NOT MEASUREMENT SENSITIVE

MIL-STD-40051-2B
30 November 2012
SUPERSEDING
MIL-STD-40051-2A
21 July 2010

DEPARTMENT OF DEFENSE STANDARD PRACTICE

PREPARATION OF DIGITAL TECHNICAL INFORMATION
FOR
PAGE-BASED TECHNICAL MANUALS (TMs)

AMCS 9294 **AREA TMSS**

DISTRIBUTION STATEMENT A. Approved for public release; distribution is unlimited.

FOREWORD

1. This standard is approved for use by the Department of the Army and the United States Marine Corps and is available for use by all Departments and Agencies of the Department of Defense (DoD).

2. This standard establishes the technical content requirements and mandatory style and format requirements for the preparation of technical manuals (TMs) and other types of equipment publications specified herein and subsequent revisions required to support the various types of equipment and weapon systems within the Department of the Army and Department of the Marine Corps. The requirements contained in this standard cover operation (except aviation) and maintenance at all levels through overhaul (depot), including Depot Maintenance Work Requirements (DMWRs) and National Maintenance Work Requirements (NMWRs). For purposes of this standard, the terms "technical manual" and "equipment publication" are synonymous.

3. This two-part book form consists of the following parts.

MIL-STD-40051-1	—	Preparation of Digital Technical Information for Interactive Electronic Technical Manuals (IETM)
MIL-STD-40051-2	—	Preparation of Digital Technical Information for Page-Based Technical Manuals (TMs)

4. Comments, suggestions, or questions should be addressed to USAMC Logistics Support Activity, ATTN: AMXLS-AP, Redstone Arsenal, AL 35898-7466 or e-mailed to logsa.tmss@conus.army.mil. Since contact information can change, you may want to verify the currency of this address information using the ASSIST Online database at https://assist.dla.mil/online/start/.

REVISION SUMMARY

1. The following general changes were made in this revision and are not marked with vertical bars:

a. Changed all instance of "title block page" to title page to reflect terminology used in AR 25-30, MIL-STD-38784, etc.

b. Clarified use of terms "task", "procedure", "function", and "instruction". Each work package can have one or more tasks. Function and task are synonymous. Procedure and instruction are synonymous. Term usage and figures were corrected as required.

c. Changed "CD" to disc or CD/DVD as appropriate to reflect the current usage of both CDs and DVDs. Also, changed spelling of "disk" to disc.

d. Corrected task titles in paragraphs that cover them to match tasks in list in paragraph E.5.3.5.3 and in the MAC.

e. Verified correct usage of material vs materiel and changed terms as required.

f. Corrected inconsistencies in usage of "Web site" vs "website".

g. Corrected usage of numbers (e.g., spell out numbers less than ten, use numbers for those greater than ten.)

h. Corrected inconsistencies with "supersedure" vs "supersession".

i. Corrected inconsistencies in use of "technical manual".

j. Corrected paragraph caveats to reflect maintenance classes rather than maintenance levels.

k. Changed "operator's" to operator in TM titles.

l. Table of Contents and Content Format Selection Matrixes updated to reflect changes made elsewhere in this standard. Content Format Selection Matrixes update to reflect review comments.

m. Typos and other errors including referencing errors corrected.

n. Added service identifiers to identify service unique requirements.

o. Changed content selection matrixes for conventional and chemical ammunition to reflect current requirements.

2. The following specific changes were made and are marked with vertical bars:

Current Para/Fig/Table Number	***Previous Para/Fig/Table Number***	***Action***
1 (Foreword)	1 (Foreword)	Changed
2 (Foreword)	2 (Foreword)	Changed
1.1	1.1	Changed
1.2	1.2	Changed
2.2.2	2.2.2	Added (AR 25-52) and DODM 5200.01 Deleted: DOD 5200.1-R, DOD 5400.7-R, SB 11-573, TB 43-0209, and TC 3-04.7 Changed source statements
2.3	2.3	Added: ISO 1219, ASME Y14.38 Changed source statements
3.1	3.1	Changed
3.2	*	Added
3.4	*	Added
3.20	*	Added
3.21	3.18	Changed
3.25	3.22	Changed
*	3.23	Deleted
*	3.24	Deleted
3.26	3.92	Moved and Changed
3.28	3.26	Changed
3.30	3.28	Changed
3.35	3.33	Changed
3.36	*	Added
3.37	*	Added
3.42	*	Added
3.55	3.51	Changed
3.56	3.52	Changed
3.59	3.55	Changed
3.69	*	Added
3.73	*	Added
3.74	*	Added
3.82	3.50	Moved and Changed
3.83	3.75	Changed
3.85	3.77	Changed
3.88	3.80	Changed

Current Para/Fig/Table Number	***Previous Para/Fig/Table Number***	***Action***
3.102	*	Added
3.114	3.106	Changed
3.115	*	Added
3.121	*	Added
3.132	*	Added
3.141	3.130	Changed
3.144	3.133	Changed
3.148	3.137	Changed
3.152	*	Added
3.154	3.142	Changed
4.1	4.1	Changed
4.6b	4.6b	Changed
4.8.2.1e	*	Added
4.8.2.3	4.8.2.3	Changed
4.8.2.3.1	4.8.2.3.1	Changed
*	4.8.2.3.2	Moved to 4.8.2.3
*	4.8.2.3.3	Moved to MIL-HDBK-1222
4.8.6	4.8.6	Changed
4.8.7.4a(1)	*	Added
4.8.7.4a(4)	4.8.7.4a(3)	Changed
4.8.7.4c	4.8.7.4c	Changed
4.8.7.4g	4.8.7.4g	Changed
4.8.7.4m	*	Added
4.8.7.5	4.8.7.5	Changed
4.8.9.1	4.8.9.1	Changed
4.8.9.1b	4.8.9.1b	Changed
4.8.9.3.1	4.8.9.3.1	Changed
4.8.9.4	4.8.9.4	Changed
4.8.9.4.2	4.8.9.4.2	Changed
4.8.9.4.3	4.8.9.4.3	Changed
4.8.9.4.5	4.8.9.4.5	Changed
4.8.9.5	*	Added
4.8.9.6	4.8.9.5	Renumbered
*	4.8.10	Deleted
4.8.10.2d	4.8.11.2d	Changed
4.8.10.2.2	4.8.11.2.2	Changed
4.8.11	4.8.12	Changed
4.8.13.2	4.8.14.2	Changed
4.8.13.3	4.8.14.3	Changed
4.8.13.7	4.8.14.7	Changed
4.8.15	4.8.16	Changed
4.8.16.2.1.2	4.8.17.2.1.3	Changed

Current Para/Fig/Table Number	***Previous Para/Fig/Table Number***	***Action***
4.8.16.2.1.3	4.8.17.2.1.3	Changed
4.8.17	4.8.18	Changed
4.8.17c	4.8.18c	Changed
4.8.17d	4.8.18d	Changed
4.8.22.1	4.8.23.1	Changed
4.8.22.1.1	4.8.23.1.1	Changed
*	4.8.23.1.2	Deleted
*	4.8.23.1.3	Deleted
4.8.22.3	4.8.23.3	Changed
4.8.23.1	4.8.24.1	Changed
4.8.23.2	4.8.23.2	Changed
4.8.23.8	4.8.23.8	Changed
4.8.25.2	4.8.26.2	Changed
4.8.27.2.4	4.8.28.2.4	Changed
4.8.27.2.5.1 (table)	4.8.28.2.5.1 (table)	Changed contents Added number/title
4.8.27.3.2	4.8.28.3.2	Changed
4.8.27.3.4.ld	4.8.28.3.4.ld	Changed
4.8.27.4.5.2c	4.8.28.4.5.2c	Changed
4.9	4.9	Changed
4.9.1.1c	4.9.1.1c	Changed
4.9.1.1e	*	Added
4.9.1.6	4.9.1.6	Changed
5.2.1.1 & subparas	5.2.1.1 & subparas	Changed
5.2.1.1.3	*	Added
5.2.1.1.3.1	*	Added
5.2.1.1.3.2	*	Added
5.2.1.1.3.3	*	Added
5.2.1.1.3.4	*	Added
5.2.1.1.5	*	Added
5.2.1.1.7	5.2.1.1.5	Changed
5.2.1.1.9	5.2.1.1.7	Changed
5.2.1.1.11.1	*	Added
5.2.1.3	5.2.1.3	Changed
5.2.1.6.3a, b, c, d, & e	5.2.1.6.3a, b, c, d, & e	Changed
*	5.2.1.7.1a(2)	Deleted
5.2.1.6.9	5.2.1.6.9	Changed
5.2.1.7	5.2.1.7	Changed
5.2.1.7.1a(2)	5.2.1.7.1a(3)	Changed
5.2.1.9	5.2.1.9	Changed
5.2.1.9b	5.2.1.9b	Changed
5.2.1.9c	5.2.1.9c	Changed
*	5.2.1.9e	Deleted

Current Para/Fig/Table Number	***Previous Para/Fig/Table Number***	***Action***
5.2.2	5.2.1.6.10	Moved and changed
5.2.3e	5.2.2e	Changed
*	5.2.2f	Deleted
5.2.3.1	5.2.2.1	Changed
5.2.3.2c	5.2.2.2c	Changed
5.2.3.4	5.2.2.4	Changed
*	5.2.2.7	Deleted
*	6.4	Deleted
6.4	6.5	Changed
6.5	6.6	Changed
Figure 1	Figure 1	Changed
Figure 2	Figure 2	Changed
Figure 3	Figure 3	Changed
Figure 4	Figure 4	Changed
*	Figure 5	Deleted
Figure 6	Figure 7	Changed
Figure 7 (Sheets 1 &2)	Figure 8 (Sheets 1 & 2)	Changed
Figure 7, sheet 3	*	Added
Figure 8	Figure 9	Changed
Figure 9	Figure 10	Changed
Figure 10	Figure 11	Changed
Figure 11	Figure 12	Changed
Figure 12	Figure 13	Changed
Figure 13	*	Added
Figure 14	*	Added
Figure 15	*	Added
Figure 16	*	Added
Figure 17	*	Added
Figure 18	*	Added
Figure 19	*	Added
Figure 20	Figure 14	Changed
Figure 21	Figure 15	Changed
Figure 22	Figure 16	Changed
Figure 23	Figure 17	Changed
Figure 24	Figure 18	Changed
Figure 25, sheets 1&2	Figure 19, sheets 1&2	Changed
Figure 26	*	Added
Figure 27	*	Added
Figure 28	Figure 20	Changed
Figure 29	Figure 21	Changed
Figure 30	*	Added
Figure 33	Figure 24	Changed
Figure 34	Figure 25	Changed

Current Para/Fig/Table Number	***Previous Para/Fig/Table Number***	***Action***
A.5.2	A.5.2	Changed
A.5.3.1	A.5.3.1	Changed
B.4.7	B.4.7	Changed
B.5.2.5	B.5.2.5	Changed
B.5.2.7	B.5.2.7	Changed
B.5.2.19	*	Added
B.5.2.25	B.5.2.24	Changed
Appendix C title	Appendix C title	Changed
C.1.1	C.1.1	Last sentence deleted
C.4.2	C.4.2	Changed
C.4.7	C.4.7	Changed
C.5.2.2	C.5.2.2	Subparas a-f changed
C.5.2.2.2.13	C.5.2.2.2.13	Changed
C.5.2.2.3.10	C.5.2.2.3.10	Changed
C.5.2.2.5.5	C.5.2.2.5.5	Changed
Figure C-1	Figure C-1	Changed
D.4.8	D.4.8	Changed
D.5.4.4	D.5.4.4	Changed
Figure D-1	Figure D-1	Changed
Figure D-2	Figure D-2	Changed
Figure D-3	Figure D-3	Changed
Figure D-5 (both sheets)	Figure D-5 (both sheets)	Changed
Figure D-6	Figure D-6	Changed
Figure D-7	Figure D-7	Changed
Figure D-8	Figure D-8	Changed
E.4.9	E.4.9	Changed
E.5.3.2.3.3.2.1	E.5.3.2.3.3.2.1	Changed
E.5.3.2.3.3.2.2	E.5.3.2.3.3.2.2	Changed
E.5.3.4	E.5.3.4	Changed
E.5.3.4.1.3c	E.5.3.4.1.3c	Changed
E.5.3.4.2.3.1	E.5.3.4.2.3.1	Changed
E.5.3.4.2.3.1.5	E.5.3.4.2.3.1.5	Changed
*	E.5.3.4.2.4a(1)	Deleted
E.5.3.5	E.5.3.5	Changed
E.5.3.5a	E.5.3.5a	Changed
E.5.3.5i	*	Added
E.5.3.5.3	E.5.3.5.3	Changed
E.5.3.5.3.2.2f (3)	E.5.3.5.3.2.2f (3)	Changed
E.5.3.5.3.3a	E.5.3.5.3.3a	Changed
E.5.3.5.3.8	E.5.3.5.3.8	Changed
E.5.3.5.3.9	E.5.3.5.3.9	Changed
E.5.3.5.3.10	E.5.3.5.3.10	Changed
E.5.3.5.3.11	E.5.3.5.3.11	Changed

Current Para/Fig/Table Number	***Previous Para/Fig/Table Number***	***Action***
E.5.3.5.3.12	E.5.3.5.3.12	Changed
E.5.3.5.3.16	E.5.3.5.3.16	Changed
E.5.3.5.3.17c	*	Added
E.5.3.5.3.19	E.5.3.5.3.19	Chnaged
E.5.3.5.3.23f&g	*	Added
E.5.3.5.3.24	E.5.3.5.3.24	Changed
E.5.3.7	E.5.3.7	Changed
E.5.3.9.1	E.5.3.5.3.35	Moved and changed
E.5.3.9.3.3	E.5.3.9.2.3	Changed
E.5.3.16	E.5.3.16	Changed
Figure E-1	Figure E-1	Changed
Figure E-2	Figure E-2	Changed
Figure E-4	Figure E-4	Changed
Figure E-8	Figure E-5	Changed
Figure E-10	Figure E-10	Changed
Figure E-11	Figure E-11	Changed
Figure E-13	Figure E-13	Changed
Figure E-14	Figure E-14	Changed
F.4.7	F.4.7	Changed
F.5.3.4	F.5.3.4	Changed
F.5.3.5.3.1	F.5.3.5.3.1	Changed boiler plate
F.5.3.5.3.2	F.5.3.5.3.2	Changed boiler plate
F.5.3.6.3	F.5.3.6.3	Changed
F.5.3.6.3.2.2	F.5.3.6.3.2.2	Changed
F.5.3.6.3.2.6.1	F.5.3.6.3.2.6.1	Changed
F.5.3.6.3.2.6.10	F.5.3.6.3.2.6.10	Changed
F.5.3.6.3.2.8	F.5.3.6.3.2.8	Changed
F.5.3.6.3.2.12	F.5.3.6.3.2.12	Changed
F.5.3.8	F.5.3.8	Changed
F.5.3.9	F.5.3.9	Changed
F.5.3.10	F.5.3.10	Changed
Figure F-1	Figure F-1	Changed
Figure F-2	Figure F-2	Changed
Figure F-3	Figure F-3	Changed
Figure F-4	Figure F-4	Sheets switched and sheet 2 changed
Figure F-5	Figure F-14	Changed
*	Figure F-5	Deleted
Figure F-6	Figure F-6	Changed
Figure F-7	Figure F-7	Changed
Figure F-8	Figure F-8	Changed
Figure F-9	Figure F-9	Changed
Figure F-11	Figure F-11	Changed

Current Para/Fig/Table Number	***Previous Para/Fig/Table Number***	***Action***
Figure F-12	Figure F-12	Changed
Figure F-13	Figure F-13	Changed
G.4.7	G.4.7	Changed
G.5.3.1.3	G.5.3.1.3	Changed (boiler plate)
G.5.3.2.3	G.5.3.2.3	Changed (boiler plate)
G.5.3.3	G.5.3.3	Changed
G.5.3.3.3a	G.5.3.3.3a	Changed
G.5.3.3.3h	*	Added
G.5.4	G.5.4	Changed
G.5.4.3	G.5.4.3	Changed
G.5.4.3.1	*	Added paragraph identifier (body of paragraph not new but was changed)
G.5.4.3.2	*	Added
G.5.4.4	G.5.4.4	Changed
G.5.4.4.1	G.5.4.4.1	Changed
G.5.5	G.5.5	Changed
G.5.5.3	G.5.5.3	Changed
G.5.5.3.1	*	Added paragraph identifier (body of paragraph not new but was changed)
G.5.5.3.2	*	Added
G.5.5.4	G.5.5.4	Changed
G.5.7	G.5.7	Changed
G.5.7.3	G.5.7.3	Changed
Figure G-1	Figure G-1	Changed
Figure G-2	Figure G-2	Changed
Figure G-3	Figure G-3	Changed
Figure G-4	Figure G-4	Changed
Figure G-5	Figure G-5	Changed
Figure G-9	Figure G-9	Changed
Figure G-11	Figure G-12	Figures 11 and 12 switched
Figure G-12	Figure G-11	Figures 11 and 12 switched. Figure 12 changed
Figure G-13	Figure G-13	Changed
Figure G-16	Figure G-16	Changed
Figure G-18	Figure G-18	Changed
H.4.2.1	H.4.2.1	Changed
H.4.2.3	H.4.2.3	Changed
I.4.7	I.4.7	Changed
I.5.1	I.5.1	Changed
I.5.3	I.5.3	Changed

Current Para/Fig/Table Number	***Previous Para/Fig/Table Number***	***Action***
I.5.3.2.2	*	Added
I.5.4	*	Added
I.5.5	*	Added
I.5.6	*	Added
J.4.2	J.4.2	Changed
J.5.2	J.5.2	Changed
Figure J-1	Figure J-1	Changed
K.4.7	K.4.7	Changed
Figure K-1	Figure K-1	Changed
L.5.2	L.5.2	Changed

This page intentionally left blank.

TABLE OF CONTENTS

PARAGRAPH PAGE

FOREWORD ..... **ii**

1. SCOPE **1**
1.1 Scope. 1
1.2 Paragraphs with limited applicability 1
1.3 Use of the technical content 1
1.4 Examples/figures 1

2. APPLICABLE DOCUMENTS **1**
2.1 General 1
2.2 Government documents 1
2.2.1 Specifications, standards, and handbooks. 1
2.2.2 Other Government documents and publications 3
2.3 Non-Government publications. 4
2.4 Order of precedence. 5

3. DEFINITIONS **6**

4. GENERAL REQUIREMENTS **23**
4.1 General 23
4.2 Types of technical manuals 23
4.3 Selective application and tailoring 24
4.4 Preparation of digital data for electronic delivery 24
4.5 Use of the Document Type Definition (DTD)/stylesheets 24
4.6 Obtaining the Document Type Definition (DTD)/stylesheets 24
4.7 Content structure 24
4.8 Style and format 25
4.8.1 Examples of style and format 25
4.8.2 TM divisions 25
4.8.2.1 Volume size and content 25
4.8.2.2 Chapters. 25
4.8.2.3 Work packages 26
4.8.2.3.1 Work package size. 26
4.8.3 Font size and style 26
4.8.4 Page size and orientation. 26
4.8.5 Foldout pages 26
4.8.6 Final Reproducible Copy (FRC) 27
4.8.7 Warnings, cautions, and notes 27
4.8.7.1 Warning <warning> 27
4.8.7.2 Caution <caution> 27
4.8.7.3 Notes <note> 27
4.8.7.4 Display of warnings, cautions, and notes 27
4.8.7.5 Icons <icon-set> 28
4.8.7.5.1 Development of icons 28

TABLE OF CONTENTS

PARAGRAPH		PAGE
4.8.7.5.2	Safety warnings with icons <icon-set>.	28
4.8.7.5.3	Hazardous materials warnings <warning>.	29
4.8.7.5.3.1	Format for hazardous materials warnings with icons <icon-set>.	29
4.8.7.5.3.2	Abbreviated format for hazardous materials warnings with icons <icon-set>.	29
4.8.7.5.4	Equipment damage caution icons <icon-set>.	29
4.8.8	Chapters.	29
4.8.8.1	Chapter title page <titlepg>	29
4.8.8.2	Chapter numbering.	29
4.8.9	Work packages.	29
4.8.9.1	Work package number	29
4.8.9.2	Work package sequential numbering	30
4.8.9.2.1	Assignment of new work packages sequence numbers for a change	31
4.8.9.2.2	Deletion of work packages in a change.	31
4.8.9.2.3	Assignment of work package sequence numbers in volumized TMs.	31
4.8.9.3	Work package identification information <wpidinfo>.	31
4.8.9.3.1	Maintenance class <maintlvl>	31
4.8.9.3.2	Work package title <title>	31
4.8.9.3.3	Effectivity notice <config>	32
4.8.9.3.4	Joint use.	32
4.8.9.4	Initial setup information <initial_setup>	32
4.8.9.4.1	Test equipment <testeqp>	32
4.8.9.4.2	Tools and special tools <tools>	32
4.8.9.4.3	Materials/parts <mtrlpart>.	33
4.8.9.4.4	Personnel required <persnreq>.	33
4.8.9.4.5	References <ref>	33
4.8.9.4.6	Equipment conditions <eqpconds>	34
4.8.9.4.7	Special environmental conditions <specenv>	34
4.8.9.4.8	Drawings required <dwgreq>	34
4.8.9.4.9	Estimated time to complete the task <time.to.comp>	34
4.8.9.5	End of task/work package statement	34
4.8.9.6	Work package page numbering	34
4.8.10	Paragraphs	35
4.8.10.1	Paragraph numbering.	35
4.8.10.2	Paragraphs and subparagraph titles.	35
4.8.10.2.1	Format	35
4.8.10.2.2	Continuation headers	35
4.8.11	Task titles.	35
4.8.12	Procedural steps	35
4.8.12.1	Procedural step levels.	35
4.8.12.2	Procedural step titles.	36
4.8.13	Tables and lists.	36
4.8.13.1	Placement of tables	36
4.8.13.2	Table numbering	36

TABLE OF CONTENTS

PARAGRAPH PAGE
4.8.13.3 Table titles....36
4.8.13.4 Footnotes <ftnote> to tables....36
4.8.13.5 Table format....37
4.8.13.6 Lists....37
4.8.13.6.1 Definition list <deflist>....37
4.8.13.6.2 Random list <randlist>....37
4.8.13.6.3 Sequential list <seqlist>....37
4.8.13.7 Standard information....37
4.8.14 Placement of text....38
4.8.15 Placement of illustrations....38
4.8.15.1 Rotating illustrations....38
4.8.15.2 Placement of text and related illustrations for pocket-sized TMs....38
4.8.15.3 Repeating illustrations....38
4.8.16 Margin data....38
4.8.16.1 Headers....39
4.8.16.2 Footers....39
4.8.16.2.1 Page numbering....39
4.8.16.2.1.1 Front matter....39
4.8.16.2.1.2 Rear matter....39
4.8.16.2.1.3 Blank pages....39
4.8.16.2.1.4 Foldout page numbers....39
4.8.17 Abbreviations and acronyms....40
4.8.18 Symbols....40
4.8.18.1 General information for symbols....40
4.8.18.2 Metric symbols....40
4.8.19 Nuclear hardness (hardness-critical processes) marking....40
4.8.20 Electrostatic Discharge (ESD) sensitive marking....41
4.8.21 Quality Assurance (QA)....41
4.8.22 Special page markings....41
4.8.22.1 Security classification....41
4.8.22.1.1 Classification guidelines....41
4.8.22.2 Emergency page markings....42
4.8.22.3 Protective markings....42
4.8.23 Referencing....42
4.8.23.1 Other documents <extref>....42
4.8.23.2 Within the TM <xref>....42
4.8.23.2.1.1 TM divisions....42
4.8.23.2.1.2 Volumes....42
4.8.23.2.1.2.1 Maintenance tasks, procedures, and paragraphs....42
4.8.23.3 Equipment, components, and parts....42
4.8.23.4 National Stock Numbers (NSNs) and Part Numbers (P/Ns)....42
4.8.23.5 Equipment panel markings (placarding)....42
4.8.23.6 Metric and United States (U.S.) standard measurements....43
4.8.23.7 Temperature....43

TABLE OF CONTENTS

PARAGRAPH PAGE
4.8.23.8 Other TMs/IETMs <extref>....43
4.8.23.9 Tables....43
4.8.23.10 Figures and multisheet figures....43
4.8.23.11 Index numbers....43
4.8.23.12 Items on diagrams....43
4.8.23.13 Footnotes....43
4.8.23.14 Repeating information....43
4.8.24 Equations....43
4.8.25 Nomenclature....43
4.8.25.1 Nomenclature consistency and applicability....44
4.8.25.2 Official/approved nomenclature....44
4.8.25.3 Military terms....44
4.8.25.4 Automatic electronic test and checkout terminology....44
4.8.26 Comprehensibility....44
4.8.27 Graphics....44
4.8.27.1 Graphic format....44
4.8.27.2 Types of graphics....44
4.8.27.2.1 Line drawings....44
4.8.27.2.2 Multiview and multisheet illustrations....45
4.8.27.2.3 Photographs....45
4.8.27.2.3.1 Photograph quality....45
4.8.27.2.3.2 Retouching....45
4.8.27.2.3.3 Use of photographs in place of line drawings....45
4.8.27.2.4 Engineering drawings (**NMWRS/DMWRS only**)....45
4.8.27.2.5 Diagrams....45
4.8.27.2.5.1 Diagram specifications....45
4.8.27.2.5.2 Types of diagrams....46
4.8.27.2.6 Charts and graphs....46
4.8.27.2.7 Tools and test equipment illustrations....46
4.8.27.3 Elements of illustrations....46
4.8.27.3.1 Border rules and boxes....46
4.8.27.3.2 Use of the human figure....46
4.8.27.3.3 Credit lines....46
4.8.27.3.4 Callouts....46
4.8.27.3.4.1 Index numbers....47
4.8.27.3.4.2 Leader lines and arrowheads....47
4.8.27.3.5 Illustration legends....47
4.8.27.3.6 Procedures on illustrations....47
4.8.27.4 Graphic techniques....47
4.8.27.4.1 Figure numbers....47
4.8.27.4.2 Repair Parts and Special Tools List (RPSTL) figure numbering....47
4.8.27.4.3 Foldout figure numbering....47
4.8.27.4.4 Multisheet numbering....48
4.8.27.4.5 Figure titles....48

TABLE OF CONTENTS

PARAGRAPH PAGE
4.8.27.4.5.1 Figure title format. 48
4.8.27.4.5.2 Figure title placement 48
4.8.27.4.6 Illustration identification numbers 48
4.8.27.4.7 Portraying signal flow. 48
4.8.27.4.8 Use of color. 48
4.9 Changes/Revisions 49
4.9.1 Changes for TMs. 49
4.9.1.1 Changes. 49
4.9.1.2 Changed work packages. 49
4.9.1.3 Changed front and rear matter pages. 49
4.9.1.4 Change symbols for text and tables. 49
4.9.1.5 Change symbols for illustrations. 50
4.9.1.6 Changes to Repair Parts and Special Tools List (RPSTL) work packages. 50
4.9.2 Complete TM revisions. 51

5. DETAILED REQUIREMENTS. 51
5.1 Technical content preparation. 51
5.2 Preparation of front and rear matter 51
5.2.1 Front matter <paper.frnt. 51
5.2.1.1 Front cover <frntcover> 52
5.2.1.1.1 TM number for joint service TMs <tminfono> 53
5.2.1.1.2 National overhaul standards statement (**TMs/DMWRs/NMWRs with national overhaul standards only**) 53
5.2.1.1.3 Publication title <prtitle> 53
5.2.1.1.3.1 Model number <modelno> 53
5.2.1.1.3.2 National stock number <nsn> 53
5.2.1.1.3.3 Part number <partno> 53
5.2.1.1.3.4 End item code <eic> 53
5.2.1.1.4 Weapon system name <weapons_system>. 53
5.2.1.1.5 Equipment illustration <graphic> 54
5.2.1.1.6 Availability statement (DMWR/NMWR only) <avail>. 54
5.2.1.1.7 Supersedure notice for revisions only <super> 54
5.2.1.1.8 Distribution statement <dist> 54
5.2.1.1.9 Export control notice warning <export> 54
5.2.1.1.10 Destruction notice <destr> 54
5.2.1.1.11 General purpose notice <general_purpose_notices>. 54
5.2.1.1.11.1 Hazardous materials information notice 54
5.2.1.1.12 Service nomenclature <servnomen>. 55
5.2.1.1.13 Publication date <date>. 55
5.2.1.1.14 For Army Communications Security (COMSEC) manuals use. 55
5.2.1.2 Abbreviated front cover <frntcover_abbreviated> 55
5.2.1.3 (MC) Promulgation letter <promulgation> 55
5.2.1.4 Warning summary <warnsum> 55
5.2.1.4.1 First aid <first_aid> 56

TABLE OF CONTENTS

PARAGRAPH PAGE
5.2.1.5 Change transmittal page <chgsheet>. 56
5.2.1.6 List of effective pages/work packages <loepwp> 56
5.2.1.6.1 Types of publications. 56
5.2.1.6.2 Exempted publications. 57
5.2.1.6.3 Types of pages to be included 57
5.2.1.6.4 Exempted pages 57
5.2.1.6.5 Change numbers 57
5.2.1.6.6 Listing the pages. 57
5.2.1.6.7 Numbering the list of effective pages/work packages 58
5.2.1.6.8 List of effective pages/work packages for Repair Parts and Special Tools List (RPSTLs) 58
5.2.1.6.9 Multi-service manuals 58
5.2.1.6.10 Dates of issue for changes 58
5.2.1.7 (A) Title page <titleblk> 58
5.2.1.7.1 Reporting errors and recommending improvements statement <reporting> 58
5.2.1.8 Preventive maintenance services and phased maintenance inspection manuals title page with warning data (**Aviation only**) 61
5.2.1.9 Table of contents <contents>. 62
5.2.1.10 "How To Use This Manual" information (**Except RPSTLs and DMWRs/NMWRs**) <howtouse> 63
5.2.1.10.1 International standardization agreements. 63
5.2.2 Multi-volume manuals 64
5.3.2 Rear matter <rear>. 64
5.3.2.1 Glossary (**Except RPSTL**) <glossary> 65
5.3.2.2 Alphabetical index (**Except RPSTL**) <aindx>. 65
5.3.2.3 Reporting errors and recommending improvements Department of the Army (DA) Form 2028 <da2028> 65
5.3.2.4 Authentication page <authent>. 65
5.3.2.5 Foldout pages (**Except RPSTL**) <foldsect> 65
5.3.2.6 Back cover <back> 66

6. NOTES 66
6.1 Intended use 66
6.2 Acquisition requirements 66
6.3 Tailoring guidance 66
6.4 Subject term (key word) listing 66
6.5 Changes form previous issue. 67

A CONTENT SELECTION MATRIXES 107

A.1 SCOPE 107
A.1.1 Scope. 107

TABLE OF CONTENTS

PARAGRAPH PAGE

A.2 APPLICABLE DOCUMENTS....107

A.3 DEFINITIONS....107

A.4 GENERAL REQUIREMENTS....107

A.5 DETAILED REQUIREMENTS....107
A.5.1 Tailoring requirements for technical manuals....107
A.5.2 Publication Titles....107
A.5.3 Technical content tables....110
A.5.3.1 Intended use....110
A.5.4 Acquisition requirements....111

B GENERAL INFORMATION, EQUIPMENT DESCRIPTION, AND THEORY OF OPERATION....191

B.1 SCOPE....191
B.1.1 Scope....191

B.2 APPLICABLE DOCUMENTS....191

B.3 DEFINITIONS....191

B.4 GENERAL REQUIREMENTS....191
B.4.1 General....191
B.4.2 Maintenance level/class applicability....191
B.4.3 Preparation of digital data for electronic delivery....191
B.4.4 Use of the Document Type Definition (DTD)/stylesheet....191
B.4.5 Content structure....192
B.4.6 Style and format....192
B.4.7 Work package development....192
B.4.8 Safety devices and interlocks....192
B.4.9 Electrostatic Discharge (ESD) sensitive parts....192
B.4.10 Nuclear hardness <hcp>....192
B.4.11 Selective application and tailoring....192

B.5 DETAILED REQUIREMENTS....192
B.5.1 Preparation of general information, equipment description, and theory of operation....192
B.5.1.1 Required general information, equipment description, and theory of operation data work packages....193
B.5.2 General information work package <ginfowp>....193
B.5.2.1 Work package identification information <wpidinfo>....193
B.5.2.2 Work package initial setup <initial_setup>....193
B.5.2.3 Scope <scope>....193

TABLE OF CONTENTS

PARAGRAPH		PAGE
B.5.2.4	Maintenance forms, records, and reports <mfrr>	193
B.5.2.5	Reporting equipment improvement recommendations <eir>	194
B.5.2.6	Hand Receipt (HR) manuals <handreceipt>	195
B.5.2.7	Corrosion prevention and control <cpcdata>	196
B.5.2.8	Ozone Depleting Substances (ODSs) <odsdata>	197
B.5.2.9	Destruction of Army materiel to prevent enemy use <destructmat>.	197
B.5.2.10	Preparation for storage or shipment <pssref>	197
B.5.2.11	Warranty information <wrntyref>	197
B.5.2.12	Nomenclature cross-reference list <nomenreflist>.	197
B.5.2.13	List of abbreviations/acronyms <loa>.	197
B.5.2.14	Quality assurance (QA) (**DMWR/NMWR and aviation only**) <qainfo>.	198
B.5.2.15	Quality of material <qual.mat.info>.	198
B.5.2.16	Safety, care, and handling <sftyinfo>.	198
B.5.2.17	Nuclear hardness <hcp>	199
B.5.2.18	Calibration <calref>.	199
B.5.2.19	Item unique identification (IUID) <iuid>	199
B.5.2.20	Engineering Change Proposals (ECPs) (**DMWR/NMWR only**) <ecp>.	199
B.5.2.21	Modification list (**DMWR/NMWR only**) <modification>	200
B.5.2.22	Deviations and exceptions (**DMWR/NMWR only**) <deviation>	200
B.5.2.23	Mobilization requirements (**DMWR/NMWR only**) <mobreq>	200
B.5.2.24	Critical safety items (CSI) (Flight Safety Critical Aircraft Parts (FSCAP))(**aircraft only**) <csireq>	200
B.5.2.25	Cost considerations (**DMWR/NMWR only**) <cost>	201
B.5.2.26	Supporting information for repair parts, special tools, Test, Measurement, and Diagnostic Equipment (TMDE), and support equipment <supdata>	201
B.5.2.26.1	Common tools and equipment.	201
B.5.2.26.2	Special tools, Test, Measurement, and Diagnostic Equipment (TMDE), and support equipment	202
B.5.2.26.3	Repair parts.	202
B.5.2.27	Copyright credit line <copyrt>	202
B.5.2.27.1	Proprietary names.	202
B.5.2.27.2	Advertising.	202
B.5.3	Equipment description and data work package <descwp>.	202
B.5.3.1	Work package identification information <wpidinfo>.	202
B.5.3.2	Work package initial setup <initial_setup>	202
B.5.3.3	Equipment characteristics, capabilities, and features <eqpinfo>	203
B.5.3.4	Location and description of major components (**except Conventional Ammunition and Chemical Manuals**) <locdesc>	203
B.5.3.5	Differences between models <eqpdiff>.	204
B.5.3.6	Equipment data <eqpdata>.	204
B.5.4	Theory of operation work package <thrywp>.	204
B.5.4.1	Work package identification information <wpidinfo>.	204
B.5.4.2	Work package initial setup <initial_setup>	204
B.5.4.3	Theory presentation	205

TABLE OF CONTENTS

PARAGRAPH PAGE

B.5.5 General information work package (**Preventive Maintenance Services Manual or Preventive Maintenance Daily Manual only**) <pms-ginfowp>....205
B.5.5.1 Work package identification information <wpidinfo>....205
B.5.5.2 Work package initial setup <initial_setup>....206
B.5.5.3 Maintenance activities <scope>....206
B.5.5.4 General information <pms-geninfo>....206
B.5.6 General information work package (**Phased Maintenance Inspection manual only**) <pm-ginfowp>....208
B.5.6.1 Work package identification information <wpidinfo>....208
B.5.6.2 Work package initial setup <initial_setup>....208
B.5.6.3 General information <geninfo>....208
B.5.6.3.1 Phased schedule....208
B.5.6.3.2 Additional general information....208

B.6 NOTES....211

C OPERATOR INSTRUCTIONS (EXCEPT AVIATION)....213

C.1 SCOPE....213
C.1.1 Scope....213

C.2 APPLICABLE DOCUMENTS....213

C.3 DEFINITIONS....213

C.4 GENERAL REQUIREMENTS....213
C.4.1 General....213
C.4.2 Maintenance level/class applicability....213
C.4.3 Preparation of digital data for electronic delivery....213
C.4.4 Use of the Document Type Definition (DTD)/stylesheet....213
C.4.5 Content structure....214
C.4.6 Style and format....214
C.4.7 Work package development....214
C.4.8 Safety devices and interlocks....214
C.4.9 Electrostatic Discharge (ESD) sensitive part....214
C.4.10 Nuclear hardness <hcp>....214
C.4.11 Selective application and tailoring....214

C.5 DETAILED REQUIREMENTS....214
C.5.1 Preparation of operator instructions....214
C.5.2 Operator instructions work packages....215
C.5.2.1 Work package content....215
C.5.2.2 Types of operator instructions work packages....215
C.5.2.2.1 Description and use of controls and indicators work package <ctrlindwp>..215

TABLE OF CONTENTS

PARAGRAPH PAGE
C.5.2.2.1.1 Work package identification information <wpidinfo>. 215
C.5.2.2.1.2 Work package initial setup <initial_setup> 215
C.5.2.2.1.3 Controls and indicators description tabular option 215
C.5.2.2.1.4 Controls and indicators description narrative option 216
C.5.2.2.2 Operation under usual conditions work package <opusualwp> 216
C.5.2.2.2.1 Work package identification information <wpidinfo>. 216
C.5.2.2.2.2 Work package initial setup <initial_setup> 216
C.5.2.2.2.3 Operations under usual tasks <opertsk> 216
C.5.2.2.2.4 Security measures for electronic data <secref>. 216
C.5.2.2.2.5 Siting requirements <site> 216
C.5.2.2.2.6 Shelter requirements <shelter> 217
C.5.2.2.2.7 Assembly and preparation for use <prepforuse>. 217
C.5.2.2.2.8 Initial adjustments before use and self-test <initial> 217
C.5.2.2.2.9 Operating procedures <oper> 217
C.5.2.2.2.10 Operating procedure considerations. 218
C.5.2.2.2.11 Operating auxiliary equipment <operaux> 219
C.5.2.2.2.12 Preparation for movement <prepmove>. 219
C.5.2.2.2.13 Decals and instruction plates <instructplt>. 219
C.5.2.2.3 Operation under unusual conditions work package <opunuwp> 219
C.5.2.2.3.1 Work package identification information <wpidinfo>. 219
C.5.2.2.3.2 Work package initial setup <initial_setup> 219
C.5.2.2.3.3 Operations under unusual tasks <opunutsk>. 219
C.5.2.2.3.4 Security measures for electronic data <secref>. 219
C.5.2.2.3.5 Unusual environment/weather <unusualenv>. 219
C.5.2.2.3.6 Fording and swimming <fording> 219
C.5.2.2.3.7 Interim Chemical, Biological, Radiological, and Nuclear (CBRN) decontamination procedures <decon>. 220
C.5.2.2.3.8 Jamming and Electronic Countermeasures (ECM) procedures <ecm> 220
C.5.2.2.3.9 Degraded operation procedures <degraded> 220
C.5.2.2.3.10 Decals and instruction plates <instructplt>. 220
C.5.2.2.4 Emergency work package <emergencywp> 220
C.5.2.2.4.1 Work package identification information <wpidinfo>. 220
C.5.2.2.4.2 Work package initial setup <initial_setup>. 220
C.5.2.2.4.3 Emergency operation <emergency>. 220
C.5.2.2.4.4 Emergency shutdown <emergency> 220
C.5.2.2.5 Stowage and decal/data plate guide work package <stowagewp>. 220
C.5.2.2.5.1 Work package identification information <wpidinfo>. 220
C.5.2.2.5.2 Work package initial setup <initial_setup> 220
C.5.2.2.5.3 Introduction <intro> 221
C.5.2.2.5.4 Stowage guide <stowinfo>. 221
C.5.2.2.5.5 Decal/data plate guide <decalinfo>. 221
C.5.2.2.6 On-vehicle equipment loading plan work package <eqploadwp> 221
C.5.2.2.6.1 Work package identification information <wpidinfo>. 221
C.5.2.2.6.2 Work package initial setup <initial_setup> 221

TABLE OF CONTENTS

PARAGRAPH PAGE
C.5.2.2.6.3 Introduction <intro>....221
C.5.2.2.6.4 Illustrated loading plan list(s) <loaddesc>....221

C.6 NOTES....221

D TROUBLESHOOTING PROCEDURES....223

D.1 SCOPE....223
D.1.1 Scope....223

D.2 APPLICABLE DOCUMENTS....223

D.3 DEFINITIONS....223

D.4 GENERAL REQUIREMENTS....223
D.4.1 General....223
D.4.2 Development of troubleshooting instructions....223
D.4.3 Maintenance level/class applicability....223
D.4.4 Preparation of digital data for electronic delivery....224
D.4.5 Use of Document Type Definition (DTD)/stylesheet....224
D.4.6 Content structure....224
D.4.7 Style and format....224
D.4.8 Work package development....224
D.4.9 Safety devices and interlocks....224
D.4.10 Electrostatic discharge (ESD) sensitive parts....224
D.4.11 Nuclear hardness <hcp>....224
D.4.12 Selective application and tailoring....225

D.5 DETAILED REQUIREMENTS....225
D.5.1 Testing and troubleshooting philosophy....225
D.5.2 Information to be provided....225
D.5.2.1 Methods of testing and troubleshooting....225
D.5.2.1.1 Manual (non-automatic) troubleshooting....225
D.5.2.1.2 Semi-automatic or automatic testing and troubleshooting....226
D.5.2.1.3 Testing and troubleshooting using built-in-test equipment (BITE)....226
D.5.2.1.4 Sensor derived failures....226
D.5.2.1.5 Failure interpretation....226
D.5.2.2 Types of testing and troubleshooting information....226
D.5.2.2.1 Fault reporting/fault isolation information....226
D.5.2.2.2 Integrated system testing and troubleshootin....226
D.5.2.2.2.1 Integrated systems having self-test or built-in test (BIT) capability....227
D.5.2.2.2.2 Integrated systems requiring the use of system peculiar test sets....227
D.5.2.2.2.3 Integrated systems requiring the use of common test equipment....227
D.5.3 Troubleshooting procedures content....227
D.5.4 Types of testing and troubleshooting....228

TABLE OF CONTENTS

PARAGRAPH PAGE
D.5.4.1 Aviation testing and troubleshooting category (**Aircraft Troubleshooting TMs only**) <troubleaviationcategory>. 228
D.5.4.2 Standard testing and troubleshooting category <troublecategory>. 228
D.5.4.3 DMWR/NMWR testing and troubleshooting category (**depot only**) <troubledmwrnmwrcategory>. 229
D.5.4.4 Master index testing and troubleshooting category <masterindexcategory>....229
D.5.5 Testing and troubleshooting work packages....229
D.5.5.1 Work package content....229
D.5.5.2 Types of testing and troubleshooting work packages. 229
D.5.5.3 Introduction work package <tsintrowp>....230
D.5.5.3.1 Work package identification information <wpidinfo>. 230
D.5.5.3.2 Work package initial setup <initial_setup> 230
D.5.5.4 Technical description work packages (**Aircraft Troubleshooting Manuals only**) <techdescwp>....230
D.5.5.4.1 Work package identification information <wpidinfo>. 230
D.5.5.4.2 Work package initial setup <initial_setup> 230
D.5.5.4.3 Equipment description and data <descproc> 230
D.5.5.4.4 Controls and indicators <ctrlindproc>. 230
D.5.5.4.5 Theory of operation <thryproc> 230
D.5.5.5 Troubleshooting index work package <tsindxwp>....230
D.5.5.5.1 Work package identification information <wpidinfo>. 230
D.5.5.5.2 Work package initial setup <initial_setup> 231
D.5.5.5.3 Malfunction/symptom index <tsindx.symptom>/<tsindx.messageword>. ...231
D.5.5.5.4 Master malfunction/symptom index <tsindx.symptom>. 231
D.5.5.5.5 System/subsystem index <tsindx.system>....231
D.5.5.6 Preshop analysis work package (**DMWR/NMWR only**) <pshopanalwp>...231
D.5.5.6.1 Work package identification information <wpidinfo>. 231
D.5.5.6.2 Work package initial setup <initial_setup> 231
D.5.5.6.3 Scope <scope> 231
D.5.5.6.4 Preparation Procedures <proc>....232
D.5.5.6.5 Preshop analysis procedures <pshopanal>. 232
D.5.5.6.5.1 Narrative procedures <proc> 232
D.5.5.6.5.2 Checklist <chklist> 232
D.5.5.6.5.2.1 Cover sheet/frame <coverpage> 232
D.5.5.6.5.2.2 Introduction <intro>....232
D.5.5.6.5.2.3 Table of tests and inspections <pshopckk.tab> 233
D.5.5.7 Component checklist work package (**DMWR/NMWR only**) <compchklistwp>....233
D.5.5.7.1 Work package identification information <wpidinfo>. 233
D.5.5.7.2 Work package initial setup <initial_setup> 233
D.5.5.7.3 Introduction <intro>....233
D.5.5.7.4 Component checklist <compchklist>....233
D.5.5.8 Operational checkout and troubleshooting procedures work packages....233

TABLE OF CONTENTS

PARAGRAPH PAGE
D.5.5.8.1 Operational checkout and troubleshooting procedures content. 233
D.5.5.8.2 Operational checkout and troubleshooting procedure work package development. 234
D.5.5.8.3 Operational checkout work package <opcheckwp> 234
D.5.5.8.3.1 Work package identification information <wpidinfo>. 234
D.5.5.8.3.2 Work package initial setup <initial_setup> 234
D.5.5.8.3.3 Introduction <intro>. 234
D.5.5.8.3.4 General procedures and precautions <proc>. 234
D.5.5.8.3.5 Pretest setup procedures <hookup>. 235
D.5.5.8.3.6 Operational checkout procedures <opcheckproc>. 235
D.5.5.8.3.6.1 Operational checkout test procedure <opcheck>. 235
D.5.5.8.3.6.2 Test set message word index <messageindx>. 235
D.5.5.8.3.6.3 Fault code reference index <faultreports>. 235
D.5.5.8.3.7 Post-operational shutdown procedures <disconnect>. 235
D.5.5.8.3.8 Follow-on maintenance <follow-on>. 235
D.5.5.8.4 Troubleshooting work package <tswp>. 235
D.5.5.8.4.1 Work package identification information <wpidinfo>. 236
D.5.5.8.4.2 Work package initial setup <initial_setup>. 236
D.5.5.8.4.3 Introduction <intro>. 236
D.5.5.8.4.4 General procedures and precautions <proc>. 236
D.5.5.8.4.5 Pretest setup procedures <hookup>. 236
D.5.5.8.4.6 Troubleshooting procedures <tsproc>. 236
D.5.5.8.4.6.1 Method A - Text-Logic <logicproc>. 236
D.5.5.8.4.6.2 Method B - Text <faultproc>. 236
D.5.5.8.4.6.3 Method C - Multiplex read codes <muxproc>. 237
D.5.5.8.4.7 Post-operational shutdown procedures <disconnect>. 237
D.5.5.8.4.8 Follow-on maintenance <follow-on>. 237
D.5.5.8.5 Combined operational checkout and troubleshooting work package <opcheck-tswp> 237
D.5.5.8.5.1 Work package identification information <wpidinfo>. 237
D.5.5.8.5.2 Work package initial setup <initial_setup>. 237
D.5.5.8.5.3 Introduction <intro>. 237
D.5.5.8.5.4 General procedures and precautions <proc>. 237
D.5.5.8.5.5 Pretest setup procedures <hookup>. 238
D.5.5.8.5.6 Operational checkout and troubleshooting procedures. 238
D.5.5.8.5.6.1 Combined operational checkout and troubleshooting procedures <opcheck-tsproc> 238
D.5.5.8.5.6.2 Separate operational checkout procedures <opcheckproc>. 238
D.5.5.8.5.6.3 Separate troubleshooting procedure <tsproc>. 238
D.5.5.8.5.7 Post-operational shutdown procedures <disconnect>. 238
D.5.5.8.5.8 Follow-on maintenance <follow-on>. 238
D.5.5.8.6 Integrated system troubleshooting procedures work packages. 238

TABLE OF CONTENTS

PARAGRAPH PAGE

D.6 NOTES 238

E MAINTENANCE INSTRUCTIONS 249

E.1 SCOPE 249
E.1.1 Scope. 249

E.2 APPLICABLE DOCUMENTS 249

E.3 DEFINITIONS 249

E.4 GENERAL REQUIREMENTS 249
E.4.1 General. 249
E.4.2 Development of maintenance instructions. 249
E.4.3 Maintenance level/class applicability. 249
E.4.4 Depot Maintenance Work Requirements (DMWRs) and National Maintenance Work Requirements (NMWRs). 249
E.4.5 Preparation of digital data for electronic delivery. 250
E.4.6 Use of the Document Type Definition (DTD)/stylesheet. 250
E.4.7 Content structure. 250
E.4.8 Style and format. 250
E.4.9 Work package development. 250
E.4.10 Safety devices and interlocks. 250
E.4.11 Electrostatic discharge (ESD) sensitive parts. 250
E.4.12 Nuclear hardness. 251
E.4.13 Selective application and tailoring. 251

E.5 DETAILED REQUIREMENTS 251
E.5.1 Preparation of maintenance instructions. 251
E.5.2 Types of maintenance. 251
E.5.2.1 Preventive Maintenance Checks and Services (PMCS) (**except for aircraft TMs, DMWRs, and NMWRs**) <pmcscategory>. 251
E.5.2.2 Weapon system/equipment maintenance with required Preventive Maintenance Checks and Services (PMCS) (**except for aircraft TMs, DMWRs, and NMWRs**) <maintenancepmcscategory>. 251
E.5.2.3 Weapon system/equipment maintenance without Preventive Maintenance Checks and Services (PMCS) (**except for aircraft TMs, DMWRs, and NMWRs**) <maintenancecategory>. 252
E.5.2.4 Depot weapon system/equipment maintenance <depotcategory>. 252
E.5.2.5 Aircraft maintenance (**aircraft TMs, DMWRs, and NMWRs only**) <aviationcategory>. 253
E.5.2.6 Auxiliary equipment maintenance <auxiliarycategory>. 253
E.5.2.7 Ammunition maintenance <ammunitioncategory>. 254
E.5.2.8 Test and inspection maintenance (**Conventional and chemical ammunition only**) <testinspectioncategory>. 254

TABLE OF CONTENTS

PARAGRAPH PAGE
E.5.2.9 Shipment/movement and storage maintenance (**Conventional and chemical ammunition only**) <shipmentmovementstoragecategory>. 254
E.5.2.10 Ammunition marking maintenance (**Conventional and chemical ammunition only**) <ammomarkingcategory>. 254
E.5.2.11 Preventive maintenance services (**Aircraft preventive maintenance services only**) <pmscategory>.....254
E.5.2.12 Phased maintenance inspections (**aircraft phased maintenance inspection only**) <checklistcategory>. 254
E.5.3 Maintenance work packages. 254
E.5.3.1 Work package content.....254
E.5.3.2 Service upon receipt work package (**Maintainer and AMC only**) <surwp>. 255
E.5.3.2.1 Work package identification information <wpidinfo>. 255
E.5.3.2.2 Work package initial setup <initial_setup>. 255
E.5.3.2.3 Service upon receipt tasks <surtsk>.....255
E.5.3.2.3.1 Siting <siting>.....255
E.5.3.2.3.2 Shelter requirements <shltr>.....255
E.5.3.2.3.3 Service upon receipt of materiel <surmat>.....256
E.5.3.2.3.3.1 Unpacking <unpack>.....256
E.5.3.2.3.3.2 Checking unpacked equipment <chkeqp>.....256
E.5.3.2.3.3.2.1 Packaging material <crit.insp.tab>. 256
E.5.3.2.3.3.2.2 Equipment components <pecul.insp.tab>.....256
E.5.3.2.3.3.3 Processing unpacked equipment <processeqp>.....256
E.5.3.2.3.4 Installation instructions <install>.....256
E.5.3.2.3.4.1 Installation of the equipment. 257
E.5.3.2.3.4.2 Special applications. 258
E.5.3.2.3.4.3 Van and shelter installations. 258
E.5.3.2.3.4.4 Assembly of equipment <assem>. 258
E.5.3.2.3.5 Preliminary servicing of equipment <preserv>. 258
E.5.3.2.3.6 Preliminary checks and adjustment of equipment <prechkadj>. 258
E.5.3.2.3.7 Preliminary calibration of equipment <precal>. 259
E.5.3.2.3.8 Circuit alignment <calign>. 259
E.5.3.2.3.8.1 External connections <extconn>.....259
E.5.3.2.3.8.2 Switch settings, patch panel connections, and internal control settings. 259
E.5.3.2.3.8.3 Alignment procedures <alignproc>. 259
E.5.3.2.3.9 Ammunition service upon receipt tasks.....259
E.5.3.2.3.9.1 Ammunition markings <mark>. 260
E.5.3.2.3.9.2 Classification of defects <ammo.defect>.....260
E.5.3.2.3.9.3 Handling <ammo.handling>. 260
E.5.3.2.3.9.4 Procedures needed to activate ammunition, mines, etc. <arm>.....260
E.5.3.2.3.10 Other service upon receipt tasks <other.surtsk>. 260
E.5.3.2.3.11 Follow-on maintenance <followon.maintsk>. 260
E.5.3.3 Equipment/user fitting instructions work package <perseqpwp>.....260
E.5.3.3.1 Work package identification <wpidinfo>. 260

TABLE OF CONTENTS

PARAGRAPH PAGE
E.5.3.3.2 Work package initial setup <initial_setup>. 260
E.5.3.4 Preventive Maintenance Checks and Services (PMCS) (**except for aircraft TMs, DMWRs, and NMWRs**). 260
E.5.3.4.1 Preventive Maintenance Checks and Services (PMCS) introduction work package <pmcsintrowp>. 260
E.5.3.4.1.1 Work package identification information <wpidinfo>. 260
E.5.3.4.1.2 Work package initial setup <initial_setup>. 261
E.5.3.4.1.3 Preventive Maintenance Checks and Services (PMCS) data. 261
E.5.3.4.2 Preventive Maintenance Checks and Services (PMCS) work package <pmcswp>. 261
E.5.3.4.2.1 Work package identification information <wpidinfo>. 261
E.5.3.4.2.2 Work package initial setup <initial_setup>. 262
E.5.3.4.2.3 Preventive Maintenance Checks and Services (PMCS) procedures. 262
E.5.3.4.2.3.1 Preventive Maintenance Checks and Services (PMCS) data preparation <pmcstable>. 262
E.5.3.4.2.3.1.1 Item number <itemno>. 262
E.5.3.4.2.3.1.2 Intervals <interval>. 262
E.5.3.4.2.3.1.3 Man-hours <manhours>. 262
E.5.3.4.2.3.1.4 Item to be checked or serviced <checked>. 263
E.5.3.4.2.3.1.5 Procedure <pmcsproc>. 263
E.5.3.4.2.3.1.6 Equipment not ready/available if: <eqpnotavail>. 263
E.5.3.4.2.4 Mandatory replacement parts <mrplpart>. 263
E.5.3.4.3 Preventive Maintenance Checklist (PMC). 263
E.5.3.5 Maintenance work packages (**not required for aircraft PM and PMS manuals**) <maintwp>. 264
E.5.3.5.1 Work package identification information <wpidinfo>. 265
E.5.3.5.2 Work package initial setup <initial_setup>. 265
E.5.3.5.3 Maintenance tasks <maintsk>. 265
E.5.3.5.3.1 Maintenance task requirements. 266
E.5.3.5.3.2 Inspect <inspect>. 267
E.5.3.5.3.2.1 Inspect during assembly. 267
E.5.3.5.3.2.2 Inspection of conventional and chemical ammunition or components containing radioactive materials (**Maintainer, below depot sustainment, or ASB only**). 267
E.5.3.5.3.2.3 Pre-embarkation inspection of material in units alerted for overseas movement. 268
E.5.3.5.3.2.4 Inspection of installed items. 268
E.5.3.5.3.2.5 Inspection-acceptance and rejection criteria. 268
E.5.3.5.3.3 Test <test>. 269
E.5.3.5.3.4 Service <service>. 270
E.5.3.5.3.5 Adjust <adjust>. 270
E.5.3.5.3.6 Align <align>. 270
E.5.3.5.3.7 Calibrate <calibration>. 270
E.5.3.5.3.8 Remove <remove>. 270

TABLE OF CONTENTS

PARAGRAPH PAGE
E.5.3.5.3.9 Install <install>. 271
E.5.3.5.3.10 Replace <replace>....271
E.5.3.5.3.11 Repair <repair>. 271
E.5.3.5.3.12 Paint <paint>. 271
E.5.3.5.3.13 Overhaul <overhaul>. 271
E.5.3.5.3.14 Rebuild <rebuild>. 272
E.5.3.5.3.15 Lubricate <lube>. 272
E.5.3.5.3.16 Mark <mark>. 272
E.5.3.5.3.17 Pack <pack>. 272
E.5.3.5.3.18 Unpack <unpack>. 272
E.5.3.5.3.19 Preserve <preservation>. 272
E.5.3.5.3.20 Prepare for use <prepforuse>. 273
E.5.3.5.3.21 Assemble <assem>. 273
E.5.3.5.3.22 Disassemble <disassem>. 273
E.5.3.5.3.23 Clean <clean>. 273
E.5.3.5.3.24 Nondestructive Inspection (NDI) <ndti>. 274
E.5.3.5.3.25 Radio interference suppression <ris>. 275
E.5.3.5.3.26 Place in service <pis>. 275
E.5.3.5.3.27 Towing <tow>. 275
E.5.3.5.3.28 Jacking <jack>. 275
E.5.3.5.3.29 Parking <park>. 275
E.5.3.5.3.30 Mooring <moor>. 275
E.5.3.5.3.31 Covering <cover>. 275
E.5.3.5.3.32 Hoisting <hoist>. 275
E.5.3.5.3.33 Sling loading <sling>. 276
E.5.3.5.3.34 External power <extpwr>. 276
E.5.3.5.3.35 Preparation for storage or shipment <pss>. 276
E.5.3.5.3.36 Activate ammunition, mines, etc. <arm>. 276
E.5.3.5.3.37 Load <load>. 276
E.5.3.5.3.38 Unload <unload>. 276
E.5.3.5.3.39 Software maintenance <softwaremaint>. 277
E.5.3.5.3.40 Additional maintenance tasks <other.maintsk>. 277
E.5.3.5.3.41 Follow-on maintenance task <followon.maintsk>. 277
E.5.3.6 Overhaul and retirement schedule work package (**aircraft only**) <orschwp>. 277
E.5.3.6.1 Work package identification information <wpidinfo>. 277
E.5.3.6.2 Work package initial setup <initial_setup>. 277
E.5.3.6.3 Overhaul and retirement schedule <orsch>. 277
E.5.3.7 General maintenance work package <gen.maintwp> 278
E.5.3.7.1 Work package identification information <wpidinfo>. 278
E.5.3.7.2 Work package initial setup <initial_setup> 278
E.5.3.7.3 Maintenance procedure <proc> 278
E.5.3.8 Lubrication instructions work package <lubewp>. 278
E.5.3.8.1 Work package identification information <wpidinfo>. 278

TABLE OF CONTENTS

PARAGRAPH PAGE
E.5.3.8.2 Work package initial setup <initial_setup> 278
E.5.3.8.3 Lubrication instructions 278
E.5.3.8.4 Lubrication charts 278
E.5.3.9 DMWR/NMWR specific maintenance work packages. 279
E.5.3.9.1 Preservation, packaging, and marking general information work package <ppmgeninfowp> 279
E.5.3.9.2 Facilities work package <facilwp> 281
E.5.3.9.2.1 Work package identification information <wpidinfo>. 281
E.5.3.9.2.2 Work package initial setup <initial_setup> 281
E.5.3.9.3 Overhaul inspection procedures (OIPs) work package <oipwp>. 281
E.5.3.9.3.1 Work package identification information <wpidinfo>. 281
E.5.3.9.3.2 Work package initial setup <initial_setup> 281
E.5.3.9.3.3 Overhaul Inspection Procedures (OIPs)....281
E.5.3.9.4 Depot mobilization requirements work package <mobilwp>....281
E.5.3.9.4.1 Work package identification information <wpidinfo>. 282
E.5.3.9.4.2 Work package initial setup <initial_setup> 282
E.5.3.9.4.3 Introduction for depot mobilization requirements work package <intro>....282
E.5.3.9.4.4 Mobilization requirements <mobilreq> 282
E.5.3.9.5 QA requirements work package <qawp> 282
E.5.3.9.5.1 Work package identification information <wpidinfo>. 282
E.5.3.9.5.2 Work package initial setup <initial_setup> 282
E.5.3.9.5.3 Statement of responsibility <responsibility> 282
E.5.3.9.5.4 Definitions <definitions>....283
E.5.3.9.5.5 Special requirements for inspection tools and equipment <specialreq>....283
E.5.3.9.5.6 Certification requirements <certreq>....283
E.5.3.9.5.7 Quality program <quality-program> 283
E.5.3.9.5.8 In-process inspections <inprocess>. 283
E.5.3.9.5.9 Acceptance inspections <acceptance>....283
E.5.3.9.5.10 First article inspection <first>....283
E.5.3.10 Illustrated list of manufactured items (**Maintainer/AMC and above**). 283
E.5.3.10.1 Illustrated list of manufactured items introduction work package <manu_items_introwp> 284
E.5.3.10.1.1 Work package identification information <wpidinfo>. 284
E.5.3.10.1.2 Work package initial setup <initial_setup> 284
E.5.3.10.1.3 Introduction for illustrated list of manufactured items work package <intro> 284
E.5.3.10.1.4 Index of manufactured items <manuindx>....284
E.5.3.10.2 Manufacturing procedure work package <manuwp> 284
E.5.3.10.2.1 Work package identification information <wpidinfo>. 284
E.5.3.10.2.2 Work package initial setup <initial_setup> 285
E.5.3.10.2.3 Instructions for manufactured items <manuitem>....285
E.5.3.11 Torque limits work package (**Maintainer/AMC and above**) <torquewp>..285
E.5.3.11.1 Work package identification information <wpidinfo>. 285
E.5.3.11.2 Work package initial setup <initial_setup>. 285

TABLE OF CONTENTS

PARAGRAPH PAGE
E.5.3.11.3 Introduction <intro>.....285
E.5.3.11.4 Torque instructions <torqueval>.....285
E.5.3.12 Wiring diagrams work package (**Maintainer/AMC and above**) <wiringwp>.....285
E.5.3.12.1 Work package identification information <wpidinfo>.....285
E.5.3.12.2 Work package initial setup <initial_setup>.....286
E.5.3.12.3 Introduction <intro>.....286
E.5.3.12.4 Wire identification <wireid>.....286
E.5.3.12.5 Abbreviations <abbrev>.....286
E.5.3.12.6 Wiring diagrams <wiringdiag>.....286
E.5.3.13 Aircraft specific maintenance work packages.....286
E.5.3.13.1 Preventive maintenance inspections work package <pmiwp>.....286
E.5.3.13.1.1 Work package identification information <wpidinfo>.....286
E.5.3.13.1.2 Work package initial setup <initial_setup>.....286
E.5.3.13.1.3 General information and introduction <geninfo>.....286
E.5.3.13.1.4 Standards of serviceability.....286
E.5.3.13.1.5 Special inspections.....286
E.5.3.13.2 Aircraft inventory master guide work package <inventorywp>.....287
E.5.3.13.2.1 Work package identification information <wpidinfo>.....287
E.5.3.13.2.2 Work package initial setup <initial_setup>.....287
E.5.3.13.2.3 Introduction <intro>.....288
E.5.3.13.2.4 Security <security>.....288
E.5.3.13.2.5 Inventoriable items <inventoriable>.....288
E.5.3.13.2.6 Periods of inventory <prdinv>.....288
E.5.3.13.3 Storage of aircraft work package <storagewp>.....288
E.5.3.13.3.1 Work package identification information <wpidinfo>.....289
E.5.3.13.3.2 Work package initial setup <initial_setup>.....289
E.5.3.13.3.3 General information for storage of aircraft work package <geninfo>.....289
E.5.3.13.3.4 Flyable storage <flyable>, short term storage <short>, and intermediate storage <intermediate>.....289
E.5.3.13.4 Weighing and loading work package (ASB only) <wtloadwp>.....289
E.5.3.13.4.1 Work package identification information <wpidinfo>.....289
E.5.3.13.4.2 Work package initial setup <initial_setup>.....289
E.5.3.13.4.3 General information <geninfo>.....290
E.5.3.13.4.4 Weighing information <formchart>.....290
E.5.3.13.4.5 Loading information <weightinst>.....290
E.5.3.14 Auxiliary equipment maintenance work package <auxeqpwp>.....290
E.5.3.14.1 Work package identification information <wpidinfo>.....290
E.5.3.14.2 Work package initial setup <initial_setup>.....290
E.5.3.14.3 Auxiliary equipment procedures <maintsk>/<proc>.....290
E.5.3.15 Ammunition specific work packages.....291
E.5.3.15.1 Ammunition maintenance work package <ammowp>.....291
E.5.3.15.1.1 Work package identification information <wpidinfo>.....291
E.5.3.15.1.2 Work package initial setup <initial_setup>.....291

TABLE OF CONTENTS

PARAGRAPH PAGE
E.5.3.15.1.3 Care and handling 291
E.5.3.15.1.3.1 Ammunition markings <mark> 291
E.5.3.15.1.3.2 Classification of defects <ammo.defect>....291
E.5.3.15.1.3.3 Handling <ammo.handling>. 291
E.5.3.15.1.3.3.1 Unpacking <unpack> 291
E.5.3.15.1.3.3.2 Packing <pack>....291
E.5.3.15.1.4 Defective <ammo.defect>....291
E.5.3.15.1.5 Cleaning and painting <clean> or <paint> 291
E.5.3.15.2 Ammunition marking information work package <ammo.markingwp>.292
E.5.3.15.2.1 Work package identification information <wpidinfo>. 292
E.5.3.15.2.2 Work package initial setup <initial_setup> 292
E.5.3.15.3 Foreign ammunition (NATO) work package <natowp> 292
E.5.3.15.3.1 Work package identification information <wpidinfo> 292
E.5.3.15.3.2 Work package initial setup <initial_setup> 292
E.5.3.16 Preventive maintenance services/Preventive maintenance daily inspection work packages (A**ircraft preventive maintenance services/preventive maintenance daily only**) <pms-inspecwp> or <pmd-inspecwp> 292
E.5.3.16.1 Work package identification information <wpidinfo>. 292
E.5.3.16.2 Work package initial setup <initial_setup> 292
E.5.3.16.3 Actuation warning....292
E.5.3.16.4 Area diagram....293
E.5.3.16.5 Standard checklists....293
E.5.3.17 Phased maintenance inspection work package (A**ircraft phased maintenance checklist only**) <pmi-cklistwp>....293
E.5.3.17.1 Work package identification information <wpidinfo>. 293
E.5.3.17.2 Work package initial setup <initial_setup> 293
E.5.3.17.3 Inspection area diagrams <figure> 293
E.5.3.17.4 Phased maintenance checklist. 293

E.6 NOTES....294

F REPAIR PARTS AND SPECIAL TOOLS LIST (RPSTL) 313

F.1 SCOPE....313
F.1.1 Scope....313

F.2 APPLICABLE DOCUMENTS....313

F.3 DEFINITIONS....313

F.4 GENERAL REQUIREMENTS....313
F.4.1 General....313
F.4.2 Maintenance level/class applicability. 313
F.4.3 Preparation of digital data for electronic delivery. 313

TABLE OF CONTENTS

PARAGRAPH PAGE
F.4.4 Use of the Document Type Definition (DTD)/stylesheet. 314
F.4.5 Content structure. 314
F.4.6 Style and format. 314
F.4.7 Work package development. 314
F.4.8 Selective application and tailoring. 314

F.5 DETAILED REQUIREMENTS 314
F.5.1 General. 314
F.5.2 Repair Parts and Special Tool List (RPSTL) development. 314
F.5.3 Preparation of Repair Parts and Special Tool Lists (RPSTL) 314
F.5.3.1 Separate RPSTL TM. 314
F.5.3.2 Parts information chapter <pim>. 315
F.5.3.3 Repair Parts and Special Tool List (RPSTL) work packages requirements. 315
F.5.3.3.1 Repair Parts and Special Tool List(RPSTL) work packages <pim> included in a maintenance TM. 315
F.5.3.3.2 Repair Parts and Special Tool List (RPSTL) work packages included in a DMWR/NMWR. 315
F.5.3.3.2.1 Depot repair parts. 315
F.5.3.4 Repair parts list, special tools, and kits work package layout. 316
F.5.3.5 Introduction work package <introwp>. 316
F.5.3.5.1 Work package identification information <wpidinfo>. 316
F.5.3.5.2 Work package initial setup <initial_setup>. 316
F.5.3.5.3 Introduction. 316
F.5.3.5.3.1 Non aviation Repair Parts and Special Tool List (RPSTL) introduction. 316
F.5.3.5.3.2 Aviation Repair Parts and Special Tool List (RPSTL) introduction. 324
F.5.3.5.3.3 Indexed Repair Parts and Special Tool List (RPSTL) illustration and legend <Figure>. 332
F.5.3.6 Repair parts list work package <plwp>. 332
F.5.3.6.1 Work package identification information <wpidinfo>. 332
F.5.3.6.2 Work package initial setup <initial_setup>. 332
F.5.3.6.3 Repair parts list <pi.category>. 332
F.5.3.6.3.1 Repair parts Figure title <title>. 332
F.5.3.6.3.2 Repair part item <pi.item>. 332
F.5.3.6.3.2.1 Item number column <callout>. 332
F.5.3.6.3.2.2 Source, Maintenance, and Recoverability (SMR) code column <smr>. 332
F.5.3.6.3.2.3 National Stock Number (NSN) column <nsn>. 333
F.5.3.6.3.2.4 Commercial And Government Entity Code (CAGEC) column <cageno> 333
F.5.3.6.3.2.5 Part number column <partno> 333
F.5.3.6.3.2.6 Description and Usable On Code (UOC) column. 333
F.5.3.6.3.2.6.1 Functional group header <fncgrp> 333
F.5.3.6.3.2.6.2 Item name <name> 333
F.5.3.6.3.2.6.3 Description <desc> 333
F.5.3.6.3.2.6.4 Indentions. 333

TABLE OF CONTENTS

PARAGRAPH		PAGE
F.5.3.6.3.2.6.5	Usable On Code (UOC) <uoc>	333
F.5.3.6.3.2.6.6	Serial number application <usbefserno>	333
F.5.3.6.3.2.6.7	Assembled items	334
F.5.3.6.3.2.6.8	Manufactured items.	334
F.5.3.6.3.2.6.9	Kits and kit repair parts	334
F.5.3.6.3.2.6.10	End of figure statement	334
F.5.3.6.3.2.7	Quantity column <qty>	335
F.5.3.6.3.2.8	(MC) United States Marine Corp. (USMC) quantity per equipment column <qty_per_end_item>	335
F.5.3.6.3.2.9	Mandatory replacement <mrp>	335
F.5.3.6.3.2.10	Unit of issue <ui>	335
F.5.3.6.3.2.10.1	Unit of measure 'um'	335
F.5.3.6.3.2.11	Reference designator <refdes>	335
F.5.3.6.3.2.12	Next higher assembly <nha_item>	335
F.5.3.6.3.2.12.1	Parts breakdown reference <part.breakdown.ref>.	335
F.5.3.6.4	Basic Issue Items (BII) (repair parts)	335
F.5.3.6.5	Expendable and durable items.	335
F.5.3.7	Repair parts for special tools list work package <stl_partswp>	335
F.5.3.7.1	Work package identification information <wpidinfo>	336
F.5.3.7.2	Work package initial setup <initial_setup>	336
F.5.3.7.3	Special tools repair parts items list <pi.category>	336
F.5.3.7.3.1	Functional group header <fncgrp>	336
F.5.3.8	Kit parts list work package <kitswp>	336
F.5.3.8.1	Work package identification information <wpidinfo>	336
F.5.3.8.2	Work package initial setup <initial_setup>	336
F.5.3.8.3	Kits part items list <pi.category>	336
F.5.3.8.3.1	Functional group header <fncgrp>	336
F.5.3.8.3.2	Kit part item group <kititem>	336
F.5.3.8.3.3	Kits part item quantity <qty>	337
F.5.3.9	Bulk items work package <bulk_itemswp>	337
F.5.3.9.1	Work package identification information <wpidinfo>	337
F.5.3.9.2	Work package initial setup <initial_setup>	337
F.5.3.9.3	Bulk item <pi.item>	337
F.5.3.9.3.1	ITEM column <callout>	337
F.5.3.9.3.2	Functional group header <fncgrp>	337
F.5.3.10	Special tools list work package <stlwp>	337
F.5.3.10.1	Work package identification information <wpidinfo>.	337
F.5.3.10.2	Work package initial setup <initial_setup>	337
F.5.3.10.3	Special tools list <pi.category>	337
F.5.3.10.3.1	Item number column	337
F.5.3.10.3.2	Functional group header <fncgrp>	338
F.5.3.10.3.3	D-coded items	338
F.5.3.10.3.4	Basis of Issue (BOI) <boi>	338
F.5.3.10.3.5	Quantity column	338

TABLE OF CONTENTS

PARAGRAPH PAGE
F.5.3.10.3.6 Components list <kititem>....338
F.5.3.11 Cross-reference index work packages. 338
F.5.3.11.1 National stock number (NSN) index work package <nsnindxwp> 338
F.5.3.11.1.1 Work package identification information <wpidinfo>. 338
F.5.3.11.1.2 Work package initial setup <initial_setup> 338
F.5.3.11.1.3 National Stock Number (NSN) index <nsnindx>. 338
F.5.3.11.2 Part number index work package <pnindxwp> 338
F.5.3.11.2.1 Work package identification information <wpidinfo>. 339
F.5.3.11.2.2 Work package initial setup <initial_setup> 339
F.5.3.11.2.3 Part number index <pnindx> 339
F.5.3.11.3 Reference designator index work package <refdesindxwp> 339
F.5.3.11.3.1 Work package identification information <wpidinfo>. 339
F.5.3.11.3.2 Work package initial setup <initial_setup 339
F.5.3.11.3.3 Reference designator index <refdesindx> 339
F.5.3.11.4 Bulk Figure reference 339
F.5.3.11.5 Sets and kits 339
F.5.3.12 Illustrations 339
F.5.3.12.1 Arrangement of illustrations. 340
F.5.3.12.2 Use of illustrations 340
F.5.3.12.3 Identical parts/item numbers....340
F.5.3.12.4 Identical assemblies 340

F.6 NOTES....340

G SUPPORTING INFORMATION 355

G.1 SCOPE....355
G.1.1 Scope....355

G.2 APPLICABLE DOCUMENTS....355

G.3 DEFINITIONS....355

G.4 GENERAL REQUIREMENTS....355
G.4.1 General....355
G.4.2 Maintenance level/class applicability 355
G.4.3 Preparation of digital data for electronic delivery 355
G.4.4 Use of the Document Type Definition (DTD)/stylesheet....355
G.4.5 Content structure....356
G.4.6 Style and format....356
G.4.7 Work package development....356
G.4.8 Safety devices and interlocks....356
G.4.9 Electrostatic Discharge (ESD) sensitive parts 356
G.4.10 Nuclear hardness <hcp>....356
G.4.11 Selective application and tailoring....356

TABLE OF CONTENTS

PARAGRAPH PAGE

G.5 DETAILED REQUIREMENTS....356

G.5.1 Preparation of supporting information....356
G.5.2 References work package <refwp>....357
G.5.2.1 Work package identification information <wpidinfo>. 357
G.5.2.2 Work package initial setup <initial_setup> 357
G.5.2.3 Scope <scope> 357
G.5.2.4 Publication list <publist> 357
G.5.3 (A) Maintenance Allocation Chart (MAC) (**Maintainer/AMC only**)....357
G.5.3.1 (A) Introduction for non-aviation Maintenance Allocation Chart (MAC) work package <macintrowp>....357
G.5.3.1.1 (A) Work package identification information <wpidinfo>....357
G.5.3.1.2 (A) Work package initial setup <initial_setup>....357
G.5.3.1.3 (A) Introduction <intro> 357
G.5.3.2 (A) Introduction for aviation Maintenance Allocation Chart (MAC) work package <macintrowp>....363
G.5.3.2.1 (A) Work package identification information <wpidinfo>....363
G.5.3.2.2 (A) Work package initial setup <initial_setup>....363
G.5.3.2.3 (A) Introduction <intro> 363
G.5.3.3 (A) Maintenance Allocation Chart (MAC) work package <macwp>. 369
G.5.3.3.1 (A) Work package identification information <wpidinfo>....369
G.5.3.3.2 (A) Work package initial setup <initial_setup>....369
G.5.3.3.3 (A) Maintenance Allocation Chart (MAC) entries 369
G.5.3.3.4 (A) Maintenance Allocation Chart (MAC) format 370
G.5.3.4 (A) Tools and test equipment requirements <tereqtab>....371
G.5.3.5 (A) Remarks <remarktab>. 371
G.5.4 Components of End Item (COEI)/Basic Issue Items (BII) and Supply System Responsibility (SSR) lists work package (**crew (operator) only**) <coeibiiwp> 371
G.5.4.1 Work package identification information <wpidinfo>. 371
G.5.4.2 Work package initial setup <initial_setup> 371
G.5.4.3 Introductions for COEI/BII and SSR lists work package <intro>. 371
G.5.4.3.1 (A) Introduction for COEI/BII....371
G.5.4.3.2 (MC) Introduction for SSR 374
G.5.4.4 COEI/SSR list <coei>....375
G.5.4.4.1 List <coeitab> 375
G.5.4.5 (A) Basic Issue Items (BII) list <bii>....375
G.5.5 Additional Authorization List (AAL) and Using Unit Responsibility Items (UURI) work package (**crew (operator) only**) <aalwp> 376
G.5.5.1 Work package identification information <wpidinfo>. 376
G.5.5.2 Work package initial setup <initial_setup> 376
G.5.5.3 AAL/UURI introductions <intro> 376
G.5.5.3.1 (A) AAL introduction 376
G.5.5.3.2 (MC) UURI introduction 377
G.5.5.4 AAL/UURI list <aal> 378

TABLE OF CONTENTS

PARAGRAPH PAGE
G.5.6 Expendable and durable items list work package <explistwp> 378
G.5.6.1 Work package identification information <wpidinfo>. 378
G.5.6.2 Work package initial setup <initial_setup> 378
G.5.6.3 Introduction for expendable and durable items list work package <intro>. ..378
G.5.6.4 Expendable and durable items list <explist> 379
G.5.7 Tool identification list work package (**Maintainer/AMC and above**) <toolidwp>. 379
G.5.7.1 Work package identification information <wpidinfo>. 379
G.5.7.2 Work package initial setup <initial_setup> 379
G.5.7.3 Introduction for tool identification list work package <intro> 379
G.5.7.4 Tool identification list <toolidlist> 380
G.5.8 Mandatory replacement parts work package (**Maintainer/AMC and above**) <mrplwp>. 380
G.5.8.1 Work package identification information <wpidinfo>. 381
G.5.8.2 Work package initial setup <initial_setup> 381
G.5.8.3 Introduction for mandatory replacement parts work package <intro> 381
G.5.8.4 Mandatory replacement parts list <mprl>. 381
G.5.9 Critical safety items (CSIs) work package <csi.wp> 381
G.5.9.1 Work package identification information <wpidinfo>. 381
G.5.9.2 Work package initial setup <initial_setup> 381
G.5.9.3 Critical Safety Items (CSIs) (Flight Safety Critical Aircraft Parts (FSCAPs)) <csi> 381
G.5.10 Support items work package <supitemwp> 381
G.5.10.1 Work package identification information <wpidinfo>. 381
G.5.10.2 Work package initial setup <initial_setup> 381
G.5.10.3 Introduction <intro> 381
G.5.10.4 Support items lists 381
G.5.11 Additional work packages <genwp>. 382
G.5.11.1 Work package identification information <wpidinfo>. 382
G.5.11.2 Work package initial setup <initial_setup> 382

G.6 NOTES 382

H DESTRUCTION OF ARMY MATERIEL TO PREVENT ENEMY USE 401

H.1 SCOPE 401
H.1.1 Scope. 401

H.2 APPLICABLE DOCUMENTS 401

H.3 DEFINITIONS 401

H.4 GENERAL REQUIREMENTS 401
H.4.1 General 401
H.4.2 Types of manuals. 401

TABLE OF CONTENTS

PARAGRAPH PAGE
H.4.2.1 Destruction manuals for a Federal Supply Classification (FSC) 401
H.4.2.2 Destruction manuals/work packages for weapon systems. 402
H.4.2.3 Preparation of digital data for electronic delivery 402
H.4.3 Use of the Document Type Definition (DTD)/stylesheet. 402
H.4.4 Content structure 402
H.4.5 Style and format 402
H.4.6 Selective application and tailoring 402
H.4.7 General destruction rules. 402

H.5 DETAILED REQUIREMENTS 403
H.5.1 Front and rear matter 403
H.5.2 General information work package <ginfowp> 403
H.5.2.1 Work package identification information <wpidinfo>. 403
H.5.2.2 Work package initial setup <initial_setup> 403
H.5.3 Destruction introduction work package <destruct-introwp> 403
H.5.3.1 Work package identification information <wpidinfo>. 403
H.5.3.2 Work package initial setup <initial_setup> 404
H.5.3.3 Authority to destroy materiel <authorize_to_destroy> 404
H.5.3.4 Reporting destruction <report_destruct> 404
H.5.3.5 General destruction information <general_destruct_info>. 404
H.5.3.6 Degree of destruction 404
H.5.3.7 Essential components and spare parts <component_spares>. 404
H.5.4 Destruction procedures work package <destruct-materialwp>. 405
H.5.4.1 Work package identification information <wpidinfo>. 405
H.5.4.2 Work package initial setup <initial_setup> 405
H.5.4.3 Parts list <essential_spares> 405
H.5.4.4 Specific destruction procedures <proc> 405
H.5.4.5 Classified equipment and documents 405

H.6 NOTES 405

I BATTLE DAMAGE ASSESSMENT AND REPAIR (BDAR) 407

I.1 SCOPE 407
I.1.1 Scope. 407

I.2 APPLICABLE DOCUMENTS 407

I.3 DEFINITIONS 407

I.4 GENERAL REQUIREMENTS 407
I.4.1 Maintenance level. 407
I.4.2 Maintenance level/class applicability. 407
I.4.3 Preparation of digital data for electronic delivery 407
I.4.4 Use of the Document Type Definition (DTD)/stylesheet. 408

TABLE OF CONTENTS

PARAGRAPH PAGE
I.4.5 Content structure 408
I.4.6 Style and format 408
I.4.7 Work package development 408
I.4.8 Safety devices and interlocks 408
I.4.9 Electrostatic Discharge (ESD) sensitive parts 408
I.4.10 Nuclear hardness <hcp> 408
I.4.11 Selective application and tailoring 408

I.5 DETAILED REQUIREMENTS 409
I.5.1 Content 409
I.5.1.1 Operating procedures 409
I.5.2 Front and rear matter 409
I.5.3 General information chapter <gim> 409
I.5.3.1 General information work package <ginfowp> 409
I.5.3.2 BDAR unique general information work package <bdar-geninfowp>. 409
I.5.3.2.1 Work package identification information <wpidinfo>. 409
I.5.3.2.2 Initial setup <initial_setup> 409
I.5.3.2.3 BDAR fixes statement 409
I.5.3.2.4 Standards and practices <bdar-std-practices> 409
I.5.3.2.5 Tasks and responsibilities <bdar-task-resp> 410
I.5.3.2.5.1 Tagging/identifying BDAR repairs 410
I.5.3.2.5.2 Reports 410
I.5.3.2.6 Combat Threats <bdar-combat-threat> (Aviation Only). 410
I.5.4 Battle damage assessment chapter <baim> 410
I.5.4.1 Battle damage assessment work package(s) <damage-assesswp>. 410
I.5.4.1.1 Work package identification information <wpidinfo>. 411
I.5.4.1.2 Work package initial setup <initial_setup> 411
I.5.4.1.3 BDAR fixes statement 411
I.5.4.1.4 Introduction <intro> 411
I.5.4.1.5 Fault assessment tables 411
I.5.5 Battle damage repair chapter <brim> 411
I.5.5.1 Repair work package <genrepairwp>. 411
I.5.5.1.1 Work package identification information <wpidinfo>. 412
I.5.5.1.2 Initial setup information <initial_setup> 412
I.5.5.1.3 BDAR fixes statement 412
I.5.5.1.4 Introduction <geninfo> 412
I.5.5.1.4.1 Scope. 412
I.5.5.1.4.2 Repair procedure index 412
I.5.5.1.5 Repair procedure <bdar-repair-proc>. 412
I.5.5.1.5.1 General 412
I.5.5.1.5.2 Item name, trouble. 412
I.5.5.1.5.2.1 Limitations <bdar-limitation> 412
I.5.5.1.5.2.2 Personnel/time required <bdar-persn> 412
I.5.5.1.5.2.3 Materials/tools <bdar-mtrl-tools> 413

TABLE OF CONTENTS

PARAGRAPH PAGE
I.5.5.1.5.2.4 Procedural steps <proc>....413
I.5.5.1.5.3 Options....413
I.5.5.1.5.4 Item name, category....413
I.5.6 Supporting information chapter <sim>....413
I.5.6.1 References work package <refwp>....413
I.5.6.2 Special or fabricated tools work package <bdartoolswp>....413
I.5.6.2.1 Work package identification information <wpidinfo>....413
I.5.6.2.2 Initial setup information <initial_setup>....413
I.5.6.2.3 BDAR fixes statement....413
I.5.6.2.4 Content and format....413
I.5.6.3 Expendable and durable items work package <explistwp>....414
I.5.6.4 Substitute materials/parts work package <substitute-matwp>....414
I.5.6.4.1 Work package identification information <wpidinfo>....414
I.5.6.4.2 Initial setup information <initial_setup>....414
I.5.6.4.3 BDAR fixes statement....414
I.5.6.4.4 Content....414

I.6 NOTES....414

J PREVENTIVE MAINTENANCE CHECKLIST (PMC)....421

J.1 SCOPE....421
J.1.1 Scope....421

J.2 APPLICABLE DOCUMENTS....421

J.3 DEFINITIONS....421

J.4 GENERAL REQUIREMENTS....421
J.4.1 General....421
J.4.2 Development of a Preventive Maintenance Checklist (PMC)....421
J.4.3 Preparation of digital data for electronic delivery....421
J.4.4 Use of Document Type Definition (DTD)/stylesheet....421
J.4.5 Content structure....421
J.4.6 Style and format....422
J.4.7 Preventive Maintenance Checklist (PMC) numbering....422
J.4.8 National Stock Numbers (NSNs) and Part Numbers (P/Ns)....422
J.4.9 Illustrations....422
J.4.10 Selective application and tailoring....422

J.5 DETAILED REQUIREMENTS....422
J.5.1 Basic content....422
J.5.2 Usage note and reporting errors and recommending improvements statement <reporting>....422
J.5.3 Technical content....422

TABLE OF CONTENTS

PARAGRAPH PAGE
J.5.4 Item numbering 422
J.5.5 Inspection checklist use 423

J.6 NOTES 423
J.6.1 Acquisition requirements 423

K LUBRICATION ORDERS 425

K.1 SCOPE 425
K.1.1 Scope. 425

K.2 APPLICABLE DOCUMENTS 425

K.3 DEFINITIONS 425

K.4 GENERAL REQUIREMENTS 425
K.4.1 General 425
K.4.2 Development of lubrication instructions. 425
K.4.3 Preparation of digital data for electronic delivery 425
K.4.4 Use of Document Type Definition (DTD)/stylesheet 425
K.4.5 Content structure 426
K.4.6 Style and format 426
K.4.7 Work package development 426
K.4.8 Warnings, cautions, and notes 426
K.4.9 Illustrations 426
K.4.9.1 Single illustrations 426
K.4.9.2 Multiple illustrations. 426
K.4.10 Safety devices and interlocks 426
K.4.11 Electrostatic Discharge (ESD) sensitive parts 426
K.4.12 Selective application and tailoring. 426

K.5 DETAILED REQUIREMENTS 426
K.5.1 Lubrication Order (LO) card <lubeorder> 426
K.5.1.1 Logbook size lubrication order 426
K.5.1.2 Lubrication order (LO) number. 426
K.5.1.3 Lubrication order (LO) card numbering 427
K.5.2 Title page (first card) contents <frntcover_abbreviated> 427
K.5.2.1 Heading 427
K.5.2.2 Title <tmtitle> 427
K.5.2.3 National Stock Number (NSN), part number, Commercial and Government Entity Code (CAGEC), and End Item Code (EIC) 427
K.5.2.4 Reference line 427
K.5.2.5 Reporting errors <reporting>. 427
K.5.2.6 Distribution statement, export control warning, and destruction notice <notices> 427

TABLE OF CONTENTS

PARAGRAPH PAGE
K.5.2.7 Lubrication order (LO) statement <general_purpose_notices>.....427
K.5.3 Introduction <intro>.....427
K.5.3.1 General statement(s)/notes.....427
K.5.3.1.1 General note placement.....427
K.5.3.1.2 General note content.....428
K.5.3.2 Oil filter statement.....428
K.5.3.3 Army Oil Analysis Program (AOAP) statements.....428
K.5.3.3.1 Army Oil Analysis Program (AOAP) sampling interval statement.....428
K.5.3.3.2 Army Oil Analysis Program (AOAP) not available/non-enrolled statement.....428
K.5.3.4 Warranty hardtime statement.....428
K.5.4 Lubrication procedures <lubewp>.....428
K.5.4.1 Work package identification information <wpidinfo>.....428
K.5.4.2 Work package initial setup <initial_setup>.....429
K.5.4.3 Maintenance class.....429
K.5.4.4 Grouped lubrication points.....429
K.5.4.5 Disassembling and hand packing.....429
K.5.4.6 Cleaning, disassembling, and reassembling.....429
K.5.4.7 Washing and natural drying.....430
K.5.4.8 Preservative material.....430
K.5.5 Lubricants and military symbols.....430
K.5.5.1 Lubrication interval symbols.....430
K.5.6 Measurements.....430
K.5.7 Lubricant table.....431
K.5.7.1 Notes to tables.....431
K.5.8 Special notes.....431
K.5.8.1 Pertinent lubrication point information.....431
K.5.8.2 Effect of extreme conditions.....431
K.5.9 Lubrication order rear matter <lubeorder_rear>.....431
K.5.9.1 Reporting errors and recommending improvements DA Form 2028 <da2028>.....431
K.5.9.2 Authentication block <authent>.....431
K.5.9.3 Back cover <back>.....431

K.6 NOTES.....431

L MAINTENANCE OR DEMILITARIZATION OF AMMUNITION PROCEDURES.....437

L.1 SCOPE.....437
L.1.1 Scope.....437

TABLE OF CONTENTS

PARAGRAPH PAGE

L.2 APPLICABLE DOCUMENTS....437

L.3 DEFINITIONS....437

L.4 GENERAL REQUIREMENTS....437
L.4.1 General....437
L.4.2 Development of maintenance or demilitarization instructions....437
L.4.3 Preparation of digital data for electronic delivery....437
L.4.4 Use of Document Type Definition (DTD)/stylesheet....437
L.4.5 Content structure and format....437
L.4.6 Style and format....437
L.4.7 Work package development....438
L.4.8 Electrostatic discharge (ESD) sensitive parts....438
L.4.9 Selective application and tailoring....438

L.5 DETAILED REQUIREMENTS....438
L.5.1 General....438
L.5.2 Preparation of maintenance or demilitarization DMWRs....438
L.5.3 General Information work package <ginfowp>....438
L.5.4 DMWR introduction work package <dmwr_introwp>....439
L.5.4.1 Work package identification information <wpidinfo>....439
L.5.4.2 Work package initial setup <initial_setup>....439
L.5.4.3 Work planning <work_planning>....439
L.5.4.4 Disposition <disposition>....439
L.5.4.5 Equipment <equipment>....439
L.5.4.6 Safety requirements <sfty_req>....439
L.5.4.7 Protection against general hazards <gen_hazards>....440
L.5.4.8 Protection against specific hazards <spec_hazards>....440
L.5.4.9 Hazard analysis <haz_analysis>....440
L.5.4.10 Environmental regulation compliance <erc>....440
L.5.4.11 Resource conservation and recovery regulations <rcrr>....440
L.5.4.12 Resource recovery <resource_recovery>....440
L.5.4.13 Reporting requirements <reporting_req>....440
L.5.4.14 Tabulated data <tabdata>....440
L.5.4.15 Flowchart <flowchart>....440
L.5.5 Operational requirements work package <dmwr_operationalreqwp>....440
L.5.5.1 Work package identification information <wpidinfo>....440
L.5.5.2 Work package initial setup <initial_setup>....441
L.5.5.3 Special safety requirements <spec_sfty_req>....441
L.5.5.4 Operational steps <op_steps>....441
L.5.5.5 Flowchart <flowchart>....441
L.5.6 Quality acceptance requirements work package <dmwr_qarwp>....441
L.5.6.1 Work package identification information <wpidinfo>....441
L.5.6.2 Work package initial setup <initial_setup>....441

TABLE OF CONTENTS

PARAGRAPH PAGE
L.5.6.3 Demilitarized ammunition <demil_qar> 441
L.5.6.4 Maintenance of ammunition <maintenance_qar> 441
L.5.6.5 Definitions <definitions>.....441
L.5.7 Supporting information work packages <dmwr_sim>. 441
L.5.7.1 References work package <refwp>.....441
L.5.7.2 Expendable and durable items list work package <explistwp>.....441
L.5.7.3 Equipment and special facilities work package <facilwp> 442
L.5.7.4 Tabulated data, military specifications, and drawings work package <genwp>. 442
L.5.7.5 Approved intraplant transfer equipment work package <genwp>.....442
L.5.7.6 Pentachlorophenol (PENTA)-treated packing materials work package <genwp>. 442
L.5.7.7 Environmental requirements work package <genwp>. 442
L.5.7.8 Hazard analysis work package <genwp>.....442
L.5.7.9 Other supporting information work packages <genwp> 442

L.6 NOTES.....442

TABLE OF FIGURES

FIGURE PAGE
FIGURE 1. Example of a maintenance work package....68
FIGURE 2. Example of a chapter title page....69
FIGURE 3. Example of work package identification information....70
FIGURE 4. Example of a foldout page....71
FIGURE 5. Example of emergency page markings....72
FIGURE 6. Example of a change transmittal page....73
FIGURE 7. Example of a TM front cover....74
FIGURE 8. Example of a phased maintenance TM front cover....77
FIGURE 9. Example of a DMWR front cover....78
FIGURE 10. Example of a DMWR cover with national overhaul standards....79
FIGURE 11. Example of a NMWR cover with national overhaul standards....80
FIGURE 12. Example of front cover for TM with national overhaul standards....81
FIGURE 13. (MC) Cover for Marine Corp only TM....82
FIGURE 14. (MC) Sample promulgation letter for new TM....84
FIGURE 15. (MC) Sample promulgation letter for changed TM with inserted pages only....85
FIGURE 16. (MC) Sample promulgation letter for changed TM with inserted pages and replacement pages....86
FIGURE 17. (MC) Sample promulgation letter for multi-volume TM with changes....87
FIGURE 18. (MC) Sample promulgation letter for joint service TM involving Marine Corps....88
FIGURE 19. (MC) Sample promulgation letter for revised TM....89
FIGURE 20. Example of transmittal page for change to support Army maintenance transformation....90
FIGURE 21. Example of a list of effective pages for a new publication....91
FIGURE 22. Example of a list of effective pages for a manual with changes....92
FIGURE 23. Example of a list of effective pages for a revised manual....93
FIGURE 24. Example of a list of effective pages for a multi-volume manual....94
FIGURE 25. Example of a title page....95
FIGURE 26. Example of a title page for a RPSTL TM....97
FIGURE 27. Example of a title page for a narrative TM with a RPSTL....98
FIGURE 28. Example of a title page with warning data for phased maintenance inspection and preventive maintenance services....99
FIGURE 29. Example of a table of contents with figures and tables listed....100
FIGURE 30. Example of a table of contents without figures and tables listed....101
FIGURE 31. Example of a RPSTL table of contents....102
FIGURE 32. Example of an alphabetical index....103
FIGURE 33. Example of an authentication block for the Army....104
FIGURE 34. Example of an authentication block for Joint Services....105
FIGURE B-1. Example of a station diagram....212
FIGURE C-1. Example of controls and indicators....222
FIGURE D-1. Example of a cover sheet for preshop analysis checklist....239
FIGURE D-2. Example of a of a table of tests and inspections for a preshop analysis....240
FIGURE D-3. Example of a component checklist....241
FIGURE D-4. Example of content for an operational checkout procedure....242

TABLE OF FIGURES

FIGURE PAGE
FIGURE D-5. Example of content for a troubleshooting procedure (Method A) 243
FIGURE D-6. Example of content for a troubleshooting procedure (Method B) 245
FIGURE D-7. Example of content for a troubleshooting procedure (Method C) 246
FIGURE D-8. Example of content for a combination testing and troubleshooting procedure..247
FIGURE E-1. Example of packaging inspection/service upon receipt 295
FIGURE E-2. Example of a PMCS table. 297
FIGURE E-3. Example of a PMCS mandatory replacement parts list.....298
FIGURE E-4. Example of tabular and narrative reliability, availability, and maintainability data. 299
FIGURE E-5. Example of classification of materiel defects.....300
FIGURE E-6. Example of an overhaul and retirement schedule.....301
FIGURE E-7. Example of a lubrication chart 302
FIGURE E-8. Example of an OIP table. 303
FIGURE E-9. Example of depot mobilization requirements. 304
FIGURE E-10. Example of an illustrated list of manufactured items. 305
FIGURE E-11. Example of torque limits data.....306
FIGURE E-12. Example of two-view chart diagram.....307
FIGURE E-13. Example of an area diagram for PMD. 308
FIGURE E-14. Example of an area diagram for PMS.....309
FIGURE E-15. Example of an inspection area diagram. 310
FIGURE E-16. Example of inspection access provisions. 311
FIGURE F-1. RPSTL page layout scenarios.....341
FIGURE F-2. Example of an introduction work package. 342
FIGURE F-3. Example of an indexed RPSTL illustration and legend. 343
FIGURE F-4. Example of a repair parts list work package 344
FIGURE F-5. Example of a multiservice RPSTL. 346
FIGURE F-6. Example of indentions (next higher assembly). 347
FIGURE F-7. Example of kits breakdown option 1.....348
FIGURE F-8. Example of kits breakdown option 2.....349
FIGURE F-9. Example of a bulk material list.....350
FIGURE F-10. Example of a special tools list work package.....351
FIGURE F-11. Example of a national stock number index work package. 352
FIGURE F-12. Example of a part number index work package. 353
FIGURE F-13. Example of a reference designator index work package. 354
FIGURE G-1. Example of references. 383
FIGURE G-2. Example of non-aviation MAC introduction.....384
FIGURE G-3. Example of aviation MAC introduction. 385
FIGURE G-4. Example of a non-aviation MAC. 386
FIGURE G-5. Example of joint service non-aviation MAC. 387
FIGURE G-6. Example of an aviation MAC.....388
FIGURE G-7. Example of non-aviation MAC tools and test equipment and remarks tables. ..389
FIGURE G-8. Example of aviation two-level MAC tools and test equipment and remarks tables. 390
FIGURE G-9. (A) Example of an introduction for COEI and BII lists.....391

TABLE OF FIGURES

FIGURE PAGE
FIGURE G-10. (A) Example of COEI list (Method A). 392
FIGURE G-11. (A) Example of COEI list (Method B). 393
FIGURE G-12. (A) Example of BII list (Method A). 394
FIGURE G-13. (A) Example of BII list (Method B). 395
FIGURE G-14. (A) Example of an AAL. 396
FIGURE G-15. Example of expendable and durable items list. 397
FIGURE G-16. Example of a tool identification list. 398
FIGURE G-17. Example of a mandatory replacement parts list. 399
FIGURE G-18. Example of a critical safety items parts table. 400
FIGURE I-1. Example of BDAR-general information work package. 415
FIGURE I-2. Example of BDAR assessment flowchart diagram. 416
FIGURE I-3. Example of BDAR assessment table. 417
FIGURE I-4. Example of substitute materials/parts. 418
FIGURE I-5. Example of substitute lubricants and hydraulic fluids. 419
FIGURE I-6. Example of substitute fuels. 420
FIGURE J-1. Example PMC cover page. 424
FIGURE K-1. Example of first card. 432
FIGURE K-2. Example of general statements/notes. 433
FIGURE K-3. Example – identification of lubricant symbol and lubrication points, interval, and note. 434
FIGURE K-4. Example of lubricant table. 435
FIGURE L-1. Example of operational requirements work package. 443
FIGURE L-2. Example of equipment and special facilities work package. 445
FIGURE L-3. Example of tabulated data, military specifications, and drawings. 446

TABLE PAGE

TABLE I. Manual styles and trim sizes 26
TABLE II. Foldout maximum page sizes (in inches) 27
TABLE III. Diagram specifications 45
TABLE A-I. Publication type and title with associated context matrix table 107
TABLE A-II. Operators and combined operator/maintenance requirements matrix for _____ 113
TABLE A-III. Below depot sustainment requirements matrix for _____.....123
TABLE A-IV. Combined maintenance and maintenance with parts requirements matrix for_____ 129
TABLE A-V. Aviation maintenance and maintenance with parts requirements matrix for aviation_____ 135
TABLE A-VI. Stand-alone RPSTL requirements matrix for _____. 141
TABLE A-VII. DMWR/NMWR requirements matrix for_____ 143
TABLE A-VIII. DMWR with overhaul standards requirements matrix for_____ 149
TABLE A-IX. Aircraft troubleshooting requirements matrix for_____ 155
TABLE A-X. Aircraft PMS or PMD requirements matrix for_____ 157
TABLE A-XI. Aircraft phased maintenance requirements matrix for_____ ...159
TABLE A-XII. Conventional and chemical ammunition requirements matrix for_____ 161
TABLE A-XIII. Conventional and chemical ammunition below depot sustainment requirements matrix for_____ 167
TABLE A-XIV. Conventional and chemical ammunition combined maintenance requirements matrix for_____ 173
TABLE A-XV. Stand-alone destruction of materiel manual requirements matrix for 179
TABLE A-XVI. BDAR requirements matrix for_____ 181
TABLE A-XVII. Preventive maintenance checklists requirements matrix for_____ 183
TABLE A-XVIII. Lubrication orders requirements matrix for_____ 185
TABLE A-XIX. DMWR maintenance/demilitarization of conventional and chemical requirements matrix for_____ 187
TABLE K-I. Maintenance classes 429
TABLE K-II. Lubrication intervals.....430

1. SCOPE.

1.1 Scope. This standard establishes the technical content, style, and format requirements for all Technical Manuals (TMs) for major weapon systems and their related systems, subsystems, equipment, Weapons Replacement Assemblies (WRAs), and Shop Replacement Assemblies (SRAs), including Destruction of Army Materiel to Prevent Enemy Use, Battle Damage Assessment and Repair (BDAR), Preventive Maintenance Checklists (PMCs), Lubrication Orders (LOs), and Ammunition Depot Maintenance Work Requirements (DMWRs). The requirements are applicable for all maintenance levels/classes through overhaul (depot) including DMWRs and National Maintenance Work Requirements (NMWRs). The requirements can be used to develop TMs in paper, page-based manuals. For purposes of this standard, electronic technical manual (ETM) is synonymous with page-based technical manual.

1.2 Paragraphs with limited applicability. This standard contains paragraphs and specific requirements that are not applicable to all services. Such paragraphs or requirements are prefixed to indicate the Services to which they pertain: (A) Army, (N) Navy, (MC) Marine Corps only manuals, and (F) Air Force. Portions not prefixed are applicable to all services. Paragraphs prefixed with MC pertain to manuals that are for the Marine Corps only and unless otherwise stated, do not apply to multi-service manuals involving the Marine Corps.

1.3 Use of the technical content. In addition to using the technical content requirements provided herein for the development of TMs, the technical information developed in accordance with this standard and MIL-STD-3008 can be used to provide the necessary input to other external systems that are designed to collect and report operations, maintenance, historical and parts requisition data required for efficient management and support of aviation and non-aviation weapon systems and their related systems, equipment, and components/modules.

1.4 Examples/figures. The figures used in the specification are examples only. The text of this specification takes precedence over the figures.

2. APPLICABLE DOCUMENTS.

2.1 General. The documents listed in this section are specified in sections 3, 4, and 5 of this standard. This section does not include documents cited in other sections of this multipart standard or recommended for additional information or as examples. While every effort has been made to ensure the completeness of this list, document users are cautioned that they must meet all specified requirements documents cited in sections 3, 4, and 5 of this standard, whether or not they are listed.

2.2 Government documents.

2.2.1 Specifications, standards, and handbooks. The following specifications, standards, and handbooks form a part of this document to the extent specified herein. Unless otherwise specified, the issues of these documents are those cited in the solicitation or contract.

SPECIFICATIONS

DEPARTMENT OF DEFENSE

MIL-PRF-63049 — Manuals, Technical: List of Applicable Publications (LOAP)

STANDARDS

DEPARTMENT OF DEFENSE

MIL-STD-882 — System Safety

MIL-STD-1309 — Definitions of Terms for Testing, Measurement, and Diagnostics

MIL-STD-1686 — Electrostatic Discharge Control Program for Protection of Electrical and Electronic Parts, Assemblies and Equipment (Excluding Electrically Initiated Explosive Devices)

MIL-STD-2361 — Digital Publications Development

HANDBOOKS

DEPARTMENT OF DEFENSE

MIL-HDBK-113 — Guide for the Selection of Lubricants, Functional Fluids, Preservatives and Specialty Products for use in Ground Equipment Systems

MIL-HDBK-263 — Electrostatic Discharge Control Handbook for Protection of Electrical and Electronic Parts, Assemblies and Equipment (Excluding Electrically Initiated Explosive Devices) (Metric)

MIL-HDBK-275 — Guide for Selection of Lubricants, Fluids, and Compounds for Use in Flight Vehicles and Components

MIL-HDBK-1222 — Guide to the General Style and Format of U.S. Army Work Package Technical Manuals

MIL-HDBK-9660 — DOD Produced CD-ROM Products

(Copies of these documents are available from the Document Automation and Production Service, Building 4/D, 700 Robbins Avenue, Philadelphia, PA 19111-5094 or online at https://assist.dla.mil/quicksearch/.)

H4/H8 — Commercial and Government Entity (CAGE) Codes

H6 — Federal Item Name Directory

(Copies of Handbooks H4/H8 and H6 are available on CD-ROM from the Commander, Defense Logistics Services Center, Battle Creek, MI 49017-3084 or online at http://www.dlis.dla.mil/hseries.asp.)

2.2.2 Other Government documents and publications. The following other Government documents and publications form a part of this document to the extent specified herein. Unless specified otherwise, the issues are those cited in the solicitation or contract.

AR 25-30	—	The Army Publishing Program
AR 25-52	—	Authorized Abbreviations, Brevity Code, and Acronyms
AR 95-1	—	Flight Regulations
AR 385-10	—	The Army Safety Program
CTA 50-909	—	Field and Garrison Furnishings and Equipment
CTA 50-970	—	Expendable/Durable Items (Except Medical, Class V, Repair Parts, and Heraldic Items)
DA PAM 25-30	—	Consolidated Index of Army Publications and Blank Forms
DA PAM 25-40	—	Army Publishing: Action Officers Guide
DA PAM 385-63	—	Range Safety
DA PAM 385-64	—	Ammunition and Explosives Safety Standards
DA PAM 738-751	—	Functional Users Manual for The Army Maintenance Management System-Aviation (TAMMS-A)
DA PAM 750-8	—	The Army Maintenance Management System (TAMMS) Users Manual

(Application for copies should be addressed to Commander, U. S. Army Publishing Directorate, Media Distribution Division, ATTN: JDHQSV-PAS, 1655 Woodson Road, St. Louis, MO 63114-6128 or online at http://www.apd.army.mil/.)

DODM 5200.01, Volume 1	—	Information Security Program: Overview, Classification, and Declassification
DODM 5200.01, Volume 2	—	Information Security Program: Marking of Classified Information
DODM 5200.01, Volume 3	—	Information Security Program: Protection of Classified Information
DODM 5200.01, Volume 4	—	Information Security Program: Controlled Unclassified Information (CUI)
DOD 5220.22-M	—	National Industrial Security Program Operating Manual
DODD 5230.24	—	Distribution Statements on Technical Documents

(Copies of DoD documents are available online at http://www.dtic.mil/.)

FM 4-25.11	—	First Aid
FM 4-30.31	—	Recovery and Battle Damage Assessment and Repair
Joint Pub 1-02	—	DOD Dictionary of Military and Associated Terms

SB 742-1	—	Inspection of Supplies and Equipment Ammunition Surveillance Procedures
TB 43-0118	—	Field Instructions for Painting and Preserving Communications-Electronics Equipment
TB 43-0213	—	Corrosion Prevention and Control (CPC) for Tactical Vehicles
TM 1-1500-204-23	—	Aviation Unit Maintenance (AVUM) and Aviation Intermediate Maintenance (AVIM) Manual for General Aircraft Maintenance, Volumes 1-10
TM 1-1500-335-23	—	Nondestructive Inspection Methods, Basic Theory
TM 1-1500-344-23	—	Cleaning and Corrosion Control (4 volumes)
TM 43-0139	—	Painting Instructions for Army Materiel
TM 55-1500-342-23	—	Joint Service Technical Manual for Aircraft Weight and Balance
TM 55-1500-345-23	—	Painting and Marking of Army Aircraft

(Copies of these publications are available from the U. S. Army Publishing Directorate, Media Distribution Division, 1655 Woodson Road, St. Louis, MO 63114-6128)

2.3 Non-Government publications. The following documents form a part of this document to the extent specified therein. Unless otherwise specified, the issues of these documents are those cited in the solicitation or contract.

AMERICAN NATIONAL STANDARDS INSTITUTE (ANSI)

ISO 1219-1	—	Fluid Power Systems and Components - Graphic Symbols and Circuit Diagrams -- Part 1: Graphic Symbols for Conventional Use and Data Processing Systems
ISO 1219-2	—	Fluid Power Systems and Components - Graphic Symbols and Circuit Diagrams -- Part 2: Circuit Diagrams
ISO 9000 Series	—	Quality Management

(Application for copies should be addressed to the American National Standards Institute Inc., 25 West 43rd Street, New York, NY 10036 or online at http://www.ansi.org/. DOD users can obtain copes at https://www.us.army.mil/suite/page/468324.)

AMERICAN SOCIETY OF MECHANICAL ENGINEERS (ASME)

ASME Y14.38	—	Abbreviations and Acronyms for Use on Drawings and Related Documents
ASME Y14.100	—	Engineering Drawing Practices

(Application for copies should be addressed to the American Society of Mechanical Engineers, 3 Park Avenue, New York, NY 10016-5990 or online at http://www.asme.org/. DOD users can obtain copes at https://www.us.army.mil/suite/page/468324.)

AMERICAN SOCIETY FOR TESTING AND MATERIALS (ASTM)

ASTM-F856	—	Standard Practice for Mechanical Symbols, Shipboard—Heating, Ventilation, and Air Conditioning (HVAC)

(Applications for copies should be addressed to the American Society for Testing Material, 100 Barr Harbor Drive, West Conshohocken, PA 19428-2959 or online at http://www.astm.org/. DOD users can obtain copes at https://www.us.army.mil/suite/page/468324.)

INSTITUTE OF ELECTRICAL AND ELECTRONICS ENGINEERS (IEEE)

IEEE Std 91	—	IEEE Standard Graphic Symbols for Logic Functions
IEEE Std 260.1	—	IEEE Standard Letter Symbols for Units of Measurement (SI Units, Customary Inch-Pound Units, and Certain Other Units)
IEEE Std 280	—	IEEE Standard Letter Symbols for Quantities Used in Electrical Science and Electrical Engineering
IEEE Std 315a	—	Supplement to Graphic Symbols for Electrical and Electronics Diagrams
IEEE Std 945	—	IEEE Recommended Practice for Preferred Metric Units for Use in Electrical and Electronics Science and Technology

(Application for copies should be addressed to the Institute of Electrical and Electronics Engineers, Inc., 345 East 47th Street, New York, NY 10017 or online at http://www.ieee.org/. DOD users can obtain copes at https://www.us.army.mil/suite/page/468324.)

2.4 Order of precedence. In the event of a conflict between the text of this document and the references cited herein, the text of this document takes precedence. Nothing in this document, however, supersedes applicable laws and regulations unless a specific exemption has been obtained.

3. **DEFINITIONS.**

3.1 Acronyms used in this standard. The acronyms used in this standard are defined as follows:

AAL	Additional Authorization List
AMC	Aviation Maintenance Company
AMDF	Army Master Data File
ANSI	American National Standards Institute
Ao	Operational Availability
AOAP	Army Oil Analysis Program
APD	Army Publishing Directorate
APE	Ammunition Peculiar Equipment
AQL	Acceptable Quality Level
AR	Army Regulation
ASB	Aviation Support Battalion
ASRL	Army SGML Registry and Library
ASTM	American Society for Testing and Materials
ATE	Automatic Test Equipment
AVMAC	Aviation Maintenance Allocation Chart
BDAR	Battle Damage Assessment and Repair
BII	Basic Issue Items
BIT	Built-in Test
BITE	Built-in Test Equipment
BOI	Basis of Issue
BTR	Ballistic Test Requirement
CAGEC	Commercial and Government Entity Code
CBRN	Chemical, Biological, Radiological, and Nuclear
CD	Compact Disc
CD-ROM	Compact Disc Read-Only Memory
CGM	Computer Graphics Metafile
COEI	Components of End Item
COMSEC	Communications Security
CPC	Corrosion Prevention and Control
CSI	Critical Safety Item
CTA	Common Table of Allowance
DMWR	Depot Maintenance Work Requirement
DoD	Department of Defense
DODAC	Department of Defense Ammunition Code

DRMO	Defense Reutilization Marketing Office
DTD	Document Type Definition
DVD	Digital Versatile Disc
ECM	Electronic Countermeasure
ECP	Engineering Change Proposal
e.g.	for example
EIC	End Item Code
EIR	Equipment Improvement Recommendation
EMP	Electromagnetic Pulse
ESD	Electrostatic Discharge
FDEP	Final Draft Equipment Publication
FGC	Functional Group Code
FRC	Final Reproducible Copy
FSC	Federal Supply Classification
FSCAP	Flight Safety Critical Aircraft Parts
HAP	Hazardous Air Pollutant
HCI	Hardness Critical Item
HCP	Hardness Critical Process
HR	Hand Receipt
IAW	in accordance with
i.e.	in other words
IEC	International Electrotechnical Commission
IEEE	Institute of Electrical and Electronics Engineers
IETM	Interactive Electronic Technical Manual
IGES	Initial Graphics Exchange Specification
ISO	International Organization for Standardization
IUID	Item Unique Identification
JPEG	Joint Photographers Experts Group
JTA	Joint Table of Allowances
JTCI	Joint Technical Committee for Information Technology
LIN	Line Item Number
LMI	Logistics Management Information
LOAP	List of Applicable Publications
LOGSA	Logistics Support Activity
LRU	Line Replacement Unit
MAC	Maintenance Allocation Chart

MEL	Maintenance Expenditure Limit
MOC	Maintenance Operational Checks
MOS	Military Occupational Specialty
MSC	Major Subordinate Command
MT	Maintenance Team
MTBCM	Mean Time Between Corrective Maintenance
MTBF	Mean Time Between Failures
MTF	Maintenance Test Flight
MTOE	Modified Table of Organization and Equipment
MTTR	Mean Time to Repair
MUX	Multiplex
MWO	Modification Work Order
NATO	North Atlantic Treaty Organization
NDI	Nondestructive Inspection
NDTI	Nondestructive Testing Inspection
NHA	Next Higher Assembly
NIIN	National Item Identification Number
NMP	National Maintenance Plan
NMWR	National Maintenance Work Requirement
NSN	National Stock Number
ODS	Ozone Depleting Substances
OIP	Overhaul Inspection Procedure
OSHA	Occupational Safety and Health Act
P/N	Part Number
PCB	Printed Circuit Board
PENTA	Pentachlorophenol
PI	Parts Information
PIN	Publication Identification Number
PM	Phased Maintenance
PMAC	Preliminary Maintenance Allocation Chart
PMC	Preventive Maintenance Checklist
PMCS	Preventive Maintenance Checks and Services
PMI	Phased Maintenance Inspection
PMS	Preventive Maintenance Services
PNG	Portable network Graphics
POL	Petroleum, Oil, and Lubricant

PSA	Preshop Analysis
QA	Quality Assurance
QTY	Quantity
RAM	Reliability, Availability, Maintainability
RCM	Reliability Centered Maintenance
RGL	Reading Grade Level
RMS	Reliability, Maintainability, and Supportability
RPSTL	Repair Parts and Special Tools List
SB	Supply Bulletin
SC	Supply Catalog
SKO	Sets, Kits, and Outfits
SMR	Source, Maintenance, and Recoverability
SPC	Statistical Process Control
SRA	Shop Replacement Assembly
SRU	Shop Replacement Unit
TAMMS	Total Army Maintenance Management System
TAMMS-A	Total Army Maintenance Management System Aviation
TASMG	Theater Aviation Sustainment Maintenance Group
TB	Technical Bulletin
TBO	Time Between Overhaul
TDA	Tables of Distribution and Allowances
TM	Technical Manual
TMDE	Test, Measurement, and Diagnostic Equipment
TOC	Table of Contents
TOE	Table of Organization and Equipment
U/I	Unit of Issue
UOC	Usable On Code
URL	Uniform Resource Locator
UUT	Unit Under Test
W3C	World Wide Web Consortium
WP	Work Package
WRA	Weapons Replacement Assembly
WTB	Warranty Technical Bulletin
WWW	World Wide Web
XML	Extensible Markup Language
XSL	Extensible Stylesheet Language

XSL-FO Extensible Stylesheet Language – Formatting Object

XSLT Extensible Stylesheet Language Transformation

3.2 Abbreviation. A shortened or contracted form of a word or phrase, used to represent the whole word or phrase, e.g., U.S. for United States. Abbreviations may contain punctuation.

3.3 Acquiring activity. The DoD component, activity, or organization of a using military service, or that organization delegated by a using service, that is responsible for the selection and determination of requirements for Technical Manuals (TMs).

3.4 Acronym. A word formed from the initial letters or groups of letters of words in a set phrase or series of words such as PMCS for preventive maintenance checks and services. Acronyms contain no punctuation.

3.5 Additional Authorization List (AAL) items. Items are optional (discretionary), are not essential to operate the end item, and are not listed on engineering drawings. Items are not turned in with the end item.

3.6 American National Standards Institute (ANSI). A private sector organization, that plans, develops, establishes, or coordinates standards, specifications, handbooks, or related documents.

3.7 Army Master Data File (AMDF). The files required to record, maintain, and distribute supply management data between and from Army commands to requiring activities.

3.8 Army Oil Analysis Program (AOAP). Effort to detect impending equipment component failure and determine lubricant condition through periodic analytical evaluation of oil samples.

3.9 Assembled item. An item has an "A" as the first letter of the source code in the SMR. This indicates the item is not stocked as an assembly but is assembled from its constituent repair parts.

3.10 Assembly. Two or more parts or subassemblies joined together to perform a specific function and capable of disassembly (e.g., brake assembly, fan assembly, audio frequency amplifier). Note that the distinction between an assembly and subassembly is determined by the individual application. An assembly in one instance may be a subassembly in another, where it forms a portion of an assembly.

3.11 Auxiliary equipment. Equipment, accessories, or devices which, when used with basic equipment, extend or increase its capability (e.g., Modified Table of Organization and Equipment (MTOE) items, etc.).

3.12 Basic Issue Items (BII). The minimum essential items not listed in the drawings, but required to place the equipment in operation, to operate it, and to perform emergency repairs. Although shipped separately packaged, BII must be with the equipment during operation and whenever they are transferred between property accounts. BII may be packed with communications security (COMSEC) equipment.

3.13 Basis of Issue (BOI). The quantity of an item (special tool) authorized for the end item density spread or for the unit level specified.

3.14 Block diagram. A modified schematic diagram in which each group of maintenance-significant components that together performs one or more functions is represented by a single symbol or block. The block or symbol representing the group of components shows simplified relevant input and output signals pertinent to the subject diagram.

3.15 Built-In Test Equipment (BITE). Any identifiable device that is a part of the supported end item and is used for testing that supported end item.

3.16 Bulk material. Material issued in bulk for manufacture or fabrication of support items (e.g., sheet metal, pipe tubing, bar stock, or gasket material); excludes expendable items.

3.17 Callout. Anything placed on an illustration to aid in identifying the objects being illustrated, such as index numbers, nomenclature, leader lines, and arrows.

3.18 Chemical, Biological, Radiological, and Nuclear (CBRN). Reference to decontamination procedures performed on equipment and/or personnel exposed to chemical, biological, radiological, and nuclear weapons.

3.19 Commercial and Government Entity Code (CAGEC). A five-character code assigned to commercial activities that manufacture or supply items used by the Federal Government and to Government activities that control design or are responsible for the development of certain specifications, standards, or drawings that control the design of Government items. CAGEC assignments are listed in the H4/H8 Commercial and Government Entity (CAGE) Codes.

3.20 Compact Disc (CD). CDs are discs that are 4.75 in (12 cm) in diameter. CDs can hold approximately 700 MB of data or 80 minutes of audio. The data on a CD is stored as small notches on the disc and is read by a laser from an optical drive.

3.21 Complete repair. Maintenance capacity, capability, and authority to perform all the corrective maintenance tasks in order to restore serviceability to a failed item. Excludes the prescriptive maintenance tasks, overhaul, and rebuild.

3.22 Component. A constituent part not normally considered capable of independent operation; a piece part.

3.23 Components of End Item (COEI). Items identified on the engineering drawing tree that are physically separated and distinct from the end item.

3.24 Comprehensibility. The completeness with which a user in the target audience understands the information in the TM.

3.25 Computer Graphics Metafile (CGM). Computer Graphics Metafile (CGM) is defined in ISO/IEC 86332. CGM provides a means of graphics data interchange for computer representation of 2D graphical information independent from any particular application, system, platform, or device. CGM contains a metafile that describes the content and additional function as in the standard. Basically, CGM is a wrapper for the data and the data is explained in the metafile.

3.26 Condition Based Maintenance. Maintenance performed or an item replacement action performed based upon condition of the item as determined by an evaluation of each item on a scheduled basis.

3.27 Corrosion Prevention and Control (CPC). Systematic maintenance steps/procedures taken to prevent or retard the gradual destruction and/or pitting of a metal surface or other materials, such as rubber and plastic, due to chemical attack.

3.28 Crew (operator) maintenance. Consists of performance of PMCS, inspections by sight and touch of accessible components per -10 manual or, condition based maintenance indicators/ instrumentation, lubrication, cleaning (including corrective actions to repair corrosive damage), preserving (including spot painting), tightening, replacement, minor adjustments authorized by the MAC, limited diagnosis and fault isolation as authorized by the MAC, and replacement of combat spares (unserviceable parts, modules, and assemblies) as authorized by the MAC and carried on board the equipment or system.

3.29 Critical Safety Item (CSI). Formerly referred to as Flight Safety Critical Aircraft Parts (FSCAP), CSI is an aviation-related part, assembly, installation or production system with one or more critical or critical safety characteristics that, if missing or not conforming to the design data, quality requirements or overhaul and maintenance documentation, would result in an unsafe condition that could cause loss or serious damage to the end item or major components, loss of control, uncommanded engine shutdown or serious injury or death to personnel. Unsafe conditions relate to hazard severity categories I and II of MIL-STD-882 and include items determined to be "life-limited," "fracture critical," "fatigue-sensitive," etc. The determining factor in Aviation CSI (FSCAP) is the consequence of failure, not the probability that the failure or consequence would occur. The term CSI (FSCAP) should be used throughout this manual.

3.30 Degradation. The reduction in system, subsystem, component performance capability.

3.31 Department of Defense (DoD). The Office of the Secretary of Defense (OSD) (including all boards and councils), the Military Departments (Army, Navy, and Air Force), the Organization of the Joint Chiefs of Staff (OJCS), the Unified and Specified Commands, the National Security Agency (NSA), and the Defense Agencies.

3.32 Department of Defense Ammunition Code (DODAC). An eight-character code developed to indicate interchangeability of ammunition and explosive items in Federal Supply Classification (FSC) Group 13. This eight-character code is divided into two parts. The two parts are separated by a hyphen. The first four digits represent the FSC; the letter and last three numerals represent the DoD Identification Code that is assigned to items that are interchangeable in function and use. The eight-character DoD ammunition code is used for such ammunition operations as worldwide stock status reporting and requisitioning when specific items are not required.

3.33 Depot-level maintenance. Maintenance that is beyond the capability of the field and below depot sustainment maintenance activities. Depot-level maintenance normally consists of overhaul, recondition, manufacture, repair, or modification and requires technical assistance beyond lower maintenance level capability.

3.34 Depot Maintenance Work Requirement (DMWR). A maintenance serviceability document for depot maintenance operations. The document prescribes the essential factors to ensure that an acceptable and cost-effective product is obtained.

3.35 Digital graphics form. A standard graphics form acceptable for graphics preparation under this standard. These forms include Computer Graphics Metafile (CGM), raster, Initial Graphics Exchange Specification (IGES), Joint Photographers Experts Group (JPEG) and Portable Network Graphics (PNG).

3.36 Digital Versatile Disc (DVD). A DVD is a high-capacity optical disc that looks like a CD, but can store much more information. A single-layer, single-sided DVD can store approximately 4.7 GB of data. This enables massive computer applications and full-length movies to be stored on a single DVD.

3.37 Disc. Removable and portable storage medium used to house data, music, movies, etc. Examples are CD or DVD.

3.38 Document instance. The instance is the actual document text and its accompanying Extensible Markup Language (XML) tags conforming to the specifications and restrictions set forth in the Document Type Definition (DTD).

3.39 Document Type Definition (DTD). The definition of the markup rules for a given class of documents. A DTD or reference to one should be contained in any XML conforming document.

3.40 Effectivity. The act or process of identifying weapon systems or end-items and their hardware and software system and subsystems by their associated Usable On Code (UOC), serial number, model number, Part Number (P/N)/CAGEC, National Stock Number (NSN), End Item Code (EIC), software version or Modification Work Order (MWO). Effectivity is included to signify that certain configuration(s) or modifications apply to a given weapon system/equipment.

3.41 Electronic Countermeasure (ECM). Electronic surveillance equipment for detecting and adverting threatening enemy weapons systems.

3.42 Electronic Technical Manual (ETM). An ETM is a page-oriented file usually based on a paper original that may or may not be prepared from a digital database. An ETM may have hyperlinks added. ETMs can be distributed as digital media or printed on paper.

3.43 Electrostatic Discharge (ESD). Static electricity. A transfer of electrostatic charge between objects of different potentials caused by direct contact or induced by an electrostatic field. Devices such as integrated circuits and discrete devices (e.g., resistors, transistors, and other semiconductor devices) are susceptible to damage from electrostatic discharge.

3.44 End Item Code (EIC). A final combination of end products, component parts, or materials that is ready for its intended use (e.g., tank, mobile machine shop, aircraft, receiver, rifle, recorder).

3.45 Equipment. One or more units capable of performing specified functions.

3.46 Equipment Improvement Recommendation (EIR). Solicitation of suggestions from end item users/operators for means to improve the operation and effectiveness of equipment. The Standard Form (SF) 368 is the instrument by which suggested improvements are forwarded to the cognizant agency.

3.47 Equipment nomenclature. The official name of the equipment as shown in FEDLOG H6 listing.

3.48 Essential. Those systems/subsystems/components that are required for a designated mission or system operation.

3.49 Evacuation. A combat service support function which involves the movement of recovered materiel from a main supply route; maintenance collection materiel may be returned to the user, to the supply system for reissue, or to property disposal activities.

3.50 Expendable items. Items, other than repair parts that are consumed in use (e.g., paint, lubricants, wiping rags, tape, cleaning compounds, sandpaper).

3.51 Extensible Markup Language (XML). A set of rules for encoding documents electronically through the use of markup. Its primary purpose is to facilitate the sharing of structured data across different information systems. It is a product of the World Wide Web Consortium (W3C).

3.52 Extensible Stylesheet Language (XSL). A stylesheet language that can be used for rendering XML documents.

3.53 Extensible Stylesheet Language Formatting Objects (XSL-FO). A subset of Extensible Stylesheet Language Transformation (XSLT) that is used to format valid and well formed XML into a page-oriented output. This output may be a direct print to paper or it may be to an electronic page-oriented presentation such as a Portable Document Format (PDF) file.

3.54 Extensible Stylesheet Language Transformation (XSLT). A declarative, XML-based language used to transform XML documents into other XML documents. XSLT is supported by the World Wide Web Consortium (W3C).

3.55 Final Reproducible Copy (FRC). The final document ready for reproduction and publication as an authenticated TM, including all necessary changes made as a result of validation/verification and acquisition activity conditions of acceptance or approval. For Army, FRC equates to Final Draft Equipment Publication (FDEP).

3.56 Follow-on maintenance. A maintenance condition that must be accomplished sometime following the completion of a task to clean up or undo actions performed prior to or during the task.

3.57 Footer. One or more lines of standard text that appear at the bottom of each page (also called feet and running feet).

3.58 Functional diagram. A type of illustration in which symbols are connected by lines to show relationships among the symbols. The symbols may be rectangles or other shapes, standard electronic symbols representing components or functions, or pictorials representing equipment or components. Where appropriate, voltage readings are shown. The lines may represent procedures or processes, such as signal or logic flow, and physical items, such as wires. Functional diagram includes schematics, wiring and piping diagrams, flow charts, and block diagrams.

3.59 Functional Group Code (FGC). A basic (usually two-position) group code assigned to identify major components, assemblies, and subassemblies to a functional system. Subordinate subfunctional groups/subassemblies are coded to relate back to the basic (top position) FGC in a sequential, Next Higher Assembly (NHA) relationship (e.g., top-down breakdown structure). For aviation systems, FGCs are prescribed by DA PAM 738-751, Table 1-10. They are different than those used by ground systems.

3.60 Graphic(s). Any type of presentation or representation, which gives a clear visual impression.

3.61 Hazardous Air Pollutant (HAP)-free. HAP-free means a material that contains no more than 0.1 percent by mass of any individual HAP that is an Occupational Safety and Health Act-(OSHA-) defined carcinogen as specified in 29 Code of Federal Regulations (CFR) 1910.1200(d)(4) and no more than 1.0 percent by mass for any other individual HAP, as demonstrated by a specification or a standard, or a manufacturer's representation, such as in a material safety data sheet or product data sheet.

3.62 Hardness Critical Item (HCI). A support item that provides the equipment with special protection from electromagnetic pulse (EMP) damage during a nuclear attack.

3.63 Hardness Critical Process (HCP). A process affecting a mission critical item which could degrade system survivability in a nuclear, biological, or chemical hostile environment if hardness were not considered. Nuclear HCPs are processes, finishes, specifications, manufacturing techniques, and/or procedures which are hardness critical, and which, if changed, could degrade nuclear hardness.

3.64 Hardtime intervals. Hardtime maintenance is scheduled maintenance conducted at predetermined fixed intervals because of age, calendar, or use such as operating time, flying hours, miles driven, or rounds fired.

3.65 Header. One or more lines of standard text that appear at the top of each page (also called heads and running heads).

3.66 Horizontal (landscape) TM format. Positioning of technical manual so that page horizontal (width) dimensions are greater than vertical (height) dimensions.

3.67 Icon. Pictorial representation; visual image to give immediate recognition of a hazard or to provide essential information.

3.68 Illustration. A general term meaning graphic presentations of all types. Illustrations include pictorials, functional diagrams, and line graphs. This term is used synonymously with figure, graphic, drawing, diagram, and artwork.

3.69 Initial Graphics Exchange Specification (IGES). IGES is defined in ASME Y14.26M and is a predecessor to ISO 10303 Standard for the Exchange of Product (STEP) Model Data. IGES is a file format which defines a vendor neutral data format that allows the digital exchange of information among Computer-aided design (CAD) systems.

3.70 Institute of Electrical and Electronics Engineers (IEEE). Membership organization that includes engineers, scientists, and students in electronics and allied fields. Founded in 1963, it has over 300,000 members and is involved with setting standards for computers and communications.

3.71 Interchangeability. The intent/purpose of this specification is to allow fully innovative fixes/repairs to the equipment. This includes minor modifications that can be made to achieve interchangeability. Capable of being put or used in place of each other.

3.72 International Organization for Standardization (ISO). Organization that sets international standards, founded in 1946 and headquartered in Geneva. It deals with all fields except electrical and electronics, which is governed by the older International Electrotechnical Commission (IEC), also in Geneva. With regard to information processing, ISO and IEC created the Joint Technical Committee (JTC 1) for Information Technology.

3.73 Item unique identification (IUID). A system of establishing unique item identifiers within the Department of Defense by assigning a machine-readable character string or number to a discrete item, which serves to distinguish it from other like and unlike items.

3.74 Kit, tool. An assembly of tools/components in a small pouch or box, designed for use of and carried by an individual or crew, type classified with a unit of issue of kit.

3.75 Landscape mode. To print an image sideways on the page so that the longest edge of the form corresponds to the horizontal axis.

3.76 Leak rate. The speed or rate of flow of accidental escape of fluid or gas from a system, which is caused by damage processes. The leak rate is influenced by such factors as the hole size, internal/external pressures, and fluid level.

3.77 Legend. A tabular listing and explanation of the numbers or symbols on a figure or an illustration.

3.78 Limited repair. Scope of corrective repair authorized to be performed by a level of maintenance lower than the level of authorized complete repair.

3.79 Line Replacement Unit (LRU). An item normally removed and replaced as a single unit to correct a deficiency or malfunction on a weapon system or end item of equipment.

3.80 List of Applicable Publications (LOAP). A separate listing of publications which are related to a specific piece of equipment, group of equipment, or system. For additional information, refer to MIL-PRF-63049.

3.81 Logistics Management Information (LMI). The selective application of scientific and engineering efforts undertaken during the acquisition process, as part of the systems engineering process, to assist in acquiring the required support; and providing the required support during the operational phrase at minimum cost.

3.82 Maintainer Maintenance. Consists of performance of PMCS; inspections; lubrication; cleaning; preserving; tightening, replacement, and minor adjustments authorized by the MAC; diagnosis and fault isolation as authorized by the MAC; replacement of unserviceable parts, modules, and assemblies as authorized by the MAC; requisition, receipt, storage, and issue of repair parts; verification of faults and level of repair of unserviceable materiel prior to evacuation; evacuation of unserviceable reparables beyond the MAC authorization or unit capacity to correct/repair; AOAP directed activities; materiel readiness reporting; coordination and annotation of field level MWOs; providing maintenance support to sustainment maintenance activities; diagnosis and isolation of materiel or module malfunctions, adjustment, and alignment of modules that can be readily completed with assigned tools and TMDE; performance of light body repair; turn-in of maintenance repair codes F, D, H, and L; fabrication as identified by the appropriate TM; and operation of cannibalization points, when authorized.

3.83 Maintenance Allocation Chart (MAC). A list of equipment maintenance functions showing maintenance level and maintenance class. The MAC is arranged in functional group code sequence or in top-down, breakdown sequence in the logical order of disassembly following the Repair Parts and Special Tools List (RPSTL) order of assembly/subassembly listings.

3.84 Maintenance class. Maintenance classes are subsets of field and sustainment maintenance levels. They identify and implement the specific activity, identified by the MAC, to perform the maintenance. The maintenance classes of both the field and sustainment maintenance levels are further separated by aviation and non-aviation and the corresponding classes are shown below:

a. Field level classes:
   (1) Aviation
      (a) AMC – corresponds to MAC code - O.
      (b) ASB – corresponds to MAC code - F.
   (2) Non-aviation
      (a) Crew (operator) – corresponds to MAC code - C.
      (b) Maintainer – corresponds to MAC code - F.
b. Sustainment level classes:
   (1) Aviation
      (a) TASMG – corresponds to MAC code - L.
      (b) Depot – corresponds to MAC code - D.

   (2) Non-aviation
      (a) Below depot – corresponds to MAC code - H.
      (b) Depot – corresponds to MAC code - D.

3.85 Maintenance function. Refer to maintenance task definition.

3.86 Maintenance level. The primary division of maintenance activities. The U.S. Army uses a two-level maintenance concept. The two levels are field and sustainment.

3.87 Maintenance significant. Refers to a maintenance item, whose failure could affect safety for ground or aviation equipment or significantly impact operations. For maintenance and inspection instructions, maintenance significant could include systems, subsystems, modules, components, accessories, units, and parts.

3.88 Maintenance task (function). A task consists of an initial setup and one or more procedures. A task has a definite beginning and end. The term "function" is synonymous with task and is primarily used in the maintenance allocation chart and in maintenance policy documents.

3.89 Mean Time Between Corrective Maintenance (MTBCM). For a particular interval, the total functional life of a population of an item divided by the total number of failures within the population during the measurement interval. The definition holds for time, rounds, miles, events, or other measure of life units. (Used only when referring to depot level maintenance.)

3.90 Mean Time Between Failures (MTBF). For a particular interval, the total functional life of a population of an item divided by the total number of failures within the population during the measurement interval. The definition holds for time, rounds, miles, events, or other measure of life units.

3.91 Mean Time To Repair (MTTR). The total elapsed time (clock hours) for corrective maintenance divided by the total number of corrective maintenance actions during a given period of time.

3.92 Modified Table of Organization and Equipment (MTOE). A modified version of a TOE that prescribes the unit organization, personnel, and equipment needed to perform an assigned mission in a specific geographical or operational environment.

3.93 Modification Work Order (MWO). Detailed instructions (including text and graphics) for making changes/improvements to a particular system in order to bring the system up to date and/or to improve its overall efficiency.

3.94 Module. A subassembly that, in the area of electronic systems, may be removed and replaced without use of soldering equipment or special tools. A module may be encapsulated.

3.95 National Item Identification Number (NIIN). The last nine digits of the National/North Atlantic Treaty Organization (NATO) stock number. The first two digits of the NIIN identify the country assigning the number and the remaining seven digits are a serially assigned number.

3.96 National Maintenance Work Requirement (NMWR). A maintenance serviceability standard for depot level reparables that do not have an existing depot maintenance work requirement and for field level reparables that are repaired by maintenance activities below the depot level maintainers for return to the Army supply system.

3.97 National Stock Number (NSN). A 13-digit number assigned to a repair part to be used for requisitioning purposes.

3.98 Next Higher Assembly (NHA). Assembly or subassembly of which subject component(s) or subassembly is a subpart.

3.99 Nomenclature. The approved name or alphanumeric identifier assigned to an item, equipment, or component in agreement with an organized designation system.

3.100 Operator task. Generic or explicit step-by-step information that provides the user direction on how to use a piece of equipment.

3.101 Orphan. Last line of a paragraph pushed to a new page, stranded alone (orphaned) at the top of the page without the rest of its paragraph.

3.102 Outfit. An assemblage of tools or equipment, type classified, assigned a LIN, with a unit of issue of outfit; it may include separately type classified items as a component, such as pneumatic tool and compressor outfit, water purification outfit, tool outfit hydraulic systems repair, and tool outfit pioneer portable electric tools.

3.103 Overhaul Inspection Procedure (OIP). Routine maintenance inspection conducted just before period specified for removal of aircraft for overhaul or retirement.

3.104 Page-based Technical Manual (TM). A TM consisting of text, illustrations, and tabular data presented in a standard page-oriented format.

3.105 Part Number (P/N). A primary number used to identify an item used by the manufacturer (individual, company, firm, corporation, or Government activity) that controls the design, characteristics, and production of the item by means of its engineering drawings, specifications, and inspection requirements.

3.106 Phased Maintenance Inspection (PMI) (aircraft). A thorough and searching examination of the aircraft and associated equipment. Removal of access plates, panels, screens, and some partial disassembly of the aircraft is required to complete the inspection. Inspections are due after an appointed number of flying hours since new or from the completion of the last inspection.

3.107 Pictorial. A type of illustration showing the physical appearance of equipment or component parts. This term is used instead of such general terms as illustration, drawing, and diagram.

3.108 Portrait mode. To print an image so that the longest edge of the form corresponds to the vertical axis.

3.109 Preshop analysis. To determine, before beginning maintenance activities, the extent of maintenance required to return the end item, assembly, subassembly, or component to a serviceable condition as specified by the depot level maintenance instructions.

3.110 Preventive maintenance (scheduled maintenance). The performance of scheduled inspections and maintenance functions necessary to keep the equipment in serviceable condition and ready for its primary mission.

3.111 Preventive Maintenance Checklist (PMC). A listing of all before, during, and after operation preventive maintenance checks, including tactical and safety checks, that the crew (operator) performs to ensure that the equipment is mission capable and in good operating condition.

3.112 Preventive maintenance daily (aircraft). Inspection of aircraft and associated equipment after the last flight of the mission day or before the first flight of the next day. Some operational checks and removal of screens, panels, and inspection plates may be required to accomplish the inspection.

3.113 Preventive maintenance services inspection (aircraft). Special recurring inspection of aircraft and associated equipment after an appointed number of flying hours or days whichever occurs first (e.g., 10 flying hours or 14 days). Some operational checks and removal of screens, panels, and inspection plates may be required to accomplish the inspection.

3.114 Preventive Maintenance Checks and Services (PMCS). Periodic inspection and maintenance at scheduled intervals to ensure that the equipment and its components remain mission capable and in good operating condition. Lubrication may be included in PMCS. PMCS procedures can be performed by maintainers at any level of maintenance, not just by operators. PMCS is for non-aviation systems only.

3.115 Procedure. A set of step-by-step actions required to accomplish a task or a portion thereof.

3.116 Proponent. An Army organization or staff that has been assigned primary responsibility for materiel or subject matter in its area of interest.

3.117 Publication Identification Number (PIN). A number (assigned by Army Publishing Directorate (APD) to each publication) that can be found in DA PAM 25-30 and is comprised of six numerals and a three-digit "change number" field that permits ordering a specific change to the publication (e.g., 001 for change 1, 023 for change 23).

3.118 Publication medium. The type of publication (TM, DMWR, NMWR, MWO, SC, SB, TB, etc.). This does not include IETM, ETM, or EM.

3.119 Publication number. The number shown on the cover of each publication as constructed per DA PAM 25-40 (e.g., TM 1-1520-238-10).

3.120 Quality Assurance (QA). A planned and systematic pattern of all actions necessary to provide adequate confidence that the item or product conforms to established technical requirements.

3.121 Raster graphics. Raster graphics use a dot matrix data structure representing a generally rectangular grid of pixels, or points of color. Raster graphics are resolution dependent and cannot scale up to an arbitrary resolution without loss of apparent quality. Raster graphics are not easily editable

3.122 Reading Grade Level (RGL). A measurement of reading difficulty of text related to grade levels (such as ninth grade level, fourteenth grade level, etc.).

3.123 Reference Designator (REFDES). Letters or numbers, or both, used to identify and locate discreet units, portions thereof, and basic parts of a specific equipment, assembly, or subassembly.

3.124 Reliability, Maintainability and Supportability (RMS) and Operational Availability (Ao). Requirements imposed on materiel systems to ensure that they are operationally ready for use when needed, will successfully perform assigned functions, and can be economically operated and maintained within the scope of logistic concepts and policies.

3.125 Reliability Centered Maintenance (RCM). A systematic approach for identifying preventive maintenance tasks for an equipment end item in accordance with a specified set of procedures and for establishing intervals between maintenance tasks.

3.126 Repair part. Those support items that are an integral part of the end item or weapons system, which are coded as not repairable (e.g., consumable items).

3.127 Repair Parts and Special Tools List (RPSTL). The technical document which contains an introduction, list of repair parts, list of special tools, NSN index, part number index, and reference designator index for a specified equipment item.

3.128 Revision. A revision is comprised of corrected, updated, or additional pages or work packages to the current edition of a manual. It consists of replacement work packages that contain new or updated technical information or improves, clarifies, or corrects existing information in the current edition of the manual.

3.129 Schematic diagram. A graphic representation showing the interrelationship of each component or group of components in the system/equipment. The essential characteristic of these diagrams is that every maintenance-significant functional component is separately represented. Also, where appropriate, voltage readings should be shown.

3.130 Service. Operations required periodically to keep an item in proper operating condition such as replenishing fuel, lubricants, chemical fluids, or gases.

3.131 Set. A unit and necessary assemblies, subassemblies, and parts connected together or used in association to perform an operational function (e.g., radio receiving set, measuring set, radar, or homing set which includes parts, assemblies, and units such as cables, microphones, and measuring instruments).

3.132 Set, Tool. A collection of tools/components used by a group, section, squad, platoon or unit usually supplemented by tool kits to perform an organizational mission, type classified, assigned a LIN, with a unit of issue of set.

3.133 Source, Maintenance, and Recoverability (SMR) code. This code is composed of four parts consisting of a two-position source code, a two-position maintenance code, a one-position recoverability code and a one-position Service option code. The first two positions of the SMR code indicate the source for acquiring the item for replacement purposes. The third position represents who can install, replace, or use the item. The fourth position dictates whether the item is to be repaired and identifies the lowest maintenance level with the capability to perform a complete repair action. The fifth position indicates the desired disposition of the support item. The sixth position is unique to each Service and is utilized to disseminate specific instructions to that Service's logistics business process.

3.134 Spare part. Those support items that are an integral part of the end item or weapons system that are coded as repairable (e.g., reparable items). Spares include that equipment authorized by a Table of Organization and Equipment (TOE) line item; plus equipment, assemblies, and modules designated as operational readiness float. TOE training equipment is excluded.

3.135 Special tools. Those tools that have single or peculiar application to a specific end item/system.

3.136 Specialized repair activity. A level of maintenance usually characterized by the capability to perform maintenance functions requiring specialized skills, disciplined quality control, highly sophisticated and expensive special tools, and Test, Measurement, and Diagnostic Equipment (TMDE). Its phases normally consist of adjustments, calibration, alignment, testing, troubleshooting, assembly, disassembly, fault isolation, and repair of unserviceable parts, modules, and Printed Circuit Boards (PCBs).

3.137 Subassembly. Two or more parts that form a portion of an assembly or a component replaceable as a whole, but having a part or parts that are individually replaceable (e.g., gun mount stand, window recoil mechanism, floating piston, intermediate frequency strip, mounting board with mounted parts).

3.138 Supply Catalog (SC). The DA publication, which is the configuration control document that provides the user identification of Sets, Kits and Outfits (SKO) and its components. It also provides user supply management data and is an accountability aid.

3.139 Sustainment maintenance. Sustainment is off-system maintenance and is mainly repair of defective equipment/parts. Sustainment maintenance returns repaired equipment/parts to the supply system.

3.140 System. A group of items united or regulated by interaction or interdependence to accomplish a set of specific functions.

3.141 Table of Contents (TOC). A sequential list of chapter, work package, paragraph, figure, and table titles with corresponding work package sequence numbers, if applicable, for information within the TM. May contain page number references.

3.142 Tags. Descriptive markup, as in a start-tag and end-tag.

3.143 Tailoring. The process of evaluating individual potential requirements to determine their pertinence and cost effectiveness. The tailoring of data requirements is limited to the exclusion of information requirement provisions and selecting or specifying applicable requirements.

3.144 Task. A generic task is a procedure or set of procedures. Refer to definitions of operator task (formerly operating instructions) and maintenance task. Refer to AR 750-1 for exact terms and definitions.

3.145 Technical Manual (TM). A manual that contains instructions for the installation, operation, maintenance, and support of weapon systems, weapon system components, and support equipment. TM information may be presented, according to prior agreement between the contractor and the Government, in any form or characteristic, including hard printed copy, audio and visual displays, electronic embedded media, discs, other electronic devices, or other media. They normally include operational and maintenance instructions, parts lists, and related technical information or procedures exclusive of administrative procedures.

3.146 Test, Measurement, and Diagnostic Equipment (TMDE). Any system or device used to evaluate the operational condition of an end item or subsystem thereof, or to identify and/or isolate any actual or potential malfunction. TMDE includes diagnostic and prognostic equipment, semiautomatic and automatic test equipment (with issued software), and calibration test or measurement equipment.

3.147 Time Between Overhaul (TBO) items. Those items having a definite retirement schedule within a defined overhaul interval (e.g., those items that must be replaced within a system assembly, subassembly, or component between scheduled overhauls).

3.148 Title page. The first page after the warning summary in the front matter portion of a TM. It identifies the TM by publication number, date, title, NSN, part number, and model number of equipment covered in the manual.

3.149 Top-down breakdown. The pyramidal breakdown of an end item, with the top item being the complete end item. The process of breakdown is established from the engineering drawing structure in an NHA progression until the lowest reparable in each family tree group is identified. All nonreparables (spare parts) can be identified in like manner to establish their NHA relationships.

3.150 Usable On Code (UOC). A three-position alphanumeric code representing the applicable configuration in which an item is used.

3.151 User. A person using the TM.

3.152 Vector Graphics. Vector graphics is the use of geometrical primitives such as points, lines, curves, and shapes or polygon(s), which are all based on mathematical expressions, to represent images in computer graphics. Vector graphics are not resolution dependent and may be scaled up or down to an arbitrary resolution without loss of apparent quality. This is the preferred format for graphics used in Army technical publications.

3.153 Wiring diagram. A diagram illustrating signal flow or wiring connections. Where appropriate, voltage readings should be shown.

3.154 Work Package (WP). Presentation of information functionally divided into tasks in the logical order of work sequence. These work packages should be stand alone and may contain one or more tasks. If capture of individual times and/or personnel is required for a program such as Condition Based Maintenance (CBM), maintenance work packages must contain only one task. The following work package types are covered in this standard: general information, operator instructions, troubleshooting procedures, maintenance instructions, parts information, supporting information, destruction of Army materiel to prevent enemy use, battle damage assessment and repair (BDAR), preventive maintenance checklist, and lubrication orders. A work package should contain all information or references required to support the work package type.

4. GENERAL REQUIREMENTS.

4.1 General. This standard provides the technical content requirements and mandatory style and format requirements for the preparation of page-based TMs and subsequent revisions covering operation and maintenance, at all levels of maintenance through overhaul (depot), including Depot Maintenance Work Requirements (DMWRs) and National Maintenance Work Requirements (NMWRs). All requirements throughout this standard for depot maintenance or DMWRs shall be followed for NMWRs. Style and format requirements are provided in 4.8. Specific technical content requirements are provided in the following appendixes.

APPENDIX B — General Information, Equipment Description, and Theory of Operation
APPENDIX C — Operator Instructions (Except Aviation)
APPENDIX D — Troubleshooting Procedures
APPENDIX E — Maintenance Instructions
APPENDIX F — Repair Parts and Special Tools List (RPSTL)
APPENDIX G — Supporting Information
APPENDIX H — Destruction of Army Materiel to Prevent Enemy Use
APPENDIX I — Battle Damage Assessment and Repair (BDAR)
APPENDIX J — Preventive Maintenance Checklist
APPENDIX K — Lubrication Orders
APPENDIX L — DMWR for Maintenance/Demilitarization of Ammunition

4.2 Types of technical manuals. APPENDIX A lists specific technical content requirements for each type of maintenance manual, including multilevel TMs, covered by this standard. Each type of TM shall provide in detail the maintenance coverage prescribed for the applicable maintenance level(s) by the Maintenance Allocation Chart (MAC) and Source, Maintenance, and Recoverability (SMR) coded items. Unless otherwise specified, the following manual types shall be prepared as standalone manuals:

a. Ammunition-specific manuals **<ammo>**.
b. Phased Maintenance Inspections (PMIs) **<pmi>**.
c. Aircraft system trouble shooting **<sys-ts>**.
d. Destruction manual (when destruction instructions are not included in the basic TM) **<destruction_manual>**.
e. Battle damage assessment and repair **<bdar>**.
f. Lubrication orders (when not included in the PMCS) **<lubeorder>**.
g. Preventive maintenance checklist **<pmc>**.

h. DMWR munitions maintenance and demilitarization **<dmwr_ammo>**.

4.3 Selective application and tailoring. This standard contains some requirements that may not be applicable to the preparation of all TMs. Selective application and tailoring of requirements contained in this standard are the responsibility of the acquiring activity and shall be accomplished using Appendix A. The applicability of some requirements is also designated by one of the following statements: unless specified otherwise by the acquiring activity; as specified by the acquiring activity; or when specified by the acquiring activity.

4.4 Preparation of digital data for electronic delivery. Data prepared and delivered digitally in accordance with this standard shall be Extensible Markup Language (XML) tagged using the Document Type Definition (DTD) in accordance with MIL-STD-2361. Stylesheets may be prepared using Extensible Stylesheet Language (XSL) or other languages as specified by the acquiring activity. Where possible and when available, Army developed and provided. Refer to 4.6 for information on obtaining or accessing the DTD and stylesheets. XML tags used in the DTD are noted throughout the text of this standard in bracketed, bold characters (e.g., **<descwp>**) as a convenience for the author and to ensure that the tags are used correctly when developing a document instance.

4.5 Use of the Document Type Definition (DTD)/stylesheets. The DTD referenced in this standard interprets the technical content and structure for the functional requirements contained in this standard. Its use is mandatory. Development of TMs is accomplished through the use of this standard, the DTD, and the guidance contained in MIL-HDBK-1222. The guidance contained in MIL-HDBK-1222 applies unless it conflicts with the requirements in this standard. Where possible and when available, Army developed and provided stylesheets shall be used. For additional information on DTDs and specific stylesheets, refer to MIL-STD-2361.

4.6 Obtaining the Document Type Definition (DTD)/stylesheets. The DTD, stylesheets, associated tag and attribute descriptions, which are XML constructs, may be obtained from the Army SGML (Standard Generalized Markup Language) Registry and Library (ASRL). The ASRL assets may be obtained using the methods described in MIL-STD-2361 as follows:

a. World Wide Web (WWW): ASRL homepage Uniform Resource Locator (URL) http://www.asrl.com/.

b. U.S. Mail: Requested files will be mailed on Compact Disc-Read Only Memory (CD-ROM). Requests may be submitted as follows:

Written request:
Director, APD - Army Publishing Directorate
ATTN: AAHA-PAA-PS
9351 HAll Road, Bldg 1456
Fort Belvour, VA 22060-5447

Telephone Request:
Commercial: (703) 693-1556
DSN: 221-1556

4.7 Content structure. The examples provided herein are an accurate representation of the content structure requirements contained in this standard and are provided to permit the effective use of the DTD. Any conflicts between examples and the text of the standard shall be resolved in favor of the text. (Refer to 1.4.)

4.8 Style and format. This standard provides style and format requirements for the technical content requirements described in this standard. These requirements are considered mandatory and are intended for compliance. Style and format requirements for the technical content contained in TMs are provided in 4.8.1 through 4.8.27.4.8. Refer to MIL-HDBK-1222 for additional information and examples. The U.S. Government Printing Office (GPO) Style Manual shall be used a general guide for capitalization, punctuation, compounding of words, numerals in text, and spelling of nontechnical words.

4.8.1 Examples of style and format. The examples provided at the rear of this standard are an accurate interpretation of the technical content, style, and format requirements contained herein. The examples shall be followed to ensure that the conforming DTD can be used to develop digital data in accordance with MIL-STD-2361.

4.8.2 TM divisions. The hierarchical breakdown of a TM is: volumes (if required), chapters, and work packages, paragraphs, subparagraphs, and steps. Each division used should have at least two occurrences (for example, where there is a Volume 1, there should be a Volume 2; where there is a Chapter 1, there should be a Chapter 2; etc.). Except for the RPSTL, volumes shall be partitioned only between chapters. Stand-alone RPSTL manuals may be volumized between parts lists **<plwp>**, special tools and parts list **<stl_partswp>**, kits **<kitswp>**, bulk items list **<bulk_itemswp>**, and special tools list **<stlwp>**.

4.8.2.1 Volume size and content.

a. Division into volumes shall occur when the number of printed pages (excluding pocket-sized TMs) exceeds 1,500 pages or 750 sheets. Each volume shall not exceed 1,500 pages or 750 sheets. A pocket-sized manual (4 x 5-1/2 inches) shall not exceed 200 pages or 100 sheets. Pocket-sized manuals shall not be divided into volumes.
b. Each volume of a series shall display the TM number on its cover and all pages that make up the volume. Front matter for each volume of a series shall include a title page, warning summary, change transmittal page (as applicable per volume), list of effective pages/work packages (as applicable per volume), and a table of contents (TOC). The first volume shall contain a complete (including all volumes information) table of contents. Refer to 5.2.2.
c. Rear matter for each volume of a series shall contain as a minimum reporting errors and recommending improvements DA Forms 2028, an authentication page, and back cover. A glossary, index, and foldout pages are included as applicable.
d. Separate volumes shall not be used to distinguish between models of equipment (e.g., -10 for basic model, -10-1 for model A, -10-2 for model B, etc.).
e. When a change causes a manual to exceed page limits in paragraph 4.8.2.1a above, the manual shall be divided into volumes.

4.8.2.2 Chapters. Chapters shall be used to divide TM data into specific functional information. Chapter types include General Information, Operating Instructions, Troubleshooting Information, Maintenance Information, Parts Information, and Supporting Information. Each chapter shall be made up of one or more work packages. Chapter titles shall be based on the titles given in the matrices in APPENDIX A and may be augmented as needed.

4.8.2.3 Work packages. Work packages shall be used to logically divide TM data into functional descriptive or task-oriented information. Work packages shall begin on a right-hand page. Refer to FIGURE 1 for an example of a typical work package. Work packages may contain one or more tasks. If capture of task time or personnel from initial setups is required for a program such as Condition Based Maintenance (CBM), maintenance work packages shall contain only one task. If the initial setups are different, tasks shall not be grouped into one work package. Refer to APPENDIX B through L for the specific content requirements for each of the functional work package types (e.g., description information, operator instructions, maintenance, troubleshooting, repair parts, and supporting information). Refer to MIL-HDBK-1222 for additional guidance on work package development.

4.8.2.3.1 Work package size. To facilitate the change/revision process, work packages should be kept smaller (less than 30 pages). Refer to MIL-HDBK-1222 for further guidance on work package size.

4.8.3 Font size and style. Font style, size, and spacing shall be in accordance with best commercial practices for technical publications. However, the minimum font size for a regular manual is 8 point, logbook is 6 point, pocket-sized manual is 6 point, and the minimal for a graphic is 6 point. Type shall be proportionally spaced (non-monospaced). Fonts shall be selected for a balance between readability and economy of space. Setting text in all capital letters shall be limited to appropriate uses, such as major headings, acronyms, and equipment markings. For more guidance on font style, size, and spacing; refer to MIL-HDBK-1222.

4.8.4 Page size and orientation. The TM shall be prepared in a size selected from TABLE I as specified by the acquiring activity. Orientation of pages, either vertical (portrait) or horizontal (landscape), shall be consistent throughout a given manual for ease of use. The growing prevalence of TMs used in electronic display mode (instead of paper) makes this consistency extremely important. Exceptions may be made only if essential for proper grouping of information for the user's benefit. Otherwise, information shall be formatted or reformatted so that all pages have the same orientation.

NOTE

Take into account the binding edge when determining your margins.

TABLE I. Manual styles and trim sizes.

Style	**Trim Size**	**Orientation**	**Maximum Printing Area**
Pocket-sized	4 x 5½ 5½ x 4	Vertical Horizontal	$3^1/_8$ x 5 5 x $3^1/_8$
Logbook	6½ x 9½ 9½ x 6½	Vertical Horizontal	5½ x 8½ 8½ x 5½
Standard	8½ x 11 11 x 8½	Vertical Horizontal	7 x 10 10 x 7
Double Standard	17 x 11	Horizontal	15¾ x 9

4.8.5 Foldout pages.

a. Foldout pages, if needed, shall be the same height as regular pages in the standard manual only, and shall be folded 2, 4, or 6 times, depending on the width necessary. Each foldout shall have a blank apron wide enough for the user to look at the data while reading text elsewhere in the TM. Foldouts shall not be used in RPSTLs or operator-only TMs.

b. TABLE II lists the foldout maximum trim sizes and foldout maximum printing area for foldout pages. The minimum margin is ½-inch top and bottom and ½ inch on the side opposite the binding edge.

c. Foldout pages shall be the last printed material in the TM or volume.

TABLE II. Foldout maximum page sizes (in inches).

Manual Trim Size	Foldout Maximum Page Trim Size (Including Apron)	Foldout Maximum Printing Area
8½ x 11	45 x 11	36 x 10
11 x 8½	11 x 45	10 x 36

4.8.6 Final Reproducible Copy (FRC). FRC shall be the final manuscript, reproducible copy, or electronic media delivery, with all necessary changes and corrections incorporated and including final resolution of all comments and recommendations made as a result of validation, verification, testing, and user review. The master copy of any TM is a set of digital files, not the hard-copy results. No particular layout requirements exist for FRC distinct from those for non-final drafts or proofs. The only special criterion for FRC is reproducibility. Its resolution and contrast must be sufficient for creation of offset plates or raster page images without loss of detail that would be noticeable to users. If the FRC is delivered as a portable document format (PDF) file, the PDF shall be capable of being edited, linked and having selectable and searchable text that can be copied and pasted. The PDF shall have all fonts embedded.

4.8.7 Warnings, cautions, and notes.

4.8.7.1 Warning **<warning>**. A warning identifies a clear danger for injury or death to the person doing that procedure.

4.8.7.2 Caution **<caution>**. A caution identifies risk of damage to the equipment.

4.8.7.3 Notes **<note>**. A note is used to highlight essential procedures, conditions, or statements or convey important instructional data to the user.

4.8.7.4 Display of warnings, cautions, and notes.

a. Warnings, cautions, and notes shall appear as follows:
   (1) For any procedural work package, they shall appear after the initial setup.
   (2) For tasks, they shall follow the title of the associated task.
   (3) For procedures, they shall follow the title of the associated procedure.
   (4) For steps, they shall precede the associated step(s).

b. If multiple warnings, cautions, and notes apply to the same text, warnings shall appear first, cautions shall appear second, and notes shall appear last.

c. The header **WARNING**, **CAUTION**, or **NOTE** shall be bold and centered above the appropriate text. Headers shall not be numbered or bulleted.

d. Warnings may have safety or hazard icon(s) and shall appear below the warning header.

e. Cautions may have icon(s) depicting equipment damage and shall appear below the caution header.

f. When a warning, caution, or note consists of two or more paragraphs, the header **WARNING**, **CAUTION**, or **NOTE** shall not be repeated above each paragraph.

g. Warnings on unrelated topics that pertain to the same task, procedure, or step(s) may be grouped under one heading. Cautions on unrelated topics that pertain to the same task, procedure, or step(s) may be grouped under one heading. Notes on unrelated topics that pertain to the same task, procedure, or step(s) may be grouped under one heading. Warnings, cautions, and notes shall not be mixed under one header (e.g., warnings grouped with cautions). When grouping warnings, cautions, or notes, each warning, caution, or note shall be separated by at least one line and may be bulleted.

h. Warning, caution, and note text shall be indented on the right and left. The text shall be left justified.

i. The layout shall not result in warnings, cautions, and notes being divided so first lines of text or groups of icons appear on one page and remaining lines or groups of icons on another page.

j. Layout shall avoid warnings, cautions, and notes being placed on a different page than the paragraph to which they apply.

k. Warnings shall include basic first aid instructions/guidance in the event of exposure or injury (e.g., flush eyes with water, seek medical attention, cleanse affected area with soap and water, etc.).

l. Notes shall be allowed in the manual other than in a task, a procedure, or a step.

m. Warnings, cautions, and notes should be used judiciously to preserve their value and to avoid overuse. Warnings and cautions shall only be used if necessary to ensure safety of personnel and/or equipment.

4.8.7.5 Icons **<icon-set>**. The use of standardized icons to improve readers' recognition of hazards is encouraged. Approved icons for use in TM warnings are available online at https://www.logsa.army.mil/mil40051/tmsspecs.cfm. Additional non-standardized warning icons shall be approved by the acquiring activity safety office. Equipment damage caution icons shall be approved by the acquiring activity safety office. Icons shall be used only if they clarify the notice, clearly depict the hazard, and can be reproduced clearly. Icons are not required for every warning. Icons used shall be defined in the Warning Summary. (Refer to 5.2.1.4.)

4.8.7.5.1 Development of icons. Icons are enclosed in a square or rectangular box. The signal word(s) for warning icons appear outside the box centered below the icon(s).

4.8.7.5.2 Safety warnings with icons **<icon-set>**. The approved safety warning icons are available on the LOGSA Web site at https://www.logsa.army.mil/mil40051/tmsspecs.cfm and can be used in conjunction with the **WARNING** header and description of the hazard. For additional information on the use and placement of warnings and icons, refer to MIL-HDBK-1222.

4.8.7.5.3 Hazardous materials warnings **<warning>**. Procedures prescribed for the operation and maintenance of equipment shall be consistent with the safety standards established by the Occupational Safety and Health Act (OSHA) Public Law 91-596 and Executive Order 12196. When exposure to hazardous chemicals or other adverse health factors or use of equipment cannot be eliminated, guidance pertaining to the exposure shall be included in the TM. A list of personnel protective devices shall also be included. Hazardous materials warnings may be presented in the standard warning format without an icon, or in conjunction with an icon, or a combination of icons as described in 4.8.7.4. The acquiring activity safety office shall approve the use of icons other than those presented on the LOGSA Web site at https://www.logsa.army.mil/mil40051/tmsspecs.cfm. Hazards that result from a combination of materials shall clearly be identified to indicate that mixing or combining the materials creates the hazard.

4.8.7.5.3.1 Format for hazardous materials warnings with icons **<icon-set>**. Hazardous materials warnings with icons consist of a **WARNING** header (refer to 4.8.7.4 c), the icon(s), and a full description of the hazardous material and the precautions to be taken.

4.8.7.5.3.2 Abbreviated format for hazardous materials warnings with icons **<icon-set>**. For commonly used substances only (e.g., dry cleaning solvent, hydraulic fluids, paints, etc.), an abbreviated format may be used for hazardous materials warnings. The abbreviated format consists of the **WARNING** header (refer to 4.8.7.4c), the icon(s), and the signal word(s) (e.g., ISOPROPYL ALCOHOL, TT-I-735) of the hazardous material. The signal word(s) for warning icons appear outside the box centered below the icon(s). The full description of the warning shall be placed in the warning summary. Icons may be used in TM warnings either singly or in combination. When icons are used in combination, the placement and format should adhere to the methods provided in MIL-HDBK-1222.

4.8.7.5.4 Equipment damage caution icons **<icon-set>**. The equipment damage caution icons can be used in conjunction with the **CAUTION** header and description of the equipment damage. For additional information on the use and placement of cautions and icons, refer to the requirements specified in 4.8.7.4.

4.8.8 Chapters.

4.8.8.1 Chapter title page **<titlepg>**. Each chapter shall begin with a chapter title page. Refer to FIGURE 2 for an example of a chapter title page. A chapter title page shall always be a right-hand page and shall not be numbered. A separate chapter title page is not required for pocket-sized manuals. For pocket-sized manuals, the chapter number and title may be placed on the top of the first page of the first work package of the chapter.

4.8.8.2 Chapter numbering. Chapters shall be numbered in sequential order throughout the TM using Arabic numerals. Chapters shall not be renumbered in separate volumes.

4.8.9 Work packages.

4.8.9.1 Work package number. A unique number shall be assigned to each work package. This identifier may be used for database retrieval purposes. The work package identification number shall not appear on the printed page and should not be confused with the work package sequence number in 4.8.9.2. It shall be assigned when preparing the document instance in accordance with the DTD and shall not be changed throughout the life of the work package. The work package identification number shall consist of an alpha designation for the type of information contained

in the work package, a five-digit block number assigned by the acquiring activity, and the TM number less the maintenance level dash numbers. The TM number is used only to provide uniqueness and avoid duplication of a work package identification number. Other than that it shall not have significance. When reusing a work package, the work package identification number shall remain the same throughout the life of the work package and shall not be changed in the event the work package is reused in another manual.

a. The following alpha designators shall be assigned to the specific types of information contained within the work packages.

G	General information
O	Operator instructions
T	Troubleshooting procedures
M	Maintenance instructions
R	Repair Parts and Special Tools List (RPSTL)
S	Supporting information

b. The following examples explain work package database identification numbering:

M00432-9-1425-646

M	Identifies a work package containing maintenance instructions.
00432	Identifies the 432nd work package containing specific maintenance instructions that was initially developed for the M270 Armored Vehicle Mounted Rocket Launcher.
9-1425-646	Identifies the M270 Armored Vehicle Mounted Rocket Launcher TM. This is the TM under which this work package was initially developed.

T02000-1-1520-238

T	Identifies a work package containing troubleshooting procedures.
02000	Identifies the 2000th work package containing specific troubleshooting procedures that was initially developed for the AH-64A Helicopter.
1-1520-238	Identifies the AH-64A Helicopter TM. This is the TM under which this work package was initially developed.

4.8.9.2 Work package sequential numbering. To maintain a sequential order in the TM and to facilitate referencing, each Work Package (WP) shall initially be assigned a four-digit number beginning with the number 0001. The work package sequence numbers shall run consecutively throughout the TM. For example, the first work package in chapter 2 will be assigned the number immediately following the last work package number in chapter 1 (e.g., if 0010 is the last work package in Chapter 1, 0011 will be the first work package in Chapter 2). Work package sequence numbers shall be assigned in numerical sequence.

4.8.9.2.1 Assignment of new work packages sequence numbers for a change. A new work package that is added to the end of a non-volumized TM or to the end of the last volume of a multi-volume TM shall use the next available four-digit work package number. For example, if 0098 is the number of the last work package in the TM, 0099 shall be the number of the new work package. A new work package that is inserted between two work packages shall use a point numbering scheme to create a new sequence number that logically fits between the two existing work package numbers. Point numbers shall start with "1" and continue in numerical sequence as needed. If the work packages already have point sequence numbers, an additional point level shall be added to create a new sequence number that follows the same criteria. For example, to insert three work packages between WPs 0010 and 0011, the numbers 0010.1, 0010.2, and 0010.3 shall be used. For example, to insert a work package between 0010 and 0010.1, the number 0010.0.1 shall be used. For example, to insert two work packages between 0010.2 and 0010.3, the numbers 0010.2.1 and 0010.2.2 shall be used. For example, to insert a work package between 0010.3 and 0011, the number 0010.4 shall be used.

4.8.9.2.2 Deletion of work packages in a change. When a work package is deleted in a change, the work package shall be removed and a page inserted with a statement that says "WP XXXX was deleted" and a vertical bar shall be placed next to this statement. The deleted work package shall be listed on the change transmittal sheet and the list of effective pages/work packages with the word "DELETED" next to it. All work packages following the deleted work package shall retain their original work package sequence number.

4.8.9.2.3 Assignment of work package sequence numbers in volumized TMs. When a TM is divided into two or more volumes, the work package sequence number shall continue in sequence. The first volume shall contain as many work packages as necessary beginning with 0001. The work packages contained in the second and subsequent volumes shall be numbered consecutively beginning with the number immediately following the last work package sequence number in the preceding volume.

4.8.9.3 Work package identification information **<wpidinfo>**. All work packages shall include the identification information entries in the following sequential order, as applicable. (Refer to FIGURE 3.)

4.8.9.3.1 Maintenance class **<maintlvl>**. The lowest maintenance class authorized to use the work package shall be included. Operator instruction work packages shall have a maintenance class of either "operator" or “crew”. All maintenance work packages including operator maintenance shall have the word "maintenance" as part of the maintenance class (e.g., operator maintenance, maintainer maintenance, AMC maintenance, etc). Troubleshooting work packages shall include the word "troubleshooting" as part of the maintenance class (e.g., maintainer troubleshoooting). For all other types of work packages, the maintenance class shall contain no additional words (e.g., maintenance class for COEI/BII would be "operator", not "operator tasks".)

4.8.9.3.2 Work package title **<title>**. The title of the individual work package shall be listed (e.g., M144 Shop Van Semi trailer General Information).

4.8.9.3.3 Effectivity notice **<config>**. If applicable, an effectivity notice shall be included. When the work package does not apply to all configurations of the weapon system/equipment, the applicable configurations **<name>** covered by the work package shall be listed. Omit this requirement if the same task/procedure applies to all configurations. (If certain configurations require different tasks/procedures, separate work packages shall be prepared.)

4.8.9.3.4 Joint use. When TMs are acquired and specified by the Army for joint use with another or other services (Joint Service TMs), work packages in joint publications which do not apply to all services concerned shall be marked to indicate the service(s) to which they apply (e.g., LANDING GEAR MAINTENANCE (ARMY ONLY)).

4.8.9.4 Initial setup information **<initial_setup>**. The initial setup provides the maintenance technician with general information, equipment, parts, material, and authorized personnel required to perform and complete the task(s) included in the work package. As appropriate, referencing shall be established for all supporting information items. Unless otherwise specified in this standard, all work packages shall include initial setup instructions **<initial_setup>**. Initial setup shall be at the top of the work package directly following the work package identification information. There shall be only one initial setup per work package. Refer to FIGURE 1 for example of an initial setup. When no initial setup instructions are required to perform the task(s), the title **INITIAL SETUP** shall be included with the words "**Not Applicable**", which is set by selecting the element **<null>**. The items in paragraphs 4.8.9.4.1 through 4.8.9.4.9 shall be included in the intial setup in the order given. Items not applicable to the work package may be omitted.

4.8.9.4.1 Test equipment **<testeqp>**. All test equipment required to perform the procedure shall be listed by name **<name>**, the work package containing an overall listing of tools and special tools listed by work package number, and item number or document number **<itemref>**. Referencing will eliminate the need to repeat or update the part and model numbers throughout the TM.

4.8.9.4.2 Tools and special tools **<tools>**. Tools and special tools **<tools>**. Tools and special tools shall be listed as follows in the initial setup:

a. Kits. The tool kit (box) assigned (on a one-per-mechanic-by-MOS basis) to the mechanic to be used in the maintenance of a particular piece of equipment shall be listed by name **<name>**, by the work package sequence number for the work package containing an overall listing of tools and special tools listed, and by item number or document number **<itemref>** (e.g., Screwdriver, phillips head (WP 0142, Item 14)). Tools in the kit may be further identified. If tools from a kit are further identified, they shall be listed underneath the tool kit in the initial setup. A kit is defined as an assembly of tools/components in a small pouch or box, designed for use of and carried by an individual or crew, type classified with a unit of issue of kit.

b. Sets/Outfits. Sets/Outfits are listed in Table 2 of the MAC. The individual tools from the set or outfit shall be listed in the initial setup by name **<name>**, by the work package sequence number for the work package containing an overall listing of tools and special tools, and by item number or document number **<itemref>** (e.g., Wrench, socket (WP 0123, Item 12)) A set is defined as a collection of tools/components

used by a group, section, squad, platoon or unit usually supplemented by tool kits to perform an organizational mission, type classified, assigned a LIN, with a unit of issue of set. An outfit is defined as an assemblage of tools or equipment, type classified, assigned a LIN, with a unit of issue of outfit; it may include separately type classified items as a component, such as pneumatic tool and compressor outfit, water purification outfit, tool outfit hydraulic systems repair, and tool outfit pioneer portable electric tools.

c. Other individual tools. Other individual tools required for performance of the task which are not part of a kit, set, or outfit shall be listed in the initial setup by **<name>**, by the work package sequence number of the work package containing an overall listing of tools and special tools, and by item number or document number **<itemref>**.

Tools shall be referenced to the MAC tool table, RPSTL, or tool identification list containing details such as NSNs or part numbers. Initial setups shall not contain any NSNs or part numbers.

4.8.9.4.3 Materials/parts **<mtrlpart>**. All repair parts, expendable items, support materials, mandatory replacement parts, bulk items, and Critical Safety Items (CSIs) (FSCAPs) shall be listed by, as a minimum, name **<name>;** by quantity **<qty>**, if applicable; by work package sequence number for work package containing details about the materials/parts (e.g., expendable and durable items list, RPSTL, mandatory replacement parts list, etc); and by item number **<itemref>**, if any, or figure/group number as applicable. Referencing will eliminate the need to repeat or update the part and numbers throughout the TM. For example:

"Material/Parts

Grease (WP 0120, Item 5)
Range lock (WP 0120, Item 10)
Frequency Converter (WP 0122, Item 3)
Bracket Assembly, Chemical Alarm (WP 0121, Item 4)
Clamp, Loop (TM 11-1520-238-23P, Group 110503)"

4.8.9.4.4 Personnel required **<persnreq>**. Personnel **<name>** and the number of personnel **<qty>** shall be identified if the task requires more than one. The Military Occupational Specialty (MOS) designation **<mos>** may be included when a specific skill set is needed to perform the task. For example:

"Personnel Required

Artillery Mechanic 68M10
Artillery Mechanic 66J30 (2)"

4.8.9.4.5 References **<ref>**. When necessary, other work packages, TMs, foldouts, and other sources (**<link>**/**<extref>**/**<xref>**) that are needed to complete the task shall be listed here. Only references not listed in equipment conditions shall be listed. If reference is to a work package within the TM, it shall be by work package sequence number as a minimum and may include the title if needed. For example:

"References

TM 9-1015-252-20&P

WP 0100"

4.8.9.4.6 Equipment conditions **<eqpconds>**. Any special equipment conditions required before the task can be started shall be listed here and cross-referenced to the appropriate source (**<link>**/**<extref>**/**<xref>**) for setting up the condition **<condition>**. For example:

"Equipment Condition

Firing mechanism removed (WP 0010)"

4.8.9.4.7 Special environmental conditions **<specenv>**. Any special environmental conditions (such as ventilation, lighting, or temperature) **<condition>** that are required shall be listed here. The reason **<reason>** that such conditions are needed shall be explained. For example:

"Special Environmental Condition

Darkened area required for testing lights."

4.8.9.4.8 Drawings required **<dwgreq>**. When necessary, all drawings (which are not included in the work package) required to complete the maintenance task shall be listed here. Drawings shall be listed by title **<dwgname>** and drawing number **<dwgno>**. For example:

"Drawings Required

Power Supply Schematic (132E470092)"

4.8.9.4.9 Estimated time to complete the task **<time.to.comp>**. If required by the acquiring activity, the estimated time it will take to complete the task shall be included. Approved Logistics Management Information (LMI), and service experience, performance data on similar equipment, and all other Reliability, Availability, and Maintainability (RAM) data available shall be used to estimate the time required to complete the task. For example:

"Time to Complete

8 Hours"

4.8.9.5 End of task/work package statement. The words "**END OF WORK PACKAGE**" shall be placed immediately following the last data item (e.g., text, illustration, etc.) at the end of any work package, except for the following RPSTL work packages; Repair Parts List, Kits Part List, Bulk Items, Repair Parts for Special Tools List, and Special Tools List. For these RPSTL work packages, the words "**END OF FIGURE**" shall be placed after the list. If multiple tasks are included in a work package, the words "**END OF TASK**" shall be placed at the end of each task.

4.8.9.6 Work package page numbering. Each work package shall be page numbered consecutively using the four-digit work package sequence number followed by -1, -2, -3, etc. (e.g., 0001-1, 0001-2, etc.). Page numbers shall be centered at the bottom of the page. Even numbers shall be assigned to the left-hand pages and odd numbers to right-hand pages.

4.8.10 Paragraphs.

4.8.10.1 Paragraph numbering. Paragraphs and subparagraphs within a work package shall be unnumbered.

4.8.10.2 Paragraphs and subparagraph titles. Paragraphs and subparagraphs shall have titles. The title shall begin at the left margin. Paragraph requirements shall be as follows:

a. Primary paragraph plus four subparagraph levels.
b. Multiple primary paragraphs in a work package.
c. Multiple blocks of text under a title are allowed.
d. If a paragraph is continued on subsequent pages, the first level paragraph title may be placed at the top of those pages (e.g., REMOVAL-CONT). If continuation headers are directed, the acquiring activity will ensure the style sheets used to publish the TMs support this capability. Any modifications to Army provided style sheets will be provided to proponent activity.

4.8.10.2.1 Format.

a. Primary Paragraph - Paragraph shall be flush left. Title shall be bold and capital case. Block text shall start on a separate line and shall have a blank line between title and text block.
b. Subparagraph Level 1 - Paragraph shall be flush left. Title shall be bold and title case. Block text shall start on a separate line and shall have a blank line between title and text block.
c. Subparagraph Level 2 - Paragraph shall be flush left. Title shall be bold, title case, and end with a period. Block text shall start immediately after the title.
d. Subparagraph Level 3 - Paragraph shall indent first line five spaces and the remaining text flush left. Title shall be bold, title case and end with a period. Block text shall start immediately after the title.
e. Subparagraph Level 4 - Paragraph shall indent first line ten spaces and the remaining text flush left. Title shall be bold, title case and end with a period. Block text shall start immediately after the title.

4.8.10.2.2 Continuation headers. The continuation header shall be in the same style and format as the original header (e.g., if it is centered and all caps, the continuation header shall be centered and all caps; if it is left justified and title case, the continuation header shall be left justified and title case).

4.8.11 Task titles. Each operator, maintenance, and troubleshooting task shall have a title.

4.8.12 Procedural steps. Procedural steps shall be used to present detailed step-by-step instructions for performing an operational or maintenance task. Subordinate steps may be used to differentiate an expert step from a novice step. When subordinate steps are used in combination with an expert step, the subordinate steps should appear indented under the expert step.

4.8.12.1 Procedural step levels. When required, procedural steps shall be divided into no more than six levels. The following demonstrates, by example, how procedural steps and subordinate steps levels shall be formatted and numbered.

EXAMPLE:

1. Primary procedural step number (1, 2, 3, etc.) is flush left. Text begins two spaces after the period following the numeral. The text is blocked.

   a. The first-level procedural subordinate step letters, (a, b, c, etc.), are immediately below the text of the first-level procedural steps. The text is blocked. If additional subordinate step letters are required, use aa., ab., etc., after z.

      (1) The second-level procedural subordinate step numbers, ((1), (2), (3), etc.), are immediately below the text of first-level procedural subordinate steps. The text is blocked.

         (a) The third-level procedural subordinate step letters, ((a), (b), (c), etc.), are immediately below the text of second-level procedural subordinate steps. The text is blocked. If additional subordinate step letters are required, use (aa), (ab), etc., after (z).

            1 The fourth-level procedural subordinate step numbers, (1, 2, 3, etc.), are immediately below the text of third-level procedural subordinate steps. The text is blocked.

               a The fifth-level procedural subordinate step letters, (a, b, c, etc.), are immediately below the text of fourth-level procedural subordinate steps. The text is blocked. If additional subordinate step letters are required, use aa, ab, etc., after z.

4.8.12.2 Procedural step titles. Procedural steps shall not have titles.

4.8.13 Tables and lists.

4.8.13.1 Placement of tables. Tables shall be placed in the TM on the same page or as soon after the first reference in the text as possible. Full-page tables using a horizontal (landscape) format shall be positioned so that the page must be rotated 90 degrees clockwise to be read. The table number and title shall be placed at the top of the table.

4.8.13.2 Table numbering. Tables which will be referenced or listed in the table of contents shall be numbered. Table numbers shall be consecutive within each work package in the order of their reference starting with Arabic number 1. If only one table is referenced in a work package, it shall be numbered. For Marine Corps only manuals, tables shall be numbered. Tables designated as **standard information per paragraph 4.8.13.7** shall be numbered.

4.8.13.3 Table titles. Tables may have titles. Tables which are referenced or listed in the table of contents shall have a title. The titles shall identify the contents or purpose of the table and distinguish that table from others in the TM. The table title shall appear above the table. If a table is two or more pages, table titles shall be continued on each page. The preferred table title format is provided in MIL-HDBK-1222. For Marine Corps only manuals, tables shall be titled. Tables designated as **standard information per paragraph 4.8.13.7** shall be titled.

4.8.13.4 Footnotes **<ftnote>** to tables. Footnotes shall appear at the bottom of the table. For multiple page tables, the footnotes shall appear on the last page of the table. The footnotes shall not be placed at the bottom of each page of multiple page tables. The preferred formatting for footnote numbering in tables is provided in MIL-HDBK-1222.

4.8.13.5 Table format. Tables designated as **standard information per parapgrah 4.8.13.7** shall have no deviations to the number of columns, the titles in the column headings, and the required format. The standard information format is automatically generated by the applicable stylesheet. The DTD provides for non-standard tables. For non-standard tables, the data required in APPENDIXES B through L shall be included regardless of format used. The preferred style and format for all non-standard tables is provided in MIL-HDBK-1222.

4.8.13.6 Lists. Lists may be used in lieu of tables, when appropriate. Lists may be unnumbered, numbered sequentially, or lettered alphabetically. They may have an optional title. Three types of lists are identified:

4.8.13.6.1 Definition list **<deflist>**. The definition list shall consist of the term **<term>** and the definition **<def>**. The definition list may have headers such as "**Term**" and "**Definition**" above the appropriate sections of the list.

4.8.13.6.2 Random list **<randlist>**. The random list shall consist of one or more items in a random order.

4.8.13.6.3 Sequential list **<seqlist>**. The sequential list shall consist of one or more items in a specified order, such as alphabetic, numeric, or alphanumeric.

4.8.13.7 Standard information. Data designated as **standard information** is prescribed in the following. The standard information specified data shall have no deviation to the content requirements including the use of standard headings. The standard information shall be presented as prescribed in the standard. Refer to APPENDIXES C through G of this standard and MIL-HDBK-1222 for examples. A list of tables that contain standard information is provided below:

a. Controls and Indicators (Refer to C.5.2.2.1.)
b. Checking Unpacked Equipment (Refer to E.5.3.2.3.3.2.)
c. Preventive Maintenance Checks and Services (PMCS) (Refer to E.5.3.4.)
d. Mandatory Replacement Parts List (Refer to E.5.3.4.2.2 and G.5.8.4.)
e. Classification of Materiel Defects (Refer to E.5.3.5.3.2.2 6.)
f. Overhaul and Retirement Schedule (Refer to E.5.3.6.3.)
g. Overhaul Inspection Procedures (OIPs) (Refer to E.5.3.9.3.)
h. Depot Mobilization Requirements (Refer to E.5.3.9.4.)
i. Special Inspections (Refer to E.5.3.13.1.5.)
j. Repair Parts List (Refer to F.5.3.6.)
k. Kit Parts List (Refer to F.5.3.8.)
l. Bulk Items List (Refer to F.5.3.9.)
m. Special Tools List (Refer to F.5.3.10.)
n. National Stock Number (NSN) Index (Refer to F.5.3.11.1.3.)
o. Part Number Index (Refer to F.5.3.11.2.)
p. Reference Designator Index (Refer to F.5.3.11.3.)
q. Standard Maintenance Allocation Chart (MAC) (Refer to G.5.3.3.)
r. Aviation Maintenance Allocation Chart (AVMAC) (Refer to G.5.3.3.)
s. Tools and Test Equipment Requirements (MAC/AVMAC) (Refer to G.5.3.4.)

t. Remarks (MAC/AVMAC) (Refer to G.5.3.5.)
u. Component of End Items (COEI) List (Refer to G.5.4.4.)
v. Basic Issue Items (BII) List (Refer to G.5.4.5.)
w. Additional Authorization List (AAL) (Refer to G.5.5.4.)
x. Expendable and Durable Items List (Refer to G.5.6.4.)
y. Tool Identification List (Refer to G.5.7.4.)
z. Critical Safety Items (CSI (FSCAP)) (Refer to G.5.9.3.)

4.8.14 Placement of text.

a. Preferred text format for 8½ by 11-inch manuals is single column (page wide), although double column can be used. Both single- and double-column formatted work packages can be included in a single TM if it would make the data more readable or comprehensible, however, both formats should not be used in the same chapter. Text is single spaced (double spaced between procedural steps).
b. Procedural step text shall not be placed on an illustration.
c. Text shall always be positioned within the image area (within margins). The text shall be positioned above and below the illustration, and not on the illustration left or right sides.
d. The first line of a paragraph shall not be located at the bottom of the page or column (widow). The last line of a paragraph shall not be placed at the top of a new page (orphan). Do not place the title or header on the last line of a page or column. Widows and orphans are not allowed.

4.8.15 Placement of illustrations. Illustrations shall be placed as close to their reference in text as possible. Illustrations may float on a page to reduce the white space on a page. Whenever possible, place illustrations on the same or facing page of associated text. Foldout illustrations shall not be included in work packages, but shall placed inside the back cover after all of the other material in the manual or volume.

4.8.15.1 Rotating illustrations. When an illustration is wider than the page, the illustration may be placed sideways on a page (rotated 90 degrees counterclockwise). However, foldouts shall not be rotated.

4.8.15.2 Placement of text and related illustrations for pocket-sized TMs. Place text for pocket-sized manuals on the right-hand pages with supporting illustration on the facing left-hand pages.

4.8.15.3 Repeating illustrations. Illustrations are not repeated unless necessary to support multi-page descriptions of tasks or to support a different requirement in another part of the TM.

4.8.16 Margin data. Margin data (usually headers and footers) shall be placed outside the area of the page used for either text, full-page tabular data, or full-page illustrations, but within the printing area dimensions of the page. (Refer to 4.8.16.1 and 4.8.16.2.) Complete headers and footers shall be prepared for all pages except: TM cover pages, title pages, transmittal pages, and rear matter pages (except for pocket-sized TMs where theTM numbers shall only be on the front cover and back cover along with the PIN).

4.8.16.1 Headers. Headers shall consist of the security classification markings (refer to 4.8.22) if any, the TM number centered at the top of each page, and the work package sequence number (refer to 4.8.9.2) placed at the extreme top right of each page. (Refer to FIGURE 1.) If the manual is jointly used by two or more Services, only the acquiring activity's TM number shall be placed on each page. TM numbers for pocket-sized TMs are required on front and back covers only. For pocket-sized manuals only, the work package sequence number may be placed only on the first page of the work package providing it is included as part of the page number on all pages of the work package.

4.8.16.2 Footers. Footers shall include the security classification markings (refer to 4.8.22) if any, the page numbers (refer to FIGURE 1), and other information as specified by the acquiring activity (e.g., change designator).

4.8.16.2.1 Page numbering. Except for foldout pages, all TM page numbers shall be centered at the bottom of the page. Even numbers shall be assigned to left-hand pages and odd numbers to right-hand pages. For horizontal TMs, the upper pages shall have even numbers, and the lower pages shall have odd numbers. Page numbers shall be in boldface type. Page numbering for RPSTLs shall also be in accordance with this paragraph and 4.8.16.2.1.1 through 4.8.16.2.1.3.

4.8.16.2.1.1 Front matter. Page numbering for front matter shall be as follows.

a. Front cover. Front covers shall be unnumbered.
b. Warning summary. The pages of the warning summary shall be numbered consecutively using lowercase letters (e.g., a, b, c, etc.).
c. Change transmittal page. The change transmittal page shall be unnumbered.
d. List of effective pages/work packages. When a list of effective pages/work packages is prepared, it shall be numbered with upper case letters (e.g., A, B, etc.).
e. Title page, table of contents, and the how to use this manual section. These pages shall be numbered consecutively using lower case Roman numerals beginning with i (e.g., i, ii, iii, etc.). Numbering shall be continuous and shall not start over with "i" for the table of contents or how to use this manual information.

4.8.16.2.1.2 Rear matter. DA Forms 2028, authentication pages, metric conversion charts (on the inside of the back cover), and back covers shall be unnumbered. Page numbers for a glossary shall begin with Glossary-1, Glossary-2, etc. Page numbers for an index shall begin with Index-1, Index-2, etc.

4.8.16.2.1.3 Blank pages. Blank pages shall not be numbered and on the preceding or following page shall be denoted as a blank. For example, if page 0001-10 of a work package is blank, page 0001-9 shall have the number 0001-9/blank. Unless otherwise specified by the acquiring activity, blank pages shall contain no text (e.g., this page intentionally left blank) or any other information.

4.8.16.2.1.4 Foldout page numbers. Foldout page numbers shall be numbered consecutively using Arabic numbers prefixed by the letters "FP." The reverse side of foldout pages shall be blank and each foldout page number shall include a blank page notation (e.g., FP-1/blank, FP-3/blank, etc.). (Refer to FIGURE 4.)

4.8.17 Abbreviations and acronyms. The first use of abbreviations and acronyms shall have the word(s) spelled out completely with the abbreviation or acronym in parentheses immediately after the word(s). Acronyms such as PMCS shall be in all capital letters and shall contain no spaces or periods but abbreviations such as U.S., etc, e.g., etc may contain periods.

a. Acronyms, abbreviations, and unusual terms may be used in any work package text, when applicable.

b. Abbreviations and acronyms, which are accepted as words (radar, sonar, laser, etc.) need not be included.

c. All abbreviations and acronyms used in the manual, including those in tables or figures, shall be defined in the "list of abbreviations/acronyms" paragraph of the general information work package. Refer to APPENDIX B.

d. Use of abbreviations and acronyms shall follow the following criteria:

(1) Common abbreviations and acronyms shall be taken from ASME Y14.38.

(2) DOD unique abbreviations and acronyms shall be taken from JP 1.02.

(3) Army abbreviations and acronyms shall be taken from https://www.rmda.army.mil/abbreviation.

(4) Any new abbreviations and acronyms shall be developed in accordance with AR 25-52.

e. When abbreviations or acronyms are used as markings on the equipment (placarding), the same abbreviations or acronyms shall be used in the TM.

f. Abbreviations and acronyms used in tables, but not found in the text or in any other portion of the TM, shall be spelled out in a footnote to the applicable table. Abbreviations and acronyms used in illustrations or figures, but not found in the text or in any other portion of the TM, shall be spelled out in a note to the applicable illustration or figure.

4.8.18 Symbols.

4.8.18.1 General information for symbols. All nonstandard symbols shall be defined in the list of abbreviations and acronyms contained in the General Information work package. (Refer to B.5.2.) New symbols shall not duplicate those presently listed in ASTM-F856 where possible.

4.8.18.2 Metric symbols. Metric symbols shall be in accordance with IEEE Std 945.

4.8.19 Nuclear hardness (hardness-critical processes) marking. All Hardness-Critical Processes shall be preceded with the acronym **HCP**. The acronym shall be prepared in boldface type and in the same style and size as the adjacent text. The acronym shall not be shown with the titles in the table of contents. Use of the acronym is as follows:

a. When the entire task and all subordinate paragraphs and steps relate to establishing nuclear hardness, the acronym **HCP** shall precede the task title (e.g., **HCP** DISASSEMBLY).

b. When the entire task and all subordinate paragraphs and steps do not contribute to establishing nuclear hardness, only those that do contribute shall be annotated with the acronym **HCP**. For example:

"SERVICING

1. _____

2. **HCP _____"**

c. Operating or maintenance actions which could degrade hardness, but which are not directly involved in establishing nuclear hardness, shall not be annotated with the acronym, but shall be preceded by a caution.

4.8.20 Electrostatic Discharge (ESD) sensitive marking. All paragraphs addressing handling or maintenance which could damage ESD sensitive parts shall be marked with the acronym **ESD** as shown in the following. The acronym shall be prepared in boldface type and in the same style and size as the adjacent text. The acronym shall not be shown with the titles in the table of contents. Use of the acronym is described in the following list:

a. When the entire task and all subordinate paragraphs and steps relate to ESD sensitive parts, the acronym **ESD** shall precede the task title (e.g., **ESD** DISASSEMBLY).

b. When the entire task and subordinate paragraphs and steps are not directly related to ESD sensitive parts, only those which do apply shall be annotated with the acronym **ESD**. For example:

"REMOVAL

1. _____

2. **ESD _____"**

c. Handling or maintenance actions which could damage ESD sensitive parts, but which are not directly related to handling or maintenance of ESD sensitive parts, shall not be annotated with the acronym **ESD**, but shall be preceded by a caution.

d. Mark figures, drawings, and schematics with the **ESD** acronym in accordance with MIL-STD-1686.

4.8.21 Quality Assurance (QA). Depot and aviation maintenance procedures, which have a QA impact, shall be identified by the acronym **QA** in boldface letters preceding the text. Only procedures at the step level shall be labeled with **QA**. For example:

"1. **QA _____**"

4.8.22 Special page markings. This paragraph covers page markings for classified manuals, those with other restrictive markings and emergency page markings.

4.8.22.1 Security classification.

4.8.22.1.1 Classification guidelines. When the acquiring activity requires the development of a classified TM, it shall be properly marked as cited in 4.8.23.1.2, 4.8.23.1.3, and the current security directives. To ensure proper protection of classified markings, if there is a conflict between the text contained herein and the current security directives, the current security directives shall take precedence. The security classification markings for classified TMs, titles of parts, chapters, work packages, paragraphs, illustrations, tables, and their contents, shall be identified in accordance with DODM 5200.01 volumes 1-4, DOD 5220.22-M, and Executive Order 12958. For guidance on classification and handling restrictive markings on CD-ROM, refer to MIL-HDBK-9660. Downgrading/declassification shall be done in accordance with DODM 5200.01 volumes 1-4. The overall security classification assigned to a TM shall agree with the highest security classification assigned to any portion within.

4.8.22.2 Emergency page markings. When specified by the acquiring activity, emergency pages shall be prepared. Pages containing emergency information shall have a dark border that indicates to the user that they are emergency pages. The border should go to the edge of the page, if the composition system allows it, and should be made up of characters such as large Xs, large asterisks, or large slashes. Refer to FIGURE 5 for examples of emergency page markings.

4.8.22.3 Protective markings. When specified by the acquiring activity, a FOR OFFICIAL USE ONLY (FOUO) protectively marked TM shall be prepared. Any TM marked as FOUO shall have each page and paragraph containing FOUO information marked as such. Refer to DODM 5200.01 volumes 1-4 for specific requirements on using the FOUO protective marking.

4.8.23 Referencing.

4.8.23.1 Other documents <**extref**>. Reference shall be made only to other documents available through normal publications channels such as Army Publishing Directorate, Media Distribution Division, St. Louis, MO, or a post library and which are authorized to the user. For Government specifications and standards, reference shall be made to the basic publication number. For non-Government documents, reference shall be made by the publication number. References to pending publication actions shall not be made.

4.8.23.2 Within the TM <**xref**>. Reference within a work package shall be to the appropriate maintenance task title, procedure title, step number, figure number or table number, etc. References to other work packages shall include the work package sequence number in the reference (e.g., WP 0125, etc.). The work package sequence number shall appear before the reference title or number.

4.8.23.2.1.1 TM divisions. References to any major division of the manual shall be made by name (e.g., volume 5, chapter 6, table of contents, glossary, index, etc.) or by abbreviation (e.g., vol 5, chap 6, TOC, etc.).

4.8.23.2.1.2 Volumes. References to information in another volume within the TM shall include the volume number.

4.8.23.2.1.3 Maintenance tasks, procedures, and paragraphs. Reference to maintenance tasks, procedures, and paragraphs shall be by work package sequence number and reference to title, as necessary (e.g., WP 0025, Disassembly or WP 0012, Equipment Data).

4.8.23.3 Equipment, components, and parts. References to parts of the equipment and to equipment components may be made by nomenclature, model, type, reference designator, or figure and item number, as applicable. References shall be made only to models or types of equipment covered by the TM.

4.8.23.4 National Stock Numbers (NSNs) and Part Numbers (P/Ns). Reference to NSNs shall be made only in tables, other tabular material, and lists. Reference to NSNs shall not be made on illustrations or in illustration legends. Reference to P/Ns shall not be made in the narrative portions of the TM, procedural steps, illustrations, or legends, except when essential for identification. Reference to P/Ns may be made in tables, other tabular material, and lists.

4.8.23.5 Equipment panel markings (placarding). Reference shall be made to panel markings and switch positions exactly as marked on the equipment. However, symbols on panel markings shall be spelled out when they cannot be produced by the software, composing equipment, or printers used in producing the manual, such as the symbol for ohm, infinity, etc.

4.8.23.6 Metric and United States (U.S.) standard measurements. Unless specified otherwise by the acquiring activity, all measurements shall be expressed in both U.S. standard units (e.g., ounces, pounds, gallons, inches, feet, knots, miles, etc.) and metric units (e.g., grams, kilograms, liters, centimeters, kilometers per hour, kilometers, etc.). U.S. standard measurements shall be followed by the metric conversion in parentheses unless the equipment, instrument, or tool, etc., is calibrated in metric units. In that case, metric units shall be first, followed by the U.S. standard units (e.g., "169.5 N•m (125 lb-ft)").

4.8.23.7 Temperature. Reference shall be made to temperature readings as calibrated on the equipment. If other than Fahrenheit, the equivalent in Fahrenheit shall follow in parentheses. General temperature references, such as room temperature, shall be given in degrees Fahrenheit (e.g., 78°F).

4.8.23.8 Other TMs/ IETMs <**extref**>. When it becomes necessary to reference to other work packages, descriptive information, maintenance tasks, or other data contained in another TM/IETM, it shall be by the TM number, as a minimum.

4.8.23.9 Tables. References shall be made to tables within a work package by table number (e.g., Table 2). References shall be made to tables in a different work package by work package sequence number and table number (for example, WP 0012, Table 2). References shall be made only to tables within the same manual or another volume of the same manual.

4.8.23.10 Figures and multisheet figures. References shall be made to figures within a work package by figure number (for example, Figure 2) and the sheet number for multisheet illustrations, when applicable (e.g., Figure 17, Sheet 1). References shall be made to figures in a different work package by work package sequence number and figure number (for example, WP 0012, Figure 2). References shall be made only to figures within the same manual or another volume of the same manual.

4.8.23.11 Index numbers. Unless specified otherwise by the acquiring activity, figure and index numbers shall be used in text to identify items and parts on illustrations. For example:

> "Remove safety disc (Figure 1, Item 3) and safety disc washer (Figure 1, Item 4) from valve body (Figure 1, Item 2)."

4.8.23.12 Items on diagrams. References shall be made to parts on diagrams by sufficient description or reference designator to identify the item (e.g., resistor A6R11).

4.8.23.13 Footnotes. References shall be made to footnotes when essential for explanation, comments, or other information. Testing procedures shall not contain footnotes.

4.8.23.14 Repeating information. Repeating information shall be allowed to ensure the work package information is complete. Information, two pages or less may be repeated; information more than two pages shall be referenced.

4.8.24 Equations. The use of equations shall be held to the minimum use required by the needs of the TM user.

4.8.25 Nomenclature.

4.8.25.1 Nomenclature consistency and applicability. Nomenclature, other terms, and names shall be consistent within a manual and throughout the RPSTL, MAC, and other directly related manuals. Statements that explain applicability for individual items of equipment shall use specific serial numbers, block designations, model designations, or similar identification. Such terms as "on later equipment" and "on early serial numbers" shall not be used.

4.8.25.2 Official/approved nomenclature. Unless specified otherwise by the acquiring activity, only approved names and official nomenclature shall be used. Official nomenclature shall be the nomenclature used in the FEDLOG H6 listing (https://www.dlis.dla.mil/h6/). If the acquiring activity approves unofficial nomenclature (common name), an appropriate nomenclature cross-reference list shall be prepared for the TM and placed in the general information work package. (Refer to APPENDIX B.) Shortened versions of the approved nomenclature are not considered deviations. Approved nomenclature shall be used wherever the use of a common name might be ambiguous.

4.8.25.3 Military terms. Military terms used shall be in accordance with Joint Pub 1-02 or any approved dictionary or glossary of Army military terms.

4.8.25.4 Automatic electronic test and checkout terminology. Terms used for automatic electronic test and checkout shall be in accordance with MIL-STD-1309.

4.8.26 Comprehensibility. TMs shall be written for the target audience. Reading Grade Level (RGL) shall be as specified by the acquiring activity. Refer to MIL-HDBK-1222 for guidance on calculating the RGL for TMs.

4.8.27 Graphics.

4.8.27.1 Graphic format. Graphics formats shall be as specified by the acquiring activity in accordance with AR 25-30. A list of preferred formats is provided in MIL-HDBK-1222.

4.8.27.2 Types of graphics. As applicable, the following types of graphics shall be used in the preparation of TMs. Preferred format of these graphics and typical examples are provided in MIL-HDBK-1222.

a. Line drawings.
b. Photographs.
c. Engineering drawings.
d. Diagrams.
e. Charts and graphs.
f. Tools and test equipment illustrations.

4.8.27.2.1 Line drawings. Line drawings including exploded views, locator views, and detailed views shall be used to support the operational, troubleshooting, and maintenance procedures. Examples of line drawings are provided in MIL-HDBK-1222.

a. When index numbers are used to locate and identify equipment components or parts, they shall be used as specified in 4.8.27.3.4.1.
b. To assist the maintenance technician or operator in locating major components, controls and indicators, etc., locator views may be included.
c. When the illustration does not adequately or clearly depict the subject matter or part(s), specific detailed views may be included to support the main illustration.

4.8.27.2.2 Multiview and multisheet illustrations. Multiview and multisheet illustrations may be used to clarify, identify significant features, or further detail equipment assemblies, subassemblies, and detailed parts. Refer to MIL-HDBK-1222 for examples of multiview and multisheet illustrations.

4.8.27.2.3 Photographs. Photographs, film or digital, may be used for illustrations when a photograph provides for better clarity than a line drawing. All photographs, regardless of source, shall be delivered as digital photographs. The acquiring activity shall determine acceptability of photographs and usage of line drawings.

4.8.27.2.3.1 Photograph quality. If used, photographs shall be detailed and sharp, free of heavy shadows, distorted objects, cluttered foregrounds and backgrounds, and of good contrast. Photographs shall provide sufficient detail for the user to clearly identify all components.

4.8.27.2.3.2 Retouching. Photographic retouching shall be held to a minimum. Retouching shall be used only to emphasize detail, exclude unwanted detail, correct slight photographic defects, and eliminate undesirable shadow from that portion of the photograph related to the text only.

4.8.27.2.3.3 Use of photographs in place of line drawings. For photographs that cannot meet the requirements specified previously, line drawings shall be prepared and used.

4.8.27.2.4 Engineering drawings (**NMWR/DMWR only**). Engineering drawings may be used with the approval of the acquiring activity. Engineering drawings are controlled documents and when used, they shall be used in their entirety, without modification. They shall be reduced or redrawn to meet page size restrictions. When the controlled elements of an engineering drawing (e.g., title block, sources of supply, revision data, etc.) are removed, leaving only the "field" of the drawing, it shall be treated as a typical line drawing.

4.8.27.2.5 Diagrams.

4.8.27.2.5.1 Diagram specifications. Diagrams shall be prepared in accordance with the following specifications.

Table III. Diagram specifications.

Subject	Equipment Covered	Specification
Abbreviations	All	ASME Y14.38, JP 1-02, and https://www.rmda.army.mil/abbreviation/mainpage.asp
Engineering Drawing	All	ASME Y14.100
Graphic Symbols	Electrical and Electronic	IEEE Std 315a, IEEE Std 280
	Mechanical	ASTM-F856
	Digital (Logic)	IEEE Std 91
	Fluid Power	ISO 1219 (Parts 1 and 2)
Unit Symbols	All	IEEE Std 260.1
Logic	All	IEEE Std 91

4.8.27.2.5.2 Types of diagrams. The following types of diagrams may be included in the TM. Refer to MIL-HDBK-1222 for examples of types of diagrams.

a. Block diagrams.
b. Schematic diagrams.
c. Pictorial diagrams.
d. Cutaway diagrams.
e. Wiring diagrams/wire lists.
f. Cable diagrams.
g. Piping diagrams.
h. Test setup diagrams.

4.8.27.2.6 Charts and graphs. Charts and graphs shall be prepared as illustrations. Instructions shall be provided for use and interpretation of complex graphs.

4.8.27.2.7 Tools and test equipment illustrations. Only uncommon or unusual uses and connections for test purposes shall be illustrated if it is essential to avoid misunderstanding. Unusual operations shall also be illustrated. Special tools and test equipment shall be illustrated, as applicable. Standard tools and test equipment shall not be illustrated, nor shall self-evident or generally known uses be shown.

4.8.27.3 Elements of illustrations.

4.8.27.3.1 Border rules and boxes. Border rules and boxes shall not be used for single illustrations, but are used to separate multi-section illustrations on the same page or for locator/detail views. Refer to MIL-HDBK-1222 for an example of border rules and boxes.

4.8.27.3.2 Use of the human figure. When necessary, illustrations may include parts of the human body such as a hand, arm, leg or foot. The human figure shall not contain any information that can identify the person including a face, rank insignia, identification numbers, unit/company/brigade patches, medals/wings, etc. Jewelry shall not appear in any illustration. The human figure shall not be permitted to obscure details of the equipment necessary for a complete understanding of its operation. The human figure shall be clothed as designated by the acquiring activity. A cross section of races and sexes shall be used.

4.8.27.3.3 Credit lines.

a. The photographer's or illustrator's name shall not appear on any illustration.
b. A manufacturer's name, symbol, or trademark shall not appear on illustrations for the purpose of identifying the illustration.

4.8.27.3.4 Callouts. Index numbers, reference designators, nomenclature, leader lines, sweep arrows, legends, and other identifiers shall be used, when necessary, to identify significant features. Both index numbers and nomenclature can be used in the same document. However, they shall not be used together in the same illustration. Refer to MIL-HDBK-1222 for examples of the use of these types of identifiers.

4.8.27.3.4.1 Index numbers. Index numbers shall start with Arabic numeral 1 and continue consecutively within an illustration. For multisheet illustrations, index numbers shall continue in sequence from one sheet to another.

a. Index numbers shall be presented in one of the following manners:
   (1) In clockwise sequence, beginning at 11 o'clock. Refer to MIL-HDBK-1222 for example of callouts starting at 11 o'clock. This is the preferred method.
   (2) In inspection or disassembly/assembly order.
   (3) In the order mentioned in the text.
b. Within a multisheet illustration, if an item that already has been assigned an index number is used in more than one illustration in that multisheet illustration, it shall retain the same index number.
c. All items shown as exploded shall be identified. Items drawn in phantom need not be identified.
d. Index numbers shall not be contained within a shape of any kind (e.g., circle, square, triangle, etc.

4.8.27.3.4.2 Leader lines and arrowheads. Leader lines shall be uniform, short, and as straight as possible; avoid the use of dogleg-shaped lines unless absolutely necessary. Arrowheads may be added for clarity. Do not allow leader lines to touch the callout. Do not allow arrowheads to enter the object to which they apply. If it is necessary to enter the object to provide for greater clarity, a breakoff symbol shall be used in lieu of an arrowhead.

4.8.27.3.5 Illustration legends. When necessary for clarity, legends shall be prepared to identify index numbers on illustrations. Legends shall not be a part of the illustration and shall be placed in the text area. Examples of legends are provided in MIL-HDBK-1222.

4.8.27.3.6 Procedures on illustrations. Procedural steps shall not be placed on illustrations.

4.8.27.4 Graphic techniques. In addition to the graphic techniques provided in 4.8.27.4.1 through 4.8.27.4.8, refer to MIL-HDBK-1222 for suggested graphic techniques used for the preparation of TMs.

4.8.27.4.1 Figure numbers. Figure numbers shall be included on all illustrations except inline graphics (e.g., equations). Figures shall be numbered using Arabic numbers sequentially within each work package starting with the Arabic numeral 1. The figure number shall precede the title. The figure number and title shall not be an integral part of the figure. The figure number and title shall be separated from the graphic so the text can have the capability of being searched.

4.8.27.4.2 Repair Parts and Special Tools List (RPSTL) figure numbering. Figures for RPSTL shall be numbered sequentially within the RPSTL (not within each work package) using Arabic numerals beginning with 1. Multisheet RPSTL illustration shall be used as specified by the acquiring activity and shall be numbered as described in this paragraph and in 4.8.27.4.4.

4.8.27.4.3 Foldout figure numbering. Foldout figures shall be numbered in consecutive ascending numerical sequence within each TM, beginning with Arabic number 1 (e.g., FO-1, FO-2, etc.). Figures are numbered in the order of reference in the text. Figure numbers for foldouts shall be placed preceding the figure title under the illustration.

4.8.27.4.4 Multisheet numbering. Multisheet figures shall be consecutively sheet numbered and include the total number of sheets following the title; for example, "Figure 2. Wing Hydraulic Assembly (Sheet 1 of 3)." or "Figure 1. Cable Assembly W12 Wiring Diagram (Sheet 1 of 2)." Remaining sheets shall be numbered in consecutive order; for example, Sheet 2 of x, Sheet 3 of x, etc. (where x is the total number of sheets). A sample multisheet illustration is provided in MIL-HDBK-1222.

4.8.27.4.5 Figure titles. Each figure, except inline graphics (e.g., an equation), shall have a figure title.

4.8.27.4.5.1 Figure title format. The figure title format shall:

a. Include "Figure" in title case, followed by the figure number, a period, two spaces, and the title (e.g., "Figure 3. Fuel Indicator.").
b. Capitalize the first letter of the first and each major word of the title.
c. End with a period following the last word.
d. Identify illustrations applicable to one service in a joint service TM (e.g., "Figure 3. Fuel Indicator (Army Only).").
e. Identify illustrations applicable to more than one service in a joint service TM (e.g., "Figure 3. Fuel Indicator (Army and Air Force Only).").

4.8.27.4.5.2 Figure title placement. Figure title placement shall:

a. Center the figure title on the graphic image area below the graphic
b. Begin the title on the same line with the figure number.
c. When the title is too long to fit on one line, align the second line with the first letter of the title.

4.8.27.4.6 Illustration identification numbers.

a. Each illustration shall be assigned a unique identification number provided by the proponent activity.
b. The contractor's identification number may be used when approved by the proponent activity.
c. When the identification number is to be printed in the TM, such number shall be approximately 4- to 6-point type and placed in the lower right-hand corner of the illustration (within the graphics area) sufficiently removed to avoid being confused as part of the illustration.

4.8.27.4.7 Portraying signal flow. Signal flow, especially for electrical and electronic equipment, critically affects the understandability of diagrams. To assist the TM user in following the diagram, major signal or pressure flow shall be from left to right, and feedback or return flow shall be from right to left, if possible.

4.8.27.4.8 Use of color. Unless specified otherwise by the acquiring activity, black and shades of black (one color) shall be used for TMs. Prior approval for color will be obtained by the acquiring activity from the Army Publishing Directorate (APD). The acquiring activity will provide written approval, designating color(s) to be used.

4.9 Changes/Revisions. When updates to TMs are ordered, the deliverable product shall be changed pages/work packages or a complete revision of the TM. The acquiring activity will determine the type of update required. When changes/additions/deletions of maintenance tasks are done, the associated MAC should be reviewed and updated as required.

4.9.1 Changes for TMs. A change is used to incorporate appropriate new information (e.g., MAC changes, Modification Work Orders (MWOs), engineering drawing changes, DA Forms 2028, etc.) into the basic TM (or previous edition) or clarifies, corrects, or improves existing information in the TM. The change will be written in the same style and format as the basic manual.

4.9.1.1 Changes. Changes shall consist of a change transmittal page and the applicable change pages and/or work packages. For the content and format of a change transmittal page, refer to FIGURE 7.

a. Each change to a TM shall be numbered in sequence beginning with 1.
b. Front matter, work package, and rear matter change pages shall conform to the style and format of the basic TM and shall incorporate all approved information.
c. Changes to front and rear matter pages and all pages of a changed work package shall include the applicable change number located on the outer edge of the page opposite the binding side at the bottom og the page.
d. The Publication Identification Number (PIN) shall be on the last page of the change package.
e. Change date shall appear on the change transmittal page only. Refer to FIGURE 7.

4.9.1.2 Changed work packages. When updates to a work package are made, the entire work package shall be reissued and included in the TM change package.

4.9.1.3 Changed front and rear matter pages. When updates to the front and rear matter of a TM are required, all pages that share the same page number style (e.g., a-z or i-ix) shall be revised and reissued and included in the TM change package.

4.9.1.4 Change symbols for text and tables. Change symbols shall be inserted to identify technical updates in text and tables as follows:

a. Updates to the text and tables shall be indicated by a vertical bar opposite the updated, deleted, or added text (except as noted in the following items).
b. A change bar shall be placed to the left of the table title only if the table title is changed or a new table is added. A change bar shall be placed to the left of the illustration title only if the illustration title is changed.
c. Change symbols from a previous update shall be deleted when a page is subsequently updated. Symbols shall show current updates only.
d. Change symbols are not required for correction of minor inaccuracies, such as spelling, punctuation, relocation of material, renumbering, etc., unless such correction changes the meaning of the information.
e. If everything in the work package is changed, a vertical bar shall be placed to the left of the work package title in lieu of putting vertical bars next to all the text. Procedural steps or list items whose number/letter changed after adding or deleting material shall not be marked with a vertical bar and shall not be considered changed material.

4.9.1.5 Change symbols for illustrations. Unless specified otherwise by the acquiring activity, a miniature pointing hand may be used for illustrations (other than diagrams and schematics) to highlight the area containing the revised information. Changes shall be indicated as follows:

a. Changes continued to the same general area shall be indicated only once on the illustration.
b. A vertical bar next to changed callouts on illustrations may be used in lieu of a pointing hand.
c. A vertical bar shall be placed next to the graphic if the miniature pointing hand is not used.
d. As specified by the acquiring activity, screens (shading), screened (shaded) boxes, or miniature pointing hands shall be used to highlight updated areas of diagrams and schematics.
e. If a callout is deleted from an illustration, the word "DELETED" may be placed after the appropriate number in the legend, if applicable. If a callout is deleted from an illustration without a legend, such as those used to supplement a RPSTL, the word "DELETED" may be placed on the illustration at the end of the leader line.
f. When an illustration is changed, index numbers added between existing numbers may be the same as the preceding index number with added alpha characters (e.g., 22A, 22B). This system may also be used in basic manuals when errors are discovered so late in preparation that renumbering of all following index numbers would delay submittal. Index numbers with added alpha characters shall be eliminated for a complete revision.
g. When an illustration contains embedded references to other illustrations or tables (this practice is highly discouraged), the referenced table and illustration numbers shall not be changed. When an illustration or table in the work package is added or deleted before the referenced table or illustration, the use of point illustration or table number is permitted and shall be in accordance with the LMI plan.

4.9.1.6 Changes to Repair Parts and Special Tools List (RPSTL) work packages. Requirementsin 4.9.1 through 4.9.1.5 shall apply with the following exceptions:

a. Inserted or deleted figures and items. When figures and items have been inserted or deleted, the cross-reference index work packages shall be changed as necessary.
b. Item changes. Unless specified otherwise by the acquiring activity, an asterisk shall be placed to the left of the item number column in the list adjacent to the line item indicating that an update has been made to the item and is reflected in the associated text, illustration, P/N index, or reference designator index.
c. Deleted work package. When a RPSTL work package is deleted, remaining RPSTL figure numbers shall not be changed to reflect the deleted work package and associated figure until the next revision.
d. Inserted work package. When a RPSTL work package is inserted before the last RPSTL work package, the RPSTL figure number shall have point figure numbers in accordance with the LMI plan (e.g., Insert between Figure 234 and Figure 235 would be Figure 234A). The remaining RPSTL figure numbers shall not be changed until the next revision.

4.9.2 Complete TM revisions. A complete revision requires rewrite and reorganization of the technical content of the data. All existing changes to the basic manual will be merged. All change dates and change symbols will be removed and, if necessary, all work packages will be assigned new work package sequence numbers in consecutive order. If point numbers were added to the work package sequence numbers for expansion during a previous change cycle, they should be recycled to the basic four-digit work package sequence numbers. (e.g., if WP 0034.1 and WP 0034.2 were inserted between WP 0034 and WP 0035, WP 0034.1 would be renumbered 0035, WP 0034.2 would be renumbered 0036, and WP 0035 should be renumbered 0037). The total number of pages in the work package or other division (e.g., warning summary, TOC, etc.) is counted when determining the total number of pages in the proposed change and applying the following rules:

a. Bound publications. Bound publications shall be revised when a proposed change to a publication would alter 25 percent or more of its printed pages or would alter 50 percent or more of its printed paragraphs. If the publication is eight or fewer pages, it shall always be revised.
b. Loose-leaf publications. Loose-leaf publications, which have 32 or fewer printed pages including changes, shall be revised when a proposed change would replace 50 percent or more of those pages. Loose-leaf publications, which have more than 32 printed pages including changes, shall be revised when a proposed change would replace 75 percent or more of those pages.

5. DETAILED REQUIREMENTS.

5.1 Technical content preparation. TM data developed in accordance with this standard shall be task oriented and fully consistent with the maintenance concepts derived from the baseline documents described in the following:

a. Logistics Management Information (LMI). The technical data and instructions developed by the requirements of LMI, along with the DoD Requirements for an LMI (including the MAC), shall be used as the baseline to prepare TMs.
b. Maintenance Allocation Chart (MAC). For equipment that does not have LMI data available, either a Preliminary Maintenance Allocation Chart (PMAC) or a MAC shall be used as the baseline to prepare TMs.
c. Additional source data. Available engineering drawings shall be used with the other required data. Sound engineering principles and techniques, available engineering analyses, service experience, performance data on the item and on similar items, and all other Reliability, Maintainability, Supportability (RMS) and Operational Availability (Ao) data available shall be used in the preparation of specific instructions.

5.2 Preparation of front and rear matter. Requirements for the preparation of front and rear matter necessary to supplement the technical content chapters and associated work packages in APPENDIX B through L are provided in 5.2.1 and 5.2.3. APPENDIX A provides detailed assembly and content requirements for all TMs covering operation, maintenance, and parts information, at all maintenance levels/classes/classes through depot.

5.2.1 Front matter **<paper.frnt>**. As applicable, material preceding the first text page shall consist of the following in the order specified in the following:

a. Front cover **<frntcover>** or abbreviated front cover **<frntcover_abbreviated>.** (Refer to 5.2.1.1 or 5.2.1.2.)

b. (MC) Promulgation letter **<promulgation>** (Refer to 5.2.1.3.)

c. Warning summary **<warnsum>.** (Refer to 5.2.1.4.)

d. Change transmittal page **<chgsheet>**, if applicable. (Refer to 5.2.1.5.)

e. List of effective pages/work packages **<loepwp>**. (Refer to 5.2.1.6.)

f. Title page **<titleblk>.** (Refer to 5.2.1.7.)

g. Table of contents **<contents>** (Refer to 5.2.1.9.)

h. "How To Use This Manual" information **<howtouse>.** (Refer to 5.2.1.10.)

5.2.1.1 Front cover **<frntcover>**. A front cover shall be prepared for each TM and DMWR/NMWR. NSN(s) and EIC(s) shall be included on the front cover for equipment publications but are not required for publications such as general equipment and software manuals. The formats of the front covers are shown in FIGURE 8 (TM), FIGURE 9 (Phased Maintenance and Preventive Maintenance Services TMs), FIGURE 10 (DMWR) and FIGURE 11 (DMWR with national overhaul standards), FIGURE 12 (NMWR with national overhaul standards), FIGURE 13 (TM with national overhaul standards), and FIGURE 14 (MC only manual). Unless otherwise specified, the front cover shall contain the following content information in the order listed. Supersedure notice, destruction notice, and general purpose notices may be placed on the inside front cover if necessary. All other information shall remain on the front cover. Cover illustrations shall only be used if space permits after all required information is placed on the cover and shall be used for pocket-sized manuals only if the illustration will not cause information to be pushed to the inside front cover. Additional detailed requirements for the front cover content information are described in 5.2.1.1.1 through 5.2.1.1.14.

a. Security classification (when required).

b. Publication number single service **<tmno>** or joint service **<tminfono>.** (Refer to 5.2.1.1.1.)

c. National overhaul standards statement (TMs/DMWRs/NMWRs with national overhaul standards only). (Refer to 5.2.1.1.2.)

d. Publication title **<prtitle>**. (Refer to 5.2.1.1.3.)

   (1) System or item nomenclature <**name**>.

   (2) Any or all of the following, in the order specified. This group may be repeated to present all variations covered in the publication.

      (a) Model number <**modelno**>. (Refer to 5.2.1.1.3.1.)

      (b) National Stock Number (NSN) **<nsn>**. (Refer to 5.2.1.1.3.2)

      (c) Part number <**partno**>. (Refer to 5.2.1.1.3.3.)

      (d) End Item Code (EIC) **<eic>**, as specified in the Army Master Data File (AMDF). (Refer to 5.2.1.1.3.4.)

e. Subtitle (when required) **<stitle>**.

f. Weapon system name (when required) **<weapons_system>.** (Refer to 5.2.1.1.4.)

g. Equipment illustration (when required) **<graphic>**. (Refer to 5.2.1.1.5.)
h. Availability statement **<avail>** (**DMWR/NMWR only**). (Refer to 5.2.1.1.6.)
i. Supersedure notice (for revisions only) **<super>.** (Refer to 5.2.1.1.7.)
j. Distribution statement **<dist>.** (Refer to 5.2.1.1.8.)
k. Export control notice warning (when required) **<export>.** (Refer to 5.2.1.1.9.)
l. Destruction notice (when required) **<destr>.** (Refer to 5.2.1.1.10.)
m. General purpose notices (when specified) **<general_purpose_notices>.** (Refer to 5.2.1.1.11.)
n. Service nomenclature **<servnomen>.** (Refer to 5.2.1.1.12.)
o. Publication date **<date>.** (Refer to 5.2.1.1.13.)

5.2.1.1.1 TM number for joint service TMs **<tminfono>**. If the manual is jointly used, each service's number shall be placed on the front cover and title page; however, only the proponent activity's TM number shall be placed on each page within the TM. The numbers shall be prefixed with the word Air Force, Army, Marine Corps, or Navy (NAVSEA or NAVAIR), as applicable. The acquiring activity's (proponent activity's) name **<servbranch>** and manual number **<tmno>** shall be placed first. The TM number(s) for the other services shall be in alphabetical sequence following the acquiring activity's name and manual number. For example,

"ARMY	TM 11-1510-204-34
AIR FORCE	TO 21M-LGM30G-12
MARINE CORPS	TM 12345A-15/1
NAVY (NAVAIR)	AI-F18AA-WRM-070
NAVY (NAVSEA)	SE211-FA-MMA-010/SPS-10A"

5.2.1.1.2 National overhaul standards statement **(TMs/DMWRs/NMWRs with national overhaul standards only)**. The following shall be added to the title of NMWRs/DMWRs/TMs which document national overhaul standards for the National Maintenance Program: "Containing National Overhaul standards for" (refer to FIGURE 11, FIGURE 12, and FIGURE 13 for examples).

5.2.1.1.3 Publication title **<prtitle>.** The publication title shall consist of the system or item official nomenclature <**name**> and any or all of the following:

5.2.1.1.3.1 Model number <**modelno**>. When available, the assigned model number shall be included.

5.2.1.1.3.2 National stock number <**nsn**>. When available, the assigned national stock number shall be included.

5.2.1.1.3.3 Part number <**partno**>. When available, the item's part number shall be included.

5.2.1.1.3.4 End item code<**eic**>. When available, the item's end item code shall be included.

5.2.1.1.4 Weapon system name **<weapons_system>**. When required, the name of the weapon system to which this publication applies shall be included.

5.2.1.1.5 Equipment ilustration <**graphic**>. When prescribed by the acquiring activity, the front cover shall include an illustration depicting the item or system if space permits.

5.2.1.1.6 Availability statement **(DMWR/NMWR only) <avail>**. For DMWRs/NMWRs only, the front cover shall contain the following availability statement (italicized text within parentheses shall be replaced with the appropriate information):

> "This publication is not available through the St. Louis Media Distribution Division. This publication is available through (*insert the name and address of the proponent activity*)."

5.2.1.1.7 Supersedure notice for revisions only **<super>**. When a TM is revised, a supersedure notice shall be included on the front cover and on the title page. The supersedure notice shall have the words "SUPERSEDURE NOTICE" underlined preceding the body of the notice. When a new TM is prepared that will replace existing manual(s), a supersedure notice shall be included on the front cover and title page. Refer to MIL-HDBK-1222 for examples of wording for supersedure notices. Refer to figures 8, 9, 19, and 20 for examples of format and placement of supersedure notice.

5.2.1.1.8 Distribution statement **<dist>**. All TMs, DMWRs, and NMWRs shall have a distribution statement placed on the front cover for each manual or revision. (Refer to FIGURE 8.) The appropriate distribution statement shall be provided by the acquiring activity as selected from DoD Directive (DODD) 5230.24.

5.2.1.1.9 Export control notice warning **<export>**. For those publications with export controlled data, the following export control notice contained in DODD 5230.24 shall be included:

"**WARNING** - This document contains technical data whose export is restricted by the Arms Export Control Act (Title 22, U.S.C., Sec 2751, et. seq.) or the Export Administration Act of 1979, as amended, Title 50, U.S.C., App. 2401 et. seq. Violations of these export laws are subject to severe criminal penalties. Disseminate in accordance with provisions of DoD Directive 5230.25."

5.2.1.1.10 Destruction notice **<destr>**. All TMs marked with distribution statements "B," "C," "D," "E," "F," or "X" shall be marked with the destruction notice. For classified and unclassified documents, the element **<destr>** within **<notices>** shall contain the following text "Destroy by any means possible to prevent disclosure of contents or reconstruction of the document." For classified documents, the program must also be compliant with DOD 5220.22-M and DOD 5200.1-R. (Refer to FIGURE 8.)

5.2.1.1.11 General purpose notice **<general_purpose_notices>**. When specified by the acquiring activity, additional notice(s) may be included that are not addressed by the notices in 5.2.1.1.6 through 5.2.1.1.10. The notice shall have a title followed by the notice text.

5.2.1.1.11.1 Hazardous materials information notice. A general purpose notice may be used to indicate review for hazardous materials in accordance with Executive Order 13148 has been completed. This type of general purpose notice for hazardous materials information shall only be used when the review has been completed. Refer to FIGURE 8 for example. Verbiage similar to the following shall be used:

" **HAZARDOUS MATERIALS INFORMATION**: This document has been reviewed for the presence of HAZARDOUS CHEMICALS AND TOXIC SUBSTANCES as defined by the EPCRA 302 and 313 lists by (*insert command environmental office*). As of the base document, dated (*insert date*), all references to Hazardous Chemicals and Toxic Substances have been removed from this document by substitution with nonhazardous or less hazardous materials where possible."

5.2.1.1.12 Service nomenclature **<servnomen>**. All TMs shall include the service or acquiring activity's nomenclature.

5.2.1.1.13 Publication date **<date>**. The TM publication date shall be the official publication date assigned by the acquiring activity. If the publication is produced in more than one media, the date must be the same on all media. The day, month, and year shall be given in that sequence. (Refer to FIGURE 8.)

5.2.1.1.14 For Army Communications Security (COMSEC) manuals use. Unless otherwise specified by the acquiring activity, unclassified TMs that contain COMSEC materiel shall be marked FOR OFFICIAL USE ONLY or FOUO. The notice shall be placed at the bottom center of the front cover and all TM pages. Classified TMs that contain COMSEC materiel shall be appropriately marked at the level of classification.

5.2.1.2 Abbreviated front cover **<frntcover_abbreviated>**. When required by the content matrix and requirements contained herein, Lubrication Orders (LOs) or Preventive Maintenance Checklists (PMCs) shall contain an abbreviated front cover. The abbreviated front cover shall contain:

a. TM number single service **<tmno>** or joint service **<tminfono>.** (Refer to 5.2.1.1.1.)
b. TM title **<tmtitle>**. (Refer to 5.2.1.1.3.)
c. A reporting of errors block **<reporting>.** (Refer to 5.2.1.7.1.)
d. Those notices **<notices>** as required in 5.2.1.1.6 through 5.2.1.1.10.
e. The service nomenclature **<servnomen>.** (Refer to 5.2.1.1.12).
f. TM publication date **<date>**. (Refer to 5.2.1.1.13.)

5.2.1.3 (MC) Promulgation letter **<promulgation>**. A promulgation letter provided by the acquiring activity shall be included. The promulgation letter shall immediately follow the Marine Corp cover sheet. Refer to FIGURES 15 through 20 for examples.

5.2.1.4 Warning summary **<warnsum>**. When required, a warning summary shall be prepared for all TMs containing warnings. The warning summary shall appear on the first right-hand page immediately after the front cover. The warning summary title shall be centered above the warning summary. The warning summary shall include first aid data **<first_aid>** and explanations of all general safety warning icons **<safety>** and hazardous materials icons **<haz-icons>** used in the manual. It shall also include descriptions of the general safety warnings **<warninfo>** and hazardous materials warnings **<hazard>** that have major impact throughout the manual. Only warnings that meet these criteria shall be included. Refer to

MIL-HDBK-1222 for an example of a warning summary. As applicable, the warning summary shall consist of the following in the order specified:

a. First aid data **<first_aid>**
b. Warning icons **<safety>**
c. Warning description **<warninfo>**
d. Hazardous materials icons **<haz-icons>**
e. Hazardous materials descriptions **<hazard>**

5.2.1.4.1 First aid **<first_aid>**. Any first aid data required in the TM, and not explicitly included in a warning, shall be included in the warning summary. The first paragraph of the warning summary shall reference FM 4-25.11. Any additional first aid data not described in FM 4-25.11 shall be described in this section.

5.2.1.5 Change transmittal page **<chgsheet>**. A change transmittal page shall be prepared for each change to a TM and shall be included in the change package. (Refer to FIGURE 7.) The change transmittal page shall not be numbered and shall be located following the warning summary. The change transmittal sheet shall list all pages/work packages that have been changed, added, deleted, or superseded. When updates are prepared, the change number and date shall be shown on the change transmittal page. Unless specified otherwise by the acquiring activity, the change date shall be the date at which the material to be included was received (copy freeze date, provided by the acquiring activity). For changes prepared to support maintenance transformation, the following statement shall be included verbatim on the change transmittal page (refer to FIGURE 21):

"This change implements Army Maintenance Transformation and changes the Maintenance Allocation Chart (MAC) to support field and sustainment maintenance."

5.2.1.6 List of effective pages/work packages **<loepwp>**. A list of effective pages/work packages (refer to FIGURE 23 through FIGURE 25) shall be prepared as in accordance with 5.2.1.6.1 through 5.2.1.6.10. The list of effective pages/work packages shall be prepared and transmitted with the basic version of the TM and each subsequent change or revision. The list of effective pages/work packages shall immediately follow the warning summary. When included in a change, it shall immediately follow the change transmittal sheet if the warning summary is not included in the change.

5.2.1.6.1 Types of publications. The following types of publications shall have a list of effective pages/work packages:

a. Technical Manuals (TMs).
b. Repair Parts and Special Tools Lists (RPSTLs).
c. Depot Maintenance Work Requirements (DMWRs).
d. National Maintenance Work Requirements (NMWRs).
e. Preventive Maintenance Services (PMSs) manuals.
f. Preventive Maintenance Inspections (PMIs) manuals.
g. Preventive Maintenance Daily (PMD) manuals.
h. Phased Maintenance (PM) Inspection Checklist.
i. Aircraft troubleshooting manuals.

j. Technical Bulletins (TBs).
k. Battle Damage Assessment and Repair (BDAR).
l. Destruction of Army materiel to prevent enemy use.

5.2.1.6.2 Exempted publications. Unless otherwise specified by the acquiring activity, the following types of publications shall not have a list of effective pages/work packages:

a. Pocket-sized TMs.
b. TMs/TBs less than 8 pages.
c. Hand Receipt (HR) manuals.
d. Lubrication Order (LO).
e. Preventive Maintenance Checklist (PMC).

5.2.1.6.3 Types of pages to be included. The following types of pages shall be included in a list of effective pages/work packages:

a. All front matter pages to include cover, warning summary, title page, table of contents, and how-to-use this manual info. Blank backup pages shall be listed.
b. Chapter title pages. Blank back up pages shall be listed.
c. All work packages with their page counts (including blank pages). Blank pages within the work packages shall not be listed separately on the list of effective pages. Work packages may be grouped together if they are on the same change number (include total page count for all work packages in the group).
d. Glossary pages including blank pages.
e. Index pages including blank pages.
f. Foldout pages.
g. Back cover.

5.2.1.6.4 Exempted pages. The following types of pages shall not be included in a list of effective pages/work packages:

a. Change transmittal page.
b. List of effective pages.
c. DA Forms 2028.
d. Authentication page.
e. Inside of front cover.

5.2.1.6.5 Change numbers. For new publications, the change number is always zero; the list of effective pages/work packages shall have all zeros. Refer to FIGURE 22 for a sample of a new publication list of effective pages. When a change is prepared, the appropriate change number shall be placed in the change number column. Refer to FIGURE 23 for a sample of a change publication list of effective pages. When a publication is revised, the change numbers shall all be changed back to zero. Refer to FIGURE 24 for a sample of a revised publication list of effective pages/work packages.

5.2.1.6.6 Listing the pages. All pages in the book shall be listed except as noted in 5.2.1.6.4. List each work package by number and put the total number of pages in the work package in parentheses next to the work package number. The words "deleted," "added," or "blank" may be

placed next to the page numbers when applicable. Refer to FIGURES 22-25 for sample usage of these words.

5.2.1.6.7 Numbering the list of effective pages/work packages. The list of effective pages/work packages shall have a page number "A" for the first page and "B, C, D, etc." for additional pages.

5.2.1.6.8 List of effective pages/work packages for Repair Parts and Special Tools List (RPSTLs). A list of effective pages/work packages for a RPSTL shall be prepared similarly to other manuals. For RPSTLs prepared entirely in work package format, the work package numbers shall be listed.

5.2.1.6.9 Multi-service manuals. For multi-service manuals, the abbreviation of the acquiring service (e.g., USA, USN, USMC, or USAF) shall be placed in the lower right-hand corner of the page on each page of the list of effective pages/work packages. Refer to FIGURE 25 for sample.

5.2.1.6.10 Dates of issue for changes. At the top of the list of effective pages/work packages, the date of the basic manual and the date of each change that appears in the change number column shall be listed. (Refer to FIGURE 23 for sample.)

5.2.1.7 (A) Title page **<titleblk>**. A title page shall be prepared and follow the list of effective pages/work packages. (Refer to FIGURE 26.) The title page shall include the reporting errors and recommended improvement statement **<reporting>**. When depot level repair parts are included in a lower level RPSTL, the following statement shall be added to the RPSTL title: "(Including Depot Maintenance Repair Parts)." When the publication contains National Overhaul Standards, the title page shall include the National Overhaul Standards Statement in accordance with 5.2.1.1.2. The title page shall contain the same statements as shown on the front cover. RPSTL manuals and narrative manuals which include a RPSTL may have a current as of date on the title page. Refer to FIGURES 27 and 28 for examples. The current as of date, if included, shall appear immediately following the reporting of errors box. (Refer to 5.2.1.7.1.)

5.2.1.7.1 Reporting errors and recommending improvements statement **<reporting>**. A reporting errors and recommending improvements statement (refer to FIGURE 26) shall appear below the prime title, NSN, EIC, and subtitle (if any) on the title page. The mailing address, e-mail address, and fax number of the responsible proponent shall be inserted in the statement. Additional information may be added as required by the acquiring activity (e.g., how to submit an electronic 2028 via the internet).

a. Unclassified/standard TM. Except for classified TMs, over-sized manuals, pocket-sized manuals, and manuals with less than eight pages, the following statement shall precede the table of contents title:

(1) Army only publications. The following statements shall be included (italicized text within parentheses shall be replaced with the appropriate information):

"REPORTING ERRORS AND RECOMMENDING IMPROVEMENTS

You can help improve this manual. If you find any mistakes or if you know of a way to improve the procedures, please let us know. Mail your letter or DA Form 2028 (Recommended Changes to Publications and Blank Forms), located in the back of this manual directly to: (*name and address of proponent*). You may also send in your recommended changes via electronic mail or by fax. Our fax number is (*insert DSN and*

commercial number of proponent). Our e-mail address is (*insert address of proponent*). A reply will be furnished to you."

(2) Multi-service publications. The following statements shall be included only for multi-service technical publication and use only applicable services (e.g., if the Navy does not use the publication, do not include the statement for that Service) (italicized text within parentheses shall be replaced with the appropriate information, include only those services using the TM.):

"**REPORTING ERRORS AND RECOMMENDING IMPROVEMENTS**

You can help improve this manual. If you find any mistakes or if you know of a way to improve the procedures, please let us know. Reports, as applicable by the requiring service, should be submitted as follows:

(a) (A) Army - Mail your letter or DA Form 2028 (Recommended Changes to Publications and Blank Forms), located in the back of this manual directly to: (*name and address of proponent*). You may also send in your recommended changes via electronic mail or by fax. Our fax number is (*insert DSN and commercial number of proponent*). Our e-mail address is (*insert address of proponent*).

(b) (MC) Marine Corps - Submit notice of discrepancies or suggested changes on a NAVMC 10772. The NAVMC may be submitted using either of the following:

a. The first method of submittal does not require a Common Access Card (CAC) to access the form. Click on http://navalforms.daps.dla.mil/web/public/forms, select the "Keyword Search" button, enter "10772" in the Search Criteria Box. Under "type" click on download page button. Click on PDF icon. Enter user data in the appropriate fields. Must have users contact information block filled with Unit address and telephone number. Click on the 'Envelope' icon in the tool bar. Select "Send Copy " click on "OK". When the PDF document is created, an Outlook Email screen will open with the .PDF as an attachment. On the TO: line type SMB.LOG.Tech.Pubs.fct@usmc.mil. In the body of the email, type any additional information you wish to provide. Click 'SEND'.

b. The https://portal.logcom.usmc.mil/sites/pubs/default.aspx URL will allow access to the Albany Publications web site (CAC required) where the form can be filled out and be submitted to the NAVMC web master.

Problems or questions regarding the NAVMC 10772 program should be reported by calling DSN 567-7628 or DSN 567-5017 (Commercial number is (229) 639-7628 or (229) 639-5017).

(c) (N) Navy - By letter directly to (*name and address of proponent*). You may also send in your recommended changes via electronic mail or by fax. Our fax number is (*insert DSN and commercial number of proponent*). Our e-mail address is (*insert address of proponent*).

(d) (F) Air Force - By Air Force AFTO Form 22 directly to (*name and address of proponent*). You may also send in your recommended changes via electronic

mail or by fax. Our fax number is (*insert DSN and commercial number of proponent*). Our e-mail address is (*insert address of proponent*).

(e) A reply will be furnished to you."

b. Pocket-sized manuals, over-sized manuals, and manuals with less than eight pages. For pocket-sized manuals, over-sized manuals, and manuals with less than eight pages, the following statement shall precede the table of contents title.

(1) Army only publications. The following statements shall be included (italicized text within parentheses shall be replaced with the appropriate information):

"**REPORTING ERRORS AND RECOMMENDING IMPROVEMENTS**

You can help improve this manual. If you find any mistakes or if you know of a way to improve the procedures, please let us know. Mail your letter or DA Form 2028, Recommended Changes to Publications and Blank Forms, directly to: (*name and address of proponent*). You may also send in your recommended changes via electronic mail or by fax. Our fax number is (*insert DSN and commercial number of proponent*). Our e-mail address is (*insert address of proponent*). A reply will be furnished to you."

(2) Marine only publications. The following statements shall be included (italicized text within parentheses shall be replaced with the appropriate information):

"**REPORTING ERRORS AND RECOMMENDING IMPROVEMENTS**

You can help improve this manual. If you find any mistakes or if you know of a way to improve the procedures, please let us know. Submit by NAVMC Form 10772 directly to (*name and address of proponent*). You may also send in your recommended changes via electronic mail or by fax. Our fax number is (*insert DSN and commercial number of proponent*). Our e-mail address is (*insert address of proponent*). A reply will be furnished to you."

(3) Multi-service publications. The following statements shall be included only for multi-service technical publication and use only applicable services (e.g., if the Navy does not use the publication, do not include a statement for that Service) (italicized text within parentheses shall be replaced with the appropriate information):

"**REPORTING ERRORS AND RECOMMENDING IMPROVEMENTS**

You can help improve this manual. If you find any mistakes or if you know of a way to improve the procedures, please let us know. Reports, as applicable by the requiring Service, should be submitted as follows:

(a) (A) Army - Mail your letter or DA Form 2028, Recommended Changes to Publications and Blank Forms, directly to: (name and address of proponent). You may also send in your recommended changes via electronic mail or by fax. Our fax number is (insert DSN and commercial number of proponent). Our e-mail address is (insert address of proponent).

(b) (MC) Marine Corps - By NAVMC Form 10772 directly to (name and address of proponent). You may also send in your recommended changes via electronic

mail or by fax. Our fax number is (insert DSN and commercial number of proponent). Our e-mail address is (insert address of proponent).

(c) (N) Navy - By letter directly to (name and address of proponent). You may also send in your recommended changes via electronic mail or by fax. Our fax number is (insert DSN and commercial number of proponent). Our e-mail address is (insert address of proponent).

(d) (F) Air Force - By Air Force AFTO Form 22 directly to (name and address of proponent). You may also send in your recommended changes via electronic mail or by fax. Our fax number is (insert DSN and commercial number of proponent). Our e-mail address is (insert address of proponent).

(e) A reply will be furnished to you."

c. Classified TMs. For classified TMs, the following statement shall precede the table of contents title (italicized text within parentheses shall be replaced with the appropriate information):

(1) Army or Marine TM. The following statements shall be included:

"**REPORTING ERRORS AND RECOMMENDING IMPROVEMENTS**

You can help improve this manual. If you find any mistakes or if you know of a way to improve this manual, write and tell us about it. Address your correspondence to (*name and address of proponent*). When dealing with classified information, make sure that your correspondence is properly marked and is handled in accordance with current security regulations."

(2) Multi-service TM. The following statements shall be included only for multi-service technical publication and use only applicable services (e.g., if the Navy does not use the publication, do not include a statement for that Service):

"**REPORTING ERRORS AND RECOMMENDING IMPROVEMENTS**

You can help improve this manual. If you find any mistakes or if you know of a way to improve this manual, write and tell us about it. Service, should be submitted as follows:

(a) (A) Army - Address your correspondence to (*name and address of proponent*).

(b) (MC) Marine Corps - Address your correspondence to (*name and address of proponent*).

(c) (N) Navy - Address your correspondence to (*name and address of proponent*).

(d) (F) Air Force - Address your correspondence to (*name and address of proponent*).

When dealing with classified information, make sure that your correspondence is properly marked and is handled in accordance with current security regulations."

5.2.1.8 Preventive maintenance services and phased maintenance inspection manuals title page with warning data **(Aviation only)**. For preventive maintenance services and phased maintenance inspection only, the warning data page shall include the reporting errors and

recommending improvement statement and the following additional verbatim statement (refer to FIGURE 29):

"WARNING

Certain inspections are Mandatory Safety-of-Flight requirements, and the inspection intervals cannot be exceeded. In the event these inspections cannot be accomplished at the specified interval, the aircraft condition status symbol will be changed to a red X. Mandatory Safety-of-Flight inspection items are printed in bold face type.

NOTE

Inspection items contained in this manual are considered the minimum requirements for performing phased maintenance and must be performed. The cumulative effects of inspection deferrals are unknown and could result in catastrophic failure or increased maintenance at a later date. Therefore, the use of special lettering to emphasize Mandatory Safety-of-Flight Items is not to be construed as authority for deferral of other inspections."

5.2.1.9 Table of contents **<contents>**. A table of contents listing all chapters and work packages shall be prepared for all TMs, DMWRs, and NMWRs. They shall have the exact same title and shall be listed in the same order they appear in the TM. For work packages, page number is optional. The how-to-use this manual information shall be listed on the table of contents including page number. The warning summary shall not be listed on the table of contents. The content and format of the table of contents is shown in FIGURE 30. The table of contents shall begin on the first available page following the title page and shall be as described in the following:

a. The security classification, if any, of chapters, work packages, figures, and tables shall be indicated.

b. As specified by the acquiring activity, figures may be listed in the table of contents under the corresponding work package by the figure number and title. Listing of page number of each figure is optional. A RPSTL TM shall not include figures in the table of contents. When a TM includes the parts information chapter, the listing of RPSTL figures is optional. Foldout figures, if included in the TOC, shall be listed after all the work packages along with the other rear matter.

c. As specified by the acquiring activity, tables may be listed in the table of contents under the corresponding work package by the table number and title. Listing of page number of each table is optional.

d. The following requirements are applicable to RPSTL entries (refer to FIGURE 31):

   (1) The RPSTL introduction work package **<introwp>** shall be the first work package listed in the parts information.

   (2) Titles of RPSTL work packages, including the Functional Group Codes (FGCs) as applicable, shall be listed by the same nomenclature and in the same sequence in which they appear in the first tabular listing in the work package. The work package sequence number shall be referenced with each work package title. The figure number may be included in the work package title.

(3) When multiple functional groups are under a single RPSTL work package, each functional group tabular list title may be included as a subordinate table of content entry.

(4) NSN, P/N, and (as applicable) reference designator cross-reference indexes shall be listed.

5.2.1.10 "How To Use This Manual" information (Except RPSTLs and DMWRs/NMWRs) **<howtouse>**. How-to-use this manual information shall be prepared for all TMs except pocket-sized manuals. For pocket-sized manuals, the how-to-use this manual information is optional. How-to-use this manual information shall include as applicable:

a. "How to Use This Manual" information shall be located after the table of contents and before the first chapter of the TM. "How to Use This Manual" information shall begin on the page immediately following the table of contents.

b. Information to familiarize the user with special or unusual features of the TM shall be prepared. Coverage shall lead the user through the TM and explain important features of the organization and content. For example, the format is explained; operating, troubleshooting, Preventive Maintenance Checks and Services (PMCS) are explained; and repair, maintenance instructions, and other pertinent information are explained.

c. Any peculiarities in the basic arrangement of the TM shall be described. "How To Use This Manual" information shall not repeat instructions given within the chapters and/or work packages.

d. For all TMs (excluding operator) the "How To Use This Manual" information shall include a reference to the associated RPSTL and an explanation on how to use the RPSTL in conjunction with the manual.

e. For all TMs with a glossary, reference to the glossary shall be made and an explanation of its features and use shall be provided.

f. For troubleshooting, an explanation on how troubleshooting data is presented in the TM shall be included. If applicable, an explanation on how failure symptom indexes and malfunction codes correspond to maintenance operational checks and troubleshooting procedures for individual systems and components shall be included. If necessary, for multi-volume troubleshooting TMs, examples of the troubleshooting process shall be provided to illustrate how specific troubleshooting volumes and work packages are used together to locate and isolate faults.

5.2.1.10.1 International standardization agreements. When specified by the acquiring activity, the "How To Use This Manual" information shall contain the following (italicized text within parentheses shall be replaced with the appropriate information):

"NOTE

Certain provisions of this technical manual (*identify by chapter, work package, paragraph, or similar manner, if appropriate*) are the subject of international standardization agreement (*insert the ABCA or ASCC standard number; the NATO, STANAG, NETR, or NEPR number; or appropriate documentary reference*). When revision or cancellation of this technical manual is proposed which will modify the international agreement concerned, the technical manual management activity will take appropriate action through international standardization channels, including

departmental standardization offices, to change the agreement or make other appropriate accommodations."

5.2.2 Multi-volume manuals. The following shall apply to all multi-volume TMs.

a. The first volume in a multi-volume TM shall contain the following front matter as specified in the applicable supporting paragraph:
   (1) A front cover **<frntcover>.** (Refer to 5.2.1.1.)
   (2) An optional promulgation page **<promulgation>** (MC only) (Refer to 5.2.1.3.)
   (3) A consolidated warning summary **<warnsum>.** (Refer to 5.2.1.4.)
   (4) When required, a change transmittal page **<chgsheet>** (refer to 5.2.1.5) shall be prepared to include only the volume change pages.
   (5) A list of effective pages/work packages **<loepwp>** (refer to 5.2.1.6) for all volumes.
   (6) A title page **<titleblk>.** (Refer to 5.2.1.7.)
   (7) A table of contents **<contents>.** (Refer to 5.2.1.9.) The volume contains a complete table of contents covering the entire set. Entries shall indicate the volume in which the referenced material appears; for example, Operator Instructions, Vol. 1.
   (8) The how-to-use this manual information **<howtouse>.** (Refer to 5.2.1.10.)

b. The remaining volumes in a multi-volume TM shall contain the following front matter as specified in the applicable supporting paragraph:
   (1) A front cover **<frntcover>.** (Refer to 5.2.1.1.)
   (2) An optional promulgation page **<promulgation>** (MC only) (Refer to 5.2.1.3.)
   (3) A warning summary **<warnsum>.** (Refer to 5.2.1.4.)
   (4) When required, a change transmittal page **<chgsheet>** (refer to 5.2.1.5) shall be prepared to include only the volume change pages.
   (5) A list of effective pages/work packages **<loepwp>** (refer to 5.2.1.6 and FIGURE 25) for the volume only.
   (6) A title page **<titleblk>.** (Refer to 5.2.1.7.)
   (7) A table of contents **<contents>.** (Refer to 5.2.1.9.) Each volume shall contain its own table of contents and shall reference companion volumes for the same TM.

c. Changes to multi-volume TMs shall be made independently to each volume. The consolidated elements (e.g., warning summary, list of effective pages/work packages, table of contents, global index) contained in the first volume shall be updated during any change to subsequent volumes.`

d. For multi-volume manuals, if an index is included, a global index for all volumes shall be placed at the back of the first volume. (Refer to 5.2.3.2.)

5.2.3 Rear matter **<rear>**. As applicable, material following the last text page shall consist of the following in the order specified:

a. Glossary (RPSTL not required) **<glossary>.** (Refer to 5.2.3.1.)
b. Alphabetical index (when required) (RPSTL not required) **<aindx>**. (Refer to 5.2.3.2.)
c. Reporting errors and recommending improvements DA Forms 2028 **<da2028>.** (Refer to 5.2.3.3.)
d. Authentication page **<authent>**. (Refer to 5.2.3.4.)
e. Foldout pages (when required) (except RPSTL) **<foldsect>.** (Refer to 5.2.3.5.)
f. Back cover **<back>.** (Refer to 5.2.3.6.)

5.2.3.1 Glossary (**Except RPSTL**) **<glossary>**. A glossary shall be prepared for TMs only when the terms are uncommon and are not adequately defined in the text or in the Army, DoD, or standard dictionary. The glossary shall include a list of terms **<term>** followed by definitions **<def>**. The terms shall be listed in alphabetical order. If a glossary is required, it shall begin on a separate, right-hand page and immediately precede the alphabetical index, if any.

5.2.3.2 Alphabetical index (**Except RPSTL**) **<aindx>**. An alphabetical index shall be prepared unless specified otherwise by the acquiring activity and the following shall apply:

a. The index may be an index of work packages only or it may be a detailed index, as applicable.
b. All applicable work package references for each entry shall be indicated, regardless of the type of index being prepared. Page references may be included in a detailed index.
c. The index shall be located at the end of the TM but shall precede the sample DA Form 2028. Indexes shall begin on a separate, right-hand page. (Refer to FIGURE 33.)
d. For pocket-sized manuals, an alphabetical index shall not be prepared unless otherwise specified by the acquiring activity.

5.2.3.3 Reporting errors and recommending improvements Department of the Army (DA) Form 2028 **<da2028>**. Instructions on how to complete and submit an electronic DA Form 2028 may precede the filled out sample of DA Form 2028. One filled-out sample copy of DA Form 2028, provided by the acquiring activity, and a minimum of three blank DA Forms 2028 with the TM number, date, and title shall be included and shall precede the authentication page of every unclassified TM (except for oversize TMs, pocket-sized TMs, TMs with less than eight pages, and LOs). The filled out sample shall include guidelines for completing the form.

5.2.3.4 Authentication page **<authent>**. The authentication page, provided by the acquiring activity, shall be the last printed text page of the TM or if foldout pages are included, the authentication page shall be the last printed text page before the foldout pages. For changes, the authentication block shall be included on the change transmittal sheet(s). The authentication block shall be placed after all of the other information on the change transmittal sheet(s). (Refer to FIGURE 34 (Army) or FIGURE 35 (Joint Services) for examples of authentication blocks.)

5.2.3.5 Foldout pages (**Except RPSTL**) **<foldsect>**. If foldout pages are approved by the acquiring activity, they shall be the last printed material in the manual or volume. Foldout pages shall not be included in a RPSTL.

5.2.3.6 Back cover **<back>**. The outside back cover shall be blank, except for pocket-sized TMs and classified TMs. For pocket-sized TMs, the outside back cover shall include the TM number. For classified TMs, security classification markings shall be included on the back cover. When applicable, a metric conversion table, covering applicable units included in the TM, shall be placed on the inside back cover. The PIN shall be placed in the lower right-hand corner of the back cover (**except for Maintenance/Demilitarization for Ammunition DMWRs**).

6. NOTES.

(This section contains information of a general or explanatory nature that may be helpful, but is not mandatory.)

6.1 Intended use. MIL-STD-40051-2 prescribes requirements applicable to various types of technical manuals, and the revisions for these manuals.

6.2 Acquisition requirements. The acquisition document(s) should cite the following:

a. Title, number, and date of this standard.
b. Title, number, and date of MIL-HDBK-1222.
c. Title, number, and date of MIL-STD-2361 and MIL-HDBK-2361.
d. Filled out content selection matrix.

6.3 Tailoring guidance. The acquiring activity should tailor any required options offered herein in accordance with APPENDIX A.

6.4 Subject term (key word) listing. The following terms are to be used to identify the MIL-STD-40051-2 document during retrieval searches:

a. Additional Authorization List (AAL)
b. Basic Issue Items (BII)
c. Basis of Issue (BOI)
d. Components of End Item (COEI)
e. Depot Maintenance Work Requirement (DMWR)
f. Expendable and durable items list
g. Extensible Markup Language (XML)
h. Illustrations
i. Introductory information
j. Maintenance Allocation Chart (MAC)
k. Maintenance instructions
l. National Maintenance Work Requirement (NMWR)
m. Operator instructions
n. Quality Assurance (QA)
o. Repair Parts and Special Tools List (RPSTL)
p. Security classification
q. Supporting information
r. Theory of operation

s. Troubleshooting procedures
t. Work package (WP)
u. Work package identification number

6.5 Changes from previous issue. The margins of this standard are marked with vertical lines to indicate where changes from the previous issue were made. This was done as a convenience only and the Government assumes no liability whatsoever for any inaccuracies in these notations. Bidders and contractors are cautioned to evaluate the requirements of this document based on the entire content irrespective of the marginal notations and relationships to the last previous issue.

TM X-XXXX-XXX-XX 0029

FIELD MAINTENANCE
24-VOLT CONNECTOR RECEPTACLE
DISASSEMBLY

INITIAL SETUP:

Tools and Special Tools
Pliers, diagonal cutting (WP 0060, Item 3)
Screwdriver, flat- tip 3/16 – inch (WP 0060, Item 43)
References
WP 0023
Equipment Condition
24-volt connectors receptacle removed (WP 0038)

DISASSEMBLY

NOTE

Tag wires to aid installation (WP 0023). If circuit marker bands are missing or not readable, replace (WP 0038)

1. Unscrew and pull back bushing retaining nut (Figure 1, Item 1) from shell (Figure 1, Item 4).
2. Using screwdriver, pry off shell (Figure 1, Item 4) from bushing (Figure 1, Item 2).
3. Using pliers, pull out 12 inserts (Figure 1, Item 3) form bushing (Figure 1, Item 2).

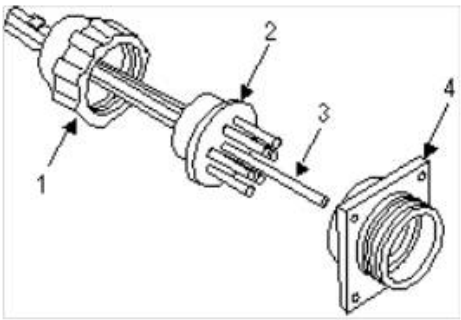

Figure 1. 24-volt Connector Receptacle

END OF WORK PACKAGE

0029-1/BLANK

FIGURE 1. <u>Example of a maintenance work package.</u>

TM X-XXXX-XXX-13

CHAPTER 6

MAINTAINER MAINTENANCE INSTRUCTIONS
FOR
155 MM, M109A6 HOWITZER

FIGURE 2. Example of a chapter title page.

TM NUMBER 0017

BELOW DEPOT SUSTAINMENT MAINTENANCE
24-VOLT CONNECTOR RECEPTACLE REPAIR
DISASSEMBLY
EFFECTIVITY NOTICE
Model A1

0017-1

FIGURE 3. Example of work package identification information.

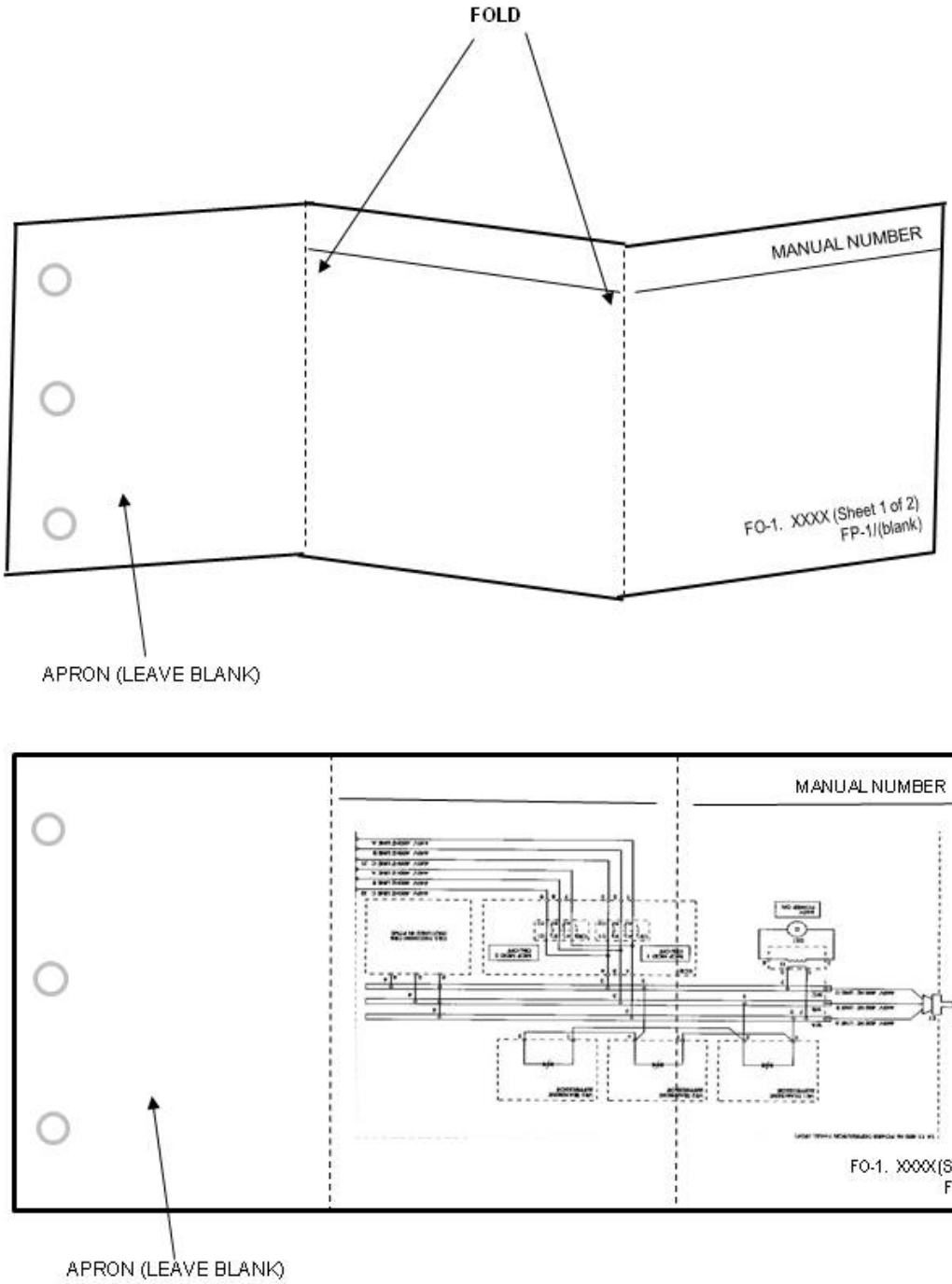

FIGURE 4. <u>Example of a foldout page.</u>

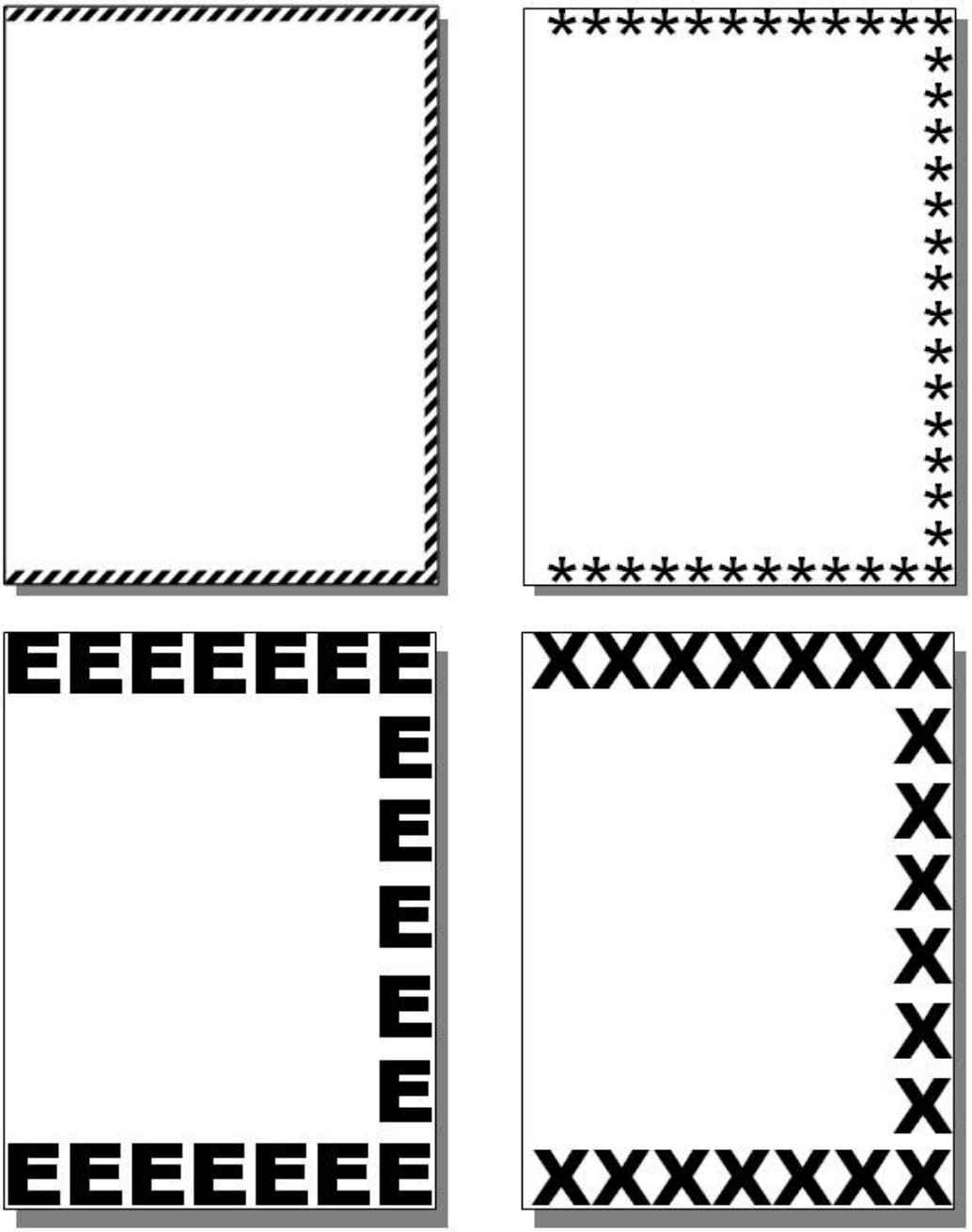

FIGURE 5. Example of emergency page markings.

MANUAL NUMBER

CHANGE
NO. 1

HEADQUARTERS,
DEPARTMENT OF THE ARMY
WASHINGTON, D.C., 31 AUGUST 1993

OPERATOR MANUAL
FOR
TEST SET
RADAR AN/TPM-22
NSN 4931-00-707-1229 (EIC D42)

DISTRIBUTION STATEMENT A. Approved for public release distribution is unlimited.

TM X-XXX-XXXX-XX, 5 June 1987, is updated as follows:

1.File this sheet in front of the manual for reference

2.This change is a result of new preventive maintenance checks and service procedures and new expendable/durable supplies and materials.

3.New or updated text is indicated by a vertical bar in the outer margin of the page.

4.Added illustrations are indicated by a vertical bar adjacent to the figure number. Changed illustrations are indicated by a miniature pointing hand adjacent to the updated area and a vertical bar adjacent to the figure number.

5. Remove old pages and insert new pages as indicated below:

Remove Pages	Insert Pages
a through d	a through d
None	e through h

6.Replace the following work packages with their revised version.

Work Package Number
WP 0154
WP 0042

7.Add the following new work packages.

Work Package Number
WP 1625.1
WP 1700.1

FIGURE 6. Example of a change transmittal page.

SECURITY CLASSIFICATION

TM NUMBER(S)

MAINTENANCE LEVELS
FOR

NOMENCLATURE OF EQUIPMENT
TYPE, MODEL, PART NUMBER
NATIONAL STOCK NUMBER (EIC)
OR
SUBJECT

SUBTITLE

WEAPON SYSTEM NAME

ILLUSTRATION

SUPERSEDURE NOTICE
DISTRIBUTION STATEMENT
WARNING
DESTRUCTION NOTICE
GENERAL NOTICE

SERVICE NOMENCLATURE

TM DATE

SECURITY CLASSIFICATION

FIGURE 7. Example of a TM front cover.

TM 3-6665-339-10

OPERATOR MANUAL
FOR

CHEMICAL-BIOLOGICAL-RADIOLOGICAL-NUCLEAR
RECONNAISSANCE SYSTEM (CBRNRS) FOX
M93A1
(NSN 6665-01-372-1303) (EIC Y60)

SUPERSEDURE NOTICE: TM 3-6665-339-10 dated 1 June 1996 supersedes TM 3-6665-339-10 dated 20 June 1994, Including all changes.

DISTRIBUTION STATEMENT C - Distribution authorized to U.S. Government Agencies and their contractors. This publication is required for administrative and operational purposes, as determined on 22 October, 1990. Other requests for this document must be referred to Commander, U.S. Army Chemical Research Development and Engineering Center, ATTN: SMCCR-MAT, Aberdeen Proving Ground, MD 21010-5423.

WARNING – This document contains technical data whose export is restricted by the Arms Export Control Act (Title 22, U.S.C., Sec 2751, et. seq.) or the Export Administration Act of 1979, as amended, Title 50, U.S.C., App 2401 et. seq. Violations of these export laws are subject to severe criminal penalties. Disseminate in accordance with provisions of DoD Directive 5230.25

DESTRUCTION NOTICE – Destroy by any means possible to prevent disclosure of contents or reconstruction of the document.

HEADQUARTERS, DEPARTMENT OF THE ARMY
1 JUNE 1996

FIGURE 7. Example of a TM front cover – Continued.

TM 9-4910-784-13&P

FIELD MAINTENANCE MANUAL
INCLUDING REPAIR PARTS AND SPECIAL TOOLS LIST
FOR

HYDRAULIC SYSTEMS TEST AND REPAIR KIT (HSTRU)
P/N 123456789A
(NSN 4910-01-539-8440) (EIC HSW)

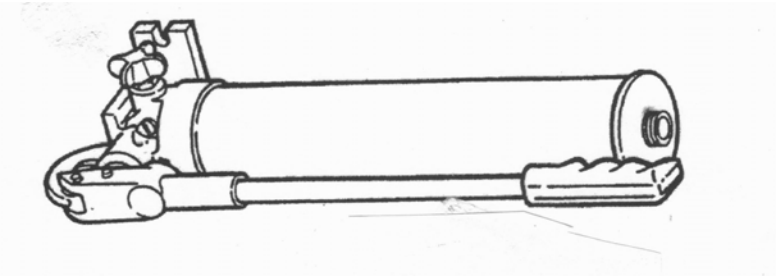

SUPERSEDURE NOTICE: TM 3-6665-339-10 dated 1 June 1996 supersedes TM 3-6665-339-10 dated 20 June 1994, Including all changes.

DISTRIBUTION STATEMENT C - Distribution authorized to U.S. Government Agencies and their contractors. This publication is required for administrative and operational purposes, as determined on 22 October, 1990. Other requests for this document must be referred to Commander, U.S. Army Aviation and Missile Lifecycle Management Command, (AMSAM-MMC-MA-NP), Redstone Arsenal, AL 35898-5230.

DESTRUCTION NOTICE – Destroy by any means possible to prevent disclosure of contents or reconstruction of the document.

HAZARDOUS MATERIALS INFORMATION: This document has been reviewed for the presence of HAZARDOUS CHEMICALS AND TOXIC SUBSTANCES as defined by the EPCRA 302 and 313 lists by the AMCOM G-4 (Logistics) Environmental Division. As of the base document, dated 14 Aug 2009, all references to Hazardous Chemicals and Toxic Substances have been removed from this document by substitution with nonhazardous or less hazardous materials where possible.

HEADQUARTERS, DEPARTMENT OF THE ARMY
14 AUGUST 2009

FIGURE 7. Example of a TM front cover w/hazardous materials information general purpose notice – Continued.

TM 1-1520-238-PM

PHASED MAINTENANCE INSPECTION CHECKLIST
FOR

ARMY
AH-64A HELICOPTER

SUPERSEDURE NOTICE: TM 1-1520-238-PM dated 28 February 2002 supersedes TM 1-1520-238-PM dated 20 June 1994, Including all changes.

DISTRIBUTION STATEMENT A. Approved for public release; distribution is unlimited.

US ARMY AVIATION AND MISSILE
LIFE CYCLE MANAGEMENT COMMAND,
REDSTONE ARSENAL, AL

23 APRIL 2003

FIGURE 8. Example of a phased maintenance TM front cover.

DMWR 11-5895-532-2

DEPOT MAINTENANCE WORK REQUIREMENT
FOR

INTERROGATOR SETS
AN/TPX-46(V)1 (NSN 5895-00-423-1693) (EIC IZA)
AN/TPX-46(V)2 (NSN 5895-00-423-1694) (EIC IZB)
AN/TPX-46(V)3 (NSN 5895-00-423-1696) (EIC IZC)
AN/TPX-46(V)4 (NSN 5895-00-423-1700) (EIC IZD)
AN/TPX-46(V)6 (NSN 5895-00-423-1702) (EIC IZE)
AN/TPX-46A(V)1 (NSN 5895-01-163-5237) (EIC N/A)
AN/TPX-46A(V)2 (NSN 5895-01-162-5239) (EIC N/A)
AN/TPX-46A(V)3 (NSN 5895-01-163-3646) (EIC N/A)

This publication is not available through the St. Louis Media Distribution Division. This publication is available through the US Army Communications- Electronics Command, Fort Monmouth, NJ 07703-5007.

DISTRIBUTION STATEMENT D. Distribution authorized to the Department of Defense and U.S. DOD contractors only. This publication is critical technology, as determined on 20 May, 1998. Other requests for this document shall be referred to AMSEL-LCL-ECM,Building 6001, POD C3-322/49, Aberdeen Proving Ground, MD 21005-1846.

DESTRUCTION NOTICE – Destroy by any means possible to prevent disclosure of contents or reconstruction of the document.

US ARMY COMMUNICATIONS-ELECTRONICS
LIFE CYCLE MANAGEMENT COMMAND,
ABERDEEN PROVING GROUND, MD

16 JUNE 2004

FIGURE 9. Example of a DMWR front cover.

DMWR X-XXXX-XXX

DEPOT MAINTENANCE WORK REQUIREMENT
CONTAINING
NATIONAL OVERHAUL STANDARDS
FOR

INTERROGATOR SETS
AN/TPX-46(V)1 (NSN 5895-00-423-1693) (EIC IZA)
AN/TPX-46(V)2 (NSN 5895-00-423-1694) (EIC IZB)

This publication is not available through the St. Louis Media Distribution Division. This publication is available through the US Army Communications- Electronics Command, Fort Monmouth, NJ 07703-5007.

DISTRIBUTION STATEMENT D. Distribution authorized to the Department of Defense and U.S. DOD contractors only. This publication is critical technology, as determined on 20 May, 1998. Other requests for this document shall be referred to AMSEL-LCL-ECM,Building 6001, POD C3-322/49, Aberdeen Proving Ground, MD 21005-1846.

DESTRUCTION NOTICE – Destroy by any means possible to prevent disclosure of contents or reconstruction of the document.

US ARMY COMMUNICATIONS-ELECTRONICS
LIFE CYCLE MANAGEMENT COMMAND,
ABERDEEN PROVING GROUND, MD

DATE

FIGURE 10. Example of a DMWR cover with national overhaul standards.

NMWR X-XXXX-XXX

NATIONAL MAINTENANCE WORK REQUIREMENT
CONTAINING
NATIONAL OVERHAUL STANDARDS
FOR

INTERROGATOR SETS
AN/TPX-46(V)1 (NSN 5895-00-423-1693) (EIC IZA)
AN/TPX-46(V)2 (NSN 5895-00-423-1694) (EIC IZB)

This publication is not available through the St. Louis Media Distribution Division. This publication is available through the US Army Communications- Electronics Command, Fort Monmouth, NJ 07703-5007.

DISTRIBUTION STATEMENT D. Distribution authorized to the Department of Defense and U.S. DOD contractors only. This publication is critical technology, as determined on 20 May, 1998. Other requests for this document shall be referred to AMSEL-LCL-ECM,Building 6001, POD C3-322/49, Aberdeen Proving Ground, MD 21005-1846.

DESTRUCTION NOTICE – Destroy by any means possible to prevent disclosure of contents or reconstruction of the document.

US ARMY COMMUNICATIONS-ELECTRONICS
LIFE CYCLE MANAGEMENT COMMAND,
ABERDEEN PROVING GROUND, MD

DATE

FIGURE 11. Example of a NMWR cover with national overhaul standards.

TM 3-6665-339-14

OPERATOR, FIELD, AND SUSTAINMENT MAINTENANCE MANUAL
CONTAINING
NATIONAL OVERHAUL STANDARDS
FOR

CHEMICAL-BIOLOGICAL-RADIOLOGICAL-NUCLEAR
RECONNAISSANCE SYSTEM (CBRNRS) FOX
M93A1

NSN 6665-01-372-1303 (EIC Y60)

DISTRIBUTION STATEMENT C - Distribution authorized to U.S. Government Agencies and their contractors. This publication is required for administrative and operational purposes, as determined on 22 October, 1990. Other requests for this document must be referred to Commander, U.S. Army Chemical Research Development and Engineering Center, ATTN: SMCCR-MAT, Aberdeen Proving Ground, MD 21010-5423.

WARNING – This document contains technical data whose export is restricted by the Arms Export Control Act (Title 22, U.S.C., Sec 2751, et. seq.) or the Export Administration Act of 1979, as amended, Title 50, U.S.C., App. 2401 et. seq.. Violations of these export laws are subject to severe criminal penalties. Disseminate in accordance with provisions of DoD Directive 5230.25

DESTRUCTION NOTICE – Destroy by any means possible to prevent disclosure of contents or reconstruction of the document.

HEADQUARTERS, DEPARTMENT OF THE ARMY
1 JUNE 1996

FIGURE 12. Example of front cover for TM with national overhaul standards.

FONT FOR COVER OF MARINE CORP TMs

Font size in points.

1. TM 11026A-OR – Short Title – 24 to 30.
2. U.S. MARINE CORPS TECHNICAL MANUAL – 18 to 24.
3. OPERATOR/CREW AND/OR FIELD LEVEL MAINTENANCE – 24 to 30.
4. FOR – 16
5. NOMENCLATURE – 18 to 24.
6. MODEL and NSN – 18 to 24.
7. MARINE CORPS SEAL – 2 inch diameter.
8. SUPERSEDURE NOTICE (if Applicable) – 10 to 12 Bold.
9. DISTRIBUTION and DESTRUCTION NOTICE – 10 to 12.
10. FOR OFFICIAL USE ONLY and DATE – 18 to 24.
11. PCN – 14.

FIGURE 13. (MC) Cover for Marine Corps only TMs.

SAMPLE OF TM COVER

(1)TM XXXXXX-XX

(2)U.S. MARINE CORPS TECHNICAL MANUAL

---

(3)OPERATOR/CREW AND FIELD LEVEL MAINTENANCE

(4)FOR

(5)ENGINEER EQUIPMENT TRAILER (EET)

(6)MODELS MT020/M322LT

(7)NSN: 2330-01-518-3809/2330-01-547-0272

(8)THIS PUBLICATION SUPERSEDES TM XXXXXX-XX DATED JANUARY 2000.

(9) **DISTRIBUTION C:** DISTRIBUTION AUTHORIZED TO U.S. GOVERNMENT AGENCIES AND THEIR CONTRACTORS ONLY FOR THE ADMINISTRATION AND OPERATIONAL PURPOSES AS DETERMINED **(INSERT DATE OF DETERMINATION).** OTHER REQUESTS FOR THIS DOCUMENT SHALL BE REFERRED TO: COMMANDANT OF THE MARINE CORPS (CODE ARD), HEADQUARTERS U.S. MARINE CORPS, WASHINGTON, DC 20380-0001.

(9)DESTRUCTION NOTICE: DESTROY BY ANY METHOD THAT WILL PREVENT DISCLOSURE OF CONTENTS OR RECONSTRUCTION OF THE DOCUMENTS.

---

(10)FOR OFFICIAL USE ONLY

(10)JANUARY 2000
(11)PCN XXX XXXXXX XX

FIGURE 13. MC) Cover for Marine Corps only TM - Continued.

DEPARTMENT OF THE NAVY
Headquarters, U.S. Marine Corps
Washington, DC 20380-0001

(One (1) inch left and right margins and last working day of the month) DD Month YYYY
(One (1) blank line)

1. This Technical Manual (TM), authenticated for Marine Corps use and effective upon receipt, provides (operation and/or level of maintenance as determined by TM XXXXXX-XX/X, (Volume 1 of 2) (As applicable) of the Nomenclature, Model, NSN ####-##-###-####. (Keep the 13 digit NSN numbers on same line, do not let it wrap.)

2. Safety issues related to the information contained in this manual should be reported to the Marine Corps Systems Command Safety Office at MCSC_Safety@usmc.mil. All significant safety hazards that have the potential to affect other commands and require widespread dissemination shall be reported via a Hazard Report per MCO P5102.1B.

3. Submit notice of discrepancies or suggested changes on a NAVMC 10772. The NAVMC may be submitted using either of the following:

a. The first method of submittal does not require a Common Access Card (CAC) to access the form. Click on URL http://192.156.19.109/ar/mcefs.nsf, select the 'By Form Type' button, choose 'NAVMC' then advance several pages to 'NAVMC 10772 R 10-09'. Select 'Change Request Part 1', this will bring up Technical Publication Change Request for NAVMC 10772 Tracking Program Part 1. Enter user data in the appropriate fields and must have users contact information block filled with Unit address and telephone number. Move the cursor to the Adobe Tool Bar above the NAVMC Form. Click on the 'Envelope' icon, a Pop-Up screen will appear with two choices, select 'Send a PDF Copy' click on 'OK'. When the .pdf document is created an Outlook Email screen will open with the .PDF as an attachment, on the To: line type "SMB.LOG.Tech.Pubs.fct@usmc.mil". In the body of the email, type any additional information you wish to provide. Click 'SEND'.

b. The https://pubs.logcom.usmc.mil/front.htm URL will allow access to the Albany Publications web site (CAC required) where the form can be filled out and be submitted. Problems or questions regarding the NAVMC 10772 program should be reported by calling DSN 567-7628 or DSN 567-5017 (Commercial number is (229) 639-7628 or (229) 639-5017).

(Two (2) blank lines)

BY DIRECTION OF THE COMMANDANT OF THE MARINE CORPS

(Three (3) blank lines)

OFFICIAL

(Four (4) blank lines)

I. M. SIGNER (PGD/PM as applicable)
Product Group Director, PGD-XX
Marine Corps Systems Command

(Two (2) blank lines)
DISTRIBUTION: PCN ### ###### ## or EDO

Sample Prom Letter for New TM

Text in red must be changed to represent the actual publication.

Text in green is for information.

Font is Times New Roman, 10pt.

(Updated 3 November 2011)

1/(2 blank)

FIGURE 14. (MC) Sample promulgation letter for new TM.

DEPARTMENT OF THE NAVY
Headquarters, U.S. Marine Corps
Washington, DC 20380-0001

(Two (2) blank lines)

TM XXXXXX-XX/X
(One (1) inch left and right margins) (As applicable) Volume 1 of 2
Change ##
PCN ### ###### ##
(One (1) blank line)
(Last working day of the month) DD Month YYYY

(One (1) blank line)
Encl : (1) New Page Inserts

1. Purpose. To transmit new page inserts to the basic manual, TM XXXXXX-XX/X, (Volume 1 of 2) (As applicable) dated Month YYYY, for the Nomenclature, Model, NSN ####-##-###-####.
(Keep the 13 digit NSN numbers on same line, do not let it wrap.)

2. Action. Insert new pages contained in the enclosure.

INSERT PAGES

25 and 26
29 and 30

3. Filing Instructions. This change transmittal page will be filed immediately following the signature page of the basic manual.

(Two (2) blank lines)

BY DIRECTION OF THE COMMANDANT OF THE MARINE CORPS

(Three (3) blank lines)

OFFICIAL

(Four (4) blank lines)

I. M. SIGNER (PGD/PM as applicable)
Product Group Director, PGD-XX
Marine Corps Systems Command

(Two (2) blank lines)

DISTRIBUTION: PCN ### ###### ## or EDO

Sample of Transmittal Letter for TM Change with New Insert Pages only.

Text in red must be changed to represent the actual publication.

Text in green is for information.

Font is Times New Roman, 10pt.

(Updated 23May2011)

1/(2 blank)

FIGURE 15. (MC) Sample promulgation letter for changed TM with inserted pages only.

DEPARTMENT OF THE NAVY
Headquarters, U.S. Marine Corps
Washington, DC 20380-0001

(Two (2) blank lines)

TM XXXXXX-XX/X
(As applicable) Volume 1 of 2
Change ##
(One (1) inch left and right margins) PCN ### ###### ##
(One (1) blank line)
(Last working day of month) DD Month YYY

(One (1) blank line)
Encls: (1) New Page Inserts
(2) Replacement Pages

1. Purpose. To transmit new page inserts and replacement pages to the basic manual, TM XXXXXX-XX/X, (Volume 1 of 2) (As applicable) dated Month YYYY, for the Nomenclature, Model, NSN ####-##-###-####. (Keep the 13 digit NSN numbers on same line, do not let it wrap.)

2. Action. Remove present pages listed below and replace with corresponding pages contained in enclosures (1) and (2). Significant changes contained in the replacement pages of this change are denoted by a bar symbol. Changes to illustrations are denoted by a miniature pointing hand. (This sentence is optional, use only if changes are made to illustrations).

REMOVE PAGES	INSERT PAGES
25 and 26	25 and 26 29 and 30

3. Filing Instructions. This change transmittal page will be filed immediately following the signature page of the basic manual.

(Two (2) blank lines)

BY DIRECTION OF THE COMMANDANT OF THE MARINE CORPS

(Three (3) blank lines)

OFFICIAL

(Four (4) blank lines)

I. M. SIGNER (PGD/PM as applicable)
Product Group Director, PGD-XX
Marine Corps Systems Command

(Two (2) blank lines)
DISTRIBUTION: PCN ### ###### ## or EDO

Sample Transmittal Letter for a TM Change with New Page Inserts and Replacement Pages

Text in red must be changed to represent the actual publication.

Text in green is for information.

Font is Times New Roman, 10pt.

(Updated 23May2011)

1/(2 blank)

FIGURE 16. (MC) Sample promulgation letter for changed TM with inserted pages and replacement pages.

DEPARTMENT OF THE NAVY
Headquarters, U.S. Marine Corps
Washington, DC 20380-0001

(Two (2) blank lines)

TM XXXXXX-XX/X
(One (1) inch left and right margins) (As applicable) Volume 1 of 2
Change ##
PCN ### ###### ##
(One (1) blank line)
(Last working day of month) DD Month YYYY

(One (1) blank line)
Encl: (1) Replacement Pages

1. Purpose. To transmit replacement pages to the basic manual, TM XXXXXX-XX/X, (Volume 1 of 2 As applicable) dated Month YYYY, for the Nomenclature, Model, NSN ####-##-###-####. (Keep the 13 digit NSN numbers on same line, do not let it wrap.)

2. Action. Remove present pages listed below and replace with corresponding pages contained in the enclosure. Significant changes contained in the replacement pages of this change are denoted by a bar symbol. Changes to illustrations are denoted by a miniature pointing hand. (This sentence is optional, use only if changes are made to illustrations).

REMOVE PAGES	INSERT PAGES
A/(B blank)	A/(B blank)
25 and 26	25 and 26
29 and 30	29 and 30

3. Filing Instructions. This change transmittal page will be filed immediately following the signature page of the basic manual.

(Two (2) blank lines)

BY DIRECTION OF THE COMMANDANT OF THE MARINE CORPS

(Three (3) blank lines)

OFFICIAL

(Four (4) blank lines)

I. M. SIGNER (PGD/PM as applicable)
Product Group Director, PGD-XX
Marine Corps Systems Command

(Two (2) blank lines)
DISTRIBUTION: PCN ### ###### ## or EDO

Sample of Transmittal Letter for a multi-volume TM Change with Replacement Pages

Text in red must be changed to represent the actual publication.

Text in green is for information.

Font is Times New Roman, 10pt.

(Updated 3 November 2011)

1/(2 blank)

FIGURE 17. (MC) Sample promulgation letter for multi-volume TM with changes.

Marine Corps TM XXXXXX-XX
Army TM X-XXXX-XX-XX-X

DEPARTMENT OF THE NAVY
Headquarters, U.S. Marine Corps
Washington, DC 20380-0001

(One (1) inch left and right margins) (Last working day of the month) DD Month YYYY
(One (1) blank line)

1. This Technical Manual (TM), authenticated for Marine Corps use and effective upon receipt, provides (operation and/or level of maintenance as determined by TM XXXXXX-XX/X, of the Nomenclature, Model,
NSN ####-##-###-####. (Keep the 13 digit NSN numbers on same line, do not let it wrap.)

2. TM XXXXXX-XX/X, dated Month YYYY is/are hereby superseded for Marine Corps use. (List each manual by Short Title and publication date that is superseded).

3. Safety issues related to the information contained in this manual should be reported to the Marine Corps Systems Command Safety Office at MCSC_Safety@usmc.mil. All significant safety hazards that have the potential to affect other commands and require widespread dissemination shall be reported via a Hazard Report per MCO P5102.1B.

4. Submit notice of discrepancies or suggested changes on a NAVMC 10772. The NAVMC may be submitted using either of the following:

a. The first method of submittal does not require a Common Access Card (CAC) to access the form. Click on URL http://192.156.19.109/ar/mcefs.nsf, select the 'By Form Type' button, choose 'NAVMC' then advance several pages to 'NAVMC 10772 R 10-09'. Select 'Change Request Part 1', this will bring up Technical Publication Change Request for NAVMC 10772 Tracking Program Part 1. Enter user data in the appropriate fields and must have users contact information block filled with Unit address and telephone number. Move the cursor to the Adobe Tool Bar above the NAVMC Form. Click on the 'Envelope' icon, a Pop-Up screen will appear with two choices, select 'Send a PDF Copy' click on 'OK'. When the .pdf document is created an Outlook Email screen will open with the .PDF as an attachment, on the To: line type "SMB.LOG.Tech.Pubs.fct@usmc.mil". In the body of the email, type any additional information you wish to provide. Click 'SEND'.

b. The https://pubs.logcom.usmc.mil/front.htm URL will allow access to the Albany Publications web site (CAC required) where the form can be filled out and be submitted. Problems or questions regarding the NAVMC 10772 program should be reported by calling DSN 567-7628 or DSN 567-5017 (Commercial number is (229) 639-7628 or (229) 639-5017).

(Two (2) blank lines)

BY DIRECTION OF THE COMMANDANT OF THE MARINE CORPS
AND BY ORDER OF THE SECRETARY OF THE ARMY

(Three (3) blank lines)

OFFICIAL

(Four (4) blank lines)

Sample Prom Letter of a Joint service TM Revision

Text in red must be changed to represent the actual publication.

Each volume requires its own Prom Letter.
(Updated 3 November 2011)

I. M. SIGNER (PGD/PM as applicable)
Product Group Director, PGD-XX
Marine Corps Systems Command

I. M. SIGNER (ARMY)
Brigadier General, United States Army
The Adjutant General

I. M. SIGNER
General, United States Army
Chief of Staff

(Two (2) blank lines)
DISTRIBUTION: PCN ### ###### ## or EDO
U.S. Army XXXXXXXXXXXXXXXX

1/(2 blank)

FIGURE 18. (MC) Sample promulgation letter for joint service TM involving the Marine Corps.

DEPARTMENT OF THE NAVY
Headquarters, U.S. Marine Corps
Washington, DC 20380-0001

(One (1) inch left and right margins) (Two (2) blank lines)

(Last working day of the month) DD Month YYYY

(One (1) blank line)

1. This Technical Manual (TM), authenticated for Marine Corps use and effective upon receipt, provides (operation and/or level of maintenance as determined by TM XXXXXX-XX/(alpha character indicates revision level) for the Nomenclature, Model, NSN ####-##-###-####. (Keep the 13 digit NSN numbers on same line, do not let it wrap.)

2. TM XXXXXX-XX, dated Month YYYY is/are hereby superseded for Marine Corps use.

3. Safety issues related to the information contained in this manual should be reported to the Marine Corps Systems Command Safety Office at MCSC_Safety@usmc.mil. All significant safety hazards that have the potential to affect other commands and require widespread dissemination shall be reported via a Hazard Report per MCO P5102.1B.

4. Submit notice of discrepancies or suggested changes on a NAVMC 10772. The NAVMC may be submitted using either of the following:

a. The first method of submittal does not require a Common Access Card (CAC) to access the form. Click on URL http://192.156.19.109/ar/mcefs.nsf, select the 'By Form Type' button, choose 'NAVMC' then advance several pages to 'NAVMC 10772 R 10-09'. Select 'Change Request Part 1', this will bring up Technical Publication Change Request for NAVMC 10772 Tracking Program Part 1. Enter user data in the appropriate fields and must have users contact information block filled with Unit address and telephone number. Move the cursor to the Adobe Tool Bar above the NAVMC Form. Click on the 'Envelope' icon, a Pop-Up screen will appear with two choices, select 'Send a PDF Copy' click on 'OK'. When the .pdf document is created an Outlook Email screen will open with the .PDF as an attachment, on the To: line type "SMB.LOG.Tech.Pubs.fct@usmc.mil". In the body of the email, type any additional information you wish to provide. Click 'SEND'.

b. The https://pubs.logcom.usmc.mil/front.htm URL will allow access to the Albany Publications web site (CAC required) where the form can be filled out and be submitted. Problems or questions regarding the NAVMC 10772 program should be reported by calling DSN 567-7628 or DSN 567-5017 (Commercial number is (229) 639-7628 or (229) 639-5017).

(Two (2) blank lines)

BY DIRECTION OF THE COMMANDANT OF THE MARINE CORPS

(Three (3) blank lines)
OFFICIAL

(Four (4) blank lines)

I. M. SIGNER (PGD/PM as applicable)
Product Group Director, PGD-XX
Marine Corps Systems Command
(Two (2) blank lines)

DISTRIBUTION: PCN ### ###### ## or EDO

Sample Prom Letter for a single volume TM Revision

Text in red must be changed to represent the actual publication.

Text in green is for information.

Font is Times New Roman, 10pt.

(Updated 3 November 2011)

1/(2 blank)

FIGURE 19. (MC) Sample promulgation letter for revised TM.

MANUAL NUMBER

CHANGE
NO. 1

HEADQUARTERS, DEPARTMENT OF THE ARMY
WASHINGTON, D.C., 31 AUGUST 1993

TECHNICAL MANUAL

OPERATOR AND FIELD
MAINTENANCE MANUAL
FOR

TEST SET
RADAR AN/TPM-22
NSN 4931-00-707-1229 (EIC D42)

DISTRIBUTION STATEMENT A – Approved for public release distribution is unlimited.

TM X-XXX-XXXX-XX, 5 June 1987, is updated as follows:

1.File this sheet in front of the manual for reference.
2.This change is a result of new preventive maintenance checks and service procedures and new expendable/durable supplies and materials.
3.This change implements Army Maintenance Transformation and changes the Maintenance Allocation Chart (MAC) to support field and sustainment maintenance.
4.New or updated text is indicated by a vertical bar in the outer margin of the page.
5.Added illustrations are indicated by a vertical bar adjacent to the figure number. Changed illustrations are indicated by a miniature pointing hand adjacent to the updated area and a vertical bar adjacent to the figure number.
6. Remove old pages and insert new pages as indicated below:

Remove Pages	Insert Pages
a through d	a through d
None	e through h

7.Replace the following work packages with their revised version.

Work Package Number
WP0044
WP 0125
WP 0271

8.Add the following new work packages.

Work Package Number
WP 1625.1
WP 1700.1

FIGURE 20. Example of transmittal page for change to support Army maintenance transformation.

MANUAL NUMBER

LIST OF EFFECTIVE PAGES/WORK PACKAGES

NOTE: Zero in the "Change No." column indicates an original page or work package.

Date of issue for the original manual is:

Original: 13 July 1998

TOTAL NUMBER OF PAGES FOR FRONT AND REAR MATTER IS 26 AND TOTAL NUMBER OF WORK PACKAGES IS 35, CONSISTING OF THE FOLLOWING:

Page/WP No.	Change No.	Page/WP No.	Change No.
Front Cover	0	Chapter 7 title page	0
Blank	0	Blank	0
a-d	0	WP 0022 (2 pgs)	0
i-iii	0	WP 0023 (4 pgs)	0
Iv blank	0	WP 0024 (6 pgs)	0
Chapter 1 title page	0	WP 0025 (4 pgs)	0
Blank	0	WP 0026 (4 pgs)	0
WP 0001 (4 pgs)	0	WP 0027 (4 pgs)	0
WP 0002 (10 pgs)	0	WP 0028 (4 pgs)	0
WP 0003 (2 pgs)	0	WP 0029 (4 pgs)	0
WP 0004 (2 pgs)	0	WP 0030 (4 pgs)	0
Chapter 2 title page	0	WP 0031 (6 pgs)	0
Blank	0	WP 0032 (6 pgs)	0
WP 0005 (2 pgs)	0	WP 0033 (2 pgs)	0
WP 0006 (8 pgs)	0	WP 0034 (2 pgs)	0
WP 0007 (2 pgs)	0	WP 0035 (2 pgs)	0
Chapter 3 title page	0	INDEX-1 – INDEX-14	0
Blank	0	Inside back cover	0
WP 0008 (2 pgs)	0	Back cover	0
Chapter 4 title page	0		
Blank	0		
WP 0009 (12 pgs)	0		
Chapter 5 title page	0		
Blank	0		
WP 0010 (2 pgs)	0		
WP 0011 (2 pgs)	0		
Chapter 6 title page	0		
Blank	0		
WP 0012 (20 pgs)	0		
WP 0013 (30 pgs)	0		
WP 0014 (30 pgs)	0		
WP 0015 (2 pgs)	0		
WP 0016 (4 pgs)	0		
WP 0017 (2 pgs)	0		
WP 0018 (8 pgs)	0		
WP 0019 (12 pgs)	0		
WP 0020 (2 pgs)	0		
WP 0021 (2 pgs)	0		

A

FIGURE 21. Example of a list of effective pages for a new publication.

MANUAL NUMBER

LIST OF EFFECTIVE PAGES/WORK PACKAGES

NOTE: The portion of text affected by the change is indicated by a vertical bar in the outer margins of the page. Changes to illustrations are indicated by a vertical bar adjacent to the title. Zero in the "Change No." column indicates an original page or work package.

Dates of issue for the original manual and for the changes are:

Original	13 July 1998
Change 1	10 December 1998
Change 2	22 March 1999

TOTAL NUMBER OF PAGES FOR FRONT AND REAR MATTER IS 26 AND TOTAL NUMBER OF WORK PACKAGES IS 35, CONSISTING OF THE FOLLOWING:

Page/WP No.	Change No.	Page/WP No.	Change No.
Front Cover	0	Chapter 7 title page	0
Blank	0	Blank	0
a-d	0	WP 0022 (2 pgs)	0
i-iii	0	WP 0023 (4 pgs)	2
Iv blank	0	WP 0024 (6 pgs)	1
Chapter 1 title page	0	WP 0025 (4 pgs)	1
Blank	0	WP 0026 (4 pgs)	0
WP 0001 (4 pgs)	1	WP 0027 (4 pgs) Deleted	2
WP 0002 (10 pgs)	1	WP 0028 (4 pgs)	0
WP 0003 (2 pgs)	0	WP 0029 (4 pgs)	0
WP 0004 (2 pgs)	2	WP 0030 (4 pgs)	1
Chapter 2 title page	0	WP 0031 (6 pgs)	2
Blank	0	WP 0032 (6 pgs)	0
WP 0005 (2 pgs)	1	WP 0033 (2 pgs)	1
WP 0006 (8 pgs)	0	WP 0034 (2 pgs)	0
WP 0007 (2 pgs)	0	WP 0034.1 (4 pgs) Added	2
Chp 3 title page	0	WP 0035 (2 pgs)	2
Blank	0	INDEX-1 – INDEX-14	0
WP 0008 (2 pgs)	0	Inside back cover	0
Chapter 4 title page	0	Back cover	0
Blank	0		
WP 0009 (12 pgs)	0		
Chapter 5 title page	0		
Blank	0		
WP 0010 (2 pgs)	0		
WP 0011 (2 pgs)	1		
Chapter 6 title page	0		
Blank	0		
WP 0012 (20 pgs)	2		
WP 0013 (30 pgs)	0		
WP 0014 (30 pgs)	2		
WP 0015 (2 pgs)	0		
WP 0016 (4 pgs)	0		
WP 0017 (2 pgs)	1		
WP 0018 (8 pgs)	1		
WP 0019 (12 pgs)	1		
WP 0020 (2 pgs)	2		
WP 0021 (2 pgs)	0		

FIGURE 22. Example of a list of effective pages for a manual with changes.

MANUAL NUMBER

LIST OF EFFECTIVE PAGES/WORK PACKAGES

NOTE: This manual supersedes TM X-XXXX-XXX-XX dated 15 Mar 1998. Zero in the "Change No." column indicates an original page or work package.

Date of issue for the revised manual is:

Original 16 September 1998

TOTAL NUMBER O F PAGES FOR FRONT AND REAR MATTER IS 26 AND TOTAL NUMBER OF WORK PACKAGES IS 36, CONSISTING OF THE FOLLOWING:

Page/WP No.	Change No.	Page/WP No.	Change No.
Front Cover	0	Chapter 7 title page	0
Blank	0	Blank	0
a-d	0	WP 0022 (2 pgs)	0
i-iii	0	WP 0023 (4 pgs)	0
Iv blank	0	WP 0024 (6 pgs)	0
Chapter 1 title page	0	WP 0025 (4 pgs)	0
Blank	0	WP 0026 (4 pgs)	0
WP 0001 (4 pgs)	0	WP 0027 (4 pgs)	0
WP 0002 (10 pgs)	0	WP 0028 (4 pgs)	0
WP 0003 (2 pgs)	0	WP 0029 (4 pgs)	0
WP 0004 (2 pgs)	0	WP 0030 (4 pgs)	0
Chapter 2 title page	0	WP 0031 (6 pgs)	0
Blank	0	WP 0032 (6 pgs)	0
WP 0005 (2 pgs)	0	WP 0033 (2 pgs)	0
WP 0006 (8 pgs)	0	WP 0034 (2 pgs)	0
WP 0007 (2 pgs)	0	WP 0035 (4 pgs)	0
Chapter 3 title page	0	WP 0036 (2 pgs)	0
Blank	0	INDEX-1 – INDEX-14	0
WP 0008 (2 pgs)	0	Inside back cover	0
Chapter 4 title page	0	Back cover	0
Blank	0		
WP 0009 (12 pgs)	0		
Chapter 5 title page	0		
Blank	0		
WP 0010 (2 pgs)	0		
WP 0011 (2 pgs)	0		
Chapter 6 title page	0		
Blank	0		
WP 0012 (20 pgs)	0		
WP 0013 (30 pgs)	0		
WP 0014 (30 pgs)	0		
WP 0015 (2 pgs)	0		
WP 0016 (4 pgs)	0		
WP 0017 (2 pgs)	0		
WP 0018 (8 pgs)	0		
WP 0019 (12 pgs)	0		
WP 0020 (2 pgs)	0		
WP 0021 (2 pgs)	0		

A

FIGURE 23. Example of a list of effective pages for a revised manual.

MANUAL NUMBER

LIST OF EFFECTIVE PAGES/WORK PACKAGES

NOTE: Zero in the "Change No." column indicates an original page or work package.

Date of issue for the original manual is:

Original 24 April 1990

TOTAL NUMBER OF VOLUMES IS 3, TOTAL NUMBER O F PAGES FOR FRONT AND REAR MATTER IS 62 AND TOTAL NUMBER OF WORK PACKAGES IS 30, CONSISTING OF THE FOLLOWING:

Page/WP No.	Change No.	Page/WP No.	Change No.
VOLUME 1		WP 0021 (2 pgs)	0
Front cover	0	INDEX-1 - INDEX 6	0
Blank	0	Inside back cover	0
a-f	0	Back cover	0
i-viii	0	VOLUME 3	0
Chapter 1 title page	0	Front cover	0
WP 0001 (4 pgs)	0	Blank	0
WP 0002 (10 pgs)	0	a-b	0
WP 0003 (2 pgs)	0	i-ii	0
WP 0004 (2 pgs)	0	Chapter 7 title page	0
Chapter 2 title page	0	WP 0022 (2 pgs)	0
WP 0005 (2 pgs)	0	WP 0023 (4 pgs)	0
WP 0006 (8 pgs)	0	WP 0024 (6 pgs)	0
WP 0007 (2 pgs)	0	WP 0025 (4 pgs)	0
Chapter 3 title page	0	WP 0026 (4 pgs)	0
WP 0008 (2 pgs)	0	WP 0027 (4 pgs)	0
INDEX-1 – INDEX-16	0	WP 0028 (4 pgs)	0
Inside back cover	0	WP 0029 (4 pgs)	0
Back cover	0	WP 0030 (4 pgs)	0
VOLUME 2		INDEX-1 - INDEX-4	0
Front cover	0	Inside back cover	0
Blank	0	Back cover	0
a-b	0		
i-iv	0		
Chapter 4 title page	0		
WP 0009 (12 pgs)	0		
Chapter 5 title page	0		
WP 0010 (2 pgs)	0		
WP 0011 (2 pgs)	0		
Chapter 6 title page	0		
WP 0012 (20 pgs)	0		
WP 0013 (30 pgs)	0		
WP 0014 (30 pgs)	0		
WP 0015 (2 pgs)	0		
WP 0016 (4 pgs)	0		
WP 0017 (2 pgs)	0		
WP 0018 (8 pgs)	0		
WP 0019 (12 pgs)	0		
WP 0020 (2 pgs)	0		

A USAF

FIGURE 24. Example of a list of effective pages for a multi-volume manual.

TM NUMBER

SERVICE NOMENCLATURE
CITY, STATE, TM DATE

TYPE OF PUBLICATION
MAINTENANCE LEVELS

NOMENCLATURE OF EQUIPMENT
TYPE, MODEL, PART NUMBER
NATIONAL STOCK NUMBER (EIC)
OR
SUBJECT
SUBTITLE
WEAPON SYSTEM NAME

REPORTING ERRORS AND RECOMMENDING IMPROVEMENTS

You can help improve this manual. If you find any mistakes or if you know of a way to improve the procedures, please let us know. Mail your letter, DA Form 2028 (Recommended Changes to Publications and Blank Forms) directly to: (*insert name and address of proponent*). You may also send in your recommended changes via electronic mail or by fax. Our fax number is (*insert DSN and commercial number of proponent*). Our e-mail address is (*insert e-mail address of proponent*). A reply will be furnished to you.

SUPERSEDURE NOTICE

DISTRIBUTION STATEMENT

EXPORT CONTROL WARNING

DESTRUCTION NOTICE

FIGURE 25. Example of a title page.

MANUAL NUMBER

HEADQUARTERS
DEPARTMENT OF THE ARMY
WASHINGTON, D.C., 1 JUNE 1996

OPERATOR MANUAL

CHEMICAL-BIOLOGICAL-RADIOLOGICAL-NUCLEAR
RECONNAISSANCE SYSTEM (CBRNRS) FOX
M93A1
NSN 6665-01-372-1303 (EIC Y60)

REPORTING ERRORS AND RECOMMENDING IMPROVEMENTS

You can help improve this manual. If you find any mistakes or if you know of a way to improve the procedures, please let us know. Mail your letter, DA Form 2028 (Recommended Changes to Publications and Blank Forms) directly to: Technical Director, Edgewood Research Development and Engineering Center, ATTN: SCBRD-ENL-V, Aberdeen Proving Ground, MD 21010-5423. You may also send in your recommended changes via electronic mail or by fax. Our fax number is (*insert DSN and commercial number of proponent*). Our e-mail address is (*insert e-mail address of proponent*). A reply will be furnished to you.

DISTRIBUTION STATEMENT C. Distribution authorized to U.S. Government agencies and their contractors. This publication is Administrative-Operational Use required for administrative and operational purposes, as determined on 22 October 1990. Other requests for this document must be referred to Commander, U.S. Army Chemical Research Development and Engineering Center, ATTN: SMCRR-MAT, Aberdeen Proving Ground, MD 21010-5423.

WARNING – This document contains technical data whose export is restricted by the Arms Export Control Act (Title 22, U.S.C., Sec 2751, et. seq.) or the Export Administration Act of 1979, as amended, Title 50, U.S.C., App. 2401 et. seq. Violations of these export laws are subject to severe criminal penalties. Disseminate in accordance with provisions of DoD Directive 5230.25.

DESTRUCTION NOTICE – Destroy by any means possible to prevent disclosure of contents or reconstruction of the document.

FIGURE 25. Example of a title page – Continued.

MANUAL NUMBER

HEADQUARTERS
DEPARTMENT OF THE ARMY
WASHINGTON, D.C., 1 JUNE 1996

FIELD REPAIR PARTS AND SPECIAL TOOLS LIST
FOR

CHEMICAL-BIOLOGICAL-RADIOLOGICAL-NUCLEAR
RECONNAISSANCE SYSTEM (CBRNRS) FOX
M93A1
NSN 6665-01-372-1303 (EIC Y60)

REPORTING ERRORS AND RECOMMENDING IMPROVEMENTS

You can help improve this manual. If you find any mistakes or if you know of a way to improve the procedures, please let us know. Mail your letter, DA Form 2028 (Recommended Changes to Publications and Blank Forms) directly to: Technical Director, Edgewood Research Development and Engineering Center, ATTN: SCBRD-ENL-V, Aberdeen Proving Ground, MD 21010-5423. You may also send in your recommended changes via electronic mail or by fax. Our fax number is (*insert DSN and commercial number of proponent*). Our e-mail address is (*insert e-mail address of proponent*). A reply will be furnished to you.

Current as of 15 May 2004

DISTRIBUTION STATEMENT C. Distribution authorized to U.S. Government agencies and their contractors. This publication is Administrative-Operational Use required for administrative and operational purposes, as determined on 22 October 1990. Other requests for this document must be referred to Commander, U.S. Army Chemical Research Development and Engineering Center, ATTN: SMCRR-MAT, Aberdeen Proving Ground, MD 21010-5423.

WARNING – This document contains technical data whose export is restricted by the Arms Export Control Act (Title 22, U.S.C., Sec 2751, et. seq.) or the Export Administration Act of 1979, as amended, Title 50, U.S.C., App. 2401 et. seq. Violations of these export laws are subject to severe criminal penalties. Disseminate in accordance with provisions of DoD Directive 5230.25.

DESTRUCTION NOTICE – Destroy by any means possible to prevent disclosure of contents or reconstruction of the document.

FIGURE 26. Example of a title page for a RPSTL TM.

MANUAL NUMBER

HEADQUARTERS
DEPARTMENT OF THE ARMY
WASHINGTON, D.C., 1 JUNE 1996

FIELD MAINTENANCE MANUAL
INCLUDING REPAIR PARTS AND SPECIAL TOOLS LIST
FOR

CHEMICAL-BIOLOGICAL-RADIOLOGICAL-NUCLEAR
RECONNAISSANCE SYSTEM (CBRNRS) FOX
M93A1
NSN 6665-01-372-1303 (EIC Y60)

REPORTING ERRORS AND RECOMMENDING IMPROVEMENTS

You can help improve this manual. If you find any mistakes or if you know of a way to improve the procedures, please let us know. Mail your letter, DA Form 2028 (Recommended Changes to Publications and Blank Forms) directly to: Technical Director, Edgewood Research Development and Engineering Center, ATTN: SCBRD-ENL-V, Aberdeen Proving Ground, MD 21010-5423. You may also send in your recommended changes via electronic mail or by fax. Our fax number is (*insert DSN and commercial number of proponent*). Our e-mail address is (*insert e-mail address of proponent*). A reply will be furnished to you.

Current as of 15 May 2004

DISTRIBUTION STATEMENT C. Distribution authorized to U.S. Government agencies and their contractors. This publication is Administrative-Operational Use required for administrative and operational purposes, as determined on 22 October 1990. Other requests for this document must be referred to Commander, U.S. Army Chemical Research Development and Engineering Center, ATTN: SMCRR-MAT, Aberdeen Proving Ground, MD 21010-5423.

WARNING – This document contains technical data whose export is restricted by the Arms Export Control Act (Title 22, U.S.C., Sec 2751, et. seq.) or the Export Administration Act of 1979, as amended, Title 50, U.S.C., App. 2401 et. seq. Violations of these export laws are subject to severe criminal penalties. Disseminate in accordance with provisions of DoD Directive 5230.25.

DESTRUCTION NOTICE – Destroy by any means possible to prevent disclosure of contents or reconstruction of the document.

FIGURE 27. Example of a title page for a narrative TM with RPSTL.

TM 1-1520-238-PM

HEADQUARTERS
DEPARTMENT OF THE ARMY
WASHINGTON, D.C., 28 FEBRUARY 2002

TECHNICAL MANUAL

PHASED MAINTENANCE INSPECTION CHECKLIST

ARMY
AH-64A HELICOPTER

REPORTING ERRORS AND RECOMMENDING IMPROVEMENTS

You can help improve this manual. If you find any mistakes or if you know of a way to improve the procedures, please let us know. Mail your letter, DA Form 2028 (Recommended Changes to Publications and Blank Forms) directly to: Commander, U.S. Army Aviation and Missile Command, ATTN: AMSAM-MMA-NP, Redstone Arsenal, AL, 35898-5230. You may also send in your recommended changes via electronic mail or by fax. Our fax number is FAX 256-999-9999 or FAX (DSN) 999-9999. Our e-mail address is 2028@redstone.army.mil. A reply will be furnished to you.

WARNING

Certain inspections are mandatory safety-of-flight requirements, and the inspection intervals cannot be exceeded. In the event these inspections cannot be accomplished at the specified interval, the aircraft condition status symbol will be immediately changed to a red X. Mandatory safety-of-flight inspection items are printed in bold face type.

NOTE

Inspection items contained in this manual are considered the minimum requirements for performing phased maintenance and must be performed. The cumulative effects of inspection deferrals are unknown and could result in catastrophic failure or increased maintenance at a later date. Therefore, the use of special lettering to emphasize mandatory safety-of-flight inspection items is not to be construed as authority for deferral of other inspections.

SUPERSEDURE NOTICE: TM 1-1520-238-PM dated 28 February 2002 supersedes TM 1-1520-238-PM dated 20 June 1994, Including all changes.

DISTRIBUTION STATEMENT A. Approved for public release; distribution is unlimited.

FIGURE 28. Example of a title page with warning data for phased maintenance inspection and preventive maintenance services.

MANUAL NUMBER

TABLE OF CONTENTS

Page No.
WP Sequence No.

How to Use This Manual vii

Chapter 1 – Operator General Information, Description, and Theory of Operation

Transportation Electronic Shop General Information ..... WP 0001-1

Figure 1. Family AN/TSM-191 Vehicles ..... WP 0001-1

Transportation Electronic Shop Description and Data ..... WP 0002-1

Figure 1. Exterior Components ..... WP 0002-1

Figure 2. Interior Components ..... WP 0002-2

Table 1. Difference Between Models ..... WP 0002-3

Introduction ..... WP 0003-1

Powerpack Theory of Operation ..... WP 0004-1

Fuel System Theory of Operation ..... WP 0005-1

Electrical System Theory of Operation ..... WP 0006-1

Hydraulic System Theory of Operation ..... WP 0007-1

Amphibious System Theory of Operation ..... WP 0008-1

Bilge Pumps and Drain Valves Theory of Operation ..... WP 0009-1

Fire Extinguisher System Theory of Operation ..... WP 0010-1

Chapter 2 – Operator Instructions

==========

Expendable Supplies and Materials List ..... WP 0123-1

Table 1. Expendable and Durable Items List ..... WP 0123-1

Foldout Figures

FO1. Wiring Schematic FP-1

FO2. Hydraulic Flow FP-3

Glossary GLOSSARY-1

Index INDEX-1

iii

FIGURE 29. Example of a table of contents with figures and tables listed.

MANUAL NUMBER

TABLE OF CONTENTS

Page No.
WP Sequence No.

How to Use This Manual vii
Chapter 1 – General Information, Description, and Theory of Operation
General Information ..... WP 0001-1
Equipment Description and Data ..... WP 0002-1
Location and Description of major Components ..... WP 0003-1
Theory of Operation ..... WP 0004-1
Chapter 2 – Operator Instructions
Description and Use of Controls and Indicators ..... WP 0005-1
Operation Under Usual Conditions ..... WP 0006-1
Operation Under Unusual Conditions ..... WP 0007-1
Emergency Procedures ..... WP 0008-1
Chapter 3 Operator Troubleshooting
Troubleshooting ..... WP 0009-1
Chapter 4 Operator Maintenance
Preventive Maintenance Checks and Services (PMCS) Introduction ..... WP 0010-1
PMCS ..... WP 0011-1
Disassemble ..... WP 0012-1
Assemble ..... WP 0013-1
Clean ..... WP 0014-1
Inspect ..... WP 0015-1
Lubricate ..... WP 0016-1
Chapter 5 Supporting Information
References ..... WP 0017-1
Components of End Item/Basic Issue Items ..... WP 0018-1
Additional Authorization Items ..... WP 0019-1
Expendable Supplies and Materials List ..... WP 0123-1
Glossary GLOSSARY-1
Index INDEX-1

FIGURE 30. Example of a table of contents without figures and tables listed.

MANUAL NUMBER

TABLE OF CONTENTS

		WP Sequence No.
Introduction		WP 0001
GROUP 00	20-mm Self-Propelled Air Defense Artillery Gun M163A1	WP 0002
GROUP 01	20-mm Air Defense Gun Cannon M168	WP 0003
GROUP 0101	Recoil Adapter Assembly	WP 0004
GROUP 0102	Breech Bolt Assembly	WP 0005
GROUP 0103	Center Clamp Assembly	WP 0006
GROUP 02	20-mm Gun Mount Assembly M157A1	WP 0007
GROUP 0201	Storage Battery	WP 0008
GROUP 0202	Ammunition Chute	WP 0009
GROUP 0203	Element Chute	WP 0010
GROUP 0204	Mount Component Assembly Detail Illustrations	WP 0011
GROUP 020401	Turret Drum Assembly	WP 0012
GROUP 020402	Azimuth Drive Assembly	WP 0013
GROUP 020403	Azimuth Drive Friction Clutch Assembly	WP 0014
GROUP 03	Automatic Lead Computing Sight M61	WP 0015
GROUP 0301	Motor and Electromagnet Assemblies	WP 0016
GROUP 0302	Combining Glass and Gimbal	WP 0017
GROUP 0303	Caging Device and Cable Assembly	WP 0018
GROUP 0304	Housing Support Assembly	WP 0019
GROUP 09	Special Tools (Repair Parts)	WP 0045
GROUP 0901	Boresight	WP 0046
GROUP 0902	Storage Drum slot Gauge with Case	WP 0047
GROUP 99	Bulk Materials List	WP 0048
Special Tools List		WP 0049
Special Tools for field maintenance (Stowed with Case) Special Tools List		WP 0050
National Stock Number Index		WP 0051
Part Number Index		WP 0052
Reference Designator Index		WP 0053

iii

FIGURE 31. Example of a RPSTL table of contents.

INDEX

Subject — WP Sequence No.- Page No.

A

Accessory Section
- Description ... WP 0002-9
- Inspection ... WP 0045-3
- Installation ... WP 0045-10
- Removal ... WP 0045-1
- Repair ... WP 0045-6

Actuating Pilot Valve Leakage Check ... WP 0011-10

Actuator, Compressor Bleed Valve
- Assembly ... WP 0012-5
- Cleaning ... WP 0012-2
- Disassembly ... WP 0012-1
- Inspection ... WP 0012-3
- Repair ... WP 0012-4
- Adapter, Compressor Repair ... WP 0022-9

Afterburner
- Description ... WP 0002-1
- Inspection ... WP 0047-1
- Installation ... WP 0048-5
- Performer Limits ... WP 0003-1
- Repair ... WP 0049-1
- Removal ... WP 0004-1
- Troubleshooting ... WP 0060-1

Air System ... WP 0004-6

Airseal Installation ... WP 0016-4

Anti-Icing Air System Description ... WP 0002-2

B

Baffle and Spacer ... WP 0034-7

Baffle Assembly ... WP 0007-9

Bearings, Anti-friction
- Balance ... WP 0041-2
- Cleaning ... WP 0041-3
- Inspection ... WP 0041-2
- Installation ... WP 0042-3
- Removal ... WP 0042-1

Bleed Control Limit Curve ... WP 0040-3

Breather Pressurizing Valve
- Disassembly ... WP 0017-1
- Inspection ... WP 0017-3
- Installation ... WP 0017-5

C

Carbon Seals
- Cleaning ... WP 0008-2
- Inspection ... WP 0008-1
- Replacement ... WP 0009-1

Combustion Chambers
- Description ... WP 0002-4

FIGURE 32. Example of an alphabetical index.

By Order of the Secretary of the Army:

RAYMOND T. ODIERNO
General, United States Army
Chief of Staff

Official:

(Signature)
JOYCE E. MORROW
Administrative Assistant to the
Secretary of the Army
0232913

FIGURE 33. Example of an authentication block for the Army.

By Order of the Secretary of the Army:

Official:

JOYCE E. MORROW
Administrative Assistant to the
Secretary of the Army
00000000

RAYMOND T. ODIERNO
General, United States Army
Chief of Staff

By Order of the Secretary of the Air Force:

Official:

DONALD J. HOFFMAN
General, United States Air Force
Commander, AFMC

NORTON A. SWARTZ
General, United States Air Force
Chief of Staff

By Order of the Secretary of the Navy:

WALTER H. CANTRELL
Rear Admiral, United States Navy
Commander, Space and Naval Warfare
Systems Command

By Order of the Marine Corps:

G. W. TAYLOR
Product Group Director, PG-15
Ground Transportation Engineer Systems
Marine Corps Systems Command

Army Distribution:

To be distributed in accordance with the initial distribution number (IDN) 256886 requirements for TM 9-6115-729-10.

Marine Corps Distribution:

To be distributed in accordance with PCN 184 115980 02.

FIGURE 34. Example of an authentication block for Joint Services.

This page intentionally left blank.

APPENDIX A

CONTENT SELECTION MATRIXES

A.1 SCOPE.

A.1.1 Scope. This appendix includes the technical content requirements for the preparation of technical manuals for all major weapon systems and all types of equipment, including test and support equipment. This appendix is a mandatory part of this standard. The information contained herein is intended for compliance. The requirements are applicable for all maintenance levels/classes through overhaul (depot) including DMWRs and NMWRs.

A.2 APPLICABLE DOCUMENTS.

This section is not applicable to this appendix.

A.3 DEFINITIONS.

This section is not applicable to this appendix.

A.4 GENERAL REQUIREMENTS.

This section is not applicable to this appendix.

A.5 DETAILED REQUIREMENTS.

A.5.1 Tailoring requirements for technical manuals. Tailoring of the technical content requirements contained in APPENDIX B through L is provided in the content matrix tables, TABLE A-II through TABLE A-XIX. The tables list all applicable technical content requirements for the development of the following page-based TMs. There is a sample filled-out matrix provided in MIL-HDBK-1222. Copies of the applicable tables will be completed and added as an attachment to the Document Summary List of the contract.

A.5.2 Publication Titles.

a. All page-based publications prepared in accordance with this standard shall have a title in accordance with TABLE A-I.

b. If your RPSTL information contains Depot parts/special tools, the title shall indicate this (e.g., Field and Sustainment Maintenance Manual with Repair Parts and Special Tools List including Depot Repair Parts and Special Tools).

TABLE A-I. Publication type and title with associated context matrix table.

PUB TYPE	TITLE	APPLICABLE TABLE
EXCLUDING CONVENTIONAL AND CHEMICAL AMMUNITION		
-10	Operator Manual for *insert system*	TABLE A-II
-13	Operator and Field Maintenance Manual *insert system*	TABLE A-II

TABLE A-I. Publication type and title with associated context matrix table.

PUB TYPE	TITLE	APPLICABLE TABLE
-13&P	Operator and Field Maintenance Manual including Repair Parts and Special Tools List for *insert system*	TABLE A-II
-14	Operator, Field, and Sustainment Maintenance Manual for *insert system*	TABLE A-II
-14&P	Operator, Field and Sustainment Maintenance Manual including Repair Parts and Special Tools List for *insert system*	TABLE A-II
-23	Field Maintenance Manual for *insert system*	TABLE A-IV (Non-aviation) TABLE A-V (Aviation)
-23&P	Field Maintenance Manual including Repair Parts and Special Tools List for *insert system*	TABLE A-IV (Non-aviation) TABLE A-V (Aviation)
-23P	Field Maintenance Repair Parts and Special Tools List for *insert system*	TABLE A-VI
-24	Field and Sustainment Maintenance Manual for *insert system*	TABLE A-IV (Non-aviation) TABLE A-V (Aviation)
-24&P	Field and Sustainment Maintenance Manual including Repair Parts and Special Tools List for *insert system*	TABLE A-IV (Non-aviation) TABLE A-V (Aviation)
-24P	Field and Sustainment Maintenance Repair Parts and Special Tools List for *insert system*	TABLE A-VI
-40	Sustainment Maintenance Manual for *insert system*	TABLE A-III
-40&P	Sustainment Maintenance Manual including Repair Parts and Special Tools List for *insert system*	TABLE A-III
-40P	Sustainment Maintenance Repair Parts and Special Tools List for *insert system*	TABLE A-VI
BDAR	*Insert Maintenance level* Battle Damage Assessment and Repair for *insert system*	TABLE A-XVI
DMWR	Depot Maintenance Work Requirement for *insert system*	TABLE A-VII
DMWR w/RPSTL	Depot Maintenance Work Requirement including Repair Parts and Special Tools List for *insert system*	TABLE A-VII

TABLE A-I. Publication type and title with associated context matrix table.

PUB TYPE	TITLE	APPLICABLE TABLE
DMWR Containing Overhaul Standards	Depot Maintenance Work Requirement containing National Maintenance Repair Standards for *insert system*	TABLE A-VIII
DMWR Containing Overhaul Standards w/RPSTL	Depot Maintenance Work Requirement containing National Maintenance Repair Standards including Repair Parts and Special Tools List for *insert system*	TABLE A-VIII
NMWR	National Maintenance Work Requirement for *insert system*	TABLE A-VII
NMWR w/RPSTL	National Maintenance Work Requirement including Repair Parts and Special Tools List for *insert system*	TABLE A-VII
Aircraft Trouble-shooting	Aviation Field Troubleshooting Manual for *insert system*	TABLE A-IX
	Aviation Sustainment Troubleshooting Manual for *insert system*	TABLE A-IX
	Aviation Field and Sustainment Troubleshooting Manual for *insert system*	TABLE A-IX
Aircraft PMD	Preventive Maintenance Daily Manual for *insert system*	TABLE A-X
Aircraft PMS	Preventive Maintenance Services Manual for *insert system*	TABLE A-X
Aircraft PM	Phased Maintenance Inspection Checklist for *insert system*	TABLE A-XI
Destruction TMs	Destruction of Equipment to Prevent Enemy Use for *insert system*	TABLE A-XV
Lubrication Orders	Lubrication Orders for *insert system*	TABLE A-XVIII
PM Checklist	Preventive Maintenance Checklists for *insert system*	TABLE A-XVII
CONVENTIONAL AND CHEMICAL AMMUNITION		
-10	Operator Manual for *insert system*	TABLE A-XII
-13	Operator and Field Maintenance Manual for *insert system*	TABLE A-XII

TABLE A-I. Publication type and title with associated context matrix table.

PUB TYPE	TITLE	APPLICABLE TABLE
-13&P	Operator and Field Maintenance Manual including Repair Parts and Special Tools List for *insert system*	TABLE A-XII
-14	Operator, Field, and Sustainment Maintenance Manual for *insert system*	TABLE A-XII
-14&P	Operator, Field, and Sustainment Maintenance Manual including Repair Parts and Special Tools List for *insert system*	TABLE A-XII
-23	Field Maintenance Manual for *insert system*	TABLE A-XIV
-23&P	Field Maintenance Manual including Repair Parts and Special Tools List for *insert system*	TABLE A-XIV
-24	Field and Sustainment Maintenance Manual for *insert system*	TABLE A-XIV
-24&P	Field and Sustainment Maintenance Manual including Repair Parts and Special Tools List for *insert system*	TABLE A-XIV
-40	Sustainment Maintenance Manual for *insert system*	TABLE A-XIII
-40&P	Sustainment Maintenance Manual including Repair Parts and Special Tools List for *insert system*	TABLE A-XIII
DMWR	DMWR Maintenance/Demilitarization of *insert system*	TABLE A-XIX

A.5.3 Technical content tables. TABLE A-II through TABLE A-XIX simplifies tailoring the technical content requirements of technical manuals prepared using this standard as a guide. The tables indicate which portions of this standard are applicable and list the content requirements for each type of TM. The content requirements for each applicable TM shall be arranged in the order presented in the tables. Inclusion of the applicable tables of this appendix is mandatory and is intended for compliance.

A.5.3.1 Intended use. First, determine the types of TMs required for each acquisition and then duplicate or download (available at https://www.logsa.army.mil/mil40051/menu.cfm) the table(s) that contain the content requirements for those types of TMs. Indicate the types of TMs needed by filling in the blank after "Requirements Matrix for" at the top of each matrix.

a. For each type of TM selected, indicate in the empty shaded blocks the "TM" content desired by entering an "R" for "REQUIRED" content, a "P" for content that is "PROHIBITED," or an "AR" for content that is "AS REQUIRED." All blocks for the selected TM type shall be filled in. Further guidance is provided below.

(1) For tables with multiple columns, allowing a choice of TM type (e.g., -10, -13, -14). Unused columns must either be removed during the editing process, or marked to indicate that manual type is not required. Rows in the matrix tables shall not be removed or added.

(2) Blocks that contain an “R” are required content and shall not be changed except as specified in A.5.4.3b below.

(3) Blocks that contain a “P” are prohibited content and shall not be changed.

(4) Information not included in a specific table is prohibited for that type of TM and shall not be included.

b. The blocks that are shaded are content items where a decision must be made by the acquiring activity whether they are required to support the equipment. The blocks that are shaded shall be filled in with an “R,” “P,” or “AR.”

(1) If a decision on a shaded item cannot be made, the shaded item shall be marked with an "AR.”

(2) When a decision has been made, the shaded item shall be marked with a “P” or “R.”

(3) Many shaded items identify a parent (e.g., manufactured items) that when selected must contain certain content. Shaded cells with an “R” or a “P” identify requirements that must be followed when the parent item is selected. If the parent option is marked as “R” or “AR”, these “R’s” and “P’s” cannot be changed. If a parent module is determined not to be needed and is marked with a “P”, then the children are also prohibited and should be marked as such.

c. The notation “Chapter X” in the matrix means that, if required, at least one of these chapters shall be in the TM. If more than one of these chapters is needed, then a required content item listed within the “Chapter X” matrix portion shall be in one of the chapters and may not be in the others. For example, if there are more than two “Maintenance Instructions” chapters, only one of them needs a “PMCS Work Package.”

d. An “R” at the chapter level means the chapter is required. It does not mean everything below it must be included. Individual items that can be included with the chapter carry their own marking (“R”, “P”, or “AR”)..

A.5.4 Acquisition requirements. The properly executed Technical Manual Content Selection Matrix table becomes contractually binding when it is made part of the contract, statement of work, or any other contractual instrument.

This page intentionally left blank.

TABLE A-II. Operators and combined operator/maintenance requirements matrix for _____.

TM Content	-10	-13 -13&P	-14 -14&P	MIL-STD-40051-2B Reference	Element Name
FRONT MATTER	R	R	R	5.2.1	**<paper.frnt>**
Front cover	R	R	R	5.2.1.1	**<frntcover>**
(MC) Promulgation letter				5.2.1.3	**<promulgation>**
Warning summary				5.2.1.4	**<warnsum>**
Change transmittal page				5.2.1.5	**<chgsheet>**
List of effective pages/work packages	R	R	R	5.2.1.6	**<loepwp>**
Title page	R	R	R	5.2.1.7	**<titleblk>**
Table of contents	R	R	R	5.2.1.9	**<contents>**
How to use this manual	R	R	R	5.2.1.10	**<howtouse>**
CHAPTER 1. GENERAL INFORMATION, EQUIPMENT DESCRIPTION, AND THEORY OF OPERATION	R	R	R	APPENDIX B	**<gim>**
GENERAL INFORMATION WORK PACKAGE	R	R	R	B.5.2	**<ginfowp>**
Scope	R	R	R	B.5.2.3	**<scope>**
Maintenance forms, records, and reports	R	R	R	B.5.2.4	**<mfrr>**
Reporting Equipment Improvement Recommendations (EIR)	R	R	R	B.5.2.5	**<eir>**
Hand Receipt (HR) manuals				B.5.2.6	**<handreceipt>**
Corrosion Prevention and Control (CPC)	R	R	R	B.5.2.7	**<cpcdata>**
Ozone Depleting Substances (ODS)				B.5.2.8	**<odsdata>**
Destruction of Army materiel to prevent enemy use	R	R	R	B.5.2.9	**<destructmat>**
Preparation for storage or shipment	R	R	R	B.5.2.10	**<pssref>**
Warranty information				B.5.2.11	**<wrntyref>**
Nomenclature cross-reference list	R	R	R	B.5.2.12	**<nomenreflist>**
List of abbreviations/acronyms	R	R	R	B.5.2.13	**<loa>**
Quality of material	P	R	R	B.5.2.15	**<qual.mat.info>**
Safety, care, and handling				B.5.2.16	**<sftyinfo>**
Nuclear hardness				B.5.2.17	**<hcp>**
Calibration				B.5.2.18	**<calref>**
Item unique identification (IUID)				B.5.2.19	**<iuid>**

TABLE A-II. Operators and combined operator/maintenance requirements matrix for _____.

TM Content	-10	-13 -13&P	-14 -14&P	MIL-STD-40051-2B Reference	Element Name
Supporting information for repair parts, special tools, TMDE, and support equipment	P			B.5.2.26	<supdata>
Copyright credit line				B.5.2.27	<copyrt>
EQUIPMENT DESCRIPTION AND DATA WORK PACKAGE	R	R	R	B.5.3	<descwp>
Equipment characteristics, capabilities, and features	R	R	R	B.5.3.3	<eqpinfo>
Location and description of major components	R	R	R	B.5.3.4	<locdesc>
Differences between models				B.5.3.5	<eqpdiff>
Equipment data	R	R	R	B.5.3.6	<eqpdata>
THEORY OF OPERATION WORK PACKAGE	R	R	R	B.5.4	<thrywp>
CHAPTER X. OPERATOR INSTRUCTIONS	R	R	R	APPENDIX C	<opim>
DESCRIPTION AND USE OF OPERATOR CONTROLS AND INDICATORS WORK PACKAGE	R	R	R	C.5.2.2.1	<ctrlindwp>
OPERATION UNDER USUAL CONDITIONS WORK PACKAGE	R	R	R	C.5.2.2.2	<opusualwp>
Operation under usual conditions task	R	R	R	C.5.2.2.2.3	<opertsk>
Security measures for electronic data				C.5.2.2.2.4	<secref>
Siting requirements				C.5.2.2.2.5	<site>
Shelter requirements				C.5.2.2.2.6	<shelter>
Assembly and preparation for use				C.5.2.2.2.7	<prepforuse>
Initial adjustments, before use and self-test				C.5.2.2.2.8	<initial>
Operating procedures	R	R	R	C.5.2.2.2.9	<oper>
Operating auxiliary equipment				C.5.2.2.2.11	<operaux>
Preparation for movement				C.5.2.2.2.12	<prepmove>
Decals and instruction plates				C.5.2.2.2.13	<instructplt>
OPERATION UNDER UNUSUAL CONDITIONS WORK PACKAGE	R	R	R	C.5.2.2.3	<opunuwp>
Security measures for electronic data				C.5.2.2.3.4	<secref>
Unusual environment/weather	R	R	R	C.5.2.2.3.5	<unusualenv>
Fording and swimming				C.5.2.2.3.6	<fording>

TABLE A-II. Operators and combined operator/maintenance requirements matrix for _____.

TM Content	-10	-13 -13&P	-14 -14&P	MIL-STD-40051-2B Reference	Element Name
Interim Chemical, Biological, Radiological, and Nuclear (CBRN) decontamination procedures				C.5.2.2.3.7	**<decon>**
Jamming and Electronic Countermeasures (ECM) procedures				C.5.2.2.3.8	**<ecm>**
Degraded operation procedures				C.5.2.2.3.9	**<degraded>**
Decals and instruction plates				C.5.2.2.3.10	**<instructplt>**
EMERGENCY WORK PACKAGE				C.5.2.2.4	**<emergencywp>**
STOWAGE AND DECAL/DATA PLATE GUIDE WORK PACKAGE				C.5.2.2.5	**<stowagewp>**
ON-VEHICLE EQUIPMENT LOADING PLAN WORK PACKAGE				C.5.2.2.6	**<eqploadwp>**
CHAPTER X. TROUBLESHOOTING MASTER INDEX				APPENDIX D D.5.4.4	**<tim> <masterindexcategory>**
TROUBLESHOOTING INDEX WORK PACKAGE				D.5.5.5	**<tsindxwp>**
CHAPTER X. TROUBLESHOOTING PROCEDURES ***NOTE*** *The notation (*) indicates that at least one of the these content items shall be included*		R	R	APPENDIX D D.5.4.2	**<tim> <troublecategory>**
INTRODUCTION WORK PACKAGE				D.5.5.3	**<tsintrowp>**
TROUBLESHOOTING INDEX WORK PACKAGE				D.5.5.5	**<tsindxwp>**
**OPERATIONAL CHECKOUT WORK PACKAGES*				D.5.5.8.3	**<opcheckwp>**
**TROUBLESHOOTING WORK PACKAGES*				D.5.5.8.4	**<tswp>**
**COMBINED OPERATIONAL CHECKOUT AND TROUBLESHOOTING WORK PACKAGES*				D.5.5.8.5	**<opcheck-tswp>**

TABLE A-II. Operators and combined operator/maintenance requirements matrix for _____.

TM Content	-10	-13 -13&P	-14 -14&P	MIL-STD-40051-2B Reference	Element Name
CHAPTER X. **PMCS** **MAINTENANCE INSTRUCTIONS** ***NOTE*** *PMCS may be in its own chapter or may be combned with other maintenance work packages in a maintenance chapter but not both places.*				APPENDIX E E.5.2.1	<mim> <pmcscategory>
PMCS INTRODUCTION WORK PACKAGE	R	R	R	E.5.3.4.1	<pmcsintrowp>
PMCS, INCLUDING LUBRICATION INSTRUCTIONS, WORK PACKAGE	R	R	R	E.5.3.4.2	<pmcswp>
CHAPTER X. **MAINTENANCE INSTRUCTIONS** ***NOTE*** *PMCS is required as a minimum in one maintenance chapter. PMCS may be in its own chapter or may be combned with other maintenance work packages in a maintenance chapter but not both places.*	R	R	R	APPENDIX E E.5.2.2 E.5.2.3	<mim> <maintenancepmcscategory> <maintenancecategory>
SERVICE UPON RECEIPT WORK PACKAGE (MAINTAINER LEVEL ONLY)	P	R	R	E.5.3.2	<surwp>
Service upon receipt tasks	P	R	R	E.5.3.2.3	<surtsk>
Siting	P			E.5.3.2.3.1	<siting>
Shelter requirements	P			E.5.3.2.3.2	<shltr>
Service upon receipt of materiel	P	R	R	E.5.3.2.3.3	<surmat>
Installation instructions	P	R	R	E.5.3.2.3.4	<install>
Preliminary servicing of equipment	P			E.5.3.2.3.5	<preserv>
Preliminary checks and adjustment of equipment	P			E.5.3.2.3.6	<prechkadj>
Preliminary calibration of equipment	P			E.5.3.2.3.7	<precal>
Circuit alignment	P			E.5.3.2.3.8	<calign>
Ammunition markings	P			E.5.3.2.3.9.1	<mark>
Classification of defects	P			E.5.3.2.3.9.2	<ammo.defect>
Ammunition handling	P			E.5.3.2.3.9.3	<ammo.handling>
Procedures to activate ammunition	P			E.5.3.2.3.9.4	<arm>
Additional maintenance task	P			E.5.3.2.3.10	<other.surtsk>
Follow-on maintenance	P			E.5.3.2.3.11	<followon.maintsk>

TABLE A-II. Operators and combined operator/maintenance requirements matrix for _____.

TM Content	-10	-13 -13&P	-14 -14&P	MIL-STD-40051-2B Reference	Element Name
EQUIPMENT/USER FITTING INSTRUCTIONS WORK PACKAGE				E.5.3.3	**<perseqpwp>**
PMCS INTRODUCTION WORK PACKAGE	R			E.5.3.4.1	**<pmcsintrowp>**
PMCS WORK PACKAGE	R			E.5.3.4.2	**<pmcswp>**
MAINTENANCE WORK PACKAGES		R	R	E.5.3.5	**<maintwp>**
Maintenance tasks		R	R	E.5.3.5.3	**<maintsk>**
Inspect				E.5.3.5.3.2	**<inspect>**
Test				E.5.3.5.3.3	**<test>**
Service				E.5.3.5.3.4	**<service>**
Adjust				E.5.3.5.3.5	**<adjust>**
Align				E.5.3.5.3.6	**<align>**
Calibrate				E.5.3.5.3.7	**<calibration>**
Remove				E.5.3.5.3.8	**<remove>**
Install				E.5.3.5.3.9	**<install>**
Replace				E.5.3.5.3.10	**<replace>**
Repair				E.5.3.5.3.11	**<repair>**
Paint				E.5.3.5.3.12	**<paint>**
Overhaul	P			E.5.3.5.3.13	**<overhaul>**
Rebuild	P			E.5.3.5.3.14	**<rebuild>**
Lubricate				E.5.3.5.3.15	**<lube>**
Mark				E.5.3.5.3.16	**<mark>**
Pack				E.5.3.5.3.17	**<pack>**
Unpack				E.5.3.5.3.18	**<unpack>**
Preserve				E.5.3.5.3.19	**<preserv>**
Prepare for use				E.5.3.5.3.20	**<prepforuse>**
Assemble				E.5.3.5.3.21	**<assem>**
Disassemble				E.5.3.5.3.22	**<disassem>**
Clean				E.5.3.5.3.23	**<clean>**
Nondestructive inspection				E.5.3.5.3.24	**<ndi>**
Radio interference suppression				E.5.3.5.3.25	**<ris>**
Place in service				E.5.3.5.3.26	**<pis>**
Towing				E.5.3.5.3.27	**<tow>**
Jacking				E.5.3.5.3.28	**<jack>**
Parking				E.5.3.5.3.29	**<park>**
Mooring				E.5.3.5.3.30	**<moor>**
Covering				E.5.3.5.3.31	**<cover>**
Hoisting				E.5.3.5.3.32	**<hoist>**
Sling loading				E.5.3.5.3.33	**<sling>**
External power				E.5.3.5.3.34	**<extpwr>**
Preparation for shipment and storage				E.5.3.5.3.35	**<pss>**
Arm				E.5.3.5.3.36	**<arm>**
Load				E.5.3.5.3.37	**<load>**
Unload				E.5.3.5.3.38	**<unload>**
Software maintenance				E.5.3.5.3.39	**<softwaremaint>**

TABLE A-II. Operators and combined operator/maintenance requirements matrix for _____.

TM Content	-10	-13 -13&P	-14 -14&P	MIL-STD-40051-2B Reference	Element Name
Additional maintenance task				E.5.3.5.3.40	<other.maintsk>
Follow-on maintenance				E.5.3.5.3.41	<followon.maintsk>
GENERAL MAINTENANCE WORK PACKAGE				E.5.3.7	<gen.maintwp>
LUBRICATION INSTRUCTIONS WORK PACKAGE				E.5.3.8	<lubewp>
ILLUSTRATED LIST OF MANUFACTURED ITEMS WORK PACKAGE (MAINTAINER LEVEL AND ABOVE)	P			E.5.3.10	
Illustrated list of manufactured items introduction work package	P	R	R	E.5.3.10.1	<manu_items_introwp>
Manufacturing procedures work package	P	R	R	E.5.3.10.2	<manuwp>
TORQUE LIMITS WORK PACKAGE (MAINTAINER LEVEL AND ABOVE)	P			E.5.3.11	<torquewp>
WIRING DIAGRAMS WORK PACKAGE (MAINTAINER LEVEL AND ABOVE)	P			E.5.3.12	<wiringwp>
CHAPTER X. AUXILIARY EQUIPMENT MAINTENANCE INSTRUCTIONS				APPENDIX E E.5.2.6	<mim> <auxiliarycategory>
AUXILIARY EQUIPMENT MAINTENANCE WORK PACKAGE				E.5.3.14	<auxeqpwp>
ILLUSTRATED LIST OF MANUFACTURED ITEMS WORK PACKAGE (MAINTAINER LEVEL AND ABOVE)	P			E.5.3.10	
Illustrated list of manufactured items introduction work package	P	R	R	E.5.3.10.1	<manu_items_introwp>
Manufacturing procedures work package	P	R	R	E.5.3.10.2	<manuwp>
TORQUE LIMITS WORK PACKAGE (MAINTAINER LEVEL AND ABOVE)	P			E.5.3.11	<torquewp>
WIRING DIAGRAMS WORK PACKAGE (MAINTAINER LEVEL AND ABOVE)	P			E.5.3.12	<wiringwp>
CHAPTER X. AMMUNITION MAINTENANCE INSTRUCTIONS				APPENDIX E E.5.2.7	<mim> <ammunitioncategory>
AMMUNITION MAINTENANCE WORK PACKAGE				E.5.3.15.1	<ammowp>

TABLE A-II. Operators and combined operator/maintenance requirements matrix for _____.

TM Content	-10	-13 -13&P	-14 -14&P	MIL-STD-40051-2B Reference	Element Name
AMMUNITION MARKING INFORMATION WORK PACKAGE				E.5.3.15.2	**<ammo.markingwp>**
FOREIGN AMMUNITION (NATO) WORK PACKAGE				E.5.3.15.3	**<natowp>**
CHAPTER X. **PARTS INFORMATION** *(-10, -13, -14)* *(-13&P, -14&P)*	 P P	 P R	 P R	APPENDIX F	**<pim>**
INTRODUCTION WORK PACKAGE	P	R	R	F.5.3.5	**<introwp>**
REPAIR PARTS LIST WORK PACKAGE	P	R	R	F.5.3.6	**<plwp>**
REPAIR PARTS FOR SPECIAL TOOLS WORK PACKAGE	P			F.5.3.7	**<stl_partswp>**
KIT PARTS LIST WORK PACKAGE	P			F.5.3.8	**<kitswp>**
BULK ITEM WORK PACKAGE	P			F.5.3.9	**<bulk_itemswp>**
SPECIAL TOOLS LIST WORK PACKAGE	P			F.5.3.10	**<stlwp>**
NSN INDEX WORK PACKAGE	P	R	R	F.5.3.11.1	**<nsnindxwp>**
P/N INDEX WORK PACKAGE	P	R	R	F.5.3.11.2	**<pnindxwp>**
REFERENCE DESIGNATOR INDEX WORK PACKAGE	P			F.5.3.11.3	**<refdesindxwp>**
CHAPTER X. **DESTRUCTION OF EQUIPMENT TO PREVENT ENEMY USE** *NOTE* *If a separate destruction of material manual is not developed for this equipment, then the destruction chapter must be included.*				APPENDIX H	**<dim>**
DESTRUCTION OF EQUIPMENT TO PREVENT ENEMY USE INTRODUCTION WORK PACKAGE	R	R	R	H.5.3	**<destruct-introwp>**
Authority to destroy	R	R	R	H.5.3.3	**<authorize_to_destroy>**
Reporting destruction	R	R	R	H.5.3.4	**<report_destruct>**
General destruction information	R	R	R	H.5.3.5	**<general_destruct_info>**
Degree of destruction	R	R	R	H.5.3.6	
Essential components and spare parts				H.5.3.7	**<component_spares>**

TABLE A-II. Operators and combined operator/maintenance requirements matrix for _____.

TM Content	-10	-13 -13&P	-14 -14&P	MIL-STD-40051-2B Reference	Element Name
DESTRUCTION OF EQUIPMENT TO PREVENT ENEMY USE PROCEDURES WORK PACKAGE	R	R	R	H.5.4	**<destruct-materialwp>**
Parts list				H.5.4.3	**<essential_spares>**
Specific destruction procedures	R	R	R	H.5.4.4	**<proc>**
CHAPTER X. SUPPORTING INFORMATION ***NOTE*** *Applicable supporting information work packages shall be arranged in the order in which they are presented here and numbered accordingly.*	R	R	R	APPENDIX G	**<sim>**
REFERENCES WORK PACKAGE	R	R	R	G.5.2	**<refwp>**
INTRODUCTION FOR NON-AVIATION TWO-LEVEL MAINTENANCE MAC WORK PACKAGE	P	R	R	G.5.3.1	**<macintrowp>**
MAC WORK PACKAGE (NON-AVIATION TWO-LEVEL)	P	R	R	G.5.3.3	**<macwp>**
COMPONENTS OF END ITEM (COEI) AND BASIC ISSUE ITEMS (BII) LISTS WORK PACKAGE	R	R	R	G.5.4	**<coeibiiwp>**
ADDITIONAL AUTHORIZATION LIST (AAL) WORK PACKAGE				G.5.5	**<aalwp>**
EXPENDABLE AND DURABLE ITEMS LIST WORK PACKAGE	R	R	R	G.5.6	**<explistwp>**
TOOL IDENTIFICATION LIST WORK PACKAGE				G.5.7	**<toolidwp>**
MANDATORY REPLACEMENT PARTS WORK PACKAGE				G.5.8	**<mrplwp>**
CRITICAL SAFETY ITEMS WORK PACKAGE				G.5.9	**<csi.wp>**
SUPPORT ITEMS WORK PACKAGE				G.5.10	**<supitemwp>**
ADDITIONAL SUPPORTING WORK PACKAGES				G.5.11	**<genwp>**
REAR MATTER	R	R	R	5.2.3	**<rear>**
Glossary				5.2.3.1	**<glossary>**
Alphabetical index				5.2.3.2	**<aindx>**
DA Form 2028	R	R	R	5.2.3.3	**<da2028>**
Authentication page	R	R	R	5.2.3.4	**<authent>**

TABLE A-II. Operators and combined operator/maintenance requirements matrix for _____.

TM Content	-10	-13 -13&P	-14 -14&P	MIL-STD-40051-2B Reference	Element Name
Foldout pages				5.2.3.5	`<foldsect>`
Back cover	R	R	R	5.2.3.6	`<back>`

Legend
R - Required
P - Prohibited
Shaded - As Required

This page intentionally left blank.

TABLE A-III. Below depot sustainment requirements matrix for _____.

TM Content	-40 -40&P	MIL–STD–40051–2B Reference	Element Name
FRONT MATTER	R	5.2.1	**<paper.frnt>**
Front cover	R	5.2.1.1	**<frntcover>**
(MC) Promulgation letter		5.2.1.3	**<promulgation>**
Warning summary		5.2.1.4	**<warnsum>**
Change transmittal page		5.2.1.5	**<chgsheet>**
List of effective pages/work packages		5.2.1.6	**<loepwp>**
Title page	R	5.2.1.7	**<titleblk>**
Table of contents	R	5.2.1.9	**<contents>**
How to use this manual	R	5.2.1.10	**<howtouse>**
CHAPTER 1. GENERAL INFORMATION, EQUIPMENT DESCRIPTION, AND THEORY OF OPERATION	R	APPENDIX B	**<gim>**
GENERAL INFORMATION WORK PACKAGE	R	B.5.2	**<ginfowp>**
Scope	R	B.5.2.3	**<scope>**
Maintenance forms, records, and reports	R	B.5.2.4	**<mfrr>**
Reporting Equipment Improvement Recommendations (EIR)	R	B.5.2.5	**<eir>**
Hand Receipt (HR) manuals		B.5.2.6	**<handreceipt>**
Corrosion Prevention and Control (CPC)	R	B.5.2.7	**<cpcdata>**
Ozone Depleting Substances (ODS)		B.5.2.8	**<odsdata>**
Destruction of Army materiel to prevent enemy use	R	B.5.2.9	**<destructmat>**
Preparation for storage or shipment	R	B.5.2.10	**<pssref>**
Warranty information		B.5.2.11	**<wrntyref>**
Nomenclature cross-reference list		B.5.2.12	**<nomenreflist>**
List of abbreviations	R	B.5.2.13	**<loa>**
Quality of material	R	B.5.2.15	**<qual.mat.info>**
Safety, care, and handling		B.5.2.16	**<sftyinfo>**
Nuclear hardness		B.5.2.17	**<hcp>**
Calibration		B.5.2.18	**<calref>**
Item unique identification (IUID)		B.5.2.19	**<iuid>**
Supporting information for repair parts, special tools, TMDE, and support equipment		B.5.2.26	**<supdata>**
Copyright credit line		B.5.2.27	**<copyrt>**
EQUIPMENT DESCRIPTION AND DATA WORK PACKAGE	R	B.5.3	**<descwp>**
Equipment characteristics, capabilities, and features	R	B.5.3.3	**<eqpinfo>**
Location and description of major components	R	B.5.3.4	**<locdesc>**
Differences between models		B.5.3.5	**<eqpdiff>**
Equipment data	R	B.5.3.6	**<eqpdata>**

TABLE A-III. Below depot sustainment requirements matrix for _____.

TM Content	-40 -40&P	MIL–STD–40051–2B Reference	Element Name
THEORY OF OPERATION WORK PACKAGE	R	B.5.4	**<thrywp>**
CHAPTER X. TROUBLESHOOTING MASTER INDEX		APPENDIX D D.5.4.4	**<tim> <masterindexcategory>**
TROUBLESHOOTING INDEX WORK PACKAGE		D.5.5.5	**<tsindxwp>**
CHAPTER X. TROUBLESHOOTING PROCEDURES ***NOTE*** *The notation (*) indicates that at least one of the these content items shall be included*	R	APPENDIX D D.5.4.2	**<tim> <troublecategory>**
INTRODUCTION WORK PACKAGE		D.5.5.3	**<tsintrowp>**
TROUBLESHOOTING INDEX WORK PACKAGE		D.5.5.5	**<tsindxwp>**
**OPERATIONAL CHECKOUT WORK PACKAGE*		D.5.5.8.3	**<opcheckwp>**
**TROUBLESHOOTING WORK PACKAGE*		D.5.5.8.4	**<tswp>**
**COMBINED OPERATIONAL CHECKOUT AND TROUBLESHOOTING WORK PACKAGE*		D.5.5.8.5	**<opcheck-tswp>**
CHAPTER X. PMCS MAINTENANCE INSTRUCTIONS ***NOTE*** *PMCS may be in its own chapter or may be combned with other maintenance work packages in a maintenance chapter but not both places.*		APPENDIX E E.5.2.1	**<mim> <pmcscategory>**
PMCS INTRODUCTION WORK PACKAGE	R	E.5.3.4.1	**<pmcsintrowp>**
PMCS, INCLUDING LUBRICATION INSTRUCTIONS, WORK PACKAGE	R	E.5.3.4.2	**<pmcswp>**
CHAPTER X. MAINTENANCE INSTRUCTIONS ***NOTE*** *PMCS may be in its own chapter or may be combned with other maintenance work packages in a maintenance chapter but not both places.*	R	APPENDIX E E.5.2.2 E.5.2.3	**<mim> <maintenancepmcscategory> <maintenancecategory>**
SERVICE UPON RECEIPT WORK PACKAGE (MAINTAINER LEVEL ONLY)	P	E.5.3.2	**<surwp>**
EQUIPMENT/USER FITTING INSTRUCTIONS WORK PACKAGE)		E.5.3.3	**<perseqpwp>**
PMCS INTRODUCTION WORK PACKAGE		E.5.3.4.1	**<pmcsintrowp>**
PMCS WORK PACKAGE		E.5.3.4.2	**<pmcswp>**
MAINTENANCE WORK PACKAGES	R	E.5.3.5	**<maintwp>**
Maintenance tasks	R	E.5.3.5.3	**<maintsk>**
Inspect		E.5.3.5.3.2	**<inspect>**
Test		E.5.3.5.3.3	**<test>**
Service		E.5.3.5.3.4	**<service>**
Adjust		E.5.3.5.3.5	**<adjust>**

TABLE A-III. Below depot sustainment requirements matrix for _____.

TM Content	-40 -40&P	MIL–STD–40051–2B Reference	Element Name
Align		E.5.3.5.3.6	<align>
Calibrate		E.5.3.5.3.7	<calibration>
Remove		E.5.3.5.3.8	<remove>
Install		E.5.3.5.3.9	<install>
Replace		E.5.3.5.3.10	<replace>
Repair		E.5.3.5.3.11	<repair>
Paint		E.5.3.5.3.12	<paint>
Overhaul		E.5.3.5.3.13	<overhaul>
Rebuild		E.5.3.5.3.14	<rebuild>
Lubricate		E.5.3.5.3.15	<lube>
Mark		E.5.3.5.3.16	<mark>
Pack		E.5.3.5.3.17	<pack>
Unpack		E.5.3.5.3.18	<unpack>
Preserve		E.5.3.5.3.19	<preserv>
Prepare for use		E.5.3.5.3.20	<prepforuse>
Assemble		E.5.3.5.3.21	<assem>
Disassemble		E.5.3.5.3.22	<disassem>
Clean		E.5.3.5.3.23	<clean>
Nondestructive inspection		E.5.3.5.3.24	<ndi>
Radio interference suppression		E.5.3.5.3.25	<ris>
Place in service		E.5.3.5.3.26	<pis>
Towing		E.5.3.5.3.27	<tow>
Jacking		E.5.3.5.3.28	<jack>
Parking		E.5.3.5.3.29	<park>
Mooring		E.5.3.5.3.30	<moor>
Covering		E.5.3.5.3.31	<cover>
Hoisting		E.5.3.5.3.32	<hoist>
Sling loading		E.5.3.5.3.33	<sling>
External power		E.5.3.5.3.34	<extpwr>
Preparation for shipment and storage		E.5.3.5.3.35	<pss>
Arm		E.5.3.5.3.36	<arm>
Load		E.5.3.5.3.37	<load>
Unload		E.5.3.5.3.38	<unload>
Software maintenance		E.5.3.5.3.39	<softwaremaint>
Additional maintenance task		E.5.3.5.3.40	<other.maintsk>
Follow-on maintenance		E.5.3.5.3.41	<followon.maintsk>
GENERAL MAINTENANCE WORK PACKAGE		E.5.3.7	<gen.maintwp>
LUBRICATION INSTRUCTIONS WORK PACKAGE		E.5.3.8	<lubewp>
ILLUSTRATED LIST OF MANUFACTURED ITEMS WORK PACKAGE		E.5.3.10	
Illustrated list of manufactured items introduction work package	R	E.5.3.10.1	<manu_items_introwp>
Manufacturing procedures work package	R	E.5.3.10.2	<manuwp>
TORQUE LIMITS WORK PACKAGE		E.5.3.11	<torquewp>
WIRING DIAGRAMS WORK PACKAGE		E.5.3.12	<wiringwp>

TABLE A-III. Below depot sustainment requirements matrix for _____.

TM Content	-40 -40&P	MIL–STD–40051–2B Reference	Element Name
CHAPTER X. AUXILIARY EQUIPMENT MAINTENANCE INSTRUCTIONS		APPENDIX E E.5.2.6	**<mim> <auxiliarycategory>**
AUXILIARY EQUIPMENT MAINTENANCE WORK PACKAGE		E.5.3.14	**<auxeqpwp>**
ILLUSTRATED LIST OF MANUFACTURED ITEMS WORK PACKAGE		E.5.3.10	
Illustrated list of manufactured items introduction work package	R	E.5.3.10.1	**<manu_items_introwp>**
Manufacturing procedures work package	R	E.5.3.10.2	**<manuwp>**
TORQUE LIMITS WORK PACKAGE		E.5.3.11	**<torquewp>**
WIRING DIAGRAMS WORK PACKAGE		E.5.3.12	**<wiringwp>**
CHAPTER X. AMMUNITION MAINTENANCE INSTRUCTIONS		APPENDIX E E.5.2.7	**<mim> <ammunitioncategory>**
AMMUNITION MAINTENANCE WORK PACKAGE		E.5.3.15.1	**<ammowp>**
AMMUNITION MARKING INFORMATION WORK PACKAGE		E.5.3.15.2	**<ammo.markingwp>**
FOREIGN AMMUNITION (NATO) WORK PACKAGE		E.5.3.15.3	**<natowp>**
CHAPTER X. PARTS INFORMATION *(40)* *(-40&P)*	 P R	APPENDIX F	**<pim>**
INTRODUCTION WORK PACKAGE	R	F.5.3.5	**<introwp>**
REPAIR PARTS LIST WORK PACKAGE	R	F.5.3.6	**<plwp>**
REPAIR PARTS FOR SPECIAL TOOLS WORK PACKAGE		F.5.3.7	**<stl_partswp>**
KIT PARTS LIST WORK PACKAGE		F.5.3.8	**<kitswp>**
BULK ITEMS WORK PACKAGE		F.5.3.9	**<bulk_itemswp>**
SPECIAL TOOLS LIST WORK PACKAGE		F.5.3.10	**<stlwp>**
NSN INDEX WORK PACKAGE	R	F.5.3.11.1	**<nsnindxwp>**
P/N INDEX WORK PACKAGE	R	F.5.3.11.2	**<pnindxwp>**
REFERENCE DESIGNATOR INDEX WORK PACKAGE		F.5.3.11.3	**<refdesindxwp>**

TABLE A-III. Below depot sustainment requirements matrix for _____.

TM Content	-40 -40&P	MIL–STD–40051–2B Reference	Element Name
CHAPTER X. **DESTRUCTION OF EQUIPMENT TO PREVENT ENEMY USE**		APPENDIX H	**<dim>**
DESTRUCTION OF EQUIPMENT TO PREVENT ENEMY USE INTRODUCTION WORK PACKAGE ***NOTE*** *If a separate destruction of material manual is not developed for this equipment, then the destruction chapter must be included.*	R	H.5.3	**<destruct-introwp>**
Authority to destroy	R	H.5.3.3	**<authorize_to_destroy>**
Reporting destruction	R	H.5.3.4	**<report_destruct>**
General destruction information	R	H.5.3.5	**<general_destruct_info>**
Degree of destruction	R	H.5.3.6	
Essential components and spare parts		H.5.3.7	**<component_spares>**
DESTRUCTION OF EQUIPMENT TO PREVENT ENEMY USE PROCEDURES WORK PACKAGE	R	H.5.4	**<destruct-materialwp>**
Parts list		H.5.4.3	**<essential_spares>**
Specific destruction procedures	R	H.5.4.4	**<proc>**
CHAPTER X. **SUPPORTING INFORMATION** ***NOTE*** *Applicable supporting information work packages shall be arranged in the order in which they are presented here and numbered accordingly.*	R	APPENDIX G	**<sim>**
REFERENCES WORK PACKAGE	R	G.5.2	**<refwp>**
EXPENDABLE AND DURABLE ITEMS WORK PACKAGE	R	G.5.6	**<explistwp>**
TOOL IDENTIFICATION LIST WORK PACKAGE		G.5.7	**<toolidwp>**
MANDATORY REPLACEMENT PARTS WORK PACKAGE		G.5.8	**<mrplwp>**
SUPPORT ITEMS WORK PACKAGE		G.5.10	**<supitemwp>**
ADDITIONAL SUPPORTING WORK PACKAGES		G.5.11	**<genwp>**
REAR MATTER	R	5.2.3	**<rear>**
Glossary		5.2.3.1	**<glossary>**
Alphabetical index		5.2.3.2	**<aindx>**
DA Form 2028	R	5.2.3.3	**<da2028>**
Authentication page	R	5.2.3.4	**<authent>**
Foldout pages		5.2.3.5	**<foldsect>**
Back cover	R	5.2.3.6	**<back>**

Legend
R - Required
P - Prohibited
Shaded - As Required

This page intentionally left blank.

TABLE A-IV. Combined maintenance and maintenance with parts requirements matrix for _____.

TM Content	-23 -23&P	-24 -24&P	MIL-STD-40051-2B Reference	Element Name
FRONT MATTER	R	R	5.2.1	**<paper.frnt>**
Front cover	R	R	5.2.1.1	**<frntcover>**
(MC) Promulgation letter			5.2.1.3	**<promulgation>**
Warning summary			5.2.1.4	**<warnsum>**
Change transmittal page			5.2.1.5	**<chgsheet>**
List of effective pages/work packages	R	R	5.2.1.6	**<loepwp>**
Title page	R	R	5.2.1.7	**<titleblk>**
Table of contents	R	R	5.2.1.9	**<contents>**
How to use this manual	R	R	5.2.1.10	**<howtouse>**
CHAPTER 1. GENERAL INFORMATION, EQUIPMENT DESCRIPTION, AND THEORY OF OPERATION	R	R	APPENDIX B	**<gim>**
GENERAL INFORMATION WORK PACKAGE	R	R	B.5.2	**<ginfowp>**
Scope	R	R	B.5.2.3	**<scope>**
Maintenance forms, records, and reports	R	R	B.5.2.4	**<mfrr>**
Reporting Equipment Improvement Recommendations (EIR)	R	R	B.5.2.5	**<eir>**
Hand Receipt (HR) information			B.5.2.6	**<handreceipt>**
Corrosion Prevention and Control (CPC)	R	R	B.5.2.7	**<cpcdata>**
Ozone Depleting Substances (ODS)			B.5.2.8	**<odsdata>**
Destruction of Army materiel to prevent enemy use	R	R	B.5.2.9	**<destructmat>**
Preparation for storage or shipment	R	R	B.5.2.10	**<pssref>**
Warranty information			B.5.2.11	**<wrntyref>**
Nomenclature cross-reference list			B.5.2.12	**<nomenreflist>**
List of abbreviations	R	R	B.5.2.13	**<loa>**
Quality of material	R	R	B.5.2.15	**<qual.mat.info>**
Safety, care, and handling			B.5.2.16	**<sftyinfo>**
Nuclear hardness			B.5.2.17	**<hcp>**
Calibration			B.5.2.18	**<calref>**
Item unique identification (IUID)			B.5.2.19	**<iuid>**
Supporting information for repair parts, special tools, TMDE, and support equipment			B.5.2.26	**<supdata>**
Copyright credit line			B.5.2.27	**<copyrt>**

TABLE A-IV. Combined maintenance and maintenance with parts requirements matrix for _____.

TM Content	-23 -23&P	-24 -24&P	MIL-STD-40051-2B Reference	Element Name
EQUIPMENT DESCRIPTION AND DATA WORK PACKAGE	R	R	B.5.3	**<descwp>**
Equipment characteristics, capabilities, and features	R	R	B.5.3.3	**<eqpinfo>**
Location and description of major components	R	R	B.5.3.4	**<locdesc>**
Differences between models			B.5.3.5	**<eqpdiff>**
Equipment data	R	R	B.5.3.6	**<eqpdata>**
THEORY OF OPERATION WORK PACKAGE	R	R	B.5.4	**<thrywp>**
CHAPTER X. TROUBLESHOOTING MASTER INDEX			APPENDIX D D.5.4.4	**<tim> <masterindexcategory>**
TROUBLESHOOTING INDEX WORK PACKAGE	R	R	D.5.5.5	**<tsindxwp>**
CHAPTER X. TROUBLESHOOTING PROCEDURES ***NOTE*** *The notation (*) indicates that at least one of the these content items shall be included*	R	R	APPENDIX D D.5.4.2	**<tim> <troublecategory>**
INTRODUCTION WORK PACKAGE			D.5.5.3	**<tsintrowp>**
TROUBLESHOOTING INDEX WORK PACKAGE			D.5.5.5	**<tsindxwp>**
**OPERATIONAL CHECKOUT WORK PACKAGES*			D.5.5.8.3	**<opcheckwp>**
**TROUBLESHOOTING WORK PACKAGES*			D.5.5.8.4	**<tswp>**
**COMBINED OPERATIONAL CHECKOUT AND TROUBLESHOOTING WORK PACKAGES*			D.5.5.8.5	**<opcheck-tswp>**
CHAPTER X. PMCS MAINTENANCE INSTRUCTIONS ***NOTE*** *PMCS may be in its own chapter or may be combned with other maintenance work packages in a maintenance chapter but not both places.*			APPENDIX E E.5.2.1	**<mim> <pmcscategory>**
PMCS INTRODUCTION WORK PACKAGE	R	R	E.5.3.4.1	**<pmcsintrowp>**
PMCS, INCLUDING LUBRICATION INSTRUCTIONS, WORK PACKAGE	R	R	E.5.3.4.2	**<pmcswp>**

TABLE A-IV. Combined maintenance and maintenance with parts requirements matrix for _____.

TM Content	-23 -23&P	-24 -24&P	MIL-STD-40051-2B Reference	Element Name
CHAPTER X. **MAINTENANCE INSTRUCTIONS** ***NOTE*** ***NOTE*** *PMCS may be in its own chapter or may be combned with other maintenance work packages in a maintenance chapter but not both places.*	R	R	APPENDIX E E.5.2.2 E.5.2.3	**<mim> <maintenancepmcscategory> <maintenancecategory>**
SERVICE UPON RECEIPT WORK PACKAGE	R	R	E.5.3.2	**<surwp>**
Service upon receipt tasks	R	R	E.5.3.2.3	**<surtsk>**
Siting			E.5.3.2.3.1	**<siting>**
Shelter requirements			E.5.3.2.3.2	**<shltr>**
Service upon receipt of materiel	R	R	E.5.3.2.3.3	**<surmat>**
Installation instructions	R	R	E.5.3.2.3.4	**<install>**
Preliminary servicing of equipment			E.5.3.2.3.5	**<preserv>**
Preliminary checks and adjustment of equipment			E.5.3.2.3.6	**<prechkadj>**
Preliminary calibration of equipment			E.5.3.2.3.7	**<precal>**
Circuit alignment			E.5.3.2.3.8	**<calign>**
Ammunition markings			E.5.3.2.3.9.1	**<mark>**
Classification of defects			E.5.3.2.3.9.2	**<ammo.defect>**
Ammunition handling			E.5.3.2.3.9.3	**<ammo.handling>**
Procedures to activate ammunition			E.5.3.2.3.9.4	**<arm>**
Additional service upon receipt task			E.5.3.2.3.10	**<other.surtsk>**
Follow-on maintenance			E.5.3.2.3.11	**<followon.maintsk>**
EQUIPMENT/USER FITTING INSTRUCTIONS WORK PACKAGE			E.5.3.3	**<perseqpwp>**
PMCS INTRODUCTION WORK PACKAGE			E.5.3.4.1	**<pmcsintrowp>**
PMCS WORK PACKAGE			E.5.3.4.2	**<pmcswp>**
MAINTENANCE WORK PACKAGES	R	R	E.5.3.5	**<maintwp>**
Maintenance tasks	R	R	E.5.3.5.3	**<maintsk>**
Inspect			E.5.3.5.3.2	**<inspect>**
Test			E.5.3.5.3.3	**<test>**
Service			E.5.3.5.3.4	**<service>**
Adjust			E.5.3.5.3.5	**<adjust>**
Align			E.5.3.5.3.6	**<align>**
Calibrate			E.5.3.5.3.7	**<calibration>**
Remove			E.5.3.5.3.8	**<remove>**
Install			E.5.3.5.3.9	**<install>**
Replace			E.5.3.5.3.10	**<replace>**
Repair			E.5.3.5.3.11	**<repair>**
Paint			E.5.3.5.3.12	**<paint>**

TABLE A-IV. Combined maintenance and maintenance with parts requirements matrix for _____.

TM Content	-23 -23&P	-24 -24&P	MIL-STD-40051-2B Reference	Element Name
Overhaul			E.5.3.5.3.13	<overhaul>
Rebuild			E.5.3.5.3.14	<rebuild>
Lubricate			E.5.3.5.3.15	<lube>
Mark			E.5.3.5.3.16	<mark>
Pack			E.5.3.5.3.17	<pack>
Unpack			E.5.3.5.3.18	<unpack>
Preserve			E.5.3.5.3.19	<preserv>
Prepare for use			E.5.3.5.3.20	<prepforuse>
Assemble			E.5.3.5.3.21	<assem>
Disassemble			E.5.3.5.3.22	<disassem>
Clean			E.5.3.5.3.23	<clean>
Nondestructive inspection			E.5.3.5.3.24	<ndi>
Radio interference suppression			E.5.3.5.3.25	<ris>
Place in service			E.5.3.5.3.26	<pis>
Towing			E.5.3.5.3.27	<tow>
Jacking			E.5.3.5.3.28	<jack>
Parking			E.5.3.5.3.29	<park>
Mooring			E.5.3.5.3.30	<moor>
Covering			E.5.3.5.3.31	<cover>
Hoisting			E.5.3.5.3.32	<hoist>
Sling loading			E.5.3.5.3.33	<sling>
External power			E.5.3.5.3.34	<extpwr>
Preparation for shipment and storage			E.5.3.5.3.35	<pss>
Arm			E.5.3.5.3.36	<arm>
Load			E.5.3.5.3.37	<load>
Unload			E.5.3.5.3.38	<unload>
Software maintenance			E.5.3.5.3.39	<softwaremaint>
Additional maintenance task			E.5.3.5.3.40	<other.maintsk>
Follow-on maintenance			E.5.3.5.3.41	<followon.maintsk>
GENERAL MAINTENANCE WORK PACKAGE			E.5.3.7	<gen.maintwp>
LUBRICATION INSTRUCTIONS WORK PACKAGE			E.5.3.8	<lubewp>
ILLUSTRATED LIST OF MANUFACTURED ITEMS WORK PACKAGE			E.5.3.10	
Illustrated list of manufactured items introduction work package	R	R	E.5.3.10.1	<manu_items_introwp>
Manufacturing procedures work package	R	R	E.5.3.10.2	<manuwp>
TORQUE LIMITS WORK PACKAGE			E.5.3.10.2	<torquewp>
WIRING DIAGRAMS WORK PACKAGE			E.5.3.11	<wiringwp>
CHAPTER X. AUXILIARY EQUIPMENT MAINTENANCE INSTRUCTIONS			APPENDIX E E.5.2.6	<mim> <auxiliarycategory>
AUXILIARY EQUIPMENT MAINTENANCE WORK PACKAGE			E.5.3.14	<auxeqpwp>

TABLE A-IV. Combined maintenance and maintenance with parts requirements matrix for _____.

TM Content	-23 -23&P	-24 -24&P	MIL-STD-40051-2B Reference	Element Name
ILLUSTRATED LIST OF MANUFACTURED ITEMS WORK PACKAGE			E.5.3.10	
Illustrated list of manufactured items introduction work package	R	R	E.5.3.10.1	**<manu_items_introwp>**
Manufacturing procedures work package	R	R	E.5.3.10.2	**<manuwp>**
TORQUE LIMITS WORK PACKAGE			E.5.3.11	**<torquewp>**
WIRING DIAGRAMS WORK PACKAGE			E.5.3.12	**<wiringwp>**
CHAPTER X. AMMUNITION MAINTENANCE INSTRUCTIONS			APPENDIX E E.5.2.7	**<mim> <ammunitioncategory>**
AMMUNITION MAINTENANCE WORK PACKAGE			E.5.3.15.1	**<ammowp>**
AMMUNITION MARKING INFORMATION WORK PACKAGE			E.5.3.15.2	**<ammo.markingwp>**
FOREIGN AMMUNITION (NATO) WORK PACKAGE			E.5.3.15.3	**<natowp>**
CHAPTER X. PARTS INFORMATION *(–23, –24)* *(–23&P, –24&P)*	 P R	 P R	APPENDIX F	**<pim>**
INTRODUCTION WORK PACKAGE	R	R	F.5.3.5	**<introwp>**
REPAIR PARTS LIST WORK PACKAGE	R	R	F.5.3.6	**<plwp>**
REPAIR PARTS FOR SPECIAL TOOLS WORK PACKAGE			F.5.3.7	**<stl_partswp>**
KIT PARTS LIST WORK PACKAGE			F.5.3.8	**<kitswp>**
BULK ITEM WORK PACKAGE			F.5.3.9	**<bulk_itemswp>**
SPECIAL TOOLS LIST WORK PACKAGE			F.5.3.10	**<stlwp>**
NSN INDEX WORK PACKAGE	R	R	F.5.3.11.1	**<nsnindxwp>**
P/N INDEX WORK PACKAGE	R	R	F.5.3.11.2	**<pnindxwp>**
REFERENCE DESIGNATOR INDEX WORK PACKAGE			F.5.3.11.3	**<refdesindxwp>**
CHAPTER X. DESTRUCTION OF EQUIPMENT TO PREVENT ENEMY USE ***NOTE*** *If a separate destruction of material manual is not developed for this equipment, then the destruction chapter must be included.*			APPENDIX H	**<dim>**
DESTRUCTION OF EQUIPMENT TO PREVENT ENEMY USE INTRODUCTION WORK PACKAGE	R	R	H.5.3	**<destruct-introwp>**

TABLE A-IV. Combined maintenance and maintenance with parts requirements matrix for _____.

TM Content	-23 -23&P	-24 -24&P	MIL-STD-40051-2B Reference	Element Name
Authority to destroy	R	R	H.5.3.3	<authorize_to_destroy>
Reporting destruction	R	R	H.5.3.4	<report_destruct>
General destruction information	R	R	H.5.3.5	<general_destruct_info>
Degree of destruction	R	R	H.5.3.6	
Essential components and spare parts			H.5.3.7	<component_spares>
DESTRUCTION OF EQUIPMENT TO PREVENT ENEMY USE PROCEDURES WORK PACKAGE	R	R	H.5.4	<destruct-materialwp>
Parts list			H.5.4.3	<essential_spares>
Specific destruction procedures	R	R	H.5.4.4	<proc>
CHAPTER X. **SUPPORTING INFORMATION** ***NOTE*** *Applicable supporting information work packages shall be arranged in the order in which they are presented here and numbered accordingly.*	R	R	APPENDIX G	<sim>
REFERENCES WORK PACKAGE	R	R	G.5.2	<refwp>
INTRODUCTION FOR NON-AVIATION TWO-LEVEL MAC WORK PACKAGE	R	R	G.5.3.1	<macintrowp>
NON-AVIATION TWO-LEVEL MAC WORK PACKAGE	R	R	G.5.3.3	<macwp>
EXPENDABLE AND DURABLE ITEMS WORK PACKAGE	R	R	G.5.6	<explistwp>
TOOL IDENTIFICATION LIST WORK PACKAGE			G.5.7	<toolidwp>
MANDATORY REPLACEMENT PARTS WORK PACKAGE			G.5.8	<mrplwp>
CRITICAL SAFETY ITEMS WORK PACKAGE			G.5.9	<csi.wp>
SUPPORT ITEMS WORK PACKAGE			G.5.10	<supitemwp>
ADDITIONAL SUPPORTING WORK PACKAGES			G.5.11	<genwp>
REAR MATTER	R	R	5.2.3	<rear>
Glossary			5.2.3.1	<glossary>
Alphabetical index			5.2.3.2	<aindx>
DA Form 2028	R	R	5.2.3.3	<da2028>
Authentication page	R	R	5.2.3.4	<authent>
Foldout pages			5.2.3.5	<foldsect>
Back cover	R	R	5.2.3.6	<back>

Legend
R - Required
P – Prohibited
Shaded - As Required

TABLE A-V. Aviation maintenance and maintenance with parts requirements matrix for aviation.

TM Content	AVIATION -23/-23&P	AVIATION -24/-24&P	MIL-STD-40051-2B Reference	Element Name
FRONT MATTER	R	R	5.2.1	**<paper.frnt>**
Front cover	R	R	5.2.1.1	**<frntcover>**
(MC) Promulgation letter			5.2.1.3	**<promulgation>**
Warning summary			5.2.1.4	**<warnsum>**
Change transmittal page			5.2.1.5	**<chgsheet>**
List of effective pages/work packages			5.2.1.6	**<loepwp>**
Title page	R	R	5.2.1.7	**<titleblk>**
Table of contents	R	R	5.2.1.9	**<contents>**
How to use this manual	R	R	5.2.1.10	**<howtouse>**
CHAPTER 1. GENERAL INFORMATION, EQUIPMENT DESCRIPTION, AND THEORY OF OPERATION	R	R	APPENDIX B	**<gim>**
GENERAL INFORMATION WORK PACKAGE	R	R	B.5.2	**<ginfowp>**
Scope	R	R	B.5.2.3	**<scope>**
Maintenance forms, records, and reports	R	R	B.5.2.4	**<mfrr>**
Reporting Equipment Improvement Recommendations (EIR)	R	R	B.5.2.5	**<eir>**
Hand Receipt (HR) manuals			B.5.2.6	**<handreceipt>**
Corrosion Prevention and Control (CPC)	R	R	B.5.2.7	**<cpcdata>**
Ozone Depleting Substances (ODS)			B.5.2.8	**<odsdata>**
Destruction of Army materiel to prevent enemy use	R	R	B.5.2.9	**<destructmat>**
Preparation for storage or shipment	R	R	B.5.2.10	**<pssref>**
Warranty information			B.5.2.11	**<wrntyref>**
Nomenclature cross-reference list			B.5.2.12	**<nomenreflist>**
List of abbreviations	R	R	B.5.2.13	**<loa>**
Quality Assurance (QA)			B.5.2.14	**<qainfo>**
Quality of material	R	R	B.5.2.15	**<qual.mat.info>**
Safety, care, and handling			B.5.2.16	**<sftyinfo>**
Nuclear hardness			B.5.2.17	**<hcp>**
Calibration			B.5.2.18	**<calref>**
Item unique identification			B.5.2.19	**<iuid>**
Critical Safety Items (CSI)	R	R	B.5.2.24	**<csireq>**
Supporting information for repair parts, special tools, TMDE, and support equipment			B.5.2.26	**<supdata>**
Copyright credit line			B.5.2.27	**<copyrt>**

TABLE A-V. Aviation maintenance and maintenance with parts requirements matrix for aviation.

TM Content	AVIATION -23/-23&P	AVIATION -24/-24&P	MIL-STD-40051-2B Reference	Element Name
EQUIPMENT DESCRIPTION AND DATA WORK PACKAGE	R	R	B.5.3	**<descwp>**
Equipment characteristics, capabilities, and features	R	R	B.5.3.3	**<eqpinfo>**
Location and description of major components	R	R	B.5.3.4	**<locdesc>**
Differences between models			B.5.3.5	**<eqpdiff>**
Equipment data	R	R	B.5.3.6	**<eqpdata>**
THEORY OF OPERATION WORK PACKAGE	R	R	B.5.4	**<thrywp>**
CHAPTER X. TROUBLESHOOTING MASTER INDEX			APPENDIX D D.5.4.4	**<tim> <masterindexcategory>**
TROUBLESHOOTING INDEX WORK PACKAGE	R	R	D.5.5.5	**<tsindxwp>**
CHAPTER X. TROUBLESHOOTING PROCEDURES ***NOTE*** *The notation (*) indicates that at least one of the these content items shall be included*	R	R	APPENDIX D D.5.4.1	**<tim> <troubleaviationcategory>**
INTRODUCTION WORK PACKAGE			D.5.5.3	**<tsintrowp>**
TECHNICAL DESCRPITION WORK PACKAGE			D.5.5.4	**<techdescwp>**
TROUBLESHOOTING INDEX WORK PACKAGE			D.5.5.5	**<tsindxwp>**
**OPERATIONAL CHECKOUT WORK PACKAGE*			D.5.5.8.3	**<opcheckwp>**
**TROUBLESHOOTING WORK PACKAGE*			D.5.5.8.4	**<tswp>**
**COMBINED OPERATIONAL CHECKOUT AND TROUBLESHOOTING WORK PACKAGE*			D.5.5.8.5	**<opcheck-tswp>**
CHAPTER X. AIRCRAFT MAINTENANCE INSTRUCTIONS	R	R	APPENDIX E E.5.2.5	**<mim> <aviationcategory>**
SERVICE UPON RECEIPT WORK PACKAGE	R	R	E.5.3.2	**<surwp>**
Service upon receipt tasks	R	R	E.5.3.2.3	**<surtsk>**
Siting			E.5.3.2.3.1	**<siting>**
Shelter requirements			E.5.3.2.3.2	**<shltr>**
Service upon receipt of materiel	R	R	E.5.3.2.3.3	**<surmat>**
Installation instructions	R	R	E.5.3.2.3.4	**<install>**
Preliminary servicing of equipment			E.5.3.2.3.5	**<preserv>**

TABLE A-V. Aviation maintenance and maintenance with parts requirements matrix for aviation.

TM Content	AVIATION -23/-23&P	AVIATION -24/-24&P	MIL-STD-40051-2B Reference	Element Name
Preliminary checks and adjustment of equipment			E.5.3.2.3.6	<prechkadj>
Preliminary calibration of equipment			E.5.3.2.3.7	<precal>
Circuit alignment			E.5.3.2.3.8	<calign>
Ammunition markings			E.5.3.2.3.9.1	<mark>
Classification of defects			E.5.3.2.3.9.2	<ammo.defect>
Ammunition handling			E.5.3.2.3.9.3	<ammo.handling>
Procedures to activate ammunition			E.5.3.2.3.9.4	<arm>
Additional maintenance task			E.5.3.2.3.10	<other.surtsk>
Follow-on maintenance			E.5.3.2.3.11	<followon.maintsk>
EQUIPMENT/USER FITTING INSTRUCTIONS WORK PACKAGE			E.5.3.3	<perseqpwp>
PREVENTIVE MAINTENANCE INSTRUCTIONS WORK PACKAGE			E.5.3.13.1	<pmiwp>
MAINTENANCE WORK PACKAGES	R	R	E.5.3.5	<maintwp>
Maintenance tasks	R	R	E.5.3.5.3	<maintsk>
Inspect			E.5.3.5.3.2	<inspect>
Test			E.5.3.5.3.3	<test>
Service			E.5.3.5.3.4	<service>
Adjust			E.5.3.5.3.5	<adjust>
Align			E.5.3.5.3.6	<align>
Calibrate			E.5.3.5.3.7	<calibration>
Remove			E.5.3.5.3.8	<remove>
Install			E.5.3.5.3.9	<install>
Replace			E.5.3.5.3.10	<replace>
Repair			E.5.3.5.3.11	<repair>
Paint			E.5.3.5.3.12	<paint>
Overhaul			E.5.3.5.3.13	<overhaul>
Rebuild			E.5.3.5.3.14	<rebuild>
Lubricate			E.5.3.5.3.15	<lube>
Mark			E.5.3.5.3.16	<mark>
Pack			E.5.3.5.3.17	<pack>
Unpack			E.5.3.5.3.18	<unpack>
Preserve			E.5.3.5.3.19	<preserv>
Prepare for use			E.5.3.5.3.20	<prepforuse>
Assemble			E.5.3.5.3.21	<assem>
Disassemble			E.5.3.5.3.22	<disassem>
Clean			E.5.3.5.3.23	<clean>
Nondestructive inspection			E.5.3.5.3.24	<ndi>
Radio interference suppression			E.5.3.5.3.25	<ris>
Place in service			E.5.3.5.3.26	<pis>
Towing			E.5.3.5.3.27	<tow>
Jacking			E.5.3.5.3.28	<jack>
Parking			E.5.3.5.3.29	<park>

TABLE A-V. Aviation maintenance and maintenance with parts requirements matrix for aviation.

TM Content	AVIATION -23/-23&P	AVIATION -24/-24&P	MIL-STD-40051-2B Reference	Element Name
Mooring			E.5.3.5.3.30	<moor>
Covering			E.5.3.5.3.31	<cover>
Hoisting			E.5.3.5.3.32	<hoist>
Sling loading			E.5.3.5.3.33	<sling>
External power			E.5.3.5.3.34	<extpwr>
Preparation for shipment and storage			E.5.3.5.3.35	<pss>
Arm			E.5.3.5.3.36	<arm>
Load			E.5.3.5.3.37	<load>
Unload			E.5.3.5.3.38	<unload>
Software maintenance			E.5.3.5.3.39	<softwaremaint>
Additional maintenance task			E.5.3.5.3.40	<other.maintsk>
Follow-on maintenance			E.5.3.5.3.41	<followon.maintsk>
GENERAL MAINTENANCE WORK PACKAGE			E.5.3.7	<gen.maintwp>
OVERHAUL AND RETIREMENT SCHEDULE WORK PACKAGE	R	R	E.5.3.6	<orschwp>
LUBRICATION INSTRUCTIONS WORK PACKAGE			E.5.3.8	<lubewp>
ILLUSTRATED LIST OF MANUFACTURED ITEMS WORK PACKAGE			E.5.3.10	
Illustrated list of manufactured items introduction work package	R	R	E.5.3.10.1	<manu_items_introwp>
Manufacturing procedures work package	R	R	E.5.3.10.2	<manuwp>
TORQUE LIMITS WORK PACKAGE			E.5.3.11	<torquewp>
AIRCRAFT INVENTORY MASTER GUIDE WORK PACKAGE			E.5.3.13.2	<inventorywp>
STORAGE OF AIRCRAFT WORK PACKAGE			E.5.3.13.3	<storagewp>
WEIGHING AND LOADING WORK PACKAGE (ASB ONLY)	R	R	E.5.3.13.4	<wtloadwp>
WIRING DIAGRAMS WORK PACKAGE			E.5.3.12	<wiringwp>
CHAPTER X. AUXILIARY EQUIPMENT MAINTENANCE INSTRUCTIONS			APPENDIX E E.5.2.6	<mim> <auxiliarycategory>
AUXILIARY EQUIPMENT MAINTENANCE WORK PACKAGE			E.5.3.14	<auxeqpwp>
ILLUSTRATED LIST OF MANUFACTURED ITEMS WORK PACKAGE			E.5.3.10	
Illustrated list of manufactured items introduction work package	R	R	E.5.3.10.1	<manu_items_introwp>

TABLE A-V. Aviation maintenance and maintenance with parts requirements matrix for aviation.

TM Content	AVIATION -23/-23&P	AVIATION -24/-24&P	MIL-STD-40051-2B Reference	Element Name
Manufacturing procedures work package	R	R	E.5.3.10.2	<manuwp>
TORQUE LIMITS WORK PACKAGE			E.5.3.11	<torquewp>
WIRING DIAGRAMS WORK PACKAGE			E.5.3.12	<wiringwp>
CHAPTER X. AMMUNITION MAINTENANCE INSTRUCTIONS			APPENDIX E E.5.2.7	<mim> <ammunitioncategory>
AMMUNITION MAINTENANCE WORK PACKAGE			E.5.3.15.1	<ammowp>
AMMUNITION MARKING INFORMATION WORK PACKAGE			E.5.3.15.2	<ammo.markingwp>
FOREIGN AMMUNITION (NATO) WORK PACKAGE			E.5.3.15.3	<natowp>
CHAPTER X. PARTS INFORMATION *(23/24)* *(23&P/24&P)*	P R	P R	APPENDIX F	<pim>
INTRODUCTION WORK PACKAGE	R	R	F.5.3.5	<introwp>
REPAIR PARTS LIST WORK PACKAGE	R	R	F.5.3.6	<plwp>
REPAIR PARTS FOR SPECIAL TOOLS WORK PACKAGE			F.5.3.7	<stl_partswp>
KIT PARTS LIST WORK PACKAGE			F.5.3.8	<kitswp>
BULK ITEMS WORK PACKAGE			F.5.3.9	<bulk_itemswp>
SPECIAL TOOLS LIST WORK PACKAGE			F.5.3.10	<stlwp>
NSN INDEX WORK PACKAGE	R	R	F.5.3.11.1	<nsnindxwp>
P/N INDEX WORK PACKAGE	R	R	F.5.3.11.2	<pnindxwp>
REFERENCE DESIGNATOR INDEX WORK PACKAGE			F.5.3.11.3	<refdesindxwp>
CHAPTER X. DESTRUCTION OF EQUIPMENT TO PREVENT ENEMY USE ***NOTE*** **If a separate destruction of materiel manual is not developed for this equipment, then the destruction chapter must be included.**			APPENDIX H	<dim>
DESTRUCTION OF EQUIPMENT TO PREVENT ENEMY USE INTRODUCTION WORK PACKAGE	R	R	H.5.3	<destruct-introwp>
Authority to destroy	R	R	H.5.3.3	<authorize_to_destroy>
Reporting destruction	R	R	H.5.3.4	<report_destruct>
General destruction information	R	R	H.5.3.5	<general_destruct_info>

TABLE A-V. Aviation maintenance and maintenance with parts requirements matrix for aviation.

TM Content	AVIATION -23/-23&P	AVIATION -24/-24&P	MIL-STD-40051-2B Reference	Element Name
Degree of destruction	R	R	H.5.3.6	
Essential components and spare parts			H.5.3.7	<component_spares>
DESTRUCTION OF EQUIPMENT TO PREVENT ENEMY USE PROCEDURES WORK PACKAGE			H.5.4	<destruct-materialwp>
Parts list			H.5.4.3	<essential_spares>
Specific destruction procedures			H.5.4.4	<proc>
CHAPTER X. SUPPORTING INFORMATION ***NOTE*** *Applicable supporting information work packages shall be arranged in the order in which they are presented here and numbered accordingly.*	R	R	APPENDIX G	<sim>
REFERENCES WORK PACKAGE	R	R	G.5.2	<refwp>
INTRODUCTION FOR AVIATION TWO-LEVEL MAC WORK PACKAGE	R	R	G.5.3.2	<macintrowp>
AVIATION TWO-LEVEL MAC WORK PACKAGE	R	R	G.5.3.3	<macwp>
EXPENDABLE AND DURABLE ITEMS LIST WORK PACKAGE	R	R	G.5.6	<explistwp>
TOOL IDENTIFICATION LIST WORK PACKAGE			G.5.7	<toolidwp>
MANDATORY REPLACEMENT PARTS WORK PACKAGE			G.5.8	<mrplwp>
CRITICAL SAFETY ITEMS (CSI) WORK PACKAGE			G.5.9	<csi.wp>
SUPPORT ITEMS WORK PACKAGE			G.5.10	<supitemwp>
ADDITIONAL SUPPORTING WORK PACKAGES			G.5.11	<genwp>
REAR MATTER	R	R	5.2.3	<rear>
Glossary			5.2.3.1	<glossary>
Alphabetical index			5.2.3.2	<aindx>
DA Form 2028	R	R	5.2.3.3	<da2028>
Authentication page	R	R	5.2.3.4	<authent>
Foldout pages			5.2.3.5	<foldsect>
Back cover	R	R	5.2.3.6	<back>

Legend
R - Required
P - Prohibited
Shaded - As Required

TABLE A-VI. Stand-alone RPSTL requirements matrix for _____.

TM Content	RPSTL	MIL-STD-40051-2B Reference	Element Name
FRONT MATTER	R	5.2.1	**<paper.frnt>**
Front cover	R	5.2.1.1	**<frntcover>**
(MC) Promulgation letter		5.2.1.3	**<promulgation>**
Change transmittal page	R	5.2.1.5	**<chgsheet>**
List of effective pages/work packages	R	5.2.1.6	**<loepwp>**
Title page	R	5.2.1.7	**<titleblk>**
Table of contents	R	5.2.1.9	**<contents>**
CHAPTER 1. REPAIR PARTS AND SPECIAL TOOLS LIST FOR (ENTER EQUIPMENT NAME)	R	APPENDIX F	**<pim>**
INTRODUCTION WORK PACKAGE	R	F.5.3.5	**<introwp>**
REPAIR PARTS LIST WORK PACKAGES	R	F.5.3.6	**<plwp>**
REPAIR PARTS FOR SPECIAL TOOLS WORK PACKAGE		F.5.3.7	**<stl_partswp>**
KIT PARTS LIST WORK PACKAGE		F.5.3.8	**<kitswp>**
BULK ITEM WORK PACKAGE		F.5.3.9	**<bulk_itemswp>**
SPECIAL TOOLS LIST WORK PACKAGE		F.5.3.10	**<stlwp>**
NSN INDEX WORK PACKAGE	R	F.5.3.11.1	**<nsnindxwp>**
P/N INDEX WORK PACKAGE	R	F.5.3.11.2	**<pnindxwp>**
REFERENCE DESIGNATOR INDEX WORK PACKAGE		F.5.3.11.3	**<refdesindxwp>**
REAR MATTER	R	5.2.3	**<rear>**
DA Form 2028	R	5.2.3.3	**<da2028>**
Authentication page	R	5.2.3.4	**<authent>**
Back cover	R	5.2.3.6	**<back>**

Legend
R - Required
P - Prohibited
Shaded - As Required

This page intentionally left blank.

TABLE A-VII. DMWR/NMWR requirements matrix for _____.

DMWR/NMWR Content	DMWR DMWR with RPSTL	NMWR NMWR with RPSTL	MIL-STD-40051-2B Reference	Element Name
FRONT MATTER	R	R	5.2.1	**<paper.frnt>**
Front cover	R	R	5.2.1.1	**<frntcover>**
(MC) Promulgation letter			5.2.1.3	**<promulgation>**
Warning summary			5.2.1.4	**<warnsum>**
Change transmittal page			5.2.1.5	**<chgsheet>**
List of effective pages/work packages	R	R	5.2.1.6	**<loepwp>**
Title page	R	R	5.2.1.7	**<titleblk>**
Table of contents	R	R	5.2.1.9	**<contents>**
CHAPTER 1. GENERAL INFORMATION, EQUIPMENT DESCRIPTION, AND THEORY OF OPERATION	R	R	APPENDIX B	**<gim>**
GENERAL INFORMATION WORK PACKAGE	R	R	B.5.2	**<ginfowp>**
Scope	R	R	B.5.2.3	**<scope>**
Maintenance forms, records, and reports	R	R	B.5.2.4	**<mfrr>**
Reporting Equipment Improvement Recommendations (EIR)	R	R	B.5.2.5	**<eir>**
Hand receipt (HR)			B.5.2.6	**<handreceipt>**
Corrosion Prevention and Control (CPC)	R	R	B.5.2.7	**<cpcdata>**
Ozone Depleting Substances (ODS)			B.5.2.8	**<odsdata>**
Destruction of Army materiel to prevent enemy use	R	R	B.5.2.9	**<destructmat>**
Preparation for storage or shipment	R	R	B.5.2.10	**<pssref>**
Warranty information			B.5.2.11	**<wrntyref>**
Nomenclature cross-reference list			B.5.2.12	**<nomenreflist>**
List of abbreviations/acronyms	R	R	B.5.2.13	**<loa>**
Quality Assurance (QA)			B.5.2.14	**<qainfo>**
Quality of material	R	R	B.5.2.15	**<qual.mat.info>**
Safety, care, and handling			B.5.2.16	**<sftyinfo>**
Nuclear hardness			B.5.2.17	**<hcp>**
Calibration			B.5.2.18	**<calref>**
Item unique identification (IUID)			B.5.2.19	**<iuid>**
Engineering Change Proposals (ECP)	R	R	B.5.2.20	**<ecp>**
Modifications			B.5.2.21	**<modification>**
Deviations and exceptions	R	R	B.5.2.22	<deviation>

TABLE A-VII. DMWR/NMWR requirements matrix for _____.

DMWR/NMWR Content	DMWR DMWR with RPSTL	NMWR NMWR with RPSTL	MIL-STD-40051-2B Reference	Element Name
Mobilization requirements	R	R	B.5.2.23	<mobreq>
Critical Safety Items (CSI) (**Aircraft only**)			B.5.2.24	**<csireq>**
Cost considerations	R	R	B.5.2.25	**<cost>**
Supporting information for repair parts, special tools, TMDE, and support equipment			B.5.2.26	**<supdata>**
Copyright credit line			B.5.2.27	**<copyrt>**
EQUIPMENT DESCRIPTION AND DATA WORK PACKAGE	R	R	B.5.3	**<descwp>**
Equipment characteristics, capabilities, and features	R	R	B.5.3.3	**<eqpinfo>**
Location and description of major components	R	R	B.5.3.4	**<locdesc>**
Differences between models			B.5.3.5	**<eqpdiff>**
Equipment data	R	R	B.5.3.6	**<eqpdata>**
THEORY OF OPERATION WORK PACKAGE			B.5.4	**<thrywp>**
CHAPTER X. DMWR/NMWR TROUBLESHOOTING PROCEDURES ***NOTE*** *The notation (*) indicates that at least one of the these content items shall be included*	R	R	APPENDIX D D.5.4.3	**<tim>** **<troubledmwrnmwrcategory>**
INTRODUCTION WORK PACKAGE			D.5.5.3	**<tsintrowp>**
TROUBLESHOOTING INDEX WORK PACKAGE			D.5.5.5	**<tsindxwp>**
PRESHOP ANALYSIS WORK PACKAGE	R	R	D.5.5.6	**<pshopanalwp>**
COMPONENT CHECKLIST WORK PACKAGE			D.5.5.7	**<compchklistwp>**
**OPERATIONAL CHECKOUT WORK PACKAGES*			D.5.5.8.3	**<opcheckwp>**
**TROUBLESHOOTING WORK PACKAGES*			D.5.5.8.4	**<tswp>**
**COMBINED OPERATIONAL CHECKOUT AND TROUBLESHOOTING WORK PACKAGES*			D.5.5.8.5	**<opcheck-tswp>**

TABLE A-VII. DMWR/NMWR requirements matrix for _____.

DMWR/NMWR Content	DMWR DMWR with RPSTL	NMWR NMWR with RPSTL	MIL-STD-40051-2B Reference	Element Name
CHAPTER X. DEPOT MAINTENANCE INSTRUCTIONS	R	R	APPENDIX E E.5.2.4	**<mim> <depotcategory>**
MAINTENANCE WORK PACKAGES	R	R	E.5.3.5	**<maintwp>**
Maintenance tasks	R	R	E.5.3.5.3	**<maintsk>**
Inspect			E.5.3.5.3.2	**<inspect>**
Test			E.5.3.5.3.3	**<test>**
Service			E.5.3.5.3.4	**<service>**
Adjust			E.5.3.5.3.5	**<adjust>**
Align			E.5.3.5.3.6	**<align>**
Calibrate			E.5.3.5.3.7	**<calibration>**
Remove			E.5.3.5.3.8	**<remove>**
Install			E.5.3.5.3.9	**<install>**
Replace			E.5.3.5.3.10	**<replace>**
Repair			E.5.3.5.3.11	**<repair>**
Paint			E.5.3.5.3.12	**<paint>**
Overhaul			E.5.3.5.3.13	**<overhaul>**
Rebuild			E.5.3.5.3.14	**<rebuild>**
Lubricate			E.5.3.5.3.15	**<lube>**
Mark			E.5.3.5.3.16	**<mark>**
Pack			E.5.3.5.3.17	**<pack>**
Unpack			E.5.3.5.3.18	**<unpack>**
Preserve			E.5.3.5.3.19	**<preserv>**
Prepare for use			E.5.3.5.3.20	**<prepforuse>**
Assemble			E.5.3.5.3.21	**<assem>**
Disassemble			E.5.3.5.3.22	**<disassem>**
Clean			E.5.3.5.3.23	**<clean>**
Nondestructive inspection			E.5.3.5.3.24	**<ndi>**
Radio interference suppression			E.5.3.5.3.25	**<ris>**
Place in service			E.5.3.5.3.26	**<pis>**
Towing			E.5.3.5.3.27	**<tow>**
Jacking			E.5.3.5.3.28	**<jack>**
Parking			E.5.3.5.3.29	**<park>**
Mooring			E.5.3.5.3.30	**<moor>**
Covering			E.5.3.5.3.31	**<cover>**
Hoisting			E.5.3.5.3.32	**<hoist>**
Sling loading			E.5.3.5.3.33	**<sling>**
External power			E.5.3.5.3.34	**<extpwr>**
Preparation for shipment and storage			E.5.3.5.3.35	**<pss>**
Arm			E.5.3.5.3.36	**<arm>**
Load			E.5.3.5.3.37	**<load>**
Unload			E.5.3.5.3.38	**<unload>**
Software maintenance			E.5.3.5.3.39	**<softwaremaint>**
Additional maintenance task			E.5.3.5.3.40	**<other.maintsk>**
Follow-on maintenance			E.5.3.5.3.41	**<followon.maintsk>**

TABLE A-VII. DMWR/NMWR requirements matrix for _____.

DMWR/NMWR Content	DMWR DMWR with RPSTL	NMWR NMWR with RPSTL	MIL-STD-40051-2B Reference	Element Name
GENERAL MAINTENANCE WORK PACKAGE			E.5.3.7	**<gen.maintwp>**
LUBRICATION INSTRUCTIONS WORK PACKAGE			E.5.3.8	**<lubewp>**
PRESERVATION, PACKAGING, AND MARKING GENERAL INFORMATION WORK PACKAGE	R	R	E.5.3.9.1	**<ppmgeninfowp>**
FACILITIES WORK PACKAGE			E.5.3.9.2	**<facilwp>**
OVERHAUL INSPECTION PROCEDURES WORK PACKAGE			E.5.3.9.3	**<oipwp>**
DEPOT MOBILIZATION REQUIREMENTS WORK PACKAGE			E.5.3.9.4	**<mobilwp>**
QUALITY ASSURANCE REQUIREMENTS WORK PACKAGE	R	R	E.5.3.9.5	**<qawp>**
ILLUSTRATED LIST OF MANUFACTURED ITEMS WORK PACKAGE			E.5.3.10	
Illustrated list of manufactured items introduction work package	R	R	E.5.3.10.1	**<manu_items_introwp>**
Manufacturing procedures work package	R	R	E.5.3.10.2	**<manuwp>**
TORQUE LIMITS WORK PACKAGE			E.5.3.11	**<torquewp>**
AIRCRAFT INVENTORY MASTER GUIDE WORK PACKAGE (AIRCRAFT ONLY)			E.5.3.13.2	**<inventorywp>**
STORAGE OF AIRCRAFT WORK PACKAGE WORK PACKAGE (AIRCRAFT ONLY)			E.5.3.13.3	**<storagewp>**
WIRING DIAGRAMS WORK PACKAGE			E.5.3.12	**<wiringwp>**
CHAPTER X. AUXILIARY EQUIPMENT MAINTENANCE INSTRUCTIONS			APPENDIX E E.5.2.6	**<mim> <auxiliarycategory>**
AUXILIARY EQUIPMENT MAINTENANCE WORK PACKAGE			E.5.3.14	**<auxeqpwp>**
ILLUSTRATED LIST OF MANUFACTURED ITEMS WORK PACKAGE			E.5.3.10	
Illustrated list of manufactured items introduction work package	R	R	E.5.3.10.1	**<manu_items_introwp>**
Manufacturing procedures work package	R	R	E.5.3.10.2	**<manuwp>**

TABLE A-VII. DMWR/NMWR requirements matrix for _____.

DMWR/NMWR Content	DMWR DMWR with RPSTL	NMWR NMWR with RPSTL	MIL-STD-40051-2B Reference	Element Name
TORQUE LIMITS WORK PACKAGE			E.5.3.11	**<torquewp>**
WIRING DIAGRAMS WORK PACKAGE			E.5.3.12	**<wiringwp>**
CHAPTER X. AMMUNITION MAINTENANCE INSTRUCTIONS			APPENDIX E E.5.2.7	**<mim>** **<ammunitioncategory>**
AMMUNITION MAINTENANCE WORK PACKAGE			E.5.3.15.1	**<ammowp>**
AMMUNITION MARKING INFORMATION WORK PACKAGE			E.5.3.15.2	**<ammo.markingwp>**
FOREIGN AMMUNITION (NATO) WORK PACKAGE			E.5.3.15.3	**<natowp>**
CHAPTER X. PARTS INFORMATION *(DMWR, NMWR)* *(DMWR WITH RPSTL, NMWR WITH RPSTL)*	 P R	 P R	APPENDIX F	**<pim>**
INTRODUCTION WORK PACKAGE	R	R	F.5.3.5	**<introwp>**
REPAIR PARTS LIST WORK PACKAGE	R	R	F.5.3.6	**<plwp>**
REPAIR PARTS FOR SPECIAL TOOLS WORK PACKAGE			F.5.3.7	**<stl_partswp>**
KIT PARTS LIST WORK PACKAGE			F.5.3.8	**<kitswp>**
BULK ITEMS WORK PACKAGE			F.5.3.9	**<bulk_itemswp>**
SPECIAL TOOLS LIST WORK PACKAGE			F.5.3.10	**<stlwp>**
NSN INDEX WORK PACKAGE	R	R	F.5.3.11.1	**<nsnindxwp>**
P/N INDEX WORK PACKAGE	R	R	F.5.3.11.2	**<pnindxwp>**
REFERENCE DESIGNATOR INDEX WORK PACKAGE			F.5.3.11.3	**<refdesindxwp>**
CHAPTER X. SUPPORTING INFORMATION ***NOTE*** *Applicable supporting information work packages shall be arranged in the order in which they are presented here and numbered accordingly.*	R	R	APPENDIX G	**<sim>**
REFERENCES WORK PACKAGE	R	R	G.5.2	**<refwp>**
EXPENDABLE AND DURABLE ITEMS LIST WORK PACKAGE	R	R	G.5.6	**<explistwp>**
TOOL IDENTIFICATION LIST WORK PACKAGE			G.5.7	**<toolidwp>**

TABLE A-VII. DMWR/NMWR requirements matrix for _____.

DMWR/NMWR Content	DMWR DMWR with RPSTL	NMWR NMWR with RPSTL	MIL-STD-40051-2B Reference	Element Name
MANDATORY REPLACEMENT PARTS WORK PACKAGE			G.5.8	**<mrplwp>**
CRITICAL SAFETY ITEMS (CSI) WORK PACKAGE (AIRCRAFT ONLY)			G.5.9	**<csi.wp>**
SUPPORT ITEMS WORK PACKAGE			G.5.10	**<supitemwp>**
ADDITIONAL SUPPORTING WORK PACKAGES			G.5.11	**<genwp>**
REAR MATTER	R	R	5.2.3	**<rear>**
Glossary			5.2.3.1	**<glossary>**
Alphabetical index			5.2.3.2	**<aindx>**
DA Form 2028	R	R	5.2.3.3	**<da2028>**
Authentication page	R	R	5.2.3.4	**<authent>**
Foldout pages			5.2.3.5	**<foldsect>**
Back cover	R	R	5.2.3.6	**<back>**

Legend
R - Required
P - Prohibited
Shaded - As Required

TABLE A-VIII. DMWR with overhaul standards requirements matrix for _____.

DMWR/NMWR Content	DMWR with Overhaul Standards	DMWR with Overhaul Standards with RPSTL	MIL-STD-40051-2B Reference	Element Name
FRONT MATTER	R	R	5.2.1	**<paper.frnt>**
Front cover	R	R	5.2.1.1	**<frntcover>**
(MC) Promulgation letter			5.2.1.3	**<promulgation>**
Warning summary			5.2.1.4	**<warnsum>**
Change transmittal page			5.2.1.5	**<chgsheet>**
List of effective pages/work packages	R	R	5.2.1.6	**<loepwp>**
Title page	R	R	5.2.1.7	**<titleblk>**
Table of contents	R	R	5.2.1.9	**<contents>**
CHAPTER 1. GENERAL INFORMATION, EQUIPMENT DESCRIPTION, AND THEORY OF OPERATION	R	R	APPENDIX B	**<gim>**
GENERAL INFORMATION WORK PACKAGE	R	R	B.5.2	**<ginfowp>**
Scope	R	R	B.5.2.3	**<scope>**
Maintenance forms, records, and reports	R	R	B.5.2.4	**<mfrr>**
Reporting Equipment Improvement Recommendations (EIR)	R	R	B.5.2.5	**<eir>**
Hand Receipt (HR) manuals			B.5.2.6	**<handreceipt>**
Corrosion Prevention and Control (CPC)	R	R	B.5.2.7	**<cpcdata>**
Ozone Depleting Substances (ODS)			B.5.2.8	**<odsdata>**
Destruction of Army materiel to prevent enemy use	R	R	B.5.2.9	**<destructmat>**
Preparation for storage or shipment	R	R	B.5.2.10	**<pssref>**
Warranty information			B.5.2.11	**<wrntyref>**
Nomenclature cross-reference list			B.5.2.12	**<nomenreflist>**
List of abbreviations/acronyms	R	R	B.5.2.13	**<loa>**
Quality Assurance (QA)			B.5.2.14	**<qainfo>**
Quality of material	R	R	B.5.2.15	**<qual.mat.info>**
Safety, care, and handling			B.5.2.16	**<sftyinfo>**
Nuclear hardness			B.5.2.17	**<hcp>**
Calibration			B.5.2.18	**<calref>**
Item unique identification (IUID)			B.5.2.19	**<iuid>**
Engineering Change Proposals (ECP)	R	R	B.5.2.20	**<ecp>**
Modifications			B.5.2.21	**<modification>**
Deviations and exceptions	R	R	B.5.2.22	**<deviation>**
Mobilization requirements	R	R	B.5.2.23	**<mobreq>**
Critical Safety Items (CSI) (**Aircraft only**)	R	R	B.5.2.24	**<csireq>**
Cost considerations	R	R	B.5.2.25	**<cost>**

TABLE A-VIII. DMWR with overhaul standards requirements matrix for _____.

DMWR/NMWR Content	DMWR with Overhaul Standards	DMWR with Overhaul Standards with RPSTL	MIL-STD-40051-2B Reference	Element Name
Supporting information for repair parts, special tools, TMDE, and support equipment			B.5.2.26	<supdata>
Copyright credit line			B.5.2.27	<copyrt>
EQUIPMENT DESCRIPTION AND DATA WORK PACKAGE	R	R	B.5.3	<descwp>
Equipment characteristics, capabilities, and features	R	R	B.5.3.3	<eqpinfo>
Location and description of major components	R	R	B.5.3.4	<locdesc>
Differences between models			B.5.3.5	<eqpdiff>
Equipment data	R	R	B.5.3.6	<eqpdata>
THEORY OF OPERATION WORK PACKAGE			B.5.4	<thrywp>
CHAPTER X. TROUBLESHOOTING PROCEDURES ***NOTE*** *The notation (*) indicates that at least one of the these content items shall be included*			APPENDIX D D.5.4.3	<tim> <troubledmwrnmwr category>
INTRODUCTION WORK PACKAGE			D.5.5.3	<tsintrowp>
TROUBLESHOOTING INDEX WORK PACKAGE			D.5.5.5	<tsindxwp>
PRESHOP ANALYSIS WORK PACKAGE	R	R	D.5.5.6	<pshopanalwp>
COMPONENT CHECKLIST WORK PACKAGE			D.5.5.7	<compchklistwp>
**OPERATIONAL CHECKOUT WORK PACKAGES*			D.5.5.8.3	<opcheckwp>
**TROUBLESHOOTING WORK PACKAGES*			D.5.5.8.4	<tswp>
**COMBINED OPERATIONAL CHECKOUT AND TROUBLESHOOTING WORK PACKAGES*			D.5.5.8.5	<opcheck-tswp>
CHAPTER X. DEPOT MAINTENANCE INSTRUCTIONS	R	R	APPENDIX E E.5.2.4	<mim> <depotcategory>
MAINTENANCE WORK PACKAGES	R	R	E.5.3.5	<maintwp>
Maintenance tasks	R	R	E.5.3.5.3	<maintsk>
Inspect			E.5.3.5.3.2	<inspect>
Test			E.5.3.5.3.3	<test>
Service			E.5.3.5.3.4	<service>
Adjust			E.5.3.5.3.5	<adjust>
Align			E.5.3.5.3.6	<align>
Calibrate			E.5.3.5.3.7	<calibration>
Remove			E.5.3.5.3.8	<remove>
Install			E.5.3.5.3.9	<install>
Replace			E.5.3.5.3.10	<replace>
Repair			E.5.3.5.3.11	<repair>
Paint			E.5.3.5.3.12	<paint>
Overhaul			E.5.3.5.3.13	<overhaul>
Rebuild			E.5.3.5.3.14	<rebuild>

TABLE A-VIII. DMWR with overhaul standards requirements matrix for _____.

DMWR/NMWR Content	DMWR with Overhaul Standards	DMWR with Overhaul Standards with RPSTL	MIL-STD-40051-2B Reference	Element Name
Lubricate			E.5.3.5.3.15	<lube>
Mark			E.5.3.5.3.16	<mark>
Pack			E.5.3.5.3.17	<pack>
Unpack			E.5.3.5.3.18	<unpack>
Preserve			E.5.3.5.3.19	<preserv>
Prepare for use			E.5.3.5.3.20	<prepforuse>
Assemble			E.5.3.5.3.21	<assem>
Disassemble			E.5.3.5.3.22	<disassem>
Clean			E.5.3.5.3.23	<clean>
Nondestructive inspection			E.5.3.5.3.24	<ndi>
Radio interference suppression			E.5.3.5.3.25	<ris>
Place in service			E.5.3.5.3.26	<pis>
Towing			E.5.3.5.3.27	<tow>
Jacking			E.5.3.5.3.28	<jack>
Parking			E.5.3.5.3.29	<park>
Mooring			E.5.3.5.3.30	<moor>
Covering			E.5.3.5.3.31	<cover>
Hoisting			E.5.3.5.3.32	<hoist>
Sling loading			E.5.3.5.3.33	<sling>
External power			E.5.3.5.3.34	<extpwr>
Preparation for shipment and storage			E.5.3.5.3.35	<pss>
Arm			E.5.3.5.3.36	<arm>
Load			E.5.3.5.3.37	<load>
Unload			E.5.3.5.3.38	<unload>
Software maintenance			E.5.3.5.3.39	<softwaremaint>
Additional maintenance task			E.5.3.5.3.40	<other.maintsk>
Follow-on maintenance			E.5.3.5.3.41	<followon.maintsk>
GENERAL MAINTENANCE WORK PACKAGE			E.5.3.7	<gen.maintwp>
LUBRICATION INSTRUCTIONS WORK PACKAGE			E.5.3.8	<lubewp>
PRESERVATION, PACKAGING, AND MARKING GENERAL INFORMATION WORK PACKAGE	R	R	E.5.3.9.1	<ppmgeninfowp>
FACILITIES WORK PACKAGE			E.5.3.9.2	<facilwp>
OVERHAUL INSPECTION PROCEDURES WORK PACKAGE			E.5.3.9.3	<oipwp>
DEPOT MOBILIZATION REQUIREMENTS WORK PACKAGE	R	R	E.5.3.9.4	<mobilwp>
QUALITY ASSURANCE REQUIREMENTS WORK PACKAGE	R	R	E.5.3.9.5	<qawp>
ILLUSTRATED LIST OF MANUFACTURED ITEMS WORK PACKAGE			E.5.3.10	

TABLE A-VIII. DMWR with overhaul standards requirements matrix for _____.

DMWR/NMWR Content	DMWR with Overhaul Standards	DMWR with Overhaul Standards with RPSTL	MIL-STD-40051-2B Reference	Element Name
Illustrated list of manufactured items introduction work package	R	R	E.5.3.10.1	<manu_items_introwp>
Manufacturing procedures work package	R	R	E.5.3.10.2	<manuwp>
TORQUE LIMITS WORK PACKAGE			E.5.3.11	<torquewp>
AIRCRAFT INVENTORY MASTER GUIDE WORK PACKAGE (AIRCRAFT ONLY)			E.5.3.13.2	<inventorywp>
STORAGE OF AIRCRAFT WORK PACKAGE WORK PACKAGE (AIRCRAFT ONLY)			E.5.3.13.3	<storagewp>
WIRING DIAGRAMS WORK PACKAGE			E.5.3.12	<wiringwp>
CHAPTER X. AUXILIARY EQUIPMENT MAINTENANCE INSTRUCTIONS			APPENDIX E E.5.2.6	<mim> <auxiliarycategory>
AUXILIARY EQUIPMENT MAINTENANCE WORK PACKAGE			E.5.3.14	<auxeqpwp>
ILLUSTRATED LIST OF MANUFACTURED ITEMS WORK PACKAGE			E.5.3.10	
Illustrated list of manufactured items introduction work package	R	R	E.5.3.10.1	<manu_items_introwp>
Manufacturing procedures work package	R	R	E.5.3.10.2	<manuwp>
TORQUE LIMITS WORK PACKAGE			E.5.3.11	<torquewp>
WIRING DIAGRAMS WORK PACKAGE			E.5.3.12	<wiringwp>
CHAPTER X. AMMUNITION MAINTENANCE INSTRUCTIONS			APPENDIX E E.5.2.7	<mim> <ammunitioncategory>
AMMUNITION MAINTENANCE WORK PACKAGE			E.5.3.16.1	<ammowp>
AMMUNITION MARKING INFORMATION WORK PACKAGE			E.5.3.16.2	<ammo.markingwp>
FOREIGN AMMUNITION (NATO) WORK PACKAGE			E.5.3.16.3	<natowp>
CHAPTER X. PARTS INFORMATION *(DMWR WITH OVERHAUL STANDARDS)* *(DMWR WITH OVERHAUL STANDARDS WITH RPSTL)*	P R	P R	APPENDIX F	<pim>
INTRODUCTION WORK PACKAGE	R	R	F.5.3.5	<introwp>
REPAIR PARTS LIST WORK PACKAGE	R	R	F.5.3.6	<plwp>
REPAIR PARTS FOR SPECIAL TOOLS WORK PACKAGE			F.5.3.7	<stl_partswp>
KIT PARTS LIST WORK PACKAGE			F.5.3.8	<kitswp>

TABLE A-VIII. DMWR with overhaul standards requirements matrix for _____.

DMWR/NMWR Content	DMWR with Overhaul Standards	DMWR with Overhaul Standards with RPSTL	MIL-STD-40051-2B Reference	Element Name
BULK ITEMS WORK PACKAGE			F.5.3.9	**<bulk_itemswp>**
SPECIAL TOOLS LIST WORK PACKAGE			F.5.3.10	**<stlwp>**
NSN INDEX WORK PACKAGE	R	R	F.5.3.11.1	**<nsnindxwp>**
P/N INDEX WORK PACKAGE	R	R	F.5.3.11.2	**<pnindxwp>**
REFERENCE DESIGNATOR INDEX WORK PACKAGE			F.5.3.11.3	**<refdesindxwp>**
CHAPTER X. SUPPORTING INFORMATION ***NOTE*** *Applicable supporting information work packages shall be arranged in the order in which they are presented here and numbered accordingly.*	R	R	APPENDIX G	**<sim>**
REFERENCES WORK PACKAGE	R	R	G.5.2	**<refwp>**
EXPENDABLE AND DURABLE ITEMS LIST WORK PACKAGE	R	R	G.5.6	**<explistwp>**
TOOL IDENTIFICATION LIST WORK PACKAGE			G.5.7	**<toolidwp>**
MANDATORY REPLACEMENT PARTS WORK PACKAGE			G.5.8	**<mrplwp>**
CRITICAL SAFETY ITEMS (CSI) WORK PACKAGE (AIRCRAFT ONLY)			G.5.9	**<csi.wp>**
SUPPORT ITEMS WORK PACKAGE			G.5.10	**<supitemwp>**
ADDITIONAL SUPPORTING WORK PACKAGES			G.5.11	**<genwp>**
REAR MATTER	R	R	5.2.3	**<rear>**
Glossary			5.2.3.1	**<glossary>**
Alphabetical index			5.2.3.2	**<aindx>**
DA Form 2028	R	R	5.2.3.3	**<da2028>**
Authentication page	R	R	5.2.3.4	**<authent>**
Foldout pages			5.2.3.5	**<foldsect>**
Back cover	R	R	5.2.3.6	**<back>**

Legend
R - Required
P - Prohibited
Shaded - As Required

This page intentionally left blank.

TABLE A-IX. Aircraft troubleshooting requirements matrix for _____.

TM Content	Aircraft Troubleshooting	MIL-STD-40051-2B Reference	Element Name
FRONT MATTER	R	5.2.1	**<paper.frnt>**
Front cover	R	5.2.1.1	**<frntcover>**
(MC) Promulgation letter		5.2.1.3	**<promulgation>**
Warning summary		5.2.1.4	**<warnsum>**
Change transmittal		5.2.1.5	**<chgsheet>**
List of effective pages/work packages	R	5.2.1.6	**<loepwp>**
Title page	R	5.2.1.7	**<titleblk>**
Table of contents	R	5.2.1.9	**<contents>**
How to use this manual	R	5.2.1.10	**<howtouse>**
CHAPTER X. **AVIATION** **TROUBLESHOOTING PROCEDURES** ***NOTE*** *The notation (*) indicates that at least one of the these content items shall be included*	R	APPENDIX D D.5.4.1	**<tim>** **<troubleaviationcategory>**
INTRODUCTION WORK PACKAGE	R	D.5.5.3	**<tsintrowp>**
TECHNICAL DESCRIPTION WORK PACKAGES		D.5.5.4	**<techdescwp >**
Equipment description and data		D.5.5.4.3	**<descproc>**
Controls and indicators		D.5.5.4.4	**<ctrlindproc>**
Theory of operation		D.5.5.4.5	**<thryproc>**
TROUBLESHOOTING INDEX WORK PACKAGE		D.5.5.5	**<tsindxwp>**
**OPERATIONAL CHECKOUT WORK PACKAGES*		D.5.5.8.3	**<opcheckwp>**
**TROUBLESHOOTING WORK PACKAGES*		D.5.5.8.4	**<tswp>**
**COMBINED OPERATIONAL CHECKOUT AND TROUBLESHOOTING WORK PACKAGES*		D.5.5.8.5	**<opcheck-tswp>**
REAR MATTER	R	5.2.3	**<rear>**
Glossary		5.2.3.1	**<glossary>**
Alphabetical index		5.2.3.2	**<aindx>**
DA Form 2028	R	5.2.3.3	**<da2028>**
Authentication page	R	5.2.3.4	**<authent>**
Foldout pages		5.2.3.5	**<foldsect>**
Back cover	R	5.2.3.6	**<back>**

Legend
R - Required
P - Prohibited
Shaded - As Required

This page intentionally left blank.

TABLE A-X. Aircraft PMS or PMD requirements matrix for _____.

TM Content	Aircraft PMS/PMD	MIL-STD-40051-2B Reference	Element Name
PREVENTIVE MAINTENANCE SERVICES / PREVENTIVE MAINTENANCE DAILY			**<pms>**
FRONT MATTER	R	5.2.1	**<paper.frnt>**
Front cover	R	5.2.1.1	**<frntcover>**
(MC) Promulgation letter		5.2.1.3	**<promulgation>**
Warning summary		5.2.1.4	**<warnsum>**
Change transmittal page		5.2.1.5	**<chgsheet>**
List of effective pages/work packages	R	5.2.1.6	**<loepwp>**
Title page with warning data	R	5.2.1.8	**<titleblk>**
CHAPTER 1. GENERAL INFORMATION	R	APPENDIX B	
GENERAL INFORMATION WORK PACKAGE	R	B.5.5	**<pms-ginfowp>**
Maintenance activities	R	B.5.5.3	**<scope>**
General information	R	B.5.5.4	**<pms-geninfo>**
CHAPTER X. PREVENTIVE MAINTENANCE SERVICES MAINTENANCE INFORMATION CHAPTER	R	APPENDIX E E.5.2.11	**<mim> <pmscategory>**
PMS/PMD INSPECTION WORK PACKAGE	R	E.5.3.16	**<pms-inspecwp>**
REAR MATTER	R	5.2.3	**<rear>**
DA Form 2028	R	5.2.3.3	**<da2028>**
Authentication page	R	5.2.3.4	**<authent>**
Back cover	R	5.2.3.6	**<back>**

Legend
R - Required
P - Prohibited
Shaded - As Required

This page intentionally left blank.

TABLE A-XI. Aircraft phased maintenance requirements matrix for _____.

TM Content	Aircraft PM	MIL-STD-40051-2B Reference	Element Name
PHASED MAINTENANCE		4.2	**<pmi>**
FRONT MATTER	R	5.2.1	**<paper.frnt>**
Front cover	R	5.2.1.1	**<frntcover>**
(MC) Promulgation letter		5.2.1.3	**<promulgation>**
Warning summary		5.2.1.4	**<warnsum>**
Change transmittal page		5.2.1.5	**<chgsheet>**
List of effective pages/work packages	R	5.2.1.6	**<loepwp>**
Title page with warning data	R	5.2.1.8	**<titleblk>**
CHAPTER 1. GENERAL INFORMATION	R	APPENDIX B	
GENERAL INFORMATION WORK PACKAGE	R	B.5.6	**<pm-ginfowp>**
CHAPTER X. PHASED MAINTENANCE INSPECTION MAINTENANCE INFORMATION	R	APPENDIX E E.5.2.12	**<mim> <checklistcategory>**
PM INSPECTION WORK PACKAGE	R	E.5.3.17	**<pmi-cklistwp>**
REAR MATTER	R	5.2.3	**<rear>**
DA Form 2028	R	5.2.3.3	**<da2028>**
Authentication page	R	5.2.3.4	**<authent>**
Back cover	R	5.2.3.6	**<back>**

Legend
R - Required
P - Prohibited
Shaded - As Required

This page intentionally left blank.

TABLE A-XII. Conventional and chemical ammunition requirements matrix for ____.

TM Content	Conventional and Chemical Ammunition			MIL-STD-40051-2B Reference	Element Name
	-10	-13 -13&P	-14 -14&P		
FRONT MATTER	R	R	R	5.2.1	**<paper.frnt>**
Front cover	R	R	R	5.2.1.1	**<frntcover>**
(MC) Promulgation letter				5.2.1.3	**<promulgation>**
Warning summary				5.2.1.4	**<warnsum>**
Change transmittal page				5.2.1.5	**<chgsheet>**
List of effective pages/work packages	R	R	R	5.2.1.6	**<loepwp>**
Title page	R	R	R	5.2.1.7	**<titleblk>**
Table of contents	R	R	R	5.2.1.9	**<contents>**
How to use this manual	R	R	R	5.2.1.10	**<howtouse>**
CHAPTER 1. GENERAL INFORMATION, EQUIPMENT DESCRIPTION, AND THEORY OF OPERATION	R	R	R	APPENDIX B	**<gim>**
GENERAL INFORMATION WORK PACKAGE	R	R	R	B.5.2	**<ginfowp>**
Scope	R	R	R	B.5.2.3	**<scope>**
Maintenance forms, records, and reports	R	R	R	B.5.2.4	**<mfrr>**
Reporting Equipment Improvement Recommendations (EIR)	R	R	R	B.5.2.5	**<eir>**
Hand Receipt (HR) manuals				B.5.2.6	**<handreceipt>**
Corrosion Prevention and Control (CPC)	R	R	R	B.5.2.7	**<cpcdata>**
Ozone Depleting Substances (ODS)				B.5.2.8	**<odsdata>**
Destruction of Army materiel to prevent enemy use	R	R	R	B.5.2.9	**<destructmat>**
Preparation for storage or shipment	R	R	R	B.5.2.10	**<pssref>**
Warranty information				B.5.2.11	**<wrntyref>**
Nomenclature cross-reference list				B.5.2.12	**<nomenreflist>**
List of abbreviations/acronyms	R	R	R	B.5.2.13	**<loa>**
Quality of material	P			B.5.2.15	**<qual.mat.info>**
Safety, care, and handling				B.5.2.16	**<sftyinfo>**
Nuclear hardness				B.5.2.17	**<hcp>**
Calibration				B.5.2.18	**<calref>**
Item unique identification (IUID)				B.5.2.19	**<iuid>**
Supporting information for repair parts, special tools, TMDE, and support equipment	P			B.5.2.26	**<supdata>**
Copyright credit line				B.5.2.27	**<copyrt>**

TABLE A-XII. Conventional and chemical ammunition requirements matrix for ____.

TM Content	Conventional and Chemical Ammunition			MIL-STD-40051-2B Reference	Element Name
	-10	-13 -13&P	-14 -14&P		
EQUIPMENT DESCRIPTION AND DATA WORK PACKAGE	R	R	R	B.5.3	**<descwp>**
Equipment characteristics, capabilities, and features	R	R	R	B.5.3.3	**<eqpinfo>**
Location and description of major components	R	R	R	B.5.3.4	**<locdesc>**
Differences between models				B.5.3.5	**<eqpdiff>**
Equipment data	R	R	R	B.5.3.6	**<eqpdata>**
THEORY OF OPERATION WORK PACKAGE				B.5.4	**<thrywp>**
CHAPTER X. OPERATOR INSTRUCTIONS	R	R	R	APPENDIX C	**<opim>**
DESCRIPTION AND USE OF OPERATOR CONTROLS AND INDICATORS WORK PACKAGE				C.5.2.2.1	**<ctrlindwp>**
OPERATION UNDER USUAL CONDITIONS WORK PACKAGE	R	R	R	C.5.2.2.2	**<opusualwp>**
Operation under usual tasks	R	R	R	C.5.2.2.2.3	**<opertsk>**
Security measures for electronic data				C.5.2.2.2.4	**<secref>**
Siting requirements				C.5.2.2.2.5	**<site>**
Shelter requirements				C.5.2.2.2.6	**<shelter>**
Assembly and preparation for use				C.5.2.2.2.7	**<prepforuse>**
Initial adjustments, before use and self-test				C.5.2.2.2.8	**<initial>**
Operating procedures	R	R	R	C.5.2.2.2.9	**<oper>**
Operating auxiliary equipment				C.5.2.2.2.11	**<operaux>**
Preparation for movement				C.5.2.2.2.12	**<prepmove>**
Decals and instruction plates				C.5.2.2.2.13	**<instructplt>**
OPERATION UNDER UNUSUAL CONDITIONS WORK PACKAGE	R	R	R	C.5.2.2.3	**<opunuwp>**
Security measures for electronic data				C.5.2.2.3.4	**<secref>**
Unusual environment/weather	R	R	R	C.5.2.2.3.5	**<unusualenv>**
Fording and swimming				C.5.2.2.3.6	**<fording>**
Interim Chemical, Biological, Radiological, and Nuclear (CBRN) decontamination procedures				C.5.2.2.3.7	**<decon>**
Jamming and Electronic Countermeasures (ECM) procedures				C.5.2.2.3.8	**<ecm>**
Degraded operation procedures				C.5.2.2.3.9	**<degraded>**
Decals and instruction plates				C.5.2.2.3.10	**<instructplt>**
EMERGENCY WORK PACKAGE				C.5.2.2.4	**<emergencywp>**

TABLE A-XII. Conventional and chemical ammunition requirements matrix for ____.

TM Content	Conventional and Chemical Ammunition			MIL-STD-40051-2B Reference	Element Name
	-10	-13 -13&P	-14 -14&P		
CHAPTER X. MAINTENANCE INSTRUCTIONS	R	R	R	APPENDIX E E.5.2.3	**<mim> <maintenancecategory>**
SERVICE UPON RECEIPT WORK PACKAGE	P	R	R	E.5.3.2	**<surwp>**
Service upon receipt tasks	P	R	R	E.5.3.2.3	**<surtsk>**
Siting	P			E.5.3.2.3.1	**<siting>**
Shelter requirements	P			E.5.3.2.3.2	**<shltr>**
Service upon receipt of materiel	P	R	R	E.5.3.2.3.3	**<surmat>**
Installation instructions	P			E.5.3.2.3.4	**<install>**
Preliminary servicing of equipment	P			E.5.3.2.3.5	**<preserv>**
Preliminary checks and adjustment of equipment	P			E.5.3.2.3.6	**<prechkadj>**
Preliminary calibration of equipment	P			E.5.3.2.3.7	**<precal>**
Circuit alignment	P			E.5.3.2.3.8	**<calign>**
Ammunition markings	P			E.5.3.2.3.9.1	**<mark>**
Classification of defects	P			E.5.3.2.3.9.2	**<ammo.defect>**
Ammunition handling	P			E.5.3.2.3.9.3	**<ammo.handling>**
Procedures to activate ammunition	P			E.5.3.2.3.9.4	**<arm>**
Additional maintenance task	P			E.5.3.2.3.10	**<other.surtsk>**
Follow-on maintenance	P			E.5.3.2.3.11	**<followon.maintsk>**
MAINTENANCE WORK PACKAGES	R	R	R	E.5.3.5	**<maintwp>**
Maintenance tasks	R	R	R	E.5.3.5.3	**<maintsk>**
Inspect				E.5.3.5.3.2	**<inspect>**
Test				E.5.3.5.3.3	**<test>**
Service				E.5.3.5.3.4	**<service>**
Adjust				E.5.3.5.3.5	**<adjust>**
Align				E.5.3.5.3.6	**<align>**
Calibrate				E.5.3.5.3.7	**<calibration>**
Remove				E.5.3.5.3.8	**<remove>**
Install				E.5.3.5.3.9	**<install>**
Replace				E.5.3.5.3.10	**<replace>**
Repair				E.5.3.5.3.11	**<repair>**
Paint				E.5.3.5.3.12	**<paint>**
Overhaul				E.5.3.5.3.13	**<overhaul>**
Rebuild				E.5.3.5.3.14	**<rebuild>**
Lubricate				E.5.3.5.3.15	**<lube>**
Mark				E.5.3.5.3.16	**<mark>**
Pack				E.5.3.5.3.17	**<pack>**
Unpack				E.5.3.5.3.18	**<unpack>**
Preserve				E.5.3.5.3.19	**<preserv>**
Prepare for use				E.5.3.5.3.20	**<prepforuse>**
Assemble				E.5.3.5.3.21	**<assem>**

TABLE A-XII. Conventional and chemical ammunition requirements matrix for ____.

TM Content	Conventional and Chemical Ammunition			MIL-STD-40051-2B Reference	Element Name
	-10	-13 -13&P	-14 -14&P		
Disassemble				E.5.3.5.3.22	<disassem>
Clean				E.5.3.5.3.23	<clean>
Nondestructive inspection				E.5.3.5.3.24	<ndi>
Place in service				E.5.3.5.3.26	<pis>
Preparation for shipment and storage				E.5.3.5.3.35	<pss>
Arm				E.5.3.5.3.36	<arm>
Load				E.5.3.5.3.37	<load>
Unload				E.5.3.5.3.38	<unload>
Software maintenance				E.5.3.5.3.39	<softwaremaint>
Additional maintenance task				E.5.3.5.3.40	<other.maintsk>
Follow-on maintenance				E.5.3.5.3.41	<followon.maintsk>
GENERAL MAINTENANCE WORK PACKAGE				E.5.3.7	<gen.maintwp>
LUBRICATION INSTRUCTIONS WORK PACKAGE				E.5.3.8	<lubewp>
ILLUSTRATED LIST OF MANUFACTURED ITEMS WORK PACKAGE				E.5.3.10	
Illustrated list of manufactured items introduction work package				E.5.3.10.1	<manu_items_introwp>
Manufacturing procedures work package				E.5.3.10.2	<manuwp>
TORQUE LIMITS WORK PACKAGE				E.5.3.11	<torquewp>
WIRING DIAGRAMS WORK PACKAGE	P			E.5.3.12	<wiringwp>
CHAPTER X. TEST AND INSPECTION MAINTENANCE INSTRUCTIONS				APPENDIX E E.5.2.8	<mim> <testinspectioncategory>
MAINTENANCE WORK PACKAGES				E.5.3.5	<maintwp>
Inspection				E.5.3.5.3.2	<inspect>
Test				E.5.3.5.3.3	<test>
CHAPTER X. SHIPMENT/MOVEMENT AND STORAGE MAINTENANCE INSTRUCTIONS		R	R	APPENDIX E E.5.2.9	<mim> <shipmentmovementstoragecategory>
MAINTENANCE WORK PACKAGES		R	R	E.5.3.5	<maintwp>
Preparation for storage or shipment		R	R	E.5.3.5.3.35	<pss>
CHAPTER X. AMMUNITION MARKING MAINTENANCE INSTRUCTIONS		R	R	APPENDIX E E.5.2.10	<mim> <ammomarkingcategory>
AMMUNITION MARKING INFORMATION WORK PACKAGE		R	R	E.5.3.15.2	<ammo.markingwp>

TABLE A-XII. Conventional and chemical ammunition requirements matrix for ____.

TM Content	Conventional and Chemical Ammunition			MIL-STD-40051-2B Reference	Element Name
	-10	-13 -13&P	-14 -14&P		
CHAPTER X. **PARTS INFORMATION** *(-10, -13, -14)* *(-13&P, -14&P)*	 P P	 P R	 P R	APPENDIX F	**<pim>**
INTRODUCTION WORK PACKAGE	P	R	R	F.5.3.5	**<introwp>**
REPAIR PARTS LIST WORK PACKAGE	P	R	R	F.5.3.6	**<plwp>**
REPAIR PARTS FOR SPECIAL TOOLS WORK PACKAGE	P			F.5.3.7	**<stl_partswp>**
KIT PARTS LIST WORK PACKAGE	P			F.5.3.8	**<kitswp>**
BULK ITEM WORK PACKAGE	P			F.5.3.9	**<bulk_itemswp>**
SPECIAL TOOLS LIST WORK PACKAGE	P			F.5.3.10	**<stlwp>**
NSN INDEX WORK PACKAGE	P	R	R	F.5.3.11.1	**<nsnindxwp>**
P/N INDEX WORK PACKAGE	P	R	R	F.5.3.11.2	**<pnindxwp>**
REFERENCE DESIGNATOR INDEX WORK PACKAGE	P			F.5.3.11.3	**<refdesindxwp>**
CHAPTER X. **DESTRUCTION OF EQUIPMENT TO PREVENT ENEMY USE** ***NOTE*** *If a separate destruction of materiel manual is not developed for this equipment, then the destruction chapter must be included.*				APPENDIX H	**<dim>**
DESTRUCTION OF EQUIPMENT TO PREVENT ENEMY USE INTRODUCTION WORK PACKAGE	R	R	R	H.5.3	**<destruct-introwp>**
Authority to destroy	R	R	R	H.5.3.3	**<authorize_to_destroy>**
Reporting destruction	R	R	R	H.5.3.4	**<report_destruct>**
General destruction information	R	R	R	H.5.3.5	**<general_destruct_info>**
Degree of instruction	R	R	R	H.5.3.6	
Essential components and spare parts				H.5.3.7	**<component_spares>**
DESTRUCTION OF EQUIPMENT TO PREVENT ENEMY USE PROCEDURES WORK PACKAGE	R	R	R	H.5.4	**<destruct-materialwp>**
Parts list				H.5.4.3	**<essential_spares>**
Specific destruction procedures	R	R	R	H.5.4.4	**<proc>**

TABLE A-XII. Conventional and chemical ammunition requirements matrix for ____.

TM Content	Conventional and Chemical Ammunition			MIL-STD-40051-2B Reference	Element Name
	-10	-13 -13&P	-14 -14&P		
CHAPTER X. **SUPPORTING INFORMATION** ***NOTE*** *Applicable supporting information work packages shall be arranged in the order in which they are presented here and numbered accordingly.*	R	R	R	APPENDIX G	**<sim>**
REFERENCES WORK PACKAGE	R	R	R	G.5.2	**<refwp>**
INTRODUCTION FOR NON-AVIATION TWO-LEVEL MAC WORK PACKAGE	P	R	R	G.5.3.1	**<macintrowp>**
TWO-LEVEL MAC WORK PACKAGE	P	R	R	G.5.3.3	**<macwp>**
COMPONENTS OF END ITEM (COEI) AND BASIC ISSUE ITEMS (BII) LISTS WORK PACKAGE	R	R	R	G.5.4	**<coeibiiwp>**
ADDITIONAL AUTHORIZATION LIST (AAL) WORK PACKAGE				G.5.5	**<aalwp>**
EXPENDABLE AND DURABLE ITEMS LIST WORK PACKAGE	R	R	R	G.5.6	**<explistwp>**
TOOL IDENTIFICATION LIST WORK PACKAGE	P			G.5.7	**<toolidwp>**
ADDITIONAL SUPPORTING WORK PACKAGES				G.5.11	**<genwp>**
REAR MATTER	R	R	R	5.2.3	**<rear>**
Glossary				5.2.3.1	**<glossary>**
Alphabetical index				5.2.3.2	**<aindx>**
DA Form 2028	R	R	R	5.2.3.3	**<da2028>**
Authentication page	R	R	R	5.2.3.4	**<authent>**
Foldout pages				5.2.3.5	**<foldsect>**
Back cover	R	R	R	5.2.3.6	**<back>**

Legend
R - Required
P - Prohibited
Shaded - As Required

TABLE A-XIII. Conventional and chemical ammunition below depot sustainment requirements matrix for _____.

TM Content	Conventional and Chemical Ammunition -40 -40&P	MIL-STD-40051-2B Reference	Element Name
FRONT MATTER	R	5.2.1	**<paper.frnt>**
Front cover	R	5.2.1.1	**<frntcover>**
(MC) Promulgation letter		5.2.1.3	**<promulgation>**
Warning summary		5.2.1.4	**<warnsum>**
Change transmittal page		5.2.1.5	**<chgsheet>**
List of effective pages/work packages	R	5.2.1.6	**<loepwp>**
Title page	R	5.2.1.7	**<titleblk>**
Table of contents	R	5.2.1.9	**<contents>**
How to use this manual	R	5.2.1.10	**<howtouse>**
CHAPTER 1. GENERAL INFORMATION, EQUIPMENT DESCRIPTION, AND THEORY OF OPERATION	R	APPENDIX B	**<gim>**
GENERAL INFORMATION WORK PACKAGE	R	B.5.2	**<ginfowp>**
Scope	R	B.5.2.3	**<scope>**
Maintenance forms, records, and reports	R	B.5.2.4	**<mfrr>**
Reporting Equipment Improvement Recommendations (EIR)	R	B.5.2.5	**<eir>**
Hand Receipt (HR) manuals		B.5.2.6	**<handreceipt>**
Corrosion Prevention and Control (CPC)	R	B.5.2.7	**<cpcdata>**
Ozone Depleting Substances (ODS)		B.5.2.8	**<odsdata>**
Destruction of Army materiel to prevent enemy use	R	B.5.2.9	**<destructmat>**
Preparation for storage or shipment	R	B.5.2.10	**<pssref>**
Warranty information		B.5.2.11	**<wrntyref>**
Nomenclature cross-reference list		B.5.2.12	**<nomenreflist>**
List of abbreviations	R	B.5.2.13	**<loa>**
Quality of material		B.5.2.15	**<qual.mat.info>**
Safety, care, and handling		B.5.2.16	**<sftyinfo>**
Nuclear hardness		B.5.2.17	**<hcp>**
Calibration		B.5.2.18	**<calref>**
Item unique identification		B.5.2.19	**<iuid>**
Supporting information for repair parts, special tools, TMDE, and support equipment		B.5.2.26	**<supdata>**
Copyright credit line		B.5.2.27	**<copyrt>**

TABLE A-XIII. Conventional and chemical ammunition below depot sustainment requirements matrix for _____.

TM Content	Conventional and Chemical Ammunition -40 -40&P	MIL-STD-40051-2B Reference	Element Name
EQUIPMENT DESCRIPTION AND DATA WORK PACKAGE	R	B.5.3	**<descwp>**
Equipment characteristics, capabilities, and features	R	B.5.3.3	**<eqpinfo>**
Location and description of major components	R	B.5.3.4	**<locdesc>**
Differences between models		B.5.3.5	**<eqpdiff>**
Equipment data	R	B.5.3.6	**<eqpdata>**
THEORY OF OPERATION WORK PACKAGE		B.5.4	**<thrywp>**
CHAPTER X. MAINTENANCE INSTRUCTIONS	R	APPENDIX E E.5.2.3	**<mim> <maintenancecategory>**
MAINTENANCE WORK PACKAGES	R	E.5.3.5	**<maintwp>**
Maintenance tasks	R	E.5.3.5.3	**<maintsk>**
Inspect		E.5.3.5.3.2	**<inspect>**
Test		E.5.3.5.3.3	**<test>**
Service		E.5.3.5.3.4	**<service>**
Adjust		E.5.3.5.3.5	**<adjust>**
Align		E.5.3.5.3.6	**<align>**
Calibrate		E.5.3.5.3.7	**<calibration>**
Remove		E.5.3.5.3.8	**<remove>**
Install		E.5.3.5.3.9	**<install>**
Replace		E.5.3.5.3.10	**<replace>**
Repair		E.5.3.5.3.11	**<repair>**
Paint		E.5.3.5.3.12	**<paint>**
Overhaul		E.5.3.5.3.13	**<overhaul>**
Rebuild		E.5.3.5.3.14	**<rebuild>**
Lubricate		E.5.3.5.3.15	**<lube>**
Mark		E.5.3.5.3.16	**<mark>**
Pack		E.5.3.5.3.17	**<pack>**
Unpack		E.5.3.5.3.18	**<unpack>**
Preserve		E.5.3.5.3.19	**<preserv>**
Prepare for use		E.5.3.5.3.20	**<prepforuse>**
Assemble		E.5.3.5.3.21	**<assem>**
Disassemble		E.5.3.5.3.22	**<disassem>**
Clean		E.5.3.5.3.23	**<clean>**
Nondestructive inspection		E.5.3.5.3.24	**<ndi>**
Place in service		E.5.3.5.3.26	**<pis>**
Preparation for shipment and storage		E.5.3.5.3.35	**<pss>**
Arm		E.5.3.5.3.36	**<arm>**
Load		E.5.3.5.3.37	**<load>**
Unload		E.5.3.5.3.38	**<unload>**
Software maintenance		E.5.3.5.3.39	**<softwaremaint>**
Additional maintenance task		E.5.3.5.3.40	**<other.maintsk>**

TABLE A-XIII. Conventional and chemical ammunition below depot sustainment requirements matrix for _____.

TM Content	Conventional and Chemical Ammunition -40 -40&P	MIL-STD-40051-2B Reference	Element Name
Follow-on maintenance		E.5.3.5.3.41	<followon.maintsk>
GENERAL MAINTENANCE WORK PACKAGE		E.5.3.7	<gen.maintwp>
LUBRICATION INSTRUCTIONS WORK PACKAGE		E.5.3.8	<lubewp>
ILLUSTRATED LIST OF MANUFACTURED ITEMS WORK PACKAGE		E.5.3.10	
Illustrated list of manufactured items introduction work package	R	E.5.3.10.1	<manu_items_introwp>
Manufacturing procedures work package	R	E.5.3.10.2	<manuwp>
TORQUE LIMITS WORK PACKAGE		E.5.3.11	<torquewp>
WIRING DIAGRAMS WORK PACKAGE		E.5.3.12	<wiringwp>
CHAPTER X. TEST AND INSPECTION MAINTENANCE INSTRUCTIONS		APPENDIX E E.5.2.8	<mim> <testinspectioncategory>
MAINTENANCE WORK PACKAGES		E.5.3.5	<maintwp>
Inspect		E.5.3.5.3.2	<inspect>
Test		E.5.3.5.3.3	<test>
CHAPTER X. SHIPMENT/MOVEMENT AND STORAGE MAINTENANCE INSTRUCTIONS		APPENDIX E E.5.2.9	<mim> <shipmentmovementstoragecategory>
MAINTENANCE WORK PACKAGES		E.5.3.5	<maintwp>
Preparation for storage or shipment		E.5.3.5.3.35	<pss>
CHAPTER X. AMMUNITION MARKING MAINTENANCE INSTRUCTIONS		APPENDIX E E.5.2.10	<mim> <ammomarkingcategory>
AMMUNITION MARKING INFORMATION WORK PACKAGE		E.5.3.15.2	<ammo.markingwp>
CHAPTER X. PARTS INFORMATION *(-40)* *(-40&P)*	 P R	APPENDIX F	<pim>
INTRODUCTION WORK PACKAGE	R	F.5.3.5	<introwp>
REPAIR PARTS LIST WORK PACKAGE	R	F.5.3.6	<plwp>
REPAIR PARTS FOR SPECIAL TOOLS WORK PACKAGE		F.5.3.7	<stl_partswp>
KIT PARTS LIST WORK PACKAGE		F.5.3.8	<kitswp>
BULK ITEM WORK PACKAGE		F.5.3.9	<bulk_itemswp>

TABLE A-XIII. Conventional and chemical ammunition below depot sustainment requirements matrix for _____.

TM Content	Conventional and Chemical Ammunition -40 -40&P	MIL-STD-40051-2B Reference	Element Name
SPECIAL TOOLS LIST WORK PACKAGE		F.5.3.10	**<stlwp>**
NSN INDEX WORK PACKAGE	R	F.5.3.11.1	**<nsnindxwp>**
P/N INDEX WORK PACKAGE	R	F.5.3.11.2	**<pnindxwp>**
REFERENCE DESIGNATOR INDEX WORK PACKAGE		F.5.3.11.3	**<refdesindxwp>**
CHAPTER X. DESTRUCTION OF EQUIPMENT TO PREVENT ENEMY USE		APPENDIX H	**<dim>**
DESTRUCTION OF EQUIPMENT TO PREVENT ENEMY USE INTRODUCTION WORK PACKAGE ***NOTE*** *If a separate destruction of materiel manual is not developed for this equipment, then the destruction chapter must be included.*	R	H.5.3	**<destruct-introwp>**
Authority to destroy	R	H.5.3.3	**<authorize_to_destroy>**
Reporting destruction	R	H.5.3.4	**<report_destruct>**
General destruction information	R	H.5.3.5	**<general_destruct_info>**
Degree of destruction	R	H.5.3.6	
Essential components and spare parts		H.5.3.7	**<component_spares>**
DESTRUCTION OF EQUIPMENT TO PREVENT ENEMY USE PROCEDURES WORK PACKAGE	R	H.5.4	**<destruct-materialwp>**
Parts list		H.5.4.3	**<essential_spares>**
Specific destruction procedures	R	H.5.4.4	**<proc>**
CHAPTER X. SUPPORTING INFORMATION ***NOTE*** *Applicable supporting information work packages shall be arranged in the order in which they are presented here and numbered accordingly.*	R	APPENDIX G	**<sim>**
REFERENCES WORK PACKAGE	R	G.5.2	**<refwp>**
EXPENDABLE AND DURABLE ITEMS WORK PACKAGE	R	G.5.6	**<explistwp>**
TOOL IDENTIFICATION LIST WORK PACKAGE		G.5.7	**<toolidwp>**

TABLE A-XIII. Conventional and chemical ammunition below depot sustainment requirements matrix for _____.

TM Content	Conventional and Chemical Ammunition -40 -40&P	MIL-STD-40051-2B Reference	Element Name
ADDITIONAL SUPPORTING WORK PACKAGES		G.5.11	**<genwp>**
REAR MATTER	R	5.2.3	**<rear>**
Glossary		5.2.3.1	**<glossary>**
Alphabetical index		5.2.3.2	**<aindx>**
DA Form 2028	R	5.2.3.3	**<da2028>**
Authentication page	R	5.2.3.4	**<authent>**
Foldout pages		5.2.3.5	**<foldsect>**
Back cover	R	5.2.3.6	**<back>**

Legend
R - Required
P - Prohibited
Shaded - As Required

This page intentionally left blank.

TABLE A-XIV. Conventional and chemical ammunition combined maintenance requirements matrix for _____.

TM Content	Conventional and Chemical Ammunition -23 -23&P	Conventional and Chemical Ammunition -24 -24&P	MIL-STD-40051-2B Reference	Element Name
FRONT MATTER	R	R	5.2.1	**<paper.frnt>**
Front cover	R	R	5.2.1.1	**<frntcover>**
(MC) Promulgation letter			5.2.1.3	**<promulgation>**
Warning summary			5.2.1.4	**<warnsum>**
Change transmittal page			5.2.1.5	**<chgsheet>**
List of effective pages/work packages	R	R	5.2.1.6	**<loepwp>**
Title page	R	R	5.2.1.7	**<titleblk>**
Table of contents	R	R	5.2.1.9	**<contents>**
How to use this manual	R	R	5.2.1.10	**<howtouse>**
CHAPTER 1. GENERAL INFORMATION, EQUIPMENT DESCRIPTION, AND THEORY OF OPERATION	R	R	APPENDIX B	**<gim>**
GENERAL INFORMATION WORK PACKAGE	R	R	B.5.2	**<ginfowp>**
Scope	R	R	B.5.2.3	**<scope>**
Maintenance forms, records, and reports	R	R	B.5.2.4	**<mfrr>**
Reporting Equipment Improvement Recommendations (EIR)	R	R	B.5.2.5	**<eir>**
Hand Receipt (HR) information			B.5.2.6	**<handreceipt>**
Corrosion Prevention and Control (CPC)	R	R	B.5.2.7	**<cpcdata>**
Ozone Depleting Substances (ODS)			B.5.2.8	**<odsdata>**
Destruction of Army materiel to prevent enemy use	R	R	B.5.2.9	**<destructmat>**
Preparation for storage or shipment	R	R	B.5.2.10	**<pssref>**
Warranty information			B.5.2.11	**<wrntyref>**
Nomenclature cross-reference list			B.5.2.12	**<nomenreflist>**
List of abbreviations	R	R	B.5.2.13	**<loa>**
Quality of material			B.5.2.15	**<qual.mat.info>**
Safety, care, and handling			B.5.2.16	**<sftyinfo>**
Nuclear hardness			B.5.2.17	**<hcp>**
Calibration			B.5.2.18	**<calref>**
Item unique identification (IUID)			B.5.2.19	**<iuid>**
Supporting information for repair parts, special tools, TMDE, and support equipment			B.5.2.26	**<supdata>**
Copyright credit line			B.5.2.27	**<copyrt>**

TABLE A-XIV. Conventional and chemical ammunition combined maintenance requirements matrix for _____.

TM Content	Conventional and Chemical Ammunition		MIL-STD-40051-2B Reference	Element Name
	-23 -23&P	-24 -24&P		
EQUIPMENT DESCRIPTION AND DATA WORK PACKAGE	R	R	B.5.3	**<descwp>**
Equipment characteristics, capabilities, and features	R	R	B.5.3.3	**<eqpinfo>**
Location and description of major components	R	R	B.5.3.4	**<locdesc>**
Differences between models			B.5.3.5	**<eqpdiff>**
Equipment data	R	R	B.5.3.6	**<eqpdata>**
THEORY OF OPERATION WORK PACKAGE			B.5.4	**<thrywp>**
CHAPTER X. MAINTENANCE INSTRUCTIONS	R	R	APPENDIX E E.5.2.3	**<mim> <maintenancecategory>**
SERVICE UPON RECEIPT WORK PACKAGE	R	R	E.5.3.2	**<surwp>**
Service upon receipt tasks			E.5.3.2.3	**<surtsk>**
Siting			E.5.3.2.3.1	**<siting>**
Shelter requirements			E.5.3.2.3.2	**<shltr>**
Service upon receipt of materiel	R	R	E.5.3.2.3.3	**<surmat>**
Installation instructions			E.5.3.2.3.4	**<install>**
Preliminary servicing of equipment			E.5.3.2.3.5	**<preserv>**
Preliminary checks and adjustment of equipment			E.5.3.2.3.6	**<prechkadj>**
Preliminary calibration of equipment			E.5.3.2.3.7	**<precal>**
Circuit alignment			E.5.3.2.3.8	**<calign>**
Ammunition markings			E.5.3.2.3.9.1	**<mark>**
Classification of defects			E.5.3.2.3.9.2	**<ammo.defect>**
Ammunition handling			E.5.3.2.3.9.3	**<ammo.handling>**
Procedures to activate ammunition			E.5.3.2.3.9.4	**<arm>**
Additional service upon receipt task			E.5.3.2.3.10	**<other.surtsk>**
Follow-on maintenance			E.5.3.2.3.11	**<followon.maintsk>**
MAINTENANCE WORK PACKAGES	R	R	E.5.3.5	**<maintwp>**
Maintenance tasks	R	R	E.5.3.5.3	**<maintsk>**
Inspect			E.5.3.5.3.2	**<inspect>**
Test			E.5.3.5.3.3	**<test>**
Service			E.5.3.5.3.4	**<service>**
Adjust			E.5.3.5.3.5	**<adjust>**
Align			E.5.3.5.3.6	**<align>**
Calibrate			E.5.3.5.3.7	**<calibration>**
Remove			E.5.3.5.3.8	**<remove>**
Install			E.5.3.5.3.9	**<install>**
Replace			E.5.3.5.3.10	**<replace>**

TABLE A-XIV. Conventional and chemical ammunition combined maintenance requirements matrix for _____.

TM Content	Conventional and Chemical Ammunition		MIL-STD-40051-2B Reference	Element Name
	-23 -23&P	-24 -24&P		
Repair			E.5.3.5.3.11	<repair>
Paint			E.5.3.5.3.12	<paint>
Overhaul			E.5.3.5.3.13	<overhaul>
Rebuild			E.5.3.5.3.14	<rebuild>
Lubricate			E.5.3.5.3.15	<lube>
Mark			E.5.3.5.3.16	<mark>
Pack			E.5.3.5.3.17	<pack>
Unpack			E.5.3.5.3.18	<unpack>
Preserve			E.5.3.5.3.19	<preserv>
Prepare for use			E.5.3.5.3.20	<prepforuse>
Assemble			E.5.3.5.3.21	<assem>
Disassemble			E.5.3.5.3.22	<disassem>
Clean			E.5.3.5.3.23	<clean>
Nondestructive inspection			E.5.3.5.3.24	<ndi>
Place in service			E.5.3.5.3.26	<pis>
Preparation for shipment and storage			E.5.3.5.3.35	<pss>
Arm			E.5.3.5.3.36	<arm>
Load			E.5.3.5.3.37	<load>
Unload			E.5.3.5.3.38	<unload>
Software maintenance			E.5.3.5.3.39	<softwaremaint>
Additional maintenance task			E.5.3.5.3.40	<other.maintsk>
Follow-on maintenance			E.5.3.5.3.41	<followon.maintsk>
GENERAL MAINTENANCE WORK PACKAGE			E.5.3.7	<gen.maintwp>
LUBRICATION INSTRUCTIONS WORK PACKAGE			E.5.3.8	<lubewp>
ILLUSTRATED LIST OF MANUFACTURED ITEMS WORK PACKAGE			E.5.3.10	
Illustrated list of manufactured items introduction work package	R	R	E.5.3.10.1	<manu_items_introwp>
Manufacturing procedures work package	R	R	E.5.3.10.2	<manuwp>
TORQUE LIMITS WORK PACKAGE			E.5.3.11	<torquewp>
WIRING DIAGRAMS WORK PACKAGE			E.5.3.12	<wiringwp>
CHAPTER X. TEST AND INSPECTION MAINTENANCE INSTRUCTIONS			APPENDIX E E.5.2.8	<mim> <testinspectioncategory>
MAINTENANCE WORK PACKAGES			E.5.3.5	<maintwp>
Inspection			E.5.3.5.3.2	<inspect>
Test			E.5.3.5.3.3	<test>

TABLE A-XIV. Conventional and chemical ammunition combined maintenance requirements matrix for _____.

TM Content	Conventional and Chemical Ammunition -23 -23&P	Conventional and Chemical Ammunition -24 -24&P	MIL-STD-40051-2B Reference	Element Name
CHAPTER X. SHIPMENT/MOVEMENT AND STORAGE MAINTENANCE INSTRUCTIONS	R	R	APPENDIX E E.5.2.9	**<mim> <shipmentmovementstoragecategory>**
MAINTENANCE WORK PACKAGES			E.5.3.5	**<maintwp>**
Preparation for storage or shipment			E.5.3.5.3.35	**<pss>**
CHAPTER X. AMMUNITION MARKING MAINTENANCE INSTRUCTIONS	R	R	APPENDIX E E.5.2.10	**<mim> <ammomarkingcategory>**
AMMUNITION MARKING INFORMATION WORK PACKAGE	R	R	E.5.3.15.2	**<ammo.markingwp>**
CHAPTER X. PARTS INFORMATION *(-23, -24)* *(-23&P, -24&P)*	P R	P R	APPENDIX F	**<pim>**
INTRODUCTION WORK PACKAGE	R	R	F.5.3.5	**<introwp>**
REPAIR PARTS LIST WORK PACKAGE	R	R	F.5.3.6	**<plwp>**
REPAIR PARTS FOR SPECIAL TOOLS WORK PACKAGE			F.5.3.7	**<stl_partswp>**
KIT PARTS LIST WORK PACKAGE			F.5.3.8	**<kitswp>**
BULK ITEM WORK PACKAGE			F.5.3.9	**<bulk_itemswp>**
SPECIAL TOOLS LIST WORK PACKAGE			F.5.3.10	**<stlwp>**
NSN INDEX WORK PACKAGE	R	R	F.5.3.11.1	**<nsnindxwp>**
P/N INDEX WORK PACKAGE	R	R	F.5.3.11.2	**<pnindxwp>**
REFERENCE DESIGNATOR INDEX WORK PACKAGE			F.5.3.11.3	**<refdesindxwp>**
CHAPTER X. DESTRUCTION OF EQUIPMENT TO PREVENT ENEMY USE ***NOTE*** *If a separate destruction of materiel manual is not developed for this equipment, then the destruction chapter must be included.*			APPENDIX H	**<dim>**
DESTRUCTION OF EQUIPMENT TO PREVENT ENEMY USE INTRODUCTION WORK PACKAGE	R	R	H.5.3	**<destruct-introwp>**
Authority to destroy	R	R	H.5.3.3	**<authorize_to_destroy>**
Reporting destruction	R	R	H.5.3.4	**<report_destruct>**

TABLE A-XIV. Conventional and chemical ammunition combined maintenance requirements matrix for _____.

TM Content	Conventional and Chemical Ammunition		MIL-STD-40051-2B Reference	Element Name
	-23 -23&P	-24 -24&P		
General destruction information	R	R	H.5.3.5	<general_destruct_info>
Degree of destruction	R	R	H.5.3.6	
Essential components and spare parts			H.5.3.7	<component_spares>
DESTRUCTION OF EQUIPMENT TO PREVENT ENEMY USE PROCEDURES WORK PACKAGE			H.5.4	<destruct-materialwp>
Parts list			H.5.4.3	<essential_spares>
Specific destruction procedures			H.5.4.4	<proc>
CHAPTER X. SUPPORTING INFORMATION ***NOTE*** *Applicable supporting information work packages shall be arranged in the order in which they are presented here and numbered accordingly.*	R	R	APPENDIX G	<sim>
REFERENCES WORK PACKAGE	R	R	G.5.2	<refwp>
INTRODUCTION FOR NON-AVIATION TWO LEVEL MAC WORK PACKAGE	R	R	G.5.3.1	<macintrowp>
NON-AVIATION TWO-LEVEL MAC WORK PACKAGE	R	R	G.5.3.3	<macwp>
EXPENDABLE AND DURABLE ITEMS WORK PACKAGE	R	R	G.5.6	<explistwp>
TOOL IDENTIFICATION LIST WORK PACKAGE			G.5.7	<toolidwp>
ADDITIONAL SUPPORTING WORK PACKAGES			G.5.11	<genwp>
REAR MATTER	R	R	5.2.3	<rear>
Glossary			5.2.3.1	<glossary>
Alphabetical index			5.2.3.2	<aindx>
DA Form 2028	R	R	5.2.3.3	<da2028>
Authentication page	R	R	5.2.3.4	<authent>
Foldout pages			5.2.3.5	<foldsect>
Back cover	R	R	5.2.3.6	<back>

Legend
R - Required
P - Prohibited
Shaded - As Required

This page intentionally left blank.

TABLE A-XV. Stand-alone destruction of materiel manual requirements matrix for _____.

TM Content	Destruction to Prevent Enemy Use TM	MIL-STD-40051-2B Reference	Element Name
DESTRUCTION TO PREVENT ENEMY USE TM ***NOTE*** *If a separate destruction of materiel manual is not developed, then the destruction chapter in the basic TM must be included.*		APPENDIX H	**<destruction_manual>**
FRONT MATTER	R	5.2.1	**<paper.frnt>**
Front cover	R	5.2.1.1	**<frntcover>**
(MC) Promulgation letter		5.2.1.3	**<promulgation>**
Warning summary		5.2.1.4	**<warnsum>**
Change transmittal page		5.2.1.5	**<chgsheet>**
List of effective pages/work packages	R	5.2.1.6	**<loepwp>**
Title page	R	5.2.1.7	**<titleblk>**
Table of contents	R	5.2.1.9	**<contents>**
CHAPTER 1. GENERAL INFORMATION	R		
GENERAL INFORMATION WORK PACKAGE	R	H.5.2	**<ginfowp>**
DESTRUCTION GENERAL INFORMATION WORK PACKAGE	R	H.5.3	**<destruct-introwp>**
Authority to destroy	R	H.5.3.3	**<authorize_to_destroy>**
Reporting destruction	R	H.5.3.4	**<report_destruct>**
General destruction information	R	H.5.3.5	**<general_destruct_info>**
Degree of destruction	R	H.5.3.6	
Essential components and spare parts		H.5.3.7	**<componenet_spares>**
CHAPTER X. DESTRUCTION OF EQUIPMENT TO PREVENT ENEMY USE	R	H.5.4	
DESTRUCTION PROCEDURES WORK PACKAGE	R	H.5.4	**<destruct-materialwp>**
Parts list		H.5.4.3	**<essential_spares>**
Specific destruction procedures	R	H.5.4.4	**< proc>**
REAR MATTER	R	5.2.3	**<rear>**
Glossary		5.2.3.1	**<glossary>**
Alphabetical Index	R	5.2.3.2	**<aindx>**
DA Form 2028	R	5.2.3.3	**<da2028>**
Authentication page	R	5.2.3.4	**<authent>**
Foldout pages		5.2.3.5	**<foldsect>**

TABLE A-XV. Stand-alone destruction of materiel manual requirements matrix for_____.

TM Content	Destruction to Prevent Enemy Use TM	MIL-STD-40051-2B Reference	Element Name
Back cover	R	5.2.3.6	<back>

Legend
R - Required
P - Prohibited
Shaded - As Required

TABLE A-XVI. BDAR requirements matrix for _____.

TM Content	BDAR TM	MIL-STD-40051-2B Reference	Element Name
BATTLE DAMAGE ASSESSMENT AND REPAIR		APPENDIX I	**<bdar>**
FRONT MATTER	R	5.2.1	**<paper.frnt>**
Front cover	R	5.2.1.1	**<frntcover>**
(MC) Promulgation letter		5.2.1.3	**<promulgation>**
Warning summary		5.2.1.4	**<warnsum>**
Change transmittal page		5.2.1.5	**<chgsheet>**
List of effective pages/work packages	R	5.2.1.6	**<loepwp>**
Title page	R	5.2.1.7	**<titleblk>**
Table of contents		5.2.1.9	**<contents>**
How to use this manual		5.2.1.10	**<howtouse>**
CHAPTER 1. GENERAL INFORMATION	R	I.5.3	**<gim>**
GENERAL INFORMATION WORK PACKAGE	R	I.5.3.1	**<ginfowp>**
BDAR GENERAL INFORMATION WORK PACKAGE	R	I.5.3.2	**<bdar-geninfowp>**
Standards and practices	R	I.5.3.2.4	**<bdar-std-practices>**
Tasks and responsibilities	R	I.5.3.2.5	**<bdar-task-resp>**
Combat threats (aviation only)		I.5.3.2.6	**<bdar-combat-threat>**
CHAPTER 2. ASSESSING BATTLE DAMAGE	R	I.5.4	**<baim>**
BATTLE DAMAGE ASSESSMENT WORK PACKAGE	R	I.5.4.1	**<damage-assesswp>**
Introduction	R	I.5.4.1.4	**<intro>**
General fault assessment tables	R	I.5.4.1.5	
CHAPTER X. GENERAL REPAIR	R	I.5.5	**<brim>**
GENERAL REPAIR WORK PACKAGE	R	I.5.5.1	**<genrepairwp>**
Introduction	R	I.5.5.1.4	**<geninfo>**
Repair procedure	R	I.5.5.1.5	**<bdar-repair-proc>**
CHAPTER X. SUPPORTING INFORMATION	R	APPENDIX G I.5.6	**<sim>**
REFERENCES WORK PACKAGE	R	G.5.2	**<refwp>**
SPECIAL OR FABRICATED TOOLS WORK PACKAGE		I.5.6.2	**<bdartoolswp>**
EXPENDABLE AND DURABLE ITEMS WORK PACKAGE	R	G.5.6	**<explistwp>**
SUBSTITUTE MATERIALS/PARTS WORK PACKAGE	R	I.5.6.4	**<substitute-matwp>**
REAR MATTER	R	5.2.3	**<rear>**
Glossary		5.2.3.1	**<glossary>**
Alphabetical Index	R	5.2.3.2	**<aindx>**

TABLE A-XVI. BDAR requirements matrix for _____.

TM Content	BDAR TM	MIL-STD-40051-2B Reference	Element Name
DA Form 2028	R	5.2.3.3	**<da2028>**
Authentication page	R	5.2.3.4	**<authent>**
Foldout pages		5.2.3.5	**<foldsect>**
Back cover	R	5.2.3.6	**<back>**

Legend
R - Required
P - Prohibited
Shaded - As Required

TABLE A-XVII. Preventive maintenance checklists requirements matrix for _.

TM Content	-10	-13	-14	-23	-24	-40	MIL-STD-40051-2B Reference	Element Name
PREVENTIVE MAINTENANCE CHCKLIST							APPENDIX J	**<pmc>**
FRONT MATTER	R	R	R	R	R	R	5.2.1.2	**<frntcover_abbreviated>**
TM Title	R	R	R	R	R	R	5.2.1.3	**<tmtitle>**
Reporting of errors	R	R	R	R	R	R	J.5.2	**<reporting>**
Notices	R	R	R	R	R	R	5.2.1.1.6 5.2.1.1.7 5.2.1.1.8 5.2.1.1.9 5.2.1.1.10 5.2.1.1.11	**<notices>**
Service Nomenclature	R	R	R	R	R	R	5.2.1.1.12	**<servnomen>**
Date	R	R	R	R	R	R	5.2.1.1.13	**<date>**
INSPECTION DATA	R	R	R	R	R	R	J.5.5	**<pmcstable>**

Legend
R - Required
P - Prohibited
Shaded - As Required

This page intentionally left blank.

TABLE A-XVIII. Lubrication orders requirements matrix for _____.

TM Content	LO	MIL-STD-40051-2B Reference	Element Name
LUBRICATION ORDER	R	APPENDIX K K.5.1	**<lubeorder>**
FRONT MATTER	R		
Front cover	R	K.5.2.	**<frntcover_abbreviated>**
TM Title	R	K.5.2.2	**<tmtitle>**
Reference line	R	K.5.2.4	**<lube-refs>**
Reporting of errors	R	K.5.2.5	**<reporting>**
Distribution statement, export control warning, and destruction notice	R	K.5.2.6	**<notices>**
Service Nomenclature	R	5.2.1.1.12	**<servnomen>**
Date	R	5.2.1.1.13	**<date>**
List of effective pages/work packages		5.2.1.6	**<loepwp>**
INTRODUCTION	R	K.5.3	**<intro>**
LUBRICATION PROCEDURES WORK PACKAGE	R	K.5.4	**<lubewp>**
REAR MATTER	R	K.5.9	**<lubeorder_rear>**
Authentication page	R	K.5.9.2	**<authent>**
Back cover	R	K.5.9.3	**<back>**

Legend
R - Required
P - Prohibited
Shaded - As Required

This page intentionally left blank.

TABLE A-XIX. DMWR maintenance/demilitarization of conventional and chemical requirements matrix for _____.

DMWR Content	DMWR Maintenance/ Demilitarization of Conventional and Chemical Ammunition	MIL-STD-40051-2B Reference	Element Name
DMWR MAINTENANCE OR DEMILITARIZAITON OF CONVENTIONAL AND CHEMICAL AMMUNITION		APPENDIX L	<dmwr_ammo>
FRONT MATTER	R	5.2.1	<paper.frnt>
Front cover	R	5.2.1.1	<frntcover>
(MC) Promulgation letter		5.2.1.3	<promulgation>
Warning summary		5.2.1.4	<warnsum>
Change transmittal page		5.2.1.5	<chgsheet>
List of effective pages/work packages	R	5.2.1.6	<loepwp>
Title page	R	5.2.1.7	<titleblk>
Table of contents	R	5.2.1.9	<contents>
CHAPTER 1. GENERAL INFORMATION AND DMWR INTRODUCTION	R	APPENDIX B	
GENERAL INFORMATION WORK PACKAGE	R	B.5.2	<ginfowp>
Scope	R	B.5.2.3	<scope>
Maintenance forms, records, and reports	R	B.5.2.4	<mfrr>
Reporting Equipment Improvement Recommendations (EIR)	R	B.5.2.5	<eir>
Corrosion Prevention and Control (CPC)	R	B.5.2.7	<cpcdata>
Item unique identification (IUID)		B.5.2.19	<iuid>
Deviations, waivers, and exceptions	R	B.5.2.22	<deviation>
DMWR INTRODUCTION WORK PACKAGE	R	L.5.4	<dmwr_introwp>
Work planning	R	L.5.4.3	<work_planning>
Disposition	R	L.5.4.4	<disposition>
Equipment	R	L.5.4.5	<equipment>
Safety requirements	R	L.5.4.6	<sfty_req>
Protection against general hazards	R	L.5.4.7	<gen_hazards>
Protection against specific hazards	R	L.5.4.8	<spec_hazards>
Hazard analysis	R	L.5.4.9	<haz_analysis>
Environmental regulation compliance	R	L.5.4.10	<erc>
Resource conservation and recovery regulations	R	L.5.4.11	<rcrr>
Resource recovery	R	L.5.4.12	<resource_recovery>
Reporting requirements	R	L.5.4.13	<reporting_req>

TABLE A-XIX. DMWR maintenance/demilitarization of conventional and chemical requirements matrix for _____.

DMWR Content	DMWR Maintenance/ Demilitarization of Conventional and Chemical Ammunition	MIL-STD-40051-2B Reference	Element Name
Tabulated data	R	L.5.4.14	<tabdata>
Flowchart		L.5.4.15	<flowchart>
CHAPTER X. OPERATIONAL REQUIREMENTS	R		
OPERATIONAL REQUIREMENTS WORK PACKAGE	R	L.5.5	<dmwr_operationalreqwp>
Special safety requirements	R	L.5.5.3	<special_sfty>
Operational steps	R	L.5.5.4	<op_steps>
Flowchart		L.5.5.5	<flowchart>
CHAPTER X. QUALITY ACCEPTANCE REQUIREMENTS	R		
QUALITY ACCEPTANCE REQUIREMENTS WORK PACKAGE	R	L.5.6	<dmwr_qarwp>
Demilitarized ammunition		L.5.6.3	<demil_qar>
Maintenance of ammunition		L.5.6.4	<maintenance_qar>
Definitions	R	L.5.6.5	<definitions>
CHAPTER X. SUPPORTING INFORMATION	R		
SUPPORTING INFORMATION ***NOTE*** *Applicable supporting information work packages shall be arranged in the order in which they are presented here and numbered accordingly.*	R	L.5.7	
REFERENCES WORK PACKAGE	R	L.5.7.1	<refwp>
EXPENDABLE AND DURABLE ITEMS LIST WORK PACKAGE	R	L.5.7.2	<explistwp>
EQUIPMENT AND SPECIAL FACILITIES WORK PACKAGE	R	L.5.7.3	<facilwp>
TABULATED DATA, MILITARY SPECIFICATIONS, AND DRAWINGS WORK PACKAGE	R	L.5.7.4	<genwp>
APPROVED INTRAPLANT TRANSFER EQUIPMENT WORK PACKAGE		L.5.7.5	<genwp>
PENTACHLOROPHENOL (PENTA)-TREATED MATERIALS WORK PACKAGE		L.5.7.6	<genwp>
ENVIRONMENTAL REQUIREMENTS WORK PACKAGE	R	L.5.7.7	<genwp>
HAZARD ANALYSIS WORK PACKAGE	R	L.5.7.8	<genwp>
OTHER SUPPORTING INFORMATION WORK PACKAGE		L.5.7.9	<genwp>

TABLE A-XIX. DMWR maintenance/demilitarization of conventional and chemical requirements matrix for _____.

DMWR Content	DMWR Maintenance/ Demilitarization of Conventional and Chemical Ammunition	MIL-STD-40051-2B Reference	Element Name
REAR MATTER	R	5.2.3	**<rear>**
Glossary		5.2.3.1	**<glossary>**
Alphabetical index		5.2.3.2	**<aindx>**
DA Form 2028	R	5.2.3.3	**<da2028>**
Authentication page	R	5.2.3.4	**<authent>**
Foldout pages		5.2.3.5	**<foldsect>**
Back cover	R	5.2.3.6	**<back>**

Legend
R - Required
P - Prohibited
Shaded - As Required

This page intentionally left blank.

APPENDIX B

GENERAL INFORMATION, EQUIPMENT DESCRIPTION, AND THEORY OF OPERATION

B.1 SCOPE.

B.1.1 Scope. This appendix establishes the technical content requirements for the preparation of general information, equipment description, and theory of operation data for major weapon systems and their related systems, subsystems, equipment, WRAs, and SRAs. This appendix is a mandatory part of this standard. The information contained herein is intended for compliance. The requirements are applicable for all maintenance levels/classes through overhaul (depot) including DMWRs and NMWRs.

B.2 APPLICABLE DOCUMENTS.

The applicable documents in Section 2 apply to this appendix.

B.3 DEFINITIONS.

The definitions in Section 3 apply to this appendix.

B.4 GENERAL REQUIREMENTS.

B.4.1 General. Descriptive information with theory of operation shall be prepared for weapon systems, major equipment, components, and applicable support and interface equipment. Information that is required to provide the user with a physical description and to functionally explain how the weapon system or equipment operates shall be included.

B.4.2 Maintenance level/class applicability. Requirements contained in this appendix are applicable to all maintenance levels/classes unless specifically labeled in bold and in parentheses. The labeled requirement may specify a specific level (e.g., **Field**) (refer to 3.86) or a specific maintenance class (refer to 3.85) (e.g., **Maintainer** or **AMC**). The labeled requirement shall be applicable to all TMs containing that maintenance level/class. An explanation of applicable Department of the Army (DA) maintenance levels/classes is provided in 3.

B.4.3 Preparation of digital data for electronic delivery. Data prepared and delivered digitally in accordance with this standard shall be XML tagged using the DTD. Data shall be formatted for presentation using stylesheets in accordance with MIL-STD-2361. Stylesheets may be prepared using XSL or other languages as specified by the acquiring activity. Where possible and when available, Army developed and provided stylesheets shall be used. Refer to 4.6 for information on obtaining or accessing the DTD and stylesheets. XML tags used in the DTD are noted throughout the text of this standard in bracketed, bold characters (e.g., **<descwp>**) as a convenience for the author and to ensure that the tags are used correctly when developing a document instance.

B.4.4 Use of the Document Type Definition (DTD)/stylesheet. The DTD referenced in this appendix interprets the technical content and structure for the functional requirements contained in this standard. Its use is mandatory. Development of the TMs is accomplished through the use of this standard, the DTD, and the guidance contained in MIL-HDBK-1222. Where possible and when available, Army developed and provided stylesheets shall be used. For additional information on the DTD and specific XSL, refer to MIL-STD-2361.

B.4.5 Content structure. The examples provided herein are an accurate representation of the content structure requirements contained in this appendix and shall be followed to permit the effective use of the DTD for General Information, Equipment Description, and Theory of Operation.

B.4.6 Style and format. This standard provides style and format requirements for the technical content requirements described in this appendix. These requirements are considered mandatory and are intended for compliance.

B.4.7 Work package development. Data developed in accordance with this appendix shall be divided into work packages. These work packages should be stand alone and are broken into the following work package types: general information, equipment description and data, and theory of operation. A work package shall contain all information and references required to support the work package type.

B.4.8 Safety devices and interlocks. Information shall be prepared pertaining to the purpose and location of all safety devices and interlocks in conjunction with the pertinent procedures.

B.4.9 Electrostatic Discharge (ESD) sensitive parts. If the equipment contains ESD sensitive parts, components, or circuits, cautions and ESD labels shall be incorporated into the applicable tasks and procedures to ensure ESD sensitive parts are not damaged or degraded during maintenance and operation. (Refer to 4.8.20 for requirements on labeling with ESD.) Actions which could damage ESD sensitive parts, but which are not directly related to handling or operation of ESD sensitive parts, shall not be annotated with the ESD acronym, but shall be preceded by a caution statement.

B.4.10 Nuclear hardness **<hcp>**. If the weapon system/equipment has nuclear survivability requirements (e.g., overpressure and burst, thermal radiation, electromagnetic pulse, or transient radiation effects on electronics), cautions and Hardness-Critical Process (HCP) labels shall be incorporated into the applicable tasks and procedures to ensure that the hardness of the equipment is not degraded during handling or operation. Refer to 4.8.19 for requirements on labeling with HCP. Actions which could degrade hardness, but which are not directly involved in establishing nuclear hardness, shall not be annotated with the acronym, but shall be preceded by a caution statement.

B.4.11 Selective application and tailoring. This standard contains some requirements that may not be applicable to the preparation of all TMs. Selective application and tailoring of requirements contained in this standard are the responsibility of the acquiring activity and shall be accomplished using APPENDIX A. The applicability of some requirements is also designated by one of the following statements: unless specified otherwise by the acquiring activity, as specified by the acquiring activity, or when specified by the acquiring activity.

B.5 **DETAILED REQUIREMENTS.**

B.5.1 Preparation of general information, equipment description, and theory of operation. The general information, equipment description, and theory of operation chapter shall be prepared and subdivided into individual work packages to provide the user with information for general requirements, descriptive data about the weapon system or equipment, and an explanation of how the weapon system or equipment works. Weapon system and equipment description and theory of operation data shall be developed in narrative or tabular form, or by whatever method is most simple or effective for conveying the specific TM application. Descriptive information

shall not contain any procedural data or warnings, cautions, or notes. When necessary for clarity or improved understanding, illustrations shall be used to support the narrative or tabular information. Refer to 4.8.9.3 for a description of work package identification information requirements. Refer to MIL-HDBK-1222 for examples of work package identification information format.

B.5.1.1 Required general information, equipment description, and theory of operation data work packages. General information, equipment description, and theory of operation data shall be developed and divided into the following types of work packages. Nomenclature used to identify the weapon system, major equipment, components, and applicable support and interface equipment shall remain consistent throughout and among all work packages.

a. General information work package **<ginfowp>** (refer to B.5.2).
b. Equipment description and data work package **<descwp>** (refer to B.5.3).
c. Theory of operation work package **<thrywp>** (refer to B.5.4).
d. General information work package (Preventive Maintenance Service Manual only) **<pms-ginfowp>** (refer to B.5.5).
e. General information work package (Phased Maintenance Checklist Manual only) **<pm-ginfowp>** (refer to B.5.6).

B.5.2 General information work package **<ginfowp>**. This work package shall contain the requirements provided in B.5.2.1 through B.5.2.27, as applicable, for the weapon system/equipment. (Refer to MIL-HDBK-1222 for examples.)

B.5.2.1 Work package identification information **<wpidinfo>**. Work package identification information is required for this work package. (Refer to 4.8.9.3.)

B.5.2.2 Work package initial setup **<initial_setup>**. Initial setup is not required for this work package.

B.5.2.3 Scope **<scope>**. A brief statement shall be prepared to tell what is covered in the TM. As applicable, the following information shall also be included:

a. Type of manual.
b. Model number(s) and equipment name(s).
c. Purpose of equipment.
d. Special inclusions in the manual, such as drill procedures or on-vehicle loading plans.

B.5.2.4 Maintenance forms, records, and reports **<mfrr>**.

a. (A) Army Only TM. The following statement shall be included:

"**MAINTENANCE FORMS, RECORDS, AND REPORTS**

Department of the Army forms and procedures used for equipment maintenance will be those prescribed by (as applicable) DA PAM 750-8, The Army Maintenance Management System (TAMMS) Users Manual; DA PAM 738-751, Functional Users Manual for the Army Maintenance Management Systems - Aviation (TAMMS-A); or AR 700-138, Army Logistics Readiness and Sustainability."

b. (MC) Marines Only TM. The following statement shall be included:

"**MAINTENANCE FORMS, RECORDS, AND REPORTS**

Maintenance forms and records used by Marine Corps personnel are prescribed by TM 4700-15/1."

c. Multi-Service TM. The following statements shall be included only for multi-service technical publications and shall use only applicable services (e.g., if the Navy does not use the publication, do not include a statement for that Service):

"**MAINTENANCE FORMS, RECORDS, AND REPORTS**

(A) Department of the Army forms and procedures used for equipment maintenance will be those prescribed by (as applicable) DA PAM 750-8, The Army Maintenance Management System (TAMMS) Users Manual; DA PAM 738-751, Functional Users Manual for the Army Maintenance Management Systems - Aviation (TAMMS-A); or AR 700-138, Army Logistics Readiness and Sustainability.

(MC) Maintenance forms and records used by Marine Corps personnel are prescribed by TM 4700-15/1.

(F) Maintenance forms and records used by Air Force personnel are prescribed in AFI 21-101 and the applicable TO 00-20 Series Technical Orders.

(N) Navy users should refer to their service directives to determine applicable maintenance forms and records to be used."

d. (A) Army conventional and chemical ammunition. The following statement shall be added:

"Accidents involving injury to personnel or damage to materiel will be reported on DA Form 285, U.S. Army Accident Report in accordance with AR 385-40. Explosives and ammunition malfunctions will be reported in accordance with AR 75-1."

e. When applicable, add references to SB 742-1, Inspection of Supplies and Equipment Ammunition Surveillance Procedures.

B.5.2.5 Reporting equipment improvement recommendations **<eir>**. The following statement shall be included (italicized text within parentheses shall be replaced with the appropriate information):

“REPORTING EQUIPMENT IMPROVEMENT RECOMMENDATIONS (EIR)

If your (*insert equipment short item name*) needs improvement, let us know. Send us an EIR. You, the user, are the only one who can tell us what you do not like about your equipment. Let us know why you do not like the design or performance.“

(A) For aviation and missiles systems add the following:

"All AMCOM (Aviation and Missile Command) Deficiency Reports (DRs), (Warranty, EIR, and PQDRs) must be submitted through the Joint Deficiency Reporting System (JDRS) at https://jdrs.mil/.

(A) For all equipment other than missile or aviation systems add the following:

"All non-Aviation/Missile EIRs and PQDRs must be submitted through the Product Data Reporting and Evaluation Program (PDREP) Web site. The PDREP site is: https://www.pdrep.csd.disa.mil/."

(MC) The following statement shall be added for Marine Corps TMs:

“For Marine Corps users: Quality deficiency reports (QDR) shall be submitted on SF 368 in accordance with MCO 4855.10. A reply will be furnished to you.”

(A) Add the following at the end after the above information:

“If you do not have internet access, you may submit your information using an SF 368 (Product Quality Deficiency Report). You can send your SF 368 using email, regular mail, or fax using the addresses/fax numbers specified in (*DA PAM 750-8, The Army Maintenance Management System (TAMMS) Users Manual* OR *DA PAM 738-751, Functional Users Manual for the Army Maintenance Management Systems - Aviation (TAMMS-A) for aviation systems*). We will send you a reply.”

B.5.2.6 Hand Receipt (HR) manuals **<handreceipt>**. If the equipment supported by the TM uses resources that require a hand receipt and a hand receipt manual has been prepared, the following statement shall be included in the maintainer maintenance or AMC manual’s and below general information work package.

“**HAND RECEIPT (HR) MANUALS**

This manual has a companion document with a TM number followed by “-HR” (which stands for Hand Receipt). TM X-XXXX-XXX-10-HR consists of preprinted hand receipts that list end item related equipment (e.g., Components of End Item (COEI), Basic Issue Items (BIIs), and Additional Authorization List (AAL)) that must be accounted for. As an aid to property accountability, additional HR manuals may be requisitioned through normal publication channels.”

B.5.2.7 Corrosion prevention and control **<cpcdata>**. A statement similar to the following shall be prepared.

"**CORROSION PREVENTION AND CONTROL (CPC)**

Corrosion prevention and control of Army materiel is a continuing concern. It is important that any corrosion problems with this item be reported so that the problem can be corrected and improvements can be made to prevent the problem in future items. The term "corrosion" means the deterioration of a material or its properties due to a reaction of that material with its chemical environment. An example is the rusting of iron. Corrosion damage in metals can be seen, depending on the metal, as tarnishing, pitting, fogging, surface residue, and/or cracking. Plastics, composites, and rubbers can also degrade (also considered to be corrosion based on the above definition of corrosion). Degradation is caused by thermal (heat), oxidation (oxygen), solvation (solvents), or photolytic (light, typically ultraviolet) processes. The most common exposures are excessive heat or light. Damage from these processes will appear as cracking, softening, swelling, and/or breaking. The US Army has defined the following nine (9) forms of corrosion used to evaluate the deterioration of metals. These shall be used when evaluating and documenting corrosion.

UNIFORM (or general attack): Affects a large area of exposed metal surface, like rust on steel or tarnish on silver. It gradually reduces the thickness of the metal until it fails.

CREVICE: Occurs in crevices created by rubber seals, gaskets, bolt heads, lap joints, dirt or other surface deposits. It will develop anywhere moisture or other corrosive agents are trapped and unable to drain or evaporate.

SELECTIVE LEACHING: One element, usually the anodic element of an alloy, corrodes away, leaving the cathodic element. This can create holes in metal.

INTERGRANULAR: Metal deterioration caused by corrosion on the bonds between or across the grain boundaries of the metal. The metal will appear to be peeling off in sheets, flaking, or being pushed apart by layers. A particular type of intergranular corrosion is exfoliation.

PITTING: This can result from conditions similar to those for crevice corrosion. Pits can develop on various materials due to their composition. Rifle boxes are big victims of pitting.

EROSION: Results when a moving fluid (liquid or gas) flows across a metal surface, particularly when solid particles are present in the fluid. Corrosion actually occurs on the surface of the metal, but the moving fluid washes away the corrosion and exposes a new metal surface, which also corrodes.

FRETTING: Occurs as a result of small, repetitive movements (e.g., vibration) between two surfaces in contact with each other. It's usually identified by a black powder corrosion product or pits on the surface.

GALVANIC: Occurs when two different types of metal come in contact with each other, like steel bolts on aluminum, for example. This is a common problem on aircraft because of their mix of metals.

STRESS: Term used to describe corrosion cracking and corrosion fatigue.

Where an item is not ready/available due to one of these forms of corrosion, it shall be recorded as a corrosion failure in the inspection record and the appropriate code (170) for corrosion shall be used when requesting/performing maintenance.

SF Form 368, Product Quality Deficiency Report should be submitted to the address specified in DA PAM 750-8, The Army Maintenance Management System (TAMMS) Users Manual."

For aircraft TMs, this information shall include a reference to TM 1-1500-344-23, volumes 1-4 (Cleaning and Corrosion Control).

For ground vehicle TMs, this information shall include a reference to TB 43-0213 (Corrosion Prevention and Control (CPC) for Tactical Vehicles)

B.5.2.8 Ozone Depleting Substances (ODSs) **<odsdata>**. The use of Class 1 ODS for new acquisitions has been curtailed by Executive Order, Public Law, and related Army policy. ODSs are listed in Title VI of the Clean Air Act. For systems procured and fielded prior to the date these became effective (June 1993) that use a Class 1 ODS, a listing of those substances required to operate and maintain the system shall be included in the manual. After June 1993, this requirement applies to any system procured or fielded that requires the use of a Class 1 ODS, where the use of the ODS has been properly documented and waived. The procuring activity will provide a list of Class 1 ODS upon request.

B.5.2.9 Destruction of Army materiel to prevent enemy use **<destructmat>**. Reference shall be made to the appropriate TM(s) or work package(s) covering the destruction of Army materiel to prevent enemy use as provided by the proponent activity.

B.5.2.10 Preparation for storage or shipment **<pssref>**. Reference shall be made to the preparation for storage or shipment procedures, including packaging and administrative storage, found in the applicable maintenance instructions work package.

B.5.2.11 Warranty information **<wrntyref>**. When the TM covers equipment that is under warranty and a Warranty Technical Bulletin (WTB) is published, the applicable WTB shall be referenced. When a WTB is not published, the following statement shall be included (italicized text within parentheses shall be replaced with the appropriate information):

"**WARRANTY INFORMATION**

The (*insert name of equipment*) is warranted for (*insert miles or other timeframe as appropriate*). The warranty starts on the date found in block 23 of DA Form 2408-9, Equipment Control Record. Report all defects to your supervisor, who will take appropriate action."

B.5.2.12 Nomenclature cross-reference list **<nomenreflist>**. A cross-reference list shall be prepared when unofficial nomenclature (common name) is approved by the proponent activity.

B.5.2.13 List of abbreviations/acronyms **<loa>**. A list of all abbreviations, acronyms, signs, or symbols used in the manual shall be prepared. Warning icons are defined in the Warning Summary. For **aircraft only**, a statement shall be prepared that abbreviations are in accordance with abbreviations contained in the Records Management and Declassification Agency (RMDA) at https://www.rmda.army.mil/abbreviation/mainmenu.asp, except when the abbreviation stands for a marking actually found in the aircraft.

B.5.2.14 Quality assurance **(QA) (DMWR/NMWR and aviation only) <qainfo>**. When specified by the acquiring activity, reference shall be made to pertinent QA information or include the appropriate general QA information. If QA information is not referenced but is included in the manual, it shall be stated that the text of each quality assurance procedure or step in the manual is preceded (and highlighted) by the addition of "QA check." For **aircraft maintenance TMs,** include a reference to FM 3-04.500. The abbreviation "QA" shall be defined either in a note or in the text.

B.5.2.15 Quality of material **<qual.mat.info>**. A statement(s) similar to the following shall be included (italicized text within parentheses shall be replaced with the appropriate information):

> "Material used for replacement, repair, or modification must meet the requirements of this (*insert manual*). If quality of material requirements are not stated in this (*insert manual*), the material must meet the requirements of the drawings, standards, specifications, or approved engineering change proposals applicable to the subject equipment."

B.5.2.16 Safety, care, and handling **<sftyinfo>**. The following general precautions and safety regulations shall be prepared.

a. (**Ammunition TMs**) Information shall be prepared to comply with DA PAM 385-63. References to applicable ARs for range safety and danger zones during training and combat shall be included. Explanations and official definitions shall be prepared for such safety-related terms as "misfire," "hangfire," and "cook-off," which describe characteristics associated with the specific items(s) covered by the TM under preparation. A reference to AR 385-10 and DA PAM 385-64 shall be made for general ammunition care, handling, and safety.
b. For TMs covering equipment with radioactive parts or components, information shall be prepared to comply with Nuclear Regulatory Commission provisions, and references to applicable ARs and safety TMs on radioactive materials shall be included. If additional coverage on radioactive materials is needed, but is not included in applicable TMs, instructions shall be prepared as required. In addition, the following information shall be prepared for inclusion throughout the TM.
    (1) Nuclear warning notices. These shall be placed at the beginning of any instruction covering procedures that will expose personnel to a nuclear radiation hazard.
    (2) Procedures to be followed before maintenance actions or in the event of breakage of radioactive parts or components. These include safety, care, and handling instructions.
    (3) Radioactive parts or components. These shall be shown and identified on a parts location diagram or illustration. Warning notices shall be included.
    (4) A list of radioactive parts or components and the type and quantity of radioactive material involved. These shall be included as part of equipment data (Refer to B.5.3).
    (5) Instructions for the disposal of radioactive material, such as the requirement to double bag all broken tritium sources in plastic.

c. ESD control standards for the protection of electrical and electronic parts, assemblies, and equipment shall be prepared. The ESD classes shall be identified. Refer to MIL-STD-1686 and MIL-HDBK-263, which contain ESD control procedures and material necessary to protect these items. For classifications of ESD marking procedures, refer to 4.8.20.

d. (**DMWRs/NMWRs only**) When applicable, reference shall be made to the electromagnetic compatibility standards (e.g., MIL-STD-461 and MIL-STD-462) that apply to the equipment covered in the DMWR/NMWR.

B.5.2.17 Nuclear hardness **<hcp>**. If equipment covered in the TM has nuclear survivability requirements (e.g., overpressure and burst, thermal radiation, electromagnetic pulse, or transient radiation effects on electronics), it shall be so stated. (Refer to 4.8.19 for marking HCP procedures.) The following statement shall be included.

"NUCLEAR HARDNESS

All hardness critical process (HCP) procedures in this manual are marked with the acronym HCP as follows:

1. When an entire task, including all paragraphs and procedures, is considered hardness critical, only the task title will be marked by nthe acronym HCP. This will be placed before the title.
2. When only certain processes and steps within the work package are hardness critical, only the applicable processes and steps will be marked by placement of the acronym HCP between each applicable step number and the text."

B.5.2.18 Calibration **<calref>**. Equipment requiring calibration shall be identified, and reference shall be made to the publication containing the applicable calibration procedure.

B.5.2.19 Item unique idenitification (IUID) <**iuid**>. If the equipment covered by the manual or any of its components/parts have IUID markings, a statement similar to the following shall be included:

"**ITEM UNIQUE IDENTIFICATION**

This equipment and/or its components/parts are marked with item unique identification (IUID) markings such as data plates, decals, or etchings. These markings must be scanned during performance of procedures to remove and replace the items marked or when turning in items or receiving them from supply or another unit. For information on location of the IUID marking for the end item, refer to the decal/data plate guide contained in the operator manual for the equipment."

B.5.2.20 Engineering Change Proposals (ECPs) **(DMWR/NMWR only) <ecp>**. The following statement shall be included (italicized text within parentheses shall be replaced with the appropriate information):

"**ENGINEERING CHANGE PROPOSALS**

Engineering Change Proposals (ECPs) will be submitted in accordance with AR 70-1 directly to (*enter the name and address of the responsible command or activity*). A reply will be furnished to you."

B.5.2.21 Modification list **(DMWR/NMWR only) <modification>**. Modification Work Orders (MWOs) and ECPs shall be identified for all modifications which have been incorporated into the work required by the DMWR/NMWR. MWOs shall be reported as outlined in AR 750-10. The applicable MWOs and the ECPs shall be listed (by title and number). This listing shall be supplied by the major subordinate command. Alternatively, a statement shall be made stating that the modifications must be applied during the overhaul of the item. For example (italicized text within parentheses shall be replaced with the appropriate information):

"**MODIFICATIONS**

All Modification Work Orders (MWOs), all minor alteration procedures (MAPs) specified in the contract/work directive, and all Engineering Change Proposals (ECPs) listed in the *(insert DMWR or NMWR)* must be applied during the overhaul of the item."

B.5.2.22 Deviations and exceptions **(DMWR/NMWR only) <deviation>**. The following statement shall be included (italicized text within parentheses shall be replaced with the appropriate information):

"**DEVIATIONS AND EXCEPTIONS**

Requests for deviations or exceptions to this (*insert Depot Maintenance Work Requirement (DMWR) or National Maintenance Work Requirement (NMWR)*) will be processed in accordance with International Standards Organization (ISO) 9000 Series standards, or equivalent."

B.5.2.23 Mobilization requirements **(DMWR/NMWR only) <mobreq>.** The following statement shall be included (italicized text within parentheses shall be replaced with the appropriate information):

"**MOBILIZATION REQUIREMENTS**

All requirements of this (*insert DMWR or NMWR*) will be exempted or revised in the event of mobilization. Only those procedures necessary to return the (*insert equipment name*) to a serviceable condition will be performed. The exemptions and revisions are explained in supporting information work package (*insert appropriate work package sequence number*)."

B.5.2.24 Critical safety items **(CSI) (Flight Safety Critical Aircraft Parts (FSCAP))(aircraft only) <csireq>**. The following statement shall be included:

"**CRITICAL SAFETY ITEMS (CSI) (FLIGHT SAFETY CRITICAL AIRCRAFT PARTS (FSCAP)) PROGRAM**

Parts, assemblies, or installations identified under the CSI (FSCAP) program require special handling during maintenance or overhaul (M&O). Throughout the M&O procedures, warnings are included emphasizing critical instructions to be followed. These warnings are identified as CSI (FSCAP) warnings.

A critical safety item is defined as:

> An aviation-related part, assembly, installation or production system with one or more critical or critical safety characteristics that, if missing or not conforming to the design data, quality requirements or overhaul and maintenance documentation, would result in an unsafe condition that

could cause loss or serious damage to the end item or major components, loss of control, uncommanded engine shutdown or serious injury or death to personnel. Unsafe conditions relate to hazard severity categories I and II of MIL-STD-882 and include items determined to be "life-limited," "fracture critical," "fatigue-sensitive," etc. The determining factor in Aviation CSI (FSCAP) is the consequence of failure, not the probability that the failure or consequence would occur.

All CSIs (FSCAPs) shall be handled and managed as prescribed in DOD 4140.1R and DA PAM 95-9.

Throughout the maintenance tasks, 'CRITICAL SAFETY ITEM (FLIGHT SAFETY CRITICAL AIRCRAFT PART)' alerts will precede the procedural step that includes a CSI (FSCAP), emphasizing that this part or parts require(s) special handling during maintenance."

B.5.2.25 Cost considerations **(DMWR/NMWR only) <cost>**. The following statement shall be included (italicized text within parentheses shall be replaced with the appropriate information):

"**COST CONSIDERATIONS**

This work requirement shall be the basis for establishing the extent of overhaul while taking into consideration cost factors. A determination shall be made on all subassemblies/assemblies to replace worn or damaged components which are available in supply, if acquisition cost is less than the cost to repair and restore to the (*insert DMWR or NMWR*) standard. The cost to repair/restore any individual item with an established Maintenance Expenditure Limit (MEL) to the (*insert DMWR or NMWR*) standard shall not exceed the MEL, unless a waiver has been approved in accordance with AR 750-1. This requirement does not apply to items exempted from MEL in accordance with AR 750-1."

B.5.2.26 Supporting information for repair parts, special tools, Test, Measurement, and Diagnostic Equipment (TMDE), and support equipment (**Maintainer/AMC and above**) **<supdata>**. When applicable, the following information shall include a reference to the common tools and equipment; special tools, TMDE, and support equipment; and the repair parts as shown in the following paragraphs. The information in B.5.2.26.1 through B.5.2.26.3 shall be included.

B.5.2.26.1 Common tools and equipment. The following statement shall be included:

"**COMMON TOOLS AND EQUIPMENT**

For authorized common tools and equipment, refer to the Modified Table of Organization and Equipment (MTOE), Common Table of Allowances (CTA) 50-970, Expendable/Durable Items (Except: Medical, Class V, Repair Parts, and Heraldic Items); CTA 50-909, Field and Garrison Furnishings and Equipment; or CTA 8-100, Army Medical Department Expendable/Durable Items; as applicable to your unit."

B.5.2.26.2 Special tools, Test, Measurement, and Diagnostic Equipment (TMDE), and support equipment. A reference to the Repair Parts and Special Tools List (RPSTL) and Maintenance Allocation Chart (MAC) shall be included. When no special tools or equipment are required, it shall be so stated. If tools are to be fabricated, reference shall be made to the Illustrated List of Manufactured Items work package (Refer to E.5.3.10).

B.5.2.26.3 Repair parts. One of the following statements shall be included (italicized text within parentheses shall be replaced with the appropriate information):

> "Repair parts are listed and illustrated in the parts information work packages beginning with (*insert TM number of RPSTL*) of this manual."
>
> OR
>
> "Repair parts are listed and illustrated in the parts information work package (*insert appropriate work package sequence number)* of this manual."

B.5.2.27 Copyright credit line **<copyrt>**. TMs should not contain copyrighted material except as specified in the Federal Acquisition Regulations and Defense Federal Acquisition Regulation Supplement. When copyrighted material is included in a TM, the TM author shall obtain prior written permission from the copyright owner or authorized agent for its use. The written permission shall contain a statement declaring whether or not a copyright credit line is required. When a copyright credit line is required, the information shall appear as the last paragraph of the general information work package.

B.5.2.27.1 Proprietary names. Trade names, copyrighted names, or other proprietary names applying exclusively to the product of one company shall not be used unless the items cannot be adequately described without using the proprietary names because of the technical involvement, construction, or composition. In such instances, one commercial product shall be listed, followed by the words "or equal." The same shall apply to manufacturers' part numbers or drawing numbers for minor parts where it is impractical to specify the exact requirements. If possible, the particular characteristics required for the "or equal" products shall be defined.

B.5.2.27.2 Advertising. Publication material shall not contain advertising matter.

B.5.3 Equipment description and data work package **<descwp>**. This work package shall contain the descriptive data requirements listed in B.5.3.1 through B.5.3.6, as applicable. If the descriptive data is provided in a separate operator manual, a paragraph referencing the equipment description and data in the operator manual shall suffice. Additional equipment description and data required for a higher maintenance level, but not included in the operator manual, shall be included. This work package shall not contain any operator or maintenance procedures.

B.5.3.1 Work package identification information **<wpidinfo>**. Work package identification information is required for this work package. (Refer to 4.8.9.3.)

B.5.3.2 Work package initial setup **<initial_setup>**. Initial setup is not required for this work package.

B.5.3.3 Equipment characteristics, capabilities, and features **<eqpinfo>**. An overall description of the equipment **<eqpdesc>** shall be prepared, including general capabilities, special features, and other like information (e.g., applications, limitations) which will be helpful in the operation and maintenance of the equipment. Unless otherwise directed, the information may be in narrative or tabular format. Additional description requirements are outlined by the following:

a. The equipment type shall be stated, as shall the following equipment features: portability or mobility, operational and special environment, and remote control.
b. Components and their functions shall not be described unless essential to continuity. For functional data, reference shall be made to the theory of operation.
c. When the equipment covered varies in scope and application or has several applications within an end item, a brief explanation of the multiple uses and a simple diagram showing all aspects of a typical application shall be prepared.
d. For **ammunition TMs**, packing and packaging information shall be prepared, including number of rounds per pack.

B.5.3.4 Location and description of major components (**except Conventional Ammunition and Chemical Manuals**) **<locdesc>**. Equipment location information shall be prepared. It shall include external and internal views of the equipment used, to show general features and all major components. This information shall not duplicate information contained in the equipment data requirements and the equipment characteristics, capabilities, and features.

a. The equipment and weapon systems configuration shall be described as follows:
   (1) A description of system areas and compartments shall be prepared. The system equipment and components contained in the areas shall be identified. To identify and locate the listed system equipment, the configuration description shall be supported by separate illustrations of each compartment and area. For aircraft only, a station diagram showing fuselage station, water line, and butt line, etc., shall be included. (Refer to FIGURE B-1.)
   (2) The subsystems or equipment comprising the system shall be identified and described. Other equipment which is installed in the subject system compartments and areas does not need to be listed in the text or called out in the illustrations if it does not directly affect the operation or maintenance of the subject system. Descriptions of operator-attended equipment shall include general statements about the nature and purpose of the controls and indicators. The text shall be supported by illustrations.
   (3) Descriptions and illustrations of associated systems' equipment shall be limited to the major units of that equipment. The descriptions shall be more concise than those of the subject system's equipment; otherwise, the same requirements shall apply. In the descriptions, emphasis shall be placed on the associated system equipment that constitutes operational or functional interfaces with the subject system. Such units shall be included in the system illustrations.
b. Illustrate the use of the equipment. Only information pertaining to the user shall be prepared.

c. Location and contents of end-item and major component identification plates shall be illustrated. Modification information and warranty plates, stencils, or location of serial numbers shall be illustrated.

B.5.3.5 Differences between models **<eqpdiff>**. Significant differences affecting interchangeability shall be identified. Specifically, differences associated with equipment models or units of the same model shall be indicated if they would affect operator or maintenance actions. These differences shall be related explicitly to equipment model, part number, or serial number ranges in such a manner that the TM user can identify the specific equipment configuration involved. When model differences exist but have no effect on operation or maintenance, this fact shall be stated.

B.5.3.6 Equipment data **<eqpdata>**.

a. Performance data shall be prepared, including numerical and other standard-related data applying to operational and maintenance functions. The equipment data shall summarize the specific capabilities and limitations of the equipment and other critical data needed by the TM user for maintenance of the equipment. Vehicle and cargo space dimensions and metric and other equivalents shall be included.
b. For systems, a list of the environmental control requirements, such as limited temperature, humidity, or other limited conditions shall be prepared. Reference shall be made to the work package(s) containing information on any damage to be expected from exceeding these limits and procedures for minimizing the damage.
c. A summary shall be prepared that lists the effects of weather conditions on equipment that could affect system capability or cause equipment damage. This summary shall include references to any special servicing procedures that must be accomplished because of climatic changes, such as adding antifreeze to coolants.
d. Instructions for the use, transportation, handling, storage, or disposal of such substances as fuels, toxic and hazardous substances, chemicals, ordnance, and munitions shall be prepared. These instructions shall meet the applicable requirements of the Federal Environmental Protection Standards (standards to be provided by the acquiring activity).
e. The energy efficiency rating shall be included for products that directly consume energy in normal operations and that commonly have a method of expressing energy efficiency.

B.5.4 Theory of operation work package **<thrywp>**. A theory of operation work package shall be prepared to provide the maintenance technician with adequate background information to support and perform maintenance tasks and troubleshooting on the weapon system, equipment, or components. DMWR/NMWR shall include this(these) work package(s) as required by the acquiring activity. The amount of detail and complexity of the theory of operation presentation shall be in accordance with the Logistics Management Information (LMI) maintenance concept, the MAC, or an approved maintenance plan. Theory of operation shall be provided as described in B.5.4.1 through B.5.4.3. This work package shall not contain any operator or maintenance procedures.

B.5.4.1 Work package identification information **<wpidinfo>**. Work package identification information is required for this work package. (Refer to 4.8.9.3.)

B.5.4.2 Work package initial setup **<initial_setup>**. Initial setup is not required for this work package.

B.5.4.3 Theory presentation. Theory of operation shall consist of a functional narrative to explain the weapon system, equipment, and component operation (electrical/electronic, hydraulic, pneumatic, and mechanical). (Refer to MIL-HDBK-1222 for an example of theory of operation.) Block diagrams, functional flow diagrams, schematics, and other illustrations shall be included to support the text. Basic theory, normally found in textbooks, shall not be included. If the TM covers more than one model of equipment, or more than one configuration of a weapon system, the differences shall be explained or separate work packages may be used. Additional theory requirements are outlined in the following:

a. When necessary, introductory general information **<intro>** may precede the theory of operation narrative.
b. For simple systems or equipment/components, all theory **<systhry>** may be included in a single work package.
c. If the relative complexity of the weapon system/equipment is such that it is reasonable to first present the theory of the end item as a unit and then present the theory of its major system, subsystems, and components, it shall be presented in a series of work packages. A separate theory of operation work package shall be developed for each aircraft system. The work package may contain the functional operation for the system **<systhry>**, its subsystems **<ssysthry>** and its components (line replacement units (LRUs) **<lruthry>** and shop replacement units (SRUs) **<sruthry>)** ; or when necessary for usability or clarity, subsystem and component theory of operation may be provided in separate work packages. Subsystem component theory of operation may be included in either the subsystem theory of operation work package or in a separate component theory of operation work package. Detailed component functional operation, common circuitry, and wiring diagrams shall not be included unless they are necessary to understand the system/subsystem function.
d. Theory narrative shall be to a depth necessary to support the technician in fault isolation to the level directed by the LMI and/or maintenance plan. The operation of the weapon system and related systems/components shall be presented in a logical flow. Significant input, output, and control signals; supply voltages; and power supply output voltages shall be identified. If the equipment operates in more than one mode, each mode shall be explained and supported by functional block diagrams. Theory of operation shall describe detailed circuitry of all repairable components as directed by the LMI/maintenance plan. Internal circuits, their relationship to each other, input and output signals, waveforms, and time-phase relationship to significant waveforms shall be included when required to understand detailed equipment operation. Theory shall not be prepared for nonrepairable, throw-away components.

B.5.5 General information work package **(Preventive Maintenance Services Manual or Preventive Maintenance Daily Manual only) <pms-qinfowp>**. This work package shall be prepared for Preventive Maintenance Services manuals and Preventive Maintenance Daily manuals. It shall contain the content requirements provided in B.5.5.1 and B.5.5.4. The italicized text shall be deleted and, as applicable, replaced with the appropriate information.

B.5.5.1 Work package identification information **<wpidinfo>**. Work package identification information is required for this work package. (Refer to 4.8.9.3.)

B.5.5.2 Work package initial setup **<initial_setup>**. Initial setup is not required for this work package.

B.5.5.3 Maintenance activities **<scope>**. The following text within quotes shall be included verbatim (italicized text within parentheses shall be replaced with the appropriate information).

"**SCOPE**

The Preventive Maintenance Services Inspection Checklist work package contains complete requirements for a (*insert specific inspection interval(s) here*) for the (*insert specific equipment here*). It does not contain instructions for repair, adjustment, or other means of rectifying conditions, nor does it contain instruction for troubleshooting to find causes for malfunctioning. Specific tolerances, limits, etc., can be found in the applicable maintenance manuals. Use of the alphabetical index in the applicable manuals will facilitate locating the required information."

B.5.5.4 General information **<pms-geninfo>**. The following text within quotes shall be included verbatim (italicized text within parentheses shall be replaced with the appropriate information).

"**INSPECTION REQUIREMENTS**

The inspection requirements contained in this work package are stated in such a manner as to establish when certain equipment is to be inspected and what conditions are desired/undesired. Compliance with the provisions outlined herein is required in order to ensure that latent defects are discovered and corrected before malfunctioning or serious trouble results. Inspection requirements are arranged, as nearly as possible, according to the manner in which they will be performed. The requirements are divided into groups and listed under the area heading in the "How To Use This Manual" portion of this manual and Figure (*insert figure number here*).

INSPECTION INTERVALS

The *(insert inspection interval here)* inspection will be performed every (*insert the specific aircraft hours here*) flight hours or (*insert specific calendar days here*) days, whichever comes first. The (*insert the specific aircraft hours here*) will not be extended except in actual operational emergencies. In no case shall the aircraft intentionally be scheduled for a flight that will cause it to exceed the (*insert the specific aircraft hours here*) inspection due time. The (*insert specific calendar days here*) interval is a full (*insert the number of weeks here if applicable*) weeks. That is, if a (*insert specific calendar days here*) is done on Tuesday, the next (*insert specific calendar days here*) days inspection will not be due until *(insert the specific day here) (insert the specific number of weeks here*) later.

SPECIFIC NON-INSTALLED EQUIPMENT ON AIRCRAFT

This work package may contain inspection requirements applicable to specific equipment not installed on your aircraft. Those requirements should be disregarded.

DA FORMS

DA Form 2408-13-1 will be used to record all deficiencies or shortcomings discovered during the (*insert specific inspection interval here*). Use DA PAM 738-751 to properly complete this form.

SPECIAL INSTRUCTIONS

The (*insert inspection interval here*) will not be exceeded except in actual operational emergencies. When operational emergencies require aircraft operation beyond the normal inspection due-time, a circled red X status symbol and an appropriate statement (to include authority) must be entered in Part I, Fault Information block of DA Form 2408-13-1 (Aircraft Inspection and Maintenance Record) until such time as the inspection is complete. When inspections are delayed to meet emergency requirements, commanders will ensure that the aircraft status symbol reverts to a red "X" and that delayed inspections are accomplished immediately upon termination of the actual emergency. When unusual local conditions of environment, use, mission, experience of flight crew and maintenance personnel, periods of inactivity, etc., are encountered; the maintenance officer will, at his discretion, increase the scope and/or frequency of maintenance of inspections as necessary to ensure safe flight.

Aircraft that are down, Not Mission Capable due to Supply (NCMS), or Not Mission Capable due to Maintenance (NMCM), are deferred from the (*insert inspection interval here*) inspection until the aircraft is returned to flyable status. When the NMCS and/or NMCM condition is cleared from the aircraft that has been deferred, the (*insert inspection interval here*) must be done before the first flight. It is the maintenance office's responsibility to determine those inspections necessary during NMCS and/or NMCM to preserve the aircraft. Maintenance situations and climates vary too much to permit a definition of an adequate inspection of the aircraft in NMCS and/or NMCM status.

Accessing procedures and detailed inspection criteria can be found in the applicable maintenance manuals. Use the alphabetical index in the applicable manuals. Unless otherwise directed, removed panels and opened doors will be reinstalled and closed upon completion of each area inspection.

The total man-hour (M/H) requirements for a complete (*insert inspection interval here*) inspection is (*insert total number of man-hours here*) M/H.

REPORTING ERRORS AND RECOMMENDING IMPROVEMENTS

You can help improve this TM. If you find any mistakes or if you know of a way to improve the procedures, please let us know. Mail the DA Form 2028 directly to: (*insert mailing address*). You may also send in your recommended changes using electronic mail, by fax, or by the World Wide Web. Our fax number is (*insert DSN and commercial number of proponent)*. Our e-mail address is (*insert e-mail address of proponent*). Instructions for sending an electronic DA Form 2028 may be found at the back of the applicable technical manual. For World Wide Web, use https://amcom2028.redstone.army.mil. A reply will be furnished to you.

OZONE DEPLETING CHEMICALS

(*insert appropriate ODC statement here*)

HAZARDOUS MATERIALS (HAZMAT)

(*insert appropriate HAZMAT statement here*)

INSPECTION AREAS

Inspection areas are shown in (*enter WP(s) title and figure number*). ”

B.5.6 General information work package **(Phased Maintenance Inspection manual only)** **`<pm-ginfowp>`**. This work package shall be prepared for Preventive Maintenance Inspection manuals and shall contain the content requirements provided in B.5.6.1 through B.5.6.3.

B.5.6.1 Work package identification information **`<wpidinfo>`**. Work package identification information is required for this work package. (Refer to 4.8.9.3.)

B.5.6.2 Work package initial setup **`<initial_setup>`**. Initial setup is not required for this work package.

B.5.6.3 General information **`<geninfo>`**. The information in B.5.6.3.1 and B.5.6.3.2 shall be included.

B.5.6.3.1 Phased schedule. One of the following shall be included verbatim as applicable (italicized text within parentheses shall be replaced with the appropriate information):

“**PHASED SCHEDULE**

The phased maintenance inspection checklist contains requirements for inspection of the (*insert aircraft model*) aircraft on a phased schedule having a (*insert flight hour cycle*) hour (*flight hours*) cycle with (*insert phase hours*) hour phases. Each requirement included herein is designated for accomplishment at least once, but not more than (*insert number of phases*) times during the (*insert flight hour cycle*) hour cycle."

OR

"**PROGRESSIVE PHASED MAINTENANCE SCHEDULE**

The progressive phased maintenance inspection checklist contains requirements for inspection of the (*insert aircraft model*) aircraft on a phased schedule of (*insert inspection interval*) hour intervals."

B.5.6.3.2 Additional general information. The following additional text shall be included verbatim (italicized text within parentheses shall be replaced with the appropriate information):

"EXCEEDING THE PHASED SCHEDULE

The phased maintenance inspection intervals designated are the maximum and shall not be exceeded except in actual operational emergencies as explained herein. It is the Commander's responsibility to determine (on an individual aircraft basis) when inspection intervals may be exceeded. For this purpose, operational emergencies are conditions of combat, or conditions of disaster which necessitate flight to evacuate aircraft or personnel. When aircraft are operated beyond the normal inspection due time because of such emergency situations, a circled red X status symbol and an appropriate statement (to include authority) must be entered on the appropriate aircraft form as specified in DA PAM 738-751 until such time as the inspection is complete. When inspections are delayed to meet emergency requirements, Commanders will ensure that

the aircraft status symbol reverts to a red X and that delayed inspections are accomplished immediately upon termination of the actual emergency. When unusual local conditions (use, type of mission, personnel, periods of inactivity, environmental conditions, etc.) dictate, it is the prerogative and responsibility of the Maintenance Officer to increase the scope and/or frequency of maintenance or inspection as necessary to ensure safe operation (TM 1-1500-328-23).

MAINTENANCE ACTIVITIES

The inspections prescribed by this checklist will be accomplished at specified phases by Aviation Maintenance Company (AMC) activities with assistance of Aviation Support Battalion (ASB) and Depot Maintenance activities when required. The inspection of the part/component is visual unless stated otherwise.

LIMITATIONS

The checklist does not contain instructions for repair, adjustment, or other means of rectifying conditions. Neither does it contain special tolerances, limits, or instructions for special troubleshooting to find causes for malfunctions. Such data will be obtained from the latest issue of the aircraft (*insert applicable aircraft technical manuals*) series Maintenance Manuals.

CHANGEOVER TO THE PHASED MAINTENANCE SYSTEM

Changeover shall be accomplished in accordance with instructions provided in (*insert appropriate TM/TB*) entitled, (*Insert title*). The requirements of this TM/TB must be accomplished before implementation of Phase 1 inspection requirements specified in this checklist.

PRE-INSPECTION MAINTENANCE TEST FLIGHT (MTF)

A pre-inspection MTF to duplicate non-hazardous equipment problems, determine unsatisfactory conditions, determine equipment operation problems, etc., is recommended before start of aircraft disassembly for phased maintenance inspection. However, the decision to perform the pre-inspection MTF shall be the responsibility of the unit Maintenance Officer.

SPECIAL INSPECTIONS, CALENDAR INSPECTIONS AND LUBRICATION REQUIREMENTS

Special inspections, calendar inspections, and lubrication requirements contained in (*insert applicable aircraft technical manual*) and those listed on the aircraft's DA Form 2408-18 shall be reviewed and accomplished in accordance with the "inspection due" requirements specified in those documents.

TIME BETWEEN OVERHAUL (TBO) AND RETIREMENT LIFE ITEMS CHECK

Before the start of the applicable phased maintenance inspection, a check will be made of components and their remaining operating hours before removal. The latest issue of the aircraft's (*insert applicable aircraft technical manual*) and DA Form 2408-16 shall be referred to for a complete listing of components and their TBO and retirement life.

USING THE PHASED INSPECTION CHECKLIST

A new checklist shall be used each time phased maintenance is due on the aircraft. This checklist is arranged such that it can be separated by area and distributed to the maintenance crew. For use of the checklist, refer to DA PAM 738-751.

FINAL RECORDS CHECK

After all corrective actions have been completed and following completion of the phased inspection, the Technical Inspector or designated supervisor shall verify that all applicable forms and records have been properly updated. All uncorrected faults shall be entered on applicable aircraft forms in accordance with DA PAM 738-751. A Final Records Checklist shall be used to ensure forms and records have been inspected for completeness and accuracy before release of the aircraft from the phased maintenance inspection. The Personal Identification (PID) of the inspector verifying the final records check shall be entered adjacent to the indicated form or record on the Final Records Checklist. The PID entered shall be registered on the Signature Sheet adjacent to that person's signature.

MAINTENANCE OPERATIONAL CHECKS

After the completion of any required corrective actions to any of the components of a functional system of the aircraft, maintenance operational checks (MOCs) shall be performed on that system to determine the effectiveness of the maintenance actions performed and to verify the proper operation of that system. These MOCs shall be performed in accordance with TM 1-1500-328-23. DA Form 2408-13-1 may be used to record and sign off on the MOC performed.

MAINTENANCE TEST FLIGHT

When all required inspections have been accomplished and initialed in accordance with the previously mentioned procedure, the Maintenance Test Flight (MTF) shall be performed in accordance with the requirements of (*insert applicable aircraft technical manuals*) and TM 1-1500-328-23 using the MTF form in the MTF TM.

CHECKLIST DISTRIBUTION

The completion of each phased maintenance inspection shall be recorded on applicable forms as prescribed by DA PAM 738-751. The signed checklist, together with all forms prescribed by DA PAM 738-751, shall be filed. Disposition shall be in accordance with DA PAM 738-751 or specific instructions in the applicable aircraft TM.

INSPECTION AREAS

(*Insert WP title and figure number*) reflects the inspection areas of the (*insert applicable aircraft model*) aircraft. Those areas are titled as shown. Figure (*insert number*) shows the location of access doors and panels which require removal at various phased maintenance inspections

REPORTING ERRORS AND RECOMMENDING IMMPROVEMENTS.

(*insert appropriate reporting errors statement here*)"

B.6 **NOTES.**

The notes in section 6 apply to this appendix.

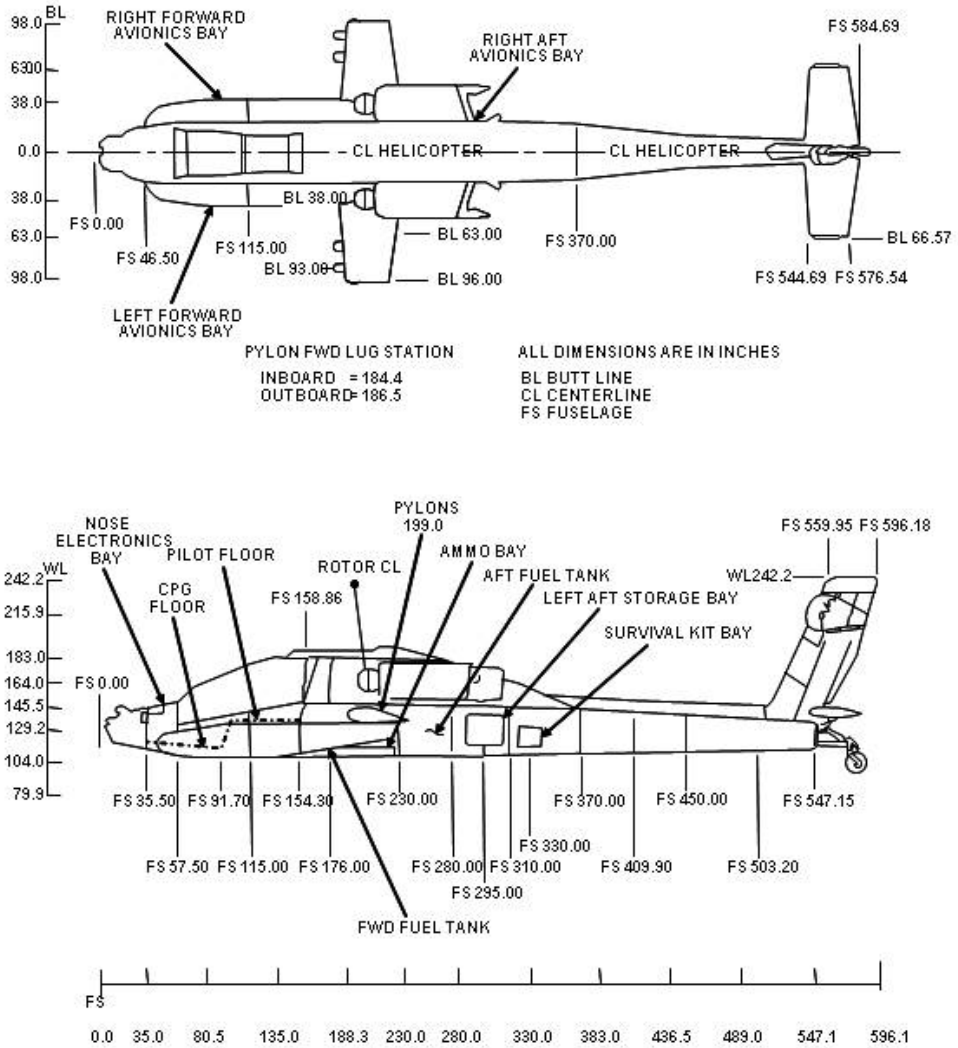

FIGURE B-1. <u>Example of a station diagram.</u>

APPENDIX C

OPERATOR INSTRUCTIONS (EXCEPT AVIATION)

C.1 SCOPE.

C.1.1 Scope. This appendix establishes the technical content requirements for the preparation of operator instructions for major weapon systems, and their related systems, subsystems, equipment, WRAs, and SRAs. This appendix is a mandatory part of this standard. The information contained herein is intended for compliance.

C.2 APPLICABLE DOCUMENTS.

The applicable documents in section 2 apply to this appendix.

C.3 DEFINITIONS.

The definitions in section 3 apply to this appendix.

C.4 GENERAL REQUIREMENTS.

C.4.1 General. Operator instructions shall be prepared for weapon systems, major equipment, components, and applicable support and interface equipment. Operating instructions shall describe the operations the crew (operator) is authorized to perform. Procedures and supporting illustrations shall be prepared so that personnel can prepare the weapon system/equipment for operation, identify and locate operational controls and indicators, and operate the weapon system/equipment safely and efficiently in both normal and emergency conditions. Unless otherwise specified, an Operator Instructions chapter shall be used for operator data. Multiple chapters should only be used for equipment that is very complex or that has multiple configurations.

C.4.2 Maintenance level/class applicability. Requirements contained in this appendix are applicable to operator class. An explanation of all applicable DA maintenance levels/classes is provided in section 3.

C.4.3 Preparation of digital data for electronic delivery. Data prepared and delivered digitally in accordance with this standard shall be XML tagged using the DTD. Data shall be formatted for presentation using stylesheets in accordance with MIL-STD-2361. Stylesheets may be prepared using XSL or other languages as specified by the acquiring activity. Where possible and when available, Army developed and provided stylesheets shall be used. Refer to 4.6 for information on obtaining or accessing the DTD and stylesheets. XML tags used in the DTD are noted throughout the text of this standard in bracketed, bold characters (e.g., **<ctrlindwp>**) as a convenience for the author and to ensure that the tags are used correctly when developing a document instance.

C.4.4 Use of the Document Type Definition (DTD)/stylesheet. The DTD referenced in this appendix interprets the technical content and structure for the functional requirements contained in this standard. Its use is mandatory. Development of TMs is accomplished through the use of this standard, the DTD, and the guidance contained in MIL-HDBK-1222. Where possible and when available, Army developed and provided stylesheets shall be used. For additional information on DTD and specific stylesheets, refer to MIL-STD-2361.

C.4.5 Content structure. The examples provided herein are an accurate representation of the content structure requirements contained in this appendix and shall be followed to permit the effective use of the DTD.

C.4.6 Style and format. This standard provides style and format requirements for the technical content requirements described in this appendix. These requirements are considered mandatory and are intended for compliance.

C.4.7 Work package development. Data developed in accordance with this appendix shall be divided into work packages. These work packages should be stand alone and are broken into the following work package types: description and use of controls and indicators, operation under usual conditions, operation under unusual conditions, emergency, stowage and decal/data plate, and on-vehicle equipment loading. A work package shall contain all information and references required to support the work package type.

C.4.8 Safety devices and interlocks. Information shall be prepared pertaining to the purpose and location of all safety devices and interlocks in conjunction with the pertinent procedures.

C.4.9 Electrostatic Discharge (ESD) sensitive parts. If the equipment contains ESD sensitive parts, components, or circuits, cautions, and ESD labels shall be incorporated into the applicable tasks and procedures to ensure ESD sensitive parts are not damaged or degraded during maintenance and operation. (Refer to 4.8.20 for requirements on labeling with ESD.) Actions which could damage ESD sensitive parts, but which are not directly related to handling or operation of ESD sensitive parts, shall not be annotated with the ESD acronym, but shall be preceded by a caution statement.

C.4.10 Nuclear hardness **<hcp>**. If the weapon system/equipment has nuclear survivability requirements (e.g., over pressure and burst, thermal radiation, electromagnetic pulse, or transient radiation effects on electronics), cautions and HCP labels shall be incorporated into the applicable tasks and procedures to ensure the hardness of the equipment is not degraded during handling or operation. Refer to 4.8.19 for requirements on labeling with HCP. Actions which could degrade hardness, but which are not directly involved in establishing nuclear hardness, shall not be annotated with the acronym, but shall be preceded by a caution statement.

C.4.11 Selective application and tailoring. This standard contains some requirements that may not be applicable to the preparation of all TMs. Selective application and tailoring of requirements contained in this standard are the responsibility of the acquiring activity and shall be accomplished using APPENDIX A. The applicability of some requirements is also designated by one of the following statements: unless specified otherwise by the acquiring activity; as specified by the acquiring activity; or when specified by the acquiring activity.

C.5 **DETAILED REQUIREMENTS.**

C.5.1 Preparation of operator instructions. Operator instructions shall be prepared and subdivided into individual work packages that provide the operator of the weapon system/equipment with descriptions and use of controls and indicators; and operation of the weapon system/equipment under usual, unusual, and emergency conditions. Weapon system and equipment operator data shall be developed in narrative or tabular form, or by whatever method is the most effective in conveying the specific TM application.

C.5.2 Operator instructions work packages.

C.5.2.1 Work package content. Work packages shall include WP identification information, initial setup information, and all required operator instruction information. When initial setup information differs for specific operator instructions, additional work packages shall be developed. Work packages shall stand alone and contain complete start-to-finish operator procedures. The words "**END OF WORK PACKAGE**" shall be placed below the last data item (e.g., text, illustration, etc.) of the work package. The operator instructions work packages described in C.5.2.2 shall be prepared, as applicable. (Refer to MIL-HDBK-1222 for examples of work package identification information format.)

C.5.2.2 Types of operator instructions work packages. The following types of operator instructions work packages shall be developed, as applicable. Note however, in cases where operating instructions are divided by crew station assignment (or auxiliary equipment), work packages shall be developed to support each crew-served station.

a. Description and use of controls and indicators work package **<ctrlindwp>** (refer to C.5.2.2.1 and FIGURE C-1).
b. Operation under usual conditions work package(s) **<opusualwp>** (refer to C.5.2.2.2). Refer to MIL-HDBK-1222 for example.
c. Operation under unusual conditions work package(s) **<opunuwp>** (refer to C.5.2.2.3). Refer to MIL-HDBK-1222 for example.
d. Emergency work package(s) **<emergencywp>** (refer to C.5.2.2.4). Refer to MIL-HDBK-1222 for example.
e. Stowage and decal/data plate guide work package **<stowagewp>** (refer to C.5.2.2.5). Refer to MIL-HDBK-1222 for example.
f. On-vehicle equipment loading plan work package **<eqploadwp>** (refer to C.5.2.2.6). Refer to MIL-HDBK-1222 for example.

C.5.2.2.1 Description and use of controls and indicators work package **<ctrlindwp>**. Information shall be prepared for the description and use of all system or equipment controls and indicators. A description and use of controls and indicators shall be prepared for each equipment, assembly, or control panel having controls and indicators. Controls and indicators shall be described using a tabular option or a narrative option (Refer to C.5.2.2.1.3 or C.5.2.2.1.4). The same format shall be used throughout the work package.

C.5.2.2.1.1 Work package identification information **<wpidinfo>**. Work package identification information is required for this work package. (Refer to 4.8.9.3.)

C.5.2.2.1.2 Work package initial setup **<initial_setup>**. Initial setup information is not required for this work package.

C.5.2.2.1.3 Controls and indicators description tabular option. This option shall describe each control and indicator in a tabular format. (Refer to FIGURE C-1.) The work package shall start with a short introduction **<intro>** that identifies the basic system, area, or other breakdown. The introduction shall be followed by one or more controls and indicators tables (**standard information per paragraph 4.8.13.7**) **<ctrlindtab>** with an associated illustration **<figure>** for each control and indicator. The number of controls and indicators standard

information tables required is dependent on several factors. These factors include but are not limited to system complexity, different users (crew members/stations) or configuration differences. For each control and indicator, the following entries shall be provided:

a. An index number **<key>** is used on the illustration to locate and identify the control or indicator on the illustration.
b. The name (nomenclature) **<ctrlind>** of the control or indicator as it appears on the equipment. Controls and indicators that are not labeled, such as the accelerator or brake pedals, shall be identified. Each control and indicator shall be clearly labeled as it appears on the equipment.
c. A description of the function of the control or indicator **<function>** shall be described.

C.5.2.2.1.4 Controls and indicators description narrative option. This option provides a narrative approach to describe each control and indicator. This textual approach shall begin with a figure **<figure>** illustrating the control or indicator that is being described. The figure shall be followed by paragraphs **<ctrlinddesc>** describing each control or indicator shown in the figure. The narrative option for controls and indicators shall contain the same items as given in C.5.2.2.1.3 a - c. More than one figure and controls and indicators description may be used to improve user understanding.

C.5.2.2.2 Operation under usual conditions work package **<opusualwp>**. Instructions to operate the weapon system/equipment and auxiliary equipment in all modes of operation shall be prepared. Any combination of control settings that will create a hazard to personnel or cause damage to equipment shall be preceded by a warning or caution. Instructions to ensure proper grounding of equipment shall be prepared.

C.5.2.2.2.1 Work package identification information **<wpidinfo>**. Work package identification information is required for this work package. (Refer to 4.8.9.3.)

C.5.2.2.2.2 Work package initial setup **<initial_setup>**. Initial setup information is required for this work package. (Refer to 4.8.9.4.)

C.5.2.2.2.3 Operations under usual tasks **<opertsk>**. The operational tasks **<opertsk>** described in C.5.2.2.2.4 through C.5.2.2.2.13 shall be included, as applicable.

C.5.2.2.2.4 Security measures for electronic data **<secref>**. Instructions for handling, loading, purging, overwriting, or unloading classified electronic data under usual conditions shall be developed when the systems are classified, have non-volatile on-board memory that is required to be cleared prior to transportation, or for any other action that might compromise the data as the result of being accessed by unauthorized personnel. Instructions shall meet the requirements of current regulations as they pertain to automation security.

C.5.2.2.2.5 Siting requirements **<site>**. When siting instructions specific to the equipment exist, these instructions shall be prepared. Operational features shall be considered, such as the following:

a. Location.
b. Proximity to power sources.
c. Effective ranges.

d. Terrain requirements to avoid screening reflections, ground clutter, and other poor operational conditions due to terrain.
e. Technical requirements.
f. Shelter locations.
g. Compensating for adverse siting conditions.
h. Orientation to a baseline during siting when the equipment contains large components, such as towers and antennas.
i. Mobile equipment oriented during installation.

C.5.2.2.2.6 Shelter requirements **<shelter>**. When equipment is normally housed in a permanent or semi-permanent shelter (other than a military truck, van, or transportable shelter) during use, the following information shall be prepared:

a. Amount of floor, wall, and height space required to house the equipment.
b. A plan for a typical layout.
c. Required weight capacity of the building floor.
d. Dimensions required for installed equipment.
e. Total weight that the floor must support and the area in square feet over which the total weight will be distributed.
f. Environmental conditions (e.g., venting).
g. Power requirements.
h. Unusual requirements specific to the equipment, such as air-conditioning.
i. Architectural and engineering data on beam sizes, lengths, bending moments, and required supports shall not be included.

C.5.2.2.2.7 Assembly and preparation for use **<prepforuse>**. Procedures shall be prepared when unpacking, assembly, and installation is required. When the equipment is shipped or delivered in specially designed containers, unpacking instructions shall be prepared. If the containers are to be used again, kept for future use, turned in to supply, or if any special disposition is required, the necessary procedures shall be prepared. Assembly and installation procedures shall be prepared when needed. These instructions shall be supported by illustrations. As applicable, power requirements, connections, and initial control settings needed for installation purposes shall be included.

C.5.2.2.2.8 Initial adjustments before use and self-test **<initial>**. Procedures shall be prepared for any routine checks, self-test, or adjustments that the operator must make before putting the equipment in operation is required.

C.5.2.2.2.9 Operating procedures **<oper>**. The following operating instructions shall be prepared, as applicable:

a. All steps necessary to bring the equipment from OFF through STANDBY condition to full operation, including all necessary warnings and cautions.
b. Procedures for each mode of operation; e.g., manual, automatic, local, remote, etc. The use and relative advantage of each mode shall also be described.

c. Description of the equipment's anti-jamming and interference reduction features, the advantage of each feature, and the operating procedures to be followed. Supporting illustrations (such as indicator displays, waveforms, etc.) that provide typical observations of jamming and interference for evaluation by the operator shall be included.

d. Operator turn-off procedures, including all steps necessary to bring the equipment from full operation through STANDBY to OFF condition.

e. Operating procedures for misfire, hangfire, and other events applicable to ammunition.

f. Operating procedures explaining how the equipment is operated in conjunction with auxiliary equipment or how it operates when integrated with other equipment.

g. When specified by the acquiring activity, operating procedures containing the identification, loading, initializing, and downloading of applicable operational and diagnostic software shall be included. Identification of the software shall include the purpose, configuration applicability, and version information. Procedures that verify that the proper software has been loaded and is operating properly shall also be included. Examples of specific types of data that may be applicable to these work packages are:

   (1) Descriptions of screen data and interpretation of message formats.

   (2) Operator actions based on screen display.

   (3) Data entry by the Operator.

   (4) Saving or purging data.

   (5) Processing of messages.

   (6) Software transfer procedures.

   (7) Reviewing message and entry formats.

C.5.2.2.2.10 Operating procedure considerations. The following considerations should be taken into account when preparing operating procedures:

a. Initial safety requirements (actions, inspections, and emergency turn-off procedures).

b. If a particular operating procedure or step is assigned to a specific crew-served position (e.g., gunner), the assignment must be indicated.

c. Connection of any accessory equipment not permanently connected.

d. Instructions for obtaining or confirming the presence of all critical inputs such as power, coolant, air, signal, air-conditioning, etc. Specific values for critical inputs (power, coolant, air, etc.) shall also be included.

e. Procedures for setting controls and making adjustments that must be accomplished by the operator prior to equipment turn-on.

f. Procedures for determining operational readiness and the acceptable indications expected from built-in indicators, such as meters, lamps, gauges, displays, and recorder readouts.

g. Milestones in the operational status of the equipment, indicated by brief statements, such as "The generator is now in STANDBY."

h. Visual or audible observations that occur as a result of an operator action, such as boom lowering, sweep rotation, blower motor running, etc.

C.5.2.2.2.11 Operating auxiliary equipment **<operaux>**. If applicable, procedures shall be prepared for putting any auxiliary equipment into operation, operating it, and putting it in standby or shutdown status. If these procedures are published in another TM covering the auxiliary equipment, reference shall be made to that TM in accordance with 4.8.25.1.

C.5.2.2.2.12 Preparation for movement **<prepmove>**. Preparation for movement procedures shall be prepared if the equipment is designed for movement and it can be readied for movement by the operator. Procedures shall be prepared for actions such as disassembly, folding, and telescoping. Illustrations shall be prepared, as required, to support the text. This information shall not duplicate the "assembly and preparation for use" requirements contained in C.5.2.2.2.7.

C.5.2.2.2.13 Decals and instruction plates **<instructplt>**. Decals and operating instruction plates located on the equipment, which are essential for operation, shall be clearly illustrated, so that all information is legible. Related warning and caution decals and plates shall be included. An illustration(s) shall be prepared to show the location of all applicable decals and plates including item unique identification markings.

C.5.2.2.3 Operation under unusual conditions work package **<opunuwp>**. Instructions shall be prepared for operation under unusual conditions. Preventive or protective measures to be taken beyond the operator capabilities shall be identified. Instructions to ensure proper grounding of equipment shall be prepared, as applicable.

C.5.2.2.3.1 Work package identification information **<wpidinfo>**. Work package identification information is required for this work package. (Refer to 4.8.9.3.)

C.5.2.2.3.2 Work package initial setup **<initial_setup>**. Initial setup information is required for this work package. (Refer to 4.8.9.4.)

C.5.2.2.3.3 Operations under unusual tasks **<opunutsk>**. The operational tasks described in C.5.2.2.3.4 through C.5.2.2.3.10 shall be included, as applicable.

C.5.2.2.3.4 Security measures for electronic data **<secref>**. Instructions for handling, loading, purging, overwriting, or unloading classified electronic data under unusual conditions shall be provided. These instructions shall be developed when the systems are classified. Instructions shall meet the requirements of current regulations as they pertain to automation security. Procedures shall include but are not limited to:

a. clearing non-volatile on-board memory that is required to be cleared before transport,
b. any other action that allows the data to be accessed by unauthorized personnel.

C.5.2.2.3.5 Unusual environment/weather **<unusualenv>**. Procedures shall be prepared for operation under conditions of extreme moist heat, extreme dry heat, extreme cold, salt air, sea spray, dust storms, sand storms, high altitudes, snow, mud, and other similar adverse environmental/weather conditions. Ranges of environmental/weather operating conditions considered for the system addressed shall be defined.

C.5.2.2.3.6 Fording and swimming **<fording>**. If applicable, procedures for fording and swimming the equipment shall be provided.

C.5.2.2.3.7 Interim Chemical, Biological, Radiological, and Nuclear (CBRN) decontamination procedures **<decon>**. As applicable and specified by the acquiring activity, interim general CBRN decontamination procedures to be performed until CBRN decontamination facilities are available shall be prepared. Other decontamination TMs shall be referenced only when necessary.

C.5.2.2.3.8 Jamming and Electronic Countermeasures (ECM) procedures **<ecm>**. As applicable, procedures shall be prepared for operation of the equipment in an ECM environment through transmitted and reflected deception signals and through transmitted and reflected jamming.

C.5.2.2.3.9 Degraded operation procedures **<degraded>**. When operation of the equipment in a degraded condition is required, procedures shall be prepared for temporarily adapting the equipment and the operating procedures to meet the reduction of power, partial failure, failure of a portion of the equipment, or similar conditions.

C.5.2.2.3.10 Decals and instruction plates **<instructplt>**. Decals and operating instruction plates located on the equipment, which are essential for operation, shall be clearly illustrated, so that all information is legible. Related warning and caution decals and plates shall be included. An illustration(s) shall be prepared to show the location of all applicable decals and plates including item unique identification markings.

C.5.2.2.4 Emergency work package **<emergencywp>**. As applicable, emergency procedures for, but not limited to, operating and shutting down equipment during emergency conditions shall be prepared. Emergency work packages shall be marked as specified in 4.8.22.2.

C.5.2.2.4.1 Work package identification information **<wpidinfo>**. Work package identification information is required for this work package. (Refer to 4.8.9.3.)

C.5.2.2.4.2 Work package initial setup **<initial_setup>**. Initial setup is required for this work package. (Refer to 4.8.9.4.)

C.5.2.2.4.3 Emergency operation **<emergency>**. Procedures covering operation of the equipment during emergency conditions (control failure, air failure, lube oil failure, loss of cooling water, etc.) shall be provided. Emergency operating instructions shall be included. A warning or a caution to return the equipment to proper operation when the emergency is over shall also be included.

C.5.2.2.4.4 Emergency shutdown **<emergency>**. Procedures to turn the equipment off during an emergency (fire, water, smoke, hazard to personnel, loss of coolant, normal power, etc.) shall be provided.

C.5.2.2.5 Stowage and decal/data plate guide work package **<stowagewp>**. This work package shall be prepared as directed by the acquiring activity. The guide plan shall include information provided by the acquiring activity. The data described in C.5.2.2.5.1 through C.5.2.2.5.5 shall be included.

C.5.2.2.5.1 Work package identification information **<wpidinfo>**. Work package identification information is required for this work package. (Refer to 4.8.9.3.)

C.5.2.2.5.2 Work package initial setup **<initial_setup>**. Initial setup is not required for this work package.

C.5.2.2.5.3 Introduction **<intro>**. A brief scope statement shall be prepared explaining the purpose of the work package.

C.5.2.2.5.4 Stowage guide **<stowinfo>**. Data on the location of applicable COEIs, BII, and AAL items shall be prepared. An illustration shall be included to facilitate the location of the items.

C.5.2.2.5.5 Decal/data plate guide **<decalinfo>**. Data on the location of all decals and data plates including item unique identification (IUID) markings, if applicable, shall be prepared. As applicable, illustrations detailing the locations of the decals and data plates shall be included.

C.5.2.2.6 On-vehicle equipment loading plan work package **<eqploadwp>**. This work package shall be prepared when applicable to the equipment. The loading plan shall include information provided by the acquiring activity. The data described in C.5.2.2.6.1 through C.5.2.2.6.4 shall be included.

C.5.2.2.6.1 Work package identification information **<wpidinfo>**. Work package identification information is required for this work package. (Refer to 4.8.9.3.)

C.5.2.2.6.2 Work package initial setup **<initial_setup>**. Initial setup is not required for this work package.

C.5.2.2.6.3 Introduction **<intro>**. A brief scope statement shall be prepared explaining the purpose of the loading plan and identifying the equipment covered by the on-vehicle equipment loading plan work package.

C.5.2.2.6.4 Illustrated loading plan list(s) **<loaddesc>**. An illustration identifying and locating the on-vehicle equipment shall be included. External and internal views shall be used, if necessary. As applicable, both tactical and nontactical situation loading configurations shall be shown.

C.6 **NOTES.**

The notes in section 6 apply to this appendix.

TM X-XXXX-XXX-10 0004

CREW MAINTENANCE
DESCRIPTION AND USE OF OPERATOR CONTROLS AND INDICATORS

INTRODUCTION

The following tables and illustrations provide the description and use of the controls and indicators pertaining to the instrument and auxiliary panels, center console, steering column, floor-mounted/door-mounted seat exterior, M1079 van controls, and special purpose kit controls and indicators. Some switch locations on the auxiliary panels may be blank depending on the model of your vehicle controls.

Figure 1. Instrument Panel Controls and Indicators

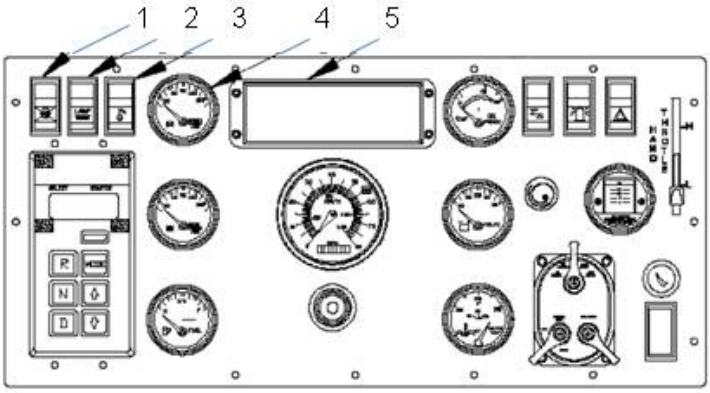

STEERING WHEEL REMOVED FOR CLARITY

1B01A011

Table 1. Instrument Panel Controls and Indicators

Key	Control/Indicator	Function
1	Radiator Fan Off Switch	When positioned on, radiator fan off switch will illuminate to indicate the radiator fan is disabled. Radiator fan off switch will remain in the off position and will not be illuminated, unless otherwise directed.
2	Lamp Test Switch	Tests the lights on high engine temperature and TRANS OIL TEMP indicators on Lighted Indicator Display.
3	Ether Start Switch	Injects ether into engine intake system to assist with cold weather starting when switch is pressed.
4	FRONT BRAKE AIR Pressure Gauge	Shows air pressure (in psi) available to operate front brakes. Normal air pressure range is 65-120 psi (448-827 kPa).
5	Lighted Indicator Display	Indicator lights to indicate operating characteristics of the vehicle. Figure 5 shows all indicators on the Lighted Indicator Display.

0004-1

FIGURE C-1. Example of controls and indicators.

APPENDIX D
TROUBLESHOOTING PROCEDURES

D.1 SCOPE.

D.1.1 Scope. This appendix establishes the technical content requirements for the preparation of troubleshooting procedures for major weapon systems and their related systems, subsystems, equipment, WRAs, and SRAs. This appendix is a mandatory part of this standard. The information contained herein is intended for compliance. The requirements are applicable for all maintenance levels/classes through overhaul (depot) including DMWRs and NMWRs.

D.2 APPLICABLE DOCUMENTS.

The applicable documents in section 2 apply to this appendix.

D.3 DEFINITIONS.

The definitions in section 3 apply to this appendix.

D.4 GENERAL REQUIREMENTS.

D.4.1 General. Troubleshooting procedures shall be prepared for weapon systems, major equipment, components, and applicable support and interface equipment. Troubleshooting procedures and supporting illustrations shall be prepared so that operator/crew and maintenance personnel can perform all required operator through depot level (overhaul) troubleshooting.

D.4.2 Development of troubleshooting instructions. Troubleshooting instructions shall cover all items comprising the weapon system/equipment, such as assemblies, subassemblies, components, wiring, junction boxes, and accessories. Troubleshooting procedures shall isolate faults to the part(s) authorized by the RPSTL for repair or replacement at the maintenance level addressed. Tasks shall be presented in the order in which they are performed. Approved LMI, service experience, performance data on similar equipment, other RMS and Ao data available shall be used in the preparation of specific troubleshooting procedures. Troubleshooting procedures shall begin with diagnostic tests, observed problems, a fault symptom or malfunction and shall diagnose to a single fault/failure. Troubleshooting shall refer to specific maintenance or repair tasks to correct the fault. Instructions, where applicable, shall flow from operator level through field and sustainment until the fault is isolated. Procedures shall include schematics and illustrations as needed (or shall reference to required schematics, etc.). Troubleshooting data shall be test and fault-isolation oriented. Troubleshooting instructions shall include detailed inspection and troubleshooting information. Instructions shall include or reference functional descriptions of subsystems being diagnosed to aid the operator/technician. The method used for identifying system equipment test points, including the requirements and methods of determining defects through visual inspection, shall be explained.

D.4.3 Maintenance level/class applicability. Requirements contained in this appendix are applicable to all maintenance levels/classes unless specifically labeled in bold and in parentheses. The labeled requirement may specify a specific level (e.g., **Field**) (refer to 3.87) or a specific maintenance class (refer to 3.85) (e.g., **Maintainer** or **AMC**). The labeled requirement shall be applicable to all TMs containing that maintenance level/class. An explanation of applicable DDA maintenance levels/classes is provided in section 3.

D.4.4 Preparation of digital data for electronic delivery. Data prepared and delivered digitally in accordance with this standard shall be XML tagged using the DTD. Data shall be formatted for presentation using stylesheets in accordance with MIL-STD-2361. Stylesheets may be prepared using XSL or other languages as specified by the acquiring activity. Where possible and when available, Army developed and provided stylesheets shall be used. Refer to 4.6 for information on obtaining or accessing the DTD and stylesheets. XML tags used in the DTD are noted throughout the text of this standard in bracketed, bold characters (e.g., **<tswp>)** as a convenience for the author and to ensure that the tags are used correctly when developing a document instance.

D.4.5 Use of Document Type Definition (DTD)/stylesheet. The DTD referenced in this appendix interprets the technical content and structure for the functional requirements contained in this standard. Its use is mandatory. Development of TMs is accomplished through the use of this standard, the DTD, and the guidance contained in MIL-HDBK-1222. Where possible and when available, Army developed and provided stylesheets shall be used. For additional information on the DTD and specific XSL, refer to MIL-STD-2361.

D.4.6 Content structure. The examples provided herein are an accurate representation of the content structure requirements contained in this appendix and shall be followed to permit the effective use of the DTD.

D.4.7 Style and format. This standard provides style and format requirements for the technical content requirements described in this appendix. These requirements are considered mandatory and are intended for compliance.

D.4.8 Work package development. Data developed in accordance with this appendix shall be divided into work packages. These work packages should be stand alone and are broken into the following work package types: troubleshooting introduction, technical description, troubleshooting index, operational checkout, troubleshooting, diagnostic, preshop anlaysis, and component checklist. A work package shall contain all information and references required to support the work package type.

D.4.9 Safety devices and interlocks. Information shall be prepared pertaining to the purpose and location of all safety devices and interlocks in conjunction with the pertinent procedures.

D.4.10 Electrostatic discharge (ESD) sensitive parts. If the equipment contains ESD sensitive parts, components, or circuits, cautions and ESD labels shall be incorporated into the applicable tasks and procedures to ensure ESD sensitive parts are not damaged or degraded during maintenance and operation. (Refer to 4.8.20 for requirements on labeling with ESD.) Actions which could damage ESD sensitive parts, but which are not directly related to handling or operation of ESD sensitive parts, shall not be annotated with the ESD acronym, but shall be preceded by a caution statement.

D.4.11 Nuclear hardness **<hcp>**. If the weapon system/equipment has nuclear survivability requirements (e.g., overpressure and burst, thermal radiation, electromagnetic pulse, or transient radiation effects on electronics), cautions and HCP labels shall be incorporated into the applicable tasks and procedures to ensure the hardness of the equipment is not degraded during handling or operation. Refer to 4.8.19 for requirements on labeling with HCP. Actions which could degrade hardness, but which are not directly involved in establishing nuclear hardness, shall not be annotated with the acronym, but shall be preceded by a caution statement.

D.4.12 Selective application and tailoring. This standard contains some requirements that may not be applicable to the preparation of all TMs. Selective application and tailoring of requirements contained in this appendix are the responsibility of the acquiring activity and shall be accomplished using APPENDIX A. The applicability of some requirements is also designated by one of the following statements: unless specified otherwise by the acquiring activity; as specified by the acquiring activity; or when specified by the acquiring activity.

D.5 **DETAILED REQUIREMENTS.**

D.5.1 Testing and troubleshooting philosophy. Testing and troubleshooting data shall be developed to the extent required to maintain aircraft and other major weapon systems, equipment, components and support equipment at the authorized maintenance level in accordance with the LMI, MAC, or Maintenance Plan and the SMR codes developed for the weapon system/equipment. Other factors to be considered in the development of troubleshooting procedures include, but are not limited to, the following:

a. Technical experience (target audience).
b. User environment.
c. System quick-turnaround requirements.
d. Test equipment requirements and availability.
e. Automated versus manual testing.
f. Replaceable component and part reliability.
g. Ease of testing.
h. Test access time.
i. Test time.

D.5.2 Information to be provided. Troubleshooting information shall be provided in combination with test procedures. This testing and troubleshooting information shall guide the technician, in as practical a manner as possible, to the system, subsystem, equipment, WRA, SRA, or further to the replaceable part, interconnecting wire, or mechanical linkage, which caused the malfunction or failure. All information required to perform the tests and evaluate probable malfunctions of the assembled systems or equipment shall be provided.

D.5.2.1 Methods of testing and troubleshooting. The number of interrelated systems, assemblies, subassemblies, components, types of equipment, and the maintenance plan shall be taken into consideration as to the type and depth of testing and troubleshooting instructions to be developed. Based on the complexity of the system or equipment, manual (non-automatic), semi-automatic or automatic testing and troubleshooting methods shall be used. Functional testing is usually performed using a test set or test console whereby technicians make end-to-end checks of the system or equipment to ensure it will perform the function it was intended to do.

D.5.2.1.1 Manual (non-automatic) troubleshooting. Troubleshooting procedures using non-automatic test equipment shall be established on a system test concept. To meet the objectives of reduced maintenance downtime and decreased fault detection time, malfunction symptoms shall be identified to specific points of entry into the testing/troubleshooting cycle. Every effort shall be employed to avoid repetition of time-consuming end-to-end tests.

D.5.2.1.2 Semi-automatic or automatic testing and troubleshooting. Many systems have been designed to use semi-automatic/automatic test equipment. These systems are designed and programmed for rapid electronic testing in the interest of reducing maintenance downtime to fault isolate and repair.

D.5.2.1.3 Testing and troubleshooting using built-in-test equipment (BITE). Many systems/pieces of equipment have been designed with BITE capabilities. BITE identifies faults to the operator or maintenance technician. BITE faults may be further isolated using diagnostic software or other troubleshooting procedures. When diagnostic software is used to isolate Built-In Test (BIT) faults, the software required to be used shall be identified in the TM.

D.5.2.1.4 Sensor derived failures. If the equipment/system has installed sensors, they shall be used to provide critical information on system operation or discrepancies.

D.5.2.1.5 Failure interpretation. Lookup tables for manually tested systems or software coding for semi-automatic and automatic systems shall be prepared so that the maintenance technician may properly interpret these displays and isolate and correct malfunctions.

D.5.2.2 Types of testing and troubleshooting information. Testing and troubleshooting information includes fault reporting/fault isolation data and detailed testing and troubleshooting procedures for each weapon system's equipment, systems, components, and support equipment. When applicable, integrated system testing and troubleshooting for aircraft and major weapon systems shall also be included.

D.5.2.2.1 Fault reporting/fault isolation information. Fault reporting information provides the crew member(s) or other operating personnel with a standardized means for reporting malfunctions and fault symptoms. Fault isolation information is designed for use in rapid isolation of faults revealed during an operational mission or when the aircraft/weapon system is in an operational configuration on the ground. This data shall instruct maintenance personnel as to what maintenance actions to perform and/or what procedures to use to correct reported faults. Fault reporting information and the fault isolation data are designed to be used together. Fault isolation information coverage shall be limited to faults identified in the fault reporting data that require specific procedures to isolate the cause. Fault reporting data shall reference the fault isolation data to the maximum extent practical for isolation of indicated malfunctions.

D.5.2.2.2 Integrated system testing and troubleshooting. When several systems are dependent upon each other for proper operation, the interdependent systems, as a unit, are identified as an integrated system. The testing of an integrated system is a checkout of the interdependent systems and shall reflect the assumption that the technician performing the check is qualified and is familiar with its systems and subsystems. Development and content of testing and troubleshooting for integrated systems shall be determined based on the systems having self-test or BIT capabilities, or requiring the use of a system peculiar test set, or common test equipment. These compound applications require more specifics on the criteria of which components or signals are tested by which method. In addition to coverage of the integrated system, the associated systems making up the integrated system shall be covered separately.

D.5.2.2.2.1 Integrated systems having self-test or built-in test (BIT) capability. Testing and troubleshooting procedures shall identify components or functions which are tested, and any additional input required for proper testing (power parameters, signals, motion, air, hydraulic, etc.). If wiring tests are included they should have defined testing parameters (which wires are tested, resistance tolerances, open definitions, wire-to-wire and wire-to-ground resistances, and any peculiar wire criteria) and what fault verification is required for a failure indication.

D.5.2.2.2.2 Integrated systems requiring the use of system peculiar test sets. Testing and troubleshooting procedures shall include identical parameters as those in D.5.2.2.2.1 with the additional requirement for special cables or support equipment that may be required.

D.5.2.2.2.3 Integrated systems requiring the use of common test equipment. Testing and troubleshooting procedures shall focus on actual readings or signal requirements so that sources of common test equipment will not be restricted.

D.5.3 Troubleshooting procedures content. The procedures shall contain all essential and pertinent information that would be included in any other form of maintenance procedure. This includes warnings, cautions, notes, power turn-on procedures, pre-checkout procedures, reference diagrams, and initial switch settings. In addition to external causes for malfunctions, troubleshooting should also identify symptoms resulting from failure of every spare and repair part authorized for replacement at user level. Troubleshooting procedures shall be prepared assuming one malfunction at a time is being corrected. The operator/technician shall be instructed to perform any applicable self-tests, alignments, and inspections before beginning any other troubleshooting procedures. As applicable, an operational check shall be specified to be performed after the fault is corrected to ensure correct operation of the system. Troubleshooting procedural instructions shall be prepared following these general requirements:

a. A concise explanation of the testing and troubleshooting format and an explanation of how to use the testing and troubleshooting procedures with the malfunction/symptom index, when applicable, shall be included.
b. The location for each component, accessory, connector, or junction box in the system under test shall be provided or a reference to the equipment description and data work package shall be included. The text and illustrations, as necessary, shall identify every test connector or other test point to be used in the test.
c. A complete list of test options shall be stipulated by the troubleshooting procedure. Any self-tests that are associated with the system shall be listed. Self-test schemes shall be described as the primary troubleshooting tool, with manual or automatic troubleshooting prepared to supplement the instructions where the self-test leaves off or fails to locate the malfunction. The procedure shall be built using system self-tests before using external test equipment.
d. Test setup procedures and post-test teardown procedures shall be included.
e. Complete step-by-step troubleshooting procedures, including instructions required for use and application of installed on-line testing equipment, shall be included. Procedures shall take into account controls, test point accessibility, indicator displays, and the feasibility of using BITE or automated test equipment where available.
f. Test procedures (e.g., system turn on, identification of time required to run and complete the system test, and an indication of any possible mid-test interruptions or stoppages and how to respond to them) shall be included.

g. Backup diagrams showing all test points, input and output signals, logic charts, schematics, signal flow diagrams, tables, and other illustrations as required for comprehensible understanding of the procedures shall be included.

h. Any information that will aid the operator/technician, such as waveforms; resistance data; fluid pressures; voltage levels; references to test diagrams, functional diagrams, text, etc.; and alignment procedures, checkout procedures, or other scheduled maintenance procedures shall be included. Connector numbers, pin designations, etc., shall be identified.

i. Special attention shall be given to interface wiring fault isolation procedures. Wiring fault isolation procedures shall include the following types of data, as applicable:

   (1) Specific wire reading access points and resistances for wiring components (where practical).

   (2) Wire-to-wire and wire-to-ground criteria for circuit integrity.

   (3) Special wire definition where required (including interconnecting criteria for proper sealing or terminal application), and special notations where wire harnesses should be completely replaced and not repaired.

   (4) It is also essential when developing fault isolation procedures to provide or refer to ground stud tables, which include type, location, and wires connected; charts for both connectors and terminal boards; and a wire number log to identify any wire with its prime wiring diagram.

D.5.4 Types of testing and troubleshooting. Depending on the type and complexity of the weapon system/equipment, the TM may contain the following testing and troubleshooting categories.

D.5.4.1 Aviation testing and troubleshooting category **(Aircraft Troubleshooting TMs only)** **`<troubleaviationcategory>`**. When developing Aircraft Troubleshooting TMs, the following work packages shall be developed as specified in their detailed paragraph:

a. Introduction work package **`<tsintrowp>`** (refer to D.5.5.3).

b. Technical description work package **`<techdescwp>`** (refer to D.5.5.4).

c. Troubleshooting index work package **`<tsindxwp>`** (refer to D.5.5.5).

d. Operational checkout work packages **`<opcheckwp>`** (refer to D.5.5.8.3).

e. Troubleshooting work packages **`<tswp>`** (refer to D.5.5.8.4).

f. Combined operational checkout and troubleshooting work package **`<opcheck-tswp>`** (refer to D.5.5.8.5).

D.5.4.2 Standard testing and troubleshooting category **`<troublecategory>`**. When developing TMs with maintenance level below depot, the following work packages shall be developed as specified in their detailed paragraph:

a. Introduction work package **`<tsintrowp>`** (refer to D.5.5.3).

b. Troubleshooting index work package **`<tsindxwp>`** (refer to D.5.5.5).

c. Operational checkout work packages **`<opcheckwp>`** (refer to D.5.5.8.3).

d. Troubleshooting work packages **`<tswp>`** (refer to D.5.5.8.4).

e. Combined operational checkout and troubleshooting work package **<opcheck-tswp>** (refer to D.5.5.8.5).

D.5.4.3 DMWR/NMWR testing and troubleshooting category **(depot only)** **<troubledmwrnmwrcategory>**. When developing DMWRs or NMWRs, the following work packages shall be developed as specified in their detailed paragraph:

a. Introduction work package **<tsintrowp>** (refer to D.5.5.3).
b. Troubleshooting index work package **<tsindxwp>** (refer to D.5.5.5).
c. Preshop analysis work package **<pshopanalwp>** (refer to D.5.5.6).
d. Component checklist work package **<compchklistwp>** (refer to D.5.5.7).
e. Operational checkout work packages **<opcheckwp>** (refer to D.5.5.8.3).
f. Troubleshooting work packages **<tswp>** (refer to D.5.5.8.4).
g. Combined operational checkout and troubleshooting work package **<opcheck-tswp>** (refer to D.5.5.8.5).

D.5.4.4 Master index testing and troubleshooting category **<masterindexcategory>**. When developing a TM with a master troubleshooting index, the Troubleshooting Index work package **<tsindxwp>** shall be developed. Refer to D.5.5.5.

D.5.5 Testing and troubleshooting work packages. Testing and troubleshooting work packages shall be developed for the overall weapon system/equipment and each maintainable system, subsystem, and WRA/SRA for each applicable maintenance level as indicated in the approved MAC or maintenance plan.

D.5.5.1 Work package content. Work packages shall include WP identification information, initial setup, and all required testing and troubleshooting information. When initial setup differs for specific testing and troubleshooting procedures, additional work packages shall be developed. Work packages shall stand alone and contain complete start-to-finish troubleshooting procedures. Any follow-on maintenance that must be performed after troubleshooting is completed shall be included (e.g., disconnect external power, perform operational checks, etc.). When the follow-on maintenance is extensive and is contained in a separate work package, a reference shall be made to the applicable work package. The words "END OF WORK PACKAGE" shall be placed below the last data item (e.g., text, illustration, etc.) of the work package.

D.5.5.2 Types of testing and troubleshooting work packages. The following types of testing and troubleshooting work packages shall be developed, as applicable. Refer to FIGURE D-1 through FIGURE D-8 and MIL-HDBK-1222 for typical examples of testing and troubleshooting work packages.

D.5.5.3 Introduction work package **<tsintrowp>**. This work package is required for aviation systems and is optional for non aviation systems. This work package shall describe the testing and troubleshooting process used to perform troubleshooting and shall include information on the methods used to perform troubleshooting. The general flow of the troubleshooting process shall be described and the general methods used to perform testing and troubleshooting shall be included. Any information peculiar to troubleshooting electrical subsystems and electronic equipment shall also be described. If a troubleshooting index **<tsindxwp>** is used, an explanation of the index shall be provided.

D.5.5.3.1 Work package identification information **<wpidinfo>**. Work package identification information is required for this work package (refer to 4.8.9.3).

D.5.5.3.2 Work package initial setup **<initial_setup>**. Initial setup is not required for this work package.

D.5.5.4 Technical description work packages **(Aircraft Troubleshooting Manuals only)** **<techdescwp>**. A technical description work package may be developed for each system and subsystem of the weapon system, as applicable. The work package shall, as applicable, include the information in D.5.5.4.1 through D.5.5.4.5.

D.5.5.4.1 Work package identification information **<wpidinfo>**. Work package identification information is required for this work package. (Refer to 4.8.9.3.)

D.5.5.4.2 Work package initial setup **<initial_setup>**. Initial setup is required for this work package. (Refer to 4.8.9.4.)

D.5.5.4.3 Equipment description and data **<descproc>**. When equipment description and data is required to support the testing and troubleshooting procedures, it shall be prepared in accordance with the requirements provided in B.5.3.3 through B.5.3.6, as applicable. If this information is provided in another TM, a reference to the TM may be included in lieu of including the descriptive data.

D.5.5.4.4 Controls and indicators **<ctrlindproc>**. When it is necessary to provide information concerning the description and use of the controls and indicators to support the testing and troubleshooting procedures, it shall be prepared in accordance with the requirements provided in C.5.2.2.1.3 or C.5.2.2.1.4, as applicable. If this information is provided in another TM, a reference to the TM may be included in lieu of including the controls and indicator data.

D.5.5.4.5 Theory of operation **<thryproc>**. When theory of operation is required to support the troubleshooting procedures, it shall be prepared in accordance with the requirements provided in B.5.4, as applicable. If this information is provided in another TM, a reference to the TM may be included in lieu of including the theory data.

D.5.5.5 Troubleshooting index work package **<tsindxwp>**. This work package shall be prepared as directed by the acquiring activity and consist of either a malfunction/symptom index **<tsindx.symptom>/<tsindx.messageword>** or a system/subsystem index **<tsindx.system>**.

D.5.5.5.1 Work package identification information **<wpidinfo>**. Work package identification information is required for this work package (refer to 4.8.9.3).

D.5.5.5.2 Work package initial setup **<initial_setup>**. Initial setup is not required for this work package.

D.5.5.5.3 Malfunction/symptom index **<tsindx.symptom>**/**<tsindx.messageword>**. When all probable faults have been determined and described, prepare a malfunction/symptom index work package using the exact description of the fault or symptom as was used in the troubleshooting procedures. Group symptoms to common system areas both in the malfunction/symptom index and in the troubleshooting procedures. For example, if a system has a data link, communications, radar, display, and tracking systems, the symptoms would be grouped into each related area. All fault symptoms of a communications nature would fall into the communications group. The symptoms may be further divided into functions within the communications group that would be common. The same would be done for radar, data link, display, and tracking systems. This index shall include the following data:

a. List all fault symptoms or known malfunctions in alphabetical order by malfunction/ symptom **<malfunc>** or by built-in test code/fault message word **<messageword>.** Reference this information to the applicable testing and troubleshooting WP sequence number **<xref>/<link>/<extref>** or the required corrective action **<action>**.
b. For complex systems, list symptoms by subsystem categories **<tsindx.symptom-category>/<tsindx.messagewor-category>**, if necessary, and use codes that help identify specific items. Subsystem categories shall be listed in alphabetical order or by code.
c. Catalog malfunctions/symptoms by method of detection, if this aids usability.
d. Fault symptom descriptions (titles) shall be standardized between malfunction/symptom index work packages and troubleshooting procedures work packages.

D.5.5.5.4 Master malfunction/symptom index **<tsindx.symptom>**. When applicable, one troubleshooting malfunction/symptom index work package (refer to D.5.4.4) shall be prepared for all troubleshooting for the system/equipment.

D.5.5.5.5 System/subsystem index **<tsindx.system>**. This index shall consist of a list of specific systems, subsystems, assemblies and components requiring troubleshooting, referenced to the applicable testing and troubleshooting WP sequence number **<xref>/<link>/<extref>** or required corrective action **<action>**.

D.5.5.6 Preshop analysis work package **(DMWR/NMWR only) <pshopanalwp>**. Preshop analysis shall apply when data indicates that an inspection or test is more effective in determining the useful life of a system, subsystem, or component than a mandatory disassembly. Preshop analysis shall be prepared in accordance with D.5.5.6.1 through D.5.5.6.5.

D.5.5.6.1 Work package identification information **<wpidinfo>**. Work package identification information is required for this work package. (Refer to 4.8.9.3.)

D.5.5.6.2 Work package initial setup **<initial_setup>**. Initial setup is required for this work package. (Refer to 4.8.9.4.)

D.5.5.6.3 Scope **<scope>**. The purpose and coverage of the preshop analysis shall be stated.

D.5.5.6.4 Preparation Procedures **<proc>**.

a. Unpacking and special handling. Procedures shall be prepared for removing the item, assemblies, subassemblies, or components from the shipping containers and packaging material. Instructions shall be prepared on any needed handling requirements for hazardous material, electrostatic sensitive devices, precious metal content, classified material, or critical material. Instructions shall also be prepared for any special condemnation procedures for the item and its assemblies and subassemblies.
b. Checking attached documents. Instructions shall be prepared for checking all tags, forms, and documents attached to the item to determine the reason for its return and to identify any other obvious faults or damage.
c. External inspection. Procedures shall be prepared for external inspection of the item to determine if it is complete and if there is any obvious external damage.
d. Cleaning and preservation. Instructions shall be prepared for cleaning the item to prepare it for preshop analysis testing. The instructions shall include the procedures for any temporary preservation or corrosion protection measures needed to protect the item until the work required is started.

D.5.5.6.5 Preshop analysis procedures **<pshopanal>**. Detailed procedures shall be prepared for performing a preshop analysis. The acquiring activity shall determine if the preshop analysis procedures shall be a narrative or be structured as a checklist. The checklist shall permit the inclusion of the name and signature of the person performing the analysis and any remarks that are required based on the results of the analysis. If a narrative preshop analysis is not provided, a printable checklist shall be provided. When specified by the acquiring activity, an electronic checklist shall be provided in lieu of the narrative or printable checklist.

D.5.5.6.5.1 Narrative procedures **<proc>**. Preshop analysis text shall be presented in procedural format. Test and analysis procedures shall be presented in a logical sequence not to cause any unnecessary disassembly and in the order in which they should be performed. Each procedure shall be identified by a step number. Procedures shall be arranged in groups by major components, assemblies, and subassemblies. Each group shall be headed with an applicable title.

D.5.5.6.5.2 Checklist **<chklist>**. The checklist shall include the following data.

D.5.5.6.5.2.1 Cover sheet/frame **<coverpage>**. The cover sheet/frame (refer to FIGURE D-1) shall contain an area to record the following item information: part number **<partno>**; serial number **<serialno>**; NSN **<nsn>**; modifications required **<modreq>**; reason for overhaul or repair **<reason>**; unpacking of secondary items required **<secitem>**; review of tags **<revtag>** or forms **<revform>** with the item, name **<name>,** and signature **<sig>** of the person doing the analysis, and date **<date>**.

D.5.5.6.5.2.2 Introduction **<intro>**. When necessary, the table of tests and inspections shall be preceded by a brief explanation of its use.

D.5.5.6.5.2.3 Table of tests and inspections **<pshopckk.tab>**. This table shall have an entry for each test and inspection procedure. Each entry shall have, as a minimum, the following information: inspection point (the item or area to be inspected), condition, action, remarks, and identification of the personnel performing the inspection (refer to FIGURE D-2). If the procedure is too complex or lengthy to be included in the checklist, a reference to the WP where the procedures or actions are provided shall be included in the checklist.

D.5.5.7 Component checklist work package **(DMWR/NMWR only) <compchklistwp>**. A component checklist work package shall be prepared when required to support the preshop analysis procedures. In addition to the main components, subcomponents may be listed. This work package shall consist of the data described in D.5.5.7.1 through D.5.5.7.4.

D.5.5.7.1 Work package identification information **<wpidinfo>**. Work package identification information is required for this work package. (Refer to 4.8.9.3.)

D.5.5.7.2 Work package initial setup **<initial_setup>**. Initial setup is required for this work package. (Refer to 4.8.9.4.)

D.5.5.7.3 Introduction **<intro>**. When necessary, the checklist shall be preceded by a brief explanation of its use.

D.5.5.7.4 Component checklist **<compchklist>**. The checklist (refer to FIGURE D-3) shall contain the following data, of which item a is required and items b-j are as applicable:

a. Name/nomenclature of the equipment/item **<name>**.
b. Serial number **<serialno>**.
c. Date received **<daterec>**.
d. Received from (identify unit) **<recfrom>**.
e. Component name **<compname>**.
f. NSN **<nsn>**.
g. Part number/CAGEC **<partno>/<cageno>**.
h. Quantity required **<qty>**.
i. Quantity received **<qtyrec>**.
j. Visual damage found **<damage>**.

D.5.5.8 Operational checkout and troubleshooting procedures work packages. A series of work packages shall be developed containing operational checkout and troubleshooting procedures for integrated weapon systems and for each independent system and subsystem of the weapon system, as applicable. DMWRs/NMWRs shall include these work packages as required by the acquiring activity. The content and development requirements for these work packages are provided in D.5.5.8.1 through D.5.5.8.6.

D.5.5.8.1 Operational checkout and troubleshooting procedures content. Operational checkout and troubleshooting procedures shall guide a technician in as practical a manner as possible in detecting, isolating, and correcting system or equipment failure/malfunctions. Procedures shall ultimately lead to isolating faults to an appropriate adjustment, replaceable parts, interface wires, or mechanical linkage. Instructions shall direct repair or replacement of parts authorized for repair or replacement at the maintenance level covered. Procedures shall be accompanied by

schematics, signal flow diagrams, waveforms, tables, and other illustrations for comprehensive understanding of the procedures. When schematics are required as backup data, they shall be referenced or they may be contained in the same WP. The schematics shall integrate fluid, mechanical, electrical, and electronic components. Illustrations may also be included that locate and identify the controls and displays used to perform the testing and troubleshooting procedures. If ATE is used and a Test Program Set has been developed, the operational checkout and troubleshooting procedures contained in the Test Program Set shall not be duplicated. A reference to the Test Program Set shall be provided.

D.5.5.8.2 Operational checkout and troubleshooting procedure work package development. Operational checkout and troubleshooting procedures shall be combined and contained in the same WP or may be developed in separate operational checkout and troubleshooting work packages. Based on the following factors, may be developed in a separate operational checkout and a separate troubleshooting work package (refer to D.5.5.8.5):

a. Complexity of the system/equipment.
b. The type of test equipment used.
c. System/equipment self-test or BIT capability.
d. Complexity of the test and troubleshooting procedures as determined by the task analysis.
e. Clarity and usability.

D.5.5.8.3 Operational checkout work package **<opcheckwp>**. Operational checkout procedures that subject an aircraft; or other type of a major weapon system; or their systems, subsystems, components, accessories, and items of equipment to prescribed conditions to determine if they will function in accordance with predetermined test parameters shall be developed. Operational checkout for DMWRs/NMWRs shall be developed as specified by the acquiring activity. An operational checkout work package may include test set hookup and disconnect procedures, index of test set message words, a reference index of test set or BIT/BITE fault codes and related actions, and further testing procedures related to the message words and fault codes. The words "END OF WORK PACKAGE" shall be placed below the last item (e.g., text, illustration, etc.) in any work package containing the operational checkout procedures. The information in D.5.5.8.3.1 through D.5.5.8.3.8 shall be included in the work package, as applicable.

D.5.5.8.3.1 Work package identification information **<wpidinfo>**. Work package identification information is required for this work package. (Refer to 4.8.9.3.)

D.5.5.8.3.2 Work package initial setup **<initial_setup>**. Initial setup is required for this work package. (Refer to 4.8.9.4.).

D.5.5.8.3.3 Introduction **<intro>**. When required, an introduction shall be included explaining how the operational checkout procedures are to be used to perform testing and how they relate to the associated troubleshooting work packages.

D.5.5.8.3.4 General procedures and precautions **<proc>**. Any general procedures that must be performed prior to checkout and precautions that must be taken during the performance of the checkout procedure shall be included.

D.5.5.8.3.5 Pretest setup procedures **<hookup>**. Procedures for connecting any test and accessory equipment, including cable connections, shall be included. Procedures for the initial setting of controls shall also be provided.

D.5.5.8.3.6 Operational checkout procedures **<opcheckproc>**. The selection of an operational checkout type shall be based on the type of system, equipment, or assembly/subassembly being addressed, the target audience, and the maintenance level of the operator/technician. Based on the complexity of the operational checkout to be performed, operational checkout procedures can be structured differently and therefore contain different content elements. The following methods shall be used to prepare operational checkout procedures. Once selected, the operational checkout method shall be prepared in accordance with the requirements outlined below.

D.5.5.8.3.6.1 Operational checkout test procedure **<opcheck>**. Operational checkout procedures **<testproc>** shall consist of a series of numbered steps **<step1>** and substeps **<step2> - <step6>**, which lead to an indication or condition **<indication>**. Based on the indications or conditions, a corrective action **<action>** shall be provided (refer to FIGURE D-4). This corrective action can either be stated as a specific remedy or can be a reference **<xref>/<link>** to a detailed troubleshooting procedure work package. This process is continued until the complete operational checkout procedure is completed.

D.5.5.8.3.6.2 Test set message word index **<messageindx>**. The message word index shall consist of a series of test set messages or bit-code words with message word description. Based on the message or bit-code word, a corrective action shall be stated. This corrective action can either be stated as a specific remedy or can be a reference **<xref>/<link>** to a detailed troubleshooting procedure work package.

D.5.5.8.3.6.3 Fault code reference index **<faultreports>**. The fault code reference index shall consist of a fault code(s) that leads to a corrective action. This corrective action can either be stated as a specific remedy or can be a reference **<xref>/<link>** to a maintenance work package. If applicable, additional follow-on operational testing procedures **<follow-on>** shall be included based on the corrective action.

D.5.5.8.3.7 Post-operational shutdown procedures **<disconnect>**. Procedures to return the aircraft, aircraft system, or equipment to its normal configuration, prior to operational checkout setup, if required, shall be included.

D.5.5.8.3.8 Follow-on maintenance **<follow-on>**. Instructions or reference to appropriate work packages related to any follow-on maintenance shall be included.

D.5.5.8.4 Troubleshooting work package **<tswp>**. Troubleshooting procedures for detecting, isolating, and correcting aircraft, aircraft systems, or other types of weapon systems and their subsystems, and equipment failures and malfunctions shall be developed. Troubleshooting for DMWRs/NMWRs shall be developed as specified by the acquiring activity. Work packages will relate either to a specific symptom or to a system, assembly, or component. Work packages related to a system of some complexity may contain more than one set of troubleshooting procedures directed to specific subsystems. The information in D.5.5.8.4.1 through D.5.5.8.4.8 shall be included in the work package, as applicable.

D.5.5.8.4.1 Work package identification information **<wpidinfo>**. Work package identification information is required for this work package (refer to 4.8.9.3).

D.5.5.8.4.2 Work package initial setup **<initial_setup>**. Initial setup is required for this work package. (Refer to 4.8.9.4.)

D.5.5.8.4.3 Introduction **<intro>**. When required, an introduction shall be included explaining how the troubleshooting procedures are to be used to perform troubleshooting and how they relate to the associated operational checkout work packages.

D.5.5.8.4.4 General procedures and precautions **<proc>**. Any general procedures that must be performed prior to troubleshooting and precautions that must be taken during the performance of the troubleshooting procedure shall be included.

D.5.5.8.4.5 Pretest setup procedures **<hookup>**. Procedures for connecting any test and accessory equipment, including cable connections, shall be included. Procedures for the initial setting of controls shall also be provided.

D.5.5.8.4.6 Troubleshooting procedures **<tsproc>**. The selection of a troubleshooting type shall be based on the type of system, equipment, or assembly/subassembly being addressed; the target audience description; and the maintenance level of the operator/technician. Based on the complexity of the troubleshooting to be performed, troubleshooting procedures can be structured differently and therefore contain different content elements. The following methods shall be used to prepare troubleshooting procedures. Once selected, the troubleshooting method shall be prepared in accordance with the requirements specified by this document. Refer to MIL-HDBK-1222 for an example of a troubleshooting procedure.

D.5.5.8.4.6.1 Method A - Text-Logic **<logicproc>**. There are two options available in the **<logicproc>**:

a. Troubleshooting procedures for specific fault symptoms shall combine text and logic and consist of a series of tests **<test>** (steps and substeps) which lead to an indication or condition **<indication>** (usually stated in the form of a question). Based on these indications or conditions, a "YES" or "NO" response **<answer>** is provided that will guide the technician to either the next step or a series of steps **<test>**, or to a malfunction **<malfunc>** and corrective action **<action>** (refer to FIGURE D-5). This process is continued until the entire troubleshooting procedure is completed. When required, the corrective action may include a reference to the work package or paragraph **<xref>/<link>** that contains the data to perform the corrective action.

b. Troubleshooting may use the Functional Flow Tree troubleshooting method. A graphical example of functional flow tree troubleshooting is shown in MIL-HDBK-1222.

D.5.5.8.4.6.2 Method B - Text **<faultproc>**. Troubleshooting procedures shall consist of an all-inclusive series of specific fault symptoms for the system/equipment being troubleshot. For each fault symptom **<symptom>**, the probable malfunction or series of malfunctions **<malfunc>** that may have caused the fault shall be listed. For each probable malfunction identified, a corrective action **<action>** shall be stated with a reference to the work package or paragraph **<xref>/<link>** that contains the data to perform the corrective action (refer to FIGURE D-6).

D.5.5.8.4.6.3 Method C - Multiplex read codes **<muxproc>**. This method of troubleshooting is based on the use of computer generated MUX read code data. The MUX read code data are listed in troubleshooting sequence order by signal name.

a. Signal data. For each signal name **<signame>,** the following MUX read code data shall be provided (refer to FIGURE D-7).
   (1) Memory location **<memloc>.**
   (2) Memory data bit(s) **<memdata>.**
   (3) Condition **<condition>.**
   (4) Signal function **<sigfunc>.**
   (5) Remarks **<ckremarks>.**
   (6) Pass **<criteria>.**
   (7) Fail **<criteria>.**

b. The MUX read code data. The MUX read code data is used in conjunction with a malfunction/symptom index (refer to D.5.5.5.4) and an operational checkout procedure (refer to D.5.5.8.3.6). For each system or equipment, the MUX read code data shall be listed under the system or equipment name by the specific malfunction/symptom**.**

D.5.5.8.4.7 Post-operational shutdown procedures **<disconnect>**. Procedures to return the aircraft, aircraft system, or equipment to its normal configuration prior to troubleshooting setup, if required, shall be included.

D.5.5.8.4.8 Follow-on maintenance **<follow-on>**. Instructions or reference to appropriate work packages related to any follow-on maintenance shall be included.

D.5.5.8.5 Combined operational checkout and troubleshooting work package **<opcheck-tswp>**. Combined operational checkout and troubleshooting procedures to verify proper operation to prescribed standards and for detecting, isolating, and correcting system and equipment failures and malfunctions shall be developed. Combined operational checkout and troubleshooting for DMWRs/NMWRs shall be developed as specified by the acquiring activity. The following information in D.5.5.8.5.1 through D.5.5.8.5.8 shall be included, as applicable.

D.5.5.8.5.1 Work package identification information **<wpidinfo>**. Work package identification information is required for this work package. (Refer to 4.8.9.3.)

D.5.5.8.5.2 Work package initial setup **<initial_setup>**. Initial setup is required for this work package. (Refer to 4.8.9.4.)

D.5.5.8.5.3 Introduction **<intro>**. When required, an introduction shall be included explaining how the operational checkout and troubleshooting procedures are to be used to perform checkout and troubleshooting and how they relate to the associated maintenance work packages that include the corrective actions that will return the equipment to proper operation.

D.5.5.8.5.4 General procedures and precautions **<proc>**. Any general procedures that must be performed prior to checkout and precautions that must be taken during the performance of the checkout procedure shall be included.

D.5.5.8.5.5 Pretest setup procedures **<hookup>**. Procedures for connecting any test and accessory equipment, including cable connections, shall be included. Procedures for the initial setting of controls shall also be provided.

D.5.5.8.5.6 Operational checkout and troubleshooting procedures. Operational checkout and troubleshooting procedures may be combined in a single procedure or may be prepared as a separate operational checkout procedure and a separate troubleshooting procedure.

D.5.5.8.5.6.1 Combined operational checkout and troubleshooting procedures **<opcheck-tsproc>**. Combined operational checkout and troubleshooting procedures shall consist of a series of test procedures **<testproc>** (steps and substeps) that lead to an indication or condition **<indication>**. When a normal indication is obtained, the operational checkout continues until the complete checkout is completed or until an abnormal condition or indication is observed. When the test procedure results in an abnormal indication or condition, a malfunction **<malfunc>** or a series of malfunctions is provided. For each malfunction, the possible corrective actions **<action>** shall be provided (refer to FIGURE D-8). When required, the corrective action may include a reference to the work package or paragraph **<xref>/<link>** that contains the data to perform the corrective action.

D.5.5.8.5.6.2 Separate operational checkout procedures **<opcheckproc>**. When it is determined that the operational checkout procedures shall be separate from the troubleshooting procedures, the operational checkout procedures shall be included under the heading "OPERATIONAL CHECKOUT." Operational checkout procedures shall be developed in accordance with D.5.5.8.3.6.

D.5.5.8.5.6.3 Separate troubleshooting procedure **<tsproc>**. When it is determined that the troubleshooting procedures shall be separate from the operational checkout procedures, the troubleshooting procedures shall be included under the heading "TROUBLESHOOTING." Troubleshooting procedures shall be developed in accordance with D.5.5.8.4.6.

D.5.5.8.5.7 Post-operational shutdown procedures **<disconnect>**. Procedures to return the aircraft, aircraft system, or equipment to its normal configuration, prior to operational checkout or troubleshooting setup, if required, shall be included.

D.5.5.8.5.8 Follow-on maintenance **<follow-on>**. Instructions or reference to appropriate work packages related to any follow-on maintenance shall be included.

D.5.5.8.6 Integrated system troubleshooting procedures work packages. When specified by the acquiring activity, integrated system operational checkout and troubleshooting (refer to D.5.2.2.2) shall be developed. Troubleshooting procedures which involve more than one system or more than one major subsystem and which cannot be logically placed in one of the individual system/subsystem troubleshooting information work packages shall be covered in this type of work package. The content and structure of this work package shall be as described in D.5.5.8.3 and D.5.5.8.4 or D.5.5.8.5.

D.6 **NOTES.**

The notes in section 6 apply to this appendix.

TM X-XXXX-XXX-XX 0079

PRESHOP ANALYSIS
FOR
P/N _____

Serial No. _____
NSN _____

MWOs Required _____

Reason(s) for Overhaul/Repair _____
_____
_____
_____

Unpacking Secondary Items Required? _____

Reviewed Tags? _____

Reviewed Forms? _____

Name (please print) _____

Signature _____ Date _____

0079-2

FIGURE D-1. Example of a cover sheet for preshop analysis checklist.

TM X-XXXX-XXX-XX 0079

Table 1. Preshop Analysis Checklist

Inspection Point	Condition	Action	Remarks	Date Checked	Checked by
(1) Pump Housing	Inspect for obvious damage, signs of leakage, overheating, and overall condition	External Visual Inspection			
(2) Equipment Data Plate and Pump Markings	Inspect for legibility, unwanted paint, and general condition.	External Visual Inspection			
(3) Pressure Regulating Valve (TYPE I)	Inspect for damage to threads and mounting surfaces.	External Visual Inspection			
(4) Check Valve (TYPE II)	Inspect for damage to threads and mounting surfaces.	External Visual Inspection			
(5) Check Valve (TYPE III)	Inspect for damage to threads and mounting surfaces.	External Visual Inspection			
(6) Pressure Relief Valve (TYPE IV)	Inspect for damage to threads and mounting surfaces.	External Visual Inspection			
(7) Check Valve (TYPE V)	Inspect for damage to threads and mounting surfaces.	External Visual Inspection			
(8) Filter Bypass Valve (TYPE VI)	Inspect for damage to threads and mounting Surfaces.	External Visual Inspection			
(9) Programming Valve (TYPE VII)	Inspect for damage to threads and mounting surfaces.	External Visual Inspection			
(10) Filter Bypass Valve (TYPE VIII)	Inspect for damage to threads and mounting surfaces.	External Visual Inspection			
(11) Temperature Sensor (TYPE IX)	Check sensor and electrical connector for damage.	External Visual Inspection			
(12) Oil Pressure Sensor (TYPE X)	Check sensor and electrical connector for damage.	External Visual Inspection			
(13) Magnetic Particle Detector Assembly (TYPE XI)	Inspect for damage to threads and mounting surfaces. Check that assembly is magnetized.	External Visual Inspection			

0079-3

FIGURE D-2. Example of a table of tests and inspections for a preshop analysis.

TM X-XXXX-XXX-XX 0080

DEPOT MAINTENANCE
COMPONENT CHECKLIST

INITIAL SETUP:
NOT APPLICABLE

SCOPE

This work package includes a list which is to be copied for each item received for a preshop analysis. After copying one list for each item, the information required must be completed on the checklist prior to the preshop analysis.

COMPONENT CHECKLIST

Name/nomenclature of the Equipment/item_____

Serial number_____

Date received _____

Received from (identify unit)_____

Component name _____

NSN_____

Part number_____

Quantity required_____

Quantity received_____

Visual damage found_____

END OF WORK PACKAGE

0080-1/blank

FIGURE D-3. Example of a component checklist.

TM X-XXXX-XXX-XX 0183

MAINTAINER MAINTENANCE
ARRESTING GEAR SYSTEM OPERATIONAL CHECKOUT

INITIAL SETUP:

Personnel Required
Maintainer (2)

Equipment Conditions
Door 103 is Installed (WP 0261)

References
WP 0210.3
WP 0250
WP 0279

ARRESTING GEAR SYSTEM OPERATIONAL CHECKOUT

STEP

1. Make sure door 103 is installed (WP 0061}.
2. Make sure arresting **HOOK manual control lever is set to up.**
3. Read, record and reset nose wheel well DDI (WP 0050}.

CONDITION/INDICATION

No maintenance code exists.

CORRECTIVE ACTION

Perform troubleshooting (WP 0010.3,Maintenance Code 916).

STEP

4. If arresting hook is not up, manually raise and latch arresting hook.

CONDITION/INDICATION

Arresting hook latches in up position.

CORRECTIVE ACTION

Do arresting hook push-pull control assembly rigging or replace push-pull control assembly (WP 0279).

END OF WORK PACKAGE

0183-1/blank

FIGURE D-4. Example of content for an operational checkout procedure.

TM X-XXXX-XXX-XX 0151

MAINTAINER MAINTENANCE
FRONT TURN LIGHT(S) DO NOT WORK

INITIAL SETUP:

Tools and Special Tools
General technician's tool kit, automotive (WP 139, Item 47)
Multimeter (WP 1239, Item 77)

Personnel Required
ITV/IFV Sys Mech (63T10)
Helper (H)

References
TM X-XXXX-XXX-10-1
WP 0152
WP 0225

References (cont.)
WP 0235
WP 0243
WP 0265
WP 0293
WP 0329
WP 0343

Equipment Condition
Engine stopped (WP 0029)
FIRE SUPPRESSION switch in MANUAL (WP 0034)

TROUBLESHOOTING PROCEDURE

FRONT TURN LIGHT(S) DO NOT WORK

NOTE
Left and right light circuits are identical. Designators for left side are given with designators for right side in parenthesis, when appropriate.

STEP

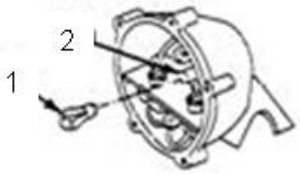

Figure 1. Front composite light.

1. Remove appropriate front composite light lens (WP 0343).
2. Remove turn signal lamp (Figure 1, Item 1) from (Figure 1, Item 2).
3. (H) Move **MASTER POWER** to **ON**.
4. (H) Move turn signal switch to appropriate position.
5. Measure voltage between socket (Figure 1, Item 2) and ground

CONDITION/INDICATION

Does multimeter read less than 17 volts?

DECISION

NO – Step 27 Yes – Step 6

0151-1

FIGURE D-5. Example of content for a troubleshooting procedure (Method A).

STEP

6. Check rear lights.

CONDITION/INDICATION

Do rear stop/turn lights work?

DECISION

No – Go to: Service stop lights(s) malfunction WP 0152 YES – Step 7

STEP

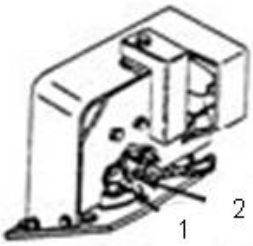

Figure 2. Plug 1W13P7.

7. (H) Move **MASTER POWER** to **OFF**.
8. Remove plug 1W13P7 (1W13P12) 9Figure 2, Item 1) form turn signal plug P3 (Figure 2, Item 2).
9. (H) Move **MASTER POWER** to **ON**.
10. (H) Move **TURN INDICATOR** switch to appropriate position.

CONDITION/INDICATION

Does multimeter read less than 17 volts?

DECISION

NO – Step 11 YES – Step 12

MALFUNCTION

11. Faulty front composite light assembly.

ACTION

STEP 1. (H) Move **TURN INDICATOR** switch to center position.
STEP 2. Move **MASTER POWER** to **OFF**.
STEP 3. Replace front composite light assembly WP 0243.
STEP 4. Verify no faults found.

FIGURE D-5. <u>Example of content for a troubleshooting procedure (Method A)</u> - Continued.

TM X-XXXX-XXX-XX 0251

CREW MAINTENANCE
ENGINE TROUBLESHOOTING PROCEDURE

INITIAL SETUP:

Personnel Required
Mechanic (3)

References
WP 0239

References (cont.)
WP 0240
WP 0241
WP 0247

TROUBLESHOOTING PROCEDURE

ENGINE OIL PRESSURE

SYMPTOM

Engine oil press gauge is in red zone.

MALFUNCTION

ENGINE OIL LOW PRESS indicator light is flashing.

CORRECTIVE ACTION

STEP1. If indicator light is flashing, stop engine immediately (WP 0039).

WARNING

Hot power unit can burn you. Use care when working near power unit.

STEP2. Check engine oil level (WP 0047).

STEP3. Check bilge for oil.

a. If oil is present, check engine hoses, clamps, and fittings for leaks.

STEP4. Start engine (WP 0039).

STEP5. Check if **ENGINE OIL PRESS gauge is still in the red zone.**

a. Stop engine immediately (WP 0039). Notify unit maintenance.

MALFUNCTION

ENGINE COOLANT TEMPERATURE GAUGE IS IN RED ZONE.

CORRECTIVE ACTION

STEP1. Check if **COOLANT LOWLEVEL indicator light is flashing.**

a. If **COOLANT LOW LEVEL indicator light is off.**

b. Press **TEST SENSOR BUTTON.**

(1) If **COOLANT LOWLEVEL indicator does not flash, notify unit maintenance.**

(2) If **COOLANT LOW LEVEL indicator light is flashing,**

(a) Stop engine immediately (WP 0039).

0251-1

FIGURE D-6. Example of content for a troubleshooting procedure (Method B).

23. **SIGNAL NAME:** DASEC STATUSWORD DC ANALOG OUTPUT BIT
MEMORY LOCATION: 002150
MEMORY DATA BIT(S): 15 (BINARY)
CONDITION: (None)
SIGNAL FUNCTION: Indicates status of DC analog circuits.
REMARKS: From DASEC to FCC.
PASS: If second digit displayed on HOD is 3 or 7, go to Step 24.
FAIL: Location of fault: replace DASEC (TM 1-1520-238-23 Series).

24. **SIGNAL NAME:** DASEC STATUSWORD AD/DA BIT
MEMORY LOCATION: 002150
MEMORY DATA BIT(S): 13 (BINARY)
CONDITION: (None)
SIGNAL FUNCTION: Indicates status of analog-to-digital and digital-to-analog circuits.
REMARKS: From DASEC to FCC.
PASS: If third digit displayed on HOD is 1, 3, 5, or 7, go to Step 25.
FAIL: Location of fault: replace DASEC (TM 1-1520-238-23 Series).

25. **SIGNAL NAME:** DASEC STATUSWORD FD/LS TEST
MEMORY LOCATION: 002150
MEMORY DATA BIT(S): 12 (BINARY)
CONDITION: (None)
SIGNAL FUNCTION: Indicates FD/LS ground test is being run.
REMARKS: From DASEC to FCC.
PASS: If third digit displayed on HOD is 1 or 5, go to Step 26.
FAIL: Location of fault: replace DASEC (TM 1-1520-238-23 Series).

26. **SIGNAL NAME:** DASEC STATUSWORD ASE BIT
MEMORY LOCATION: 002150
MEMORY DATA BIT(S): 11 (BINARY)
CONDITION: (None)
SIGNAL FUNCTION: Indicates last FD/LS test ASE bit status.
REMARKS: DASEC to FCC.
PASS: If third digit displayed on HOD is 1, go to Step 27.
FAIL: Location of fault: replace DASEC (TM 1-1520-238-23 Series).

27. **SIGNAL NAME:** DASEC STATUSWORD VD TEST
MEMORY LOCATION: 002150
MEMORY DATA BIT(S): 10 (BINARY)
CONDITION: (None)
SIGNAL FUNCTION: Indicates last FD/LS test VD bit status.
REMARKS: DASEC to FCC.
PASS: If third digit displayed on HOD is 3 or 4, go to Step 28.
FAIL: Location of fault: replace DASEC (TM 1-1520-238-23 Series).

FIGURE D-7. Example of content for a troubleshooting procedure (Method C).

TM X-XXXX-XXX-XX 0481

MAINTAINER MAINTENANCE
COMPUTER PROCESSOR
OPERATIONAL CHECKOUT AND TRUBLESHOOTING

INITIAL SETUP:

Test Equipment
Test set (WP 0654, Item 4)

References
WP 0539

COMPUTER PROCESSOR
TEST PROCEDURE

STEP
1. Remove computer processor top cover (WP 0005).
2. Apply power to test set and place test set **POWER** switch to **ON** position.

CONDITION/INDICATION
Test set power indicator is illuminated.

MALFUNCTION/CORRECTIVE ACTION
If power indicator does not light, check power source for 28 VDC.

STEP
3. Place **UUT POWER** switch in **CP** position.

CONDITION/INDICATION
CP LEDS momentarily flash.

MALFUNCTION/CORRECTIVE ACTION
If LEDS do not flash briefly, check test set wiring.

STEP
4. Place Test Set **UUT POWER** switch in **CP** position. Quickly press and release the **CP BIT** button on the system interface card. Observe the 10 LEDs on the system I/F CCA.

CONDITION/INDICATION
BIT test routine runs for 30 seconds. During the first 15 seconds the CP LEDs (DS1- DS10) will flash. The second 15 second period is the status reporting period. All LEDs are **OFF** during the second 15 second period. After the BIT routine is complete, all LEDs will return to the original **OFF** state.

MALFUNCTION/CORRECTIVE ACTION
a. If DS1 is illuminated, perform **DS1** testing. Refer to Table 2.
b. If **DS2** is illuminated, perform **DS2** testing. Refer to Table 3.

0481-1

FIGURE D-8. Example of content for a combination testing and troubleshooting procedure.

This page intentionally left blank.

APPENDIX E
MAINTENANCE INSTRUCTIONS

E.1 SCOPE.

E.1.1 Scope. This appendix establishes the technical content requirements for the preparation of maintenance procedures for major weapon systems and their related systems, subsystems, equipment, WRAs, and SRAs. This appendix is a mandatory part of this standard. The information contained herein is intended for compliance. The requirements are applicable for all maintenance levels/classes through overhaul (depot), including DMWRs and NMWRs.

E.2 APPLICABLE DOCUMENTS.

The applicable documents in section 2 apply to this appendix.

E.3 DEFINITIONS.

The definitions in section 3 apply to this appendix.

E.4 GENERAL REQUIREMENTS.

E.4.1 General. Maintenance instructions shall be prepared for major weapon systems, equipment, components, and applicable support and interface equipment. They shall be prepared for all items comprising the weapon system/equipment: such as assemblies, subassemblies, components, wiring, junction boxes, and accessories. Maintenance procedures and supporting illustrations shall be prepared so that maintenance personnel can perform all required crew through depot level (overhaul) maintenance.

E.4.2 Development of maintenance instructions. Tasks shall be presented in the order in which they are performed. Sound engineering principles and techniques, approved LMI, service experience, performance data on similar equipment, and all other RMS and Ao data available shall be used in the preparation of specific maintenance instructions.

E.4.3 Maintenance level/class applicability. Requirements contained in this appendix are applicable to all maintenance levels/classes unless specifically labeled in bold and in parentheses. The labeled requirement may specify a specific level (e.g., **Field**) (refer to 3.87) or a specific maintenance class (refer to 3.85) (e.g., **Maintainer** or **AMC**). The labeled requirement shall be applicable to all TMs containing that maintenance level/class. An explanation of applicable DA maintenance levels/classes is provided in section 3.

E.4.4 Depot Maintenance Work Requirements (DMWRs) and National Maintenance Work Requirements (NMWRs). When the acquiring activity specifies that a DMWR or NMWR shall be prepared to the best commercial practices, the depot requirements contained in this standard shall be used only as a guide; therefore, the maintenance instructions in the DTD (refer to E.4.6) cannot be used.

E.4.5 Preparation of digital data for electronic delivery. Data prepared and delivered digitally in accordance with this standard shall be XML tagged using the DTD. Data shall be formatted for presentation using stylesheets in accordance with MIL-STD-2361. Stylesheets may be prepared using XSL or other languages as specified by the acquiring activity. Where possible and when available, Army developed and provided stylesheets shall be used. (Refer to 4.6 for information on obtaining or accessing the DTD and stylesheets.) XML tags used in the DTD are noted throughout the text of this standard in bracketed, bold characters (e.g., **<maintwp>**) as a convenience for the author and to ensure the tags are used correctly when developing a document instance.

E.4.6 Use of the Document Type Definition (DTD)/stylesheet. The DTD referenced in this appendix interprets the technical content and structure for the functional requirements contained in this standard. Its use is mandatory. Development of TMs is accomplished through the use of this standard, the DTD, and the guidance contained in MIL-HDBK-1222. Where possible and when available, Army developed and provided stylesheets shall be used. For additional information on the DTD and specific stylesheets, refer to MIL-STD-2361.

E.4.7 Content structure. The examples provided herein are an accurate representation of the content structure requirements contained in this appendix and shall be followed to permit the effective use of the DTD.

E.4.8 Style and format. This standard provides style and format requirements for the technical content requirements described in this appendix. These requirements are considered mandatory and are intended for compliance.

E.4.9 Work package development. Data developed in accordance with this appendix shall be divided into work packages. These work packages should be stand alone and are broken into the following work package types: PMCS Introduction, PMCS, Service upon receipt, maintenance, general maintenance, lubrication instructions, illustrated list of manufactured items, torque limits, wiring diagrams, equipment/user fitting instructions, facilities, overhaul inspection procedures, depot mobilization requirements, quality assurance requirements, aircraft inventory master guide, storage of aircraft, overhaul and reirement schedule, weighing and loading, auxiliary equipment maintenance, ammunition maintenance, ammnition marking information, and foreign ammunition. A work package shall contain all information and references required to support the work package type.

E.4.10 Safety devices and interlocks. Information shall be prepared pertaining to the purpose and location of all safety devices and interlocks in conjunction with the pertinent procedures.

E.4.11 Electrostatic discharge (ESD) sensitive parts. If the equipment contains ESD sensitive parts, components, or circuits, cautions and ESD labels shall be incorporated into the applicable tasks and procedures to ensure ESD sensitive parts are not damaged or degraded during maintenance and operation. (Refer to 4.8.20 for requirements on labeling with ESD.) Actions which could damage ESD sensitive parts, but which are not directly related to handling or operation of ESD sensitive parts, shall not be annotated with the ESD acronym, but shall be preceded by a caution statement.

E.4.12 Nuclear hardness. If the weapon system/equipment has nuclear survivability requirements (for example, over pressure and burst, thermal radiation, electromagnetic pulse, or transient radiation effects on electronics), cautions and HCP labels shall be incorporated into the applicable tasks and procedures to ensure the hardness of the equipment is not degraded during handling or operation. (Refer to 4.8.19 for requirements on labeling with HCP.) Actions which could degrade hardness, but which are not directly involved in establishing nuclear hardness, shall not be annotated with the acronym, but shall be preceded by a caution statement.

E.4.13 Selective application and tailoring. This standard contains some requirements that may not be applicable to the preparation of all TMs. Selective application and tailoring of requirements contained in this appendix are the responsibility of the acquiring activity and shall be accomplished using APPENDIX A. The applicability of some requirements is also designated by one of the following statements: unless specified otherwise by the acquiring activity; as specified by the acquiring activity; or when specified by the acquiring activity.

E.5 **DETAILED REQUIREMENTS.**

E.5.1 Preparation of maintenance instructions. Maintenance instructions shall be prepared to enable a technician to perform maintenance on the weapons system/equipment and associated WRAs/SRAs. Tasks will be developed to allow the appropriate maintainer to bring the asset to a mission capable status. Maintenance tasks shall be developed in accordance with the LMI, Maintenance Allocation Chart (MAC) or Maintenance Plan, and the SMR codes developed for the weapon system/equipment and components. Maintenance work packages shall be arranged to coincide with the FGC sequence followed in the MAC or Repair Parts and Special Tools List (RPSTL).

E.5.2 Types of maintenance. Depending on the type and complexity of the weapon system/equipment, the TM, DMWR, or NMWR shall contain one or more of the following maintenance categories.

E.5.2.1 Preventive Maintenance Checks and Services (PMCS) **(except for aircraft TMs, DMWRs, and NMWRs) <pmcscategory>**. This maintenance category contains only the PMCS requirements. The remaining maintenance tasks will be contained in later chapter(s). The PMCS category contains the following work packages in the order specified:

a. PMCS Introduction work package **<pmcsintrowp>** (refer to E.5.3.4.1).
b. PMCS work package **<pmcswp>** (refer to E.5.3.4.2).

E.5.2.2 Weapon system/equipment maintenance with required Preventive Maintenance Checks and Services (PMCS) **(except for aircraft TMs, DMWRs, and NMWRs) <maintenancepmcscategory>**. Unless otherwise indicated, this maintenance category contains the following work packages in the order specified:

a. Service upon receipt work package **(Maintainer only) <surwp>** (refer to E.5.3.2).
b. Equipment/User fitting Instruction work package **<perseqpwp>** (refer to E.5.3.3)
c. PMCS introduction work package **<pmcsintrowp>** (refer to E.5.3.4.1).
d. PMCS work package **<pmcswp>** (refer to E.5.3.4.2).
e. The following work packages occur in no specific order:

(1) Maintenance work package **<maintwp>** (refer to E.5.3.5).

(2) General maintenance work package **<gen.maintwp>** (refer to E.5.3.7).

(3) Lubrication instructions work package **<lubewp>** (refer to E.5.3.8).

f. Illustrated list of manufactured items work package **(Maintainer level and above)** (refer to E.5.3.10).

g. Torque limits work package **(Maintainer level and above) <torquewp>** (refer to E.5.3.11).

h. Wiring diagrams work package **(Maintainer level and above) <wiringwp>** (refer to E.5.3.12).

E.5.2.3 Weapon system/equipment maintenance without Preventive Maintenance Checks and Services (PMCS) **(except for aircraft TMs, DMWRs, and NMWRs) <maintenancecategory>**. This maintenance category shall require either the PMCS or maintenance with PMCS category to be developed also. Unless otherwise specified by the acquiring activity, this maintenance category contains the following work packages in the order specified:

a. Service upon receipt work package **(Maintainer level only) <surwp>** (refer to E.5.3.2).

b. Equipment/User fitting instruction work package **<perseqpwp>** (refer to E.5.3.3).

c. The following work packages occur in no specific order:

(1) Maintenance work package **<maintwp>** (refer to E.5.3.5).

(2) General maintenance work package **<gen.maintwp>** (refer to E.5.3.7).

(3) Lubrication instructions work package **<lubewp>** (refer to E.5.3.8).

d. Illustrated list of manufactured items work package **(Maintainer level and above)** (refer to E.5.3.10).

e. Torque limits work package **(Maintainer level and above) <torquewp>** (refer to E.5.3.11).

f. Wiring diagrams work package **(Maintainer level and above) <wiringwp>** (refer to E.5.3.12).

E.5.2.4 Depot weapon system/equipment maintenance **<depotcategory>**. Unless otherwise specified, the depot maintenance category contains the following work packages in the order specified:

a. Preservation, packaging, and marking general information work package <ppmgeninfowp> (refer to E.5.3.9.1).

b. Equipment/User Fitting Instruction work package **<perseqpwp>** (refer to E.5.3.3). c

c. The following work packages occur in no specific order:

(1) Maintenance work package **<maintwp>** (refer to E.5.3.5).

(2) General maintenance work package **<gen.maintwp>** (refer to E.5.3.7).

(3) Lubrication instructions work package **<lubewp>** (refer to E.5.3.8).

d. Facilities work package **<facilwp>** (refer to E.5.3.9.2).

e. Overhaul inspection procedures (OIPs) work package **<oipwp>** (refer to E.5.3.9.3).

f. Depot mobilization requirements work package **<mobilwp>** (refer to E.5.3.9.4).

g. Quality Assurance (QA) requirements work package **<qawp>** (refer to E.5.3.9.5).

h. Illustrated list of manufactured items (refer to E.5.3.10).

i. Torque limits work package **<torquewp>** (refer to E.5.3.11).

j. The following work packages are for **aircraft only**:

(1) Aircraft inventory master Guide work package **<inventorywp>** (refer to E.5.3.13.2).

(2) Storage of aircraft work package **<storagewp>** (refer to E.5.3.13.3).

k. Wiring diagrams work package **<wiringwp>** (refer to E.5.3.12).

E.5.2.5 Aircraft maintenance **(aircraft TMs, DMWRs, and NMWRs only)** **<aviationcategory>**. Unless otherwise indicated, this maintenance category contains the following work packages in the order specified:

a. Preservation, packaging, and marking general information work package <ppmgeninfowp> (refer to E.5.3.9.1).

b. Service upon receipt work package **(AMC only)** **<surwp>** (refer to E.5.3.2).

c. Equipment/User fitting instruction work package **<perseqpwp>** (refer to E.5.3.3).

d. The following work packages occur in no specific order:

(1) Maintenance work package **<maintwp>** (refer to E.5.3.5).

(2) General maintenance work package **<gen.maintwp>** (refer to E.5.3.7).

(3) Lubrication instructions work package **<lubewp>** (refer to E.5.3.8).

(4) Preventive maintenance inspections work package **<pmiwp>** (refer to E.5.3.13.1).

e. Overhaul and retirement schedule work package **<orschwp>** (refer to E.5.3.6).

f. Illustrated list of manufactured items (refer to E.5.3.10).

g. Torque limits work package **<torquewp>** (refer to E.5.3.11).

h. Aircraft inventory master Guide work package **<inventorywp>** (refer to E.5.3.13.2).

i. Storage of aircraft work package **<storagewp>** (refer to E.5.3.13.3).

j. Weighing and loading work package **(ASB only)** **<wtloadwp>** (refer to E.5.3.13.4).

k. Wiring diagrams work package **<wiringwp>** (refer to E.5.3.12).

E.5.2.6 Auxiliary equipment maintenance **<auxiliarycategory>**. This maintenance category contains the following work packages in the order specified:

a. Auxiliary equipment maintenance work package **<auxeqwp>** (refer to E.5.3.14).

b. Illustrated list of manufactured items work package **(Maintainer/AMC and above)** (refer to E.5.3.10).

c. Torque limits work package **(Maintainer/AMC and above)** **<torquewp>** (refer to E.5.3.11).

d. Wiring diagrams work package **(Maintainer/AMC and above)** **<wiringwp>** (refer to E.5.3.12).

E.5.2.7 Ammunition maintenance **<ammunitioncategory>**. This maintenance category contains the following work packages in no specific order:

a. Ammunition maintenance work package **<ammowp>** (refer to E.5.3.15.1).
b. Ammunition marking information work package **<ammo.markingwp>** (refer to E.5.3.15.2).
c. Foreign ammunition (NATO) work package **<natowp>** (refer to E.5.3.15.3).

E.5.2.8 Test and inspection maintenance **(Conventional and chemical ammunition only) <testinspectioncategory>**. This maintenance category contains the Maintenance work package **<maintwp>.** (Refer to E.5.3.5.)

E.5.2.9 Shipment/movement and storage maintenance **(Conventional and chemical ammunition only) <shipmentmovementstoragecategory>**. This maintenance category contains the Maintenance work package **<maintwp>.** (Refer to E.5.3.5.)

E.5.2.10 Ammunition marking maintenance **(Conventional and chemical ammunition only) <ammomarkingcategory>**. This maintenance category contains the Ammunition Marking Information work package **<ammo.markingwp>.** (Refer to E.5.3.15.2.)

E.5.2.11 Preventive maintenance services **(Aircraft preventive maintenance services only) <pmscategory>**. This maintenance category contains the Preventive Maintenance Services Inspection work packages **<pms-inspecwp>.** (Refer to E.5.3.16.)

E.5.2.12 Phased maintenance inspections **(Aircraft phased maintenance inspection only) <checklistcategory>**. This maintenance category contains the Phased Maintenance Inspection work packages **<pmi-cklistwp>.** (Refer to E.5.3.17.)

E.5.3 Maintenance work packages. Individual maintenance work packages shall be developed for the overall weapon system/equipment and each maintainable system, subsystem, and WRA/SRA for each applicable maintenance level as indicated in the approved MAC or maintenance plan.

E.5.3.1 Work package content. Work packages shall include the following work package identification information and those maintenance tasks required to complete the specified task, either directly or through reference. Work packages shall stand alone and contain complete start-to-finish maintenance procedures to the maximum extent possible. Liberal use of references between work packages is encouraged. Any follow-on maintenance that must be performed after maintenance procedures are completed shall be included or referenced (e.g., disconnect external power, perform operational checks, etc.). When the follow-on maintenance is extensive and is contained in a separate work package, a reference shall be made to the applicable work package. The words "**END OF WORK PACKAGE**" shall be placed below the last data item (e.g., text, illustration, etc.) of the work package containing the maintenance procedure. The maintenance work packages described in E.5.3.2 through E.5.3.17 shall be prepared, as applicable. (Refer to MIL-HDBK-1222 for examples of work package identification information format.)

E.5.3.2 Service upon receipt work package **(Maintainer and AMC only) <surwp>**. One or more service upon receipt work packages **<surwp>** shall be prepared. Each **<surwp>** shall contain a single service upon receipt task **<surtsk>**. (Refer to E.5.3.2.3.) The service upon receipt work packages shall contain information required for the user to ensure that the equipment will be adequately inspected, serviced, and operationally tested before it is subjected to use. Instructions for munitions service upon receipt are contained in E.5.3.2.3.9.

E.5.3.2.1 Work package identification information **<wpidinfo>**. Work package identification information is required for this work package. (Refer to 4.8.9.3.)

E.5.3.2.2 Work package initial setup **<initial_setup>**. Initial setup is required for this work package. (Refer to 4.8.9.4.)

E.5.3.2.3 Service upon receipt tasks **<surtsk>**. For equipment that requires extensive service upon receipt, the following tasks described in E.5.3.2.3.1 through E.5.3.2.3.11 shall be prepared and shall be placed in individual work packages.

E.5.3.2.3.1 Siting **<siting>**. Siting instructions peculiar to the equipment shall be prepared, as applicable. In preparing the instructions, operational and maintenance features shall be considered, such as the following:

a. Location.
b. Proximity to power sources.
c. Effective ranges.
d. Terrain requirements to avoid screening, reflections, ground clutter, and other poor operational conditions due to terrain.
e. Technical requirements.
f. Shelter locations.
g. Compensation for adverse siting conditions.
h. When the equipment contains large components such as towers and antennas that require orientation to a baseline during siting.
i. Orientation of mobile equipment during installation.

E.5.3.2.3.2 Shelter requirements **<shltr>**. When equipment is normally housed in a permanent or semi-permanent shelter (other than a military truck, van, or transportable shelter) during use, the following information shall be prepared:

a. Amount of floor, wall, and height space required.
b. A plan for a typical layout.
c. Required weight capacity of the building floor.
d. Dimensions required for installed equipment.
e. Total weights that the floor must support and the area in square feet over which the total weight will be distributed.
f. Environmental conditions (e.g., venting).
g. Power requirements.
h. Unusual requirements specific to equipment, such as air conditioning.

i. Architectural and engineering data on beam sizes, lengths, bending moments, and required supports shall not be included.

E.5.3.2.3.3 Service upon receipt of materiel **<surmat>**. The following instructions shall be prepared as specified in E.5.3.2 and E.5.3.2.3.

E.5.3.2.3.3.1 Unpacking **<unpack>**. Instructions for unpacking materiel or equipment shall be prepared. (Refer to E.5.3.5.3.18.)

E.5.3.2.3.3.2 Checking unpacked equipment **<chkeqp>**. Instructions shall be prepared for a condition check of the shipment (including that of pallets, containers, boxes, and legibility of markings). These instructions may be contained in a table (**standard information per paragraph 4.8.13.7**). The following data shall be included.

E.5.3.2.3.3.2.1 Packaging material **<crit.insp.tab>**. For each item **<eqpitem>** of a component requiring inspection, the following conditions shall be provided: acceptable **<accept>**, reparable **<repairable>**, and nonreparable **<nonrepairable>**. (Refer to FIGURE E-1).

E.5.3.2.3.3.2.2 Equipment components **<pecul.insp.tab>**. A table shall be provided that lists, by location **<location>**, each item **<eqpitem>** of a component **<compntassem>** requiring inspection. For each of these items, an inspection action **<step1>** shall be provided and, if applicable, a reference **<remarks>** shall be made to another work package. (Refer to FIGURE E-1.)

In addition, the following shall be inserted:

> "Inspect the equipment for damage incurred during shipment. If the equipment has been damaged, report the damage on DD Form 361, Transportation Discrepancy Report.
>
> Check the equipment against the packing slip to see if the shipment is complete. Report all discrepancies in accordance with DTR 4500.9-R, Part II.
>
> Check to see whether the equipment has been modified."

E.5.3.2.3.3.3 Processing unpacked equipment **<processeqp>**. Instructions shall be prepared for processing the unpacked equipment (e.g., removing excess lubricant from a new rifle), as long as they do not conflict with any warranty provisions. The following information shall be prepared, as applicable:

a. Any special skills required by processing personnel.
b. All caustic, corrosive, and/or toxic material used during processing shall be identified and applicable warnings and cautions given.
c. Instructions on safe disposal of waste products generated during processing actions.
d. Man-hour requirements and total man-hours required for processing the equipment.

E.5.3.2.3.4 Installation instructions **<install>**. Instructions shall be prepared to install the equipment properly. These instructions shall include which tools are to be used to make the necessary interconnections, to lubricate, calibrate, and adjust the equipment. Instructions for cabling and wiring shall include the following:

a. Cable diagrams shall be included or referenced as necessary. When cable assemblies are not supplied but are required for bench test setup, instructions shall be prepared in the

manufactured items work package (refer to E.5.3.10) for fabricating interconnecting cable assemblies.

(1) Instructions shall be prepared for any mating connectors that call for a special procedure either to make the proper connection or to prevent damage to the connector. Warnings and cautions shall be included where necessary.

(2) A wiring diagram shall be prepared which fully identifies, by either color code or wire number (if applicable), each wire to be connected. This diagram shall show the location of each pertinent terminal. The terminal(s) shall be identified by number or other marking, if available, or by position if neither is available. Where appropriate, voltage readings shall be annotated.

(3) All alternate connection patterns required for various modes of operation shall be shown and explained.

(4) Only one diagram shall be used to illustrate interconnection patterns that appear more than once within the same equipment.

b. For installation of plug-in items, diagrams shall be prepared or referenced showing the location of items that are not installed in the equipment when received. Instructions shall be prepared whenever special techniques or connections are required.

E.5.3.2.3.4.1 Installation of the equipment.

a. Installation instructions shall be prepared for all the following actions (including placing, mounting, and attaching):

(1) Cable and wiring interconnections.

(2) Proper use of special tools.

b. Installation instructions shall identify all dimensions that must be maintained in placing, mounting, or attaching items.

c. When initial adjustments can be made efficiently during installation, such adjustments shall be included.

d. For equipment designed and intended for use in more than one type of installation (e.g., field, fixed station, and mobile), instructions shall be prepared for each type of installation involved.

e. Performance of any step in the installation instructions that requires the assistance of personnel from a higher level of maintenance shall be detailed. This shall be stated in a note similar to that in the following (italicized text within parentheses shall be replaced with the appropriate information):

"**NOTE**

The following installation procedure must be made with the assistance of (*insert level*) maintenance personnel (include Military Occupational Specialty, if applicable)."

f. Installation instructions shall include instructions for (as applicable):

(1) All required installation options (e.g., ESD control requirements).

(2) Accessory items.

(3) Auxiliary items (those that extend or increase equipment capability).

(4) Grounding of the equipment for both safety and proper operation.

(5) Torque requirements.

E.5.3.2.3.4.2 Special applications. Installation instructions, which are common to all special applications of a system, shall be prepared. Details resulting from the installation shall be omitted if they are specific only to the equipment into which the system is being installed (e.g., special treatment required when the system is installed in a vehicle or aircraft).

E.5.3.2.3.4.3 Van and shelter installations. When the equipment is permanently installed in vans or shelters, installations instructions will not need to be prepared. The following information shall be prepared only to the extent required for the applicable level of maintenance:

a. Instructions shall be prepared for the removal and replacement of each nonpermanent unit.
b. Diagrams and instructions shall be prepared which pertain to electrical and interconnection wiring, exclusive of wiring specific to the equipment on which the installation is being made (e.g., headlight, ignition wiring).
c. Instructions shall be prepared for cable run locations, equipment locations, circuit breaker panels, and other similar details.

E.5.3.2.3.4.4 Assembly of equipment **<assem>**.

a. Instructions shall be prepared for assembling equipment that has been shipped unassembled. When the equipment is to be shelf or rack mounted, instructions shall also be prepared for assembly of the rack, if necessary, and for installation of the equipment in the rack. As applicable, power requirements, connections, and initial control settings needed for installation purposes shall be included.
b. When the equipment is shipped or delivered in specially designed containers, unpacking instructions shall be prepared as detailed in E.5.3.2.3.3.1.
c. For security measures for electronic data, instructions shall be prepared for handling, loading, purging, overwriting, or unloading classified electronic data under usual conditions. Instructions shall meet current security regulations as they pertain to automation security.

E.5.3.2.3.5 Preliminary servicing of equipment **<preserv>**. Instructions shall be prepared for all preliminary services required on newly installed equipment. This should include, but not be limited to, the following: lubrication, wiring, and fueling, etc.

E.5.3.2.3.6 Preliminary checks and adjustment of equipment **<prechkadj>**. Instructions shall be prepared for all checks and adjustments to be made on newly installed equipment. Information on the location of items such as controls and check points shall be prepared or referenced. Instructions shall be prepared for checks and adjustments that must be made before the equipment is put into operation and for all other checks required to ensure proper operation of the equipment. These instructions shall include, but not be limited to, the following (as applicable):

a. Checks for interconnections.
b. Checks for grounding, including earth ground connections, earth conditioning for conduction, as well as a check of the grounding circuit for negligible resistance.
c. Checks for adequate clearance for rotating or moving devices.

d. Checks of initial settings of all controls that must be preset before power is to be applied.
e. All other checks needed to determine that power can be applied without injuring personnel or damaging the equipment.
f. Firm seating and connection of all plug-in parts, mating connectors, jacks, and plugs.
g. Cable and wire harness routing, dressing, and fastening.
h. ESD control standards and cautions against damaging transistors, diodes, and other electrically sensitive items.
i. Replacement of all covers, inspection and access doors, and plates.
j. Operation of safety interlocks and switches.
k. Operation of ventilating louvers and intake and exhaust ports.
l. Operation and content of liquid cooling systems.
m. Lubricants and Corrosion Prevention Control (CPC) procedures.
n. Switch and control settings that are preset at installation (installer's adjustments).
o. Presetting and adjustment of automatic controls.
p. Terminal connections.
q. Required terminal or capacitor strapping.
r. Preliminary test measurements.
s. Presetting operator controls.
t. Normal operating checks.
u. After-installation orientation.
v. Burn-in of parts.
w. After-operations shutdown, checks, and inspections.

E.5.3.2.3.7 Preliminary calibration of equipment **<precal>**. Instructions shall be prepared for all calibration to be made on newly installed equipment.

E.5.3.2.3.8 Circuit alignment **<calign>**. Instructions shall be prepared for circuit alignment procedures. Applicable instructions shall be prepared in the following order.

E.5.3.2.3.8.1 External connections **<extconn>**. Connections to external lines that are required for each installation option shall be included. Connection instructions shall conform to the requirements for installing wiring and cabling interconnections.

E.5.3.2.3.8.2 Switch settings, patch panel connections, and internal control settings. **<setconn>**. Instructions shall be prepared for all switch settings, patch panel connections, and internal control settings required for each installation option and mode of operation.

E.5.3.2.3.8.3 Alignment procedures **<alignproc>**. Instructions shall be prepared for all alignment procedures, including any variations required for different installation options and modes of operation.

E.5.3.2.3.9 Ammunition service upon receipt tasks. Procedures shall be prepared for performing the following tasks as described in E.5.3.2.3.9.1 through E.5.3.2.3.9.4. Procedures shall include inspections to include verification that ammunition received was that requisitioned. Instructions shall be prepared to note the quantity of each lot for recording purposes.

E.5.3.2.3.9.1 Ammunition markings **<mark>**. Instructions shall be prepared for marking ammunition and ammunition containers. (Refer to E.5.3.5.3.16.)

E.5.3.2.3.9.2 Classification of defects **<ammo.defect>**. Procedures shall be prepared for identifying defects in munitions. (Refer to E.5.3.15.1.3.2.)

E.5.3.2.3.9.3 Handling **<ammo.handling>**. Procedures shall be prepared for handling ammunition. (Refer to E.5.3.15.1.3.3.)

E.5.3.2.3.9.4 Procedures needed to activate ammunition, mines, etc. **<arm>**. Procedures shall be prepared for the activation of ammunition, mines, etc., in preparation of functioning or use of training devices.

E.5.3.2.3.10 Other service upon receipt tasks **<other.surtsk>**. Additional service upon receipt tasks may be developed when the specific type of service upon receipt tasks are not covered as described in E.5.3.2.3.1 through E.5.3.2.3.9.4. If additional service upon receipt tasks are used, the proponent shall submit to LOGSA the requirements for this service upon receipt task type for possible incorporation within future revisions to this standard.

E.5.3.2.3.11 Follow-on maintenance **<followon.maintsk>**. As applicable, instructions shall be prepared or references to the applicable work package(s) for any follow-on maintenance required and shall be the last information in the work package. Follow-on is a maintenance condition which must be accomplished following the completion of a task to clean up or undo actions performed during the task. For example, in order to fix a component a task might require that an access panel be removed. The panel would then need to be replaced as a follow-on action. This task might be performed sometime after the repair task is completed, but not immediately after the repair task. Other maintenance tasks might be performed in the same area before the follow-on task is accomplished.

E.5.3.3 Equipment/user fitting instructions work package **<perseqpwp>**. As applicable, equipment/user fitting instructions for personal use equipment shall be prepared.

E.5.3.3.1 Work package identification **<wpidinfo>**. Work package identification information is required for this work package. (Refer to 4.8.9.3.)

E.5.3.3.2 Work package initial setup **<initial_setup>**. Initial setup is required for this work package. (Refer to 4.8.9.4.)

E.5.3.4 Preventive Maintenance Checks and Services (PMCS) (**except for aircraft TMs, DMWRs, and NMWRs**). The PMCS shall be prepared for operator manuals and as required for other maintenance levels. PMCS shall be based upon the principles of Reliability Centered Maintenance (RCM) logic. It shall include PMCS information and applicable scheduled corrosion inspections. Lubrication instructions may be included in the PMCS information or a separate lubrication order may be prepared. (Refer to APPENDIX K). An introduction work package for PMCS shall also be prepared.

E.5.3.4.1 Preventive Maintenance Checks and Services (PMCS) introduction work package **<pmcsintrowp>**. This work package shall explain the purpose and use of the PMCS data.

E.5.3.4.1.1 Work package identification information **<wpidinfo>**. Work package identification information is required for this work package. (Refer to 4.8.9.3.)

E.5.3.4.1.2 Work package initial setup **<initial_setup>**. Initial setup is not required for this work package.

E.5.3.4.1.3 Preventive Maintenance Checks and Services (PMCS) data.

a. An explanation shall be prepared for each PMCS entry and any general checks/services that are common to the entire piece of equipment. The explanation for the item numbers shall detail how the item numbers are used when recording results of PMCS on DA Form 2404, Equipment Inspection and Maintenance Worksheet.
b. If lubrication instructions are included in the PMCS data, the requirements contained in 0 shall be used.
c. A statement concerning CPC shall be prepared. This statement shall contain maintenance instructions or reference CPC requirements contained in the applicable maintenance instructions. This will include inspection requirements for corrosion and shall reference the types of corrosion listed in section B.5.2.7. For items that are not ready/available resulting from one (or more) of the forms of corrosion being present that shall be recorded as a corrosion failure in the inspection record and the appropriate corrosion code (170) will be used when requesting/performing maintenance activities.In addition, if the inclusion of such instructions is applicable, a statement shall be prepared which states that the instructions are mandatory.
d. When the equipment contains fluids, such as lubrication oil or hydraulic fluid, leakage criteria shall be prepared for the PMCS introduction as follows and referred to in the NOT READY/AVAILABLE IF: column (italicized text within parentheses shall be replaced with the appropriate information).

"**FLUID LEAKAGE**
It is necessary for you to know how fluid leakage affects the status of the (*enter component/equipment name*). Following are types/classes of leakage you need to know to be able to determine the status of the (*enter component/equipment name*). Learn these leakage definitions and remember—when in doubt, notify your supervisor. Equipment operation is allowed with minor leakage (Class I or II). Consideration must be given to fluid capacity in the item/system being checked/inspected. When in doubt, notify your supervisor.

When operating with Class I or II leaks, continue to check fluid levels as required in the PMCS.

Class III leaks should be reported immediately to your supervisor.

(1) Class I. Seepage of fluid (as indicated by wetness or discoloration) but not great enough to form drops.
(2) Class II. Leakage of fluid great enough to form drops, but not enough to cause drops to drip from the item being checked/inspected.
(3) Class III. Leakage of fluid great enough to form drops that fall from item being checked/inspected."

E.5.3.4.2 Preventive Maintenance Checks and Services (PMCS) work package **<pmcswp>**.

E.5.3.4.2.1 Work package identification information **<wpidinfo>**. Work package identification information is required for this work package. (Refer to 4.8.9.3.)

E.5.3.4.2.2 Work package initial setup **<initial_setup>**. Initial setup information is required for this work package. (Refer to 4.8.9.4.)

E.5.3.4.2.3 Preventive Maintenance Checks and Services (PMCS) procedures. The PMCS procedures shall include the checks and services data described in E.5.3.4.2.3.1. When specified by the acquiring activity, an illustration of the equipment shall be included. This illustration shall include a routing diagram by which the PMCS will be performed.

E.5.3.4.2.3.1 Preventive Maintenance Checks and Services (PMCS) data preparation **<pmcstable>**. PMCS data shall consist of the entries described in E.5.3.4.2.3.1.1 through E.5.3.4.2.3.1.6. The text in parenthesis and bold shall be the headings for the PMCS table. PMCS is **standard information per paragraph 4.8.14.7**. (Refer to FIGURE E-2.)

E.5.3.4.2.3.1.1 Item number **<itemno>**. Item numbers (***ITEM NO.***) shall be assigned to the PMCS procedures. The PMCS procedures shall be arranged in a logical sequence requiring minimum time and motion on the part of the person(s) performing them and shall be so arranged that minimum interference will occur between persons performing the checks simultaneously on the same end item.

E.5.3.4.2.3.1.2 Intervals **<interval>**. The designated interval (***INTERVAL***) (e.g., "before," "during," "after," "weekly," etc.) when each check is to be performed shall be included. Procedures done first or most frequently (e.g., "before" checks and services) shall appear before "during" and "after" checks and services. When more advantageous to the user, intervals shall be subgrouped by crewmember(s). The "core" PMCS intervals which can be used are as follows:

Before

During

After

Daily

Weekly

Monthly

Quarterly

Semiannually

Annually

Periodic

Intermediate (**Aviation only**)

Man-hour/day (**Aviation only**)

Phased (**Aviation only**)

Other

E.5.3.4.2.3.1.3 Man-hours **<manhours>**. When specified by the acquiring activity, man-hours (***MAN-HOUR***) required to complete all prescribed lubrication services shall be included. Man-hours shall be stated to the nearest 10th of an hour.

E.5.3.4.2.3.1.4 Item to be checked or serviced **<checked>**. The items listed (***ITEM TO BE CHECKED OR SERVICED***) shall be identified in as few words as possible to clearly identify the item. Usually the common name (e.g., bumper, gas can and mounting bracket, front axle, etc.) will be enough.

E.5.3.4.2.3.1.5 Procedure **<pmcsproc>**. The procedure (***PROCEDURE***) by which each check is to be performed (as well as any information required to accomplish each check or service) shall be provided. This may include lubrication, appropriate tolerances, adjustment limits, and instrument gauge readings. When specified by the acquiring activity, illustrations shall be prepared to identify the location or the process of the task being performed and shall be integrated with the procedures. Whenever replacement or repair is recommended, the maintenance task shall be included or the applicable maintenance instruction work package may be referenced. PMCS procedural steps shall be numbered in accordance with paragraph 4.8.12.1.

E.5.3.4.2.3.1.6 Equipment not ready/available if: **<eqpnotavail>**. A brief statement shall be provided to detail the condition (***EQUIPMENT NOT READY/AVAILABLE IF:***)(e.g., malfunction, shortage) that would cause the equipment to be less than fully ready to perform its assigned mission. If the procedure contains detailed steps, the statement shall be placed opposite the applicable step.

E.5.3.4.2.4 Mandatory replacement parts **<mrplpart>**. All items that must be replaced during PMCS, whether they have failed or not, shall be identified.

a. When mandatory replacement parts are required, the information entries shall be placed in a standard table. (Refer to FIGURE E-3.) The table shall follow the PMCS and shall contain:
   (1) Item number **<itemno>**
   (2) P/N **<partno>**/Commercial and Government Equipment Code (CAGEC) **<cageno>**
   (3) National stock number (NSN) **<nsn>**
   (4) Nomenclature **<name>**
   (5) Quantity **<qty>**
b. If no mandatory replacement parts are required, the following statement shall be included in lieu of parts information:

"No replacement parts are required for these PMCS procedures."

E.5.3.4.3 Preventive Maintenance Checklist (PMC). When specified by the acquiring activity, a PMC shall be prepared as specified in APPENDIX J.

E.5.3.5 Maintenance work packages (**not required for aircraft PM and PMS manuals**) **<maintwp>**. Maintenance information shall be prepared and functionally divided into individual maintenance work packages **<maintwp>** containing one or more maintenance tasks. (Refer to E.5.3.5.3.). These maintenance work packages shall be in the order listed in the MAC and shall use the task titles as given in the MAC. Every task identified in the MAC shall be contained in a maintenance work package. The technical content structure for these work packages shall be consistent from work package to work package. Illustrations shall be prepared to identify the location or the process of the task being performed and shall be integrated with the procedures.

a. Each maintenance work package shall include one or more authorized, complete, start-to-finish maintenance tasks **<maintsk**> pertinent to the specific item. Task title **<title>** shall be identical to the title as used in the applicable MAC and RPSTL. Maintenance tasks are described in E.5.3.5.3.

b. Maintenance instructions shall reference all work packages required for any unusual or critical steps such as specifying QA checks (**depot and aviation only**), care and handling of ESD sensitive items and all hazardous material (e.g., ammunition, radioactive components or materials, including prevention of deterioration due to rough handling, exposure to adverse weather conditions, or other hazards). Visual inspection and safety criteria shall be prepared to determine item serviceability. When applicable, instructions shall contain references to the work packages for disposition of defective ammunition. (Refer to E.5.3.2.3.9.2.) Work packages shall be prepared for use of cleaning materials and paint authorized for use in the specified maintenance operations. When a tool is unusual or abnormal, it shall be described. Other tools, except for tools in a kit, may be described.

c. When specific to the equipment, applicable CPC procedural steps shall be included, or the work package shall reference applicable CPC publications.

d. NSNs shall not be used in procedural steps, illustrations, or legends of maintenance work packages.

e. P/Ns shall not be used in procedural steps, illustrations, or legends, except when essential for identification.

f. Aviation maintenance TMs shall reference work packages in TM 1-1500-204-23, as applicable.

g. The maintenance instructions shall be prepared to include required environmental control data and information. Instructions shall be prepared for information on any special maintenance required under extreme temperature, altitude, and humidity conditions within the limits established by the design specification for the equipment.

h. (**DMWRs/NMWRs only**) A Reliability, Availability, and Maintainability (RAM) table shall be prepared listing the pertinent measurable RAM ranges for the major overhauled components. (Refer to FIGURE E-4.) The RAM requirements shall be prescribed by maintenance engineering of the acquiring activity. When established by maintenance engineering, the requirements shall include critical measurement factors, such as Meantime Between Failures (MTBFs), Meantime Between Corrective Maintenance (MTBCM), Mean Time to Repair (MTTR), availability, and maintenance ratio. The reliability and availability portion of the table shall give the minimum acceptable values, while the maintainability portion shall provide the maximum allowable rates. Availability

may be expressed as a probability versus a qualified number. When specified by the acquiring activity, the RAM information may be prepared in a narrative. (Refer to FIGURE E-4.)

i. When maintenance tasks are updated during a change/revision cycle, the MAC shall be updated to reflect any changes made in the maintenance procedures (e.g., new tasks, deleted tasks, changes in times, etc)

E.5.3.5.1 Work package identification information **<wpidinfo>**. Work package identification information is required for this work package. (Refer to 4.8.9.3.)

E.5.3.5.2 Work package initial setup **<initial_setup>**. Initial setup is required for this work package. (Refer to 4.8.9.4.)

E.5.3.5.3 Maintenance tasks **<maintsk>**. Maintenance work packages shall be prepared for each task at each authorized maintenance level/class. A maintenance task shall be prepared for each maintenance task/function listed in the MAC. For each maintenance task, illustrations shall be used to support or clarify the text, including schematics, wiring diagrams, parts location drawings, and other visual aids. The general maintenance work package is not a single task but is a series of procedures that may be referenced in the tasks below. The following is a list of the maintenance tasks which shall be used and are reserved for task titles except for follow-on and other. These titles shall not be used for procedures within the tasks.

Inspect **<inspect>** (refer to E.5.3.5.3.2)
Test **<test>** (refer to E.5.3.5.3.3)
Service **<service>** (refer to E.5.3.5.3.4)
Adjust **<adjust>** (refer to E.5.3.5.3.5)
Align **<align>** (refer to E.5.3.5.3.6)
Calibrate **<calibration>** (refer to E.5.3.5.3.7)
Remove **<remove>** (refer to E.5.3.5.3.8)
Install **<install>** (refer to E.5.3.5.3.9)
Replace **<replace>** (refer to E.5.3.5.3.10)
Repair **<repair>** (refer to E.5.3.5.3.11)
Paint **<paint>** (refer to E.5.3.5.3.12)
Overhaul **<overhaul>** (refer to E.5.3.5.3.13)
Rebuild **<rebuild>** (refer to E.5.3.5.3.14)
Lubricate **<lube>** (refer to E.5.3.5.3.15)
Mark **<mark>** (refer to E.5.3.5.3.16)
Pack **<pack>** (refer to E.5.3.5.3.17)
Unpack **<unpack>** (refer to E.5.3.5.3.18)
Preserve **<preservation>** (refer to E.5.3.5.3.19)
Prepare for use **<prepforuse>** (refer to E.5.3.5.3.20)
Assemble **<assem>** (refer to E.5.3.5.3.21)
Disassemble **<disassem>** (refer to E.5.3.5.3.22)
Clean **<clean>** (refer to E.5.3.5.3.23)
Non destructive inspection **<ndti>** (refer to E.5.3.5.3.24)
Radio interference suppression **<ris>** (refer to E.5.3.5.3.25)
Place in service **<pis>** (refer to E.5.3.5.3.26)

Towing **<tow>** (refer to E.5.3.5.3.27)
Jacking **<jack>** (refer to E.5.3.5.3.28)
Parking **<park>** (refer to E.5.3.5.3.29)
Mooring **<moor>** (refer to E.5.3.5.3.30)
Covering **<cover>** (refer to E.5.3.5.3.31)
Hoisting **<hoist>** (refer to E.5.3.5.3.32)
Sling loading **<sling>** (refer to E.5.3.5.3.33)
External power **<extpwr>** (refer to E.5.3.5.3.34)
Preparation for shipment and storage **<pss>** (refer to E.5.3.5.3.35)
Arm <**<arm>** (refer to E.5.3.5.3.36)
Load **<load>** (refer to E.5.3.5.3.37)
Unload **<unload>** (refer to E.5.3.5.3.38**)**
Software maintenance **<softwaremaint>** (refer to E.5.3.5.3.39).
Other <**other.maintsk**> (refer to E.5.3.5.3.40)
Follow-on <**followon.maintsk**> (refer to E.5.3.5.3.41)

E.5.3.5.3.1 Maintenance task requirements. Additional mandatory or unique technical information or additional explanations may be required to be included in the maintenance tasks listed in E.5.3.5.3. This information is described in E.5.3.5.3.2 through E.5.3.5.3.41. The following general requirements apply to most of the maintenance tasks in E.5.3.5.3:

a. Specific instructions shall be prepared for lockwiring, installing cotter pins, use of sealing compounds, lubricants or CPCs, and similar operations with applicable references to the expendable and durable items list.
b. Procedures shall not be prepared for separation of bonded, press-fitted, soldered, welded, or riveted parts; or the removal of electronic circuitry parts, unless such removal is necessary to clean, inspect, or test separately.
c. If servicing (e.g., pressurizing and charging with gas, lubrication, etc.) is required upon completion of a maintenance task, include this information as part of the task.
d. Warnings and cautions shall be included whenever chemicals or cleaning compounds are used or combined which may result in a dangerous or hazardous mixture. Whether the danger is to personnel or equipment, it shall be identified and the effect (e.g., gases, fumes, caustic, and fire) shall be stated.
e. Torque requirements, values, and sequences shall be indicated. Only critical torques **<torque>** shall be indicated in task steps. All noncritical torques will be covered by the Torque Limits work package (refer to E.5.3.11) and a reference to the work package shall be provided. Torque values shall be given for all structural attaching hardware, fluid couplings (fuel, oil, hydraulic, pneumatic, etc.), and connections. Torque values shall include torque correction factors when crowfoot extensions, thread lubricants, and cadmium-plated screws or nuts are used. Torque values identified in the tasks must reflect torque wrenches authorized to personnel targeted to perform tasks. Upon completion of torque action, instructions shall be prepared on use of an orientation mark (striping).
f. Such terms as “reverse the disassembly procedures” or “installation is the reverse of removal” shall not be used in any maintenance task.

g. Maintenance procedures or steps that have a major QA effect shall be preceded by a statement (such as "QA check") to identify them.

h. **(DMWRs/NMWRs only)** For items that have parts with specific characteristics, wear limits, specified performance requirements, or fatigue characteristics or tolerances; OIPs shall be included in any applicable maintenance task.

E.5.3.5.3.2 Inspect **<inspect>**. Instructions detailing all required inspections to determine the serviceability of an item by comparing its physical, mechanical, and/or electrical characteristics with established standards through examination (e.g., by sight, sound, or feel) shall be prepared. Special inspection requirements cited below shall be included as necessary.

E.5.3.5.3.2.1 Inspect during assembly. Instructions shall be prepared for testing and inspection during or after assembly to ensure proper assembly of the item. Correct methods of testing, instructions for making tolerance checks, and instructions for inspection of distance measurements (e.g., clearance, end play, backlash) shall be prepared. Measurement criteria and tolerances shall reflect the Test Measurement and Diagnostic Equipment (TMDE) available to the user**.**

E.5.3.5.3.2.2 Inspection of conventional and chemical ammunition or components containing radioactive materials **(Maintainer, below depot sustainment, or ASB only)**. The following information shall be prepared for conventional and chemical munitions or components that contain radioactive material:

a. A statement shall be included that inspection criteria are provided to ensure that performed maintenance will restore items to an acceptable level. At a minimum, the types of inspection procedures shall include a pre-maintenance inspection to be conducted during unpacking, in-process inspections, and final acceptance inspection. Regulations and technical publications relating to policy responsibility and procedures applicable to ammunition stockpile reliability, ammunition surveillance, radioactive materials procedures, and quality evaluation programs shall be referenced. When approved by the acquiring activity, these procedures contained in other publications shall be included in the task.

b. Instructions shall be prepared for inspection methods or techniques used to detect defective components or end items being processed. Classification of Materiel Defects tables (**standard information per paragraph 4.8.13.7**) **<defect.tab>** shall be prepared for ammunition components and packaging and packing material. (Refer to FIGURE E-6.) A classification of defects (e.g., minor, major, or critical) for both functioning and nonfunctioning categories shall be included. The tabulated data shall include the following entries:

   (1) A list of categories of defects **<defecttype>** (minor, major, critical) by the defects attributable to each component **<condition>**.

   (2) The corrective action to be taken **<actionreq>** or a reference **<xref>/<link>** to the corrective action.

   (3) The inspection methods **<insp-method>** used to determine if corrective action was accomplished.

   (4) The acceptable quality level **<acceptqual>** established for each defect.

c. Visual inspection criteria shall be prepared for the packing of the items in conformance with the inspection criteria noted in a above.

d. Detailed instructions and criteria shall be prepared for function testing. When test fixtures must be fabricated, diagrams and instructions for the fabrication shall be prepared. Where ammunition is required for function testing weapons, it shall be identified by Department of Defense Ammunition Code (DODAC), NSN, and nomenclature. This shall also include dummy rounds.

e. Instructions shall be prepared to establish a uniform system of examination for deterioration or damage. Definitions shall be prepared to explain minor, major, and critical defects. When appropriate, lower maintenance levels/classes shall be included.

f. Instructions for disposition of lots shall be prepared and shall be as specified by the acquiring activity. The following statements shall be included in the TM verbatim (italicized text in parentheses shall be replaced with the appropriate information):

(1) "Each lot of materiel shall be inspected and screened 100 percent if one critical nonfunctioning defect is observed. If a critical functioning defect occurs, save the remaining pieces and components; suspend the lot from local issue and use. Submit malfunction reports as prescribed in AR 75-1. Disposition instructions will be furnished by the U.S. Army Materiel Command.

(2) A lot of materiel is acceptable for issue if the acceptable criteria as indicated in *(insert applicable table number)* are met.

(3) Report all lots of materiel rejected under applicable serviceability table for disposition instructions to: Commander, US Army TACOM Life Cycle Management Command, Chemical/Biological Defense, ATTN: AMSTA-LCW-C, 6501 E. 11 Mile Road, Warren, MI 48397-5000. Include a statement describing the capability and workload situation of your organization as to whether you are capable of reworking/demilitarizing the item."

E.5.3.5.3.2.3 Pre-embarkation inspection of materiel in units alerted for overseas movement. If applicable, pre-embarkation inspection instructions shall be prepared. They shall be as specified by the acquiring activity.

E.5.3.5.3.2.4 Inspection of installed items. Instructions shall be prepared for inspection of components, assemblies, or parts installed on the equipment. Instructions shall indicate that inspection will be performed with the item in its normally installed position or condition. The instructions shall consider accessibility and visibility of the item being inspected. The purpose of the inspection shall be stated, e.g., to determine if the item is damaged, deteriorated, or incomplete to the extent that it should be replaced or repaired. Instructions shall be prepared for inspecting solder joints on an electronic item, welds on an armored vehicle, fluid leakage on vehicles, connectors on electronic devices, and other items to identify defects that must be corrected.

E.5.3.5.3.2.5 Inspection-acceptance and rejection criteria. Inspection requirements shall be prepared to include acceptance and rejection information sufficient to determine that new, repaired, and used components, assemblies, and subassemblies conform to wear limits, fits, and tolerances established.

E.5.3.5.3.3 Test **<test>**.

a. Instructions shall be prepared, as applicable, to verify serviceability by measuring the mechanical, pneumatic, hydraulic, chemical, electrical, or electronic characteristics of components, assemblies, and subassemblies and comparing those characteristics with prescribed standards.

b. (**DMWR/NMWR only**) Information shall be prepared for final testing of the highest assembly or equipment/end item involved to ensure the parameters of RAM and durability are met. The following procedures shall be prepared:

(1) Inspection. Inspection procedures (refer to E.5.3.5.3.2) shall be prepared that are required before final testing to ensure the item is complete and ready for final testing. Instructions shall be prepared for any minor preparation tasks needed before final testing.

(2) Lubrication. Any final lubrication procedures (refer to E.5.3.5.3.15) that need to be done before final testing shall be prepared.

(3) Final test procedures. Test procedures (refer to E.5.3.5.3.3), performance standards, and tolerances shall be prepared to establish that the equipment is adequately overhauled and ready for issue without qualifications. The procedures shall list all tools, TMDE, jigs, fixtures, and other support items required for the test in the initial setup information. Operating instructions shall be prepared for special test equipment where necessary. Procedures shall be prepared for minor adjustments that can be done without disassembling equipment. Complete procedures shall be prepared for burn-in or run-in tests.

(4) Final painting, refinishing, and marking. Procedures shall be prepared for any final painting (refer to E.5.3.5.3.12), refinishing, and marking (refer to E.5.3.5.3.16) that could not be done during the overhaul procedures. The materials and tools required to do the job shall be identified. Depot level maintenance shall include data plate replacement data. For data plates which require replacement, the type of material shall be indicated. Detailed preparation and attachment instructions shall be prepared. The instructions for stamping data plates shall include the initials of the facility performing the overhaul or modification, the contact number (if applicable), the date of overhaul or modification, the part number, and the total operating time since new (if applicable). The instructions shall specify the letter and figure sizes and indicate their placement (adjustment to manufacturer's data). The following statement shall be inserted:

"When sufficient space is not available on the existing data plate to add information, the plate shall be replaced and all pertinent data transferred to the new plate. Data shall not be stamped directly on any part, assembly, or item of equipment except when approved by the Government."

E.5.3.5.3.4 Service **<service>**.

a. Instructions shall be prepared for replenishment of fuel; oil; hydraulic or other fluids; oxygen, nitrogen, or other gases; and tire pressure. They shall also include any other such items and materials (except for lubricants) required for complete servicing of the equipment.
b. Servicing instructions shall be supplemented with a diagram showing locations of regular and emergency servicing points. Items located on each side of the equipment which require servicing shall be illustrated and identified as right and left side. NO STEP areas on walkways leading to any tank (in an aircraft) shall be indicated and necessary cautions shall be included.
c. All expendable and durable items used in the servicing instructions shall be referenced and contained in the expendable and durable items list (refer to G.5.6) by standard nomenclature, P/N, and CAGEC. A servicing diagram shall be referenced or included to support the procedures when required.
d. The warnings and cautions to observe in servicing a particular system tank or reservoir (e.g., grounding and prevention of fire hazards) shall be stated clearly.
e. Instructions shall be prepared regarding access to any out-of-the-way or unusual places requiring service.

E.5.3.5.3.5 Adjust **<adjust>**. Adjustment instructions shall be prepared for the item to maintain or regulate, within prescribed limits, by bringing into proper position, or by setting the operating characteristics to specified parameters before operating the part, system, or end item.

E.5.3.5.3.6 Align **<align>**. Detailed alignment instructions shall be prepared to adjust specified variable elements of an item to bring about optimum or desired performance.

E.5.3.5.3.7 Calibrate **<calibration>**. Instructions to determine and cause corrections to be made or to be adjusted on instruments of test, measuring, and diagnostic equipment used in precision measurement. It consists of comparisons of two instruments, one of which is a certified standard of known accuracy, to detect and adjust any discrepancy in the accuracy of the instrument being compared. Equipment that requires calibration after assembly or installation shall be indicated. Reference shall be made to the publication containing the applicable calibration procedure. The calibration procedures contained in other publications may be included in the task, when approved by the acquiring activity.

E.5.3.5.3.8 Remove **<remove>**. Instructions to take a component off an asset to facilitate other maintenance on a different component or on the same component (except for replace and repair.) If a component is removed only to repair or replace it, the remove procedure shall be incorporated into the repair or replace task, rather than using a separate remove task. A remove task typically requires an install task.

a. Instructions shall be prepared in the logical removal sequence. Illustrations shall be used to support and clarify the text. Instructions shall be prepared for checking and recording gear wear patterns, backlash, ESD protective control measures, measurements and tolerances for determining thickness of shims and purpose for shims, and separating and indexing parts for the assembly. Procedures shall identify items which must be matched or precision mated when installed at a later time.

b. **(DMWR/NMWR only)** Instructions shall be prepared for recording the condition of the item/assembly, marking, handling, and storing the item.

E.5.3.5.3.9 Install **<install>**. Instructions for the placing, positioning, or otherwise locating a component to make it part of a higher level end item. If a component is only installed after repair or to replace it, a separate install task shall not be prepared . The install procedure shall be incorporated into the repair or replace task. The install task is authorized by the LMI/MAC and the assigned maintenance level is shown as the third position code of the SMR code. Illustrations shall be used to support and clarify the text. Illustrations shall be used to support and clarify the text..

a. Instructions shall be referenced for painting, refinishing, and marking the item before its installation in the next higher assembly of the equipment.
b. Inspection instructions shall be prepared for checking alignment and adjustment of the item during the installation sequence. These instructions shall include a statement that adjustment, servicing, testing, and/or an operational check is required.
c. Instructions such as "reverse the removal procedure," shall not be used.
d. Specific instructions shall be prepared for lockwiring, installing cotter pins, use of sealing compounds, lubricants, or CPCs and similar operations with applicable references to the expendable and durable items list.
e. Instructions shall identify any mandatory replacement parts or items that are required during the course of the installation. Reference shall be made to the Mandatory Replacement Parts List.

E.5.3.5.3.10 Replace **<replace>**. Instructions to take off an unserviceable component and put a serviceable component in its place. Replace may contain references to separate remove and install tasks if the component is removed/installed for purposes other than to replace it with a new component. The replace task is authorized by the LMI/MAC and the assigned maintenance level is shown as the third position code of the SMR code.

E.5.3.5.3.11 Repair **<repair>**. Instructions for repair actions required to restore an item to a completely serviceable or fully mission capable status. Repair may contain references to separate remove and install tasks if the component is removed/installed for purposes other than to repair it. Repair shall not be used for replacement action. The repair task is authorized by the LMI/MAC and the assigned maintenance level is shown as the fourth position code of the SMR code.

E.5.3.5.3.12 Paint **<paint>**. Instructions shall be prepared for required painting, refinishing, and marking of assembled components, assemblies, subassemblies, or end item. Reference may be made to TM 55-1500-345-23, TB 43-0118, TM 43-0139, or other documents. Instructions shall also be prepared for any final painting, refinishing, and marking that could not be done during the overhaul procedures.

E.5.3.5.3.13 Overhaul **<overhaul>**. Instructions shall be prepared to restore an item to a completely serviceable/operational condition as required by maintenance standards in the appropriate technical publications. Overhaul is normally the highest degree of maintenance performed by the Army. Overhaul does not normally return an item to a like new condition.

E.5.3.5.3.14 Rebuild **<rebuild>**. Instructions shall be prepared for the restoration of unserviceable equipment to a like new condition in accordance with original manufacturing standards. Rebuild is the highest degree of materiel maintenance applied to Army equipment. The rebuild operation includes the act of returning to zero those age measurements (e.g., hours/miles) considered in classifying Army equipment/components.

E.5.3.5.3.15 Lubricate **<lube>**. Pertinent mandatory lubrication instructions, CPC procedures, and general lubrication instructions not contained elsewhere shall be prepared and appear in this section. (Refer to APPENDIX K.)

E.5.3.5.3.16 Mark **<mark>**.

a. For non munitions, instructions shall be prepared placing identifying information on the equipment or item. This may be done after repair or when required due to normal wear.

b. For munitions not covered in the ammunitions maintenance work package (refer to E.5.3.15.1), the following information shall be prepared as a minimum:

(1) Any special sequence of action necessary to protect the ammunition.

(2) If a specially designed reusable container is involved for either the end item or components that are authorized for replacement, instructions shall be prepared to report or reenter the empty container through supply channels.

c. For DMWRs/NMWRs, a reference to the preservation, packaging, and marking general information work package shall be included.

d. For DMWRs/NMWRs, this work package shall be used if instructions for marking IUID are required.

E.5.3.5.3.17 Pack **<pack>**.

a. Instructions shall be prepared detailing how to place an item into a container for either storage or shipment after service and other maintenance operations have been completed.

b. For munitions not covered in the ammunitions maintenance work package (refer to E.5.3.15.1), the following information shall be prepared as a minimum:

(1) Any special sequence of action necessary to protect the ammunition.

(2) If a specially designed reusable container is involved for either the end item or components that are authorized for replacement, instructions shall be prepared to report or reenter the empty container through supply channels.

c. For DMWR/NMWRs, a reference to the preservation, packaging, and marking general information work package shall be included.

E.5.3.5.3.18 Unpack **<unpack>**. Instructions shall be prepared detailing how to remove an item from a storage or shipping container or other shipping device prior to service or other maintenance operations. If the containers are to be used again, kept for future use, turned into supply, or require a special disposition method, the necessary procedures for reassembly of the container shall be prepared. These instructions shall be supported by illustrations.

E.5.3.5.3.19 Preserve **<preservation>**. Instructions shall be prepared for all authorized methods to treat systems and equipment whether installed or stored, to keep them in a satisfactory condition. For DMWR/NMWRs, a reference to the preservation, packaging, and marking general information work package shall be included.

E.5.3.5.3.20 Prepare for use **<prepforuse>**.

a. As applicable, instructions shall be prepared for assembly or other tasks required to prepare the equipment for use after it has been unpacked such as power requirements, connections, and initial control settings needed for installation purposes.
b. For security measures for electronic data, instructions shall be prepared for handling, loading, purging, overwriting, or unloading classified electronic data under usual conditions. Instructions shall meet current security regulations as they pertain to automation security.

E.5.3.5.3.21 Assemble **<assem>**. Step-by-step instructions shall be prepared for assembling items disassembled or removed that make up the components, assemblies, or subassemblies. Illustrations shall be used to support and clarify the text.

a. Instructions shall be prepared for assembling precision-matched or mated parts marked during disassembly.
b. Instructions shall be prepared for checking and recording gear wear patterns, backlash, shimming requirements, and the indexing of parts to ensure proper alignment during assembly. The purpose of shims shall be given (e.g., adjust backlash, prevent metallurgical reaction, etc.).
c. Torque requirements, values, and sequences shall be indicated. Only critical torques **<torque>** shall be indicated in task steps. All non-critical torques will be covered by the Torque Limits work package. (Refer to E.5.3.11.) Torque values shall be given for all structural attaching hardware, fluid couplings (fuel, oil, hydraulic, pneumatic, etc.), and connections. Torque values shall include torque correction factors when crowfoot extensions, thread lubricants, and cadmium-plated screws or nuts are used. Torque values identified in the tasks must reflect torque wrenches authorized to personnel targeted to perform tasks. Upon completion of torque action, instructions shall be prepared on use of an orientation mark (striping).
d. Instructions such as “reverse the disassembly procedure,” shall not be used.
e. ESD standards, ESD sensitive items along with the protective and control measures to be taken, and CPC procedures shall be identified.

E.5.3.5.3.22 Disassemble **<disassem>**. Instructions shall be prepared to take apart components, assemblies, or subassemblies to the extent specified by the MAC and SMR coded items. Illustrations shall be used to support and clarify the text. Instructions shall be prepared for precision matched or mated components, assemblies, subassemblies, or parts (other than common hardware), including ESD sensitive items, to ensure they will be marked, handled, and stored to preclude damage and to ensure assembly and installation in their matched positions.

E.5.3.5.3.23 Clean **<clean>**. Step-by-step instructions on how to remove dirt, corrosion, or other contaminants from equipment shall be prepared. All cleaning instructions, methods, special equipment, and materials shall be specified. Instructions shall be prepared for corrosion prevention treatment of metal parts after cleaning.

a. All materials used in the cleaning and corrosion prevention of equipment, components, or parts shall be referenced and contained in the expendable and durable items list. (Refer to G.5.6.)

b. Cleaning materials used for the cleaning of systems, subsystems, and components in order to prepare them for painting, bonding, applying sealants or adhesives, and the removal thereof shall be Hazardous Air Pollutant (HAP) Free. The use of HAP containing cleaner(s) is considered a serious risk to human health and the environment due to potential impacts on installations that are required to perform the specific cleaning tasks. If a HAP containing cleaner(s) must be used due to performance/technical requirements, then it shall be formally approved by the risk acceptance authority for serious-level risks, as identified in the System Safety program and MIL-STD-882.

c. Instructions shall include cautions to avoid damage of components and to prevent the entrance of water or other solvents into electrical components, ducts, or similar openings.

d. Warnings and cautions shall be prepared whenever chemicals or cleaning compounds are used or combined which may result in a dangerous or hazardous mixture. Any danger to personnel or equipment shall be identified and the effect (e.g., gases, fumes, caustic, and fire) shall be stated.

e. For aircraft, detailed instructions shall be prepared for cleaning and washing the entire aircraft. Instructions shall be prepared for the removal of the battery, the relief tube, and power plant. Removal instructions for armament exhaust deposits or other items or material as necessary shall be provided. Instructions shall also be prepared regarding components which require relubrication after the aircraft has been washed or steam cleaned.

f. Cleaning methods or materials shall not cause corrosion, create conditions that promote corrosion or remove/negate any in-place corrosion prevention methods. If normal cleaning (e.g. pressure washing) has the potential to remove coatings, CPCs or other corrosion prevention materials instructions (or reference to the appropriate methods) shall be provided on how to properly restore the corrosion prevention to the affected system(s).

g. The standard cleaning practice shall include instructions for proper cleanout and draining of enclosed areas. This shall include but is not limited to cleaning drain holes, removing drain plugs and opening covers, hatches, etc. The procedure should clearly state when to open access points, how to clean enclosed areas, how to verify that such spaces are clean and dry and how to reinstall drain plugs, covers, hatches, etc.

E.5.3.5.3.24 Nondestructive Inspection (NDI) **<ndti>**. Step-by-step instructions on preparation and accomplishment of inspections or tests which do not destroy or damge the item or equipment.

a. The reject criteria shall be specified in all cases. This shall be done by means of a blanket statement, individual criteria for a part, or a combination of both.

b. When several NDI methods are permitted, the relative order of preference shall be specified.

c. Instructions shall be prepared for removing primer and/or paint for TMs that require the removal process as part of NDI procedures. If a part requires a special process, this procedure must be contained within the NDI procedure for that part.

d. Cleaning requirements before, during, and after NDI shall be specified. If a part has a built-in bearing, then a procedure shall be prepared to ensure protection of the bearing for the NDI procedure.

e. The following requirements apply to **aircraft NDI TMs only.**

(1) Instructions for use of visible dye penetrants shall not be included as part of NDI instructions unless specified otherwise by the proponent activity. When required, refer to TM 1-1500-335-23 for preparation of those instructions.

(2) When specified by the acquiring activity, TM 1-1500-335-23 shall be the only NDI document referenced in the NDI procedures. The technical provisions of this TM shall be followed. Individual NDI procedures shall be specified for each part requiring NDI. In order to satisfy this requirement, the following shall be prepared:

(a) If penetrant is required, the applicable process in TM 1-1500-335-23 shall be identified.

(b) If magnetic particle inspection is required, the specific TM 1-1500-335-23 method, the type of magnetization, and amount of current or ampere turns shall be provided.

E.5.3.5.3.25 Radio interference suppression **<ris>**.

a. Instructions shall be prepared for primary components in the suppression system. The instructions shall also include the replacement of these primary components.

b. Secondary components shall be referenced to pertinent maintenance procedures that contain the removal and installation instructions.

c. Instructions shall be prepared for testing radio interference suppression components.

E.5.3.5.3.26 Place in service **<pis>**. Instructions shall be prepared for actions not previously provided in a service upon receipt work package (refer to E.5.3.2) that may be required for an assembly, component, or end item. Instructions shall be prepared such as removal of an item from storage and preparation for installation on an end item. Final servicing checks, calibration, leak checks, charging, pressurizing, and operational checks shall be prepared.

E.5.3.5.3.27 Towing **<tow>**. Instructions shall be prepared to connect one vehicle to another for the purpose of having one vehicle moved through the motive power of the other vehicle.

E.5.3.5.3.28 Jacking **<jack>**. Instructions shall be prepared to mechanically raise or lift a vehicle to facilitate maintenance on the vehicle.

E.5.3.5.3.29 Parking **<park>**. Instructions shall be prepared to safely place a vehicle in a lot, ramp area, or other designated location.

E.5.3.5.3.30 Mooring **<moor>**. Instructions shall be prepared to secure a vehicle by chains, ropes, or other means to protect the vehicle from environmental conditions or secure for transportation.

E.5.3.5.3.31 Covering **<cover>**. Instructions shall be prepared to place a protective wrapping over a vehicle to protect it from environmental conditions or to hide (e.g., camouflage) it.

E.5.3.5.3.32 Hoisting **<hoist>**. Instructions shall be prepared to allow a vehicle to be raised by cables or ropes through attaching points.

E.5.3.5.3.33 Sling loading **<sling>**. Instructions shall be prepared to place a sling around a vehicle to allow it to be raised.

E.5.3.5.3.34 External power **<extpwr>**. Instructions shall be prepared on how to apply electrical power from any authorized power source (e.g., external generator or facility power).

E.5.3.5.3.35 Preparation for storage or shipment **<pss>**. As applicable, the following shall be prepared:

a. Instructions for security procedures and special transportation requirements for sensitive items (security, terrorism, etc.).
b. Instructions for special preservation, packaging, packing, marking, ESD-protective and control measures, and shipping. These shall include the use of specially designed reusable containers.
c. Instructions on special use of corrosion-preventive compounds, moisture barriers, and desiccant materials.
d. Instructions for applying special identifying, shipping, and cautionary markings to shipping containers. These shall include security classification, special temperature requirements, and shelf life.
e. Instructions will be provided by the proponent activity for placing equipment in, and for removing it from, administrative storage.
f. Instructions for procedures on the proper handling, blocking, and bracing of basic load ammunition when being transported in trucks and other tactical vehicles.
g. (**Conventional and chemical ammunition only**) Instructions for basic load storage, quantity-distance class, storage compatibility groupings, storage temperatures, stacking limits, and other pertinent storage requirements.
h. Instructions for aviation ground support equipment requirements to include a reference to TM 1-1500-204-23 for general technical information for preparation for storage or shipment.

E.5.3.5.3.36 Activate ammunition, mines, etc. **<arm>**. Instructions shall be prepared for activation of munitions (e.g., ammunition, mines, etc.) prior to use.

E.5.3.5.3.37 Load **<load>**. Instructions for placing assets onto a transportation medium (e.g., pallet, truck, container) or munitions into a weapon/weapon system shall be prepared as required to support the specific equipment.

a. For transportation, the act of placing assets onto a transportation medium (e.g., pallet, truck, container).
b. For munitions, the act of placing munitions onto a vehicle or aircraft.

E.5.3.5.3.38 Unload **<unload>**. Instructions for removing assets from a transportation medium (e.g., pallet, truck, container) or munitions from a weapon/weapon system shall be prepared as required to support the specific equipment.

a. For transportation, the act of removing assets from a transportation medium (e.g., pallet, truck, container).
b. For munitions, the act of removing munitions from a vehicle or aircraft.

E.5.3.5.3.39 Software maintenance **<softwaremaint>**. Instructions for software maintenance tasks (e.g., installing, un-installing, interface setup, etc.) shall be prepared as required to support the specific equipment.

E.5.3.5.3.40 Additional maintenance tasks **<other.maintsk>**. Additional maintenance tasks may be developed when the specific type of maintenance tasks are not covered as described in E.5.3.5.3.2 through E.5.3.5.3.39. If additional maintenance tasks are used, the proponent shall submit to LOGSA the requirements for this maintenance task type for possible incorporation within future revisions to this standard.

E.5.3.5.3.41 Follow-on maintenance task **<followon.maintsk>**. Refer to E.5.3.2.3.11 for requirements.

E.5.3.6 Overhaul and retirement schedule work package **(aircraft only) <orschwp>**. A work package identifying the criteria to overhaul or retire an aircraft or aircraft components shall be prepared.

E.5.3.6.1 Work package identification information **<wpidinfo>**. Work package identification information is required for this work package. (Refer to 4.8.9.3.)

E.5.3.6.2 Work package initial setup **<initial_setup>**. Initial setup is not required for this work package.

E.5.3.6.3 Overhaul and retirement schedule **<orsch>**. The overhaul and retirements schedule shall include the following statement and the associated table (**standard information per paragraph 4.8.13.7**) (refer to FIGURE E-6):

> **"OVERHAUL AND RETIREMENT SCHEDULE**
>
> Units of operating equipment that are to be overhauled or retired at the period specified are listed here. Unless otherwise specified in TM 1-1500-328-23, Aeronautical Equipment Maintenance Management Policies and Procedures, removal of equipment for overhaul may be accomplished at the inspection nearest the time when overhaul is due."

The overhaul and retirement schedule shall be prepared as a table and shall consist of the following entries:

a. Part name. The name of the part shall be listed. An asterisk (*) shall precede the part name if the part is an indentured subassembly.
b. Part number. The official P/N of the part listed.
c. Overhaul interval hours. The maximum operating time allowed on the part before it is to be overhauled.
d. Overhaul interval notes. Any additional information required on the part's overhaul interval.
e. Retirement interval hours. Maximum operating time allowed on the part before it is removed and condemned.
f. Retirement interval notes. Any additional information required on the part's retirement interval.

E.5.3.7 General maintenance work package **<gen.maintwp>**. This work package shall be prepared as directed by the acquiring activity. It shall contain common, general, or standard maintenance procedure(s) (e.g., specific torque wrench usage, lockwire procedures, "O" ring seal installation, external power connections, etc.) applicable to other maintenance work packages contained within the TM that require this general maintenance procedure to complete the task. Maintenance tasks listed in E.5.3.5.3 shall not be included. This WP may be referenced in other maintenance work packages.

E.5.3.7.1 Work package identification information **<wpidinfo>**. Work package identification information is required for this work package. (Refer to 4.8.9.3.)

E.5.3.7.2 Work package initial setup **<initial_setup>**. Initial setup is required for this work package. (Refer to 4.8.9.4.)

E.5.3.7.3 Maintenance procedure **<proc>**. Instructions to perform a specific common, general, or standard maintenance procedure shall be prepared or referenced.

E.5.3.8 Lubrication instructions work package **<lubewp>**. This work package shall be prepared as directed by the acquiring activity. It shall contain the requirements outlined in E.5.3.8.1 through E.5.3.8.4.

E.5.3.8.1 Work package identification information **<wpidinfo>**. Work package identification information is required for this work package. (Refer to 4.8.9.3.)

E.5.3.8.2 Work package initial setup **<initial_setup>**. Initial setup is required for this work package. (Refer to 4.8.9.4.)

E.5.3.8.3 Lubrication instructions. Lubrication schedules shall be prepared to present all applications, procedures, lubricants, and lubrication points to completely lubricate equipment.

E.5.3.8.4 Lubrication charts.

a. Lubrication charts shall consist of a main drawing prepared as a three-dimensional (3-D) diagram. They shall consist of enlarged or detailed views as are considered necessary to identify items which otherwise would be obscured. They shall show all lubrication requirements for all parts of the equipment requiring periodic lubrication, other than those lubricated by the main engine oil system. The charts shall also indicate type of lubricant, method of application, and frequency. (Refer to FIGURE E-7.)
b. Use of black silhouette figures representing a likeness of the tool used in the application (oil can, grease gun, brush, or hand) shall be the accepted means of presenting application methods on the lubrication chart.
c. Abbreviations, as specified in MIL-HDBK-275, shall be used to present lubricant types. In the event a lubricant does not have an abbreviation listed in MIL-HDBK-275, the abbreviation shall be provided by the acquiring activity. Assigned application symbols, type abbreviations, and frequency shall be placed within the standard lubrication symbols.
d. Each application symbol and lubricant abbreviation used shall be defined. Notes may be used to specify any other than normal requirements.

E.5.3.9 DMWR/NMWR specific maintenance work packages.

E.5.3.9.1 Preservation, packaging, and marking general information work package <**ppmgeninfowp**>. This work package shall be prepared and shall be the first work package in the first maintenance chapter. This work package shall contain the below preservation, packaging, and marking general information verbatim. Individual maintenance work packages shall be prepared for pack (refer to E.5.3.5.3.17), mark (refer to E.5.3.5.3.16), and preserve (refere to E.5.3.5.3.19) tasks. This work package shall refer to the individual work packages containing the procedures for packing, marking, and preserving. This work package shall not contain any tasks/procedures.

"PACKAGING

Military preservation, Level A packing, and marking shall be accomplished in accordance with the specific packaging instructions contained in WP (*insert work package number*).

MARKING FOR SHIPMENT AND STORAGE

Storage: In addition to any special markings called out on the special packaging instruction (SPI) or in the packaging requirements code, all unit packages, intermediate packs, exterior shipping containers, and, as applicable, unitized loads shall be marked in accordance with MIL-STD-129 including bar coding. The repair facility is responsible for application of special markings as required by MIL-STD-129 regardless of whether specified in the contract/order or not. Special markings include, but are not limited to, Shelf-life markings, structural markings, and transportation special handling markings. The marking of pilferable and sensitive materiel will not identify the nature of the materiel.

Shipment: The repair facility shall apply identification and address markings with bar codes in accordance with MIL-STD-129. A Military Shipment Label (MSL) is required for all shipments except contractor to contractor. The MSL will include both linear and 2D bar codes per the standard. Military Shipping Label: Military Shipment Labels may be created using the Computer Automated Transportation Tool Military Shipment Label/Issue Receipt Release Document (CATT MSL/IRRD).

HEAT TREATMENT AND MARKING OF WOOD PACKAGING MATERIALS

Wood Packaging Materials (WPM) (e.g., boxes, crates, skids, pallets, and any wood used as inner packaging made of non-manufactured wood) shall be constructed of lumber that has been heat-treated in accordance with the requirements of International Standard for Phytosanitary Measures (ISPM) –15. The WPM manufacturer shall be affiliated with an inspection agency accredited by the board of review of the American Lumber Standard Committee. The WPM manufacturer shall ensure traceability to the original source of heat treatment. Each piece of WPM shall be marked to show the conformance to the International Plant Protection Convention Standard. Certification markings shall be indelible and permanent. They may be stamped, stenciled, or branded directly onto or into the WPM. Certification marks shall be applied in a visible location on at least two opposite sides of the wood packaging product, but are not

required on each individual component piece of a wood packaging product. On dunnage, the marking shall be applied every 2 feet to opposite surfaces of each piece. If possible, the mark shall be visible when the dunnage is placed in the load to enable inspectors to verify the WPM's compliance without unloading or unstuffing the container. Foreign manufacturers shall have the heat treatment of WPM verified in accordance with their National Plant Protection Organization's compliance program.

ALTERNATIVES

The packaging requirements have been validated and the method of preservation/packing has proven successful in meeting the needs of the military distribution system, including undefined storage and shipment throughout the world. Tailoring of the packaging instructions may only be authorized by the packaging requirements developer. If tailored, prototype package is required to validate the sizes and fit requirements. Minor dimensional and size changes are acceptable provided e-mail notification is provided to the packaging requirements developer. Any design changes or changes in the method of preservation that provide a cost savings without degrading the method of preservation or packing or affecting the serviceability of the item will be considered and responded to within 10 days of submission. The equipment proponent reserves the right to require testing to validate alternate preservation methods, materials, alternates, blocking, bracing, cushioning, and packing.

REUSE OF PACKAGING MATERIALS

The cushioning material and the fiberboard boxes may be reused provided:

a. There is no visible damage to material.
b. The foam cushioning has not taken a permanent set.
c. The fiberboard has no punctures, delaminating, or crushed flutes.

The water vapor proof barrier bag shall never be reused. Always use new barrier material, evacuate air from the barrier bag, and conduct a snap test after 2 hours on each bag to ensure seal is holding. All components of the wood box/crate must be present, properly secured in position, and not broken. Splits are acceptable provided the boards remain secured and not loose. When reapplying the lid, fasteners shall be placed 1/2 inch away from the previous fastener hole. Strapping shall be applied per MIL-HDBK-774.

CONTAINER REPAIR

Each long life metal reusable container will be inspected and reconditioned in accordance with TB 9-289, TB 55-8100-200-24, or SB 725-92-1 and the applicable container drawing package. Container drawings are available upon request from the packaging requirements developer. This reconditioning effort includes mandatory replacement of breather valves, humidity indicators, data plates, sealing gaskets, and desiccant, plus all shear mounts with an age factor of 5 years or older. It also includes a leak test after reconditioning, inspection and replacement of unserviceable wood skids, and touch up or total stripping and refinishing of the container surfaces with CARC paint."

E.5.3.9.2 Facilities work package **<facilwp>**. This work package shall be prepared as directed by the acquiring activity. A description of all facilities (e.g., test stands, test tracks, clean rooms, shielded rooms, or other facilities) that are required to do the maintenance work shall be included. Reference shall be provided for any specifications or standards that these facilities must meet. When approved by the acquiring activity, data from these standards may be included in this work package.

E.5.3.9.2.1 Work package identification information **<wpidinfo>**. Work package identification information is required for this work package. (Refer to 4.8.9.3.)

E.5.3.9.2.2 Work package initial setup **<initial_setup>**. Initial setup is required for this work package. (Refer to 4.8.9.4.)

E.5.3.9.3 Overhaul inspection procedures (OIPs) work package **<oipwp>**. Unless otherwise specified by the acquiring activity, OIPs shall be prepared for items that have parts with specific characteristics, wear limits, specified performance requirements, or fatigue characteristics or tolerances. A separate work package shall be provided for each item containing such parts. Within each work package, a separate OIP table or list shall be provided for each part of the item that requires a critical inspection. The OIP shall consist of the characteristics being inspected for, inspection methods, and the acceptance/reject criteria that must be met. Unless otherwise specified by the acquiring activity, an illustration shall accompany the OIP. Illustrations for OIPs are strongly encouraged and shall only be omitted for very simple systems/parts. A reference letter may be included on the illustration to aid in locating the critical inspection characteristics of the parts. The OIPs shall be placed immediately after the maintenance step for which it applies. When a maintenance task contains an excessive number of parts requiring OIPs, the OIPs may take the form of a consolidated table or list.

E.5.3.9.3.1 Work package identification information **<wpidinfo>**. Work package identification information is required for this work package. (Refer to 4.8.9.3).

E.5.3.9.3.2 Work package initial setup **<initial_setup>**. Initial setup is required for this work package. (Refer to 4.8.9.4.)

E.5.3.9.3.3 Overhaul Inspection Procedures (OIPs). The OIP shall contain the characteristics being inspected for, the inspection methods being used, and the acceptance/reject criteria that must be met. Unless otherwise specified, an illustration shall accompany the OIP. Illustrations are strongly encouraged for OIPs and shall only be omitted for very simple systems/parts. A reference letter may be included in the OIP to locate the critical inspection characteristics of the parts on the illustrations. The OIPs may be contained in a table or a list. (Refer to FIGURE E-8.) References to these OIP work packages shall be included within the applicable maintenance procedural step (e.g., disassembly, reassembly, testing, etc.) or preshop analysis procedural step where they apply. The OIP is **standard information per paragraph 4.8.13.7**.

E.5.3.9.4 Depot mobilization requirements work package **<mobilwp>**. When specified and provided by the acquiring activity, the modifications, deletions, or additions to the preshop analysis or overhaul procedures required during mobilization shall be included in this work package. The data described in E.5.3.9.4.1 through E.5.3.9.4.4 shall be included (**standard information per paragraph 4.8.13.7**).

E.5.3.9.4.1 Work package identification information **<wpidinfo>**. Work package identification information is required for this work package. (Refer to 4.8.9.3.)

E.5.3.9.4.2 Work package initial setup **<initial_setup>**. Initial setup information is required for this work package. (Refer to 4.8.9.4.)

E.5.3.9.4.3 Introduction for depot mobilization requirements work package **<intro>**. The following text shall be included verbatim:

"**DEPOT MOBILIZATION REQUIREMENTS**
INTRODUCTION

Scope
The purpose of this work package is to streamline and accelerate the overhaul process during the mobilization of the depot.

Explanation of Mobilization Requirements
The mobilization requirements include a list of instructions for modifying preshop analysis and/or overhaul procedures. The pertinent procedures to be modified are referred to by work package number, followed by the action to be taken."

E.5.3.9.4.4 Mobilization requirements **<mobilreq>**. Mobilization requirements consist of a list of actions that shall be in effect during depot mobilization. The work packages that are modified by these actions shall be noted. This data shall be provided in a standard table (**standard information per paragraph 4.8.13.7**) **<mobiltab>.** Alternatively, if the actions are already listed in another work package or packages, a statement shall be made that includes references to those actions. (Refer to FIGURE E-9 for example of mobilization requirements.)

E.5.3.9.5 QA requirements work package **<qawp>**. This work package shall be prepared and include the data described in E.5.3.9.5.1 through E.5.3.9.5.10.

E.5.3.9.5.1 Work package identification information **<wpidinfo>**. Work package identification information is required for this work package. (Refer to 4.8.9.3.)

E.5.3.9.5.2 Work package initial setup **<initial_setup>**. Initial setup is required for this work package. (Refer to 4.8.9.4.)

E.5.3.9.5.3 Statement of responsibility **<responsibility>**. The following information shall be included:

"**STATEMENT OF RESPONSIBILITY**
The depot/contractor is responsible for complying with the quality assurance requirements contained in this work package and in accordance with International Standards Organization (ISO) 9000 Series standards or equivalent. The commodity manager reserves the right to perform inspections or make changes that ensure the depot work being done meets the quality standards of the DMWR and preserves the inherent reliability of the item."

E.5.3.9.5.4 Definitions **<definitions>**. Definitions shall be prepared for all QA terms extensively used in the DMWR and NMWR. If the definitions are listed in another publication, that publication shall be referenced.

E.5.3.9.5.5 Special requirements for inspection tools and equipment **<specialreq>**. Any special requirements for the maintenance and calibration of tools and test equipment used for QA inspections shall be listed.

E.5.3.9.5.6 Certification requirements **<certreq>**. Any certification or licensing requirements for processes, procedures, materials, equipment, or personnel skills shall be listed. The list shall include appropriate standards, specifications, regulations, and/or laws that apply. The list shall reference the text in the DMWR/NMWR where a requirement exists for a soldering, welding, or magnetic particle inspection certification, radioactive substance, or test driver licenses.

E.5.3.9.5.7 Quality program **<quality-program>**. Any requirements for a quality program shall be listed.

E.5.3.9.5.8 In-process inspections **<inprocess>**. The following statement shall be included:

> "**IN-PROCESS INSPECTIONS**
>
> In-process quality assurance (QA) inspections are contained throughout the overhaul procedures of this DMWR. These inspections are immediately preceded by a statement such as "QA check" to identify them. They are the minimum inspections required. Additional QA inspections may be established by the depot or the commodity manager."

E.5.3.9.5.9 Acceptance inspections **<acceptance>**. The following statement shall be included:

> "**ACCEPTANCE INSPECTIONS**
>
> Items overhauled in accordance with this DMWR will be accepted based on the following criteria:
>
> 1. Conformance to quality of material requirements.
> 2. Conformance to all in-process quality assurance inspections.
> 3. Conformance to all final assembly testing requirements.
> 4. Conformance to the preservation, packaging, and marking requirements."

E.5.3.9.5.10 First article inspection **<first>**. When applicable, reference to first article inspection/test prepared for the DMWR/NMWR in accordance with ISO 9000 Series standards or equivalent shall be included.

E.5.3.10 Illustrated list of manufactured items (**Maintainer/AMC and above**). The illustrated list of manufactured items information shall be prepared when there are any items required to support maintenance or operation coded with an "M" in the source code of the SMR contained in the RPSTL. It shall contain an introduction work package (refer to E.5.3.10.1) and one or more manufacturing procedure work packages (refer to E.5.3.10.2). The manufacturing procedure work package shall identify and include technical information for each item authorized to be manufactured or fabricated by field or sustainment personnel (e.g., all "MO," "MF," "MH," and

"MD" source coded items). When applicable, links may be made to fabrication instructions for tools and equipment.

E.5.3.10.1 Illustrated list of manufactured items introduction work package **<manu items introwp>**. The work package shall include the data described in E.5.3.10.1.1 through E.5.3.10.1.4.

E.5.3.10.1.1 Work package identification information **<wpidinfo>**. Work package identification information is required for this work package. (Refer to 4.8.9.3.)

E.5.3.10.1.2 Work package initial setup **<initial_setup>**. Initial setup is not required for this work package.

E.5.3.10.1.3 Introduction for illustrated list of manufactured items work package **<intro>**. The following introduction shall be prepared and included verbatim (italicized text within parentheses shall be replaced with the appropriate information):

> "**ILLUSTRATED LIST OF MANUFACTURED ITEMS**
> **INTRODUCTION**
>
> **Scope**
> This work package includes complete instructions for making items authorized to be manufactured or fabricated at the (*enter applicable maintenance level*).
>
> **How to Use the Index of Manufactured Items**
> A part number index in alphanumeric order is provided for cross-referencing the part number of the item to be manufactured to the information that covers fabrication criteria.
>
> **Explanation of the Illustrations of Manufactured Items**
> All instructions needed by maintenance personnel to manufacture the item are included on the illustrations. (*When applicable, a reference to the associated parts information TM or parts information work package shall be entered here.*) All bulk materials needed for manufacture of an item are listed by part number or specification number in a tabular list on the illustration."

E.5.3.10.1.4 Index of manufactured items **<manuindx>**. An index of P/Ns or drawing numbers shall be prepared. This index shall list P/Ns and/or drawing numbers, in alphanumeric order, along with the name of the part for all items illustrated in this work package. The work package number to the manufactured items work package containing the manufacturing instructions shall be included.

E.5.3.10.2 Manufacturing procedure work package **<manuwp>**. A work package shall be prepared for each manufactured item. It shall contain the data described in E.5.3.10.2.1 through E.5.3.10.2.3.

E.5.3.10.2.1 Work package identification information **<wpidinfo>**. Work package identification information is required for this work package. (Refer to 4.8.9.3.)

E.5.3.10.2.2 Work package initial setup **<initial_setup>**. Initial setup information is required for this work package. (Refer to 4.8.9.4.)

E.5.3.10.2.3 Instructions for manufactured items **<manuitem>**. The following shall be prepared:

a. Illustrations which contain sufficient views to portray all features of the item (as required). (Refer to FIGURE E-10.)
b. All instructions (explanatory text and list of bulk materials) needed by maintenance personnel to manufacture the item (refer to FIGURE E-10) shall supplement the illustrations and shall contain the following data:
   (1) All dimensional, location, and processing instructions needed to manufacture the item shall be included (e.g., 30 in. long, top surface, primer coating).
   (2) A description of the item to be manufactured, including the P/N and name.
   (3) A list of bulk materials needed to manufacture the item shall be prepared. The list of bulk materials shall consist of the P/N, CAGEC and NSN, or specification number of the raw bulk material to be used in manufacture of the item. The list shall cite the technical characteristics (e.g., standards, specifications, conditions, dimensions, and any other pertinent data).
   (4) When applicable, a link shall be made to the associated parts information (PI), parts information TM, or Repair Parts List work package (for combined TMs).

E.5.3.11 Torque limits work package (**Maintainer/AMC and above**) **<torquewp>**. This work package shall be prepared as directed by the acquiring activity. Information shall be prepared to provide applicable torque values **<torque>** (expressed in foot or inch pound terms), data as to bolt grade markings and their proper identification, and specific torque sequencing requirements. Refer to FIGURE E-11 for an example of the type of information presented in a torque limits work package. The torque data described in E.5.3.11.1 through E.5.3.11.4 shall be included.

E.5.3.11.1 Work package identification information **<wpidinfo>**. Work package identification information is required for this work package. (Refer to 4.8.9.3.)

E.5.3.11.2 Work package initial setup **<initial_setup>**. Initial setup is required for this work package. (Refer to 4.8.9.4.)

E.5.3.11.3 Introduction **<intro>**. Information shall be prepared to include the scope or how to use the work package.

E.5.3.11.4 Torque instructions **<torqueval>**. Specific instructions such as torque limits for dry and wet fasteners, fastener sizes and thread patterns, etc., shall be prepared.

E.5.3.12 Wiring diagrams work package (**Maintainer/AMC and above**) **<wiringwp>**. This work package shall be prepared as directed by the acquiring activity. It shall include wiring and cable provisions contained in the equipment/end item, including all systems or equipment which can be installed or removed later (e.g., mission-related systems/equipment). Applicability of diagrams shall be explained in relation to equipment configuration. At a minimum, the wiring data described in E.5.3.12.1 through E.5.3.12.6 shall be included.

E.5.3.12.1 Work package identification information **<wpidinfo>**. Work package identification information is required for this work package. (Refer to 4.8.9.3.)

E.5.3.12.2 Work package initial setup **<initial_setup>**. Initial setup information is required for this work package. (Refer to 4.8.9.4.)

E.5.3.12.3 Introduction **<intro>**. Information shall be prepared to include the scope of the work package. A statement shall be included explaining that wiring diagrams and essential wiring information are provided for all electrical and electronic systems and circuits.

E.5.3.12.4 Wire identification **<wireid>**. Identification of wires by number shall be explained. A list of circuit designators and a wire identification diagram shall be prepared.

E.5.3.12.5 Abbreviations **<abbrev>**. A statement shall be prepared that abbreviations are in accordance with those found at https://www.rmda.army.mil/abbreviation/mainpage.asp, except when the abbreviation stands for a marking actually found in the equipment.

E.5.3.12.6 Wiring diagrams **<wiringdiag>**. Wiring diagrams shall be prepared for all electrical and electronic systems and circuits.

E.5.3.13 Aircraft specific maintenance work packages.

E.5.3.13.1 Preventive maintenance inspections work package **<pmiwp>**. This work package shall be prepared as directed by the acquiring activity and shall contain the requirements outlined in E.5.3.13.1.1 through E.5.3.13.1.5.

E.5.3.13.1.1 Work package identification information **<wpidinfo>**. Work package identification information is required for this work package. (Refer to 4.8.9.3.)

E.5.3.13.1.2 Work package initial setup **<initial_setup>**. Initial setup information is required for this work package. (Refer to 4.8.9.4.)

E.5.3.13.1.3 General information and introduction **<geninfo>**. The following paragraph shall be inserted (italicized text within parentheses shall be replaced with the appropriate information):

> "**GENERAL INFORMATION**
>
> This work package contains complete requirements for special inspections, overhaul and retirement schedule, and standards of serviceability applicable to the aircraft. The inspections prescribed in this work package shall be accomplished at specified periods by aviation maintenance companies, with the assistance of aviation support battalions when required. Complete Daily, Intermediate, Periodic, or Phased inspections are contained in the (*insert applicable aircraft inspection checklist TM*)."

E.5.3.13.1.4 Standards of serviceability. The following paragraph shall be inserted:

> "Standards of serviceability to be used in the day-to-day inspection and maintenance of the aircraft can be found as fits, tolerances, wear limits, and specifications in the aircraft maintenance manuals. Standards of serviceability for transfer to aircraft are contained in TM 1-1500-328-23."

E.5.3.13.1.5 Special inspections.

a. Definition and general information. The following paragraph shall be inserted:

"This information supplements scheduled inspections as outlined in the applicable aircraft inspection checklists. Inspection of items that are required to be inspected at intervals not compatible with airframe operating time or airframe inspection intervals is also included. Refer to DA PAM 738-751 (Functional Users Manual for the Army Maintenance Management System-Aviation (TAMMS-A)) for applicable forms, records, and worksheets required for these inspection intervals. Typical examples of this type of inspection are as follows:

(1) Inspections which are solely contingent upon specific conditions or incidents that occur (e.g., hard landings, over speed, or sudden stoppage), wherein immediate inspection is required to ensure safe flight.

(2) Inspection of components or airframe on a calendar basis, e.g., first aid kits, weight and balance check, aircraft inventory."

b. Requirements. Components and other items which qualify under the criteria for special inspections, as detailed previously, or over speed shall be included. These inspections shall be grouped under specific aircraft areas. A line drawing of the aircraft or accessory showing sequence for inspection by area shall be included. The area identified shall include all surfaces, materials, components, and equipment pertaining to that specific location. The following inspection data entries shall be included, as applicable. The information entries shall be placed in a table (**standard information per paragraph 4.8.13.7**) **<pmi.pecul.tab>**.

(1) Aircraft serial or tail number **<serialno>**.

(2) Date of inspection **<date>**.

(3) Area number **<areano>**.

(4) Inspection number **<itemno>**.

(5) Inspection interval **<interval>**.

(6) Name of component being inspected **<compname>**.

(7) Inspection procedure **<proc>**.

E.5.3.13.2 Aircraft inventory master guide work package **<inventorywp>**. This work package shall be prepared as directed by the acquiring activity. Information shall be prepared on standard inventory procedures to allow determination of inventoriable items of installed and loose equipment authorized and required by the specific aircraft in performance of its mission. The inventory data described in E.5.3.13.2.1 through E.5.3.13.2.6 shall be included.

E.5.3.13.2.1 Work package identification information **<wpidinfo>**. Work package identification information is required for this work package. (Refer to 4.8.9.3.)

E.5.3.13.2.2 Work package initial setup **<initial_setup>**. Initial setup information is required for this work package. (Refer to 4.8.9.4.)

E.5.3.13.2.3 Introduction **<intro>**. A short explanation of the scope and purpose of the work package shall be prepared. Information pertaining to the necessary steps to ensure the list is accurate, exact, and complete (e.g., research of authorized changes, Modification Work Orders (MWOs), additions/deletions for special mission requirements) shall be included. The introduction shall include a reference to DA PAM 738-751 for applicable forms and records.

E.5.3.13.2.4 Security **<security>**. It shall be stated here that aircraft inventory records should be unclassified, but, if necessary, any classification of the contents shall be in accordance with the existing security regulations.

E.5.3.13.2.5 Inventoriable items **<inventoriable>**. The selection of inventoriable items to be listed is to be without regard to the agency (governmental or contractual) furnishing the items.

a. Items to be listed are as follows:
   (1) Items essential to the execution of the designated mission of the aircraft, such as electronic, photographic, armament, special mission instruments, and safety and comfort equipment.
   (2) Loose equipment delivered with the aircraft and items subject to pilferage or readily converted to personal use.
   (3) Modification kits which are reissued or distributed to using organizations for installation and which are not immediately placed in use. These shall be recorded on the affected aircraft's DA Form 2408-17, Aircraft Inventory Record, and identified as loose equipment until modification is completed.
   (4) Equipment required for operation in a specific environment.
b. Items to be excluded are as follows:
   (1) Nonaccountable items coded as expendable in the applicable stock lists.
   (2) Personal issue or items furnished on unit allowance or other authority.
   (3) Items or components considered as basic or integral parts of the airframe or basic aircraft, such as engines, propellers, wheels, and standard instruments.
   (4) Equipment publications, checklists, and aircraft forms.

E.5.3.13.2.6 Periods of inventory **<prdinv>**. The following text shall be included verbatim:

"**PERIODS OF INVENTORY**

Inventoriable items shall be checked against the Aircraft Inventory Record, DA Form 2408-17, at the following periods:

1. Upon receipt.
2. Before transfer of the aircraft to another organization.
3. Upon placing aircraft in storage and upon removal from storage. Aircraft need not be inventoried while in storage.
4. Twelve months after last inventory."

E.5.3.13.3 Storage of aircraft work package **<storagewp>**. The stowage of aircraft work package(s) shall be prepared as directed by the acquiring activity. Information described in E.5.3.13.3.1 through E.5.3.13.3.4 shall be included.

E.5.3.13.3.1 Work package identification information **<wpidinfo>**. Work package identification information is required for this work package. (Refer to 4.8.9.3.)

E.5.3.13.3.2 Work package initial setup **<initial_setup>**. Initial setup information is required for this work package. (Refer to 4.8.9.4.)

E.5.3.13.3.3 General information for storage of aircraft work package **<geninfo>**. The following text shall be included verbatim:

"**STORAGE OF AIRCRAFT**
GENERAL INFORMATION

Components Involved in an Accident

Any component removed for reason of accident shall not be preserved, but shall be shipped in the same condition it was in after the accident.

Categories of Storage

1. Flyable storage - no time limit.
2. Short term (administrative storage) - 1 to 45 days.
3. Intermediate storage - 46 to 180 days."

E.5.3.13.3.4 Flyable storage **<flyable>**, short term storage **<short>**, and intermediate storage **<intermediate>**.

a. A general discussion shall be prepared for each category of aircraft storage, to include considerations for selection of the appropriate category (e.g., ground operation, motoring of engines, and other required maintenance for which personnel and materials are needed) and steps to be taken for care of the aircraft during exceptionally wet weather.
b. For each category of aircraft storage, all essential information shall be prepared to include all procedures for preparing the complete aircraft for storage and removal from storage. It shall exclude any information on when or why the aircraft is stored. Each category of storage shall make reference to inspection documents and inspection procedures to be conducted before, during, and after storage.

E.5.3.13.4 Weighing and loading work package **(ASB only) <wtloadwp>**. The weighing and loading work package(s) shall be prepared. It shall provide description, information, and procedures for aircraft weighing, balancing, and loading. The data described in E.5.3.13.4.1 through E.5.3.13.4.5 shall be included.

E.5.3.13.4.1 Work package identification information **<wpidinfo>**. Work package identification information is required for this work package. (Refer to 4.8.9.3.)

E.5.3.13.4.2 Work package initial setup **<initial_setup>**. Initial setup is required for this work package. (Refer to 4.8.9.4.)

E.5.3.13.4.3 General information **<geninfo>**. The following text shall be included verbatim:

"**WEIGHING AND LOADING**

GENERAL INFORMATION

Scope

This work package contains description, information, and procedures for aircraft weighing and loading."

E.5.3.13.4.4 Weighing information **<formchart>**. Instructions shall be included for preparing the aircraft, weighing the aircraft in the basic weight condition, performing calculations, and using and recording data on DD Form 365-1 (Basic Weight Checklist) and DD Form 365-2 (Aircraft Weighing Record). Instructions shall include setup requirements, procedures for positioning the aircraft in the weighing area, and assembly of the aircraft weighing equipment. Illustrations shall be prepared to support the text, including a two-view chart diagram. (Refer to FIGURE E-12.) A reference may be made to TM 55-1500-342-23 for additional information governing weight and balance of aircraft, forms, and records.

E.5.3.13.4.5 Loading information **<weightinst>**. Descriptions and instructions shall be prepared for aircraft loading and for computing weight and balance information. Sufficient information and data shall be provided so that an aviator, knowing the basic weight and moment of the aircraft, can compute any combination of weight and balance using the prescribed charts and forms. Reference shall be made to AR 95-1, DA PAM 738-751, and TM 55-1500-342-23 for additional information governing weight and balance of aircraft, forms, and records. Data shall include fundamental principles of loading. An illustration of aircraft compartments and stations shall be included. Reference shall be made to DD Form 365-1 for a more complete listing of compartments and equipment that comprise the basic weight of the aircraft. Loading information shall include weight and balance characteristics, center of gravity limits, weight/balance and loading, and weight and moment tables for load items such as crew, fuel, cargo, and armament.

E.5.3.14 Auxiliary equipment maintenance work package **<auxeqpwp>**. When auxiliary equipment (e.g., Modified Tables of Organization and Equipment (MTOE) items, etc.) maintenance TMs are not procured for peculiar equipment furnished by the contractor, separate maintenance work packages shall be prepared for each maintenance task.

E.5.3.14.1 Work package identification information **<wpidinfo>**. Work package identification information is required for this work package. (Refer to 4.8.9.3.)

E.5.3.14.2 Work package initial setup **<initial_setup>**. Initial setup is required for this work package. (Refer to 4.8.9.4.)

E.5.3.14.3 Auxiliary equipment procedures **<maintsk>**/**<proc>**. Concise step-by-step instructions shall be prepared for proper care of auxiliary equipment while in and out of service. There shall be work packages for each of the following tasks:

a. Storage,
b. Preventive maintenance,
c. Lubrication,
d. Operating checks,
e. Adjustments,

f. Maintenance instructions **<maintsk>** (refer to E.5.3.5.3) for special tools that have been fabricated (refer to E.5.3.10).

E.5.3.15 Ammunition specific work packages.

E.5.3.15.1 Ammunition maintenance work package **<ammowp>**. This work package shall be prepared as directed by the acquiring activity and shall reference or contain (in separate work packages) the following information as presented in E.5.3.15.1.1 through E.5.3.15.1.5.

E.5.3.15.1.1 Work package identification information **<wpidinfo>**. Work package identification information is required for this work package. (Refer to 4.8.9.3.)

E.5.3.15.1.2 Work package initial setup **<initial_setup>**. Initial setup is required for this work package. (Refer to 4.8.9.4.)

E.5.3.15.1.3 Care and handling. Concise step-by-step instructions required for the care and handling of ammunition shall be prepared. These shall include hazard distances, storage, special requirements, prevention of deterioration due to rough handling, exposure to adverse weather conditions, or any other hazards that may be encountered. Visual inspection criteria shall be prepared to determine item serviceability.

E.5.3.15.1.3.1 Ammunition markings **<mark>**. Instructions shall be prepared for marking ammunition and ammunition containers. (Refer to E.5.3.5.3.16.)

E.5.3.15.1.3.2 Classification of defects **<ammo.defect>**. Instructions shall be prepared for performing visual inspection of ammunition received from the ammunition supply facility. Instructions shall be prepared for performing visual inspection and a condition check of the shipment of ammunition/containers (pallets, boxes, etc.) and shall include classification and disposition of defective ammunition/containers.

E.5.3.15.1.3.3 Handling **<ammo.handling>**. Instructions shall be prepared for handling ammunition.

E.5.3.15.1.3.3.1 Unpacking **<unpack>**. As a minimum, the following information shall be prepared:

a. Any special sequence of action necessary to protect the ammunition.
b. If a specially designed, reusable container is involved for either the end item or components that are authorized for replacement, instructions shall be prepared to report or reenter the empty container through supply channels.

E.5.3.15.1.3.3.2 Packing **<pack>**. As a minimum, the following information shall be prepared:

a. Any special sequence of action necessary to protect the ammunition.
b. Instructions shall be prepared on how to package defective ammunition.

E.5.3.15.1.4 Defective **<ammo.defect>**. Instructions shall be prepared for disposition of defective ammunition. (Refer to E.5.3.2.3.9.2.)

E.5.3.15.1.5 Cleaning and painting **<clean>** or **<paint>**. Use of cleaning materials and paint authorized for use in the specified maintenance operations.

E.5.3.15.2 Ammunition marking information work package **<ammo.markingwp>**. This work package shall be prepared as directed by the acquiring activity. It shall provide applicable information on ammunition marking **<mark>** (refer to E.5.3.5.3.16), classification, identification **<ammotype>**, care and handling, preservation, transportation, authorized rounds, preparation for firing, fuzes, and packing **<pack>** (refer to E.5.3.5.3.17). Reusable original packaging and containers shall be identified for return or temporary storage of ammunition in its original configuration. Information on classifying, identifying, caring for, handling, etc., non-ammunition Class V items shall be prepared, when applicable. Individual paragraphs shall be prepared for each ammunition type/classification.

E.5.3.15.2.1 Work package identification information **<wpidinfo>**. Work package identification information is required for this work package. (Refer to 4.8.9.3.)

E.5.3.15.2.2 Work package initial setup **<initial_setup>**. Initial setup is required for this work package. (Refer to 4.8.9.4.)

E.5.3.15.3 Foreign ammunition (NATO) work package **<natowp>**. A work package to describe foreign ammunition shall be prepared when applicable. The requirements of E.5.3.15.2 shall apply.

E.5.3.15.3.1 Work package identification information **<wpidinfo>**. Work package identification information is required for this work package. (Refer to 4.8.9.3.)

E.5.3.15.3.2 Work package initial setup **<initial_setup>**. Initial setup is required for this work package. (Refer to 4.8.9.4.)

E.5.3.16 Preventive maintenance services/Preventive maintenance daily inspection work packages **(aircraft preventive maintenance services/preventive maintenance daily only) <pms-inspecwp>**. A work package shall be developed for each specific inspection interval (e.g., daily, intermediate, periodic, 10 hour/14 day, 30 hr/42 day, etc.), as applicable to the aircraft. Inspection checklists shall be divided by areas of the aircraft (e.g., nose, fuselage, tail, etc.). All items requiring inspection shall be listed in the logical sequence of inspection that would require a minimum of time and motion on the part of the individual performing the inspection. The checklist data shall be formatted and delivered to support the inspection requirements in DA PAM 738-751.

E.5.3.16.1 Work package identification information **<wpidinfo>**. Work package identification information is required for this work package. (Refer to 4.8.9.3.)

E.5.3.16.2 Work package initial setup **<initial_setup>**. Initial setup information is required for this work package. (Refer to 4.8.9.4.)

E.5.3.16.3 Actuation warning. The following warning shall appear before the first step of the procedure (italicized text within parentheses shall be replaced with the appropriate information):

WARNING

Accidental actuation of the aircraft power plant or hydraulic system, or (*insert aircraft specific equipment as applicable, e.g., firing of armament, jettison ballistics*) may cause severe injury or death. Before starting inspection, the aircraft safety check must be performed, if applicable IAW (*insert specific technical manual here) (if applicable the following statement may be inserted here "and all armament must be safetied, deactivated, and cleared (insert technical manuals here)"*).

E.5.3.16.4 Area diagram. An area diagram of the aircraft, showing sequences for inspection by area shall be included. The area identified shall include all surfaces, material, components and equipment pertaining to that specific location. (Refer to FIGURE E-13 (PMD) and FIGURE E-14 (PMS).)

E.5.3.16.5 Standard checklists. If applicable, the standard inspection checklist shall be further divided into Power Off checks and Power On checks.

a. The following statement shall be the first item for each aircraft. It shall read: "Inspect aircraft forms and records for recorded discrepancies (DA PAM 738-751, Functional Users Manual for the Army Maintenance Management System Aviation (TAMMS-A))."
b. The work packages shall be divided into the proper sequence of steps as outlined in the area diagrams. For PMD manuals, there shall be one work package for each inspection area.
c. The following statement shall be the final procedure of the checklist: "Inspect for foreign object damage and ensure all access panels or doors opened or removed for this inspection are closed or reinstalled."

E.5.3.17 Phased maintenance inspection work package **(aircraft phased maintenance checklist only) <pmi-cklistwp>**. Phased maintenance inspection data shall be prepared and shall include the information described in E.5.3.17.1 through E.5.3.17.4.

E.5.3.17.1 Work package identification information **<wpidinfo>**. Work package identification information is required for this work package. (Refer to 4.8.9.3.)

E.5.3.17.2 Work package initial setup **<initial_setup>**. Initial setup information is required for this work package. (Refer to 4.8.9.4.)

E.5.3.17.3 Inspection area diagrams **<figure>**. Diagrams locating the inspection areas and the access doors and panels that require removal at various phased maintenance inspections of the aircraft shall be included. (Refer to FIGURE E-15 and FIGURE E-16.)

E.5.3.17.4 Phased maintenance checklist. The phased maintenance checklist shall include all the inspection steps required to complete the given inspection. It may contain illustrations to aid in the performance of the inspection. Inspection steps shall be organized in a logical flow to minimize inspector movement. The inspection data shall be formatted and presented to support the inspection requirements in DA PAM 738-751. The work package shall begin with the following note:

"NOTE

Before start of the Phased Maintenance Inspection, it is recommended that a pre-inspection maintenance test flight (MTF) be conducted. Accomplishment of the MTF shall be determined by the unit maintenance officer. The pre-inspection MTF should be conducted by a maintenance test pilot following a review of the aircraft forms and records and a briefing from the crew of the aircraft. The MTF is recommended to assess the aircraft performance and identify deficiencies that should be corrected while the aircraft is undergoing phased maintenance inspections."

E.6 **NOTES.**

The notes in section 6 apply to this appendix.

MAINTAINER MAINTENANCE
SERVICE UPON RECEIPT

INITIAL SETUP:

Tools and Special Tools
Measuring Tape (WP 0240, Item 3)

References
WP 0125

References (cont.)
WP 0128
SF 361, Transportation Discrepancy Report

Checking Unpacked Equipment

Inspect the equipment for damage incurred during shipment.

If the equipment has been damaged, report the damage on DD Form 361, Transportation Discrepancy Report. Check the equipment against the packing slip to see if the shipment is complete. Report all discrepancies in accordance with DTR 4500.9-R, Part II.

Check to see of the equipment has been modified.

TABLE 1. Inspection Criteria for Packaging

COMPONENT	ACCEPTABLE	REPARABLE	NONREPARABLE
Wooden Boxes and Crates			
Hardware	Operative and tight. Nails, screws, and fasteners.	Inoperative or loose. Nails, screws, and fasteners.	None. None.
Ends	Free from damage.	Broken or missing cleats and handles.	Damage that requires disassembly of box.
Wood	Splits less than 3 inches long, no closer than 1 inch to edge of board or adjoining split. The board must be secured by at least one nail on each side of the split when it extends to the edge of the board.	Splits no more than 3 inches but no closer than 1 inch to edge of board or adjoining split, or ½-inch wide, that can be repaired by use of corrugated fasteners.	Splits closer than 1 inch to edge of board or adjoining split or over ½-inch wide.
Fiber Containers			
Metal Ends	Minor rust, cracks, indentations, or splits that would not impair waterproofing or serviceability of container.	None.	Perforations, excessive rust, or ends which are crushed or not securely crimped to body.
Body and Cap	No leaks, cuts, or gouges.	Cuts, tears, or gouges not closer than 1 inch to closure, less than ½ square inch in area, and un-penetrated layers that can be spot-painted.	Cuts, tears, or gouges closer than 1 inch to closure, more than ½ square inch in area, or through all impregnated layers.

FIGURE E-1. Example of packaging inspection/service upon receipt.

TABLE 2. M29 and M30 Control Surfaces and Containers

LOCATION	ITEM	ACTION	REMARKS
Container	Components	1. Inspect for rust, fungus, paint damage, and deformation. 2. Reject container if damage prevents it from functioning properly.	WP 0125 —
M29	Control Surfaces	1. Inspect for dents and scratches on post, trailing edge phenolic, skin and closure plate. 2. Reject control surface: a. If post dents or scratches exceed 0.002 in. (0.051 mm). b. If trailing edge phenolic dents exceed 0.040 in. (10.160 mm). c. If skin dents exceed 0.030 in. (7.620 mm) within 2 in (50.800 mm) of post. d. If closure plate dents exceed 0.030 in. (7.620 mm) within 2 in (50.800 mm) of post.	WP 0128 —
M30	Control Surfaces	1. Inspect for dents and scratches on post and skin. 2. Skin dents or scratches up to 0.050 in. (12.700 mm) are allowable, but should be blended. 3. Reject control surface if post dents or scratches exceed 0.002 in. (0.051 mm).	— — —

END OF WORK PACKAGE

FIGURE E-1. Example of packaging inspection/service upon receipt - Continued.

TM X-XXXX-XXX-XX 0132

CREW MAINTENANCE
PREVENTIVE MAINTENANCE CHECKS AND SERVICES

TABLE 1. Preventive Maintenance Checks and Service for NBCRS FOX M93A1

ITEM NO.	INTERVAL	MAN HOURS	ITEM TO BE CHECKED OR SERVICED	PROCEDURE	EQUIPMENT NOT READY/ AVAILABLE IF:
				NOTE Driver, commander, and crew will inspect for damaged or missing items while performing checks in walkaround sequence.	
1	Before		Vehicle Exterior	**COMMANDER** 1.Check for damaged and missing items. Check lighting fixtures. Make sure all stowed items (pioneer equipment, etc.) are secured to vehicle for travel. 2.Secure stowed items. Replace missing items. Report major damage of lighting fixtures. Report minor damage after operations.	Any damage or missing items that will prevent operation.
2	Before		Left Side Exercise	**DRIVER** **NOTE** If leakage is detected, further investigation is needed to determine the location and cause of the leak. 1. Check underneath vehicle for evidence of fuel, or coolant.	Any class III leak of oil, fuel leakage.
3	Before		Left Side Tires	**DRIVER** **WARNING** Operating a vehicle with an improperly inflated tire or with a questionable defect may lead to premature tire failure and cause equipment damage, injury, or death to personnel. 1. Check for missing or damaged tires and wheels. Visually check for proper tire inflation.	Missing or damaged tires or wheels. Flat or deflated tires.

0132-1

FIGURE E-2. Example of a PMCS table.

Note: Manhour column is optional and may be omitted if there are no lubrication instructions combined with the PMCS.

TABLE 2. PMCS Mandatory Replacement Parts List for (A0/A1)

ITEM NO.	PART NUMBER (CAGEC)	NSN	NOMENCLATURE	QTY
SEMI-ANNUAL (1500 MILE)				
1	D5-19-2353 (42765)	4240-01-026-3112	PRECLEANER AND PART (A1 ONLY)	01
2	MS24665-285 (42765)	5315-01-061-2060	PIN COTTER	01
3	MS35333-42 (42765)	5310-00-595-7237	WASHER, LOCK	03
4	MS35338-43 (42765)	5310-00-045-3296	WASHER, LOCK	01
5	MS35338-44 (42765)	5310-00-582-5965	WASHER, LOCK	16
6	MS35338-46 (42765)	5310-00-004-5033	WASHER, LOCK	09
7	MS51922-1 (42765)	5310-00-088-1251	NUT, SELF-LOCKING	04
8	MS51922-17 (42765)	5310-00-087-4652	NUT, SELF-LOCKING	17
9	11628247 (42765)	5330-01-109-1925	GASKET	02
10	12294872 (42765)	5310-01-107-3356	WASHER, FLAT	02
11	2585163-57 (42765)	5306-00-163-2850	BOLT, SELF-LOCKING	01
ANNUAL (3000 MILE)				
1	D5-19-2353 (42765)	4240-01-026-3112	PRECLEANER AND PART (A1 ONLY)	01
2	MS24665-283 (42765)	5315-00-842-3044	PIN, COTTER	01
3	MS24665-285 (42765)	5315-01-061-2060	PIN, COTTER	01
4	MS35333-42 (42765)	5310-00-595-7237	WASHER, LOCK	03

FIGURE E-3. <u>Example of a PMCS mandatory replacement parts list.</u>

Table 2. Requirements for XXX System

System	MTBF	MTR	Ao
Track	500 mi	30 min	0.89
Engine	70 hr	43 min	0.92
Hull	1,000 mi	80 min	0.86
Radio	400 hr	10 min	0.95
Night Sight	145 hr	10 min	0.88
Gun Tube	10,000 rds	45 min	0.95

Table 3. Maintenance Ratio for XXX System 0.35

Maintainer	Below Depot	Depot
0.05	0.08	0.07

EXAMPLE OF TABULAR RAM DATA

Requirements for XXX System

Maintainability

When maintenance procedures shown in the technical manuals are followed, the mature maintainability data are as follows:

1. Mean Operator Preventive Maintenance Time shall not exceed 0.25 man-hours per mission. This time shall not be included in organizational preventive maintenance time.
2. Maximum operator Corrective Maintenance Time shall not exceed 1.00 man-hours per mission without being classified as a mission failure.
3. The ratio of total corrective and maintainer preventive maintenance man-hours to operating hours shall not exceed 0.10.
4. The ratio of total maintainer preventive maintenance man-hours to total operating hours shall not exceed 0.04.
5. The ratio of total corrective maintenance man-hours to operating hours shall not exceed 0.06.
6. Mean man-hours to perform a corrective maintenance action shall not exceed 2.5.
7. The Mean Time Between Corrective Maintenance Actions shall not be less than 150 operating hours.
8. The engine shall have an 80 percent probability of not requiring replacement in 20,000 miles of operation.
9. The gun tube shall have an 80 percent probability of not requiring replacement in 50,000 rounds of operation.
10. The truck shall have a 92 percent probability of not requiring replacement in 5,450 miles of operation.

EXAMPLE OF NARRATIVE RAM DATA

FIGURE E-4. Example of tabular and narrative reliability, availability, and maintainability data.

TEST AND INSPECTION - CONTINUED

Table 1. Classification of Materiel Defects

CATEGORIES OF DEFECTS/COMPONENTS AND DEFECTS	WP NO. OR TM WITH CORRECTIVE ACTION	INSPECTION METHODS AFTER CORRECTIVE ACTION	ACCEPTABLE QUALITY LEVEL
CRITICAL:			
1. Fuze not set on SAFE	WP 0120	Visual	Fuze set of SAFE.
2. Fuze well liner missing	WP 0120	Visual	Fuze well liner in place.
MINOR:			
1. Fuze stake missing	WP 0120	Visual	Fuze stake replaced.
2. Supplementary charge spacer missing.	WP 0121	Visual	Supplementary charge spacer replaced.
3. Supplementary charge damaged.	WP 0121	Visual	Supplementary charge replaced.
4. Explosive on fuze well threads.	WP 0120	Visual	Fuze well threads without caked explosive
5..Shear or twist pin above flush	WP 0122	Visual	Shear or twist pin flush.

END OF WORK PACKAGE

FIGURE E-5. Example of classification of materiel defects.

OVERHAUL AND RETIREMENT SCHEDULE - CONTINUED

Table 1. Overhaul and Retirement Schedule

PART NAME	PART NUMBER/ CAGEC	OVERHAUL INTERVAL HOURS	OVERHAUL INTERVAL NOTES	RETIREMENT INTERVAL HOURS	RETIREMENT INTERVAL NOTES
*Clutch Assembly	7–311310003 (02771)	1,000		4,500	
	7–31131003–3 (02771)	1,000		14,500	
	7–31131003–7 (02771)	1,000		14,500	
	7–31131003–9 (02771)	1,000		14,500	
Main Rotor Drive Shaft	7–211350021 (02781)			5,400	1
	7–211350021–3 (02781)			5,400	1
Main Rotor Drive Plat	7–211310098–5 (02771)			5,400	
	7–211310098–7 (02771)			5,400	
	7–211310098–9 (02771)			5,400	
	7–211310098–11 (02771)			5,400	
Nose Gearbox Assembly, LH	7–311320001–3 (02831)			4,500	
	7–311320001–5 (02831)			4,500	
Quill Shaft Assembly	7–211320093 (02731)			4,500	
Nose Gearbox Assembly, RH	7–311320001–4 (02731)			4,500	
	7–311320001–6 (02731)			4,500	

END OF WORK PACKAGE

FIGURE E-6. Example of an overhaul and retirement schedule.

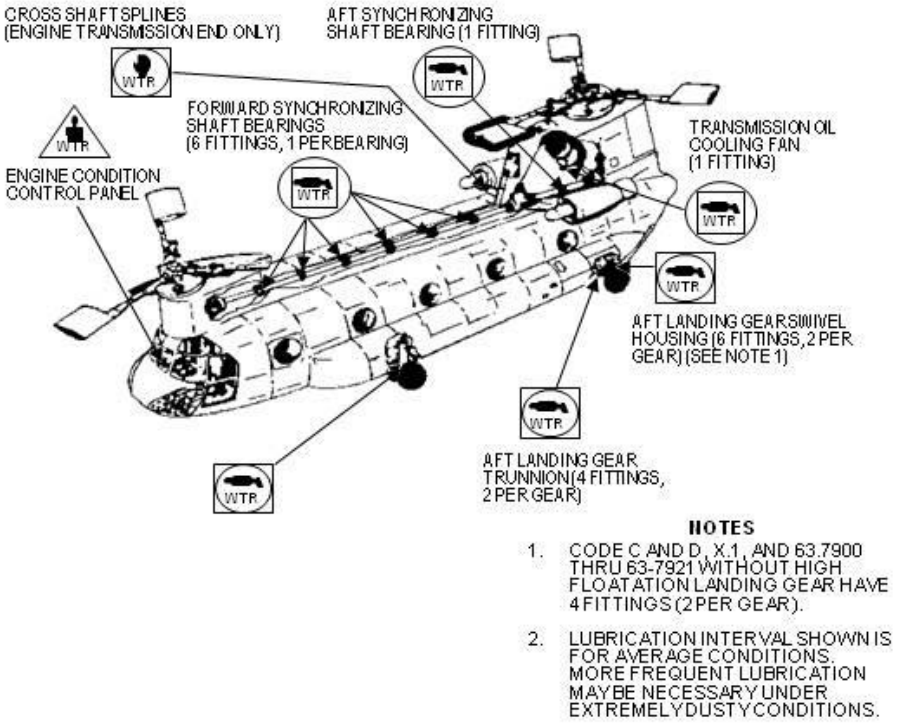

NOTES

1. CODE C AND D, X.1, AND 63.7900 THRU 63-7921 WITHOUT HIGH FLOATATION LANDING GEAR HAVE 4 FITTINGS (2 PER GEAR).
2. LUBRICATION INTERVAL SHOWN IS FOR AVERAGE CONDITIONS. MORE FREQUENT LUBRICATION MAY BE NECESSARY UNDER EXTREMELY DUSTY CONDITIONS.

TABLE OF LUBRICANTS		
IDENTI-FICATION LETTER	SPECIFICATION	TYPE OF LUBRICANT
WTR	MIL-G-813228 (C221)	GREASE, AIRCRAFT, GENERAL PURPOSE, WIDE TEMPERATURE RANGE

SYMBOLS	FREQUENCY	METHOD OF APPLICATION
□	25 Hours	GREASE GUN
○	100 Hours	BRUSH
△	500 Hours	HAND

FIGURE E-7. <u>Example of a lubrication chart</u>.

TM X-XXXX-XXX-XX 0280

**DEPOT MAINTENANCE
SPUR GEAR FOR
OVERHAUL INSPECTION PROCEDURES**

INITIAL SETUP:

References
WP 0252

Table 1. Overhaul Inspection Procedures for Spur Gear (Item 5, Figure 4)

QA REQ	NO.	REF LTR	CHARACTERISTIC	INSP METHOD	REQUISITE
NO	1		Serviceability	Visual/measure	Examine for nicks, gouges, burrs, and corrosion, identified below repair damaged areas, 0.020 inch (0.508mm) or less deep, by blending.
YES	2		Metal fatigue	Magnetic particle inspection	No fractures or cracks.
YES	3	A	Tooth wear	visual	No pitting, scuffing, scoring, metal flow, or wear steps allowed.
YES	4	B	Journal wear	Measure	Minimum diameter, 0.9841 inch (24.99mm). Repair (WP 0252).

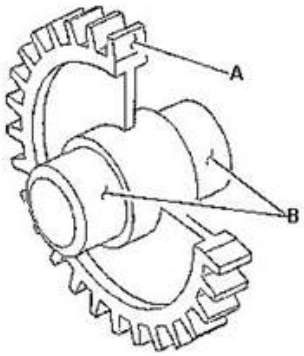

Figure 1. Spur Gear.

END OF WORK PACKAGE

0280-1/blank

FIGURE E-8. Example of an OIP table.

Table 1. Mobilization Requirements

WORK PACKAGE	ACTION
WP 0088	Materials and Fabrication, Step 6. Add "Depending on the urgency of requirements, availability of materials, and fabrication lead time, provisions of this work package may be relaxed. When that occurs, any practical method may be used to inscribe or attach the data to the equipment, i.e., decals."
WP 0090	Cleaning, Step 3. Add "Clean only to the extent necessary to perform preshop analysis."
WP 0092	Cleaning, Step 8. Add "Clean only to the extent necessary to inspect components."
WP 0098	Painting, Step 3. Add "Painted surfaces will be treated for corrosion and scratches that expose bare metal. Touch-up painting need not correlate in hue and gloss."
WP 0099	Delete

END OF WORK PACKAGE

FIGURE E-9. Example of depot mobilization requirements.

Flange Holder

1. Fabricate the flange holder form 0.50 in. (12.7 mm) thick mild steel stock.
2. Using torch, cut steel stock to dimensions shown in Figure 12.
3. Using a grinder, remove all rough edges.

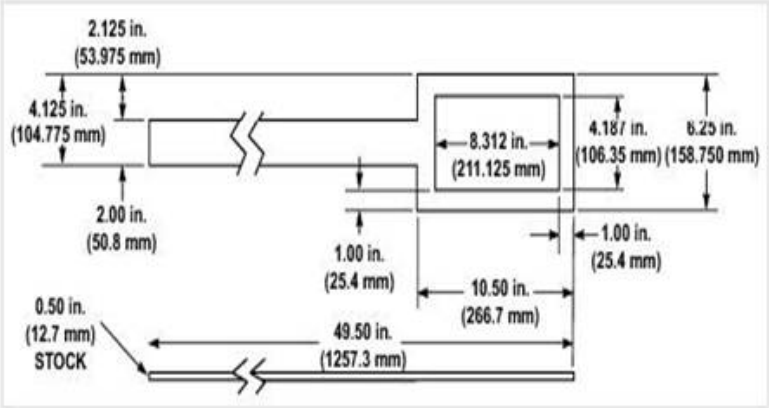

Figure 12. Dimensions for flange holder.

0291-3

FIGURE E-10. <u>Example of an illustrated list of manufactured items.</u>

TM X-XXXX-XXX-XX 0321

BELOW DEPOT MAINTENANCE
TORQUE LIMITS

TORQUE TABLES

How To Use Torque Tables

1. Measure the diameter of the screw you are installing.

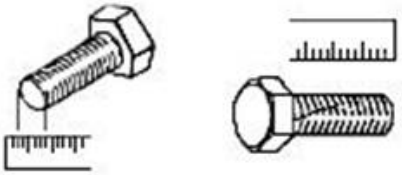

Figure 1. Measuring Screw.

2. Count the number of threads per inch or use a pitch grade.

3. Under the heading SIZE, look down the left-hand column until you find the diameter of the screw you are installing. (There will usually be two lines beginning with the same size).

4. In the second column under SIZE, find the numbers of threads per inch that matches the number of threads you counted in Step 2. (Not required for metric screws.)

Figure 2. Capscrew Head Markings.

NOTE

Manufacture's mark may vary. Standard are all SAE Grade 5 (3-Line). Metric screws are of three grades: 8.8, 10.9, and 12.9 Grades and manufacturer's marks appear on the screw head.

5. To Find the grade screw you are installing, match the markings on the head to the correct picture of Capscrew Head Markings in Figure 2 preceding the torque table.

END OF WORK PACKAGE

0321-1/blank

FIGURE E-11. Example of torque limits data.

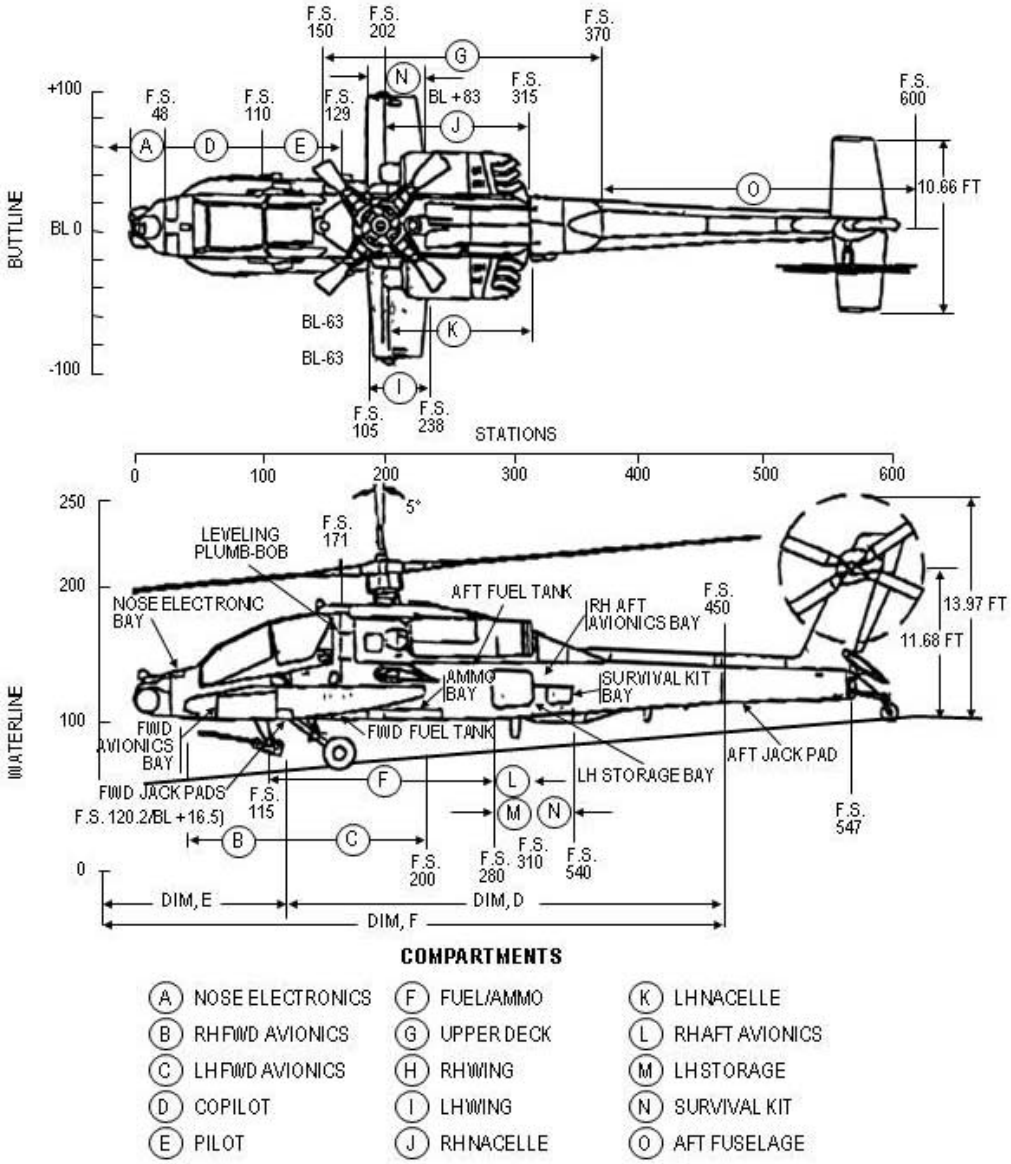

FIGURE E-12. <u>Example of two-view chart diagram.</u>

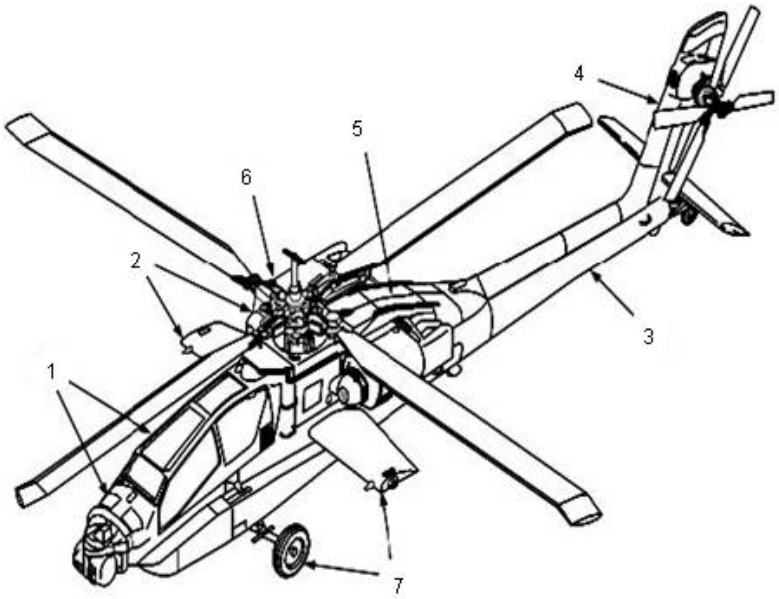

AREA NO. 1	CANOPY, CREW STATION, AVIONICS COMPARTMENTS, FORWARD RELEASE
AREA NO. 2	RIGHT FUSELAGE, WING, PYLONS, RIGHT MAIN LANDING GEAR, NO. 2 ENGINE AND NACELLE, BATTERY COMPARTMENT
AREA NO. 3	AFT FUSELAGE, TAIL ROTOR DRIVE AND CONTROLS
AREA NO. 4	STABILIZER, STABILATOR, TAIL WHEEL, TAIL ROTOR DRIVES AND CONTROLS
AREA NO. 5	AFT EQUIPMENT BAY (ALL EQUIPMENT)
AREA NO. 6	MAIN ROTOR AND CONTROLS
AREA NO. 7	LEFT FUSELAGE, WING, PYLONS, LEFT MAIN LANDING GEAR, NO. 1 ENGINE AND NACELLE, AMMO COMPARTMENT

FIGURE E-13. Example of an area diagram for PMD.

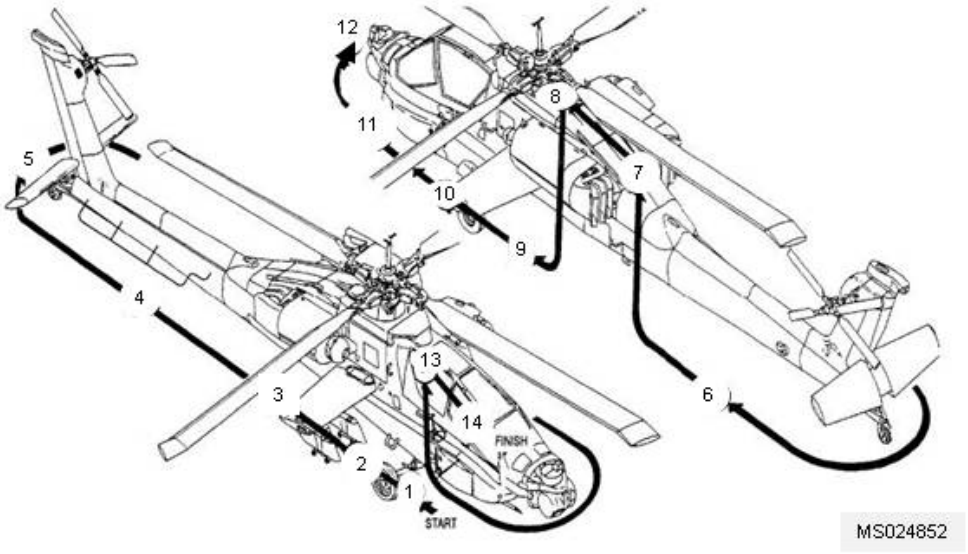

Figure 1. Area Diagram

TM 1-1520-238-PMS

AREA NO. 1	WP 0002	Fuselage – Right Side Forward	All surfaces, components, and equipment in forward avionics bay. Includes landing gear and search light.
AREA NO. 2	WP 0003	Fuselage – Right Side Center	All surfaces, components, and equipment aft of crewstation to engine nacelle. Includes transmission deck, right nose gearbox, engine installation components, wing and stores.
AREA NO. 3	WP 0004	Engine Nacelle – Right	All surfaces, components, and equipment aft of APU exhaust duct. Includes lower nacelle, aft electronics compartment, and IR suppressor.
AREA NO. 4	WP 0005	Fuselage – Right Side Aft	All surfaces, components, and equipment aft of APU exhaust duct and forward of intermediate gearbox. Includes hydraulic ground service panel and aft horizontal tail rotor drive shaft.
AREA NO. 5	WP 0006	Tail Section	All surfaces, components, and equipment aft of tailboom area. Includes horizontal stabilator, tail landing gear, intermediate and tail rotor gearboxes, aft vertical tail rotor drive shaft, and tail rotor
AREA NO. 6	WP 0007	Fuselage – Left Side Aft	All surfaces, components, and equipment forward of intermediate gearbox and aft of ANCU exhaust duct.
AREA NO. 7	WP 0008	Catwalk	All surfaces, components, and equipment in catwalk area. Includes shaft-driven compressor, forward tail rotor drive shaft, fire extinguisher containers, environmental control unit (ENCU), and APU.

FIGURE E-14. <u>Example of an area diagram for PMS.</u>

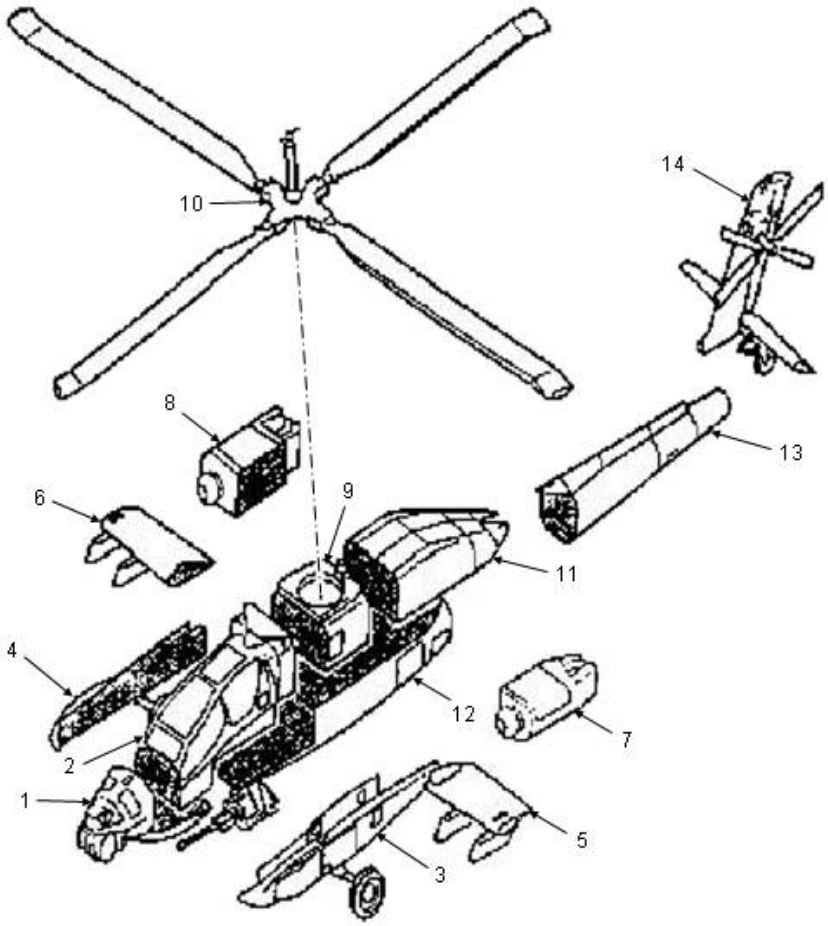

AREA NO.	AREA TITLE
1	FORWARD FUSELAGE
2	CREW STATIONS
3	LEFT FORWARD AVIONICS BAY AND MAIN LANDING GEAR
4	RIGHT FORWARD AVIONICA BAY AND MAIN LANDING GEAR
5	LEFT WING AND PYLONS
6	RIGHT WING AND PYLONS
7	LEFT ENGINE AND NOSE GEARBOX
8	RIGHT ENGINE AND NOSE GEARBOX
9	MAIN TRANSMISSION
10	MAIN ROTOR
11	AFT EQUIPMENT BAY
12	MID AND LOWER FUSELAGE
13	AFT FUSELAGE
14	EMPENNAGE, TAIL ROTOR AND TAIL LANDING GEAR

FIGURE E-15. Example of an inspection area diagram.

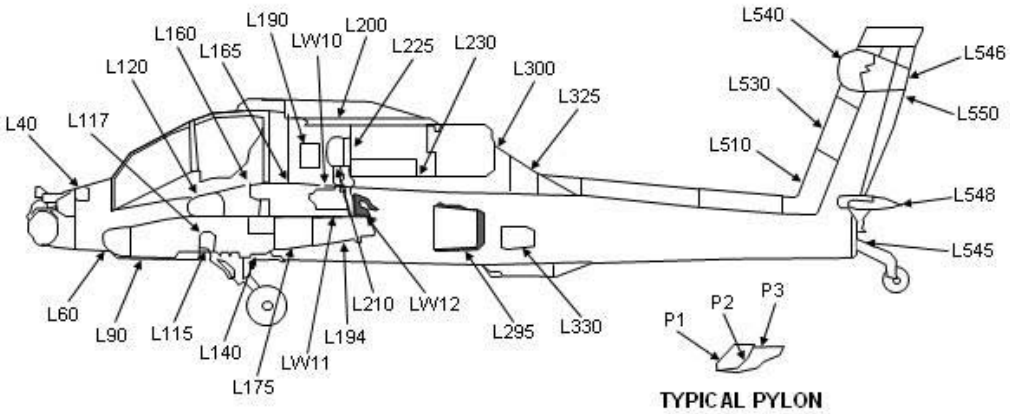

LEFT SIDE

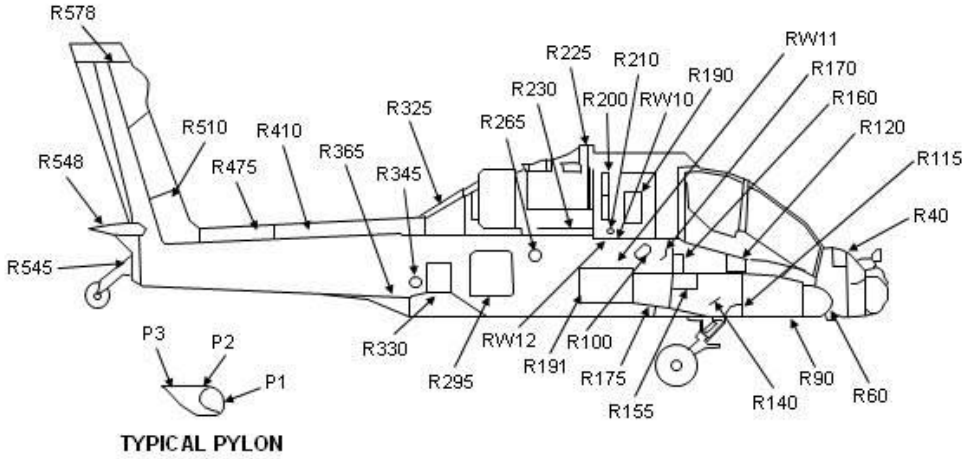

RIGHT SIDE

FIGURE E-16. <u>Example of inspection access provisions.</u>

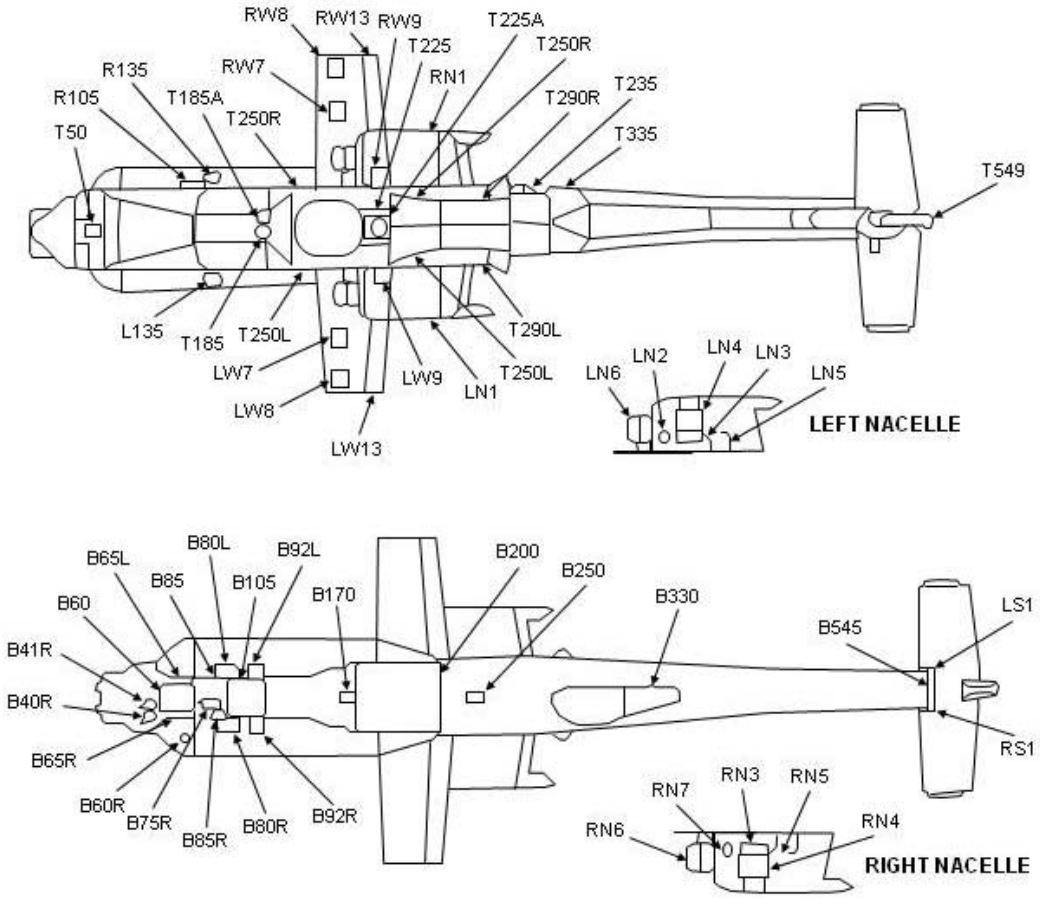

FIGURE E-16. <u>Example of inspection access provisions</u> – Continued.

APPENDIX F
REPAIR PARTS AND SPECIAL TOOLS LIST (RPSTL)

F.1 SCOPE.

F.1.1 Scope. This appendix establishes the technical content requirements for the preparation of parts information for major weapon systems and their related systems, subsystems, equipment, WRAs, and SRAs. This appendix is a mandatory part of this standard. The information contained herein is intended for compliance. The requirements are applicable for all maintenance levels/classes through overhaul (depot), including DMWRs and NMWRs.

F.2 APPLICABLE DOCUMENTS.

The applicable documents in section 2 apply to this appendix.

F.3 DEFINITIONS.

The definitions in section 3 apply to this appendix.

F.4 GENERAL REQUIREMENTS.

F.4.1 General. The RPSTL provides authorized spares and repair parts; special tools; special Test, Measurement, and Diagnostic Equipment (TMDE); and other special support equipment required for performance of all levels of maintenance of the weapon system/equipment, subsystems, assemblies, and components. It authorizes the requisitioning, issue and disposition of spares, repair parts and special tools in accordance with the SMR codes.

F.4.2 Maintenance level/class applicability. Requirements contained in this appendix are applicable to all maintenance levels/classes unless specifically labeled in bold and in parentheses. The labeled requirement may specify a specific level (e.g., **Field**) (refer to 3.87) or a specific maintenance class (refer to 3.85) (e.g., **Maintainer** or **AMC**). The labeled requirement shall be applicable to all TMs containing that maintenance level/class. An explanation of applicable DA maintenance levels/classes is provided in section 3. Unless otherwise specified by the acquiring activity, all RPSTL information for all levels of maintenance, including depot, shall be in a single RPSTL. When separate RPSTLs are specified by the acquiring activity, they shall be grouped either by system, subsystem, or by maintenance level. Duplication of the RPSTL data should be avoided.

F.4.3 Preparation of digital data for electronic delivery. Data prepared and delivered digitally in accordance with this standard shall be XML tagged using the DTD. Data shall be formatted for presentation using stylesheets in accordance with MIL-STD-2361. Stylesheets may be prepared using XSL or other languages as specified by the acquiring activity. Where possible and when available, Army developed and provided stylesheets shall be used. (Refer to 4.6 for information on obtaining or accessing the DTD and stylesheets.) XML tags used in the DTD are noted throughout the text of this standard in bracketed, bold characters (e.g., **`<plwp>`**) as a convenience for the author and to ensure that the tags are used correctly when developing a document instance.

F.4.4 Use of the Document Type Definition (DTD)/stylesheet. The DTD referenced in this appendix interprets the technical content and structure for the functional requirements contained in this standard. Its use is mandatory. Development of TMs is accomplished through the use of this standard, the DTD, and the guidance contained in MIL-HDBK-1222. Where possible and when available, Army developed and provided stylesheets shall be used. For additional information on DTD and specific stylesheets, refer to MIL-STD-2361.

F.4.5 Content structure. The examples provided herein are an accurate representation of the content structure requirements contained in this appendix and shall be followed to permit the effective use of the DTD for RPSTL.

F.4.6 Style and format. This standard provides style and format requirements for the technical content requirements described in this appendix. These requirements are considered mandatory and are intended for compliance.

F.4.7 Work package development. Data developed in accordance with this appendix shall be divided into work packages. These work packages should be stand alone and are broken into the following work package types: Introduction, parts list, repair parts for special tools, kits, bulk items, special tools list, and cross reference indexes. A work package shall contain all information and references required to support the work package type.

F.4.8 Selective application and tailoring. This standard contains some requirements that may not be applicable to the preparation of all TMs. Selective application and tailoring of requirements contained in this standard are the responsibility of the acquiring activity and shall be accomplished using APPENDIX A. The applicability of some requirements is also designated by one of the following statements: unless specified otherwise by the acquiring activity; as specified by the acquiring activity; or when specified by the acquiring activity.

F.5 **DETAILED REQUIREMENTS.**

F.5.1 General. The requirements provided in this appendix provide the technical content requirements for the preparation of RPSTL data.

F.5.2 Repair Parts and Special Tool List (RPSTL) development. RPSTL requirements include:

a. Introductory information;
b. Listings of all authorized spare and repair parts, special tools, special TMDE, and other support equipment required for performance of maintenance; and
c. Illustrations to identify and locate the spare and repair parts.

F.5.3 Preparation of Repair Parts and Special Tool Lists (RPSTL). RPSTL shall be prepared for weapon systems, major components, and applicable support and interface equipment. This information shall be contained in one of the following:

a. A separate RPSTL TM,
b. RPSTL work packages included in a maintenance TM,
c. RPSTL work packages included in a DMWR, or
d. RPSTL work packages included in a NMWR.

F.5.3.1 Separate RPSTL TM. Separate RPSTL TMs shall consist of front and rear matter and a Parts Information Chapter **<pim>** containing the work packages as described in F.5.3.2.

F.5.3.2 Parts information chapter **<pim>**. Unless otherwise specified, the parts information chapter **<pim>** shall contain the following work packages listed in the order specified:

a. A single introduction work package **<introwp>.** (Refer to F.5.3.5.)
b. One or more repair parts list work packages **<plwp**> . (Refer to F.5.3.6.)
c. When the requirements in F.5.3.7 a through c are met, a repair parts for special tools work package **<stl_partswp>** shall be prepared. (Refer to F.5.3.7.)
d. When kit parts are listed as described under option 2 (refer to F.5.3.6.3.2.6.9b, a kit parts list work package **<kitswp>** shall be prepared. (Refer to F.5.3.8.)
e. When bulk items are listed in a parts list, a bulk items work package **<bulkitemswp>** shall be prepared. (Refer to F.5.3.9.)
f. When special tools are listed, one or more special tools list work packages **<stlwp>** shall be prepared. (Refer to F.5.3.10.)
g. A National Stock Number (NSN) index work package **<nsnindxwp>** shall be prepared. (Refer to F.5.3.11.1)
h. A part number index work package **<pnindxwp>** shall be prepared. (Refer to F.5.3.11.2.)
i. When specified by the acquiring activity, a reference designator index work package **<refdesindxwp>** shall be prepared. (Refer to F.5.3.11.3.)

F.5.3.3 Repair Parts and Special Tool List (RPSTL) work packages requirements. When a separate parts manual is not procured and repair parts and/or special tools are required, the work packages described previously shall be prepared as specified in F.5.3.3.1 or F.5.3.3.2.

F.5.3.3.1 Repair Parts and Special Tool List(RPSTL) work packages **<pim>** included in a maintenance TM. When a separate RPSTL manual is not required or authorized, RPSTL data shall be included in a separate parts information chapter **<pim>** that immediately follows the last Maintenance Information Chapter (**<mim>**) in a maintenance TM. Front and rear matter requirements shall become part of the maintenance TM that includes the RPSTL work packages.

F.5.3.3.2 Repair Parts and Special Tool List (RPSTL) work packages included in a DMWR/NMWR. If an item of equipment is programmed for depot overhaul and no repair parts (including modules, printed circuits, and components) are authorized for replacement below depot level maintenance, authorized repair parts data shall be included in the applicable DMWR/NMWR. The work packages described in F.5.3.5 through F.5.3.11 shall be included as specified herein.

F.5.3.3.2.1 Depot repair parts. Unless otherwise specified by the acquiring activity, depot level repair parts shall be included in the single RPSTL. (Refer to F.5.3.) When the acquiring activity specifies a depot (DMWR/NMWR) level RPSTL, only depot level parts shall appear in the depot RPSTL. Figure(s) in the lower maintenance level RPSTL that contain both depot coded and non-depot coded parts shall identify all parts. The appropriate SMR code shall identify the repair level. If the RPSTL TM includes depot repair parts, the statement "Including Depot Maintenance Repair Parts" shall be added to the title of the RPSTL TM.

F.5.3.4 Repair parts list, special tools, and kits work package layout. All RPSTL work packages shall start on a right-hand page in accordance with 4.8.2.3. For parts list, special tools, and kit work packages, the first page shall contain the work package identification information **<wpidinfo>**. The Figure shall start on page 2. The parts list shall follow the figure and shall start ona new page. (Refer to FIGURE F-1 for possible layout scenarios. Refer to F.5.3.12.1 for the figure layout requirements.)

F.5.3.5 Introduction work package **<introwp>**. The introduction work package shall be prepared to the requirements contained in F.5.3.5.1 through F.5.3.5.3.3. (Refer to FIGURE F-2.)

F.5.3.5.1 Work package identification information **<wpidinfo>**. Work package identification information is required for this work package. (Refer to 4.8.9.3.)

F.5.3.5.2 Work package initial setup **<initial_setup>**. Initial setup is not required for this work package.

F.5.3.5.3 Introduction. One of the following introductions shall be included. The content of F.5.3.5.3.1 covers non-aviation and F.5.3.5.3.2 covers aviation. The verbatim text (within the quotation marks) shall be included. The italicized text shall be replaced with the required system specific information or select the corresponding phrase for the specific system. The publication list shall identify the publication number and title in numerical sequence. If the publication is non-government, the source shall be given and shall be listed alphabetically by title.

F.5.3.5.3.1 Non aviation Repair Parts and Special Tool List (RPSTL) introduction.

"**INTRODUCTION**

SCOPE

This RPSTL lists the authorized spares and repair parts; special tools; special test, measurement, and diagnostic equipment (TMDE); and other special support equipment required for performance of (*enter maintenance level*) maintenance of the (*enter item name*). It authorizes the requisitioning, issue, and disposition of spares, repair parts, and special tools as indicated by the source, maintenance, and recoverability (SMR) codes.

GENERAL

In addition to the Introduction work package, this RPSTL is divided into the following work packages.

1. Repair Parts List Work Packages. Work packages containing lists of spare and repair parts authorized for use in the performance of maintenance at the levels determined by the MAC/SMR code. These work packages also include parts which must be removed for replacement of the authorized parts. Parts lists are composed of functional groups in ascending alphanumeric sequence, with the parts in each group listed in ascending Figure and item number sequence. Sending units, brackets, filters, and bolts are listed with the component they mount on. Bulk materials are listed by item name in the Bulk Items work package which follows (*select the work package the bulk items follow: the last Parts List work package, the Special Tools Repair Parts work package, or Kits*) work package. *(choose one of the following) Repair parts kits are listed separately in their own functional group and work package* **OR** *Repair parts kits are listed at the end of the individual work packages.* Repair parts for reparable special tools are also listed in a separate work package. Items listed are shown on the associated illustrations.

2. *(Include the text in items* 2 *through* 4 *only if the described work package is included in the TM.)* Special Tools Repair Parts Work Package. This work package lists any spare parts required for the special tools, TMDE, or other support equipment listed in the Special Tools Work Package that are not listed in any other publication.

3. Kits work package. This work package lists all repair kits and their component parts.

4. Bulk Items Work Package. This work package lists all items identified as 'bulk' in the parts lists. Due to the nature of bulk items, this work package does not include a Figure.

5. Special Tools List Work Packages. This work package lists those special tools, special TMDE, and special support equipment authorized by this RPSTL (as indicated by Basis of Issue (BOI) information in the DESCRIPTION AND USABLE ON CODE (UOC) column). Tools that are components of common tool sets and/or Class VII are not listed.

6. Cross-Reference Indexes Work Packages. There are (*enter applicable number*) cross-reference indexes work packages in this RPSTL. The National Stock Number (NSN) Index work package refers you to the Figure and item number for each NSN listed in the RPSTL. The Part Number Index work package refers you to the figure and item number for each part number listed in the RPSTL. (*If reference designator is used enter: "The Reference Designator Index work package refers you to the Figure and item number of each reference designator listed in the RPSTL"*).

EXPLANATION OF COLUMNS IN THE REPAIR PARTS LIST AND SPECIAL TOOLS LIST WORK PACKAGES

ITEM NO. (Column 1). Indicates the number used to identify items called out in the illustration.

SMR CODE (Column 2). The SMR code containing supply/requisitioning information, maintenance level authorization criteria, and disposition instruction, as shown in the following breakout. This entry may be subdivided into 4 subentries, one for each service.

TABLE 1. SMR Code Explanation.

Source Code	**Maintenance Code**		**Recoverability Code**
XX	XX		X
1st two positions: How to get an item.	3rd position: Who can install, replace, or use the item.	4th position: Who can do complete repair on the item	5th position: Who determines disposition action on unserviceable items.

NOTE

Complete Repair: Maintenance capacity, capability, and authority to perform all corrective maintenance tasks of the "Repair" function in a use/user environment in order to restore serviceability to a failed item.

Source Code. The source code tells you how you get an item needed for maintenance, repair, or overhaul of an end item/equipment. Explanations of source codes follow:

TABLE 2. Source Code Explanation.

Source Code	Application/Explanation
PA PB PC PD PE PF PG PH PR PZ	Stock items; use the applicable NSN to requisition/request items with these source codes. They are authorized to the level indicated by the code entered in the third position of the SMR code. **NOTE** Items coded PC are subject to deterioration.
KD KF KB	Items with these codes are not to be requested/requisitioned individually. They are part of a kit that is authorized to the maintenance level indicated in the third position of the SMR code. The complete kit must be requisitioned and applied.
MF-Made at maintainer class MH-Made at below depot sustainment class ML-Made at SRA MD-Made at depot MG-Navy only	Items with these codes are not to be requisitioned/requested individually. They must be made from bulk material which is identified by the P/N in the DESCRIPTION AND USABLE ON CODE (UOC) entry and listed in the bulk material group work package of the RPSTL. If the item is authorized to you by the third position code of the SMR code, but the source code indicates it is made at higher level, order the item from the higher level of maintenance.
AF-Assembled by maintainer class AH-Assembled by below depot sustainment class AL-Assembled by SRA AD-Assembled by depot AG - Navy only	Items with these codes are not to be requested/requisitioned individually. The parts that make up the assembled item must be requisitioned or fabricated and assembled at the level of maintenance indicated by the source code. If the third position of the SMR code authorizes you to replace the item, but the source code indicates the item is assembled at a higher level, order the item from the higher level of maintenance.
XA	Do not requisition an "XA" coded item. Order the next higher assembly. (Refer to NOTE below.)

Source Code	Application/Explanation
XB	If an item is not available from salvage, order it using the CAGEC and P/N.
XC	Installation drawings, diagrams, instruction sheets, field service drawings; identified by manufacturer's P/N.
XD	Item is not stocked. Order an XD-coded item through local purchase or normal supply channels using the CAGEC and P/N given, if no NSN is available.

NOTE

Cannibalization or controlled exchange, when authorized, may be used as a source of supply for items with the above source codes except for those items source coded "XA" or those aircraft support items restricted by requirements of AR 750-1.

Maintenance Code. Maintenance codes tell you the level(s) of maintenance authorized to use and repair support items. The maintenance codes are entered in the third and fourth positions of the SMR code as follows:

Third Position. The maintenance code entered in the third position tells you the lowest maintenance class authorized to remove, replace, and use an item. The maintenance code entered in the third position will indicate authorization to the following classes of maintenance:

Maintenance Code	Application/Explanation
C -	Crew
F -	Maintainer maintenance can remove, replace, and use the item.
H -	Below Depot Sustainment maintenance can remove, replace, and use the item.
L -	Specialized repair activity can remove, replace, and use the item.
G -	Afloat and ashore intermediate maintenance can remove, replace, and use the item (Navy only)
K -	Contractor facility can remove, replace, and use the item
Z -	Item is not authorized to be removed, replace, or used at any maintenance level
D -	Depot can remove, replace, and use the item.

NOTE

Army will use C in the third position. However, for joint service publications, other services may use O.

Fourth Position. The maintenance code entered in the fourth position tells you whether or not the item is to be repaired and identifies the lowest maintenance class with the capability to do complete repair (perform all authorized repair functions).

Maintenance Code	Application/Explanation
C -	Crew (operator) is the lowest class that can do complete repair.
F -	Maintainer is the lowest class that can do complete repair of the item.
H -	Below Depot Sustainment is the lowest class that can do complete repair of the item.
L -	Specialized repair activity (*enter specialized repair activity designator*) is the lowest class that can do complete repair of the item.
D -	Depot is the lowest class that can do complete repair of the item.
G -	Both afloat and ashore intermediate levels are capable of complete repair of item. (Navy only)
K -	Complete repair is done at contractor facility
Z -	Nonreparable. No repair is authorized.
B -	No repair is authorized. No parts or special tools are authorized for maintenance of "B" coded item. However, the item may be reconditioned by adjusting, lubricating, etc., at the user level.

Recoverability Code. Recoverability codes are assigned to items to indicate the disposition action on unserviceable items. The recoverability code is shown in the fifth position of the SMR code as follows:

Recoverability Code	Application/Explanation
Z -	Nonreparable item. When unserviceable, condemn and dispose of the item at the level of maintenance shown in the third position of the SMR code.
F -	Reparable item. When uneconomically reparable, condemn and dispose of the item at the field level.

Recoverability Code	Application/Explanation
H -	Reparable item. When uneconomically reparable, condemn and dispose of the item at the below depot sustainment.
D -	Reparable item. When beyond lower level repair capability, return to depot. Condemnation and disposal of item are not authorized below depot.
L -	Reparable item. Condemnation and disposal not authorized below Specialized Repair Activity (SRA).
A -	Item requires special handling or condemnation procedures because of specific reasons (such as precious metal content, high dollar value, critical material, or hazardous material). Refer to appropriate manuals/directives for specific instructions.
G -	Field level reparable item. Condemn and dispose at either afloat or ashore intermediate levels. (Navy only)
K -	Reparable item. Condemnation and disposal to be performed at contractor facility.

NSN (Column (3)). The NSN(s) for the item is listed in this column.

CAGEC (Column (4)). The Commercial and Government Entity Code (CAGEC) is a five-digit code which is used to identify the manufacturer, distributor, or Government agency/activity that supplies the item.

PART NUMBER (Column (5)). Indicates the primary number used by the manufacturer (individual, company, firm, corporation, or Government activity), which controls the design and characteristics of the item by means of its engineering drawings, specifications, standards, and inspection requirements to identify an item or range of items.

NOTE

When you use an NSN to requisition an item, the item you receive may have a different part number from the number listed.

DESCRIPTION AND USABLE ON CODE (UOC) (Column (6)). This column includes the following information:

1. The federal item name, and when required, a minimum description to identify the item.

2. Part numbers of any bulk materials required if the item is to be locally manufactured or fabricated.

3. Hardness Critical Item (HCI). Items that require special handling or procedures to ensure protection against electromagnetic pulse (EMP) damage are marked with the letters 'HCI.'

4. The statement END OF FIGURE appears below the last item description in column (6) for each Figure in the repair parts list, special tools repair parts, kits, bulk items, and special tools list work packages.

5. Refer to Usable on Code details presented later in this work package under SPECIAL INFORMATION.

QTY (Column (7)). The QTY (quantity per Figure) column indicates the quantity of the item used in the breakout shown on the illustration/Figure. A "V" appearing in this column instead of a quantity indicates that the quantity is variable and quantity may change from application to application.

(MC) Include for Marine Corps manuals only.

USMC QTY per Equip (Column (8)). This column indicates the total quantity of the item used on the equipment.

EXPLANATION OF CROSS-REFERENCE INDEXES WORK PACKAGES FORMAT AND COLUMNS

1. National Stock Number (NSN) Index Work Package. NSNs in this index are listed in National Item Identification Number (NIIN) sequence.

STOCK NUMBER Column. This column lists the NSN in NIIN sequence. The NIIN consists of the last nine digits of the NSN. When using this column to locate an item, ignore the first four digits of the NSN. However, the complete NSN should be used when ordering items by stock number.

For example, if the NSN is 5385-01-574-1476, the NIIN is 01-574-1476.

FIG. Column. This column lists the number of the Figure where the item is identified/located. The Figures are in numerical order in the repair parts list and special tools list work packages.

ITEM Column. This column identifies the item associated with the Figure listed in the adjacent FIG. column. This item is also identified by the NSN listed on the same line.

2. Part Number (P/N) Index Work Package. Part numbers in this index are listed in ascending alphanumeric sequence (vertical arrangement of letter and number combinations which places the first letter or digit of each group in order A through Z, followed by the numbers 0 through 9 and each following letter or digit in like order).

PART NUMBER Column. This column indicates the part number assigned to the item.

FIG. Column. This column lists the number of the Figure where the item is identified/located in the repair parts list and special tools list work packages.

ITEM Column. The item number is the number assigned to the item as it appears in the Figure referenced in the adjacent Figure number column.

Include item 3 if reference designator index is used.

3. Reference Designator Index Work Package. Reference designators in this index are listed in ascending alphanumeric sequence (vertical arrangement of letter and number

combination which places the first letter or digit of each group in order "A" through "Z," followed by the numbers "0" through "9" and each following letter or digit in like order).

REFERENCE DESIGNATOR Column. This column indicates the reference designator assigned to the item.

FIG. Column. This column lists the number of the Figure where the item is identified/located in the repair parts list or special tools list work package.

ITEM Column. The item number is the number assigned to the item as it appears in the Figure referenced in the adjacent Figure number column.

SPECIAL INFORMATION

UOC. The UOC appears in the lower left corner of the Description Column heading. Usable on codes are shown as "UOC:" in the Description Column (justified left) on the first line under the applicable item/nomenclature. Uncoded items are applicable to all models. Examples of the UOCs used in the RPSTL are:

Code	Used On
PAA	Model M114
PAB	Model M114A
PAC	Model M114B

Include appropriate UOC content, as applicable.

Fabrication Instructions. Bulk materials required to manufacture items are listed in the bulk material work package of this RPSTL. Part numbers for bulk material are also referenced in the Description Column of the line item entry for the item to be manufactured/fabricated. Detailed fabrication instructions for items source coded to be manufactured or fabricated are found in (*enter applicable TM number or work package sequence number*).

Index Numbers. Items which have the word BULK in the Figure column will have an index number shown in the item number column. This index number is a cross-reference between the NSN/Part Number (P/N) Index work packages and the bulk material list in the bulk items work package.

For a combined narrative-RPSTL manual associated publications shall not be included.

Associated Publications. The publication(s) listed below pertain to the (*enter item name*):

Publication	Short Title

The following paragraph shall appear only in the field maintenance RPSTL special instructions.

Illustrations List. The illustrations in this RPSTL contain field authorized items. Illustrations published in (*enter applicable TM number for the higher maintenance level RPSTL, e.g., for field, below depot sustainment, etc.*) that contain field authorized items also appear in this RPSTL. The tabular list in the repair parts list work package contains only those parts coded "F" in the third position of the SMR code, therefore, there may be a break in the item number sequence.

HOW TO LOCATE REPAIR PARTS

1. When NSNs or Part Numbers Are Not Known.

First. Using the table of contents, determine the assembly group to which the item belongs. This is necessary since Figures are prepared for assembly groups and subassembly groups, and lists are divided into the same groups.

Second. Find the Figure covering the functional group or the sub functional group to which the item belongs.

Third. Identify the item on the Figure and note the number(s).

Fourth. Look in the repair parts list work packages for the Figure and item numbers. The NSNs and part numbers are on the same line as the associated item numbers.

2. When NSN Is Known.

First. If you have the NSN, look in the STOCK NUMBER column of the NSN index work package. The NSN is arranged in NIIN sequence. Note the Figure and item number next to the NSN.

Second. Turn to the Figure and locate the item number. Verify that the item is the one for which you are looking.

3. When Part Number Is Known.

First. If you have the part number and not the NSN, look in the PART NUMBER column of the part number index work package. Identify the Figure and item number.

Second. Look up the item on the Figure in the applicable repair parts list work package.

Include item 4 only if the RPSTL has a reference designator index work package.

4. When Reference Designator Is Known.

First. If you know the reference designator, look in the REFERENCE DESIGNATOR column of the reference designator index work package. Note the Figure and item number.

Second. Turn to the Figure and locate the item number. Verify that the item is the one for which you are looking.

ABBREVIATIONS

Abbreviation	**Explanation**

Include uncommon abbreviations used in the RPSTL. List/define those not found in ASME Y14.38"

F.5.3.5.3.2 Aviation Repair Parts and Special Tool List (RPSTL) introduction.

"**INTRODUCTION**

SCOPE

This RPSTL lists and authorizes spares and repair parts; special tools; special test, measurement, and diagnostic equipment (TMDE); and other special support equipment required for performance of (*enter maintenance level*) maintenance of the (*enter item name*). It authorizes the requisitioning, issue, and disposition of spares, repair parts, and special tools as indicated by the source, maintenance, and recoverability (SMR) codes.

GENERAL

In addition to the Introduction work package, this RPSTL is divided into the following work packages.

1. Repair Parts List Work Packages. Work packages containing lists of spare and repair parts authorized for use in the performance of maintenance at the levels determined by the MAC/SMR code. These work packages also include parts which must be removed for replacement of the authorized parts. Parts lists are composed of functional groups in ascending alphanumeric sequence, with the parts in each group listed in ascending Figure and item number sequence. Sending units, brackets, filters, and bolts are listed with the component they mount on. Bulk materials are listed by item name in the Bulk Items work package which follows (*select the work package the bulk items follow: the last Parts List work package, the Special Tools Repair Parts work package, or Kits*) work package. *(choose one of the following) Repair parts kits are listed separately in their own functional group and work package* **OR** *Repair parts kits are listed at the end of the individual work packages.* Repair parts for reparable special tools are also listed in a separate work package. Items listed are shown on the associated illustrations.

2. *(Include the text in items* 2 *through* 4 *only if the described work package is included in the TM.)* Special Tools Repair Parts Work Package. This work package lists any spare parts required for the special tools, TMDE, or other support equipment listed in the Special Tools Work Package that are not listed in any other publication.

3. Kits work package. This work package lists all repair kits and their component parts.

4. Bulk Items Work Package. This work package lists all items identified as 'bulk' in the parts lists. Due to the nature of bulk items, this work package does not include a Figure.

5. Special Tools List Work Packages. This work package lists those special tools, special TMDE, and special support equipment authorized by this RPSTL (as indicated by Basis of Issue (BOI) information in the DESCRIPTION AND USABLE ON CODE (UOC) column). Tools that are components of common tool sets and/or Class VII are not listed.

6. Cross-Reference Indexes Work Packages. There are (*enter applicable number*) cross-reference indexes work packages in this RPSTL. The National Stock Number (NSN) Index work package refers you to the Figure and item number for each NSN listed in the RPSTL. The Part Number Index work package refers you to the Figure and item number for each part number listed in the RPSTL." (*If reference designator is used enter: "The Reference Designator Index work package refers you to the Figure and item number of each reference designator listed in the RPSTL).*

EXPLANATION OF COLUMNS IN THE REPAIR PARTS LIST AND SPECIAL TOOLS LIST WORK PACKAGES

ITEM NO. (Column 1). Indicates the number used to identify items called out in the illustration.

SMR CODE (Column 2). The SMR code containing supply/requisitioning information, maintenance level authorization criteria, and disposition instruction, as shown in the following breakout. This entry may be subdivided into 4 subentries, one for each service.

TABLE 1. SMR Code Explanation.

Source Code XX		Maintenance Code XX		Recoverability Code X
1st two positions: How to get an item.	3rd position: Who can install, replace, or use the item.		4th position: Who can do complete repair on the item	5th position: Who determines disposition action on unserviceable items.

NOTE

Complete Repair: Maintenance capacity, capability, and authority to perform all corrective maintenance tasks of the "Repair" function in a use/user environment in order to restore serviceability to a failed item.

Source Code. The source code tells you how you get an item needed for maintenance, repair, or overhaul of an end item/equipment. Explanations of source codes follow:

TABLE 2. Source Code Explanation.

Source Code	Application/Explanation
PA PB PC PD PE PF PG PH PR PZ	Stock items; use the applicable NSN to requisition/request items with these source codes. They are authorized to the level indicated by the code entered in the third position of the SMR code. **NOTE** Items coded PC are subject to deterioration.
KD KF KB	Items with these codes are not to be requested/requisitioned individually. They are part of a kit that is authorized to the maintenance level indicated in the third position of the SMR code. The complete kit must be requisitioned and applied.
MO-Made at AMC level MF-Made at ASB level ML-Made at TASMG MD-Made at depot MG- Navy only	Items with these codes are not to be requisitioned/requested individually. They must be made from bulk material which is identified by the P/N in the DESCRIPTION AND USABLE ON CODE (UOC) entry and listed in the bulk material group work package of the RPSTL. If the item is authorized to you by the third position code of the SMR code, but the source code indicates it is made at higher level, order the item from the higher level of maintenance.

AO-Assembled at AMC level AF-Assembled at ASB level AL-Assembled at TASMG AD-Assembled at depot AG-Navy only	Items with these codes are not to be requested/requisitioned individually. The parts that make up the assembled item must be requisitioned or fabricated and assembled at the level of maintenance indicated by the source code. If the third position of the SMR code authorizes you to replace the item, but the source code indicates the item is assembled at a higher level, order the item from the higher level of maintenance.
XA	Do not requisition an "XA" coded item. Order the next higher assembly. (Refer to NOTE below.)
XB	If an item is not available from salvage, order it using the CAGEC and P/N.
XC	Installation drawings, diagrams, instruction sheets, field service drawings; identified by manufacturer's P/N.
XD	Item is not stocked. Order an XD-coded item through local purchase or normal supply channels using the CAGEC and P/N given, if no NSN is available.

NOTE

Cannibalization or controlled exchange, when authorized, may be used as a source of supply for items with the above source codes except for those items source coded "XA" or those aircraft support items restricted by requirements of AR 750-1.

Maintenance Code. Maintenance codes tell you the level(s) of maintenance authorized to use and repair support items. The maintenance codes are entered in the third and fourth positions of the SMR code as follows:

Third Position. The maintenance code entered in the third position tells you the lowest maintenance level authorized to remove, replace, and use an item. The maintenance code entered in the third position will indicate authorization to the following levels of maintenance:

Maintenance Code	**Application/Explanation**
O -	AMC maintenance can remove, replace, and use the item
F -	ASB maintenance can remove, replace, and use the item.
L -	TASMG can remove, replace, and use the item.
G -	Afloat and ashore intermediate maintenance can remove, replace, and use the item (Navy only)
K -	Contractor facility can remove, replace, and use the item
Z -	Item is not authorized to be removed, replace, or used at any maintenance level
D -	Depot can remove, replace, and use the item.

Fourth Position. The maintenance code entered in the fourth position tells you whether or not the item is to be repaired and identifies the lowest maintenance level with the capability to do complete repair (perform all authorized repair functions).

Maintenance Code	**Application/Explanation**
O -	AMC is the lowest class that can do complete repair of item
F -	ASB is the lowest class that can do complete repair of the item.
L -	TASMG is the lowest class that can do complete repair of the item.
D -	Depot is the lowest class that can do complete repair of the item.
G -	Both afloat and ashore intermediate levels are capable of complete repair of item. (Navy only)
K -	Complete repair is done at contractor facility
Z -	Nonreparable. No repair is authorized.
B -	No repair is authorized. No parts or special tools are authorized for maintenance of "B" coded item. However, the item may be reconditioned by adjusting, lubricating, etc., at the user level.

Recoverability Code. Recoverability codes are assigned to items to indicate the disposition action on unserviceable items. The recoverability code is shown in the fifth position of the SMR code as follows:

Recoverability Code	**Application/Explanation**
Z -	Nonreparable item. When unserviceable, condemn and dispose of the item at the level of maintenance shown in the third position of the SMR code.
O -	Reparable item. When uneconomically reparable, condemn and dispose of the item at the AMC level.
F -	Reparable item. When uneconomically reparable, condemn and dispose of the item at the ASB level.
D -	Reparable item. When beyond lower level repair capability, return to depot. Condemnation and disposal of item are not authorized below depot level.
L -	Reparable item. Condemnation and disposal not authorized below TASMG.
A -	Item requires special handling or condemnation procedures because of specific reasons (such as precious metal content, high dollar value, critical material, or hazardous material). Refer to appropriate manuals/directives for specific instructions.
G -	Field level reparable item. Condemn and dispose at either afloat or ashore intermediate levels. (Navy only)
K -	Reparable item. Condemnation and disposal to be performed at contractor facility.

NSN (Column 3). The NSN for the item is listed in this column.

CAGEC (Column 4). The Commercial and Government Entity Code (CAGEC) is a five-digit code that is used to identify the manufacturer, distributor, or Government agency/activity that supplies the item.

PART NUMBER (Column 5). Indicates the primary number used by the manufacturer (individual, company, firm, corporation, or Government activity), which controls the design and characteristics of the item by means of its engineering drawings, specifications, standards, and inspection requirements to identify an item or range of items.

NOTE

When you use an NSN to requisition an item, the item you receive may have a different P/N from the number listed.

DESCRIPTION AND USABLE ON CODE (UOC) (Column (6)). This column includes the following information:

1. The federal item name, and when required, a minimum description to identify the item.

2. P/Ns of bulk materials are referenced in this column in the line entry to be manufactured or fabricated.

3. Hardness Critical Item (HCI). A support item that provides the equipment with special protection from electromagnetic pulse (EMP) damage during a nuclear attack.

4. The statement END OF FIGURE appears just below the last item description in column (6) for a given Figure in both the repair parts list and special tools list work packages.

5. Refer to Usable on Code details presented later in this work package under SPECIAL INFORMATION.

QTY (Column (7)). The QTY (quantity per Figure) column indicates the quantity of the item used in the breakout shown on the illustration/Figure, which is prepared for a functional group, sub functional group, or an assembly. A "V" appearing in this column instead of a quantity indicates that the quantity is variable and quantity may change from application to application.

(MC) Include for Marine Corps manuals only.

USMC QTY per Equip (Column 8). This column accommodates the Marine Corps quantity per equipment requirement.

EXPLANATION OF CROSS-REFERENCE INDEXES WORK PACKAGES FORMAT AND COLUMN

1. National Stock Number (NSN) Index Work Package. NSNs in this index are listed in National Item Identification Number (NIIN) sequence.

STOCK NUMBER Column. This column lists the NSN in NIIN sequence. The NIIN consists of the last nine digits of the NSN. When using this column to locate an item, ignore the first four digits of the NSN. However, the complete NSN should be used when ordering items by stock number.

For example, if the NSN is 5385-01-574-1476, the NIIN is 01-574-1476.

FIG. Column. This column lists the number of the Figure where the item is identified/located. The Figures are in numerical order in the repair parts list and special tools list work packages.

ITEM Column. The item number identifies the item associated with the Figure listed in the adjacent FIG. column. This item is also identified by the NSN listed on the same line.

2. Part Number (P/N) Index Work Package. P/Ns in this index are listed in ascending alphanumeric sequence (vertical arrangement of letter and number combinations which places the first letter or digit of each group in order A through Z, followed by the numbers 0 through 9 and each following letter or digit in like order).

PART NUMBER Column. Indicates the P/N assigned to the item.

FIG. Column. This column lists the number of the Figure where the item is identified/located in the repair parts list and special tools list work packages.

ITEM Column. The item number is the number assigned to the item as it appears in the Figure referenced in the adjacent Figure number column.

Include 3, as applicable.

3. Reference Designator Index Work Package. Reference designators in this index are listed in ascending alphanumeric sequence (vertical arrangement of letter and number combination which places the first letter or digit of each group in order "A" through "Z," followed by the numbers "0" through "9" and each following letter or digit in like order).

REFERENCE DESIGNATOR Column. Indicates the reference designator assigned to the item.

FIG. Column. This column lists the number of the Figure where the item is identified/located in the repair parts list or special tools list work package.

ITEM Column. The item number is the number assigned to the item as it appears in the Figure referenced in the adjacent Figure number column.

SPECIAL INFORMATION

UOC. The UOC appears in the lower left corner of the Description Column heading. Usable on codes are shown as "UOC: ..." in the Description Entry (justified left) on the first line under the applicable item/nomenclature. Uncoded items are applicable to all models. Identification of the UOCs used in the RPSTL are:

Code	Used On
PAA	Model M114
PAB	Model M114A
PAC	Model M114B

Include appropriate UOC content, as applicable.

Fabrication Instructions. Bulk materials required to manufacture items are listed in the bulk material functional group of this RPSTL. Part numbers for bulk material are also referenced in the Description Column of the line item entry for the item to be manufactured/fabricated. Detailed fabrication instructions for items source coded to be manufactured or fabricated are found in (*enter applicable TM number or work package sequence number*).

Index Numbers. Items which have the word BULK in the Figure column will have an index number shown in the item number column. This index number is a cross-reference between the NSN / P/N index work packages and the bulk material list in the repair parts list work package.

For a combined narrative-RPSTL manual, associated publications shall not be included.

Associated Publications. The publication(s) listed below pertains to the (enter item name):

Publication	**Short Title**

The following paragraph shall appear only in the unit maintenance RPSTL special instructions.

Illustrations List. The illustrations in this RPSTL contain field authorized items. Illustrations published in (enter applicable TM number for the higher maintenance level RPSTL, e.g., for field, below depot sustainment, etc.) that contain field authorized items also appear in this RPSTL. The tabular list in the repair parts list work package contains only those parts coded "O" in the third position of the SMR code, therefore, there may be a break in the item number sequence.

HOW TO LOCATE REPAIR PARTS

1. When NSNs or P/Ns Are Not Known.

First. Using the table of contents, determine the assembly group to which the item belongs. This is necessary since Figures are prepared for assembly groups and subassembly groups, and lists are divided into the same groups.

Second. Find the Figure covering the functional group or the sub functional group to which the item belongs.

Third. Identify the item on the Figure and note the number(s).

Fourth. Look in the repair parts list work packages for the Figure and item numbers. The NSNs and part numbers are on the same line as the associated item numbers.

2. When NSN Is Known.

First. If you have the NSN, look in the STOCK NUMBER column of the NSN index work package. The NSN is arranged in NIIN sequence. Note the Figure and item number next to the NSN.

Second. Turn to the Figure and locate the item number. Verify that the item is the one you are looking for.

3. When P/N Is Known.

First. If you have the P/N and not the NSN, look in the PART NUMBER column of the P/N index work package. Identify the Figure and item number.

Second. Look up the item on the Figure in the applicable repair parts list work package.

Include 4 only if the RPSTL has a reference designator index work package.

4. When Reference Designator Is Known.

First. If you know the reference designator, look in the REFERENCE DESIGNATOR column of the reference designator index work package. Note the Figure and item number.

Second. Turn to the Figure and locate the item number. Verify that the item is the one you are looking for.

ABBREVIATIONS

Abbreviation	**Explanation**

Include uncommon abbreviations used in the RPSTL. List/define those not found at https://www.rmda.army.mil/abbreviation/mainpage.asp."

F.5.3.5.3.3 Indexed Repair Parts and Special Tool List (RPSTL) illustration and legend **<figure>**. When specified by the acquiring activity, an indexed RPSTL illustration and legend shall be added to the end of the introduction work package. The illustration shall have a legend that defines the item number, major functional group Figure title, and the respective Figure number. (Refer to FIGURE F-3.)

F.5.3.6 Repair parts list work package **<plwp>**. Each stand-alone RPSTL TM or RPSTL chapter in a combined manual shall contain at least one repair parts list work package **<plwp>**. (Refer to FIGURE F-4 for example of a repair parts list work package.) For less complex equipment with a small RPSTL, the RPSTL may be contained in a single work package or a few work packages. For complex equipment, each RPSTL work package shall have one Figure and one parts list. The Figure may have multiple sheets.

F.5.3.6.1 Work package identification information **<wpidinfo>**. Work package identification information is required for this work package. (Refer to 4.8.9.3.)

F.5.3.6.2 Work package initial setup **<initial_setup>**. Initial setup is not required for this work package.

F.5.3.6.3 Repair parts list **<pi.category>**. The repair parts lists shall have a Figure **<Figure>** and a list of repair part items **<pi.item>** as specified in F.5.3.6.3.1 and F.5.3.6.3.2. Repair parts list is **standard information per paragraph 4.8.13.7**.

F.5.3.6.3.1 Repair parts Figure title **<title>**. When available, Figure titles shall be taken from provisioning documentation. The RPSTL Figure title, the functional group title, and the applicable MAC title shall be the same. When no provisioning documentation is provided, the acquiring activity or contractor shall develop a title. This title shall be used consistently throughout the TM.

F.5.3.6.3.2 Repair part item **<pi.item>**. Each repair part shall include the column requirements in F.5.3.6.3.2.1 through F.5.3.6.3.2.8. Each repair may also include the optional items in F.5.3.6.3.2.9 through F.5.3.6.3.2.12.1.

F.5.3.6.3.2.1 Item number column **<callout>**. Items shall be listed on the repair parts list (in the ITEM NO. column) by the same callout number shown on the associated figure. The items shall be listed in ascending alphanumeric sequence.

F.5.3.6.3.2.2 Source, Maintenance, and Recoverability (SMR) code column **<smr>**. The SMR code column shall include SMR codes assigned to the applicable items. For multiple service TMs, the SMR code column shall be divided into subcolumns, one for each service involved. Each service shall identify the appropriate SMR code subentry. When services share the same SMR code for an item, the SMR code shall be listed for each service. Refer to FIGURE 5 for example of SMR codes in a multi-service RPSTL.

F.5.3.6.3.2.3 National Stock Number (NSN) column **<nsn>**. The NSN column shall include the NSN assigned to the applicable item.

F.5.3.6.3.2.4 Commercial And Government Entity Code (CAGEC) column **<cageno>**. The applicable five-digit CAGEC number, as listed in *Catalog Handbook H4/H8*, shall appear in the CAGEC column.

F.5.3.6.3.2.5 Part number column **<partno>**. Each assigned part number shall be listed in the PART NUMBER column. When multiple part numbers exist for a single item, such as an end-item design number and a subsidiary suppliers number, the part number column shall list the manufacturer's number. The subsidiary identification information shall be included in the description column. (Refer to F.5.3.6.3.2.6.)

F.5.3.6.3.2.6 Description and Usable On Code (UOC) column. The DESCRIPTION AND USABLE ON CODE (UOC) column shall include the following information.

F.5.3.6.3.2.6.1 Functional group header **<fncgrp>**. The functional group header shall precede the first repair part item in the description column. The header shall consist of the functional group number and title **<fnccode>** appearing on the top line(s). The next line(s) below shall include the Figure number and the Figure title **<fnctitle>**. The functional group codes shall not exceed 11 characters.

F.5.3.6.3.2.6.2 Item name **<name>**. The item name shall consist of the official nomenclature (Refer to 4.8.25.2). If the item is an HCI or ESD item, the symbol HCI and/or ESD shall precede the item name.

F.5.3.6.3.2.6.3 Description **<desc>**. The description shall consist of the data from the provisioning document. The **<desc>** may also contain other information to assist in identifying the item. This includes, but is not limited to, original manufacturer's part number, Military Specification (MS) part numbers, or specific physical information about the item.

F.5.3.6.3.2.6.4 Indentions. The item name listed in the DESCRIPTION AND USABLE ON CODE (UOC) column shall be indented to show components of assemblies and next higher assemblies. (Refer to FIGURE F-6.)

F.5.3.6.3.2.6.5 Usable On Code (UOC) **<uoc>**. When an item has multiple configurations or multiple models, the three-position alphanumeric UOC, representing the applicable configuration in which the item is used, shall be placed on the last line under the item description. The letters "UOC:" followed by the applicable UOC shall be indented. (Refer to FIGURE F-4.) When an item is used on all configurations or when only one configuration is covered by the RPSTL, UOCs shall not be shown.

F.5.3.6.3.2.6.6 Serial number application **<usbefserno>**. When part numbers of spare/repair items are not the same for all serial numbered equipment of the same model, a statement identifying the Usable Effective (USBL EFF) serial numbers shall be placed on the last line under the item description. The letters "USBL EFF" followed by the applicable serial numbers shall be indented (e.g., USBL EFF SER NOS 1719-1941). When an item is used on all models or when only one configuration is covered by the RPSTL, serial numbers shall not be shown.

F.5.3.6.3.2.6.7 Assembled items. Spare and repair parts that are part of a nonstocked assembled item (source coded "AO," "AF," "AH," "AL," or "AD") shall be assigned item numbers on illustrations and shall be listed in item number sequence on the repair parts list. These items/parts shall be listed immediately below the item to be assembled on the repair parts list. When a particular illustration does not show the parts breakdown of the nonstocked assembly, reference shall be made to the breakdown illustration in the RPSTL. Instructions, drawings, charts, and tables showing how to assemble assemblies source coded "A( )" shall not appear in the RPSTL, but shall appear in the "List of Manufactured Items" (refer to E.5.3.10) or by reference to the applicable assembled items maintenance TM if one is available.

F.5.3.6.3.2.6.8 Manufactured items. All items source coded "MO," "MF," "MH," "ML," or "MD" shall have the statement in the DESCRIPTION AND USABLE ON CODE (UOC) column **<desc>** as follows: "MAKE FROM (*enter applicable bulk material or other replaceable item name, CAGEC, and part number*)." Material that is used to make items shall also be shown in a separate bulk items work package **<bulk_itemswp>.** (Refer to F.5.3.9.) Instructions, drawings, charts, and tables required to show how items are made shall not be contained in the RPSTL; but shall appear in the illustrated list of manufactured items. (Refer to E.5.3.10.)

F.5.3.6.3.2.6.9 Kits and kit repair parts. Kits and repair parts shall conform to the format of either option 1 (refer to FIGURE F-7) or option 2 (refer to FIGURE F-8), as specified by the acquiring activity. Only one option is to be used in a weapons systems RPSTL listing:

a. Option 1 (kits):

(1) Option 1 kits shall appear at the end of the associated parts list. As specified by the acquiring activity, the ITEM NO. column **<callout>** for kits shall be either left blank or list an alphabetical character(s). The QTY column **<qty>** for kits shall be a "V" (variable) when the exact quantity may vary. (Refer to FIGURE F-7.)

(2) Option 1 (parts) <kititem>. Option 1 kit repair parts shall be listed with their applicable Figure and appear in item number sequence. The statement "part of Kit P/N (enter kit P/N)" shall follow item name **<name>**. Kit repair parts shall also be listed under the kit list at the end of the parts list. Parts of the kit list shall be indented and listed alphabetically by item name or in item number sequence immediately below the kit item name. The quantity **<qty>** (in parentheses), Figure number, and item number **<callout>** shall follow the repair part item name.

b. Option 2 (kits) <kitswp>.

(1) Option 2 kits shall be listed in the kit parts list work package **<kitswp>.** (Refer to F.5.3.8.)

(2) Option 2 (parts) <pi.item>. Option 2 kit repair parts shall appear in the parts list by item number as shown on the associated Figure. They shall be listed in item number sequence. The statement "PART OF KIT P/N *(enter kit part number)*" shall follow the item name.

F.5.3.6.3.2.6.10 End of figure statement. The statement "**END OF FIGURE"** shall appear below the last item described in the column for each of the tabular lists in the repair parts list and the special tools list work packages to indicate the end of the work packages.

F.5.3.6.3.2.7 Quantity column **<qty>**. The number in the QTY column shall represent the number of times the item appears in the illustration/Figure with the associated item number. When a definite quantity cannot be determined because the number of uses per equipment or the size/length of an item may vary with each piece of equipment, the letter "V" shall be placed in the left position of the QTY column.

F.5.3.6.3.2.8 (MC) United States Marine Corp. (USMC) quantity per equipment column **<qty_per_end_item>**. The number in the USMC QTY per Equip column shall represent the total quantity for all the occurrences of that part in all the repair parts lists. This column shall be included in multi-service manuals involving the Marine Corps.

F.5.3.6.3.2.9 Mandatory replacement **<mrp>**. Information on mandatory replacement may be included.

F.5.3.6.3.2.10 Unit of issue **<ui>**. The unit of issue for the item may be included.

F.5.3.6.3.2.10.1 Unit of measure 'um'. The unit of measure for the item may be included. When used, the unit of measure is an attribute of the **<ui>** element and the unit of issue **<ui>** must be entered.

F.5.3.6.3.2.11 Reference designator **<refdes>**. The reference designator for the item may be included.

F.5.3.6.3.2.12 Next higher assembly **<nha_item>**. Information on the next higher assembly may be included. Refer FIGURE F-6 for example.

F.5.3.6.3.2.12.1 Parts breakdown reference **<part.breakdown.ref>**. A reference to parts breakdown for the item may be included.

F.5.3.6.4 Basic Issue Items (BII) (repair parts). Repair parts for reparable BII that do not have separate operator TMs, but are authorized in the RPSTL, shall be listed in a functional group titled **<fnctitle>** BASIC ISSUE ITEMS (REPAIR PARTS). Items listed in functional and sub functional groups shall be listed and identified with the same basic columnar data required for the end item repair parts. BII shall be supported by illustrations.

F.5.3.6.5 Expendable and durable items. Expendable and durable items shall not be listed in the RPSTL. These items shall appear in the expendable and durable items work package **<explistwp>** (refer to G.5.6) in the Support Information Chapter.

F.5.3.7 Repair parts for special tools list work package **<stl_partswp>**. The special tools repair parts list work package shall be prepared when all the following conditions in a through c are met. This work package shall follow the last repair parts list work package **<plwp>** and shall precede the kit parts list work package **<kitswp>,** bulk items work package **<bulk_itemswp**>, or special tools list work package **<stlwp>**. The work package data requirements are specified in F.5.3.7.1 through F.5.3.7.3.

a. The RPSTL identifies the special tool in the special tools list work package. (Refer to F.5.3.10.)
b. The special tool has repair parts that may be replaced at any maintenance level covered in the TM.

c. The special tool does not have repair instructions and/or parts listed in a TM for the special tool.

F.5.3.7.1 Work package identification information **<wpidinfo>**. Work package identification information is required for this work package. (Refer to 4.8.9.3.)

F.5.3.7.2 Work package initial setup **<initial_setup>**. Initial setup is not required for this work package.

F.5.3.7.3 Special tools repair parts items list **<pi.category>**. When developing the special tools repair parts items list, the requirements in F.5.3.6.3.2 shall be used except as specified in F.5.3.7.3.1.

F.5.3.7.3.1 Functional group header **<fncgrp>**. The functional group header shall precede the first special tools repair part item in the DESCRIPTION AND USABLE ON CODE (UOC) column. The functional group number and title **<fnccode>** shall be "SPECIAL TOOLS (REPAIR PARTS)" appearing on the top line(s). The next line(s) below shall be the Figure number and the Figure title **<fnctitle>**.

F.5.3.8 Kit parts list work package **<kitswp>**. A kits parts work package **<kitswp>** (refer to FIGURE F-8) shall be prepared when kit parts are listed separately in accordance with F.5.3.6.3.2.6.9 b (Option 2 (kits)). The work package shall follow the last repair parts list work package **<plwp>** or repair parts for special tools list work package **<stl_partswp>**, when provided, and shall precede the bulk items list work package **<bulk_itemswp>**, if provided, or special tools list work package **<stlwp>**. The work package consists of one or more kits part item lists **<pi.category>** organized by functional group. The work package data requirements are specified in F.5.3.8.1 through F.5.3.8.3. Kit parts list is **standard information per paragraph 4.8.13.7**.

F.5.3.8.1 Work package identification information **<wpidinfo>**. Work package identification information is required for this work package. (Refer to 4.8.9.3.)

F.5.3.8.2 Work package initial setup **<initial_setup>**. Initial setup is not required for this work package.

F.5.3.8.3 Kits part items list **<pi.category>**. The kits part items list shall be listed alphanumerically by part number in the PART NUMBER column. The requirements defined in F.5.3.6.3 shall be used except as specified in F.5.3.8.3.1 through F.5.3.8.3.3.

F.5.3.8.3.1 Functional group header **<fncgrp>**. The functional group header shall precede the first bulk item in the DESCRIPTION AND USABLE ON CODE (UOC) column. The functional group number and title **<fnccode>** shall be "REPAIR KITS" appearing on the top line(s). The next line(s) below shall be the Figure number and the Figure title **<fnctitle>**.

F.5.3.8.3.2 Kit part item group **<kititem>**. Parts in the kit group, in the DESCRIPTION AND USABLE ON CODE (UOC) column, shall be indented two positions and listed alphabetically by item name or in item number sequence under their kit name. Kit parts shall be listed by item names **<name>**, the quantity (in parentheses) **<qty>**, the Figure number, and the item numbers **<callout>** that appear in the basic parts list.

F.5.3.8.3.3 Kits part item quantity **<qty>**. The QTY column entry for kits part shall contain a "V" (variable) when the exact quantity may vary.

F.5.3.9 Bulk items work package **<bulk_itemswp>**. A bulk items work package shall be prepared whenever bulk items are required in the repair of any parts listed in a parts list, special tool list or repair kit. The work package shall not have an illustration. The work package data requirements are specified in F.5.3.9.1 through F.5.3.9.3. Bulk items list is **standard information per paragraph 4.8.13.7**.

F.5.3.9.1 Work package identification information **<wpidinfo>**. Work package identification information is required for this work package. (Refer to 4.8.9.3.)

F.5.3.9.2 Work package initial setup **<initial_setup>**. Initial setup is not required for this work package.

F.5.3.9.3 Bulk item **<pi.item>**. Items in the bulk items list shall be listed alphabetically by item name in the DESCRIPTION AND USABLE ON CODE (UOC) column. (Refer to FIGURE F-9.) The requirements defined in F.5.3.6.3.2 shall be used except as specified in F.5.3.9.3.1 and F.5.3.9.3.2.

F.5.3.9.3.1 ITEM column **<callout>**. Numbers in the ITEM column of bulk material list apply to the FIG. BULK only and shall not be associated with item numbers (callouts appearing on the illustrations/Figures).

F.5.3.9.3.2 Functional group header **<fncgrp>**. The functional group header shall precede the first bulk item in the DESCRIPTION AND USABLE ON CODE (UOC) column. The functional group number and title **<fnccode>** shall be "BULK MATERIAL" appearing on the top line(s). The next line(s) below shall be the Figure number and the Figure title **<fnctitle>** and titled "FIG. BULK."

F.5.3.10 Special tools list work package **<stlwp>**. A special tools list work package shall be prepared for special tools, special TMDE, and other special support equipment authorized for maintenance of the end item/assembly. (Refer to FIGURE F-10.) Repair parts for special tools listed in this work package that have their own TM shall not be listed in the repair parts for special tools list work package. (Refer to F.5.3.7.) These tools shall be listed in the format and data requirement in F.5.3.10.1 through F.5.3.10.3.6. Special tools list is **standard information per paragraph 4.8.13.7**.

F.5.3.10.1 Work package identification information **<wpidinfo>**. Work package identification information is required for this work package. (Refer to 4.8.9.3.)

F.5.3.10.2 Work package initial setup **<initial_setup>**. Initial setup is not required for this work package.

F.5.3.10.3 Special tools list **<pi.category>**. The special tools list requirements in F.5.3.6.3 shall be used except as specified in F.5.3.10.3.1 through F.5.3.10.3.6.

F.5.3.10.3.1 Item number column. Items shall be listed on the special tools list (in the ITEM NO. column) by the same callout number shown on the associated Figure. The items shall be listed in ascending alphanumeric sequence.

F.5.3.10.3.2 Functional group header **<fncgrp>**. The functional group header shall precede the first bulk item in the DESCRIPTION AND USABLE ON CODE (UOC) column. The functional group number and title **<fnccode>** shall be "SPECIAL TOOLS" appearing on the top line(s). The next line(s) below shall be the Figure number and the Figure title **<fnctitle>**.

F.5.3.10.3.3 D-coded items. When a depot level RPSTL does not exist and items are maintained at depot level, they shall be identified with a "D" in the third position of the SMR code in the highest level RPSTL prepared.

F.5.3.10.3.4 Basis of Issue (BOI) **<boi>**. The BOI **<boi>** shall be placed on the last line under the item description, in the DESCRIPTION AND USABLE ON CODE (UOC) column, for individual items, sets, or kits. The BOI shall indicate the quantity of the items, e.g., sets, or kits authorized to support a quantity of end items/assembly(s) or a specific military unit. For example, BOI: 1 auth for 1-12 equip or BOI: 1 per BN HQ when BN has SVC CO.

F.5.3.10.3.5 Quantity column. The QTY column shall be left blank.

F.5.3.10.3.6 Components list **<kititem>**. Components of special tool sets and kits, in the DESCRIPTION AND USABLE ON CODE (UOC) column, shall be listed in Figure and item number sequence **<callout>**. The component shall be indented two positions and listed by item name **<name>**, the Figure number, and the item numbers **<callout>**. Quantities of components **<qty>** shall be included in BOI statement. (Refer to F.5.3.10.3.4.)

F.5.3.11 Cross-reference index work packages.

F.5.3.11.1 National stock number (NSN) index work package **<nsnindxwp>**. This work package (refer to FIGURE F-11) shall be prepared. The index (**standard information per paragraph 4.8.13.7**) shall be in ascending numeric sequence by the National Item Identification Number (NIIN) (the last nine digits of the NSN). This index shall be listed in the format and data requirement in F.5.3.11.1.1 through F.5.3.11.1.3.

F.5.3.11.1.1 Work package identification information **<wpidinfo>**. Work package identification information is required for this work package. (Refer to 4.8.9.3.)

F.5.3.11.1.2 Work package initial setup **<initial_setup>**. Initial setup is not required for this work package.

F.5.3.11.1.3 National Stock Number (NSN) index **<nsnindx>**. Each line entry **<nsnindxrow>** shall list the complete NSN for each NSN assigned to the applicable repair part or special tool items Figure number and item number **<callout>**. The NSN **<nsn>** line entry shall identify the first Figure number and item number **<callout>** for which the stock number is applicable. The NSN shall not be repeated on the same page of the index for each additional Figure number and item number **<callout>** identified by that NSN. When NSN references carry over to another page, the carried over NSN entry shall appear at the top of the list.

F.5.3.11.2 Part number index work package **<pnindxwp>**. This work package (refer to FIGURE F-12) shall be prepared. The index (**standard information per paragraph 4.8.13.7**) shall be in ascending alphanumeric sequence by part number. This index shall be listed in the format and data requirement in F.5.3.11.2.1 through F.5.3.11.2.3.

F.5.3.11.2.1 Work package identification information **<wpidinfo>**. Work package identification information is required for this work package. (Refer to 4.8.9.3.)

F.5.3.11.2.2 Work package initial setup **<initial_setup>**. Initial setup is not required for this work package.

F.5.3.11.2.3 Part number index **<pnindx>**. Each line entry **<pnindxrow>** shall list each part numbers assigned to applicable repair part or special tool items Figure number and item number **<callout>**. The part number **<partno>** line entry shall identify the first Figure number and item number **<callout>** for which the part number is applicable. The part number shall not be repeated on the same page of the index for each additional Figure number and item number **<callout>** identified by that part number. When part number references carry over to another page, the carried over part number entry shall appear at the top of the list.

F.5.3.11.3 Reference designator index work package **<refdesindxwp>**. A reference designator work package (refer to FIGURE F-13) shall be prepared as required. The index (**standard information per paragraph 4.8.13.7**) shall be in alphanumeric sequence by reference designators. This index shall be listed in the format and data requirement in F.5.3.11.3.1 through F.5.3.11.3.3.

F.5.3.11.3.1 Work package identification information **<wpidinfo>**. Work package identification information is required for this work package. (Refer to 4.8.9.3.).

F.5.3.11.3.2 Work package initial setup **<initial_setup>**. Initial setup is not required for this work package.

F.5.3.11.3.3 Reference designator index **<refdesindx>**. Each line entry **<refdesindxrow>** shall list each reference designator assigned to the applicable repair part or special tool items Figure number and item number **<callout>**. The reference designator **<refdes>** line entry shall identify the first Figure number and item number **<callout>** for which the reference designator is applicable. The reference designators shall not be repeated on the same page of the index for each additional Figure number and item number **<callout>** identified by that reference designator. When reference designator references carry over to another page, the carried over reference designator entry shall appear at the top of the list.

F.5.3.11.4 Bulk Figure reference. When entries in either the NSN or the part number index references bulk material, the word “BULK” shall appear in the FIG. column. The numbers in the ITEM No. column shall refer to the item number list in the bulk Figure located in the bulk functional group list and shall not refer to item numbers on an illustration.

F.5.3.11.5 Sets and kits. Part numbers for sets/kits shall be cross-referenced to NSN, figure, and item number for the set/kit. When Option 1 is selected, the ITEM column shall either be blank or list an alphabetical character (e.g., "K" for KIT, "S" for SET, etc.). (Refer to F.5.3.6.3.2.6.9a) When Option 2 is selected, the FIG. column shall list the word KITS or SETS, as applicable. (Refer to F.5.3.6.3.2.6.9b.)

F.5.3.12 Illustrations. Additional RPSTL specific illustration requirements are described in F.5.3.12.1 through F.5.3.12.4.

F.5.3.12.1 Arrangement of illustrations. All illustrations prepared for spares, repair parts, special tools, special TMDE, and other special support equipment shall be arranged in figure number sequence. They shall precede their companion parts list (on the left-hand page preceding the parts list or at the top of the same page of the parts list). Illustrations shall not be duplicated to provide facing page illustrations for the second and subsequent pages of the companion parts list. Illustrations shall not be duplicated to show different models or configurations of an assembly when UOCs can be assigned to indicate differences in configurations. (Refer to F.5.3.4 for RPSTL work package layout requirements to achieve facing page layout.)

F.5.3.12.2 Use of illustrations. Foldout and foldout-foldup illustrations shall not be used in RPSTLs. References to illustrations in other TMs or to illustrations in the narrative portion of a combined maintenance TM with a RPSTL shall not be made. Landscape pages shall not be prepared except for RPSTLs supporting nuclear weapons (regulated by the Department of Energy/Defense Nuclear Agency). For clarity, multisheet illustrations may be used.

F.5.3.12.3 Identical parts/item numbers. Identical parts (same part number) appearing in a Figure (illustration) having only one FGC shall have the same item number. If a figure has two or more FGCs/assemblies, only the identical parts with identical SMR codes within each FGC/assembly shall have the same item number.

F.5.3.12.4 Identical assemblies. When two or more identical assemblies (same part number) exist in different places, i.e., in the equipment, a breakdown of the parts shall be illustrated only once, i.e., the first time the assembly appears in the RPSTL. For subsequent times that the identical assembly appears, the assembly item name shall appear in the description and UOC column and be followed by the statement “SEE FIG ## FOR BREAKDOWN.”

F.6 **NOTES.**

The notes in section 6 apply to this appendix.

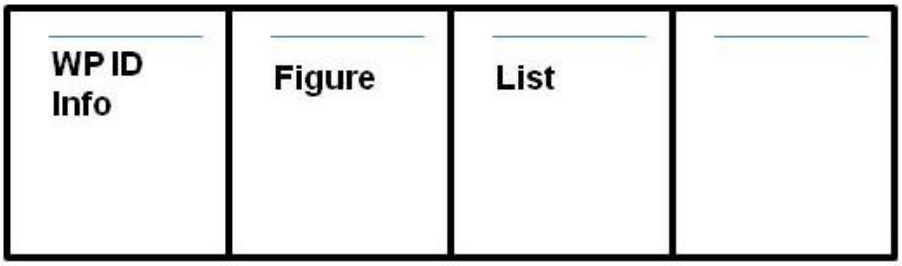

Single sheet illustration

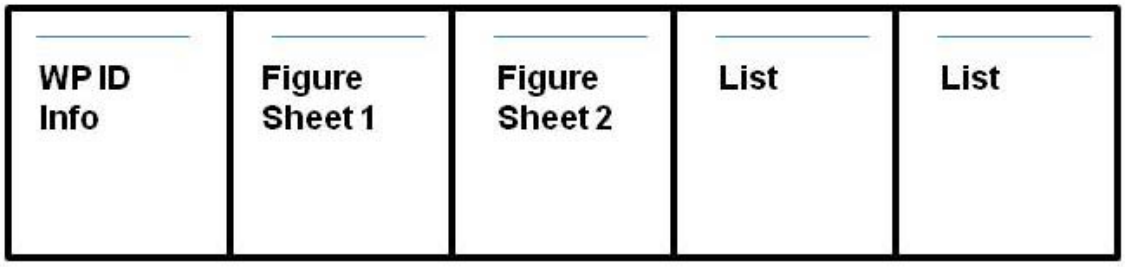

Multisheet illustration

FIGURE F-1. RPSTL page layout scenarios.

0001

TM X-XXXX-XXX-XX

MAINTAINER MAINTENANCE
M198 HOWITZER

INTRODUCTION

SCOPE
This RPSTL lists the authorized spares and repair parts; special tools; special test, measurement, and diagnostic equipment (TMDE); and other special support equipment required for performance of maintainer maintenance of the M198 Howitzer. It authorizes the requisitioning, issue, and disposition of spares, repair parts, and special tools as indicated by the source, maintenance, and recoverability (SMR) codes.

GENERAL
In addition to the Introduction work package, this RPSTL is divided into the following work packages.

1. Repair Parts List Work Packages. Work packages containing lists of spare and repair parts authorized for use in the performance of maintenance at the levels determined by the MAC/SMR code. These work packages also include parts which must be removed for replacement of the authorized parts. Parts lists are composed of functional groups in ascending alphanumeric sequence, with the parts in each group listed in ascending figure and item number sequence. Sending units, brackets, filters, and bolts are listed with the component they mount on. Bulk materials are listed by item name in the Bulk Items work package which follows the Special Tools Repair Parts work package. Repair parts kits are listed at the end of the individual work packages. Repair parts for reparable special tools are also listed in a separate work package. Items listed are shown on the associated illustrations.

2. Special Tools Repair Parts Work Package. This work package lists any spare parts required for the special tools, TMDE, or other support equipment listed in the Special Tools Work Package that are not listed in any other publication.

3. Bulk Items Work Package. This work package lists all items identified as 'bulk' in the parts lists. Due to the nature of bulk items, this work package does not include a Figure.

4. Special Tools List Work Packages. This work package lists those special tools, special TMDE, and special support equipment authorized by this RPSTL (as indicated by Basis of Issue (BOI) information in the DESCRIPTION AND USABLE ON CODE (UOC) column). Tools that are components of common tool sets and/or Class VII are not listed.

5. Cross-Reference Indexes Work Packages. There are 2 cross-reference indexes work packages in this RPSTL. The National Stock Number (NSN) Index work package refers you to the Figure and item number for each NSN listed in the RPSTL. The Part Number Index work package refers you to the figure and item number for each part number listed in the RPSTL.

EXPLANATION OF COLUMNS IN THE REPAIR PARTS LIST AND SPECIAL TOOLS LIST WORK PACKAGES

0001-1

FIGURE F-2. Example of an introduction work package.

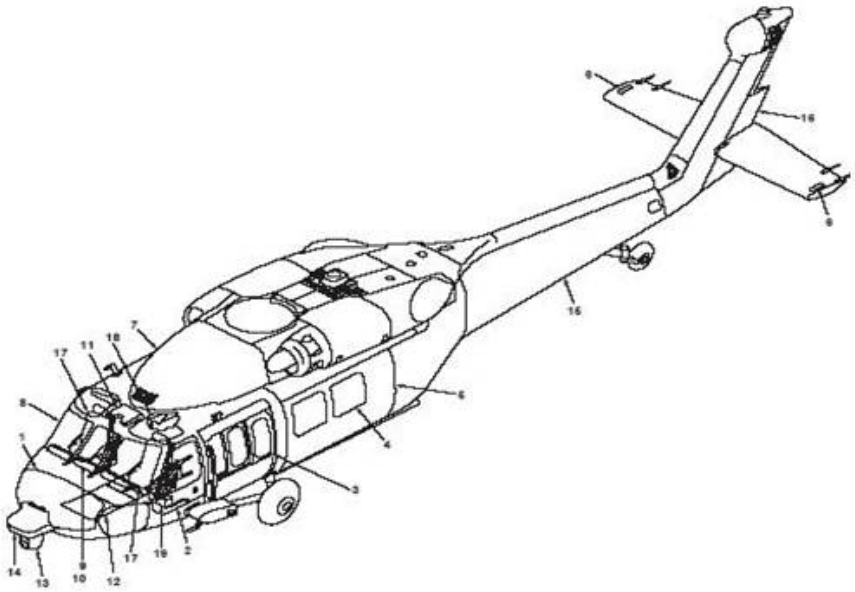

ITEM NO.	FIGURE TITLE	FIGURE NO.
1	Door Installation, Nose Section	4
2	Door Installation, Crew Nose Section	5
3	Gunners Window	13
4	Window Panel, Jettisonable, Cargo Door US-60Q	26
5	Door Installation, Troop/Cargo	25
6	Stabilator Installation, Tail Rotor Pylon Horizontal	42
7	Stabilator Installation, Tail Rotor Pylon Horizontal	56
8	Windshield Installation, Cockpit	65
9	Instrument Installation, Cockpit	66
10	Instrument Panel Installation UH-60Q	67
11	Console Installation Overhead	78
12	PM Equipment Bay, Lower	99
13	FLIR Turret Installation	109
14	FLIR Installation	110
15	Tail Cone Assembly	187
16	Tail Rotor Pylon Assembly	200
17	Seat Installation, Pilot And Copilot	213
18	Seat Installation, Troop And Gunner	230
19	Battery Installation	279

Figure 1. Exploded View, UH-60A, UH-60L, UH-60Q, HH-60L, and EH-60A Helicopter Airframe

FIGURE F-3. <u>Example of an indexed RPSTL illustration and legend.</u>

TM X-XXXX-XXX-XX 0092

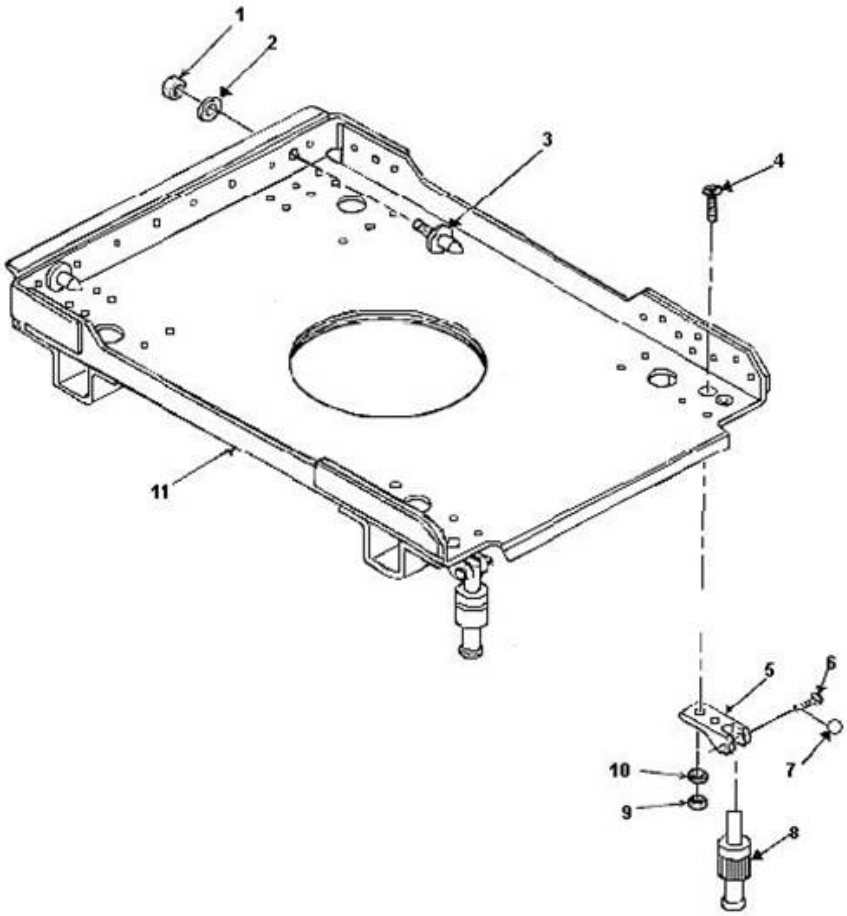

Figure 91. Electrical Equipment Rack, FMT 3234023-100

0092-2

FIGURE F-4. <u>Example of a repair parts list work package.</u>

(1) ITEM NO.	(2) SMR CODE	(3) NSN	(4) CAGEC	(5) PART NUMBER	(6) DESCRIPTION AND USABLE ON CODE (UOC)	(7) QTY
					GROUP 6025	
					FIG. 91 RACK, ELECTRONIC EQUIPMENT, FMT 3234023-100	
1	PAOZZ	5310-00-894-3637	80205	NAS1291CAM	NUT, SELF-LOCKING, EX UOC:DCT, DCU.....	2
2	PAOZZ	5310-00-515-7449	88044	AN960C416L	WASHER, FLAT UOC: DCT, DCU.....	2
3	PAOZZ	5315-00-127-8038	82577	3210472	PIN, REAR GUIDE UOC: DCT, DCU.....	2
4	PAOZZ	5305-00-958-3409	96906	MS2469S52	SCREW, MACHINE UOC: DCT, DCU.....	4
5	PAOZZ	5340-01-257-1761	82577	3210471	HINGE, RACK UOC: DCT, DCU.....	2
6	PAOZZ	5315-01-008-7083	82577	3210473	PIN, HINGE UOC: DCT, DCU.....	2
7	PAOZZ	5315-00-288-2478	96906	MS24665-1011	PIN, COTTER UOC: DCT, DCU.....	2
8	PAOZZ	5340-00-132-3718	82577	964037-IC	FASTENER, SELF LOCK UOC: DCT, DCU.....	2
9	PAOZZ	5310-00-844-3302	80205	NAS1291C3	NUT, SELF LOCKING UOC: DCT, DCU.....	4
10	PAOZZ	5310-00-781-9483	80205	NAS620C10L	WASHER, FLAT UOC: DCT, DCU.....	4
11	XAOZZ		82577	6019031	RACK, SUBASSEMBLY.....	
					END OF FIGURE	

FIGURE F-4. Example of a repair parts list work package - Continued.

TM X-XXXX-XXX-XX 0092

(1) ITEM NO	(2) SMR CODE a. ARMY	b. AIR FORCE	c. NAVY	d. USMC	(3) NSN	(4) CAGEC	(5) PART NUMBER	(6) DESCRIPTION AND USABLE ON CODE (UOC)	(7) QTY	(8) USMC QTY PER EQUIP
1	PAOZZ	PAOZZ	PAOZZ	PAOZZ	5310-01-012-3595	81205	2740-0003	. NUT, PLAIN, ASSEMBLED	7	374
2	PAOZZ	PAOZZ	PAOZZ	PAOZZ		19207	12325869	. BOLT, MACHINE	6	300
3	PAOZZ	PAOZZ	PAOZZ	PAOZZ		96906	MS35207-269	. SCREW, MACHINE	1	1
4	XDOZZ	XB	XBOZZ	XBOZZ		30554	88-20036	. SPACER, TRAY, OUTPUT	1	1
5	PAOZZ	PAOZZ	PAOZZ	PAOZZ		96906	MS27183-42	. WASHER, FLAT	1	1
6	XDOOO	XB	XBOZZ	XBOZZ		30554	88-20036	. OUTPUT BOX ASSEMBLY SEE FIGURE 13 FOR BREAKDOWN	1	1
7	PAOZ	PAOZZ	PAOZZ	PAOZZ		45722	P15121-64	. . SCREW, ASSEMBLED, WAS	2	25
8	PAOZZ	PAOZZ	PAOZZ	PAOZZ		81205	2740-0003	. . NUT, PLAIN, ASSEMBLED	10	374
9	PAOZZ	PAOZZ	PAOZZ	PAOZZ		96906	88-20314-4	. . CLAMP, LOOP	2	7
10	PAOZZ	PAOZZ	PAOZZ	PAOZZ		45722	P15121-67	. . SCREW, ASSEMBLED, WAS	9	9
11	XDOZZ	XB	XBOZZ	XBOZZ		9R803	4300-12-XP-74	. . MARKER STRIP, TERMINAL	1	1
12	XDOZZ	XB	XBOZZ	XBOZZ		9R803	3300-14-XP-74	. . MARKER STRIP, TERMINAL	1	1
13	PAOZZ	PAOZZ	PAOZZ	PAOZZ		78189	511-081800-00	. . NUT, PLAIN, ASSEMBLED	2	8
14	PAOZZ	PAOZZ	PAOZZ	PAOZZ		45722	P15121-37	. . SCREW, ASSEMBLED, WAS	2	6
15	PAOZZ	PAOZZ	PAOZZ	PAOZZ		96906	MS27183-42	. . WASHER, FLAT	6	87

FIGURE F-5. Example of a multiservice RPSTL.

TM X-XXXX-XXX-XX 0025

(1) ITEM NO.	(2) SMR CODE	(3) NSN	(4) CAGEC	(5) PART NUMBER	(6) DESCRIPTION AND USABLE ON CODE (UOC)	(7) QTY
					GROUP 14 ENGINE ASSEMBLY	
					FIG. 24 OIL PUMP ASSEMBLY	
1	XXXXX	XXXX-XX-XXX-XXXX	XXXXX	XXXXXXXXXX	.BOLT MACHINE	1
2	XXXXX	XXXX-XX-XXX-XXXX	XXXXX	XXXXXXXXXX	.WASHER, LOCK	1
3	XXXXX	XXXX-XX-XXX-XXXX	XXXXX	XXXXXXXXXX	.STRAINER, PUMP	1
4	XXXXX	XXXX-XX-XXX-XXXX	XXXXX	XXXXXXXXXX	.PUMP ROTARY.	1
5	XXXXX	XXXX-XX-XXX-XXXX	XXXXX	XXXXXXXXXX	..REGULATOR PRESS	1
6	XXXXX	XXXX-XX-XXX-XXXX	XXXXX	XXXXXXXXXX	..WASHER, KEY	1
7	XXXXX	XXXX-XX-XXX-XXXX	XXXXX	XXXXXXXXXX	..SPACER, RING	5
8	XXXXX	XXXX-XX-XXX-XXXX	XXXXX	XXXXXXXXXX	..GEAR, OIL PUMP	1
9	XXXXX	XXXX-XX-XXX-XXXX	XXXXX	XXXXXXXXXX	..BOLT, MACHINE CAP SCREW 1/4-20X1-3/8 INCH	5
10	XXXXX	XXXX-XX-XXX-XXXX	XXXXX	XXXXXXXXXX	..WASHER, LOCK, 1/4 IN MEDIUM SAE	1
11	XXXXX	XXXX-XX-XXX-XXXX	XXXXX	XXXXXXXXXX	..LOCKWASHER, STEEL	2
12	XXXXX	XXXX-XX-XXX-XXXX	XXXXX	XXXXXXXXXX	..SCREW, COVER	2
13	XXXXX	XXXX-XX-XXX-XXXX	XXXXX	XXXXXXXXXX	..COVER, PUMP	2
14	XXXXX	XXXX-XX-XXX-XXXX	XXXXX	XXXXXXXXXX	..PUMP, OIL BSC	6
15	XXXXX	XXXX-XX-XXX-XXXX	XXXXX	XXXXXXXXXX	...GEAR, DR SHAFT	1
16	XXXXX	XXXX-XX-XXX-XXXX	XXXXX	XXXXXXXXXX	...BODY ASSY	1
17	XXXXX	XXXX-XX-XXX-XXXX	XXXXX	XXXXXXXXXX	...SHAFT, IDLER	1
18	XXXXX	XXXX-XX-XXX-XXXX	XXXXX	XXXXXXXXXX	....BODY, PUMP	1
					END OF FIGURE	

0025-3/blank

FIGURE F-6. <u>Example of indentions (next higher assembly).</u>

TM X-XXXX-XXX-XX 0011

(1) ITEM NO.	(2) SMR CODE	(3) NSN	(4) CAGEC	(5) PART NUMBER	(6) DESCRIPTION AND USABLE ON CODE (UOC)	(7) QTY
					GROUP 15 AUXILLARY POWER UNIT	
					FIG. 10 T62T-2A, T62T-2A1 GAS TURBINE ENGINE	
1	PAODD	2835-00-906-6766	55820	37688-0	ENGINE, GAS TURBINE T62T-2A UOC:NB4...	2
2	PAODD	2835-00-804-8316	55820	37688-1000	ENGINE, GAS TURBINE T62T-2A1 UOC: NB5...	2
3	PAOZZ	5310-00-877-5797	96906	MS21044N3	.NUT, SELF-LOCKING UOC: NB4, NB5.....	2
4	PAOZZ		88044	AN960DD10	.WASHER, FLAT UOC: NB4, NB5, NB6.....	4
5	KAOZZ	5330-00-263-8030	96906	MS29512-06	.PACKING, PREFORMED PART OF KIT P/N 31766-1	2
6	PAOOO	2910-00-919-2021	55820	28022-4	. .NOZZLE ASSEMBLY STATOR UOC: NB4, NB5, NB6.....	2
7	KDOZZ	5330-00-961-1463	96906	MS35769-5	. .GASKET PART OF KIT P/N 31766-1 UOC: NB4, NB5, NB6.....	2
8	PAOZZ		71895	970HE1UPPH	NOZZLE, STATOR UOC: NB4, NB5, NB6.....	2
9	KAOZZ	5330-00-961-1463	55820	26793-1	. .GASKET PART OF KIT P/N 31766-1 UOC: NB4, NB5, NB6.....	4
	PAOZZ		55820	31766-1	. .SEAL KIT, TURBINE...	
					GASKET (1) 10-7	
					GASKET (1) 10-9	
					PACKING, PREFORMED (10) 10-6	
					END OF FIGURE	

0011-3/blank

FIGURE F-7. <u>Example of kits breakdown option 1.</u>

(1) ITEM NO.	(2) SMR CODE	(3) NSN	(4) CAGEC	(5) PART NUMBER	(6) DESCRIPTION AND USABLE ON CODE (UOC)	(7) QTY
					GROUP 94 REPAIR KITS	
					FIG. KITS	
1	PAOZZ	2540-00-255-0775	78385	G7044528	PARTS KIT, HEATER, VE PERSONNEL HEATER.....	2
					BURNER ASSEMBLY (1) 252-6	
					SCREW, MACHINE (1) 252-8	
2	PAOZZ	2540-00-255-0777	78385	G704529	PARTS KIT, HEATER, VE PERSONNEL HEATER.....	2
					SCREW, MACHINE (1) 252-8	
					VAPORIZER (1) 252-11	
					WASHER, FLAT (1) 252-9	
					WASHER, FIBER (1) 252-10	
					WASHER, FLAT (1) 252-12	
					WICK (1) 252-13	
3	PAFZZ	2990-01-065-7617	19207	12259821	MOUNT, ENGINE TO BE INSTALLED ONLY AS A SET.....	2
					CAP, ENGINE MOUNT (1) 1-14	
					MOUNT, ENGINE (1) 1-18	
4	PAFZZ	4320-01-133-4069	62983	421242L	.PARTS KIT, HYDRAULIC.....	4
					GASKET (1) 239-5	
					PACKING, PREFORMED (1) 239-4	
					PACKING, PREFORMED (1) 239-6	
					PACKING, SEAL (4) 239-8	
					PARTS KIT, ROTARYPU (2) 239-9	
					PARTS KIT, ROTARYPU (10) 239-10	
					PIN (20) 239-14	
					PLATE, INLET SUPPORT (1) 239-13	
					PLATE, OUTLET SUPPORT (1) 239-7	
					RETAINER, PACKING (1) 239-12	
					RING (1) 239-12	
					ROTOR (1) 239-11	
					SCREW (2) 239-15	
					END OF FIGURE	

0134-3/blank

FIGURE F-8. Example of kits breakdown option 2.

TM X-XXXX-XXX-XX 0116

MAINTAINER MAINTENANCE
GROUP 9501 BULK MATERIAL

(1) ITEM NO.	(2) SMR CODE	(3) NSN	(4) CAGEC	(5) PART NUMBER	(6) DESCRIPTION AND USABLE ON CODE (UOC)	(7) QTY
					GROUP 9501 BULK MATERIAL	
					FIG. BULK	
1	PAOZZ	5330-00-982-5130	81349	MILC7637TYP2	ASBESTOS SHEET, WOVE.....	1
2	XBOZZ		19207	RRC271	CHAIN, WELDLESS.....	1
3	PAOZZ	5975-00-285-0907	97030	LOOM3/8ID	CONDUIT, NONMETALIC.....	1
4	PAOZZ	9340-00-142-6860	19207	11633348	GLASS, LAMINATED.....	1
5	PAOZZ	9340-00-285-6775	19200	8635931	GLASS, LAMINATED.....	1
6	PFOZZ	4720-00-809-2429	30299	FT3548-5	HOSE, AIRDUCT.....	1
7	PAFZZ	4720-00-001-0093	81349	MIL-H-13531	NOSE, ASSEMBLY, NONMETALIC...	1
8	XBOZZ		85757	3250-0610	HOSE, NONMETALIC.....	1
9	PAFZZ	4720-00-999-8994	01276	303-8	HOSE, NONMETALIC.....	1
10	PAOZZ	4720-00-951-2433	96909	MS521301A229R	HOSE, NONMETALIC.....	1
11	PAOZZ	4720-01-009-9058	85757	3250-1010	HOSE, NONMETALIC.....	1
12	PAOZZ	4720-00-683-8830	81349	MIL-H-8788-4	HOSE, NONMETALIC.....	1
13	PAOZZ	4720-00-999-4044	11083	3R7752	HOSE, PREFORMED.....	1
14	XBOZZ		81349	MIL-I-14511	INSULATION BOARD TH.....	1
15	PAOZZ	9390-00-488-2106	19207	CPR102201	NONMETALLIC SPECIAL.....	1
16	PAOZZ	5330-00-333-0313	81348	HHP151	RUBBER SHEET SOLID.....	1
17	XBOZZ		19207	10287823-7	RUBBER STRIP.....	1
18	PAFZZ	5330-01-040-8923	19207	CPR104394	SEAL, RUBBER CHANNEL.....	1
19	PAFZZ	5330-01-082-3792	19207	CPR102235	SEAL, RUBBER SPECIAL.....	1
20	PAOZZ	5330-01-082-3793	19207	CPR102232	SEAL, RUBBER SPECIAL.....	1

0116-1

FIGURE F-9. Example of a bulk material list.

TM X-XXXX-XXX-XX 0255

(1) ITEM NO.	(2) SMR CODE	(3) NSN	(4) CAGEC	(5) PART NUMBER	(6) DESCRIPTION AND USABLE ON CODE (UOC)	(7) QTY
					GROUP 30 SPECIAL TOOLS	
					FIG. 254	
1	PEODD	6625-01-169-5333	80058	TS-3920A/ASM	TEST SET, STABILIZATION (BOI: 1 AUTH PER 15 AIRCRAFT……	1
1	PEODD	6625-01-266-1636	80058	TS-3920B/ASM	TEST SET, STABILIZATION (BOI: 1 AUTH PER 15 AIRCRAFT……	1
2	XBOZZ		80063	A3012556	WEDGE, 30/60/90 DEG. (BOI: 1 AUTH PER TEST SET……	1
3	XBOZZ		80063	A3012557	WEDGE, 05/85/90 DEG. (BOI: 1 AUTH PER TEST SET……	1
4	XBOZZ		80063	A3012558	PIN, ALIGNMENT (BOI: 1 AUTH PER TEST SET)……	1
5	XBOZZ		80063	A3012559	FIXTURE, PROTRACTOR (BOI: 1 AUTH PER TEST SET)……	1
					END OF FIGURE	

0255-2

FIGURE F-10. <u>Example of a special tools list work package.</u>

TM X-XXXX-XXX-XX 0101

MAINTAINER MAINTENANCE
NATIONAL STOCK NUMBER INDEX

STOCK NUMBER	FIG.	ITEM		STOCK NUMBER	FIG.	ITEM
5365-00-003-6807	4	4		5305-00-054-5651	9	5
5935-00-005-2826	3	1			28	5
5315-00-012-0123	65	1			90	1
5310-00-016-7216	28	12		5305-00-054-5652	52	1
5340-00-021-3495	77	20		5305-00-054-5653	28	6
	85	15		5305-00-054-6653	89	17
5310-00-027-7247	8	2		5305-00-054-6654	28	23
5310-00-030-0580	51	21		5305-00-054-6655	29	4
3110-00-034-5257	69	5			88	21
	72	5		5305-00-054-6657	29	18
	75	9		5305-00-054-6666	51	29
	77	8		5305-00-054-6669	1	10
	79	5		5305-00-054-9293	60	4
	81	10		5305-00-056-9961	9	3
	84	5			33	16
	85	3			88	35
5305-00-038-9048	45	27		5310-00-057-0573	33	8
5310-00-045-3296	77	25			52	2
	85	20			90	2
5310-00-045-4007	2	5		5310-00-058-1823	29	1
5305-00-052-6456	55	2			61	4
5310-00-054-0041	24	3		5315-00-058-6062	45	18
5305-00-054-5637	6	9		5305-00-059-3657	2	14
5305-00-054-5638	88	11		5305-00-059-3658	1	3
5305-00-054-5647	33	15		5305-00-059-3661	51	26
	51	25		5310-00-061-7326	29	19
5305-00-054-5648	10	1		5305-00-066-7327	88	37
	33	7		5305-00-066-7369	34	1
5305-00-054-5649	2	8		5365-00-067-3836	46	17
	29	13		5305-00-068-0543	45	9
	33	3		5365-00-068-8011	70	2
	51	15			80	2
	52	8		5975-00-074-2072	61	12
	89	3			88	33
5305-00-054-5650	51	3		5970-00-074-8780		

0101-1

FIGURE F-11. Example of a national stock number index work package.

TM X-XXXX-XXX-XX 0102

MAINTAINER MAINTENANCE
PART NUMBER INDEX

PART NUMBER	FIG.	ITEM		PART NUMBER	FIG.	ITEM
AN960C 10L	12	20		DM53745-25	15	16
AN960C4L	8	11			31	10
	9	44		DM53745-27	15	15
	12	24			31	9
	17	28		DM53745-28	32	1
AN960C416L	8	89		DSC7900-10-C-6	8	19
AN960C516L	8	66		EP15160	10	81
AN960C6	8	74		I/O-100-00000	21	3
	13	5			22	5
AN960C6L	27	6			23	3
AN960C616	27	22			24	2
AN960C8	8	41			25	2
	11	10			26	2
AN/960C816	17	9		JANTX1N1206A	12	1
AP373-95	8	84			14	3
AP373-96	12	15		JANTX1N4102-1	10	89
B3-14	17	12		JANTX1N4106-1	14	98
CA4342	27	23		JANTX1N4109-1	9	31
CA4440-4	16	54		JANTX1N4150-1	4	2
CD2-Z147-1	16	44			8	77
CKR05BX102M	10	7			9	4
CMR05F201JPDR	14	16			10	1
DB-3	16	65			14	2
DBM5W5P	15	17			28	1
	31	11		JANTX1N4572A-1	10	86
	32	2		JANTX1N4626-1	10	90
DBM5W5S	8	29			28	8
	31	3		JANTX1N4627	10	85
DBM50906-1	8	28		JANTX1N4627-1	14	99
	15	18		JANTX1N5419	9	1
	31	5			12	2
	32	4		JANTX1N5420	10	3
DDM50PE	10	27			14	4
DM53744-21	8	32		JANTX1N5645A	9	30
DM53744-24	31	2		JANTX1N5656A	10	87
DM53744-25	31	1		JANTX1N5806	10	2

0102-1

FIGURE F-12. Example of a part number index work package.

TM X-XXXX-XXX-XX 0102

MAINTAINER MAINTENANCE
REFERENCE DESIGNATOR INDEX

REFERENCE DESIGNATOR	FIG.	ITEM		REFERENCE DESIGNATOR	FIG.	ITEM
S1	1	15		2A1A25	70	14
W2	1	3		2A1A26	70	14
2AT1	2	309		2A1A27	70	15
2AT10	2	552		2A1A28	70	16
2AT11	2	699		2A1A29	70	18
2AT12	2	699		2A1A4	70	8
2AT13	2	479		2A1A6	70	9
2AT14	2	479		2A1A7	70	9
2AT2	2	309		2A1A8	70	10
2AT3	2	558		2A1A9	70	11
2AT4	2	564		2A1DL1	70	25
2AT5	2	705		2A1DL2	70	25
2AT5	2	479		2A1DL3	70	25
2AT6	2	494		2A1DL4	70	25
2AT7	2	675		2A1DL5	70	25
2AT8	2	624		2A1DL6	70	25
2AT9	2	552		2A1J20	71	27
2A1	2	489		2A1J25	71	36
2A1AT2	71	30		2A1J29	71	34
2A1AT3	71	33		2A1W10	71	46
2A1A1	70	6		2A1W12	71	44
2A1A10	70	6		2A1W14	70	45
2A1A11	70	12		2A1W30	70	31
2A1A13	70	13		2A1W31	70	29
2A1A14	70	14		2A1W32	70	30
2A1A15	70	14		2A1W33	70	28
2A1A16	70	15		2A1W34	70	26
2A1A17	70	16		2A1W35	70	27
2A1A18	70	13		2A1W36	70	35
2A1A19	70	14		2A10	2	590
2A1A20	70	14		2A10A1	80	2
2A1A21	70	15		2A10A10	80	2
2A1A22	70	16		2A10A11	80	3
2A1A23	70	17		2A10A13	80	4
2A1A24	70	13		2A10A14	80	2

0102-1

FIGURE F-13. Example of a reference designator index work package.

APPENDIX G
SUPPORTING INFORMATION

G.1 SCOPE.

G.1.1 Scope. This appendix establishes the technical content requirements for the preparation of supporting information for major weapon systems and their related systems, subsystems, equipment, WRAs, and SRAs. This appendix is a mandatory part of this standard. The information contained herein is intended for compliance. The requirements are applicable for all maintenance levels/classes through overhaul (depot), including DMWRs and NMWRs.

G.2 APPLICABLE DOCUMENTS.

The applicable documents in section 2 apply to this appendix.

G.3 DEFINITIONS.

The definitions in section 3 apply to this appendix.

G.4 GENERAL REQUIREMENTS.

G.4.1 General. Supporting information shall be prepared for weapon systems, major equipment, components, and applicable support and interface equipment. Supporting information requirements are included for the preparation of technical data that supplements the specific operation and maintenance information contained in the TM. This supplemental information includes reference data and general maintenance and parts information with associated illustrations.

G.4.2 Maintenance level/class applicability. Requirements contained in this appendix are applicable to all maintenance levels/classes unless specifically labeled in bold and in parentheses. The labeled requirement may specify a specific level (e.g., **Field**) (refer to 3.86) or a specific maintenance class (refer to 3.85) (e.g., **Maintainer** or **AMC**). The labeled requirement shall be applicable to all TMs containing that maintenance level/class. An explanation of applicable DA maintenance levels/classes is provided in section 3.

G.4.3 Preparation of digital data for electronic delivery. Data prepared and delivered digitally in accordance with this standard shall be XML tagged using the DTD. Data shall be formatted for presentation using stylesheets in accordance with MIL-STD-2361. Stylesheets may be prepared using XSL or other languages as specified by the acquiring activity. Where possible and when available, Army developed and provided stylesheets shall be used. (Refer to 4.6 for information on obtaining or accessing the DTD and stylesheets.) XML tags used in the DTD are noted throughout the text of this standard in bracketed, bold characters (e.g., **<macwp>**) as a convenience for the author and to ensure that the tags are used correctly when developing a document instance.

G.4.4 Use of the Document Type Definition (DTD)/stylesheet. The DTD referenced in this appendix interprets the technical content and structure for the functional requirements contained in this standard. Its use is mandatory. Development of TMs is accomplished through the use of this standard, the DTD, and the guidance contained in MIL-HDBK-1222. Where possible and when available, Army developed and provided stylesheets shall be used. For additional information on the DTD and specific stylesheets, refer to MIL-STD-2361.

G.4.5 Content structure. The examples provided herein are an accurate representation of the content structure requirements contained in this appendix and shall be followed to permit the effective use of the DTD.

G.4.6 Style and format. This standard provides style and format requirements for the technical content requirements described in this appendix. These requirements are considered mandatory and are intended for compliance.

G.4.7 Work package development. Data developed in accordance with this appendix shall be divided into work packages. These work packages should be stand alone and are broken into the following work package types: references, MAC intro, MAC, COEI/BII, AAL, expendable and durable items list, tool identification list, mandatory replacement parts list, and critical safety items. A work package shall contain all information and references required to support the work package type.

G.4.8 Safety devices and interlocks. Information shall be prepared pertaining to the purpose and location of all safety devices and interlocks in conjunction with the pertinent procedures.

G.4.9 Electrostatic Discharge (ESD) sensitive parts. If the equipment contains ESD sensitive parts, components, or circuits; cautions and ESD labels shall be incorporated into the applicable tasks and procedures to ensure ESD sensitive parts are not damaged or degraded during maintenance and operation. (Refer to 4.8.20 for requirements on labeling with ESD.) Actions which could damage ESD sensitive parts, but which are not directly related to handling or operation of ESD sensitive parts, shall not be annotated with the ESD acronym, but shall be preceded by a caution statement.

G.4.10 Nuclear hardness **<hcp>**. If the weapon system/equipment has nuclear survivability requirements (e.g., overpressure and burst, thermal radiation, electromagnetic pulse, or transient radiation effects on electronics), cautions and Hardness-Critical Process (HCP) labels shall be incorporated into the applicable tasks and procedures to ensure that the hardness of the equipment is not degraded during handling or operation. (Refer to 4.8.19 for requirements on labeling with HCP.) Actions which could degrade hardness, but which are not directly involved in establishing nuclear hardness, shall not be annotated with the acronym, but shall be preceded by a caution statement.

G.4.11 Selective application and tailoring. This standard contains some requirements that may not be applicable to the preparation of all TMs. Selective application and tailoring of requirements contained in this standard are the responsibility of the acquiring activity and shall be accomplished using APPENDIX A. The applicability of some requirements is also designated by one of the following statements: unless specified otherwise by the acquiring activity; as specified by the acquiring activity; or when specified by the acquiring activity.

G.5 **DETAILED REQUIREMENTS.**

G.5.1 Preparation of supporting information. Supporting information shall be developed as work packages. Supporting information work packages are described in G.5.2 through G.5.11. Supporting information work packages shall be placed in a single chapter called "Supporting Information." These work packages shall be placed in the TM in the order in which they are presented herein, as applicable.

G.5.2 References work package **<refwp>**. This work package shall be prepared and list all publications referenced in the TM that are required by the user to operate and/or maintain the equipment. It shall consist of a scope and a publication list(s).

G.5.2.1 Work package identification information **<wpidinfo>**. This information is required for this work package. (Refer to 4.8.9.3.)

G.5.2.2 Work package initial setup **<initial_setup>**. Initial setup is not required for this work package.

G.5.2.3 Scope **<scope>**. Information concerning the use and content of the references work package shall be prepared. (Refer to FIGURE G-1.)

G.5.2.4 Publication list **<publist>**. Individual paragraphs shall be prepared for each publication type. All related/referenced publications, with the exception of those publications that are currently unpublished, shall be listed. This list shall identify the publication by number **<name>/<extref>/<link>** and title **<title>** in alphanumeric sequence. If a publication is non-government, the source shall be given and all such publications shall be listed alphabetically by title. (Refer to FIGURE G-1.) If a LOAP exists, it may be referenced.

G.5.3 (A)Maintenance Allocation Chart **(MAC) (Maintainer/AMC only)**. The MAC shall be prepared and include an introduction work package and a MAC work package. Non-Aviation MAC preparation instructions are discussed in G.5.3.1 and Aviation MAC preparation instructions are discussed in G.5.3.2.

G.5.3.1 (A)Introduction for non-aviation Maintenance Allocation Chart (MAC) work package **<macintrowp>**.

G.5.3.1.1 (A)Work package identification information **<wpidinfo>**. This information is required for this work package. (Refer 4.8.9.3.)

G.5.3.1.2 (A)Work package initial setup **<initial_setup>**. Initial setup is not required for this work package.

G.5.3.1.3 (A) Introduction **<intro>**. The following text shall be prepared and included verbatim. (Refer to FIGURE G-2.)

"INTRODUCTION

The Army Maintenance System MAC

This introduction provides a general explanation of the maintenance and repair functions.

The MAC (immediately following this introduction) designates overall authority and responsibility for the performance of maintenance tasks on the identified end item or component. The application of the maintenance tasks to the end item or component shall be consistent with the capacities and capabilities of the designated maintenance levels/classes, which are shown in the MAC in column (4). Column (4) is divided into two secondary columns. These columns indicate the maintenance levels/classes of 'Field' and 'Sustainment'. Each maintenance level column is further divided into two sub-columns. These sub-columns identify the maintenance classes and are as follows:

1. Field level maintenance classes:
    a. Crew (operator) maintenance. This is the responsibility of a using organization to perform maintenance on its assigned equipment. It normally consists of inspecting, servicing, lubricating, adjusting, and replacing parts, minor assemblies, and subassemblies. Items with a “C” (“O” for joint service reporting) in the third position of the Source, Maintenance, and Recoverability (SMR) code may be replaced at the crew(operator) class. A code of “C” (“O” for joint service) in the fourth position of the SMR code indicates complete repair is authorized at the crew (operator) class.
    b. Maintainer maintenance. This is maintenance accomplished on a component, accessory, assembly, subassembly, plug-in unit, or other portion by field level units. This maintenance is performed either on the system or after it is removed. An “F” in the third position of the SMR code indicates replacement of assemblies, subassemblies, or other components is authorized at this level. An “F” in the fourth position of the SMR code indicates complete repair of the identified item is allowed at the Maintainer class. Items repaired at this level are normally returned to the user after maintenance is performed.
2. Sustainment level maintenance classes:
    a. Below depot sustainment. This is maintenance accomplished on a component, accessory, assembly, subassembly, plug-in unit, or other portion either on the system or after it is removed. The item subject to maintenance has normally been forwarded to a maintenance facility away from the field level supporting units. An “H” in the third position of the SMR code indicates replacement of assemblies, subassemblies, or other components is authorized at this class. An "H" appearing in the fourth position of the SMR code indicates complete repair is possible at this class. Items are normally returned to the supply system after maintenance is performed at this class.
    b. Depot. This is maintenance accomplished on a component, accessory, assembly, subassembly, plug-in unit, or other portion either on the system or after it is removed. Assets to be repaired at this class are normally returned to an Army Depot or authorized contractor facility. The replace function for this class of maintenance is indicated by the letter "D" or "K" appearing in the third position of the SMR code. A "D" or "K" appearing in the fourth position of the SMR code indicates complete repair is possible at the depot sustainment maintenance level. Items are returned to the supply system after maintenance is performed at this class.

The tools and test equipment requirements table (immediately following the MAC) lists the tools and test equipment (both special tools and common tool sets) required for each maintenance task as referenced from the MAC.

The remarks table (immediately following the tools and test equipment requirements) contains supplemental instructions and explanatory notes for a particular maintenance task.

Maintenance functions (tasks)

Maintenance functions are limited to and defined as follows:

1. Inspect. A function to determine the serviceability of an item by comparing its physical, mechanical, and/or electrical characteristics with established standards through examination (e.g., by sight, sound, or feel).
2. Test. To verify serviceability by measuring the mechanical, pneumatic, hydraulic, or electrical characteristics of an item and comparing those characteristics with prescribed standards, e.g., load testing of lift devices or hydrostatic testing of pressure hoses.
3. Service. Operations required periodically to keep an item in proper operating condition such as replenishing fuel, lubricants, chemical fluids, or gases.
4. Adjust. To maintain or regulate, within prescribed limits, by bringing into proper position, or by setting the operating characteristics to specified parameters.
5. Align. To adjust specified variable elements of an item to bring about optimum or desired performance.
6. Calibrate. To determine and cause corrections to be made or to be adjusted on instruments of test, measuring, and diagnostic equipment used in precision measurement. It consists of comparisons of two instruments, one of which is a certified standard of known accuracy, to detect and adjust any discrepancy in the accuracy of the instrument being compared.
7. Remove. The act of taking a component off an asset to facilitate other maintenance on a different component or on the same component (except for replace and repair.)
8. Install. The act of placing, positioning, or otherwise locating a component to make it part of a higher level end item. The install task is authorized by the LMI/MAC and the assigned maintenance level is shown as the third position code of the SMR code.
9. Replace. The act of taking off an unserviceable component and putting a serviceable component in its place. The replace task is authorized by the LMI/MAC and the assigned maintenance level is shown as the third position code of the SMR code.
10. Repair. The act of restoring an item to a completely serviceable or fully mission capable status. The repair task is authorized by the LMI/MAC and the assigned maintenance level is shown as the fourth position code of the SMR code.
11. Paint. This is a function to prepare and apply coats of paint. When used with munitions, the paint is applied so the ammunition can be identified and protected.

NOTE

The following definitions are applicable to the "repair" maintenance task:

Fault location/troubleshooting. The process of investigating and detecting the cause of equipment malfunctioning; the act of isolating a fault within a system or Unit Under Test (UUT).

Actions. Welding, grinding, riveting, straightening, facing, machining, and/or resurfacing.

12. Overhaul. This is the maintenance effort (service/action) prescribed to restore an item to a completely serviceable/operational condition as required by maintenance standards in the appropriate technical publications. Overhaul is normally the highest degree of maintenance performed by the Army. Overhaul does not normally return an item to a like new condition.

13. Rebuild. This consists of those services/actions necessary for the restoration of unserviceable equipment to a like new condition in accordance with original manufacturing standards. Rebuild is the highest degree of materiel maintenance applied to Army equipment. The rebuild operation includes the act of returning to zero those age measurements (e.g., hours/miles) considered in classifying Army equipment/components.

14. Lubricate. The act of applying a material (e.g., oil or grease) to reduce friction and allow a component to operate in a more efficient manner.

15. Mark. The process of restoring obliterated identification on an asset.

16. Pack. To place an item into a container for either storage or shipment after service and other maintenance operations have been completed.

17. Unpack. The act or removing an asset from a storage or shipping container in preparation to perform further maintenance (e.g., repair or install).

18. Preserve. The action required to treat systems and equipment whether installed or stored, to ensure a serviceable condition.

19. Prepare for use. Those steps required to make an asset ready for other maintenance (e.g., remove preservatives, lubricate, etc.).

20. Assemble. The step-by-step instructions to join the component pieces of an asset together to make a complete serviceable asset.

21. Disassemble. The step-by-step breakdown (taking apart) of a spare/functional group coded item to the level of its least component, that is assigned an SMR code for the level of maintenance under consideration (i.e., identified as maintenance significant).

22. Clean. Step-by-step instructions on how to remove dirt, corrosion or other contaminants from equipment. Refer to appropriate painting, lubrication, and preservation methods to restore original corrosion prevention and control methods when removed as a result of cleaning and/or when using cleaning to remove corrosion from the item.
23. Non destructive inspection. Step-by-step instructions on preparation and accomplishment inspections which do not destroy or damage the equipment.
24. Radio interference suppression. Step-by-step instructions to ensure installed equipment, either communication or other electronics, does not interfere with installed communication equipment.
25. Place in service. Step-by-step instructions required to place an item into service that are not covered in the service upon receipt work package.
26. Towing. The step-by-step instructions to connect one vehicle to another for the purpose of having one vehicle moved through the motive power of the other vehicle.
27. Jacking. The step-by-step instructions to mechanically raise or lift a vehicle to facilitate maintenance on the vehicle.
28. Parking. Step-by-step instructions to safely place a vehicle in a lot, ramp area or other designated location.
29. Mooring. Step-by-step instructions to secure a vehicle by chains, ropes or other means to protect the vehicle from environmental conditions or secure for transportation.
30. Covering. Step-by-step instructions to place a protective wrapping over a vehicle to protect it from environmental conditions or to hide (e.g., camouflage) it.
31. Hoisting. Step-by-step instructions to allow a vehicle to be raised by cables or ropes through attaching points.
32. Sling loading. Step-by-step instructions to place a sling around a vehicle to allow it to be raised.
33. External power. Step-by-step instructions on how to apply electrical power from any authorized power source (e.g., external generator or facility power).
34. Preparation for storage or shipment. Step-by-step instructions for preparing the equipment for placement into administrative storage or for special transportation requirements.
35. Arm. Detailed instructions on activating munitions prior to use.
36. Load. This may be one of two tasks:
    a. For transportation, the act of placing assets onto a transportation medium (e.g., pallet, truck, container).

b. For weapons/weapons systems, the act of placing munitions into the weapon/weapons system.

37. Unload. This may be one of two tasks:

a. For transportation, the act of removing assets from a transportation medium (e.g., pallet, truck, container).

b. For weapons/weapons systems, the act of removing munitions from the weapon/weapons system.

38. Software maintenance. Step-by-step instructions for software maintenance (e.g., installing, un-installing, etc.).

Explanation of Columns in the MAC

Column (1) Group Number. Column (1) lists Functional Group Code (FGC) numbers, the purpose of which is to identify maintenance significant components, assemblies, subassemblies, and modules with the Next Higher Assembly (NHA).

Column (2) Component/Assembly. Column (2) contains the item names of components, assemblies, subassemblies, and modules for which maintenance is authorized.

Column (3) Maintenance Function. Column (3) lists the functions to be performed on the item listed in column (2). (For a detailed explanation of these functions, refer to maintenance functions (tasks) outlined previously.)

Column (4) Maintenance Level. Column (4) specifies each level/class of maintenance authorized to perform each function listed in column (3), by indicating work time required in the appropriate sub-column. This work time figure represents the active time required to perform that maintenance task at the indicated level/class of maintenance. If the number or complexity of the tasks within the listed maintenance task varies at different maintenance classes, appropriate work time figures are to be shown for each class.

The work time figure represents the average time required to perform the prescribed task (assembly, subassembly, component, module, end item, or system) on the item under typical operating conditions for that maintenance level/class. This time includes preparation time (including any necessary disassembly/assembly time), troubleshooting/fault location time, and quality assurance time in addition to the time required to perform the specific tasks identified for the maintenance tasks authorized in the MAC. The symbol designations for the various maintenance levels/classes and classes are as follows:

Field:

C Crew maintenance

F Maintainer maintenance

Sustainment:

L Specialized Repair Activity (SRA)

H Below depot maintenance

D Depot maintenance

NOTE

The "L" maintenance class is not included in column (4) of the MAC. Functions to this class of maintenance are identified by work time figure in the "H" column of column (4), and an associated reference code is used in the REMARKS column (6). This code is keyed to the remarks and the SRA complete repair application is explained there.

Column (5) Tools and Equipment Reference Code. Column (5) specifies, by a number code, those common tool sets (not individual tools), common Test, Measurement and Diagnostic Equipment (TMDE), and special tools, special TMDE and special support equipment required to perform the designated function. Codes are keyed to the entries in the tools and test equipment table.

Column (6) Remarks Code. When applicable, this Column (6) contains a letter code, in alphabetical order, which is keyed to the remarks table entries.

Explanation of Columns in the Tools and Test Equipment Requirements

Column (1) Tool or Test Equipment Reference Code. The tool or test equipment reference code correlates with a code used in column (5) of the MAC.

Column (2) Maintenance Level. The lowest class of maintenance authorized to use the tool or test equipment.

Column (3) Nomenclature. Name or identification of the tool or test equipment.

Column (4) National Stock Number (NSN). The NSN of the tool or test equipment.

Column (5) Tool Number. The manufacturer's part number.

Explanation of Columns in the Remarks

Column (1) Remarks Code. The code recorded in column (6) of the MAC.

Column (2) Remarks. This column lists information pertinent to the maintenance task being performed as indicated in the MAC."

G.5.3.2 (A) Introduction for aviation Maintenance Allocation Chart (MAC) work package **<macintrowp>**.

G.5.3.2.1 (A) Work package identification information **<wpidinfo>**. This information is required for this work package. (Refer to 4.8.9.3)

G.5.3.2.2 (A) Work package initial setup **<initial_setup>**. Initial setup is not required for this work package.

G.5.3.2.3 (A) Introduction **<intro>**. The following text shall be prepared and included verbatim. (Refer to FIGURE G-3.)

"INTRODUCTION

Aviation Maintenance Allocation Chart

The MAC (immediately following the introduction) designates overall authority and responsibility for the performance of maintenance tasks on the identified end item or component. The application of the maintenance tasks to the end item or component shall be consistent with the capacities and capabilities of the designated maintenance level which are shown on the MAC as:

Field - includes two columns:

"O" which corresponds to Aviation Maintenance Company (AMC) and

"F" which corresponds to Aviation Support Battalion (ASB)

Sustainment - includes two columns:

"L" which corresponds to Theater Aviation Sustainment Maintenance Group (TASMG) and other organizations that have National Maintenance Program certification and

"D" which corresponds to Depot

The maintenance to be performed is described as follows:

1. Field maintenance activities:
   (1) Aviation Maintenance Company (AMC). The aviation maintenance company is the lowest class of aviation field maintenance. The AMC provides direct support to aircraft operations, performing functions of aircraft servicing (daily, preflight, post-flight inspections, refuel, arming), Battle Damage Assessment and Repair (BDAR), and repair or replacement actions as specified in the MAC.
   (2) Aviation Support Company (ASC) in the Aviation Support Battalion (ASB). The ASB performs the following types of maintenance:
      (1) Off equipment repair of LRUs or other components within the limits prescribed in the MAC.
      (2) Inspections beyond the capability of the AMC.
      (3) BDAR as required.
      (4) Provide support to AMC personnel during peak workload periods as determined by local policy.
2. Sustainment maintenance:
   a. Theater Aviation Sustainment Maintenance Group (TASMG) (deployed). The AVCRAD/TASMG performs the following:
      (1) Provides support to CONUS deploying forces
      (2) Provides support to OCONUS deployed forces (as the Theater Aviation Support Maintenance Group (TASMG).
      (3) Expands aviation maintenance capabilities of CONUS depots
      (4) Classifies and inspects aviation stocks and components.
      (5) Performs maintenance actions beyond the scope of the AMC or ASB within the limits prescribed in the MAC.
      (6) Augments ASB and AMC maintenance tasks.
   b. Depot. This is maintenance accomplished on a component, accessory, assembly, subassembly, plug-in unit, or other portion either on the system or after it is removed. Assets to be repaired at this class are normally returned to an Army Depot or authorized contractor facility. The replace function for this class of maintenance is indicated by the letter "D" or "K" appearing in the third position of the Source, Maintenance, and Recoverability (SMR) code. A "D" or "K" appearing in the fourth position of the SMR code indicates complete repair is

possible at the depot sustainment maintenance level. Items are returned to the supply system after maintenance is performed at this level/class.

Use of the MAC

NOTE

Approved item names are used throughout this MAC. Generic terms/ nomenclature (if any) are expressed in parentheses and are not to be considered as official terminology.

The MAC assigns maintenance tasks to the lowest level/class of maintenance.

Maintenance functions (tasks)

Maintenance functions are limited to and defined as follows:

1. Inspect. A function to determine the serviceability of an item by comparing its physical, mechanical, and/or electrical characteristics with established standards through examination (e.g., by sight, sound, or feel).
2. Test. To verify serviceability by measuring the mechanical, pneumatic, hydraulic, or electrical characteristics of an item and comparing those characteristics with prescribed standards, e.g., load testing of lift devices or hydrostatic testing of pressure hoses.
3. Service. Operations required periodically to keep an item in proper operating condition such as replenishing fuel, lubricants, chemical fluids, or gases.
4. Adjust. To maintain or regulate, within prescribed limits, by bringing into proper position, or by setting the operating characteristics to specified parameters.
5. Align. To adjust specified variable elements of an item to bring about optimum or desired performance.
6. Calibrate. To determine and cause corrections to be made or to be adjusted on instruments of test, measuring, and diagnostic equipment used in precision measurement. It consists of comparisons of two instruments, one of which is a certified standard of known accuracy, to detect and adjust any discrepancy in the accuracy of the instrument being compared.
7. Remove. The act of taking a component off an asset to facilitate other maintenance on a different component or on the same component (except for replace and repair.)
8. Install. The act of placing, positioning, or otherwise locating a component to make it part of a higher level end item. The install task is authorized by the LMI/MAC and the assigned maintenance level is shown as the third position code of the SMR code
9. Replace. The act of taking off an unserviceable component and putting a serviceable component in its place. The replace task is authorized by the LMI/MAC and the assigned maintenance level is shown as the fourth position code of the SMR code.
10. Repair. The application of maintenance actions, including fault location/troubleshooting, removal, installation, disassembly, assembly, or other maintenance actions to restore serviceability to an item by correcting specific damage, fault, malfunction, or failure in the item.

11. Paint. This is a function to prepare and apply coats of paint. When used with munitions, the paint is applied so the ammunition can be identified and protected.

NOTE

The following definitions are applicable to the "repair" maintenance task:

Fault location/troubleshooting. The process of investigating and detecting the cause of equipment malfunctioning; the act of isolating a fault within a system or Unit Under Test (UUT).

Actions. Welding, grinding, riveting, straightening, facing, machining, and/or resurfacing.

12. Overhaul. This is the maintenance effort (service/action) prescribed to restore an item to a completely serviceable/operational condition as required by maintenance standards in the appropriate technical publications. Overhaul is normally the highest degree of maintenance performed by the Army. Overhaul does not normally return an item to a like new condition.

13. Rebuild. This consists of those services/actions necessary for the restoration of unserviceable equipment to a like new condition in accordance with original manufacturing standards. Rebuild is the highest degree of materiel maintenance applied to Army equipment. The rebuild operation includes the act of returning to zero those age measurements (e.g., hours/miles) considered in classifying Army equipment/components.

14. Lubricate. The act of applying a material (e.g., oil or grease) to reduce friction and allow a component to operate in a more efficient manner.

15. Mark. The process of restoring obliterated identification on an asset.

16. Pack. To place an item into a container for either storage or shipment after service and other maintenance operations have been completed.

17. Unpack. The act or removing an asset from a storage or shipping container in preparation to perform further maintenance (e.g., repair or install).

18. Preserve. The action required to treat systems and equipment whether installed or stored, to ensure a serviceable condition.

19. Prepare for use. Those steps required to make an asset ready for other maintenance (e.g., remove preservatives, lubricate, etc).

20. Assemble. The step-by-step instructions to join the component pieces of an asset together to make a complete serviceable asset.

21. Disassemble. The step-by-step breakdown (taking apart) of a spare/functional group coded item to the level of its least component, that is assigned an SMR code for the level of maintenance under consideration (i.e., identified as maintenance significant)

22. Clean. Step-by-step instructions on how to remove dirt, corrosion or other contaminants from equipment. Refer to appropriate painting, lubrication, and preservation methods to restore original corrosion prevention and control methods when removed as a result of cleaning and/or when using cleaning to remove corrosion from the item.
23. Non destructive inspection. Step-by-step instructions on preparation and accomplishment of inspections which do not destroy or damage the equipment.
24. Radio interference suppression. Step-by-step instructions to ensure installed equipment, either communication or other electronics, does not interfere with installed communication equipment.
25. Place in service. Step-by-step instructions required to place an item into service that are not covered in the service upon receipt work package.
26. Towing. The step-by-step instructions to connect one vehicle to another for the purpose of having one vehicle moved through the motive power of the other vehicle.
27. Jacking. The step-by-step instructions to mechanically raise or lift a vehicle to facilitate maintenance on the vehicle.
28. Parking. Step-by-step instructions to safely place a vehicle in a lot, ramp area or other designated location.
29. Mooring. Step-by-step instructions to secure a vehicle by chains, ropes or other means to protect the vehicle from environmental conditions or secure for transportation.
30. Covering. Step-by-step instructions to place a protective wrapping over a vehicle to protect it from environmental conditions or to hide (e.g., camouflage) it.
31. Hoisting. Step-by-step instructions to allow a vehicle to be raised by cables or ropes through attaching points.
32. Sling loading. Step-by-step instructions to place a sling around a vehicle to allow it to be raised.
33. External power. Step-by-step instructions on how to apply electrical power from any authorized power source (e.g., external generator or facility power).
34. Preparation for storage or shipment. Those procedures necessary to prepare an item to be stored for an extended period or shipped.
35. Arm. Detailed instructions on activating munitions prior to use.
36. Load. This may be one of two tasks:
    a. For transportation, the act of placing assets onto a transportation medium (e.g., pallet, truck, container).
    b. For weapons/weapon systems, the act of placing munitions into the weapon/weapon system.

37. Unload. This may be one of two tasks:

    a. For transportation, the act of removing assets from a transportation medium (e.g., pallet, truck, container).

    b. For weapons/weapon systems, the act of removing munitions from the weapon/weapon system.

38. Software maintenance. Step-by-step instructions for software maintenance (e.g., installing, un-installing, etc.).

Explanation of Columns in the MAC

Column (1) Group Number. Column (1) lists Functional Group Code (FGC) numbers, the purpose of which is to identify maintenance significant components, assemblies, subassemblies, and modules with the Next Higher Assembly (NHA).

Column (2) Component/Assembly. Column (2) contains the item names of components, assemblies, subassemblies, and modules for which maintenance is authorized.

Column (3) Maintenance Function. Column (3) lists the functions to be performed on the item listed in column (2). (For a detailed explanation of these functions, refer to maintenance functions (tasks) outlined above.)

Column (4) Maintenance Level. Column (4) specifies each level/class of maintenance authorized to perform each function listed in column (3), by indicating work time required in the appropriate sub-column. This work time figure represents the active time required to perform that maintenance task at the indicated level of maintenance. If the number or complexity of the tasks within the listed maintenance task varies at different maintenance levels/classes, appropriate work time figures are to be shown for each level/class.

The man-hours represents the average time required to perform the prescribed task (assembly, subassembly, component, module, end item, or system) on the item under typical operating conditions for that maintenance level. This time includes preparation time (including any necessary disassembly/assembly time), troubleshooting/fault location time, and quality assurance time in addition to the time required to perform the specific tasks identified for the maintenance tasks authorized in the MAC. The symbol designations for the maintenance levels/classes are as follows:

<u>Field:</u>

O Aviation Maintenance Company

F Aviation Support Battalion

<u>Sustainment:</u>

L Theater Aviation Support Maintenance Group

D Depot

Column (5) Tools and Equipment Reference Code. Column (5) specifies, by a number code, those common tool sets (not individual tools), common TMDE, and special tools, special TMDE, and special support equipment required to perform the designated function.

Column (6) Remarks Code. When applicable, Column (6) contains a letter code, in alphabetical order, which is keyed to the remarks.

Explanation of Entries in the Tools and Test Equipment Requirements

Column (1) Tool or Test Equipment Reference Code. The tool or test equipment reference code correlates with a code used in column (5) of the MAC.

Column (2) Maintenance Level. The lowest level/class of maintenance authorized to use the tool or test equipment.

Column (3) Nomenclature. Name or identification of the tool or test equipment.

Column (4) National Stock Number (NSN). The NSN of the tool or test equipment.

Column (5) Tool Number. The manufacturer's part number.

Explanation of Entries in the Remarks

Column (1) Remarks Code. The code recorded in remarks code column of the MAC.

Column (2) Remarks. This column lists information pertinent to the maintenance task being performed as indicated in the MAC."

G.5.3.3 (A) Maintenance Allocation Chart (MAC) work package **<macwp>**. This work package shall be prepared in Functional Group Code (FGC) sequence to consolidate and identify those groups on the list that involve identified maintenance tasks. The MAC shall be prepared according to the approved source data provided by the acquiring activity. Every entry in the MAC shall be contained in a maintenance work package. The times for setup, follow-on maintenance procedures, and general maintenance procedures shall be included in the times for the tasks that refer to them (e.g., a repair task that requires follow-on maintenance would include the time for the follow-on maintenance in the time for the repair.

G.5.3.3.1 (A) Work package identification information **<wpidinfo>**. Work package identification information is required for this work package. (Refer to 4.8.9.3.)

G.5.3.3.2 (A) Work package initial setup **<initial_setup>**. Initial setup is not required for this work package.

G.5.3.3.3 (A) Maintenance Allocation Chart (MAC) entries.

a. The basic entries in the MAC shall be a list of functional groups applicable to the end item which requires maintenance. The term functional group applies to reparable assemblies and subassemblies; e.g., spares, but not to repair parts. The end item group shall be numbered “00,” or its equivalent “AA.” The functional group codes shall not exceed 11 characters in length and shall match those used in the RPSTL.
b. Entries shall be item names (a basic name and a noun or phrase modifier; e.g., transformer, pulse, low power) and, where applicable, type designators, without stock or part numbers (P/Ns) if possible, in order to minimize need for subsequent change; however, entries shall contain positive identification. Parts that are not subject to maintenance shall not be listed in the MAC.
c. All item names of MAC functional groups shall be the official nomenclature. (Refer to 4.8.25.2.) Reverse word order shall be used in the MAC.

d. The maintenance code entered in the third position of the SMR code in the RPSTL shall be used to identify the lowest category of maintenance that is authorized to remove, replace, and use the spare or repair part. SMR codes are further defined in APPENDIX F.

e. If the maintenance task is a replace function only for a repair part, the repair part shall not be listed in the MAC, unless not listing the repair part would result in omission of the Next Higher Assembly (NHA) group number; in which case, the part shall be listed in order to list the NHA functional group number.

f. All items in the MAC shall specify the maintenance class(es) to which a function is authorized.

g. Exception is authorized to ammunition MACs to permit use of maintenance task headings that better describe or identify ammunition peculiar maintenance tasks. The headings used and their definitions shall be included in the appropriate ammunition TM(s).

h. The MAC shall be updated during change/revision cycle to reflect and changes made to maintenance tasks in that change/revision such as adding new tasks, deleting tasks, or changing times.

G.5.3.3.4 (A) Maintenance Allocation Chart (MAC) format. The non-aviation MAC **<mac> (standard information per paragraph 4.8.13.7)** and aviation MAC **<avmac> (standard information per paragraph 4.8.13.7)** shall be prepared in the formats shown in FIGURE G-4 (non-aviation), FIGURE G-5 (joint service non-aviation), and FIGURE G-6 (aviation) and as follows:

a. For an explanation of data to be listed in columns of the MAC, refer to the introduction information presented in G.5.3.1 or G.5.3.2 as applicable.

b. The group number **<groupno>** shall be entered in column 1, the nomenclature of the spare (component/assembly) **<compassem>** shall be entered in column 2, and the maintenance task **<maintfunc>** shall be listed in column 3 of the MAC.

c. The maintenance level entry shall be as follows:

(1) Column 4 of the non-aviation MAC shall be divided into two main headings, one for field and one for sustainment. Beneath the main headings, there shall be four subheadings **<maintclass-2lvl>.** Crew **<c>** and maintainer **<f>** shall be under field and below depot **<h>** and depot **<d>** shall be under sustainment. For joint service manuals, an asterisk shall be placed next to the "C" and the following note shall follow the table to explain the asterisk:

"*NOTE

This is a joint service manual. While Army uses a "C," other service may use an "O" in this column."

(2) Column 4 of the aviation MAC shall be divided into two main headings, one for field and one for sustainment. Beneath the main headings, there shall be four subheadings **<avmaintclass-2lvl>.** Aviation maintenance company **<o>** and aviation support battalion **<f>** shall be under field and theater aviation sustainment maintenance group **<l>** and depot **<d>** shall be under sustainment.

d. A work time figure must appear in the subcolumn for the maintenance level authorized to perform the maintenance listed in column 3.

e. Reference numbers for all required tools and test equipment **<terefs>** shall be listed in column 5 of the MAC. These reference numbers shall correspond to the appropriate tools/test equipment listed in the tools and test equipment table.

f. Reference letters for applicable remarks **<remarkrefs>** shall be listed in column 6 of the MAC. These reference letters shall correspond to the appropriate remarks listed in the remarks table.

G.5.3.4 (A) Tools and test equipment requirements **<tereqtab>**. A tabular list **(standard information per paragraph 4.8.13.7)** of all tools and test equipment, both special and common, required to maintain the equipment shall be prepared in accordance with the format shown in FIGURE G-7 or FIGURE G-8, as applicable. Common tools shall not be included on this list when they are part of an existing set, kit, or outfit authorized to the intended user; however, the authorized set, kit, or outfit that contains the prescribed common tools shall be listed.

G.5.3.5 (A) Remarks **<remarktab>**. Remarks **(standard information per paragraph 4.8.13.7)** pertinent to maintenance tasks shall be prepared in accordance with the format shown in FIGURE G-7 or FIGURE G-8, as applicable.

G.5.4 Components of End Item (COEI)/Basic Issue Items (BII) or Supply System Responsibility (SSR) lists work package (**crew (operator) only**) **<coeibiiwp>**. Army only manuals and multi-service manuals shall use term COEI/BII. For Marine Corps only manuals, use the term "Supply System Responsibility (SSR)" in place of COEI/BII for this work package. This work package shall be prepared as an inventory for the equipment to ensure safe and efficient operation. The format of the COEI and BII shall be based on the number of items and usability. When only a few items are listed, the illustrations shall be placed above the tabular listing (Method A). When using method A for a larger number of items, the table may be broken into several smaller tables for usability. When numerous items are listed, the illustrations may be included within the tabular listing for better usability (Method B). The data described in G.5.4.1 through G.5.4.5 shall be prepared.

G.5.4.1 Work package identification information **<wpidinfo>**. Work package identification information is required for this work package. (Refer to 4.8.9.3.)

G.5.4.2 Work package initial setup **<initial_setup>**. Initial setup is not required for this work package.

G.5.4.3 Introductions for COEI/BII lists and SSR lists work package **<intro>**. As applicable, the following introductions shall be prepared and included verbatim.

G.5.4.3.1 (A) Introduction for COEI/BII. Include the following introduction verbatim (refer to FIGURE G-9 for example). If the COEI/BII list is long and there are multiple UOCs, additional information may be provided in the UOC portion of the introduction.

"COMPONENTS OF END ITEM (COEI) AND BASIC ISSUE ITEMS (BII) LISTS

INTRODUCTION

Scope

This work package lists COEI and BII for the (*insert the short end item name*) to help you inventory items for safe and efficient operation of the equipment.

General

The COEI and BII information is divided into the following lists:

Components of End Item (COEI). This list is for information purposes only and is not authority to requisition replacements. These items are part of the (*enter name of end item*). As part of the end item, these items must be with the end item whenever it is issued or transferred between property accounts. Items of COEI are removed and separately packaged for transportation or shipment only when necessary. Illustrations are furnished to help you find and identify the items.

Basic Issue Items (BII). These essential items are required to place the (*enter name of end item*) in operation, operate it, and to do emergency repairs. Although shipped separately packaged, BII must be with the (*enter name of end item*) during operation and when it is transferred between property accounts. Listing these items is your authority to request/requisition them for replacement based on authorization of the end item by the Table of Organization and Equipment/Modified Table of Organization and Equipment (TOE/MTOE). Illustrations are furnished to help you find and identify the items.

Explanation of Columns in the COEI List and BII List

Select method A text.

"Column (1) Illus Number. Gives you the number of the item illustrated.

Column (2) National Stock Number (NSN). Identifies the stock number of the item to be used for requisitioning purposes.

Column (3) Description, Part Number/Commercial and Government Entity Code (CAGEC). Identifies the Federal item name (in all capital letters) followed by a minimum description when needed. The stowage location of COEI and BII is also included in this column. The last line below the description is the CAGEC (in parentheses) and the part number.

Column (4) Usable On Code. When applicable, gives you a code if the item you need is not the same for different models of equipment. (*Add the following only as applicable. Replace Xs with appropriate codes and model numbers.*) These codes are identified below:

Code	Used on
XXX	*Model XXX*
XXX	*Model XXXX*
XXX	*Model XXXXX*

Add if applicable: Model XXX uses COEI items (insert item numbers) and BII items (insert item numbers), Model XXXX use COEI items(insert item numbers) and BII items (insert item numbers), and Model XXXXX use COEI items(insert item numbers) and BII items (insert item numbers).

Column (5) U/I. Unit of Issue (U/I) indicates the physical measurement or count of the item as issued per the National Stock Number shown in column (2).

Column (6) Qty Rqr. Indicates the quantity required."

OR

Select method B text.

"Column (1) Item Number. Gives you the reference number of the item listed.

Column (2) National Stock Number (NSN) and Illustration. Identifies the stock number of the item to be used for requisitioning purposes and provides an illustration of the item.

Column (3) Description, Part Number/(CAGEC). Identifies the Federal item name (in all capital letters) followed by a minimum description when needed. The stowage location of COEI and BII is also included in this column. The last line below the description is the CAGEC (Commercial and Government Entity Code) (in parentheses) and the part number.

Column (4) Usable On Code. When applicable, gives you a code if the item you need is not the same for different models of equipment. (*Add the following only as applicable. Replace Xs with appropriate codes and model numbers.*) These codes are identified below:

Code	**Used on**
XXX	*Model XXX*
XXX	*Model XXXX*
XXX	*Model XXXXX*

Add if applicable: Model XXX uses COEI items (insert item numbers) and BII items (insert item numbers), Model XXXX use COEI items(insert item numbers) and BII items (insert item numbers), and Model XXXXX use COEI items(insert item numbers) and BII items (insert item numbers).

Column (5) U/I. Unit of Issue (U/I) indicates the physical measurement or count of the item as issued per the National Stock Number shown in column (2).

Column (6) Qty Rqr. Indicates the quantity required."

G.5.4.3.2 (MC) Introduction for SSR. Include the following introduction verbatim for SSR. If the SSR list is long and there are multiple UOCs, additional information may be provided in the UOC portion of the introduction

"SUPPLY SYSTEM RESPONSIBILITY (SSR) LIST
INTRODUCTION

Scope

This work package lists SSR for the (*insert the short end item name*) to help you inventory items for safe and efficient operation of the equipment.

General

Suply System Responsibility. This list is for information purposes only and is not authority to requisition replacements. These items are part of the (*enter name of end item*). As part of the end item, these items must be with the end item whenever it is issued or transferred between property accounts. Illustrations are furnished to help you find and identify the items.

Explanation of Entries in the SSR List

Select method A text

Illus Number. Gives you the number of the item illustrated.

National Stock Number (NSN). Identifies the stock number of the item to be used for requisitioning purposes.

Description, Part Number/Commercial and Government Entity Code (CAGEC). Identifies the Federal item name (in all capital letters) followed by a minimum description when needed. The stowage location of SSR is also included in this entry. The last line below the description is the CAGEC (in parentheses) and the part number.

Usable On Code. When applicable, gives you a code if the item you need is not the same for different models of equipment. (*Add the following only as applicable. Replace Xs with appropriate codes and model numbers.*) These codes are identified below:

Code	Used on
XXX	*Model XXX*
XXX	*Model XXXX*
XXX	*Model XXXXX*

Add if applicable: Model XXX uses SSR items (insert items numbers), Model XXXX uses SSR items (insert item numbers), and Model XXXXX uses SSR items (insert item numbers).

U/I. Unit of Issue (U/I) indicates the physical measurement or count of the item as issued per the National Stock Number entry.

Qty Rqr. Indicates the quantity required."

OR

Select method B text.

"Item Number. Gives you the reference number of the item listed.

National Stock Number and Illustration. Identifies the stock number of the item to be used for requisitioning purposes and provides an illustration of the item.

Description, Part Number/ Commercial and Government Entity Code (CAGEC). Identifies the Federal item name (in all capital letters) followed by a minimum description when needed. The stowage location of SSR is also included in this entry. The last line below the description is the CAGEC (in parentheses) and the part number.

Usable On Code. When applicable, gives you a code if the item you need is not the same for different models of equipment. (*Add the following only as applicable. Replace Xs with appropriate codes and model numbers.*) These codes are identified below:

Code	**Used on**
XXX	*Model XXX*
XXX	*Model XXXX*
XXX	*Model XXXXX*

Add if applicable: Model XXX uses SSR items (insert items numbers), Model XXXX uses SSR items (insert item numbers), and Model XXXXX uses SSR items (insert item numbers.

U/I. Unit of Issue (U/I) indicates the physical measurement or count of the item as issued per the National Stock Number entry.

Qty Rqr. Indicates the quantity required."

G.5.4.4 COEI/SSR list **<coei>**. This list shall be prepared as an illustrated tabular list of COEI/SSR items. The illustrations shall be placed above the list (Method A) or within the list (Method B). The arrangement of the illustrations and list shall be as shown shown in FIGURE G-10 (Method A) or FIGURE G-11 (Method B). For method B, illustrations shall be placed in the national stock number column.

G.5.4.4.1 List **<coeitab>**. The COEI/SSR list **(standard information per paragraph 4.8.13.7)** shall include the headings and basic content shown in FIGURE G-10 or FIGURE G-11, applicable to the specific equipment. The description **<dcpno>** of each item shall consist of the approved Federal item name **<name>**, followed by a short description **<desc>** when needed. The part number **<partno>** shall be located below the item. The CAGEC **<cageno>** shall follow the part number and in parentheses. The stowage location of COEI/SSR shall also be included in the description column. When more than one model or configuration is applicable and Usable On Codes (UOCs) **<uoc>** are assigned, the UOC shall appear in a separate column adjacent to the description column. (Refer to FIGURE G-10 or FIGURE G-11.) When on-board spares **<on-board-spares>** apply, there shall be a break in the text of the list and a new heading ON-BOARD SPARES shall be used. A list of the on-board spares shall appear in the same format as required for the basic COEI/SSR list.

G.5.4.5 (A) Basic Issue Items (BII) list **<bii>**. This tabular list **(standard information per paragraph 4.8.14.7)** shall be prepared in the same format and include similar content (tailored to the applicable BII) as required for the COEI list. The stowage location of BII shall also be included in the description column in the introduction. (Refer to FIGURE G-12 or FIGURE G-13.) As noted in AR 25-30 "Ensure that equipment publications for operators are listed in the basic issue items list."

G.5.5 Additional Authorization List (AAL) or Using Unit Responsibility Items (UURI) list work package (**crew (operator) only**) **<aalwp>**. Army only manuals and multi-service manuals shall user the term AAL. For Mairine Corps only manuals, the term "Using Unit Repsonsibility Items (UURI)" shall be used in place of AAL. This work package shall be prepared as directed by acquiring activity and shall list all AAL items (i.e., items not issued with the end item; not listed on the end item engineering drawing as part of the end item, NSN configuration; not required to be turned in with the end item; separately authorized by MTOE, TDA, CTA, or JTA; and provided for information only). For Marine Corps only manuals, this work package shall list the items to be requisitioned separately by using unit. The data described in G.5.5.1 and G.5.5.4 shall be prepared.

G.5.5.1 Work package identification information **<wpidinfo>**. Work package identification information is required for this work package. (Refer to 4.8.9.3.)

G.5.5.2 Work package initial setup **<initial_setup>**. Initial setup is not required for this work package.

G.5.5.3 AAL/UURI introductions **<intro>**. As applicable, the following introductions (text within the quotation marks) shall be prepared and included verbatim. (Refer also to FIGURE G-14.)

G.5.5.3.1 (A) AAL introduction. The following instruction shall be included verbatim. If the AAL list is long and there are multiple UOCs, additional information may be provided in the UOC portion of the introduction

"**ADDITIONAL AUTHORIZATION LIST (AAL)**
INTRODUCTION

Scope

This work package lists additional items you are authorized for the support of the (*enter short item name*).

General

This list identifies items that do not have to accompany the (*enter short item name*) and that do not have to be turned in with it. These items are all authorized to you by CTA, MTOE, TDA, or JTA.

Explanation of Columns in the AAL

Column (1) National Stock Number (NSN). Identifies the stock number of the item to be used for requisitioning purposes.

Column (2) Description, Part Number/(CAGEC). Identifies the Federal item name (in all capital letters) followed by a minimum description when needed. The last line below the description is the part number and the Commercial and Government Entity Code (CAGEC) (in parentheses).

Column (3) Usable On Code. When applicable, gives you a code if the item you need is not the same for different models of equipment. (*Add the following only as applicable. Replace Xs with appropriate codes and model numbers.*) These codes are identified below:

Code	Used on
XXX	*Model XXX*
XXX	*Model XXXX*
XXX	*Model XXXXX*

Add if applicable: Model XXX uses COEI items (insert item numbers and BII items (insert item numbers), Model XXXX use COEI items(insert item numbers) and BII items (insert item numbers), and Model XXXXX use COEI items(insert item numbers) and BII items (insert item numbers)

Column (4) U/I. Unit of Issue (U/I) indicates the physical measurement or count of the item as issued per the National Stock Number shown in column (1).

Column (5) Qty Recm. Indicates the quantity recommended."

G.5.5.3.2 (MC) UURI introduction. The following introduction shall be included verbatim. If the UURI list is long and there are multiple UOCs, additional information may be provided in the UOC portion of the introduction

"**USING UNIT RESPONSIBILITY ITEMS (UURI) LIST**

INTRODUCTION

Scope

This work package lists using unit responsibility items you are authorized for the support of the (*enter short item name*).

General

This list identifies items that are to be requisitioned by the using unit.

Explanation of Entries in the UURI

National Stock Number (NSN). Identifies the stock number of the item to be used for requisitioning purposes.

Description, Part Number/Commercial and Government Entity Code (CAGEC). Identifies the Federal item name (in all capital letters) followed by a minimum description when needed. The last line below the description is the part number and the CAGEC (in parentheses).

Usable On Code. When applicable, gives you a code if the item you need is not the same for different models of equipment. (*Add the following only as applicable. Replace Xs with appropriate codes and model numbers.*) These codes are identified below:

Code	Used on
XXX	*Model XXX*
XXX	*Model XXXX*
XXX	*Model XXXXX*

Add if applicable: Model XXX uses UURI items (insert item numbers), Model XXXX uses UURI items(insert item numbers), and Model XXXXX use UURI items (insert item numbers.

U/I. Unit of Issue (U/I) indicates the physical measurement or count of the item as issued per the National Stock Number.

Qty Recm. Indicates the quantity recommended."

G.5.5.4 AAL/UURI list **<aal>**. A tabular list **(standard information per paragraph 4.8.14.7)** of all AAL items/UURI shall be prepared. The headings and subsequent information for this list shall be the same as the COEI/BII/SSR lists except the ILLUS NUMBER column required for the COEI/BII/SSR lists shall not apply since no illustrations are used, and the QTY column shall be QTY RECM (quantity recommended). The items shall be listed alphabetically. The format and general content of the list shall be prepared as shown in FIGURE G-14.

G.5.6 Expendable and durable items list work package **<explistwp>**. This work package shall be prepared to provide the TM user a list of all expendable and durable items called out in the TM text that are necessary to operate and/or maintain the equipment. The following data described in G.5.6.1 through G.5.6.4 shall be included.

G.5.6.1 Work package identification information **<wpidinfo>**. Work package identification information is required for this work package. (Refer to 4.8.9.3.)

G.5.6.2 Work package initial setup **<initial_setup>**. Initial setup is not required for this work package.

G.5.6.3 Introduction for expendable and durable items list work package **<intro>**. The following introduction (text within the quotation marks) shall be prepared and included verbatim. (Refer also to FIGURE G-15.)

"**EXPENDABLE AND DURABLE ITEMS LIST**

INTRODUCTION

Scope

This work package lists expendable and durable items that you will need to operate and maintain the (*enter equipment/end item name*). This list is for information only and is not authority to requisition the listed items. These items are authorized to you by CTA 50-970, Expendable/Durable Items (Except Medical, Class V Repair Parts, and Heraldic Items), CTA 50-909, Field and Garrison Furnishings and Equipment or CTA 8-100, Army Medical Department Expendable/Durable Items.

Explanation of Columns in the Expendable/Durable Items List

Column (1) Item No. This number is assigned to the entry in the list and is referenced in the narrative instructions to identify the item (e.g., Use brake fluid (WP 0098, item 5)).

Column (2) Level. This column identifies the lowest level of maintenance that requires the listed item (*include as applicable: C = Crew, O = AMC, F = Maintainer or ASB, H = Below Depot or TASMG, D = Depot*).

Column (3) National Stock Number (NSN). This is the NSN assigned to the item which you can use to requisition it.

Column (4) Item Name, Description, Part Number/(CAGEC). This column provides the other information you need to identify the item. The last line below the description is the part number and the Commercial and Government Entity Code (CAGEC) (in parentheses).

Column (5) U/I. Unit of Issue (U/I) code shows the physical measurement or count of an item, such as gallon, dozen, gross, etc."

G.5.6.4 Expendable and durable items list **<explist>**. This list **(standard information per paragraph 4.8.13.7)** shall be prepared in tabular format as shown in FIGURE G-15 and include the following information:

a. Item number
b. Lowest maintenance class
c. National Stock Number (NSN)
d. Item name or nomenclature
e. If applicable, a description
f. Part number
g. Commercial and Government Entity Code (CAGEC)
h. Unit of Issue (U/I)

No illustrations shall be prepared for these items. Items appearing in the tabular list shall appear in alphabetical sequence by item name. Items to be listed shall be those approved by the acquiring activity.

G.5.7 Tool identification list work package (**Maintainer/AMC and above**) **<toolidwp>**. This work package shall be prepared as directed by the acquiring activity and shall include a list of the tools authorized to the levels of maintenance covered in the narrative portion of the TM and as referenced by the initial setups. A tool identification list shall be prepared if tools from sets or outfits are referenced within the initial setups. The tool identification list work package shall be prepared if there are tools required which are not listed elsewhere in the manual (e.g., RPSTL, MAC tools listing, or BII). For DMWRs/NMWRs, a list of all special tools and TMDE not contained in lower level TMs or in the RPSTL and required to perform the procedures in the DMWR/NMWR shall be included. This list shall include any special inspection equipment used only for the item that the DMWR/NMWR covers. The following data described in G.5.7.1 through G.5.7.4 shall be included.

G.5.7.1 Work package identification information **<wpidinfo>**. Work package identification information is required for this work package. (Refer to 4.8.9.3.)

G.5.7.2 Work package initial setup **<initial_setup>**. Initial setup is not required for this work package.

G.5.7.3 Introduction for tool identification list work package **<intro>**. The following introduction (text within the quotation marks) shall be prepared and included verbatim. (Refer to FIGURE G-16.)

"**TOOL IDENTIFICATION LIST**
INTRODUCTION

Scope
This work package lists common tools and supplements and special tools/fixtures needed to maintain the (*insert equipment name*)."

OR

"This work package lists special tools and equipment needed to maintain the (*insert equipment name*)." **(DMWRs/NMWRs only)**

"**Explanation of Columns in the Tool Identification List**

Column (1) Item No. This number is assigned to the entry in the list and is referenced in the initial setup to identify the item (e.g., Extractor (WP 0090, item 32)).

Column (2) Item Name. This column lists the item by noun nomenclature and other descriptive features (e.g., Gauge, belt tension).

Column (3) National Stock Number (NSN). This is the National Stock Number (NSN) assigned to the item; use it to requisition the item.

Column (4) Part Number/(CAGEC). Indicates the primary number used by the manufacturer (individual, company, firm, corporation, or Government activity) which controls the design and characteristics of the item by means of its engineering drawings, specifications, standards, and inspection requirements to identify an item or range of items. The manufacturer's Commercial and Government Entity Code (CAGEC) is also included.

Column (5) Reference. This column identifies the authorizing supply catalog, components list, or RPSTL for items listed in this work package." **(Not required for DMWRs/NMWRs)**

G.5.7.4 Tool identification list **`<toolidlist>`**. Applicable information for this tabular list **(standard information per paragraph 4.8.13.7)** shall be prepared, formatted as shown in FIGURE G-16, and include the following information:

a. Item number
b. Item name or nomenclature
c. National Stock Number (NSN)
d. Part Number
e. Commercial and Government Entity Code (CAGEC)
f. Reference

Item names shall be in alphabetical order. A lead-in paragraph to the tool identification list may be included.

G.5.8 Mandatory replacement parts work package (**Maintainer/AMC and above**) **`<mrplwp>`**. This work package shall be prepared as directed by acquiring activity and shall list all mandatory replacement parts referenced in the task initial setups and procedures. For **DMWRs/NMWRs**, a mandatory replacement parts list consisting of all items that must be replaced during the repair and overhaul of the equipment, whether or not they have been disturbed, shall be developed. When an item or component is not disassembled based on preshop analysis (PSA), the item will not be disassembled for the sole purpose to add a mandatory part. All items that must be replaced during overhaul or repair procedures (based on usage intervals such as miles, time, or rounds fired, or replaced on a time between overhaul (TBO) interval) shall be included in the parts list table. A reference shall be made to the TM that covers the equipment. The following data described in G.5.8.1 through G.5.8.4 shall be included.

G.5.8.1 Work package identification information **<wpidinfo>**. Work package identification information is required for this work package. (Refer to 4.8.9.3.)

G.5.8.2 Work package initial setup **<initial_setup>**. Initial setup is not required for this work package.

G.5.8.3 Introduction for mandatory replacement parts work package **<intro>**. This work package shall include an introduction.

G.5.8.4 Mandatory replacement parts list **<mprl>**. This work package shall include a tabular list **<mrpl>** **(standard information per paragraph 4.8.13.7)** of mandatory replacement parts. Mandatory replacement parts shall be listed (standard column headings in quotes) by item number **<itemno>** "Item No.," part number **<partno>** and CAGEC **<cageno>** "Part Number/(CAGEC)," NSN **<nsn>** "National Stock Number (NSN)," nomenclature **<name>** "Nomenclature," and quantity **<qty>** "Qty." Items shall be listed in alphanumeric order by part number. (Refer to FIGURE G-17.)

G.5.9 Critical safety items (CSIs) work package **<csi.wp>**. When specified by acquiring activity, this work package shall be developed. The following data described in G.5.9.1 through G.5.9.3 shall be included in the work package.

G.5.9.1 Work package identification information **<wpidinfo>**. Work package identification information is required for this work package. (Refer to 4.8.9.3.)

G.5.9.2 Work package initial setup **<initial_setup>**. Initial setup is not required for this work package.

G.5.9.3 Critical Safety Items (CSIs) (Flight Safety Critical Aircraft Parts (FSCAPs)) **<csi>**. This work package shall be prepared on any aviation system that contains a CSI (FSCAP). All CSIs (FSCAPs) shall be listed (standard column headings are shown in quotes) by their nomenclature **<name>** "Nomenclature," part number **<partno>** and Commercial and Government Entity Code CAGEC **<cageno>** "Part Number/(CAGEC)" and critical characteristic **<desc>** "Critical Characteristic". (Refer to FIGURE G-18.)

G.5.10 Support items work package **<supitemwp>**. This work package shall be prepared as directed by the acquiring activity and shall combine any of the supporting lists described in G.5.4 through G.5.9, as applicable. This work package shall be developed when the data contained in these supporting lists are minimal and creating a separate work package for each list is unnecessary.

G.5.10.1 Work package identification information **<wpidinfo>**. Work package identification information is required for this work package. (Refer to 4.8.9.3.)

G.5.10.2 Work package initial setup **<initial_setup>**. Initial setup is not required for this work package.

G.5.10.3 Introduction **<intro>**. The work package may include an introduction to the information.

G.5.10.4 Support items lists. The work package shall include the applicable lists described in G.5.4 through G.5.9.

G.5.11 Additional work packages **<genwp>**. When specified by the acquiring activity additional work packages shall be prepared when the work packages previously described herein do not support the data/information to be presented.

G.5.11.1 Work package identification information **<wpidinfo>**. Work package identification information is required for this work package. (Refer to 4.8.9.3.)

G.5.11.2 Work package initial setup **<initial_setup>**. Initial setup is required for this work package. (Refer to 4.8.9.4.)

G.6 **NOTES.**

The notes in section 6 apply to this appendix.

TM NUMBER **0438**

MAINTAINER MAINTENANCE REFERENCES

SCOPE

This work package lists all field manuals, forms, technical manuals, and miscellaneous publications referenced in this manual.

FIELD MANUALS

ATTP 3-97.11	Cold Region Operations
FM 3-11.3	Multiservice Tactics, Techniques and Procedures for Chemical, Biological, Radiological, and Nuclear Contamination Avoidance
FM 3-97.6	Mountain Operations
FM 4-25.11	First Aid for Soldiers
FM 9-207	Operation and Maintenance of Ordnance Material in Cold Weather Recovery and Battle Damage Assessment and Repair
FM 90-3	Desert Operations

FORMS

DA Form 2028	Recommended Changes to Publications and Blank Forms
DA Form 2062	Hand Receipt/Annex Number
DA Form 2404	Equipment Inspection and Maintenance Worksheet
DA Form 2408	Symbols and Codes to be Used on Aircraft Operaitonal and Maintenance Forms
DA Form 2408-4-1	Weapon Record Data
DA Form 2408-9	Equipment Control Record
DA Form 2408-14	Uncorrected Fault Record
DA Form 2408-20	Oil Analysis Log
DD 518	Accident Identification Card
SF 91	Motor Vehicle Accident Report
SF 368	Product Quality Deficiency Report

TECHNICAL MANUALS

TM 9-1300-200	Ammunition, General
TM 11-5965-286-14	Headset-Microphone Kit
TM 750-244-6	Procedures for Destruction of TACOM Equipment to Prevent Enemy Use

END OF WORK PACKAGE

0438-1/blank

FIGURE G-1. Example of references.

TM X-XXXX-XXX-XX 0439

MAINTAINER MAINTENANCE
MAINTENANCE ALLOCATION CHART (MAC)

INTRODUCTION

The Army Maintenance System MAC

This introduction provides a general explanation of the maintenance and repair functions.

The MAC (immediately following this introduction) designates overall authority and responsibility for the performance of maintenance tasks on the identified end item or component. The application of the maintenance tasks to the end item or component shall be consistent with the capacities and capabilities of the designated maintenance levels/classes, which are shown in the MAC in column (4). Column (4) is divided into two secondary columns. These columns indicate the maintenance levels/classes of 'Field' and 'Sustainment'. Each maintenance level column is further divided into two sub-columns. These sub-columns identify the maintenance classes and are as follows:

1. Field level maintenance classes:

    a. Crew (operator) maintenance. This is the responsibility of a using organization to perform maintenance on its assigned equipment. It normally consists of inspecting, servicing, lubricating, adjusting, and replacing parts, minor assemblies, and subassemblies. Items with a "C" ("O" for joint service reporting) in the third position of the Source, Maintenance, and Recoverability (SMR) code may be replaced at the crew(operator) class. A code of "C" ("O" for joint service) in the fourth position of the SMR code indicates complete repair is authorized at the crew (operator) class.

    b. Maintainer maintenance. This is maintenance accomplished on a component, accessory, assembly, subassembly, plug-in unit, or other portion by field level units. This maintenance is performed either on the system or after it is removed. An "F" in the third position of the SMR code indicates replacement of assemblies, subassemblies, or other components is authorized at this level. An "F" in the fourth position of the SMR code indicates complete repair of the identified item is allowed at the Maintainer class. Items repaired at this level are normally returned to the user after maintenance is performed.

2. Sustainment level maintenance classes:

    a. Below depot sustainment. This is maintenance accomplished on a component, accessory, assembly, subassembly, plug-in unit, or other portion either on the system or after it is removed. The item subject to maintenance has normally been forwarded to a maintenance facility away from the field level supporting units. An "H" in the third position of the SMR code indicates replacement of assemblies, subassemblies, or other components is authorized at this class. An "H" appearing in the fourth position of the SMR code indicates complete repair is possible at this class. Items are normally returned to the supply system after maintenance is performed at this class.

0439-1

FIGURE G-2. Example of non-aviation MAC introduction.

TM X-XXXX-XXX-XX 0439

AMC MAINTENANCE
MAINTENANCE ALLOCATION CHART (MAC)

INTRODUCTION

Aviation Maintenance Allocation Chart

The MAC (immediately following the introduction) designates overall authority and responsibility for the performance of maintenance tasks on the identified end item or component. The application of the maintenance tasks to the end item or component shall be consistent with the capacities and capabilities of the designated maintenance level which are shown on the MAC as:

Field - includes two columns:
"O" which corresponds to Aviation Maintenance Company (AMC) and
"F" which corresponds to Aviation Support Battalion (ASB)

Sustainment - includes two columns:
"L" which corresponds to Theater Aviation Sustainment Maintenance Group (TASMG) and other organizations that have National Maintenance Program certification and
"D" which corresponds to Depot

The maintenance to be performed is described as follows:

1. Field maintenance activities:

a. Aviation Maintenance Company (AMC). The aviation maintenance company is the lowest class of aviation field maintenance. The AMC provides direct support to aircraft operations, performing functions of aircraft servicing (daily, preflight, post-flight inspections, refuel, arming), Battle Damage Assessment and Repair (BDAR), and repair or replacement actions as specified in the MAC.

b. Aviation Support Company (ASC) in the Aviation Support Battalion (ASB). The ASB performs the following types of maintenance:

(1) Off equipment repair of LRUs or other components within the limits prescribed in the MAC.
(2) Inspections beyond the capability of the AMC.
(3) BDAR as required.
(4) Provide support to AMC personnel during peak workload periods as determined by local policy.

2. Sustainment maintenance:

a. Theater Aviation Sustainment Maintenance Group (TASMG) (deployed). The AVCRAD/TASMG performs the following:

0439-1

FIGURE G-3. Example of aviation MAC introduction.

TM X-XXXX-XXX-XX **0440**

MAINTAINER MAINTENANCE
TSEC/ST-34
MAINTENANCE ALLOCATION CHART (MAC)

Table 1. MAC for TSEC/ST-34

(1) GROUP NUMBER	(2) COMPONENT/ ASSEMBLY	(3) MAINTENANCE FUNCTION	(4) MAINTENANCE LEVEL				(5) TOOLS & EQUIP REFERENCE CODE	(6) REMARKS CODE
			FIELD		SUSTAINMENT			
			CREW (C)	MAINTAINER (F)	BELOW DEPOT (H)	DEPOT (D)		
00	TSEC/ST-34	INSPECT	0.1					A
		SERVICE	0.2					B
		REPLACE	0.3				1	C, D
		TEST	0.4					E
		REPAIR		1.5			1,2	F
		REPAIR			2.0		1, 2, 3, 4, 5	G, H
		REPAIR				2.0	1, 2, 3, 4, 5, 6, 7, 8	I
		OVERHAUL				16.0	1, 2, 3, 4, 5, 6, 7, 8	J
01	POWER UNIT. STP-	INSPECT	0.1					A
		TEST	0.3					E
		REPAIR		1.8			1, 2	F
		REPAIR			2.0		1, 2, 3, 4, 5	G, J
		REPAIR				2.0	1, 2, 3, 4, 5, 6, 7, 8	H
0101	PRINT CIRCUIT BOARDS							
010101	E-EB/01	INSPECT		0.1				A
		REPLACE		0.5			1, 2	A
		TEST				1.0	1, 2, 3, 6, 7, 8	I
		REPAIR		0.5			1	
		REPLACE				2.0	1, 2, 3, 4, 6, 7, 8	G
010102	SWITCHING ASSEMBLY	INSPECT	0.1	0.1			1	A
		REPLACE	0.5	0.5			1	
		TEST				1.0	1, 2, 3, 6, 7, 8	
		REPAIR				2.0	1, 2, 3, 4, 6, 7, 8	H
02	LOGIC UNIT,	INSPECT	--					A
		TEST	--					E
		REPAIR		1.0			1, 2	F
		REPAIR			2.0		1, 2, 3, 4, 5	

0440-1

FIGURE G-4. Example of a non-aviation MAC.

TM X-XXXX-XXX-XX **0440**

MAINTAINER MAINTENANCE
TSEC/ST-34
MAINTENANCE ALLOCATION CHART (MAC)

Table 1. MAC for TSEC/ST-34

(1) GROUP NUMBER	(2) COMPONENT/ ASSEMBLY	(3) MAINTENANCE FUNCTION	(4) MAINTENANCE LEVEL				(5) TOOLS & EQUIP REFERENCE CODE	(6) REMARKS CODE
			FIELD		SUSTAINMENT			
			CREW (C)*	MAINTAINER (F)	BELOW DEPOT (H)	DEPOT (D)		
00	TSEC/ST-34	INSPECT	0.1					A
		SERVICE	0.2					B
		REPLACE	0.3				1	C, D
		TEST	0.4					E
		REPAIR		1.5			1,2	F
		REPAIR			2.0		1, 2, 3, 4, 5	G, H
		REPAIR				2.0	1, 2, 3, 4, 5, 6, 7, 8	I
		OVERHAUL				16.0	1, 2, 3, 4, 5, 6, 7, 8	J
01	POWER UNIT. STP-	INSPECT	0.1					A
		TEST	0.3					E
		REPAIR		1.8			1, 2	F
		REPAIR			2.0		1, 2, 3, 4, 5	G, J
		REPAIR				2.0	1, 2, 3, 4, 5, 6, 7, 8	H
0101	PRINT CIRCUIT BOARDS							
010101	E-EB/01	INSPECT		0.1				A
		REPLACE		0.5			1, 2	A
		TEST				1.0	1, 2, 3, 6, 7, 8	I
		REPAIR		0.5			1	
		REPLACE				2.0	1, 2, 3, 4, 6, 7, 8	G
010102	SWITCHING ASSEMBLY	INSPECT	0.1	0.1			1	A
		REPLACE	0.5	0.5			1	
		TEST				1.0	1, 2, 3, 6, 7, 8	
		REPAIR				2.0	1, 2, 3, 4, 6, 7, 8	H
02	LOGIC UNIT,	INSPECT	--					A
		TEST	--					E
		REPAIR		1.0			1, 2	F
		REPAIR			2.0		1, 2, 3, 4, 5	

*This is a joint service manual. While Army uses a “C”, other services may use an “O” in this column.

0440-1

FIGURE G-5. Example of joint service non-aviation MAC.

TM X XXXX-XXX-XX **0442**

AMC MAINTENANCE
AVIATION MAINTENANCE ALLOCATION
CHART (MAC)

Table 1. MAC for T-XXX Turbine Engine

(1) GROUP NUMBER	(2) DESCRIPTION	(3) MAINTENANCE FUNCTION	(4) MAINTENANCE LEVEL				(5) TOOLS & EQUIP REFERENCE CODE	(6) REMARKS CODE
			FIELD		SUSTAINMENT			
			AMC (O)	ASB (F)	TASMG (L)	DEPOT (D)		
04	POWER PLANT							
0401	ENGINE, TURBINE	INSPECT	--				1	A
		TEST	--					B
		TEST		--				
		TEST			--			
		SERVICE	0.2					C
		REPLACE		0.4				
		REPAIR		0.4				
		REPAIR			0.4			
		OVERHAUL				--		A
040101	EXTERNAL LINES & HOSES	INSPECT	--				3	D
		TEST		--				
		REPLACE	--					
		REPAIR		--				
0402	COMPRESSOR SECTION (COLD SECTION MODULE	INSPECT	0.1					E
		INSPECT		0.2				
		TEST		--				
		SERVICE	0.2					
		REPAIR		0.4				
		REPAIR			0.6			
		OVERHAUL				--		

0442-1

FIGURE G-6. Example of an aviation MAC.

Table 2. Tools and Test Equipment for TSEC/ST-34

TOOLS OR TEST EQUIPMENT	MAINTENANCE LEVEL	NOMENCLATURE	NATIONAL STOCK NUMBER	TOOL NUMBER
1	H	Automatic test system ST-51	5810-00-089-4599	TSEC/ST-51
2	F	Multimeter, digital	6625-01-139-2512	AN/PSM-45
3	D	Multimeter, digital	6625-01-145-2430	AN/USM 486
4	H	Oscilloscope	6625-01-187-7847	AN/USM 488
5	D	Power supply (0-35 VDC 2.4A)	6130-00-006-5524	HP 6434B86
6	D	Power supplytester	NOT APPLICABLE	ON502427
7	H	Repair and soldering center (page)	4940-01-031-4541	PRC-350C/equip
8	F	Tool kit, electronic equipment	5180-00-610-8177	TK-105/6

Table 3. Remarks for TSEC/ST-34

REMARKS CODES	REMARKS
A	External
B	Preventive maintenance checks and services (PMCS)
C	Replace rack installed unit, 0.4 hrs
D	Bench top use only, 0.1 hrs
E	Selftest
F	Repair by PMA and authorized component replacement only
G	Complete unit and subassembly repair (except STP-34 switching assembly and E-EBO/1)
H	Complete unit and subassembly repair
I	In compliance with TSEC/ST-34 CIDOS
J	Function performed by specialized repair activity (SRA). (theater COMSEC Logistics Center-Europe or Lexington-Blue Grass Army Depot)

END OF WORK PACKAGE

FIGURE G-7. <u>Example of non-aviation MAC tools and test equipment and remarks tables.</u>

Table 2. Tools and Test Equipment for T-xxx Turbine Engine

TOOLS OR TEST EQUIPMENT	MAINTENANCE LEVEL	NOMENCLATURE	NATIONAL STOCK NUMBER	TOOL NUMBER
1	AMC	Sling, aircraft maintenance	1730-00-903-5019	LTCT 773
2	AMC	Wrench, crowfoot	5120-00-034-6193	LTCT 4810
3	ASB	Wrench, socket	5120-00-875-2588	LTCT 393
4	ASB	Wrench, spanner	5120-00-886-1794	LTCT 9263

Table 3. Remarks for T-xxx Turbine Engine

REMARKS CODES	REMARKS
A	Diagnostic inspection using bprescope.
B	Functional test at AMC – engine in airframe.
C	Functional test at ASB – engine in METS
D	Repair at ASB includes the engine assembly, individual line replacement units (LRU) 9accessories) and modules.
E	Replace seal.
F	Repair limited to replacement of rotor assembly, stator, stage 1 nozzle, face type seal, and combiustion liner.
G	Repair limited to replacement of external lines, hoses, and line replacement units (LRU) (accessories).
H	Replacement of carbon seal.
I	Reset button.
J	Water wash.
K	Visible inspection without detailed disassembly.
L	All repair and replacement of parts performed by AMC is limited to authorized items listed in TM XX-XXXX-XXX-23P

END OF WORK PACKAGE

FIGURE G-8. <u>Example of aviation two-level MAC tools and test equipment and remarks tables.</u>

MAINTAINER MAINTENANCE
M198 HOWITZER
COMPONENTS OF END ITEM (COEI) AND BASIC ISSUE ITEMS (BII) LISTS

INTRODUCTION

Scope

This work package lists COEI and BII for the M198 howitzer to help you inventory items for safe and efficient operation of the equipment.

General

The COEI and BII information is divided into the following lists:

Components of End Item (COEI). This list is for information purposes only and is not authority to requisition replacements. These items are part of the M198 howitzer. As part of the end item, these items must be with the end item whenever it is issued or transferred between property accounts. Items of COEI are removed and separately packaged for transportation or shipment only when necessary. Illustrations are furnished to help you find and identify the items.

Basic Issue Items (BII). These essential items are required to place the M198 howitzer in operation, operate it, and to do emergency repairs. Although shipped separately packaged, BII must be with the M198 howitzer during operation and when it is transferred between property accounts. Listing these items is your authority to request/requisition them for replacement based on authorization of the end item by the TOE/MTOE. Illustrations are furnished to help you find and identify the items.

Explanation of Columns in the COEI List and BII List

Column (1), Illus Number, gives you the number of the item illustrated.

Column (2), National Stock Number, identifies the stock number of the item to be used for requisitioning purposes.

Column (3), Description, CAGEC, and Part Number, identifies the Federal item name (in all capital letters) followed by a minimum description when needed. The stowage location of COEI and BII is also included in this column. The last line below the description is the CAGEC (Commercial and Government Entity Code) (in parentheses) and the part number.

Column (4), Usable on Code, gives you a code if the item you need is not the same for different models of equipment. These codes are identified below:

Code	Used on
PAA	Model XXX
PAB	Model XXXX
PAC	Model XXXXX

PAA uses COEI items 1, 2, 4, 5, 6, 7, 9, and 10 and all BII items. PAB uses COEI items 1, 2, 3, 5, 6, 8, and 10 and all BII items. PBB uses COEI items 1, 2, 3, 5, 6, 9, 11, and 12 and all BII items.

Column (5), U/M (unit of measure), indicates how the item is issued for the National Stock Number shown in column (2).

Column (6), Qty Rqr, indicates the quantity required.

FIGURE G-9. (A) Example of an introduction for COEI and BII lists.

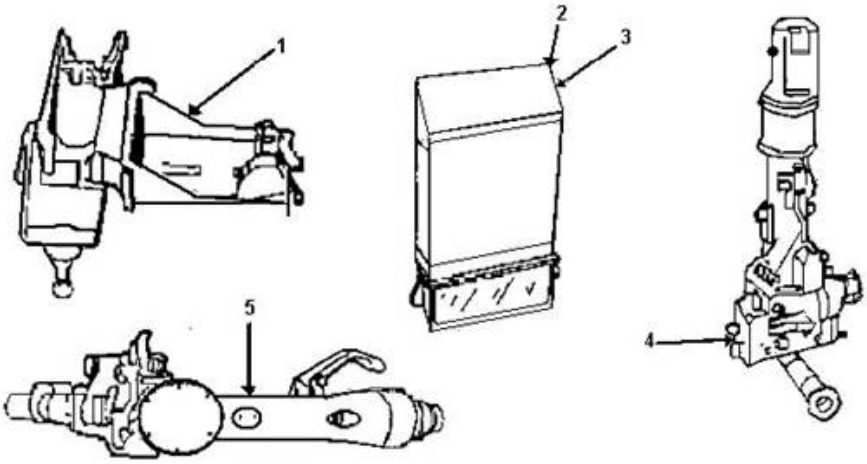

Table 1. Components of End Item List

(1) Illus number	(2) National Stock Number (NSN)	(3) Description, Part Number/CAGEC)	(4) Usable On Code	(5) U/I	(6) Qty Rqr
1	1005-00-706-8880	MOUNT,MACHINE GUN 1:cal. .50 (in mount on cupola) 7068880(19204)	PAA	EA	1
2	1240-00-344-4643	PERISCOPE:M27 (chief of section) (stowage box cab wall) 7633132(19200)	PAA	EA	1
3	1240-00-509-2743	PERISCOPE:M45 (driver's) (stowage box driver's compartment) 8213430(19200)	PAA	EA	1
4	1240-00-864-2930	TELESCOPE, PANORAMIC M117 (in mount M145 or telescope box) 7660400(19200)	PAA	EA	1
5	1240-00-491-9676	TELESCOPE, ELBOW:M118CA1 (in mountM146) 10559855(19200)	PAB	EA	1

0441-2

FIGURE G-10. <u>(A) Example of COEI list (Method A).</u>

TM X-XXXX-XXX-XX 0441

Table 1. Components of End Item List

(1) Illus number	(2) National Stock Number (NSN)	(3) Description, Part Number/CAGEC)	(4) Usable On Code	(5) U/I	(6) Qty Rqr
1	1005-00-706-8880 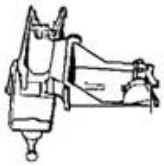	MOUNT,MACHINE GUN 1:cal. .50 (in mount on cupola) 7068880(19204)	PAA	EA	1
2	1240-00-344-4643	PERISCOPE:M27 (chief of section) (stowage box cab wall) 7633132(19200)	PAA	EA	1
3	1240-00-509-2743	PERISCOPE:M45 (driver's) (stowage box driver's compartment) 8213430(19200)	PAA	EA	1
4	1240-00-864-2930	TELESCOPE,PANORAMIC M117 (in mount M145 or telescope box) 7660400(19200)	PAA	EA	1
5	1240-00-491-9676 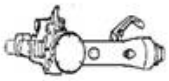	TELESCOPE,ELBOW:M118CA1 (in mountM146) 10559855(19200)	PAB	EA	1

0441-2

FIGURE G-11. (A) Example of COEI list (Method B).

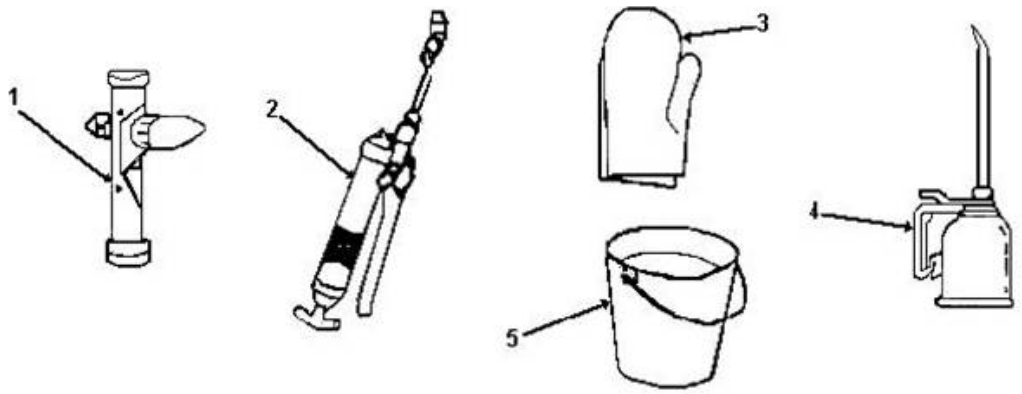

Table 2. Basic Issue Items (BII)

(1) Illus number	(2) National Stock Number (NSN)	(3) Description, Part Number/CAGEC)	(4) Usable On Code	(5) U/I	(6) Qty Rqr
1	1290-00-535-7629	LIGHT, AIMING POST; M14 7197188(19200)	PAA	EA	2
2	4930-00-766-3545	LUBRICATING GUN, HAND: high pressure (in tool bag) 102758(36251)	PAA	EA	1
3	8415-00-266-8843	MITTENS, CLOTH: (pair)M1942 (in oddment tray) 11655982(19207)	PAA	EA	2
4	4930-00-262-8868	OILER, HAND: steel, pump type, 1pt, spout 9 lg (in left cab door stowage box) 328(72798)	PAA	EA	1
5	7240-00-160-0455	PAIL, UTILITY: 14-qt capability (on vehicle floor) RRP35(81348)	PAA	EA	1
6		Technical Manual (TM X-XXXX-XX-10)		EA	1

END OF WORK PACKAGE

0441-3/blank

FIGURE G-12. <u>(A) Example of BII list (Method A).</u>

Table 2. Basic Issue Items (BII)

(1) Illus number	(2) National Stock Number (NSN)	(3) Description, Part Number/CAGEC)	(4) Usable On Code	(5) U/I	(6) Qty Rqr
1	1290-00-535-7629	LIGHT, AIMING POST; M14 7197188(19200)	PAA	EA	2
2	4930-00-766-3545	LUBRICATING GUN, HAND: high pressure (in tool bag) 102758(36251)	PAA	EA	1
3	8415-00-266-8843	MITTENS, CLOTH: (pair)M1942 (in oddment tray) 11655982(19207)	PAA	EA	2
4	4930-00-262-8868	OILER, HAND: steel, pump type, 1 pt, spout 9 lg (in left cab door stowage box) 328(72798)	PAA	EA	1
5	7240-00-160-0455	PAIL, UTILITY: 14-qt capability (on vehicle floor) RRP35(81348)	PAA	EA	1
6		Technical Manual (TM X-XXXX-XXX-10)		EA	1

END OF WORK PACKAGE

0441-3/blank

FIGURE G-13. **(A) Example of BII list (Method B).**

TM X-XXXX-XXX-XX 0442

CREW MAINTENANCE
NBCRS FOX M93A1
ADDITIONAL AUTHORIZATION LIST (AAL)

INTRODUCTION

Scope

This work package lists additional items you are authorized for the support of the NBCRS FOX M93A1.

General

This list identifies items that do not have to accompany the NBCRS FOX M93A1 and that do not have to be turned in with it.

These items are all authorized to you by CTA, MTOE, TDA, or JTA.

Explanation of Columns in the AAL

Column (1) National Stock Number (NSN). Identifies the stock number of the item to be used for requisitioning purposes.

Column (2) Description, Part Number/(CAGEC). Identifies the Federal item name (in all capital letters) followed by a minimum description when needed. The last line below the description is the part number and Commercial and Government Entity Code (CAGEC) (in parentheses).

Column (3) Usable On Code. When applicable, gives you a code if the item you need is not the same for different models of equipment.

Column (4) U/I. Unit of Issue (U/I) indicates the physical measurement or count of the item as issued per the National Stock Number shown in column (1).

Column (5) Qty Recm. Indicates the quantity recommended.

Table 1. Additional Authorization List

(1) National Stock Number (NSN)	(2) Description, Part Number/CAGEC)	(3) Usable On Code	(4) U/I	(5) Qty Rqr
6665-01-105-5623	ALARM, CHEMICAL AGENT 8762101(19200)		EA	1
1240-01-207-5787	BINOCULARS, MOD, CON M22 9370122(19200)		EA	1
2590-01-148-7961	CABLE KIT, SPECIAL PURPOSE 223592-2000(19200)		EA	2
1080-00-623-7295	CAMOUFLAGE SCREEN WOODLAND/DST POLES 11655722(34623)		EA	1
1080-00-103-1246	CAMOUFLAGE SCREEN WOODLAND RAD SCT 11655720(34623)		EA	1
6665-01-199-4153	CHEMICAL AGENT MONITOR (CAM) 11645620(34623)		EA	1

END OF WORK PACKAGE

0442-1/blank

FIGURE G-14. (A) Example of an AAL.

TM X-XXXX-XXX-XX 0059

CREW MAINTENANCE
NBCRS FOX M93A1
EXPENDABLE AND DURABLE ITEMS LIST

INTRODUCTION

Scope
This work package lists expendable and durable items that you will need to operate and maintain the NBCRS FOX M93A1. This list is for information only and is not authority to requisition the listed items. These items are authorized to you by CTA 50-970, Expendable/Durable Items (Except Medical, Class V Repair Parts, and Heraldic Items), CTA 50–909, Field and Garrison Furnishings and Equipment, or CTA 8-100, Army Medical Department Expendable/Durable Items.

Explanations of Columns in the Expendable / Durable Items List

Column (1) Item No. This number is assigned to the entry in the list and is referenced in the narrative instructions to identify the item (e.g., "Use brake fluid (WP 0098, Item 5).").

Column (2) Level. This column includes the lowest level of maintenance that requires the listed item (C = Operator/Crew).

Column (3) National Stock Number (NSN). This is the NSN assigned to the item which you can use to requisition it.

Column (4) Item Name, Description, Part Number/(CAGEC). This column provides the other information you need to identify the item. The last line below the description is the part number and the Commercial and Government Entity Code (CAGEC) (in parentheses).

Column (5) U/I. Unit of Issue (U/I) code shows the physical measurement or count of an item, such as gallon, dozen, gross, etc.

Table 1. Expendable and Durable Items List

(1) Item No.	(2) Level	(3) National Stock Number (NSN)	(4) Item Name, Description, Part Number/CAGEC)	(5) U/I
1	C	6810-00-201-0906	Alcohol, denatured, Grade III, 16 ounce bottle O-E-760 (81348)	BT
2	C	8030-01-138-1666	Antiseize Compound, 250-gram tube MIL-T-5544 (81349)	TU
3	C	6515-00-059-5235	Applicator, disposable, package of 1000 A-A-30016 (58536)	PK
4	C	8020-00-224-8024	Brush, artist, MTL ferrule, round, tapered point, Type I, camel hair H-B-118 (81348)	EA
5	C	9150-01-054-6453	Cleaner, Lubricant & Preservation (CLP), 1-pint bottle with sprayer MIL-L-63640 (81349)	P

END OF WORK PACKAGE

0059-1/blank

FIGURE G-15. Example of expendable and durable items list.

TM X-XXXX-XXX-XX 0444

MAINTAINER MAINTENANCE
MCLIC
TOOL IDENTIFICATION LIST

INTRODUCTION

Scope
This work package lists all common tools and supplements and special tools/fixtures needed to maintain the MICLIC.

Explanation of Columns in the Tool Identification List

Column (1) Item No. This number is assigned to the entry in the list and is referenced in the initial setup to identify the item (e.g., "Extractor (WP 0090, Item 32)").

Column (2) Item Name. This column lists the item by noun nomenclature and other descriptive features (e.g., "Gage, belt tension").

Column (3) National Stock Number (NSN). This is the National Stock Number (NSN) assigned to the item; use it to requisition the item.

Column (4) Part Number/(CAGEC). Indicates the primary number used by the manufacturer (individual, company, firm, corporation, or Government activity) which controls the design and characteristics of the item by means of its engineering drawings, specifications, standards, and inspection requirements to identify an item or range of items. The manufacturer's Commercial and Government Entity Code (CAGEC) is also included.

Column (5) Reference. This column identifies the authorizing supply catalog or RPSTL for items listed in this work package.

Table 1. MCLIC Tool Identification List

(1) Item No.	(2) Item Name	(3) National Stock Number (NSN)	(4) Part Number/ CAGEC)	(5) Reference
1	Adapter, socket wrench, 1/2 inch-3/4 inch	5120-00-114-5207	11655788-3 (81349)	TM 9-2350-252-20P-1
2	Adapter, torque wrench, 1/2 inch drive, 1/2 inch	5120-00-399-1157	2588756 (81349)	TM 9-2350-252-20P-1
3	Adapter, torque wrench, 1/2 inch drive, 3/4 inch	5120-00-399-1154	2588757 (81349)	TM 9-2350-252-20P-1
4	Adapter, torque wrench, 1/2 inch drive, 5/16 inch	5120-01-115-1891	12298105-1 (81349)	TM 9-2350-252-20P-1
5	Adapter, torque wrench, 1/2 inch drive, 1/5216 inch	5120-00-215-8200	11663358-2 (81349)	TM 9-2350-252-20P-1
6	Adjusting tool, belt	4910-01-128-2670	3375058 (81349)	TM 9-2350-252-20P-1
7	Bit. Screwdriver, 1/4 inch drive	5120-00-316-9228	TMC105A (81349)	TM 9-2350-252-20P-1
8	Brush, Battery, Terminal		BTC3A (55719)	FRS CL 4950-95-E42
9	Caliper Set, Micrometer, Inside		KTCS0998 (00NS2)	SATS CL 4910-95-A81

0444-1

FIGURE G-16. Example of a tool identification list.

MAINTAINER MAINTENANCE
MANDATORY REPLACEMENT PARTS LIST

MANDATORY REPLACEMENT PARTS LIST

This work package includes a list of all mandatory replacement parts referenced in the task initial setups and procedures. These are items that must be replaced during maintenance whether they have failed or not. This includes items based on usage intervals such as miles, time, rounds, fired, etc.

Table 1. Mandatory Replacement Parts List

(1) Item No.	(2) Part Number/ CAGEC)	(3) National Stock Number (NSN)	(4) Nomenclature	(5) Qty
1	12286941 (19207)	2940-01-086-1605	Filter assembly (part of kit, P/N 5705132)	1
2	M83248/1-014 (81349)	5330-00-166-0990	Preformed packing (item 54 is part of kit, P/N 57051324	4
3	M83248/1-115 (81349)	5330-00-166-1066	Preformed packing	2
4	M83248/1-904 (81349)	5330-00-020-0203	Preformed packing	5
5	M83248/1-905 (81349)	5330-00-167-5166	Preformed packing	2
6	M83248/1-906 (81349)	5330-00-020-0186	Preformed packing	2
7	M83248/1-908 (81349)	5330-00-020-0105	Preformed packing	3
8	M83248/1-910 (81349)	5330-00-020-0067	Preformed packing	3
9	M83248/1-916 (81349)	5330-00-165-4565	Preformed packing	1
10	MS35333-3	5310-00-576-5752	Lock washer	4

END OF WORK PACKAGE

FIGURE G-17. Example of a mandatory replacement parts list.

Table 1. Critical Safety Items List (CSI)/Flight Safety Critical Aircraft Parts (FSCAP) List

Nomenclature	Part Number/ CAGEC)	Critical Characteristics
Carrier Hub	7-311310016-3 (02731)	Process core and surface hardness
Cluster Gear	7-211310027-3 (02731)	Process core and surface hardness
Spur Gear	7-113100029-3 (02731)	Dimensions and contour of root area.
Gear	7-311310025-3 (02731)	Process core and surface hardness
Gearshaft	7-211310035-3 (02731)	Process core and surface hardness
Gearshaft	7-211310039-5 (02731)	Process core and surface hardness
Nut	7-113100121-3 (02731)	Process surface hardness.
Spindle	7-113100141-3 (02731)	Process core hardness.

END OF WORK PACKAGE

FIGURE G-18. Example of a critical safety items parts table.

DESTRUCTION OF ARMY MATERIEL TO PREVENT ENEMY USE

H.1 SCOPE.

H.1.1 Scope. This appendix establishes the technical content requirements for developing generic information and/or specific procedures regarding the destruction of Army materiel to prevent enemy use for major weapon systems and their related systems, subsystems, equipment, WRAs, and SRAs. This appendix is a mandatory part of this standard. The information contained herein is intended for compliance. The requirements are applicable for all maintenance levels/classes through overhaul (depot), including DMWRs and NMWRs.

H.2 APPLICABLE DOCUMENTS.

The applicable documents in section 2 of the basic standard apply to this appendix.

H.3 DEFINITIONS.

The definitions in section 3 of the basic manual apply to this appendix.

H.4 GENERAL REQUIREMENTS.

H.4.1 General. The requirements provided in this appendix provide the technical content requirements for the preparation of destruction of Army materiel procedures. Several approaches are available for preparing manuals for destruction of Army materiel. These include, but are not limited to:

a. Instructions or procedures developed for a particular stock class of materiel, as identified by its Federal Supply Classification (FSC).
b. Procedures that provide detailed destruction instructions for specific weapons system(s) or equipment and any installed subsystems.
c. Simple standardized destruction methods based on the assumption that time and demolition materials may not always be available for carrying out complicated demolition or other destruction procedures.

H.4.2 Types of manuals. Each weapon system or major item of equipment shall have destruction procedures prepared that cover the approaches in b and c mentioned previously. Equipment managers may direct that a generic destruction manual be developed for assets they control in approach a that are not covered in a weapons system-specific manual. Equipment managers and weapons system program managers should work together to ensure that destruction procedures do not provide conflicting destruction requirements or overly duplicated destruction procedures. Some duplication of destruction procedures is allowed for components in a weapons system, but only those specific procedures (refer to H.5.5.4) for the component shall be duplicated. Duplication of this information is preferred to having users in a combat situation looking for destruction information in multiple TMs.

H.4.2.1 Destruction manuals for a Federal Supply Classification (FSC). When directed by an AMC supply class custodian or manager, a separate destruction TM <**destruction_manual**> shall be prepared. The manual shall contain generic destruction procedures and when possible should include specific procedures for each item in the stock class. The requirements in H.5.1 through H.5.4 shall be used.

H.4.2.2 Destruction manuals/work packages for weapon systems. Each weapons system shall have destruction procedures developed. If a separate manual is used, these procedures will be contained in a minimum of three work packages. The first shall be a general information work package **<ginfowp>** containing the information specified in H.5.2. The second shall be the introduction work package **<destruct-introwp>** with the information specified in H.5.3. The third and any succeeding work packages shall contain specific destruction procedures **<destruct-materialwp>** as specified in H.5.4.

H.4.2.3 Preparation of digital data for electronic delivery. Data prepared and delivered digitally in accordance with this standard shall be XML tagged using the DTD. Data shall be formatted for presentation using stylesheets in accordance with MIL-STD-2361. Stylesheets may be prepared using XSL or other languages as specified by the acquiring activity. Where possible and when available, Army developed and provided stylesheets shall be used. Refer to 4.6 for information on obtaining or accessing the DTD and stylesheets. XML tags used in the DTD are noted throughout the text of this standard in bracketed, bold characters (e.g., **<genrepairwp>**) as a convenience for the author and to ensure that the tags are used correctly when developing a document instance.

H.4.3 Use of the Document Type Definition (DTD)/stylesheet. The DTD referenced in this appendix interprets the technical content and structure for the functional requirements contained in this standard. Its use is mandatory. Development of TMs is accomplished through the use of this standard, the DTD, and the guidance contained in MIL-HDBK-1222. Where possible and when available, Army developed and provided stylesheets shall be used. For additional information on DTD and specific stylesheets, refer to MIL-STD-2361.

H.4.4 Content structure. The examples provided herein are an accurate representation of the content structure requirements contained in this appendix and shall be followed to permit the effective use of the DTD

H.4.5 Style and format. This standard provides style and format requirements for the technical content requirements described in this appendix. These requirements are considered mandatory and are intended for compliance.

H.4.6 Selective application and tailoring. This standard contains some requirements that may not be applicable to the preparation of all destruction TMs. Selective application and tailoring of requirements contained in this standard is the responsibility of the acquiring activity and shall be accomplished using APPENDIX A. The applicability of some requirements is also designated by one of the following statements: unless specified otherwise by the acquiring activity; as specified by the acquiring activity; or when specified by the acquiring activity.

H.4.7 General destruction rules. When preparing any destruction manual, the following priority guidelines shall be followed. These are provided to ensure a common approach to destruction of materiel:

a. Any cryptographic equipment or materiel shall be destroyed first.
b. Classified equipment or materiel is to be destroyed after any cryptographic assets. A statement to this effect shall be included in the introductory materiel. The destruction of classified materiel statement is required regardless of the classification of the materiel covered in the current TM.

c. Essential material shall be destroyed when time precludes the destruction of the entire system. In this case, essential material consists of such material identified for the system or stock class in the manual being prepared. The system manual shall include a list of essential material. A statement shall be included stating that essential material be destroyed in the order provided and that the same material be destroyed on each system. (Refer to H.5.3.7.)

d. Any repair parts that may be on the verge of capture shall be destroyed in the same order as the essential material.

H.5 **DETAILED REQUIREMENTS.**

H.5.1 Front and rear matter. When a stand alone destruction manual is prepared, unless otherwise specified in this appendix, the front and rear matter requirements contained in 5.2.1 and 5.2.3. shall be used.

H.5.2 General information work package **<ginfowp>**. A general information work package shall be prepared. (Refer to B.5.2.) At a minimum, it shall contain a scope statement containing the following verbatim text:

> "This manual is for the guidance of those whose duty it is to render inoperable or destroy equipment which is in imminent danger of capture by an enemy."

For destruction procedures that will implement any international standards, the following text shall be included. For a stand-alone destruction manual, the statement shall be in the <ginfowp> scope paragraph. For destruction procedures included in a weapon system manual, this statement shall be included in the "How to Use the Manual" (italicized text within parentheses shall be replaced with the appropriate information).

> "Certain provisions of this technical manual (identify by chapter, work package, paragraph, or similar manner, if appropriate) are the subject of international standardization agreement (*insert the ABCA or ASCC standard number; the NATO, STANAG, NETR, or NEPR number; or appropriate documentary reference*). When revision or cancellation of this technical manual is proposed which will modify the international agreement concerned, the technical manual management activity will take appropriate action through international standardization channels, including departmental standardization offices, to change the agreement or make other appropriate accommodations."

H.5.2.1 Work package identification information **<wpidinfo>**. Work package identification information is required for this work package. (Refer to 4.8.9.3.)

H.5.2.2 Work package initial setup **<initial_setup>**. Initial setup is not required for this work package.

H.5.3 Destruction introduction work package **<destruct-introwp>**. The destruction introduction work package shall contain the following information as described in H.5.3.1 through H.5.3.7.

H.5.3.1 Work package identification information **<wpidinfo>**. Work package identification information is required for this work package. (Refer to 4.8.9.3.)

H.5.3.2 Work package initial setup **<initial_setup>**. Initial setup is not required for this work package.

H.5.3.3 Authority to destroy materiel **<authorize_to_destroy>**. The following paragraph shall be included verbatim:

> "Authorization. Only division or higher commanders have the authority to order destruction of equipment. They may however, delegate this authority to subordinate commanders when the situation demands it."

H.5.3.4 Reporting destruction **<report_destruct>**. A paragraph shall be included that requires any destruction activity be reported through command channels.

H.5.3.5 General destruction information **<general_destruct_info>**. Text shall be included that provides the user with information that is generic to most destruction processes. This data shall include, but is not limited to, the following types of information:

a. Information on types of destructive processes such as burning, use of explosives, burying, or self destruction devices/techniques. This explanation shall include the advantages and disadvantages of each process.
b. For complex weapons systems, the reason to perform any subordinate destruction procedures in conjunction with those for the weapons system.
c. Any considerations relative to physical location or weather related (wind, rain, temperature) that users should consider when destroying materiel.
d. Explanations on the priority for materiel destruction. (Refer to H.4.7.)

H.5.3.6 Degree of destruction. The following information shall be included verbatim:

> "Methods of Destruction. Choose methods of destruction which will cause such damage that it will be impossible to restore the equipment to a usable condition within the combat zone.
>
> Classified Equipment. Classified equipment must be destroyed to such a degree as to prevent duplication by, or revealing means of operation or function to the enemy.
>
> Associated Classified Documents. Any classified documents, notes, instructions, or other written material pertaining to function, operation, maintenance, or employment, including drawings or parts lists, must be destroyed in a manner to render them useless to the enemy."

H.5.3.7 Essential components and spare parts **<component_spares>**. When specified by the acquiring activity, the destruction procedures may identify essential components whose destruction will incapacitate the weapons system. In certain conditions, the destruction of essential components may be used. If destruction of essential components is allowed, statements shall be included that for each weapons system, the same components will be destroyed. A similar statement shall be included that for any spare parts requiring destruction, the same essential spare parts shall be destroyed.

If a weapons system determines the component parts to be essential, they should notify the components item manager so that they may identify those items for higher priority destruction in any item-level destruction procedures manual.

H.5.4 Destruction procedures work package **<destruct-materialwp>**. The destruction procedures work package shall contain the following information as described in H.5.4.1 through H.5.4.5. The destruction procedures work package shall contain only destruction procedures. All general or explanatory information shall be contained in the destruction introduction work package. (Refer to H.5.3.)

H.5.4.1 Work package identification information **<wpidinfo>**. Work package identification information is required for this work package. (Refer to 4.8.9.3.)

H.5.4.2 Work package initial setup **<initial_setup>**. Any procedure, **<proc>**, required by this work package shall include initial setup **<initial_setup>**. Initial setup requirements are found in 4.8.9.4.

H.5.4.3 Parts list **<essential_spares>**. When a weapons system TM contains a requirement to allow destruction of essential or spare parts (refer to H.5.3.7), a list of essential components and spares shall be developed and included in the work package.

H.5.4.4 Specific destruction procedures **<proc>**. The destruction procedures work package shall include specific destruction procedures for the weapons system or items (for item-level TMs). When required, specific procedures to destroy subordinate components shall be included. Specific destruction procedures for subordinate components shall not be referenced. As applicable, the order the procedures should be applied and the results of applying in the wrong order shall be included in this work package. When destruction procedures are developed, authors shall ensure the procedures use resources a soldier in the field would have readily accessible. The following methods shall be included as applicable:

a. Self-destruction options.
b. Explosive devices.
c. Improper operation.
d. Fire.
e. Mechanical devices (e.g., sledgehammers, crowbars, cranes, etc.).
f. Natural surroundings (e.g., rivers, lakes, caves, burying, hiding in vegetation, etc.).

As applicable, the procedures shall identify the points on the equipment that would be most advantageous to apply the previously described methods (e.g., where to place explosives or where to apply force with a mechanical device).

H.5.4.5 Classified equipment and documents. Special instructions for destruction of classified equipment and documents shall be provided.

H.6 **NOTES.**

The notes in section 6 apply to this appendix.

This page intentionally left blank.

BATTLE DAMAGE ASSESSMENT AND REPAIR (BDAR)

I.1 SCOPE.

I.1.1 Scope. The requirements provided in this appendix provide the technical content requirements for the preparation of BDAR procedures. This appendix covers only assessment and repair of equipment failures occurring on the battlefield. This repair is sometimes limited to such means of fixing as bypassing, patching, or jury-rigging components, or the use of alternative procedures to restore the equipment/system performance to a minimum operating condition. Fix procedures in BDAR information are for use in combat only. Standard maintenance procedures are used as soon as practicable. This appendix is a mandatory part of this standard. The information contained herein is intended for compliance.

I.2 APPLICABLE DOCUMENTS.

The applicable documents in section 2 of the basic standard apply to this appendix.

I.3 DEFINITIONS.

The definitions in section 3 of the basic manual apply to this appendix.

I.4 GENERAL REQUIREMENTS.

I.4.1 Maintenance level. Unless otherwise specified, BDAR repair functions shall be accomplished by the following maintenance levels/classes:

a. Field (Crew (operator)/AMC). Performed by crew (operator) or by a forward organizational maintenance team (MT).
b. Field (Maintanier/ASB). Performed by maintainer or ASB, when damage exceeds service repair capability. When required repair time or tactical conditions dictate, the damaged/failed item will be recovered or evacuated as appropriate.

I.4.2 Maintenance level/class applicability. Requirements contained in this appendix are applicable to all maintenance levels/classes/ unless specifically labeled in bold and in parentheses. The labeled requirement may specify a specific level (e.g., **Field**) (refer to 3.87) or a specific maintenance class (refer to 3.85) (e.g., **Maintainer** or **AMC**). The labeled requirement shall be applicable to all TMs containing that maintenance level/class. An explanation of applicable DA maintenance levels/classes is provided in section 3.

I.4.3 Preparation of digital data for electronic delivery. Data prepared and delivered digitally in accordance with this standard shall be XML tagged using the DTD. Data shall be formatted for presentation using stylesheets in accordance with MIL-STD-2361. Stylesheets may be prepared using XSL or other languages as specified by the acquiring activity. Where possible and when available, Army developed and provided stylesheets shall be used. Refer to 4.6 for information on obtaining or accessing the DTD and stylesheets. XML tags used in the DTD are noted throughout the text of this standard in bracketed, bold characters (e.g., **<genrepairwp>**) as a convenience for the author and to ensure that the tags are used correctly when developing a document instance.

I.4.4 Use of the Document Type Definition (DTD)/stylesheet. The DTD referenced in this appendix interprets the technical content and structure for the functional requirements contained in this standard. Its use is mandatory. Development of TMs is accomplished through the use of this standard, the DTD, and the guidance contained in MIL-HDBK-1222. Where possible and when available, Army developed and provided stylesheets shall be used. For additional information on DTD and specific stylesheets, refer to MIL-STD-2361.

I.4.5 Content structure. The examples provided herein are an accurate representation of the content structure requirements contained in this appendix and shall be followed to permit the effective use of the DTD.

I.4.6 Style and format. This standard provides style and format requirements for the technical content requirements described in this appendix. These requirements are considered mandatory and are intended for compliance.

I.4.7 Work package development. Data developed in accordance with this appendix shall be divided into work packages. These work packages should be stand alone and are broken into the following work package types: BDAR unique general information, battle damage assessment, repair, references, special or fabricated tools, expendable and durable items list, and substitute materials/part. A work package shall contain all information and references required to support the work package type.

I.4.8 Safety devices and interlocks. Information shall be prepared pertaining to the purpose and location of all safety devices and interlocks in conjunction with the pertinent procedures.

I.4.9 Electrostatic Discharge (ESD) sensitive parts. If the equipment contains ESD sensitive parts, components, or circuits; cautions and ESD labels shall be incorporated into the applicable tasks and procedures to ensure ESD sensitive parts are not damaged or degraded during maintenance and operation. Refer to 4.8.20 for requirements on labeling with ESD. Actions which could damage ESD sensitive parts, but which are not directly related to handling or operation of ESD sensitive parts, shall not be annotated with the ESD acronym, but shall be preceded by a caution statement.

I.4.10 Nuclear hardness **<hcp>**. If the weapon system/equipment has nuclear survivability requirements (e.g., overpressure and burst, thermal radiation, electromagnetic pulse, or transient radiation effects on electronics), cautions and Hardness-Critical Process (HCP) labels shall be incorporated into the applicable tasks and procedures to ensure that the hardness of the equipment is not degraded during handling or operation. Refer to 4.8.19 for requirements on labeling with HCP. Actions which could degrade hardness, but which are not directly involved in establishing nuclear hardness, shall not be annotated with the acronym, but shall be preceded by a caution statement.

I.4.11 Selective application and tailoring. This standard contains some requirements that may not be applicable to the preparation of all IETMs. Selective application and tailoring of requirements contained in this standard are the responsibility of the acquiring activity and shall be accomplished using APPENDIX A. The applicability of some requirements is also designated by one of the following statements: unless specified otherwise by the acquiring activity; as specified by the acquiring activity; or when specified by the acquiring activity.

I.5 **DETAILED REQUIREMENTS.**

I.5.1 Content. When specified by the acquiring activity, a battle damage manual <bdar> shall be prepared. Content shall be directed to fix-forward battlefield conditions; i.e., repairs must be made as quickly as possible and to the extent necessary to restore or maintain the applicable equipment/system. A BDAR manual shall consist of front matter, <gim>, <baim>, <brim>, <sim>, and rear matter as described in I.5.1.11 through I.5.6.4.4. The following statement shall appear at the beginning of each work package in the BDAR manual:

> BDAR FIXES SHALL BE USED ONLY IN COMBAT OR FOR TRAINING AT THE DISCRETION OF THE COMMANDER. (AUTHORIZED TRAINING FIXES ARE LISTED IN THE BDAR TRAINING PROCEDURES WORK PACKAGE.) IN ANY CASE, DAMAGE SHALL BE REPAIRED BY STANDARD MAINTENANCE PROCEDURES AS SOON AS PRACTICABLE.

I.5.1.1 Operating procedures. Operating procedures in BDAR manuals shall be restricted to testing a system, subsystem, or component for the purpose of damage assessment or to testing after a field expedient repair has been performed. If any change to normal operating procedures is made, the new procedures to be followed shall be given.

I.5.2 Front and rear matter. The front and rear matter requirements contained in 5.2.1 and 5.2.3. shall be used.

I.5.3 General information chapter <**gim**>. A general information chapter <gim> shall be provided. It shall consist of a general information work package <ginfowp> (refer to B.5.2.) and BDAR unique general information work package <bdar-geninfowp> (refer to I.5.3.2.)

I.5.3.1 General information work package **<ginfowp>**. A general information work package shall be prepared IAW B.5.2. It shall contain those elements required to support all Army TMs. This may include, but is not limited to a scope (required), equipment improvement reporting, etc.

I.5.3.2 BDAR unique general information work package **<bdar-geninfowp>**. This work package shall contain information that is general in nature, but unique to a BDAR manual. It shall inform the user/reader of the purpose of the BDAR information and its relationship to user personnel, other publications, and the end item/system it supports. It shall also contain the BDAR fixes statement. (Refer to I.5.1 and FIGURE I-1.)

I.5.3.2.1 Work package identification information **<wpidinfo>**. Work package identification information is required for this work package. (Refer to 4.8.9.3.)

I.5.3.2.2 Work package initial setup **<initial_setup>**. Initial setup information is not required for this work package.

I.5.3.2.3 BDAR fixes statement. The BDAR fixes statement given in I.5.1 shall be included in this work package.

I.5.3.2.4 Standards and practices **<bdar-std-practices>**. This paragraph shall contain information pertaining to standards and practices peculiar to combat conditions. It shall include, as a minimum, the following subparagraph headings and data (expanded as applicable):

a. BDAR Characteristics. An explanation of the expediency of repair, reason for deviation from standard maintenance practices, need to take greater risks, and other characteristics specific to repair under combat conditions shall be included..

b. Waiver of precautions. A reference to deviations from normal peacetime precautions shall be included. If such deviations are summarized in another portion of the BDAR information, reference shall be made to that portion.

c. Operating characteristics. The minimum functional combat capability criteria for the applicable end item/system shall be listed.

d. Training. The explanation/rationale concerning the use of BDAR fixes for training shall be addressed. It shall list all BDAR procedures that are authorized for training. The fix (training) procedures shall be grouped by major system(s) or components(s) as they appear in the BDAR information. Each procedure shall be cross-referenced to the work package where it appears. The following statement shall be included:

"After completion of training, the end item/system shall be returned to full serviceable condition using regular repair procedures as applicable."

I.5.3.2.5 Tasks and responsibilities **<bdar-task-resp>**. This paragraph shall consist of tasks that may be required as a result of battlefield damage. The person/group responsible for each task shall be identified. The tasks shall appear in the order in which they should be performed. This information shall be presented in narrative form. This section shall include the following subparagraphs:

I.5.3.2.5.1 Tagging/identifying BDAR repairs. Instructions for identifying components affected by BDAR fixes shall be included.

I.5.3.2.5.2 Reports. Instructions for completing reports resulting from BDAR fixes shall be addressed.

I.5.3.2.6 Combat Threats **<bdar-combat-threat>** (Aviation Only). This paragraph shall consist of the description of damage from threats confronting aircraft while on combat missions from armor-piercing, armor piercing incendiary projectiles, and high-explosive incendiary projectiles. It shall also describe damage from exposure to bombs, mortars, and artillery fragments and blasts when on the ground. The resulting effects to the metal airframe structure and follow-on effects should the mission be continued shall be given. The effects of secondary damage such as cracks, crippling, or buckling and loss or damage to mechanical fasteners shall also be given. Structure damage modes shall be defined for the type of materials and structure affected.

I.5.4 Battle damage assessment chapter <baim>. A battle damage assessment chapter containing one or more battle damage assessment work packages **<damage-assesswp>** (refer to I.5.4.1) shall be prepared.

I.5.4.1 Battle damage assessment work package(s) **<damage-assesswp>**. Multiple battle damage assessment work packages shall be prepared. Each of these work packages shall contain an introduction and fault assessment tables. The work packages shall be organized as follows:

a. End item. These shall be a battle damage assessment work package pertaining to the overall end item or major subsystems and shall discuss the capability of the end item/subsystem to perform its mission essential functions.
b. Major functional group. Unless otherwise specified by the acquiring activity, these work packages shall be titled, arranged, and shall correspond to the functional groups as they appear in the MAC and the parts information. The total number of work packages in the BDAR information shall be determined by the number of major functional groups applicable to the equipment/system covered by the manual.
c. Auxiliary Equipment. As required, battle damage assessment work packages shall be prepared for any auxiliary equipment.

Each battle damage assessment work package shall contain the information in I.5.4.1.1 through I.5.4.1.5.

I.5.4.1.1 Work package identification information **<wpidinfo>**. Work package identification information is required for this work package. (Refer to 4.8.9.3)

I.5.4.1.2 Work package initial setup **<initial_setup>**. Initial setup information is not required for this work package.

I.5.4.1.3 BDAR fixes statement. The BDAR fixes statement given in I.5.1 shall be included in this work package.

I.5.4.1.4 Introduction **<intro>**. This paragraph shall introduce the assessment table(s) in the work package. It shall contain paragraphs that will cover the scope of the work package and application of assessment tables.

I.5.4.1.5 Fault assessment tables. This paragraph shall contain assessment tables that lead the user to a repair procedure or another chart/table that will further aid in analyzing/assessing damage. As specified by the acquiring activity, the format of the assessment tables shall be either a troubleshooting procedure or a table. (Refer to FIGURE I-2 and FIGURE I-3 for examples.) The assessment procedures shall be developed and arranged so that logical and expedient methods are used to locate trouble.

I.5.5 Battle damage repair chapter <brim>. One or more battle damage repair chapters < brim>, containing one or more battle damage repair work packages <genrepairwp> shall be prepared (refer to I.5.5.1).

I.5.5.1 Repair work package **<genrepairwp>**. Unless otherwise specified by the acquiring activity, these work packages shall provide information for battlefield repair of end items, components, etc. The following types of repair work packages shall be included in the BDAR information module:

a. General repair. As required, procedures shall be provided for items that are not necessarily associated with a specific component or subsystem of the end item.
b. End item repair. Procedures for repair of the overall end item shall be provided.

c. Major functional group repair. Unless otherwise specified by the acquiring activity, these work package(s) shall be titled, arranged, and shall correspond to the functional groups as they appear in the MAC and the parts information. The total number of work packages in the BDAR repair information shall be determined by the number of major functional groups applicable to the equipment/system covered by the manual.

d. Auxiliary equipment. As required, procedures for repair of battle damage to auxiliary equipment shall be provided.

Each repair work package shall comply with the requirements contained in I.5.5.1.1 through I.5.5.1.5.

I.5.5.1.1 Work package identification information **<wpidinfo>**. Work package identification information is required for this work package. (Refer to 4.8.9.3)

I.5.5.1.2 Initial setup information **<initial_setup>**. Initial setup information is required for this work package. (Refer to 4.8.9.4.)

I.5.5.1.3 BDAR fixes statement. The BDAR fixes statement given in I.5.1 shall be included in this work package.

I.5.5.1.4 Introduction **<geninfo>**. This paragraph shall contain the following subparagraphs.

I.5.5.1.4.1 Scope. A brief statement that describes the purpose and application of the overall coverage of the work package shall be included.

I.5.5.1.4.2 Repair procedure index. A list of all procedures shall be contained in this work package. The procedures shall be listed in the order in which they appear. Procedures authorized for training and listed in the training fixes work package shall be boxed in.

I.5.5.1.5 Repair procedure **<bdar-repair-proc>**. This paragraph shall contain the repair procedure for the item(s) covered in the work package. The format and content of these paragraphs shall be as follows.

I.5.5.1.5.1 General. Remarks concerning the general nature and causes related to the damage and repair of the item shall be included. These remarks shall be brief.

I.5.5.1.5.2 Item name, trouble. The item name and the trouble shall be used as the subparagraph side head. The side head shall be followed with a general statement(s) concerning the particular type of trouble and repair to be made. Statement(s) shall be brief and as concise as possible. Subparagraphs shall be as follows.

I.5.5.1.5.2.1 Limitations **<bdar-limitation>**. This statement(s) shall identify, in relation to operational capability, the limits that would be imposed on the equipment/end item if the fix that follows is performed.

I.5.5.1.5.2.2 Personnel/time required **<bdar-persn>**. The number of personnel and time required to accomplish the fix shall be listed. Time shall be expressed in decimal point hours to the nearest one-tenth hour. An example follows:

1 soldier - 1.5 hrs

I.5.5.1.5.2.3 Materials/tools **<bdar-mtrl-tools>**. The materials and tools (peculiar) needed to make the BDAR fix shall be listed. Following each listed item shall be a reference (in parenthesis) to that work package and item number (e.g., hose (WP 0048, item 4). Reference to tools shall reference instructions for tool fabrication when applicable. Any other necessary information (such as quantities and sizes) shall be provided.

I.5.5.1.5.2.4 Procedural steps **<proc>**. Each step shall be listed numerically and placed in the sequential order in which it will be performed. Steps shall be as prescribed in 4.8.12. The last procedural step for every BDAR fix shall be: "Record BDAR action taken. When mission is complete, as soon as practical, repair the equipment/system using standard maintenance procedures."

I.5.5.1.5.3 Options. When more than one method of making the same repair/fix exists, multiple options shall be included. Options shall be listed in order of effectiveness and listed consecutively as option 1, option 2, etc. Each option provided under the item name/trouble paragraph side head shall contain the subparagraphs required by I.5.5.1.5.2. Alternatives that do not include fixes shall also be listed as options.

I.5.5.1.5.4 Item name, category. When the basic item, identified in the section title, is divided into categories or types, each specific item shall be titled and covered within a separate paragraph. Each of these paragraphs shall contain only the information that applies to that specific item. For example: Information or procedures under a heading "high pressure" shall pertain to high pressure; low pressure information/ procedures (if applicable) shall appear under the heading, "low pressure."

I.5.6 Supporting information chapter <sim>. A supporting information chapter containing the following work packages shall be prepared.

I.5.6.1 References work package **<refwp>**. References for the BDAR information shall be included in the references work package for the system TM. The BDAR shall not have its own references work package

I.5.6.2 Special or fabricated tools work package **<bdartoolswp>**. The special or fabricated tools work package shall consist of the following information as described in I.5.6.2.1 through I.5.6.2.4.

I.5.6.2.1 Work package identification information **<wpidinfo>**. Work package identification information is required for this work package. (Refer to 4.8.9.3)

I.5.6.2.2 Initial setup information **<initial_setup>**. Initial setup information is only required for this work package (refer to 4.8.9.4) if fabricated tools are used.

I.5.6.2.3 BDAR fixes statement. The BDAR fixes statement given in I.5.1 shall be included in this work package.

I.5.6.2.4 Content and format. This work package shall contain a list of all tools and test equipment that are required for BDAR procedures and that are not common. This list shall be prepared in accordance with the requirements for a tool identification list in G.5.7. When fabrication of tools is required for BDAR, this work package shall also contain fabrication instructions for those tools. The fabrication instructions shall be prepared in accordance with the requirements for an illustrated list of manufactured items contained in E.5.3.10.

I.5.6.3 Expendable and durable items work package **<explistwp>**. Expendable and durable items required for BDAR information shall be included in the expendable and durable items list work package for the system TM. The BDAR shall not have its own expendable and durable items list work package.

I.5.6.4 Substitute materials/parts work package **<substitute-matwp>**. The substitute materials/parts work package shall consist of the following information as described in I.5.6.4.1 through I.5.6.4.4.

I.5.6.4.1 Work package identification information **<wpidinfo>**. Work package identification information is required for this work package. (Refer to 4.8.9.3)

I.5.6.4.2 Initial setup information **<initial_setup>**. Initial setup information is not required for this work package.

I.5.6.4.3 BDAR fixes statement. The BDAR fixes statement given in I.5.1 shall be included in this work package.

I.5.6.4.4 Content. This work package shall list materials and parts that may be used for BDAR fixes. Lists or tables shall include the primary material/part, the substitute/alternate material/part, and remarks (when applicable) that identify the limitations or degradation effected by use of the substitutes. The work package shall be divided into paragraphs by material type. When paragraphs are required, the first paragraph shall be titled introduction and shall provide a general explanation of the purpose and content of the other paragraphs. When applicable, a paragraph shall be dedicated to Petroleum, Oil, and Lubricant (POL) substitutes. For example of alternate/substitute material listing, refer to FIGURE I-4. For examples of POL substitutes, refer to FIGURE I-5 and FIGURE I-6.

I.6 **NOTES.**

The notes in section 6 apply to this appendix.

TM X-XXXX-XXX-BD 0001

MAINTAINER MAIJNTENANCE
BDAR INTRODUCTION

BDAR FIXES SHALL BE USED ONLY IN COMBAT OR FOR TRAINING AT THE DISCRETION OF THE COMMANDER. (AUTHORIZED TRAINING FIXES ARE LISTED IN APPENDIX E.) IN ANY CASE, DAMAGE SHALL BE REPAIRED BY STANDARD MAINTENANCE PROCEDURES AS SOON AS PRACTICABLE.

INTRODUCTION

Purpose

This Technical Manual (TM) is for use by operators, unit and Direct Support (DS) maintenance personnel. It provides procedures and guidelines for battlefield repairs on the M113 Family of Vehicles (FOV) under the forward support maintenance concept during combat.

The purpose of Battlefield Damage Assessment and Repair (BDAR) is to rapidly return disabled combat vehicles to the operation commander by expediently fixing, bypassing, or jury-rigging components to restore the minimum essential systems required for the support of the specific combat mission or to enable the tank to self-recover. These repairs may be temporary and may not restore full performance capability.

Scope

This TM describes BDAR procedures applicable specifically to M113 FOV. Expedient repairs of a general nature applicable to system or subsystem common to more than one combat vehicle, are covered in TM 9-2350-276-BD.

Many expedient repair techniques helpful in preparing a tank for recovery are included in FM 20-22, Vehicle Recovery Operations. Details of such procedures are not duplicated in the TM, although certain quick-fix battlefield operations which would, in some cases, prepare the vehicle for recovery or self-recovery will be described. Users of this manual should refer to FM 20-22 for further recovery-associated expedient repairs.

All possible types of combat damage and failure modes cannot be predicted, nor are all effective field repairs known. This TM provides guidelines for assessing and repairing battlefield failures of the 13 FOV and is not intended to be a complete catalog of all possible emergency repairs. The repairs described here serve as a guideline and are intended to stimulate the experienced mechanic to devise methods, as needed, to rapidly repair equipment in a combat crisis.

Application

The procedures in this manual are designed for battlefield environments and should be used in situations where standard maintenance procedures are impractical. These procedures are not meant to replace standard maintenance practices, but rather to supplement them strictly in a battlefield environment. Standard maintenance procedures will prov ide the most effective means of returning a damaged vehicle to ready starus provided that adequate time, replacement parts, and necessary tools are available. BDAR procedures are only authorized for use in an emergency situation in a battlefield environment, and only at the direction of the commander.

0001-1

FIGURE I-1. <u>Example of BDAR-general information work package.</u>

Table 1. Visual Inspection

ITEM/ACTION	FAULT ISOLATION	BDAR REFERENCE
I. Engine Visually Inspect →	Damage visible: - Evaluate extent of damage using procedures in	WP 0023, Table 1
↓ No Damage Found		
II. Fuel System Visually Inspect →	Damage visible: - Evaluate extent of damage using procedures in	WP 0024, Table 1
↓ No Damage Found		
III. Cooling System Visually Inspect →	Damage visible: - Evaluate extent of damage using procedures in	WP 0025, Table 1
↓ No Damage Found		
IV. Electrical System Visually Inspect →	Damage visible: - Evaluate extent of damage using procedures in	WP 0026, Table 1
↓ No Damage Found		

FIGURE I-2. <u>Example of BDAR assessment flowchart diagram.</u>

How to use the fault assessment tables:

a. A fault assessment table is organized so the user can quickly assess a particular system or capability by asking a series of questions.

b. First, ask a question. Your response will be either a “yes” or “no”. If it is “yes”, then you have no problem so go to the next question.

c. If it is “no”, then proceed to the work package listed.

Table 1. Mobility

Does engine start/run?	If no go to WP 0032
Does tank move in “D” and “R”?	If no go to WP 0033
Are the track and suspension in tact?	If no go to WP 0034 for track repair Or go to WP 0035 for suspension repair
Does tank steer/pivot?	If no go to WP 0036
Does tank brake?	If no go to WP 0037
Does tank have full power	If no go to WP 0038

FIGURE I-3. Example of BDAR assessment table.

Table 1. Hull Spares and Repair Parts

Parts		Applies To		From Weapons System					
NSN	Description	M1 (PM)	M1A1	M2 M3 Tank	M34 A2 Track	M48 A5 Famil	M60 Famil	M88 Famil	M109 Veh
5935-00-001-7325	Connector Plug	X	X	X					
5315-00-014-1283	Pin, Straight, Headless	X	X			X	X		
2530-00-015-2774	Spacer, Hub Track	X	X	X		X	X	X	X
4730-00-018-9566	Plug, Pipe	X	X	X		X	X	X	X
4730-00-050-4203	Fitting, Lubrication	X	X			X	X		
4730-00-050-4208	Fitting, Lubrication	X	X			X	X		
5340-00-057-3537	Clevis, Road End	X	X			X	X		
2530-01-201-4816	Roadwheel Assembly	X	X				X	X	
4730-00-080-9847	Adaptor, Straight	X	X			X	X	X	X
5340-00-088-4254	Clamp, Loop	X	X			X	X		
5340-00-088-6655	Clamp, Loop	X	X			X	X		
2920-00-088-8613		X	X				X		

FIGURE I-4. <u>Example of substitute materials/parts.</u>

Table 2. Substitute Lubricants and Hydraulic Fluids

Primary				Alternate		Expedient	Notes
Lubrication Point	Temperature Range	Military Specifications	NATO Product	US or NATO Equivalent	Soviet		
Gun Bore	Above 32°F +40°F/65°F	(PL-M) MIL-L-3150 PL-S VV-L-800	02-192 0-190				Not BDAR critical
Bore Evacuator	Above 32°F +40°F/65°F	(PL-M) MIL-L-3150 PL-S VV-L-800	0-192 0-190	OE/HDO-10 MIL-L-2104 OEA, MIL-G-46167			
Breech Block	Above 32°F +40°F/65°F	(PL-M) MIL-L-3150 PL-S VV-L-800	0-192 0-190	Any MIL-L-2104 OEA, MIL-G-46167			
Grenade Dischargers	Above 32°F +40°F/65°F	(PL-M) MIL-L-3150 PL-S VV-L-800	0-192 0-190	Any MIL-L-2104 OEA, MIL-G-46167			Not BDAR critical

FIGURE I-5. <u>Example of substitute lubricants and hydraulic fluids.</u>

Table 3. Substitute Fuels for Diesel Fuel W-F-800, DF-1, and NATO-F-54

Primary Fuel	Alternate Fuel	Expedient Fuel	Military Specification	Commercial Specification
Diesel Fuel VV-F-800 DF-1 NATO-F-54	See Below	See Below	X	
	*Automotive Diesel: ASTM-D-975 (1-D and 2-D)			X
	Kerosene: ASTM-D-3699			X
	Fuel Oil: ASTM-D-396 (Numbers 1 and 2)			X
	Distillate: NATO-F-75 (Low pour point)		X	
	Kerosene: NATO-F-5B		X	
	Aviation Turbine: MIL-T-5624 (JP4 and JP5) NATO-F-40		X	X

FIGURE I-6. <u>Example of substitute fuels</u>.

APPENDIX J

PREVENTIVE MAINTENANCE CHECKLIST (PMC)

J.1 SCOPE.

J.1.1 Scope. This appendix contains detailed requirements for the preparation of a page-based operator's pocket-size Preventive Maintenance Checklist (PMC) for major weapon systems and their related systems, subsystems, equipment, WRAs, and SRAs. This appendix is a mandatory part of the standard. The information contained herein is intended for compliance. The requirements are applicable for all maintenance levels/classes through overhaul (depot), including DMWRs and NMWRs.

J.2 APPLICABLE DOCUMENTS.

The applicable documents in section 2 apply to this appendix.

J.3 DEFINITIONS.

The definitions in section 3 apply to this appendix.

J.4 GENERAL REQUIREMENTS.

J.4.1 General. The requirements provided in this appendix provide the technical content requirements for PMC.

J.4.2 Development of a Preventive Maintenance Checklist (PMC). A PMC <pmc> shall be prepared when specified by the acquiring activity. The acquiring activity shall specify those inspection intervals for the PMC using those intervals as stated in E.5.3.4.2.3.1.2. (Refer to J.6.1.)

J.4.3 Preparation of digital data for electronic delivery. Data prepared and delivered digitally in accordance with this standard shall be XML tagged using the DTD. Data shall be formatted for presentation using stylesheets in accordance with MIL-STD-2361. Stylesheets may be prepared using XSL or other languages as specified by the acquiring activity. Where possible and when available, Army developed and provided stylesheets shall be used. Refer to 4.6 for information on obtaining or accessing this DTD and stylesheets. XML tags used in the DTD are noted throughout the text of this standard in bracketed, bold characters (e.g., **<ginfowp>**) as a convenience for the PMC author and to ensure that the tags are used correctly when developing a document instance.

J.4.4 Use of Document Type Definition (DTD)/stylesheet. The DTD referenced in this appendix interprets the technical content and structure for the functional requirements contained in this standard. Its use is mandatory. Development of PMCs is accomplished through the use of this standard, the DTD, and the guidance contained in MIL-HDBK-1222. Where possible and when available, Army developed and provided stylesheets shall be used. For additional information on the DTD and specific stylesheets, refer to MIL-STD-2361.

J.4.5 Content structure. The examples provided herein are an accurate representation of the content structure requirements contained in this appendix and shall be followed to permit the effective use of the DTD.

J.4.6 Style and format. This standard provides style and format requirements for the technical content requirements described in this appendix. These requirements are considered mandatory and are intended for compliance.

J.4.7 Preventive Maintenance Checklist (PMC) numbering. The PMC shall use the same basic TM identification number as the operator or field level maintenance manual from which the preventive maintenance checks and services were extracted. A "-##PMC" suffix shall be added to the basic TM number. (Refer to FIGURE J-1.)

J.4.8 National Stock Numbers (NSNs) and Part Numbers (P/Ns). NSNs shall not be used in procedural steps in the PMC. P/Ns shall not be used in procedural steps except when absolutely necessary for identification.

J.4.9 Illustrations. Illustrations may be used in the PMC.

J.4.10 Selective application and tailoring. This standard contains some requirements that may not be applicable to the preparation of all PMCs. Selective application and tailoring of requirements contained in this standard are the responsibility of the acquiring activity and shall be accomplished using APPENDIX A. The applicability of some requirements is also designated by one of the following statements: unless specified otherwise by the acquiring activity; as specified by the acquiring activity; or when specified by the acquiring activity.

J.5 **DETAILED REQUIREMENTS.**

J.5.1 Basic content. The PMC shall consist of cover page information (refer to 5.2.1.2, J.5.2, and FIGURE J-1) and the checklist.

J.5.2 Usage note and reporting errors and recommending improvements statement **<reporting>**. The following statements shall appear on the cover page of the PMC (italicized text within parentheses shall be replaced with the appropriate information) (refer to FIGURE J-1):

"**NOTICE**

To effectively perform the procedures in this checklist, you must be experienced in using the preventive maintenance checks and services (PMCS) table in Technical Manual (TM) (*insert the applicable operator TM number*). The checklist item numbers match those in the PMCS table in the TM.

REPORTING ERRORS AND RECOMMENDING IMPROVEMENTS

You can help improve this publication. If you find any errors, or if you know of a way to improve this publication, please let us know. Mail your letters or DA Form 2028-2 (Recommended Changes to Publications and Blank Forms) directly to: (*the address of proponent*). A reply will be sent to you."

J.5.3 Technical content. The PMC shall contain all items for the interval of inspections determined by the acquiring activity. The specified inspections shall be taken directly from the applicable PMCS table (refer to E.5.3.4.2.3.1) in the operator or field level manual containing the inspection.

J.5.4 Item numbering. Item numbers in the checklist shall be the same as those assigned to the procedures in the operator or field level maintenance PMCS table.

J.5.5 Inspection checklist use. The PMC shall be used in the same manner as the PMCS table. (Refer to E.5.3.4.)

J.6 **NOTES.**

(This section contains information of a general or explanatory nature that may be helpful, but is not mandatory.)

J.6.1 Acquisition requirements. The acquiring activity should specify the inspection intervals to be included in the PMC. (Refer to J.4.2.)

TM 9-2350-252-10PMC

CREW (OPERATOR) DAILY PREVENTIVE MAINTENANCE CHECKLIST FOR HULL

FIGHTING VEHICLE, INFANTRY M2 AND M2A1

NOTICE

To effectively perform the procedures in this checklist, you must be experienced in using the PMCS table in TM 9-2350-252-10-1. The item numbers in this checklist are the same as those in the PMCS tables.

REPORTING ERRORS AND RECOMMENDING IMPROVEMENTS

You can help improve this publication. If you find any errors, or if you know of a way to improve this publication, please let us know. Mail your letters or DA Form 2028-2 (Recommended Changes to Publications and Blank Forms) directly to: (the address of proponent). A reply will be sent to you.

DISTRIBUTION STATEMENT A: Approved for public release; distribution is unlimited

HEADQUARTERS, DEPARTMENT OF THE ARMY
29 SEPTEMBER 1989

FIGURE J-1. Example PMC cover page.

APPENDIX K

LUBRICATION ORDERS

K.1 SCOPE.

K.1.1 Scope. This appendix establishes the technical content requirements for the preparation of stand-alone Lubrication Orders (LOs) for major weapon systems and their related systems, subsystems, equipment, WRAs, and SRAs. This appendix is a mandatory part of this standard. The information contained herein is intended for compliance. The requirements are applicable for all maintenance levels/classes through overhaul (depot) including DMWRs and NMWRs.

K.2 APPLICABLE DOCUMENTS.

The applicable documents in section 2 apply to this appendix.

K.3 DEFINITIONS.

The definitions in section 3 apply to this appendix.

K.4 GENERAL REQUIREMENTS.

K.4.1 General. The requirements provided in this appendix provide the technical content requirements for the LOs.

K.4.2 Development of lubrication instructions. Lubrication instructions shall be prepared for all equipment, except aircraft, that require lubrication. These lubrication instructions shall be prepared as a stand-alone work card except in the following cases:

a. When specified by the acquiring activity, the lubrication instructions may be included in the PMCS work package or as a lubrication work package. (Refer to E.5.3.4.)
b. When the lubrication procedures are classified, the lubrication instructions shall be included in the PMCS or a lubrication work package that is classified to at least the classification level of the instructions or higher. Classified instructions shall be marked and handled as specified in the current security regulations.

K.4.3 Preparation of digital data for electronic delivery. Data prepared and delivered digitally in accordance with this standard shall be XML tagged using the DTD. Data shall be formatted for presentation using stylesheets in accordance with MIL-STD-2361. Stylesheets may be prepared using XSL or other languages as specified by the acquiring activity. Where possible and when available, Army developed and provided stylesheets shall be used. Refer to 4.6 for information on obtaining or accessing this DTD and stylesheets. XML tags used in the DTD are noted throughout the text of this standard in bracketed, bold characters (e.g., **<ginfowp>**) as a convenience for the author and to ensure that the tags are used correctly when developing a document instance.

K.4.4 Use of Document Type Definition (DTD)/stylesheet. The DTD referenced in this standard interprets the technical content and structure for the functional requirements contained in this standard. Its use is mandatory. Development of TMs is accomplished through the use of this standard, the DTD, and the guidance contained in MIL-HDBK-1222. Where possible and when available, Army developed and provided stylesheets shall be used. For additional information on the DTD and specific stylesheets, refer to MIL-STD-2361.

K.4.5 Content structure. The examples provided herein are an accurate representation of the content structure requirements contained in this appendix and shall be followed to permit the effective use of the DTD for LOs.

K.4.6 Style and format. This standard provides style and format requirements for the technical content requirements described in this appendix. These requirements are considered mandatory and are intended for compliance.

K.4.7 Work package development. Data developed in accordance with this appendix shall be divided into work packages. These work packages should be stand alone and are broken into the following work package types: lubrication. A work package shall contain all information and references required to support the work package type.

K.4.8 Warnings, cautions, and notes. Warnings, cautions, and notes shall be applied in accordance with 4.8.7.

K.4.9 Illustrations. Illustrations may be used in the LO.

K.4.9.1 Single illustrations. Illustrations shall be used to show the location of grease fittings and shall indicate the number of grease points (when applicable). A minimum number of illustrations shall be used. Foldouts shall not be used in lubrication orders.

K.4.9.2 Multiple illustrations. When it is necessary to provide multiple numbers of illustrations to show separate component parts, each illustration shall have an individual title.

K.4.10 Safety devices and interlocks. Information shall be prepared pertaining to the purpose and location of all safety devices and interlocks in conjunction with the pertinent procedures.

K.4.11 Electrostatic Discharge (ESD) sensitive parts. If the equipment contains ESD sensitive parts, components, or circuits, cautions and ESD labels shall be incorporated into the applicable tasks and procedures to ensure ESD sensitive parts are not damaged or degraded during maintenance and operation. (Refer to 4.8.20 for requirements on labeling with ESD.) Actions which could damage ESD sensitive parts, but which are not directly related to handling or operation of ESD sensitive parts, shall not be annotated with the ESD acronym, but shall be preceded by a caution statement.

K.4.12 Selective application and tailoring. This standard contains some requirements that may not be applicable to the preparation of all TMs. Selective application and tailoring of requirements contained in this standard are the responsibility of the acquiring .activity and shall be accomplished using APPENDIX A. The applicability of some requirements is also designated by one of the following statements: unless specified otherwise by the acquiring activity; as specified by the acquiring activity; or when specified by the acquiring activity.

K.5 **DETAILED REQUIREMENTS.**

K.5.1 Lubrication Order (LO) card **`<lubeorder>`**.

K.5.1.1 Logbook size lubrication order. LOs shall be prepared in either log book or standard page size. (Refer to TABLE I.) LO card size C shall be used in conjunction with the operators log book manual. LOs shall not be folded.

K.5.1.2 Lubrication order (LO) number. The LO number shall appear on the first card in accordance with K.5.2.1. The LO number shall appear at the top of all the other cards in the LO.

K.5.1.3 Lubrication order (LO) card numbering. Unless otherwise specified by the acquiring activity, the card number shall be centered at the bottom of the card. Each printed side of a card shall be numbered sequentially. Each side shall reflect the relationship of that side to the total number of printed sides. For example, 1 of 4, 2 of 4, 3 of 4, and 4 of 4. If only one side of a card is printed, it shall be numbered 1 of 1.

K.5.2 Title page (first card) contents **<frntcover_abbreviated>**. The title page shall contain the LO number, a heading, title, NSN, part number, CAGEC, the EIC, a reference line, reporting errors information, distribution statement/export control warning/destruction notice, and location of the LO statement. Refer to FIGURE K-1.

K.5.2.1 Heading. The heading shall consist of the words "LUBRICATION ORDER," the date printed, the LO number, and a supersedure notice (if applicable), formatted as shown in FIGURE K-1.

K.5.2.2 Title **<tmtitle>**. The title shall appear below the heading and read the same as the title on the related TM. When more than one piece of equipment is covered by the LO, the title for each shall appear separately.

K.5.2.3 National Stock Number (NSN), part number, Commercial and Government Entity Code (CAGEC), and End Item Code (EIC). The applicable NSNs, part numbers, CAGECs, and EICs for each piece of equipment covered by the LO shall be entered beneath the title(s).

K.5.2.4 Reference line. A reference line consisting of the publication number(s) of the related TMs shall be placed below the title within the applicable area.

K.5.2.5 Reporting errors **<reporting>**. LO cards shall contain a Reporting Errors and Recommending Improvements Statement.

K.5.2.6 Distribution statement, export control warning, and destruction notice **<notices>**. A distribution statement and, when required, an export control warning and destruction notice shall be placed on the first card. Requirements for these notices are contained in 5.2.1.1.8 through 5.2.1.1.10 and in DODD 5230.24.

K.5.2.7 Lubrication order (LO) statement **<general_purpose_notices>**. The following statement shall be included on the title page of the LO:

> "A copy of this lubrication order will remain with the equipment at all times; instructions contained herein are mandatory."

K.5.3 Introduction **<intro>**. The following statements shall be included in the LO, as applicable.

K.5.3.1 General statement(s)/notes.

K.5.3.1.1 General note placement. General statement(s)/notes shall be placed in the LO that are applicable to the overall understanding of requirements of the LO procedures. These statements/notes should be placed on the first card when possible. If insufficient space is available for these notes on the first card, they shall be placed before the first lubrication procedure.

K.5.3.1.2 General note content. The statement(s) shall include such information as adherence to lubrication intervals, explanation of interval symbols, maintenance levels/classes, exceptional operational requirements, abbreviations, fittings, and parts cleaning. A statement concerning corrosion control shall be used as applicable. The statement shall provide instructions or reference corrosion control requirements provided in the applicable narrative TM. (Refer to FIGURE K-2 for an example.)

K.5.3.2 Oil filter statement. As applicable, a statement similar to the following shall be included:

"Oil filters shall be serviced/cleaned/changed as applicable, when:

a. They are known to be contaminated, or clogged,
b. Service is recommended by Army Oil Analysis Program (AOAP) laboratory analysis, or
c. At prescribed hardtime intervals."

K.5.3.3 Army Oil Analysis Program (AOAP) statements. One of the following statements shall be included for all equipment falling under the AOAP.

K.5.3.3.1 Army Oil Analysis Program (AOAP) sampling interval statement. A statement similar to the following shall be included:

"Engine oil/transmission oil/hydraulic fluids must be sampled at (*insert applicable hour/mileage time frame*) as prescribed by (*insert DA PAM 750-8 or DA PAM 738-751).”*

K.5.3.3.2 Army Oil Analysis Program (AOAP) not available/non-enrolled statement. When a component/equipment is not enrolled in the AOAP, or oil analysis support is not available, a statement similar to the following shall be used:

"This (*enter name of component/equipment*) is not enrolled in the Army Oil Analysis Program. HARDTIME INTERVALS APPLY."

K.5.3.4 Warranty hardtime statement. When applicable, the following statement shall be used:

"For equipment under manufacturer's warranty, hardtime oil service intervals shall be followed. Intervals shall be shortened if lubricants are known to be contaminated or if operation is under adverse conditions such as longer than usual operating hours, extended idling periods, extreme dust, etc."

K.5.4 Lubrication procedures **<lubewp>**. Lubrication procedures shall be prepared and shall include all applications, procedures, authorized lubricants, intervals, man-hour requirements, lubrication points, and AOAP requirements. Unless otherwise specified by the contracting activity, the lubrication procedures shall be presented in grouped sequence by interval to enable the user to receive, lubricate, and return to an acceptable performance standard all components of the equipment in a minimum amount of time with the skills, tools, test equipment, and spare parts authorized by the LMI or the MAC. Unless otherwise specified by the contracting activity, lubrication procedures shall be based upon the principles of RCM logic.

K.5.4.1 Work package identification information **<wpidinfo>**. Work package identification information is required for this work package. (Refer to 4.8.9.3.)

K.5.4.2 Work package initial setup **<initial_setup>**. Initial setup is required for this work package. (Refer to 4.8.9.4.)

K.5.4.3 Maintenance class. The lowest class of maintenance authorized to perform the task shown shall be identified. The applicable maintenance class symbol shall be shown in parentheses after the task. Applicable maintenance classes to be used are provided in TABLE K-I.

TABLE K-I. Maintenance classes.

Symbol	Maintenance Class
C	Crew
O (aviation only)	Aviation Maintenance Company (AMC)
F	Maintainer or Aviation Support Battalion (ASB)
H	Below Depot
L	Specialized Repair Activity or Theater Aviation Support Maintenance Group (TASMG)
D	Depot

K.5.4.4 Grouped lubrication points. When grouped lubrication points require the same lubricant at the same interval, the type and number of points shall be identified and described by one of the following methods:

a. Multi-headed, solid-shafted arrows shall point to each of the lubrication points. (Refer to FIGURE K-3.)
b. Lubrication point notes shall provide instructions for applying lubricants, taking into account the following factors:
   (1) Type, grade, availability, and properties of prescribed lubricant.
   (2) Expected temperature.
   (3) Lubrication gun and tools available to authorized maintenance level.
   (4) Types of lubrication fittings.
   (5) Possible ill effects of excessive or insufficient lubrication.

Caution shall be stressed where over or under lubrication of a part will damage that part or closely associated parts. Such cautionary notes shall either be included as a portion of the point note or as a special note. (Refer to K.5.8.)

K.5.4.5 Disassembling and hand packing. If applicable, disassembling and hand packing instructions shall be provided for medium- and high-speed antifriction bearings which are sensitive to the amount of lubrication applied and do not have bleed holes or relief valves.

K.5.4.6 Cleaning, disassembling, and reassembling. Cleaning, disassembling, and reassembling instructions that are required before or after lubrication shall be provided. If instructions are extensive and contained in a TM, the TM shall be referenced.

K.5.4.7 Washing and natural drying. If applicable, instructions shall be given for washing and natural drying of finely machined and dirt-sensitive parts before relubricating. Use of compressed air jets or temperatures above 212 degrees Fahrenheit shall not be prescribed.

K.5.4.8 Preservative material. Instructions shall not specify a coating of preservative material, either before or after packing parts that are lubricated with grease; nor shall they specify an application of oil, solvent, or additional grease to a "sealed-for-life" or prepacked antifriction bearing.

K.5.5 Lubricants and military symbols. Unless otherwise specified by the acquiring activity, lubricants shall be identified by standard military symbols, in accordance with MIL-HDBK-113 and MIL-HDBK-275. (Refer to FIGURE K-3.) The lubricant symbols and interval symbols shall be printed in separate, vertical columns on the inner side of the point names. These columns shall be headed by the words "LUBRICANT" and "INTERVAL." Those lubrication points that are serviced or lubricated by checking the level, replenishing the lubricant, or draining and refilling shall be indicated by the lubricant's symbol at the point on the illustration that is designated for replenishing or refilling. The amount of lubricant required shall be given either in the point note or in the "Capacity" column of the table, if applicable.

K.5.5.1 Lubrication interval symbols. Unless otherwise specified by the acquiring activity, the lubrication interval symbols in TABLE K-II shall be used:

TABLE K-II. Lubrication intervals.

Symbol	Definition
D	Daily
W	Weekly
M	Monthly
Q	Quarterly
S	Semiannually
A	Annually
B	Biannually
H	Hours (operated)
MI	Miles (operated)
KM	Kilometers (operated)
RDS	Rounds (fired)
OC	On Condition
MRA	Maintenance Repair Action

K.5.6 Measurements. Unless otherwise specified by the acquiring activity, all measurements expressed in the text, in tables, or in illustrations shall be expressed in both U.S. standard units and metric units. The order shall be in accordance with equipment markings.

K.5.7 Lubricant table. As applicable, a table(s) shall be prepared to provide information needed to select the proper lubricant for various temperature ranges and uses. The size and location of the table(s) shall be tailored to meet layout requirements and shall include as applicable, information on temperature range, lubricant, military symbol, NATO code, specification, NSN, capacity, interval between service, and man-hours required to complete all service by type stated to the nearest tenth for all lubricants prescribed by the LO. (Refer to FIGURE K-4 for an example.)

K.5.7.1 Notes to tables. As necessary, when specific restrictions, preferred grades, and other conditions exist, notes shall be annotated on tables in accordance with MIL-STD-40051-2. For example: 1/"When MIL-PRF-2104 lubricant is authorized, use 15W-40 (OE/HDO-15/40) when available and the applicable temperature range exists," or 2/"15W-40 oil is not authorized in this particular (*enter component name*)." Where applicable, the statement "For Arctic Operation, refer to FM 9-207" shall be included as a note.

K.5.8 Special notes.

K.5.8.1 Pertinent lubrication point information. As applicable, additional pertinent lubrication point information shall be incorporated into the LO. When applicable, the LO shall contain a special note referencing, but not repeating, instructions in TMs.

K.5.8.2 Effect of extreme conditions. If applicable, pertinent instructions relevant to the effect of extreme conditions such as temperature, humidity, or altitude on lubrication requirements for the equipment shall be included as a special note.

K.5.9 Lubrication order rear matter **<lubeorder_rear>**.

K.5.9.1 Reporting errors and recommending improvements DA Form 2028 **<da2028>**. A DA Form 2028 shall be included as prescribed in 5.2.3.3.

K.5.9.2 Authentication block **<authent>**. An authentication block, provided by the acquiring activity, shall be included in the LO. Distribution information, as applicable, shall be placed below the authentication block.

K.5.9.3 Back cover **<back>**. The lubrication order shall contain a back cover as specified in 5.2.3.6.

K.6 **NOTES.**

The notes in section 6 apply to this appendix.

LO X-XXXX-XXX-X

LUBRICATION ORDER
TITLE
NSN
PART NUMBER
CAGEC
EIC

References: TM X-XXXX-XXX-10, TM X-XXXX-XXX-20, LO X-XXXX-XXX-XX, AND FM X-XXX

REPORTING OF ERRORS

You can help improve this LO. If you find any mistakes or if you know of a way to improve the procedures, please let us know. Mail your letter, DA Form 2028 (Recommended Changes to Publications and Blank Forms) directly to: (*Insert name and address of proponent*.) You may also send your recommended changes via electronic mail or by fax. Our fax number is (*insert DSN and commercial number of proponent*). Our e-mail address is (*insert e-mail address of proponent*). A reply will be furnished to you.

SUPERSEDURE NOTICE:

DISTRIBUTION STATEMENT C: Distribution authorized to U.S. government agencies and their contractors. This publication is Administrative-Operational Use required for administrative and operational purposes, as determined on (*insert date*). Other request for this document must be referred to (*insert name and address of proponent.*)

WARNING: This document contains technical data whose export is restricted by the Arms Export Control Act (Title 22, U.S.C., Sec 2751, et. seq.) or the Export Administration Act of 1979, as amended, Title 50, U.S.C., App. 2401, et. seq.. Violations of these export laws are subject to severe criminal penalties. Disseminate in accordance with provisions of DOD Directive 5230.25.

DESTRUCTION NOTICE: Destroy by any method that will prevent disclosure of the contents or reconstruction of the document.

GENERAL NOTICE: Copy of this lubrication order will remain with the equipment at all times; instructions contained herein are mandatory.

SERVICE NOMENCLATURE
LO DATE

Card 1 of 16

FIGURE K-1. Example of first card.

NOTES:

This LO is for crew (C) maintenance. Lube intervals (on-condition or hardtime) are based on normal operation. Lube more during constant use, and less during inactive periods. Use correct grade of lubricant for seasonal temperature expected.

On the picture, a dash line (--) means lube points on both sides.

Clean parts with dry solvent (SD), type II, or equivalent. Use cleaning compound solvent (RBC) on powder-fouled parts. Dry before lubricating. DO NOT use fluid or semi-fluid lubricant on SFD lubricated surface. Wipe surfaces dry.

Before you start your lube service.

ALWAYS	NEVER
a. Clean grease fittings before lubrication.	a. Use wrong type/grade grease.
b. Use the lubrication order as your guide.	b. Use too much lubricant.

FIGURE K-2. Example of general statements/notes.

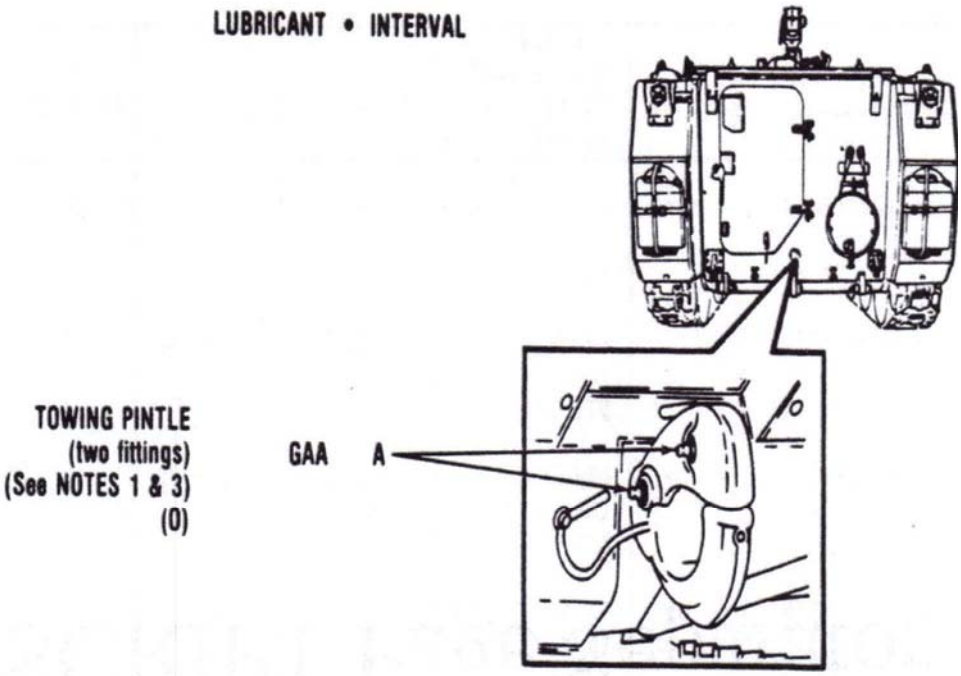

FIGURE K-3. <u>Example – identification of lubricant symbol and lubrication points, interval, and note.</u>

TABLE I. Lubricant Table for Engine XXC

Temperature Range	Lubricant Mil. Symbol (NATO Code) Specification	Capacity	Interval	Man-hour
-18°C to +49ºC (zero to +120ºF)	OE/HDO 14/40 (0-1236) MIL-PRF-2104	5 QTS	200 MI	.5
-25°C to +40ºC (-15ºF to +40ºF)	OE/HDO 10 (0-237) MIL-PRF-2104	5 QTS	200 MI	.5
-10°C to +49ºC (+15ºF to +120ºF)	OE/HDO 30 (0-238) MIL-PRF-2104	5 QTS	200 MI	.5
-05°C to +49ºC (+25ºF to +120ºF)	OE/HDO 40 (NA) MIL-PRF-2104	5 QTS	200 MI	.5
-57°C to +04ºC (-70ºF to +40ºF)	OEA (D-183) MIL-PRF-2104	5 QTS	100 MI	.5

FIGURE K-4. Example of lubricant table.

This page intentionally left blank.

APPENDIX L

MAINTENANCE OR DEMILITARIZATION OF AMMUNITION PROCEDURES

L.1 SCOPE.

L.1.1 Scope. This appendix establishes the technical content requirements for the preparation of DMWRs for the maintenance or demilitarization of conventional and chemical ammunition, hereafter referred to as ammunition for major weapon systems and their related systems, subsystems, equipment, WRAs, and SRAs. This appendix is a mandatory part of this standard. The information contained herein is intended for compliance.

L.2 APPLICABLE DOCUMENTS.

The applicable documents in section 2 of the basic standard apply to this appendix.

L.3 DEFINITIONS.

The definitions in section 3 of the basic standard apply to this appendix.

L.4 GENERAL REQUIREMENTS.

L.4.1 General. The requirements provided in this appendix provide the technical content requirements for the maintenance or demilitarization of ammunition.

L.4.2 Development of maintenance or demilitarization instructions. Maintenance or demilitarization instructions shall cover all items comprising the ammunition. Tasks shall be presented in the order in which they are performed. Procedures shall refer to specific maintenance tasks or demilitarization tasks to complete the tasks.

L.4.3 Preparation of digital data for electronic delivery. Data prepared and delivered digitally in accordance with this standard shall be XML tagged using the DTD. Data shall be formatted for presentation using stylesheets in accordance with MIL-STD-2361. Stylesheets may be prepared using XSL or languages as specified by the acquiring activity. Where possible and when available, Army developed and provided stylesheets shall be used. Refer to 4.6 for information on obtaining or accessing this DTD and stylesheets. XML tags used in the DTD are noted throughout the text of this standard in bracketed, bold characters (e.g., **<ginfowp>**) as a convenience for the author and to ensure that the tags are used correctly when developing a document instance.

L.4.4 Use of Document Type Definition (DTD)/stylesheet. The DTD referenced in this appendix interprets the technical content and structure for the functional requirements contained in this standard. Its use is mandatory. Development of DMWRs is accomplished through the use of this standard, the DTD, and the guidance contained in MIL-HDBK-1222. Where possible and when available, Army developed and provided stylesheets shall be used. For additional information on the DTD and specific XSL, refer to MIL-STD-2361.

L.4.5 Content structure and format. The examples provided herein are an accurate representation of the content structure and format requirements contained in this appendix and shall be followed to permit the effective use of the DTD for demilitarization or maintenance procedures.

L.4.6 Style and format. This standard provides style and format requirements for the technical content requirements described in this appendix. These requirements are considered mandatory and are intended for compliance.

L.4.7 Work package development. Data developed in accordance with this appendix shall be divided into work packages. These work packages should be stand-alone and are broken into the following work package types: general information, DMWR introduction, operational requirements, quality acceptance requirements, and supporting information.

L.4.8 Electrostatic discharge (ESD) sensitive parts. If the equipment contains ESD sensitive parts, components, or circuits, cautions and ESD labels shall be incorporated into the applicable tasks and procedures to ensure ESDsensitive parts are not damaged or degraded during maintenance and operation. (Refer to 4.8.20 for requirements on labeling with ESD.) Actions which could damage ESDsensitive parts, but which are not directly related to handling or operation of ESD sensitive parts, shall not be annotated with the ESD acronym, but shall be preceded by a caution statement.

L.4.9 Selective application and tailoring. This standard contains some requirements that may not be applicable to the preparation of all DMWRs. Selective application and tailoring of requirements contained in this standard are the responsibility of the acquiring activity and shall be accomplished using APPENDIX A. The applicability of some requirements is also designated by one of the following statements: unless specified otherwise by the acquiring activity; as specified by the acquiring activity; or when specified by the acquiring activity.

L.5 **DETAILED REQUIREMENTS.**

L.5.1 General. The requirements provided in this appendix provide the technical content requirements for the maintenance or demilitarization of ammunition.

L.5.2 Preparation of maintenance or demilitarization DMWRs. The DMWR <**dmwr_ammo**> shall contain the following work packages outlined below, as applicable, in addition to the front matter (5.2.1) and rear matter (5.2.3):

a. General Information Work Package
b. DMWR Introduction Work Package
c. Operational Requirements Work Package
d. Quality Acceptance Requirements Work Package
e. Supporting Information
   (1) References Work Package
   (2) Expendable and Durable Items List Work Package
   (3) Equipment and Special Facilities Work Package
   (4) Tabulated Data, Military Specifications, and Drawings Work Package
   (5) Approved Intraplant Transfer Equipment Work Package
   (6) Pentachlorophenol (PENTA)-Treated Packing Materials Work Package
   (7) Environmental Requirements Work Package
   (8) Hazard Analysis Work Package
   (9) Other Supporting Information Work Packages

L.5.3 General Information work package **<ginfowp>**. A general information work package shall be prepared in accordance with B.5.2.

L.5.4 DMWR introduction work package **<dmwr_introwp>**. The DMWR introduction work package shall be prepared in accordance with the requirements contained in L.5.4.1 through L.5.4.15.

L.5.4.1 Work package identification information **<wpidinfo>**. Work package identification information is required for this work package. (Refer to 4.8.9.3)

L.5.4.2 Work package initial setup **<initial_setup>**. Initial setup is not required for this work package.

L.5.4.3 Work planning **<work_planning>**. Accumulation of excess ammunition items, removal of line rejects or explosive waste/hazardous waste, and removal of items containing precious metals shall be addressed.

L.5.4.4 Disposition **<disposition>**. Disposition guidelines for serviceable and unserviceable components and materials shall be included as a part of each operation description and shall address removal of hazardous materials or components and inspection of salvaged materials prior to transfer to Defense Reutilization Marketing Office (DRMO). Reference may be made to publications for information on packing, marking, and shipping generated assemblies, components, and materials.

L.5.4.5 Equipment **<equipment>**. The equipment information provided shall contain, but not be limited to, the following paragraph:

> "Equipment cited herein for the various operations has been approved for the operations specified. Activities intending to use other equipment for these operations must obtain approval from the publication's proponent agency by filing a deviation, waiver, or exception.
>
> Transfer and materials handling equipment must conform to requirements set forth in AR 385-10. The Approved Intraplant Transfer Equipment Work Package lists preferred approved Ammunition Peculiar Equipment (APE) for moving and handling ammunition and components.
>
> Use of APE or nonstandard APE is governed by AR 700-20. All modifications to existing APE and locally fabricated nonstandard APE must have prior approval in accordance with AR 700-20. Locally designed and fabricated equipment, other than APE or nonstandard APE, must be approved by local safety office and the commander of the installation.
>
> APE and associated kits must be operated in accordance with the applicable operation and maintenance manual."

L.5.4.6 Safety requirements **<sfty_req>**. The safety requirements information provided shall contain, but not be limited to, the following paragraph:

> "Guidance for safety requirements as prescribed by current safety directives and regulations shall be addressed."

L.5.4.7 Protection against general hazards **<gen_hazards>**. Guidance for general hazards shall be addressed for the ammunition and materials requiring protection against the general hazards. Additionally, requirements for handling of ammunition, requirements for wearing of suitable protective clothing, and precautions when handling PENTA-treated packing materials and pallets shall be included. Reference shall be made to PENTA-Treated Packing Materials Work Package for additional data on personal hygiene requirements, working with PENTA-treated wood, and the disposition of contaminated clothing.

L.5.4.8 Protection against specific hazards **<spec_hazards>**. Specific hazards shall be listed in each applicable operation for the ammunition and materials requiring protection against the specific hazards.

L.5.4.9 Hazard analysis **<haz_analysis>**. As a minimum, the Hazard Analysis information provided shall contain the following statement and shall reference the Hazard Analysis Work Package.

> "A hazard analysis identifies potential hazards associated with these operations and countermeasures to mitigate these hazards, and assesses the probability and effect of occurrence."

L.5.4.10 Environmental regulation compliance **<erc>**. Environmental regulations implemented by federal, state, and local governments shall be addressed. (Refer to L.5.7.7.)

L.5.4.11 Resource conservation and recovery regulations **<rcrr>**. Pertinent resource conservation and recovery regulations, as contained in the Resource Conservation and Recovery Act, 42 U.S.C. 6901 et seq., shall be addressed.

L.5.4.12 Resource recovery **<resource_recovery>**. Resource recovery shall contain a paragraph similar to the following:

> "All items of salvageable value will be salvaged as scrap or reusable material. All explosives and hazardous materials that can be successfully recovered and reused will be recovered; otherwise, the materials will be disposed of by an environmentally safe and approved method."

L.5.4.13 Reporting requirements **<reporting_req>**. Guidance for reporting work accomplishments shall be addressed.

L.5.4.14 Tabulated data **<tabdata>**. Reference shall be made to the Tabulated Data, Military Specifications, and Drawings Work Package for the tabulated data.

L.5.4.15 Flowchart **<flowchart>**. A flowchart providing an overview of all operations may be included but is not mandatory.

L.5.5 Operational requirements work package **<dmwr_operationalreqwp>**. The operational requirements work package shall be prepared in accordance with requirements contained in L.5.5.1 through L.5.5.5. This work package may be repeated for each operation, as necessary, to meet all of the operational requirements. Refer to FIGURE L-1 for an example of a demilitarization operational requirements work package.

L.5.5.1 Work package identification information **<wpidinfo>**. Work package identification information is required for this work package. (Refer to 4.8.9.3)

L.5.5.2 Work package initial setup **<initial_setup>**. Initial setup is required for this work package. (Refer to 4.8.9.4.)

L.5.5.3 Special safety requirements **<spec_sfty_req>**. Special safety requirements shall be prepared.

L.5.5.4 Operational steps **<op_steps>**. Specific operational steps, which are to include warnings, cautions, and notes, shall be prepared. The initial setup shall include equipment requirements, material requirements, and special facilities requirements.

L.5.5.5 Flowchart **<flowchart>**. A flowchart of each specific operation may be included but is not mandatory.

L.5.6 Quality acceptance requirements work package **<dmwr_qarwp>**. The quality acceptance requirements work package shall contain either the QA requirements for demilitarization or maintenance of ammunition, but shall not contain information for both. The quality acceptance requirements work package shall address the quality acceptance requirements for the DMWR contained in L.5.6.1 through L.5.6.5, as applicable.

L.5.6.1 Work package identification information **<wpidinfo>**. Work package identification information is required for this work package. (Refer to 4.8.9.3)

L.5.6.2 Work package initial setup **<initial_setup>**. Initial setup is not required for this work.

L.5.6.3 Demilitarized ammunition **<demil_qar>**. The quality acceptance requirements for ammunition subject to demilitarization shall address the QA plan, inspection, and random sampling of salvaged materiel.

L.5.6.4 Maintenance of ammunition **<maintenance_qar>**. The quality acceptance requirements for ammunition subject to maintenance shall address ballistic test requirements (BTRs), product defect criteria, or site defect criteria identified in the operation requirements work package(s) to include defect classification or to incorporate appropriate statistical process control (SPC) statements for performing activities.

L.5.6.5 Definitions **<definitions>**. All peculiar quality terms used in the DMWR shall be listed and defined. Alternately, if the definitions are listed in another publication, that publication shall be referenced.

L.5.7 Supporting information work packages **<dmwr_sim>**. Supporting information work packages shall be added to a DMWR as applicable, in the order in which they are presented herein, for purposes of illustration, application, and general information. Supporting information work package identification shall be referenced in the text by work package sequence number followed by the title. Each individual supporting information work package shall begin on a right-hand page.

L.5.7.1 References work package **<refwp>**. This work package shall be prepared in accordance with G.5.2. Military specifications and drawings which are listed in the Tabulated data, military specifications, and drawings work package shall not be listed.

L.5.7.2 Expendable and durable items list work package **<explistwp>**. This work package shall be prepared in accordance with G.5.6.

L.5.7.3 Equipment and special facilities work package **<facilwp>**. This work package shall be prepared in accordance with E.5.3.9.2. This work package shall consist of a list of equipment and special facilities required to perform the operations described in the DMWR. (Refer to FIGURE L-2 for an example.)

L.5.7.4 Tabulated data, military specifications, and drawings work package **<genwp>**. This work package shall be prepared in accordance with G.5.11. This work package shall consist of a list of tabulated data extracted from Army Data Sheets, and/or military specifications and drawings applicable to the DMWR operations. Refer to FIGURE L-3 for an example.

L.5.7.5 Approved intraplant transfer equipment work package **<genwp>**. This work package shall be prepared in accordance with G.5.11. This work package lists suggested or commonly available intraplant transfer equipment.

L.5.7.6 Pentachlorophenol (PENTA)-treated packing materials work package **<genwp>**. This work package shall be prepared in accordance with G.5.11. When specified by the contracting activity, this work package shall be used to include the latest PENTA-treated packing materials requirements.

L.5.7.7 Environmental requirements work package **<genwp>**. This work package shall be prepared in accordance with G.5.11. This work package shall be used to include the latest environmental requirements. As a minimum, this work package shall include air, noise, and emission problems, and controls as applicable.

L.5.7.8 Hazard analysis work package **<genwp>**. This work package shall be prepared in accordance with G.5.11. This work package shall contain a hazard analysis updated to include the latest requirements. Potential hazards that may result in injury or death shall be identified. Appropriate countermeasures shall be provided.

L.5.7.9 Other supporting information work packages **<genwp>**. This work package shall be prepared in accordance with G.5.11. When specified by the contracting activity, other supporting information work packages may be added to the DMWR.

L.6 **NOTES.**

The notes in section 6 apply to this appendix.

DMWR 9-1315-CA44-X1 0003

DEPOT MAINTENANCE
UNLOAD PALLET (SKID)

INITIAL SETUP:

Materials/Parts	**References**
Coveralls, fire. resistant (WP 0014, Table 2, Item 2)	TM 9-1300-251-20&P
Cutter, steel strapping, 3/4-inch (WP 0014, Table. 2, Item 3)	TM 9-1300-251-34&P
Glasses, safety (WP 0014, Table 2, Item 6)	WP 0004
Gloves, leather-palmed (WP 0014, Table 2, Item 8)	
Shoes, safety, steel-toed SPECIAL SAFETY REQUIRMENTS	

SPECIAL SAFETY REQUIRMENTS

Operators handling PENTA-treated pallet and all other wood products will wear leather-palmed gloves, fire resistant coveralls, and safety glasses.

Operators handling or nearby steel strapping cutting operations will wear face shield, leather-palmed gloves, fire resistant coveralls, and safety glasses.

Operators will unload metal container from pallet from top to bottom while wearing leather-palmed gloves, fire resistant coveralls, safety glasses, and .steel-toed safety shoes.

OPERATING PROCEDURES

NOTE
All pallets, boxes. and other wooden packing materials marked with the letter "P" are treated with Pentachlorophenol (PENTA).

1. Receive palletized ammunition from storage.

2. Identify palletized ammunition by nomenclature and lot number.

3. Cut steel strapping with steel strapping cutter and remove strapping.

4. Remove metal container from pallet.

5. Inspect pallet for serviceability in accordance with TM 9-1300-25 1-20&P and TM 9-1300-251-34&P.

6. Transfer:

   a. Metal container to WP 0004.

   b. Serviceable pallet to storage.

   c. Unserviceable, repairable. pallet to carpenter shop.

   d. Unserviceable, unrepairable. pallet to DRMO.

   e. Steel .strapping to DRMO.

0003-1

FIGURE L-1. Example of operational requirements work package.

DMWR 9-1315-CA44-X1 0003

OPERATING PROCEDURES - Continued

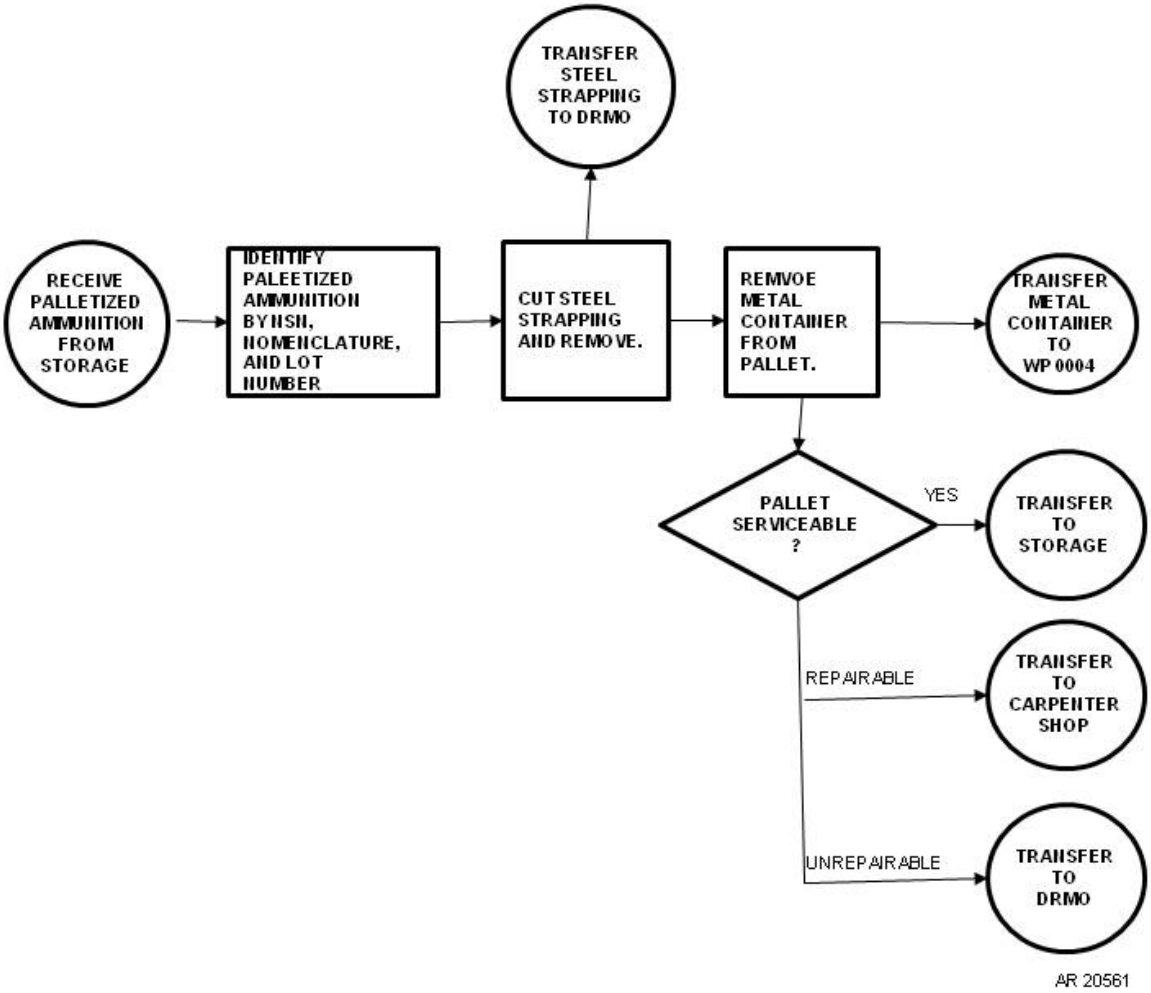

Figure 1. Flowchart for Unload Pallet (Skid).

0003-2

FIGURE L-1. <u>Example of operational requirements work package</u> - Continued.

DMWR 9-1315-CA44-X1 0014

DEPOT MAINTENANCE
EQUIPMENT AND SPECIAL FACILITIES

APE EQUIPMENT

Table 1. APE Equipment

ITEM NO.	NOMENCLATURE	APE
1	Remover, lid pneumatic	1003MI
2	Vise, pneumatic	1065 with kit 1065E021

OTHER EQUIPMENT AND MATERIALS

Table 2 Other Equipment and Materials

ITEM NO.	NOMENCLATURE	NSN
1	Adapter, fuze wrench	Locally fabricated
2	Coveralls, explosives handlers': fire resistant	8415-00-279-8719
3	Cutter, steel strapping: 3/4-inch	5110-00-771-3732
4	Face shield, industrial:	4240-00-542-2048
5	Forklift, gas-operated, for explosive handling	Locally available
6	Glasses, safety	Commercially available
7	Gloves, cotton	Commercially available
8	Gloves, leather-palmed	Commercially available
9	Screwdriver, flathead	Locally available
10	Shoes, safety, steel-toed	Locally available
11	Shovel, hand, nonsparking	Locally available
12	Wrench, fuze, 1-3/4 inch open end	Locally available

SPECIAL FACILITIES

Table 3 Special Facilities

ITEM NO.	NOMENCLATURE
1	Conductive flooring or conductive mats

END OF WRK PACKAGE

0014-1/blank

FIGURE L-2. Example of equipment and special facilities work package.

DMWR 9-1315-CA44-X1 0015

DEPOT MAINTENANCE
DATA, MILITARY SPECIFICATIONS, AND DRAWINGS

DATA

NOTE

Numerical values, such as weights, dimensions, etc., are nominal values, except when specified as maximum or minimum. Actual items may vary slightly from these values. Allowable limits can be obtained from the drawings indicated in this WP.

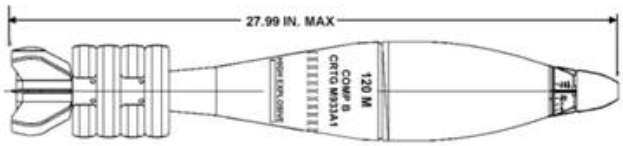

Figure 1. Cartridge, 120mm: HE, M933A1 with Fuze, PD/DLY, M783

Description

The complete round consists of a PD/DLY fuze, propelling increments, fin assembly, ignition cartridge, and shell body. The shell body is made of wrought steel and is loaded with HE filler. The ignition cartridge has a compression primer and is assembled to the end of the fin assembly. The propelling increments are contained in four horseshoe-shaped felt fiber containers assembled around the fin assembly shaft.

Tabulated Data

Complete Round:	
Type	High Explosive (HE)
Weight	XX lb (XX kg)
Length	XX in. (XX mm)
Weapon used with	120mm Mortar System
NSN	XXXX-XX-XXX-XXXX
DODAC	XXXX-XXXX
PIN	XXXXXXXX
CAGEC	XXXXX
Projectile:	
Body Material	Steel
Color	Olive drab w/yellow markings
Filler	HE
Weight	XX lb (XXkg)

0015-1

FIGURE L-3. <u>Example of tabulated data, military specifications, and drawings</u>.

DMWR 9-1315-CA44-X1 0015

DATA - Continued

Temperature Limits

Firing:	
Lower limit	-50°F (-45°C)
Upper limit	+145°F (+62.8°C)
Storage:	
Lower limit	-60°F (-51.1°C)
Upper limit	+160°F (+71.1°C)

Unit of Issue

Packing	1 round per PA153 fiber container; 2 PA153 fiber containers per PA154 metal container; 24 PA514 metal containers per pallet

Packing Data

PA154 Metal Container	
Length	12.362 in. (313.995 mm)
Width	6.360 in. (161.544 mm)
Height	31.780 in. (807.212 mm)
Cube	1.45 cu ft (0.041 cu m)

Shipping and Storage Data

Quantity distance class	1.1
Storage compatibility group	E
Proper shipping name	Cartridge for weapons
Un number	0006

MILITARY SPECIFICATIONS

Detail Specification Item Specification for the Cartridge, 120MM: High Explosive M934A1 and M933A1	MIL-S-XXXXX

DRAWINGS

Booster Assembly	XXXXXXXXXX
Cartridge, Ignition, M1020	XXXXXXXXXX

END OF WORK PACKAGE

0015-2

FIGURE L-3. <u>Example of tabulated data, military specifications, and drawings</u> – Continued.

CONCLUDING MATERIAL

Custodians:
Army - TM
Marine Corps - MC

Preparing Activity:
Army - TM

Review Activities:
Army - APD, AR, AT, AV,
CR, EA, MI, PT

Project Number:
TMSS-2012-003

NOTE: The activities listed above were interested in this document as of the date of this document. Since organizations and responsibilities can change, you should verify the currency of the information above using the ASSIST Online database at http://assist.dla.mil/online/start.