NOT MEASUREMENT SENSITIVE

MIL-STD-40051-1A
21 July 2010
SUPERSEDING
(Refer to 6.4)

DEPARTMENT OF DEFENSE STANDARD PRACTICE

PREPARATION OF DIGITAL TECHNICAL INFORMATION
FOR
INTERACTIVE ELECTRONIC TECHNICAL MANUALS (IETMs)

AMCS 9050 **AREA TMSS**

DISTRIBUTION STATEMENT A. Approved for public release; distribution is unlimited.

FOREWORD

1. This standard is approved for use by the Department of the Army and the Department of the Marine Corps and is available for use by all Departments and Agencies of the Department of Defense (DoD).

2. This standard establishes the technical content requirements and mandatory style, format and functionality requirements for the preparation of Interactive Electronic Technical Manuals (IETMs) and other types of equipment publications specified herein and subsequent revisions required to support the various types of equipment and weapon systems within the Department of the Army and the Department of the Marine Corps. The requirements contained in this standard cover operation and maintenance at all levels through overhaul (depot), including Depot Maintenance Work Requirements (DMWRs) and National Maintenance Work Requirements (NMWRs). For purposes of this standard, the terms "technical manual" and "equipment publication" are synonymous.

3. This 2-part book form consists of the following parts.

MIL-STD-40051-1	—	Preparation of Digital Technical Information for Interactive Electronic Technical Manuals (IETM)
MIL-STD-40051-2	—	Preparation of Digital Technical Information for Page-Based Technical Manuals (TMs)

4. Comments, suggestions, or questions should be addressed to USAMC Logistics Support Activity, ATTN: AMXLS-AP, Redstone Arsenal, AL 35898-7466 or e-mailed to logsa.tmss@conus.army.mil. Since contact information can change, you may want to verify the currency of this address information using the ASSIST Online database at https://assist.daps.dla.mil/online/.

TABLE OF CONTENTS

PARAGRAPH PAGE

FOREWORD ..... **ii**

1. SCOPE **1**
1.1 Scope. 1
1.2 Paragraphs with limited applicability. 1
1.3 Use of the technical content. 1
1.4 Examples/figures. 1

2. APPLICABLE DOCUMENTS **1**
2.1 General. 1
2.2 Government documents. 1
2.2.1 Specifications, standards, and handbooks. 1
2.2.2 Other Government documents and publications. 2
2.3 Non-Government publications. 4
2.4 Order of precedence. 5

3. DEFINITIONS **5**

4. GENERAL REQUIREMENTS **21**
4.1 General. 21
4.2 Types of technical manuals. 21
4.3 Selective application and tailoring. 22
4.4 Preparation of digital data for electronic delivery. 22
4.5 Use of the Document Type Definition (DTD)/stylesheets. 22
4.6 Obtaining the Document Type Definition (DTD)/stylesheet. 22
4.7 Interactive Electronic Technical Manual (IETM) functionality requirements. 22
4.8 Content structure. 23
4.9 Style and format. 23
4.9.1 Development of work package Technical Manuals (TMs). 23
4.9.2 Interactive Electronic Technical Manual (IETM) divisions. 23
4.9.2.1 Work packages. 23
4.9.3 Font size and style. 23
4.9.4 Alerts (Warning or Caution). 23
4.9.4.1 Warning <warning>. 24
4.9.4.2 Caution <caution>. 24
4.9.4.3 Display of warnings and cautions. 24
4.9.4.4 Acknowledgment of alerts. 24
4.9.4.5 Pop-up alerts. 25
4.9.4.6 Icons <icon>. 25
4.9.4.6.1 Development of icons. 25
4.9.4.6.2 Safety warnings with icons <icon>. 25
4.9.4.6.3 Hazardous materials warnings <warning>. 25
4.9.4.6.3.1 Format for hazardous materials warnings with icons <icon>. 26

TABLE OF CONTENTS

PARAGRAPH		PAGE
4.9.4.6.3.2	Abbreviated format for hazardous materials warnings with icons <icon-set>.	26
4.9.4.6.4	Equipment damage caution icons <icon-set>.	26
4.9.5	Notes <note>.	26
4.9.5.1	Display of notes.	26
4.9.5.2	Acknowledgment of notes.	27
4.9.6	Work packages.	27
4.9.6.1	Work package number.	27
4.9.6.2	Work package identification information <wpidinfo>.	28
4.9.6.2.1	Maintenance class <maintlvl>.	28
4.9.6.2.2	Work package title <title>.	28
4.9.6.2.3	Effectivity notice <config>.	28
4.9.6.2.4	Joint use.	28
4.9.6.2.5	Display of work package identification information.	29
4.9.6.3	Initial setup information <initial_setup>.	29
4.9.6.3.1	Test equipment <testeqp>.	29
4.9.6.3.2	Tools and special tools <tools>.	29
4.9.6.3.3	Materials/parts <mtrlpart>.	29
4.9.6.3.4	Personnel required <persnreq>.	30
4.9.6.3.5	References <ref>.	30
4.9.6.3.6	Equipment conditions <eqpconds>.	30
4.9.6.3.7	Special environmental conditions <specenv>	30
4.9.6.3.8	Drawings required <dwgreq>.	30
4.9.6.3.9	Estimated time to complete the task <time.to.comp>.	30
4.9.7	Descriptive information.	31
4.9.8	Paragraphs.	31
4.9.8.1	Paragraph numbering.	31
4.9.8.2	Paragraphs and subparagraph titles.	31
4.9.8.2.1	Format.	31
4.9.9	Maintenance tasks.	31
4.9.10	Procedural steps.	31
4.9.10.1	Procedural step levels.	32
4.9.10.2	Procedural step titles.	32
4.9.11	Tables and lists.	32
4.9.11.1	Display of tables.	32
4.9.11.2	Table numbering.	32
4.9.11.3	Table titles.	32
4.9.11.4	Footnotes <ftnote> to tables.	32
4.9.11.5	Table format.	33
4.9.11.6	Lists.	33
4.9.11.6.1	Definition list <deflist>.	33
4.9.11.6.2	Random list <randlist>.	33
4.9.11.6.3	Sequential list <seqlist>.	33
4.9.12	Standard information.	33
4.9.13	Display of text.	34

TABLE OF CONTENTS

PARAGRAPH		PAGE
4.9.14	Display of illustrations.	34
4.9.15	Abbreviations and acronyms.	34
4.9.16	Symbols.	34
4.9.16.1	General information for symbols.	34
4.9.16.2	Metric symbols.	34
4.9.17	Nuclear hardness (hardness-critical processes) marking.	34
4.9.18	Electrostatic Discharge (ESD) sensitive marking.	35
4.9.19	Quality Assurance (QA).	35
4.9.20	Security classification and protective markings.	35
4.9.20.1	Classification guidelines.	35
4.9.20.2	Overall security classification.	36
4.9.20.3	Protective markings.	36
4.9.21	Referencing.	36
4.9.21.1	Other documents.	36
4.9.21.2	Within the Interactive Electronic Technical Manual (IETM).	36
4.9.21.3	Equipment, components, and parts.	36
4.9.21.4	National Stock Numbers (NSNs) and Part Numbers (P/Ns).	36
4.9.21.5	Equipment panel markings (placarding).	36
4.9.21.6	Metric and United States (U.S.) standard measurements.	36
4.9.21.7	Temperature.	37
4.9.21.8	Other Technical Manuals (TMs)/Interactive Electronic Technical Manuals (IETMs).	37
4.9.21.9	Tables.	37
4.9.21.10	Figures.	37
4.9.21.11	Index numbers.	37
4.9.21.12	Items on diagrams.	37
4.9.21.13	Footnotes.	37
4.9.22	Equations.	37
4.9.23	Nomenclature.	37
4.9.23.1	Nomenclature consistency and applicability.	37
4.9.23.2	Official/approved nomenclature.	37
4.9.23.3	Military terms.	38
4.9.23.4	Automatic electronic test and checkout terminology.	38
4.9.24	Comprehensibility.	38
4.9.25	Multimedia presentation.	38
4.9.26	Graphics.	38
4.9.26.1	Graphic format.	38
4.9.26.2	Types of graphics.	38
4.9.26.2.1	Line drawings.	38
4.9.26.2.2	Multiview illustrations.	38
4.9.26.2.3	Photographs.	38
4.9.26.2.3.1	Photograph quality.	39
4.9.26.2.3.2	Retouching.	39
4.9.26.2.3.3	Use of photographs in place of line drawings.	39
4.9.26.2.4	Engineering drawings.	39

TABLE OF CONTENTS

PARAGRAPH PAGE
4.9.26.2.5 Diagrams. 39
4.9.26.2.5.1 Diagram specifications....39
4.9.26.2.5.2 Types of diagrams....39
4.9.26.2.6 Charts and graphs....40
4.9.26.2.7 Tools and test equipment illustrations. 40
4.9.26.3 Elements of illustrations. 40
4.9.26.3.1 Border rules and boxes....40
4.9.26.3.2 Use of the human figure....40
4.9.26.3.3 Credit lines....40
4.9.26.3.4 Callouts. 40
4.9.26.3.4.1 Index numbers....40
4.9.26.3.5 Leader lines and arrowheads....41
4.9.26.3.6 Illustration legends....41
4.9.26.3.7 Procedures on illustrations....41
4.9.26.4 Graphic techniques....41
4.9.26.4.1 Figure numbers. 41
4.9.26.4.2 Parts information figure numbering....41
4.9.26.4.3 Multisheet numbering. 41
4.9.26.4.4 Figure titles. 41
4.9.26.4.4.1 Figure title format. 41
4.9.26.4.4.2 Figure title placement. 42
4.9.26.4.5 Illustration identification numbers....42
4.9.26.4.6 Portraying signal flow....42
4.9.27 Use of color....42
4.9.28 Revisions for Interactive Electronic Technical Manuals (IETMs). 42
4.9.28.1 Revision symbols for text and tables. 42
4.9.28.2 Revision symbols for illustrations. 42

5. DETAILED REQUIREMENTS....43
5.1 Technical content preparation....43
5.2 Preparation of introductory matter and planning information for Interactive Electronic Technical Manuals (IETMs). 43
5.2.1 Introductory matter <framed.frnt>....44
5.2.1.1 Interactive Electronic Technical Manual (IETM) installation data/access....44
5.2.1.2 Compact Disk (CD) content frame. 44
5.2.1.3 (MC) Promulgation letter <promulgation>....44
5.2.1.4 Warning summary <warnsum>. 44
5.2.1.4.1 First aid <first_aid>. 45
5.2.1.5 Revision summary frame <revisionsummary>....45
5.2.1.6 Identification information <frntcover>....45
5.2.1.6.1 Technical Manual (TM) number <tmno>....46
5.2.1.6.2 Technical Manual (TM) number for joint service Interactive Electronic Technical Manuals (IETMs) <tminfono>....46
5.2.1.6.3 National overhaul standards statement (TMs/DMWRs/NMWRs with national overhaul standards only). 47

TABLE OF CONTENTS

PARAGRAPH PAGE
5.2.1.6.4 Weapon system name <weapons_system>. 47
5.2.1.6.5 Reporting errors and recommending improvements statement <reporting>. 47
5.2.1.6.6 Availability statement (DMWR/NMWR only) <avail>. 49
5.2.1.6.7 Supersedure notice for revisions only <super>. 49
5.2.1.6.8 Distribution statement <dist>. 49
5.2.1.6.9 Export control notice warning <export>. 49
5.2.1.6.10 Destruction notice <destr>. 49
5.2.1.6.11 General purpose notice <general_purpose_notices>. 50
5.2.1.6.12 Service nomenclature <servnomen>. 50
5.2.1.6.13 Technical Manual (TM) publication date <date>. 50
5.2.1.6.14 For Army Communications Security (COMSEC) manuals use. 50
5.2.1.7 Abbreviated identification information <frntcover_abbreviated>. 50
5.2.1.8 Table of contents <contents>. 50
5.2.1.9 "How To Use This IETM" information (Except parts information and DMWRs/NMWRs) <howtouse>. 50
5.2.1.9.1 International standardization agreements. 51
5.2.2 Rear matter. 51
5.2.2.1 Reporting errors and recommending improvements Department of the Army (DA_ Form 2028 <da2028>. 51
5.2.2.2 Authentication information. 51
5.2.2.3 Glossary and index. 51
5.2.2.4 Metric conversion table. 51

6. NOTES 52
6.1 Intended use. 52
6.2 Acquisition requirements. 52
6.3 Tailoring guidance. 52
6.4 Supersession data. 52
6.5 Subject term (key word) listing. 52
6.6 Change notations. 53

A IETM FUNCTIONALITY AND DATA DISPLAY REQUIREMENTS AND CONTENT SELECTION MATRIXES 71

A.1 SCOPE 71
A.1.1 Scope. 71

A.2 APPLICABLE DOCUMENTS 71

A.3 DEFINITIONS 71

A.4 GENERAL REQUIREMENTS 74
A.4.1 IETM functionality requirements. 74
A.4.2 Physical IETM screen layout. 74
A.4.2.1 General inner shell layout. 76

TABLE OF CONTENTS

PARAGRAPH		PAGE
A.4.2.2	Reset Area (Guidepost).	76
A.4.2.2.1	Reset area (guidepost) functions.	77
A.4.2.3	Table of Contents (TOC).	77
A.4.2.4	Classification bar.	77
A.4.2.5	Navigation panel.	77
A.4.2.5.1	Subtitle bar.	78
A.4.2.6	Main menu bar.	78
A.4.2.7	Project-specific bar.	79
A.4.2.8	Main content area.	79
A.4.2.9	Status bar.	82
A.4.2.10	Title bar.	82
A.4.2.11	Screen sizes.	82
A.4.3	Style and format on the display.	82
A.4.3.1	Text colors/background.	82
A.4.3.1.1	Standard text/fonts.	83
A.4.3.1.2	Custom developed fonts.	83
A.4.3.2	Security markings.	83
A.4.3.3	Front and rear matter.	84
A.4.3.4	Revisions.	84
A.4.3.4.1	Revision markings.	85
A.4.4	Hyperlinks/Icon hotspots.	85
A.4.4.1	Hyperlinks.	85
A.4.4.2	Icon hotspot.	85
A.4.4.3	Links to text.	87
A.4.4.4	Links to graphics and tables.	87
A.4.4.5	Links to multimedia.	87
A.4.4.6	Links in graphics.	87
A.4.4.7	Hotspots in tables.	88
A.4.5	User interface.	89
A.4.5.1	Session control.	89
A.4.5.2	Bookmarks.	90
A.4.5.3	Annotations.	90
A.4.5.4	Redline (Review only).	90
A.4.5.5	Browsing.	91
A.4.5.6	Dialog boxes.	91
A.4.5.6.1	Dialog box types.	92
A.4.5.6.1.1	Message dialog box.	92
A.4.5.6.1.2	Fill-in dialog box.	92
A.4.5.6.1.2.1	Number range.	93
A.4.5.6.1.3	Menu dialog box.	94
A.4.5.6.1.4	Multiple-choice dialog box.	95
A.4.5.6.1.5	Composite dialog box.	95
A.4.5.6.2	Dialog box title.	96
A.4.5.6.3	Dialog push buttons.	96
A.4.5.6.3.1	Common function push buttons.	96

TABLE OF CONTENTS

PARAGRAPH PAGE
A.4.5.6.4 Dialog cursor movement. 96
A.4.5.7 Screen stacking. 96
A.4.5.8 Response time. 97
A.4.5.9 Audio control. 97
A.4.5.10 Graphical navigation. 98
A.4.5.11 Additional navigation. 99

A.5 DETAILED REQUIREMENTS. 99
A.5.1 IETM functionality requirements. 99
A.5.2 Functionality matrix. 99
A.5.2.1 Strategy pricing. 99
A.5.2.2 Functionality matrix column definitions. 100
A.5.2.2.1 Complexity factor. 100
A.5.2.2.1.1 Linear. 100
A.5.2.2.1.2 Non-Linear. 100
A.5.2.2.2 Category. 100
A.5.2.2.3 Functionality. 101
A.5.2.2.4 Requirement (Reqmt). 101
A.5.2.2.5 Paragraph reference. 101
A.5.2.3 Functionality definitions. 107
A.5.2.3.1 Access (Ac) category. 107
A.5.2.3.1.1 Suspend and restart. 107
A.5.2.3.1.2 Login. 107
A.5.2.3.2 Annotation (An) category. 107
A.5.2.3.2.1 Global data annotation. 107
A.5.2.3.2.2 Local data annotation. 107
A.5.2.3.2.3 Personal annotation. 107
A.5.2.3.2.4 Redlining graphics. 107
A.5.2.3.2.5 Redlining text. 108
A.5.2.3.3 Delivery and distribution (DD) category. 108
A.5.2.3.3.1 Compact Disk – Read Only Memory (CD-ROM). 108
A.5.2.3.3.2 Digital Versatile Disc (DVD). 108
A.5.2.3.3.3 Network distribution. 108
A.5.2.3.4 Diagnostics and prognostics (DP) category. 108
A.5.2.3.4.1 Diagnostics - User-determined entry to IETM. 109
A.5.2.3.4.2 Diagnostics - Software-driven entry to IETM. 109
A.5.2.3.4.3 Dynamic diagnostics. 109
A.5.2.3.4.4 Prognostics. 109
A.5.2.3.4.5 System simulation. 109
A.5.2.3.4.6 Wire/Fluid system tracing. 110
A.5.2.3.5 External processes (E) category. 111
A.5.2.3.5.1 Deficiency report (User feedback) (Required). 111
A.5.2.3.5.2 Knowledge management. 111
A.5.2.3.5.3 Maintenance data collection. 111
A.5.2.3.5.4 Operator debriefing. 111

TABLE OF CONTENTS

PARAGRAPH PAGE
A.5.2.3.5.5 Parts ordering (Required).....111
A.5.2.3.5.6 Resource scheduling. 111
A.5.2.3.5.7 Supporting technical data.....112
A.5.2.3.6 Graphics (G) category.....112
A.5.2.3.6.1 3-D modeling. 112
A.5.2.3.6.2 Assembly/Disassembly. 112
A.5.2.3.6.3 Locator graphics.....113
A.5.2.3.6.4 Pan, zoom, expand, rotate, magnify.....114
A.5.2.3.7 Linking (L) category.....114
A.5.2.3.7.1 Hot reference.....114
A.5.2.3.7.2 Hotspotting. 114
A.5.2.3.7.3 Internal References. 115
A.5.2.3.7.4 Link to separate parts data. 115
A.5.2.3.7.5 Table of contents (Required). 115
A.5.2.3.7.5.1 Authentication block <authent>.....116
A.5.2.3.7.5.2 Feedback. 116
A.5.2.3.8 Navigation and tracking (N) category.....116
A.5.2.3.8.1 Audit trail.....116
A.5.2.3.8.2 Dialog-driven interaction.....117
A.5.2.3.8.3 Exit (Required).....117
A.5.2.3.8.4 Filter by configuration. 117
A.5.2.3.8.5 Filter by model series.....118
A.5.2.3.8.6 Filter by modification. 118
A.5.2.3.8.7 Filter by skill/maintenance class.....119
A.5.2.3.8.8 Filter by unique identification code.....119
A.5.2.3.8.9 Graphical navigation.....119
A.5.2.3.8.10 History of traversed links (Required). 119
A.5.2.3.8.11 Next and previous (Required).....119
A.5.2.3.8.12 Forward and back.....119
A.5.2.3.8.13 Search. 119
A.5.2.3.8.13.1 Search - context.....119
A.5.2.3.8.13.2 Search - Full text (Required).....120
A.5.2.3.8.13.3 Search - User defined Boolean.....120
A.5.2.3.8.13.4 Search - Across multiple databases/files.....120
A.5.2.3.8.13.5 Search - Key word.....120
A.5.2.3.8.14 Simultaneous display of multiple content elements.....120
A.5.2.3.8.15 System/Subsystem navigation. 121
A.5.2.3.8.16 Tear-off window capability.....121
A.5.2.3.8.17 User creation of bookmarks.....122
A.5.2.3.8.18 Voice-Activated commands.....122
A.5.2.3.9 Printing (P) category.....122
A.5.2.3.9.1 Work package-specific printing.....122
A.5.2.3.9.2 Fully formatted/book version.....123
A.5.2.3.9.3 Print linked data. 123
A.5.2.3.9.4 Print screen (Required). 123

TABLE OF CONTENTS

PARAGRAPH PAGE
A.5.2.3.9.5 Print Frame....123
A.5.2.3.10 Special content (S) category. 123
A.5.2.3.10.1 Alerts. 123
A.5.2.3.10.2 Animation. 123
A.5.2.3.10.3 Audio....123
A.5.2.3.10.4 Help. 123
A.5.2.3.10.4.1 Content-sensitive help (technical data help) (Required). 123
A.5.2.3.10.4.2 Context-sensitive help (viewer help) (Required). 123
A.5.2.3.10.5 Motion video. 124
A.5.2.3.10.6 Digital photos. 124
A.5.2.3.10.7 User training....124
A.5.2.3.10.8 Browsing. 124
A.5.2.3.10.9 Selectable Text. 124
A.5.2.3.10.10 Selectable Graphics. 125
A.5.2.3.10.11 Reset Area. 125
A.5.2.3.11 Updates (U) category. 126
A.5.2.3.11.1 Active change indications and markings (Required). 126
A.5.2.3.11.2 Block cycle with urgent changes. 126
A.5.2.3.11.3 Full revision. 126
A.5.2.3.11.4 Near real-time updates. 126
A.5.2.3.11.5 User operation mode (Uo) category. 126
A.5.2.3.11.5.1 Network connectivity. 126
A.5.2.3.11.5.1.1 Network connectivity - context filtering. 127
A.5.2.3.11.5.1.2 Network connectivity - update capability (partial). 127
A.5.2.3.11.5.1.3 Network connectivity mode - update capability (full revision). 127
A.5.2.3.11.6 Stand-alone mode....127
A.5.2.3.11.6.1 Stand-alone mode - context filtering. 127
A.5.2.3.11.6.2 Stand-alone mode - update capability (full revision). 127
A.5.2.3.11.6.3 Stand-alone mode - update capability (partial). 127
A.5.2.3.11.7 Web browser-viewable. 127
A.5.3 IETM tailoring requirements. 127
A.5.3.1 Publication Titles. 128
A.5.3.2 Technical content tables. 128
A.5.3.3 Additional requirements....128
A.5.3.3.1 CD-ROM....128
A.5.3.3.2 Schematics and wiring diagrams. 129
A.5.3.4 Intended use. 129
A.5.3.5 Acquisition requirements. 129

B GENERAL INFORMATION, EQUIPMENT DESCRIPTION, AND THEORY OF OPERATION....169

B.1 SCOPE 169
B.1.1 Scope. 169

TABLE OF CONTENTS

PARAGRAPH PAGE

B.2 APPLICABLE DOCUMENTS....169

B.3 DEFINITIONS 169

B.4 GENERAL REQUIREMENTS....169

B.4.1 General. 169
B.4.2 Maintenance level/class applicability. 169
B.4.3 Preparation of digital data for electronic delivery. 169
B.4.4 Use of the Document Type Definition (DTD)/stylesheet. 169
B.4.5 Content structure. 170
B.4.6 Style and format. 170
B.4.7 Interactive Electronic Technical Manual (IETM) functionality. 170
B.4.8 Work package development. 170
B.4.9 Safety devices and interlocks. 170
B.4.10 Electrostatic Discharge (ESD) sensitive parts. 170
B.4.11 Nuclear hardness <hcp>. 170
B.4.12 Selective application and tailoring. 170

B.5 DETAILED REQUIREMENTS....171

B.5.1 Preparation of general information, equipment description, and theory of operation. 171
B.5.1.1 Required general information, equipment description, and theory of operation data work packages. 171
B.5.2 General information work package <ginfowp>. 171
B.5.2.1 Work package identification information <wpidinfo>. 171
B.5.2.2 Work package initial setup <initial_setup>. 171
B.5.2.3 Scope <scope>. 171
B.5.2.4 Maintenance forms, records, and reports <mfrr>. 172
B.5.2.5 Reporting equipment improvement recommendations <eir>. 172
B.5.2.5.1 (MC) Additional reporting equipment improvement recommendations for Marine Corps Technical Manuals (TMs). 173
B.5.2.6 Hand Receipt (HR) manuals <handreceipt>. 173
B.5.2.6.1 Hand Receipt (HR) contained in Interactive Electronic Technical Manual (IETM). 173
B.5.2.6.2 Hand Receipt (HR) not contained in Interactive Electronic Technical Manual (IETM). 173
B.5.2.7 Corrosion prevention and control <cpcdata>. 174
B.5.2.8 Ozone Depleting Substances (ODSs) <odsdata>. 174
B.5.2.9 Destruction of Army materiel to prevent enemy use <destructmat>. 174
B.5.2.10 Preparation for storage or shipment <pssref>. 174
B.5.2.11 Warranty information <wrntyref>. 174
B.5.2.12 Nomenclature cross-reference list <nomenreflist>. 175
B.5.2.13 List of abbreviations/acronyms <loa>. 175
B.5.2.14 Quality assurance (QA) (DMWR/NMWR and aviation only) <qainfo>. 175
B.5.2.15 Quality of material <qual.mat.info>. 175

TABLE OF CONTENTS

PARAGRAPH		PAGE
B.5.2.16	Safety, care, and handling <sftyinfo>.	175
B.5.2.17	Nuclear hardness <hcp>.	176
B.5.2.18	Calibration <calref>.	176
B.5.2.19	Engineering Change Proposals (ECPs) (DMWR/NMWR only) <ecp>.	176
B.5.2.20	Modification list (DMWR/NMWR only) <modification>.	177
B.5.2.21	Deviations and exceptions (DMWR/NMWR only) <deviation>.	177
B.5.2.22	Mobilization requirements (DMWR/NMWR only) <mobreq>	177
B.5.2.23	Critical safety items (CSIs) (Flight Safety Critical Aircraft Parts (FSCAP))(aircraft only) <csireq>.	177
B.5.2.24	Cost considerations (DMWR/NMWR only) <cost>.	178
B.5.2.25	Supporting information for repair parts, special tools, Test, Measurement, and Diagnostic Equipment (TMDE), and support equipment <supdata>.	178
B.5.2.25.1	Common tools and equipment.	178
B.5.2.25.2	Special tools, Test, Measurement, and Diagnostic Equipment (TMDE), and support equipment.	179
B.5.2.25.3	Repair parts.	179
B.5.2.26	Copyright credit line <copyrt>.	179
B.5.2.26.1	Proprietary names.	179
B.5.2.26.2	Advertising.	179
B.5.3	Equipment description and data work package <descwp>.	179
B.5.3.1	Work package identification information <wpidinfo>.	179
B.5.3.2	Work package initial setup <initial_setup>.	179
B.5.3.3	Equipment characteristics, capabilities, and features <eqpinfo>.	179
B.5.3.4	Location and description of major components (except Conventional Ammunition and Chemical Manuals) <locdesc>.	180
B.5.3.5	Differences between models <eqpdiff>.	180
B.5.3.6	Equipment data <eqpdata>.	181
B.5.4	Theory of operation work package <thrywp>.	181
B.5.4.1	Work package identification information <wpidinfo>.	181
B.5.4.2	Work package initial setup <initial_setup>.	181
B.5.4.3	Theory presentation.	181
B.5.5	General information work package (Preventive Maintenance Services Manual or Preventive Maintenance Daily Manual only) <pms-ginfowp>	182
B.5.5.1	Work package identification information <wpidinfo>.	182
B.5.5.2	Work package initial setup <initial_setup>.	182
B.5.5.3	Maintenance activities <scope>.	182
B.5.5.4	General information <pms-geninfo>.	183
B.5.6	General information work package (Phased Maintenance Inspection manual only) <pm-ginfowp>.	185
B.5.6.1	Work package identification information <wpidinfo>.	185
B.5.6.2	Work package initial setup <initial_setup>.	185
B.5.6.3	General information <geninfo>.	185
B.5.6.3.1	Phased schedule.	185
B.5.6.3.2	Additional general information.	185

TABLE OF CONTENTS

PARAGRAPH PAGE
B.6 NOTES 188

C OPERATOR INSTRUCTIONS 191

C.1 SCOPE 191
C.1.1 Scope. 191

C.2 APPLICABLE DOCUMENTS.....191

C.3 DEFINITIONS 191

C.4 GENERAL REQUIREMENTS.....191
C.4.1 General. 191
C.4.2 Maintenance level/class applicability. 191
C.4.3 Preparation of digital data for electronic delivery. 191
C.4.4 Use of the Document Type Definition (DTD)/stylesheet. 191
C.4.5 Content structure. 192
C.4.6 Style and format. 192
C.4.7 Interactive Electronic Technical Manual (IETM) functionality. 192
C.4.8 Work package development. 192
C.4.9 Safety devices and interlocks. 192
C.4.10 Electrostatic Discharge (ESD) sensitive parts. 192
C.4.11 Nuclear hardness <hcp>. 192
C.4.12 Selective application and tailoring. 192

C.5 DETAILED REQUIREMENTS.....193
C.5.1 Preparation of operator instructions. 193
C.5.2 Operator instructions work packages. 193
C.5.2.1 Work package content. 193
C.5.2.2 Types of operator instructions work packages. 193
C.5.2.2.1 Description and use of controls and indicators work package <ctrlindwp>. 193
C.5.2.2.1.1 Work package identification information <wpidinfo>. 193
C.5.2.2.1.2 Work package initial setup <initial_setup>. 193
C.5.2.2.1.3 Controls and indicators description tabular option. 193
C.5.2.2.1.4 Controls and indicators description narrative option. 194
C.5.2.2.2 Operation under usual conditions work package <opusualwp>. 194
C.5.2.2.2.1 Work package identification information <wpidinfo>. 194
C.5.2.2.2.2 Work package initial setup <initial_setup>. 194
C.5.2.2.2.3 Operations under usual tasks <opertsk>. 194
C.5.2.2.2.4 Security measures for electronic data <secref>. 194
C.5.2.2.2.5 Siting requirements <site>. 194
C.5.2.2.2.6 Shelter requirements <shelter>. 195
C.5.2.2.2.7 Assembly and preparation for use <prepforuse>. 195
C.5.2.2.2.8 Initial adjustments before use, and self-test <initial>. 195
C.5.2.2.2.9 Operating procedures <oper>. 195
C.5.2.2.2.10 Operating procedure considerations. 196

TABLE OF CONTENTS

PARAGRAPH PAGE
C.5.2.2.2.11 Operating auxiliary equipment <operaux>. 197
C.5.2.2.2.12 Preparation for movement <prepmove>. 197
C.5.2.2.2.13 Decals and instruction plates <instructplt>. 197
C.5.2.2.3 Operation under unusual conditions work package <opunuwp>. 197
C.5.2.2.3.1 Work package identification information <wpidinfo>. 197
C.5.2.2.3.2 Work package initial setup <initial_setup>. 197
C.5.2.2.3.3 Operations under unusual tasks <opunutsk>. 197
C.5.2.2.3.4 Security measures for electronic data <secref>. 197
C.5.2.2.3.5 Unusual environment/weather <unusualenv>. 197
C.5.2.2.3.6 Fording and swimming <fording>. 197
C.5.2.2.3.7 Interim Chemical, Biological, Radiological, and Nuclear (CBRN) decontamination procedures <decon>. 197
C.5.2.2.3.8 Jamming and Electronic Countermeasures (ECM) procedures <ecm>. 198
C.5.2.2.3.9 Degraded operation procedures <degraded>. 198
C.5.2.2.3.10 Decals and instruction plates <instructplt>. 198
C.5.2.2.4 Emergency work package <emergencywp>. 198
C.5.2.2.4.1 Work package identification information <wpidinfo>. 198
C.5.2.2.4.2 Work package initial setup <initial_setup>. 198
C.5.2.2.4.3 Emergency operation <emergency>. 198
C.5.2.2.4.4 Emergency shutdown <emergency>. 198
C.5.2.2.5 Stowage and decal/data plate guide work package <stowagewp>. 198
C.5.2.2.5.1 Work package identification information <wpidinfo>. 198
C.5.2.2.5.2 Work package initial setup <initial_setup>. 198
C.5.2.2.5.3 Introduction <intro>. 198
C.5.2.2.5.4 Stowage guide <stowinfo>. 199
C.5.2.2.5.5 Decal/data plate guide <decalinfo>. 199
C.5.2.2.6 On-vehicle equipment loading plan work package <eqploadwp>. 199
C.5.2.2.6.1 Work package identification information <wpidinfo>. 199
C.5.2.2.6.2 Work package initial setup <initial_setup>. 199
C.5.2.2.6.3 Introduction <intro>. 199
C.5.2.2.6.4 Illustrated loading plan list(s) <loaddesc>. 199

C.6 NOTES 199

D TROUBLESHOOTING PROCEDURES 201

D.1 SCOPE 201
D.1.1 Scope. 201

D.2 APPLICABLE DOCUMENTS 201

D.3 DEFINITIONS 201

D.4 GENERAL REQUIREMENTS 201
D.4.1 General. 201
D.4.2 Development of troubleshooting instructions. 201

TABLE OF CONTENTS

PARAGRAPH PAGE
D.4.3 Maintenance level/class applicability. 201
D.4.4 Preparation of digital data for electronic delivery. 202
D.4.5 Use of the Document Type Definition (DTD)/stylesheet. 202
D.4.6 Content structure. 202
D.4.7 Style and format. 202
D.4.8 Interactive Electronic Technical Manual (IETM) functionality. 202
D.4.9 Work package development. 202
D.4.10 Safety devices and interlocks. 202
D.4.11 Electrostatic Discharge (ESD) sensitive parts. 202
D.4.12 Nuclear hardness <hcp>. 202
D.4.13 Selective application and tailoring. 203
D.4.14 Types of troubleshooting models. 203
D.4.14.1 Simple diagnostic mode explanation. 203
D.4.14.2 Complex diagnostic mode explanation. 203
D.4.14.2.1 State table explanation. 203
D.4.14.2.2 State table input. 203
D.4.14.2.3 State table limits. 203
D.4.14.2.4 Minimum state table requirements. 204
D.4.14.2.5 Additional state table options. 204

D.5 DETAILED REQUIREMENTS. 204
D.5.1 Testing and troubleshooting philosophy. 204
D.5.2 Information to be provided. 204
D.5.2.1 Methods of testing and troubleshooting. 204
D.5.2.1.1 Manual (non-automatic) troubleshooting. 204
D.5.2.1.2 Semi-automatic or automatic testing and troubleshooting. 205
D.5.2.1.3 Testing and troubleshooting using built-in-test equipment (BITE). 205
D.5.2.1.4 Sensor derived failures. 205
D.5.2.1.5 Failure interpretation. 205
D.5.2.2 Types of testing and troubleshooting information. 205
D.5.2.2.1 Fault reporting/fault isolation information. 205
D.5.2.2.2 Integrated system testing and troubleshooting. 205
D.5.2.2.2.1 Integrated systems having self-test or built-in test (BIT) capability. 205
D.5.2.2.2.2 Integrated systems requiring the use of system peculiar test sets. 206
D.5.2.2.2.3 Integrated systems requiring the use of common test equipment. 206
D.5.3 Troubleshooting procedures content. 206
D.5.4 Types of testing and troubleshooting. 207
D.5.4.1 Aviation testing and troubleshooting category (Aircraft Troubleshooting TMs only) <troubleaviationcategory>. 207
D.5.4.2 Standard testing and troubleshooting category <troublecategory>. 207
D.5.4.3 DMWR/NMWR testing and troubleshooting category (depot only) <troubledmwrnmwrcategory>. 208
D.5.4.4 Master index testing and troubleshooting category <masterindexcategory>. 208
D.5.5 Testing and troubleshooting work packages. 208

TABLE OF CONTENTS

PARAGRAPH		PAGE
D.5.5.1	Work package content.	208
D.5.5.2	Types of testing and troubleshooting work packages.	208
D.5.5.3	Introduction work package <tsintrowp>.	208
D.5.5.3.1	Work package identification information <wpidinfo>.	209
D.5.5.3.2	Work package initial setup <initial_setup>.	209
D.5.5.4	Technical description work packages (aircraft troubleshooting manuals only) <techdescwp>.	209
D.5.5.4.1	Work package identification information <wpidinfo>.	209
D.5.5.4.2	Work package initial setup <initial_setup>.	209
D.5.5.4.3	Equipment description and data <descproc>.	209
D.5.5.4.4	Controls and indicators <ctrlindproc>.	209
D.5.5.4.5	Theory of operation <thryproc>.	209
D.5.5.5	Troubleshooting index work package <tsindxwp>.	209
D.5.5.5.1	Work package identification information <wpidinfo>.	209
D.5.5.5.2	Work package initial setup <initial_setup>.	209
D.5.5.5.3	Malfunction/symptom index <tsindx.symptom>/<tsindx.messageword>.	209
D.5.5.5.4	Master malfunction/symptom index <tsindx.symptom>.	210
D.5.5.5.5	System/subsystem index <tsindx.system>.	210
D.5.5.6	Preshop analysis work package (DMWR/NMWR only) <pshopanalwp>.	210
D.5.5.6.1	Work package identification information <wpidinfo>.	210
D.5.5.6.2	Work package initial setup <initial_setup>.	210
D.5.5.6.3	Scope <scope>.	210
D.5.5.6.4	Preparation Procedures <proc>.	211
D.5.5.6.5	Preshop analysis procedures <pshopanal>.	211
D.5.5.6.5.1	Narrative procedures <proc>.	211
D.5.5.6.5.2	Checklist <chklist>.	211
D.5.5.6.5.2.1	Cover sheet/frame <coverpage>.	211
D.5.5.6.5.2.2	Introduction <intro>.	211
D.5.5.6.5.2.3	Table of tests and inspections <pshopckk.tab>.	211
D.5.5.7	Component checklist work package (DMWR/NMWR only) <compchklistwp>.	212
D.5.5.7.1	Work package identification information <wpidinfo>.	212
D.5.5.7.2	Work package initial setup <initial_setup>.	212
D.5.5.7.3	Introduction <intro>.	212
D.5.5.7.4	Component checklist <compchklist>.	212
D.5.5.8	Operational checkout and troubleshooting procedures work packages.	212
D.5.5.8.1	Operational checkout and troubleshooting procedures content.	212
D.5.5.8.2	Operational checkout and troubleshooting procedure work package development.	213
D.5.5.8.3	Operational checkout work package <opcheckwp>.	213
D.5.5.8.3.1	Work package identification information <wpidinfo>.	213
D.5.5.8.3.2	Work package initial setup <initial_setup>.	213
D.5.5.8.3.3	Introduction <intro>.	213
D.5.5.8.3.4	General procedures and precautions <proc>.	213
D.5.5.8.3.5	Pretest setup procedures <hookup>.	213

TABLE OF CONTENTS

PARAGRAPH PAGE
D.5.5.8.3.6 Operational checkout procedures <opcheckproc>.....213
D.5.5.8.3.6.1 Operational checkout test procedure <opcheck>.....214
D.5.5.8.3.6.2 Test set message word index <messageindx>. 214
D.5.5.8.3.6.3 Fault code reference index <faultreports>. 214
D.5.5.8.3.7 Post-operational shutdown procedures <disconnect>.....214
D.5.5.8.3.8 Follow-on maintenance <follow-on>. 214
D.5.5.8.4 Troubleshooting work package <tswp>.....214
D.5.5.8.4.1 Work package identification information <wpidinfo>. 214
D.5.5.8.4.2 Work package initial setup <initial_setup>. 214
D.5.5.8.4.3 Introduction <intro>.....215
D.5.5.8.4.4 General procedures and precautions <proc>. 215
D.5.5.8.4.5 Pretest setup procedures <hookup>. 215
D.5.5.8.4.6 Troubleshooting procedures <tsproc>. 215
D.5.5.8.4.6.1 Method A - Text-Logic <logicproc>. 215
D.5.5.8.4.6.2 Method B - Text <faultproc>.....215
D.5.5.8.4.6.3 Method C - Multiplex read codes <muxproc>.....215
D.5.5.8.4.7 Post-operational shutdown procedures <disconnect>.....216
D.5.5.8.4.8 Follow-on maintenance <follow-on>. 216
D.5.5.8.5 Combined operational checkout and troubleshooting work package <opcheck-tswp>. 216
D.5.5.8.5.1 Work package identification information <wpidinfo>. 216
D.5.5.8.5.2 Work package initial setup <initial_setup>. 216
D.5.5.8.5.3 Introduction <intro>.....216
D.5.5.8.5.4 General procedures and precautions <proc>. 216
D.5.5.8.5.5 Pretest setup procedures <hookup>. 216
D.5.5.8.5.6 Operational checkout and troubleshooting procedures.....216
D.5.5.8.5.6.1 Combined operational checkout and troubleshooting procedures <opcheck-tsproc>. 216
D.5.5.8.5.6.2 Separate operational checkout procedures <opcheckproc>.....217
D.5.5.8.5.6.3 Separate troubleshooting procedure <tsproc>. 217
D.5.5.8.5.7 Post-operational shutdown procedures <disconnect>.....217
D.5.5.8.5.8 Follow-on maintenance <follow-on>. 217
D.5.5.8.6 Integrated system troubleshooting procedures work packages.....217
D.5.6 Diagnostic work package <diagnosticwp>. 217
D.5.6.1 Work package identification information <wpidinfo>. 218
D.5.6.2 Work package initial setup <initial_setup>. 218
D.5.6.3 Simple tests <testwithoutstate>. 218
D.5.6.3.1 Test procedure <proc>. 218
D.5.6.3.2 Indication prompt <simple>/<multioption>. 218
D.5.6.3.3 Test results <resultwithoutstate>. 218
D.5.6.4 Complex tests <testwithstate>. 218
D.5.6.4.1 Test evaluations <evaluate>.....218
D.5.6.4.1.1.1 IF statement <if>.....219
D.5.6.4.1.1.2 LOOP COUNTER statement <loopfor>.....219
D.5.6.4.1.1.3 LOOP UNTIL CONDITION statement <loopuntil>.....219

TABLE OF CONTENTS

PARAGRAPH PAGE
D.5.6.4.1.1.4 Loop test actions <loopaction>. 219
D.5.6.4.2 Test result actions <resultwithstate>. 219
D.5.6.5 Conditional tests using the state table <testwithstate-alt>. 220
D.5.6.6 Test information source. 220

D.6 NOTES 222

E MAINTENANCE INSTRUCTIONS 231

E.1 SCOPE 231
E.1.1 Scope. 231

E.2 APPLICABLE DOCUMENTS 231

E.3 DEFINITIONS 231

E.4 GENERAL REQUIREMENTS 231
E.4.1 General. 231
E.4.2 Development of maintenance instructions. 231
E.4.3 Maintenance level/class applicability. 231
E.4.4 Depot Maintenance Work Requirements (DMWRs) and National Maintenance Work Requirements (NMWRs). 231
E.4.5 Preparation of digital data for electronic delivery. 231
E.4.6 Use of the Document Type Definition (DTD)/stylesheet. 232
E.4.7 Content structure. 232
E.4.8 Style and format. 232
E.4.9 Interactive Electronic Technical Manual (IETM) functionality. 232
E.4.10 Work package development. 232
E.4.11 Safety devices and interlocks. 232
E.4.12 Electrostatic Discharge (ESD) sensitive parts. 232
E.4.13 Nuclear hardness <hcp>. 232
E.4.14 Selective application and tailoring. 233

E.5 DETAILED REQUIREMENTS 233
E.5.1 Preparation of maintenance instructions. 233
E.5.2 Types of maintenance. 233
E.5.2.1 Preventive Maintenance Checks and Services (PMCS) (except for aircraft TMs, DMWRs, and NMWRs) <pmcscategory>. 233
E.5.2.2 Weapon system/equipment maintenance with required Preventive Maintenance Checks and Services (PMCS) (except for aircraft TMs, DMWRs, and NMWRs) <maintenancepmcscategory>. 233
E.5.2.3 Weapon system/equipment maintenance without Preventive Maintenance Checks and Services (PMCS) (except for aircraft TMs, DMWRs, and NMWRs) <maintenancecategory>. 234
E.5.2.4 Depot weapon system/equipment maintenance <depotcategory>. 234

TABLE OF CONTENTS

PARAGRAPH PAGE
E.5.2.5 Aircraft maintenance (aircraft TMs, DMWRs, and NMWRs only) <aviationcategory>. 235
E.5.2.6 Auxiliary equipment maintenance <auxiliarycategory>....235
E.5.2.7 Ammunition maintenance <ammunitioncategory>. 236
E.5.2.8 Test and inspection maintenance (Conventional and chemical ammunition only) <testinspectioncategory>....236
E.5.2.9 Shipment/movement and storage maintenance (Conventional and chemical ammunition only) <shipmentmovementstoragecategory>....236
E.5.2.10 Ammunition marking maintenance (Conventional and chemical ammunition only) <ammomarkingcategory>. 236
E.5.2.11 Preventive maintenance services (Aircraft preventive maintenance services only) <pmscategory>. 236
E.5.2.12 Phased maintenance inspections (aircraft phased maintenance inspection only) <checklistcategory>....236
E.5.3 Maintenance work packages. 236
E.5.3.1 Work package content....236
E.5.3.2 Service upon receipt work package (Field level only) <surwp>. 237
E.5.3.2.1 Work package identification information <wpidinfo>. 237
E.5.3.2.2 Work package initial setup <initial_setup>. 237
E.5.3.2.3 Service upon receipt tasks <surtsk>....237
E.5.3.2.3.1 Siting <siting>....237
E.5.3.2.3.2 Shelter requirements <shltr>....237
E.5.3.2.3.3 Service upon receipt of materiel <surmat>....238
E.5.3.2.3.3.1 Unpacking <unpack>....238
E.5.3.2.3.3.2 Checking unpacked equipment <chkeqp>....238
E.5.3.2.3.3.2.1 Packaging material <crit.insp.tab>. 238
E.5.3.2.3.3.2.2 Equipment components <pecul.insp.tab>....238
E.5.3.2.3.3.3 Processing unpacked equipment <processeqp>....238
E.5.3.2.3.4 Installation instructions <install>....239
E.5.3.2.3.4.1 Installation of the equipment. 239
E.5.3.2.3.4.2 Special applications. 240
E.5.3.2.3.4.3 Van and shelter installations. 240
E.5.3.2.3.4.4 Assembly of equipment <assem>. 240
E.5.3.2.3.5 Preliminary servicing of equipment <preserv>. 240
E.5.3.2.3.6 Preliminary checks and adjustment of equipment <prechkadj>. 241
E.5.3.2.3.7 Preliminary calibration of equipment <precal>. 241
E.5.3.2.3.8 Circuit alignment <calign>. 241
E.5.3.2.3.8.1 External connections <extconn>....242
E.5.3.2.3.8.2 Switch settings, patch panel connections, and internal control settings <setconn>. 242
E.5.3.2.3.8.3 Alignment procedures <alignproc>. 242
E.5.3.2.3.9 Ammunition service upon receipt tasks....242
E.5.3.2.3.9.1 Ammunition markings <mark>. 242
E.5.3.2.3.9.2 Classification of defects <ammo.defect>....242
E.5.3.2.3.9.3 Handling <ammo.handling>. 242

TABLE OF CONTENTS

PARAGRAPH PAGE
E.5.3.2.3.9.4 Procedures needed to activate ammunition, mines, etc. <arm>.....242
E.5.3.2.3.10 Other service upon receipt tasks <other.surtsk>.....242
E.5.3.2.3.11 Follow-on maintenance <followon.maintsk>.....242
E.5.3.3 Equipment/user fitting instructions work package <perseqpwp>.....243
E.5.3.3.1 Work package identification <wpidinfo>.....243
E.5.3.3.2 Work package initial setup <initial_setup>.....243
E.5.3.4 Preventive Maintenance Checks and Services (PMCS) (except for aircraft TMs, DMWRs, and NMWRs).....243
E.5.3.4.1 Preventive Maintenance Checks and Services (PMCS) introduction work package <pmcsintrowp>.....243
E.5.3.4.1.1 Work package identification information <wpidinfo>.....243
E.5.3.4.1.2 Work package initial setup <initial_setup>.....243
E.5.3.4.1.3 Preventive Maintenance Checks and Services (PMCS) data.....243
E.5.3.4.2 Preventive Maintenance Checks and Services (PMCS) work package <pmcswp>.....244
E.5.3.4.2.1 Work package identification information <wpidinfo>.....244
E.5.3.4.2.2 Work package initial setup <initial_setup>.....244
E.5.3.4.2.3 Preventive Maintenance Checks and Services (PMCS) procedures.....244
E.5.3.4.2.3.1 Preventive Maintenance Checks and Services (PMCS) data preparation <pmcstable>.....244
E.5.3.4.2.3.1.1 Item number <itemno>.....244
E.5.3.4.2.3.1.2 Intervals <interval>.....244
E.5.3.4.2.3.1.3 Man-hours <manhours>.....245
E.5.3.4.2.3.1.4 Item to be checked or serviced <checked>.....245
E.5.3.4.2.3.1.5 Procedure <pmcsproc>.....245
E.5.3.4.2.3.1.6 Equipment not ready/available if: <eqpnotavail>.....245
E.5.3.4.2.4 Mandatory replacement parts <mrplpart>.....246
E.5.3.4.3 Preventive Maintenance Checklist (PMC).....246
E.5.3.5 Maintenance work packages (not required for aircraft PM and PMS manuals) <maintwp>.....246
E.5.3.5.1 Work package identification information <wpidinfo>.....247
E.5.3.5.2 Work package initial setup <initial_setup>.....247
E.5.3.5.3 Maintenance tasks <maintsk>.....247
E.5.3.5.3.1 Maintenance task requirements.....248
E.5.3.5.3.2 Inspect <inspect>.....249
E.5.3.5.3.2.1 Inspect during assembly.....249
E.5.3.5.3.2.2 Inspection of conventional and chemical ammunition or components containing radioactive materials (Maintainer, below depot sustainment, or ASB only).....249
E.5.3.5.3.2.3 Pre-embarkation inspection of material in units alerted for overseas movement.....251
E.5.3.5.3.2.4 Inspection of installed items.....251
E.5.3.5.3.2.5 Inspection-acceptance and rejection criteria.....251
E.5.3.5.3.3 Testing <test>.....251
E.5.3.5.3.4 Servicing <service>.....252

TABLE OF CONTENTS

PARAGRAPH PAGE
E.5.3.5.3.5 Adjustment <adjust>. 252
E.5.3.5.3.6 Alignment <align>. 253
E.5.3.5.3.7 Calibration <calibration>. 253
E.5.3.5.3.8 Removal <remove>. 253
E.5.3.5.3.9 Installation <install>. 253
E.5.3.5.3.10 Replace <replace>. 254
E.5.3.5.3.11 Repair <repair>. 254
E.5.3.5.3.12 Painting <paint>. 254
E.5.3.5.3.13 Overhaul <overhaul>. 254
E.5.3.5.3.14 Rebuild <rebuild>. 254
E.5.3.5.3.15 Lubrication <lube>. 254
E.5.3.5.3.16 Mark <mark>. 254
E.5.3.5.3.17 Pack <pack>. 255
E.5.3.5.3.18 Unpack <unpack>. 255
E.5.3.5.3.19 Preserve <preservation>. 255
E.5.3.5.3.20 Assembly and preparation for use <prepforuse>. 255
E.5.3.5.3.21 Assembly <assem>. 255
E.5.3.5.3.22 Disassembly <disassem>. 256
E.5.3.5.3.23 Cleaning <clean>. 256
E.5.3.5.3.24 Nondestructive Inspection (NDI) <ndi>. 257
E.5.3.5.3.25 Radio interference suppression <ris>. 257
E.5.3.5.3.26 Placing in service <pis>. 257
E.5.3.5.3.27 Towing <tow>. 258
E.5.3.5.3.28 Jacking <jack>. 258
E.5.3.5.3.29 Parking <park>. 258
E.5.3.5.3.30 Mooring <moor>. 258
E.5.3.5.3.31 Covering <cover>. 258
E.5.3.5.3.32 Hoisting <hoist>. 258
E.5.3.5.3.33 Sling loading <sling>. 258
E.5.3.5.3.34 External power <extpwr>. 258
E.5.3.5.3.35 Preservation, packaging, and marking (DMWR/NMWR only). 258
E.5.3.5.3.36 Preparation for storage or shipment <pss>. 260
E.5.3.5.3.37 Activate ammunition, mines, etc. <arm>. 261
E.5.3.5.3.38 Load <load>. 261
E.5.3.5.3.39 Unload <unload>. 261
E.5.3.5.3.40 Software maintenance <softwaremaint>. 261
E.5.3.5.3.41 Additional maintenance tasks <other.maintsk>. 261
E.5.3.5.3.42 Follow-on maintenance task <followon.maintsk>. 261
E.5.3.6 Overhaul and retirement schedule work package (aircraft only) <orschwp>. 262
E.5.3.6.1 Work package identification information <wpidinfo>. 262
E.5.3.6.2 Work package initial setup <initial_setup>. 262
E.5.3.6.3 Overhaul and retirement schedule <orsch>. 262
E.5.3.7 General maintenance work package <gen.maintwp>. 262
E.5.3.7.1 Work package identification information <wpidinfo>. 262

TABLE OF CONTENTS

PARAGRAPH PAGE
E.5.3.7.2 Work package initial setup <initial_setup>. 262
E.5.3.7.3 Maintenance procedure <proc>. 263
E.5.3.8 Lubrication instructions work package <lubewp>....263
E.5.3.8.1 Work package identification information <wpidinfo>. 263
E.5.3.8.2 Work package initial setup <initial_setup>. 263
E.5.3.8.3 Lubrication instructions. 263
E.5.3.8.4 Lubrication charts. 263
E.5.3.9 DMWR/NMWR specific maintenance work packages. 263
E.5.3.9.1 Facilities work package <facilwp>. 263
E.5.3.9.1.1 Work package identification information <wpidinfo>. 263
E.5.3.9.1.2 Work package initial setup <initial_setup>. 263
E.5.3.9.2 Overhaul inspection procedures (OIPs) work package <oipwp>. 264
E.5.3.9.2.1 Work package identification information <wpidinfo>. 264
E.5.3.9.2.2 Work package initial setup <initial_setup>. 264
E.5.3.9.2.3 Overhaul Inspection Procedures (OIPs)....264
E.5.3.9.3 Depot mobilization requirements work package <mobilwp>....264
E.5.3.9.3.1 Work package identification information <wpidinfo>. 264
E.5.3.9.3.2 Work package initial setup <initial_setup>. 264
E.5.3.9.3.3 Introduction for depot mobilization requirements work package <intro>....264
E.5.3.9.3.4 Mobilization requirements <mobilreq>. 265
E.5.3.9.4 Quality Assurance (QA) requirements work package <qawp>. 265
E.5.3.9.4.1 Work package identification information <wpidinfo>. 265
E.5.3.9.4.2 Work package initial setup <initial_setup>. 265
E.5.3.9.4.3 Statement of responsibility <responsibility>. 265
E.5.3.9.4.4 Definitions <definitions>. 265
E.5.3.9.4.5 Special requirements for inspection tools and equipment <specialreq>....266
E.5.3.9.4.6 Certification requirements <certreq>. 266
E.5.3.9.4.7 Quality program <quality-program>. 266
E.5.3.9.4.8 In-process inspections <inprocess>. 266
E.5.3.9.4.9 Acceptance inspections <acceptance>. 266
E.5.3.9.4.10 First article inspection <first>. 266
E.5.3.10 Illustrated list of manufactured items (Field and above). 266
E.5.3.10.1 Illustrated list of manufactured items introduction work package <manu_items_introwp>. 267
E.5.3.10.1.1 Work package identification information <wpidinfo>. 267
E.5.3.10.1.2 Work package initial setup <initial_setup>. 267
E.5.3.10.1.3 Introduction for illustrated list of manufactured items work package <intro>. 267
E.5.3.10.1.4 Index of manufactured items <manuindx>. 267
E.5.3.10.2 Manufacturing procedure work package <manuwp>. 267
E.5.3.10.2.1 Work package identification information <wpidinfo>. 267
E.5.3.10.2.2 Work package initial setup <initial_setup>. 267
E.5.3.10.2.3 Instructions for manufactured items <manuitem>. 268
E.5.3.11 Torque limits work package (Field and above) <torquewp>....268
E.5.3.11.1 Work package identification information <wpidinfo>. 268

TABLE OF CONTENTS

PARAGRAPH PAGE
E.5.3.11.2 Work package initial setup <initial_setup>. 268
E.5.3.11.3 Introduction <intro>....268
E.5.3.11.4 Torque instructions <torqueval>....268
E.5.3.12 Wiring diagrams work package (Field and above) <wiringwp>. 268
E.5.3.12.1 Work package identification information <wpidinfo>. 268
E.5.3.12.2 Work package initial setup <initial_setup>. 269
E.5.3.12.3 Introduction <intro>....269
E.5.3.12.4 Wire identification <wireid>. 269
E.5.3.12.5 Abbreviations <abbrev>. 269
E.5.3.12.6 Wiring diagrams <wiringdiag>....269
E.5.3.13 Aircraft specific maintenance work packages. 269
E.5.3.13.1 Preventive maintenance inspections work package <pmiwp>. 269
E.5.3.13.1.1 Work package identification information <wpidinfo>. 269
E.5.3.13.1.2 Work package initial setup <initial_setup>. 269
E.5.3.13.1.3 General information and introduction <geninfo>. 269
E.5.3.13.1.4 Standards of serviceability. 269
E.5.3.13.1.5 Special inspections. 270
E.5.3.13.2 Aircraft inventory master guide work package <inventorywp>. 270
E.5.3.13.2.1 Work package identification information <wpidinfo>. 270
E.5.3.13.2.2 Work package initial setup <initial_setup>. 271
E.5.3.13.2.3 Introduction <intro>....271
E.5.3.13.2.4 Security <security>. 271
E.5.3.13.2.5 Inventoriable items <inventoriable>. 271
E.5.3.13.2.6 Periods of inventory <prdinv>. 271
E.5.3.13.3 Storage of aircraft work package <storagewp>. 272
E.5.3.13.3.1 Work package identification information <wpidinfo>. 272
E.5.3.13.3.2 Work package initial setup <initial_setup>. 272
E.5.3.13.3.3 General information for storage of aircraft work package <geninfo>. 272
E.5.3.13.3.4 Flyable storage <flyable>, short term storage <short>, and intermediate storage <intermediate>. 272
E.5.3.13.4 Weighing and loading work package (ASB only) <wtloadwp>. 272
E.5.3.13.4.1 Work package identification information <wpidinfo>. 272
E.5.3.13.4.2 Work package initial setup <initial_setup>. 272
E.5.3.13.4.3 General information <geninfo>. 273
E.5.3.13.4.4 Weighing information <formchart>....273
E.5.3.13.4.5 Loading information <weightinst>. 273
E.5.3.14 Auxiliary equipment maintenance work package <auxeqpwp>. 273
E.5.3.14.1 Work package identification information <wpidinfo>. 273
E.5.3.14.2 Work package initial setup <initial_setup>. 273
E.5.3.14.3 Auxiliary equipment procedures <maintsk>/<proc>. 273
E.5.3.15 Ammunition specific work packages. 274
E.5.3.15.1 Ammunition maintenance work package <ammowp>. 274
E.5.3.15.1.1 Work package identification information <wpidinfo>. 274
E.5.3.15.1.2 Work package initial setup <initial_setup>. 274
E.5.3.15.1.3 Care and handling. 274

TABLE OF CONTENTS

PARAGRAPH PAGE
E.5.3.15.1.3.1 Ammunition markings <mark>. 274
E.5.3.15.1.3.2 Classification of defects <ammo.defect>....274
E.5.3.15.1.3.3 Handling <ammo.handling>. 274
E.5.3.15.1.3.3.1 Unpacking <unpack>....274
E.5.3.15.1.3.3.2 Packing <pack>. 275
E.5.3.15.1.4 Defective <ammo.defect>....275
E.5.3.15.1.5 Cleaning and painting <clean> or <paint>. 275
E.5.3.15.2 Ammunition marking information work package <ammo.markingwp>....275
E.5.3.15.2.1.1 Work package identification information <wpidinfo>. 275
E.5.3.15.2.1.2 Work package initial setup <initial_setup>. 275
E.5.3.15.3 Foreign ammunition (NATO) work package <natowp>. 275
E.5.3.15.3.1 Work package identification information <wpidinfo>. 275
E.5.3.15.3.2 Work package initial setup <initial_setup>. 275
E.5.3.16 Preventive maintenance services/Preventive maintenance daily inspection work packages (aircraft preventive maintenance services/preventive maintenance daily only) <pms-inspecwp>> or <pmd-inspecwp>....275
E.5.3.16.1 Work package identification information <wpidinfo>. 275
E.5.3.16.2 Work package initial setup <initial_setup>. 276
E.5.3.16.3 Actuation warning....276
E.5.3.16.4 Mandatory safety-of-flight inspection items....276
E.5.3.16.5 Area diagram....276
E.5.3.16.6 Standard checklists....276
E.5.3.17 Phased maintenance inspection work package (aircraft phased maintenance checklist only) <pmi-cklistwp>. 277
E.5.3.17.1 Work package identification information <wpidinfo>. 277
E.5.3.17.2 Work package initial setup <initial_setup>. 277
E.5.3.17.3 Inspection area diagrams <figure>. 277
E.5.3.17.4 Phased maintenance checklist....277

E.6 NOTES 277

F PARTS INFORMATION 289

F.1 SCOPE 289
F.1.1 Scope. 289

F.2 APPLICABLE DOCUMENTS....289

F.3 DEFINITIONS 289

F.4 GENERAL REQUIREMENTS....289
F.4.1 General. 289
F.4.2 Maintenance level/class applicability. 289
F.4.3 Preparation of digital data for electronic delivery. 289
F.4.4 Use of the Document Type Definition (DTD)/stylesheet. 289
F.4.5 Content structure....290

TABLE OF CONTENTS

PARAGRAPH PAGE
F.4.6 Style and format. 290
F.4.7 Interactive Electronic Technical Manual (IETM) functionality. 290
F.4.8 Work package development. 290
F.4.9 Selective application and tailoring. 290

F.5 DETAILED REQUIREMENTS. 290
F.5.1 General. 290
F.5.2 Parts information development. 290
F.5.3 Preparation of parts information. 290
F.5.3.1 Parts information work packages requirements. 291
F.5.3.1.1 Parts information work packages <pim> included in maintenance Interactive Electronic Technical Manuals (IETM). 291
F.5.3.1.2 Parts information work packages included in a DMWR/NMWR. 291
F.5.3.1.2.1 Depot repair parts. 291
F.5.3.2 Repair parts list, special tools, and kits work package layout. 291
F.5.3.3 Introduction work package <introwp>. 291
F.5.3.3.1 Work package identification information <wpidinfo>. 291
F.5.3.3.2 Work package initial setup <initial_setup>. 291
F.5.3.3.3 Introduction. 291
F.5.3.3.3.1 Non-aviation parts information introduction. 291
F.5.3.3.3.2 Aviation parts information introduction. 300
F.5.3.3.3.3 Indexed parts information illustration and legend <figure>. 307
F.5.3.4 Repair parts list work package <plwp>. 307
F.5.3.4.1 Work package identification information <wpidinfo>. 307
F.5.3.4.2 Work package initial setup <initial_setup>. 307
F.5.3.4.3 Repair parts list <pi.category>. 307
F.5.3.4.3.1 Repair parts figure title <title>. 307
F.5.3.4.3.2 Repair part item <pi.item>. 308
F.5.3.4.3.2.1 Item number column <callout>. 308
F.5.3.4.3.2.2 Source, Maintenance, and Recoverability (SMR) code column <smr>. 308
F.5.3.4.3.2.3 National Stock Number (NSN) column <nsn>. 308
F.5.3.4.3.2.4 Commercial And Government Entity Code (CAGEC) column <cageno> 308
F.5.3.4.3.2.5 Part number column <partno>. 308
F.5.3.4.3.2.6 Description and Useable On Code (UOC) column. 308
F.5.3.4.3.2.6.1 Functional group header <fncgrp>. 308
F.5.3.4.3.2.6.2 Item name <name>. 308
F.5.3.4.3.2.6.3 Description <desc>. 308
F.5.3.4.3.2.6.4 Indentions. 308
F.5.3.4.3.2.6.5 Useable On Code (UOC) <uoc>. 308
F.5.3.4.3.2.6.6 Serial number application <usbefserno>. 309
F.5.3.4.3.2.6.7 Assembled items. 309
F.5.3.4.3.2.6.8 Manufactured items. 309
F.5.3.4.3.2.6.9 Kits and kit repair parts. 309
F.5.3.4.3.2.6.10 End of work package statement. 310
F.5.3.4.3.2.7 Quantity column <qty>. 310

TABLE OF CONTENTS

PARAGRAPH PAGE
F.5.3.4.3.2.8 (MC) United States Marine Corp. (USMC) quantity per equipment column <qty_per_end_item>. 310
F.5.3.4.3.2.9 Mandatory replacement <mrp>. 310
F.5.3.4.3.2.10 Unit of issue <ui>. 310
F.5.3.4.3.2.10.1 Unit of measure 'um'. 310
F.5.3.4.3.2.11 Reference designator <refdes>. 310
F.5.3.4.3.2.12 Next higher assembly <nha_item>. 310
F.5.3.4.3.2.13 Parts breakdown reference <part.breakdown.ref>. 310
F.5.3.4.4 Basic Issue Items (BII) (repair parts). 310
F.5.3.4.5 Expendable and durable items. 310
F.5.3.5 Repair parts for special tools list work package <stl_partswp>. 310
F.5.3.5.1 Work package identification information <wpidinfo>. 311
F.5.3.5.2 Work package initial setup <initial_setup>. 311
F.5.3.5.3 Special tools repair parts items list <pi.category>. 311
F.5.3.5.3.1 Functional group header <fncgrp>. 311
F.5.3.6 Kit parts list work package <kitswp>. 311
F.5.3.6.1 Work package identification information <wpidinfo>. 311
F.5.3.6.2 Work package initial setup <initial_setup>. 311
F.5.3.6.3 Kits part items list <pi.category>. 311
F.5.3.6.3.1 Functional group header <fncgrp>. 311
F.5.3.6.3.2 Kit part item group <kititem>. 312
F.5.3.6.3.3 Kits part item quantity <qty>. 312
F.5.3.7 Bulk items work package <bulk_itemswp>. 312
F.5.3.7.1 Work package identification information <wpidinfo>. 312
F.5.3.7.2 Work package initial setup <initial_setup>. 312
F.5.3.7.3 Bulk item <pi.item>. 312
F.5.3.7.3.1 ITEM column <callout>. 312
F.5.3.7.3.2 Functional group header <fncgrp>. 312
F.5.3.8 Special tools list work package <stlwp>. 312
F.5.3.8.1 Work package identification information <wpidinfo>. 312
F.5.3.8.2 Work package initial setup <initial_setup>. 312
F.5.3.8.3 Special tools list <pi.category>. 312
F.5.3.8.3.1 Item number column. 313
F.5.3.8.3.2 Functional group header <fncgrp>. 313
F.5.3.8.3.3 D-coded items. 313
F.5.3.8.3.4 Basis of Issue (BOI) <boi>. 313
F.5.3.8.3.5 Quantity column. 313
F.5.3.8.3.6 Components list <kititem>. 313
F.5.3.9 Cross-reference index work packages. 313
F.5.3.9.1 National Stock Number (NSN) index work package <nsnindxwp>. 313
F.5.3.9.1.1 Work package identification information <wpidinfo>. 313
F.5.3.9.1.2 Work package initial setup <initial_setup>. 313
F.5.3.9.1.3 National Stock Number (NSN) index <nsnindx>. 313
F.5.3.9.2 Part number index work package <pnindxwp>. 313
F.5.3.9.2.1 Work package identification information <wpidinfo>. 314

TABLE OF CONTENTS

PARAGRAPH PAGE
F.5.3.9.2.2 Work package initial setup <initial_setup>. 314
F.5.3.9.2.3 Part number index <pnindx>. 314
F.5.3.9.3 Reference designator index work package <refdesindxwp>. 314
F.5.3.9.3.1 Work package identification information <wpidinfo>. 314
F.5.3.9.3.2 Work package initial setup <initial_setup>. 314
F.5.3.9.3.3 Reference designator index <refdesindx>. 314
F.5.3.9.4 Bulk figure reference. 314
F.5.3.9.5 Sets and kits. 314
F.5.3.10 Illustrations. 314
F.5.3.10.1 Arrangement of illustrations. 314
F.5.3.10.2 Use of illustrations. 315
F.5.3.10.3 Identical parts/item numbers. 315
F.5.3.10.4 Identical assemblies. 315

F.6 NOTES 315

G SUPPORTING INFORMATION 319

G.1 SCOPE 319
G.1.1 Scope. 319

G.2 APPLICABLE DOCUMENTS 319

G.3 DEFINITIONS 319

G.4 GENERAL REQUIREMENTS 319
G.4.1 General. 319
G.4.2 Maintenance level/class applicability. 319
G.4.3 Preparation of digital data for electronic delivery. 319
G.4.4 Use of the Document Type Definition (DTD)/stylesheet. 319
G.4.5 Content structure. 320
G.4.6 Style and format. 320
G.4.7 Interactive Electronic Technical Manual (IETM) functionality. 320
G.4.8 Work package development. 320
G.4.9 Safety devices and interlocks. 320
G.4.10 Electrostatic Discharge (ESD) sensitive parts. 320
G.4.11 Nuclear hardness <hcp>. 320
G.4.12 Selective application and tailoring. 320

G.5 DETAILED REQUIREMENTS 321
G.5.1 Preparation of supporting information. 321
G.5.2 References work package <refwp>. 321
G.5.2.1 Work package identification information <wpidinfo>. 321
G.5.2.2 Work package initial setup <initial_setup>. 321
G.5.2.3 Scope <scope>. 321
G.5.2.4 Publication list <publist>. 321

TABLE OF CONTENTS

PARAGRAPH		PAGE
G.5.3	Maintenance Allocation Chart (MAC) (Field level only)	321
G.5.3.1	Introduction for non-aviation Maintenance Allocation Chart (MAC) work package <macintrowp>.	321
G.5.3.1.1	Work package identification information <wpidinfo>.	321
G.5.3.1.2	Work package initial setup <initial_setup>.	321
G.5.3.1.3	Introduction <intro>.	321
G.5.3.2	Introduction for aviation Maintenance Allocation Chart (MAC) work package <macintrowp>.	327
G.5.3.2.1	Work package identification information <wpidinfo>.	327
G.5.3.2.2	Work package initial setup <initial_setup>.	327
G.5.3.2.3	Introduction <intro>.	327
G.5.3.3	Maintenance Allocation Chart (MAC) work package <macwp>.	333
G.5.3.3.1	Work package identification information <wpidinfo>.	333
G.5.3.3.2	Work package initial setup <initial_setup>.	333
G.5.3.3.3	Maintenance Allocation Chart (MAC) entries.	333
G.5.3.3.4	Maintenance Allocation Chart (MAC) format.	334
G.5.3.4	Tools and test equipment requirements <tereqtab>.	334
G.5.3.5	Remarks <remarktab>	335
G.5.4	Components of End Item (COEI) and Basic Issue Items (BII) lists work package (crew (operator) only) <coeibiiwp>	335
G.5.4.1	Work package identification information <wpidinfo>.	335
G.5.4.2	Work package initial setup <initial_setup>.	335
G.5.4.3	Introduction for Components of End Item (COEI) and Basic Issue Items (BII) lists work package <intro>	335
G.5.4.4	Components Of End Item (COEI) list <coei>.	337
G.5.4.4.1	List <coeitab>.	337
G.5.4.5	Basic Issue Items (BII) list <bii>.	337
G.5.5	Additional Authorization List (AAL) work package (crew (operator) only) <aalwp>.	337
G.5.5.1	Work package identification information <wpidinfo>.	337
G.5.5.2	Work package initial setup <initial_setup>.	337
G.5.5.3	Introduction <intro>.	337
G.5.5.4	Additional Authorization List (AAL) <aal>.	338
G.5.6	Expendable and durable items list work package <explistwp>.	338
G.5.6.1	Work package identification information <wpidinfo>.	338
G.5.6.2	Work package initial setup <initial_setup>.	338
G.5.6.3	Introduction for expendable and durable items list work package <intro>.	339
G.5.6.4	Expendable and durable items list <explist>.	339
G.5.7	Tool identification list work package (Field level and above) <toolidwp>	340
G.5.7.1	Work package identification information <wpidinfo>.	340
G.5.7.2	Work package initial setup <initial_setup>.	340
G.5.7.3	Introduction for tool identification list work package <intro>.	340
G.5.7.4	Tool identification list <toolidlist>.	341
G.5.8	Mandatory replacement parts work package (Field level and above) <mrplwp>.	341

TABLE OF CONTENTS

PARAGRAPH PAGE
G.5.8.1 Work package identification information <wpidinfo>. 341
G.5.8.2 Work package initial setup <initial_setup>. 341
G.5.8.3 Introduction for mandatory replacement parts work package <intro>. 341
G.5.8.4 Mandatory replacement parts list <mprl>....341
G.5.9 Critical safety items (CSIs) work package <csi.wp>....341
G.5.9.1 Work package identification information <wpidinfo>. 341
G.5.9.2 Work package initial setup <initial_setup>. 342
G.5.9.3 Critical Safety Items (CSI) (Flight Safety Critical Aircraft Parts (FSCAP)) <csi>. 342
G.5.10 Support items work package <supitemwp>....342
G.5.10.1 Work package identification information <wpidinfo>. 342
G.5.10.2 Work package initial setup <initial_setup>. 342
G.5.10.3 Introduction <intro>....342
G.5.10.4 Support items lists....342
G.5.11 Additional work packages <genwp>. 342
G.5.11.1 Work package identification information <wpidinfo>. 342
G.5.11.2 Work package initial setup <initial_setup>. 342

G.6 NOTES 342

H DESTRUCTION OF ARMY MATERIEL TO PREVENT ENEMY USE....351

H.1 SCOPE 351
H.1.1 Scope. 351

H.2 APPLICABLE DOCUMENTS....351

H.3 DEFINITIONS 351

H.4 GENERAL REQUIREMENTS....351
H.4.1 General. 351
H.4.2 Types of manuals. 351
H.4.2.1 Destruction manuals for a Federal Supply Classification (FSC). 351
H.4.2.2 Destruction manuals/work packages for weapon systems. 352
H.4.3 Use of the Document Type Definition (DTD)/stylesheet. 352
H.4.4 Content structure. 352
H.4.5 Style and format. 352
H.4.6 Selective application and tailoring. 352
H.4.7 General destruction rules. 352

H.5 DETAILED REQUIREMENTS....353
H.5.1 Front and rear matter. 353
H.5.1.1 General information work package <ginfowp>. 353
H.5.1.2 Work package identification information <wpidinfo>. 353
H.5.1.3 Work package initial setup <wpinfo>. 353
H.5.2 Destruction introduction work package <destruct-introwp>. 353

TABLE OF CONTENTS

PARAGRAPH PAGE
H.5.2.1 Work package identification information <wpidinfo>. 353
H.5.2.2 Work package initial setup <wpinfo>. 353
H.5.2.3 Authority to destroy material <authorize_to_destroy>. 353
H.5.2.4 Reporting destruction <report_destruct>. 353
H.5.2.5 General destruction information <general_destruct_info>. 354
H.5.2.6 Degree of destruction. 354
H.5.2.7 Essential components and spare parts <component_spares>. 354
H.5.3 Destruction procedures work package <destruct-materialwp>. 354
H.5.3.1 Work package identification information <wpidinfo>. 354
H.5.3.2 Work package initial setup <initial_setup >. 354
H.5.3.3 Parts list <essential_spares>. 355
H.5.3.4 Specific destruction procedures <proc>. 355
H.5.3.5 Classified equipment and documents. 355

H.6 NOTES 355

I BATTLE DAMAGE ASSESSMENT AND REPAIR (BDAR) 357

I.1 SCOPE 357
I.1.1 Scope. 357

I.2 APPLICABLE DOCUMENTS 357

I.3 DEFINITIONS 357

I.4 GENERAL REQUIREMENTS 357
I.4.1 Maintenance level. 357
I.4.2 Maintenance level/class applicability. 357
I.4.3 Preparation of digital data for electronic delivery. 357
I.4.4 Use of the Document Type Definition (DTD)/stylesheet. 358
I.4.5 Content structure. 358
I.4.6 Style and format. 358
I.4.7 IETM functionality. 358
I.4.8 Work package development. 358
I.4.9 Safety devices and interlocks. 358
I.4.10 Electrostatic Discharge (ESD) sensitive parts. 358
I.4.11 Nuclear hardness <hcp>. 358
I.4.12 Selective application and tailoring. 358

I.5 DETAILED REQUIREMENTS 359
I.5.1 Content. 359
I.5.1.1 Operating procedures. 359
I.5.2 BDAR information work packages <baim>. 359
I.5.2.1 General information work package <ginfowp>. 359
I.5.2.2 BDAR unique general information work package <bdar-geninfowp>. 359
I.5.2.2.1 Work package identification information <wpidinfo>. 359

TABLE OF CONTENTS

PARAGRAPH		PAGE
I.5.2.2.2	BDAR fixes statement.	359
I.5.2.2.3	Standards and practices <bdar-std-practices>.	359
I.5.2.2.4	Tasks and responsibilities <bdar-task-resp>.	360
I.5.2.2.4.1	Tagging/identifying BDAR repairs.	360
I.5.2.2.4.2	Reports.	360
I.5.2.2.5	Combat threats <bdar-combat-threat> (Aviation Only).	360
I.5.2.3	Battle damage assessment work package(s) <damage-assesswp>.	360
I.5.2.3.1	Work package identification information <wpidinfo>.	361
I.5.2.3.2	Work package initial setup <initial_setup>.	361
I.5.2.3.3	BDAR fixes statement.	361
I.5.2.3.4	Introduction <intro>.	361
I.5.2.3.5	Fault assessment tables.	361
I.5.2.4	Repair work package <genrepairwp>.	361
I.5.2.4.1	Work package identification information <wpidinfo>.	361
I.5.2.4.2	Work package initial setup <initial_setup>.	362
I.5.2.4.3	BDAR fixes statement.	362
I.5.2.4.4	Introduction <geninfo>.	362
I.5.2.4.4.1	Scope.	362
I.5.2.4.4.2	Repair procedure index.	362
I.5.2.4.5	Repair procedure <bdar-repair-proc>.	362
I.5.2.4.5.1	General.	362
I.5.2.4.5.2	Item name, trouble.	362
I.5.2.4.5.2.1	Limitations <bdar-limitation>.	362
I.5.2.4.5.2.2	Personnel/time required <bdar-persn>.	362
I.5.2.4.5.2.3	Materials/tools <bdar-mtrl-tools>.	362
I.5.2.4.5.2.4	Procedural steps <proc>.	362
I.5.2.4.5.3	Options.	362
I.5.2.4.5.4	Item name, category.	363
I.5.2.5	References work package <refwp>.	363
I.5.2.6	Special or fabricated tools work package <bdartoolswp>.	363
I.5.2.6.1	Work package identification information <wpidinfo>.	363
I.5.2.6.2	Initial setup information <initial_setup>.	363
I.5.2.6.3	BDAR fixes statement.	363
I.5.2.6.4	Content and format.	363
I.5.2.7	Expendable and durable items work package <explistwp>.	363
I.5.2.8	Substitute materials/parts work package <substitute-matwp>.	363
I.5.2.8.1	Work package identification information <wpidinfo>.	363
I.5.2.8.2	Initial setup information <initial_setup>.	363
I.5.2.8.3	BDAR fixes statement.	363
I.5.2.8.4	Content.	364

TABLE OF CONTENTS

PARAGRAPH PAGE

I.6 NOTES 364

J PREVENTIVE MAINTENANCE CHECKLIST (PMC) 371

J.1 SCOPE 371
J.1.1 Scope. 371

J.2 APPLICABLE DOCUMENTS 371

J.3 DEFINITIONS 371

J.4 GENERAL REQUIREMENTS 371
J.4.1 General. 371
J.4.2 Development of a Preventive Maintenance Checklist (PMC). 371
J.4.3 Preparation of digital data for electronic delivery. 371
J.4.4 Use of the Document Type Definition (DTD)/stylesheet. 371
J.4.5 Content structure. 371
J.4.6 Style and format. 372
J.4.7 IETM functionality. 372
J.4.8 Display area. 372
J.4.9 Preventive Maintenance Checklist (PMC) numbering. 372
J.4.11 Illustrations. 372
J.4.12 Selective application and tailoring. 372

J.5 DETAILED REQUIREMENTS 372
J.5.1 Basic content. 372
J.5.2 Usage note and reporting errors and recommending improvements statement <reporting>. 372
J.5.3 Technical content. 372
J.5.4 Item numbering. 373
J.5.5 Inspection checklist use. 373

J.6 NOTES 373
J.6.1 Acquisition requirements. 373

K LUBRICATION ORDERS 375

K.1 SCOPE 375
K.1.1 Scope. 375

K.2 APPLICABLE DOCUMENTS 375

K.3 DEFINITIONS 375

K.4 GENERAL REQUIREMENTS 375
K.4.1 General. 375

TABLE OF CONTENTS

PARAGRAPH PAGE
K.4.2 Development of lubrication instructions....375
K.4.3 Preparation of digital data for electronic delivery. 375
K.4.4 Use of Document Type Definition (DTD)/stylesheet....375
K.4.5 Content structure....376
K.4.6 Style and format....376
K.4.7 Work package development....376
K.4.8 Warnings, cautions, and notes. 376
K.4.9 Illustrations. 376
K.4.9.1 Single illustrations. 376
K.4.9.2 Multiple illustrations. 376
K.4.10 Safety devices and interlocks....376
K.4.11 Electrostatic Discharge (ESD) sensitive parts. 376
K.4.12 Selective application and tailoring....376

K.5 DETAILED REQUIREMENTS....376
K.5.1 Lubrication Order (LO) card <lubeorder>....376
K.5.1.2 Lubrication order (LO) number. 377
K.5.2 Title screen (first screen) contents <frntcover_abbreviated>. 377
K.5.2.1 Heading. 377
K.5.2.2 Title <tmtitle>....377
K.5.2.3 National Stock Number (NSN), part number. 377
K.5.2.4 Reference line. 377
K.5.2.5 Reporting errors <reporting>....377
K.5.2.6 Distribution statement, export control warning, and destruction notice <notices>. 377
K.5.2.7 Lubrication order (LO) statement <general_purpose_notices>....377
K.5.3 Introduction <intro>....377
K.5.3.1 General statement(s)/notes....377
K.5.3.1.1 General note placement....377
K.5.3.1.2 General note content. 377
K.5.3.2 Oil filter statement. 378
K.5.3.3 Army Oil Analysis Program (AOAP) statements....378
K.5.3.3.1 Army Oil Analysis Program (AOAP) sampling interval statement....378
K.5.3.3.2 Army Oil Analysis Program (AOAP) not available/non-enrolled statement. 378
K.5.3.4 Warranty hardtime statement....378
K.5.4 Lubrication procedures <lubewp>....378
K.5.4.1 Work package identification information <wpidinfo>. 378
K.5.4.2 Work package initial setup <initial_setup>. 378
K.5.4.3 Maintenance class....378
K.5.4.4 Grouped lubrication points. 379
K.5.4.5 Disassembling and hand packing....379
K.5.4.6 Cleaning, disassembling, and reassembling....379
K.5.4.7 Washing and natural drying....379
K.5.4.8 Preservative material....379

TABLE OF CONTENTS

PARAGRAPH PAGE
K.5.5 Lubricants and military symbols. 380
K.5.5.1 Lubrication interval symbols. 380
K.5.6 Measurements. 380
K.5.7 Lubricant table. 380
K.5.7.1 Notes to tables. 380
K.5.8 Special notes. 381
K.5.8.1 Pertinent lubrication point information. 381
K.5.8.2 Effect of extreme conditions. 381
K.5.9 Lubrication order rear matter <lubeorder_rear>. 381
K.5.9.1 Reporting errors and recommending improvements DA Form 2028 <da2028>. 381
K.5.9.2 Authentication block <authent>. 381

K.6 NOTES 381

L DMWR FOR MAINTENANCE/DEMILITARIZATION OF AMMUNITION 387

L.1 SCOPE 387
L.1.1 Scope. 387

L.2 APPLICABLE DOCUMENTS 387

L.3 DEFINITIONS 387

L.4 GENERAL REQUIREMENTS 387
L.4.1 General. 387
L.4.2 Development of maintenance or demilitarization instructions. 387
L.4.3 Preparation of digital data for electronic delivery. 387
L.4.4 Use of Document Type Definition (DTD)/stylesheet. 387
L.4.5 Content structure and format. 387
L.4.6 Style and format. 388
L.4.7 IETM functionality. 388
L.4.8 Work package development. 388
L.4.9 Electrostatic Discharge (ESD) sensitive parts. 388
L.4.10 Selective application and tailoring. 388

L.5 DETAILED REQUIREMENTS 388
L.5.1 General. 388
L.5.2 Preparation of maintenance or demilitarization DMWRs. 388
L.5.3 General information work package <ginfowp>. 389
L.5.4 DMWR introduction work package <dmwr_introwp>. 389
L.5.4.1 Work package identification information <wpidinfo>. 389
L.5.4.2 Work package initial setup <initial_setup>. 389
L.5.4.3 Work planning <work_planning>. 389
L.5.4.4 Disposition <disposition>. 389
L.5.4.5 Equipment <equipment>. 389

TABLE OF CONTENTS

PARAGRAPH PAGE
L.5.4.6 Safety requirements <sfty_req>. 389
L.5.4.7 Protection against general hazards <gen_hazards>. 390
L.5.4.8 Protection against specific hazards <spec_hazards>. 390
L.5.4.9 Hazard analysis <haz_analysis>. 390
L.5.4.10 Environmental regulation compliance <erc>. 390
L.5.4.11 Resource conservation and recovery regulations <rcrr>. 390
L.5.4.12 Resource recovery <resource_recovery>. 390
L.5.4.13 Reporting requirements <reporting_req>. 390
L.5.4.14 Tabulated data <tabdata>. 390
L.5.4.15 Flowchart <flowchart>. 390
L.5.5 Operational requirements work package <dmwr_operationalreqwp>. 390
L.5.5.1 Work package identification information <wpidinfo>. 390
L.5.5.2 Work package initial setup <initial_setup>. 391
L.5.5.3 Special safety requirements <special_sfty>. 391
L.5.5.4 Operational steps <op_steps>. 391
L.5.5.5 Flowchart <flowchart>. 391
L.5.6 Quality acceptance requirements work package <dmwr_qarwp>. 391
L.5.6.1 Work package identification information <wpidinfo>. 391
L.5.6.2 Work package initial setup <initial_setup>. 391
L.5.6.3 Demilitarized ammunition <demil_qar>. 391
L.5.6.4 Maintenance of ammunition <maintenance_qar>. 391
L.5.6.5 Definitions <definitions>. 391
L.5.7 Supporting information work package <dmwr_sim>. 391
L.5.7.1 References work package <refwp>. 391
L.5.7.2 Expendable and durable items list work package <explistwp>. 391
L.5.7.3 Equipment and special facilities work package <facilwp>. 392
L.5.7.4 Tabulated data, military specifications, and drawings work package <genwp>. 392
L.5.7.5 Approved intraplant transfer equipment work package <genwp>. 392
L.5.7.6 Pentachlorophenol (PENTA)-treated packing materials work package <genwp>. 392
L.5.7.7 Environmental requirements work package <genwp>. 392
L.5.7.8 Hazard analysis work package <genwp>. 392
L.5.7.9 Other supporting information work packages <genwp>. 392

L.6 NOTES 392

TABLE OF FIGURES

FIGURE PAGE

FIGURE 1. Examples of warnings, cautions, and notes using alerts. 54
FIGURE 2. Examples of warnings, cautions, and notes not using alerts. 55
FIGURE 3. Example of an inline alert on a pane with scrolling. 56
FIGURE 4. Example of an inline alert on a pane with no scrolling. 57
FIGURE 5. Example of multiple alerts acknowledgment using inline alert. 58
FIGURE 6. Example of alert acknowledgment when alert applies to entire procedure or task. 60
FIGURE 7. Example of pop-up alert superimposed over applicable information. 62
FIGURE 8. Example of an inline note.....63
FIGURE 9. Example of a note in a message dialog box. 64
FIGURE 10. Example of a warning summary.....65
FIGURE 11. Example of an IETM identification information frame. 66
FIGURE 11. Example of an IETM identification information frame – Continued.....67
FIGURE 12. Example of identification information for Depot Maintenance Work Requirement (DMWR) with National Overhaul Standards.....68
FIGURE 13. Example of identification information for National Maintenance Work Requirement (NMWR) with National Overhaul Standards.....69
FIGURE 14. Example of identification information for Technical Manual (TM) with National Overhaul Standards. 70
FIGURE A-1. System with inner and outer shell. 75
FIGURE A-2. System with inner shell. 76
FIGURE A-3. Placement of project functions.....78
FIGURE A-4. Required function icons. 79
FIGURE A-5. A single pane main content area. 80
FIGURE A-6. A left and right dual pane main content area. 81
FIGURE A-7. An upper and lower dual pane main content area.....81
FIGURE A-8. A three-pane main content area. 82
FIGURE A-9. Message dialog box.....92
FIGURE A-10. Fill-in dialog box.....92
FIGURE A-11. Fill-in dialog box using number-range.....93
FIGURE A-12. Menu dialog box. 94
FIGURE A-13. Multiple-choice dialog box. 95
FIGURE A-14. Composite dialog box. 95
FIGURE A-15. Screen stacking. 97
FIGURE A-16. Example of redlining a graphic.....108
FIGURE A-17. Example of a system simulation. 110
FIGURE A-18. Example of a wire/fluid system tracing. 110
FIGURE A-19. Example of assembly/disassembly graphic.....113
FIGURE A-20. Example of a locator graphic. 113
FIGURE A-21. Example of a locator component graphic. 114
FIGURE A-22. Example of hotspotting. 115
FIGURE A-23. Example of procedure checklist.....117
FIGURE A-24. Example of an administrative log. 117
FIGURE A-25. Example of access by MWO.....118

TABLE OF FIGURES

FIGURE PAGE
FIGURE A-26. Example of context search. 120
FIGURE A-27. Example of a simultaneous text and graph display. 121
FIGURE A-28. Example of a tear-off window. 122
FIGURE A-29. Example of a tool tip. 124
FIGURE B-1. Example of a station diagram. 189
FIGURE D-1. Example of a cover sheet/frame for preshop analysis checklist. 223
FIGURE D-2. Example of a component checklist. 224
FIGURE D-3. Example of content for an operational checkout procedure. 225
FIGURE D-4. Example of content for a troubleshooting procedure (Method A). 226
FIGURE D-5. Example of content for a troubleshooting procedure (Method B). 227
FIGURE D-6. Example of content for a troubleshooting procedure (Method C). 228
FIGURE D-7. Example of content for a combination testing and troubleshooting procedure. 229
FIGURE E-1. Example of a PMCS mandatory replacement parts list. 278
FIGURE E-2. Example of tabular and narrative reliability, availability, and maintainability data. 279
FIGURE E-3. Example of a lubrication chart. 280
FIGURE E-4. Example of an illustrated list of manufactured items. 281
FIGURE E-5. Example of torque limits data. 282
FIGURE E-6. Example of two-chart diagram. 283
FIGURE E-7. Example of area diagram for PMD. 284
FIGURE E-8. Example of area diagram for PMS. 285
FIGURE E-9. Example of an inspection area diagram. 286
FIGURE E-10. Example of inspection access provisions. 287
FIGURE F-1. Example of an introduction work package. 316
FIGURE F-2. Example of an indexed parts information illustration and legend. 317
FIGURE G-1. Example of references. 343
FIGURE G-2. Example of MAC introduction. 344
FIGURE G-3. Example of aviation MAC introduction. 345
FIGURE G-4. Example of an introduction for COEI and BII lists. 346
FIGURE G-5. Example of an introduction for an AAL. 348
FIGURE G-6. Example of an introduction for an expendable and durable items list. 349
FIGURE G-7. Example of an introduction for a tool identification list. 350
FIGURE I-1. Example of BDAR assessment troubleshooting procedure. 365
FIGURE I-2. Example of BDAR assessment table. 366
FIGURE I-3 Example of substitute materials list. 367
FIGURE I-4. Example of substitute lubricants and hydraulic fluids list. 368
FIGURE I-5. Example of substitute fuels list. 369
FIGURE J-1. Example PMC title frame. 374
FIGURE K-1. Example of first screen. 382
FIGURE K-2. Example of general statements/notes. 383
FIGURE K-3. Example – identification of lubricant symbol and lubrication points, interval, and note. 384
FIGURE K-4. Example of lubricant table. 385

TABLE A-I. Standard IETM fonts.....83
TABLE A-II. Classification bar - Classification colors and markings. 84
TABLE A-III. Classification bar - Distribution colors and markings.....84
TABLE A-IV. Standard hotspot icons. 85
TABLE A-V. Hotspot in graphics.....87
TABLE A-VI. Table navigation and display. 88
TABLE A-VII. Session standard icons. 89
TABLE A-VIII. Bookmark functions and standard icons. 90
TABLE A-IX. Annotation functions and standard icons. 90
TABLE A-X. Redline functions and standard icons.....91
TABLE A-XI. Browsing display locations and recommended icons. 91
TABLE A-XII. Cursor modes. 97
TABLE A-XIII. Audio control standard icons.....97
TABLE A-XIV. Graphical navigation standard icons. 98
TABLE A-XV. Additional graphical navigation standard icons. 99
TABLE A-XVI. Functionality matrix categories.....101
TABLE A-XVII. Functionality matrix.....103
TABLE A-XVIII. Publication type and title with associated context matrix table.....128
TABLE A-XIX. Operator's Manual requirement matrix for_____. 131
TABLE A-XX. Operator, Field, and Sustainment Maintenance Manual requirement matrix for _____. 137
TABLE A-XXI. Field and Sustainment Maintenance Manual requirement matrix for _____.....145
TABLE A-XXII. DMWR/NMWR requirement matrix for _____. 153
TABLE A-XXIII. BDAR requirements matrix for_____. 159
TABLE A-XXIV. Preventive Maintenance Checklists requirements matrix for _____.....161
TABLE A-XXV. Stand-alone Lubrication Order requirements matrix for _____. ..163
TABLE A-XXVI. DMWR for Maintenance/Demilitarization requirements for _____.....165
TABLE K-I. Maintenance classes.....379
TABLE K-II. Lubrication intervals.....380

This page intentionally left blank.

1. SCOPE.

1.1 Scope. This standard establishes the technical content, style, format, and functionality requirements for all Interactive Electronic Technical Manuals (IETMs) for major weapon systems and their related systems, subsystems, equipment, Weapons Replacement Assemblies (WRAs) and, Shop Replacement Assemblies (SRAs) including Destruction of Army Materiel to Prevent Enemy Use, Battle Damage Assessment and Repair (BDAR), Preventive Maintenance Checklists (PMCs), Lubrication Orders (LOs), and Ammunition Depot Maintenance Work Requirements (DMWRs). The requirements are applicable for all maintenance levels/classes through overhaul (depot) including DMWRs and National Maintenance Work Requirements (NMWRs). The requirements can be used to develop IETMs for interactive screen presentations.

1.2 Paragraphs with limited applicability. This standard contains paragraphs and specific requirements that are not applicable to all services. Such paragraphs or requirements are prefixed to indicate the Services to which they pertain: (A) Army; (N) Navy; (MC) Marine Corps; and (F) Air Force. Portions not prefixed are applicable to all services.

1.3 Use of the technical content. In addition to using the technical content requirements provided herein for the development of IETMs, the technical information developed in accordance with this standard and MIL-STD-3008 can be used to provide the necessary input to other external systems that are designed to collect and report operations, maintenance, historical and parts requisition data required for efficient management and support of aviation and non-aviation weapon systems and their related systems, equipment, and components/modules.

1.4 Examples/figures. The figures used in the specification are examples only. The text of this specification takes precedence over the figures.

2. APPLICABLE DOCUMENTS.

2.1 General. The documents listed in this section are specified in sections 3, 4, and 5 of this standard. This section does not include documents cited in other sections of this multipart standard or recommended for additional information or as examples. While every effort has been made to ensure the completeness of this list, document users are cautioned that they must meet all specified requirements documents cited in sections 3, 4, and 5 of this standard, whether or not they are listed.

2.2 Government documents.

2.2.1 Specifications, standards, and handbooks. The following specifications, standards, and handbooks form a part of this document to the extent specified herein. Unless otherwise specified, the issues of these documents are those cited in the solicitation or contract.

SPECIFICATIONS

DEPARTMENT OF DEFENSE

MIL-PRF-63049 — Manuals, Technical: List of Applicable Publications (LOAP)

STANDARDS

DEPARTMENT OF DEFENSE

MIL-STD-882	—	System Safety
MIL-STD-1309	—	Definitions of Terms for Testing, Measurement, and Diagnostics
MIL-STD-1686	—	Electrostatic Discharge Control Program for Protection of Electrical and Electronic Parts, Assemblies, and Equipment (Excluding Electrically Initiated Explosive Devices)
MIL-STD-2361	—	Digital Publications Development

HANDBOOKS

DEPARTMENT OF DEFENSE

MIL-HDBK-113	—	Guide for the Selection of Lubricants, Functional Fluids, Preservatives and Specialty Products for use in Ground Equipment Systems
MIL-HDBK-263	—	Electrostatic Discharge Control Handbook for Protection of Electrical and Electronic Parts, Assemblies and Equipment (Excluding Electrically Initiated Explosive Devices) (Metric)
MIL-HDBK-275	—	Guide for Selection of Lubricants, Fluids, and Compounds for Use in Flight Vehicles and Components
MIL-HDBK-1222	—	Guide to the General Style and Format of U.S. Army Work Package Technical Manuals
MIL-HDBK-9660	—	DOD Produced CD-ROM Products

(Copies of these documents are available from the Document Automation and Production Service, Building 4/D, 700 Robbins Avenue, Philadelphia, PA 19111-5094 or online at https://assist.daps.dla.mil/.)

H4/H8	—	Commercial and Government Entity (CAGE) Codes
H6	—	Federal Item Name Directory

(Copies of Handbooks H4/H8 and H6 are available on CD-ROM from the Commander, Defense Logistics Services Center, Battle Creek, MI 49017-3084 or online at http://www.dlis.dla.mil/hseries.asp.)

2.2.2 Other Government documents and publications. The following other Government documents and publications form a part of this document to the extent specified herein. Unless specified otherwise, the issues are those cited in the solicitation or contract.

AR 25-30	—	The Army Publishing Program
AR 95-1	—	Flight Regulations

AR 385-10	—	The Army Safety Program
CTA 50-909	—	Field and Garrison Furnishings and Equipment
CTA 50-970	—	Expendable/Durable Items (Except Medical, Class V, Repair Parts, and Heraldic Items)
DA PAM 25-30	—	Consolidated Index of Army Publications and Blank Forms
DA PAM 25-40	—	Army Publishing: Action Officers Guide
DA PAM 385-63	—	Range Safety
DA PAM 385-64	—	Ammunition and Explosives Safety Standards
DA PAM 738-751	—	Functional Users Manual for The Army Maintenance Management System-Aviation (TAMMS-A)
DA PAM 750-8		The Army Maintenance Management System (TAMMS) Users Manual

(Application for copies should be addressed to Commander, U. S. Army Publishing Agency, Distribution Operations Facility, ATTN: JDHQSV-PAS, 1655 Woodson Road, St. Louis, MO 63114-6128 or online at http://www.apd.army.mil/.)

DOD 5200.1-R	—	Information Security Program
DOD 5220.22-M	—	National Industrial Security Program Operating Manual
DODD 5230.24	—	Distribution Statements on Technical Documents
DOD 5400.7-R	—	DoD Freedom of Information Act Program

(Copies of DoD documents are available online at http://www.dtic.mil/whs/directives/.)

FM 4-25.11	—	First Aid
FM 4-30.31	—	Recovery and Battle Damage Assessment and Repair
Joint Pub 1-02	—	DOD Dictionary of Military and Associated Terms
SB 11-573	—	Painting and Preservation of Supplies Available for Field Use for Electronics Command Equipment
SB 742-1	—	Inspection of Supplies and Equipment Ammunition Surveillance Procedures
TB 43-0118	—	Field Instructions for Painting and Preserving Communications - Electronics Equipment
TB 43-0209	—	Color, Marking and Camouflage Painting of Military Vehicles, Construction Equipment, and Materials Handling Equipment
TC 3-04.7	—	Army Aviation Maintenance
TM 1-1500-204-23	—	Aviation Unit Maintenance (AVUM) and Aviation Intermediate Maintenance (AVIM) Manual for General Aircraft Maintenance (General Maintenance and Practices), Volumes 1-10

TM 1-1500-335-23	—	Nondestructive Inspection Methods, Basic Theory
TM 1-1500-344-23	—	Cleaning and Corrosion Control (4 volumes)
TM 43-0139	—	Painting Instructions for Army Materiel
TM 55-1500-342-23	—	Army Aviation Maintenance Engineering Manual for Weight and Balance
TM 55-1500-345-23	—	Painting and Marking of Army Aircraft

(Copies of these publications are available from the U. S. Army Publishing Agency, Distribution Operations Facility, 1655 Woodson Road, St. Louis, MO 63114-6128.)

2.3 Non-Government publications. The following documents form a part of this document to the extent specified therein. Unless otherwise specified, the issues of these documents are those cited in the solicitation or contract.

AMERICAN NATIONAL STANDARDS INSTITUTE (ANSI)

ANSI Y32.10	—	Diagrams, Fluid Power, Graphic Symbols for
ISO 9000 Series	—	Quality Management

(Application for copies should be addressed to the American National Standards Institute Inc., 25 West 43rd Street, New York, NY 10036 or online at http://www.ansi.org/.)

AMERICAN SOCIETY OF MECHANICAL ENGINEERS (ASME)

ASME Y14.38	—	Abbreviations and Acronyms for Use on Drawings and Related Documents
ASME Y14.100	—	Engineering Drawing Practices

(Application for copies should be addressed to the American Society of Mechanical Engineers, 3 Park Avenue, New York, NY 10016-5990 or online at http://www.asme.org/.)

AMERICAN SOCIETY FOR TESTING AND MATERIALS (ASTM)

ASTM-F856	—	Standard Practice for Mechanical Symbols, Shipboard—Heating, Ventilation, and Air Conditioning (HVAC)

(Applications for copies should be addressed to the American Society for Testing Material, 100 Barr Harbor Drive, West Conshohocken, PA 19428-2959 or online at http://www.astm.org/.)

INSTITUTE OF ELECTRICAL AND ELECTRONICS ENGINEERS (IEEE)

IEEE Std 91	—	IEEE Standard Graphic Symbols for Logic Functions
IEEE Std 260.1	—	IEEE Standard Letter Symbols for Units of Measurement (SI Units, Customary Inch-Pound Units, and Certain Other Units)
IEEE Std 280	—	IEEE Standard Letter Symbols for Quantities Used in Electrical Science and Electrical Engineering

IEEE Std 315a	—	Supplement to Graphic Symbols for Electrical and Electronics Diagrams
IEEE Std 945	—	IEEE Recommended Practice for Preferred Metric Units for Use in Electrical and Electronics, Science and Technology

(Application for copies should be addressed to the Institute of Electrical and Electronics Engineers, Inc., 345 East 47th Street, New York, NY 10017 or online at http://www.ieee.org/.)

2.4 Order of precedence. In the event of a conflict between the text of this document and the references cited herein, the text of this document takes precedence. Nothing in this document, however, supersedes applicable laws and regulations unless a specific exemption has been obtained.

3. DEFINITIONS.

3.1 Acronyms used in this standard. The acronyms used in this standard are defined as follows:

AAL	Additional Authorization List
AMC	Aviation Maintenance Company
AMDF	Army Master Data File
ANSI	American National Standards Institute
Ao	Operational Availability
AOAP	Army Oil Analysis Program
APD	Army Publishing Directorate
APE	Ammunition Peculiar Equipment
AQL	Acceptable Quality Level
AR	Army Regulation
ASB	Aviation Support Battalion
ASRL	Army SGML Registry and Library
ASTM	American Society for Testing and Materials
ATE	Automatic Test Equipment
AVMAC	Aviation Maintenance Allocation Chart
BDAR	Battle Damage Assessment and Repair
BII	Basic Issue Items
BIT	Built-in Test
BITE	Built-in Test Equipment
BOI	Basis of Issue
BTR	Ballistic Test Requirement
CAGEC	Commercial and Government Entity Code
CALS	Continuous Acquisition and Lifecycle Support
CBRN	Chemical, Biological, Radiological, and Nuclear

CD	Compact Disk
CD-ROM	Compact Disk Read-Only Memory
CGM	Computer Graphics Metafile
COEI	Components of End Item
COMSEC	Communications Security
CPC	Corrosion Prevention and Control
CSI	Critical Safety Item
CTA	Common Table of Allowance
DMWR	Depot Maintenance Work Requirement
DoD	Department of Defense
DODAC	Department of Defense Ammunition Code
DRMO	Defense Reutilization Marketing Office
DTD	Document Type Definition
ECM	Electronic Countermeasure
ECP	Engineering Change Proposal
e.g.	for example
EIC	End Item Code
EIR	Equipment Improvement Recommendation
EMP	Electromagnetic Pulse
ESD	Electrostatic Discharge
FGC	Functional Group Code
FSC	Federal Supply Classification
FSCAP	Flight Safety Critical Aircraft Parts
HAP	Hazardous Air Pollutant
HCI	Hardness Critical Item
HCP	Hardness Critical Process
HR	Hand Receipt
IAW	in accordance with
i.e.	in other words
IEC	International Electrotechnical Commission
IEEE	Institute of Electrical and Electronics Engineers
IETM	Interactive Electronic Technical Manual
IGES	Initial Graphics Exchange Specification
ISO	International Organization for Standardization
JTA	Joint Table of Allowances
JTCI	Joint Technical Committee for Information Technology

LAN	Local Area Network
LMI	Logistics Management Information
LOAP	List of Applicable Publications
LOGSA	Logistics Support Activity
LRU	Line Replacement Unit
MAC	Maintenance Allocation Chart
MEL	Maintenance Expenditure Limit
MOC	Maintenance Operational Checks
MOS	Military Occupational Specialty
MSC	Major Subordinate Command
MT	Maintenance Team
MTBCM	Mean Time Between Corrective Maintenance
MTBF	Mean Time Between Failures
MTF	Maintenance Test Flight
MTOE	Modified Table of Organization and Equipment
MTTR	Mean Time to Repair
MUX	Multiplex
MWO	Modification Work Order
NATO	North Atlantic Treaty Organization
NDI	Nondestructive Inspection
NDTI	Nondestructive Testing Inspection
NHA	Next Higher Assembly
NIIN	National Item Identification Number
NMP	National Maintenance Plan
NMWR	National Maintenance Work Requirement
NSN	National Stock Number
ODS	Ozone Depleting Substances
OIP	Overhaul Inspection Procedure
OSHA	Occupational Safety and Health Act
P/N	Part Number
PCB	Printed Circuit Board
PENTA	Pentachlorophenol
PI	Parts Information
PIN	Publication Identification Number
PM	Phased Maintenance
PMA	Portable Maintenance Aid

PMAC	Preliminary Maintenance Allocation Chart
PMC	Preventive Maintenance Checklist
PMCS	Preventive Maintenance Checks and Services
PMI	Phased Maintenance Inspection
PMS	Preventive Maintenance Services
POL	Petroleum, Oil, and Lubricant
PSA	Preshop Analysis
QA	Quality Assurance
QTY	Quantity
RAM	Reliability, Availability, Maintainability
RCM	Reliability Centered Maintenance
RGL	Reading Grade Level
RMS	Reliability, Maintainability, and Supportability
SB	Supply Bulletin
SC	Supply Catalog
SKO	Sets, Kits, and Outfits
SMR	Source, Maintenance, and Recoverability
SPC	Statistical Process Control
SRA	Shop Replacement Assembly
SRU	Shop Replacement Unit
TAMMS	Total Army Maintenance Management System
TAMMS-A	Total Army Maintenance Management System Aviation
TASMG	Theater Aviation Sustainment Maintenance Group
TB	Technical Bulletin
TBO	Time Between Overhaul
TDA	Tables of Distribution and Allowances
TM	Technical Manual
TMDE	Test, Measurement, and Diagnostic Equipment
TOC	Table of Contents
TOE	Table of Organization and Equipment
U/I	Unit of Issue
UOC	Usable On Code
URL	Uniform Resource Locator
UUT	Unit Under Test
W3C	World Wide Web Consortium
WP	Work Package

WRA	Weapons Replacement Assembly
WTB	Warranty Technical Bulletin
WWW	World Wide Web
XML	Extensible Markup Language
XSL	Extensible Stylesheet Language
XSL-FO	Extensible Stylesheet Language – Formatting Object
XSLT	Extensible Stylesheet Language Transformation

3.2 Acquiring activity. The DoD component, activity, or organization of a using military service, or that organization delegated by a using service, that is responsible for the selection and determination of requirements for Technical Manuals (TMs).

3.3 Additional Authorization List (AAL) items. Items are optional (discretionary), are not essential to operate the end item, and are not listed on engineering drawings. Items are not turned in with the end item.

3.4 American National Standards Institute (ANSI). A private sector organization, that plans, develops, establishes, or coordinates standards, specifications, handbooks, or related documents.

3.5 Army Master Data File (AMDF). The files required to record, maintain, and distribute supply management data between and from Army commands to requiring activities.

3.6 Army Oil Analysis Program (AOAP). Effort to detect impending equipment component failure and determine lubricant condition through periodic analytical evaluation of oil samples.

3.7 Assembled item. An item has an "A" as the first letter of the source code in the SMR. This indicates the item is not stocked as an assembly but is assembled from its constituent repair parts.

3.8 Assembly. Two or more parts or subassemblies joined together to perform a specific function and capable of disassembly (e.g., brake assembly, fan assembly, audio frequency amplifier). Note that the distinction between an assembly and subassembly is determined by the individual application. An assembly in one instance may be a subassembly in another, where it forms a portion of an assembly.

3.9 Auxiliary equipment. Equipment, accessories, or devices which, when used with basic equipment, extend or increase its capability (e.g., Modified Table of Organization and Equipment (MTOE) items, etc.).

3.10 Basic Issue Items (BII). The minimum essential items not listed in the drawings, but required to place the equipment in operation, to operate it, and to perform emergency repairs. Although shipped separately packaged, BII must be with the equipment during operation and whenever they are transferred between property accounts. BII may be packed with communications security (COMSEC) equipment.

3.11 Basis of Issue (BOI). The quantity of an item (special tool) authorized for the end item density spread or for the unit level specified.

3.12 Block diagram. A modified schematic diagram in which each group of maintenance-significant components that together performs one or more functions is represented by a single symbol or block. The block or symbol representing the group of components shows simplified relevant input and output signals pertinent to the subject diagram.

3.13 Built-In Test Equipment (BITE). Any identifiable device that is a part of the supported end item and is used for testing that supported end item.

3.14 Bulk material. Material issued in bulk for manufacture or fabrication of support items (e.g., sheet metal, pipe tubing, bar stock, or gasket material); excludes expendable items.

3.15 Callout. Anything placed on an illustration to aid in identifying the objects being illustrated, such as index numbers, nomenclature, leader lines, and arrows.

3.16 Chemical, Biological, Radiological, and Nuclear (CBRN). Reference to decontamination procedures performed on equipment and/or personnel exposed to chemical, biological, radiological, and nuclear weapons.

3.17 Commercial and Government Entity Code (CAGEC). A five-character code assigned to commercial activities that manufacture or supply items used by the Federal Government and to Government activities that control design or are responsible for the development of certain specifications, standards, or drawings that control the design of Government items. CAGEC assignments are listed in the H4/H8 Commercial and Government Entity (CAGE) Codes.

3.18 Complete repair. Maintenance capacity, capability, and authority to perform all the corrective maintenance tasks of the repair function in a use or user environment in order to restore serviceability to a failed item. Excludes the prescriptive maintenance functions, overhaul, and rebuild.

3.19 Component. A constituent part not normally considered capable of independent operation; a piece part.

3.20 Components of End Item (COEI). Items identified on the engineering drawing tree that are physically separated and distinct from the end item.

3.21 Comprehensibility. The completeness with which a user in the target audience understands the information in the TM.

3.22 Computer Graphics Metafile (CGM). A standard digital graphic format for graphics preparation as defined by MIL-PRF-28003.

3.23 Continuous Acquisition and Lifecycle Support (CALS). A DoD initiative to transition from paper-intensive, non-integrated weapon systems design, manufacturing, and support processes to a highly automated and integrated mode of operation. This transition will be facilitated by acquiring, managing, and using technical data in standardized digital form.

3.24 Continuous Acquisition and Lifecycle Support (CALS) raster. Compressed scanned raster images (CCITT, Group 4) in accordance with MIL-PRF-28002.

3.25 Corrosion Prevention and Control (CPC). Systematic maintenance steps/procedures taken to prevent or retard the gradual destruction and/or pitting of a metal surface or other materials, such as rubber and plastic, due to chemical attack.

3.26 Crew (operator) maintenance. Consists of inspecting, servicing, lubricating, adjusting, replacing, and repairing those items authorized by Logistics Management Information (LMI) and/or Maintenance Allocation Chart (MAC).

3.27 Critical Safety Item (CSI). Formerly referred to as Flight Safety Critical Aircraft Parts (FSCAP), CSI is an aviation-related part, assembly, installation or production system with one or

more critical or critical safety characteristics that, if missing or not conforming to the design data, quality requirements or overhaul and maintenance documentation, would result in an unsafe condition that could cause loss or serious damage to the end item or major components, loss of control, uncommanded engine shutdown or serious injury or death to personnel. Unsafe conditions relate to hazard severity categories I and II of MIL-STD-882 and include items determined to be "life-limited," "fracture critical," "fatigue-sensitive," etc. The determining factor in Aviation CSI (FSCAP) is the consequence of failure, not the probability that the failure or consequence would occur. The term CSI (FSCAP) should be used throughout this manual.

3.28 Degradation. The reduction in systems/subsystems/components performance capability.

3.29 Department of Defense (DoD). The Office of the Secretary of Defense (OSD) (including all boards and councils), the Military Departments (Army, Navy, and Air Force), the Organization of the Joint Chiefs of Staff (OJCS), the Unified and Specified Commands, the National Security Agency (NSA), and the Defense Agencies.

3.30 Department of Defense Ammunition Code (DODAC). An eight-character code developed to indicate interchangeability of ammunition and explosive items in Federal Supply Classification (FSC) Group 13. This eight-character code is divided into two parts. The two parts are separated by a hyphen. The first four digits represent the FSC; the letter and last three numerals represent the DoD Identification Code that is assigned to items that are interchangeable in function and use. The eight-character DoD ammunition code is used for such ammunition operations as worldwide stock status reporting and requisitioning when specific items are not required.

3.31 Depot-level maintenance. Maintenance that is beyond the capability of the field and below depot sustainment maintenance activities. Depot-level maintenance normally consists of overhaul, recondition, manufacture, repair, or modification and requires technical assistance beyond lower maintenance level capability.

3.32 Depot Maintenance Work Requirement (DMWR). A maintenance serviceability document for depot maintenance operations. The document prescribes the essential factors to ensure that an acceptable and cost-effective product is obtained.

3.33 Digital graphics form. A standard graphics form acceptable for graphics preparation under this standard. These forms include Computer Graphics Metafile (CGM), Continuous Acquisition and Lifecycle Support (CALS) raster, and Initial Graphics Exchange Specification (IGES).

3.34 Document instance. The instance is the actual document text and its accompanying Extensible Markup Language (XML) tags conforming to the specifications and restrictions set forth in the Document Type Definition (DTD).

3.35 Document Type Definition (DTD). The definition of the markup rules for a given class of documents. A DTD or reference to one should be contained in any XML conforming document.

3.36 Effectivity. The act or process of identifying weapon systems or end-items and their hardware and software system and subsystems by their associated Usable On Code (UOC), serial number, model number, Part Number (P/N)/CAGEC, National Stock Number (NSN), End Item Code (EIC), software version or Modification Work Order (MWO). Effectivity is included to signify that certain configuration(s) or modifications apply to a given weapon system/equipment.

3.37 Electronic Countermeasure (ECM). Electronic surveillance equipment for detecting and adverting threatening enemy weapons systems.

3.38 Electronic Manual (EM) Number. A chronologically numbered four-digit number (assigned by Army Publishing Directorate (APD)), using zeros when necessary to maintain four digits, following the letters "EM" (as in EM 0001, EM 0002, EM 0003). The EM number functions as the Compact Disk (CD) nomenclature assigned to an ETM/IETM comprised of one or more CDs (e.g., the same EM number applies to all CDs distributed as a set if the series and size of related equipment/Weapon System (WS) manuals dictate use of more than one CD).

3.39 Electrostatic Discharge (ESD). Static electricity. A transfer of electrostatic charge between objects of different potentials caused by direct contact or induced by an electrostatic field. Devices such as integrated circuits and discrete devices (e.g., resistors, transistors, and other semiconductor devices) are susceptible to damage from electrostatic discharge.

3.40 Embedded. Describes hardware and/or software that forms an integral part/component of some larger system and that is expected to function without human intervention. An embedded system usually does not include peripherals (e.g., keyboard, monitor, storage etc.). Embedded systems most often will provide real-time response.

3.41 End Item Code (EIC). A final combination of end products, component parts, or materials that is ready for its intended use (e.g., tank, mobile machine shop, aircraft, receiver, rifle, recorder).

3.42 Equipment. One or more units capable of performing specified functions.

3.43 Equipment Improvement Recommendation (EIR). Solicitation of suggestions from end item users/operators for means to improve the operation and effectiveness of equipment. The Standard Form (SF) 368 is the instrument by which suggested improvements are forwarded to the cognizant agency.

3.44 Equipment nomenclature. The official name of the equipment as shown in FEDLOG H6 listing.

3.45 Essential. Those systems/subsystems/components that are required for a designated mission or system operation.

3.46 Evacuation. A combat service support function which involves the movement of recovered material from a main supply route; maintenance collection material may be returned to the user, to the supply system for reissue, or to property disposal activities.

3.47 Expendable items. Items, other than repair parts that are consumed in use (e.g., paint, lubricants, wiping rags, tape, cleaning compounds, sandpaper).

3.48 Extensible Markup Language (XML). A set of rules for encoding documents electronically through the use of markup. Its primary purpose is to facilitate the sharing of structured data across different information systems. It is a product of the World Wide Web Consortium (W3C).

3.49 Extensible Stylesheet Language (XSL). A stylesheet language that can be used for rendering XML documents.

3.50 Extensible Stylesheet Language Formatting Objects (XSL-FO). A subset of Extensible Stylesheet Language Transformation (XSLT) that is used to format valid and well formed XML

into a page-oriented output. This output may be a direct print to paper or it may be to an electronic page-oriented presentation such as a Portable Document Format (PDF) file.

3.51 Extensible Stylesheet Language Transformation (XSLT). A declarative, XML-based language used to transform XML documents into other XML documents. XSLT is supported by the World Wide Web Consortium (W3C).

3.52 Field maintenance. Field maintenance is on-system maintenance and is mainly replacement of defective parts and preventative maintenance. Field maintenance returns repaired equipment to the soldier. Some "off-system" maintenance can be done at field level if, based on task analysis, it is simple to complete or it is critical to mission readiness.

3.53 Follow-on maintenance. A maintenance condition that must be accomplished sometime following the completion of a task to clean up or undo actions performed during the task.

3.54 Footer. One or more lines of standard text that appear at the bottom of each page (also called feet and running feet).

3.55 Frame-based. The format and style of the presented information are optimized for window presentation to assure maximum comprehension. The presentation format is "frame-oriented" and not "page-oriented."

3.56 Functional diagram. A type of illustration in which symbols are connected by lines to show relationships among the symbols. The symbols may be rectangles or other shapes, standard electronic symbols representing components or functions, or pictorials representing equipment or components. Where appropriate, voltage readings are shown. The lines may represent procedures or processes, such as signal or logic flow, and physical items, such as wires. Functional diagram includes schematics, wiring and piping diagrams, flow charts, and block diagrams.

3.57 Functional Group Code (FGC). A basic (usually two-position) group code assigned to identify major components, assemblies, and subassemblies to a functional system. Subordinate subfunctional groups/subassemblies are coded to relate back to the basic (top position) FGC in a sequential, Next Higher Assembly (NHA) relationship (e.g., top-down breakdown structure).

3.58 Graphic(s). Any type of presentation or representation, which gives a clear visual impression.

3.59 Hazardous Air Pollutant (HAP)-free. HAP-free means a material that contains no more than 0.1 percent by mass of any individual HAP that is an Occupational Safety and Health Act-(OSHA-) defined carcinogen as specified in 29 Code of Federal Regulations (CFR) 1910.1200(d)(4) and no more than 1.0 percent by mass for any other individual HAP, as demonstrated by a specification or a standard, or a manufacturer's representation, such as in a material safety data sheet or product data sheet.

3.60 Hardness Critical Item (HCI). A support item that provides the equipment with special protection from electromagnetic pulse (EMP) damage during a nuclear attack.

3.61 Hardness Critical Process (HCP). A process affecting a mission critical item which could degrade system survivability in a nuclear, biological, or chemical hostile environment if hardness were not considered. Nuclear HCPs are processes, finishes, specifications, manufacturing techniques, and/or procedures which are hardness critical, and which, if changed, could degrade nuclear hardness.

3.62 Hardtime intervals. Hardtime maintenance is scheduled maintenance conducted at predetermined fixed intervals because of age, calendar, or use such as operating time, flying hours, miles driven, or rounds fired.

3.63 Header. One or more lines of standard text that appear at the top of each page (also called heads and running heads).

3.64 Icon. Pictorial representation; visual image to give immediate recognition of a hazard or to provide essential information.

3.65 Illustration. A general term meaning graphic presentations of all types. Illustrations include pictorials, functional diagrams, and line graphs. This term is used synonymously with figure, graphic, drawing, diagram, and artwork.

3.66 Initial Graphics Exchange Specification (IGES). A standard digital form for graphics preparation as defined by MIL-PRF-28000.

3.67 Inline. Components such as frames, dialog boxes, figures, graphics, icons that are arranged sequentially to form a unit from overall parts.

3.68 Institute of Electrical and Electronics Engineers (IEEE). Membership organization that includes engineers, scientists and students in electronics and allied fields. Founded in 1963, it has over 300,000 members and is involved with setting standards for computers and communications.

3.69 Interactive Electronic Technical Manual (IETM). A TM prepared in digital form and designed for interactive display to the maintenance technicians or system operator end users by means of a computer controlled viewer.

3.70 Interchangeability. The intent/purpose of this specification is to allow fully innovative fixes/repairs to the equipment. This includes minor modifications that can be made to achieve interchangeability. Capable of being put or used in place of each other.

3.71 International Organization for Standardization (ISO). Organization that sets international standards, founded in 1946 and headquartered in Geneva. It deals with all fields except electrical and electronics, which is governed by the older International Electrotechnical Commission (IEC), also in Geneva. With regard to information processing, ISO and IEC created the Joint Technical Committee (JTC 1) for Information Technology.

3.72 Leak rate. The speed or rate of flow of accidental escape of fluid or gas from a system, which is caused by damage processes. The leak rate is influenced by such factors as the hole size, internal/external pressures, and fluid level.

3.73 Legend. A tabular listing and explanation of the numbers or symbols on a figure or an illustration.

3.74 Limited repair. Scope of corrective repair authorized to be performed by a level of maintenance lower than the level of authorized complete repair.

3.75 Line Replacement Unit (LRU). An item normally removed and replaced as a single unit to correct a deficiency or malfunction on a weapon system or end item of equipment.

3.76 Linear Interactive Electronic Technical Manual (IETM). Technical data that is displayed in a sequential or document oriented manner. The sequence of the data presentation is largely

predefined by the data author. It is an organization of technical data that often replicates the order of information found in a page-based document. There is generally a default "path" through the technical data.

3.77 List of Applicable Publications (LOAP). A separate listing of publications which are related to a specific piece of equipment, group of equipment, or system. For additional information, refer to MIL-PRF-63049.

3.78 Logistics Management Information (LMI). The selective application of scientific and engineering efforts undertaken during the acquisition process, as part of the systems engineering process, to assist in acquiring the required support; and providing the required support during the operational phrase at minimum cost.

3.79 Maintenance Allocation Chart (MAC). A list of equipment maintenance functions showing maintenance level. The MAC is arranged in functional group code sequence or in top-down, breakdown sequence in the logical order of disassembly following the parts information order of assembly/subassembly listings.

3.80 Maintenance class. Maintenance classes are subsets of field and sustainment maintenance. They identify and implement the specific activity, identified by the MAC, to perform the maintenance. The maintenance classes of both the field and sustainment maintenance levels are further separated by aviation and non-aviation and the corresponding classes are shown below:

a. Field level classes:
   (1) Aviation
      (a) AMC – corresponds to MAC code – O.
      (b) ASB – corresponds to MAC code – F.
   (2) Non-aviation
      (a) Crew (operator) – corresponds to MAC code – C.
      (b) Maintainer – corresponds to MAC code – F.
b. Sustainment level classes:
   (1) Aviation
      (a) TASMG – corresponds to MAC code – L.
      (b) Depot – corresponds to MAC code – D.
   (2) Non-aviation
      (a) Below depot – corresponds to MAC code – H.
      (b) Depot – corresponds to MAC code – D.

3.81 Maintenance function. The term maintenance function has numerous definitions, dependent on its usage. In the context of this standard, a maintenance function is used to identify specific MAC-identified tasks, as well as equipment, and personnel required to perform that task.

3.82 Maintenance level. The primary division of maintenance activities. The U.S. Army uses a two-level maintenance concept. The two levels are field and sustainment.

3.83 Maintenance significant. Refers to a maintenance item, whose failure could affect safety for ground or aviation equipment or significantly impact operations. For maintenance and

inspection instructions, maintenance significant could include systems, subsystems, modules, components, accessories, units, and parts.

3.84 Maintenance task. A procedure or a series of related maintenance procedures with a definite beginning and end.

3.85 Mean Time Between Corrective Maintenance (MTBCM). For a particular interval, the total functional life of a population of an item divided by the total number of failures within the population during the measurement interval. The definition holds for time, rounds, miles, events, or other measure of life units. (Used only when referring to depot level maintenance.)

3.86 Mean Time Between Failures (MTBF). For a particular interval, the total functional life of a population of an item divided by the total number of failures within the population during the measurement interval. The definition holds for time, rounds, miles, events, or other measure of life units.

3.87 Mean Time To Repair (MTTR). The total elapsed time (clock hours) for corrective maintenance divided by the total number of corrective maintenance actions during a given period of time.

3.88 Modified Table of Organization and Equipment (MTOE). A modified version of a TOE that prescribes the unit organization, personnel, and equipment needed to perform an assigned mission in a specific geographical or operational environment.

3.89 Modification Work Order (MWO). Detailed instructions (including text and graphics) for making changes/improvements to a particular system in order to bring the system up to date and/or to improve its overall efficiency.

3.90 Module. A subassembly that, in the area of electronic systems, may be removed and replaced without use of soldering equipment or special tools. A module may be encapsulated.

3.91 Mouse-over. A program element that triggers a change on an item (typically a graphic change, such as making an image or hyperlink appear) in a viewer when the pointer passes over it. The change usually signifies that the item is a link to related or additional information. Mouse-overs are used in navigation bars, pop-up dialog boxes, window panes, and or in form submissions.

3.92 National Item Identification Number (NIIN). The last nine digits of the National/North Atlantic Treaty Organization (NATO) stock number. The first two digits of the NIIN identify the country assigning the number and the remaining seven digits are a serially assigned number.

3.93 National Maintenance Work Requirement (NMWR). A maintenance serviceability standard for depot level reparables that do not have an existing depot maintenance work requirement and for field level reparables that are repaired by maintenance activities below the depot level maintainers for return to the Army supply system.

3.94 National Stock Number (NSN). A 13-digit number assigned to a repair part to be used for requisitioning purposes.

3.95 Next Higher Assembly (NHA). Assembly or subassembly of which subject component(s) or subassembly is a subpart.

3.96 Nomenclature. The approved name or alphanumeric identifier assigned to an item, equipment, or component in agreement with an organized designation system.

3.97 Non-linear Interactive Electronic Technical Manual (IETM). Technical data that is not displayed in a sequential fashion. There are high levels of interactivity between the data and the user. The order of presentation is dictated by inputs from the user, external sources or events (as in diagnostics). An organization of content that does not follow a document or page based paradigm. There are multiple paths through the data. Individual paths through the data are generally determined based on user or other input via dialog boxes.

3.98 On-condition maintenance. Maintenance performed or an item replacement action performed based upon condition of the item as determined by an evaluation of each item on a scheduled basis.

3.99 Operating instructions. Generic or explicit step-by-step information that provides the user direction on how to use a piece of equipment.

3.100 Overhaul Inspection Procedure (OIP). Routine maintenance inspection conducted just before period specified for removal of aircraft for overhaul or retirement.

3.101 Pane. Any of the rectangular frames within the main content area of the inner shell into which a computer display can be divided and in which text/graphics/multimedia output can be displayed.

3.102 Part Number (P/N). A primary number used to identify an item used by the manufacturer (individual, company, firm, corporation, or Government activity) that controls the design, characteristics, and production of the item by means of its engineering drawings, specifications, and inspection requirements.

3.103 Phased Maintenance Inspection (PMI) (aircraft). A thorough and searching examination of the aircraft and associated equipment. Removal of access plates, panels, screens, and some partial disassembly of the aircraft is required to complete the inspection. Inspections are due after an appointed number of flying hours since new or from the completion of the last inspection.

3.104 Pictorial. A type of illustration showing the physical appearance of equipment or component parts. This term is used instead of such general terms as illustration, drawing, and diagram.

3.105 Preshop analysis. To determine, before beginning maintenance activities, the extent of maintenance required to return the end item, assembly, subassembly, or component to a serviceable condition as specified by the depot level maintenance instructions.

3.106 Preventive maintenance (scheduled maintenance). The performance of scheduled inspections and maintenance functions necessary to keep the equipment in serviceable condition and ready for its primary mission.

3.107 Preventive Maintenance Checklist (PMC). A listing of all before, during, and after operation preventive maintenance checks, including tactical and safety checks, that the crew (operator) performs to ensure that the equipment is mission capable and in good operating condition.

3.108 Preventive maintenance daily (aircraft). Inspection of aircraft and associated equipment after the last flight of the mission day or before the first flight of the next day. Some operational checks and removal of screens, panels, and inspection plates may be required to accomplish the inspection.

3.109 Preventive maintenance services inspection (aircraft). Special recurring inspection of aircraft and associated equipment after an appointed number of flying hours or days whichever occurs first (e.g., 10 flying hours or 14 days). Some operational checks and removal of screens, panels, and inspection plates may be required to accomplish the inspection.

3.110 Preventive Maintenance Checks and Services (PMCS). Periodic inspection and maintenance at scheduled intervals to ensure that the equipment and its components remain mission capable and in good operating condition. In aircraft, checks are required of mandatory safety-of-flight items. Lubrication may be included in PMCS. PMCS procedures can be performed by maintainers at any level of maintenance, not just by operators.

3.111 Proponent. An Army organization or staff that has been assigned primary responsibility for material or subject matter in its area of interest.

3.112 Publication Identification Number (PIN). A number (assigned by Army Publishing Directorate (APD) to each publication) that can be found in DA PAM 25-30 and is comprised of six numerals and a three-digit "change number" field that permits ordering a specific change to the publication (e.g., 001 for change 1, 023 for change 23).

3.113 Publication medium. The type of publication (TM, DMWR, NMWR, MWO, SC, SB, TB, etc.). This does not include IETM, ETM, or EM.

3.114 Publication number. The number shown on the cover of each publication as constructed per DA PAM 25-40 (e.g., TM 1-1520-238-10).

3.115 Quality Assurance (QA). A planned and systematic pattern of all actions necessary to provide adequate confidence that the item or product conforms to established technical requirements.

3.116 Reading Grade Level (RGL). A measurement of reading difficulty of text related to grade levels (such as ninth grade level, fourteenth grade level, etc.).

3.117 Reference Designator (REFDES). Letters or numbers, or both, used to identify and locate discreet units, portions thereof, and basic parts of a specific equipment, assembly, or subassembly.

3.118 Reliability, Maintainability and Supportability (RMS) and Operational Availability (Ao). Requirements imposed on materiel systems to ensure that they are operationally ready for use when needed, will successfully perform assigned functions, and can be economically operated and maintained within the scope of logistic concepts and policies.

3.119 Reliability Centered Maintenance (RCM). A systematic approach for identifying preventive maintenance tasks for an equipment end item in accordance with a specified set of procedures and for establishing intervals between maintenance tasks.

3.120 Repair part. Those support items that are an integral part of the end item or weapons system, which are coded as not repairable (e.g., consumable items).

3.121 Revision. A revision is comprised of corrected, updated, or additional pages or work packages to the current edition of a manual. It consists of replacement work packages that contain new or updated technical information, or improves, clarifies, or corrects existing information in the current edition of the manual. Refer to 4.9.28 for revision requirements.

3.122 Schematic diagram. A graphic representation showing the interrelationship of each component or group of components in the system/equipment. The essential characteristic of these diagrams is that every maintenance-significant functional component is separately represented. Also, where appropriate, voltage readings should be shown.

3.123 Service. Operations required periodically to keep an item in proper operating condition such as replenishing fuel, lubricants, chemical fluids, or gases.

3.124 Set. A unit and necessary assemblies, subassemblies, and parts connected together or used in association to perform an operational function (e.g., radio receiving set, measuring set, radar, or homing set which includes parts, assemblies, and units such as cables, microphones, and measuring instruments).

3.125 Source, Maintenance, and Recoverability (SMR) code. This code is composed of four parts consisting of a two position source code, a two position maintenance code, a one position recoverability code and a one position Service option code. The first two positions of the SMR code indicate the source for acquiring the item for replacement purposes. The third position represents who can install, replace, or use the item. The fourth position dictates whether the item is to be repaired and identifies the lowest maintenance level with the capability to perform a complete repair action. The fifth position indicates the desired disposition of the support item. The sixth position is unique to each Service and is utilized to disseminate specific instructions to that Service's logistics business process.

3.126 Spare part. Those support items that are an integral part of the end item or weapons system that are coded as repairable (e.g., reparable items). Spares include that equipment authorized by a Table of Organization and Equipment (TOE) line item; plus equipment, assemblies, and modules designated as operational readiness float. TOE training equipment is excluded.

3.127 Special tools. Those tools that have single or peculiar application to a specific end item/system.

3.128 Specialized repair activity. A level of maintenance usually characterized by the capability to perform maintenance functions requiring specialized skills, disciplined quality control, highly sophisticated and expensive special tools, and Test, Measurement, and Diagnostic Equipment (TMDE). Its phases normally consist of adjustments, calibration, alignment, testing, troubleshooting, assembly, disassembly, fault isolation, and repair of unserviceable parts, modules, and Printed Circuit Boards (PCBs).

3.129 Subassembly. Two or more parts that form a portion of an assembly or a component replaceable as a whole, but having a part or parts that are individually replaceable (e.g., gun mount stand, window recoil mechanism, floating piston, intermediate frequency strip, mounting board with mounted parts).

3.130 Supply Catalog (SC). The DA publication, which is the configuration control document that provides the user identification of Sets, Kits and Outfits (SKO) and its components. It also provides user supply management data and is an accountability aid.

3.131 Sustainment maintenance. Sustainment is off-system maintenance and is mainly repair of defective equipment/parts. Sustainment maintenance returns repaired equipment/parts to the supply system.

3.132 System. A group of items united or regulated by interaction or interdependence to accomplish a set of specific functions.

3.133 Table of Contents (TOC). A sequential list of section/paragraph, figure, and table titles with corresponding page numbers for information within a technical manual.

3.134 Tags. Descriptive markup, as in a start-tag and end-tag.

3.135 Tailoring. The process of evaluating individual potential requirements to determine their pertinence and cost effectiveness. The tailoring of data requirements is limited to the exclusion of information requirement provisions and selecting or specifying applicable requirements.

3.136 Task. A sequence of user actions with a beginning and an end. User tasks relate to installation, checkout, operation, and maintenance of systems or equipment.

3.137 Technical Manual (TM). A manual that contains instructions for the installation, operation, maintenance, and support of weapon systems, weapon system components, and support equipment. TM information may be presented, according to prior agreement between the contractor and the Government, in any form or characteristic, including hard printed copy, audio and visual displays, electronic embedded media, disks, other electronic devices, or other media. They normally include operational and maintenance instructions, parts lists, and related technical information or procedures exclusive of administrative procedures.

3.138 Test, Measurement, and Diagnostic Equipment (TMDE). Any system or device used to evaluate the operational condition of an end item or subsystem thereof, or to identify and/or isolate any actual or potential malfunction. TMDE includes diagnostic and prognostic equipment, semiautomatic and automatic test equipment (with issued software), and calibration test or measurement equipment.

3.139 Time Between Overhaul (TBO) items. Those items having a definite retirement schedule within a defined overhaul interval (e.g., those items, that must be replaced within a system assembly, subassembly, or component between scheduled overhauls).

3.140 Top-down breakdown. The pyramidal breakdown of an end item, with the top item being the complete end item. The process of breakdown is established from the engineering drawing structure in an NHA progression until the lowest reparable in each family tree group is identified. All nonreparables (spare parts) can be identified in like manner to establish their NHA relationships.

3.141 Usable On Code (UOC). A three-position alphanumeric code representing the applicable configuration in which an item is used.

3.142 User. A person using the TM.

3.143 Viewer. A program that allows a file to be displayed but not changed. Viewers are often freely distributable and platform independent, even when the editor application is not. This characteristic allows authors to create IETMs with an editor application and make the viewer, which displays the IETM, available to other users.

3.144 Wiring diagram. A diagram illustrating signal flow or wiring connections. Where appropriate, voltage readings should be shown.

3.145 Work Package (WP). Presentation of information functionally divided into individual tasks in the logical order of work sequence. These work packages should be stand alone and are

broken into the following work package types: general information, operator instructions, troubleshooting procedures, maintenance instructions, parts information, supporting information, destruction of Army materiel to prevent enemy use, preventative maintenance checklist, and lubrication orders. A work package should contain all information or references required to support the work package type.

4. GENERAL REQUIREMENTS.

4.1 General. This standard provides the technical content requirements and mandatory style, format, and functionality requirements for the preparation of linear and non-linear interactive electronic technical manuals (IETMs) and subsequent revisions covering operation and maintenance, at all levels of maintenance through overhaul (depot), including Depot Maintenance Work Requirements (DMWRs) and National Maintenance Work Requirements (NMWRs). All requirements throughout this standard for depot maintenance or DMWRs shall be followed for NMWRs. IETM functionality requirements are provided in 4.7. Style and format requirements are provided in 4.9. Specific technical content requirements are provided in the following appendixes:

Appendix B — General Information, Equipment Description, and Theory of Operation
Appendix C — Operator Instructions
Appendix D — Troubleshooting Procedures
Appendix E — Maintenance Instructions
Appendix F — Parts Information
Appendix G — Supporting Information
Appendix H — Destruction of Army Materiel to Prevent Enemy Use
Appendix I — Battle Damage Assessment and Repair (BDAR)
Appendix J — Preventive Maintenance Checklist
Appendix K — Lubrication Orders
Appendix L — DMWR for Maintenance/Demilitarization of Ammunition

4.2 Types of technical manuals. Appendix A lists specific technical content requirements for each type of maintenance manual, including multilevel IETMs, covered by this standard. Each type of IETM shall provide in detail the maintenance coverage prescribed for the applicable maintenance level(s) by the Maintenance Allocation Chart (MAC) and Source, Maintenance, and Recoverability (SMR) coded items. Unless otherwise specified, the following manual types shall be prepared as stand-alone manuals:

a. Ammunition-specific manuals.
b. Phased Maintenance Inspections (PMIs).
c. Aircraft system trouble shooting.
d. Destruction manual (when destruction instructions are not included in the basic TM).
e. Lubrication orders (when not included in the PMCS) **<lubeorder>**.
f. Preventive maintenance checklist **<pmc>**.
g. DMWR munitions maintenance and demilitarization **<dmwr_ammo>**.

4.3 Selective application and tailoring. This standard contains some requirements that may not be applicable to the preparation of all IETMs. Selective application and tailoring of requirements contained in this standard are the responsibility of the acquiring activity and shall be accomplished using Appendix A. The applicability of some requirements is also designated by one of the following statements: unless specified otherwise by the acquiring activity; as specified by the acquiring activity; or when specified by the acquiring activity.

4.4 Preparation of digital data for electronic delivery. Data prepared and delivered digitally in accordance with this standard shall be Extensible Markup Language (XML) tagged using the Document Type Definition (DTD) IAW MIL-STD-2361. Stylesheets may be prepared using Extensible Stylesheet Language (XSL) or other languages as specified by the acquiring activity. Where possible and when available, Army developed and provided stylesheets shall be used. Refer to 4.6 for information on obtaining or accessing the DTD and stylesheets. XML tags used in the DTD are noted throughout the text of this standard in bracketed, bold characters (e.g., **<descwp>**) as a convenience for the author and to ensure that the tags are used correctly when developing a document instance.

4.5 Use of the Document Type Definition (DTD)/stylesheets. The DTD referenced in this standard interprets the technical content and structure for the functional requirements contained in this standard. Its use is mandatory. Development of IETMs is accomplished through the use of this standard, the DTD, and the guidance contained in MIL-HDBK-1222. The guidance contained in MIL-HDBK-1222 applies unless it conflicts with the requirements in this standard.. Where possible and when available, Army developed and provided stylesheets shall be used. For additional information on DTD and specific stylesheets, refer to MIL-STD-2361.

4.6 Obtaining the Document Type Definition (DTD)/stylesheet. The DTD, stylesheets, associated tag and attribute descriptions, which are XML constructs, may be obtained from the Army SGML (Standard Generalized Markup Language) Registry and Library (ASRL). The ASRL assets may be obtained using the methods described in MIL-STD-2361 as follows:

a. World Wide Web (WWW): ASRL homepage Uniform Resource Locator (URL) http://www.asrl.com.

b. U.S. Mail: Requested files will be mailed on Compact Disk-Read Only Memory (CD-ROM). Requests may be submitted as follows:

Written request:
Director, APD - Army Publishing Directorate
ATTN: JDPSO-PAT-S
2461 Eisenhower Avenue
Alexandria, VA 22331-0302

Telephone Request:

Commercial: (703) 325-6231

DSN: 221-6231

4.7 Interactive Electronic Technical Manual (IETM) functionality requirements. The specific level of functionality and user interaction to be provided in IETMs shall be in accordance with the functionality matrices contained in Appendix A. The mandatory functionality requirements for IETMs provided in Appendix A supplement the technical content requirements provided in

Appendix B through Appendix L. These requirements shall apply for the presentation of TM information in a frame-based format on a computer display.

4.8 Content structure. The examples provided herein are an accurate representation of the content structure requirements contained in this standard and are provided to permit the effective use of the DTD. Any conflicts between examples and the text of the standard shall be resolved in favor of the text. (Refer to 1.4.)

4.9 Style and format. This standard provides style and format requirements for the technical content requirements described in this standard. These requirements are considered mandatory and are intended for compliance. Additional guidance for style and format for IETMs is contained in MIL-HDBK-1222. Guidance for preparation of CD-ROM face and flyleaf information is contained in MIL-HDBK-1222. The U.S. Government Printing Office (GPO) Style Manual shall be used as a general guide for capitalization, punctuation, compounding of words, numerals in text, and spelling of nontechnical words.

4.9.1 Development of work package Technical Manuals (TMs). The style and format guidance provided in this standard has been established to facilitate the development of technical information for the work package concept. The work package concept is defined as a logical combination of requirements and improved presentation techniques designed to enhance digital display of frame-formatted pages. A work package IETM is specifically designed to support individual functional information including troubleshooting and maintenance work tasks for a weapon system or equipment in accordance with the requirements of Appendix B through Appendix L.

4.9.2 Interactive Electronic Technical Manual (IETM) divisions. The hierarchy of an IETM consists of introductory matter, planning data, and a series of work packages that include the following types of data:

a. Descriptive information and principles of operation.
b. Troubleshooting information.
c. Procedural information (operator and maintenance tasks).
d. Parts information.
e. Supporting Information.

4.9.2.1 Work packages. Work packages shall be used to logically divide IETM data into functional descriptive or task-oriented information. Refer to Appendix B through Appendix L for the specific content requirements for each of the functional work package types (e.g., description information, operator's instructions, maintenance, troubleshooting, repair parts, and supporting informaiton).

4.9.3 Font size and style. For guidance on font style, size, and spacing; refer to MIL-HDBK-1222.

4.9.4 Alerts (Warning or Caution). An alert shall be a warning or a caution. Alerts shall be used only in tasks, procedures, and steps. Alerts may be acknowledged. Alerts shall be displayed inline as a message dialog box or as a pop-up message dialog box. (Refer to 4.9.4.5.) The only push button in the alert message dialog box shall be the "**OK**" push button which shall be used for acknowledgment.

4.9.4.1 Warning **<warning>**. A warning identifies a clear danger for injury or death to the person doing that procedure.

4.9.4.2 Caution **<caution>**. A caution identifies risk of damage to the equipment.

4.9.4.3 Display of warnings and cautions.

a. Warnings and cautions shall appear inline as follows:
   (1) For tasks, they shall follow the title of the associated task.
   (2) For procedures, they shall follow the title of the associated procedure.
   (3) For steps, they shall precede the associated step.

b. If multiple warnings and cautions apply to the same text, warnings shall appear first and cautions shall appear second. If notes (refer to 4.9.5) are also applicable to the text, they shall appear after the applicable warnings and cautions.

c. The header **WARNING** or **CAUTION** shall be displayed as shown in Figure 1. Headers shall be bolded and centered above the appropriate text. Headers shall not be numbered.
   (1) The warning header shall have the word **WARNING** in white text preceded with a white exclamation point surrounded with a black triangle (⚠) and inside a red rectangle box with a black border. Warnings may have safety or hazard icon(s) and these shall appear below the warning header. The warning text shall be left justified. The warning header, icons, text, and **"OK"** pushbutton shall be enclosed within a larger white box with a red border.
   (2) The caution header shall have the word **CAUTION** in black text preceded with a white exclamation point surrounded with a black triangle (⚠) and inside a yellow rectangle box with a black border. Cautions may have icon(s) depicting equipment damage and these shall appear below the caution header. The caution text shall be left justified. The header, icons, text, and **"OK"** pushbutton shall be enclosed within a larger white box with a yellow border.

d. When a warning or caution consists of two or more paragraphs, the header **WARNING** or **CAUTION** shall not be repeated above each paragraph.

e. Warnings and cautions on unrelated topics that pertain to the same task, procedure, or step(s) may be grouped under one heading. When grouping warnings and cautions, each warning and caution text shall be separated by one line

f. Warning and caution text shall be indented on the right and left. The text shall be left justified.

g. Warnings shall include basic first aid instructions/guidance in the event of exposure/injury (e.g., flush eyes with water, seek medical attention, cleanse affected area with soap and water, etc).

4.9.4.4 Acknowledgment of alerts. If acknowledgment of alerts is not used, warnings and cautions shall be displayed in-line as shown in Figure 2. If acknowledgment of alerts is used, alerts shall be displayed and acknowledged as follows:

a. An **"OK"** pushbutton in the alert shall be used for acknowledgment. The text following the alert shall not be displayed until the alert is acknowledged. The alerts shall stay inline after the user acknowledges the alert. All functions (including the scrolling function if provided) shall be disabled until the alert has been acknowledged. Figure 3 shows an

example of a single alert on a pane with a scrolling function. Figure 4 shows an example of single alert on a pane without a scrolling function.

b. When multiple alerts are displayed in the same pane, the **"OK"** pushbutton in each alert shall be used for acknowledgment. The text following an alert shall not be displayed until that alert is acknowledged. (Refer to Figure 5.)

c. When alerts apply to the entire task or procedure, the alerts shall be displayed inline before the applicable data. (Refer to Figure 6.)

d. After an alert has been acknowledged, the applicable persistent alert icon shall be displayed in the status bar of the inner shell and remain persistent until the applicable step, task, and/or procedure has been completed. (Refer to Figure 3 through Figure 6 for examples.) Clicking on the persistent alert icon, at any time during the task or procedure, shall display the applicable alert(s).

4.9.4.5 Pop-up alerts. Alerts may also appear as a pop-up in addition to being displayed inline. When pop-up alerts are used, they shall be acknowledged using the **"OK"** pushbutton in the pop-up alert. (Refer to Figure 7.) After being acknowledged, the alert shall be displayed inline and shall not require acknowledgment.

4.9.4.6 Icons **<icon>**. The use of standardized icons to improve readers' recognition of hazards is encouraged. Approved icons for use in TM warnings are available online at https://www.logsa.army.mil/mil40051/warning-icons.cfm. Additional non-standardized warning icons shall be approved by the acquiring activity safety office. Equipment damage caution icons shall be approved by the acquiring activity safety office. However, icons shall be used only if they clarify the alert, clearly depict the hazard, and can be reproduced clearly. Icons used shall be defined in the Warning Summary. (Refer to 5.2.1.5.)

4.9.4.6.1 Development of icons. The signal word(s) for warning icons appear outside the box centered below the icon(s).

4.9.4.6.2 Safety warnings with icons **<icon>**. The approved safety warning icons are available on the LOGSA Web site at https://www.logsa.army.mil/mil40051/warning-icons.cfm and can be used in conjunction with the **WARNING** header and description of the hazard. (Refer to Figure 1.) For additional information on the use and placement of warnings and icons, refer to requirements specified in 4.9.4.3.

4.9.4.6.3 Hazardous materials warnings **<warning>**. Procedures prescribed for the operation and maintenance of equipment shall be consistent with the safety standards established by the Occupational Safety and Health Act (OSHA) Public Law 91-596 and Executive Order 12196. When exposure to hazardous chemicals or other adverse health factors or use of equipment cannot be eliminated, guidance pertaining to the exposure shall be included in the TM. A list of personnel protective devices shall also be included. Hazardous materials warnings may be presented in the standard warning format without an icon, or in conjunction with an icon, or a combination of icons as described in 4.9.4.3. The acquiring activity safety office shall approve the use of icons other than those presented on the LOGSA Web site at https://www.logsa.army.mil/mil40051/warning-icons.cfm. Hazards that result from a combination of materials shall clearly be identified to indicate that mixing or combining the materials creates the hazard.

4.9.4.6.3.1 Format for hazardous materials warnings with icons **<icon>**. Hazardous materials warnings with icons consist of a **WARNING** header (refer to 4.9.4.3.c(1)), the icon(s), and a full description of the hazardous material and the precautions to be taken.

4.9.4.6.3.2 Abbreviated format for hazardous materials warnings with icons **<icon-set>**. For commonly used substances only (e.g., dry cleaning solvent, hydraulic fluids, paints, etc.), an abbreviated format may be used for hazardous materials warnings. The abbreviated format consists of the **WARNING** header (refer to 4.9.4.3.c(1)), the icon(s), and the signal word(s) **<signalword>** (e.g., ISOPROPYL ALCOHOL, TT-I-735) of the hazardous material. The signal word(s) for warning icons appear outside the box centered below the icon(s). The full description of the warning shall be placed in the warning summary. Icons may be used in TM warnings either singly or in combination. When icons are used in combination, the placement and format should adhere to the methods provided in 4.9.4.3.

4.9.4.6.4 Equipment damage caution icons **<icon-set>**. The equipment damage caution icons can be used in conjunction with the **CAUTION** header and description of the equipment damage. (Refer to Figure 1.) For additional information on the use and placement of cautions and icons, refer to the requirements specified in 4.9.4.3**.**

4.9.5 Notes **<note>**. A note is used to highlight essential procedures, conditions, or statements or convey important instructional data to the user.

4.9.5.1 Display of notes.

a. Notes shall appear inline as follows (refer to Figure 8):
   (1) For tasks, they shall follow the title of the associated task.
   (2) For procedures, they shall follow the title of the associated procedure.
   (3) For steps, they shall precede the associated step.
b. If multiple notes apply to the same text, the warnings shall appear first, cautions shall appear second, and notes shall appear last.
c. The header **NOTE** shall be displayed as shown in Figure 1 (alerts used) or Figure 2 (alerts not used). Headers shall be bolded and centered above the appropriate text. Headers shall not be numbered.
d. The note header shall have the word **NOTE** in blue text inside a white rectangle box with a black border. Notes may have an optional note icon below the note header. The note text shall be left justified. The note header, icons, and text shall be enclosed within a larger white box with a blue border.
e. When a note consists of two or more paragraphs, the header **NOTE** shall not be repeated above each paragraph.
f. Notes on unrelated topics that pertain to the same task, procedure or step(s) may be grouped under one heading. Each note shall be separated by at least one line and may be bulleted.
g. Note text shall be indented on the right and left. The text shall be left justified.
h. Notes shall be allowed in tasks, procedures, steps, and non-procedural information. Notes shall also be allowed in the IETM other than in a task, procedure or step and shall be displayed as previously described.

4.9.5.2 Acknowledgment of notes. Notes may be acknowledged. A note shall be acknowledged if it is deemed important enough by the acquiring activity. The only push button in the note message dialog box shall be the **"OK"** push button which shall be used for acknowledgment. The note message dialog box shall appear as a pop-up or inline. Pop-up notes shall also be displayed inline and the message dialog box for the pop-up shall persist until the user acknowledges the message. (Refer to Figure 9.) Unlike warnings and cautions (refer to 4.9.4), text that follows a note may be viewable before acknowledgment and a persistent note icon shall not be displayed in the status bar of the inner shell after the note is acknowledged.

4.9.6 Work packages.

4.9.6.1 Work package number. A unique number shall be assigned to each work package. This identifier may be used for database retrieval purposes. The work package identification number shall not appear on the user's viewer. It shall be assigned when preparing the document instance in accordance with the DTD and shall not be changed throughout the life of the work package. The work package identification number shall consist of an alpha designation for the type of information contained in the work package, a five-digit block number assigned by the acquiring activity, and the IETM number less the maintenance level dash numbers. The IETM number is used only to provide uniqueness and avoid duplication of a work package identification number, other than that it shall not have significance. When reusing a work package, the same work package identification number shall be used from IETM to IETM.

a. The following alpha designators shall be assigned to the specific types of information contained within the work packages.

G General information

O Operator instructions

T Troubleshooting procedures

M Maintenance instructions

R Parts information

S Supporting information

b. Work package database identification numbering is explained in the following examples:

M00432-9-1425-646

M	Identifies a work package containing maintenance instructions.
00432	Identifies the 432nd work package containing specific maintenance instructions that was initially developed for the M270 Armored Vehicle Mounted Rocket Launcher.
9-1425-646	Identifies the M270 Armored Vehicle Mounted Rocket Launcher TM. This is the TM under which this work package was initially developed.

T02000-1-1520-238

T	Identifies a work package containing troubleshooting procedures.
02000	Identifies the 2000th work package containing specific troubleshooting procedures that was initially developed for the AH-64A Helicopter.
1-1520-238	Identifies the AH-64A Helicopter TM. This is the TM under which this work package was initially developed.

4.9.6.2 Work package identification information **<wpidinfo>**. All work packages shall include the identification information entries in the following sequential order, as applicable.

4.9.6.2.1 Maintenance class **<maintlvl>**. The lowest maintenance class(es) shall be included (e.g., crew (operator)).

4.9.6.2.2 Work package title **<title>**. The title of the individual work package shall be listed (e.g., M144 Shop Van Semi trailer General Information).

4.9.6.2.3 Effectivity notice **<config>**. If applicable, an effectivity notice shall be included. When the work package does not apply to all configurations of the weapon system/equipment, the applicable configurations <**name**> covered by the work package shall be listed. Omit this requirement if the same tasks/procedures apply to all configurations. (If certain configurations require different tasks/procedures, separate work packages shall be prepared.)

4.9.6.2.4 Joint use. When TMs are acquired and specified by the Army for joint use with another or other services (Joint Service TMs), work packages in joint publications which do not apply to all services concerned shall be marked to indicate the service(s) to which they apply (e.g., LANDING GEAR MAINTENANCE (ARMY ONLY)). This data need not be displayed on the user's viewer.

4.9.6.2.5 Display of work package identification information. Work package identification information shall be displayed as follows:

a. If context filtering/login is used in the IETM, only the work package title shall be displayed in the title bar. The other work package identification information shall be in the source data, but shall not be displayed.
b. If filtering/login is not used in the IETM, the work package title shall be displayed in the title bar and the other work package identification information shall be displayed in the inner shell.

4.9.6.3 Initial setup information **<initial_setup>**. The initial setup provides the maintenance technician with general information, equipment, parts, material, and authorized personnel required to perform and complete all the tasks included in the work package. As appropriate, links shall be established to all supporting information items. Unless otherwise specified in this standard, all work packages shall include initial setup instructions **<initial_setup>**. A sample initial setup is provided in MIL-HDBK-1222. When no initial setup instructions are required to perform tasks, the title **INITIAL SETUP** shall be included with the words "**Not Applicable**", which is set by selecting the element **<null>**. Setup information requirements are described as follows:

4.9.6.3.1 Test equipment **<testeqp>**. All test equipment required to perform the procedure shall be listed by name **<name>** and linked to the required test equipment item **<itemref>**. Linking will eliminate the need to repeat or update the part and model numbers throughout the IETM.

4.9.6.3.2 Tools and special tools **<tools>**. The tool kit (box) assigned to the mechanic to be used in the maintenance of a particular piece of equipment shall be listed by name **<name>** and linked to the required tools and special tools items **<itemref>**. Tools in the kit may be further identified. If tools from a kit are further identified, they shall be listed underneath the tool kit in the initial setup. Other tools required for performance of all tasks for the maintenance levels/classes covered in the work package shall also be identified in the initial setup. "Other tools" includes tools that are part of/components of shop sets authorized to sections/teams; tools authorized by parts information and CTA-50-909; CTA 50-970; special and fabricated tools; and items of Test, Measurement, and Diagnostic Equipment (TMDE). Linking will eliminate the need to repeat or update the part and model numbers throughout the IETM.

4.9.6.3.3 Materials/parts **<mtrlpart>**. All expendable items and support materials, mandatory replacement parts, bulk items, and Critical Safety Items (CSIs) shall be listed by, as a minimum, name **<name>**, quantity **<qty>**, if applicable, and linked to the required items **<itemref>**, if applicable. Linking will eliminate the need to repeat the part and numbers throughout the IETM. For example:

"Material/Parts

Grease
Range lock
Frequency Converter
Bracket Assembly, Chemical Alarm
Clamp, Loop, (TM 11-1520-238-23P, Group 110503)"

4.9.6.3.4 Personnel required **<persnreq>**. Personnel **<name>** and the number of personnel **<qty>** shall be identified if the task requires more than one. The Military Occupational Specialty (MOS) designation **<mos>** may be included when a specific skill set is needed to perform the task. For example:

"Personnel Required

Artillery Mechanic 68M10

Artillery Mechanic 66J30 (2)"

4.9.6.3.5 References **<ref>**. When necessary, other work packages, TMs, foldouts, and other sources (**<link>**/**<extref>**/**<xref>**) that are needed to complete the operating tasks shall be listed here. These tasks shall be linked when feasible. Only references not listed in equipment conditions shall be listed. For example:

"References

TM 9-1015-252-20&P

Engine Shutdown"

4.9.6.3.6 Equipment conditions **<eqpconds>**. Any special equipment conditions required before the procedure can be started shall be listed and linked to the appropriate source (**<link>/<extref>/<xref>)** for setting up the condition **<condition>**. For example:

"Equipment Condition

Firing mechanism removed"

4.9.6.3.7 Special environmental conditions **<specenv>**. Any special environmental conditions (such as ventilation, lighting, or temperature) **<condition>** that are required shall be listed and may be linked to here. The reason **<reason>** that such conditions are needed shall be explained. For example:

"Special Environmental Condition

Darkened area required for testing lights."

4.9.6.3.8 Drawings required **<dwgreq>**. When necessary, all drawings (which are not included in the work package) required to complete the maintenance tasks shall be listed and may be linked to here. Drawings shall be listed by title **<dwgname>** and drawing number **<dwgno>**. For example:

"Drawings Required

Power Supply Schematic (132E470092)"

4.9.6.3.9 Estimated time to complete the task **<time.to.comp>**. If required by the acquiring activity, the estimated time it will take to complete the task shall be included. Approved Logistics Management Information (LMI), and service experience, performance data on similar equipment, and all other Reliability, Availability, and Maintainability (RAM) data available shall be used to estimate the time required to complete the task. For example:

"Time to Complete

8 Hours"

4.9.7 Descriptive information. Descriptive information contained in a work package shall have a paragraph title. When it is necessary to divide descriptive information into subparagraphs, subparagraph titles shall be used for clarity. (Refer to 4.9.8.2.) The words "**END OF WORK PACKAGE**" shall be placed immediately following the last data item (e.g., text, illustration, etc.) at the end of the work package.

4.9.8 Paragraphs.

4.9.8.1 Paragraph numbering. Paragraphs and subparagraphs within a work package shall be unnumbered.

4.9.8.2 Paragraphs and subparagraph titles. Paragraphs and subparagraphs shall have titles. The title shall begin at the left margin. Paragraph requirements shall be as follows:

a. Primary paragraph plus four subparagraph levels.
b. Multiple primary paragraphs in a work package.
c. Multiple blocks of text under a title are allowed.
d. When a paragraph is continued past one screen view, the first level paragraph title shall be placed in the title bar.

4.9.8.2.1 Format.

a. Primary Paragraph - Paragraph shall be flush left. Title shall be bold and capital case. Block text shall start on a separate line and shall have a blank line between title and text block.
b. Subparagraph Level 1 - Paragraph shall be flush left. Title shall be bold and title case. Block text shall start on a separate line and shall have a blank line between title and text block.
c. Subparagraph Level 2 - Paragraph shall be flush left. Title shall be bold, title case, and end with a period. Block text shall start immediately after the title.
d. Subparagraph Level 3 - Paragraph shall indent first line 5 spaces and the remaining text flush left. Title shall be bold, title case and end with a period. Block text shall start immediately after the title.
e. Subparagraph Level 4 - Paragraph shall indent first line 10 spaces and the remaining text flush left. Title shall be bold, title case and end with a period. Block text shall start immediately after the title.

4.9.9 Maintenance tasks. Each procedural maintenance tasks contained in a work package shall have a title. For parts information, the words "**END OF FIGURE**" shall be placed at the end of each parts list. The words "**END OF WORK PACKAGE**" shall be placed immediately following the last data item (e.g., text, illustration, etc.) at the end of any work package, except the following parts information work packages: Repair Parts List, Kits Part List, Bulk Items, Repair Parts for Special Tools List, and Special Tools List where the words "**END OF FIGURE**" shall be placed after the parts list.

4.9.10 Procedural steps. Procedural steps shall be used to present detailed step-by-step instructions for performing an operational or maintenance task. Subordinate steps may be used to

differentiate an expert step from a novice step. When subordinate steps are used in combination with an expert step, the subordinate steps should appear indented under the expert step on the user's viewer. Novice subordinate steps may be scrollable on the user's viewer.

4.9.10.1 Procedural step levels. When required, procedural steps shall be divided into no more than six levels. The following demonstrates, by example, how procedural steps and subordinate steps levels shall be formatted and numbered.

EXAMPLE:

1. Primary procedural step number (1, 2, 3, etc.) is flush left. Text begins two spaces after the period following the numeral. The text is blocked.
   a. The first-level procedural subordinate step letters, (a, b, c, etc.), are immediately below the text of the first-level procedural steps. The text is blocked. If additional subordinate step letters are required, use aa., ab., etc., after z.
      (1) The second-level procedural subordinate step numbers, ((1), (2), (3), etc.), are immediately below the text of first-level procedural subordinate steps. The text is blocked.
         (a) The third-level procedural subordinate step letters, ((a), (b), (c), etc.), are immediately below the text of second-level procedural subordinate steps. The text is blocked. If additional subordinate step letters are required, use (aa), (ab), etc., after (z).
            1 The fourth-level procedural subordinate step numbers, (1, 2, 3, etc.), are immediately below the text of third-level procedural subordinate steps. The text is blocked.
               a The fifth-level procedural subordinate step letters, (a, b, c, etc.), are immediately below the text of fourth-level procedural subordinate steps. The text is blocked. If additional subordinate step letters are required, use aa, ab, etc., after z.

4.9.10.2 Procedural step titles. Procedural steps shall not have titles.

4.9.11 Tables and lists.

4.9.11.1 Display of tables. Tables shall be displayed as described in MIL-HDBK-1222.

4.9.11.2 Table numbering. Tables which will be referenced or listed in the table of contents shall be numbered. Table numbers shall be consecutive within each work package in the order of their reference starting with Arabic number 1. If only one table is referenced in a work package, it shall be numbered.

4.9.11.3 Table titles. Tables may have titles. Tables which are referenced or listed in the table of contents shall have a title. The titles shall identify the contents or purpose of the table and distinguish that table from others in the TM. The table title shall appear above the table. If a table is scrollable, the table shall have "sticky" column headers. The preferred table title format is provided in MIL-HDBK-1222.

4.9.11.4 Footnotes **<ftnote>** to tables. Footnotes shall not be used in tables. Footnote data shall be linked using a hotspot or mouse-over technique.

4.9.11.5 Table format. Tables designated as **standard information** shall have no deviations to the number of columns, the titles in the column headings, and the required format. The standard information format is automatically generated by the applicable stylesheet. The DTD provides for non-standard tables. For non-standard tables, the data required in Appendix B through Appendix L shall be included regardless of format used. The preferred style and format for all non-standard tables is provided in MIL-HDBK-1222.

4.9.11.6 Lists. Lists may be used in lieu of tables, when appropriate. Lists may be unnumbered, numbered sequentially, or lettered alphabetically. They may have an optional title. Three types of lists are identified.

4.9.11.6.1 Definition list **<deflist>**. The definition list shall consist of the term **<term>** and the definition **<def>**. The definition list may have headers such as "**Term**" and "**Definition**" above the appropriate sections of the list.

4.9.11.6.2 Random list **<randlist>**. The random list shall consist of one or more items in a random order.

4.9.11.6.3 Sequential list <**seqlist**>. The sequential list shall consist of one or more items in a specified order, such as alphabetic, numeric, or alphanumeric.

4.9.12 Standard information. Data designated as **standard information** is described in the following. The standard information specified data shall have no deviation to the content requirements including the use of standard headings. The standard information shall be presented as prescribed in the standard. Refer to MIL-HDBK-1222 for examples. A list of tables that contain standard information is provided below:

a. Controls and Indicators (Refer to C.5.2.2.1.3.)
b. Checking Unpacked Equipment (Refer to E.5.3.2.3.3.2)
c. Preventive Maintenance Checks and Services (PMCS) (Refer to E.5.3.4.2.3.1.)
d. Mandatory Replacement Parts List (Refer to E.5.3.4.2.4. or G.5.8.3.)
e. Classification of Material Defects (Refer to E.5.3.5.3.2.2b.)
f. Overhaul and Retirement Schedule (Refer to E.5.2.5d.)
g. Overhaul Inspection Procedures (OIPs) (Refer to E.5.3.9.2.)
h. Depot Mobilization Requirements (Refer to E.5.3.9.3.)
i. Special Inspections (Refer to E.5.3.13.1.5.)
j. Repair Parts List (Refer to F.5.3.7.2.)
k. Kit Parts List (Refer to F.5.3.8.2.)
l. Bulk Items List (Refer to F.5.3.9.2.)
m. Special Tools List (Refer to F.5.3.10.2.)
n. National Stock Number (NSN) Index (Refer to F.5.3.4.3.2.3.)
o. Part Number Index (Refer to F.5.3.9.2.)
p. Reference Designator Index (Refer to F.5.3.9.3.)
q. Standard Maintenance Allocation Chart (MAC) (Refer to G.5.3.3.3.)
r. Aviation Maintenance Allocation Chart (AVMAC) (Refer to G.5.3.3.3.)
s. Tools and Test Equipment Requirements (MAC/AVMAC) (Refer to G.5.3.4.)

t. Remarks (MAC/AVMAC) (Refer to G.5.3.5.)
u. Component of End Items (COEI) List (Refer to G.5.4.4.1.)
v. Basic Issue Items (BII) List (Refer to G.5.4.4.)
w. Additional Authorization List (AAL) (Refer to G.5.5.3.)
x. Expendable and Durable Items List (Refer to G.5.6.3.)
y. Tool Identification List (Refer to G.5.7.3.)
z. Critical Safety Items (CSI (FSCAP)) (Refer to G.5.9.2.)

4.9.13 Display of text. All descriptive information and task text shall be displayed in accordance with Appendix A and examples in MIL-HDBK-1222.

4.9.14 Display of illustrations. Illustrations shall be displayed on the user's viewer in accordance with Appendix A and examples in MIL-HDBK-1222.

4.9.15 Abbreviations and acronyms. The first use of abbreviations and acronyms shall have the word(s) spelled out completely with the abbreviation or acronym in parentheses immediately after the word(s). When a phrase is abbreviated as an acronym, capitalize the first letter of each word and do not separate letters in the acronym by periods (for example, "Preventive Maintenance Checks and Services (PMCS)").

a. Acronyms, abbreviations, and unusual terms may be used in any work package text, when applicable.
b. Abbreviations and acronyms, which are accepted as words (radar, sonar, laser, etc.) need not be included.
c. All nonstandard abbreviations and acronyms (excluding acronyms for Electrostatic Discharge (ESD) and Hardness Critical Processes (HCP)) shall be defined in the "list of abbreviations/acronyms" paragraph of the general information work package. (Refer to Appenidx B.)
d. Abbreviations and acronyms used shall be in accordance with those found at https://www.rmda.army.mil/abbreviation/mainpage.asp, except that abbreviations may be plural (s) or possessive ('s). New abbreviations and acronyms shall not duplicate those presently listed at https://www.rmda.army.mil/abbreviation/mainpage.asp where possible.
e. When abbreviations or acronyms are used as markings on the equipment (placarding), the same abbreviations or acronyms shall be used in the IETM.
f. When directed by the requiring activity, the spelled-out version of the acronym or abbreviation can be displayed using a mouse-over technique or a link to the acronyms, abbreviations, and uncommon terms.

4.9.16 Symbols.

4.9.16.1 General information for symbols. All nonstandard symbols shall be defined in the list of abbreviations and acronyms contained in the General Information work package. (Refer to B.5.2.13.) New symbols shall not duplicate those presently listed in ASTM-F856 where possible.

4.9.16.2 Metric symbols. Metric symbols shall be in accordance with IEEE Std 945.

4.9.17 Nuclear hardness (hardness-critical processes) marking. All Hardness-Critical Processes shall be preceded with the acronym **HCP**. The acronym shall be prepared in boldface type and in

the same style and size as the adjacent text. The acronym shall not be shown with the titles in the table of contents. Use of the acronym is as follows:

a. When the entire task and all subordinate paragraphs and steps relate to establishing nuclear hardness, the acronym **HCP** shall precede the task title (e.g., **HCP** DISASSEMBLY).
b. When the entire task and all subordinate paragraphs and steps do not contribute to establishing nuclear hardness, only those that do contribute shall be annotated with the acronym **HCP**. For example,

   "SERVICING

   1. _____
   2. **HCP** _____"

c. Operating or maintenance actions which could degrade hardness, but which are not directly involved in establishing nuclear hardness, shall not be annotated with the acronym, but shall be preceded by a caution.

4.9.18 Electrostatic Discharge (ESD) sensitive marking. All paragraphs addressing handling or maintenance which could damage ESD sensitive parts shall be marked with the acronym **ESD** as shown in the following. The acronym shall be prepared in boldface type and in the same style and size as the adjacent text. The acronym shall not be shown with the titles in the table of contents. Use of the acronym is described in the following list:

a. When the entire task and all subordinate paragraphs and steps relate to ESD sensitive parts, the acronym **ESD** shall precede the task title. (e.g., **ESD** DISASSEMBLY).
b. When the entire task and subordinate paragraphs and steps are not directly related to ESD sensitive parts, only those which do apply shall be annotated with the acronym **ESD**. For example:

   "REMOVAL

   1. _____
   2. **ESD** _____"

c. Handling or maintenance actions which could damage ESD sensitive parts, but which are not directly related to handling or maintenance of ESD sensitive parts, shall not be annotated with the acronym **ESD**, but shall be preceded by a caution.
d. Mark figures, drawings, and schematics with the **ESD** acronym in accordance with MIL-STD-1686.

4.9.19 Quality Assurance (QA). Depot and aviation maintenance procedures, which have a QA impact, shall be identified by the acronym **QA** in boldface letters preceding the text. Only procedures at the step level shall be labeled with **QA.** For example:

"1. **QA** _____"

4.9.20 Security classification and protective markings.

4.9.20.1 Classification guidelines. When the acquiring activity requires the development of a classified IETM, it shall be properly marked as cited in Appendix A and the current security

directives. To ensure proper protection of classified markings, if there is a conflict between the text contained herein and the current security directives, the current security directives shall take precedence. The security classification markings for classified IETMs, titles of parts, work packages, paragraphs, illustrations, tables, and their contents, shall be identified in accordance with DOD 5200.1-R, DOD 5220.22-M, and Executive Order 12958. For guidance on classification and handling restrictive markings on CD-ROM, refer to MIL-HDBK-9660. Downgrading/declassification shall be done in accordance with DOD 5200.1-R.

4.9.20.2 Overall security classification. The overall security classification assigned to an IETM shall agree with the highest security classification assigned to any portion within, and shall be marked accordingly.

4.9.20.3 Protective markings. When specified by the acquiring activity, a FOR OFFICIAL USE ONLY (FOUO) protectively marked IETM shall be prepared. Any IETM containing FOUO information shall contain the required protective markings. (Refer to Appendix A and DOD 5400.7-R for specific requirements on using the FOUO protective marking.)

4.9.21 Referencing.

4.9.21.1 Other documents. Reference shall be made only to other documents available and authorized to the user. For Government specifications and standards, reference shall be made to the basic publication number. For non-Government documents, reference shall be made by the publication number. References to pending publication actions shall not be made.

4.9.21.2 Within the Interactive Electronic Technical Manual (IETM). When it becomes necessary to reference to other work packages, descriptive information, maintenance tasks, or other data within the same IETM, it shall be linked and referenced by title, appropriate text, or icon. If referenced by title, the title shall be the same as the title of the work package.

4.9.21.3 Equipment, components, and parts. References to parts of the equipment and to equipment components may be by nomenclature, model, type, or reference designator, as applicable. References shall be made only to models or types of equipment covered by the IETM. The referenced items may be linked to a graphic for identification and location.

4.9.21.4 National Stock Numbers (NSNs) and Part Numbers (P/Ns). Reference to NSNs shall be made only in tables, other tabular material, and lists. Reference to NSNs shall not be made on illustrations or in illustration legends. Reference to P/Ns shall not be made in the narrative portions of the IETM, procedural steps, illustrations, or legends, except when essential for identification. Reference to P/Ns may be made in tables, other tabular material, and lists. NSN and P/N information for all equipment, components, and parts shall be accessible at any point in the presentation of work package text, tables, and illustrations, when necessary, for the purpose of identification and parts ordering.

4.9.21.5 Equipment panel markings (placarding). Reference shall be made to panel markings and switch positions exactly as marked on the equipment. However, symbols on panel markings shall be spelled out when they cannot be produced by the software used in producing the IETM, such as the symbol for ohm, infinity, etc.

4.9.21.6 Metric and United States (U.S.) standard measurements. Unless specified otherwise by the acquiring activity, all measurements shall be expressed in both U.S. standard units (e.g., ounces, pounds, gallons, inches, feet, knots, miles, etc.) and metric units (e.g., grams, kilograms, liters, centimeters, kilometers per hour, kilometers, etc.). U.S. standard measurements shall be

followed by the metric conversion in parentheses unless the equipment, instrument, or tool, etc., is calibrated in metric units. In that case, metric units shall be first, followed by the U.S. standard units (e.g., "169.5 N•m (125 lb-ft)").

4.9.21.7 Temperature. Reference shall be made to temperature readings as calibrated on the equipment. If other than Fahrenheit, the equivalent in Fahrenheit shall follow in parentheses. General temperature references, such as room temperature, shall be given in degrees Fahrenheit (e.g., 78°F).

4.9.21.8 Other Technical Manuals (TMs)/Interactive Electronic Technical Manuals (IETMs). When it becomes necessary to reference to other work packages, descriptive information, maintenance tasks, or other data contained in another TM/IETM, it shall be by the TM number, as a minimum. The reference shall be linked when the referenced data is on the same CD or within the CD set for the system.

4.9.21.9 Tables. Tables shall be linked to the appropriate text and displayed when they do not already appear in a pane on the user's viewer.

4.9.21.10 Figures. Figures shall be linked to the appropriate text or index number and displayed when they do not already appear in a pane on the user's viewer.

4.9.21.11 Index numbers. Unless specified otherwise by the acquiring activity, figure and index numbers shall be used in text to identify items and parts on illustrations. For example:

> "Remove safety disc (Figure 1, Item 3) and safety disc washer (Figure 1, Item 4) from valve body (Figure 1, Item 2)."

4.9.21.12 Items on diagrams. References shall be made to parts on diagrams by sufficient description or reference designator to identify the item (e.g., resistor A6R11).

4.9.21.13 Footnotes. Footnotes shall not be used in IETMs. Mouse over techniques or links shall be used in lieu of footnotes.

4.9.22 Equations. The use of equations shall be held to the minimum use required by the needs of the IETM user.

4.9.23 Nomenclature.

4.9.23.1 Nomenclature consistency and applicability. Nomenclature, other terms, and names shall be consistent within a manual and throughout the parts list, MAC, and other directly related manuals. Statements that explain applicability for individual items of equipment shall use specific serial numbers, block designations, model designations, or similar identification. Such terms as "on later equipment" and "on early serial numbers" shall not be used.

4.9.23.2 Official/approved nomenclature. Unless specified otherwise by the acquiring activity, only approved names and official nomenclature shall be used. (Official nomenclature shall be the nomenclature used in the FEDLOG H6 listing [https://www.dlis.dla.mil/h6/].) If unofficial nomenclature (common name) is approved, an appropriate nomenclature cross-reference list shall be prepared for the IETM. (Refer to Appendix B.) Shortened versions of the approved nomenclature are not considered deviations. Approved nomenclature shall be used wherever the use of a common name might be ambiguous.

4.9.23.3 Military terms. Military terms used shall be in accordance with Joint Pub 1-02 or any approved dictionary or glossary of Army military terms.

4.9.23.4 Automatic electronic test and checkout terminology. Terms used for automatic electronic test and checkout shall be in accordance with MIL-STD-1309.

4.9.24 Comprehensibility. IETMs shall be written for the target audience. Reading Grade Level (RGL) shall be as specified by the acquiring activity. Refer to MIL-HDBK-1222 for guidance on calculating the RGL for IETMs.

4.9.25 Multimedia presentation. Audio, video, and animation techniques shall only be used in an IETM when it results in enhancing the presentation of the information or makes the procedures more effective. Every instance of use must be discussed with and approved by the acquiring activity before any audio, video, or animation presentation is included in an IETM. Multimedia standards to be used for presentation techniques shall be as specified by the acquiring activity in accordance with AR 25-30. A list of preferred formats is provided in MIL-HDBK-1222. Multimedia shall never be the primary means of presenting information. (Refer to A.4.4.5 for requirements for multimedia links.)

4.9.26 Graphics.

4.9.26.1 Graphic format. Graphics formats shall be as specified by the acquiring activity in accordance with AR 25-30. A list of preferred formats is provided in MIL-HDBK-1222.

4.9.26.2 Types of graphics. As applicable, the following types of graphics shall be used in the preparation of IETMs. Preferred format of these graphics and typical examples are provided in MIL-HDBK-1222.

a. Line drawings.
b. Photographs.
c. Engineering drawings.
d. Diagrams.
e. Charts and graphs.
f. Tools and test equipment illustrations.

4.9.26.2.1 Line drawings. Line drawings including exploded views, locator views, and detailed views shall be used to support the operational, troubleshooting, and maintenance procedures. Examples of line drawings are provided in MIL-HDBK-1222.

a. When index numbers are used to locate and identify equipment components or parts, they shall be used as specified in 4.9.26.3.4.1.
b. To assist the maintenance technician or operator in locating major components, controls and indicators, etc., locator views may be included.
c. When the illustration does not adequately or clearly depict the subject matter or part(s), specific detailed views may be included to support the main illustration.

4.9.26.2.2 Multiview illustrations. Multiview illustrations may be used to clarify, identify significant features, or further detail equipment assemblies, subassemblies, and detailed parts. Refer to MIL-HDBK-1222 for examples of multiview illustrations.

4.9.26.2.3 Photographs. Photographs, film or digital, may be used for illustrations when a photograph provides for better clarity than a line drawing. All photographs, regardless of source,

shall be delivered as digital photographs. The acquiring activity shall determine acceptability of photographs and usage of line drawings.

4.9.26.2.3.1 Photograph quality. If used, photographs shall be detailed and sharp, free of heavy shadows, distorted objects, cluttered foregrounds and backgrounds, and of good contrast. Photographs shall provide sufficient detail for the user to clearly identify all components. Photographs shall be of sufficient resolution to allow a reasonable level of user zooming in the IETM without loss of detail.

4.9.26.2.3.2 Retouching. Photographic retouching shall be held to a minimum. Retouching shall be used only to emphasize detail, exclude unwanted detail, correct slight photographic defects, and eliminate undesirable shadow from that portion of the photograph related to the text only.

4.9.26.2.3.3 Use of photographs in place of line drawings. For photographs that cannot meet the requirements specified previously, line drawings shall be prepared and used.

4.9.26.2.4 Engineering drawings. Engineering drawings may be used with the approval of the acquiring activity. Engineering drawings are controlled documents and when used, they shall be used in their entirety, without modification. They shall be reduced or redrawn to meet any viewer restrictions. When the controlled elements of an engineering drawing (e.g., title block, sources of supply, revision data, etc.) are removed, leaving only the "field" of the drawing, it shall be treated as a typical line drawing.

4.9.26.2.5 Diagrams.

4.9.26.2.5.1 Diagram specifications. Diagrams shall be prepared in accordance with the following specifications.

Subject Equipment	**Covered**	**Specification**
Abbreviations All		https://www.rmda.army.mil/abbreviation/mainpage.asp
Engineering Drawing	All ASME	Y14.100
Graphic Symbols	Electrical and Electronic	IEEE Std 315a, IEEE Std 280
	Mechanical	ASTM-F856
	Digital (Logic)	IEEE Std 91
	Fluid Power	ANSI Y32.10
Unit Symbols	All	IEEE Std 260.1
Logic	All	IEEE Std 91

4.9.26.2.5.2 Types of diagrams. The following types of diagrams may be included in the IETM. Refer to MIL-HDBK-1222 for examples of types of diagrams. Additionally, when authorized by the acquiring activity, specific types of diagrams such as schematic and wiring diagrams may be provided in a paged-based paper format and supplement the IETM.

a. Block diagrams.
b. Schematic diagrams.
c. Pictorial diagrams.
d. Cutaway diagrams.
e. Wiring diagrams/wire lists.

f. Cable diagrams.
g. Piping diagrams.
h. Test setup diagrams.

4.9.26.2.6 Charts and graphs. Charts and graphs may be included, as applicable. They may be prepared as illustrations or may be dynamically produced. Instructions shall be provided for use and interpretation of complex graphs.

4.9.26.2.7 Tools and test equipment illustrations. Only uncommon or unusual uses and connections for test purposes shall be illustrated if it is essential to avoid misunderstanding. Unusual operations shall also be illustrated. Special tools and test equipment shall be illustrated, as applicable. Standard tools and test equipment shall not be illustrated, nor shall self-evident or generally known uses be shown.

4.9.26.3 Elements of illustrations.

4.9.26.3.1 Border rules and boxes. Border rules and boxes shall not be used for single illustrations, but are used to separate multi-section illustrations in the same pane or for locator/detail views. Refer to MIL-HDBK-1222 for an example of border rules and boxes.

4.9.26.3.2 Use of the human figure. When necessary, illustrations may include a human figure or parts of the body. Jewelry shall not appear in any illustration. The human figure shall not be permitted to obscure details of the equipment necessary for a complete understanding of its operation. The human figure shall be clothed as designated by the acquiring activity. A cross section of races and sexes shall be used.

4.9.26.3.3 Credit lines.

a. The photographer's or illustrator's name shall not appear on any illustration.
b. A manufacturer's name, symbol, or trademark shall not appear on illustrations for the purpose of identifying the illustration.

4.9.26.3.4 Callouts. Index numbers, reference designators, nomenclature, leader lines, sweep arrows, legends, and other identifiers shall be used, when necessary, to identify significant features. Both index numbers and nomenclature can be used in the same document. However, they shall not be used together in the same illustration. When hotspot techniques are used in conjunction with callouts, an explanation shall be provided in the "how to use" portion of the IETM. (Refer to MIL-HDBK-1222 for examples of the use of these types of identifiers.)

4.9.26.3.4.1 Index numbers. Index numbers shall start with Arabic numeral 1 and continue consecutively within an illustration. For multisheet illustrations, index numbers shall continue in sequence from one sheet to another.

a. Index numbers shall be presented in one of the following manners:
   (1) In clockwise sequence, beginning at 11 o'clock. Refer to MIL-HDBK-1222 for an example of callouts starting at 11 o'clock. This is the preferred method.
   (2) In inspection or disassembly/assembly order.
   (3) In the order mentioned in the text.
b. Within a multisheet illustration, if an item that already has been assigned an index number is used in more than one illustration in that multisheet illustration, it shall retain the same index number.

c. All items shown as exploded shall be identified. Items drawn in phantom need not be identified.

d. Index numbers shall not be contained within circles.

4.9.26.3.5 Leader lines and arrowheads. Leader lines shall be uniform, short, and as straight as possible; avoid the use of dogleg-shaped lines unless absolutely necessary. Arrowheads may be added for clarity. Do not allow leader lines to touch the callout. Do not allow arrowheads to enter the object to which they apply. If it is necessary to enter the object to provide for greater clarity, a breakoff symbol shall be used in lieu of an arrowhead.

4.9.26.3.6 Illustration legends. Illustration legends may be used but their use is discouraged. Legends shall not be part of the illustration and shall only be included as markup. Refer to MIL-HDBK-1222 for example of a legend.

4.9.26.3.7 Procedures on illustrations. Procedural steps shall not be placed on illustrations.

4.9.26.4 Graphic techniques. In addition to the graphic techniques provided in 4.9.26.4.1 through 4.9.26.4.6, refer to MIL-HDBK-1222 for suggested graphic techniques used for the preparation of IETMs.

4.9.26.4.1 Figure numbers. Figure numbers shall be included on all illustrations except inline graphics (e.g., equations). Figures shall be numbered using Arabic numbers sequentially within each work package starting with the Arabic numeral 1. The figure number shall precede the title. The figure number and title shall not be an integral part of the figure. The figure number and title shall be separated from the graphic so the text can have the capability of being searched.

4.9.26.4.2 Parts information figure numbering. Figures for parts information shall be numbered sequentially within the parts information (not within each work package) using Arabic numerals beginning with 1. Multisheet parts information illustration shall be used as specified by the acquiring activity and shall be numbered as described in this paragraph and in 4.9.26.4.3.

4.9.26.4.3 Multisheet numbering. Multisheet figures shall be consecutively sheet numbered and include the total number of sheets following the title; for example, "Figure 2. Wing Hydraulic Assembly (Sheet 1 of 3)." or "Figure 1. Cable Assembly W12 Wiring Diagram (Sheet 1 of 2)." Remaining sheets shall be numbered in consecutive order; for example, Sheet 2 of x, Sheet 3 of x, etc. (where x is the total number of sheets). A sample multisheet illustration is provided in MIL-HDBK-1222.

4.9.26.4.4 Figure titles. Each figure, except inline graphics (e.g., an equation), shall have a figure title.

4.9.26.4.4.1 Figure title format. The figure title format shall:

a. Include "Figure" in title case, followed by the figure number, a period, two spaces, and the title (e.g., "Figure 3. Fuel Indicator.")

b. Capitalize the first letter of the first and each major word of the title.

c. End with a period following the last word.

d. Identify illustrations applicable to one service in a joint service IETM (e.g., "Figure 3. Fuel Indicator (Army Only).").

e. Identify illustrations applicable to more than one service in a joint service IETM (e.g., "Figure 3. Fuel Indicator (Army and Air Force Only).").

4.9.26.4.4.2 Figure title placement. Figure title placement shall:

a. Center the figure title on the graphic image area below the graphic
b. Begin the title on the same line with the figure number.
c. When too long to fit on one line, align the second line with the first letter of the title.

4.9.26.4.5 Illustration identification numbers.

a. Each illustration shall be assigned a unique identification number provided by the proponent activity.
b. The contractor's identification number may be used when approved by the proponent activity.
c. When the illustration is displayed, the identification number shall not appear in the display.

4.9.26.4.6 Portraying signal flow. Signal flow, especially for electrical and electronic equipment, critically affects the understandability of diagrams. To assist the IETM user in following the diagram, major signal or pressure flow shall be from left to right, and feedback or return flow shall be from right to left, if possible. Animation or color may be used to indicate signal flow.

4.9.27 Use of color. Color may be used when it will enhance the understanding of the data. The use of some colors may not be appropriate for certain environmental conditions. (Refer to A.4.3.1.)

4.9.28 Revisions for Interactive Electronic Technical Manuals (IETMs).

a. Each revision to an IETM shall be identified by a revision date.
b. When updates to an IETM are made, the entire IETM shall be revised and reissued.
c. When an IETM is revised and reissued, revision summary information shall be included. (Refer to 5.2.1.5.)
d. IETMs shall be revised to the latest standard when 50 percent or more of the data is changed.

4.9.28.1 Revision symbols for text and tables. Revision symbols shall be inserted to identify technical updates in text and tables.

a. Updates to the text and tables shall be indicated by a vertical bar (revision bar) opposite the updated, deleted, or added text (except as noted b through d below). If an entire work package is updated, a revision bar shall be placed to the left of the work package title.
b. A revision bar shall be placed to the left of the table title only if the table title is changed or a new table is added.
c. Revision symbols from a previous revision shall be deleted when a work package is subsequently updated. Symbols shall show current dates only.
d. Revision symbols are not required for correction of minor inaccuracies, such as spelling, punctuation, relocation of material, renumbering, etc., unless such correction changes the meaning of the information.

4.9.28.2 Revision symbols for illustrations. Unless specified otherwise by the acquiring activity, a miniature pointing hand may be used for illustrations (other than diagrams and schematics (refer to item d following)) to highlight the area containing the revised information.

a. Revisions confined to the same general area shall be indicated only once on the illustration.
b. A vertical bar next to revised callouts on illustrations may be used in lieu of a pointing hand.
c. A vertical bar shall be placed next to the graphic if the miniature pointing hand is not used.
d. As specified by the acquiring activity, screens (shading), screened (shaded) boxes, or miniature pointing hands shall be used to highlight updated areas of diagrams and schematics.
e. If a callout is deleted from an illustration, the word "DELETED" may be placed after the appropriate number in the legend, if applicable. If a callout is deleted from an illustration without a legend, such as those used to supplement parts information, the word "DELETED" may be placed on the illustration at the end of the leader line.
f. When an illustration is changed, index numbers added between existing numbers may be the same as the preceding index number with added alpha characters (e.g., 22A, 22B). This system may also be used in basic manuals when errors are discovered so late in preparation that renumbering of all following index numbers would delay submittal. Index numbers with added alpha characters shall be eliminated for a complete revision.
g. When an illustration contains embedded references to other illustrations or tables (this practice is highly discouraged), the referenced table and illustration numbers shall not be changed. When an illustration or table in the work package is added or deleted before the referenced table or illustration, the use of point illustration or table number is permitted and shall be in accordance with the LMI plan.

5. DETAILED REQUIREMENTS.

5.1 Technical content preparation. TM data developed in accordance with this standard shall be task oriented and fully consistent with the maintenance concepts derived from the baseline documents described in the following paragraphs:

a. Logistics Management Information (LMI). The technical data and instructions developed by the requirements of LMI, along with the DoD Requirements for an LMI (including the MAC), shall be used as the baseline to prepare TMs.
b. Maintenance Allocation Chart (MAC). For equipment that does not have LMI data available, either a Preliminary Maintenance Allocation Chart (PMAC) or a MAC shall be used as the baseline to prepare TMs.
c. Additional source data. Available engineering drawings shall be used with the other required data. Sound engineering principles and techniques, available engineering analyses, service experience, performance data on the item and on similar items, and all other Reliability, Maintainability, Supportability (RMS) and Operational Availability (Ao) data available shall be used in the preparation of specific instructions.

5.2 Preparation of introductory matter and planning information for Interactive Electronic Technical Manuals (IETMs). Requirements for the preparation of introductory matter and planning information necessary to supplement the technical content work packages in Appendix B through Appendix L are provided in 5.2.1 through 5.2.2. Appendix A provides detailed

assembly and content requirements for all IETMs covering operation, maintenance, and parts information, at all maintenance levels/classes through depot.

5.2.1 Introductory matter **<framed.frnt>**. As applicable, the following introductory matter shall be prepared. Guidance for assembly of introductory matter frames is provided in MIL-HDBK-1222.

a. IETM installation data. (Refer to 5.2.1.1.)
b. CD content frame. (Refer to 5.2.1.2.)
c. (MC) Promulgation letter **<promulgation>.** (Refer to 5.2.1.3.)
d. Warning summary **<warnsum>.** (Refer to 5.2.1.4.)
e. Revision summary frame **<revisionsummary>** (except for initial release). (Refer to 5.2.1.5.)
f. Identification information **<frntcover>** and **<frontcover_abbreviated>.** (Refer to 5.2.1.6 and to 5.2.1.7, respectively.)
g. Table of contents **<contents>.** (Refer to 5.2.1.8.)
h. "How To Use This IETM" information **<howtouse>.** (Refer to 5.2.1.9.)

5.2.1.1 Interactive Electronic Technical Manual (IETM) installation data/access. Information on installing the CD-ROM on the computer and launching the IETM shall be prepared. The installation routine shall have an uninstall capability and shall determine if ample space is available for the install. Installation data shall include instructions for operating the IETM with and without Web access. Installation routine shall check for previously installed versions of the IETM or display software. The information shall be printed and shall be part of the packaging of the CD-ROM. The following types of install/capabilities shall be available to the user:

a. The minimum installation, which is loading to the viewer only those files necessary to access the program and data on the CD. This requires that the programs for the IETMs be executable from the CD and be able to read the data from the CD. This is the preferred method.
b. Installation of the required files for the viewer to operate as a workstation on a Local Area Network (LAN). In these cases, the program and data would be loaded to a server, and the Portable Maintenance Aid (PMA) would access the program and data via a LAN. This type of install may be desirable in a flight line or motor pool environment.
c. Loading the executable program to the hard drive. This will require the data be accessed from the CD. This may be used when multiple CDs for a system use the same reader program and the program is loaded to the hard drive for faster operation.

5.2.1.2 Compact Disk (CD) content frame. When more than one IETM is resident on a CD, the first information that shall appear on the viewer is the CD content frame. This frame shall provide the IETM number and title of all TMs that are contained on the CD. A sample CD content frame is provided in MIL-HDBK-1222.

5.2.1.3 (MC) Promulgation letter **<promulgation>**. A promulgation letter provided by the acquiring activity shall be included.

5.2.1.4 Warning summary **<warnsum>**. When required, a warning summary shall be prepared for all IETMs containing warnings. The warning summary shall include first aid data

<first_aid> and explanations of all general safety warning icons **<safety>** and hazardous material icons **<haz-icons>** used in the IETM. It shall also include descriptions of the general safety warnings **<warninfo>** and hazardous materials warnings **<hazard>** that have major impact throughout the IETM. Only warnings that meet these criteria shall be included. Warnings shown in the warning summary shall not be acknowledged. Refer to MIL-HDBK-1222 for an example of a warning summary As applicable, the warning summary shall consist of the following in the order specified:

a. First aid data **<first_aid>**.
b. Warning icons **<safety>**.
c. Warning description **<warning>**.
d. Hazardous materials icons **<haz-icons>**.
e. Hazardous materials descriptions **<hazard>**.

5.2.1.4.1 First aid **<first_aid>**. Any first aid data required in the IETM and not explicitly included in a warning, shall be included in the warning summary. The first paragraph of the warning summary shall reference FM 4-25.11. Any additional first aid data not described in FM 4-25.11 shall be described in this section.

5.2.1.5 Revision summary frame **<revisionsummary>**. When a revision to an IETM is issued, a revision summary frame shall be displayed containing a list of work packages by title that have been revised. For each work package listed, a brief description of the major changes shall be provided. The revised work packages listed on the revision summary frame shall be linked to the work package containing the revised information. The revision summary shall also indicate those work packages that have been superseded. If the work package supersedes a work package in the same manual other than itself, the supersedure notice shall be as follows (italicized text within parentheses shall be replaced with the appropriate information): "This work package supersedes work package titled (*insert title and hyperlink*), dated (*insert date*)." If the superseded work package is contained in another manual, the notice shall contain the publication number. If the superseded work package is classified, the supersession information shall be as follows: "This work package supersedes work package titled (*insert title and hyperlink*), dated (*insert date*), which should be destroyed in accordance with applicable security regulations." Examples of revision summary frames are provided in MIL-HDBK-1222. For revisions that are prepared to support maintenance transformation, the following statement shall be included on the revision summary frame: "This revision implements Army Maintenance Transformation and changes the Maintenance Allocation Chart (MAC) to support Field and Sustainment Maintenance." For revisions that are prepared to support, include, or address safety issues (Emergency Changes, Safety-of-Flight Messages (SOFM)/Safety of Use Messages (SOUM), Maintenance Advisiory Messages, etc.), a statement may be included addressing these issues.

5.2.1.6 Identification information **<frntcover>**. Identification information shall be prepared for each IETM and DMWR/NMWR. NSN(s) and EIC(s) shall be include in the identification information for equipment publications, but are not required for other types of publications such as general equipment and software manuals. The formats of the frames showing identification information are shown in Figure 11 (IETM), Figure 12 (DMWR with national overhaul standards), Figure 13 (NMWR with national overhaul standards), and Figure 14 (TM with

national overhaul standards). Unless otherwise specified, the identification information shall contain the following content information in the order listed. Additional detailed requirements for the content information are described in 5.2.1.6.1 through 5.2.1.6.14.

a. Security classification (when required).
b. TM number single service **<tmno>** or joint service **<tminfono>.** (Refer to 5.2.1.6.1 or 5.2.1.6.2.)
c. National overhaul standards statement (**IETMs/DMWRs/NMWRs with national overhaul standards only**). (Refer to 5.2.1.6.3.)
d. TM title **<prtitle>**.
e. National Stock Number (NSN) **<nsn>** for item(s) covered (when required).
f. End Item Code (EIC) **<eic>**, as specified in the Army Master Data File (AMDF) (when required).
g. Subtitle (when required) **<stitle>**.
h. Weapon system name (when required) **<weapons_system>.** (Refer to 5.2.1.6.4.)
i. Equipment illustration (when required) **<graphic>**.
j. Reporting errors and recommending improvements **<reporting>.** (Refer to 5.2.1.6.5.)
k. Availability statement **<avail>** (**DMWR/NMWR only**). (Refer to 5.2.1.6.6.)
l. Supersedure notice (**for revisions only**) **<super>.** (Refer to 5.2.1.6.7.)
m. Distribution statement **<dist>.** (Refer to 5.2.1.6.8.)
n. Export control notice warning (when required) **<export>.** (Refer to 5.2.1.6.9.)
o. Destruction notice (when required) **<destr>.** (Refer to 5.2.1.6.10.)
p. General purpose notices (when specified) **<general_purpose_notices>.** (Refer to 5.2.1.6.11.)
q. Service nomenclature **<servnomen>.** (Refer to 5.2.1.6.12.)
r. TM Publication date **<date>.** (Refer to 5.2.1.6.13.)
s. User feedback link. (Refer to A.5.2.3.5.1.)

5.2.1.6.1 Technical Manual (TM) number **<tmno>**. IETMs shall be numbered the same as page-based TMs in accordance with DA PAM 25-40 Electronically delivered TMs shall not include terms such as 'IETM', 'ETM', or 'EM' in the TM number. The TM number shall not include words such as Apache or HEMTT. IETMs shall be numbered with &P (e.g., 14&P) for manuals containing parts information.

5.2.1.6.2 Technical Manual (TM) number for joint service Interactive Electronic Technical Manuals (IETMs) **<tminfono>**. If the IETM is jointly used, each service's number shall be included and only the proponent activity's IETM number shall be placed on each frame of the TM. The numbers shall be prefixed with the word Air Force, Army, Marine Corps, or Navy (NAVSEA or NAVAIR), as applicable. The acquiring activity's (proponent activity's) name **<servbranch>** and manual number **<tmno>** shall be placed first. The IETM number(s) for the other services shall be in alphabetical sequence following the acquiring activity's name and manual number. For example,

"ARMY	TM 11-1510-204-34
AIR FORCE	TO 21M-LGM30G-12
MARINE CORPS	TM 12345A-15/1
NAVY (NAVAIR)	AI-F18AA-WRM-070
NAVY (NAVSEA)	SE211-FA-MMA-010/SPS-10A"

5.2.1.6.3 National overhaul standards statement **(TMs/DMWRs/NMWRs with national overhaul standards only)**. The following shall be added to the title of NMWRs/DMWRs/TMs which document national overhaul standards for the National Maintenance Program: "Containing National Overhaul standards for" (refer to Figure 12 , Figure 13, and Figure 14 for examples).

5.2.1.6.4 Weapon system name **<weapons_system>**. When required, the name of the weapon system to which this publication applies shall be included.

5.2.1.6.5 Reporting errors and recommending improvements statement **<reporting>**. A reporting errors and recommending improvements statement shall be included. The mailing address, e-mail address, and fax number of the responsible proponent shall be inserted in the statement. Additional information may be added as required by the acquiring activity (e.g., how to submit an electronic 2028 via the internet).

a. Unclassified Interactive Electronic Technical Manual (IETM). Except for classified IETMs, the following statement shall be included.

(1) Army only publications. The following statements shall be included (italicized text within parentheses shall be replaced with the appropriate information):

"**REPORTING ERRORS AND RECOMMENDING IMPROVEMENTS**

You can help improve this IETM. If you find any mistakes or if you know of a way to improve the procedures, please let us know. If your IETM supports online forms, fill in the electronic publication change request and when connected to the internet, transmit the form. If your IETM does not support online forms, obtain a copy of a DA Form 2028, Recommended Changes to Publications and Blank Forms. Your IETM may include a partially completed DA 2028. Print out the form and complete filling in the pertinent information. For IETMs without a printable DA Form 2028, blank forms should be available through your publications system. Complete the DA Form 2028 and mail it directly to: (*Insert name and address of proponent*). If you are unable to obtain a DA Form 2028, you may provide the recommendations by letter to the above address. You may also send in your recommended changes via electronic mail or by fax. Our fax number is (*insert DSN and commercial number of proponent)*. Our e-mail address is (insert address of proponent). A reply will be furnished to you."

(2) Marine only publications. The following statements shall be included (italicized text within parentheses shall be replaced with the appropriate information):

"**REPORTING ERRORS AND RECOMMENDING IMPROVEMENTS**

You can help improve this IETM. If you find any mistakes or if you know of a way to improve the procedures, please let us know. If your IETM supports online forms, fill in the electronic publication change request and when connected to the internet, transmit the form. If your IETM does not support online forms, obtain a copy of a NAVMC Form 10772, Recommended Changes to Publications and Blank Forms. Your IETM may include a partially completed NAVMC Form 10772. Print out the form and

complete filling in the pertinent information. For IETMs without a printable NAVMC Form 10772, blank forms should be available through your publications system. Complete the NAVMC Form 10772 and mail it directly to: (*insert name and address of proponent*). If you are unable to obtain a NAVMC Form 10772, you may provide the recommendations by letter to the above address. You may also send in your recommended changes via electronic mail or by fax. Our fax number is (*insert DSN and commercial number of proponent)*. Our e-mail address is (*insert address of proponent*). A reply will be furnished to you."

(3) Multi-service publications. The following statements shall be included only for multi-service technical publication and use only applicable services (e.g., if the Navy does not use the publication, do not include the statement for that Service) (italicized text within parentheses shall be replaced with the appropriate information, include only those services using the TM.):

"**REPORTING ERRORS AND RECOMMENDING IMPROVEMENTS**

You can help improve this IETM. If you find any mistakes or if you know of a way to improve the procedures, please let us know. Reports, as applicable by the requiring Service, should be submitted as follows:

(a) (A) Army - If your IETM supports online forms, fill in the electronic publication change request and when connected to the internet, transmit the form. If your IETM does not support online forms, obtain a copy of a DA Form 2028, Recommended Changes to Publications and Blank Forms. Your IETM may include a partially completed DA 2028. Print out the form and complete filling in the pertinent information. For IETMs without a printable DA Form 2028, blank forms should be available through your publications system. Complete the DA Form 2028 and mail it directly to: (*insert name and address of proponent*). If you are unable to obtain a DA Form 2028, you may provide the recommendations by letter to the above address.

(b) (MC) Marine Corps - If your IETM supports online forms, fill in the electronic publication change request and when connected to the internet, transmit the form. If your IETM does not support online forms, obtain a copy of a NAVMC Form 10772, Recommended Changes to Publications and Blank Forms. Your IETM may include a partially completed NAVMC Form 10772. Print out the form and complete filling in the pertinent information. For IETMs without a printable NAVMC Form 10772, blank forms should be available through your publications system. Complete the NAVMC Form 10772 and mail it directly to: (*insert name and address of proponent*). If you are unable to obtain a NAVMC Form 10772, you may provide the recommendations by letter to the above address.

(c) (N) Navy - If your IETM supports online forms, fill in the electronic publication change request and when connected to the internet, transmit the form. If your IETM does not support online forms, you may provide the recommendations by letter to the above address.

(d) (F) Air Force - If your IETM supports online forms, fill in the electronic publication change request and when connected to the internet, transmit the form. If your IETM does not support online forms, obtain a copy of an AFTO

Form 22, Technical Order Publications Improvement Report. Your IETM may include a partially completed AFTO Form 22. Print out the form and complete filling in the pertinent information. For IETMs without a printable AFTO Form 22, blank forms should be available through your publications system. Complete the AFTO Form 22 and mail it directly to: (*insert name and address of proponent*). If you are unable to obtain an AFTO Form 22, you may provide the recommendations by letter to the above address.

You may also send in your recommended changes using e-mail or by fax. Our fax number is (*insert DSN and commercial number of proponent)*. Our e-mail address is (*insert address of proponent*). A reply will be furnished to you."

b. Classified Interactive Electronic Technical Manuals (IETMs). Classified IETMs use the same wording as unclassified IETMs, except the following statement shall be included in the beginning of the reporting errors: "When dealing with classified information, make sure that your correspondence is properly marked and is handled in accordance with current security regulations." This is shown in the following example:

"**REPORTING ERRORS AND RECOMMENDING IMPROVEMENTS**

You can help improve this IETM. If you find any mistakes or if you know of a way to improve the procedures, please let us know. When dealing with classified information, make sure that your correspondence is properly marked and is handled in accordance with current security regulations…"

5.2.1.6.6 Availability statement **(DMWR/NMWR only) `<avail>`**. For DMWRs/NMWRs only, the following availability statement shall be included (italicized text within parentheses shall be replaced with the appropriate information):

"This publication is not available through the St. Louis Media Distribution Division. This publication is available through (*insert the name and address of the proponent activity*)."

5.2.1.6.7 Supersedure notice for revisions only **`<super>`**. When an IETM is updated, a supersedure notice shall be included and an asterisk (*) shall prefix the supersedure notice and the TM number.

5.2.1.6.8 Distribution statement **`<dist>`**. All IETMs, DMWRs, and NMWRs shall have a distribution statement for each manual or revision. The appropriate distribution statement shall be provided by the acquiring activity as selected from DoD Directive (DODD) 5230.24.

5.2.1.6.9 Export control notice warning **`<export>`**. For those publications with export controlled data, the following export control notice contained in DODD 5230.24 shall be included:

"**WARNING** - This document contains technical data whose export is restricted by the Arms Export Control Act (Title 22, U.S.C., Sec 2751, et. seq.) or the Export Administration Act of 1979, as amended, Title 50A, U.S.C., App. Violations of these export laws are subject to severe criminal penalties. Disseminate in accordance with provisions of DoD Directive 5230.25."

5.2.1.6.10 Destruction notice **`<destr>`**. All IETMs marked with distribution statements "B," "C," "D," "E," "F," or "X" shall be marked with the destruction notice. For classified and unclassified documents, the element **`<destr>`** within **`<notices>`** shall contain the following

text "Destroy by any means possible to prevent disclosure of contents or reconstruction of the document." For classified documents, the program must also be compliant with DOD 5220.22-M and DOD 5200.1-R.

5.2.1.6.11 General purpose notice **<general_purpose_notices>**. When specified by the acquiring activity, additional notice(s) may be included that are not addressed by the notices in 5.2.1.6.7 through 5.2.1.6.10. The notice shall have a title followed by the notice text.

5.2.1.6.12 Service nomenclature **<servnomen>**. All IETMs shall include the service or acquiring activity's nomenclature.

5.2.1.6.13 Technical Manual (TM) publication date **<date>**. The TM publication date shall be the official publication date assigned by the acquiring activity. If the publication is produced in more than one media, the date must be the same on all media. The day, month, and year shall be given in that sequence (for example, 10 JULY 1988).

5.2.1.6.14 For Army Communications Security (COMSEC) manuals use. Unless otherwise specified by the acquiring activity, unclassified IETMs that contain COMSEC material shall be marked FOR OFFICIAL USE ONLY or FOUO. The notice shall be displayed in accordance with Appendix A. Classified IETMs that contain COMSEC material shall be appropriately marked at the level of classification.

5.2.1.7 Abbreviated identification information **<frntcover_abbreviated>**. When required by the content matrix and requirements contained herein, Lubrication Orders (LOs) or Preventive Maintenance Checklists (PMCs) shall contain abbreviated identification information. The abbreviated identification information shall contain:

a. A title **<tmtitle>**.
b. A reporting of errors block **<reporting>.** (Refer to 5.2.1.6.5.)
c. Those notices **<notices>** as required in 5.2.1.6.8 through 5.2.1.6.11.
d. The service nomenclature **<servnomen>.** (Refer to 5.2.1.6.12.)
e. TM publication date **<date>.** (Refer to 5.2.1.6.13.)
f. User feedback link. (Refer to A.5.2.3.5.1.)

5.2.1.8 Table of contents **<contents>**. A table of contents shall be prepared in accordance with A.4.2.4 and A.5.2.3.7.5. A sample table of contents is provided in MIL-HDBK-1222.

5.2.1.9 "How To Use This IETM" information (**Except parts information and DMWRs/NMWRs**) **<howtouse>**.

a. Information to familiarize the user with special or unusual features of the IETM shall be prepared. Coverage shall lead the user through the IETM and explain important features of the organization and content. For example, the format is explained; operating, troubleshooting, Preventive Maintenance Checks and Services (PMCS) are explained; and repair, maintenance instructions, and other pertinent information are explained.
b. Any peculiarities in the basic structure of the IETM shall be described. "How To Use This IETM" information shall not repeat instructions given within the work packages.
c. For all IETMs (excluding operator's), the "How To Use This IETM" information shall include an explanation on how and where parts information is available in the work packages and how the parts information is accessed.

d. For troubleshooting, an explanation on how troubleshooting data is presented in the IETM shall be included. If applicable, an explanation on how failure symptom indexes and malfunction codes correspond to maintenance operational checks and troubleshooting procedures for individual systems and components shall be included.

e. An explanation on how to identify hotspots and how they are used and activated shall be included.

f. When a standard form (e.g., DA 2408-13, DA 2404, etc.) must be used in the process of performing a task, instructions shall be provided on how these forms are accessed, used, and filled out.

g. Provide an explanation on how to fill out a DA Form 2028 and emphasize that reference shall be made to a work package by the exact title that is provided in the table of contents.

h. An explanation and use of all icons and buttons shall be included.

i. A link may be made to an IETM tutorial (when required) to explain use of the IETM.

5.2.1.9.1 International standardization agreements. When specified by the acquiring activity, the "How To Use This Manual" information shall contain the following (italicized text within parentheses shall be replaced with the appropriate information):

"NOTE

Certain provisions of this IETM (*identify by work package, paragraph, or similar manner, if appropriate*) are the subject of international standardization agreement (*insert the ABCA or ASCC standard number; the NATO, STANAG, NETR, or NEPR number; or appropriate documentary reference*). When revision or cancellation of this IETM is proposed which will modify the international agreement concerned, the technical manual management activity will take appropriate action through international standardization channels, including departmental standardization offices, to change the agreement or make other appropriate accommodations."

5.2.2 Rear matter.

5.2.2.1 Reporting errors and recommending improvements Department of the Army (DA_ Form 2028 **<da2028>**. A blank DA Form 2028, or an electronic equivalent, should be provided in the IETM so the users can notify the proponent if any mistakes are found or any recommended improvements can be made to the IETM. Guidelines shall be included in the "How To Use" for completing the form. When this form or an electronic equivalent of this form is not provided on the IETM, the paper form shall be used.

5.2.2.2 Authentication information. An autheniction block, provided by the acquiring activity, shall be included. The authentication block is not displayed unless accessed through an entry in the table of contents. (Refer to A.5.2.3.7.5 and A.5.2.3.7.5.1.)

5.2.2.3 Glossary and index. IETMs shall not contain a glossary or index. Terms shall be defined in the general information work package. (Refer to B.5.2.)

5.2.2.4 Metric conversion table. IETMs shall not contain a metric conversion table. IETMs shall use free metric conversion software for metric conversion.

6. NOTES.

(This section contains information of a general or explanatory nature that may be helpful, but is not mandatory.)

6.1 Intended use. MIL-STD-40051-1 prescribes requirements applicable to various types of IETMs, and the revisions for these manuals.

6.2 Acquisition requirements. The acquisition document(s) should cite the following:

a. Title, number, and date of this standard.
b. Title, number, and date of MIL-HDBK-1222.
c. Title, number, and date of MIL-STD-2361and MIL-HDBK-2361.
d. Filled out functionality selection matrix.
e. Filled out content selection matrix.

6.3 Tailoring guidance. The acquiring activity should tailor any required options offered herein in accordance with Appendix A.

6.4 Supersession data. The following documents are superseded by MIL-STD-40051-1A:

a. MIL-STD-40051-1 w/Change 3, dated 21 March 2008.
b. MIL-PRF-63004D(TM), dated 23 June 2006.
c. MIL-PRF-63012B(TM), w/amendment 1 dated 15 November 2001.
d. MIL-PRF-49501(TM), dated 11 October 1996.

6.5 Subject term (key word) listing. The following terms are to be used to identify the MIL-STD-40051-1 document during retrieval searches,

a. Additional Authorization List (AAL)
b. Basic Issue Items (BII)
c. Basis of Issue (BOI)
d. Continuous Acquisition and Lifecycle Support (CALS) raster
e. Computer Graphics Metafile (CGM)
f. Components of End Item (COEI)
g. Depot Maintenance Work Requirement (DMWR)
h. Expendable and durable items list
i. Extensible Markup Language (XML)
j. Illustrations
k. Initial Graphics Exchange Specification (IGES)
l. Introductory information
m. Maintenance Allocation Chart (MAC)
n. Maintenance instructions
o. National Maintenance Work Requirement (NMWR)
p. Operator instructions
q. Parts information
r. Quality Assurance (QA)

s. Security classification
t. Supporting information
u. Theory of operation
v. Troubleshooting procedures
w. Work Package (WP)
x. Work package identification number

6.6 Change notations. Marginal notations are not used in this revision to identify changes with respect to the previous issue due to the extent of the changes.

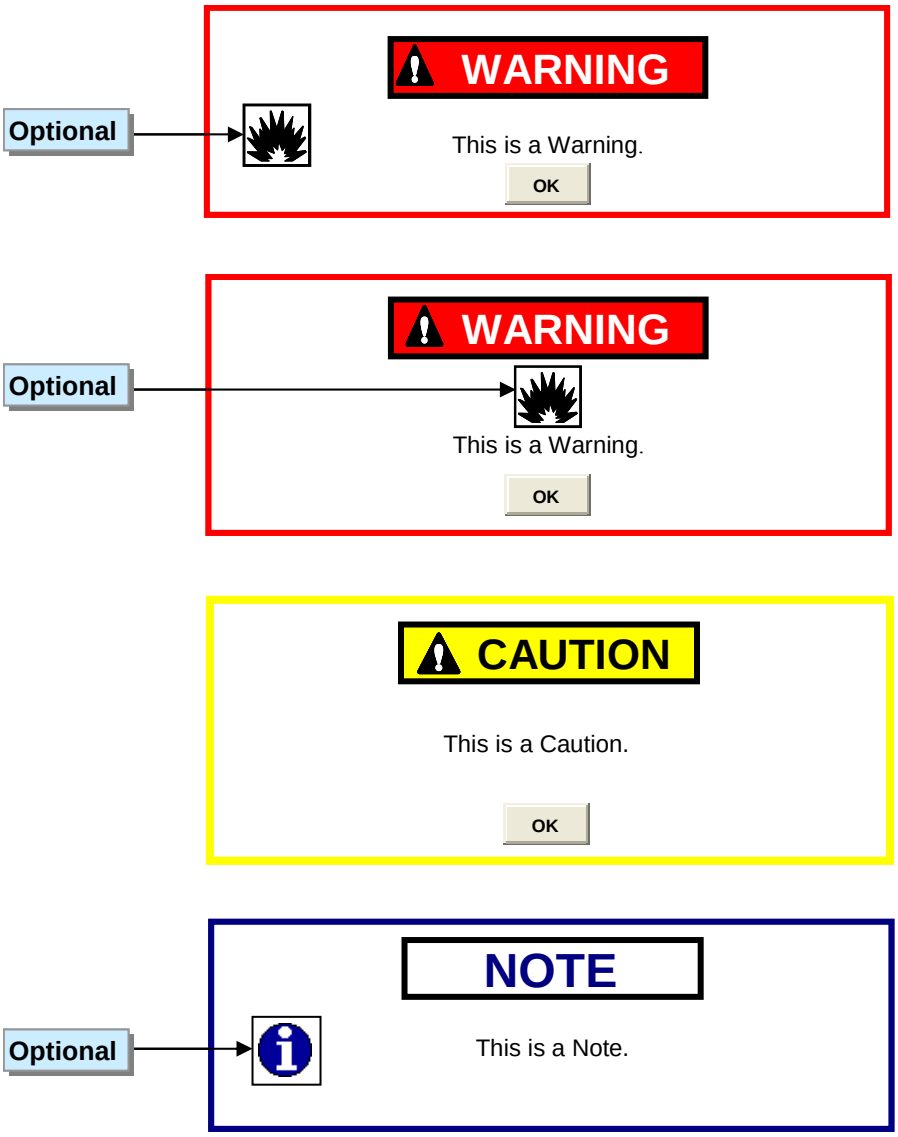

FIGURE 1. <u>Examples of warnings, cautions, and notes using alerts.</u>

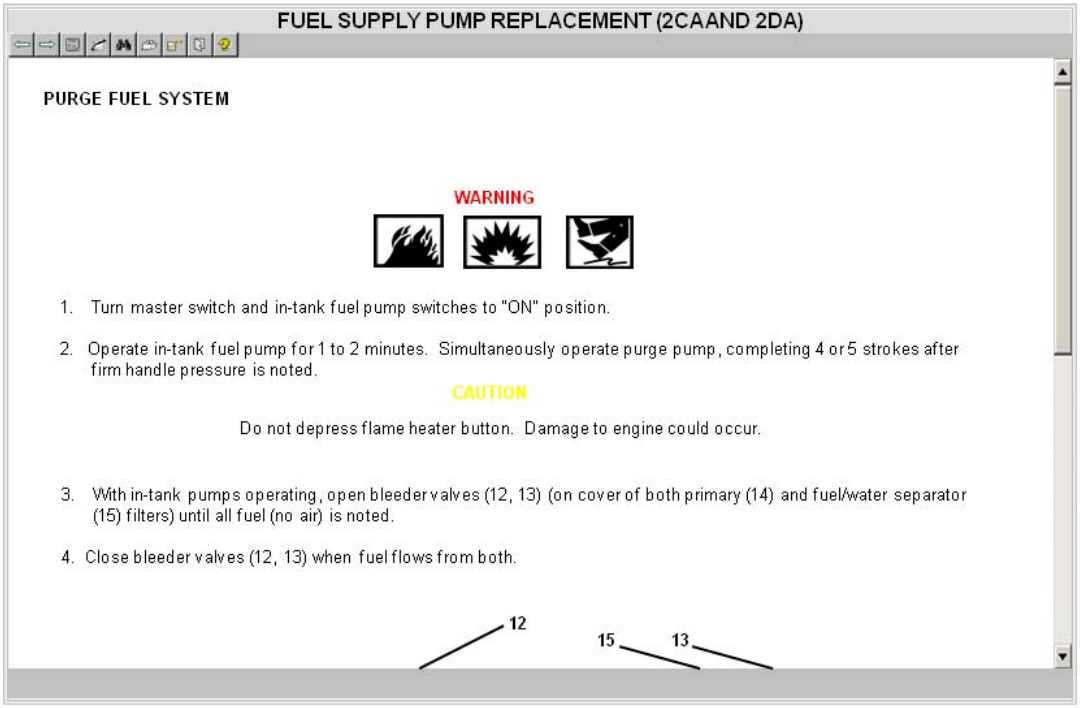

Pane Display After Acknowledgment

FIGURE 2. <u>Examples of warnings, cautions, and notes not using alerts.</u>

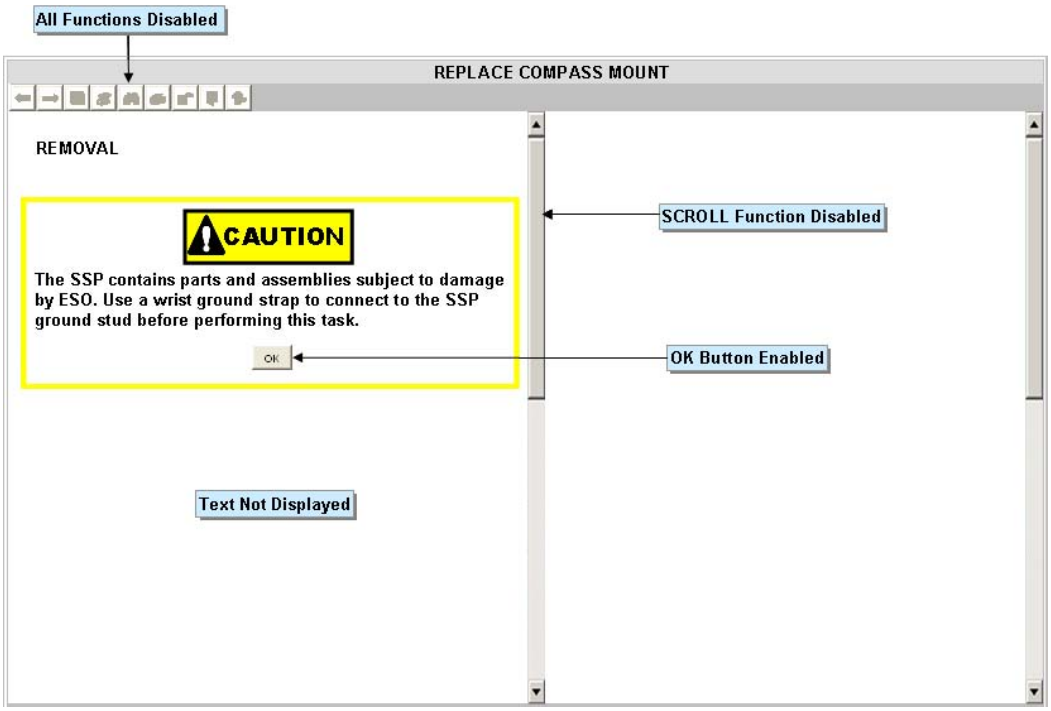

Pane Display Before Acknowledgment

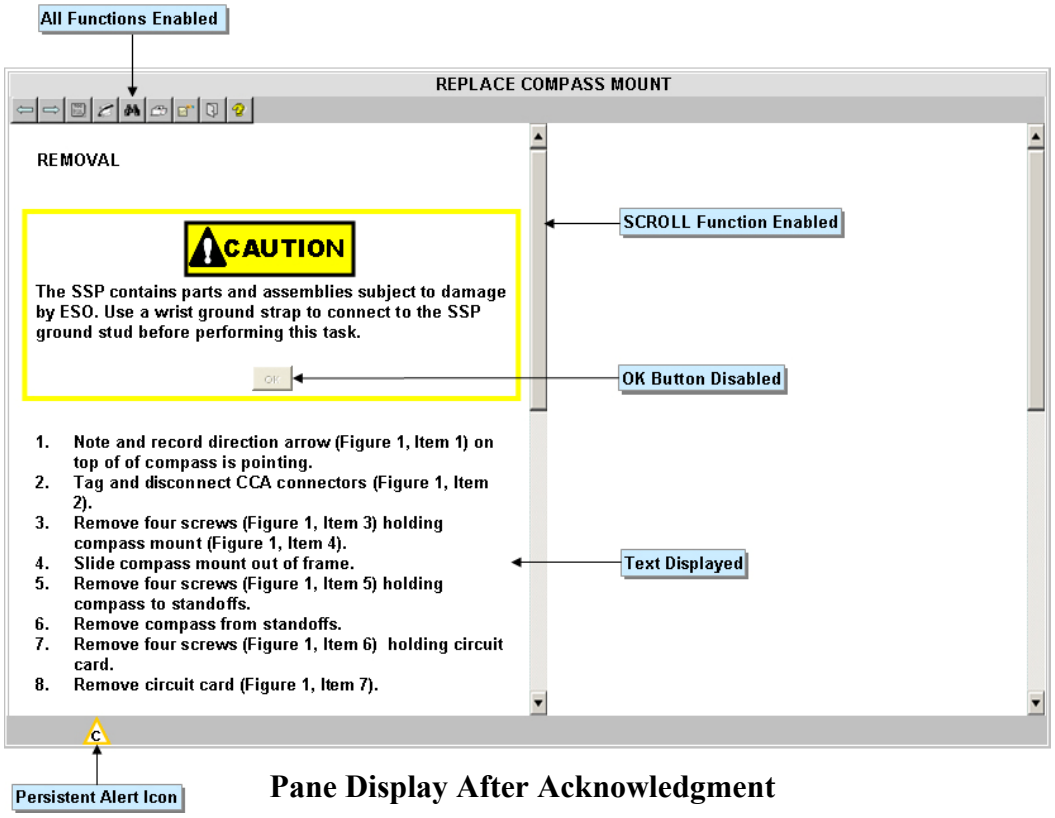

Pane Display After Acknowledgment

FIGURE 3. <u>Example of an inline alert on a pane with scrolling.</u>

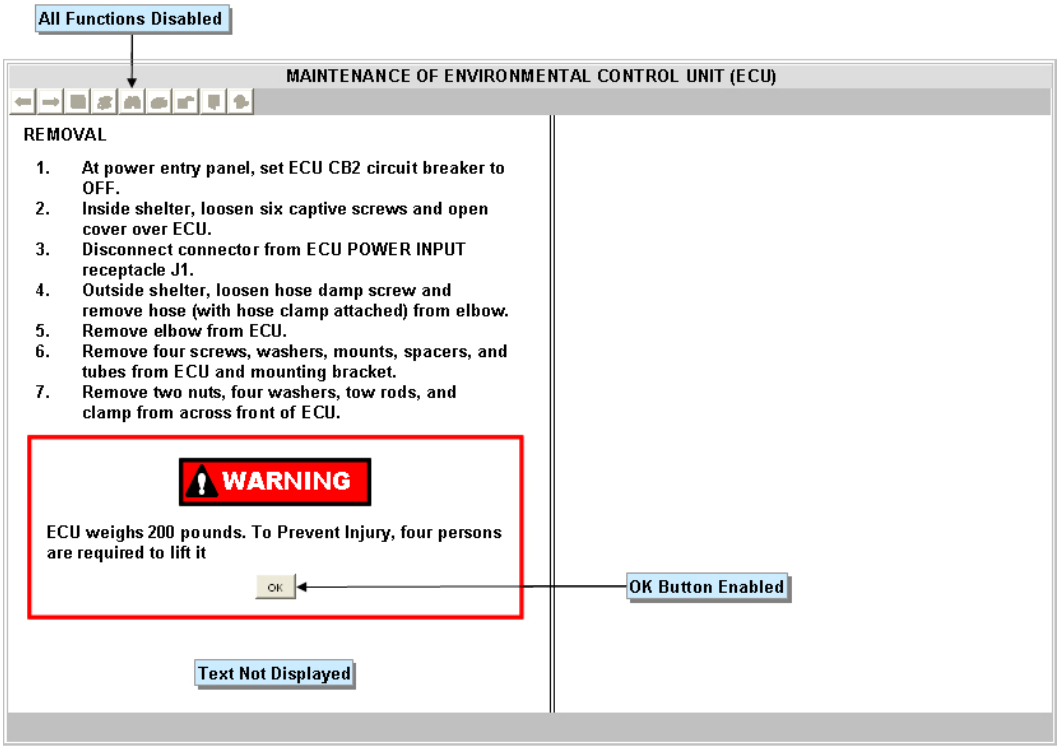

Pane Display Before Acknowledgment

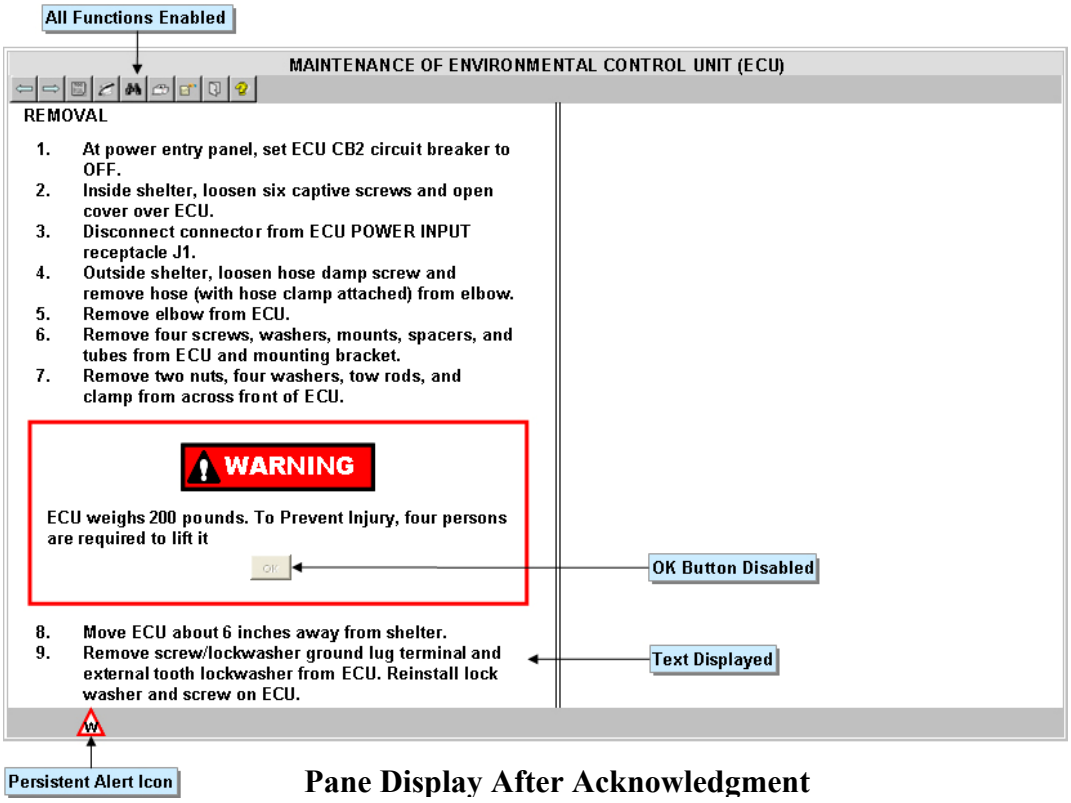

Pane Display After Acknowledgment

FIGURE 4. <u>Example of an inline alert on a pane with no scrolling.</u>

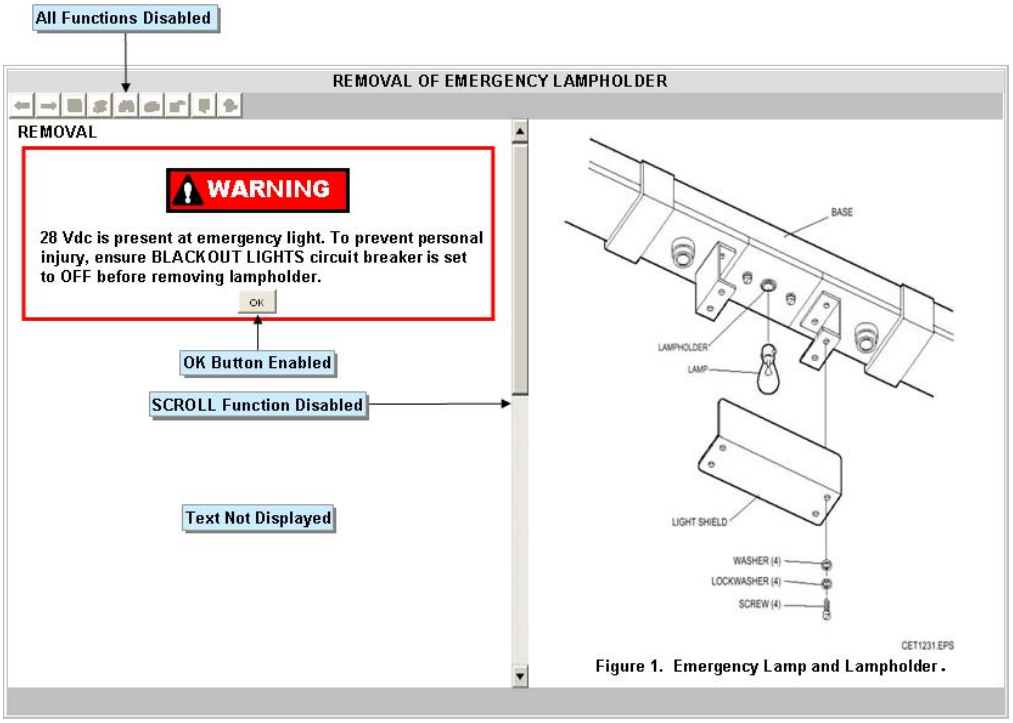

Pane Display Before Acknowledgment of First Alert

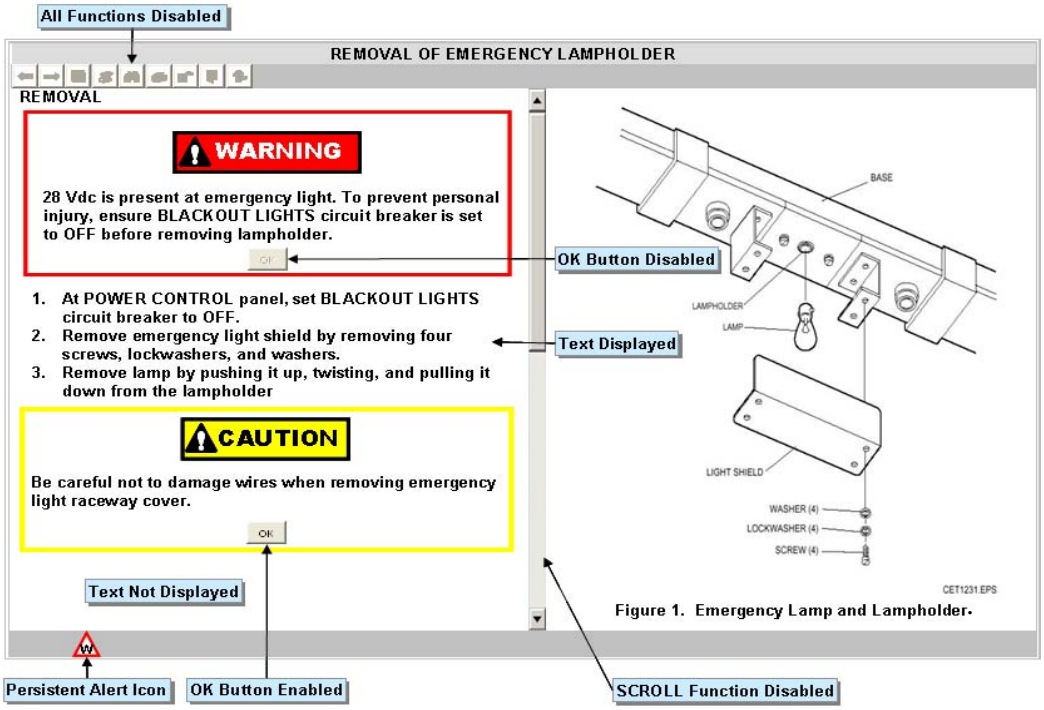

Pane Display Before Acknowledgment of Second Alert

FIGURE 5. <u>Example of multiple alerts acknowledgment using inline alert.</u>

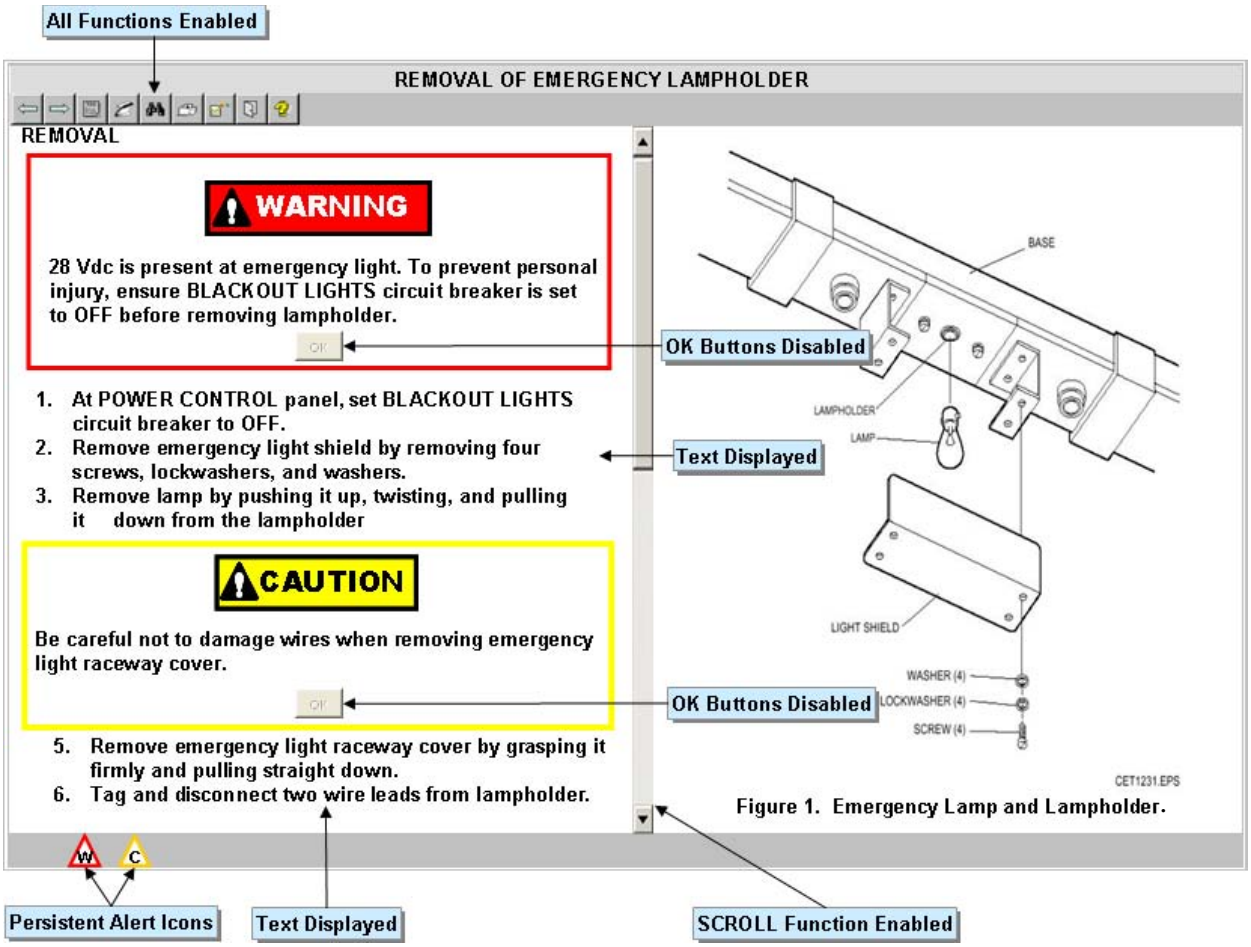

Pane Display After Acknowledgment of Both Alerts

FIGURE 5. <u>Example of multiple alerts acknowledgement using inline alert</u> – Continued.

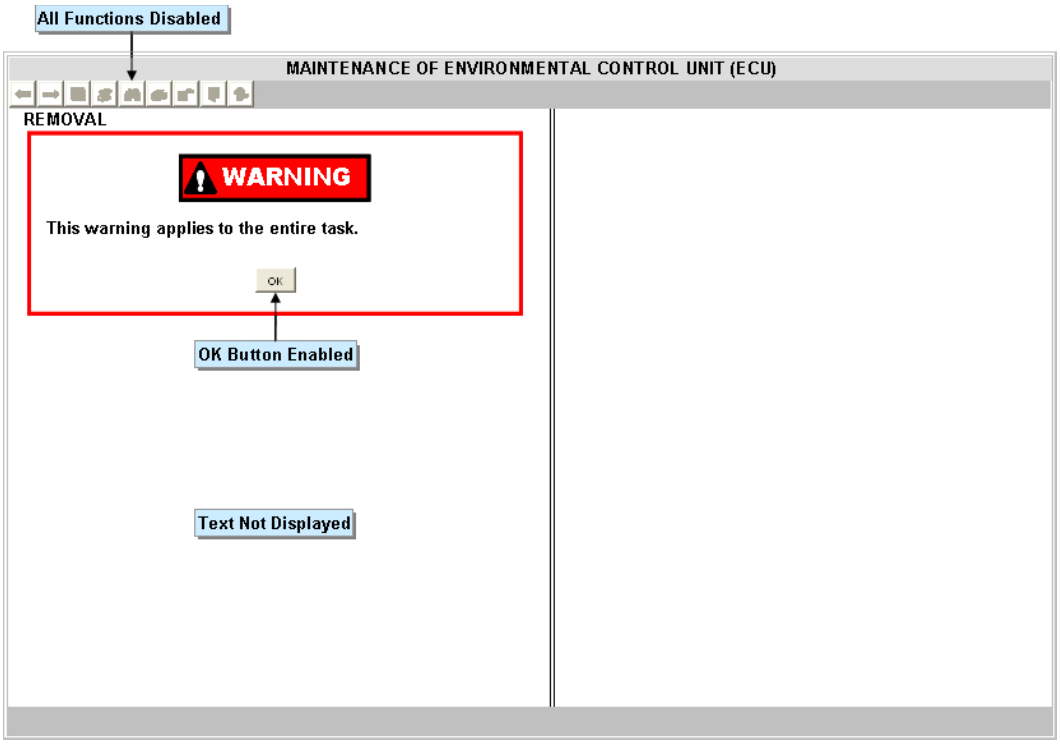

Pane Display Before Acknowledgment

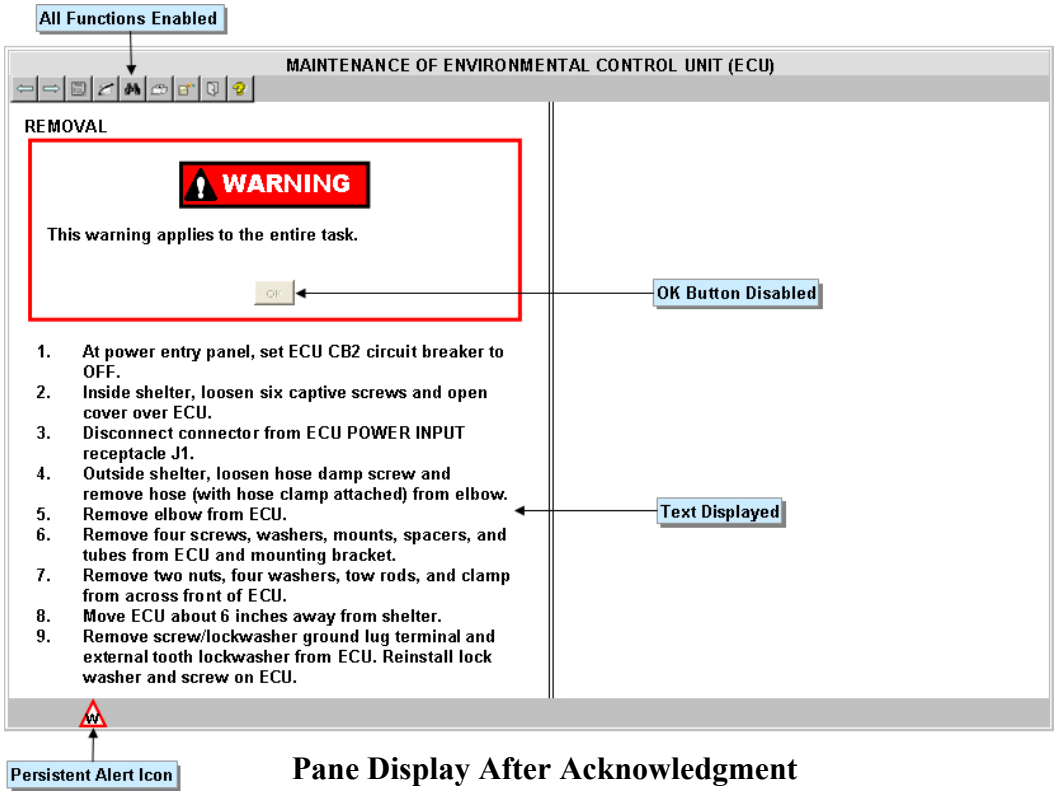

Pane Display After Acknowledgment

FIGURE 6. <u>Example of alert acknowledgment when alert applies to entire procedure or task.</u>

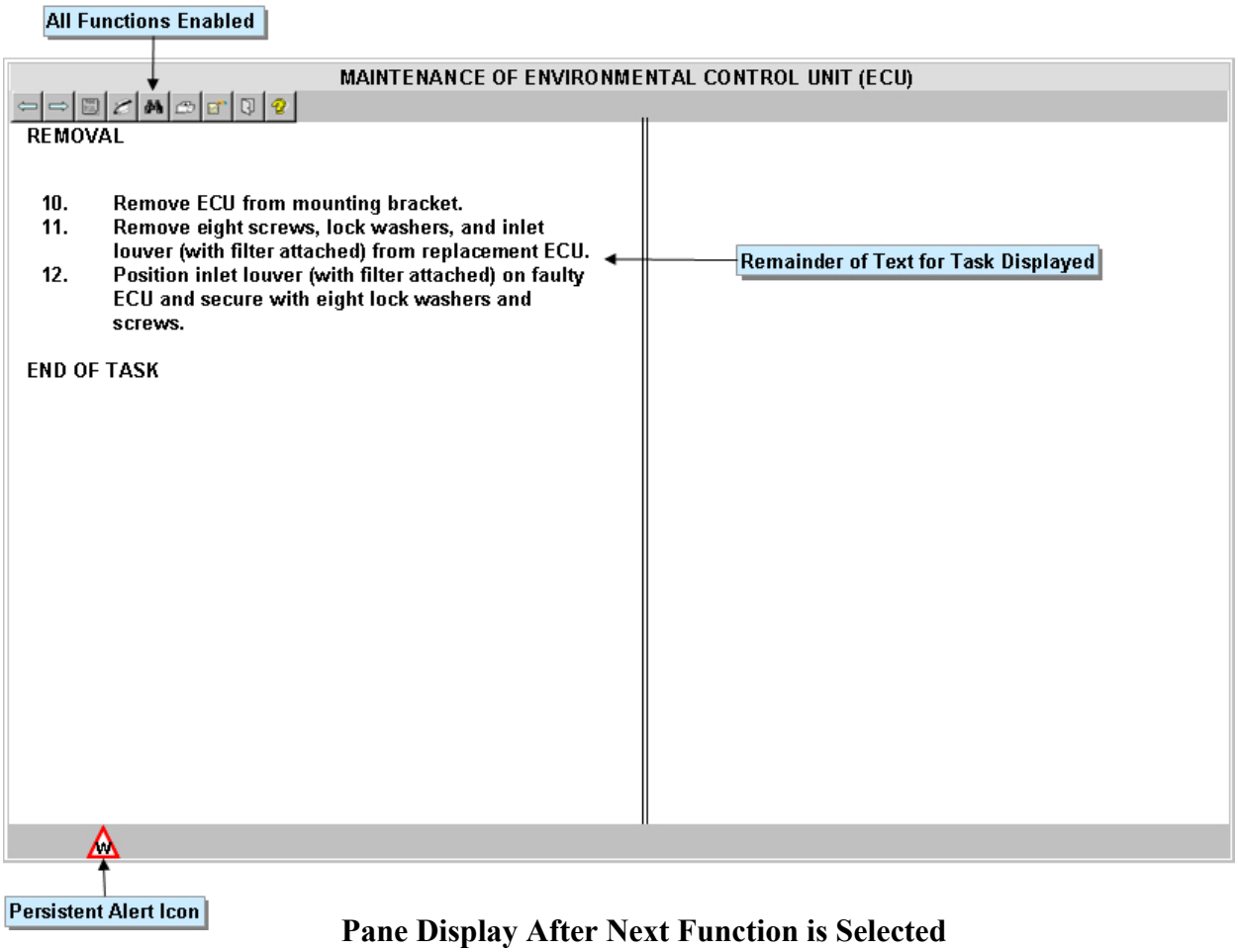

Pane Display After Next Function is Selected

FIGURE 6. <u>Example of alert acknowledgement when alert applies to entire procedure or task</u> – Continued.

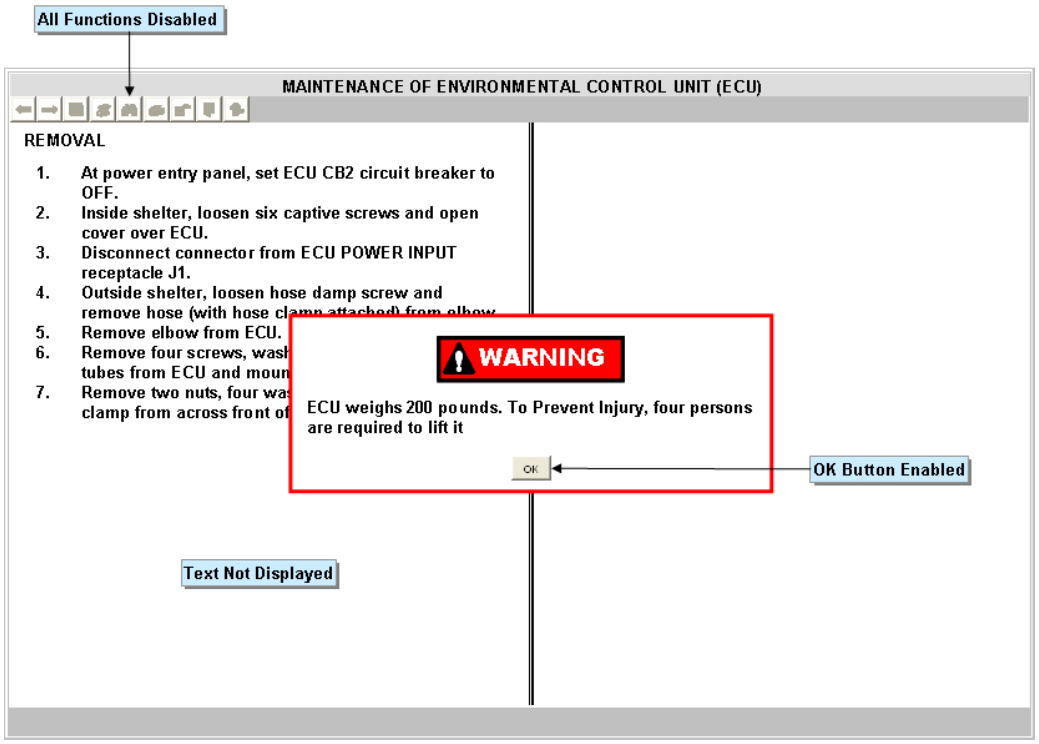

Pane Display Before Acknowledgment

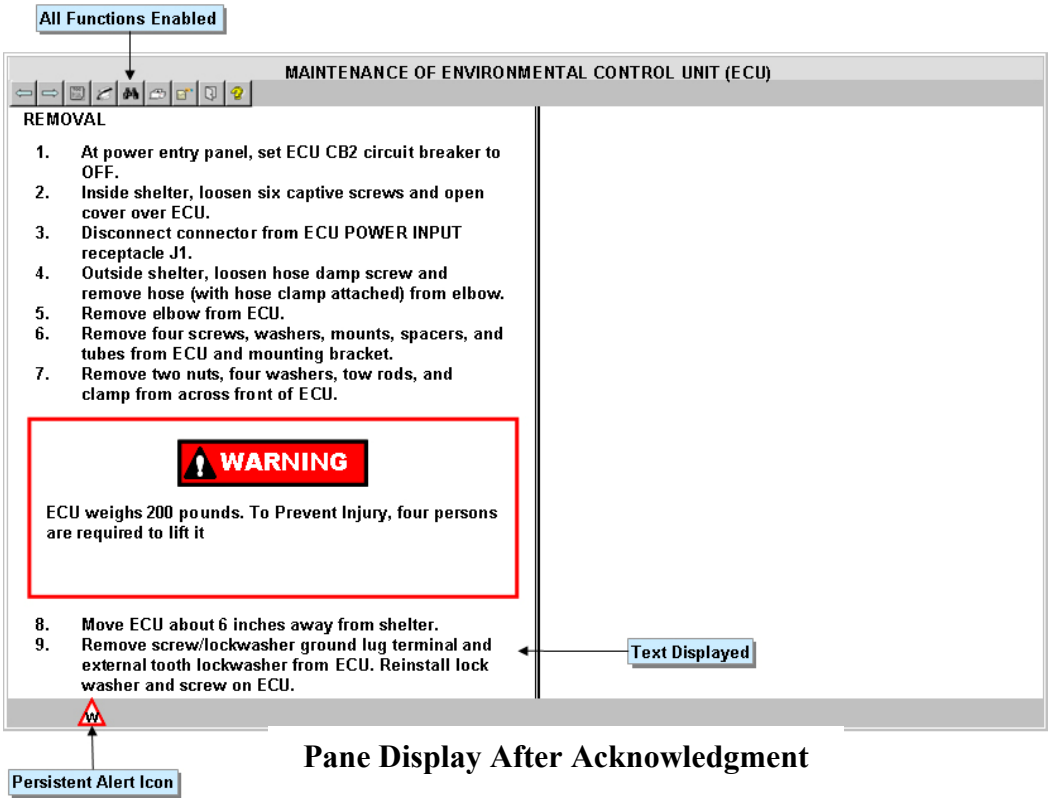

Pane Display After Acknowledgment

FIGURE 7. <u>Example of pop-up alert superimposed over applicable information.</u>

MEDIA CONVERTER ASSEMBLY REMOVAL AND REPLACEMENT

REMOVAL

1. On SHF radio (if in use), ensure that BATTERY switch is set to on.

NOTE

Turning off the power converter also removes ac power from the router and SHF radio.

2. On power converter, set POWER switch to OFF.
3. Disconnect cables from media converter.
   W033-P2
   W034-P2
   W043-P2
   W044-P2
   W050-P2 (power cord)
4. Remove two hex screws, lockwashers, and flat washers securing media converter mounting bracket to kneewall mounting rail nearest curbside wall
5. Remove media converter chassis from mounting bracket.
6. Loosen two captive screws on each moduae and remove them from media copnverter chassis for reinstallation into replacement chassis.

END OF TASK

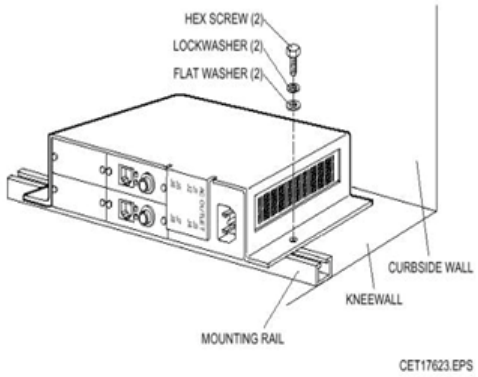

Figure 1. Media Converter Chassis Removal and Replacement

FIGURE 8. <u>Example of an inline note.</u>

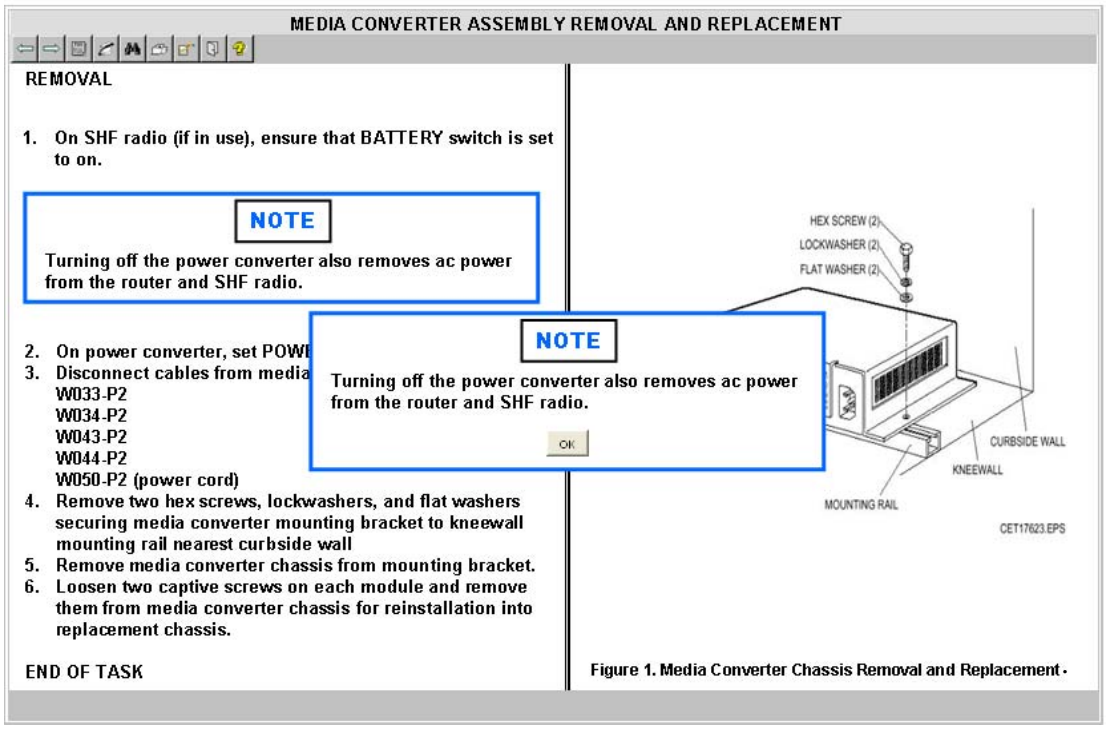

Pane Display Before Acknowledgment

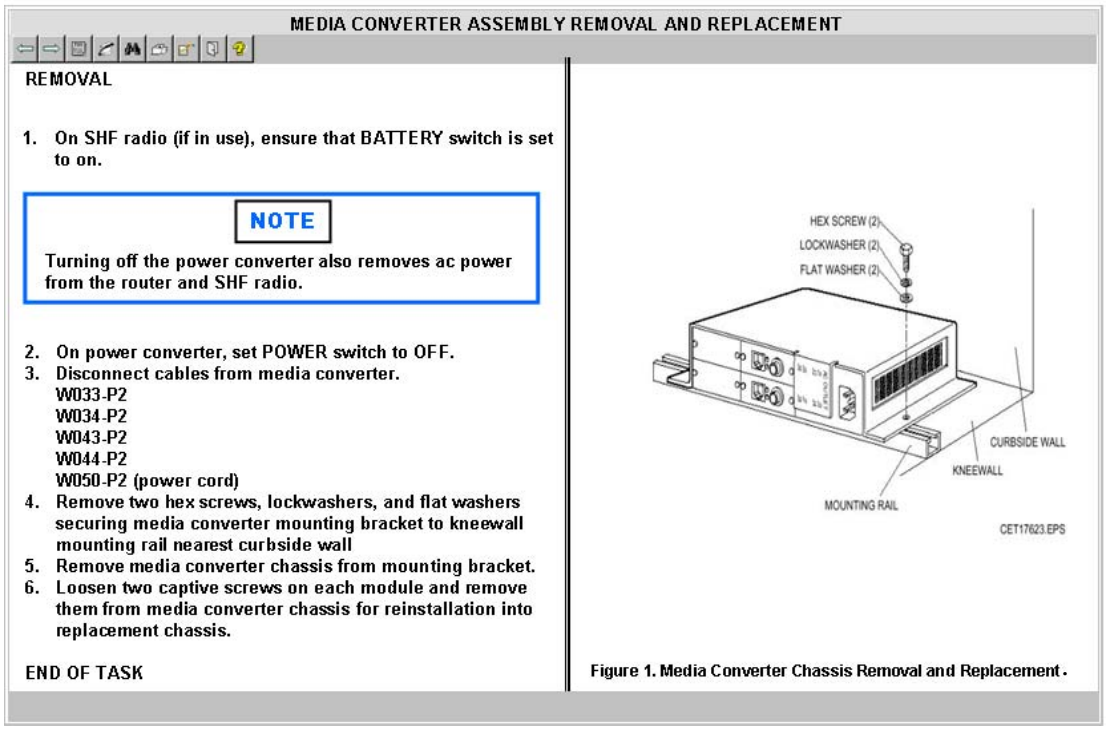

Pane Display After Acknowledgment

FIGURE 9. <u>Example of a note in a message dialog box.</u>

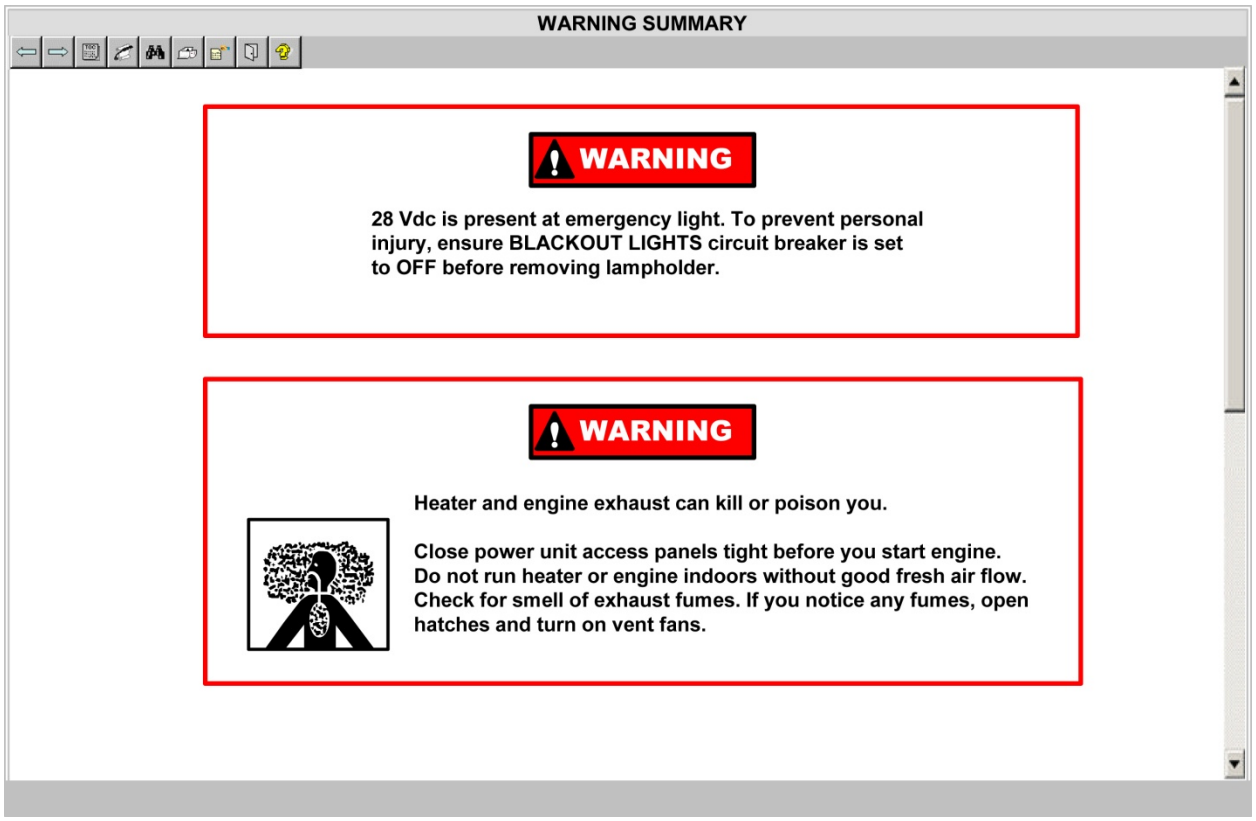

FIGURE 10. Example of a warning summary.

SECURITY CLASSIFICATION
TM NUMBER(S)

TYPE OF PUBLICATION
MAINTENANCE LEVELS
FOR

NOMENCLATURE OF EQUIPMENT
TYPE, MODEL, PART NUMBER
NATIONAL STOCK NUMBER (EIC)
OR
SUBJECT

SUBTITLE

WEAPON SYSTEM NAME

ILLUSTRATION

REPORTING ERRORS AND RECOMMENDING IMPROVEMENTS

AVAILABILITY STATEMENT
SUPERCEDURE NOTICE
DISTRIBUTION STATEMENT
WARNING
DESTRUCTION NOTICE
GENERAL NOTICE

SERVICE NOMENCLATURE
TM DATE

FIGURE 11. Example of an IETM identification information frame.

TM 3-6665-339-10

TECHNICAL MANUAL
OPERATOR'S MANUAL
FOR
NUCLEAR-BIOLOGICAL-CHEMICAL
RECONNAISSANCE SYSTEM (NBCRS)
FOX M93A1
(NSN 6665-01-372-1303) (EIC Y60))

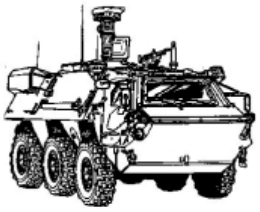

REPORTING ERRORS AND RECOMMENDING IMPROVEMENTS

DISTRIBUTION STATEMENT C
WARNING
DESTRUCTION NOTICE

HEADQUARTERS, DEPARTMENT OF THE ARMY
1 JUNE 1996

FIGURE 11. Example of an IETM identification information frame – Continued.

DMWR X-XXXX-XXX

DEPOT MAINTENANCE WORK REQUIREMENT
CONTAINING
NATIONAL OVERHAUL STANDARDS
FOR
INTERROGATOR SETS
AN/TPX-46(V)1 (NSN 5895-00-423-1693) (EIC IZA)
AN/TPX-46(V)2 (NSN 5895-00-423-1694) (EIC IZB)

REPORTING ERRORS AND RECOMMENDING IMPROVEMENTS

AVAILABILITY STATEMENT
DISCLOSURE NOTICE
DISTRIBUTION STATEMENT D
DESTRUCTION NOTICE

US ARMY COMMUNICATIONS-ELECTRONICS COMMAND, FORT MONMOUTH, NJ
1 JUNE 1999

FIGURE 12. Example of identification information for Depot Maintenance Work Requirement (DMWR) with National Overhaul Standards.

NMWR X-XXXX-XXX

NATIONAL MAINTENANCE WORK REQUIREMENT
CONTAINING
NATIONAL OVERHAUL STANDARDS
FOR
INTERROGATOR SETS
AN/TPX-46(V)1 (NSN 5895-00-423-1693) (EIC IZA)
AN/TPX-46(V)2 (NSN 5895-00-423-1694) (EIC IZB)

REPORTING ERRORS AND RECOMMENDING IMPROVEMENTS

AVAILABILITY STATEMENT
DISCLOSURE NOTICE
DISTRIBUTION STATEMENT D
DESTRUCTION NOTICE

US ARMY COMMUNICATIONS-ELECTRONICS COMMAND, FORT MONMOUTH, NJ
1 JUNE 1999

FIGURE 13. Example of identification information for National Maintenance Work Requirement (NMWR) with National Overhaul Standards.

TM X-XXXX-XXX-14&P

TECHNICAL MANUAL
OPERATOR, UNIT, DIRECT SUPPORT, AND GENERAL SUPPORT MAINTENANCE MANUAL
CONTAINING
NATIONAL OVERHAULSTANDARDS
AND INCLUDING REPAIR PARTS AND SPECIUAL TOOLS LIST
FOR
INTERROGATOR SETS
AN/TPX-46(V)1 (NSN 5895-00-423-1693) (EIC IZA)
AN/TPX-46(V)2 (NSN 5895-00-423-1694) (EIC IZB)

REPORTING ERRORS AND RECOMMENDING IMPROVEMENTS

DISCLOSURE NOTICE
DISTRIBUTION STATEMENT D
DESTRUCTION NOTICE

HEADQUARTERS, DEPARTMENT OF THE ARMY
1 JUNE 1999

FIGURE 14. Example of identification information for Technical Manual (TM) with National Overhaul Standards.

APPENDIX A
IETM FUNCTIONALITY AND DATA DISPLAY REQUIREMENTS AND CONTENT SELECTION MATRIXES

A.1 **SCOPE.**

A.1.1 Scope. This appendix includes the requirements for IETM functionality and data display (look and feel) and provides the IETM technical content selection for all major weapon systems and all types of equipment, including test and support equipment. This appendix is a mandatory part of this standard. The information contained herein is intended for compliance. These requirements are applicable for all maintenance levels/classes through overhaul (depot), including DMWRs/NMWRs.

A.2 **APPLICABLE DOCUMENTS.**

This section is not applicable to this appendix.

A.3 **DEFINITIONS.**

A.3.1 Acronyms used in Appendix A. The acronyms used in this appendix are defined as follows:

CBT Computer-Based Training
COE Common Operating Environment
COTS Commercial off-the-shelf
DVD Digital Versatile Disc
MSD Maintenance Support Device
ODA Open Document Architecture
PC Personal Computer
PDA Personal Digital Assistant
SATCOM Satellite Communications
TOC Table of Contents
VIN Vehicle Identification Number

A.3.2 Annotations. Annotations are the ability of the system administrator or user to place special notes within a manual. These notes can be public information for all users such as special information that requires rapid deployment to the manual holders like “Advance Change Notices.” They also can be private notes needed only by the user to assist in their training or in the performance of their duties.

A.3.3 Audit trails. Audit trails are the ability of the IETM to track where the user has navigated within the IETM.

A.3.4 Autonomic logistics. A system that acts without human intervention and consists of two primary components: a Prognostics and Health Management System and a Joint Distributed Information System. The Prognostics and Health Management System collects information while the weapon system is in operation using sensors and diagnostics to detect faults and impending faults. Reasoning algorithms are used to determine the causes of the faults. The system detects

degrading performance and thus can forecast the requirement to replace a component before its predicted failure. The Joint Distributed Information System communicates this information immediately through the logistics infrastructure, automatically acquiring the spare parts, tools, and manpower.

A.3.5 Bookmark. Bookmarks are the capability to mark areas of interest to allow quick access. In today's environment, the terminology bookmark has been expanded to include "favorites" and "shortcuts."

A.3.6 Cascading menus. A cascading menu is the child of the first menu item selected. In both the drop-down menu format and the pop-up menu format, the child menu appears next to the first menu item selected. Several levels of cascading menus may exist.

A.3.7 Context filtering. Context filtering is when the presentation system automatically displays the relevant information applicable to the existing situation. For example, only a specific piping system would be displayed in a compartment diagram or the level of instructions would be filtered based on the user's level of ability (novice versus expert).

A.3.8 Delivery. The method of moving technical data from a contracted vendor to the Government.

A.3.9 Dialogs. Dialogs are the pop-ups and inline collection mechanisms for gathering information for the IETM from the user.

A.3.10 Diagnostics. Maintenance procedures that result in the identification of a repair, e.g., troubleshooting. They may or may not be assisted with hardware/software tools.

A.3.11 Dialog box. A method for an IETM to request and receive input from the user. A separate window displays a request and includes an area to input a response.

A.3.12 Distribution. The method of moving technical data from an initial point to all the end users of the technical data.

A.3.13 Drilling down. The process of navigating from broader focused content to more specific and detailed content.

A.3.14 Element. A single discrete item in an IETM environment.

A.3.15 Embedded. Describes hardware and or software which forms an integral part and/or component of some larger system and which is expected to function without human intervention. An embedded system usually does not include peripherals (e.g., keyboard, monitor, storage, etc.). Embedded systems most often will provide real-time response.

A.3.16 E-tool. An electronic device used for displaying technical data.

A.3.17 Filtering. A process that narrows the displayed data to show only a specific and desired sub-set of data. As an example, the complete technical data for an aircraft can be filtered to only display to the user the data that applies to a requested tail-number.

A.3.18 Fly through. A virtual three-dimensional navigation of a solid object. The user has the ability to control the perspective, direction and location of the displayed view of an object. The user also has the ability to virtually move through the object by dynamically changing the perspective, direction and location of the display.

A.3.19 Frame Data. An interrelated block of textual and/or graphical data that is presented in the inner shell content pane(s).

A.3.20 Hyperlink. A link to another location. A hyperlink can be textual or graphical.

A.3.21 Hotspot. An area of a graphic or a section of text that activates a function when selected. Hotspots are used to invoke objects (e.g., multimedia, programs, applications, scripts etc.), where selecting a hotspot can display a graphic, run a video, or open a new pane of information.

A.3.22 Inline. Components such as frames, dialog boxes, figures, graphics, or icons which are arranged sequentially to form a unit from overall parts.

A.3.23 Inner shell. The inner shell is the portion of the IETM, within the viewer shell, provided as the client application display area. This is the only portion of the screen real-estate which is under the TM author's control.

A.3.24 Linking. The connection of two locations in a document to form a cross-reference.

A.3.25 Logic engine. A computer program that, based on user or other input, determines the correct sequence to display technical data in an IETM (also called an inference engine).

A.3.26 Maintenance session. The sum of all maintenance tasks completed during a single user's shift while keeping an IETM open and active.

A.3.27 Navigation. The act of traversing through technical data. Navigation may be accomplished via software inherent items (next and previous buttons) or through technical data inherent items (links).

A.3.28 Navigation panel. This part of the inner shell provides a main menu bar of the necessary common functions and/or options.

A.3.29 Near real time. Access to updated data at or near the time of content approval and posting. Network connectivity is required to achieve near real time access to data.

A.3.30 Online environment. The virtual environment contained within a computer and its connected (networked) devices.

A.3.31 Outer shell. The outer shell is the portion of the screen that surrounds the Inner Shell. This part of the screen cannot be modified or controlled by the TM author.

A.3.32 Pane. A pane is an independent, rectangular, bordered region within the main content area of the inner shell. For example, in a main content area with 2 panes, one pane could contain a figure and the second pane the narrative information for that figure. The later pane could be designed to scroll the narrative information independent of the figure.

A.3.33 Persistent annotations. Annotations are data which is captured and retained for later use.

A.3.34 Personal Digital Assistant (PDA). A hand-held electronic device capable of displaying IETMs.

A.3.35 Point and click. The functionality of selecting a process (like a link) by use of a mouse or other input device.

A.3.36 Pop-up menus. Pop-up menus are menus that the user specifically invokes through a right mouse click. The pop-up menu appears at the cursor location.

A.3.37 Prognostics. Procedures that focus on preventative maintenance and care of equipment. This may include health monitoring or linkage to autonomic logistics systems.

A.3.38 Reset Area (Guidepost). The reset area (guidepost) allows a user to return the IETM view back to its default settings. The reset area (guidepost) also provides a special mechanism for navigation and preferences.

A.3.39 Scrollable. A feature that is used to display text or graphics that exceed the length or width of the data pane. A visual cue (vertical or horizontal scroll bar) indicates that additional text or graphics is available for viewing. The vertical scroll bar is used to move through the text or graphics that exceed the length of the data pane. The horizontal scroll bar is used only to display graphics and tables that exceed the width of the data pane. The user may also have the capability to move through textual information, one line at a time, through the use of the SCROLL UP and SCROLL DOWN functions.

A.3.40 Screen stacking. Screen stacking is when several windows are open at the same time and are stacked one on top of each other in a staggered fashion. Screen stacking can confuse the novice user and is to be avoided.

A.3.41 Search. A navigational method to locate and display desired information through the use of processes that match results to user requests.

A.3.42 Session control. Session control is the ability to stop and start an IETM session in the middle of work. For highly interactive IETMs, this involves saving the state of the session for later reload to re-establish the user session back to where it was before the interruption.

A.3.43 Tool tip. Tool tips display further information about the purpose of the control. A tool tip appears when the user hovers the mouse pointer over the control.

A.3.44 Tracking. The process of monitoring and retaining information about the navigational activities of a particular user or device.

A.3.45 Traverse. The process of navigating through an electronic document.

A.3.46 User session. The cumulative IETM-related activities of a single user from the point when the IETM use begins to the point when it ends, uninterrupted by log-offs. A user session can be maintained by suspend/restart functionality.

A.4 **GENERAL REQUIREMENTS.**

A.4.1 IETM functionality requirements. The functionality requirements for IETMs provided in this appendix supplement the technical content requirements provided in Appendix B through Appendix L. These requirements shall apply for the presentation of TM information in a frame-based format on a computer display.

A.4.2 Physical IETM screen layout. The screen shall have an inner shell and an optional outer shell. The inner shell is the portion of the IETM, within the viewer shell, provided as the client application display area. The outer shell is the portion of the screen that surrounds the inner shell. Figure A-1 shows the layout of a system with an inner and outer shell. Figure A-2 shows the layout of a system having only an inner shell. The portion of the screen real estate under the TM author's control is the inner shell. The TM author should not attempt to modify or control the outer shell except when the acquiring activity requires an outer shell; however, the title bar shall

be modifiable. The inner shell contains specific regions as illustrated in Figure A-2. These regions are:

a. Reset Area (Guidepost)
b. Table of Contents Panel
c. Classification Bar
d. Navigation Panel
   (1) Subtitle Bar
   (2) Main Menu Bar
   (3) Project Specific Bar
e. Main Content Area
f. Status Bar

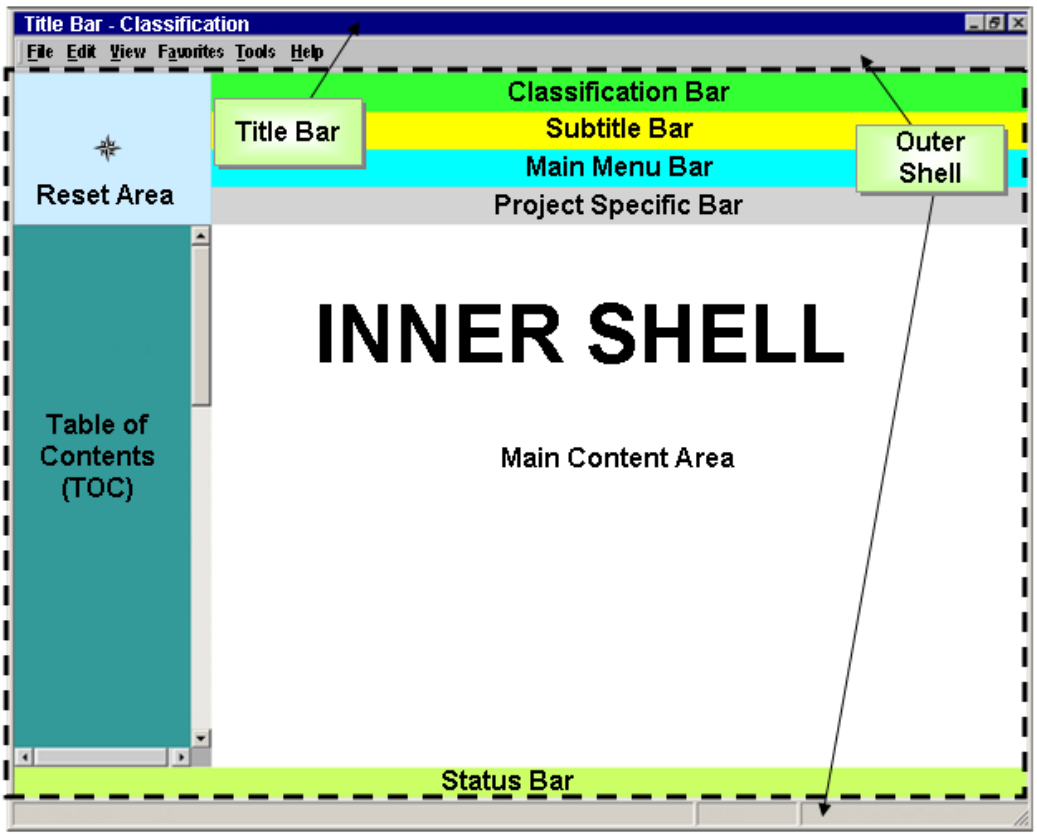

FIGURE A-1. System with inner and outer shell.

FIGURE A-2. System with inner shell.

A.4.2.1 General inner shell layout. Within the inner shell is an optional reset area in the upper left hand corner and to the right of the reset area is an optional classification and a navigation panel. On the left side of the inner shell below the reset area or navigation panel is a resizable area to display table of contents, list of illustrations, list of tables, etc., as selected. The navigation panel shall be divided into the subtitle bar, the main menu bar, and the project-specific bar in that order. The optional status bar shall be located at the bottom of the inner shell. The rest of the inner shell shall contain the main content area. (Refer to Figure A-2.)

A.4.2.2 Reset Area (Guidepost). When specified by the acquiring activity, a reset area (guidepost) shall be provided. (Refer to Figure A-2.) The reset area (guidepost) allows a user to return the IETM view back to its default settings. The reset area (guidepost) also provides a special mechanism for navigation and preferences. Items in this area are provided using a function menu. For example, the reset area (guidepost) can provide a menu allowing the user to navigate the IETM in different ways, such as, by part number, list of graphics, revision summary, etc. The reset area (guidepost) can be toggled on and off, but shall always be accessible. If toggled off, the reset area (guidepost) must be easy to find by the user. This could be achieved via an icon such as a compass rose or by a right click menu. Clicking on this area can provide a function menu. The reset area (guidepost) also provides a means for selecting user preferences. The reset area (guidepost) menu could include selections allowing the user to toggle screen areas on and off. An example of a screen area that can be toggled on and off is the additional information bar. It is recommended that a menu item be grayed out if the user is not permitted to toggle that particular screen area off.

A.4.2.2.1 Reset area (guidepost) functions. Right mouse clicking in the reset area (guidepost) shall provide the following functions menu via a pop-up. (Refer to A.5.2.3.10.11 for a description of each function.)

a. Reset user interface to standard default (required).
b. Minimize IETM (optional).
c. Print Frame (optional).
d. Change to page view (optional).
e. Open new IETM (optional).
f. Suspend (optional).
g. Restart (optional).
h. View revision summary (required).
i. Back (optional).
j. Forward (optional).
k. Abort browse mode (optional).
l. Toggle screen panels/bars on and off (optional).
m. Drill up/drill down (required).
n. Other custom functions (optional).
o. Exit Reset Area (Guidepost) (required).

A.4.2.3 Table of Contents (TOC). The table of contents panel, located to the left of the main content area, is where the navigation interactions must appear. (Refer to Figure A-2.) This area shall have a resizable right-side border (so that the TOC area can be reduced in size to the left). The TOC panel may be toggled on and off. When the user hovers the cursor over a TOC item, the full name of the TOC item shall appear. Access shall be provided via a hierarchical breakdown such as, system/subsystem, functional, physical hierarchy, or by means of graphical interfaces. (Refer to A.5.2.3.7.5.)

A.4.2.4 Classification bar. The classification bar is mandatory if a classification exists and shall not be toggled off. The bar shall appear as the top most bar of the inner shell, and when the reset area is shown, to the right of the reset area. If the IETM content is classified, security markings shall be displayed in the classification bar as well as the title bar of the outer shell. Security markings and color are described in the A.4.3.2.

A.4.2.5 Navigation panel. The navigation panel shall consist of three horizontal bars in the following sequence: a subtitle bar, a main menu bar, and a project-specific bar. The navigation panel shall remain consistent throughout the application. The navigation panel shall appear as follows:

a. Either above or below the main content area.
b. To the right of the reset area when the reset area is shown and the navigation panel is above the main content area.
c. Under the classification bar when the classification bar is shown.

A.4.2.5.1 Subtitle bar. The subtitle bar can be used for additional information when it has not been presented in the title bar. When used the subtitle bar shall appear as follows:

a. If no outer shell is shown, the subtitle bar is mandatory and shall not be toggled off.
b. If no outer shell is shown, the subtitle bar in the navigation panel shall contain the work package title or if not currently in a work package, the information title.
c. If an outer shell is shown, the subtitle bar is optional and may be toggled on and off.
d. The subtitle bar may be used for additional identifying information.

A.4.2.6 Main menu bar.

a. The main menu bar is mandatory and shall not be toggled off.
b. The main menu bar shall provide the following minimum set of mandatory navigation and control functions, which shall be made available to the user and common to all IETMs.
   (1) Previous (Refer to A.5.2.3.8.11.)
   (2) Next (Refer to A.5.2.3.8.11.)
   (3) TOC (Refer to A.5.2.3.7.5.)
   (4) History (Refer to A.5.2.3.8.10.)
   (5) Search (Refer to A.5.2.3.8.13.)
   (6) Print (Refer to A.5.2.3.9.)
   (7) Feedback (Refer to A.5.2.3.5.1.)
   (8) Exit (Refer to A.5.2.3.8.3.)
   (9) Help (Refer to A.5.2.3.10.4.)
c. The nine mandatory functions shall be presented graphically on the main menu bar. (Refer to Figure A-3and Figure A-4.) They shall appear, left justified, in exactly the order shown (e.g., Previous, Next, TOC, History, Search, Print, Feedback, Exit, Help).
d. The main menu bar may contain additional project functions appearing to the right of the nine mandatory functions. Additional functions may optionally be added to the project-specific bar as shown in the following figure:

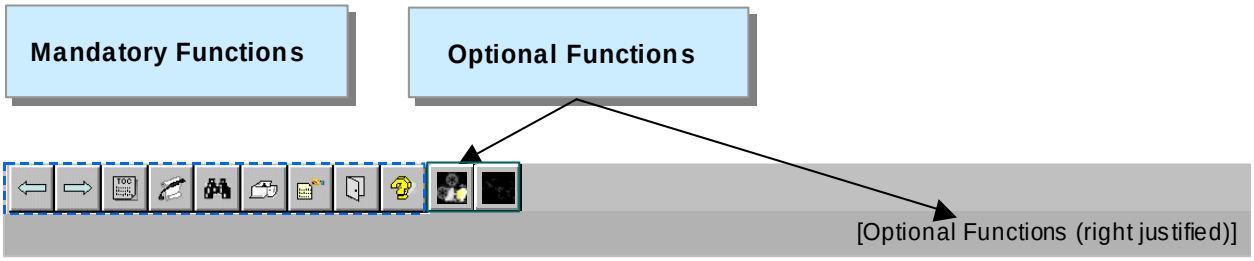

FIGURE A-3. Placement of project functions.

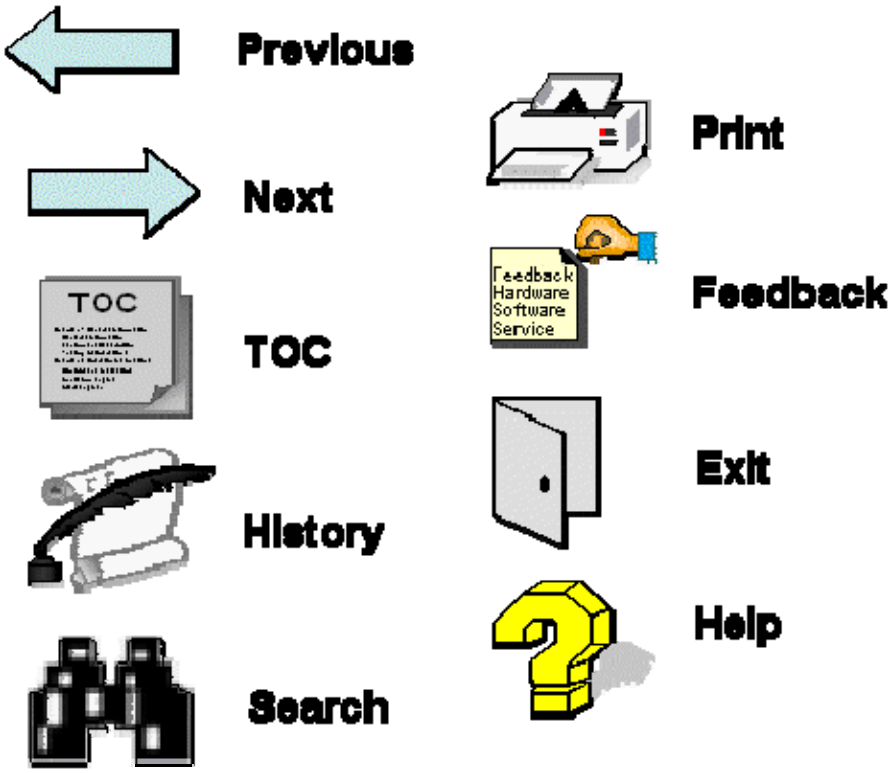

FIGURE A-4. Required function icons.

e. Cascading menus may appear as a child of a function when selected. In a drop-down menu, this appears next to the function selected. There may be several levels of cascading menus. Functions that are not active during any rendering shall be presented as disabled (grayed out). The bar must remain accessible. This is so users can depend on these items appearing at a standard location in a standard order, regardless of what state might be applicable to the function.

A.4.2.7 Project-specific bar.

a. The project-specific bar can be used if additional functions are required. Consideration should be given for placement of functions on the project-specific bar with respect to main menu bar functions to minimize the potential for making incorrect selections (for example, the project-specific functions may be oriented so that the functions are right justified).

b. The project-specific bar is optional and may be toggled on and off. Functions that are inactive during any rendering shall be presented as disabled (grayed out).

c. Cascading menus may appear as a child of a function when selected. In a drop-down menu, this appears next to the function selected. There may be several levels of cascading menus.

A.4.2.8 Main content area. The main content area contains the text and graphics of the IETM. It specifically excludes the TOC panel, reset area, classification bar, navigation panel, and status bar. This main content area must not be divided into more than three panes as shown in Figure A-5 through Figure A-8. If specified by the acquiring activity, panes shall be resizable.

FIGURE A-5. A single pane main content area.

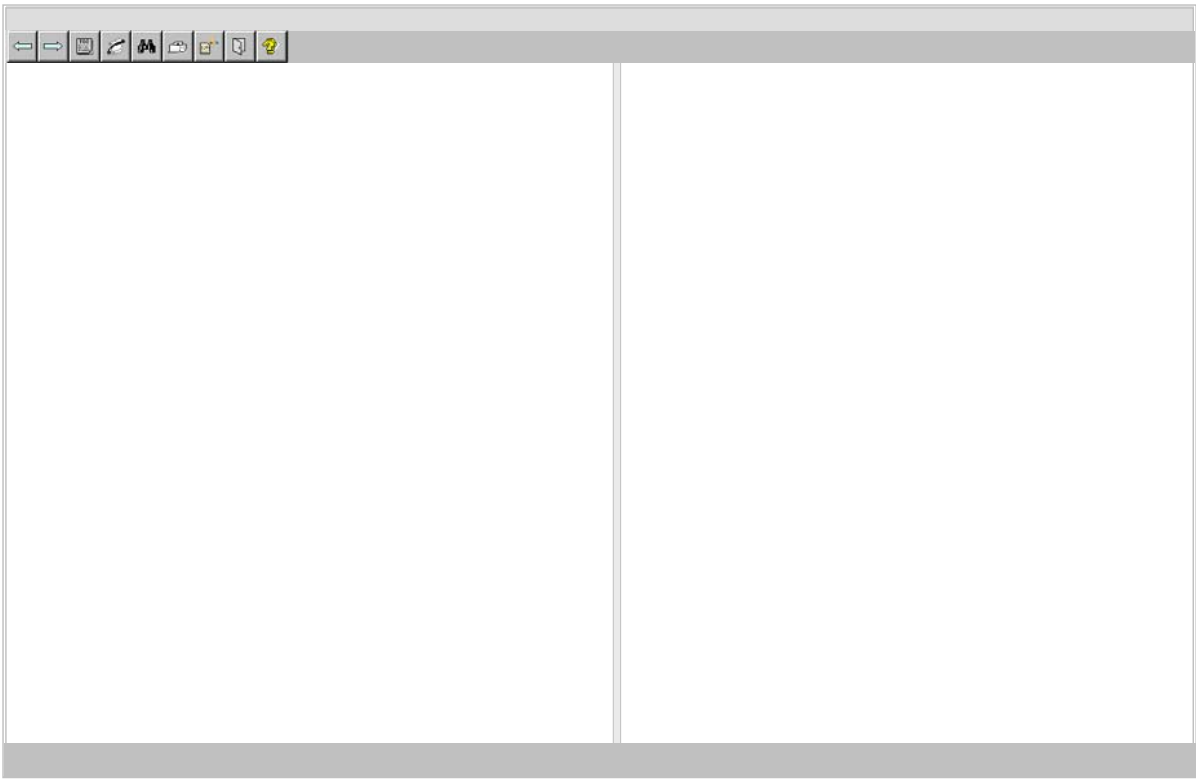

FIGURE A-6. A left and right dual pane main content area.

FIGURE A-7. An upper and lower dual pane main content area.

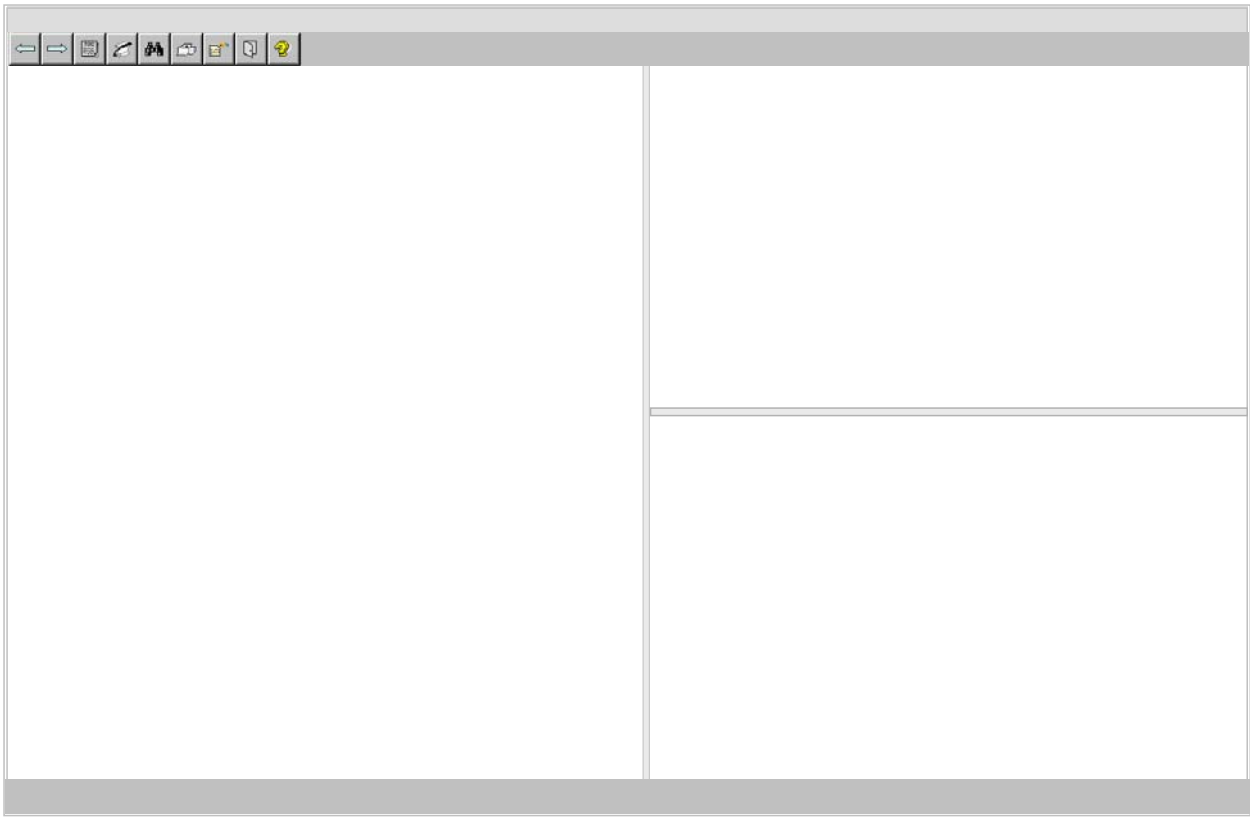

FIGURE A-8. A three-pane main content area.

A.4.2.9 Status bar. The status bar shall be a horizontal bar located at the bottom of the inner shell. The status bar shall contain status information including status indicators and icons for active (persistent) warnings, cautions, and notes. The status bar may be toggled on and off when no persistent alert icons are displayed. The status bar shall not be toggled off when persistent alert icons are displayed.

A.4.2.10 Title bar. The use of a title bar in the outer shell shall be mandatory if an outer shell is shown. The title bar shall display the work package title or, if not in a work package, the information title. If the IETM content is classified, security markings shall be displayed in the title bar as well as in the classification bar.

A.4.2.11 Screen sizes. Proper planning for the size and resolutions of various devices up front in the planning stages makes life-cycle sense as the presentation technology is always undergoing change (e.g., terminals, desktops, laptops, PDAs, etc.). (Refer to MIL-HDBK-1222 for additional information on screen sizes.)

A.4.3 Style and format on the display.

A.4.3.1 Text colors/background. The text shall be black except as noted elsewhere. Background shall be white except as noted elsewhere. These colors aid printing without loss of content. There may be operational exceptions such as night operations and where color has special meaning. Use the safe color palette (refer to inner shell colors in MIL-HDBK-1222) to ensure appropriate safe colors upon fielding to 8-bit devices such as PDAs.

A.4.3.1.1 Standard text/fonts. provides the requirements for font standardization of IETMs delivered to the end user.

TABLE A-I. Standard IETM fonts.

Electronic Presentation	Normal Font	San serif (e.g., Arial, Helvetica, etc.) For example: This is Arial. This is Helvetica.
	Minimum Size	Eight (8) points For example: This is 8 pts Arial.
	Fixed Font (if needed)	Mono-spaced (e.g., Courier New, Letter Gothic, etc.). For example: `This is Courier New.` This is Letter Gothic.
Hardcopy Presentation	Normal Font	Serif or San serif (e.g., Times New Roman, Arial, etc.) For example: This is Times New Roman (serif). This is Arial (sans serif).
	Minimum Size	Eight (8) points For example: This is 8 pts Arial.
	Fixed Font (if needed)	Mono-spaced (e.g., Courier New, Letter Gothic, etc.) For example: `This is Courier New. This is Letter Gothic.`

A.4.3.1.2 Custom developed fonts. Use of custom or proprietary fonts is strongly discouraged. When custom or proprietary fonts are required and accepted by the acquiring activity, those fonts shall be provided to the government encumbrance free. Any such fonts shall be made available as a library of re-usable fonts.

A.4.3.2 Security markings. Whenever classified and/or distribution restricted information is displayed, an indication of the highest classification/distribution level in the pane shall be made within the inner shell classification bar and, if applicable, the outer shell title bar. Technical data developed using this standard shall have security classification markings in accordance with DoD 5220.22-M or 5200.1-R. Technical data with For Official Use Only (FOUO) restrictions shall be identified and marked in accordance with DoD 5400.7R. Technical data that applies to equipment on the International Trade in Arms Regulation (ITAR), Part 121 U.S. Munitions List shall be identified and marked accordingly. Table A-II and Table A-III provide classification and distribution restricted marking requirements.

TABLE A-II. Classification bar - Classification colors and markings.

SECURITY LEVEL	CLASSIFICATION BAR	COLOR AND MARKING
Unclassified	**Text**: No text unless distribution markings are required. **Color**: Light-Green (#00CC00) **Use**: Shall be used if the highest level in the pane is unclassified and in a classified manual. If the entire manual is unclassified, the classification bar is not required.	
Confidential	**Text**: "CONFIDENTIAL" in black text and centered in the classification bar. Additional text for distribution markings. **Color**: Light-Blue (#33FFFF) **Use**: Shall be used if the highest level in the pane is confidential.	CONFIDENTIAL
Secret	**Text**: "SECRET" in white text and centered in the classification bar. **Color:** Red (#FF0000) **Use:** Shall be used if the highest level in the pane is secret.	SECRET
Top Secret	**Text**: "TOP SECRET" in white text and centered in the classification bar. **Color:** Orange (#FF9900) **Use:** Shall be used if the highest level in the pane is top secret.	TOP SECRET

TABLE A-III. Classification bar - Distribution colors and markings.

DISTRIBUTION CLAS	SIFICATION BAR	COLOR AND MARKING
Unclassified – For Official Use Only (FOUO)	**Text**: "FOUO" in black text and centered in the classification bar. **Color:** Light-Green (#00CC00) **Use:** FOUO is a distribution restriction	FOUO

A.4.3.3 Front and rear matter. Information that is normally considered part of the front and rear matter, but is typically not part of the page-based TOC, shall be accessible from the IETM's TOC or the navigation panel.

A.4.3.4 Revisions. Revision summaries are required and shall be accessed using the TOC. They may also be displayed from an icon on the navigation panel. The provided revision information shall have links to where data has changed; however, any IETM functional and cosmetic feature changes shall be described only. When a subsequent revision is prepared, the previous revision summary shall be deleted and only the new revision information shall be provided. The user shall have the option to view revision markings within the revised IETM.

A.4.3.4.1 Revision markings. Revision markings to distinguish changed information shall be indicated by a vertical bar opposite the updated, deleted, or added text. (Refer to 4.9.28.1.) Revision bars shall only be displayed for the current revision. Previous revision bars shall be removed.

A.4.4 Hyperlinks/Icon hotspots.

A.4.4.1 Hyperlinks. Hyperlinks shall be visually indicated according to standard web practices. When highlighting text for selectable elements (hyperlinks), use color changes or increase in background intensity. There shall be an indication that the hyperlink has been visited or followed. For color and style guidance, refer to MIL-HDBK-1222. The text hyperlink should include type, number, and title (e.g., "Refer to Video 7-3, Disassembly Procedures.").

A.4.4.2 Icon hotspot. An icon hotspot may be used for a non-textual reference. Table A-IV identifies the standardized hotspot icons that shall be used. In order to view the icons, the following fonts are required as the standard installation for deployed systems: Monotype Sorts, Monotype Sorts 2, Webdings, Wingdings, Wingdings 2, and Wingdings 3. Additional icon hotspots shall be approved by the acquiring activity. The following are four acceptable modes of visual indication of icon hotspots:

a. Persistent visual indication that an area is hot.
b. Cursor changes shape or color when cursor is over hotspot.
c. Object changes shape or color when cursor is over hotspot area
d. Pop-up appears while cursor is over the hotspot area (e.g., RPTSL callout expands)

TABLE A-IV. Standard hotspot icons.

ELEMENT	DESCRIPTION	INDICATOR	ICON
GENERAL HOTSPOT ICONS			
GOTO	The user is redirected to the referenced information and does not return at the conclusion of the referenced information (possibly through history, but return here is not guaranteed). Clear the GOSUB indication if set in the status bar.	**Icon**: Arrow pointing down. (Wingdings 3 #135) **Text**: Goto (Optional) **Location:** Content pane	↓ Goto
GOSUB	The user is redirected to the referenced information and does return at the conclusion of the referenced information. Set the GOSUB indication if set in the status bar.	**Icon**: Arrow pointing both left and right. (Wingdings 3 #049) **Text**: Gosub (Optional) **Location:** Content pane	↔ Gosub
Acronyms	Link to acronym definition	**Icon**: aA Symbol (Webdings #062) **Text**: Acronyms (Optional) **Location**: Content pane	aA Acronyms
Abbreviation	Link to abbreviation definition	**Icon**: aA Symbol (Webdings #062) **Text**: Abbreviations (Optional) **Location**: Content pane	aA Abbreviations
External Object	Link to External Object	**Icon**: Lightning Bolt (Webdings #126) **Location**: Content pane	↯

TABLE A-IV. Standard hotspot icons.

ELEMENT	DESCRIPTION	INDICATOR	ICON
SUPPORTING HOTSPOT ICONS			
Relational or reference	Related or reference materials (possibly more than one) are available. Functions same as a GOSUB.	**Icon**: Book Stack (Webdings #168) **Text**: Related Materials (Optional) **Location:** Content pane	Related Materials
Call Supervisor or Call QA	Call supervisor for help or QA inspection	**Icon**: Telephone (Wingdings 2 #039) **Text**: Call QA/Supervisor **Location:** Content pane	Call
Check Supply for Part	Link to check supply for a part's availability.	**Icon**: Supply Truck (Webdings #118) **Text**: Supply (Optional) **Location**: Content pane	Supply
Part	Link to part information	**Icon**: Number 10 in a circle (Wingdings 2 #126) **Text**: Parts (Optional) **Location**: Content pane	Parts
Diagnostics	Link to diagnostic tasks	**Icon**: +/- **Text**: Diagnostics (Optional) **Location:** Content pane	+/- Diagnostics
Support Equipment	Link to support equipment	**Icon**: Waving Flag (Wingdings #079) **Location**: Content pane	
Training	Link to training or refresher material	**Icon**: Schoolhouse (Webdings #071) **Text**: Training (Optional) **Location**: Content pane	Training
GRAPHIC, MULTIMEDIA, AND TABLE HOTSPOT ICONS			
Graphic Li	nk to graphic	**Icon**: Still Camera (Webdings #181) **Text**: Graphic (Optional) **Location**: Content pane	Graphic
Table	Link to table	**Icon**: Black square surrounded by two additional squares (Wingdings 2 #170) **Location**: Content pane	
Wiring Diagrams	Link to wiring or hydraulic diagram	**Icon**: Off Page Connector with X inside (Wingdings #214) **Text**: Wiring (Optional) **Location**: Content pane	Wiring
Multimedia	Link to multimedia	**Icon**: Movie Projector (Webdings #184) **Text**: Show (Optional) **Location**: Content pane	Show
Full Motion Video	Link to Full Motion Video	**Icon**: Clapboard (Webdings #183) **Text**: Video (Optional) **Location**: Content pane	Video

TABLE A-IV. Standard hotspot icons.

ELEMENT	DESCRIPTION	INDICATOR	ICON
Animation Lin	k to Animation	**Icon**: Comedy and Tragedy Masks (Webdings #174) **Text**: Animation (Optional) **Location**: Content pane	Animation

A.4.4.3 Links to text. Reference to narrative text shall require a single click of a text hyperlink (refer to A.4.4.1) or an icon hotspot (refer to A.4.4.2) and shall display the referenced text in the current pane.

A.4.4.4 Links to graphics and tables.

a. Reference to a figure or table not inline shall require a single click of a hyperlink (refer to A.4.4.1) or an icon hotspot (refer to A.4.4.2) and shall display the object in a separate panning/zooming pane or window.
b. References to a figure or table inline would display the object in a separate panning/ zooming pane or window. When inline figure(s) and/or table(s) are large or numerous, an icon hotspot (refer to A.4.4.2) may be used in place of the object to speed up the display.
c. TOC references to a figure or table shall require a single click.

A.4.4.5 Links to multimedia. Links to view animations, videos, etc., shall require a single click of a hyperlink (refer to A.4.4.1) or an icon hotspot (refer to A.4.4.2). The object shall display in a separate pane or application window. The hyperlinks or hotspots for multimedia (animation, video, etc.) clips shall precede the step(s) to which they apply. A note shall also precede the step(s) to which the multimedia clips apply. This tells the user to follow the written instructions after viewing the multimedia clips and tells which step(s) the multimedia clips apply. Multimedia clips shall use the icons provided in Table A-IV.

A.4.4.6 Links in graphics. The four acceptable modes of visual indication of hotspots in a graphic (refer to Table A-V) shall be:

a. Persistent visual indication that an area is a hotspot.
b. Cursor changes shape or color when cursor is over a hotspot.
c. Object changes shape or color when cursor is over a hotspot.
d. Pop-up appears while cursor is over a hotspot (e.g., parts information callout expands).

TABLE A-V. Hotspot in graphics.

ELEMENT	DESCRIPTION	INDICATOR	SAMPLE
Persistent	Graphic objects are viewable persistent.	**Text**: Blue underlined text (unvisited). Purple underlined text (visited) **Location**: Content pane	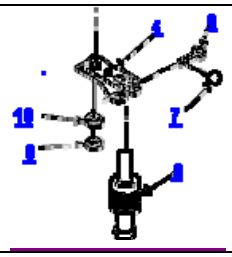

TABLE A-V. Hotspot in graphics.

ELEMENT	DESCRIPTION	INDICATOR	SAMPLE
Cursor	Cursor changes to hotspot indication on a graphic	**Cursor:** Changes from standard cursor shape and/or color. **Location**: Content pane	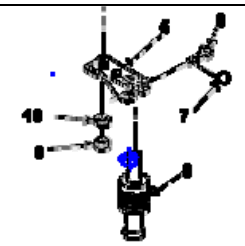
Object	Graphic object changes color when cursor is over hotspot.	**Object:** Changes color. **Location:** Content pane	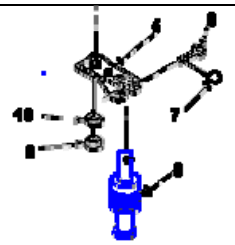
Pop-up Text	Cursor over hotspot generates pop-up text.	**Text:** Object description next cursor. **Location:** Content pane	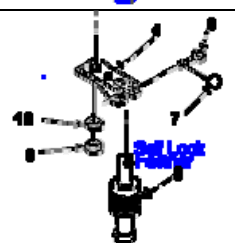

A.4.4.7 Hotspots in tables. Only the referencing text within a table cell shall be a hotspot. The entire cell shall not be a hotspot. Reference to a table cell or row shall scroll the table directly to the referenced cell or row. Table A-VI contains the requirements for tables appearing within the body of the IETM (inline), and those appearing in their own separate window.

TABLE A-VI. Table navigation and display.

TABLE SECTION	FUNCTION	DESCRIPTION
General (Mandatory)	Access	View with a single click..
	Appearance	May view as inline or separate pane. Adherence to this standard for content and appearance.
	References	TOC links shall be a single click directly to table. Links in the body or table to tables shall be normal hypertext. Example: See Table 3.5 Icon: (Optional) Black Square surrounded by 2 additional Squares ⧈ (Wingdings 2, #170). Example: See ⧈ Table 3.5
Headers	Appearance	The header shall always be visible so that it does not scroll away while rows are scrolled.
	Background	Preferred white color, but colors are optional (printing issue).
	Font	The same font as the body is preferred. **Bold** and/or larger fonts optional.
	Border Borders	should be same size lines as rest of table.
Cells	Font	The same typeface shall be used throughout the table.

TABLE A-VI. Table navigation and display.

TABLE SECTION	FUNCTION	DESCRIPTION
(Mandatory)	Background	White background, other colors are optional (printing issue).
	Border Borders	are none, single, or double lines. Small tabular text may have no lines, if controlled by style sheet.
	References	Hyperlink from a table cell shall be the reference text only, not the entire cell. Multiple hotspots within a cell shall be individually accessible.

A.4.5 User interface. The user interface requirements for session control, bookmarks, annotation browsing, etc., for highly interactive IETMs are provided in A.4.5.1 through A.4.5.11.

A.4.5.1 Session control. Session control is the ability to stop and start an IETM session in the middle of work. Session control shall involve saving the state of the session to re-establish the session back to the previous state before the interruption. IETMs shall support the "complete" (save and update history file) and "suspend/restart" functionality. The "abort" function shall only be allowed in "browse" mode on the end-user client. Table A-VII contains the session control standard icons that are used either as icon buttons in or pull-down menu navigation panel. When specified by the requiring activity through the IETM functionality matrix (refer to A.5.2.3.1.1), all the following functionalities shall be provided.

a. The ability to suspend a session at any time (e.g., for a break or emergency) shall be provided.
b. A restart function shall be capable of restarting the session at the same point it was suspended.
c. At the time of restart, the user shall be advised that some key parameters/condition settings may be out-of-date.
d. The system shall support these three exit modes.
   (1) Complete (save and update history)
   (2) Abort (do not save or update history) (Browse mode only)
   (3) Suspend (save current session state and do not update history)

TABLE A-VII. Session standard icons.

SESSION	DESCRIPTION	INDICATOR	ICON
Complete	Normal exit save and update history. Clear state table.	**Icon**: Check Mark (Wingdings 2 #080) **Text**: Complete (Optional)	✓ Complete
Suspend	Save current state and do not update history.	**Icon**: Pause (two vertical bars) (Webdings #059) **Text**: Pause Session (Optional)	❚❚ Pause Session
Restart	Reinstate previous suspended session.	**Text**: Session Restart	Session Restart
Abort	Browse only - Do not save session or update history. Clear state table.	**Icon**: Rain Clouds (Webdings #219) **Text**: Abort (Optional)	☂ Abort

A.4.5.2 Bookmarks. Bookmarks provide the ability to mark areas of interest and to allow quick access or referencing of the information. Table A-VIII describes the standardized bookmark icons and functions.

TABLE A-VIII. Bookmark functions and standard icons.

BOOKMARK	FUNCTION	INDICATOR	ICON
Create	Shall ask whether to create or navigate to a Bookmark.	**Icon**: Open Book (Wingdings #038) **Location**: Navigation Panel.	
Goto	Shall ask whether to create or navigate to a Bookmark When navigating to a bookmark, the TOC shall be updated and the content pane shall display the bookmark destination.	**Icon**: Open Book (Wingdings #038) **Location**: Navigation Panel.	
Minimized	Indicates the location is a bookmark.	**Icon**: Open Book (Wingdings #038) **Location**: Content pane.	

A.4.5.3 Annotations. Annotation provides the ability of the system administrator (public) or user (personal) to place a special note within an IETM. Public annotations shall be information (as authorized by the command) for all users, such as special information that requires rapid deployment to the manual holders like "Advance Change Notices." Personal annotations shall only be for the user initiating the annotation, such as assistance in their training. Table A-IX details functions and icons that shall be part of the annotation function. When specified by the acquiring activity through the IETM functionality matrix (refer to A.5.2.3.2), all the following functionalities shall be provided.

a. A persistent visual indication shall denote an annotation exists.
b. The default annotation presentation shall initially appear minimized.
c. Levels of annotations (e.g., public, personal, etc.) shall be visually differentiated.

TABLE A-IX. Annotation functions and standard icons.

ELEMENT	FUNCTION	INDICATOR	ICON	
			PUBLIC	PERSONAL
Create User Note	A dialog box is displayed to insert the user note at the current cursor location.	**Icon**: Black (public) and blue (personal) hand with pen (Wingdings #063) **Location**: Navigation Panel.		
User Note minimized	Selecting the icon opens the user note as a dialog message box.	**Icon**: Black (public) and blue (personal) hand with pen (Wingdings #063) **Location**: Content pane.		

A.4.5.4 Redline **(Review only)**. When specified by the acquiring activity through the IETM functionality matrix (refer to A.5.2), a redlining capability shall be available for use during the IETM reviewing cycle. For text, redlining shall provide the ability to identify a deletion by striking through the text, and an insertion by highlighting with a different text format (e.g., blue text and underlined). For graphics, redlining shall provide the capability to annotate graphics using an overlay freehand-type drawing facility. The comment annotation shall be used in conjunction with the redlining to denote reason for change. Table A-X details functions and icons that shall be part of the annotation function.

TABLE A-X. Redline functions and standard icons.

ELEMENT	FUNCTION	INDICATOR	ICON
Redline mode	Toggle on and off redline functionality.	**Icon:** Red pencil (Wingdings #033) **Location**: Navigation Panel	
Create Comment	A dialog box is displayed to insert the redline comment at the current cursor location.	**Icon** Piece of paper with upper right corner turned in (Wingdings 2 #047) **Location**: Navigation Panel.	
Comment minimized	Selecting the icon opens the redline comment as a dialog message box.	**Icon**: Piece of paper with upper right corner turned in (Wingdings 2 #047) **Location**: Content pane.	

A.4.5.5 Browsing. Browsing is the ability to preview an IETM session before performing the work or task. (Refer to A.5.2.3.10.8 for functionality requirements.) When specified by the acquiring activity, the BROWSE PREVIOUS and BROWSE NEXT functions shall be required for all systems for which the NEXT and PREVIOUS functions set interactive system variables that are used to effect subsequent navigation through the IETM. The presentation system shall provide a distinct visual indication that the system is in browse mode. (Refer to Table A-XI.)

TABLE A-XI. Browsing display locations and recommended icons.

ELEMENT	FUNCTION	INDICATOR	ICON
Begin	Initiates browse mode capability by single click on icon button. Denotes to user that the system is in browse mode	**Icon**: Eyeglasses unselected (Wingdings #036) **Location**: Navigation panel	
Browse Previous	An act similar to the PREVIOUS functions, except no interaction system variables are set.	**Icon:** Double left pointing arrows (Wingdings 3 #072) **Location:** Navigation panel	
Browse Next	An act similar to the NEXT functions, except no interaction system variables are set.	**Icon:** Double right pointing arrows (Wingdings 3 #073) **Location:** Navigation panel	
Mode Indicator	Denotes to the user that the system is in browse mode.	**Icon**: Eyeglasses (Wingdings #036) **Text**: Browse Mode On **Location**: Status bar	Browse Mode On
	Denotes to the user that the system is not in browse mode.	**Icon**: Eyeglasses (Wingdings #036) with "no or don't" slash (Wingdings 2 #087) **Text**: Browse Mode Off **Location**: Status bar	Browse Mode Off
End	Ends browse mode capability by a single click on the icon button. Denotes to the user that the system is not in browse mode.	**Icon**: Eyeglasses unselected (Wingdings #036) **Location**: Navigation panel	

A.4.5.6 Dialog boxes. Dialog boxes are used to obtain information from the user and shall appear in the center of the screen. The appearance of dialog boxes within an IETM shall be consistent throughout the IETM. All dialog boxes shall contain dialog push buttons. (Refer to A.4.5.6.3 for detailed information.)

A.4.5.6.1 Dialog box types. Dialog boxes shall be one of five kinds: message, fill-in, menu, multiple-choice, or composite. (Refer to A.4.5.6.1.1 through A.4.5.6.1.5 for different types of dialog boxes.)

A.4.5.6.1.1 Message dialog box. A message dialog box shall be used when the acknowledgment by the user of certain notes, essential procedures, conditions, statements, or important instructional data is deemed necessary. Only the push buttons "OK" and an optional "HELP" shall be used. (Refer to Figure A-9 for an example.)

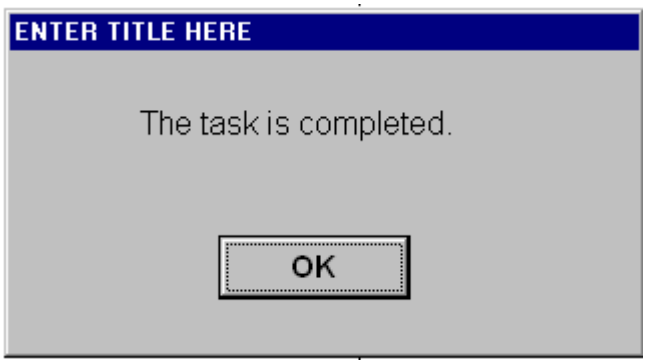

FIGURE A-9. Message dialog box.

A.4.5.6.1.2 Fill-in dialog box. The fill-in dialog box provides the capability to communicate to the IETM by prompting the user to enter text. When possible, the prompt and the data field shall be placed on the same line. Prompts shall be distinctively formatted. The OK push button shall be disabled when no characters are entered and no defaulted values are in the data fields. This shall ensure the user has entered at least one character in the data field before the user selects the "OK" push button and continues. (Refer to Figure A-10 for an example.)

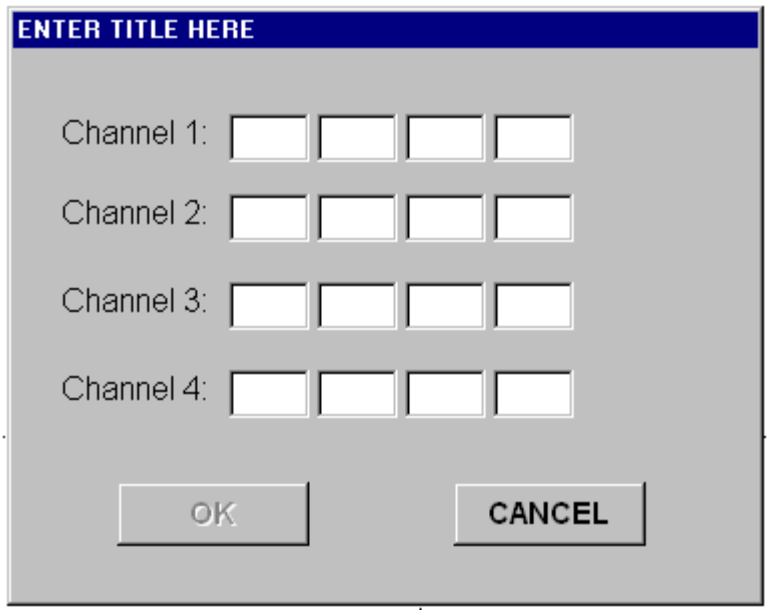

FIGURE A-10. Fill-in dialog box.

A.4.5.6.1.2.1 Number range. An optional number range shall provide an acceptable value range for fill-in data fields that requests only integer or real values. The acceptable values specified by the number range may be displayed in the dialog box. When displayed, the number range shall be in close proximity to the data field, such as appended to the prompt or directly below the data field. At a minimum, if the user enters a value outside of the number range, a message dialog box shall be displayed to the user identifying the acceptable values. Upon acknowledging the message dialog box, the fill-in dialog shall be displayed to allow the user to enter a valid value. (Refer to Figure A-11 for an example.)

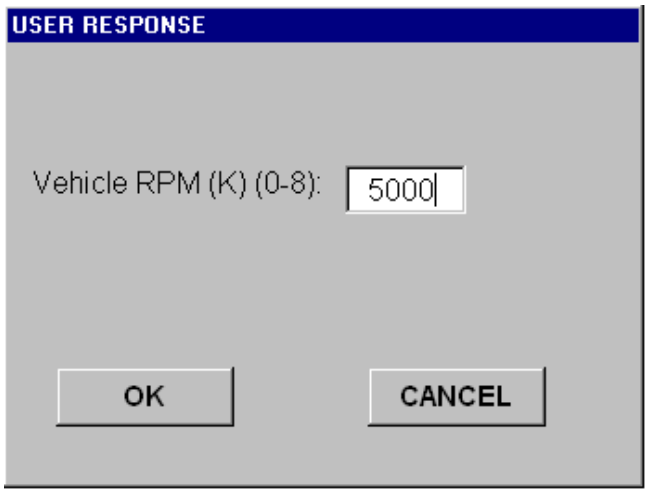

FIGURE A-11. Fill-in dialog box using number-range.

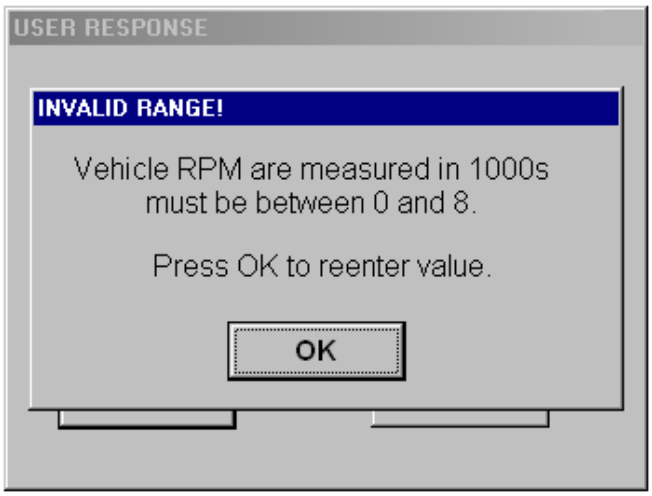

FIGURE A-11. Fill-in dialog box using number-range - Continued.

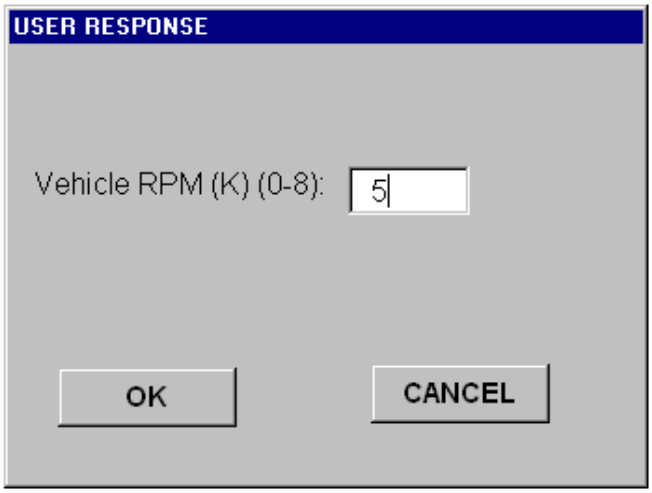

FIGURE A-11. Fill-in dialog box using number-range - Continued.

A.4.5.6.1.3 Menu dialog box. The menu dialog box shall be a selection list to choose one item from the list. The menu dialog box shall display a selection item preceded with a radio button. A radio button shall be a circle and is selected by clicking in the circle. A filled circle shall indicate that a choice has been made. When the user selects a different radio button, the previous radio button shall be cleared and the selected radio button shall be filled. The author may define a default selection and the radio button shall be filled. The "OK" push button shall be disabled until a radio button has been chosen. This shall ensure the user has selected a radio button before selecting the "OK" push button and continuing. (Refer to Figure A-12 for an example.)

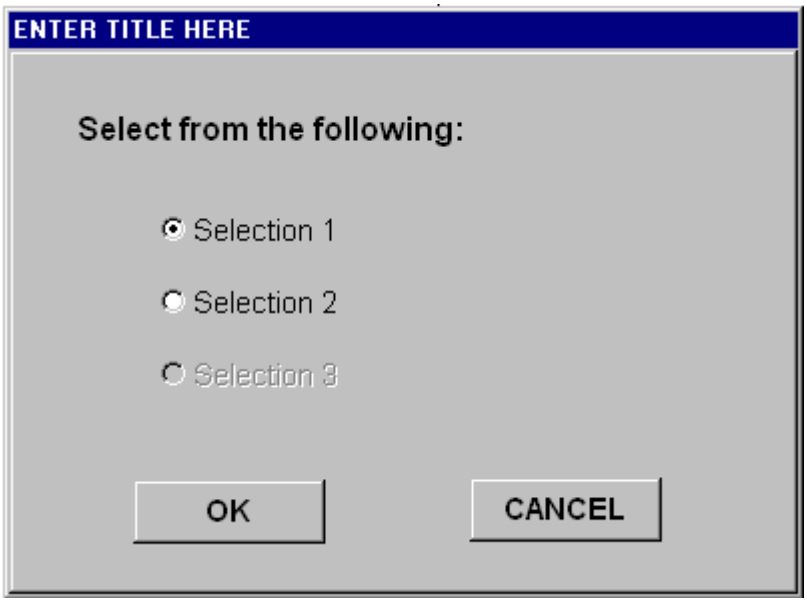

FIGURE A-12. Menu dialog box.

A.4.5.6.1.4 Multiple-choice dialog box. The multiple-choice dialog box shall be a selection list to choose at least one item from the list. The multiple-choice dialog box shall display a selection item preceded with a squared box and is selected by clicking in the square. A check in the box shall indicate that a choice has been made. When the user selects a different box, the previous checked box shall remain and the selected box checked. Selecting the checked box shall clear the box. The author may define a default selection and the box shall be checked. The "OK" push button shall be disabled until a box is checked. This shall ensure the user has selected at least one box before selecting the "OK" push button and continuing. (Refer to Figure A-13 for an example.)

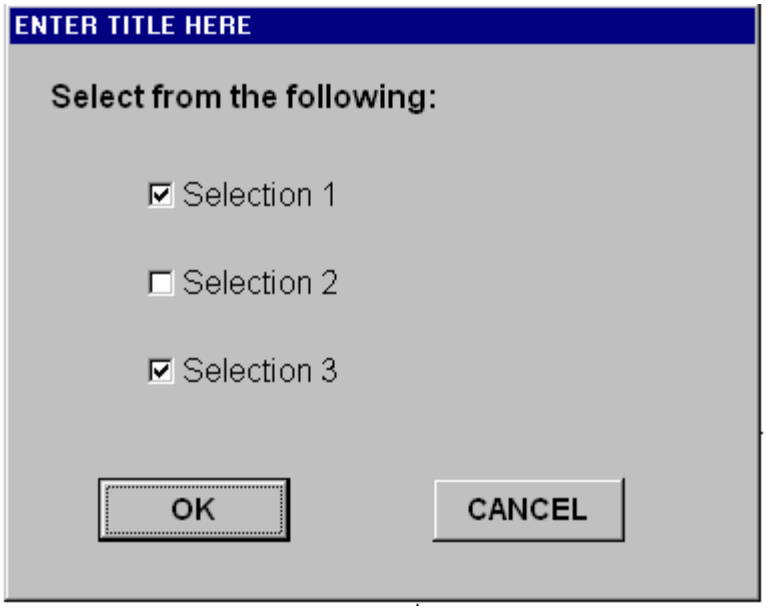

FIGURE A-13. Multiple-choice dialog box.

A.4.5.6.1.5 Composite dialog box. The composite dialog box is presented with any combination of fill-in, menu, and/or multiple-choice dialog boxes. (Refer to Figure A-14 for an example.)

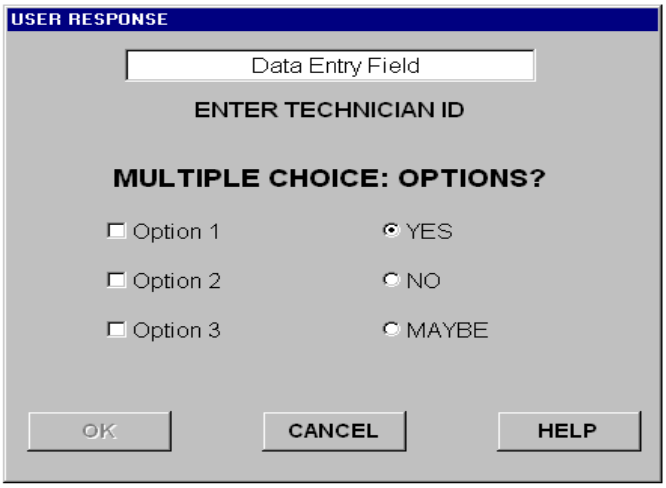

FIGURE A-14. Composite dialog box.

A.4.5.6.2 Dialog box title. When specified by the acquiring activity, dialog box titles shall be left justified at the top of the dialog box and displayed in uppercase letters. Titles shall be presented in a distinctive manner so they will not be confused with messages, response alternatives, or other text items (e.g., different background color).

A.4.5.6.3 Dialog push buttons. Dialog boxes shall contain graphical controls called push buttons. Dialog push buttons are used as a means for the user to communicate with the IETM. Push buttons can be: radio buttons (e.g., in single-choice menu dialog box), check boxes (e.g., in multiple-choice dialog box), or functions (e.g., the selectable function “OK” on a message dialog box). A push button shall be a word or graphic icon on the screen used to select or initiate an action. Push buttons shall be large enough to allow positioning of the cursor on the push button. Push buttons shall provide visual feedback when selected. Push buttons shall be found on every type of dialog box. They shall each be single-action entities. Push buttons shall indicate selections made or invoke a general action (e.g., CANCEL or OK). Push button shapes shall be consistent, such as a box, circle, or button. Function push buttons shall contain the name of the selection or action written inside of the shape. Common function push buttons (OK, CANCEL, and HELP) shall be displayed along the bottom of the dialog box. The common function buttons shall correspond to completing the last selection before leaving the dialog box.

A.4.5.6.3.1 Common function push buttons. The common function push buttons shall be displayed in the following order centered along the bottom of the dialog box: "OK", and where they exist, "CANCEL" and "HELP." The “OK” push button shall communicate the entered or selected information to the IETM and proceed to the next action. The “CANCEL” push button shall not send user-inputted information to the IETM and the IETM shall return to its previous display. The “HELP” function shall provide further information about the current dialog box in message dialog box.

A.4.5.6.4 Dialog cursor movement. Cursor movement within dialog boxes shall be consistent throughout the IETM. The cursor shall move only to items, which require input from the user. The default location of the cursor (the location of the cursor when the dialog box is initially displayed) in a dialog box shall be at the first selectable item (uppermost). When only the selectable movement mode is used, it shall restrict the allowable cursor locations to the radio buttons, check boxes, the fill-in-the-blank, and the push buttons within the dialog box. Cursor forward movement shall be accomplished through the TAB key, ENTER key or pointing device, such as a mouse, trackball, or stylus. The user shall be able to move the cursor back within the dialog box either through the SHIFT-TAB key or pointing device. Pressing the ENTER key when the push button is highlighted shall perform the action associated with the push button (e.g., Pressing the ENTER key when the “**OK**” push button is highlighted is functionally equivalent to clicking the “**OK**” push button.).

A.4.5.7 Screen stacking. illustrates screen stacking where multiple windows are opened and overlap each other. Screen stacking can confuse the user of the IETM and shall be avoided.

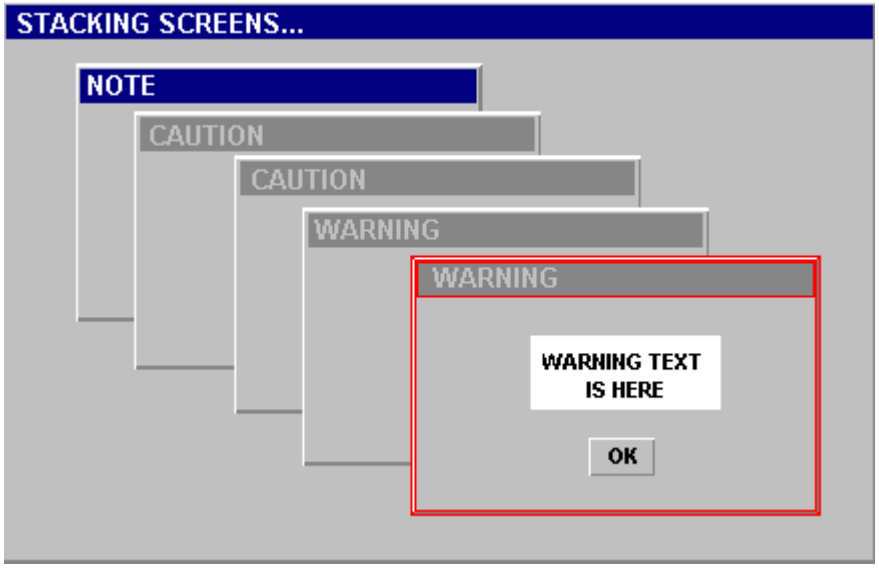

FIGURE A-15. Screen stacking.

A.4.5.8 Response time. The operating system usually handles the system busy indication. If the viewer is expected to be busy for more than 2 seconds, the cursor shall change to an hourglass until the busy condition passes. Once the busy condition passes, the cursor shall return to its previous form. (Refer to Table A-XII.)

TABLE A-XII. Cursor modes.

CURSOR	INDICATOR	FUNCTION	SAMPLE
Waiting	**Icon**: Busy cursor **Location**: Entire viewer	The IETM is waiting more than 2 seconds to perform a task.	
Normal	**Icon**: Normal cursor **Location**: Entire viewer	Normal cursor mode.	

A.4.5.9 Audio control. When audio control functions (multimedia, voice input recognition, etc.) are specified by the acquiring activity, the standard icons in Table A-XIII shall be used when applicable.

TABLE A-XIII. Audio control standard icons.

ELEMENT	FUNCTION	INDICATOR ICON	
Access Volume Controls	Toggle on and off the audio controls.	**Icon**: Speaker (Webdings #088) **Location**: Navigation Panel	
Volume Up	Increase the volume to the audio	**Icon**: Rising Triangle (Wingdings 3 #112) **Location**: Navigation Panel	
Volume Down	Decrease the volume to the audio	**Icon**: Descending Triangle (Wingdings 3 #113) **Location**: Navigation Panel	
Mute	Toggle on and off mute	**Icon**: Speaker (Webdings #088) with "no or don't" slash (Wingdings 2 #087) **Location**: Navigation Panel	

TABLE A-XIII. Audio control standard icons.

ELEMENT	FUNCTION INDICATOR ICON		
	Indicates the audio is muted.	**Icon**: Speaker (Webdings #088) with "no or don't" slash (Wingdings 2 #087) **Text**: Mute **Location:** Status bar	Mute
Play	Starts the playing of audio	**Icon**: Open Triangle (Wingdings 3 #119) **Location**: Navigation Panel	
Stop	Stops the playing of the audio	**Icon**: Open Square (Wingdings #111) **Location**: Navigation Panel	
Access Voice Input Recognition	Toggle on and off voice input recognition	**Icon**: Ear with sound coming in **Location**: Navigation panel	
Status Voice Input Recognition	Voice input recognition is on	**Icon**: Ear (Webdings #079) with sound coming in (Webdings #239) **Text**: Voice Recog On **Location**: Status bar	Voice Recog On
	Voice input recognition is off	**Icon**: Ear (Webdings #079) with sound coming in (Webdings #239) with "no or don't" slash (Wingdings 2 #087) **Text**: Voice Recog Off **Location**: Status bar	Voice Recog Off
Access Voice Output	Toggle on and off voice output	**Icon**: Head with sounds coming out (Webdings #151) **Location**: Navigation panel	
Status Voice Output	Voice output is on	**Icon**: Head with sounds coming out (Webdings #151) **Location**: Status bar	
	Voice output is off	**Icon**: Head with sounds coming out (Webdings #151) with "no or don't" slash (Wingdings 2 #087) **Location**: Status bar	

A.4.5.10 Graphical navigation. When graphical navigation functions are specified by the acquiring activity, the standard icons in Table A-XIV shall be used when applicable.

TABLE A-XIV. Graphical navigation standard icons.

ELEMENT	FUNCTION	INDICATOR	ICON
Save to a disk	Save graphic to a disk	**Icon**: 3.5-inch Floppy disk (Wingdings #060) **Location**: Navigation panel	
Print Prin	t the graphic	**Icon**: Printer (Graphic) **Location**: Navigation panel	
E-mail	E-mail the graphic	**Icon**: Unopened envelope (Wingdings #042) **Location**: Navigation panel	
Save to a folder	Saving graphic to graphic/photo area folder	**Icon**: Folder (Wingdings #048) **Location**: Navigation panel	

TABLE A-XIV. Graphical navigation standard icons.

ELEMENT	FUNCTION	INDICATOR	ICON
Zoom In	Toggle on and off graphic zoom in function.	**Icon**: Magnifying glass with plus (Graphic) **Location**: Navigation panel	
Zoom Out	Toggle on and off graphic zoom out function.	**Icon**: Magnifying glass with minus (Graphic) **Location**: Navigation panel	
Pan graphic	Toggle on and off pan graphic	**Icon**: Open hand (Wingdings #073) **Location**: Navigation panel	
	Move graphic in the pane.	**Icon**: Open hand (Wingdings #073) **Location**: Content pane	

A.4.5.11 Additional navigation. When additional navigation functions are specified by the acquiring activity, the standard icons in Table A-XV shall be used when applicable.

TABLE A-XV. Additional graphical navigation standard icons.

ELEMENT	FUNCTION	INDICATOR	ICON
Back	Navigate back through the previously viewed information.	**Icon**: Arrow Pointing up and left (Wingdings #197) **Location**: Navigation Panel	
Forward	Navigate forward through previously viewed information.	**Icon**: Arrow Pointing up and right (Wingdings #198) **Location**: Navigation Panel	
Undo	Undo last action.	**Icon**: Curled Arrow CCW (Wingdings 3 #081) **Location**: Navigation Panel	
Version information	Display the current IETM software version	**Icon**: Interstate sign (Webdings #100) **Location**: Navigation Panel	
Step Completed	The user completed the step.	**Icon**: Checkbox (Wingdings 2 #082) **Location**: Content pane	☑ Adjust

A.5 **DETAILED REQUIREMENTS.**

A.5.1 IETM functionality requirements. The requirements specified in this appendix are intended to bring about the following minimum results on a consistent basis in designing an IETM:

a. Designing a common look and feel.
b. Designing a standard user interface.
c. Standardizing the visual elements.

The specific level of functionality and user interaction to be provided in IETMs shall be in accordance with the functionality matrix requirements provided in A.5.2.

A.5.2 Functionality matrix. The functionality matrix (Table A-XVII) is intended to allow IETM programs to define their requirements in language that is accepted and understood by industry.

A.5.2.1 Strategy pricing. For a competitive bid, it is anticipated that the bidders would provide the acquiring activity with pricing data based on the filled-out functionality matrix provided by the acquiring activity or provide a completed matrix with pricing information to enable the acquiring activity to conduct a detailed evaluation. Once pricing has been completed, the acquisition officer can review the pricing provided by the bidders with the intent that

comparisons can be made from the completed matrices. These can serve as a basis for fact-finding as well. This matrix can help the acquisition manager evaluate the cost benefit associated with IETMs and trade off higher cost functionality requirements with those of lower cost.

A.5.2.2 Functionality matrix column definitions. The functionality matrix provides a complexity factor, identification of the category, name of the functionality, the requirement, and the paragraph reference that contains the definition of the functionality. The following paragraphs provide an explanation of each column.

A.5.2.2.1 Complexity factor. The Complexity Factor is a relatively weighted number assigned to each feature within the functional categories to indicate the abstracted complexity of a listed IETM feature when compared against the other features within that Functionality Category. A factor of one (1) is used as the baseline value for all measurements with all other factor values being a projected complexity of the listed value times greater than 1. For example, the "Full Word Search" feature of the "Navigational" Functional Category is listed as a 1 feature, while the "Key Word Search" feature is listed as a 2 feature. This would mean that the "Key Word Search" feature is considered to be twice as difficult to develop as the "Full Word Search." However, the "Local Data Annotation" feature, also listed as a 2 feature, is not comparable for complexity measurement against either the "Key Word Search" or the "Full Word Search" features because it is in the "Annotation" Functional Category and both of the others are in the "Navigational" Functional Category.

A.5.2.2.1.1 Linear. A linear IETM for some functionality provides a different complexity factor. An example is a "Fully Formatted/Book Version" which is not as complex as for a non-linear IETM. In some situations, a linear IETM cannot perform the function, in which case a not available (NA) is shown.

A.5.2.2.1.2 Non-Linear. A non-linear IETM for some functionality provides a different complexity factor than a linear IETM. An example is "Filter by Model Series" which is not as complex as for a linear IETM. In some situations, a linear IETM cannot perform functions that a non-linear IETM can, due to the nature of their functionality.

A.5.2.2.2 Category. Identifies the functionality category group by code. The category name and the paragraph number that contains the definition for that category is shown for each category code in Table A-XVI.

TABLE A-XVI. Functionality matrix categories.

Code	Category	Para. Ref.
Ac	Access	A.5.2.3.1
An	Anno tation	A.5.2.3.2
DD	Delivery and Distribution	A.5.2.3.3
DP	Diagnostics and Prognostics	A.5.2.3.4
E	External Processes	A.5.2.3.5
G	G raphics	A.5.2.3.6
L	Li nking	A.5.2.3.7
N	Navigation and Tracking	A.5.2.3.8
P	Prin ting	A.5.2.3.9
S	Special Content	A.5.2.3.10
U	U pdates	A.5.2.3.11
Uo	User Operation Mode	A.5.2.3.11.5

A.5.2.2.3 Functionality. Identifies the functionality title.

A.5.2.2.4 Requirement (Reqmt). Use this column to identify the desired functionality. Use the following codes to indicate these functions: “R” for “REQUIRED” content. “NR” for content that is “NOT REQUIRED” or “O” for optional content that may be required by the Government, but cannot be determined at the time of the contract. All blocks for the selected functionality shall be completed with an “R”, “NR”, or an “O” for IETM acquisition. The blocks that already contain an "R" are required and shall not be changed.

A.5.2.2.5 Paragraph reference. Supplies the paragraph reference to the functionality description.

This page intentionally left blank.

TABLE A-XVII. Functionality matrix.

Complexity Factor					
Linear	Non-Linear	Category	Functionalit y	Reqmt	Paragraph Reference
1 1		Ac	Suspend and Restart		A.5.2.3.1.1
3 3		Ac	Login		A.5.2.3.1.2
2	2	An	Local Data Annotation		A.5.2.3.2.2
1 1		An	Personal Annotation		A.5.2.3.2.3
3 3		An	Redlining Graphics		A.5.2.3.2.4
2 2		An	Redlining Text		A.5.2.3.2.5
1 1		DD	CD-ROM		A.5.2.3.3.1
1 1		DD	DVD		A.5.2.3.3.2
2 2		DD	Network Distribution		A.5.2.3.3.3
1	1	DP	Diagnostics - User-Determined Entry to IETM		A.5.2.3.4.1
2	2	DP	Diagnostics - Software-Driven Entry to IETM		A.5.2.3.4.2
NA 5		DP	Dynamic Diagnostics		A.5.2.3.4.3
NA 5		DP	Prognostics		A.5.2.3.4.4
4 4		DP	System Simulation		A.5.2.3.4.5
4	4	DP	Wire/Fluid System Tracing		A.5.2.3.4.6
3 3		E	Deficiency Report	R	A.5.2.3.5.1
NA 5		E	Knowledge Management		A.5.2.3.5.2
3 3		E	Maintenance Data Collection		A.5.2.3.5.3
3 3		E	Operator Debriefing		A.5.2.3.5.4
3 3		E	Parts Ordering	R	A.5.2.3.5.5
3 3		E	Resource Scheduling		A.5.2.3.5.6
2	2	E	Supporting Technical Data		A.5.2.3.5.7
4 4		G	3-D Modeling		A.5.2.3.6.1
2 2		G	Assembly/Disassembly		A.5.2.3.6.2
1 1		G	Locator Graphics		A.5.2.3.6.3
1	1	G	Pan, Zoom, Expand, Rotate, Magnify		A.5.2.3.6.4
2 2		L	Hot Reference		A.5.2.3.7.1
3 3		L	Hotspotting		A.5.2.3.7.2
1 1		L	Internal References		A.5.2.3.7.3
2	2	L	Link to Separate Parts Data		A.5.2.3.7.4
1	1	L	Table of Contents	R	A.5.2.3.7.5
2 2		N	Audit Trail		A.5.2.3.8.1
3 3		N	Dialog-driven interaction		A.5.2.3.8.2
1 1		N	Exit	R	A.5.2.3.8.3
2	1	N	Filter by Configuration		A.5.2.3.8.4
2	1	N	Filter by Model Series		A.5.2.3.8.5
2	1	N	Filter by Modification		A.5.2.3.8.6
2	1	N	Filter by Skill/Maintenance Level		A.5.2.3.8.7
2	1	N	Filter by Unique Identification Code		A.5.2.3.8.8
2 2		N	Graphical Navigation		A.5.2.3.8.9
1	1	N	History of Traversed Links	R	A.5.2.3.8.10

TABLE A-XVII. Functionality matrix.

Complexity Factor Linear	Non-Linear	Category	Functionalit y	Reqmt	Paragraph Reference
1	1	N	Next and Previous	R	A.5.2.3.8.11
1	1	N	Forward and Back		A.5.2.3.8.12
2	2	N	Search - Context		A.5.2.3.8.13.1
1	1	N	Search - Full Text	R	A.5.2.3.8.13.2
1	1	N	Search - User-Defined Boolean		A.5.2.3.8.13.3
4	3	N	Search - Across Multiple Databases/Files		A.5.2.3.8.13.4
2	2	N	Search - Key Word		A.5.2.3.8.13.5
2	2	N	Simultaneous display of multiple content elements		A.5.2.3.8.14
1 1		N	System/Subsystem Navigation		A.5.2.3.8.15
2	2	N	Tear-off Window Capability		A.5.2.3.8.16
1	1	N	User Creation of Bookmarks		A.5.2.3.8.17
3 3		N	Voice-Activated Commands		A.5.2.3.8.18
1	2	P	Work Package Specific Printing		A.5.2.3.9.1
4	5	P	Fully Formatted/Book Version		A.5.2.3.9.2
2 2		P	Print Linked Data		A.5.2.3.9.3
1 1		P	Print Screen	R	A.5.2.3.9.4
1 1		P	Print Frame		A.5.2.3.9.5
1 1		S	Alerts		A.5.2.3.10.1
4 4		S	Animation		A.5.2.3.10.2
2 2		S	Audio		A.5.2.3.10.3
1	1	S	Content-Sensitive Help (Technical Data Help)	R	A.5.2.3.10.4.1
2	2	S	Context-Sensitive Help (Viewer Help)	R	A.5.2.3.10.4.2
3 3		S	Motion Video		A.5.2.3.10.5
1 1		S	Digital Photos		A.5.2.3.10.6
3 3		S	User Training		A.5.2.3.10.7
1 2		S	Browsing		A.5.2.3.10.8
1 1		S	Selectable Text		A.5.2.3.10.9
2 3		S	Selectable Graphics		A.5.2.3.10.10
		S	Reset Area *NOTE* *When specified by the acquiring activity, the following reset area requirements are required.*		A.5.2.3.10.11
1	*2*	*S*	*Reset User Interface To Standard Default*	*R*	
1	*2*	*S*	*Minimize IETM*		
1	*1*	*S*	*Print Frame*		
4	*5*	*S*	*Change to Page View*		
1	*3*	*S*	*Open New IETM*		
1	*1*	*S*	*Suspend*		
1	*1*	*S*	*Restart*		
2	*2*	*S*	*View Revision Summary*	*R*	
1	*1*	*S*	*Back*		

TABLE A-XVII. Functionality matrix.

Complexity Factor					
Linear	**Non-Linear**	**Category**	**Functionalit y**	**Reqmt**	**Paragraph Reference**
1	*1*	*S*	*Forward*		
1	*2*	*S*	*Abort Browse Mode*		
2	*2*	*S*	*Toggle Screen Panels/Bars On and Off*		
2	*2*	*S*	*Drill Up/Drill Down*	*R*	
1	*1*	*S*	*Other Custom Functions*		
1	*1*	*S*	*Exit Reset Area*	*R*	
2	2	U	Active Change Indications and markings	R	A.5.2.3.11.1
2	2	U	Block Cycle with /Urgent Changes		A.5.2.3.11.2
1 1		U	Full Revision		A.5.2.3.11.3
2	2	U	Near Real-Time Updates		A.5.2.3.11.4
2 2		Uo	Network Connectivity		A.5.2.3.11.5.1
2	2	Uo	Network Connectivity - Context Filtering		A.5.2.3.11.5.1.1
2	2	Uo	Network Connectivity - Update Capability (Partial)		A.5.2.3.11.5.1.2
4	4	Uo	Network Connectivity - Update Capability (Full Revision)		A.5.2.3.11.5.1.3
1 1		Uo	Stand-Alone Mode		A.5.2.3.11.6
3	3	Uo	Stand-Alone Mode -Context Filtering		A.5.2.3.11.6.1
1	1	Uo	Stand-Alone Mode - Update Capability (Full Revision)		A.5.2.3.11.6.2
4	4	Uo	Stand-Alone Mode - Update Capability (Partial)		A.5.2.3.11.6.3
2	3	Uo	Web Browser Viewable		A.5.2.3.11.7

Legend
R Required
P Prohi bited
O Optional

REMARKS FOR MATRIX

A.5.2.3 Functionality definitions. The following definitions provide descriptions of each of the functionalities identified in the matrix as well as some considerations to be made and the range of capabilities that may be addressed therein.

A.5.2.3.1 Access (Ac) category. Access is the functionality that allows or restricts users to view specific IETM data.

A.5.2.3.1.1 Suspend and restart. Suspend and restart is the capability to suspend an IETM maintenance session at any point and then provide the maintainer with the ability to restart at the point of suspense. A prerequisite for this is "Audit trail" A.5.2.3.8.1. This capability extends beyond a user session and retains local data. For example, during the performance of a maintenance session, a part is removed. The replacement part is not available in supply. The session is suspended and subsequently restarted after the part becomes available. At the time of restart, the user shall be advised that some key parameters/condition settings may be out-of-date. The system shall support three exit modes.

a. Complete (save and update history)
b. Abort (do not save or update history) (Browse mode only)
c. Suspend (save current session state and do not update history)

A.5.2.3.1.2 Login. The login shall be used to identify key information by the user and/or weapon system. A password for login may be required.

A.5.2.3.2 Annotation (An) category. The annotation category functionality adds an electronic note to comment or provide additional explanation of the technical data. If the annotation functionality is included in the IETM, the proponent should have procedures in place to manage the configuration of the IETM.

A.5.2.3.2.1 Global data annotation. Global data annotation functionality allows the entry, storage and display of globally applicable supplemental data to the IETM. Global data annotation is a prohibited functionality. It shall not be acquired for Army IETMs.

A.5.2.3.2.2 Local data annotation. This functionality shall allow the storage of locally applicable data. These annotations shall be limited in scope and require approval by the local approval process. This feature allows local maintenance activities to supplement the IETMs. Local accessible documentation is a one-way feature, which can only be added and may not be deleted. A prerequisite for this is "User Operation Mode – Update." (Refer to A.5.2.3.11.5.1.2, A.5.2.3.11.5.1.3, A.5.2.3.11.6.2, A.5.2.3.11.6.3, and A.5.2.3.8.1.) An example of local data annotation is: "The maintainer may be required to use additional filtering in a desert environment."

A.5.2.3.2.3 Personal annotation. Personal annotation shall be added or deleted at the end user's discretion and shall not be retained at the end of the maintenance session. It is not the intent that the personal annotation persists with the IETM. An example of a personal annotation is: "Noticed that radome latch is broken on left side notify radar shop."

A.5.2.3.2.4 Redlining graphics. This functionality shall provide the capability to annotate graphics through the use of an overlay freehand-type drawing facility as shown in Figure A-16. The capability exists to save redline markups and any associated attributes. This functionality can be used during a review process.

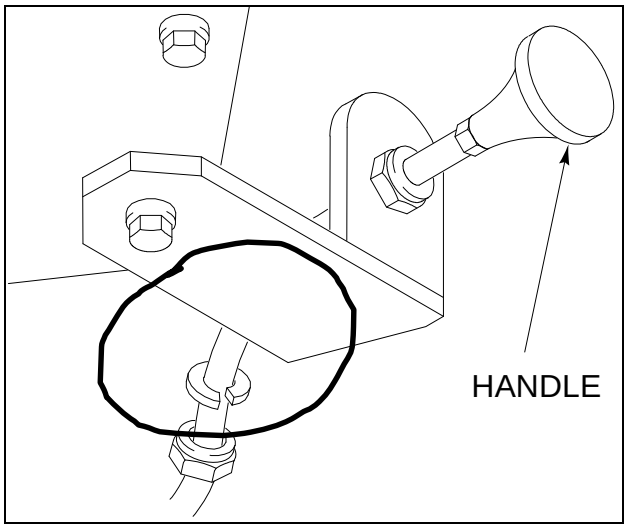

FIGURE A-16. Example of redlining a graphic.

A.5.2.3.2.5 Redlining text. This capability shall be provided only during the review process to annotate text using markings for deletions and insertions. The comment annotation shall be used in conjunction with the redlining to denote the reason(s) for the change.

A.5.2.3.3 Delivery and distribution (DD) category. This capability shall identify the media to be delivered from the contractor to the government and/or to be distributed to the soldier. Selection of the desired IETM media will drive costs; however, the most significant consideration is the readiness of the infrastructure at the user level for whatever media is acquired.

A.5.2.3.3.1 Compact Disk – Read Only Memory (CD-ROM). Distribution and/or delivery shall be accomplished by Compact Disk – Read Only Memory (CD-ROM). Such physical distribution methods typically entail the issue of a complete database thus replacing the data in use. This replacement constitutes a block change update and is performed on a periodic basis and requires a CD-ROM-compatible drive.

A.5.2.3.3.2 Digital Versatile Disc (DVD). Distribution and/or delivery shall be accomplished by Digital Versatile Disc (DVD). A DVD provides many of the same features of distribution and/or delivery by a CD-ROM, but with greater capacity. It also requires a DVD-compatible drive. (Refer to A.5.2.3.3.1.)

A.5.2.3.3.3 Network distribution. Distribution by Internet (connections to the World-Wide-Web (WWW)) or Intranet (internal to one network) shall consist of direct transfer from one computer system to another. Distribution may be via secure file transfer protocol (FTP), Hypertext Transfer Protocol (HTTP), or other secure transfer protocols. Bandwidth, security, and operational deployment considerations shall be addressed. This may enable "Near real-time updates." (Refer to A.5.2.3.11.4.) A prerequisite for network distribution is "Network connectivity." (Refer to A.5.2.3.11.5.1.)

A.5.2.3.4 Diagnostics and prognostics (DP) category. Diagnostics span from basic stand-alone troubleshooting procedures to integration with the weapon system and other maintenance systems. Prognostics may include health monitoring and linkage to autonomic logistics systems. IETM diagnostics and prognostics can be a significant benefit in reducing maintenance times and total ownership costs; however, they can also be a sizable cost driver in IETM development.

A.5.2.3.4.1 Diagnostics - User-determined entry to IETM. Tasking for troubleshooting procedures shall be primarily textual references. 'If statements' (e.g., if a light is on as an example) provide alternatives in a narrative form. The user determines a starting point for the maintenance action, through the use of a predefined fault tree or index table.

A.5.2.3.4.2 Diagnostics - Software-driven entry to IETM. The appropriate maintenance action starting point shall be software determined through use of an inference or logic engine. The user is provided with the appropriate starting point for fault isolation. Various inputs from personnel, system, and multiple fault codes are analyzed. The analysis shall determine if a relationship exists between the fault code(s) and information, then task appropriate actions as a result. A prerequisite for diagnostics for software-driven entry to IETM is "Dialog-driven interaction." (Refer to A.5.2.3.8.2.)

A.5.2.3.4.3 Dynamic diagnostics. Diagnostic capabilities that shall use on-board monitoring devices (e.g., Built-in test (BIT)) and/or support/test equipment to provide enhanced capability for fault detection and isolation. Dynamic diagnostics direct fault isolation and troubleshooting shall be based on results returned from the weapon system rather than inputs received from the maintainer. With this type of diagnostics, no pre-defined paths exist in the troubleshooting data and the paths are generally model-based.

A.5.2.3.4.4 Prognostics. Prognostics shall predict the possible component degradation or impending failure, which will allow maintenance personnel to replace components based on their actual condition. The goal is autonomic logistics, which uses electronic information collected from the weapons system to determine, plan, and perform needed maintenance with minimal downtime. Prerequisites for prognostics are "Maintenance data collection" A.5.2.3.5.3 and "Network connectivity" A.5.2.3.11.5.1.

A.5.2.3.4.5 System simulation. This functionality shall include the capability to represent the behavior or characteristics of the system function/malfunction to determine or reenact the problem as shown in Figure A-17. Capabilities can include identifying continuity in wiring diagrams and circuit simulation, for passive and active circuits including activating switches, applying power, etc. These capabilities can also be used to model hydraulic, fuel, pneumatic, and other systems.

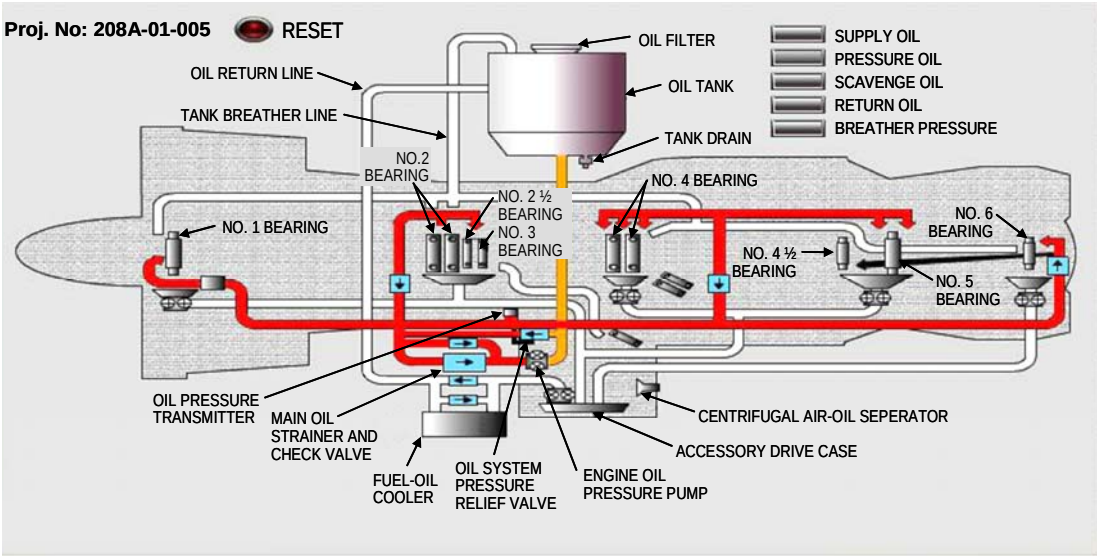

FIGURE A-17. Example of a system simulation.

A.5.2.3.4.6 Wire/Fluid system tracing. This functionality shall provide the capability to select a wire, fluid, pneumatic, or HVAC line, in a diagram or schematic and have continuity highlighted through the circuit or schematic as shown in Figure A-18.

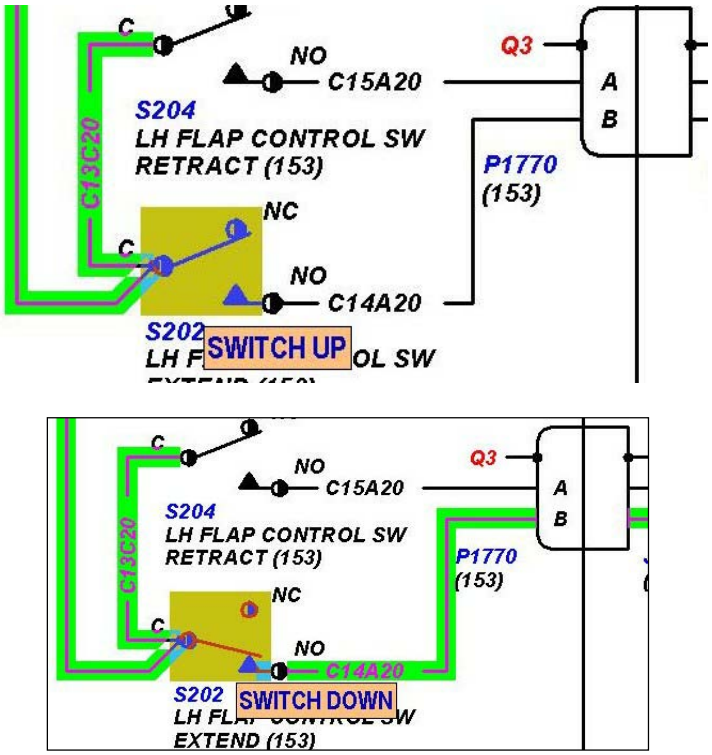

FIGURE A-18. Example of a wire/fluid system tracing.

A.5.2.3.5 External processes (E) category. The IETM environment has the potential to provide greater functionality by interacting with external processes, which are outside the technical data, to retrieve and transmit information.

A.5.2.3.5.1 Deficiency report (User feedback) (Required). The functionality shall provide a method for users to capture and transmit errors and recommended changes from the IETM. The different complexity considerations include improvement reporting tracking, local base collection, and management of improvement reporting. The complexity of this will be determined by the level of integration with the deficiency reporting system and the type of reporting structure:

a. Paper trail reporting
b. Electronic Reporting
c. LAN reporting
d. SATCOM reporting

A.5.2.3.5.2 Knowledge management. A knowledge management system shall model an organization's knowledge assets and environment to enhance its ability to deliver on its mission. It provides for information tracking, access, and synthesis in coordination with organizational culture, values, and guidance. Both tacit and explicit intellectual capital may be leveraged through electronic integration of data and human interaction (as in locating subject matter expertise and defining communities of practice). This provides leadership with a rapid path to understanding discrete problems and changes from a strategic perspective. One of the possible benefits is technical maintenance data gathered through IETM audit logs, when integrated with real-time situational understanding, resource availability, the velocity of resource distribution, and subject matter expertise may suggest to command and control that a restructuring of the logistics footprint is needed to maximize lethality in a given arena. Prerequisites for knowledge management are “Maintenance data collection” A.5.2.3.5.3, “Parts ordering” A.5.2.3.5.5, “Login” A.5.2.3.1.2, and “Audit trail” A.5.2.3.8.1.

A.5.2.3.5.3 Maintenance data collection. This functionality shall capture and transmit configuration change data (e.g., removed and installed P/N information), tasks authorized, tasks performed, results of that work (e.g., state table, audit trail), etc. This update shall feed an external data repository or maintenance application. Prerequisites for maintenance data collection are “Audit trail” A.5.2.3.8.1 and “Login” A.5.2.3.1.2.

A.5.2.3.5.4 Operator debriefing. This functionality shall include interface with operator and/or maintenance debriefing system for selecting task assignments. It may also include development of maintenance actions based on operator and weapon system inputs.

A.5.2.3.5.5 Parts ordering (Required). This functionality shall allow parts ordering capability that is linked with an integrated supply system. This functionality shall not circumvent the supply system protocol.

A.5.2.3.5.6 Resource scheduling. This functionality shall have the capability for task planning, resource allocation, execution, monitoring and/or intervention coordinated among cooperating systems by multiple human or software agents (entities). These agents act intelligently against a set of constraints to minimize conflicts and optimally manage the goals of the system users. Automatic resource scheduling is characteristic of a complex autonomic logistics system. An example is an engine maintainer’s planned maintenance activity may be modified from ‘test and

repair' to 'remove and replace' based on reliability data, mission availability requirements, and spares availability data from a ship within range.

A.5.2.3.5.7 Supporting technical data. This capability shall include links to general, part, and process manuals, commodity books, etc. It may include links to commercial manuals where applicable. Further definition is required for determining if context sensitive linking is required or simply calling up an instance of the data source. System managers must also define if linked data sources are to be maintained locally, networked, or by linking though a network and Internet/Intranet. Specific viewers may be needed to view these manuals.

A.5.2.3.6 Graphics (G) category. Various levels of graphics display, interactivity, and navigation can be implemented through IETMs. The more complex graphical navigational techniques often come at a premium for both cost and system hardware/software requirements. Examples of these functionalities include:

a. Point and click on a locator graphic for the purpose of "drilling down" to graphic details
b. Links to textual or tabular information
c. Highlighting specific connections in a circuit
d. System simulation expressed graphically
e. Full three-dimensional (3-D) models that can be rotated with parts removed

A.5.2.3.6.1 3-D modeling. This is modeling of the system using three-dimensional, solid object graphical figures that shall be used to allow virtual assembly, disassembly, removal, and installation of parts of the weapon system using animation, simulation, and/or virtual reality concepts. Levels of capability may include fly through (navigation through a three-dimensional model) type viewing. The degree of simulation, animation, and virtual reality concepts can dramatically affect cost. Prerequisites are "Assembly/Disassembly" A.5.2.3.6.2 and "Animation" A.5.2.3.10.2.

A.5.2.3.6.2 Assembly/Disassembly. This is a graphical figure that shall allow virtual assembly, disassembly, removal, and installation of parts of the weapon system as shown in Figure A-19. These may be implemented through linked drawings or through manipulation of modeled vector graphics. Prerequisite is "Animation" A.5.2.3.10.2.

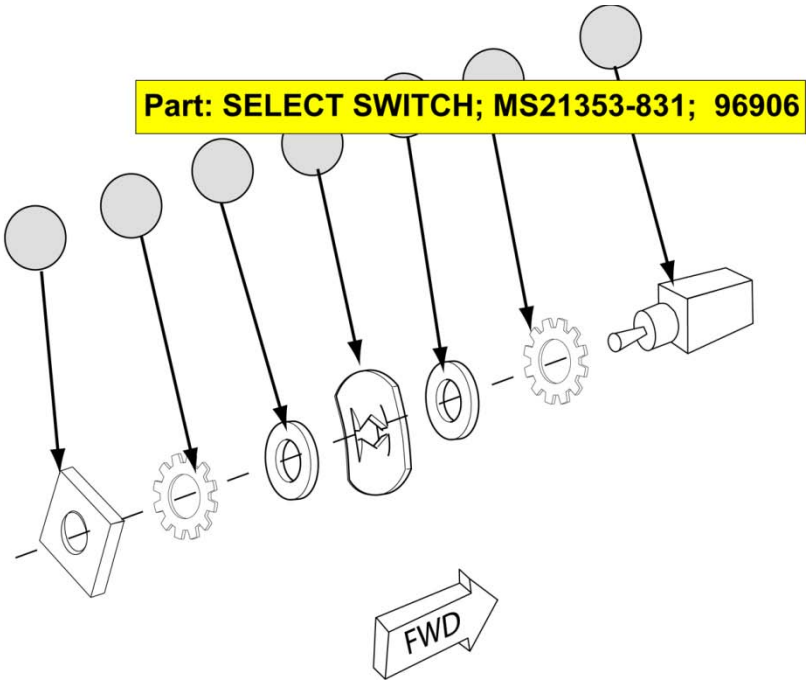

FIGURE A-19. Example of assembly/disassembly graphic.

A.5.2.3.6.3 Locator graphics. Locator graphics show where a component is located relative to other components as shown in Figure A-20 and Figure A-21.

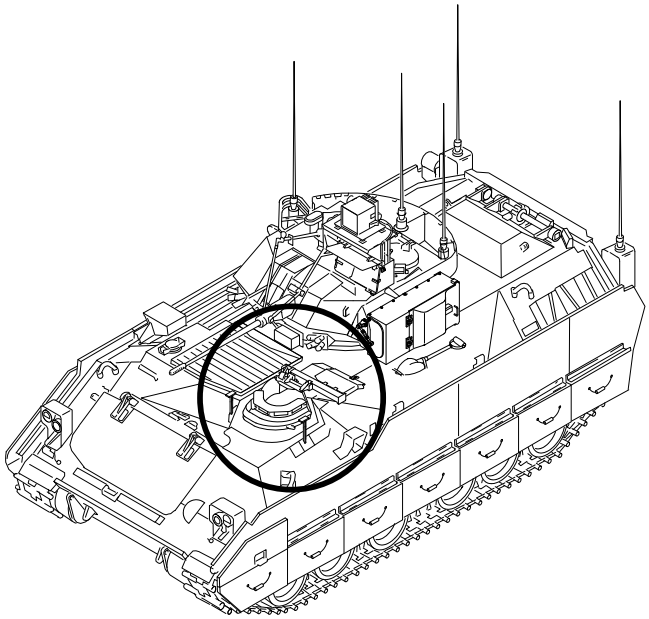

FIGURE A-20. Example of a locator graphic.

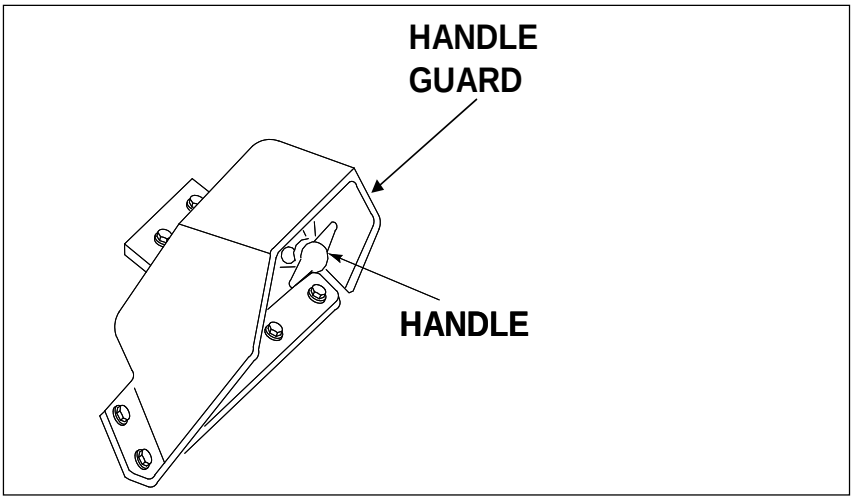

FIGURE A-21. Example of a locator component graphic.

A.5.2.3.6.4 Pan, zoom, expand, rotate, magnify. Graphical controls shall be provided to perform pan, zoom, expand, rotate, and magnify on a graphic. Additional functionality may include spyglass view, text search, graphics, and window resizing. Consideration should be given to the quality or limitations of the source data.

A.5.2.3.7 Linking (L) category. IETM basic linking functionality is defined as essentially link access or connections to the data within the IETM such as from the TOC to the applicable IETM section. Additional linkage such as cross-references may require some additional effort to maintain. Linking to data items external to the IETM can also be acquired. These links may be to resources such as material handling information or for integration with other related information.

A.5.2.3.7.1 Hot reference. This functionality shall provide the capability to display additional content (e.g., acronym, tool tip, etc.). An example is a mouse over the word IETM would generate popup text box with "Interactive Electronic Technical Manual."

A.5.2.3.7.2 Hotspotting. This functionality shall have the capability for links to be enabled within a graphic as shown in Figure A-22. Links may include reference to detail breakouts, next higher assemblies, part ordering information, parts breakdown data, and procedures from logic trees. These can be at various levels and include both raster- and vector-based graphics. The following are two hotspotting examples.

a. Links to related graphics. Links can be to breakdown illustrations showing greater detail, next higher assembly, or to locator art.
b. Links to related text. Can include links to procedural information from a logic or troubleshooting tree.

REMOVE GUNMOUNT SUPPORT/TRACK (A)ME

1. **Remove Skate Mount Rack (Figure 1, Item 4) from Gun Mount Support (Figure 1, Item 5).**

   a. Remove screw (Figure 1, Item 2) and remaining stop (Figure 1, Item 1) from gun mount support (Figure 1, Item 5) and track (Figure 1, Item 4).

   b. Remove six screws (Figure 1, Item 3) and track (Figure 1, Item 4) from gun mount support (Figure 5, Item 1).

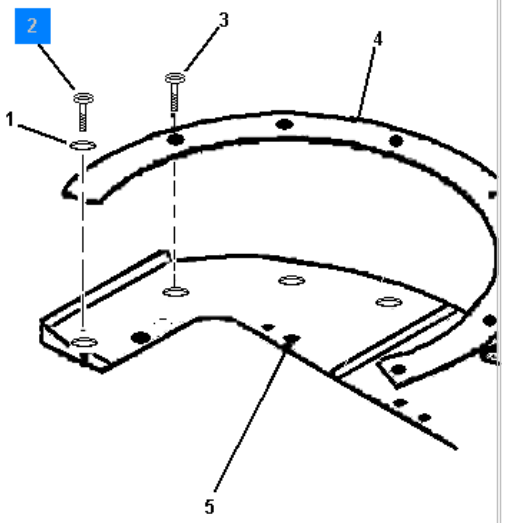

Figure 1. Gun Mount Support

FIGURE A-22. Example of hotspotting.

A.5.2.3.7.3 Internal References. Internal cross-references shall link to related data that may be accessed from one view in a presentation to another by the operator through navigating icons or links. Consideration must be given for bi-directional links. The bi-directional (go sub) returns, after completing action or procedure, to original referenced link.

A.5.2.3.7.4 Link to separate parts data. Linkage from a maintenance task or narrative shall be provided to a separate parts display in the current or separate window.

A.5.2.3.7.5 Table of contents (Required). A TOC listing all work packages, figures, and tables shall be prepared for all IETMs. They shall have the exact same title as they appear in the IETM. Figures and tables shall be listed, in the order as they appear, under the corresponding work package. A linear IETM shall list the work packages in the same order as they appear. A non-linear IETM shall include a list of systems/subsystems or functional groupings with their associated work packages. The TOC shall contain a link to the "How-to-Use" information and to the authentication block and may contain links to other useful information such as warning summary, feedback, etc.

a. The security classification, if any, of work packages, figures, and tables shall be indicated.

b. Figures identified in the TOC shall be linked and listed under the corresponding work package by the figure number and title of each figure. When an IETM includes the parts information, the listing of parts information figures is optional.

c. Tables identified in the TOC shall be listed under the corresponding work package by the table number and title of each table.

d. The following requirements are applicable to parts information entries.

(1) The parts information introduction work package **<introwp>** shall be the first work package listed in the parts information.

(2) Titles of parts information work packages, including the FGCs as applicable, shall be listed by the same nomenclature and in the same sequence in which they appear in the first tabular listing in the work package. The figure number may be included in the work package title.

(3) When multiple functional groups are under a single parts information work package, each functional group tabular list title may be included as a subordinate table of content entry.

(4) NSN, P/N, reference designator, and, when specified, the cross reference indexes shall be listed.

A.5.2.3.7.5.1 Authentication block **<authent>**. The authentication block, as provided by the acquiring activity, shall be accessed from the TOC. TM information for the authentication block frame may be linked.

A.5.2.3.7.5.2 Feedback. The user feedback shall be accessed from the TOC.

A.5.2.3.8 Navigation and tracking (N) category. IETMs exhibit a number of different navigation methods that enable linear and nonlinear access through the data. Features such as “forward” and “back,” search, and the use of bookmarks are considered to be relatively fundamental and consistent with most Web-based data presentation techniques. Higher complexity navigation techniques include dialog-driven interaction, voice-activated commands and various filtering techniques. Examples of filtering characteristics are model number, identification number (e.g., tail number or vehicle identification number (VIN)), modification performed, and user qualifications. Tracking provides the ability to allow recording and subsequent retrieval of IETM activity, as in an audit trail. Levels of audit trails include a history of the current IETM session (browser history for data traversed), logging all actions performed for maintenance data collection, and integration with training and security systems.

A.5.2.3.8.1 Audit trail. This functionality shall capture all user and IETM interaction. Examples are shown in Figure A-23 and Figure A-24.

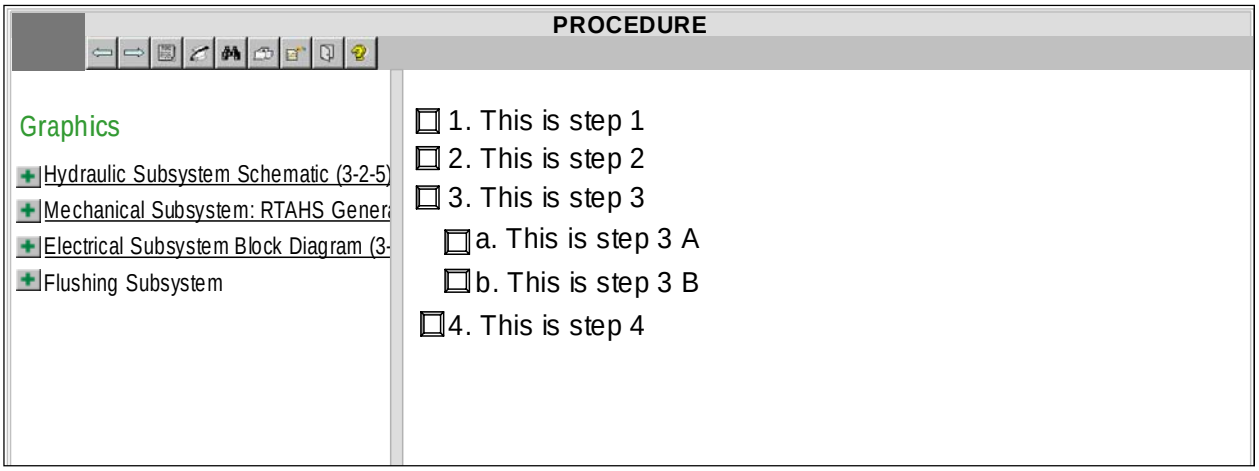

FIGURE A-23. Example of procedure checklist.

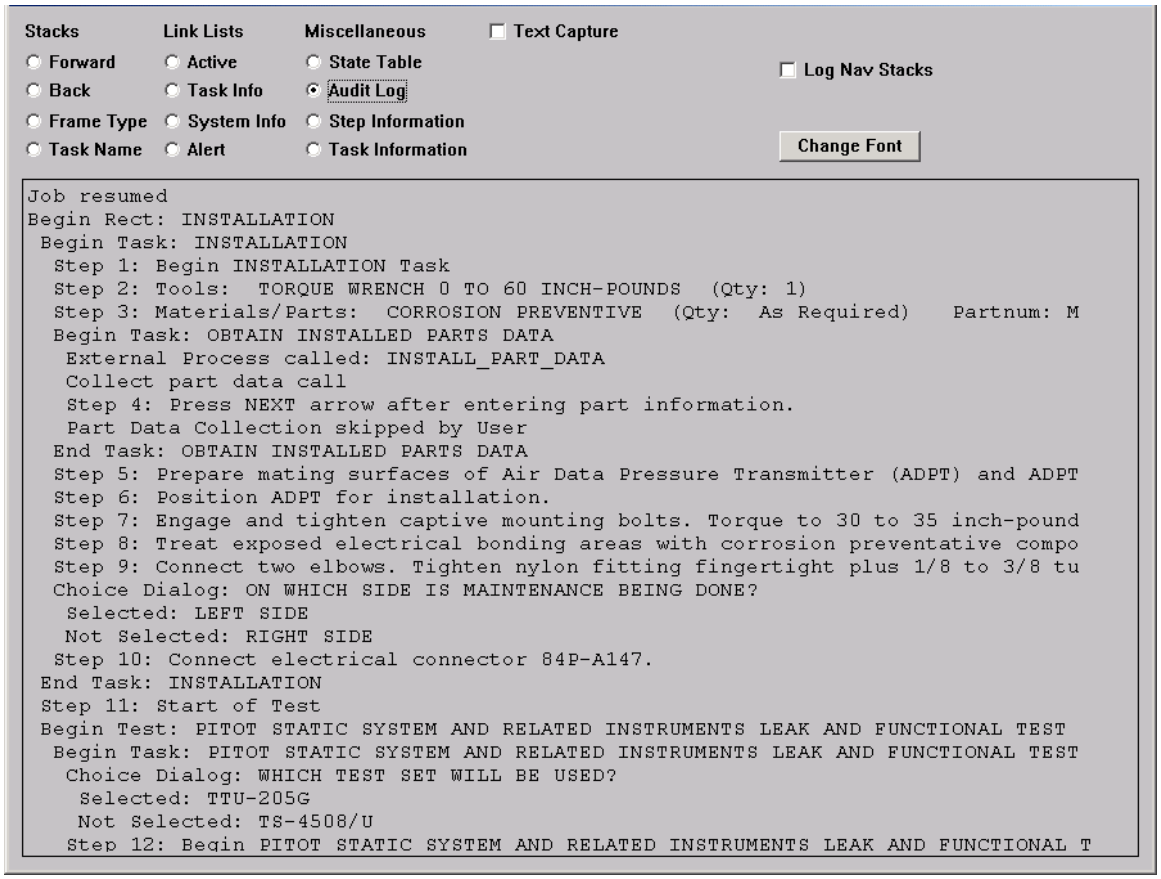

FIGURE A-24. Example of an administrative log.

A.5.2.3.8.2 Dialog-driven interaction. This functionality shall allow the user to directly feed information to the IETM environment. The IETM would cue the user to input specific data. The feature implies that at some point the IETM would then respond to the information entered. An example is: During a troubleshooting procedure, the IETM would open a dialog box that states "Enter the voltage reading at TP 5." If the user types in 5 (a nominal value), the IETM jumps to the next step in the procedure. On the other hand, if the user enters 0 (a fault level reading for a short) the IETM might jump to a remove and replace procedure.

A.5.2.3.8.3 Exit (Required). This function shall initiate the exit process that closes the IETM session. The user of the IETM shall always be asked for the confirmation that he or she wants to exit the IETM. If the IETM has session control capabilities such as suspend and restart or browse mode, then additional dialogs shall appear prompting the user for what course of action to take. For example, if suspend is used, the current state tables and position in the IETM is maintained, otherwise all information concerning state tables and position shall be cleared.

A.5.2.3.8.4 Filter by configuration. This functionality is a feature that shall narrow the information presented to the user to that associated with a specific configuration of the end item. In many cases, a specific end item is changed from the baseline configuration to a different configuration. A user login may be the method used to enter the configuration that the IETM would display.

A.5.2.3.8.5 Filter by model series. This functionality is a feature that shall narrow the information presented to the user to that associated with a specific model series of the end item. Such filtering may be pre-defined or dynamic. A user login may be the method used to enter the model series that the IETM would display. An example is an "A" model aircraft is a single seat configuration; a "B" model aircraft is a two-seat configuration. In this example, the canopy of each aircraft model is physically different. When a technician selects the "A" model for viewing, only the single seat configuration will be presented.

A.5.2.3.8.6 Filter by modification. This functionality is a feature that shall narrow the information presented to the user to that associated with a specific modification rather than the end item being modified. A user would select specific modification tracking numbers and have the data unique to that modification presented. For example, MWO (Modification Work Order) 99-0013 upgraded the landing gear left support strut from P/N 111500051354-001 to number 111500051354-003. Filtering by MWO number would present the appropriate part and maintenance data as show in Figure A-25.

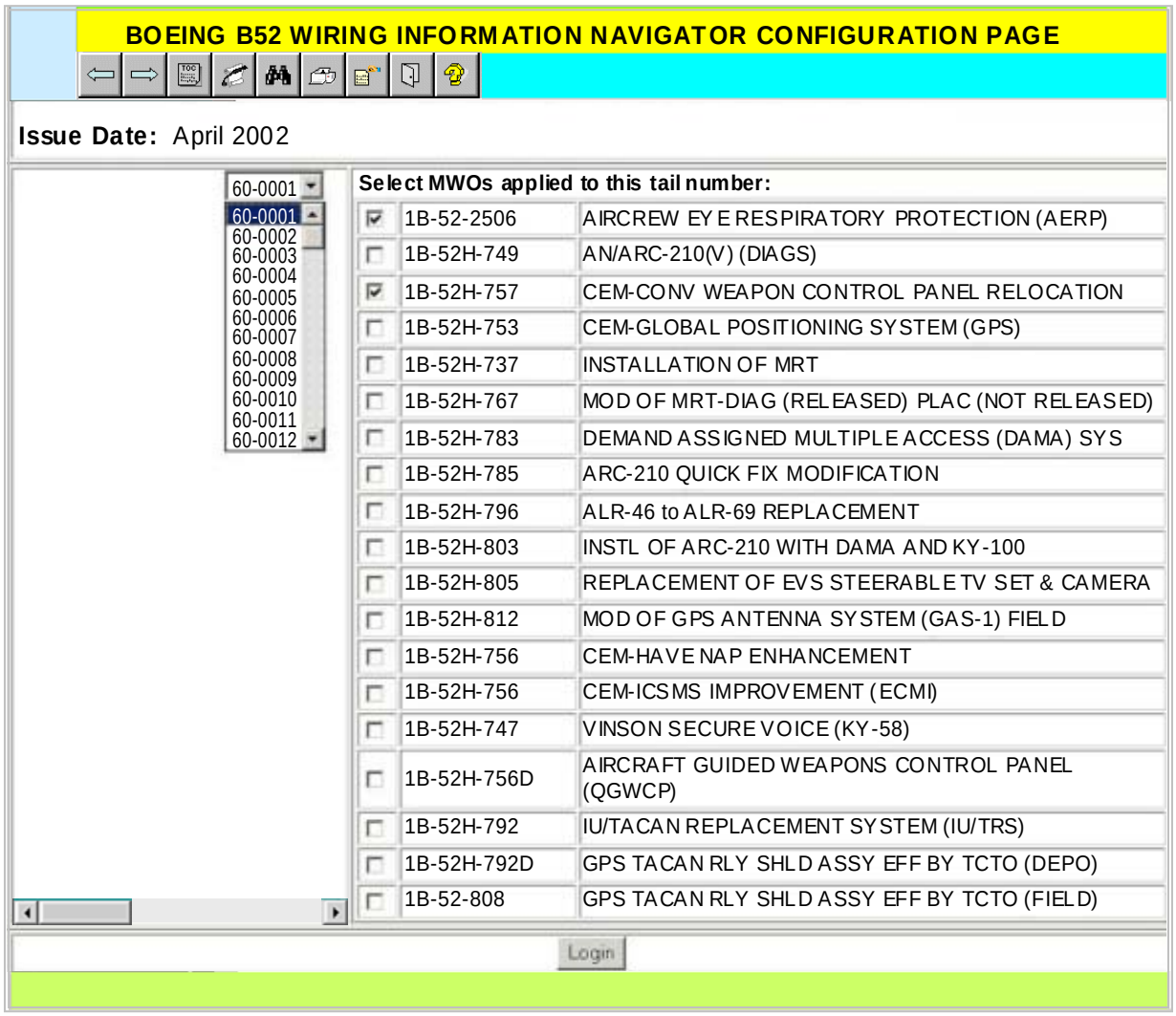

FIGURE A-25. Example of access by MWO.

A.5.2.3.8.7 Filter by skill/maintenance class. This functionality is a feature that shall narrow the information presented to the user's specific user skill or maintenance class. A user login may be the method used to access the level of proficiency the IETM would display.

A.5.2.3.8.8 Filter by unique identification code. This functionality is a feature that shall narrow the information presented to the user with a specific, unique identifier such as tail number, hull number, or VIN. A user login may be the method used to enter the identification code the IETM would display.

A.5.2.3.8.9 Graphical navigation. This functionally shall provide the capability to navigate the IETM through graphical representation of the system and its components. The prerequisite for graphical navigation is "Hotspotting" A.5.2.3.7.2. An example is: from a graphical overview of the aircraft system, the user selects a wing. A graphical overview of the wing is presented. The user then selects the flaps. A graphical overview of the flaps is presented. The user selects the actuator. Information on the actuator is presented.

A.5.2.3.8.10 History of traversed links (Required). This functionality is a navigational feature that shall track and list each location (link) a user sees along the navigational path through an IETM. Where allowable, the reader shall have the ability to bring the list up and use each location (link), in the history list, as a link back to a point in the path. This feature is useful when flipping back and forth between several data types or components of the unit under maintenance. For example - The user opens the IETM to the Front Matter (A). Follows the link to the section on the landing gear (B). Follows a reference link to an adjustment procedure (C). The history of traversed links will be discretely listed as C, B, A.

A.5.2.3.8.11 Next and previous (Required). Next and previous are navigational functions that shall take the user through a procedure in a sequential manner. For example, a user performs steps 1 through 4 in order. The user is asked a branch question in step 4. The user answers the question and selects "next." The branch question is evaluated and the results are such that user is taken directly to step 8. If the user selects "previous" at step 8, the user will go to step 7 and not to step 4 as would occur if the user selected "back." (Refer to A.5.2.3.8.12 for a definition of "back.")

A.5.2.3.8.12 Forward and back. Forward and back shall have the same meaning as used in a "traditional" Web browser. These functions shall permit re-navigation through previously viewed data. For example, a user performs steps 1 through 4 in order. In step 4, the user is asked a branch question. The user answers the question and selects "next." (Refer to A.5.2.3.8.11 for a definition of "next.") The branch question is evaluated and the results are such that user is taken directly to step 8. If the user selects "back" at step 8, the user will return to step 4. If the user then selects "forward" the user will go from step 4 to step 8 without having to answer the branch question and have it re-evaluated.

A.5.2.3.8.13 Search. Search features are as follows.

A.5.2.3.8.13.1 Search - context. A feature that shall allow the user to search within an IETM or data sources within a particular context (e.g., parts, steps, tables). The data source shall contain predefined context-sensitive elements. An example is shown in Figure A-26. The content search is of a maintenance task "Clean" in an IETM. The topic "clean" is selected and then the topic "Maintenance Task" in the context search window is chosen. "Search" button is then selected to start the search of the maintenance task "clean" in the IETM.

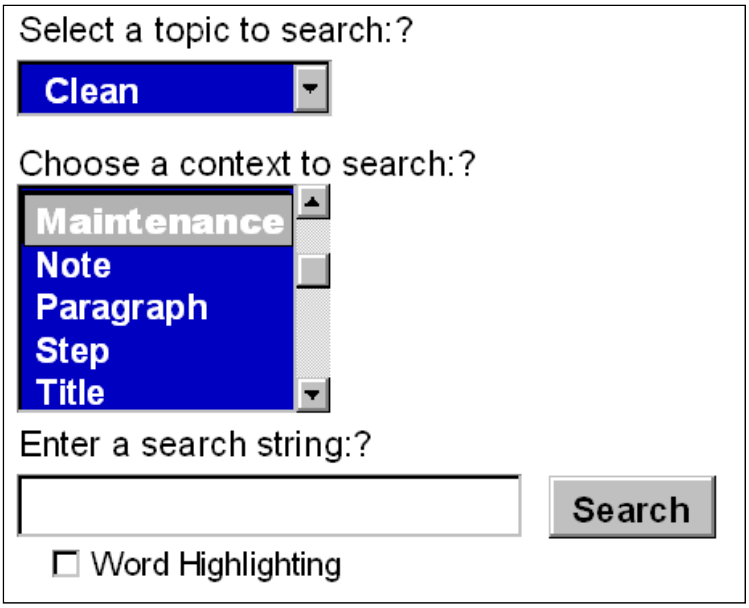

FIGURE A-26. Example of context search.

A.5.2.3.8.13.2 Search - Full text (Required). A navigational feature shall allow the user to search for any words or phrases within an IETM. This feature shall not depend upon the predefinition of key words. For example, in searching for “IFF” the user may find “IFF,” “difference,” “TIFF,” etc., depending on the search criteria.

A.5.2.3.8.13.3 Search - User defined Boolean. This is a search feature that shall permit the logical association of terms to narrow the results of the search by scope (work package, IETM, database, etc.). Commonly supported logic include instances of both x and y appear (Logical AND), instances where neither x nor y appear (Logical NOR), and instances where only x or only y appear (Logical EXCLUSIVE OR).

A.5.2.3.8.13.4 Search - Across multiple databases/files. This is a search feature that shall allow the user to look for Key Words (assumes common key words across databases) or Full Text instances in several different data collections (e.g., Databases, IETMs).

A.5.2.3.8.13.5 Search - Key word. This is a search feature that shall allow the user to search an IETM for occurrences of a specific word. System-specific "key words" are predefined with links to their location in the data. This provides benefits similar to an Index in a paper document. Associated advanced features might include: (1) links to the portion of the IETM containing the word; (2) a “word wheel” that narrows the focus of search with each letter typed into a dialog box; and (3) searches across multiple data sources. For example, a user might search for the term "IFF.” The Key Word Search would locate each pre-identified occurrence of the term in the data. This will find all occurrences of “IFF” that have been predefined as a key word, but not find all occurrences of the letters “IFF.”

A.5.2.3.8.14 Simultaneous display of multiple content elements. This functionality shall establish a relationship between content elements (text, tables, graphics, etc.) by allowing simultaneous display of those elements. The display of either element shall require the display of the other as shown in Figure A-27.

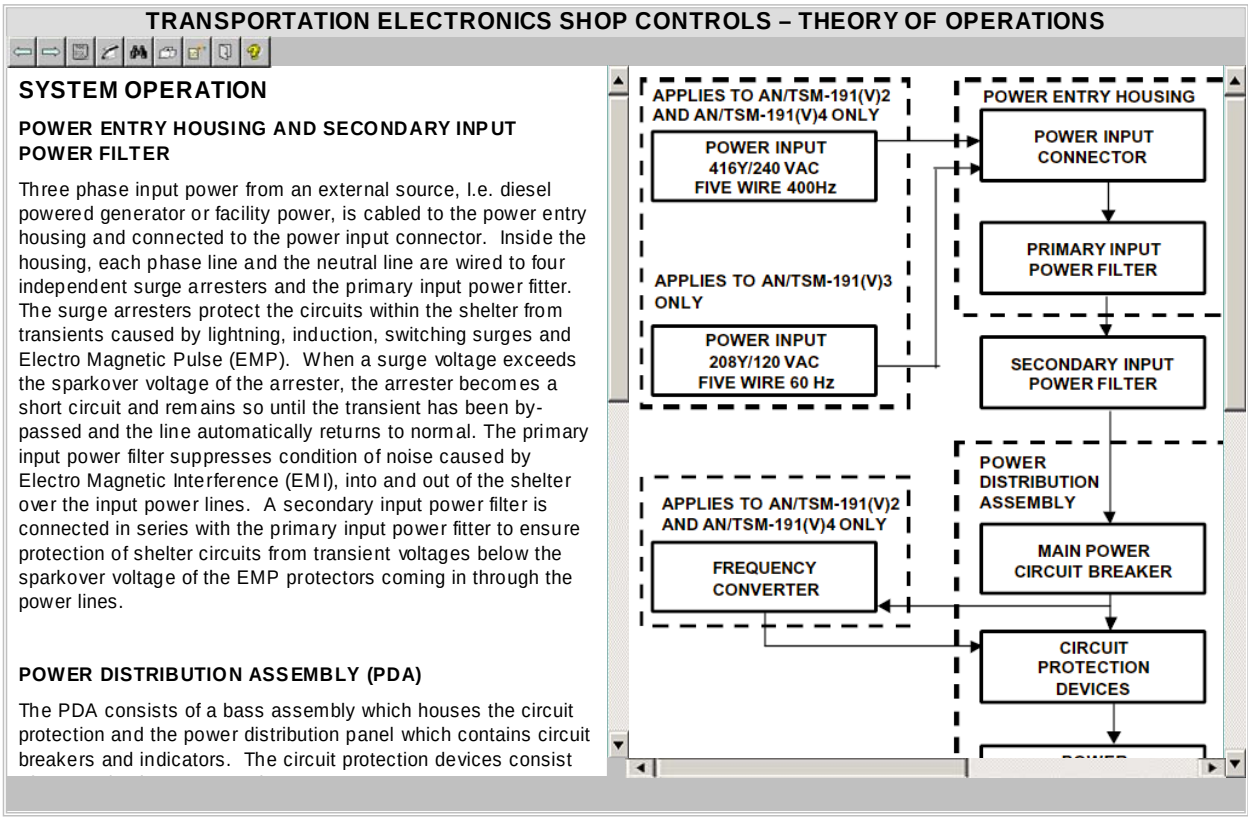

FIGURE A-27. Example of a simultaneous text and graph display.

A.5.2.3.8.15 System/Subsystem navigation. This is a navigational feature that shall allow the user to follow a top-down path through the breakdown structure of a system. The user follows a physical or functional breakdown to the next lower assembly and then to the next lower assembly from that. For example, a helicopter mechanic might begin the navigation of an IETM at the helicopter level. The next step would be to go down to the airframe. From the airframe, the mechanic might pick the cockpit. The next subsystem might be the Pilot's Seat, and the final topic might be the forward-rearward adjustment.

A.5.2.3.8.16 Tear-off window capability. This viewer navigation function shall provide the capability to capture an image of the existing pane/screen and then allow the user to navigate forward as shown in Figure A-28. This shall provide the capability to display the "torn-off" image for reference without requiring navigation back to the pane/screen.

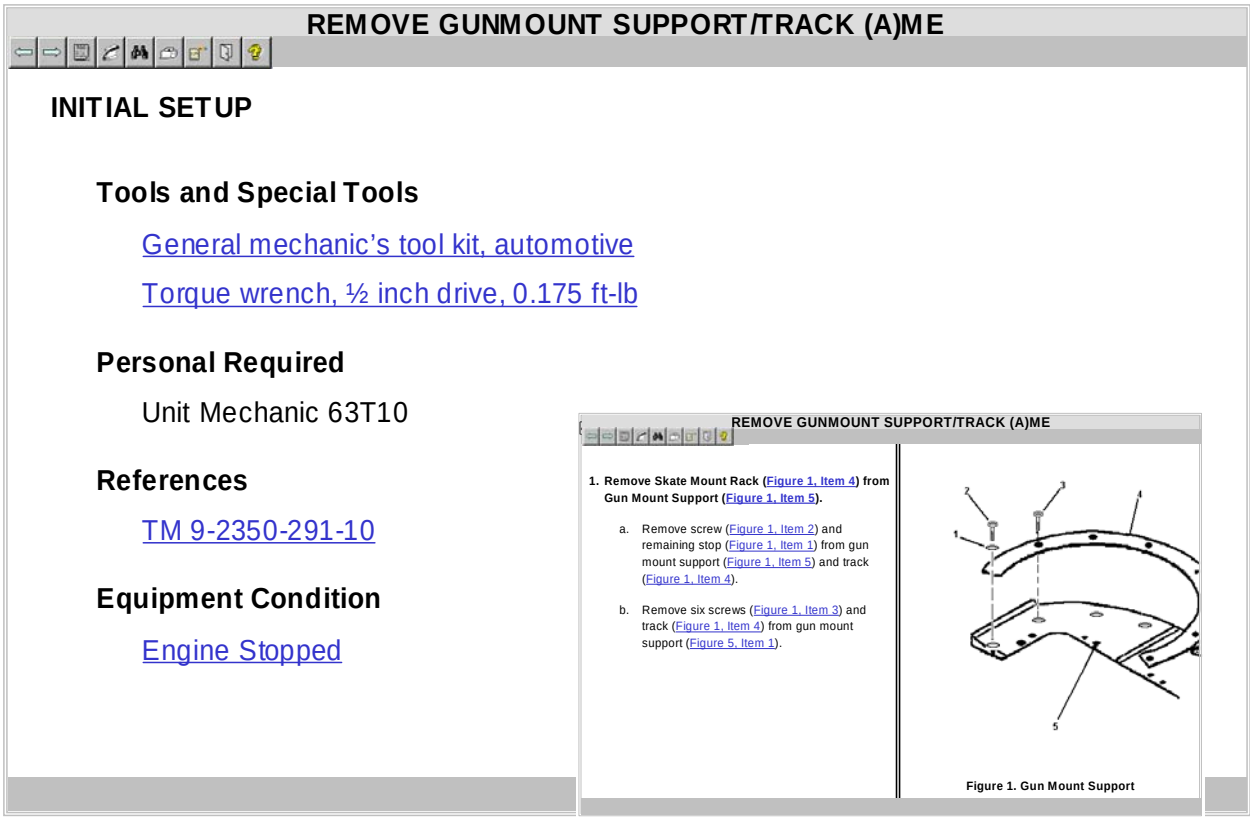

FIGURE A-28. Example of a tear-off window.

A.5.2.3.8.17 User creation of bookmarks. This is a navigational feature that shall allow the user to flag certain locations for later access. It allows the user to build his/her own index of links to specific locations in the data. Associated advanced features include login specific bookmarks, so different people using the same presentation device have their own unique set of bookmarks. This is a digital means of implementing the dog-eared page, the paperclip used in manuals. A prerequisite is "Login" A.5.2.3.1.2. For example, the maintenance crewmember that generally does the preventative maintenance checks and services might have the bookmarks to those tasks. Since that crewmember might also do the rotor tension adjustment, he would also have a bookmark to that task.

A.5.2.3.8.18 Voice-Activated commands. This is a feature that shall enable the user to navigate through the IETM by pre-determined voice commands. The complexity of this feature depends upon the extent of voice tagging in the IETM and the quality of the voice recognition software.

A.5.2.3.9 Printing (P) category. Some IETMs by their nature are intended for use in an online environment, with print functionality limited primarily to task oriented and screen print output. By defining a hard copy output that more closely resembles a paper TM, the resulting costs and complexity rise.

A.5.2.3.9.1 Work package-specific printing. This functionality shall provide the capability to print a discrete work package. Beyond the printed technical data, the following additional information shall be printed: Time/Date stamps, classified security marks, destruction notices, destruction dates, and destruction requirements.

A.5.2.3.9.2 Fully formatted/book version. This capability shall provide a document printout or page-based viewer that conforms to MIL-STD-40051-2 format requirements. Beyond the printed technical data, the following additional information shall be printed: Time/Date stamps, classified security marks, destruction notices, destruction dates, and destruction requirements. When the document exists as an IETM, in addition to the cost incurred, this may sub-optimize both the IETM and the printed TM.

A.5.2.3.9.3 Print linked data. This capability shall provide a printout of any linked data on a given task/location. This shall be limited to one level of linking. Traversing lower than one layer greatly increases the complexity. When printing a work package, all the linked data within the work package shall also be printed. Beyond the printed technical data, the following additional information shall be printed: Time/Date stamps, persistent alerts, classified security marks, destruction notices, destruction dates, and destruction requirements.

A.5.2.3.9.4 Print screen (Required). The print screen capability shall provide a print of only the screen currently being viewed by the user. The information scrolled off the screen shall not be printed.

A.5.2.3.9.5 Print Frame. The print frame capability shall provide a print of the screen currently being viewed by the user and the scrolled off information.

A.5.2.3.10 Special content (S) category. The inclusion of additional data types such as audio, motion video, and animations are accommodated relatively easily by most IETM systems; however, content generation is often more costly and performance issues may arise.

A.5.2.3.10.1 Alerts. These elements shall be readily identified and shall require specific operator acknowledgment before proceeding with the data being presented. Warnings and cautions shall be alerts. (Refer to 4.9.4 for alert requirements.)

A.5.2.3.10.2 Animation. This functionality shall provide graphical components movement to represent actual function. Animation may be included to show a variety of system functions from theory of operation (hydraulic flow) to maintenance procedures (how to access a specific part). Animation shall not be the primary instruction to perform the task, but shall be a supplement to the narrative instruction.

A.5.2.3.10.3 Audio. This functionality shall provide sounds to assist in diagnostic or notify user of an action. Consideration shall be given to the anticipated environment to determine the usability of audio. Audio shall not be the primary instruction to perform the task, but shall be a supplement to the narrative instruction. (Refer to MIL-HDBK-1222 for additional guidance on the use of the audio function.)

A.5.2.3.10.4 Help. Brings up a list of the available help including, IETM-specific viewer help, standard browser help, and help on how to use and navigate through the IETM.

A.5.2.3.10.4.1 Content-sensitive help (technical data help) (Required). Help information shall be available to the user based on the data being presented or the tasks being performed through a common interface. This type of help pertains to the particular subject matter of the IETM, such as the specific weapon system.

A.5.2.3.10.4.2 Context-sensitive help (viewer help) (Required). Help information shall be available to the user for the IETM operation including the features and functions of the IETM viewer. In many systems, right-clicking using the mouse or hovering the cursor over a particular

graphic or menu item will cause a 'Tool tip' to pop up, providing help or a description for the specified feature as shown in Figure A-29.

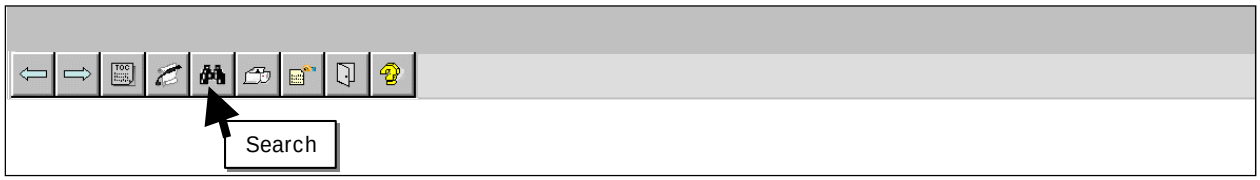

FIGURE A-29. Example of a tool tip.

A.5.2.3.10.5 Motion video. This functionality shall provide video clips to assist in the maintenance action. Motion video may be used to show a unique procedure. Motion video shall not be the primary instruction to perform the task, but shall be a supplement to the narrative instruction.

A.5.2.3.10.6 Digital photos. Digital photos shall be included to show a specific visual representation of actual systems. Photos shall not be the primary instruction to perform the task, but shall be a supplement to the narrative instruction. (Refer to 4.9.26.2.3.)

A.5.2.3.10.7 User training. User training shall include the integrating or linking maintenance and/or operational training on the use of the weapon system with the IETM. Access of the data may be through a link to an external module or integrated with the IETM can affect complexity of this functionality. Advanced capabilities may be to monitor use and training access for the purpose of tracking user competency. Specific training courseware and/or actions are not necessarily part of the data. User training complexity can range from on-line access during IETM run time by linking to an embedded Computer-Based Training (CBT) database to running a complete training lesson.

A.5.2.3.10.8 Browsing. Browsing is the ability to preview an IETM session before performing the work or task. The NEXT and PREVIOUS functions provide this capability for systems that do not set interactive system variables that are used to effect subsequent navigation through the IETM. The BROWSE PREVIOUS and BROWSE NEXT functions may be specified by the acquiring activity for highly interactive IETMs that do set such variables. These navigation functions shall act as NEXT and PREVIOUS, but shall not set or reset system variables automatically or through dialogs. Once either BROWSE PREVIOUS or BROWSE NEXT is selected, other navigation functions shall not be available until the user returns to the originating window by invoking the BROWSE EXIT function. When either the BROWSE PREVIOUS or the BROWSE NEXT function is not logical (such as at the beginning of a string or at a mandatory branch point), only the complementary BROWSE function shall be active. Browse system variables shall be set, activated, and logged to a temporary state table and shall not be posted permanently in the state table. The following browse capabilities shall be available:

a. User-controlled access mode
b. No tracking of activities
c. Not rigidly tied to IETM controls

A.5.2.3.10.9 Selectable Text. This functionality shall provide the capability to highlight and select text for the purpose of copy and paste. Copied text could be pasted into dialog box data

entry fields, editable forms, editable reports, etc. All selectable areas should be displayed and visually highlighted before selection.

A.5.2.3.10.10 Selectable Graphics. This functionality shall provide the capability to highlight and select graphics for the purpose of copy and paste. Copied graphics could be pasted into editable forms, editable reports, etc. All selectable areas should be displayed and visually highlighted before selection. The user should be given the capability to select a point, area, or the entire graphic by positioning the cursor on or near that point and activating the SELECT function. Selectable regions of a graphic should be visually distinct and should not adversely affect the appearance of the graphic. The selection of graphical information should include, but is not limited to, the following:

a. Selecting an individual graphic object, such as a part, displayed in a graphic.
b. Selecting a point or rectangular area in a graphic image.

A.5.2.3.10.11 Reset Area. The reset area allows the user to get to and initiate special advanced functions or to return the user to the standard default. Many of these functions apply to higher-end IETMs. The following functions shall be accessed from the reset area. They are identified as being required or optional. However, since the reset area is optional, the required functions are only required when the reset area itself is selected by the acquiring activity. If the function is also listed elsewhere in the matrix, its complexity factor is the same. (Refer to A.4.2.2 and Figure A-1 and Figure A-2 for further requirements/guidance for the reset area.)

a. Reset user interface to standard default (required). A user shall be able to reset the user interface back to the default, as defined upon normal start-up of the IETM for the first time.
b. Minimize IETM (optional). This function shall cause the IETM to disappear from the screen and indicate an active application on the application tool bar for the operating system.
c. Print Frame (optional). Prints the present screen including scrolled off information. (Refer to A.5.2.3.9.5.)
d. Change to page view (optional). Changes to a paged view, usually PDF. This function is included in Fully formatted/book version. (Refer to A.5.2.3.9.2.)
e. Open new IETM (optional). Opens another IETM in a separate window. Selection of this capability should take into consideration the adverse effects of screen stacking. (Refer to A.4.5.7)
f. Suspend (optional). Pauses and saves current session state and does not update history. Used in those IETMs that can pause, save, and restart sessions. This function is included in suspend/restart. (Refer to A.5.2.3.1.1.)
g. Restart (optional). Restarts a saved session at the point of suspense. Used in those IETMs that can pause, save, and restart sessions. This function is included in suspend/restart. (Refer to A.5.2.3.1.1.)
h. View revision summary (required). Allows the user to view the revision summary. This is part of active change indications and marking. (Refer to A.5.2.3.11.1.)
i. Back (optional). Navigates back through the previously viewed information. This is part of Forward and Back. (Refer to A.5.2.3.8.12.)

j. Forward (optional). Navigates forward through the previously viewed information. This is part of Forward and Back. (Refer to A.5.2.3.8.12.)

k. Abort browse mode (optional). If browse mode is implemented, allows the user to exit from the browse mode. This is part of browsing. (Refer to A.5.2.3.10.8.)

l. Toggle screen panels/bars on and off (optional). Allows the user to toggle screen panels/bars on and off. This includes the reset area, TOC, classification bar, project-specific bar, and the status bar. A menu item shall be grayed out if it is not permitted to toggle that particular screen area off.

m. Drill up/drill down (required). The drill up/drill down function walks through the fully expanded TOC, which need not be displayed in the left hand TOC area. Drill up moves you back up the fully expanded TOC and drill down moves you down through the fully expanded TOC. A fully expandable TOC means all levels of the TOC can be displayed.

n. Other custom functions (optional). Any custom functions that the IETM provides shall be placed in the reset area. These shall be listed on the pop-up menu in addition to the mandatory and implemented optional items. This way the user knows how to get to them in a standard way. The complexity factor for this item only includes accessing a custom function from the reset area.

o. Exit reset area (required). Exit the reset area and return back to where you left off before accessing the reset area.

A.5.2.3.11 Updates (U) category. These shall include change markings or other change indications. Updates include any technical data delivery after the initial delivery. IETMs support a number of different update methodologies that significantly affect the costs of sustainment and include Revisions, Changes and Urgent Changes (e.g., Rapid Action Changes (RACs)).

A.5.2.3.11.1 Active change indications and markings (Required). Each change shall be discretely marked or identified in the IETM. The IETM shall include a revision summary list. Considerations include method of display, identification of the change, and when they are removed or suppressed. (Refer to MIL-HDBK-1222 for examples of multiview change indications and markings.)

A.5.2.3.11.2 Block cycle with urgent changes. Block cycle update shall be the changes from all sources consolidated and issued at regularly scheduled intervals. Urgent changes shall be interim updates between scheduled block cycle updates.

A.5.2.3.11.3 Full revision. A full revision shall be a complete replacement of the data previously distributed. (Refer to 4.9.28.)

A.5.2.3.11.4 Near real-time updates. Updates shall be available quickly and as either complete or partial updates to the user after authorized. This reduction in distribution time results in the maintainer having more up to date data. (Refer to A.5.2.3.3.3.)

A.5.2.3.11.5 User operation mode (Uo) category. User operation mode is the connectivity of the maintenance support device (MSD) or e-tool. Cost considerations are maintainability, storage, security, and context filtering of the IETM and technical data.

A.5.2.3.11.5.1 Network connectivity. The end user shall have access to the IETM via a network infrastructure. The data shall be downloaded to or viewed on the client device. Device may be

disconnected and operated in a stand-alone mode. The data changes/revisions shall be installed on the host server and updates are transmitted via the network.

A.5.2.3.11.5.1.1 Network connectivity - context filtering. When connected to a network, the configuration of the weapon system shall be readily available to the e-tool via a maintenance management system. The configuration can then be "loaded" to the e-tool for IETM use.

A.5.2.3.11.5.1.2 Network connectivity - update capability (partial). This capability shall entail the update of the data via network distribution that contain only the changed information from the previously release. Downloading the data to the user's e-tool is done via the network.

A.5.2.3.11.5.1.3 Network connectivity mode - update capability (full revision). Data revisions shall be installed on the host server and updates shall be transmitted via the network. This is the least cost method of updates.

A.5.2.3.11.6 Stand-alone mode. The end user shall access either the IETM using the hard drive or CD-ROM/DVD drive. Consideration should be taken for the update capabilities.

A.5.2.3.11.6.1 Stand-alone mode - context filtering. When in Stand-Alone Mode, the configuration of the weapon system may not be readily available on the e-tool. If connected to a maintenance management system, the configuration can be "loaded" to the e-tool before disconnection and IETM use. Without a configuration file, the user will be required to answer dialogs (questions) that normally would not be asked in a network connection mode.

A.5.2.3.11.6.2 Stand-alone mode - update capability (full revision). This capability shall entail the update of the data using an entire CD-ROM/DVD distribution. This is done using reading the new distribution or downloading the data from the CD-ROM/DVD to the user's e-tool hard drive. This method provides the lowest cost impact.

A.5.2.3.11.6.3 Stand-alone mode - update capability (partial). This capability shall entail the update of the data using CD-ROM/DVD distribution that contains only the changed information from the previous release. This is difficult to implement if the stand-alone mode is designed to view from the CD-ROM/DVD. Downloading the data from the CD-ROM/DVD to the user's e-tool hard drive is a viable approach, but is still technically difficult to do.

A.5.2.3.11.7 Web browser-viewable. This functionality shall allow the IETM to be viewed through a COTS Web browser. Consideration will be required for a specific Web browser. Different implementations include remote access to an IETM Web server, opening static Web pages locally, and Web server emulation on the client viewer. The functionality selected in this matrix will determine the level of complexity and cost of implementing a Web browser-viewable application.

A.5.3 IETM tailoring requirements. Tailoring of the technical content requirements contained in Appendix B through Appendix L is provided in Table A-XIX through Table A-XXVI content matrix tables. The tables list all applicable technical content requirements for the development of the following IETMs. Copies of the applicable tables shall be completed and added as an attachment to the Document Summary List of the contract.

A.5.3.1 Publication Titles.

a. All IETM titles, except DMWR and NMWR, shall start with the words "Interactive Electronic Technical Manual" and shall follow by the titles given in Table A-XVIII.

b. If your RPSTL information, except DMWR and NMWR, contains Depot parts and special tools, the title shall indicate this (e.g., Field and Sustainment Maintenance Manual with Parts Information including Depot).

c. DMWR/NMWR shall start with the words "Interactive Electronic" followed by the titles in Table A-XVIII.

TABLE A-XVIII. Publication type and title with associated context matrix table.

PUBLICATION TYPE TITLE		APPLICABLE TABLE
-10 O	perator's Manual for *Insert System*	Table A-XIX
-13&P	Operator and Field Maintenance Manual for *Insert System* including Parts Information	Table A-XX
-14&P	Operator, Field, and Sustainment Maintenance Manual for *Insert System* including Parts Information	Table A-XX
-23&P	Field Maintenance Manual for *Insert System* including Parts Information	Table A-XXI
-24&P	Field and Sustainment Maintenance Manual for *Insert System* including Parts Information	Table A-XXI
-40&P	Sustainment Maintenance Manual for *Insert System* including Parts Information	Table A-XXI
DMWR w/ Parts Info	Depot Maintenance Work Requirement for *Insert System* including Parts Information	Table A-XXII
DMWR Containing Overhaul Standards w/Parts Info	Depot Maintenance Work Requirement containing National Maintenance Repair Standards for *Insert System* including Parts Information	Table A-XXII
NMWR w/Parts Info	National Maintenance Work Requirement for *Insert System* including Parts Information	Table A-XXII
BDAR TM	BDAR Requirements for *Insert System*	Table A-XXIII
PM Checklist	Preventive Maintenance Checklists for *Insert System*	Table A-XXIV
Lube Order	Stand-alone Lubrication Order Requirements for *Insert System*	Table A-XXV
DMWR Ammunitions	DMWR for Maintenance/Demilitarization of *Insert System*	Table A-XXVI

A.5.3.2 Technical content tables. Table A-XIX through Table A-XXVI simplifies tailoring the technical content requirements of TMs prepared using this standard as a guide. The tables indicate which portions of this standard are applicable and list the content requirements for each type of IETM. Inclusion of the applicable tables of this appendix is mandatory and is intended for compliance.

A.5.3.3 Additional requirements.

A.5.3.3.1 CD-ROM. Unless otherwise directed by the acquiring activity, all maintenance instructions (operators through overhaul (depot)) for major weapon systems and all types of equipment, including test and support equipment, shall be on a single CD-ROM. This includes parts information, troubleshooting, and any checklists when applicable. The following types of TMs should not be combined with the maintenance instructions on the single CD-ROM.

a. Aircraft Operators Manuals.

b. Certain types of Operator Manuals when directed by the acquiring activity.

c. DMWRs.

d. NMWRs.

A.5.3.3.2 Schematics and wiring diagrams. Due to the viewer limitations for displaying schematics and wiring diagrams provided in IETMs, the acquiring activity may require that the schematics and wiring diagrams be printed on paper in a double king size (11-inch by 17-inch) as a supplement to the IETM.

A.5.3.4 Intended use. First, determine the types of IETMs required for each acquisition and then duplicate the table(s) that contains the content requirements for those types of IETMs. Indicate the types of IETMs needed by filling in the blank after "IETM Requirements Matrix for" at the top of each matrix. For each type of IETM selected, indicate in the open blocks the "IETM" content desired by entering an "R" for "REQUIRED" content or a "P" for content that is "PROHIBITED," or an "AR" for content that is "AS REQUIRED. All blocks for the selected IETM types in Table A-XIX through Table A-XXVI must be completed with an "R," a "P," or an "AR" for each IETM acquisition. The blocks that already contain an "R" are required and cannot be changed. The blocks containing "P" are prohibited for that type of IETM and shall not be included. The blocks that are shaded are content items where a decision must be made whether they are required to support the equipment. The blocks that are shaded shall be filled in with "R," "P," or "AR." If a decision on a shaded item cannot be made before contract award, mark it with an "AR" for "As Required." When a decision can be made, the "AR" notations shall be changed to a "P" or "R." The notation "Chapter X" in the matrix means that, if required, at least one of these chapters shall be in the TM. If more than one of these chapters is needed, then a required content item listed within the "Chapter X" matrix portion shall be in one of the chapters and may be in the others. For example, if there are more than two "Maintenance Instructions" chapters, only one of them needs a "PMCS Work Package." The remarks page can be used to provide the contractor additional instructions such as indicating to the contractor any of the items in the matrix that will be provided by the proponent (done in house).

A.5.3.5 Acquisition requirements. The properly executed IETM functionality matrix and content selection matrix tables become contractually binding when made part of the contract, statement of work, or any other contractual instrument.

This page intentionally left blank.

TABLE A-XIX. Operator's Manual requirement matrix for _____.

IETM Content	-10	MIL-STD-40051-1 Reference Element Name
INTRODUCTORY MATTER	R	5.2.1	**<framed.frnt>**
IETM Installation data	R	5.2.1.1	
CD content frame	R	5.2.1.2	
(MC) Promulgation letter		5.2.1.3	**<promulgation>**
Warning summary		5.2.1.4	**<warnsum>**
Revision summary frame (Revisions only)		5.2.1.5	**<revisionsummary>**
Identification information	R	5.2.1.6	**<frntcover>**
Table of contents	R	5.2.1.8	**<contents>**
How to use this IETM	R	5.2.1.9	**<howtouse>**
GENERAL INFORMATION, EQUIPMENT DESCRIPTION, AND THEORY OF OPERATION	R	Appendix B	**<gim>**
GENERAL INFORMATION WORK PACKAGE	R	B.5.2	**<ginfowp>**
Scope	R	B.5.2.3	**<scope>**
Maintenance forms, records, and reports	R	B.5.2.4	**<mfrr>**
Reporting equipment improvement recommendations (EIR)	R	B.5.2.5	**<eir>**
Hand receipt (HR) information		B.5.2.6	**<handreceipt>**
Corrosion prevention and control (CPC)	R	B.5.2.7	**<cpcdata>**
Ozone depleting substances (ODS)		B.5.2.8	**<odsdata>**
Destruction of Army materiel to prevent enemy use	R	B.5.2.9	**<destructmat>**
Preparation for storage or shipment	R	B.5.2.10	**<pssref>**
Warranty information		B.5.2.11	**<wrntyref>**
Nomenclature cross-reference list		B.5.2.12	**<nomenreflist>**
List of abbreviations/acronyms		B.5.2.13	**<loa>**
Quality of material	R	B.5.2.14	**<qual.mat.info>**
Safety, care, and handling		B.5.2.16	**<sftyinfo>**
Nuclear hardness		B.5.2.17	**<hcp>**
Calibration		B.5.2.18	**<calref>**
Supporting information for repair parts, special tools, TMDE, and support equipment		B.5.2.24	**<supdata>**
Copyright credit line		B.5.2.26	**<copyrt>**
EQUIPMENT DESCRIPTION AND DATA WORK PACKAGE	R	B.5.3	**<descwp>**
Equipment characteristics, capabilities, and features	R	B.5.3.3	**<eqpinfo>**
Location and description of major components (*Not required for Conventional and Chemical Ammunition IETMs*)	R	B.5.3.4	**<locdesc>**
Differences between models		B.5.3.5	**<eqpdiff>**

TABLE A-XIX. Operator's Manual requirement matrix for _____.

IETM Content	-10	MIL-STD-40051-1 Reference Elemen	t Name
Equipment data	R	B.5.3.6	**<eqpdata>**
THEORY OF OPERATION WORK PACKAGE	R	B.5.4	**<thrywp>**
OPERATOR INSTRUCTIONS	R	Appendix C	**<opim>**
DESCRIPTION AND USE OF OPERATOR CONTROLS AND INDICATORS WORK PACKAGE	R	C.5.2.2.1	**<ctrlindwp>**
OPERATION UNDER USUAL CONDITIONS WORK PACKAGE	R	C.5.2.2.2	**<opusualwp>**
Operations under usual tasks	R	C.5.2.2.2.3	**<opertsk>**
Security measures for electronic data		C.5.2.2.2.3	**<secref>**
Siting requirements		C.5.2.2.2.5	**<site>**
Shelter requirements		C.5.2.2.2.6	**<shelter>**
Assembly and preparation for use		C.5.2.2.2.7	**<prepforuse>**
Initial adjustments, before use, and self-test		C.5.2.2.2.8	**<initial>**
Operating procedures	R	C.5.2.2.2.9	**<oper>**
Operating auxiliary equipment		C.5.2.2.2.11	**<operaux>**
Preparation for movement		C.5.2.2.2.12	**<prepmove>**
Decals and instruction plates		C.5.2.2.2.13	**<instructplt>**
OPERATION UNDER UNUSUAL CONDITIONS WORK PACKAGE	R	C.5.2.2.3	**<opunuwp>**
Operations under unusual tasks	R	C.5.2.2.3.3	**<opunutsk>**
Security measures for electronic data		C.5.2.2.3.4	**<secref>**
Unusual environment/weather	R	C.5.2.2.3.5	**<unusualenv>**
Fording and swimming		C.5.2.2.3.6	**<fording>**
Interim Chemical, Biological, Radiological, and Nuclear (CBRN) decontamination procedures		C.5.2.2.3.7	**<decon>**
Jamming and electronic countermeasures (ECM) procedures		C.5.2.2.3.8	**<ecm>**
Degraded operation procedures		C.5.2.2.3.9	**<degraded>**
Decals and instruction plates		C.5.2.2.2.13	**<instructplt>**
EMERGENCY WORK PACKAGE		C.5.2.2.3.10	**<emergencywp>**
STOWAGE AND DECAL/DATA PLATE GUIDE WORK PACKAGE		C.5.2.2.5	**<stowagewp>**
ON-VEHICLE EQUIPMENT LOADING PLAN WORK PACKAGE		C.5.2.2.6	**<eqploadwp>**
TROUBLESHOOTING PROCEDURES ***NOTE*** *The notation (*) indicates that at least one of the these content items shall be included*		Appendix D D.5.4.2	**<tim>** <troublecategory>
INTRODUCTION WORK PACKAGE		D.5.5.3	**<tsintrowp>**

TABLE A-XIX. Operator's Manual requirement matrix for _____.

IETM Content	-10	MIL-STD-40051-1 Reference Elemen	t Name
TROUBLESHOOTING INDEX WORK PACKAGE		D.5.5.5	**<tsindxwp>**
**OPERATIONAL CHECKOUT WORK PACKAGE*		D.5.5.8.3	**<opcheckwp>**
**TROUBLESHOOTING PROCEDURES WORK PACKAGE*		D.5.5.8.4	**<tswp>**
**OPERATIONAL CHECKOUT AND TROUBLESHOOTING PROCEDURES WORK PACKAGE*		D.5.5.8.5	**<opcheck-tswp>**
**DIAGNOSTICS WORK PACKAGE*		D.5.6	**<diagnosticwp>**
MAINTENANCE INSTRUCTIONS ***Note*** *PMCS is required as a minimum in one maintenance chapter.*	R	Appendix E E.5.2.2 E.5.2.3	**<mim>** **<maintenancepmcscategory>** **<maintenancecategory>**
SERVICE UPON RECEIPT WORK PACKAGE	R	E.5.3.2 E.5.3.2.3	**<surwp>** **<surtsk>**
Siting		E.5.3.2.3.1	**<siting>**
Shelter requirements		E.5.3.2.3.2	**<shltr>**
Service upon receipt of materiel	R	E.5.3.2.3.3	**<surmat>**
Installation instructions	R	E.5.3.2.3.4	**<install>**
Preliminary servicing of equipment		E.5.3.2.3.5	**<preserv>**
Preliminary checks and adjustment of equipment		E.5.3.2.3.6	**<prechkadj>**
Preliminary calibration of equipment		E.5.3.2.3.7	**<precal>**
Circuit alignment		E.5.3.2.3.8	**<calign>**
Ammunition markings		E.5.3.2.3.9.1	**<mark>**
Classification of defects		E.5.3.2.3.9.2	**<ammo.defect>**
Ammunition handling		E.5.3.15.1.3.3	**<ammo.handling>**
Procedures to activate ammunition		E.5.3.2.3.9.4	**<arm>**
Other service upon receipt task		E.5.3.2.3.10	**<other.surtsk>**
Follow-on maintenance		E.5.3.2.3.11	**<followon.maintsk>**
EQUIPMENT/USER FITTING INSTRUCTIONS WORK PACKAGE (PERSONAL USE EQUIPMENT)		E.5.3.3	**<perseqpwp>**
PMCS INTRODUCTION WORK PACKAGE	R	E.5.3.4.1	**<pmcsintrowp>**
PMCS WORK PACKAGE	R	E.5.3.4.2	**<pmcswp>**
MAINTENANCE WORK PACKAGES	R	E.5.3.5 E.5.3.5.3	**<maintwp>** **<maintsk>**
Inspect		E.5.3.5.3.2	**<inspect>**
Test		E.5.3.5.3.3	**<test>**
Service		E.5.3.5.3.4	**<service>**
Adjust		E.5.3.5.3.5	**<adjust>**
Align		E.5.3.5.3.6	**<align>**
Calibrate		E.5.3.5.3.7	**<calibration>**
Remove		E.5.3.5.3.8	**<remove>**

TABLE A-XIX. Operator's Manual requirement matrix for _____.

IETM Content	-10	MIL-STD-40051-1 Reference Elemen	t Name
Install		E.5.3.5.3.9	<install>
Replace		E.5.3.5.3.10	<replace>
Repair		E.5.3.5.3.11	<repair>
Paint		E.5.3.5.3.12	<paint>
Overhaul		E.5.3.5.3.13	<overhaul>
Rebuild		E.5.3.5.3.14	<rebuild>
Lubricate		E.5.3.5.3.15	<lube>
Mark		E.5.3.5.3.16	<mark>
Pack		E.5.3.5.3.17	<pack>
Unpack		E.5.3.5.3.18	<unpack>
Preserve		E.5.3.5.3.19	<preserv>
Prepare for use		E.5.3.5.3.20	<prepforuse>
Assemble		E.5.3.5.3.21	<assem>
Disassemble		E.5.3.5.3.22	<disassem>
Clean		E.5.3.5.3.23	<clean>
Nondestructive inspection		E.5.3.5.3.24	<ndi>
Radio interference suppression		E.5.3.5.3.25	<ris>
Place in service		E.5.3.5.3.26	<pis>
Towing		E.5.3.5.3.27	<tow>
Jacking		E.5.3.5.3.28	<jack>
Parking		E.5.3.5.3.29	<park>
Mooring		E.5.3.5.3.30	<moor>
Covering		E.5.3.5.3.31	<cover>
Hoisting		E.5.3.5.3.32	<hoist>
Sling loading		E.5.3.5.3.33	<sling>
External power		E.5.3.5.3.34	<extpwr>
Preparation for shipment and storage		E.5.3.5.3.36	<pss>
Arm		E.5.3.5.3.37	<arm>
Load		E.5.3.5.3.38	<load>
Unload		E.5.3.5.3.39	<unload>
Software maintenance		E.5.3.5.3.40	<softwaremaint>
Additional maintenance task		E.5.3.5.3.41	<other.maintsk>
Follow-on maintenance		E.5.3.2.3.11	<followon.maintsk>
GENERAL MAINTENANCE WORK PACKAGE		E.5.3.7	<gen.maintwp>
LUBRICATION INSTRUCTIONS WORK PACKAGE		E.5.3.8	<lubewp>
AUXILIARY EQUIPMENT MAINTENANCE INSTRUCTIONS		Appendix E E.5.2.6	<mim> <auxilarycategory>
AUXILIARY EQUIPMENT MAINTENANCE WORK PACKAGE		E.5.3.14	<auxeqpwp>
AMMUNITION MAINTENANCE INSTRUCTIONS		Appendix E E.5.2.7	<mim> <ammunitioncategory>
AMMUNITION MAINTENANCE WORK PACKAGE		E.5.3.15.1	<ammowp>

TABLE A-XIX. Operator's Manual requirement matrix for _____.

IETM Content	-10	MIL-STD-40051-1 Reference Elemen	t Name
AMMUNITION MARKING INFORMATION WORK PACKAGE		E.5.3.15.2	**<ammo.markingwp>**
FOREIGN AMMUNITION (NATO) WORK PACKAGE		E.5.3.15.3	**<natowp>**
DESTRUCTION OF EQUIPMENT TO PREVENT ENEMY USE INFORMATION	R	Appendix H	**<dim>**
DESTRUCTION OF EQUIPMENT TO PREVENT ENEMY USE INTRODUCTION WORK PACKAGE	R	H.5.2	**<destruct-introwp>**
Authority to destroy	R	H.5.2.3	**<authorize_to_destroy>**
Reporting destruction	R	H.5.2.4	**<report_destruct>**
General destruction information	R	H.5.2.5	**<general_destruct_info>**
Essential components and spare parts	R	H.5.2.7	**<component_spares>**
DESTRUCTION OF EQUIPMENT TO PREVENT ENEMY USE PROCEDURES WORK PACKAGE	R	H.5.3	**<destruct-materialwp>**
Parts list	R	H.5.3.3	**<essential_spares>**
Specific destruction procedures	R	H.5.3.4	**<proc>**
SUPPORTING INFORMATION ***NOTE*** *Applicable supporting information work packages shall be arranged in the order in which they are presented here and numbered accordingly.*	R	G.5.1	**<sim>**
REFERENCES WORK PACKAGE	R	G.5.2	**<refwp>**
COMPONENTS OF END ITEM (COEI) AND BASIC ISSUE ITEMS (BII) LISTS WORK PACKAGE	R	G.5.4	**<coeibiiwp>**
ADDITIONAL AUTHORIZATION LIST (AAL) WORK PACKAGE		G.5.5	**<aalwp>**
EXPENDABLE AND DURABLE ITEMS LIST WORK PACKAGE	R	G.5.6	**<explistwp>**
SUPPORT ITEMS WORK PACKAGE		G.5.10	**<supitemwp>**
ADDITIONAL SUPPORTING WORK PACKAGES		G.5.11	**<genwp>**
REAR MATTER	R	5.2.2	

Legend
R - Required
P - Prohibited
Shaded - As required

This page intentionally left blank.

TABLE A-XX. Operator, Field, and Sustainment Maintenance Manual requirement matrix for _____.

IETM Content	-13&P	-14&P	MIL-STD-40051-1 Reference	Element Name
INTRODUCTORY MATTER	R R		5.2.1	**<framed.frnt>**
IETM Installation data	R R		5.2.1.1	
CD content frame	R R		5.2.1.2	
(MC) Promulgation letter			5.2.1.3	**<promulgation>**
Warning summary			5.2.1.4	**<warnsum>**
Revision summary frame (Revisions only)			5.2.1.5	**<revisionsummary>**
Identification information	R R		5.2.1.6	**<frntcover>**
Table of contents	R R		5.2.1.8	**<contents>**
How to use this IETM	R R		5.2.1.9	**<howtouse>**
GENERAL INFORMATION, EQUIPMENT DESCRIPTION, AND THEORY OF OPERATION	R R		Appendix B	**<gim>**
GENERAL INFORMATION WORK PACKAGE	R R		B.5.2	**<ginfowp>**
Scope	R R		B.5.2.3	**<scope>**
Maintenance forms, records, and reports	R R		B.5.2.4	**<mfrr>**
Reporting equipment improvement recommendations (EIR)	R R		B.5.2.5	**<eir>**
Hand receipt (HR) information			B.5.2.6	**<handreceipt>**
Corrosion prevention and control (CPC)	R R		B.5.2.7	**<cpcdata>**
Ozone depleting substances (ODS)			B.5.2.8	**<odsdata>**
Destruction of Army materiel to prevent enemy use	R R		B.5.2.9	**<destructmat>**
Preparation for storage or shipment	R R		B.5.2.10	**<pssref>**
Warranty information			B.5.2.11	**<wrntyref>**
Nomenclature cross-reference list			B.5.2.12	**<nomenreflist>**
List of abbreviations/acronyms			B.5.2.13	**<loa>**
Quality of material			B.5.2.15	**<qual.mat.info>**
Safety, care, and handling			B.5.2.16	**<sftyinfo>**
Nuclear hardness			B.5.2.17	**<hcp>**
Calibration			B.5.2.18	**<calref>**
Supporting information for repair parts, special tools, TMDE, and support equipment			B.5.2.25	**<supdata>**
Copyright credit line			B.5.2.26	**<copyrt>**
EQUIPMENT DESCRIPTION AND DATA WORK PACKAGE	R R		B.5.3	**<descwp>**
Equipment characteristics, capabilities, and features	R R		B.5.3.3	**<eqpinfo>**

TABLE A-XX. Operator, Field, and Sustainment Maintenance Manual requirement matrix for _____.

IETM Content	-13&P	-14&P	MIL-STD-40051-1 Reference	Element Name
Location and description of major components (*Not required for Conventional and Chemical Ammunition TMs*)	R R		B.5.3.4	**<locdesc>**
Differences between models			B.5.3.5	**<eqpdiff>**
Equipment data	R R		B.5.3.6	**<eqpdata>**
THEORY OF OPERATION WORK PACKAGE	R R		B.5.4	**<thrywp>**
OPERATOR INSTRUCTIONS	R R		Appendix C	**<opim>**
DESCRIPTION AND USE OF OPERATOR CONTROLS AND INDICATORS WORK PACKAGE	R R		C.5.2.2.1	**<ctrlindwp>**
OPERATION UNDER USUAL CONDITIONS WORK PACKAGE	R R		C.5.2.2.2	**<opusualwp>**
Operations under usual tasks	R R		C.5.2.2.2.3	**<opertsk>**
Security measures for electronic data			C.5.2.2.2.4	**<secref>**
Siting requirements			C.5.2.2.2.5	**<site>**
Shelter requirements			C.5.2.2.2.6	**<shelter>**
Assembly and preparation for use			C.5.2.2.2.7	**<prepforuse>**
Initial adjustments, before use and self-test			C.5.2.2.2.8	**<initial>**
Operating procedures	R R		C.5.2.2.2.9	**<oper>**
Operating auxiliary equipment			C.5.2.2.2.11	**<operaux>**
Preparation for movement			C.5.2.2.2.12	**<prepmove>**
Decals and instruction plates			C.5.2.2.2.13	**<instructplt>**
OPERATION UNDER UNUSUAL CONDITIONS WORK PACKAGE	R R		C.5.2.2.3	**<opunuwp>**
Operations under usual tasks	R R		C.5.2.2.3.3	**<opunutsk>**
Security measures for electronic data			C.5.2.2.2.4	**<secref>**
Unusual environment/weather	R R		C.5.2.2.3.5	**<unusualenv>**
Fording and swimming			C.5.2.2.3.6	**<fording>**
Interim Chemical, Biological, Radiological, and Nuclear (CBRN) decontamination procedures			C.5.2.2.3.7	**<decon>**
Jamming and electronic countermeasures (ECM) procedures			C.5.2.2.3.8	**<ecm>**
Degraded operation procedures			C.5.2.2.3.9	**<degraded>**
Decals and instruction plates			C.5.2.2.2.13	**<instructplt>**
EMERGENCY WORK PACKAGE			C.5.2.2.3.10	**<emergencywp>**
STOWAGE AND DECAL/DATA PLATE GUIDE WORK PACKAGE			C.5.2.2.5	**<stowagewp>**
ON-VEHICLE EQUIPMENT LOADING PLAN WORK PACKAGE			C.5.2.2.6	**<eqploadwp>**

TABLE A-XX. Operator, Field, and Sustainment Maintenance Manual requirement matrix for _____.

IETM Content	-13&P	-14&P	MIL-STD-40051-1 Reference	Element Name
TROUBLESHOOTING PROCEDURES ***NOTE*** *The notation (*) indicates that, if required, at least one of the these content items shall be included*	R R		Appendix D D.5.4.2	**<tim> <troublecategory>**
INTRODUCTION WORK PACKAGE			D.5.5.3	**<tsintrowp>**
TECHINICAL DESCRIPTION WORK PACKAGE			D.5.5.4	**<techdescwp>**
Equipment description and data			D.5.5.4.3	**<descproc>**
Controls and indicators			D.5.5.4.4	**<ctrlindproc>**
Theory of Operation			D.5.5.4.5	**<thryproc>**
TROUBLESHOOTING INDEX WORK PACKAGE			D.5.5.5	**<tsindxwp>**
**OPERATIONAL CHECKOUT WORK PACKAGE*			D.5.5.8.3	**<opcheckwp>**
**TROUBLESHOOTING WORK PACKAGE*			D.5.5.8.4	**<tswp>**
**COMBINED OPERATIONAL CHECKOUT AND TROUBLESHOOTING WORK PACKAGE*			D.5.5.8.5	**<opcheck-tswp>**
**DIAGNOSTICS WORK PACKAGE*			D.5.6	**<diagnosticwp>**
MAINTENANCE INSTRUCTIONS ***Note*** *PMCS is required as a minimum in one maintenance chapter.*	R R		Appendix E E.5.2.2 E.5.2.3	**<mim> <maintenancepmcscategory> <maintenancecategory>**
SERVICE UPON RECEIPT WORK PACKAGE	R R		E.5.3.2 E.5.3.2.3	**<surwp> <surtsk>**
Siting			E.5.3.2.3.1	**<siting>**
Shelter requirements			E.5.3.2.3.2	**<shltr>**
Service upon receipt of materiel	R R		E.5.3.2.3.3	**<surmat>**
Installation instructions	R R		E.5.3.2.3.4	**<install>**
Preliminary servicing of equipment			E.5.3.2.3.5	**<preserv>**
Preliminary checks and adjustment of equipment			E.5.3.2.3.6	**<prechkadj>**
Preliminary calibration of equipment			E.5.3.2.3.7	**<precal>**
Circuit alignment			E.5.3.2.3.8	**<calign>**
Ammunition markings			E.5.3.2.3.9.1	**<mark>**
Classification of defects			E.5.3.2.3.9.2	**<ammo.defect>**
Ammunition handling			E.5.3.15.1.3.3	**<ammo.handling>**
Procedures to activate ammunition			E.5.3.2.3.9.4	**<arm>**
Other service upon receipt task			E.5.3.2.3.10	**<other.surtsk>**
Follow-on maintenance			E.5.3.2.3.11	**<followon.maintsk>**
EQUIPMENT/USER FITTING INSTRUCTIONS WORK PACKAGE (PERSONAL USE EQUIPMENT)			E.5.3.3	**<perseqpwp>**

TABLE A-XX. Operator, Field, and Sustainment Maintenance Manual requirement matrix for _____.

IETM Content	-13&P	-14&P	MIL-STD-40051-1 Reference	Element Name
PMCS INTRODUCTION WORK PACKAGE (EXCEPT AIRCRAFT, DMWR, NMWR)	R R		E.5.3.4.1	**<pmcsintrowp>**
PMCS WORK PACKAGE (EXCEPT AIRCRAFT, DMWR, NMWR)	R R		E.5.3.4.2	**<pmcswp>**
MAINTENANCE WORK PACKAGES	R R		E.5.3.5 E.5.3.5.3	**<maintwp> <maintsk>**
Inspect			E.5.3.5.3.2	**<inspect>**
Test			E.5.3.5.3.3	**<test>**
Service			E.5.3.5.3.4	**<service>**
Adjust			E.5.3.5.3.4	**<adjust>**
Align			E.5.3.5.3.6	**<align>**
Calibrate			E.5.3.5.3.7	**<calibration>**
Remove			E.5.3.5.3.8	**<remove>**
Install			E.5.3.5.3.9	**<install>**
Replace			E.5.3.5.3.10	**<replace>**
Repair			E.5.3.5.3.11	**<repair>**
Paint			E.5.3.5.3.12	**<paint>**
Overhaul			E.5.3.5.3.13	**<overhaul>**
Rebuild			E.5.3.5.3.14	**<rebuild>**
Lubricate			E.5.3.5.3.15	**<lube>**
Mark			E.5.3.5.3.16	**<mark>**
Pack			E.5.3.5.3.17	**<pack>**
Unpack			E.5.3.5.3.18	**<unpack>**
Preserve			E.5.3.5.3.19	**<preserv>**
Prepare for use			E.5.3.5.3.20	**<prepforuse>**
Assemble			E.5.3.5.3.21	**<assem>**
Disassemble			E.5.3.5.3.22	**<disassem>**
Clean			E.5.3.5.3.23	**<clean>**
Nondestructive inspection			E.5.3.5.3.24	**<ndi>**
Radio interference suppression			E.5.3.5.3.25	**<ris>**
Place in service			E.5.3.5.3.26	**<pis>**
Towing			E.5.3.5.3.27	**<tow>**
Jacking			E.5.3.5.3.28	**<jack>**
Parking			E.5.3.5.3.29	**<park>**
Mooring			E.5.3.5.3.30	**<moor>**
Covering			E.5.3.5.3.31	**<cover>**
Hoisting			E.5.3.5.3.32	**<hoist>**
Sling loading			E.5.3.5.3.33	**<sling>**
External power			E.5.3.5.3.34	**<extpwr>**
Preparation for shipment and storage			E.5.3.5.3.36	**<pss>**
Arm			E.5.3.5.3.37	**<arm>**
Load			E.5.3.5.3.38	**<load>**
Unload			E.5.3.5.3.39	**<unload>**
Software maintenance			E.5.3.5.3.40	**<softwaremaint>**

TABLE A-XX. Operator, Field, and Sustainment Maintenance Manual requirement matrix for _____.

IETM Content	-13&P	-14&P	MIL-STD-40051-1 Reference	Element Name
Additional maintenance task			E.5.3.5.3.41	<other.maintsk>
Follow-on maintenance			E.5.3.2.3.11	<followon.maintsk>
GENERAL MAINTENANCE WORK PACKAGE			E.5.3.7	<gen.maintwp>
LUBRICATION WORK PACKAGE			E.5.3.8	<lubewp>
ILLUSTRATED LIST OF MANUFACTURED ITEMS (FIELD LEVEL ONLY) ***NOTE*** *Introduction and procedures work packages are required only if a list of manufactured items is developed.*			E.5.3.10	
Illustrated list of manufactured items introduction work package			E.5.3.10.1	<manu_items_introwp>
Manufacturing procedures work package			E.5.3.10.2	<manuwp>
TORQUE LIMITS WORK PACKAGE (FIELD LEVEL ONLY)			E.5.3.11	<torquewp>
WIRING DIAGRAMS WORK PACKAGE (FIELD LEVEL ONLY)			E.5.3.12	<wiringwp>
AUXILIARY EQUIPMENT MAINTENANCE INSTRUCTIONS			Appendix E E.5.2.6	<mim> <auxilarycategory>
AUXILIARY EQUIPMENT MAINTENANCE WORK PACKAGE			E.5.3.14	<auxeqpwp>
ILLUSTRATED LIST OF MANUFACTURED ITEMS (FIELD LEVEL ONLY)			E.5.3.10	
Illustrated list of manufactured items introduction work package			E.5.3.10.1	<manu_items_introwp >
Manufacturing procedures work package			E.5.3.10.2	<manuwp>
TORQUE LIMITS WORK PACKAGE (FIELD LEVEL ONLY)			E.5.3.11	<torquewp>
WIRING DIAGRAMS WORK PACKAGE (FIELD LEVEL ONLY)			E.5.3.12	<wiringwp>
AMMUNITION MAINTENANCE INSTRUCTIONS			Appendix E E.5.2.7	<mim> <ammunitioncategory>
AMMUNITION MAINTENANCE WORK PACKAGE			E.5.3.15.1	<ammowp>
AMMUNITION MARKING INFORMATION WORK PACKAGE			E.5.3.15.2	<ammo.markingwp>
FOREIGN AMMUNITION (NATO) WORK PACKAGE			E.5.3.15.3	<natowp>

TABLE A-XX. Operator, Field, and Sustainment Maintenance Manual requirement matrix for _____.

IETM Content	-13&P	-14&P	MIL-STD-40051-1 Reference	Element Name
PARTS INFORMATION	R	R	F.5.3.1	**<pim>**
INTRODUCTION WORK PACKAGE	R R		F.5.3.3	**<introwp>**
REPAIR PARTS LIST WORK PACKAGE	R R		F.5.3.4	**<plwp>**
REPAIR PARTS FOR SPECIAL TOOLS WORK PACKAGE			F.5.3.5	**<stl_partswp>**
KIT PARTS LIST WORK PACKAGE			F.5.3.6	**<kitswp>**
BULK ITEM WORK PACKAGE			F.5.3.7	**<bulk_itemswp>**
SPECIAL TOOLS LIST WORK PACKAGE			F.5.3.8	**<stlwp>**
NSN INDEX WORK PACKAGE	R R		F.5.3.9.1	**<nsnindxwp>**
PART NUMBER INDEX WORK PACKAGE	R R		F.5.3.9.2	**<pnindxwp>**
REFERENCE DESIGNATOR INDEX WORK PACKAGE			F.5.3.9.3	**<refdesindxwp>**
DESTRUCTION OF EQUIPMENT TO PREVENT ENEMY USE INFORMATION	R R		Appendix H	**<dim>**
DESTRUCTION OF EQUIPMENT TO PREVENT ENEMY USE INTRODUCTION WORK PACKAGE	R R		H.5.2	**<destruct-introwp>**
Authority to destroy	R R		H.5.2.3	**<authorize_to_destroy>**
Reporting destruction	R R		H.5.2.4	**<report_destruct>**
General destruction information	R R		H.5.2.5	**<general_destruct_info>**
Essential components and spare parts	R R		H.5.2.7	**<component_spares>**
DESTRUCTION OF EQUIPMENT TO PREVENT ENEMY USE WORK PACKAGE	R R		H.5.3	**<destruct-materialwp>**
Parts list	R R		H.5.3.3	**<essential_spares>**
Specific destruction procedures	R R		H.5.3.4	**<proc>**
SUPPORTING INFORMATION ***NOTE*** *Applicable supporting information work packages shall be arranged in the order in which they are presented here and numbered accordingly.*	R R		G.5.1	**<sim>**
REFERENCES WORK PACKAGE	R R		G.5.2	**<refwp>**
INTRODUCTION FOR NON-AVIATION MAC WORK PACKAGE (FIELD ONLY)	R R		G.5.3.1	**<macintrowp>**
INTRODUCTION FOR AVIATION MAC WORK PACKAGE (FIELD ONLY)	R R		G.5.3.2	**<macintrowp>**
MAC WORK PACKAGE (NON-AVIATION) (FIELD ONLY)	R R		G.5.3.3	**<macwp>** **<mac>**

TABLE A-XX. Operator, Field, and Sustainment Maintenance Manual requirement matrix for _____.

IETM Content	-13&P	-14&P	MIL-STD-40051-1 Reference	Element Name
MAC WORK PACKAGE (AVIATION (FIELD ONLY))	R R		G.5.3.3	**<macwp>** **<avmac>**
COMPONENTS OF END ITEM (COEI) AND BASIC ISSUE ITEMS (BII) LISTS WORK PACKAGE (OPERATOR ONLY)	R R		G.5.4	**<coeibiiwp>**
ADDITIONAL AUTHORIZATION LIST (AAL) WORK PACKAGE (OPERATOR ONLY)			G.5.5	**<aalwp>**
EXPENDABLE AND DURABLE ITEMS LIST WORK PACKAGE	R R		G.5.6	**<explistwp>**
SUPPORT ITEMS WORK PACKAGE			G.5.10	**<supitemwp>**
ADDITIONAL SUPPORTING WORK PACKAGES			G.5.11	**<genwp>**
REAR	R R		5.2.2	

Legend
R - Required
P - Prohibited
Shaded - As Required

This page intentionally left blank.

TABLE A-XXI. Field and Sustainment Maintenance Manual requirement matrix for _____.

TM Content	-23&P	-24&P	-40&P	MIL-STD-40051-1 Reference Elemen	t Name
INTRODUCTORY MATTER	R	R	R	5.2.1	**<framed.frnt>**
IETM Installation data	R	R	R	5.2.1.1	
CD content frame	R	R	R	5.2.1.2	
(MC) Promulgation letter				5.2.1.3	**<promulgation>**
Warning summary				5.2.1.4	**<warnsum>**
Revision summary frame (Revisions only)				5.2.1.5	**<revisionsummary>**
Identification information	R	R	R	5.2.1.6	**<frntcover>**
Table of contents	R	R	R	5.2.1.8	**<contents>**
How to use this IETM	R	R	R	5.2.1.9	**<howtouse>**
GENERAL INFORMATION, EQUIPMENT DESCRIPTION, AND THEORY OF OPERATION	R	R	R	Appendix B	**<gim>**
GENERAL INFORMATION WORK PACKAGE	R	R	R	B.5.2	**<ginfowp>**
Scope	R	R	R	B.5.2.3	**<scope>**
Maintenance forms, records, and reports	R	R	R	B.5.2.4	**<mfrr>**
Reporting equipment improvement recommendations (EIR)	R	R	R	B.5.2.5	**<eir>**
Hand receipt (HR) information				B.5.2.6	**<handreceipt>**
Corrosion prevention and control (CPC)	R	R	R	B.5.2.7	**<cpcdata>**
Ozone depleting substances (ODS)				B.5.2.8	**<odsdata>**
Destruction of Army materiel to prevent enemy use	R	R	R	B.5.2.9	**<destructmat>**
Preparation for storage or shipment	R	R	R	B.5.2.10	**<pssref>**
Warranty information				B.5.2.11	**<wrntyref>**
Nomenclature cross-reference list	R	R	R	B.5.2.12	**<nomenreflist>**
List of abbreviations/acronyms	R	R	R	B.5.2.13	**<loa>**
Quality assurance (QA)	R	R	R	B.5.2.14	**<qainfo>**
Aviation					
Non-aviation	P	P	P		
Quality of material	R	R	R	B.5.2.15	**<qual.mat.info>**
Safety, care, and handling				B.5.2.16	**<sftyinfo>**
Nuclear hardness				B.5.2.17	**<hcp>**
Calibration				B.5.2.18	**<calref>**
Critical safety items	R	R	R	B.5.2.23	**<csireq>**
Aviation					
Non-Aviation	P	P	P		

TABLE A-XXI. Field and Sustainment Maintenance Manual requirement matrix for _____:

TM Content	-23&P	-24&P	-40&P	MIL-STD-40051-1 Reference Element Name
Supporting information for repair parts, special tools, TMDE, and support equipment				B.5.2.25	<supdata>
Copyright credit line				B.5.2.26	<copyrt>
EQUIPMENT DESCRIPTION AND DATA WORK PACKAGE	R	R	R	B.5.3	<descwp>
Equipment characteristics, capabilities, and features	R	R	R	B.5.3.3	<eqpinfo>
Location and description of major components (*Not required for Conventional and Chemical Ammunition IETMs*)	R	R	R	B.5.3.4	<locdesc>
Differences between models				B.5.3.5	<eqpdiff>
Equipment data	R	R	R	B.5.3.6	<eqpdata>
THEORY OF OPERATION WORK PACKAGE	R	R	R	B.5.4	<thrywp>
TROUBLESHOOTING PROCEDURES ***NOTE*** *The notation (*) indicates that, if required, at least one of the these content items shall be included*	R	R	R	Appendix D D.5.4.2	<tim> <troublecategory>
INTRODUCTION WORK PACKAGE				D.5.5.3	<tsintrowp>
TECHINICAL DESCRIPTION WORK PACKAGE				D.5.5.4	<techdescwp>
Equipment description and data				D.5.5.4.3	<descproc>
Controls and indicators				D.5.5.4.4	<ctrlindproc>
Theory of Operation				D.5.5.4.5	<thryproc>
TROUBLESHOOTING INDEX WORK PACKAGE				D.5.5.5	<tsindxwp>
**OPERATIONAL CHECKOUT WORK PACKAGE*				D.5.5.8.3	<opcheckwp>
**TROUBLESHOOTING WORK PACKAGE*				D.5.5.8.4	<tswp>
**COMBINED OPERATIONAL CHECKOUT AND TROUBLESHOOTING WORK PACKAGE*				D.5.5.8.5	<opcheck-tswp>
**DIAGNOSTICS WORK PACKAGE*				D.5.6	<diagnosticwp>
MAINTENANCE INSTRUCTIONS ***Note*** *When allowed, PMCS is required as a minimum in one maintenance chapter.*	R	R	R	Appendix E E.5.2.2 E.5.2.3	<mim> <maintenancecategory> <maintenancepmcscategory>
SERVICE UPON RECEIPT WORK PACKAGE (FIELD LEVEL ONLY)	R	R		P	E.5.3.2 E.5.3.2.3	<surwp> <surtsk>
Siting requirements				E.5.3.2.3.1	<siting>
Shelter requirements				E.5.3.2.3.2	<shltr>

TABLE A-XXI. Field and Sustainment Maintenance Manual requirement matrix for _____:

TM Content	-23&P	-24&P	-40&P	MIL-STD-40051-1 Reference Element	Name
Service upon receipt of materiel				E.5.3.2.3.3	<surmat>
Installation instructions				E.5.3.2.3.4	<install>
Preliminary servicing of equipment				E.5.3.2.3.5	<preserv>
Preliminary checks and adjustment of equipment				E.5.3.2.3.6	<prechkadj>
Preliminary calibration of equipment				E.5.3.2.3.7	<precal>
Circuit alignment				E.5.3.2.3.8	<calign>
Ammunition markings				E.5.3.2.3.9.1	<mark>
Classification of defects				E.5.3.2.3.9.2	<ammo.defect>
Ammunition handling				E.5.3.15.1.3.3	<ammo.handling>
Procedures to activate ammunition				E.5.3.2.3.9.4	<arm>
Additional service upon receipt task				E.5.3.2.3.10	<other.surtsk>
Follow-on maintenance				E.5.3.2.3.11	<followon.maintsk>
EQUIPMENT/USER FITTING INSTRUCTIONS WORK PACKAGE (PERSONAL USE EQUIPMENT)				E.5.3.3	<perseqpwp>
PMCS INTRODUCTION WORK PACKAGE Aviation	P P P			E.5.3.4.1 E.5.3.4.2	<pmcsintrowp>
PMCS INTRODUCTION WORK PACKAGE Non-Aviation	R R R				
PMCS WORK PACKAGE Aviation	P P P			E.5.3.5.3 E.5.3.3 E.5.3.4.1	<pmcswp> <perseqpwp> <pmcsintrowp>
PMCS WORK PACKAGE Non-Aviation	R R R				
PREVENTIVE MAINTENANCE INSPECTION WORK PACKAGE Aviation	R R R			E.5.3.13.1	<pmiwp>
PREVENTIVE MAINTENANCE INSPECTION WORK PACKAGE Non-Aviation	P P P				
MAINTENANCE WORK PACKAGES	R R R			E.5.3.5 E.5.3.5.3	<maintwp> <maintsk>
Inspect				E.5.3.5.3.2	<inspect>
Test				E.5.3.5.3.3	<test>
Service				E.5.3.5.3.4	<service>
Adjust				E.5.3.5.3.4	<adjust>
Align				E.5.3.5.3.6	<align>
Calibrate				E.5.3.5.3.7	<calibration>
Remove				E.5.3.5.3.8	<remove>
Install				E.5.3.5.3.9	<install>
Replace				E.5.3.5.3.10	<replace>
Repair				E.5.3.5.3.11	<repair>
Paint				E.5.3.5.3.12	<paint>
Overhaul				E.5.3.5.3.13	<overhaul>

TABLE A-XXI. Field and Sustainment Maintenance Manual requirement matrix for _____:

TM Content	-23&P	-24&P	-40&P	MIL-STD-40051-1 Reference Element Name	
Rebuild				E.5.3.5.3.14	<rebuild>
Lubricate				E.5.3.5.3.15	<lube>
Mark				E.5.3.5.3.16	<mark>
Pack				E.5.3.5.3.17	<pack>
Unpack				E.5.3.5.3.18	<unpack>
Preserve				E.5.3.5.3.19	<preserv>
Prepare for use				E.5.3.5.3.20	<prepforuse>
Assemble				E.5.3.5.3.21	<assem>
Disassemble				E.5.3.5.3.22	<disassem>
Clean				E.5.3.5.3.23	<clean>
Nondestructive inspection				E.5.3.5.3.24	<ndi>
Radio interference suppression				E.5.3.5.3.25	<ris>
Place in service				E.5.3.5.3.26	<pis>
Towing				E.5.3.5.3.27	<tow>
Jacking				E.5.3.5.3.28	<jack>
Parking				E.5.3.5.3.29	<park>
Mooring				E.5.3.5.3.30	<moor>
Covering				E.5.3.5.3.31	<cover>
Hoisting				E.5.3.5.3.32	<hoist>
Sling loading				E.5.3.5.3.33	<sling>
External power				E.5.3.5.3.34	<extpwr>
Preparation for shipment and storage				E.5.3.5.3.36	<pss>
Arm				E.5.3.5.3.37	<arm>
Load				E.5.3.5.3.38	<load>
Unload				E.5.3.5.3.39	<unload>
Software maintenance				E.5.3.5.3.40	<softwaremaint>
Additional maintenance task				E.5.3.2.3.10	<other.maintsk>
Follow-on maintenance				E.5.3.2.3.11	<followon.maintsk>
OVERHAUL AND RETIREMENT SCHEDULE WORK PACKAGE (AIRCRAFT ONLY) Aviation	R R R			E.5.3.6	<orschwp>
OVERHAUL AND RETIREMENT SCHEDULE WORK PACKAGE (AIRCRAFT ONLY) Non-Aviation	P	P P		E.5.3.6	<orschwp>
GENERAL MAINTENANCE WORK PACKAGE				E.5.3.7	<gen.maintwp>
LUBRICATION INSTRUCTION WORK PACKAGE				E.5.3.8	<lubewp>
ILLUSTRATED LIST OF MANUFACTURED ITEMS (FIELD LEVEL AND ABOVE)				E.5.3.10	
Illustrated list of manufactured items introduction work package				E.5.3.10.1	<manu_items_introwp>
Manufacturing procedures work package				E.5.3.10.2	<manuwp>

TABLE A-XXI. Field and Sustainment Maintenance Manual requirement matrix for _____:

TM Content	-23&P	-24&P	-40&P	MIL-STD-40051-1 Reference Element Name
TORQUE LIMITS WORK PACKAGE (FIELD LEVEL AND ABOVE)				E.5.3.11	<torquewp>
AIRCRAFT INVENTORY MASTER GUIDE WORK PACKAGE Aviation				E.5.3.13.2	<inventorywp>
Non-Aviation	P P P			
STORAGE OF AIRCRAFT WORK PACKAGE Aviation				E.5.3.13.3	<storagewp>
Non-Aviation	P P P			
WEIGHING AND LOADING WORK PACKAGE Aviation	R R		P	E.5.3.13.4	<wtloadwp>
Non-Aviation	P P P			
WIRING DIAGRAMS WORK PACKAGE (FIELD LEVEL AND ABOVE)				E.5.3.12	<wiringwp>
AUXILIARY EQUIPMENT MAINTENANCE INSTRUCTIONS				Appendix E E.5.2.6	<mim> <auxiliarycategory>
AUXILIARY EQUIPMENT MAINTENANCE WORK PACKAGE				E.5.3.14	<auxeqpwp>
ILLUSTRATED LIST OF MANUFACTURED ITEMS ***NOTE*** *Introduction and procedures work packages are required only if a list of manufactured items is developed.*				E.5.3.10	
Illustrated list of manufactured items introduction work package				E.5.3.10.1	<manu_items_introwp>
Manufacturing procedures work package				E.5.3.10.2	<manuwp>
TORQUE LIMITS WORK PACKAGE				E.5.3.11	<torquewp>
WIRING DIAGRAMS WORK PACKAGE				E.5.3.12	<wiringwp>
AMMUNITION MAINTENANCE INSTRUCTIONS				Appendix E E.5.2.7	<mim> <ammunitioncategory>
AMMUNITION MAINTENANCE WORK PACKAGE				E.5.3.15.1	<ammowp>
AMMUNITION MARKING INFORMATION WORK PACKAGE				E.5.3.15.2	<ammo.markingwp>
FOREIGN AMMUNITION (NATO) WORK PACKAGE				E.5.3.15.3	<natowp>
AIRCRAFT PMS/PMD				Appendix E E.5.2.11	<mim> <pmscategory>
GENERAL INFORMATION WORK PACKAGE				B.5.5	<pms-ginfowp>

TABLE A-XXI. Field and Sustainment Maintenance Manual requirement matrix for _____:

TM Content	-23&P	-24&P	-40&P	MIL-STD-40051-1 Reference Elemen	t Name
PMS/PMD INSPECTION WORK PACKAGE				E.5.3.16	<pms-inspecwp> <pmd-inspecwp>
AIRCRAFT PHASED MAINTENANCE				Appendix E E.5.2.12	<mim> <checklistcategory>
GENERAL INFORMATION WORK PACKAGE				B.5.6	<pm-ginfowp>
PM INSPECTION WORK PACKAGE				E.5.3.17	<pmi-cklistwp>
PARTS INFORMATION	R R		R	F.5.3.1	<pim>
INTRODUCTION WORK PACKAGE	R R R			F.5.3.3	<introwp>
REPAIR PARTS LIST WORK PACKAGE	R R R			F.5.3.4	<plwp>
REPAIR PARTS FOR SPECIAL TOOLS WORK PACKAGE				F.5.3.5	<stl_partswp>
KIT PARTS LIST WORK PACKAGE				F.5.3.6	<kitswp>
BULK ITEMS WORK PACKAGE				F.5.3.7	<bulk_itemswp>
SPECIAL TOOLS LIST WORK PACKAGE				F.5.3.8	<stlwp>
NSN INDEX WORK PACKAGE	R R R			F.5.3.9.1	<nsnindxwp>
PART NUMBER INDEX WORK PACKAGE	R R R			F.5.3.9.2	<pnindxwp>
REFERENCE DESIGNATOR INDEX WORK PACKAGE				F.5.3.9.3	<refdesindxwp>
DESTRUCTION OF EQUIPMENT TO PREVENT ENEMY USE INFORMATION				Appendix H	<dim>
DESTRUCTION OF EQUIPMENT TO PREVENT ENEMY USE INTRODUCTION WORK PACKAGE				H.5.2	<destruct-introwp>
Authority to destroy				H.5.2.3	<authorize_to_destroy>
Reporting destruction				H.5.2.4	<report_destruct>
General destruction information				H.5.2.5	<general_destruct_info>
Essential components and spare parts				H.5.2.7	<component_spares>
DESTRUCTION OF EQUIPMENT TO PREVENT ENEMY USE WORK PACKAGE				H.5.3	<destruct-materialwp>
Parts list				H.5.2.4	<essential_spares>

TABLE A-XXI. Field and Sustainment Maintenance Manual requirement matrix for _____:

TM Content		-23&P	-24&P	-40&P	MIL-STD-40051-1 Reference Element	Name
Specific destruction procedures					H.5.3.4	<proc>
SUPPORTING INFORMATION ***NOTE*** *Applicable supporting information work packages shall be arranged in the order in which they are presented here and numbered accordingly.*		R	R	R	G.5.1	<sim>
REFERENCES WORK PACKAGE		R	R	R	G.5.2	<refwp>
INTRODUCTION FOR STANDARD MAINTENANCE MAC WORK PACKAGE OR INTRODUCTION FOR AVIATION MAINTENANCE MAC WORK PACKAGE (FIELD LEVEL ONLY)		R	R	P	G.5.3.1 G.5.3.2	<macintrowp> <macintrowp>
MAC WORK PACKAGE (FIELD LEVEL ONLY)		R	R	P	G.5.3.3	<macwp>
EXPENDABLE AND DURABLE ITEMS LIST WORK PACKAGE		R	R	R	G.5.6	<explistwp>
TOOL IDENTIFICATION LIST WORK PACKAGE					G.5.7	<toolidwp>
MANDATORY REPLACEMENT PARTS WORK PACKAGE					G.5.8	<mrplwp>
CRITICAL SAFETY ITEMS(CSI) WORK PACKAGE	Aviation				G.5.9	<csi.wp>
	Non-Aviation	P	P	P		
SUPPORT ITEMS WORK PACKAGE					G.5.10	<supitemwp>
ADDITIONAL SUPPORTING WORK PACKAGES					G.5.11	<genwp>
REAR		R	R	R	5.2.2	

Legend
R - Required
P - Prohibited
Shaded - As Required

This page intentionally left blank.

TABLE A-XXII. DMWR/NMWR requirement matrix for _____.

DMWR/NMWR Content	DMWR with Parts Info	DMWR with Overhaul Standards with Parts Info	NMWR with Parts Info	MIL-STD-40051-1 Reference Elemen	t Name
INTRODUCTORY MATTER	R R		R	5.2.1	**<framed.frnt>**
IETM Installation data	R R		R	5.2.1.1	
CD content frame	R R		R	5.2.1.2	
(MC) Promulgation letter				5.2.1.3	**<promulgation>**
Warning summary				5.2.1.4	**<warnsum>**
Revision summary frame (Revisions only)				5.2.1.5	**<revisionsummary>**
Identification information	R R		R	5.2.1.6	**<frntcover>**
Table of contents	R R		R	5.2.1.8	**<contents>**
DESCRIPTION AND THEORY OF OPERATION	R R		R	Appendix B	**<gim>**
GENERAL INFORMATION WORK PACKAGE	R R		R	B.5.2	**<ginfowp>**
Scope	R R		R	B.5.2.3	**<scope>**
Maintenance forms, records, and reports	R R		R	B.5.2.4	**<mfrr>**
Reporting equipment improvement recommendations (EIR)	R R		R	B.5.2.5	**<eir>**
Corrosion prevention and control (CPC)	R R		R	B.5.2.7	**<cpcdata>**
Ozone depleting substances (ODS)				B.5.2.8	**<odsdata>**
Destruction of Army materiel to prevent enemy use	R R		R	B.5.2.9	**<destructmat>**
Preparation for storage or shipment	R R		R	B.5.2.10	**<pssref>**
Warranty information				B.5.2.11	**<wrntyref>**
Nomenclature cross-reference list	R R		R	B.5.2.12	**<nomenreflist>**
List of abbreviations/acronyms	R R		R	B.5.2.13	**<loa>**
Quality assurance (QA)				B.5.2.14	**<qainfo>**
Quality of material	R R		R	B.5.2.15	**<qual.mat.info>**
Safety, care, and handling				B.5.2.16	**<sftyinfo>**
Nuclear hardness				B.5.2.17	**<hcp>**
Calibration				B.5.2.18	**<calref>**
Engineering change proposals (ECP)	R R		R	B.5.2.19	**<ecp>**
Modifications				B.5.2.20	**<modification>**
Deviations and exceptions	R R		R	B.5.2.21	**<deviation>**
Mobilization requirements	R R		R	B.5.2.22	**<mobreq>**

TABLE A-XXII. DMWR/NMWR requirement matrix for _____.

DMWR/NMWR Content	DMWR with Parts Info	DMWR with Overhaul Standards with Parts Info	NMWR with Parts Info	MIL-STD-40051-1 Reference Elemen	t Name
Critical safety items (CSI) (Aircraft Only)				B.5.2.23	**<csireq>**
Cost considerations	R R		R	B.5.2.24	**<cost>**
Supporting information for repair parts, special tools, TMDE, and support equipment				B.5.2.25	**<supdata>**
Copyright credit line				B.5.2.26	**<copyrt>**
EQUIPMENT DESCRIPTION AND DATA WORK PACKAGE	R R		R	B.5.3	**<descwp>**
Equipment characteristics, capabilities, and features	R R		R	B.5.3.3	**<eqpinfo>**
Location and description of major components	R R		R	B.5.3.4	**<locdesc>**
Differences between models				B.5.3.5	**<eqpdiff>**
Equipment data	R R		R	B.5.3.6	**<eqpdata>**
THEORY OF OPERATION WORK PACKAGES				B.5.4	**<thrywp>**
TROUBLESHOOTING PROCEDURES	R R		R	Appendix D D.5.4.2	**<tim> <troublecategory>**
INTRODUCTION WORK PACKAGE				D.5.5.3	**<tsintrowp>**
TECHINICAL DESCRIPTION WORK PACKAGE				D.5.5.4	**<techdescwp>**
Equipment description and data	R R		R	D.5.5.4.3	**<descproc>**
Controls and indicators				D.5.5.4.4	**<ctrlindproc>**
Theory of Operation				D.5.5.4.5	**<thryproc>**
TROUBLESHOOTING INDEX WORK PACKAGE				D.5.5.5	**<tsindxwp>**
PRESHOP ANALYSIS WORK PACKAGE				D.5.5.6	**<pshopanalwp>**
COMPONENT CHECKLIST WORK PACKAGE				D.5.5.7	**<compchklistwp>**
OPERATIONAL CHECKOUT WORK PACKAGE				D.5.5.8.3	**<opcheckwp>**
TROUBLESHOOTING PROCEDURES WORK PACKAGE				D.5.5.8.4	**<tswp>**
COMBINED OPERATIONAL CHECKOUT AND TROUBLESHOOTING PROCEDURES WORK PACKAGE				D.5.5.8.5	**<opcheck-tswp>**
DIAGNOSTICS WORK PACKAGE				D.5.6	**<diagnosticwp>**

TABLE A-XXII. DMWR/NMWR requirement matrix for _____.

DMWR/NMWR Content	DMWR with Parts Info	DMWR with Overhaul Standards with Parts Info	NMWR with Parts Info	MIL-STD-40051-1 Reference Elemen	t Name
MAINTENANCE INSTRUCTIONS	R R		R	Appendix E E.5.2.4	**<mim>** **<depotcategory>**
MAINTENANCE WORK PACKAGES ***NOTE*** *As applicable, the following maintenance tasks shall b epresented in the general order listed below:*	R R		R	E.5.3.5 E.5.3.5.3	**<maintwp>** **<maintsk>**
Inspect				E.5.3.5.3.2	**<inspect>**
Test				E.5.3.5.3.3	**<test>**
Service				E.5.3.5.3.4	**<service>**
Adjust				E.5.3.5.3.4	**<adjust>**
Align				E.5.3.5.3.6	**<align>**
Calibrate				E.5.3.5.3.7	**<calibration>**
Remove				E.5.3.5.3.8	**<remove>**
Install				E.5.3.5.3.9	**<install>**
Replace				E.5.3.5.3.10	**<replace>**
Repair				E.5.3.5.3.11	**<repair>**
Paint				E.5.3.5.3.12	**<paint>**
Overhaul				E.5.3.5.3.13	**<overhaul>**
Rebuild				E.5.3.5.3.14	**<rebuild>**
Lubricate				E.5.3.5.3.15	**<lube>**
Mark				E.5.3.5.3.16	**<mark>**
Pack				E.5.3.5.3.17	**<pack>**
Unpack				E.5.3.5.3.18	**<unpack>**
Preserve				E.5.3.5.3.19	**<preserv>**
Prepare for use				E.5.3.5.3.20	**<prepforuse>**
Assemble				E.5.3.5.3.21	**<assem>**
Disassemble				E.5.3.5.3.22	**<disassem>**
Clean				E.5.3.5.3.23	**<clean>**
Nondestructive inspection				E.5.3.5.3.24	**<ndi>**
Radio interference suppression				E.5.3.5.3.25	**<ris>**
Place in service				E.5.3.5.3.26	**<pis>**
Towing				E.5.3.5.3.27	**<tow>**
Jacking				E.5.3.5.3.28	**<jack>**
Parking				E.5.3.5.3.29	**<park>**
Mooring				E.5.3.5.3.30	**<moor>**
Covering				E.5.3.5.3.31	**<cover>**
Hoisting				E.5.3.5.3.32	**<hoist>**
Sling loading				E.5.3.5.3.33	**<sling>**
External power				E.5.3.5.3.34	**<extpwr>**
Preparation for shipment and storage				E.5.3.5.3.36	**<pss>**
Arm				E.5.3.5.3.37	**<arm>**
Load				E.5.3.5.3.38	**<load>**
Unload				E.5.3.5.3.39	**<unload>**

TABLE A-XXII. DMWR/NMWR requirement matrix for _____.

DMWR/NMWR Content	DMWR with Parts Info	DMWR with Overhaul Standards with Parts Info	NMWR with Parts Info	MIL-STD-40051-1 Reference Elemen	t Name
Software maintenance				E.5.3.5.3.40	**<softwaremaint>**
Additional maintenance task				E.5.3.5.3.41	**<other.maintsk>**
Follow-on maintenance				E.5.3.2.3.11	**<followon.maintsk>**
GENERAL MAINTENANCE WORK PACKAGE				E.5.3.7	**<gen.maintwp>**
LUBRICATION INSTRUCTIONS WORK PACKAGE				E.5.3.8	**<lubewp>**
FACILITIES WORK PACKAGE				E.5.3.9.1	**<facilwp>**
OVERHAUL INSPECTION PROCEDURES (OIP) WORK PACKAGE				E.5.3.9.2	**<oipwp>**
DEPOT MOBILIZATION REQUIREMENTS WORK PACKAGE				E.5.3.9.3	**<mobilwp>**
QUALITY ASSURANCE REQUIREMENTS WORK PACKAGE	R R		R	E.5.3.9.4	**<qawp>**
ILLUSTRATED LIST OF MANUFACTURED ITEMS ***NOTE*** *Introduction and procedures work packages are required only if a list of manufactured items is developed.*				E.5.3.10	
Illustrated list of manufactured items introduction work package				E.5.3.10.1	**<manu_items_introwp>**
Manufacturing procedures work package				E.5.3.10.2	**<manuwp>**
TORQUE LIMITS WORK PACKAGE				E.5.3.11	**<torquewp>**
AIRCRAFT INVENTORY MASTER GUIDE WORK PACKAGE (AIRCRAFT ONLY)				E.5.3.13.2	**<inventorywp>**
STORAGE OF AIRCRAFT WORK PACKAGE (AIRCRAFT ONLY)				E.5.3.13.3	**<storagewp>**
WIRING DIAGRAMS WORK PACKAGE	R R		R	E.5.3.12	**<wiringwp>**

TABLE A-XXII. DMWR/NMWR requirement matrix for _____.

DMWR/NMWR Content	DMWR with Parts Info	DMWR with Overhaul Standards with Parts Info	NMWR with Parts Info	MIL-STD-40051-1 Reference Elemen	t Name
AUXILIARY EQUIPMENT MAINTENANCE INSTRUCTIONS				Appendix E E.5.2.6	**<mim> <auxiliarycategory>**
AUXILIARY EQUIPMENT MAINTENANCE WORK PACKAGE				E.5.3.14	**<auxeqpwp>**
ILLUSTRATED LIST OF MANUFACTURED ITEMS ***NOTE*** *Introduction and procedures work packages are required only if a list of manufactured items is developed.*				E.5.3.10	
Illustrated list of manufactured items introduction work package				E.5.3.10.1	**<manu_items_introwp>**
Manufacturing procedures work package				E.5.3.10.2	**<manuwp>**
TORQUE LIMITS WORK PACKAGE				E.5.3.11	**<torquewp>**
WIRING DIAGRAMS WORK PACKAGE				E.5.3.12	**<wiringwp>**
AMMUNITION MAINTENANCE INSTRUCTIONS				Appendix E E.5.2.7	**<mim> <ammunitioncategory>**
AMMUNITION MAINTENANCE WORK PACKAGE				E.5.3.15.1	**<ammowp>**
AMMUNITION MARKING INFORMATION WORK PACKAGE				E.5.3.15.2	**<ammo.markingwp>**
FOREIGN AMMUNITION (NATO) WORK PACKAGE				E.5.3.15.3	**<natowp>**
PARTS INFORMATION (DMWR, NMWR) (DMWR W/PARTS INFO, NMWR W/PARTS INFO)	P R	P R	P R	F.5.3.1	**<pim>**
INTRODUCTION WORK PACKAGE	R R		R	F.5.3.3	**<introwp>**
REPAIR PARTS LIST WORK PACKAGE	R R		R	F.5.3.4	**<plwp>**
REPAIR PARTS FOR SPECIAL TOOLS WORK PACKAGE				F.5.3.5	**<stl_partswp>**
KIT PARTS LIST WORK PACKAGE				F.5.3.6	**<kitswp>**
BULK ITEMS WORK PACKAGE				F.5.3.7	**<bulk_itemswp>**
SPECIAL TOOLS LIST WORK PACKAGE				F.5.3.8	**<stlwp>**
NSN INDEX WORK PACKAGE	R R		R	F.5.3.9.1	**<nsnindxwp>**

TABLE A-XXII. DMWR/NMWR requirement matrix for _____.

DMWR/NMWR Content	DMWR with Parts Info	DMWR with Overhaul Standards with Parts Info	NMWR with Parts Info	MIL-STD-40051-1 Reference Elemen	t Name
PART NUMBER INDEX WORK PACKAGE	R R		R	F.5.3.9.2	**<pnindxwp>**
REFERENCE DESIGNATOR INDEX WORK PACKAGE				F.5.3.9.3	**<refdesindxwp>**
SUPPORTING INFORMATION ***NOTE*** *Applicable supporting information work packages shall be arranged in the order in which they are presented here and numbered accordingly.*	R R		R	G.5.1	**<sim>**
REFERENCES WORK PACKAGE	R R		R	G.5.2	**<refwp>**
EXPENDABLE AND DURABLE ITEMS LIST WORK PACKAGE	R R		R	G.5.6	**<explistwp>**
TOOL IDENTIFICATION LIST WORK PACKAGE				G.5.7	**<toolidwp>**
MANDATORY REPLACEMENT PARTS WORK PACKAGE	R R		R	G.5.8	**<mrplwp>**
CRITICAL SAFETY ITEMS (CSI) WORK PACKAGE (AIRCRAFT ONLY)				G.5.9	**<csi.wp>**
SUPPORT ITEMS WORK PACKAGE				G.5.10	**<supitemwp>**
ADDITIONAL SUPPORTING WORK PACKAGES				G.5.11	**<genwp>**
REAR	R R		R	5.2.2	

Legend
R - Required
P - Prohibited
Shaded - As Required

TABLE A-XXIII. BDAR requirements matrix for _____.

TM Content	BDAR TM	MIL-STD-40051-1 Reference Elemen	t Name
INTRODUCTORY MATTER	R	5.2.1	**<framed.frnt>**
Revision summary frame (Revisions only)		5.2.1.5	**<revisionsummary>**
IETM Installation data	R	5.2.1.1	
CD content frame	R	5.2.1.2	
(MC) Promulgation letter		5.2.1.3	**<promulgation>**
Warning summary		5.2.1.4	**<warnsum>**
Table of Contents	R	5.2.1.8	**<contents>**
How to use this IETM	R	5.2.1.9	**<howtouse>**
CHAPTER 1. GENERAL INFORMATION	R	Appendix B	**<gim>**
GENERAL INFORMATION WORK PACKAGE	R	I.5.2.1	**<ginfowp>**
BDAR UNIQUE GENERAL INFORMATION WP	R	I.5.2.2	**<bdar-geninfowp>**
Standards and practices	R	I.5.2.2.3	**<bdar-std-practices>**
Tasks and responsibilities	R	I.5.2.2.4	**<bdar-task-resp>**
Combat threats	R	I.5.2.2.5	**<bdar-combat-threat>**
CHAPTER 2. ASSESSING BATTLE DAMAGE	R	I.5.2.3	**<baim>**
BATTLE DAMAGE ASSESSMENT WORK PACKAGE	R	I.5.2.3	**<damage-assesswp>**
CHAPTER X. GENERAL REPAIR	R	I.5.2.4	**<brim>**
GENERAL REPAIR WORK PACKAGE	R	I.5.2.4	**<genrepairwp> <bdar-repair>**
Introduction	R	I.5.2.4.4	**<geninfo>**
Repair procedure	R	I.5.2.4.5	**<bdar-repair-proc>**
CHAPTER X. SUPPORTING INFORMATION	R	Appendix G	**<sim> <bdarcategory>**
REFERENCES WORK PACKAGE	P	I.5.2.5	**<refwp>**
SPECIAL OR FABRICATED TOOLS WORK PACKAGE		I.5.2.6	**<bdartoolswp>**
EXPENDABLE AND DURABLE ITEMS WORK PACKAGE	R	I.5.2.7	**<explistwp>**
SUBSTITUTE MATERIALS/PARTS WORK PACKAGE	R	I.5.2.8	**<substitute-matwp>**
REAR MATTER	R	5.2.2	

Legend
R - Required
P - Prohibited
Shaded - As Required

This page intentionally left blank.

TABLE A-XXIV. Preventive Maintenance Checklists requirements matrix for _____.

TM Content	-10	-13	-14	-23		-24	MIL-STD-40051-1 Reference	Element Name
PREVENTIVE MAINTENANCE CHECKLLISTS (NON-AVIATION ONLY)	R	R	R	R		R	Appendix J	**<pmc>**
INTRODUCTORY MATTER	R	R	R	R		R	5.2.1.7	**<frntcover_abbreviated>**
TM Title	R	R	R	R		R		**<tmtitle>**
Reporting of errors	R	R		R	R	R	5.2.1.6.5	**<reporting>**
Notices	R	R		R	R	R		**<notices>**
Service Nomenclature	R	R		R	R	R	5.2.1.6.12	**<servnomen>**
Date	R	R	R	R		R	5.2.1.6.13	**<date>**
INSPECTION DATA	R	R	R	R		R	J.5.5	**<pmcstable>**

Legend
R - Required
P - Prohibited
Shaded - As Required

This page intentionally left blank.

TABLE A-XXV. Stand-alone Lubrication Order requirements matrix for _____.

TM Content	-10 -13		-14	MIL-STD-40051-1 Reference Element	Name
LUBRICATION ORDER	R R		R	K.5.1	**<lubeorder>**
INTRODUCTORY MATTER					
Front cover	R R		R	K.5.2	**<frntcover_abbreviated>**
TM Title	R R		R	K.5.2.2	**<tmtitle>**
Reporting of errors	R R		R	K.5.2.5	**<reporting>**
Distribution statement, export control warning, and destruction notice	R R		R	K.5.2.6	**<notices>**
Service nomenclature	R R		R	5.2.1.6.12	**<servnomen>**
Date	R R		R	5.2.1.6.13	**<date>**
INTRODUCTION	R R		R	K.5.3	**<intro>**
LUBRICATION PROCEDURES	R R		R	K.5.4	**<lubewp>**
REAR MATTER	R R		R	K.5.9	**<lubeorder_rear>**
DA Form 2028	R	R	R	K.5.9.1	**<da2028>**
Authentication block	R	R	R	K.5.9.2	**<authent>**

Legend
R - Required
P - Prohibited
Shaded - As Required

This page intentionally left blank.

TABLE A-XXVI. DMWR for Maintenance/Demilitarization requirements for _____.

TM Content	Ammo Demil DMWR	MIL-STD-40051-1 Reference Elemen	t Name
DMWR MAINTENANCE OR DEMILITARIZAITON OF CONVENTIONAL AND CHEMICAL AMMUNITION		L.5.1	**<dmwr_ammo>**
INTRODUCTORY MATTER	R	5.2.1	**<framed.frnt>**
IETM Installation data	R	5.2.1.1	
CD content frame	R	5.2.1.2	
(MC) Promulgation letter		5.2.1.3	**<promulgation>**
Warning summary		5.2.1.4	**<warnsum>**
Revision summary frame (Revisions only)		5.2.1.5	**<revisionsummary>**
Identification information	R	5.2.1.6	**<frntcover>**
Table of contents	R	5.2.1.8	**<contents>**
CHAPTER 1. GENERAL INFORMATION AND DMWR INTRODUCTION	R		
GENERAL INFORMATION WORK PACKAGE	R	B.5.2	**<ginfowp>**
Scope R		B.5.2.3	**<scope>**
Maintenance forms, records, and reports	R	B.5.2.4	**<mfrr>**
Deviations, waivers, and exceptions	R	B.5.2.5	**<eir>**
Corrosion prevention and control (CPC)	R	B.5.2.7	**<cpcdata>**
DMWR INTRODUCTION WORK PACKAGE	R	L.5.4	**<dmwr_introwp>**
Work planning	R	L.5.4.3	**<work_planning>**
Disposition R		L.5.4.4	**<disposition>**
Equipment	R	L.5.4.5	**<equipment>**
Safety requirements	R	L.5.4.6	**<sfty_req>**
Protection against general hazards	R	L.5.4.7	**<gen_hazards>**
Protection against specific hazards	R	L.5.4.8	**<spec_hazards>**
Hazard analysis	R	L.5.4.9	**<haz_analysis>**
Environmental regulation compliance	R	L.5.4.10	**<erc>**
Resource conservation and recovery regulations	R	L.5.4.11	**<rcrr>**
Resource recovery	R	L.5.4.12	**<resource_recovery>**
Reporting requirements	R	L.5.4.13	**<reporting_req>**
Tabulated data	R	L.5.4.14	**<tabdata>**
Flowchart		L.5.4.15	**<flowchart>**
CHAPTER X. OPERATIONAL REQUIREMENTS	R		
OPERATIONAL REQUIREMENTS WORK PACKAGE	R	L.5.5	**<dmwr_operationalreqwp>**
Special safety requirements	R	L.5.5.3	**<special_sfty>**

TABLE A-XXVI. DMWR for Maintenance/Demilitarization requirements for _____.

TM Content	Ammo Demil DMWR	MIL-STD-40051-1 Reference Element Name
Operational steps	R	L.5.5.4	<op_steps>
Flowchart		L.5.5.5	<flowchart>
CHAPTER X. QUALITY ACCEPTANCE REQUIREMENTS	R		
QUALITY ACCEPTANCE REQUIREMENTS WORK PACKAGE	R	L.5.6	<dmwr_qarwp>
Demilitarized ammunition		L.5.6.2	<demil_qar>
Maintenance of ammunition		L.5.6.4	<maintenance_qar>
Definitions	R	L.5.6.5	<definitions>
SUPPORTING INFORMATION ***NOTE*** *Applicable supporting information work packages shall be arranged in the order in which they are presented here and numbered accordingly*	R	L.5.7	
REFERENCES WORK PACKAGE	R	L.5.7.1	<refwp>
EXPENDABLE AND DURABLE ITEMS LIST WORK PACKAGE	R	L.5.7.2	<explistwp>
EQUIPMENT AND SPECIAL FACILITIES WORK PACKAGE	R	L.5.7.3	<facilwp>
TABULATED DATA, MILITARY SPECIFICATIONS, AND DRAWINGS WORK PACKAGE	R	L.5.7.4	<genwp>
APPROVED INTRAPLANT TRANSFER EQUIPMENT WORK PACKAGE	R	L.5.7.5	<genwp>
PENTACHLOROPHENOL (PENTA)-TREATED MATERIALS WORK PACKAGE	R	L.5.7.6	<genwp>
ENVIRONMENTAL REQUIREMENTS WORK PACKAGE	R	L.5.7.7	<genwp>
HAZARD ANALYSIS WORK PACKAGE	R	L.5.7.8	<genwp>
OTHER SUPPORTING INFORMATION WORK PACKAGE	R	L.5.7.9	<genwp>
REAR MATTER	R	5.2.2	

Legend
R - Required
P - Prohibited
Shaded - As Required

REMARKS FOR TABLE

This page intentionally left blank.

APPENDIX B
GENERAL INFORMATION, EQUIPMENT DESCRIPTION, AND THEORY OF OPERATION

B.1 **SCOPE.**

B.1.1 Scope. This appendix establishes the technical content requirements for the preparation of general information, equipment description, and theory of operation data for major weapon systems and their related systems, subsystems, equipment, WRAs, and SRAs. This appendix is a mandatory part of this standard. The information contained herein is intended for compliance. The requirements are applicable for all maintenance levels/classes through overhaul (depot), including DMWRs and NMWRs.

B.2 **APPLICABLE DOCUMENTS.**

The applicable documents in section 2 apply to this appendix.

B.3 **DEFINITIONS.**

The definitions in section 3 apply to this appendix.

B.4 **GENERAL REQUIREMENTS.**

B.4.1 General. Descriptive information with theory of operation shall be prepared for weapon systems, major equipment, components, and applicable support and interface equipment. Information that is required to provide the user with a physical description and to functionally explain how the weapon system or equipment operates shall be included.

B.4.2 Maintenance level/class applicability. Requirements contained in this appendix are applicable to all maintenance levels/classes unless specifically labeled in bold and in parentheses. The labeled requirement may specify a specific level (e.g., **Field**) (refer to 3.82) or a specific maintenance class (refer to 3.80) (e.g., **Maintainer** or **AMC**). The labeled requirement shall be applicable to all technical manuals (TMs) containing that maintenance level/class. An explanation of applicable Department of the Army (DA) maintenance levels/classes is provided in section 3.

B.4.3 Preparation of digital data for electronic delivery. Data prepared and delivered digitally in accordance with this standard shall be XML tagged using the DTD. Data shall be formatted for presentation using stylesheets in accordance with MIL-STD-2361. Stylesheets may be prepared using XSL or other languages as specified by the acquiring activity. Where possible and when available, Army developed and provided stylesheets shall be used. Refer to 4.6 for information on obtaining or accessing the DTD and stylesheets. XML tags used in the DTD are noted throughout the text of this standard in bracketed, bold characters (e.g., **<descwp>**) as a convenience for the author and to ensure that the tags are used correctly when developing a document instance.

B.4.4 Use of the Document Type Definition (DTD)/stylesheet. The DTD referenced in this appendix interprets the technical content and structure for the functional requirements contained in this standard. Its use is mandatory. Development of IETMs is accomplished through the use of this standard, the DTD, and the guidance contained in MIL-HDBK-1222. Where possible and

when available, Army developed and provided stylesheets shall be used. For additional information on the DTD and specific XSL, refer to MIL-STD-2361.

B.4.5 Content structure. The examples provided herein are an accurate representation of the content structure requirements contained in this appendix and shall be followed to permit the effective use of the DTD for General Information, Equipment Description, and Theory of Operation.

B.4.6 Style and format. This standard provides style and format requirements for the technical content requirements described in this appendix. These requirements are considered mandatory and are intended for compliance.

B.4.7 Interactive Electronic Technical Manual (IETM) functionality. The specific level of functionality and user interaction to be provided in the IETMs shall be in accordance with the functionality matrix contained in Appendix A.

B.4.8 Work package development. Data developed in accordance with this appendix shall be divided into work packages. For task-related work packages, the tasks shall be in the logical order of the work sequence. These work packages should be stand alone and are broken into the following work package types: general information, operator instructions, troubleshooting procedures, maintenance instructions, parts information, supporting information, destruction of Army materiel to prevent enemy use, preventative maintenance checklist, and lubrication orders. A work package shall contain all information and references required to support the work package type.

B.4.9 Safety devices and interlocks. Information shall be prepared pertaining to the purpose and location of all safety devices and interlocks in conjunction with the pertinent procedures.

B.4.10 Electrostatic Discharge (ESD) sensitive parts. If the equipment contains ESD sensitive parts, components, or circuits; cautions and ESD labels shall be incorporated into the applicable tasks and procedures to ensure ESD sensitive parts are not damaged or degraded during maintenance and operation. (Refer to 4.9.18 for requirements on labeling with ESD.) Actions which could damage ESD sensitive parts, but which are not directly related to handling or operation of ESD sensitive parts, shall not be annotated with the ESD acronym, but shall be preceded by a caution statement.

B.4.11 Nuclear hardness **<hcp>**. If the weapon system/equipment has nuclear survivability requirements (e.g., overpressure and burst, thermal radiation, electromagnetic pulse, or transient radiation effects on electronics), cautions and Hardness-Critical Process (HCP) labels shall be incorporated into the applicable tasks and procedures to ensure that the hardness of the equipment is not degraded during handling or operation. Refer to 4.9.17 for requirements on labeling with HCP. Actions which could degrade hardness, but which are not directly involved in establishing nuclear hardness, shall not be annotated with the acronym, but shall be preceded by a caution statement.

B.4.12 Selective application and tailoring. This standard contains some requirements that may not be applicable to the preparation of all TMs. Selective application and tailoring of requirements contained in this standard are the responsibility of the acquiring activity and shall be accomplished using Appendix A. The applicability of some requirements is also designated by one of the following statements: unless specified otherwise by the acquiring activity, as specified by the acquiring activity, or when specified by the acquiring activity.

B.5 **DETAILED REQUIREMENTS.**

B.5.1 Preparation of general information, equipment description, and theory of operation. The general information, equipment description, and theory of operation chapter shall be prepared and subdivided into individual work packages to provide the user with information for general requirements, descriptive data about the weapon system or equipment, and an explanation of how the weapon system or equipment works. Weapon system and equipment description, and theory of operation data shall be developed in narrative or tabular form, or by whatever method is most simple or effective for conveying the specific TM application. Descriptive information shall not contain any procedural data or warnings, cautions, or notes. When necessary for clarity or improved understanding, illustrations shall be used to support the narrative or tabular information. (Refer to 4.9.6.2 for a description of work package identification information requirements. Refer to MIL-HDBK-1222 for examples of work package identification information format.)

B.5.1.1 Required general information, equipment description, and theory of operation data work packages. General information, equipment description, and theory of operation data shall be developed and divided into the following types of work packages. Nomenclature used to identify the weapon system, major equipment, components, and applicable support and interface equipment shall remain consistent throughout and among all work packages.

a. General information work package **<ginfowp>** (refer to B.5.2.)
b. Equipment description and data work package **<descwp>** (refer to B.5.3.)
c. Theory of operation work package **<thrywp>** (refer to B.5.4.)
d. General information work package (**Preventive Maintenance Service Manual only**) **<pms-ginfowp>** (refer to B.5.5.)
e. General information work package (**Phased Maintenance Checklist Manual only**) **<pm-ginfowp>** (refer to B.5.6.)

B.5.2 General information work package **<ginfowp>**. This work package shall contain the requirements provided in B.5.2.1 through B.5.2.26 as applicable, for the weapon system/ equipment.

B.5.2.1 Work package identification information **<wpidinfo>**. Work package identification information is required for this work package. (Refer to 4.9.6.2.)

B.5.2.2 Work package initial setup **<initial_setup>**. Initial setup is not required for this work package.

B.5.2.3 Scope **<scope>**. A brief statement shall be prepared to tell what is covered in the TM. As applicable, the following information shall also be included:

a. Type of manual.
b. Model number(s) and equipment name(s).
c. Purpose of equipment.
d. Special inclusions in the manual, such as drill procedures or on-vehicle loading plans.

B.5.2.4 Maintenance forms, records, and reports **<mfrr>**.

a. (A) Army Only TM. The following statement shall be included:

"**MAINTENANCE FORMS, RECORDS, AND REPORTS**

Department of the Army forms and procedures used for equipment maintenance will be those prescribed by (as applicable) DA PAM 750-8, The Army Maintenance Management System (TAMMS) Users Manual; DA PAM 738-751, Functional Users Manual for the Army Maintenance Management Systems - Aviation (TAMMS-A); or AR 700-138, Army Logistics Readiness and Sustainability."

b. (MC) Marines Only TM. The following statement shall be included:

"**MAINTENANCE FORMS, RECORDS, AND REPORTS**

Maintenance forms and records used by Marine Corps personnel are prescribed by TM 4700-15/1."

c. Multi-Service TM. The following statements shall be included only for multi-service technical publications and shall use only applicable services (e.g., if the Navy does not use the publication, do not include a statement for that Service):

"**MAINTENANCE FORMS, RECORDS, AND REPORTS**

(A) Department of the Army forms and procedures used for equipment maintenance will be those prescribed by (as applicable) DA PAM 750-8, The Army Maintenance Management System (TAMMS) Users Manual; DA PAM 738-751, Functional Users Manual for the Army Maintenance Management Systems - Aviation (TAMMS-A); or AR 700-138, Army Logistics Readiness and Sustainability.

(MC) Maintenance forms and records used by Marine Corps personnel are prescribed by TM 4700-15/1.

(F) Maintenance forms and records used by Air Force personnel are prescribed in AFI 21-101 and the applicable TO 00-20 Series Technical Orders.

(N) Navy users should refer to their service directives to determine applicable maintenance forms and records to be used."

d. (A) Army conventional and chemical ammunition. The following statement shall be added:

"Accidents involving injury to personnel or damage to materiel will be reported on DA Form 285, U.S. Army Accident Report in accordance with AR 385-40. Explosives and ammunition malfunctions will be reported in accordance with AR 75-1."

e. When applicable, add references to SB 742-1, Inspection of Supplies and Equipment Ammunition Surveillance Procedures.

B.5.2.5 Reporting equipment improvement recommendations **<eir>**. The following statement shall be included (italicized text within parentheses shall be replaced with the appropriate information):

"REPORTING EQUIPMENT IMPROVEMENT RECOMMENDATIONS (EIR)

If your (*insert equipment short item name*) needs improvement, let us know. Send us an EIR. You, the user, are the only one who can tell us what you do not like about your equipment. Let us know why you do not like the design or performance. If you have Internet access, the easiest and fastest way to report problems or suggestions is to follow the instructions and links below:

For ALL non-Aviation/Missile Warranty, EIR and PQDRs must be submitted through the Web Product Quality Deficiency Reporting (PQDR) site. Note that all CECOM managed (B16), including aviation, items must also be submitted through the following site. The Web PQDR Web site is: http://www.nslcptsmh.csd.disa.mil/webpqdr/webpqdr.htm.

New accounts can be established at the following address: http://www.nslcptsmh.csd.disa.mil/accessforms/uarform.htm.

All AMCOM (Aviation and Missile Command) Deficiency Reports (DRs), (Warranty, EIR, and PQDRs) must be submitted through the Joint Deficiency Reporting System (JDRS) at https://jdrs.mil/DR_Initiate.cfm?service=AR.

You may also submit your information using an SF 368 (Product Quality Deficiency Report). You can send your SF 368 using e-mail, regular mail, or fax using the addresses/fax numbers specified in (*DA PAM 750-8, The Army Maintenance Management System (TAMMS) Users Manual* OR *DA PAM 738-751, Functional Users Manual for the Army Maintenance Management Systems - Aviation (TAMMS-A) for aviation systems*). We will send you a reply."

B.5.2.5.1 (MC) Additional reporting equipment improvement recommendations for Marine Corps Technical Manuals (TMs). The following statement shall be added for Marine Corps TMs:

"For Marine Corps users: Quality deficiency reports (QDR) shall be submitted on SF 368 in accordance with MCO 4855.10. A reply will be furnished to you."

B.5.2.6 Hand Receipt (HR) manuals **<handreceipt>**.

B.5.2.6.1 Hand Receipt (HR) contained in Interactive Electronic Technical Manual (IETM). If hand receipt information exists and is included with the IETM, the following statement shall be included in the general information work package. A link shall be provided for instructions on how to access the information:

"HAND RECEIPT (HR) MANUALS

This IETM contains hand receipts that list end item related equipment (e.g., Components of End Item (COEI), Basic Issue Items (BIIs), and Additional Authorization List (AAL)) that must be accounted for."

B.5.2.6.2 Hand Receipt (HR) not contained in Interactive Electronic Technical Manual (IETM). If hand receipt information exists but is not included with the IETM, the following statement shall be included in the general information work package:

"**HAND RECEIPT (HR) MANUALS**

This manual has a companion document with a TM number followed by "-HR" (which stands for Hand Receipt). TM X-XXXX-XXX-10-HR consists of preprinted hand receipts that list end item related equipment (e.g., Components of End Item (COEI), Basic Issue Items (BIIs), and Additional Authorization List (AAL)) that must be accounted for. As an aid to property accountability, additional HR manuals may be requisitioned through normal publication channels."

B.5.2.7 Corrosion prevention and control **<cpcdata>**. A statement similar to the following shall be prepared.

"**CORROSION PREVENTION AND CONTROL (CPC)**

Corrosion prevention and control of Army materiel is a continuing concern. It is important that any corrosion problems with this item be reported so that the problem can be corrected and improvements can be made to prevent the problem in future items.

Corrosion specifically occurs with metals. It is an electrochemical process that causes the degradation of metals. It is commonly caused by exposure to moisture, acids, bases, or salts. An example is the rusting of iron. Corrosion damage in metals can be seen, depending on the metal, as tarnishing, pitting, fogging, surface residue, and/or cracking.

Plastics, composites, and rubbers can also degrade. Degradation is caused by thermal (heat), oxidation (oxygen), solvation (solvents), or photolytic (light, typically ultraviolet) processes. The most common exposures are excessive heat or light. Damage from these processes will appear as cracking, softening, swelling, and/or breaking.

SF Form 368, Product Quality Deficiency Report should be submitted to the address specified in DA PAM 750-8, The Army Maintenance Management System (TAMMS) Users Manual."

For **aircraft IETMs**, this information shall include a reference to TM 1-1500-344-23, volumes 1-4 (Cleaning and Corrosion Control).

B.5.2.8 Ozone Depleting Substances (ODSs) **<odsdata>**. The use of Class 1 ODS for new acquisitions has been curtailed by Executive Order, Public Law, and related Army policy. ODSs are listed in Title VI of the Clean Air Act. For systems procured and fielded prior to the date these became effective (June 1993) that use a Class 1 ODS, a listing of those substances required to operate and maintain the system shall be included in the manual. After June 1993, this requirement applies to any system procured or fielded that requires the use of a Class 1 ODS, where the use of the ODS has been properly documented and waived. The procuring activity will provide a list of Class 1 ODS upon request.

B.5.2.9 Destruction of Army materiel to prevent enemy use **<destructmat>**. Reference shall be made to the appropriate TM(s) or work package(s) covering the destruction of Army materiel to prevent enemy use as provided by the proponent activity.

B.5.2.10 Preparation for storage or shipment **<pssref>**. Reference shall be made to the preparation for storage or shipment procedures, including packaging and administrative storage, found in the applicable maintenance instructions work package.

B.5.2.11 Warranty information **<wrntyref>**. When the TM covers equipment that is under warranty and a Warranty Technical Bulletin (WTB) is published, the applicable WTB shall be

referenced. When a WTB is not published, the following statement shall be included (italicized text within parentheses shall be replaced with the appropriate information):

> "**WARRANTY INFORMATION**
>
> The (*insert name of equipment*) is warranted for (*insert miles or other timeframe as appropriate*). The warranty starts on the date found in block 23 of DA Form 2408-9, Equipment Control Record. Report all defects to your supervisor, who will take appropriate action."

B.5.2.12 Nomenclature cross-reference list **<nomenreflist>**. A cross-reference list shall be prepared when unofficial nomenclature (common name) is approved by the proponent activity. A statement on how to access the nomenclature cross-reference list shall be included in this work package. (Refer to 4.9.23.)

B.5.2.13 List of abbreviations/acronyms **<loa>**. A list of all abbreviations, acronyms, signs, or symbols used in the manual shall be prepared. Warning icons are defined in the Warning Summary. For **aircraft only**, a statement shall be prepared that abbreviations are in accordance with abbreviations contained in the Records Management and Declassification Agency (RMDA) at . , except when the abbreviation stands for a marking actually found in the aircraft.

B.5.2.14 Quality assurance **(QA) (DMWR/NMWR and aviation only) <qainfo>**. When specified by the acquiring activity, reference shall be made to pertinent QA information or include the appropriate general QA information. If QA information is not referenced but is included in the manual, it shall be stated that the text of each quality assurance procedure or step in the manual is preceded and highlighted by the addition of "QA check." For **aircraft maintenance** IETMs, include a reference to FM 3-04.500. The abbreviation "QA" shall be defined either in a note or in the text.

B.5.2.15 Quality of material **<qual.mat.info>**. A statement(s) similar to the following shall be included (italicized text within parentheses shall be replaced with the appropriate information):

> "Material used for replacement, repair, or modification must meet the requirements of this (*insert IETM*). If quality of material requirements are not stated in this (*insert IETM*), the material must meet the requirements of the drawings, standards, specifications, or approved engineering change proposals applicable to the subject equipment."

B.5.2.16 Safety, care, and handling **<sftyinfo>**. The following general precautions and safety regulations shall be prepared.

a. **(Ammunition TMs)** Information shall be prepared to comply with DA PAM 385-63. References to applicable ARs for range safety and danger zones during training and combat shall be included. Explanations and official definitions shall be prepared for such safety-related terms as "misfire," "hangfire," and "cook-off," which describe characteristics associated with the specific items(s) covered by the TM under preparation. A reference to AR 385-10 and DA PAM 385-64 shall be made for general ammunition care, handling, and safety.
b. For TMs covering equipment with radioactive parts or components, information shall be prepared to comply with Nuclear Regulatory Commission provisions, and references to

applicable ARs and safety TMs on radioactive materials shall be included. If additional coverage on radioactive materials is needed, but is not included in applicable TMs, instructions shall be prepared as required. In addition, the following information shall be prepared for inclusion throughout the TM:

(1) Nuclear warning notices. These shall be placed at the beginning of any instruction covering procedures that will expose personnel to a nuclear radiation hazard.

(2) Procedures to be followed before maintenance actions or in the event of breakage of radioactive parts or components. These include safety, care, and handling instructions.

(3) Radioactive parts or components. These shall be shown and identified on a parts location diagram or illustration. Warning notices shall be included.

(4) A list of radioactive parts or components and the type and quantity of radioactive material involved. These shall be included as part of equipment data (refer to B.5.3).

(5) Instructions for the disposal of radioactive material, such as the requirement to double bag all broken tritium sources in plastic.

c. ESD control standards for the protection of electrical and electronic parts, assemblies, and equipment shall be prepared. The ESD classes shall be identified. Refer to MIL-STD-1686 and MIL-HDBK-263, which contain ESD control procedures and material necessary to protect these items. For classifications of ESD marking procedures. (Refer to 4.9.18.)

d. **(DMWRs/NMWRs only)** When applicable, reference shall be made to the electromagnetic compatibility standards (e.g., MIL-STD-461 and MIL-STD-462) that apply to the equipment covered in the DMWR/NMWR.

B.5.2.17 Nuclear hardness **<hcp>**. If equipment covered in the TM has nuclear survivability requirements (e.g., overpressure and burst, thermal radiation, electromagnetic pulse, or transient radiation effects on electronics), it shall be so stated. (Refer to 4.9.17 for marking HCP procedures.) The following statement shall be included.

"**NUCLEAR HARDNESS**

All hardness critical process (HCP) procedures in this manual are marked with the acronym **HCP** as follows:

1. When an entire task, including all paragraphs and procedures, is considered hardness critical, only the task title will be marked by the acronym **HCP**. This will be placed before the title.
2. When only certain processes and steps within the work package are hardness critical, only the applicable processes and steps will be marked by placement of the acronym **HCP** between each applicable step number and the text."

B.5.2.18 Calibration **<calref>**. Equipment requiring calibration shall be identified, and reference shall be made to the publication containing the applicable calibration procedure.

B.5.2.19 Engineering Change Proposals **(ECPs) (DMWR/NMWR only) <ecp>**. The following statement shall be included (italicized text within parentheses shall be replaced with the appropriate information):

"**ENGINEERING CHANGE PROPOSALS**

Engineering Change Proposals (ECPs) will be submitted in accordance with AR 70-1 directly to (*enter the name and address of the responsible command or activity*). A reply will be furnished to you."

B.5.2.20 Modification list **(DMWR/NMWR only) <modification>**. Modification Work Orders (MWOs) and ECPs shall be identified for all modifications which have been incorporated into the work required by the DMWR/NMWR. MWOs shall be reported as outlined in AR 750-10. The applicable MWOs and the ECPs shall be listed (by title and number). This listing shall be supplied by the major subordinate command. Alternatively, a statement shall be made stating that the modifications must be applied during the overhaul of the item. For example (italicized text within parentheses shall be replaced with the appropriate information):

"**MODIFICATIONS**

All Modification Work Orders (MWOs), all minor alteration procedures (MAPs) specified in the contract/work directive, and all Engineering Change Proposals (ECPs) listed in the *(insert DMWR or NMWR)* must be applied during the overhaul of the item."

B.5.2.21 Deviations and exceptions **(DMWR/NMWR only) <deviation>**. The following statement shall be included (italicized text within parentheses shall be replaced with the appropriate information):

"**DEVIATIONS AND EXCEPTIONS**

Requests for deviations or exceptions to this (*insert Depot Maintenance Work Requirement (DMWR) or National Maintenance Work Requirement (NMWR)*) will be processed in accordance with International Standards Organization (ISO) 9000 Series standards or equivalent."

B.5.2.22 Mobilization requirements **(DMWR/NMWR only) <mobreq>**. The following statement shall be included (italicized text within parentheses shall be replaced with the appropriate information):

"**MOBILIZATION REQUIREMENTS**

All requirements of this (*insert DMWR or NMWR*) will be exempted or revised in the event of mobilization. Only those procedures necessary to return the (*insert equipment name*) to a serviceable condition will be performed. The exemptions and revisions are explained in supporting information work package (*insert appropriate work package sequence number*)."

B.5.2.23 Critical safety items **(CSIs) (Flight Safety Critical Aircraft Parts (FSCAP))(aircraft only) <csireq>**. The following statement shall be included:

"**CRITICAL SAFETY ITEMS (CSI) (Flight Safety Critical Aircraft Parts (FSCAP)) PROGRAM**

Parts, assemblies, or installations identified under the CSI (FSCAP) program require special handling during maintenance or overhaul (M&O). Throughout the M&O procedures, warnings are included emphasizing critical instructions to be followed. These warnings are identified as CSI (FSCAP) warnings.

A critical safety item (flight safety critical aircraft part) is defined as:

> An aviation-related part, assembly, installation or production system with one or more critical or critical safety characteristics that, if missing or not conforming to the design data, quality requirements or overhaul and maintenance documentation, would result in an unsafe condition that could cause loss or serious damage to the end item or major components, loss of control, uncommanded engine shutdown or serious injury or death to personnel. Unsafe conditions relate to hazard severity categories I and II of MIL-STD-882 and include items determined to be "life-limited," "fracture critical," "fatigue-sensitive," etc. The determining factor in Aviation CSI (FSCAP) is the consequence of failure, not the probability that the failure or consequence would occur.

All CSIs (FSCAPs) shall be handled and managed as prescribed in DOD 4140.1R and DA PAM 95-9.

Throughout the maintenance tasks, 'CRITICAL SAFETY ITEM (FLIGHT SAFETY CRITICAL AIRCRAFT PART)' alerts will precede the procedural step that includes a CSI (FSCAP), emphasizing that this part or parts require(s) special handling during maintenance."

B.5.2.24 Cost considerations **(DMWR/NMWR only) `<cost>`**. The following statement shall be included (italicized text within parentheses shall be replaced with the appropriate information):

"**COST CONSIDERATIONS**

This work requirement shall be the basis for establishing the extent of overhaul while taking into consideration cost factors. A determination shall be made on all subassemblies/assemblies to replace worn or damaged components which are available in supply, if acquisition cost is less than the cost to repair and restore to the (*insert DMWR or NMWR*) standard. The cost to repair/restore any individual item with an established Maintenance Expenditure Limit (MEL) to the (*insert DMWR or NMWR*) standard shall not exceed the MEL, unless a waiver has been approved in accordance with AMC-R 750-51. This requirement does not apply to items exempted from MEL in accordance with AMC-R 750-51."

B.5.2.25 Supporting information for repair parts, special tools, Test, Measurement, and Diagnostic Equipment (TMDE), and support equipment **`<supdata>`**. When applicable, the following information shall include a reference to the common tools and equipment; special tools, TMDE, and support equipment; and the repair parts as shown in the following paragraphs. The information in B.5.2.25.1 through B.5.2.25.3 shall be included.

B.5.2.25.1 Common tools and equipment. The following statement shall be included:

"**COMMON TOOLS AND EQUIPMENT**

For authorized common tools and equipment, refer to the Modified Table of Organization and Equipment (MTOE), Common Table of Allowances (CTA) 50-970, Expendable/Durable Items (Except: Medical, Class V, Repair Parts, and Heraldic

Items*)*; CTA 50-909, Field and Garrison Furnishings and Equipment; or CTA 8-100, Army Medical Department Expendable/Durable Items; as applicable to your unit."

B.5.2.25.2 Special tools, Test, Measurement, and Diagnostic Equipment (TMDE), and support equipment. A reference to the Parts Information and Maintenance Allocation Chart (MAC) shall be included. When no special tools or equipment are required, it shall be so stated. If tools are to be fabricated, reference shall be made to the Illustrated List of Manufactured Items work package.

B.5.2.25.3 Repair parts. The following statement shall be included (italicized text within parentheses shall be replaced with the appropriate information):

"Repair parts are listed and illustrated in the parts information work packages beginning with (*insert appropriate work package sequence number)* of this IETM."

B.5.2.26 Copyright credit line **<copyrt>**. TMs should not contain copyrighted material except as specified in the Federal Acquisition Regulations and Defense Federal Acquisition Regulation Supplement. When copyrighted material is included in a TM, the TM author shall obtain prior written permission from the copyright owner or authorized agent for its use. The written permission shall contain a statement declaring whether or not a copyright credit line is required. When a copyright credit line is required, the information shall appear as the last paragraph of the general information work package.

B.5.2.26.1 Proprietary names. Trade names, copyrighted names, or other proprietary names applying exclusively to the product of one company shall not be used unless the items cannot be adequately described without using the proprietary names because of the technical involvement, construction, or composition. In such instances, one commercial product shall be listed, followed by the words "or equal." The same shall apply to manufacturers' part numbers or drawing numbers for minor parts where it is impractical to specify the exact requirements. If possible, the particular characteristics required for the "or equal" products shall be defined.

B.5.2.26.2 Advertising. Publication material shall not contain advertising matter.

B.5.3 Equipment description and data work package **<descwp>**. This work package shall contain the descriptive data requirements listed in B.5.3.1 through B.5.3.6, as applicable. If the descriptive data is provided in a separate operator's manual, a paragraph referencing the equipment description and data in the operator's manual shall suffice. Additional equipment description and data required for a higher maintenance level, but not included in the operator's manual, shall be included. This work package shall not contain any operator or maintenance procedures.

B.5.3.1 Work package identification information **<wpidinfo>**. Work package identification information is required for this work package. (Refer to 4.9.6.2.)

B.5.3.2 Work package initial setup **<initial_setup>**. Initial setup is not required for this work package.

B.5.3.3 Equipment characteristics, capabilities, and features **<eqpinfo>**. An overall description of the equipment **<eqpdesc>** shall be prepared, including general capabilities, special features, and other like information (e.g., applications, limitations) which will be helpful in the operation and maintenance of the equipment. Unless otherwise directed, the information

may be in narrative or tabular format. Additional description requirements are outlined by the following:

a. The equipment type shall be stated, as shall the following equipment features: portability or mobility, operational and special environment, and remote control.
b. Components and their functions shall not be described unless essential to continuity. For functional data, reference shall be made to the theory of operation.
c. When the equipment covered varies in scope and application or has several applications within an end item, a brief explanation of the multiple uses and a simple diagram showing all aspects of a typical application shall be prepared.
d. For **ammunition TMs**, packing and packaging information shall be prepared, including number of rounds per pack.

B.5.3.4 Location and description of major components **(except Conventional Ammunition and Chemical Manuals)** **`<locdesc>`**. Equipment location information shall be prepared. It shall include external and internal views of the equipment used to show general features and all major components. This information shall not duplicate information contained in the equipment data requirements and the equipment characteristics, capabilities, and features.

a. The equipment and weapon systems configuration shall be described as follows:
   (1) A description of system areas and compartments shall be prepared. The system equipment and components contained in the areas shall be identified. To identify and locate the listed system equipment, the configuration description shall be supported by separate illustrations of each compartment and area. For **aircraft only**, a station diagram showing fuselage station, water line, and butt line, etc., shall be included. (Refer to Figure B-1.)
   (2) The subsystems or equipment comprising the system shall be identified and described. Other equipment which is installed in the subject system compartments and areas does not need to be listed in the text or called out in the illustrations if it does not directly affect the operation or maintenance of the subject system. Descriptions of operator-attended equipment shall include general statements about the nature and purpose of the controls and indicators. The text shall be supported by illustrations.
   (3) Descriptions and illustrations of associated systems' equipment shall be limited to the major units of that equipment. The descriptions shall be more concise than those of the subject system's equipment; otherwise, the same requirements shall apply. In the descriptions, emphasis shall be placed on the associated system equipment that constitutes operational or functional interfaces with the subject system. Such units shall be included in the system illustrations.
b. Illustrate the use of the equipment. Only information pertaining to the user shall be prepared.
c. Location and contents of end-item and major component identification plates shall be illustrated. Modification information and warranty plates, stencils, or location of serial numbers shall be illustrated.

B.5.3.5 Differences between models **`<eqpdiff>`**. Significant differences affecting interchangeability shall be identified. Specifically, differences associated with equipment models

or units of the same model shall be indicated if they would affect operator or maintenance actions. These differences shall be related explicitly to equipment model, part number, or serial number ranges in such a manner that the TM user can identify the specific equipment configuration involved. When model differences exist but have no effect on operation or maintenance, this fact shall be stated.

B.5.3.6 Equipment data **<eqpdata>**.

a. Performance data shall be prepared, including numerical and other standard-related data applying to operational and maintenance functions. The equipment data shall summarize the specific capabilities and limitations of the equipment and other critical data needed by the TM user for maintenance of the equipment. Vehicle and cargo space dimensions and metric and other equivalents shall be included.
b. For systems, a list of the environmental control requirements, such as limited temperature, humidity, or other limited conditions shall be prepared. Reference shall be made to the work package(s) containing information on any damage to be expected from exceeding these limits and procedures for minimizing the damage.
c. A summary shall be prepared that lists the effects of weather conditions on equipment that could affect system capability or cause equipment damage. This summary shall include references to any special servicing procedures that must be accomplished because of climatic changes, such as adding antifreeze to coolants.
d. Instructions for the use, transportation, handling, storage, or disposal of such substances as fuels, toxic and hazardous substances, chemicals, ordnance, and munitions shall be prepared. These instructions shall meet the applicable requirements of the Federal Environmental Protection Standards (standards to be provided by the acquiring activity).
e. The energy efficiency rating shall be included for products that directly consume energy in normal operations and that commonly have a method of expressing energy efficiency.

B.5.4 Theory of operation work package **<thrywp>**. A theory of operation work package shall be prepared to provide the maintenance technician with adequate background information to support and perform maintenance tasks and troubleshooting on the weapon system, equipment, or components. DMWR/NMWR shall include this(these) work package(s) as required by the acquiring activity. The amount of detail and complexity of the theory of operation presentation shall be in accordance with the Logistics Management Information (LMI) maintenance concept, the MAC or an approved maintenance plan. Theory of operation shall be provided as described in B.5.4.1 through B.5.4.3. This work package shall not contain any operator or maintenance procedures.

B.5.4.1 Work package identification information **<wpidinfo>**. Work package identification information is required for this work package. (Refer to 4.9.6.2.)

B.5.4.2 Work package initial setup **<initial_setup>**. Initial setup is not required for this work package.

B.5.4.3 Theory presentation. Theory of operation shall consist of a functional narrative to explain the weapon system, equipment, and component operation (electrical/electronic, hydraulic, pneumatic, and mechanical). (Refer to MIL-HDBK-1222 for an example of theory of operation.) Block diagrams, functional flow diagrams, schematics, and other illustrations shall be included to support the text. Basic theory, normally found in textbooks, shall not be included. If

the TM covers more than one model of equipment or more than one configuration of a weapon system, the differences shall be explained or separate work packages may be used. Additional theory requirements are outlined in the following:

a. When necessary, introductory general information **<intro>** may precede the theory of operation narrative.
b. For simple systems or equipment/components, all theory **<systhry>** may be included in a single work package.
c. If the relative complexity of the weapon system/equipment is such that it is reasonable to first present the theory of the end item as a unit and then present the theory of its major system, subsystems, and components, it shall be presented in a series of work packages. A separate theory of operation work package shall be developed for each aircraft system. The work package may contain the functional operation for the system **<systhry>**, its subsystems **<ssysthry>** and its components (line replacement units (LRUs) **<lruthry>** and shop replacement units (SRUs) **<sruthry>**); or when necessary for usability or clarity, subsystem and component theory of operation may be provided in separate work packages. Subsystem component theory of operation may be included in either the subsystem theory of operation work package or in a separate component theory of operation work package. Detailed component functional operation, common circuitry, and wiring diagrams shall not be included unless they are necessary to understand the system/subsystem function.
d. Theory narrative shall be to a depth necessary to support the technician in fault isolation to the level directed by the LMI and/or maintenance plan. The operation of the weapon system and related systems/components shall be presented in a logical flow. Significant input, output, and control signals; supply voltages; and power supply output voltages shall be identified. If the equipment operates in more than one mode, each mode shall be explained and supported by functional block diagrams. Theory of operation shall describe detailed circuitry of all repairable components as directed by the LMI/maintenance plan. Internal circuits, their relationship to each other, input and output signals, waveforms, and time-phase relationship to significant waveforms shall be included when required to understand detailed equipment operation. Theory shall not be prepared for nonrepairable, throw-away components.

B.5.5 General information work package **(Preventive Maintenance Services Manual or Preventive Maintenance Daily Manual only) <pms-ginfowp>**. This work package shall be prepared for Preventive Maintenance Services manuals and Preventive Maintenance Daily manuals. It shall contain the content requirements provided in B.5.5.1 and B.5.5.4. The italicized text shall be deleted, and as applicable, replaced with the appropriate information.

B.5.5.1 Work package identification information **<wpidinfo>**. Work package identification information is required for this work package. (Refer to 4.9.6.2.)

B.5.5.2 Work package initial setup **<initial_setup>**. Initial setup is not required for this work package.

B.5.5.3 Maintenance activities **<scope>**. The following text within quotes shall be included verbatim (italicized text within parentheses shall be replaced with the appropriate information).

"**SCOPE**

The Preventive Maintenance Services Inspection Checklist work package contains complete requirements for a (*insert specific inspection interval(s) here*) for the (*insert specific equipment here*). It does not contain instructions for repair, adjustment, or other means of rectifying conditions, nor does it contain instruction for troubleshooting to find causes for malfunctioning. Specific tolerances, limits, etc., can be found in the applicable maintenance manuals. Use of the alphabetical index in the applicable manuals will facilitate locating the required information."

B.5.5.4 General information **<pms-geninfo>**. The following text within quotes shall be included verbatim (italicized text within parentheses shall be replaced with the appropriate information).

"**INSPECTION REQUIREMENTS**

The inspection requirements contained in this work package are stated in such a manner as to establish when certain equipment is to be inspected and what conditions are desired/undesired. Compliance with the provisions outlined herein is required in order to ensure that latent defects are discovered and corrected before malfunctioning or serious trouble results. Inspection requirements are arranged, as nearly as possible, according to the manner in which they will be performed. The requirements are divided into groups and listed under the area heading in the "How To Use This Manual" portion of this manual and Figure (*insert figure number here*).

INSPECTION INTERVALS

The *(insert inspection interval here)* inspection will be performed every (*insert the specific aircraft hours here*) flight hours or (*insert specific calendar days here*) days, whichever comes first. The (*insert the specific aircraft hours here*) will not be extended except in actual operational emergencies. In no case shall the aircraft intentionally be scheduled for a flight that will cause it to exceed the (*insert the specific aircraft hours here*) inspection due time. The (*insert specific calendar days here*) interval is a full (*insert the number of weeks here if applicable*) weeks. That is, if a (*insert specific calendar days here*) is done on Tuesday, the next (*insert specific calendar days here*) days inspection will not be due until *(insert the specific day here) (insert the specific number of weeks here*) later.

SPECIFIC NON-INSTALLED EQUIPMENT ON AIRCRAFT

This work package may contain inspection requirements applicable to specific equipment not installed on your aircraft. Those requirements should be disregarded.

DA FORMS

DA Form 2408-13-1 will be used to record all deficiencies or shortcomings discovered during the (*insert specific inspection interval here*). Use DA PAM 738-751 to properly complete this form.

SPECIAL INSTRUCTIONS

The (*insert inspection interval here*) will not be exceeded except in actual operational emergencies. When operational emergencies require aircraft operation beyond the normal inspection due-time, a circled red X status symbol and an appropriate statement (to include authority) must be entered in Part I, Fault Information block of DA Form 2408-13-1 (Aircraft Inspection and Maintenance Record) until such time as the inspection is complete. When inspections are delayed to meet emergency requirements, commanders will ensure that the aircraft status symbol reverts to a red "X" and that delayed inspections are accomplished immediately upon termination of the actual emergency. When unusual local conditions of environment, use, mission, experience of flight crew and maintenance personnel, periods of inactivity, etc., are encountered; the maintenance officer will, at his discretion, increase the scope and/or frequency of maintenance of inspections as necessary to ensure safe flight.

Aircraft that are down, Not Mission Capable due to Supply (NCMS), or Not Mission Capable due to Maintenance (NMCM), are deferred from the (*insert inspection interval here*) inspection until the aircraft is returned to flyable status. When the NMCS and/or NMCM condition is cleared from the aircraft that has been deferred, the (*insert inspection interval here*) must be done before the first flight. It is the maintenance office's responsibility to determine those inspections necessary during NMCS and/or NMCM to preserve the aircraft. Maintenance situations and climates vary too much to permit a definition of an adequate inspection of the aircraft in NMCS and/or NMCM status.

Accessing procedures and detailed inspection criteria can be found in the applicable maintenance manuals. Use the alphabetical index in the applicable manuals. Unless otherwise directed, removed panels and opened doors will be reinstalled and closed upon completion of each area inspection.

The total man-hour (M/H) requirements for a complete (*insert inspection interval here*) inspection is (*insert total number of man-hours here*) M/H.

REPORTING ERRORS AND RECOMMENDING IMPROVEMENTS

You can help improve this IETM. If you find any mistakes or if you know of a way to improve the procedures, please let us know. Mail the DA Form 2028 directly to: (*insert mailing address*). You may also send in your recommended changes using electronic mail, by fax, or by the World Wide Web. Our fax number is (*insert DSN and commercial number of proponent)*. Our e-mail address is (*insert e-mail address of proponent*). Instructions for sending an electronic DA Form 2028 may be found at the back of the applicable technical manual. For World Wide Web, use https://amcom2028.redstone.army.mil. A reply will be furnished to you.

OZONE DEPLETING CHEMICALS

(*insert appropriate ODC statement here*)

HAZARDOUS MATERIALS (HAZMAT)

(*insert appropriate HAZMAT statement here*)

INSPECTION AREAS

Inspection areas are shown in (*enter WP(s) title and figure number*)."

B.5.6 General information work package **(Phased Maintenance Inspection manual only)** **<pm-ginfowp>**. This work package shall be prepared for Preventive Maintenance Inspection manuals and shall contain the content requirements provided in B.5.6.1 through B.5.6.3.

B.5.6.1 Work package identification information **<wpidinfo>**. Work package identification information is required for this work package. (Refer to 4.9.6.2.)

B.5.6.2 Work package initial setup **<initial_setup>**. Initial setup is not required for this work package.

B.5.6.3 General information **<geninfo>**. The information in B.5.6.3.1 and B.5.6.3.2 shall be included.

B.5.6.3.1 Phased schedule. One of the following shall be included verbatim as applicable (italicized text within parentheses shall be replaced with the appropriate information):

"**PHASED SCHEDULE**

The phased maintenance inspection checklist contains requirements for inspection of the (*insert aircraft model*) aircraft on a phased schedule having a (*insert flight hour cycle*) hour (*flight hours*) cycle with (*insert phase hours*) hour phases. Each requirement included herein is designated for accomplishment at least once, but not more than (*insert number of phases*) times during the (*insert flight hour cycle*) hour cycle."

OR

"**PROGRESSIVE PHASED MAINTENANCE SCHEDULE**

The progressive phased maintenance inspection checklist contains requirements for inspection of the (*insert aircraft model*) aircraft on a phased schedule of (*insert inspection interval*) hour intervals."

B.5.6.3.2 Additional general information. The following additional text shall be included verbatim (italicized text within parentheses shall be replaced with the appropriate information):

"EXCEEDING THE PHASED SCHEDULE

The phased maintenance inspection intervals designated are the maximum and shall not be exceeded except in actual operational emergencies as explained herein. It is the Commander's responsibility to determine (on an individual aircraft basis) when inspection intervals may be exceeded. For this purpose, operational emergencies are conditions of combat or conditions of disaster which necessitate flight to evacuate aircraft or personnel. When aircraft are operated beyond the normal inspection due time because of such emergency situations, a circled red X status symbol and an appropriate statement (to include authority) must be entered on the appropriate aircraft form as specified in DA PAM 738-751 until such time as the inspection is complete. When inspections are delayed to meet emergency requirements, Commanders will ensure that the aircraft status symbol reverts to a red X and that delayed inspections are accomplished immediately upon termination of the actual emergency. When unusual

local conditions (use, type of mission, personnel, periods of inactivity, environmental conditions, etc.) dictate, it is the prerogative and responsibility of the Maintenance Officer to increase the scope and/or frequency of maintenance or inspection as necessary to ensure safe operation (TM 1-1500-328-23).

MAINTENANCE ACTIVITIES

The inspections prescribed by this checklist will be accomplished at specified phases by Aviation Maintenance Company (AMC) activities with assistance of Aviation Support Battalion (ASB) and Depot Maintenance activities when required. The inspection of the part/component is visual unless stated otherwise.

LIMITATIONS

The checklist does not contain instructions for repair, adjustment, or other means of rectifying conditions. Neither does it contain special tolerances, limits, or instructions for special troubleshooting to find causes for malfunctions. Such data will be obtained from the latest issue of the aircraft (*insert applicable aircraft technical manuals*) series Maintenance Manuals.

CHANGEOVER TO THE PHASED MAINTENANCE SYSTEM

Changeover shall be accomplished in accordance with instructions provided in (*insert appropriate TM/TB*) entitled, (*Insert title*). The requirements of this TM/TB must be accomplished before implementation of Phase 1 inspection requirements specified in this checklist.

PRE-INSPECTION MAINTENANCE TEST FLIGHT (MTF)

A pre-inspection MTF to duplicate non-hazardous equipment problems, determine unsatisfactory conditions, determine equipment operation problems, etc., is recommended before start of aircraft disassembly for phased maintenance inspection. However, the decision to perform the pre-inspection MTF shall be the responsibility of the unit Maintenance Officer.

SPECIAL INSPECTIONS, CALENDAR INSPECTIONS AND LUBRICATION REQUIREMENTS

Special inspections, calendar inspections, and lubrication requirements contained in (*insert applicable aircraft technical manual*) and those listed on the aircraft's DA Form 2408-18 shall be reviewed and accomplished in accordance with the "inspection due" requirements specified in those documents.

TIME BETWEEN OVERHAUL (TBO) AND RETIREMENT LIFE ITEMS CHECK

Before the start of the applicable phased maintenance inspection, a check will be made of components and their remaining operating hours before removal. The latest issue of the aircraft's (*insert applicable aircraft technical manual*) and DA Form 2408-16 shall be referred to for a complete listing of components and their TBO and retirement life.

USING THE PHASED INSPECTION CHECKLIST

A new checklist shall be used each time phased maintenance is due on the aircraft. This checklist is arranged such that it can be separated by area and distributed to the maintenance crew. For use of the checklist, refer to DA PAM 738-751.

FINAL RECORDS CHECK

After all corrective actions have been completed and following completion of the phased inspection, the Technical Inspector or designated supervisor shall verify that all applicable forms and records have been properly updated. All uncorrected faults shall be entered on applicable aircraft forms in accordance with DA PAM 738-751. A Final Records Checklist shall be used to ensure forms and records have been inspected for completeness and accuracy before release of the aircraft from the phased maintenance inspection. The Personal Identification (PID) of the inspector verifying the final records check shall be entered adjacent to the indicated form or record on the Final Records Checklist. The PID entered shall be registered on the Signature Sheet adjacent to that person's signature.

MAINTENANCE OPERATIONAL CHECKS

After the completion of any required corrective actions to any of the components of a functional system of the aircraft, maintenance operational checks (MOCs) shall be performed on that system to determine the effectiveness of the maintenance actions performed and to verify the proper operation of that system. These MOCs shall be performed in accordance with TM 1-1500-328-23. DA Form 2408-13-1 may be used to record and sign off on the MOC performed.

MAINTENANCE TEST FLIGHT

When all required inspections have been accomplished and initialed in accordance with the previously mentioned procedure, the Maintenance Test Flight (MTF) shall be performed in accordance with the requirements of (*insert applicable aircraft technical manuals*) and TM 1-1500-328-23 using the MTF form in the MTF TM.

CHECKLIST DISTRIBUTION

The completion of each phased maintenance inspection shall be recorded on applicable forms as prescribed by DA PAM 738-751. The signed checklist, together with all forms prescribed by DA PAM 738-751, shall be filed. Disposition shall be in accordance with DA PAM 738-751 or specific instructions in the applicable aircraft TM.

INSPECTION AREAS

(*Insert WP title and figure number*) reflects the inspection areas of the (*insert applicable aircraft model*) aircraft. Those areas are titled as shown. Figure (*insert number*) shows the location of access doors and panels which require removal at various phased maintenance inspections

REPORTING ERRORS AND RECOMMENDING IMMPROVEMENTS.

(*insert appropriate reporting errors statement here*)"

B.6 **NOTES.**

The notes in section 6 apply to this appendix.

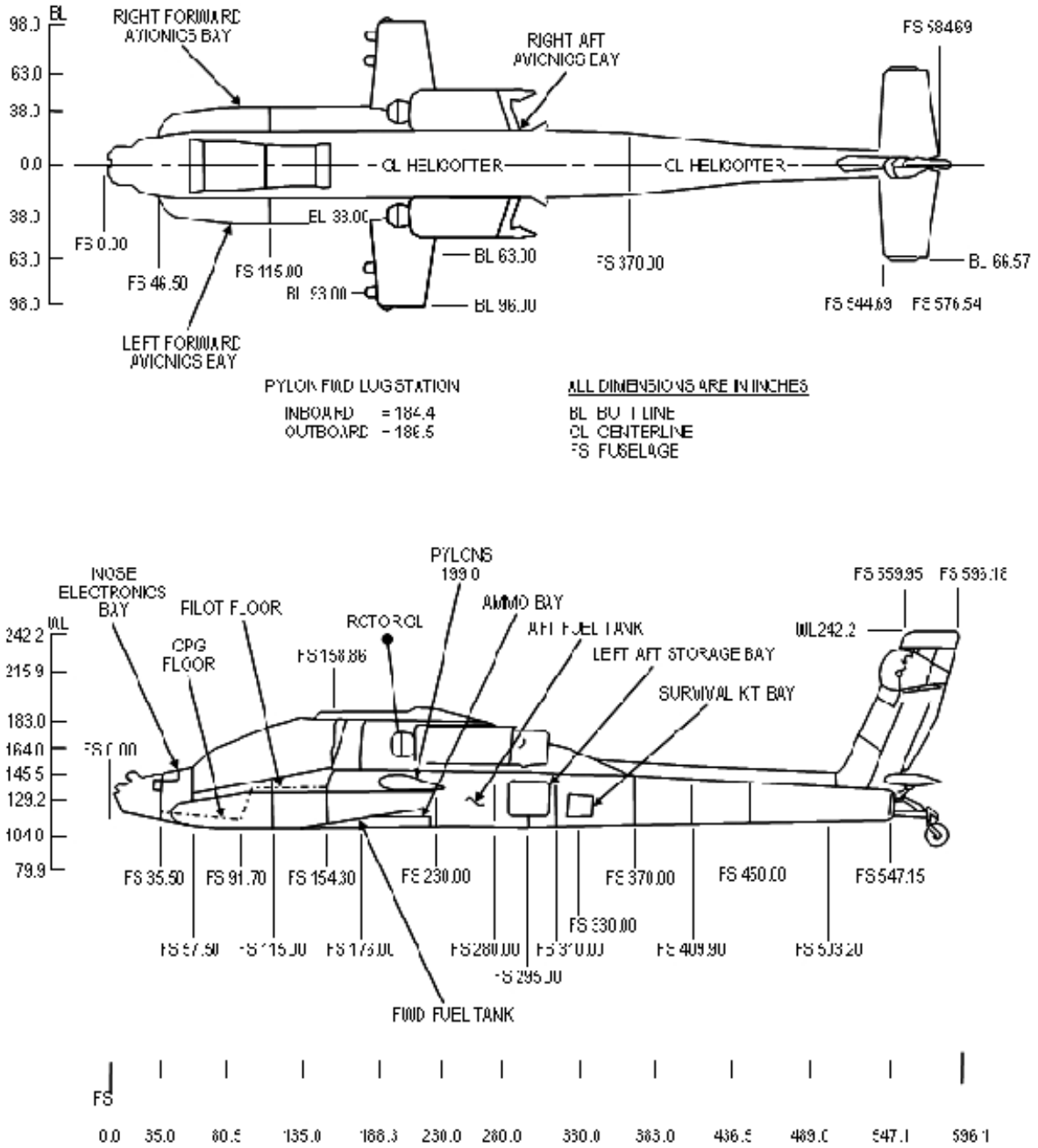

FIGURE B-1. <u>Example of a station diagram.</u>

This page intentionally left blank.

APPENDIX C
OPERATOR INSTRUCTIONS

C.1 SCOPE.

C.1.1 Scope. This appendix establishes the technical content requirements for the preparation of operator instructions for major weapon systems, and their related systems, subsystems, equipment, WRAs, and SRAs. This appendix is a mandatory part of this standard. The information contained herein is intended for compliance. The requirements are applicable for all maintenance levels/classes through overhaul (depot), including DMWRs and NMWRs.

C.2 APPLICABLE DOCUMENTS.

The applicable documents in section 2 apply to this appendix.

C.3 DEFINITIONS.

The definitions in section 3 apply to this appendix.

C.4 GENERAL REQUIREMENTS.

C.4.1 General. Operator instructions shall be prepared for weapon systems, major equipment, components, and applicable support and interface equipment. Operating instructions shall describe the operations the crew (operator) is authorized to perform. Procedures and supporting illustrations shall be prepared so that personnel can prepare the weapon system/equipment for operation, identify and locate operational controls and indicators, and operate the weapon system/equipment safely and efficiently in both normal and emergency conditions. Unless otherwise specified, an Operator Instructions chapter shall be used for operator data. Multiple chapters should only be used for equipment that is very complex or that has multiple configurations.

C.4.2 Maintenance level/class applicability. Requirements contained in this appendix are applicable to all maintenance levels/classes unless specifically labeled in bold and in parentheses. The labeled requirement may specify a specific level (e.g., **Field**) (refer to 3.82) or a specific maintenance class (refer to 3.80) (e.g., **Maintainer** or **AMC**). The labeled requirement shall be applicable to all TMs containing that maintenance level/class. An explanation of applicable DA maintenance levels/classes are provided in section 3.

C.4.3 Preparation of digital data for electronic delivery. Data prepared and delivered digitally in accordance with this standard shall be XML tagged using the DTD. Data shall be formatted for presentation using stylesheets in accordance with MIL-STD-2361. Stylesheets may be prepared using XSL or other languages as specified by the acquiring activity. Where possible and when available, Army developed and provided stylesheets shall be used. Refer to 4.6 for information on obtaining or accessing the DTD and stylesheets. XML tags used in the DTD are noted throughout the text of this standard in bracketed, bold characters (e.g., **<ctrlindwp>**) as a convenience for the author and to ensure that the tags are used correctly when developing a document instance.

C.4.4 Use of the Document Type Definition (DTD)/stylesheet. The DTD referenced in this appendix interprets the technical content and structure for the functional requirements contained in this standard. Its use is mandatory. Development of IETMs is accomplished through the use of

this standard, the DTD, and the guidance contained in MIL-HDBK-1222. Where possible and when available, Army developed and provided stylesheets shall be used. For additional information on DTD and specific stylesheets, refer to MIL-STD-2361.

C.4.5 Content structure. The examples provided herein are an accurate representation of the content structure requirements contained in this appendix and shall be followed to permit the effective use of the DTD.

C.4.6 Style and format. This standard provides style and format requirements for the technical content requirements described in this appendix. These requirements are considered mandatory and are intended for compliance.

C.4.7 Interactive Electronic Technical Manual (IETM) functionality. The specific level of functionality and user interaction to be provided in the IETMs shall be in accordance with the functionality matrix contained in Appendix A.

C.4.8 Work package development. Data developed in accordance with this appendix shall be divided into work packages. For task-related work packages, the tasks shall be in the logical order of the work sequence. These work packages should be stand alone and are broken into the following work package types: general information, operator instructions, troubleshooting procedures, maintenance instructions, parts information, supporting information, destruction of Army materiel to prevent enemy use, preventative maintenance checklist, and lubrication orders. A work package shall contain all information and references required to support the work package type.

C.4.9 Safety devices and interlocks. Information shall be prepared pertaining to the purpose and location of all safety devices and interlocks in conjunction with the pertinent procedures.

C.4.10 Electrostatic Discharge (ESD) sensitive parts. If the equipment contains ESD sensitive parts, components, or circuits, cautions, and ESD labels shall be incorporated into the applicable tasks and procedures to ensure ESD sensitive parts are not damaged or degraded during maintenance and operation. (Refer to 4.9.18 for requirements on labeling with ESD.) Actions which could damage ESD sensitive parts, but which are not directly related to handling or operation of ESD sensitive parts, shall not be annotated with the ESD acronym, but shall be preceded by a caution statement.

C.4.11 Nuclear hardness **<hcp>**. If the weapon system/equipment has nuclear survivability requirements (e.g., overpressure and burst, thermal radiation, electromagnetic pulse, or transient radiation effects on electronics), cautions and HCP labels shall be incorporated into the applicable tasks and procedures to ensure the hardness of the equipment is not degraded during handling or operation. (Refer to 4.9.17 for requirements on labeling with HCP.) Actions which could degrade hardness, but which are not directly involved in establishing nuclear hardness, shall not be annotated with the acronym, but shall be preceded by a caution statement.

C.4.12 Selective application and tailoring. This standard contains some requirements that may not be applicable to the preparation of all IETMs. Selective application and tailoring of requirements contained in this standard are the responsibility of the acquiring activity and shall be accomplished using Appendix A. The applicability of some requirements is also designated by one of the following statements: unless specified otherwise by the acquiring activity; as specified by the acquiring activity; or when specified by the acquiring activity.

C.5 **DETAILED REQUIREMENTS.**

C.5.1 Preparation of operator instructions. Operator instructions shall be prepared and subdivided into individual work packages that provide the operator of the weapon system/equipment with descriptions and use of controls and indicators and operation of the weapon system/equipment under usual, unusual and emergency conditions. Weapon system and equipment operator data shall be developed in narrative or tabular form, or by whatever method is the most effective in conveying the specific TM application.

C.5.2 Operator instructions work packages.

C.5.2.1 Work package content. Work packages shall include WP identification information, initial setup information, and all required operator instruction information. When initial setup information differs for specific operator instructions, additional work packages shall be developed. Work packages shall stand alone and contain complete start-to-finish operator procedures. The words "**END OF WORK PACKAGE**" shall be placed below the last data item (e.g., text, illustration, etc.) of the work package. The operator instructions work packages described in C.5.2.2 shall be prepared, as applicable. (Refer MIL-HDBK-1222 for examples of work package identification information format.)

C.5.2.2 Types of operator instructions work packages. The following types of operator instructions work packages shall be developed, as applicable. Note however, in cases where operating instructions are divided by crew station assignment (or auxiliary equipment), work packages shall be developed to support each crew-served station. (Refer to MIL-HDBK-1222 for typical examples of the following operator instructions work packages.)

a. Description and use of controls and indicators work package **<ctrlindwp>** (refer to C.5.2.2.1)
b. Operation under usual conditions work package(s) **<opusualwp>** (refer to C.5.2.2.2).
c. Operation under unusual conditions work package(s) **<opunuwp>** (refer to C.5.2.2.3).
d. Emergency work package(s) <**emergencywp**> (refer to C.5.2.2.4).
e. Stowage and decal/data plate guide work package **<stowagewp>** (refer to C.5.2.2.5).
f. On-vehicle equipment loading plan work package **<eqploadwp>** (refer to C.5.2.2.6).

C.5.2.2.1 Description and use of controls and indicators work package **<ctrlindwp>**. Information shall be prepared for the description and use of all system or equipment controls and indicators. A description and use of controls and indicators shall be prepared for each equipment, assembly, or control panel having controls and indicators. Controls and indicators shall be described using a tabular option or a narrative option. (Refer to C.5.2.2.1.3 or C.5.2.2.1.4.) The same format shall be described throughout the work package.

C.5.2.2.1.1 Work package identification information **<wpidinfo>**. Work package identification information is required for this work package. (Refer to 4.9.6.2.)

C.5.2.2.1.2 Work package initial setup **<initial_setup>**. Initial setup information is not required for this work package.

C.5.2.2.1.3 Controls and indicators description tabular option. This option shall describe each control and indicator in a tabular format. (Refer to MIL-HDBK-1222 for an example of controls and indicators.) The work package shall start with a short introduction <**intro**> that identifies the

basic system, area, or other breakdown. The introduction shall be followed by one or more controls and indicators (**standard information**) **<ctrlindtab>** with an associated illustration <**figure**> for each control and indicator. The number of controls and indicators standard information tables required is dependent on several factors. These factors include but are not limited to system complexity, different users (crew members/stations) or configuration differences. For each control and indicator, the following entries shall be provided:

a. An index number **<key>** is used on the illustration to locate and identify the control or indicator on the illustration.
b. The name (nomenclature) **<ctrlind>** of the control or indicator as it appears on the equipment. Controls and indicators that are not labeled, such as the accelerator or brake pedals, shall be identified. Each control and indicator shall be clearly labeled as it appears on the equipment.
c. A description of the function of the control or indicator **<function>** shall be described.

C.5.2.2.1.4 Controls and indicators description narrative option. This option provides a narrative approach to describe each control and indicator. This textual approach shall begin with a figure <**figure**> illustrating the control or indicator that is being described. The figure shall be followed by paragraphs **<ctrlinddesc>** describing each control or indicator shown in the figure. The narrative option for controls and indicators shall contain the same items as given in C.5.2.2.1.3a-c. More than one figure and controls and indicators description may be used to improve user understanding.

C.5.2.2.2 Operation under usual conditions work package **<opusualwp>**. Instructions to operate the weapon system/equipment and auxiliary equipment in all modes of operation shall be prepared. Any combination of control settings that will create a hazard to personnel or cause damage to equipment shall be preceded by a warning or caution. Instructions to ensure proper grounding of equipment shall be prepared.

C.5.2.2.2.1 Work package identification information **<wpidinfo>**. Work package identification information is required for this work package. (Refer to 4.9.6.2.)

C.5.2.2.2.2 Work package initial setup **<initial_setup>**. Initial setup is required for this work package. (Refer to 4.8.6.3.)

C.5.2.2.2.3 Operations under usual tasks **<opertsk>**. The operational tasks **<opertsk>** described in C.5.2.2.2.3 through C.5.2.2.2.12 shall be included, as applicable.

C.5.2.2.2.4 Security measures for electronic data **<secref>**. Instructions for handling, loading, purging, overwriting, or unloading classified electronic data under usual conditions shall be developed when the systems are classified, have non-volatile on-board memory that is required to be cleared prior to transportation, or for any other action that might compromise the data as the result of being accessed by unauthorized personnel. Instructions shall meet the requirements of current regulations as they pertain to automation security.

C.5.2.2.2.5 Siting requirements **<site>**. When siting instructions specific to the equipment exist, these instructions shall be prepared. Operational features shall be considered, such as the following:

a. Location.
b. Proximity to power sources.

c. Effective ranges.
d. Terrain requirements to avoid screening reflections, ground clutter, and other poor operational conditions due to terrain.
e. Technical requirements.
f. Shelter locations.
g. Compensating for adverse siting conditions.
h. Orientation to a baseline during siting when the equipment contains large components, such as towers and antennas.
i. Mobile equipment oriented during installation.

C.5.2.2.2.6 Shelter requirements **<shelter>**. When equipment is normally housed in a permanent or semi-permanent shelter (other than a military truck, van, or transportable shelter) during use, the following information shall be prepared:

a. Amount of floor, wall, and height space required to house the equipment.
b. A plan for a typical layout.
c. Required weight capacity of the building floor.
d. Dimensions required for installed equipment.
e. Total weight that the floor must support and the area in square feet over which the total weight will be distributed.
f. Environmental conditions (e.g., venting).
g. Power requirements.
h. Unusual requirements specific to the equipment, such as air-conditioning.
i. Architectural and engineering data on beam sizes, lengths, bending moments, and required supports shall not be included.

C.5.2.2.2.7 Assembly and preparation for use **<prepforuse>**. Procedures shall be prepared when unpacking, assembly, and installation is required. When the equipment is shipped or delivered in specially designed containers, unpacking instructions shall be prepared. If the containers are to be used again, kept for future use, turned in to supply, or if any special disposition is required, the necessary procedures shall be prepared. Assembly and installation procedures shall be prepared when needed. These instructions shall be supported by illustrations. As applicable, power requirements, connections, and initial control settings needed for installation purposes shall be included.

C.5.2.2.2.8 Initial adjustments before use, and self-test **<initial>**. Procedures shall be prepared for any routine checks, self-test, or adjustments that the operator must make before putting the equipment in operation is required.

C.5.2.2.2.9 Operating procedures **<oper>**. The following operating instructions shall be prepared, as applicable:

a. All steps necessary to bring the equipment from OFF through STANDBY condition to full operation, including all necessary warnings and cautions.
b. Procedures for each mode of operation; e.g., manual, automatic, local, remote, etc. The use and relative advantage of each mode shall also be described.

c. Description of the equipment's anti-jamming and interference reduction features, the advantage of each feature, and the operating procedures to be followed. Supporting illustrations (such as indicator displays, waveforms, etc.) that provide typical observations of jamming and interference for evaluation by the operator shall be included.

d. Operator turn-off procedures, including all steps necessary to bring the equipment from full operation through STANDBY to OFF condition.

e. Operating procedures for misfire, hangfire, and other events applicable to ammunition.

f. Operating procedures explaining how the equipment is operated in conjunction with auxiliary equipment or how it operates when integrated with other equipment.

g. When specified by the acquiring activity, operating procedures containing the identification, loading, initializing, and downloading of applicable operational and diagnostic software shall be included. Identification of the software shall include the purpose, configuration applicability and version information. Procedures that verify that the proper software has been loaded and is operating properly shall also be included. Examples of specific types of data that may be applicable to these work packages are:

   (1) Descriptions of screen data and interpretation of message formats.

   (2) Operator actions based on screen display.

   (3) Data entry by the Operator.

   (4) Saving or purging data.

   (5) Processing of messages.

   (6) Software transfer procedures.

   (7) Reviewing message and entry formats.

C.5.2.2.2.10 Operating procedure considerations. The following considerations should be taken into account when preparing operating procedures:

a. Initial safety requirements (actions, inspections, and emergency turn-off procedures).

b. If a particular operating procedure or step is assigned to a specific crew-served position (e.g., gunner), the assignment must be indicated.

c. Connection of any accessory equipment not permanently connected.

d. Instructions for obtaining or confirming the presence of all critical inputs such as power, coolant, air, signal, air-conditioning, etc. Specific values for critical inputs (power, coolant, air, etc.) shall also be included.

e. Procedures for setting controls and making adjustments that must be accomplished by the operator prior to equipment turn-on.

f. Procedures for determining operational readiness and the acceptable indications expected from built-in indicators, such as meters, lamps, gauges, displays, and recorder readouts.

g. Milestones in the operational status of the equipment, indicated by brief statements, such as "The generator is now in STANDBY."

h. Visual or audible observations that occur as a result of an operator action, such as boom lowering, sweep rotation, blower motor running, etc.

C.5.2.2.2.11 Operating auxiliary equipment **<operaux>**. If applicable, procedures shall be prepared for putting any auxiliary equipment into operation, operating it, and putting it in standby or shutdown status. If these procedures are published in another TM covering the auxiliary equipment, reference shall be made to that TM in accordance with 4.9.21.8.

C.5.2.2.2.12 Preparation for movement **<prepmove>**. Preparation for movement procedures shall be prepared if the equipment is designed for movement and it can be readied for movement by the operator. Procedures shall be prepared for actions such as disassembly, folding, and telescoping. Illustrations shall be prepared, as required, to support the text. This information shall not duplicate the "assembly and preparation for use" requirements contained in C.5.2.2.2.7.

C.5.2.2.2.13 Decals and instruction plates **<instructplt>**. Decals and operating instruction plates located on the equipment, which are essential for operation, shall be clearly illustrated, so that all information is legible. Related warning and caution decals and plates shall be included. An illustration(s) shall be prepared to show the location of all applicable decals and plates.

C.5.2.2.3 Operation under unusual conditions work package **<opunuwp>**. Instructions shall be prepared for operation under unusual conditions. Preventive or protective measures to be taken beyond the operator's capabilities shall be identified. Instructions to ensure proper grounding of equipment shall be prepared, as applicable.

C.5.2.2.3.1 Work package identification information **<wpidinfo>**. Work package identification information is required for this work package. (Refer to 4.9.6.2.)

C.5.2.2.3.2 Work package initial setup **<initial_setup>**. Initial setup is required for this work package. (Refer to 4.8.6.3.)

C.5.2.2.3.3 Operations under unusual tasks **<opunutsk>**. The operational tasks described in C.5.2.2.3.4 through C.5.2.2.3.9 shall be included, as applicable.

C.5.2.2.3.4 Security measures for electronic data **<secref>**. Instructions for handling, loading, purging, overwriting, or unloading classified electronic data under unusual conditions shall be provided. These instructions shall be developed when the systems are classified. Instructions shall meet the requirements of current regulations as they pertain to automation security. Procedures shall include but are not limited to:

a. clearing non-volatile on-board memory that is required to be cleared before transport,
b. any other action that allows the data to be accessed by unauthorized personnel.

C.5.2.2.3.5 Unusual environment/weather **<unusualenv>**. Procedures shall be prepared for operation under conditions of extreme moist heat, extreme dry heat, extreme cold, salt air, sea spray, dust storms, sand storms, high altitudes, snow, mud, and other similar adverse environmental/weather conditions. Ranges of environmental/weather operating conditions considered for the system addressed shall be defined.

C.5.2.2.3.6 Fording and swimming **<fording>**. If applicable, procedures for fording and swimming the equipment shall be provided.

C.5.2.2.3.7 Interim Chemical, Biological, Radiological, and Nuclear (CBRN) decontamination procedures **<decon>**. As applicable and specified by the acquiring activity, interim general CBRN decontamination procedures to be performed until CBRN decontamination facilities are

available shall be prepared. Other decontamination TMs shall be referenced only when necessary.

C.5.2.2.3.8 Jamming and Electronic Countermeasures (ECM) procedures **<ecm>**. As applicable, procedures shall be prepared for operation of the equipment in an ECM environment through transmitted and reflected deception signals and through transmitted and reflected jamming.

C.5.2.2.3.9 Degraded operation procedures **<degraded>**. When operation of the equipment in a degraded condition is required, procedures shall be prepared for temporarily adapting the equipment and the operating procedures to meet the reduction of power, partial failure, failure of a portion of the equipment, or similar conditions.

C.5.2.2.3.10 Decals and instruction plates **<instructplt>**. Decals and operating instruction plates located on the equipment, which are essential for operation, shall be clearly illustrated, so that all information is legible. Related warning and caution decals and plates shall be included. An illustration(s) shall be prepared to show the location of all applicable decals and plates.

C.5.2.2.4 Emergency work package **<emergencywp>**. As applicable, emergency procedures for, but not limited to, operating and shutting down equipment during emergency conditions shall be prepared.

C.5.2.2.4.1 Work package identification information **<wpidinfo>**. Work package identification information is required for this work package. (Refer to 4.9.6.2.)

C.5.2.2.4.2 Work package initial setup **<initial_setup>**. Initial setup is required for this work package. (Refer to 4.8.6.3.)

C.5.2.2.4.3 Emergency operation **<emergency>**. Procedures covering operation of the equipment during emergency conditions (control failure, air failure, lube oil failure, loss of cooling water, etc.) shall be provided. Emergency operating instructions shall be included. A warning or a caution to return the equipment to proper operation when the emergency is over shall also be included.

C.5.2.2.4.4 Emergency shutdown **<emergency>**. Procedures to turn the equipment off during an emergency (fire, water, smoke, hazard to personnel, loss of coolant, normal power, etc.) shall be provided.

C.5.2.2.5 Stowage and decal/data plate guide work package **<stowagewp>**. This work package shall be prepared as directed by the acquiring activity. The guide plan shall include information provided by the acquiring activity. The data described in C.5.2.2.5.1 through C.5.2.2.5.5 shall be included.

C.5.2.2.5.1 Work package identification information **<wpidinfo>**. Work package identification information is required for this work package. (Refer to 4.9.6.2.)

C.5.2.2.5.2 Work package initial setup **<initial_setup>**. Initial setup is not required for this work package.

C.5.2.2.5.3 Introduction **<intro>**. A brief scope statement shall be prepared explaining the purpose of the work package.

C.5.2.2.5.4 Stowage guide **<stowinfo>**. Data on the location of applicable COEIs, BII, and AAL items shall be prepared. An illustration shall be included to facilitate the location of the items.

C.5.2.2.5.5 Decal/data plate guide **<decalinfo>**. Data on the location of all decals and data plates shall be prepared. As applicable, illustrations detailing the locations of the decals and data plates shall be included.

C.5.2.2.6 On-vehicle equipment loading plan work package **<eqploadwp>**. This work package shall be prepared when applicable to the equipment. The loading plan shall include information provided by the acquiring activity. The data described in C.5.2.2.6.1 through C.5.2.2.6.4 shall be included.

C.5.2.2.6.1 Work package identification information **<wpidinfo>**. Work package identification information is required for this work package. (Refer to 4.9.6.2.)

C.5.2.2.6.2 Work package initial setup **<initial_setup>**. Initial setup is not required for this work package.

C.5.2.2.6.3 Introduction **<intro>**. A brief scope statement shall be prepared explaining the purpose of the loading plan and identifying the equipment covered by the on-vehicle equipment loading plan work package.

C.5.2.2.6.4 Illustrated loading plan list(s) **<loaddesc>**. An illustration identifying and locating the on-vehicle equipment shall be included. External and internal views shall be used, if necessary. As applicable, both tactical and nontactical situation loading configurations shall be shown.

C.6 **NOTES.**

The notes in section 6 apply to this appendix.

This page intentionally left blank.

APPENDIX D
TROUBLESHOOTING PROCEDURES

D.1 SCOPE.

D.1.1 Scope. This appendix establishes the technical content requirements for the preparation of troubleshooting procedures for major weapon systems, and their related systems, subsystems, equipment, WRAs, and SRAs. This appendix is a mandatory part of this standard. The information contained herein is intended for compliance. The requirements are applicable for all maintenance levels/classes through overhaul (depot) including DMWRs and NMWRs.

D.2 APPLICABLE DOCUMENTS.

The applicable documents in section 2 apply to this appendix.

D.3 DEFINITIONS.

The definitions in section 3 apply to this appendix.

D.4 GENERAL REQUIREMENTS.

D.4.1 General. Troubleshooting procedures shall be prepared for weapon systems, major equipment, components, and applicable support and interface equipment. Troubleshooting procedures and supporting illustrations shall be prepared so that operator/crew and maintenance personnel can perform all required operator through depot level (overhaul) troubleshooting.

D.4.2 Development of troubleshooting instructions. Troubleshooting instructions shall cover all items comprising the weapon system/equipment, such as assemblies, subassemblies, components, wiring, junction boxes, and accessories. Troubleshooting procedures shall isolate faults to the part(s) authorized by the parts information for repair or replacement at the maintenance level addressed. Tasks shall be presented in the order in which they are performed. Approved LMI, service experience, performance data on similar equipment, other RMS and Ao data available shall be used in the preparation of specific troubleshooting procedures. Troubleshooting procedures shall begin with diagnostic tests, observed problems, a fault symptom or malfunction and shall diagnose to a single fault/failure. Troubleshooting shall refer to specific maintenance or repair tasks to correct the fault. Instructions, where applicable, shall flow from operator level through field and sustainment until the fault is isolated. Procedures shall include schematics and illustrations as needed (or shall reference to required schematics, etc.). Troubleshooting data shall be test and fault-isolation oriented. Troubleshooting instructions shall include detailed inspection and troubleshooting information. Instructions shall include or reference to functional descriptions of subsystems being diagnosed to aid the operator/technician. The method used for identifying system equipment test points, including the requirements and methods of determining defects through visual inspection, shall be explained.

D.4.3 Maintenance level/class applicability. Requirements contained in this appendix are applicable to all maintenance levels/classes unless specifically labeled in bold and in parentheses. The labeled requirement may specify a specific level (e.g., **Field**) (refer to 3.82) or a specific maintenance class (refer to 3.80) (e.g., **Maintainer** or **AMC**). The labeled requirement shall be applicable to all TMs containing that maintenance level/class. An explanation of applicable DA maintenance levels/classes are provided in section 3.

D.4.4 Preparation of digital data for electronic delivery. Data prepared and delivered digitally in accordance with this standard shall be XML tagged using the DTD. Data shall be formatted for presentation using stylesheets in accordance with MIL-STD-2361. Stylesheets may be prepared using XSL or other languages as specified by the acquiring activity. Where possible and when available, Army developed and provided stylesheets shall be used. Refer to 4.6 for information on obtaining or accessing the DTD and stylesheets. XML tags used in the DTD are noted throughout the text of this standard in bracketed, bold characters (e.g., **<tswp>**) as a convenience for the author and to ensure that the tags are used correctly when developing a document instance.

D.4.5 Use of the Document Type Definition (DTD)/stylesheet. The DTD referenced in this appendix interprets the technical content and structure for the functional requirements contained in this standard. Its use is mandatory. Development of IETMs is accomplished through the use of this standard, the DTD, and the guidance contained in MIL-HDBK-1222. Where possible and when available, Army developed and provided stylesheets shall be used. For additional information on DTD and specific stylesheets, refer to MIL-STD-2361.

D.4.6 Content structure. The examples provided herein are an accurate representation of the content structure requirements contained in this appendix and shall be followed to permit the effective use of the DTD.

D.4.7 Style and format. This standard provides style and format requirements for the technical content requirements described in this appendix. These requirements are considered mandatory and are intended for compliance.

D.4.8 Interactive Electronic Technical Manual (IETM) functionality. The specific level of functionality and user interaction to be provided in the IETMs shall be in accordance with the functionality matrix contained in Appendix A.

D.4.9 Work package development. Data developed in accordance with this appendix shall be divided into work packages. For task-related work packages, the tasks shall be in the logical order of the work sequence. These work packages should be stand alone and are broken into the following work package types: general information, operator instructions, troubleshooting procedures, maintenance instructions, parts information, supporting information, destruction of Army materiel to prevent enemy use, preventative maintenance checklist, and lubrication orders. A work package shall contain all information and references required to support the work package type.

D.4.10 Safety devices and interlocks. Information shall be prepared pertaining to the purpose and location of all safety devices and interlocks in conjunction with the pertinent procedures.

D.4.11 Electrostatic Discharge (ESD) sensitive parts. If the equipment contains ESD sensitive parts, components, or circuits; cautions and ESD labels shall be incorporated into the applicable tasks and procedures to ensure ESD sensitive parts are not damaged or degraded during maintenance and operation. (Refer to 4.9.18 for requirements on labeling with ESD.) Actions which could damage ESD sensitive parts, but which are not directly related to handling or operation of ESD sensitive parts, shall not be annotated with the ESD acronym, but shall be preceded by a caution statement.

D.4.12 Nuclear hardness **<hcp>**. If the weapon system/equipment has nuclear survivability requirements (e.g., over pressure and burst, thermal radiation, electromagnetic pulse, or transient

radiation effects on electronics), cautions and HCP labels shall be incorporated into the applicable tasks and procedures to ensure the hardness of the equipment is not degraded during handling or operation. (Refer to 4.9.17 for requirements on labeling with HCP.) Actions which could degrade hardness, but which are not directly involved in establishing nuclear hardness, shall not be annotated with the acronym, but shall be preceded by a caution statement.

D.4.13 Selective application and tailoring. This standard contains some requirements that may not be applicable to the preparation of all IETMs. Selective application and tailoring of requirements contained in this appendix are the responsibility of the acquiring activity and shall be accomplished using . The applicability of some requirements is also designated by one of the following statements: unless specified otherwise by the acquiring activity; as specified by the acquiring activity; or when specified by the acquiring activity.

D.4.14 Types of troubleshooting models. IETMs shall support one of two modes of diagnostics, a simple mode and a complex mode. Linear IETMs shall use the simple diagnostic mode. Non-Linear IETMs shall use either mode as specified by the acquiring activity.

D.4.14.1 Simple diagnostic mode explanation. The simple diagnostic mode of troubleshooting model is identical to the page based models. The diagnostics are linear using binary (yes|no, true|false) logic. The simple model does not support state table functionality. Any simple model diagnostic that requires state table support shall be authored as a complex model.

D.4.14.2 Complex diagnostic mode explanation. The complex diagnostic mode provides for such functionality as direct interface between the IETM and test equipment/hardware, dynamic support to system changes through manipulation of a state table, allows for user data input, allows evaluation and actions to be taken based on multiple inputs, and allows multiple branching. The complex mode can support simple binary troubleshooting. The acquiring activity shall specify those features desired in their diagnostics through the IETM Functionality Matrix. (Refer to A.5.2.)

D.4.14.2.1 State table explanation. The state table may be the function of either the IETM presentation application or some form of Maintenance Information System that includes IETM presentation capability. A state table provides the IETM and/or the user with information on the condition of the task being performed or changes in system or user defined variables.

D.4.14.2.2 State table input. Input to the state table may come from various sources such as:

a. Initial settings from the TM data, entered by the author during TM development.
b. Input from installed systems/subsystems through direct interconnection with the system/subsystem or data bus connectivity. This input may be either values obtained during initialization of the system or as a result of user or other input obtained during a diagnostic or operational test.
c. Input provided by the TM (end) user through menu selection choices or direct input through dialogs provided by the IETM

D.4.14.2.3 State table limits. State table manipulation in this standard is limited to those initial settings that are included in the TM source data (refer to D.4.14.2.2a) by the author. Other state table input options are requirements of the IETM presentation system and are addressed in the TM source data. At no time shall changes to state table variables be allowed to change the TM source data. TM source data shall only be changed as a result of an approved TM change.

D.4.14.2.4 Minimum state table requirements. As a minimum, a state table shall allow storing system and user input. State table information may be used by the system to perform tests, evaluate, provide feedback, make comparisons with other stored information, or provide alternative courses of action.

D.4.14.2.5 Additional state table options. In more sophisticated systems, the state table may be tied into specific item status file(s). This more robust state table would store information from all ongoing maintenance and provide all users with the condition of equipment at any specific point in time (e.g., in service, awaiting parts, outstanding maintenance actions [open panels or fuel cells or other conditions that might preclude some maintenance from being performed or allow skipping some preconditions as they have been previously completed]).

D.5 **DETAILED REQUIREMENTS.**

D.5.1 Testing and troubleshooting philosophy. Testing and troubleshooting data shall be developed to the extent required to maintain aircraft and other major weapon systems, equipment, components and support equipment at the authorized maintenance level in accordance with the LMI, MAC, or Maintenance Plan and the SMR codes developed for the weapon system/equipment. Other factors to be considered in the development of troubleshooting procedures include, but are not limited to, the following:

a. Technical experience (target audience).
b. User environment.
c. System quick-turnaround requirements.
d. Test equipment requirements and availability.
e. Automated versus manual testing.
f. Replaceable component and part reliability.
g. Ease of testing.
h. Test access time.
i. Test time.

D.5.2 Information to be provided. Troubleshooting information shall be provided in combination with test procedures. This testing and troubleshooting information shall guide the technician, in as practical a manner as possible, to the system, subsystem, equipment, WRA, SRA, or further to the replaceable part, interconnecting wire, or mechanical linkage, which caused the malfunction or failure. All information required to perform the tests and evaluate probable malfunctions of the assembled systems or equipment shall be provided.

D.5.2.1 Methods of testing and troubleshooting. The number of interrelated systems, assemblies, subassemblies, components, types of equipment, and the maintenance plan shall be taken into consideration as to the type and depth of testing and troubleshooting instructions to be developed. Based on the complexity of the system or equipment, manual (non-automatic), semi-automatic or automatic testing and troubleshooting methods shall be used. Functional testing is usually performed using a test set or test console whereby technicians make end-to-end checks of the system or equipment to ensure it will perform the function it was intended to do.

D.5.2.1.1 Manual (non-automatic) troubleshooting. Troubleshooting procedures using non-automatic test equipment shall be established on a system test concept. To meet the objectives of reduced maintenance downtime and decreased fault detection time, malfunction symptoms shall

be identified to specific points of entry into the testing/troubleshooting cycle. Every effort shall be employed to avoid repetition of time consuming end-to-end tests.

D.5.2.1.2 Semi-automatic or automatic testing and troubleshooting. Many systems have been designed to use semi-automatic/automatic test equipment. These systems are designed and programmed for rapid electronic testing in the interest of reducing maintenance downtime to fault isolate and repair.

D.5.2.1.3 Testing and troubleshooting using built-in-test equipment (BITE). Many systems/pieces of equipment have been designed with BITE capabilities. BITE identifies faults to the operator or maintenance technician. BITE faults may be further isolated using diagnostic software or other troubleshooting procedures. When diagnostic software is used to isolate Built-In Test (BIT) faults, the software required to be used shall be included in the TM.

D.5.2.1.4 Sensor derived failures. If the equipment/system has installed sensors, they shall be used to provide critical information on system operation or discrepancies.

D.5.2.1.5 Failure interpretation. Lookup tables for manually tested systems or software coding for semi-automatic and automatic systems shall be prepared so that the maintenance technician may properly interpret these displays and isolate and correct malfunctions.

D.5.2.2 Types of testing and troubleshooting information. Testing and troubleshooting information includes fault reporting/fault isolation data and detailed testing and troubleshooting procedures for each weapon system's equipment, systems, components and support equipment. When applicable, integrated system testing and troubleshooting for aircraft and major weapon systems shall also be included.

D.5.2.2.1 Fault reporting/fault isolation information. Fault reporting information provides the crew member(s) or other operating personnel with a standardized means for reporting malfunctions and fault symptoms. Fault isolation information is designed for use in rapid isolation of faults revealed during an operational mission or when the aircraft/weapon system is in an operational configuration on the ground. This data shall instruct maintenance personnel as to what maintenance actions to perform and/or what procedures to use to correct reported faults. Fault reporting information and the fault isolation data are designed to be used together. Fault isolation information coverage shall be limited to faults identified in the fault reporting data that require specific procedures to isolate the cause. Fault reporting data shall reference the fault isolation data to the maximum extent practical for isolation of indicated malfunctions.

D.5.2.2.2 Integrated system testing and troubleshooting. When several systems are dependent upon each other for proper operation, the interdependent systems, as a unit, are identified as an integrated system. The testing of an integrated system is a checkout of the interdependent systems and shall reflect the assumption that the technician performing the check is qualified and is familiar with its systems and subsystems. Development and content of testing and troubleshooting for integrated systems shall be determined based on the systems having self-test or BIT capabilities or requiring the use of a system peculiar test set or common test equipment. These compound applications require more specifics on the criteria of which components or signals are tested by which method. In addition to coverage of the integrated system, the associated systems making up the integrated system shall be covered separately.

D.5.2.2.2.1 Integrated systems having self-test or built-in test (BIT) capability. Testing and troubleshooting procedures shall identify components or functions which are tested, and any

additional input required for proper testing (power parameters, signals, motion, air, hydraulic, etc.). If wiring tests are included, they should have defined testing parameters (which wires are tested, resistance tolerances, open definitions, wire-to-wire and wire-to-ground resistances, and any peculiar wire criteria) and what fault verification is required for a failure indication.

D.5.2.2.2.2 Integrated systems requiring the use of system peculiar test sets. Testing and troubleshooting procedures shall include identical parameters to those in D.5.2.2.2.1 with the additional requirement for special cables or support equipment that may be required.

D.5.2.2.2.3 Integrated systems requiring the use of common test equipment. Testing and troubleshooting procedures shall focus on actual readings or signal requirements so that sources of common test equipment will not be restricted.

D.5.3 Troubleshooting procedures content. The procedures shall contain all essential and pertinent information that would be included in any other form of maintenance procedure. This includes warnings, cautions, notes, power turn-on procedures, pre-checkout procedures, reference diagrams, and initial switch settings. In addition to external causes for malfunctions, troubleshooting should also identify symptoms resulting from failure of every spare and repair part authorized for replacement at user level. Troubleshooting procedures shall be prepared assuming one malfunction at a time is being corrected. The operator/technician shall be instructed to perform any applicable self-tests, alignments, and inspections before beginning any other troubleshooting procedures. As applicable, an operational check shall be specified to be performed after the fault is corrected to ensure correct operation of the system. Troubleshooting procedural instructions shall be prepared following these general requirements:

a. A concise explanation of the testing and troubleshooting format and an explanation of how to use the testing and troubleshooting procedures with the malfunction/symptom index, when applicable, shall be included.
b. The location for each component, accessory, connector, or junction box in the system under test shall be provided or a reference to the equipment description and data work package shall be included. The text and illustrations, as necessary, shall identify every test connector or other test point to be used in the test.
c. A complete list of test options shall be stipulated by the troubleshooting procedure. Any self-tests that are associated with the system shall be listed. Self-test schemes shall be described as the primary troubleshooting tool, with manual or automatic troubleshooting prepared to supplement the instructions where the self-test leaves off or fails to locate the malfunction. The procedure shall be built using system self-tests before using external test equipment.
d. Test setup procedures and post-test teardown procedures shall be included.
e. Complete step-by-step troubleshooting procedures, including instructions required for use and application of installed on-line testing equipment, shall be included. Procedures shall take into account controls, test point accessibility, indicator displays, and the feasibility of using BITE or automated test equipment where available.
f. Test procedures (e.g., system turn on, identification of time required to run and complete the system test, and an indication of any possible mid-test interruptions or stoppages and how to respond to them) shall be included.

g. Backup diagrams showing all test points, input and output signals, logic charts, schematics, signal flow diagrams, tables, and other illustrations as required for comprehensible understanding of the procedures shall be included.

h. Any information that will aid the operator/technician, such as waveforms; resistance data; fluid pressures; voltage levels; references to test diagrams, functional diagrams, text, etc.; and alignment procedures, checkout procedures, or other scheduled maintenance procedures shall be included. Connector numbers, pin designations, etc., shall be identified.

i. Special attention shall be given to interface wiring fault isolation procedures. Wiring fault isolation procedures shall include the following types of data, as applicable:

   (1) Specific wire reading access points and resistances for wiring components (where practical).

   (2) Wire-to-wire and wire-to-ground criteria for circuit integrity.

   (3) Special wire definition where required (including interconnecting criteria for proper sealing or terminal application) and special notations where wire harnesses should be completely replaced and not repaired.

   (4) It is also essential when developing fault isolation procedures, to provide or refer to ground stud tables, which include type, location, and wires connected; charts for both connectors and terminal boards; and a wire number log to identify any wire with its prime wiring diagram.

D.5.4 Types of testing and troubleshooting. Depending on the type and complexity of the weapon system/equipment, the TM may contain the following testing and troubleshooting categories.

D.5.4.1 Aviation testing and troubleshooting category **(Aircraft Troubleshooting TMs only)** **`<troubleaviationcategory>`**. When developing Aircraft Troubleshooting TMs the following work packages shall be developed as specified in their detailed paragraph:

a. Introduction work package **`<tsintrowp>`** (refer to D.5.5.3).

b. Technical description work package **`<techdescwp>`** (refer to D.5.5.4).

c. Troubleshooting index work package **`<tsindxwp>`** (refer to D.5.5.5).

d. Operational checkout work packages **`<opcheckwp>`** (refer to D.5.5.8.3).

e. Troubleshooting work packages **`<tswp>`** (refer to D.5.5.8.4).

f. Combined operational checkout and troubleshooting work package **`<opcheck-tswp>`** (refer to D.5.5.8.5).

g. Diagnostic work package **`<diagnosticwp>`** (refer to D.5.6).

D.5.4.2 Standard testing and troubleshooting category **`<troublecategory>`**. When developing TMs with maintenance level below depot the following work packages shall be developed as specified in their detailed paragraph:

a. Introduction work package **`<tsintrowp>`** (refer to D.5.5.3).

b. Troubleshooting index work package **`<tsindxwp>`** (refer to D.5.5.5).

c. Operational checkout work packages **`<opcheckwp>`** (refer to D.5.5.8.3).

d. Troubleshooting work packages **`<tswp>`** (refer to D.5.5.8.4).

e. Combined operational checkout and troubleshooting work package **<opcheck-tswp>** (refer to D.5.5.8.5).

f. Diagnostic work package **<diagnosticwp>** (refer to D.5.6).

D.5.4.3 DMWR/NMWR testing and troubleshooting category **(depot only)** **<troubledmwrnmwrcategory>**. When developing DMWRs or NMWRs the following work packages shall be developed as specified in their detailed paragraph:

a. Introduction work package **<tsintrowp>** (refer to D.5.5.3).

b. Troubleshooting index work package **<tsindxwp>** (refer to D.5.5.5).

c. Preshop analysis work package **<pshopanalwp>** (refer to D.5.5.6).

d. Component checklist work package **<compchklistwp>** (refer to D.5.5.7).

e. Operational checkout work packages **<opcheckwp>** (refer to D.5.5.8.3).

f. Troubleshooting work packages **<tswp>** (refer to D.5.5.8.4).

g. Combined operational checkout and troubleshooting work package **<opcheck-tswp>** (refer to D.5.5.8.5).

h. Diagnostic work package **<diagnosticwp>** (refer to D.5.6).

D.5.4.4 Master index testing and troubleshooting category **<masterindexcategory>**. When developing a TM with a master troubleshooting index, the Troubleshooting Index work package **<tsindxwp>** shall be developed.

D.5.5 Testing and troubleshooting work packages. Testing and troubleshooting work packages shall be developed for the overall weapon system/equipment and each maintainable system, subsystem, and WRA/SRA for each applicable maintenance level as indicated in the approved MAC or maintenance plan.

D.5.5.1 Work package content. Work packages shall include WP identification information, initial setup, and all required testing and troubleshooting information. When initial setup differs for specific testing and troubleshooting procedures, additional work packages shall be developed. Work packages shall stand alone and contain complete start-to-finish troubleshooting procedures. Any follow-on maintenance that must be performed after troubleshooting is completed shall be included (e.g., disconnect external power, perform operational checks, etc.). When the follow-on maintenance is extensive and is contained in a separate work package, a reference shall be made to the applicable work package. The words "END OF WORK PACKAGE" shall be placed below the last data item (e.g., text, illustration, etc.) of the work package. The testing and troubleshooting work packages described in D.5.5.8 for simple linear troubleshooting or D.5.6 for complex diagnostics shall be prepared, as applicable.

D.5.5.2 Types of testing and troubleshooting work packages. The following types of testing and troubleshooting work packages shall be developed, as applicable. (Refer to MIL-HDBK-1222 for typical examples of testing and troubleshooting work packages.)

D.5.5.3 Introduction work package **<tsintrowp>**. This work package is required for aviation systems and is optional for non-aviation systems. This work package shall describe the testing and troubleshooting process used to perform troubleshooting and shall include information on the methods used to perform troubleshooting. The general flow of the troubleshooting process shall be described and the general methods used to perform testing and troubleshooting shall be

included. Any information peculiar to troubleshooting electrical subsystems and electronic equipment shall also be described. If a troubleshooting index **<tsindxwp>** is used, an explanation of the index shall be provided.

D.5.5.3.1 Work package identification information **<wpidinfo>**. Work package identification information is required for this work package. (Refer to 4.9.6.2.)

D.5.5.3.2 Work package initial setup **<initial_setup>**. Initial setup is not required for this work package.

D.5.5.4 Technical description work packages **(aircraft troubleshooting manuals only)** **<techdescwp>**. A technical description work package may be developed for each system and subsystem of the weapon system, as applicable. The work package shall, as applicable, include the following information in D.5.5.4.1 through D.5.5.4.5.

D.5.5.4.1 Work package identification information **<wpidinfo>**. Work package identification information is required for this work package. (Refer to 4.9.6.2.)

D.5.5.4.2 Work package initial setup **<initial_setup>**. Initial setup is not required for this work package.

D.5.5.4.3 Equipment description and data **<descproc>**. When equipment description and data is required to support the testing and troubleshooting procedures, it shall be prepared in accordance with the requirements provided in B.5.3.3 through B.5.3.5, as applicable. If this information is provided in another TM, a reference to the TM may be included in lieu of including the descriptive data.

D.5.5.4.4 Controls and indicators **<ctrlindproc>**. When it is necessary to provide information concerning the description and use of the controls and indicators to support the testing and troubleshooting procedures, it shall be prepared in accordance with the requirements provided in C.5.2.2.1.3 or C.5.2.2.1.4, as applicable. If this information is provided in another TM, a reference to the TM may be included in lieu of including the controls and indicator data.

D.5.5.4.5 Theory of operation **<thryproc>**. When theory of operation is required to support the troubleshooting procedures, it shall be prepared in accordance with the requirements provided in B.5.4.3, as applicable. If this information is provided in another TM, a reference to the TM may be included in lieu of including the theory data.

D.5.5.5 Troubleshooting index work package **<tsindxwp>**. This work package shall be prepared as directed by the acquiring activity and consist of either a malfunction/symptom index **<tsindx.symptom>/<tsindx.messageword>** or a system/subsystem index **<tsindx.system>**.

D.5.5.5.1 Work package identification information **<wpidinfo>**. Work package identification information is required for this work package. (Refer to 4.9.6.2.)

D.5.5.5.2 Work package initial setup **<initial_setup>**. Initial setup is not required for this work package.

D.5.5.5.3 Malfunction/symptom index **<tsindx.symptom>**/**<tsindx.messageword>**. When all probable faults have been determined and described, prepare a malfunction/symptom index work package using the exact description of the fault or symptom as was used in the

troubleshooting procedures. Group symptoms to common system areas both in the malfunction/symptom index and in the troubleshooting procedures. For example, if a system has a data link, communications, radar, display, and tracking systems, the symptoms would be grouped into each related area. All fault symptoms of a communications nature would fall into the communications group. The symptoms may be further divided into functions within the communications group that would be common. The same would be done for radar, data link, display, and tracking systems. This index shall include the following data:

a. List all fault symptoms or known malfunctions in alphabetical order by malfunction/ symptom **<malfunc>** or by built-in test code/fault message word **<messageword>.** Reference this information to the applicable testing and troubleshooting WP sequence number **<xref>/<link>/<extref>** or the required corrective action **<action>**.

b. For complex systems, list symptoms by subsystem categories **<tsindx.symptom-category>/<tsindx.messageword-category>**, if necessary, and use codes that help identify specific items. Subsystem categories shall be listed in alphabetical order or by code.

c. Catalog malfunctions/symptoms by method of detection, if this aids usability.

d. Fault symptom descriptions (titles) shall be standardized between malfunction/symptom index work packages and troubleshooting procedures work packages.

D.5.5.5.4 Master malfunction/symptom index **<tsindx.symptom>**. When applicable, one troubleshooting malfunction/symptom index work package (refer to D.5.4.4) shall be prepared for all troubleshooting for the system/equipment.

D.5.5.5.5 System/subsystem index **<tsindx.system>**. This index shall consist of a list of specific systems, subsystems, assemblies and components requiring troubleshooting, referenced to the applicable testing and troubleshooting WP sequence number **<xref>/<link>/<extref>** or required corrective action **<action>**.

D.5.5.6 Preshop analysis work package **(DMWR/NMWR only) <pshopanalwp>**. Preshop analysis shall apply when data indicates that an inspection or test is more effective in determining the useful life of a system, subsystem, or component than a mandatory disassembly. Preshop analysis shall be prepared in accordance with D.5.5.6.1 through D.5.5.6.5.

D.5.5.6.1 Work package identification information **<wpidinfo>**. Work package identification information is required for this work package. (Refer to 4.9.6.2.)

D.5.5.6.2 Work package initial setup **<initial_setup>**. Initial setup is required for this work package. (Refer to4.8.6.3.)

D.5.5.6.3 Scope **<scope>**. The purpose and coverage of the preshop analysis shall be stated.

D.5.5.6.4 Preparation Procedures **<proc>**.

a. Unpacking and special handling. Procedures shall be prepared for removing the item, assemblies, subassemblies, or components from the shipping containers and packaging material. Instructions shall be prepared on any needed handling requirements for hazardous material, electrostatic sensitive devices, precious metal content, classified material, or critical material. Instructions shall also be prepared for any special condemnation procedures for the item and its assemblies and subassemblies.
b. Checking attached documents. Instructions shall be prepared for checking all tags, forms, and documents attached to the item to determine the reason for its return and to identify any other obvious faults or damage.
c. External inspection. Procedures shall be prepared for external inspection of the item to determine if it is complete and if there is any obvious external damage.
d. Cleaning and preservation. Instructions shall be prepared for cleaning the item to prepare it for preshop analysis testing. The instructions shall include the procedures for any temporary preservation or corrosion protection measures needed to protect the item until the work required is started.

D.5.5.6.5 Preshop analysis procedures **<pshopanal>**. Detailed procedures shall be prepared for performing a preshop analysis. The acquiring activity shall determine if the preshop analysis procedures shall be a narrative or be structured as a checklist. A checklist shall permit the inclusion of the name and signature of the person performing the analysis and any remarks that are required based on the results of the analysis. If a narrative preshop analysis is not provided, a printable checklist shall be provided. When specified by the acquiring activity, an electronic checklist shall be provided in lieu of the narrative or printable checklist.

D.5.5.6.5.1 Narrative procedures **<proc>**. Preshop analysis text shall be presented in procedural format. Test and analysis procedures shall be presented in a logical sequence not to cause any unnecessary disassembly and in the order in which they should be performed. Each procedure shall be identified by a step number. Procedures shall be arranged in groups by major components, assemblies, and subassemblies. Each group shall be headed with an applicable title.

D.5.5.6.5.2 Checklist **<chklist>**. The checklist shall include the following data.

D.5.5.6.5.2.1 Cover sheet/frame **<coverpage>**. The cover sheet/frame (refer to Figure D-1) shall contain an area to record the following item information: part number **<partno>**; serial number **<serialno>**; NSN **<nsn>**; modifications required **<modreq>**; reason for overhaul or repair **<reason>**; unpacking of secondary items required **<secitem>**; review of tags **<revtag>** or forms **<revform>** with the item, name **<name>,** and signature **<sig>** of the person doing the analysis; and date **<date>**.

D.5.5.6.5.2.2 Introduction **<intro>**. When necessary, the table of tests and inspections shall be preceded by a brief explanation of its use.

D.5.5.6.5.2.3 Table of tests and inspections **<pshopckk.tab>**. This table shall have an entry for each test and inspection procedure. Each entry shall have, as a minimum, the following information: inspection point (the item or area to be inspected), condition, action, remarks, and identification of the personnel performing the inspection. If the procedure is too complex or

lengthy to be included in the checklist, a reference to the WP where the procedures or actions are provided shall be included in the checklist.

D.5.5.7 Component checklist work package **(DMWR/NMWR only) <compchklistwp>**. A component checklist work package shall be prepared when required to support the preshop analysis procedures. In addition to the main components, subcomponents may be listed. This work package shall consist of the data described in D.5.5.7.1 through D.5.5.7.4.

D.5.5.7.1 Work package identification information **<wpidinfo>**. Work package identification information is required for this work package. (Refer to 4.9.6.2.)

D.5.5.7.2 Work package initial setup **<initial_setup>**. Initial setup is required for this work package. (Refer to4.8.6.3.)

D.5.5.7.3 Introduction **<intro>**. When necessary, the checklist shall be preceded by a brief explanation of its use.

D.5.5.7.4 Component checklist **<compchklist>**. The checklist (refer to Figure D-2) shall contain the following data, item a is required and items b-j are as applicable:

a. Name/nomenclature of the equipment/item **<name>**.
b. Serial number **<serialno>**.
c. Date received **<daterec>**.
d. Received from (identify unit) **<recfrom>**.
e. Component name **<compname>**.
f. NSN **<nsn>**.
g. Part number/CAGEC **<partno>/<cageno>**.
h. Quantity required **<qty>**.
i. Quantity received **<qtyrec>**.
j. Visual damage found **<damage>**.

D.5.5.8 Operational checkout and troubleshooting procedures work packages. A series of work packages shall be developed containing operational checkout and troubleshooting procedures for integrated weapon systems and for each independent system and subsystem of the weapon system, as applicable. DMWRs/NMWRs shall include these work packages as specified by the acquiring activity. The content and development requirements for these work packages are provided in D.5.5.8.1 through D.5.5.8.6.

D.5.5.8.1 Operational checkout and troubleshooting procedures content. Operational checkout and troubleshooting procedures shall guide a technician in as practical a manner as possible in detecting, isolating, and correcting system or equipment failure/malfunctions. Procedures shall ultimately lead to isolating faults to an appropriate adjustment, replaceable parts, interface wires, or mechanical linkage. Instructions shall direct repair or replacement of parts authorized for repair or replacement at the maintenance level covered. Procedures shall be accompanied by schematics, signal flow diagrams, waveforms, tables, and other illustrations for comprehensive understanding of the procedures. When schematics are required as backup data, they shall be referenced or may be contained in the same WP. The schematics shall integrate fluid, mechanical, electrical, and electronic components. Illustrations may also be included that locate

and identify the controls and displays used to perform the testing and troubleshooting procedures. If ATE is used and a Test Program Set has been developed, the operational checkout and troubleshooting procedures contained in the Test Program Set shall not be duplicated. A reference to the Test Program Set shall be provided.

D.5.5.8.2 Operational checkout and troubleshooting procedure work package development. Operational checkout and troubleshooting procedures shall be combined and contained in the same WP or may be developed in separate operational checkout and troubleshooting work packages. Based on the following factors, may be developed in a separate operational checkout and a separate troubleshooting work package (refer to D.5.5.8.5):

a. Complexity of the system/equipment.
b. The type of test equipment used.
c. System/equipment self-test or BIT capability.
d. Complexity of the test and troubleshooting procedures as determined by the task analysis.
e. Clarity and usability.

D.5.5.8.3 Operational checkout work package **<opcheckwp>**. Operational checkout procedures that subject an aircraft or other type of major weapon system or their systems, subsystems, components, accessories, and items of equipment to prescribed conditions to determine if they will function in accordance with predetermined test parameters shall be developed. Operational checkout for DMWRs/NMWRs shall be developed as specified by acquiring activity. An operational checkout work package may include test set hookup and disconnect procedures, index of test set message words, a reference index of test set or BIT/BITE fault codes and related actions, and further testing procedures related to the message words and fault codes. The words "END OF WORK PACKAGE" shall be placed below the last item (e.g., text, illustration, etc.) in any work package containing the operational checkout procedures. The information in D.5.5.8.3.1 through D.5.5.8.3.8 shall be included in the work package, as applicable.

D.5.5.8.3.1 Work package identification information **<wpidinfo>**. Work package identification information is required for this work package. (Refer to 4.9.6.2.)

D.5.5.8.3.2 Work package initial setup **<initial_setup>**. Initial setup is required for this work package. (Refer to 4.8.6.3.)

D.5.5.8.3.3 Introduction **<intro>**. When required, an introduction shall be included explaining how the operational checkout procedures are to be used to perform testing and how they relate to the associated troubleshooting work packages.

D.5.5.8.3.4 General procedures and precautions **<proc>**. Any general procedures that must be performed prior to checkout and precautions that must be taken during the performance of the checkout procedure shall be included.

D.5.5.8.3.5 Pretest setup procedures **<hookup>**. Procedures for connecting any test and accessory equipment, including cable connections, shall be included. Procedures for the initial setting of controls shall also be provided.

D.5.5.8.3.6 Operational checkout procedures **<opcheckproc>**. The selection of an operational checkout type shall be based on the type of system, equipment, or

assembly/subassembly being addressed, the target audience, and the maintenance level of the operator/technician. Based on the complexity of the operational checkout to be performed, operational checkout procedures can be structured differently and therefore contain different content elements. The following methods shall be used to prepare operational checkout procedures. Once selected, the operational checkout method shall be prepared in accordance with the requirements outlined below.

D.5.5.8.3.6.1 Operational checkout test procedure **<opcheck>**. Operational checkout procedures **<testproc>** shall consist of a series of numbered steps **<step1>** and substeps **<step2> - <step6>**, which lead to an indication or condition **<indication>**. Based on the indications or conditions, a corrective action **<action>** shall be provided. (Refer to Figure D-3.) This corrective action can either be stated as a specific remedy or can be a reference **<xref>**/**<link>** to a detailed troubleshooting procedure work package. This process is continued until the complete operational checkout procedure is completed.

D.5.5.8.3.6.2 Test set message word index **<messageindx>**. The message word index shall consist of a series of test set messages or bit-code words with message word description. Based on the message or bit-code word, a corrective action shall be stated. This corrective action can either be stated as a specific remedy or can be a reference **<xref>/<link>** to a detailed troubleshooting procedure work package.

D.5.5.8.3.6.3 Fault code reference index **<faultreports>**. The fault code reference index shall consist of a fault code(s) that leads to a corrective action. This corrective action can either be stated as a specific remedy or can be a reference **<xref>/<link>** to a maintenance work package. If applicable, additional follow-on operational testing procedures **<follow-on>** shall be included based on the corrective action.

D.5.5.8.3.7 Post-operational shutdown procedures **<disconnect>**. Procedures to return the aircraft, aircraft system, or equipment to its normal configuration, prior to operational checkout setup, if required, shall be included.

D.5.5.8.3.8 Follow-on maintenance **<follow-on>**. Instructions or references related to any follow-on maintenance shall be included.

D.5.5.8.4 Troubleshooting work package **<tswp>**. Troubleshooting procedures for detecting, isolating, and correcting aircraft, aircraft systems or other types of weapon systems and their subsystems, and equipment failures and malfunctions shall be developed. Troubleshooting for DMWRs/NMWRs shall be developed as specified by the acquiring activity. Work packages will relate either to a specific symptom or to a system, assembly, or component. Work packages related to a system of some complexity may contain more than one set of troubleshooting procedures directed to specific subsystems. The information in D.5.5.8.4.1 through D.5.5.8.4.8 shall be included in the work package, as applicable.

D.5.5.8.4.1 Work package identification information **<wpidinfo>**. Work package identification information is required for this work package. (Refer to 4.9.6.2.)

D.5.5.8.4.2 Work package initial setup **<initial_setup>**. Initial setup is required for this work package. (Refer to 4.8.6.3.)

D.5.5.8.4.3 Introduction **<intro>**. When required, an introduction shall be included explaining how the troubleshooting procedures are to be used to perform troubleshooting and how they relate to the associated operational checkout work packages.

D.5.5.8.4.4 General procedures and precautions **<proc>**. Any general procedures that must be performed prior to troubleshooting and precautions that must be taken during the performance of the troubleshooting procedure shall be included.

D.5.5.8.4.5 Pretest setup procedures **<hookup>**. Procedures for connecting any test and accessory equipment, including cable connections shall be included. Procedures for the initial setting of controls shall also be provided.

D.5.5.8.4.6 Troubleshooting procedures **<tsproc>**. The selection of a troubleshooting type shall be based on the type of system, equipment, or assembly/subassembly being addressed, the target audience description, and the maintenance level of the operator/technician. Based on the complexity of the troubleshooting to be performed, troubleshooting procedures can be structured differently and therefore contain different content elements. The following methods shall be used to prepare troubleshooting procedures. Once selected, the troubleshooting method shall be prepared in accordance with the requirements specified by this document. (Refer to MIL-HDBK-1222 for an example of troubleshooting procedure.)

D.5.5.8.4.6.1 Method A - Text-Logic **<logicproc>**. Troubleshooting procedures for specific fault symptoms shall combine text and logic and consist of a series of tests **<test>** (steps and substeps) which lead to an indication or condition **<indication>** (usually stated in the form of a question). Based on these indications or conditions, a "YES" or "NO" response **<answer>** is provided that will guide the technician to either the next step or a series of steps **<test>**, or to a malfunction **<malfunc>** and corrective action **<action>.** (Refer to Figure D-4.) This process is continued until the entire troubleshooting procedure is completed. When required, the corrective action may include a reference to the work package or paragraph **<xref>/<link>** that contains the data to perform the corrective action.

D.5.5.8.4.6.2 Method B - Text **<faultproc>**. Troubleshooting procedures shall consist of an all inclusive series of specific fault symptoms for the system/equipment being troubleshot. For each fault symptom **<symptom>**, the probable malfunction or series of malfunctions **<malfunc>** that may have caused the fault shall be listed. For each probable malfunction identified, a corrective action **<action>** shall be stated with a reference to the work package or paragraph **<xref>/<link>** that contains the data to perform the corrective action. (Refer to Figure D-5.)

D.5.5.8.4.6.3 Method C - Multiplex read codes **<muxproc>**. This method of troubleshooting is based on the use of computer generated MUX read code data. The MUX read code data are listed in troubleshooting sequence order by signal name.

a. Signal data. For each signal name **<signame>**, the following MUX read code data shall be provided. (Refer to Figure D-6.)
   (1) Memory location <**memloc**>.
   (2) Memory data bit(s) <**memdata**>.
   (3) Condition <**condition**>.

(4) Signal function **<sigfunc>**.

(5) Remarks **<ckremarks>**.

(6) Pass **<criteria>**.

(7) Fail **<criteria>**.

b. The MUX read code data. The MUX read code data is used in conjunction with a malfunction/symptom index (refer to D.5.5.5.3) and an operational checkout procedure (refer to D.5.5.8.3.6). For each system or equipment, the MUX read code data shall be listed under the system or equipment name by the specific malfunction/symptom.

D.5.5.8.4.7 Post-operational shutdown procedures **<disconnect>**. Procedures to return the aircraft, aircraft system, or equipment to its normal configuration, prior to troubleshooting setup, if required, shall be included.

D.5.5.8.4.8 Follow-on maintenance **<follow-on>**. Instructions or references related to any follow-on maintenance shall be included.

D.5.5.8.5 Combined operational checkout and troubleshooting work package **<opcheck-tswp>**. Combined operational checkout and troubleshooting procedures to verify proper operation to prescribed standards and for detecting, isolating, and correcting system and equipment failures and malfunctions shall be developed. Combined operational checkout and troubleshooting for DMWRs/NMWRs shall be developed as specified by the acquiring activity. The following information in D.5.5.8.5.1 through D.5.5.8.5.7 shall be included, as applicable.

D.5.5.8.5.1 Work package identification information **<wpidinfo>**. Work package identification information is required for this work package. (Refer to 4.9.6.2.)

D.5.5.8.5.2 Work package initial setup **<initial_setup>**. Initial setup is required for this work package. (Refer to 4.8.6.3.)

D.5.5.8.5.3 Introduction **<intro>**. When required, an introduction shall be included explaining how the operational checkout and troubleshooting procedures are to be used to perform checkout and troubleshooting and how they relate to the associated maintenance work packages that include the corrective actions that will return the equipment to proper operation.

D.5.5.8.5.4 General procedures and precautions **<proc>**. Any general procedures that must be performed prior to checkout and precautions that must be taken during the performance of the checkout procedure shall be included.

D.5.5.8.5.5 Pretest setup procedures **<hookup>**. Procedures for connecting any test and accessory equipment, including cable connections, shall be included. Procedures for the initial setting of controls shall also be provided.

D.5.5.8.5.6 Operational checkout and troubleshooting procedures. Operational checkout and troubleshooting procedures may be combined in a single procedure or may be prepared as a separate operational checkout procedure and a separate troubleshooting procedure.

D.5.5.8.5.6.1 Combined operational checkout and troubleshooting procedures **<opcheck-tsproc>**. Combined operational checkout and troubleshooting procedures shall consist of a series of test procedures **<testproc>** (steps and substeps), which lead to an indication or condition **<indication>**. When a normal indication is obtained, the operational

checkout continues until the complete checkout is completed or until an abnormal condition or indication is observed. When the test procedure results in an abnormal indication or condition, a malfunction **<malfunc>** or a series of malfunctions is provided. For each malfunction, the possible corrective actions **<action>** shall be provided. (Refer to Figure D-7.) When required, the corrective action may include a reference to the work package or paragraph **<xref></link>** that contains the data to perform the corrective action.

D.5.5.8.5.6.2 Separate operational checkout procedures **<opcheckproc>**. When it is determined that the operational checkout procedures shall be separate from the troubleshooting procedures, the operational checkout procedures shall be included under the heading "OPERATIONAL CHECKOUT." Operational checkout procedures shall be developed in accordance with D.5.5.8.3.

D.5.5.8.5.6.3 Separate troubleshooting procedure **<tsproc>**. When it is determined that the troubleshooting procedures shall be separate from the operational checkout procedures, the troubleshooting procedures shall be included under the heading "TROUBLESHOOTING." Troubleshooting procedures shall be developed in accordance with D.5.5.8.4.

D.5.5.8.5.7 Post-operational shutdown procedures **<disconnect>**. Procedures to return the aircraft, aircraft system, or equipment to its normal configuration, prior to operational checkout or troubleshooting setup, if required, shall be included.

D.5.5.8.5.8 Follow-on maintenance **<follow-on>**. Instructions or references related to any follow-on maintenance shall be included.

D.5.5.8.6 Integrated system troubleshooting procedures work packages. When specified by the acquiring activity, integrated system operational checkout and troubleshooting (refer to D.5.2.2.2) shall be developed. Troubleshooting procedures which involve more than one system or more than one major subsystem and which cannot be logically placed in one of the individual system/ subsystem troubleshooting information work packages shall be covered in this type of work package. The content and structure of this work package shall be as described in D.5.5.8.3 and D.5.5.8.4 or D.5.5.8.5.

D.5.6 Diagnostic work package **<diagnosticwp>**. The diagnostic work package shall be used to develop troubleshooting procedures for all complex diagnostic models (refer to D.4.14.2) or simple diagnostic models that require state table manipulation (refer to D.4.14.2.1). It shall contain all information required by the maintenance technician to perform a single complete test or multiple tests that isolates a fault. The test may be an entire automatic system test to a series of manual steps required to obtain some level of fault identification. The following types of information shall be included:

a. As applicable, any warnings, cautions, or notes that would apply to the entire diagnostic procedure.
b. As applicable, any general information that may aide the technician in understanding, setting up, performing the test, or similar information.
c. As applicable, any additional configuration unique hookup **<hookup>** or conditional hookup (depending on state table information) **<hookup-alt>** requirements not identified in the initial setup.
d. As applicable, a reason for performing the test **<reasonfortest>**.

e. Test method consisting of a single test selected from the following methods:
   (1) Simple test **<testwithoutstate>** (refer to D.5.6.3).
   (2) Complex test **<testwithstate>** (refer to D.5.6.4).
   (3) Conditional complex test **<testwithstate-alt>** (refer to D.5.6.5).

f. As applicable, upon a testing conclusion, any test equipment not required for the next diagnostic test shall be removed through a disconnection procedure **<disconnect>** or conditional disconnection **<disconnect-alt>** procedure.

D.5.6.1 Work package identification information **<wpidinfo>**. Work package identification information is required for this work package. (Refer to 4.9.6.2.)

D.5.6.2 Work package initial setup **<initial_setup>**. Initial setup is required for this work package. (Refer to 4.8.6.3.)

D.5.6.3 Simple tests **<testwithoutstate>**. Simple diagnostic testing shall contain the following information.

D.5.6.3.1 Test procedure **<proc>**. The testing procedure is displayed detailing the instructions of how to execute the test.

D.5.6.3.2 Indication prompt **<simple>**/**<multioption>**. After conducting the testing the user is prompted **<prompt>** for the test indication. The prompt shall indicate to the user the information needed from the test, usually through a question. The test indication shall be entered through selecting a binary indication (e.g., yes/no, true/false, pass/fail) **<simple>** or a list of possible options (e.g., "<3.5" "3.5 to 4.5" ">4.5") **<multioption>**. Using a simple test excludes the IETM from deriving direct results from test equipment or embedded sensors (since this depends on storing the information in an IETM state variable for evaluation).

D.5.6.3.3 Test results **<resultwithoutstate>**. Each test evaluation shall provide a corrective action **<para>**, reference **<link>** to a detailed corrective action work package (e.g., repair maintenance work package), or reference **<link>** to a further diagnostic testing procedure or work package. When the test has determined the fault **<fault>**, the IETM shall display the fault code to the user for recording in the equipment maintenance log. As applicable, upon testing conclusion, any test equipment not required for the next diagnostic test shall be removed through a disconnection procedure **<disconnect>**. When the test has concluded and no further testing is required, the IETM shall indicate the test completion <**completed_test**>.

D.5.6.4 Complex tests **<testwithstate>**. Diagnostic testing shall conduct testing using known system conditions (maintained in the IETM state table), previous test results (maintained in the IETM state table), test equipment results **<diagnostic_group>**, weapon system's embedded sensor(s) readings **<diagnostic_group>**, and/or information from the user **<interaction>** to conduct evaluations **<evaluate>** on the test information (from the IETM state table, user, and/or weapon system) and direct the user to the next test or corrective action **<resultwithstate>**.

D.5.6.4.1 Test evaluations **<evaluate>**. The evaluation of data shall use one of the approaches listed below.

D.5.6.4.1.1.1 IF statement **<if>**. The IF statement shall evaluate state table information (through user interaction or test results) to determine the appropriate action to perform. When an evaluated expression **<expression>** returns a true condition, the THEN condition **<then>** shall perform the assigned test result(s) **<resultwithstate>** actions and/or conduct further evaluation **<evaluate>** on the test results. When multiple conditions occur that have different test results to perform, each additional condition shall use ELSEIF **<elseif>**. When the evaluated ELSEIF expression **<expression>** returns a true condition, the THEN condition **<then>** shall perform the assigned test result(s) **<resultwithstate>** actions and/or conduct further evaluation **<evaluate>** on the test results. When all evaluated expressions **<expression>** return false, the ELSE condition **<else>** shall perform the assigned test result(s) **<resultwithstate>** actions and/or conduct further evaluation **<evaluate>** on the test results.

D.5.6.4.1.1.2 LOOP COUNTER statement **<loopfor>**. The LOOP COUNTER statement will repeat the testing actions **<loopaction>** for a predetermined number of iterations **<expression>**. After satisfying iteration count then **<then>** the test result(s) actions **<resultwithstate>** shall be performed and/or further evaluation **<evaluate>** shall be conducted on the test results.

D.5.6.4.1.1.3 LOOP UNTIL CONDITION statement **<loopuntil>**. The LOOP UNTIL CONDITION statement will repeat a testing action **<loopaction>** until an evaluated expression **<expression>** returns a terminating condition (Boolean 'true' expression). After satisfying the terminating condition then **<then>** the test result(s) actions **<resultwithstate>** shall be performed and/or further evaluation **<evaluate>** shall be conducted on the test results. The author shall ensure the LOOP UNTIL CONDITION statement has a terminating condition through setting an IETM state variable(s) **<statemanipulation>** and this terminating condition shall be part of the loop evaluating expression **<expression>**.

D.5.6.4.1.1.4 Loop test actions **<loopaction>**. The looping test action includes any required instruction(s) **<proc>**/**<step1>**/**<para>**, automated test equipment results **<diagnostic_group>**, weapon system's embedded sensor(s) readings **<diagnostic_group>**, information from the user **<dialog>**, conditional information from the user **<dialog-alt>**, and/or updating or setting an IETM state variable(s).

D.5.6.4.2 Test result actions **<resultwithstate>**. Each test evaluation shall provide a corrective action **<para>**, a reference **<link>** to a detailed corrective action work package (e.g., repair maintenance work package), a reference **<link>** to a further diagnostic testing procedure or work package, assignment of IETM state variables **<statemanipulation>**, information for the user **<interaction>**, and/or additional information from the user **<interaction>** that may require additional evaluation **<evaluate>**. When the test has determined the fault **<fault>**, the IETM shall display the fault code to the user for recording, either automatically or manually, in the equipment maintenance log. As applicable, upon testing conclusion, any test equipment not required for the next diagnostic test shall be removed through a disconnection procedure **<disconnect>** or conditional disconnection

<disconnect-alt> procedure. When the test has concluded and no further testing is required, the IETM shall indicate the test completion **<completed_test>**.

D.5.6.5 Conditional tests using the state table **<testwithstate-alt>**. Conditional diagnostic testing shall have the IETM select from various test options, system configuration, environmental conditions; etc., the test to conduct through the use of the known information (maintained in the IETM state table). Each test **<testwithstate>** shall have a precondition **<precond>** that allows the previous known information to be evaluated, through a Boolean expression **<expression>,** to provide the appropriate diagnostic test (refer to D.5.6.4) to perform. Only one test shall be applicable from the conditional test options.

D.5.6.6 Test information source. shows the testing elements and specifies where the diagnostic test data is derived. An "X" in a column means at least some portion of the element may have capability to enter test data. Testing elements that are used in more than one area are expanded only once in the table. MIL-HDBK-2361 contains full details on usage by the authors and explanation of other perceived usage. (Refer to D.4.14.2.3 for specific limits regarding state manipulation.)

TABLE D-I. Test Element Matrix.

Test Elements	Author	Weapon System	TM User
Test With State **<testwithstate>**			
• Precondition Expression **<precond>** (used with Conditional Test With State)	X		
• IETM State Variable Manipulation **<statemanipulation>**	X	X	X
• Alert (Warning, Caution) and Note	X		
• System Description **<sysdesc>**	X		
• Additional information (e.g., Interconnect **<interconnect>**, Test flow **<testflow>**, Function dependences **<funcdepend>**, Schematic **<schematic>**, Component Locator **<comp-locator>**, Harness Index **<harness-indx>**)	X		
• Test Procedure **<proc>**	X		
• Grouped Intrusive Diagnostic **<diagnostic_group>**	X	X	
• User Interaction **<interaction>**	X		X
• Evaluate IETM State Variable **<evaluate>**	X		
Conditional Test With State **<testwithstate-alt>**			
• Test With State **<testwithstate>**	X	X	X

TABLE D-I. Test Element Matrix.

Test Elements	Author	Weapon System	TM User
IETM State Variable Manipulation **<statemanipulation>**			
• Precondition Expression **<precond>** (used with Conditional IETM State Variable Manipulation)	X		
• Define IETM State Table Variable **<variable>**	X		
• Calculate an expression **<expression>**	X		
• IETM State Variable Reference **<variableref>**	X		
Conditional IETM State Variable Manipulation **<statemanipulation-alt>**			
• State Table Manipulation **<statemanipulation>**	X		
Grouped Intrusive Diagnostic **<diagnostic_group>**			
• Parameters to Conduct Test **<sendparameter>**	X		
o Parameter Name **<name>**	X		
o IETM State Variable Value **<variableref>**	X		
o Fixed Value **<string>**	X		
• Intrusive Diagnostic **<diagnostic>**	X	X	
Intrusive Diagnostic **<diagnostic>**			
• Diagnostic Description **<desc>**	X		
• Parameters to Conduct Test **<sendparameter>**	X		
o Parameter Name **<name>**	X		
o IETM State Variable Value **<variableref>**	X		
o Fixed Value **<string>**	X		
• Parameter Received from Test Result **<receiveparameter>**	X	X	
User Interaction **<interaction>**			
• State Table Manipulation **<statemanipulation>**	X		
• Dialog **<dialog>**	X		X
• Conditional Dialog **<dialog-alt>**	X		X
• Response Message **<message>**	X		

TABLE D-I. Test Element Matrix.

Test Elements	Author	Weapon System	TM User
Test without State Table **<testwithoutstate>**			
• Alert (Warning, Caution) and Note	X		
• System Description **<sysdesc>**	X		
• Additional information (e.g., Interconnect **<interconnect>**, Test flow **<testflow>**, Function dependences **<funcdepend>**, Schematic **<schematic>**, Component Locator **<comp-locator>**, Harness Index **<harness-indx>**)	X		
• Test Procedure **<proc>**	X		
• Yes/No Selection **<simple>**	X		X
• Multiple Option Selection **<multioption>**	X		X

D.6 **NOTES.**

The notes in section 6 apply to this appendix.

PRESHOP ANALYSIS

P/N

Serial number

NSN

MWOs Required

Reason(s) for Overhaul/Repair

Unpacking Secondary Items Require ○ Yes ○ No

Reviewed Tags? ○ Yes ○ No

Reviewed Forms? ○ Yes ○ No

Name

Date

Electronic Signature

OK CANCEL HELP

FIGURE D-1. Example of a cover sheet/frame for preshop analysis checklist.

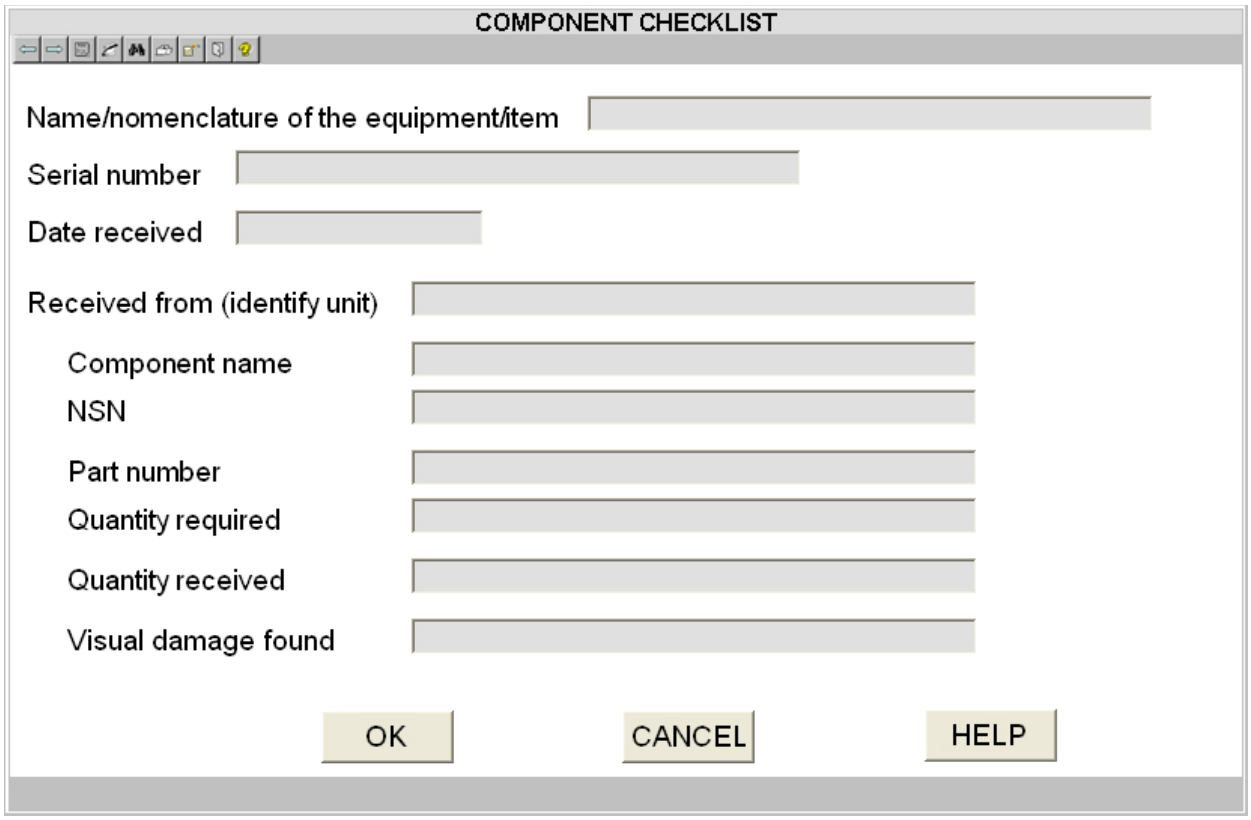

FIGURE D-2. <u>Example of a component checklist.</u>

ARRESTING GEAR SYSTEM OPERATIONAL CHECKOUT

1. Make sure door 103 is installed.
2. Make sure arresting HOOK manual control lever is set to up.
3. Read, record and reset nose wheelwell DDI (Nose Wheelwell DDI Adjustment)

INDICATION/CONDITION

No maintenance code exists.

CORRECTIVE ACTION

Perform troubleshooting Maintenance Code 916.

FIGURE D-3. Example of content for an operational checkout procedure.

916 Code Displayed with Arresting Hook Actuator Properly Serviced

2. Do substeps below:
   a. Manually raise speed brake and install speed brake aircraft ground safety lock.
   b. Remove door 103.
   c. Disconnect 19P-T012 from temperature compensation pressure switch.

CONDITION/INDICATION
Does continuity exist between 19J-T012 pins 3 and 4?
No Yes

916 Code Displayed with Arresting Hook Actuator Properly Serviced

2. Do substeps below:
   a. Manually raise speed brake and install speed brake aircraft ground safety lock.
   b. Remove door 103.
   c. Disconnect 19P-T012 from temperature compensation pressure switch.

CONDITION/INDICATION
Does continuity exist between 19J-T012 pins 3 and 4?
No Yes

MALFUNCTION
Faulty temperature compensation switch.

ACTION
Replace and do step 16.

FIGURE D-4. Example of content for a troubleshooting procedure (Method A).

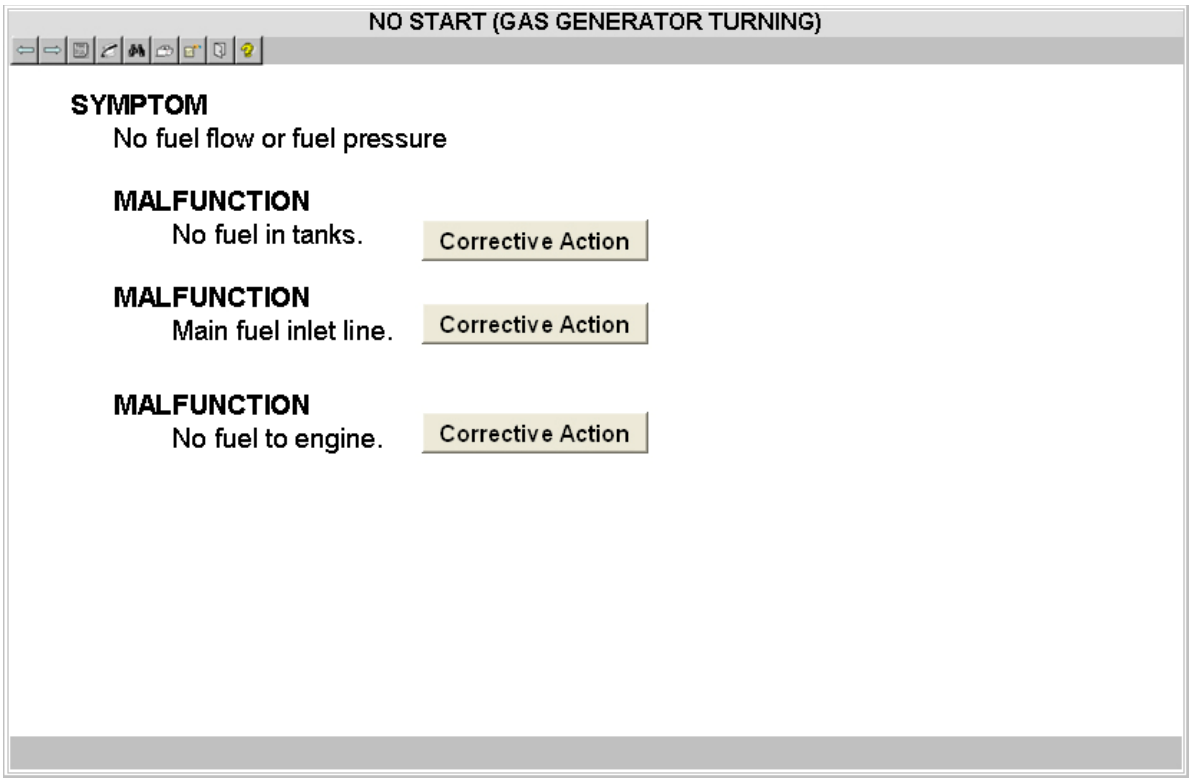

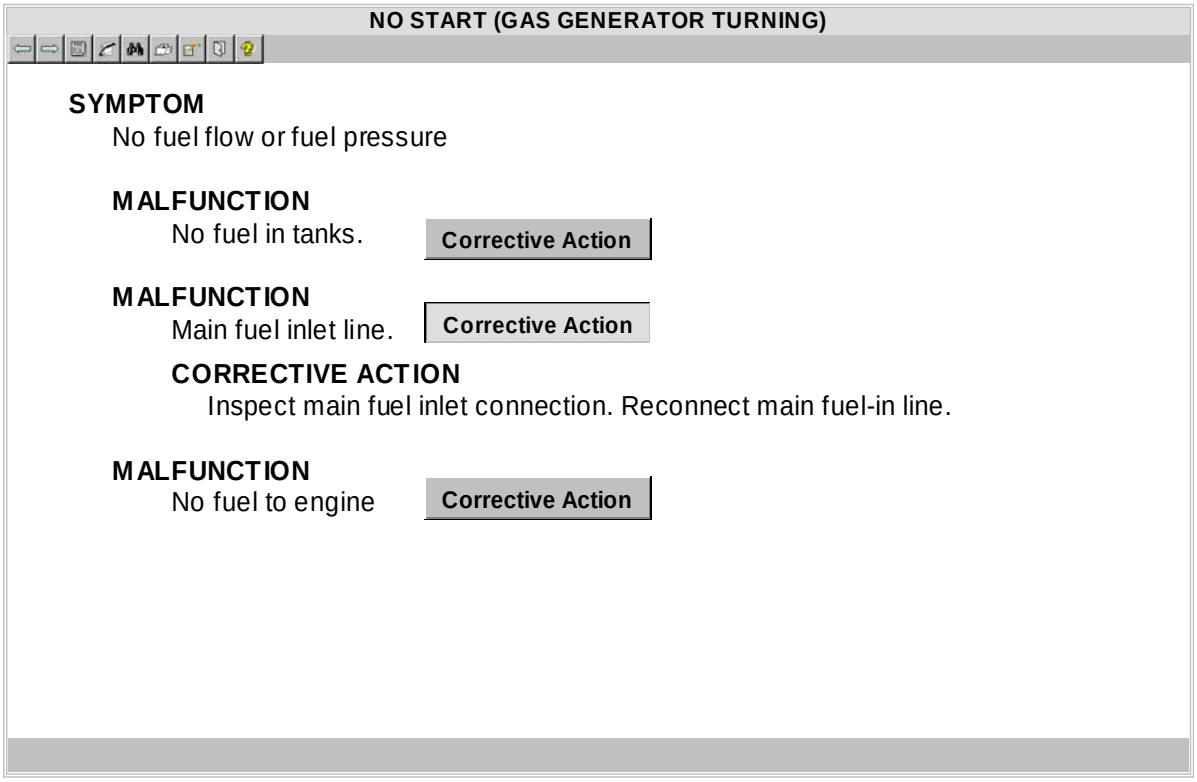

FIGURE D-5. <u>Example of content for a troubleshooting procedure (Method B).</u>

RANGE DATA CANNOT BE DISPLAYED

SIGNAL NAME: DASEC STATUS WORD DC ANALOG OUTPUT BIT

MEMORY LOCATION: 002150

MEMORY DATA BIT(S): 15 (BINARY)

CONDITION: (None)

SIGNAL FUNCTION: Indicates status of DC analog circuits.

REMARKS: From DASEC to FCC.

PASS: If second digit displayed on HOD is 3 or 7 go to DASEC STATUS WORD AD/DA BIT

FAIL: Location of fault: replace DASEC (TM 1-1520-238-23 Series)

SIGNAL NAME: DASEC STATUS WORD AD/DA BIT

SIGNAL NAME: DASEC STATUS WORD FD/LS TEST

SIGNAL NAME: DASEC STATUS WORD ASE BIT

SIGNAL NAME: DASEC STATUS WORD VD TEST

SIGNAL NAME: DASEC STATUS WORD AGD BIT

FIGURE D-6. Example of content for a troubleshooting procedure (Method C).

COMPUTER PROCESSOR OPERATIONAL CHECKOUT AND TROUBLESHOOTING

1. Remove computer processor top cover.
2. Apply power to test set and place test set POWER switch to ON position. **Indication/Condition**
3. Place UUT POWER switch in CP position. **Indication/Condition**
4. Place Test Set UUT POWER switch in CP position. Quickly press and release the CP BIT button on the system interface card. Observe the 10 LEDs on the system I/F CCA. **Indication/Condition**

COMPUTER PROCESSOR OPERATIONAL CHECKOUT AND TROUBLESHOOTING

1. Remove computer processor top cover.
2. Apply power to test set and place test set POWER switch to ON position. **Indication/Condition**

   INDICATION/CONDITION
   Test set power indicator is illuminated.

   MALFUNCTION
   If power indicator does not light

   CORRECTIVE ACTION
   Check power source for 28 VDC.
3. Place UUT POWER switch in CP position. **Indication/Condition**
4. Place Test Set UUT POWER switch in CP position. Quickly press and release the CP BIT button on the system interface card. Observe the 10 LEDs on the system I/F CCA. **Indication/Condition**

FIGURE D-7. Example of content for a combination testing and troubleshooting procedure.

This page intentionally left blank.

APPENDIX E
MAINTENANCE INSTRUCTIONS

E.1 **SCOPE.**

E.1.1 Scope. This appendix establishes the technical content requirements for the preparation of maintenance procedures for major weapon systems and their related systems, subsystems, equipment, WRAs, and SRAs. This appendix is a mandatory part of this standard. The information contained herein is intended for compliance. The requirements are applicable for all maintenance levels/classes through overhaul (depot), including DMWRs and NMWRs.

E.2 **APPLICABLE DOCUMENTS.**

The applicable documents in section 2 apply to this appendix.

E.3 **DEFINITIONS.**

The definitions in section 3 apply to this appendix.

E.4 **GENERAL REQUIREMENTS.**

E.4.1 General. Maintenance instructions shall be prepared for major weapon systems, equipment, components, and applicable support and interface equipment. They shall be prepared for all items comprising the weapon system/equipment: such as assemblies, subassemblies, components, wiring, junction boxes, and accessories. Maintenance procedures and supporting illustrations shall be prepared so that maintenance personnel can perform all required crew through depot level (overhaul) maintenance.

E.4.2 Development of maintenance instructions. Tasks shall be presented in the order in which they are performed. Sound engineering principles and techniques, approved LMI, service experience, performance data on similar equipment, /and all other RMS and Ao data available shall be used in the preparation of specific maintenance instructions.

E.4.3 Maintenance level/class applicability. Requirements contained in this appendix are applicable to all maintenance levels/classes unless specifically labeled in bold and in parentheses. The labeled requirement may specify a specific level (e.g., **Field**) (refer to 3.82) or a specific maintenance class (refer to 3.80) (e.g., **Maintainer** or **AMC**). The labeled requirement shall be applicable to all TMs containing that maintenance level/class. An explanation of applicable DA maintenance levels/classes is provided in section 3.

E.4.4 Depot Maintenance Work Requirements (DMWRs) and National Maintenance Work Requirements (NMWRs). When the acquiring activity specifies that a DMWR or NMWR shall be prepared to the best commercial practices, the depot requirements contained in this standard shall be used only as a guide; therefore, the maintenance instructions in the DTD (refer to E.4.6) cannot be used.

E.4.5 Preparation of digital data for electronic delivery. Data prepared and delivered digitally in accordance with this standard shall be XML tagged using the DTD. Data shall be formatted for presentation using stylesheets in accordance with MIL-STD-2361. Stylesheets may be prepared using XSL or other languages as specified by the acquiring

activity. Where possible and when available, Army developed and provided stylesheets shall be used. (Refer to 4.6 for information on obtaining or accessing the DTD and stylesheets.) XML tags used in the DTD are noted throughout the text of this standard in bracketed, bold characters (e.g., **<maintwp>**) as a convenience for the author and to ensure that the tags are used correctly when developing a document instance.

E.4.6 Use of the Document Type Definition (DTD)/stylesheet. The DTD referenced in this appendix interprets the technical content and structure for the functional requirements contained in this standard. Its use is mandatory. Development of IETMs is accomplished through the use of this standard, the DTD, and the guidance contained in MIL-HDBK-1222. Where possible and when available, Army developed and provided stylesheets shall be used. For additional information on the DTD and specific stylesheets, refer to MIL-STD-2361.

E.4.7 Content structure. The examples provided herein are an accurate representation of the content structure requirements contained in this appendix and shall be followed to permit the effective use of the DTD.

E.4.8 Style and format. This standard provides style and format requirements for the technical content requirements described in this appendix. These requirements are considered mandatory and are intended for compliance.

E.4.9 Interactive Electronic Technical Manual (IETM) functionality. The specific level of functionality and user interaction to be provided in the IETMs shall be in accordance with the functionality matrix contained in Appendix A.

E.4.10 Work package development. Data developed in accordance with this appendix shall be divided into work packages. For task-related work packages, the tasks shall be in the logical order of the work sequence. These work packages should be stand alone and are broken into the following work package types: general information, operator instructions, troubleshooting procedures, maintenance instructions, parts information, supporting information, destruction of Army materiel to prevent enemy use, preventative maintenance checklist, and lubrication orders. A work package shall contain all information and references required to support the work package type.

E.4.11 Safety devices and interlocks. Information shall be prepared pertaining to the purpose and location of all safety devices and interlocks in conjunction with the pertinent procedures.

E.4.12 Electrostatic Discharge (ESD) sensitive parts. If the equipment contains ESD sensitive parts, components, or circuits, cautions and ESD labels shall be incorporated into the applicable tasks and procedures to ensure ESD sensitive parts are not damaged or degraded during maintenance and operation. (Refer to 4.9.18 for requirements on labeling with ESD.) Actions which could damage ESD sensitive parts, but which are not directly related to handling or operation of ESD sensitive parts, shall not be annotated with the ESD acronym, but shall be preceded by a caution statement.

E.4.13 Nuclear hardness **<hcp>**. If the weapon system/equipment has nuclear survivability requirements (for example, overpressure and burst, thermal radiation, electromagnetic pulse, or transient radiation effects on electronics), cautions and HCP labels shall be incorporated into the applicable tasks and procedures to ensure the

hardness of the equipment is not degraded during handling or operation. Refer to 4.9.17for requirements on labeling with HCP. Actions which could degrade hardness, but which are not directly involved in establishing nuclear hardness, shall not be annotated with the acronym, but shall be preceded by a caution statement.

E.4.14 Selective application and tailoring. This standard contains some requirements that may not be applicable to the preparation of all TMs. Selective application and tailoring of requirements contained in this appendix are the responsibility of the acquiring activity and shall be accomplished using . The applicability of some requirements is also designated by one of the following statements: unless specified otherwise by the acquiring activity; as specified by the acquiring activity; or when specified by the acquiring activity.

E.5 **DETAILED REQUIREMENTS.**

E.5.1 Preparation of maintenance instructions. Maintenance instructions shall be prepared to enable a technician to perform maintenance on weapon systems/equipment and associated WRAs/SRAs. Tasks will be developed to allow the appropriate maintainer to bring the asset to a mission capable status. Maintenance tasks shall be developed in accordance with the LMI, Maintenance Allocation Chart (MAC) or Maintenance Plan, and the Source, Maintenance, and Recoverability (SMR) codes developed for the weapon system/equipment and components. Maintenance work packages shall be arranged to coincide with the Functional Group Code (FGC) sequence followed in the MAC or Parts Information.

E.5.2 Types of maintenance. Depending on the type and complexity of the weapon system/equipment, the TM, DMWR, or NMWR shall contain one or more of the following maintenance categories.

E.5.2.1 Preventive Maintenance Checks and Services (PMCS) **(except for aircraft TMs, DMWRs, and NMWRs) <pmcscategory>**. This maintenance category contains only the PMCS requirements. The remaining maintenance tasks will be contained in later chapter(s). The PMCS category contains the following work packages in the order specified.

a. PMCS Introduction work package **<pmcsintrowp>** (refer to E.5.3.4.1)
b. PMCS work package **<pmcswp>** (refer to E.5.3.4.2)

E.5.2.2 Weapon system/equipment maintenance with required Preventive Maintenance Checks and Services (PMCS) (**except for aircraft TMs, DMWRs, and NMWRs**) **<maintenancepmcscategory>**. Unless otherwise indicated, this maintenance category contains the following work packages in the order specified:

a. Service upon receipt work package **(Field only) <surwp>** (refer to E.5.3.2)
b. Equipment/User fitting Instruction work package **<perseqpwp>** (refer to E.5.3.3)
c. PMCS introduction work package **<pmcsintrowp>** (refer to E.5.3.4.1)
d. PMCS work package **<pmcswp>** (refer to E.5.3.4.2)
e. The following work packages occur in no specific order:

(1) Maintenance work package **<maintwp>** (refer to E.5.3.5)

(2) General maintenance work package **<gen.maintwp>** (refer to E.5.3.7)

(3) Lubrication instructions work package **<lubewp>** (refer to E.5.3.8)

f. Illustrated list of manufactured items **(Field level and above)** (refer to E.5.3.10)

g. Torque limits work package **(Field level and above)** **<torquewp>** (refer to E.5.3.11)

h. Wiring diagrams work package **(Field level and above))** **<wiringwp>** (refer to E.5.3.12)

E.5.2.3 Weapon system/equipment maintenance without Preventive Maintenance Checks and Services (PMCS) **(except for aircraft TMs, DMWRs, and NMWRs)** **<maintenancecategory>**. This maintenance category shall require either the PMCS or maintenance with PMCS category to be developed also. Unless otherwise specified by the acquiring activity, this maintenance category contains the following work packages in the order specified:

a. Service Upon Receipt work package **(Field level only)** **<surwp>** (refer to E.5.3.2)

b. Equipment/User fitting instruction work package **<perseqpwp>** (refer to E.5.3.3)

c. The following work packages occur in no specific order:

(1) Maintenance work package **<maintwp>** (refer to E.5.3.5)

(2) General maintenance work package **<gen.maintwp>** (refer to E.5.3.7)

(3) Lubrication instructions work package **<lubewp>** (refer to E.5.3.8)

d. Illustrated list of manufactured items **(Field level and above)** (refer to E.5.3.9)

e. Torque limits work package **(Field level and above)** **<torquewp>** (refer to E.5.3.11)

f. Wiring diagrams work package **(Field level and above)** **<wiringwp>** (refer to E.5.3.12)

E.5.2.4 Depot weapon system/equipment maintenance **<depotcategory>**. Unless otherwise specified, the depot maintenance category contains the following work packages in the order specified:

a. Equipment/User Fitting Instruction work package **<perseqpwp>** (refer to E.5.3.3)

b. The following work packages occur in no specific order:

(1) Maintenance work package **<maintwp>** (refer to E.5.3.5)

(2) General maintenance work package **<gen.maintwp>** (refer to E.5.3.7)

(3) Lubrication instructions work package **<lubewp>** (refer to E.5.3.8)

(4) Preventive maintenance inspections work package **<pmiwp>** **(aircraft only)** (refer to E.5.3.13.1).

c. Facilities work package **<facilwp>** (refer to E.5.3.9.1)

d. Overhaul inspection procedures (OIP) work package **<oipwp>** (refer to E.5.3.9.2)
e. Depot mobilization requirements work package **<mobilwp>** (refer to E.5.3.9.3)
f. Quality Assurance (QA) requirements work package **<qawp>** (refer to E.5.3.9.4)
g. Illustrated list of manufactured items (refer to E.5.3.10)
h. Torque limits work package **<torquewp>** (refer to E.5.3.11)
i. The following work packages are for **aircraft only**:
   (1) Aircraft inventory master guide work package **<inventorywp>** (refer to E.5.3.13.2)
   (2) Storage of aircraft work package **<storagewp>** (refer to E.5.3.13.3)
j. Wiring diagrams work package **<wiringwp>** (refer to E.5.3.12)

E.5.2.5 Aircraft maintenance **(aircraft TMs, DMWRs, and NMWRs only)** **<aviationcategory>**. Unless otherwise indicated, this maintenance category contains the following work packages in the order specified:

a. Service upon receipt work package **(AMC only)** **<surwp>** (refer to E.5.3.2)
b. Equipment/User fitting instruction work package **<perseqpwp>** (refer to E.5.3.3)
c. The following work packages occur in no specific order.
   (1) Maintenance work package **<maintwp>** (refer to E.5.3.5)
   (2) General maintenance work package **<gen.maintwp>** (refer to E.5.3.7)
   (3) Lubrication instructions work package **<lubewp>** (refer to E.5.3.8)
   (4) Preventive maintenance inspections work package **<pmiwp>** (refer to E.5.3.13.1)
d. Overhaul and retirement schedule work package **<orschwp>** (refer to E.5.3.6)
e. Illustrated list of manufactured items (refer to E.5.3.10)
f. Torque limits work package (**<torquewp>** (refer to E.5.3.11)
g. Aircraft inventory master guide work package **<inventorywp>** (refer to E.5.3.13.2)
h. Storage of aircraft work package **<storagewp>** (refer to E.5.3.13.3)
i. Weighing and loading work package **(ASB only)** **<wtloadwp>** (refer to E.5.3.13.4)
j. Wiring diagrams work package **<wiringwp>** (refer to E.5.3.12)

E.5.2.6 Auxiliary equipment maintenance **<auxiliarycategory>**. This maintenance category contains the following work packages in the order specified:

a. Auxiliary equipment maintenance work package **<auxeqwp>** (refer to E.5.3.14)
b. Illustrated list of manufactured items **(Field level and above)** (refer to E.5.3.10)
c. Torque limits work package **(Field level and above)** **<torquewp>** (refer to E.5.3.11)

d. Wiring diagrams work package **(Field level and above)** **<wiringwp>** (refer to E.5.3.12)

E.5.2.7 Ammunition maintenance **<ammunitioncategory>**. This maintenance category contains the following work packages in no specific order:

a. Ammunition maintenance work package **<ammowp>** (refer to E.5.3.15.1)
b. Ammunition marking information work package **<ammo.markingwp>** (refer to E.5.3.15.2)
c. Foreign ammunition (NATO) work package **<natowp>** (refer to E.5.3.15.3)

E.5.2.8 Test and inspection maintenance **(Conventional and chemical ammunition only)** **<testinspectioncategory>**. This maintenance category contains the Maintenance work package **<maintwp>.** (Refer to E.5.3.5.)

E.5.2.9 Shipment/movement and storage maintenance **(Conventional and chemical ammunition only)** **<shipmentmovementstoragecategory>**. This maintenance category contains the Maintenance work package **<maintwp>.** (Refer to E.5.3.5.)

E.5.2.10 Ammunition marking maintenance **(Conventional and chemical ammunition only)** **<ammomarkingcategory>**. This maintenance category contains the Ammunition Marking Information work package **<ammo.markingwp>.** (Refer to E.5.3.15.2.)

E.5.2.11 Preventive maintenance services **(Aircraft preventive maintenance services only)** **<pmscategory>**. This maintenance category contains the Preventive Maintenance Services Inspection work packages **<pms-inspecwp>.** (Refer to E.5.3.16.)

E.5.2.12 Phased maintenance inspections **(aircraft phased maintenance inspection only)** **<checklistcategory>**. This maintenance category contains the Phased Maintenance Inspection work package **<pmi-cklistwp>.** (Refer to E.5.3.17.)

E.5.3 Maintenance work packages. Individual maintenance work packages shall be developed for the overall weapon system/equipment and each maintainable system, subsystem, and WRA/SRA for each applicable maintenance level as indicated in the approved MAC or maintenance plan.

E.5.3.1 Work package content. Work packages shall include the following work package identification information and those maintenance tasks required to complete the specified task, either directly or through reference. Work packages shall stand alone and contain complete start-to-finish maintenance procedures to the maximum extent possible. Liberal use of references between work packages is encouraged. Any follow-on maintenance that must be performed after maintenance procedures are completed shall be included or referenced (e.g., disconnect external power, perform operational checks, etc.). When the follow-on maintenance is extensive and is contained in a separate work package, a reference shall be made to the applicable work package. The words "**END OF WORK PACKAGE**" shall be placed below the last data item (e.g., text, illustration, etc.) of the work package containing the maintenance procedure. The maintenance work packages

described in E.5.3.2 through E.5.3.17 shall be prepared, as applicable. Refer to MIL-HDBK-1222 for examples of work package identification information format.

E.5.3.2 Service upon receipt work package **(Field level only) <surwp>**. One or more service upon receipt work packages **<surwp>** shall be prepared. Each **<surwp>** shall contain a single service upon receipt task **<surtsk>**. (Refer to E.5.3.2.3.) The service upon receipt work packages shall contain information required for the user to ensure that the equipment will be adequately inspected, serviced, and operationally tested before it is subjected to use. Instructions for munitions service upon receipt are contained in E.5.3.2.3.9.

E.5.3.2.1 Work package identification information **<wpidinfo>**. Work package identification information is required for this work package. (Refer to 4.9.6.2.)

E.5.3.2.2 Work package initial setup **<initial_setup>**. Initial setup is required for this work package. (Refer to 4.9.6.3.)

E.5.3.2.3 Service upon receipt tasks **<surtsk>**. For equipment that requires extensive service upon receipt, the following tasks described in E.5.3.2.3.1 through E.5.3.2.3.10 shall be prepared and shall be placed in individual work packages.

E.5.3.2.3.1 Siting **<siting>**. Siting instructions peculiar to the equipment shall be prepared, as applicable. In preparing the instructions, operational and maintenance features shall be considered, such as the following:

a. Location.
b. Proximity to power sources.
c. Effective ranges.
d. Terrain requirements to avoid screening, reflections, ground clutter, and other poor operational conditions due to terrain.
e. Technical requirements.
f. Shelter locations.
g. Compensation for adverse siting conditions.
h. When the equipment contains large components such as towers and antennas that require orientation to a baseline during siting.
i. Orientation of mobile equipment during installation.

E.5.3.2.3.2 Shelter requirements **<shltr>**. When equipment is normally housed in a permanent or semi-permanent shelter (other than a military truck, van, or transportable shelter) during use, the following information shall be prepared:

a. Amount of floor, wall, and height space required.
b. A plan for a typical layout.
c. Required weight capacity of the building floor.
d. Dimensions required for installed equipment.
e. Total weights that the floor must support and the area in square feet over which the total weight will be distributed.
f. Environmental conditions (e.g., venting).

g. Power requirements.

h. Unusual requirements specific to equipment, such as air-conditioning.

i. Architectural and engineering data on beam sizes, lengths, bending moments, and required supports shall not be included.

E.5.3.2.3.3 Service upon receipt of materiel **<surmat>**. The following instructions shall be prepared as specified in E.5.3.2 and E.5.3.2.3.

E.5.3.2.3.3.1 Unpacking **<unpack>**. Instructions for unpacking material or equipment shall be prepared. (Refer to E.5.3.5.3.18.)

E.5.3.2.3.3.2 Checking unpacked equipment **<chkeqp>**. Instructions shall be prepared for a condition check of the shipment (including that of pallets, containers, boxes, and legibility of markings). These instructions may be contained in a table (**standard information**). The following data shall be included.

E.5.3.2.3.3.2.1 Packaging material **<crit.insp.tab>**. For each item **<eqpitem>** of a component requiring inspection, the following conditions shall be provided: acceptable **<accept>**, reparable **<repairable>**, and nonreparable **<nonrepairable>**.

E.5.3.2.3.3.2.2 Equipment components **<pecul.insp.tab>**. A table shall be provided that lists, by location **<location>**, each item **<eqpitem>** of a component **<compntassem>** requiring inspection. For each of these items, an inspection action **<step1>** shall be provided and, if applicable, a reference **<remarks>** shall be made to another work package. (Refer to Figure E-1.)

In addition, the following shall be inserted:

> "Inspect the equipment for damage incurred during shipment. If the equipment has been damaged, report the damage on DD Form 361, Transportation Discrepancy Report.
>
> Check the equipment against the packing slip to see if the shipment is complete. Report all discrepancies in accordance with applicable service instructions (e.g., for Army instructions, see AR 735-11-2).
>
> Check to see whether the equipment has been modified."

E.5.3.2.3.3.3 Processing unpacked equipment **<processeqp>**. Instructions shall be prepared for processing the unpacked equipment (e.g., removing excess lubricant from a new rifle), as long as they do not conflict with any warranty provisions. The following information shall be prepared, as applicable:

a. Any special skills required by processing personnel.

b. All caustic, corrosive, and/or toxic material used during processing shall be identified and applicable warnings and cautions given.

c. Instructions on safe disposal of waste products generated during processing actions.

d. Man-hour requirements and total man-hours required for processing the equipment.

E.5.3.2.3.4 Installation instructions **<install>**. Instructions shall be prepared to install the equipment properly. These instructions shall include which tools are to be used to make the necessary interconnections, to lubricate, calibrate, and adjust the equipment. Instructions for cabling and wiring shall include the following:

a. Cable diagrams shall be included or referenced as necessary. When cable assemblies are not supplied but are required for bench test setup, instructions shall be prepared in the manufactured items work package (refer to E.5.3.10.2) for fabricating interconnecting cable assemblies.
   (1) Instructions shall be prepared for any mating connectors that call for a special procedure either to make the proper connection or to prevent damage to the connector. Warnings and cautions shall be included where necessary.
   (2) A wiring diagram shall be prepared which fully identifies, by either color code or wire number (if applicable), each wire to be connected. This diagram shall show the location of each pertinent terminal. The terminal(s) shall be identified by number or other marking, if available, or by position if neither is available. Where appropriate, voltage readings shall be annotated.
   (3) All alternate connection patterns required for various modes of operation shall be shown and explained.
   (4) Only one diagram shall be used to illustrate interconnection patterns that appear more than once within the same equipment.
b. For installation of plug-in items, diagrams shall be prepared or referenced showing the location of items that are not installed in the equipment when received. Instructions shall be prepared whenever special techniques or connections are required.

E.5.3.2.3.4.1 Installation of the equipment.

a. Installation instructions shall be prepared for all the following actions (including placing, mounting, and attaching):
   (1) Cable and wiring interconnections.
   (2) Proper use of special tools.
b. Installation instructions shall identify all dimensions that must be maintained in placing, mounting, or attaching items.
c. When initial adjustments can be made efficiently during installation, such adjustments shall be included.
d. For equipment designed and intended for use in more than one type of installation (e.g., field, fixed station, and mobile), instructions shall be prepared for each type of installation involved.
e. Performance of any step in the installation instructions that requires the assistance of personnel from a higher level of maintenance shall be detailed. This shall be stated in a note similar to that in the following (italicized text within parentheses shall be replaced with the appropriate information):

"**NOTE**

The following installation procedure must be made with the assistance of (*insert level*) maintenance personnel (include Military Occupational Specialty, if applicable)."

f. Installation instructions shall include instructions for (as applicable):
   (1) All required installation options (e.g., ESD control requirements).
   (2) Accessory items.
   (3) Auxiliary items (those that extend or increase equipment capability).
   (4) Grounding of the equipment for both safety and proper operation.
   (5) Torque requirements.

E.5.3.2.3.4.2 Special applications. Installation instructions, which are common to all special applications of a system, shall be prepared. Details resulting from the installation shall be omitted if they are specific only to the equipment into which the system is being installed (e.g., special treatment required when the system is installed in a vehicle or aircraft).

E.5.3.2.3.4.3 Van and shelter installations. When the equipment is permanently installed in vans or shelters, installations instructions will not need to be prepared. The following information shall be prepared only to the extent required for the applicable level of maintenance:

a. Instructions shall be prepared for the removal and replacement of each nonpermanent unit.
b. Diagrams and instructions shall be prepared which pertain to electrical and interconnection wiring, exclusive of wiring specific to the equipment on which the installation is being made (e.g., headlight, ignition wiring).
c. Instructions shall be prepared for cable run locations, equipment locations, circuit breaker panels, and other similar details.

E.5.3.2.3.4.4 Assembly of equipment **<assem>**.

a. Instructions shall be prepared for assembling equipment that has been shipped unassembled. When the equipment is to be shelf or rack mounted, instructions shall also be prepared for assembly of the rack, if necessary, and for installation of the equipment in the rack. As applicable, power requirements, connections, and initial control settings needed for installation purposes shall be included.
b. When the equipment is shipped or delivered in specially designed containers, unpacking instructions shall be prepared as detailed in E.5.3.2.3.3.
c. For security measures for electronic data, instructions shall be prepared for handling, loading, purging, overwriting, or unloading classified electronic data under usual conditions. Instructions shall meet current security regulations as they pertain to automation security.

E.5.3.2.3.5 Preliminary servicing of equipment **<preserv>**. Instructions shall be prepared for all preliminary services required on newly installed equipment. This should include, but not be limited to, the following: lubrication, wiring, fueling, etc.

E.5.3.2.3.6 Preliminary checks and adjustment of equipment **<prechkadj>**. Instructions shall be prepared for all checks and adjustments to be made on newly installed equipment. Information on the location of items, such as controls and check points, shall be prepared or referenced. Instructions shall be prepared for checks and adjustments that must be made before the equipment is put into operation and for all other checks required to ensure proper operation of the equipment. These instructions shall include, but not be limited to, the following (as applicable):

a. Checks for interconnections.
b. Checks for grounding, including earth ground connections, earth conditioning for conduction, as well as a check of the grounding circuit for negligible resistance.
c. Checks for adequate clearance for rotating or moving devices.
d. Checks of initial settings of all controls that must be preset before power is to be applied.
e. All other checks needed to determine that power can be applied without injuring personnel or damaging the equipment.
f. Firm seating and connection of all plug-in parts, mating connectors, jacks, and plugs.
g. Cable and wire harness routing, dressing, and fastening.
h. ESD control standards and cautions against damaging transistors, diodes, and other electrically sensitive items.
i. Replacement of all covers, inspection and access doors, and plates.
j. Operation of safety interlocks and switches.
k. Operation of ventilating louvers and intake and exhaust ports.
l. Operation and content of liquid cooling systems.
m. Lubricants and Corrosion Prevention Control (CPC) procedures.
n. Switch and control settings that are preset at installation (installer's adjustments).
o. Presetting and adjustment of automatic controls.
p. Terminal connections.
q. Required terminal or capacitor strapping.
r. Preliminary test measurements.
s. Presetting operator's controls.
t. Normal operating checks.
u. After-installation orientation.
v. Burn-in of parts.
w. After-operations shutdown, checks, and inspections.

E.5.3.2.3.7 Preliminary calibration of equipment **<precal>**. Instructions shall be prepared for all calibration to be made on newly installed equipment.

E.5.3.2.3.8 Circuit alignment **<calign>**. Instructions shall be prepared for circuit alignment procedures as specified in E.5.3.2 and E.5.3.2.3. Applicable instructions shall be prepared in the following order.

E.5.3.2.3.8.1 External connections **<extconn>**. Connections to external lines that are required for each installation option shall be included. Connection instructions shall conform to the requirements for installing wiring and cabling interconnections.

E.5.3.2.3.8.2 Switch settings, patch panel connections, and internal control settings **<setconn>**. Instructions shall be prepared for all switch settings, patch panel connections, and internal control settings required for each installation option and mode of operation.

E.5.3.2.3.8.3 Alignment procedures **<alignproc>**. Instructions shall be prepared for all alignment procedures, including any variations required for different installation options and modes of operation.

E.5.3.2.3.9 Ammunition service upon receipt tasks. Procedures as specified in E.5.3.2 and E.5.3.2.3 shall be prepared for performing the following tasks as described in E.5.3.2.3.9.1 through E.5.3.2.3.9.4. Procedures shall include inspections to include verification that ammunition received was that requisitioned. Instructions shall be prepared to note the quantity of each lot for recording purposes.

E.5.3.2.3.9.1 Ammunition markings **<mark>**. Instructions shall be prepared for marking ammunition and ammunition containers. (Refer to E.5.3.5.3.16.)

E.5.3.2.3.9.2 Classification of defects **<ammo.defect>**. Procedures shall be prepared for identifying defects in munitions. (Refer to E.5.3.15.1.3.2.)

E.5.3.2.3.9.3 Handling **<ammo.handling>**. Procedures shall be prepared for handling ammunition. (Refer to E.5.3.15.1.3.3.)

E.5.3.2.3.9.4 Procedures needed to activate ammunition, mines, etc. **<arm>**. Procedures shall be prepared for the activation of ammunition, mines, etc., in preparation of functioning or use of training devices.

E.5.3.2.3.10 Other service upon receipt tasks **<other.surtsk>**. Additional service upon receipt tasks may be developed when the specific type of service upon receipt tasks are not covered as described in E.5.3.2.3.1 through E.5.3.2.3.9.4. If additional service upon receipt tasks are used, the proponent shall submit to LOGSA the requirements for this service upon receipt task type for possible incorporation within future revisions to this standard.

E.5.3.2.3.11 Follow-on maintenance **<followon.maintsk>**. As applicable, instructions shall be prepared or references to the applicable work package(s) for any follow-on maintenance required and shall be the last information in the work package. Follow-on is a maintenance condition which must be accomplished following the completion of a task to clean up or undo actions performed during the task. For example, in order to fix a component a task might require that an access panel be removed. The panel would then need to be replaced as a follow-on action. This task might be performed sometime after the repair task is completed, but not immediately after the repair task. Other maintenance tasks might be performed in the same area before the follow-on task is accomplished.

E.5.3.3 Equipment/user fitting instructions work package **<perseqpwp>**. As applicable, equipment/user fitting instructions for personal use equipment shall be prepared.

E.5.3.3.1 Work package identification **<wpidinfo>**. Work package identification information is required for this work package. (Refer to 4.9.6.2.)

E.5.3.3.2 Work package initial setup **<initial_setup>**. Initial setup is required for this work package. (Refer to 4.9.6.3.)

E.5.3.4 Preventive Maintenance Checks and Services (PMCS) **(except for aircraft TMs, DMWRs, and NMWRs)**. The PMCS shall be prepared and shall be based upon the principles of Reliability Centered Maintenance (RCM) logic. It shall include PMCS information and applicable scheduled corrosion inspections. Lubrication instructions may be included in the PMCS information or a separate lubrication order may be prepared. (Refer to Appendix K.) An introduction work package for PMCS shall also be prepared.

E.5.3.4.1 Preventive Maintenance Checks and Services (PMCS) introduction work package **<pmcsintrowp>**. This work package shall explain the purpose and use of the PMCS data.

E.5.3.4.1.1 Work package identification information **<wpidinfo>**. Work package identification information is required for this work package. (Refer to 4.9.6.2.)

E.5.3.4.1.2 Work package initial setup **<initial_setup>**. Initial setup is not required for this work package.

E.5.3.4.1.3 Preventive Maintenance Checks and Services (PMCS) data.

a. An explanation shall be prepared for each PMCS entry and any general checks/services that are common to the entire piece of equipment. The explanation for the item numbers shall detail how the item numbers are used when recording results of PMCS on DA Form 2404, Equipment Inspection and Maintenance Worksheet.
b. If lubrication instructions are included in the PMCS data, the requirements contained in Appendix K shall be used.
c. A statement concerning CPC shall be prepared. This statement shall contain maintenance instructions or reference CPC requirements contained in the applicable maintenance instructions. In addition, if the inclusion of such instructions is applicable, a statement shall be prepared which states that the instructions are mandatory.
d. When the equipment contains fluids, such as lubrication oil or hydraulic fluid, leakage criteria shall be prepared for the PMCS introduction as follows and referred to in the NOT READY/AVAILABLE IF: column (italicized text within parentheses shall be replaced with the appropriate information).

"**FLUID LEAKAGE**
It is necessary for you to know how fluid leakage affects the status of the (*enter component/equipment name*). Following are types/classes of leakage you need to know to be able to determine the status of the (*enter component/equipment*

name). Learn these leakage definitions and remember - when in doubt, notify your supervisor. Equipment operation is allowed with minor leakage (Class I or II). Consideration must be given to fluid capacity in the item/system being checked/inspected. When in doubt, notify your supervisor.

When operating with Class I or II leaks, continue to check fluid levels as required in the PMCS.

Class III leaks should be reported immediately to your supervisor.

(1) Class I. Seepage of fluid (as indicated by wetness or discoloration) but not great enough to form drops.

(2) Class II. Leakage of fluid great enough to form drops, but not enough to cause drops to drip from the item being checked/inspected.

(3) Class III. Leakage of fluid great enough to form drops that fall from item being checked/inspected."

E.5.3.4.2 Preventive Maintenance Checks and Services (PMCS) work package **<pmcswp>**.

E.5.3.4.2.1 Work package identification information **<wpidinfo>**. Work package identification information is required for this work package. (Refer to 4.9.6.2.)

E.5.3.4.2.2 Work package initial setup **<initial_setup>**. Initial setup information is required for this work package. (Refer to 4.9.6.3.)

E.5.3.4.2.3 Preventive Maintenance Checks and Services (PMCS) procedures. The PMCS procedures shall include the checks and services data described in E.5.3.4.2.3.1. When specified by the acquiring activity, an illustration of the equipment shall be included. (Refer to MIL-HDBK-1222 for example of PMCS information.) This illustration shall include a routing diagram by which the PMCS will be performed.

E.5.3.4.2.3.1 Preventive Maintenance Checks and Services (PMCS) data preparation **<pmcstable>**. PMCS data shall consist of the entries described in E.5.3.4.2.3.1.1 through E.5.3.4.2.3.1.4. The text in parenthesis and bold shall be the headings for the PMCS table. These checks and services data entries shall be in the form of **standard information**. (Refer to MIL-HDBK-1222 for example of PMCS data **standard information**.)

E.5.3.4.2.3.1.1 Item number **<itemno>**. Item numbers (***ITEM NO***.) shall be assigned to the PMCS procedures. The PMCS procedures shall be arranged in a logical sequence requiring minimum time and motion on the part of the person(s) performing them and shall be so arranged that minimum interference will occur between persons performing the checks simultaneously on the same end item.

E.5.3.4.2.3.1.2 Intervals **<interval>**. The designated interval (***INTERVAL***) (e.g., "before," "during," "after," "weekly," etc.) when each check is to be performed shall be included. Procedures done first or most frequently (e.g., "before" checks and services) shall appear before "during" and "after" checks and services. When more advantageous to the user, intervals shall be subgrouped by crewmember(s). The "core" PMCS intervals which can be used are as follows:

Before

During

After

Daily

Weekly

Monthly

Quarterly

Semiannually

Annually

Periodic

Intermediate (**Aviation only**)

Man-hour/day (**Aviation only**)

Phased (**Aviation only**)

Other

E.5.3.4.2.3.1.3 Man-hours **<manhours>**. When specified by the acquiring activity, man-hours (***MAN-HOUR***) required to complete all prescribed lubrication services shall be included. Man-hours shall be stated to the nearest 10th of an hour.

E.5.3.4.2.3.1.4 Item to be checked or serviced **<checked>**. The items listed (***ITEM TO BE CHECKED OR SERVICED***) shall be identified in as few words as possible to clearly identify the item. Usually the common name (e.g., bumper, gas can and mounting bracket, front axle, etc.) will be enough.

E.5.3.4.2.3.1.5 Procedure **<pmcsproc>**. The procedure (***PROCEDURE***) by which each check is to be performed (as well as any information required to accomplish each check or service) shall be provided. This may include lubrication, appropriate tolerances, adjustment limits, and instrument gauge readings. Illustrations shall be prepared to identify the location or the process of the task being performed and shall be integrated with the procedures. Whenever replacement or repair is recommended, the maintenance task shall be included or the applicable maintenance instruction work package may be referenced.

E.5.3.4.2.3.1.6 Equipment not ready/available if: **<eqpnotavail>**. A brief statement shall be provided to detail the condition (***EQUIPMENT NOT READY/AVAILABLE IF***:)(e.g., malfunction, shortage) that would cause the equipment to be less than fully ready to perform its assigned mission. If the procedure contains detailed steps, the statement shall be placed opposite the applicable step.

E.5.3.4.2.4 Mandatory replacement parts **<mrplpart>**. All items that must be replaced during PMCS whether they have failed or not shall be identified.

a. When mandatory replacement parts are required, the information entries shall be placed in a standard table. (Refer to Figure E-1.) The table shall follow the PMCS and shall contain:
   (1) Interval **<title>**
   (2) Item number **<itemno>**
   (3) P/N **<partno>**/Commercial and Government Equipment Code (CAGEC) **<cageno>**
   (4) National stock number (NSN) **<nsn>**
   (5) Nomenclature **<name>**
   (6) Quantity **<qty>**
b. If no mandatory replacement parts are required, the following statement shall be included in lieu of parts information:

"No replacement parts required for these PMCS procedures."

E.5.3.4.3 Preventive Maintenance Checklist (PMC). When specified by the acquiring activity, a stand-alone PMC shall be prepared as specified in Appendix J.

E.5.3.5 Maintenance work packages (not required for aircraft PM and PMS manuals) **<maintwp>**. Maintenance information shall be prepared and functionally divided into individual maintenance work packages **<maintwp**> containing a single maintenance task. (Refer to E.5.3.5.3.) These maintenance work packages should be in the order listed in the MAC. The technical content structure for these work packages shall be consistent from work package to work package. Illustrations shall be prepared to identify the location or the process of the task being performed and shall be integrated with the procedures.

a. Each maintenance work package shall include one authorized maintenance task **<maintsk**> pertinent to the specific item. A task shall consist of a complete start-to-finish maintenance procedure in a logical sequence of occurrence. Task title **<title>** shall be identical to the FGC title as used in the applicable MAC and parts information. Maintenance tasks are described in E.5.3.5.3.
b. Maintenance instructions shall reference all work packages required for any unusual or critical steps such as specifying QA checks (**depot and aviation only**), care and handling of ESD sensitive items and all hazardous material (e.g., ammunition, radioactive components or materials, including prevention of deterioration due to rough handling, exposure to adverse weather conditions, or other hazards). Visual inspection and safety criteria shall be prepared to determine item serviceability. When applicable, instructions shall contain references to the work packages for disposition of defective ammunition. (Refer to E.5.3.2.3.9.2.) Work packages shall be prepared for use of cleaning materials and paint authorized for use in the specified maintenance operations. When a tool is unusual

or abnormal, it shall be described. Other tools, except for tools in a kit, may be described.

c. When specific to the equipment, applicable CPC procedural steps shall be included, or the work package shall reference applicable CPC publications.

d. NSNs shall not be used in procedural steps, illustrations, or legends of maintenance work packages.

e. P/Ns shall not be used in procedural steps, illustrations, or legends, except when essential for identification.

f. Aviation maintenance TMs shall reference work packages TM 1-1500-204-23, as applicable.

g. The maintenance instructions shall be prepared to include required environmental control data and information. Instructions shall be prepared for information on any special maintenance required under extreme temperature, altitude, and humidity conditions within the limits established by the design specification for the equipment.

h. (**DMWRs/NMWRs only**) A Reliability, Availability, and Maintainability (RAM) table shall be prepared listing the pertinent measurable RAM ranges for the major overhauled components. (Refer to Figure E-2.) The RAM requirements shall be prescribed by maintenance engineering of the acquiring activity. When established by maintenance engineering, the requirements shall include critical measurement factors, such as Meantime Between Failures (MTBFs), Meantime Between Corrective Maintenance (MTBCM), Mean Time to Repair (MTTR), availability, and maintenance ratio. The reliability and availability portion of the table shall give the minimum acceptable values while the maintainability portion shall provide the maximum allowable rates. Availability may be expressed as a probability versus a qualified number. When specified by the acquiring activity, the RAM information may be prepared in a narrative format. (Refer to Figure E-2.)

E.5.3.5.1 Work package identification information **<wpidinfo>**. Work package identification information is required for this work package. (Refer to 4.9.6.2.)

E.5.3.5.2 Work package initial setup **<initial_setup>**. Initial setup is required for this work package. (Refer to 4.9.6.3.)

E.5.3.5.3 Maintenance tasks **<maintsk>**. Maintenance work packages shall be prepared for each task at each authorized maintenance level/class. Maintenance work packages shall be in the order listed in the MAC. A sample maintenance procedure is provided in MIL-HDBK-1222. For each maintenance task, illustrations shall be used to support or clarify the text, including schematics, wiring diagrams, parts location drawings, and other visual aids.

Inspect **<inspect>** (refer to E.5.3.5.3.2)
Test **<test>** (refer to E.5.3.5.3.3)
Service **<service>** (refer to E.5.3.5.3.4)
Adjust **<adjust>** (refer to E.5.3.5.3.4)
Align **<align>** (refer to E.5.3.5.3.6)

Calibrate **<calibration>** (refer to E.5.3.5.3.7)
Remove **<remove>** (refer to E.5.3.5.3.8)
Install **<install>** (refer to E.5.3.5.3.9)
Replace **<replace>** (refer to E.5.3.5.3.10)
Repair **<repair>** (refer to E.5.3.5.3.11)
Paint **<paint>** (refer to E.5.3.5.3.12)
Overhaul **<overhaul>** (refer to E.5.3.5.3.13)
Rebuild **<rebuild>** (refer to E.5.3.5.3.14)
Lubricate **<lube>** (refer to E.5.3.5.3.15)
Mark **<mark>** (refer to E.5.3.5.3.16)
Pack **<pack>** (refer to E.5.3.5.3.17)
Unpack **<unpack>** (refer to E.5.3.5.3.18)
Preserve **<preservation>** (refer to E.5.3.5.3.19)
Prepare for use **<prepforuse>** (refer to E.5.3.5.3.20)
Assemble **<assem>** (refer to E.5.3.5.3.21)
Disassemble **<disassem>** (refer to E.5.3.5.3.22)
Clean **<clean>** (refer to E.5.3.5.3.23)
Nondestructive inspection **<ndti>** (refer to E.5.3.5.3.24)
Radio interference suppression **<ris>** (refer to E.5.3.5.3.25)
Place in service **<pis>** (refer to E.5.3.5.3.26)
Towing **<tow>** (refer to E.5.3.5.3.27)
Jacking **<jack>** (refer to E.5.3.5.3.28)
Parking **<park>** (refer to E.5.3.5.3.29)
Mooring **<moor>** (refer to E.5.3.5.3.30)
Covering **<cover>** (refer to E.5.3.5.3.31)
Hoisting **<hoist>** (refer to E.5.3.5.3.32)
Sling loading **<sling>** (refer to E.5.3.5.3.33)
External power **<extpwr>** (refer to E.5.3.5.3.34)
Preparation for shipment and storage **<pss>** (refer to E.5.3.5.3.36)
Arm **<arm>** (refer to E.5.3.5.3.37)
Load **<load>** (refer to E.5.3.5.3.38)
Unload **<unload>** (refer to E.5.3.5.3.39)
Software maintenance **<softwaremaint>** (refer to E.5.3.5.3.40).

E.5.3.5.3.1 Maintenance task requirements. Additional mandatory or unique technical information or additional explanations may be required to be included in the maintenance tasks listed in E.5.3.5.3. This information is described in E.5.3.5.3.6 through E.5.3.5.3.42. The following general requirements apply to most of the maintenance tasks in E.5.3.5.3:

a. Specific instructions shall be prepared for lockwiring, installing cotter pins, use of sealing compounds, lubricants or CPCs, and similar operations with applicable references to the expendable and durable items list.

b. Procedures shall not be prepared for separation of bonded, press-fitted, soldered, welded, or riveted parts; or the removal of electronic circuitry parts, unless such removal is necessary to clean, inspect, or test separately.

c. If servicing (e.g., pressurizing and charging with gas, lubrication, etc.) is required upon completion of a maintenance task, include this information as part of the task.

d. Warnings and cautions shall be included whenever chemicals or cleaning compounds are used or combined which may result in a dangerous or hazardous mixture. Whether the danger is to personnel or equipment, it shall be identified and the effect (e.g., gases, fumes, caustic, and fire) shall be stated.

e. Torque requirements, values, and sequences shall be indicated. Only critical torques **<torque>** shall be indicated in task steps. All noncritical torques will be covered by the Torque Limits work package (refer to E.5.3.11) and a reference to the work package shall be provided. Torque values shall be given for all structural attaching hardware, fluid couplings (fuel, oil, hydraulic, pneumatic, etc.), and connections. Torque values shall include torque correction factors when crowfoot extensions, thread lubricants, and cadmium-plated screws or nuts are used. Torque values identified in the tasks must reflect torque wrenches authorized to personnel targeted to perform tasks. Upon completion of torque action, instructions shall be prepared on use of an orientation mark (striping).

f. Such terms as "reverse the disassembly procedures" or "installation is the reverse of removal" shall not be used in any maintenance task.

g. Maintenance procedures or steps that have a major QA effect shall be preceded by a statement (such as "QA check") to identify them.

h. **(DMWRs/NMWRs only)** For items that have parts with specific characteristics, wear limits, specified performance requirements, or fatigue characteristics or tolerances; OIPs shall be included in any applicable maintenance task.

E.5.3.5.3.2 Inspect **<inspect>**. Instructions detailing all required inspections to determine the serviceability of an item by comparing its physical, mechanical, and/or electrical characteristics with established standards through examination (e.g., by sight, sound, or feel) shall be prepared. Special inspection requirements cited below shall be included as necessary.

E.5.3.5.3.2.1 Inspect during assembly. Instructions shall be prepared for testing and inspection during or after assembly to ensure proper assembly of the item. Correct methods of testing, instructions for making tolerance checks, and instructions for inspection of distance measurements (e.g., clearance, end play, backlash) shall be prepared. Measurement criteria and tolerances shall reflect the Test Measurement and Diagnostic Equipment (TMDE) available to the user**.**

E.5.3.5.3.2.2 Inspection of conventional and chemical ammunition or components containing radioactive materials **(Maintainer, below depot sustainment, or ASB only)**. The following information shall be prepared for conventional and chemical munitions or components that contain radioactive material:

a. A statement shall be included that inspection criteria are provided to ensure that performed maintenance will restore items to an acceptable level. At a minimum, the types of inspection procedures shall include a pre-maintenance inspection to be conducted during unpacking, in-process inspections, and final acceptance inspection. Regulations and technical publications relating to policy responsibility

and procedures applicable to ammunition stockpile reliability, ammunition surveillance, radioactive materials procedures, and quality evaluation programs shall be referenced. When approved by the acquiring activity, these procedures contained in other publications shall be included in the task.

b. Instructions shall be prepared for inspection methods or techniques used to detect defective components or end items being processed. Classification of Material Defects tables (**standard information**) **<defect.tab>** shall be prepared for ammunition components and packaging and packing material. (Refer to MIL-HDBK-1222 for example of materials defect **standard information**.) A classification of defects (e.g., minor, major, or critical) for both functioning and nonfunctioning categories shall be included. The tabulated data shall include the following entries:

   (1) A list of categories of defects **<defecttype>** (minor, major, critical) by the defects attributable to each component **<condition>**.

   (2) The corrective action to be taken **<actionreq>** or a reference **<xref>/<link>** to the corrective action.

   (3) The inspection methods **<insp-method>** used to determine if corrective action was accomplished.

   (4) The acceptable quality level **<acceptqual>** established for each defect.

c. Visual inspection criteria shall be prepared for the packing of the items in conformance with the inspection criteria noted in a above.

d. Detailed instructions and criteria shall be prepared for function testing. When test fixtures must be fabricated, diagrams and instructions for the fabrication shall be prepared. Where ammunition is required for function testing weapons, it shall be identified by Department of Defense Ammunition Code (DODAC), NSN, and nomenclature. This shall also include dummy rounds.

e. Instructions shall be prepared to establish a uniform system of examination for deterioration or damage. Definitions shall be prepared to explain minor, major, and critical defects. When appropriate, lower maintenance levels/classes shall be included.

f. Instructions for disposition of lots shall be prepared and shall be as specified by the acquiring activity. The following statements shall be included in the TM verbatim (italicized text in parentheses shall be replaced with the appropriate information):

   (1) "Each lot of material shall be inspected and screened 100 percent if one critical nonfunctioning defect is observed. If a critical functioning defect occurs, save the remaining pieces and components; suspend the lot from local issue and use. Submit malfunction reports as prescribed in AR 75-1. Disposition instructions will be furnished by the U.S. Army Materiel Command.

   (2) A lot of materiel is acceptable for issue if the acceptable criteria as indicated in *(insert applicable table number)* are met.

(3) Report all lots of materiel rejected under applicable serviceability table for disposition instructions to: Commander, US Army Armament, and Chemical Logistics Activity, ATTN: AMSMC-DSM, Rock Island, IL 61299-6000. Include a statement describing the capability and workload situation of your organization as to whether you are capable of reworking/demilitarizing the item."

E.5.3.5.3.2.3 Pre-embarkation inspection of material in units alerted for overseas movement. If applicable, pre-embarkation inspection instructions shall be prepared. They shall be as specified by the acquiring activity.

E.5.3.5.3.2.4 Inspection of installed items. Instructions shall be prepared for inspection of components, assemblies, or parts installed on the equipment. Instructions shall indicate that inspection will be performed with the item in its normally installed position or condition. The instructions shall consider accessibility and visibility of the item being inspected. The purpose of the inspection shall be stated, e.g., to determine if the item is damaged, deteriorated, or incomplete to the extent that it should be replaced or repaired. Instructions shall be prepared for inspecting solder joints on an electronic item, welds on an armored vehicle, fluid leakage on vehicles, connectors on electronic devices, and other items to identify defects that must be corrected.

E.5.3.5.3.2.5 Inspection-acceptance and rejection criteria. Inspection requirements shall be prepared to include acceptance and rejection information sufficient to determine that new, repaired, and used components, assemblies, and subassemblies conform to wear limits, fits, and tolerances established.

E.5.3.5.3.3 Testing **<test>**.

a. Instructions shall be prepared, as applicable, to verify serviceability by measuring the mechanical, pneumatic, hydraulic, electrical, or electronic characteristics of components, assemblies, and subassemblies and comparing those characteristics with prescribed standards before installation in the end item.

b. (**DMWR/NMWR only**) Information shall be prepared for final testing of the highest assembly or equipment/end item involved to ensure the parameters of RAM and durability are met. The following procedures shall be prepared:

(1) Inspection. Inspection procedures (refer to E.5.3.5.3.2) shall be prepared that are required before final testing to ensure the item is complete and ready for final testing. Instructions shall be prepared for any minor preparation tasks needed before final testing.

(2) Lubrication. Any final lubrication procedures (refer to E.5.3.5.3.15) that need to be done before final testing shall be prepared.

(3) Final test procedures. Test procedures (refer to E.5.3.5.3.3), performance standards, and tolerances shall be prepared to establish that the equipment is adequately overhauled and ready for issue without qualifications. The procedures shall list all tools, TMDE, jigs, fixtures, and other support items required for the test in the initial setup information. Operating instructions shall be prepared for special test equipment where necessary. Procedures shall be prepared for minor adjustments that can be done without

disassembling equipment. Complete procedures shall be prepared for burn-in or run-in tests.

(4) Final painting, refinishing, and marking. Procedures shall be prepared for any final painting (refer to E.5.3.5.3.10), refinishing, and marking (refer to E.5.3.5.3.16) that could not be done during the overhaul procedures. The materials and tools required to do the job shall be identified. Depot level maintenance shall include data plate replacement data. For data plates which require replacement, the type of material shall be indicated. Detailed preparation and attachment instructions shall be prepared. The instructions for stamping data plates shall include the initials of the facility performing the overhaul or modification, the contact number (if applicable), the date of overhaul or modification, the part number, and the total operating time since new (if applicable). The instructions shall specify the letter and figure sizes and indicate their placement (adjustment to manufacturer's data). The following statement shall be inserted:

"When sufficient space is not available on the existing data plate to add information, the plate shall be replaced and all pertinent data transferred to the new plate. Data shall not be stamped directly on any part, assembly, or item of equipment except when approved by the Government."

E.5.3.5.3.4 Servicing **<service>**.

a. Instructions shall be prepared for replenishment of fuel; oil; hydraulic or other fluids; oxygen, nitrogen, or other gases; and tire pressure. They shall also include any other such items and materials **(except for lubricants**) required for complete servicing of the equipment.
b. Servicing instructions shall be supplemented with a diagram showing locations of regular and emergency servicing points. Items located on each side of the equipment which require servicing shall be illustrated and identified as right and left side. NO STEP areas on walkways leading to any tank (in an aircraft) shall be indicated and necessary cautions shall be included.
c. All expendable and durable items used in the servicing instructions shall be referenced and contained in the expendable and durable items list (refer to G.5.6) by standard nomenclature, P/N, and CAGEC. A servicing diagram shall be referenced or included to support the procedures when required.
d. The warnings and cautions to observe in servicing a particular system tank or reservoir (e.g., grounding and prevention of fire hazards) shall be stated clearly.
e. Instructions shall be prepared regarding access to any out-of-the-way or unusual places requiring service.

E.5.3.5.3.5 Adjustment **<adjust>**. Adjustment instructions shall be prepared for the item to maintain or regulate, within prescribed limits, by bringing into proper position, or by setting the operating characteristics to specified parameters before operating the part, system, or end item.

E.5.3.5.3.6 Alignment **<align>**. Detailed alignment instructions shall be prepared to adjust specified variable elements of an item to bring about optimum or desired performance.

E.5.3.5.3.7 Calibration **<calibration>**. Instructions to determine and cause corrections to be made or to be adjusted on instruments of test, measuring, and diagnostic equipment used in precision measurement. It consists of comparisons of two instruments, one of which is a certified standard of known accuracy, to detect and adjust any discrepancy in the accuracy of the instrument being compared. Equipment that requires calibration after assembly or installation shall be indicated. Reference shall be made to the publication containing the applicable calibration procedure. The calibration procedures contained in other publications may be included in the task, when approved by the acquiring activity.

E.5.3.5.3.8 Removal **<remove>**. Instructions to take a sub-component off an asset to allow repair or replacement of that sub-component, or to facilitate other maintenance.

a. Instructions shall be prepared in the logical removal sequence. Illustrations shall be used to support and clarify the text. Instructions shall be prepared for checking and recording gear wear patterns, backlash, ESD protective control measures, measurements and tolerances for determining thickness of shims and purpose for shims, and separating and indexing parts for the assembly. Procedures shall identify items which must be matched or precision mated when installed at a later time.
b. **(DMWR/NMWR only)** Instructions shall be prepared for recording the condition of the item/assembly, marking, handling, and storing the item.

E.5.3.5.3.9 Installation **<install>**. Instructions shall be prepared for the placing, positioning, or otherwise locating a component or sub-component to make it part of a higher level end item. Installation can be to install a new asset for the first time or reinstall an asset previously removed. The maintenance level allowed to perform an installation is determined by the third position in the SMR code. Illustrations shall be used to support and clarify the text.

a. Instructions shall be referenced for painting, refinishing, and marking the item before its installation in the next higher assembly of the equipment.
b. Inspection instructions shall be prepared for checking alignment and adjustment of the item during the installation sequence. These instructions shall include a statement that adjustment, servicing, testing, and/or an operational check is required.
c. Instructions such as “reverse the removal procedure,” shall not be used.
d. Specific instructions shall be prepared for lockwiring, installing cotter pins, use of sealing compounds, lubricants, or CPCs and similar operations with applicable references to the expendable and durable items list.
e. Instructions shall identify any mandatory replacement parts or items that are required during the course of the installation. Reference shall be made to the Mandatory Replacement Parts List.

E.5.3.5.3.10 Replace **<replace>**. Instructions shall be prepared to install a serviceable component in its place in exchange of one that is unserviceable or a required time change asset at all maintenance levels/classes authorized by the MAC.

E.5.3.5.3.11 Repair **<repair>**. Instructions shall be prepared for repair actions required to restore an item to a completely serviceable or fully mission capable status. Repair instructions shall be developed for all maintenance levels/classes allowed full repair by the MAC.

E.5.3.5.3.12 Painting **<paint>**. Instructions shall be prepared for required painting, refinishing, and marking of assembled components, assemblies, subassemblies, or end item. Reference may be made to TM 55-1500-345-23, TM 1-1500-204-23, Supply Bulletin (SB) 11-573, Technical Bulletin (TB) 43-0209, TB 43-0118, TM 43-0139, or other documents. Instructions shall also be prepared for any final painting, refinishing, and marking that could not be done during the overhaul procedures.

E.5.3.5.3.13 Overhaul **<overhaul>**. Instructions shall be prepared to restore an item to a completely serviceable/operational condition as required by maintenance standards in the appropriate technical publications. Overhaul is normally the highest degree of maintenance performed by the Army. Overhaul does not normally return an item to a like new condition.

E.5.3.5.3.14 Rebuild **<rebuild>**. Instructions shall be prepared for the restoration of unserviceable equipment to a like new condition in accordance with original manufacturing standards. Rebuild is the highest degree of material maintenance applied to Army equipment. The rebuild operation includes the act of returning to zero those age measurements (e.g., hours/miles) considered in classifying Army equipment/components.

E.5.3.5.3.15 Lubrication **<lube>**. Pertinent mandatory lubrication instructions, CPC procedures, and general lubrication instructions not contained elsewhere shall be prepared and appear in this section. (Refer to Appendix K.)

E.5.3.5.3.16 Mark **<mark>**.

a. For non munitions, instructions shall be prepared placing identifying information on the equipment or item. This may be done after repair or when required due to normal wear.
b. For munitions not covered in the ammunitions maintenance work package (refer to E.5.3.15.1), the following information shall be prepared as a minimum:
    (1) Any special sequence of action necessary to protect the ammunition.
    (2) If a specially designed reusable container is involved for either the end item or components that are authorized for replacement, instructions shall be prepared to report or reenter the empty container through supply channels.

E.5.3.5.3.17 Pack **<pack>**.

a. Instructions shall be prepared detailing how to place an item into a container for either storage or shipment after service and other maintenance operations have been completed.
b. For munitions maintenance not covered in the ammunitions maintenance work package (refer to E.5.3.15), the following information shall be prepared as a minimum:
   (1) Any special sequence of action necessary to protect the ammunition.
   (2) If a specially designed reusable container is involved for either the end item or components that are authorized for replacement, instructions shall be prepared to report or reenter the empty container through supply channels.

E.5.3.5.3.18 Unpack **<unpack>**. Instructions shall be prepared detailing how to remove an item from a storage or shipping container or other shipping device prior to service or other maintenance operations. If the containers are to be used again, kept for future use, turned into supply, or require a special disposition method, the necessary procedures for reassembly of the container shall be prepared. These instructions shall be supported by illustrations.

E.5.3.5.3.19 Preserve **<preservation>**. Instructions shall be prepared for all authorized methods to treat systems and equipment whether installed or stored, to keep them in a satisfactory condition.

E.5.3.5.3.20 Assembly and preparation for use **<prepforuse>**.

a. As applicable, instructions shall be prepared for assembly or other tasks required to prepare the equipment for use after it has been unpacked such as power requirements, connections, and initial control settings needed for installation purposes.
b. For security measures for electronic data, instructions shall be prepared for handling, loading, purging, overwriting, or unloading classified electronic data under usual conditions. Instructions shall meet current security regulations as they pertain to automation security.

E.5.3.5.3.21 Assembly **<assem>**. Step-by-step instructions shall be prepared for assembling items disassembled or removed that make up the components, assemblies, or subassemblies. Illustrations shall be used to support and clarify the text.

a. Instructions shall be prepared for assembling precision-matched or mated parts marked during disassembly.
b. Instructions shall be prepared for checking and recording gear wear patterns, backlash, shimming requirements, and the indexing of parts to ensure proper alignment during assembly. The purpose of shims shall be given (e.g., adjust backlash, prevent metallurgical reaction, etc.).
c. Torque requirements, values, and sequences shall be indicated. Only critical torques **<torque>** shall be indicated in task steps. All non-critical torques will be covered by the Torque Limits work package. (Refer to E.5.3.11.) Torque values shall be given for all structural attaching hardware, fluid couplings (fuel,

oil, hydraulic, pneumatic, etc.), and connections. Torque values shall include torque correction factors when crowfoot extensions, thread lubricants, and cadmium-plated screws or nuts are used. Torque values identified in the tasks must reflect torque wrenches authorized to personnel targeted to perform tasks. Upon completion of torque action, instructions shall be prepared on use of an orientation mark (striping).

d. Instructions such as "reverse the disassembly procedure," shall not be used.

e. ESD standards, ESD sensitive items along with the protective and control measures to be taken, and CPC procedures shall be identified.

E.5.3.5.3.22 Disassembly **<disassem>**. Instructions shall be prepared to take apart components, assemblies, or subassemblies to the extent specified by the MAC and SMR coded items. Illustrations shall be used to support and clarify the text. Instructions shall be prepared for precision matched or mated components, assemblies, subassemblies, or parts (other than common hardware), including ESD sensitive items, to ensure they will be marked, handled, and stored to preclude damage and to ensure assembly and installation in their matched positions.

E.5.3.5.3.23 Cleaning **<clean>**. Step-by-step instructions on how to remove dirt, corrosion, or other contaminants from equipment shall be prepared. All cleaning instructions, methods, special equipment, and materials shall be specified. Instructions shall be prepared for corrosion prevention treatment of metal parts after cleaning.

a. All materials used in the cleaning and corrosion prevention of equipment, components, or parts shall be referenced and contained in the expendable and durable items list. (Refer to G.5.6.)

b. Cleaning materials used for the cleaning of systems, subsystems, and components in order to prepare them for painting, bonding, applying sealants or adhesives, and the removal thereof shall be Hazardous Air Pollutant (HAP) Free. The use of HAP containing cleaner(s) is considered a serious risk to human health and the environment due to potential impacts on installations that are required to perform the specific cleaning tasks. If a HAP containing cleaner(s) must be used due to performance/technical requirements, then it shall be formally approved by the risk acceptance authority for serious-level risks, as identified in the System Safety program and MIL-STD-882.

c. Instructions shall include cautions to avoid damage of components and to prevent the entrance of water or other solvents into electrical components, ducts, or similar openings.

d. Warnings and cautions shall be prepared whenever chemicals or cleaning compounds are used or combined which may result in a dangerous or hazardous mixture. Any danger to personnel or equipment shall be identified and the effect (e.g., gases, fumes, caustic, and fire) shall be stated.

e. For aircraft, detailed instructions shall be prepared for cleaning and washing the entire aircraft. Instructions shall be prepared for the removal of the battery, the relief tube, and power plant. Removal instructions for armament exhaust deposits or other items or material as necessary shall be provided. Instructions shall also be

prepared regarding components which require relubrication after the aircraft has been washed or steam cleaned.

E.5.3.5.3.24 Nondestructive Inspection (NDI) **<ndi>**.

a. The reject criteria shall be specified in all cases. This shall be done by means of a blanket statement, individual criteria for a part, or a combination of both.
b. When several NDI methods are permitted, the relative order of preference shall be specified.
c. Instructions shall be prepared for removing primer and/or paint for TMs that require the removal process as part of NDI procedures. If a part requires a special process, this procedure must be contained within the NDI procedure for that part.
d. Cleaning requirements before, during, and after NDI shall be specified. If a part has a built-in bearing, then a procedure shall be prepared to ensure protection of the bearing for the NDI procedure.
e. The following requirements apply to **aircraft NDI TMs only.**
   (1) Instructions for use of visible dye penetrants shall not be included as part of NDI instructions unless specified otherwise by the proponent activity. When required, refer to TM 1-1500-335-23 for preparation of those instructions.
   (2) When specified by the acquiring activity, TM 1-1500-335-23 shall be the only NDI document referenced in the NDI procedures. The technical provisions of this TM shall be followed. Individual NDI procedures shall be specified for each part requiring NDI. In order to satisfy this requirement, the following shall be prepared:
      (a) If penetrant is required, the applicable process in TM 1-1500-335-23 shall be identified.
      (b) If magnetic particle inspection is required, the specific TM 1-1500-335-23 method, the type of magnetization, and amount of current or ampere turns shall be provided.

E.5.3.5.3.25 Radio interference suppression **<ris>**.

a. Instructions shall be prepared for primary components in the suppression system. The instructions shall also include the replacement of these primary components.
b. Secondary components shall be referenced to pertinent maintenance procedures that contain the removal and installation instructions.
c. Instructions shall be prepared for testing radio interference suppression components.

E.5.3.5.3.26 Placing in service **<pis>**. Instructions shall be prepared for actions not previously provided in a service upon receipt work package (refer to E.5.3.2) that may be required for an assembly, component, or end item. Instructions shall be prepared such as removal of an item from storage and preparation for installation on an end item. Final servicing checks, calibration, leak checks, charging, pressurizing, and operational checks shall be prepared.

E.5.3.5.3.27 Towing **<tow>**. Instructions shall be prepared to connect one vehicle to another for the purpose of having one vehicle moved through the motive power of the other vehicle.

E.5.3.5.3.28 Jacking **<jack>**. Instructions shall be prepared to mechanically raise or lift a vehicle to facilitate maintenance on the vehicle.

E.5.3.5.3.29 Parking **<park>**. Instructions shall be prepared to safely place a vehicle in a lot, ramp area, or other designated location.

E.5.3.5.3.30 Mooring **<moor>**. Instructions shall be prepared to secure a vehicle by chains, ropes, or other means to protect the vehicle from environmental conditions or secure for transportation.

E.5.3.5.3.31 Covering **<cover>**. Instructions shall be prepared to place a protective wrapping over a vehicle to protect it from environmental conditions or to hide (e.g., camouflage) it.

E.5.3.5.3.32 Hoisting **<hoist>**. Instructions shall be prepared to allow a vehicle to be raised by cables or ropes through attaching points.

E.5.3.5.3.33 Sling loading **<sling>**. Instructions shall be prepared to place a sling around a vehicle to allow it to be raised.

E.5.3.5.3.34 External power **<extpwr>**. Instructions shall be prepared on how to apply electrical power from any authorized power source (e.g., external generator or facility power).

E.5.3.5.3.35 Preservation, packaging, and marking (**DMWR/NMWR only**). Instruction for preserving (refer to E.5.3.5.3.19), packaging (refer to E.5.3.5.3.17), and marking (refer to E.5.3.5.3.16) equipment during depot level maintenance shall be prepared.

a. Packaging requirements. The packaging requirements for all components and end items under maintenance shall be requested from the items' source of supply's packaging management activity during the document's initial development and any revisions. The following packaging information shall be included verbatim in the DMWR/NMWR (italicized text within parentheses shall be replaced with the appropriate information):

"PACKAGING

Military preservation, Level A packing, and marking shall be accomplished in accordance with the specific packaging instructions contained in WP (*insert work package number*).

MARKING FOR SHIPMENT AND STORAGE

Storage: In addition to any special markings called out on the special packaging instruction (SPI) or in the packaging requirements code, all unit packages, intermediate packs, exterior shipping containers, and, as applicable, unitized loads shall be marked in accordance with MIL-STD-129 including bar coding. The repair facility is responsible for application of special markings as required by MIL-STD-129 regardless of whether specified in the contract/order or not. Special markings include, but are

not limited to, Shelf-life markings, structural markings, and transportation special handling markings. The marking of pilferable and sensitive materiel will not identify the nature of the materiel.

Shipment: The repair facility shall apply identification and address markings with bar codes in accordance with MIL-STD-129. A Military Shipment Label (MSL) is required for all shipments except contractor to contractor. The MSL will include both linear and 2D bar codes per the standard. Military Shipping Label: Military Shipment Labels may be created using the Computer Automated Transportation Tool Military Shipment Label/Issue Receipt Release Document (CATT MSL/IRRD).

HEAT TREATMENT AND MARKING OF WOOD PACKAGING MATERIALS

Wood Packaging Materials (WPM) (e.g., boxes, crates, skids, pallets, and any wood used as inner packaging made of non-manufactured wood) shall be constructed of lumber that has been heat-treated in accordance with the requirements of International Standard for Phytosanitary Measures (ISPM) –15. The WPM manufacturer shall be affiliated with an inspection agency accredited by the board of review of the American Lumber Standard Committee. The WPM manufacturer shall ensure traceability to the original source of heat treatment. Each piece of WPM shall be marked to show the conformance to the International Plant Protection Convention Standard. Certification markings shall be indelible and permanent. They may be stamped, stenciled, or branded directly onto or into the WPM. Certification marks shall be applied in a visible location on at least two opposite sides of the wood packaging product, but are not required on each individual component piece of a wood packaging product. On dunnage, the marking shall be applied every 2 feet to opposite surfaces of each piece. If possible, the mark shall be visible when the dunnage is placed in the load to enable inspectors to verify the WPM's compliance without unloading or unstuffing the container. Foreign manufacturers shall have the heat treatment of WPM verified in accordance with their National Plant Protection Organization's compliance program.

ALTERNATIVES

The packaging requirements have been validated and the method of preservation/packing has proven successful in meeting the needs of the military distribution system, including undefined storage and shipment throughout the world. Tailoring of the packaging instructions may only be authorized by the packaging requirements developer. If tailored, prototype package is required to validate the sizes and fit requirements. Minor dimensional and size changes are acceptable provided e-mail notification is provided to the packaging requirements developer. Any design changes or changes in the method of preservation that provide a cost savings without degrading the method of preservation or packing or affecting the serviceability of the item will be considered and responded

to within 10 days of submission. The equipment proponent reserves the right to require testing to validate alternate preservation methods, materials, alternates, blocking, bracing, cushioning, and packing.

REUSE OF PACKAGING MATERIALS

The cushioning material and the fiberboard boxes may be reused provided:

a. There is no visible damage to material.
b. The foam cushioning has not taken a permanent set.
c. The fiberboard has no punctures, delaminating, or crushed flutes.

The water vapor proof barrier bag be shall never be reused. Always use new barrier material, evacuate air from the barrier bag, and conduct a snap test after 2 hours on each bag to ensure seal is holding. All components of the wood box/crate must be present, properly secured in position, and not broken. Splits are acceptable provided the boards remain secured and not loose. When reapplying the lid, fasteners shall be placed 1/2 inch away from the previous fastener hole. Strapping shall be applied per MIL-HDBK-774.

CONTAINER REPAIR

Each long life metal reusable container will be inspected and reconditioned in accordance with TB 9-289, TB 55-8100-200-24, or SB 725-92-1 and the applicable container drawing package. Container drawings are available upon request from the packaging requirements developer. This reconditioning effort includes mandatory replacement of breather valves, humidity indicators, data plates, sealing gaskets, and desiccant, plus all shear mounts with an age factor of 5 years or older. It also includes a leak test after reconditioning, inspection and replacement of unserviceable wood skids, and touch up or total stripping and refinishing of the container surfaces with CARC paint."

b. Special instructions. Instructions shall be prepared for any special or unique preservation, packaging, or marking instructions that apply to the equipment. These instructions shall include warnings, cautions, or references concerning ESD, nuclear material, hazardous substances, special marking instructions, or any other instructions required that are not covered in the standard packaging and preservation information.

E.5.3.5.3.36 Preparation for storage or shipment **<pss>**. As applicable, the following shall be prepared:

a. Instructions for security procedures and special transportation requirements for sensitive items (security, terrorism, etc.).
b. Instructions for special preservation, packaging, packing, marking, ESD-protective and control measures, and shipping. These shall include the use of specially designed reusable containers.

c. Instructions on special use of corrosion-preventive compounds, moisture barriers, and desiccant materials.
d. Instructions for applying special identifying, shipping, and cautionary markings to shipping containers. These shall include security classification, special temperature requirements, and shelf life.
e. Instructions will be provided by the proponent activity for placing equipment in, and for removing it from, administrative storage.
f. Instructions for procedures on the proper handling, blocking, and bracing of basic load ammunition when being transported in trucks and other tactical vehicles.
g. (**Conventional and chemical ammunition only**) Instructions for basic load storage, quantity-distance class, storage compatibility groupings, storage temperatures, stacking limits, and other pertinent storage requirements.
h. Instructions for aviation ground support equipment requirements to include a reference to TM 1-1500-204-23 for general technical information for preparation for storage or shipment.

E.5.3.5.3.37 Activate ammunition, mines, etc. **<arm>**. Instructions shall be prepared for activation of munitions (e.g., ammunition, mines, etc.) prior to use.

E.5.3.5.3.38 Load **<load>**. Instructions for placing assets onto a transportation medium (e.g., pallet, truck, container) or munitions into a weapon/weapon system shall be prepared as required to support the specific equipment.

a. For transportation, the act of placing assets onto a transportation medium (e.g., pallet, truck, container).
b. For munitions, the act of placing munitions onto a vehicle or aircraft.

E.5.3.5.3.39 Unload **<unload>**. Instructions for removing assets from a transportation medium (e.g., pallet, truck, container) or munitions from a weapon/weapon system shall be prepared as required to support the specific equipment.

a. For transportation, the act of removing assets from a transportation medium (e.g., pallet, truck, container).
b. For munitions, the act of removing munitions from a vehicle or aircraft.

E.5.3.5.3.40 Software maintenance **<softwaremaint>**. Instructions for software maintenance tasks (e.g., installing, un-installing, interface setup, etc.) shall be prepared as required to support the specific equipment.

E.5.3.5.3.41 Additional maintenance tasks **<other.maintsk>**. Additional maintenance tasks may be developed when the specific type of maintenance tasks are not covered as described in E.5.3.5.3.6 through E.5.3.5.3.40. If additional maintenance tasks are used, the proponent shall submit to LOGSA the requirements for this maintenance task type for possible incorporation within future revisions to this standard.

E.5.3.5.3.42 Follow-on maintenance task **<followon.maintsk>**. Refer to E.5.3.2.3.11 for requirements.

E.5.3.6 Overhaul and retirement schedule work package **(aircraft only) <orschwp>**. A work package identifying the criteria to overhaul or retire an aircraft or aircraft components shall be prepared.

E.5.3.6.1 Work package identification information **<wpidinfo>**. Work package identification information is required for this work package. (Refer to 4.9.6.2.)

E.5.3.6.2 Work package initial setup **<initial_setup>**. Initial setup is not required for this work package.

E.5.3.6.3 Overhaul and retirement schedule **<orsch>**. The overhaul and retirements schedule shall include the following statement and the associated table (**standard information**):

> **"OVERHAUL AND RETIREMENT SCHEDULE**
>
> Units of operating equipment that are to be overhauled or retired at the period specified are listed here. Unless otherwise specified in TM 1-1500-328-23, Aeronautical Equipment Maintenance Management Policies and Procedures, removal of equipment for overhaul may be accomplished at the inspection nearest the time when overhaul is due."

The overhaul and retirement schedule shall be prepared as a table (refer to MIL-HDBK-1222 for example of **standard information**) and shall consist of the following entries:

a. Part name. The name of the part shall be listed. An asterisk (*) shall precede the part name if the part is an indentured subassembly.
b. Part number. The official P/N of the part listed.
c. Overhaul interval hours. The maximum operating time allowed on the part before it is to be overhauled.
d. Overhaul interval notes. Any additional information required on the part's overhaul interval.
e. Retirement interval hours. Maximum operating time allowed on the part before it is removed and condemned.
f. Retirement interval notes. Any additional information required on the part's retirement interval.

E.5.3.7 General maintenance work package **<gen.maintwp>**. This work package shall be prepared as directed by the acquiring activity. It shall contain a single common, general, or standard maintenance procedure (e.g., specific torque wrench usage, lockwire procedures, "O" ring seal installation, external power connections, etc.) applicable to other maintenance work packages contained within the TM that require this general maintenance procedure to complete the task. Maintenance tasks listed in E.5.3.5.3 shall not be included. This WP may be referenced in other maintenance work packages.

E.5.3.7.1 Work package identification information **<wpidinfo>**. Work package identification information is required for this work package. (Refer to 4.9.6.2.)

E.5.3.7.2 Work package initial setup **<initial_setup>**. Initial setup is required for this work package. (Refer to 4.9.6.3.)

E.5.3.7.3 Maintenance procedure **<proc>**. Instructions to perform a specific common, general, or standard maintenance procedure shall be prepared or referenced.

E.5.3.8 Lubrication instructions work package **<lubewp>**. This work package shall be prepared as directed by the acquiring activity. It shall contain the requirements outlined in E.5.3.8.1 through E.5.3.8.4.

E.5.3.8.1 Work package identification information **<wpidinfo>**. Work package identification information is required for this work package. (Refer to 4.9.6.2.)

E.5.3.8.2 Work package initial setup **<initial_setup>**. Initial setup is required for this work package. (Refer to 4.9.6.3.)

E.5.3.8.3 Lubrication instructions. Lubrication schedules shall be prepared to present all applications, procedures, lubricants, and lubrication points to completely lubricate equipment.

E.5.3.8.4 Lubrication charts.

a. Lubrication charts shall consist of a main drawing prepared as a three-dimensional (3-D) diagram. They shall also consist of enlarged or detailed views as are considered necessary to identify items which otherwise would be obscured. They shall show all lubrication requirements for all parts of the equipment requiring periodic lubrication, other than those lubricated by the main engine oil system. The charts shall also indicate type of lubricant, method of application, and frequency. (Refer to Figure E-3.)
b. Use of black silhouette figures representing a likeness of the tool used in the application (oil can, grease gun, brush, or hand) shall be the accepted means of presenting application methods on the lubrication chart.
c. Abbreviations, as specified in MIL-HDBK-275, shall be used to present lubricant types. In the event a lubricant does not have an abbreviation listed in MIL-HDBK-275, the abbreviation shall be provided by the acquiring activity. Assigned application symbols, type abbreviations, and frequency shall be placed within the standard lubrication symbols.
d. Each application symbol and lubricant abbreviation used shall be defined. Notes may be used to specify any other than normal requirements.

E.5.3.9 DMWR/NMWR specific maintenance work packages.

E.5.3.9.1 Facilities work package **<facilwp>**. This work package shall be prepared as directed by the acquiring activity. A description of all facilities (e.g., test stands, test tracks, clean rooms, shielded rooms, or other facilities) that are required to do the maintenance work shall be included. Reference shall be provided for any specifications or standards that these facilities must meet. When approved by the acquiring activity, data from these standards may be included in this work package.

E.5.3.9.1.1 Work package identification information **<wpidinfo>**. Work package identification information is required for this work package. (Refer to 4.9.6.2.)

E.5.3.9.1.2 Work package initial setup **<initial_setup>**. Initial setup is not required for this work package.

E.5.3.9.2 Overhaul inspection procedures (OIPs) work package **<oipwp>**. Unless otherwise specified by the acquiring activity, OIPs shall be prepared for items that have parts with specific characteristics, wear limits, specified performance requirements, or fatigue characteristics or tolerances. A separate work package shall be provided for each item containing such parts. Within each work package, a separate OIP shall be provided for each part of the item that requires a critical inspection. The OIP shall consist of the characteristics being inspected for, inspection methods, and the acceptance/reject criteria that must be met. Unless otherwise specified by the acquiring activity, an illustration shall accompany the OIP. Illustrations for OIPs are strongly encouraged and shall only be omitted for very simple systems/parts. A reference letter may be included on the illustration to aid in locating the critical inspection characteristics of the parts.

E.5.3.9.2.1 Work package identification information **<wpidinfo>**. Work package identification information is required for this work package. (Refer to 4.9.6.2.)

E.5.3.9.2.2 Work package initial setup **<initial_setup>**. Initial setup information is required for this work package. (Refer to 4.9.6.3.)

E.5.3.9.2.3 Overhaul Inspection Procedures (OIPs). The OIP shall contain the characteristics for which the inspection is to find, the inspection methods being used, and the acceptance/reject criteria that must be met. Unless otherwise specified by the acquiring activity, an illustration shall accompany the OIP. Illustrations for OIPs are strongly encouraged and shall only be omitted for very simple systems. A callout may be included in the OIP to locate the critical inspection characteristics of the parts on the illustrations. The OIPs may be contained in a table (**standard information**) or a list. References to these OIP work packages shall be included within the applicable maintenance procedural step (e.g., disassembly, reassembly, testing, etc.) or preshop analysis procedural step where they apply. (Refer to MIL-HDBK-1222 for example of an OIP.)

E.5.3.9.3 Depot mobilization requirements work package **<mobilwp>**. When specified and provided by the acquiring activity, the modifications, deletions, or additions to the preshop analysis or overhaul procedures required during mobilization shall be included in this work package. The data described in E.5.3.9.3.1 through E.5.3.9.3.4 shall be included (**standard information**).

E.5.3.9.3.1 Work package identification information **<wpidinfo>**. Work package identification information is required for this work package. (Refer to 4.9.6.2.)

E.5.3.9.3.2 Work package initial setup **<initial_setup>**. Initial setup information is required for this work package. (Refer to 4.9.6.3.)

E.5.3.9.3.3 Introduction for depot mobilization requirements work package **<intro>**. The following text shall be included verbatim:

"**DEPOT MOBILIZATION REQUIREMENTS**

INTRODUCTION

Scope

The purpose of this work package is to streamline and accelerate the overhaul process during the mobilization of the depot.

Explanation of Mobilization Requirements

The mobilization requirements include a list of instructions for modifying preshop analysis and/or overhaul procedures. The pertinent procedures to be modified are referred to by work package number, followed by the action to be taken."

E.5.3.9.3.4 Mobilization requirements **<mobilreq>**. Mobilization requirements consist of a list of actions that shall be in effect during depot mobilization. The work packages that are modified by these actions shall be noted. This data shall be provided in a table (**standard information**) **<mobiltab>**. The mobilization action shall be listed and linked to the specific step in the applicable task. Alternatively, if the actions are already listed in another work package or packages, a statement shall be made that includes links to those actions. (Refer to MIL-HDBK-1222 for example of mobilization requirements.)

E.5.3.9.4 Quality Assurance (QA) requirements work package **<qawp>**. This work package shall be prepared and include the data described in E.5.3.9.4.1 through E.5.3.9.4.10.

E.5.3.9.4.1 Work package identification information **<wpidinfo>**. Work package identification information is required for this work package. (Refer to 4.9.6.2.)

E.5.3.9.4.2 Work package initial setup **<initial_setup>**. Initial setup information is required for this work package. (Refer to 4.9.6.3.)

E.5.3.9.4.3 Statement of responsibility **<responsibility>**. The following information shall be included:

"**STATEMENT OF RESPONSIBILITY**

The depot/contractor is responsible for complying with the quality assurance requirements contained in this work package and in accordance with International Standards Organization (ISO) 9000 Series standards or equivalent. The commodity manager reserves the right to perform inspections or make changes that ensure the depot work being done meets the quality standards of the DMWR and preserves the inherent reliability of the item."

E.5.3.9.4.4 Definitions **<definitions>**. Definitions shall be prepared for all QA terms extensively used in the DMWR and NMWR. If the definitions are listed in another publication, that publication shall be referenced.

E.5.3.9.4.5 Special requirements for inspection tools and equipment **<specialreq>**. Any special requirements for the maintenance and calibration of tools and test equipment used for QA inspections shall be listed.

E.5.3.9.4.6 Certification requirements **<certreq>**. Any certification or licensing requirements for processes, procedures, materials, equipment, or personnel skills shall be listed. The list shall include appropriate standards, specifications, regulations, and/or laws that apply. The list shall reference the text in the DMWR/NMWR where a requirement exists for a soldering, welding, or magnetic particle inspection certification, radioactive substance, or test driver licenses.

E.5.3.9.4.7 Quality program **<quality-program>**. Any requirements for a quality program shall be listed.

E.5.3.9.4.8 In-process inspections **<inprocess>**. The following statement shall be included:

> "**IN-PROCESS INSPECTIONS**
> In-process quality assurance (QA) inspections are contained throughout the overhaul procedures of this DMWR. These inspections are immediately preceded by a statement such as "QA" to identify them. They are the minimum inspections required. Additional QA inspections may be established by the depot or the commodity manager."

E.5.3.9.4.9 Acceptance inspections **<acceptance>**. The following statement shall be included:

> "**ACCEPTANCE INSPECTIONS**
> Items overhauled in accordance with this DMWR will be accepted based on the following criteria:
> 1. Conformance to quality of material requirements.
> 2. Conformance to all in-process quality assurance inspections.
> 3. Conformance to all final assembly testing requirements.
> 4. Conformance to the preservation, packaging, and marking requirements."

E.5.3.9.4.10 First article inspection **<first>**. When applicable, reference to first article inspection/test prepared for the DMWR/NMWR in accordance with ISO 9000 Series standards or equivalent shall be included.

E.5.3.10 Illustrated list of manufactured items (**Field and above**). The illustrated list of manufactured items information shall be prepared when there are any items required to support maintenance or operation coded with an "M" in the source code of the SMR contained in the RPSTL. It shall contain an introduction work package (refer to E.5.3.10.1) and one or more manufacturing procedure work packages (refer to E.5.3.10.2). The manufacturing procedure work package shall identify and include technical information for each item authorized to be manufactured or fabricated by field or sustainment personnel (e.g., all "MO," "MF," "MH," and "MD" source coded items). When applicable, links may be made to fabrication instructions for tools and equipment.

E.5.3.10.1 Illustrated list of manufactured items introduction work package **<manu_items_introwp>**. The work package shall include the data described in E.5.3.10.1.1 through E.5.3.10.1.4.

E.5.3.10.1.1 Work package identification information **<wpidinfo>**. Work package identification information is required for this work package. (Refer to 4.9.6.2.)

E.5.3.10.1.2 Work package initial setup **<initial_setup>**. Initial setup is not required for this work package.

E.5.3.10.1.3 Introduction for illustrated list of manufactured items work package **<intro>**. The following introduction shall be prepared and included verbatim (italicized text within parentheses shall be replaced with the appropriate information).

"**ILLUSTRATED LIST OF MANUFACTURED ITEMS INTRODUCTION**

Scope

This work package includes complete instructions for making items authorized to be manufactured or fabricated at the (*enter applicable maintenance level*).

How to Use the Index of Manufactured Items

A part number index in alphanumeric order is provided for cross-referencing the part number of the item to be manufactured to the information which covers fabrication criteria.

Explanation of the Illustrations of Manufactured Items

All instructions needed by maintenance personnel to manufacture the item are included on the illustrations. (*When applicable, a reference to the associated parts information TM or parts information work package shall be entered here*.) All bulk materials needed for manufacture of an item are listed by part number or specification number in a tabular list on the illustration."

E.5.3.10.1.4 Index of manufactured items **<manuindx>**. An index of P/Ns or drawing numbers shall be prepared. This index shall list P/Ns and/or drawing numbers, in alphanumeric order, along with the name of the part for all items illustrated in this work package. The work package number to the manufactured items work package containing the manufacturing instructions shall be included.

E.5.3.10.2 Manufacturing procedure work package **<manuwp>**. A work package shall be prepared for each manufactured item. It shall contain the data described in E.5.3.10.2.1 through E.5.3.10.2.3.

E.5.3.10.2.1 Work package identification information **<wpidinfo>**. Work package identification information is required for this work package. (Refer to 4.9.6.2.)

E.5.3.10.2.2 Work package initial setup **<initial_setup>**. Initial setup information is required for this work package. (Refer to 4.9.6.3.)

E.5.3.10.2.3 Instructions for manufactured items **<manuitem>**. The following shall be prepared:

a. Illustrations which contain sufficient views to portray all features of the item (as required). (Refer to Figure E-4.)
b. All instructions (explanatory text and list of bulk materials) needed by maintenance personnel to manufacture the item (refer to Figure E-4) shall supplement the illustrations and shall contain the following data:
   (1) All dimensional, location, and processing instructions needed to manufacture the item shall be included (e.g., 30 in. long, top surface, primer coating).
   (2) A description of the item to be manufactured, including the P/N and name.
   (3) A list of bulk materials needed to manufacture the item shall be prepared. The list of bulk materials shall consist of the P/N, CAGEC and NSN, or specification number of the raw bulk material to be used in manufacture of the item. The list shall cite the technical characteristics (e.g., standards, specifications, conditions, dimensions, and any other pertinent data).
   (4) When applicable, a link shall be made to the associated parts information (PI), parts information TM, or Repair Parts List work package (for combined TMs).

E.5.3.11 Torque limits work package (**Field and above**) **<torquewp>**. This work package shall be prepared as directed by the acquiring activity. Information shall be prepared to provide applicable torque values **<torque>** (expressed in foot or inch pound terms), data as to bolt grade markings and their proper identification, and specific torque sequencing requirements. (Refer to Figure E-5 for an example of the type of information presented in a torque limits work package.) The torque data described in E.5.3.11.1 through E.5.3.11.4 shall be included.

E.5.3.11.1 Work package identification information **<wpidinfo>**. Work package identification information is required for this work package. (Refer to 4.9.6.2.)

E.5.3.11.2 Work package initial setup **<initial_setup>**. Initial setup is not required for this work package.

E.5.3.11.3 Introduction **<intro>**. Information shall be prepared to include the scope or how to use the work package.

E.5.3.11.4 Torque instructions **<torqueval>**. Specific instructions such as torque limits for dry and wet fasteners, fastener sizes and thread patterns, etc., shall be prepared.

E.5.3.12 Wiring diagrams work package (**Field and above**) **<wiringwp>**. This work package shall be prepared as directed by the acquiring activity. It shall include wiring and cable provisions contained in the equipment/end item, including all systems or equipment which can be installed or removed later (e.g., mission-related systems/equipment). Applicability of diagrams shall be explained in relation to equipment configuration. At a minimum, the wiring data described in E.5.3.12.1 through E.5.3.12.6 shall be included.

E.5.3.12.1 Work package identification information **<wpidinfo>**. Work package identification information is required for this work package. (Refer to 4.9.6.2.)

E.5.3.12.2 Work package initial setup **<initial_setup>**. Initial setup is required for this work package. (Refer to 4.9.6.3.)

E.5.3.12.3 Introduction **<intro>**. Information shall be prepared to include the scope of the work package. A statement shall be included explaining that wiring diagrams and essential wiring information are provided for all electrical and electronic systems and circuits.

E.5.3.12.4 Wire identification **<wireid>**. Identification of wires by number shall be explained. A list of circuit designators and a wire identification diagram shall be prepared.

E.5.3.12.5 Abbreviations **<abbrev>**. A statement shall be prepared that abbreviations are in accordance with ASME Y14.38, except when the abbreviation stands for a marking actually found in the equipment.

E.5.3.12.6 Wiring diagrams **<wiringdiag>**. Wiring diagrams shall be prepared for all electrical and electronic systems and circuits.

E.5.3.13 Aircraft specific maintenance work packages.

E.5.3.13.1 Preventive maintenance inspections work package **<pmiwp>**. This work package shall be prepared as directed by the acquiring activity and shall contain the requirements outlined in E.5.3.13.1.1 through E.5.3.13.1.5.

E.5.3.13.1.1 Work package identification information **<wpidinfo>**. Work package identification information is required for this work package. (Refer to 4.9.6.2.)

E.5.3.13.1.2 Work package initial setup **<initial_setup>**. Initial setup information is required for this work package. (Refer to 4.9.6.3.)

E.5.3.13.1.3 General information and introduction **<geninfo>**. The following paragraph shall be inserted (italicized text within parentheses shall be replaced with the appropriate information):

> "**GENERAL INFORMATION**
> This work package contains complete requirements for special inspections, overhaul and retirement schedule, and standards of serviceability applicable to the aircraft. The inspections prescribed in this work package shall be accomplished at specified periods by aviation maintenance companies, with the assistance of aviation support battalions when required. Complete Daily, Intermediate, Periodic, or Phased inspections are contained in the (*insert applicable aircraft inspection checklist TM*)."

E.5.3.13.1.4 Standards of serviceability. The following paragraph shall be inserted:

> "Standards of serviceability to be used in the day-to-day inspection and maintenance of the aircraft can be found as fits, tolerances, wear limits, and specifications in the aircraft maintenance manuals. Standards of serviceability for transfer to aircraft are contained in TM 1-1500-328-23."

E.5.3.13.1.5 Special inspections.

a. Definition and general information. The following paragraph shall be inserted:

"This information supplements scheduled inspections as outlined in the applicable aircraft inspection checklists. Inspection of items which are required to be inspected at intervals not compatible with airframe operating time or airframe inspection intervals is also included. Refer to DA PAM 738-751 (Functional Users Manual for the Army Maintenance Management System-Aviation (TAMMS-A)) for applicable forms, records, and worksheets required for these inspection intervals. Typical examples of this type of inspection are as follows:

(1) Inspections which are solely contingent upon specific conditions or incidents that occur (e.g., hard landings, over speed, or sudden stoppage), wherein immediate inspection is required to ensure safe flight.

(2) Inspection of components or airframe on a calendar basis; e.g., first aid kits, weight and balance check, aircraft inventory."

b. Requirements. Components and other items which qualify under the criteria for special inspections, as detailed previously, or over speed, shall be included. These inspections shall be grouped under specific aircraft areas. A line drawing of the aircraft or accessory showing sequence for inspection by area shall be included. The area identified shall include all surfaces, materials, components, and equipment pertaining to that specific location. The following inspection data entries shall be included, as applicable. The information entries shall be as **standard information <pmi.pecul.tab>**.

(1) Aircraft serial or tail number **<serialno>**.

(2) Date of inspection **<date>**.

(3) Area number **<areano>**.

(4) Inspection number **<itemno>**.

(5) Inspection interval **<interval>**.

(6) Name of component being inspected **<compname>**.

(7) Inspection procedure **<proc>**.

E.5.3.13.2 Aircraft inventory master guide work package **<inventorywp>**. This work package shall be prepared as directed by the acquiring activity. Information shall be prepared on standard inventory procedures to allow determination of inventoriable items of installed and loose equipment authorized and required by the specific aircraft in performance of its mission. The inventory data described in E.5.3.13.2.1 through E.5.3.13.2.6 shall be included.

E.5.3.13.2.1 Work package identification information **<wpidinfo>**. Work package identification information is required for this work package. (Refer to 4.9.6.2.)

E.5.3.13.2.2 Work package initial setup **<initial_setup>**. Initial setup information is required for this work package. (Refer to 4.9.6.3.)

E.5.3.13.2.3 Introduction **<intro>**. A short explanation of the scope and purpose of the work package shall be prepared. Information pertaining to the necessary steps to ensure the list is accurate, exact, and complete (e.g., research of authorized changes, Modification Work Orders (MWOs), additions/deletions for special mission requirements) shall be included. The introduction shall include a reference to DA PAM 738-751 for applicable forms and records.

E.5.3.13.2.4 Security **<security>**. It shall be stated here that aircraft inventory records should be unclassified, but, if necessary, any classification of the contents shall be in accordance with the existing security regulations.

E.5.3.13.2.5 Inventoriable items **<inventoriable>**. The selection of inventoriable items to be listed is to be without regard to the agency (governmental or contractual) furnishing the items.

a. Items to be listed are as follows:
   (1) Items essential to the execution of the designated mission of the aircraft, such as electronic, photographic, armament, special mission instruments, and safety and comfort equipment.
   (2) Loose equipment delivered with the aircraft and items subject to pilferage or readily converted to personal use.
   (3) Modification kits which are reissued or distributed to using organizations for installation and which are not immediately placed in use. These shall be recorded on the affected aircraft's DA Form 2408-17, Aircraft Inventory Record, and identified as loose equipment until modification is completed.
   (4) Equipment required for operation in a specific environment.
b. Items to be excluded are as follows:
   (1) Nonaccountable items coded as expendable in the applicable stock lists.
   (2) Personal issue or items furnished on unit allowance or other authority.
   (3) Items or components considered as basic or integral parts of the airframe or basic aircraft, such as engines, propellers, wheels, and standard instruments.
   (4) Equipment publications, checklists, and aircraft forms.

E.5.3.13.2.6 Periods of inventory **<prdinv>**. The following text shall be included verbatim:

"**PERIODS OF INVENTORY**

Inventoriable items shall be checked against the Aircraft Inventory Record, DA Form 2408-17, at the following periods:

1. Upon receipt.
2. Before transfer of the aircraft to another organization.
3. Upon placing aircraft in storage and upon removal from storage. Aircraft need not be inventoried while in storage.

4. Twelve months after last inventory."

E.5.3.13.3 Storage of aircraft work package **<storagewp>**. The stowage of aircraft work package(s) shall be prepared as directed by the acquiring activity. Information described in E.5.3.13.3.1 through E.5.3.13.3.4 shall be included.

E.5.3.13.3.1 Work package identification information **<wpidinfo>**. Work package identification information is required for this work package. (Refer to 4.9.6.2.)

E.5.3.13.3.2 Work package initial setup **<initial_setup>**. Initial setup information is required for this work package. (Refer to 4.9.6.3.)

E.5.3.13.3.3 General information for storage of aircraft work package **<geninfo>**. The following text shall be included verbatim:

"**STORAGE OF AIRCRAFT**

GENERAL INFORMATIONComponents Involved in an Accident

Any component removed for reason of accident shall not be preserved, but shall be shipped in the same condition it was in after the accident.

Categories of Storage

1. Flyable storage - no time limit.
2. Short term (administrative storage) - 1 to 45 days.
3. Intermediate storage - 46 to 180 days."

E.5.3.13.3.4 Flyable storage **<flyable>**, short term storage **<short>**, and intermediate storage **<intermediate>**.

a. A general discussion shall be prepared for each category of aircraft storage, to include considerations for selection of the appropriate category (e.g., ground operation, motoring of engines, and other required maintenance for which personnel and materials are needed) and steps to be taken for care of the aircraft during exceptionally wet weather.
b. For each category of aircraft storage, all essential information storage shall be prepared to include all procedures for preparing the complete aircraft for storage and removal from storage. It shall exclude any information on when or why the aircraft is stored. Each category of storage shall make reference to inspection documents and inspection procedures to be conducted before, during, and after storage.

E.5.3.13.4 Weighing and loading work package **(ASB only) <wtloadwp>**. The weighing and loading work package(s) shall be prepared. It shall provide description, information, and procedures for aircraft weighing, balancing, and loading. The data described in E.5.3.13.4.1 through E.5.3.13.4.5 shall be included.

E.5.3.13.4.1 Work package identification information **<wpidinfo>**. Work package identification information is required for this work package. (Refer to 4.9.6.2.)

E.5.3.13.4.2 Work package initial setup **<initial_setup>**. Initial setup is required for this work package. (Refer to 4.9.6.3.)

E.5.3.13.4.3 General information **<geninfo>**. The following text shall be included verbatim:

"**WEIGHING AND LOADING**

GENERAL INFORMATION

Scope

This work package contains description, information, and procedures for aircraft weighing and loading."

E.5.3.13.4.4 Weighing information **<formchart>**. Instructions shall be included for preparing the aircraft, weighing the aircraft in the basic weight condition, performing calculations, and using and recording data on DD Form 365-1 (Basic Weight Checklist) and DD Form 365-2 (Aircraft Weighing Record). Instructions shall include setup requirements, procedures for positioning the aircraft in the weighing area, and assembly of the aircraft weighing equipment. Illustrations shall be prepared to support the text, including a two-view chart diagram. (Refer to Figure E-6.) A reference may be made to TM 55-1500-342-23 for additional information governing weight and balance of aircraft, forms, and records.

E.5.3.13.4.5 Loading information **<weightinst>**. Descriptions and instructions shall be prepared for aircraft loading and for computing weight and balance information. Sufficient information and data shall be provided so that an aviator, knowing the basic weight and moment of the aircraft, can compute any combination of weight and balance using the prescribed charts and forms. Reference shall be made to AR 95-1, DA PAM 738-751, and TM 55-1500-342-23 for additional information governing weight and balance of aircraft, forms, and records. Data shall include fundamental principles of loading. An illustration of aircraft compartments and stations shall be included. Reference shall be made to DD Form 365-1 for a more complete listing of compartments and equipment that comprise the basic weight of the aircraft. Loading information shall include weight and balance characteristics, center of gravity limits, weight/balance and loading, and weight and moment tables for load items such as crew, fuel, cargo, and armament.

E.5.3.14 Auxiliary equipment maintenance work package **<auxeqpwp>**. When auxiliary equipment (e.g., Modified Tables of Organization and Equipment (MTOE) items, etc.) maintenance TMs are not procured for peculiar equipment furnished by the contractor, separate maintenance work packages shall be prepared for each maintenance task.

E.5.3.14.1 Work package identification information **<wpidinfo>**. Work package identification information is required for this work package. (Refer to 4.9.6.2.)

E.5.3.14.2 Work package initial setup **<initial_setup>**. Initial setup is required for this work package. (Refer to 4.9.6.3.)

E.5.3.14.3 Auxiliary equipment procedures **<maintsk>**/**<proc>**. Concise step-by-step instructions shall be prepared for proper care of auxiliary equipment while in and out of service. There shall be work packages for each of the following tasks:

a. Storage,
b. Preventive maintenance,
c. Lubrication,
d. Operating checks,
e. Adjustments, and
f. Maintenance instructions **<maintsk>** (refer to E.5.3.5.3) for special tools that have been fabricated (refer to E.5.3.10.2).

E.5.3.15 Ammunition specific work packages.

E.5.3.15.1 Ammunition maintenance work package **<ammowp>**. This work package shall be prepared as directed by the acquiring activity and shall reference or contain (in separate work packages) the following information as presented in E.5.3.15.1.1 through E.5.3.15.1.5.

E.5.3.15.1.1 Work package identification information **<wpidinfo>**. Work package identification information is required for this work package. (Refer to 4.9.6.2.)

E.5.3.15.1.2 Work package initial setup **<initial_setup>**. Initial setup is required for this work package. (Refer to 4.9.6.3.)

E.5.3.15.1.3 Care and handling. Concise step-by-step instructions required for the care and handling of ammunition shall be prepared. These shall include hazard distances, storage, special requirements, prevention of deterioration due to rough handling, exposure to adverse weather conditions, or any other hazards that may be encountered. Visual inspection criteria shall be prepared to determine item serviceability.

E.5.3.15.1.3.1 Ammunition markings **<mark>**. Instructions shall be prepared for marking ammunition and ammunition containers. (Refer to E.5.3.5.3.16.)

E.5.3.15.1.3.2 Classification of defects **<ammo.defect>**. Instructions shall be prepared for performing visual inspection of ammunition received from the ammunition supply facility. Instructions shall be prepared for performing visual inspection and a condition check of the shipment of ammunition/containers (pallets, boxes, etc.) and shall include classification and disposition of defective ammunition/containers.

E.5.3.15.1.3.3 Handling **<ammo.handling>**. Instructions shall be prepared for handling ammunition.

E.5.3.15.1.3.3.1 Unpacking **<unpack>**. As a minimum, the following information shall be prepared:

a. Any special sequence of action necessary to protect the ammunition.
b. If a specially designed, reusable container is involved for either the end item or components that are authorized for replacement, instructions shall be prepared to report or reenter the empty container through supply channels.

E.5.3.15.1.3.3.2 Packing **<pack>**. As a minimum, the following information shall be prepared:

a. Any special sequence of action necessary to protect the ammunition.
b. Instructions shall be prepared on how to package defective ammunition.

E.5.3.15.1.4 Defective **<ammo.defect>**. Instructions shall be prepared for disposition of defective ammunition. (Refer to E.5.3.2.3.9.3.)

E.5.3.15.1.5 Cleaning and painting **<clean>** or **<paint>**. Use of cleaning materials and paint authorized for use in the specified maintenance operations.

E.5.3.15.2 Ammunition marking information work package **<ammo.markingwp>**. This work package shall be prepared as directed by the acquiring activity. It shall provide applicable information on ammunition marking **<mark>** (refer to E.5.3.5.3.16), classification, identification **<ammotype>**, care and handling**,** preservation, transportation, authorized rounds, preparation for firing, fuzes, and packing **<pack>** (refer to E.5.3.5.3.17). Reusable original packaging and containers shall be identified for return or temporary storage of ammunition in its original configuration. Information on classifying, identifying, caring for, handling, etc., non-ammunition Class V items shall be prepared, when applicable. Individual paragraphs shall be prepared for each ammunition type/classification.

E.5.3.15.2.1.1 Work package identification information **<wpidinfo>**. Work package identification information is required for this work package. (Refer to 4.9.6.2.)

E.5.3.15.2.1.2 Work package initial setup **<initial_setup>**. Initial setup is required for this work package. (Refer to 4.9.6.3.)

E.5.3.15.3 Foreign ammunition (NATO) work package **<natowp>**. A work package to describe foreign ammunition shall be prepared when applicable. The requirements of E.5.3.15.1 shall apply.

E.5.3.15.3.1 Work package identification information **<wpidinfo>**. Work package identification information is required for this work package. (Refer to 4.9.6.2.)

E.5.3.15.3.2 Work package initial setup **<initial_setup>**. Initial setup is required for this work package. (Refer to 4.9.6.3.)

E.5.3.16 Preventive maintenance services/Preventive maintenance daily inspection work packages **(aircraft preventive maintenance services/preventive maintenance daily only) <pms-inspecwp>** or **<pmd-inspecwp>**. A work package shall be developed for each specific inspection interval (e.g., daily, intermediate, periodic, 10 hour/14 day, 30 hr/42 day, etc.), as applicable to the aircraft. Inspection checklists shall be divided by areas of the aircraft (e.g., nose, fuselage, tail, etc.). All items requiring inspection shall be listed in the logical sequence of inspection that would require a minimum of time and motion on the part of the individual performing the inspection. The checklist data shall be formatted and delivered to support the inspection requirements in DA PAM 738-751.

E.5.3.16.1 Work package identification information **<wpidinfo>**. Work package identification information is required for this work package. (Refer to 4.9.6.2.)

E.5.3.16.2 Work package initial setup **<initial_setup>**. Initial setup information is required for this work package. (Refer to 4.9.6.3.)

E.5.3.16.3 Actuation warning. The following warning shall appear before the first step of the procedure (italicized text within parentheses shall be replaced with the appropriate information):

WARNING

Accidental actuation of the aircraft power plant or hydraulic system, or (*insert aircraft specific equipment as applicable,* e.g., firing of armament, jettison ballistics) may cause severe injury or death. Before starting inspection, the aircraft safety check must be performed, if applicable IAW (*insert specific technical manual here) (if applicable the following statement may be inserted here "and all armament must be safetied, deactivated, and cleared (insert technical manuals here)"*).

E.5.3.16.4 Mandatory safety-of-flight inspection items. Mandatory safety-of-flight inspection items shall be highlighted. Mandatory safety of flight inspection items shall have WARNING on the WARNING SUMMARY page at the front of the manual. The WARNING shall be verbatim as follows:

"CSI WARNING

Certain inspections are mandatory Safety of Flight requirements, and the inspection intervals cannot be exceeded. In the event these insepctions cannot be accomplished at the specified interval, the aircraft condition status symbol will be immediately changed to a red X."

E.5.3.16.5 Area diagram. An area diagram of the aircraft, showing sequences for inspection by area shall be included. The area identified shall include all surfaces, material, components, and equipment pertaining to that specific location. (Refer to Figure E-7 (PMD) and Figure E-8 (PMS).)

E.5.3.16.6 Standard checklists. If applicable, the standard inspection checklist shall be further divided into Power Off checks and Power On checks.

a. The following statement shall be the first item for each aircraft. It shall read: “Inspect aircraft forms and records for recorded discrepancies (DA PAM 738-751, Functional Users Manual for the Army Maintenance Management System Aviation (TAMMS-A)).”
b. The work packages shall be divided into the proper sequence of steps as outlined in the area diagrams. For PMD manuals, there shall be one work package for each inspection area.
c. The following statement shall be the final procedure of the checklist: "Inspect for foreign object damage and ensure all access panels or doors opened or removed for this inspection are closed or reinstalled."

E.5.3.17 Phased maintenance inspection work package **(aircraft phased maintenance checklist only) <pmi-cklistwp>**. Phased maintenance inspection data shall be prepared and shall include the information described in E.5.3.17.1 through E.5.3.17.4.

E.5.3.17.1 Work package identification information **<wpidinfo>**. Work package identification information is required for this work package. (Refer to 4.9.6.2.)

E.5.3.17.2 Work package initial setup **<initial_setup>**. Initial setup information is required for this work package. (Refer to 4.9.6.3.)

E.5.3.17.3 Inspection area diagrams **<figure>**. Diagrams locating the inspection areas and the access doors and panels which require removal at various phased maintenance inspections of the aircraft shall be included. (Refer to Figure E-9 and Figure E-10.)

E.5.3.17.4 Phased maintenance checklist. The phased maintenance checklist shall include all the inspection steps required to complete the given inspection. It may contain illustrations to aid in the performance of the inspection. Inspection steps shall be organized in a logical flow to minimize inspector movement. The inspection data shall be formatted and presented to support the inspection requirements in DA PAM 738-751. The work package shall begin with the following note:

> "**NOTE**
>
> Before start of the Phased Maintenance Inspection, it is recommended that a pre-inspection maintenance test flight (MTF) be conducted. Accomplishment of the MTF shall be determined by the unit maintenance officer. The pre-inspection MTF should be conducted by a maintenance test pilot following a review of the aircraft forms and records and a briefing from the crew of the aircraft. The MTF is recommended to assess the aircraft performance and identify deficiencies that should be corrected while the aircraft is undergoing phased maintenance inspections."

E.6 **NOTES.**

The notes in section 6 apply to this appendix.

PREVENTIVE MAINTENANCE CHECKS AND SERVICES

Table 2. PMCS Mandatory Replacement Parts List (AO/A1)

ITEM NO.	PART NUMBER	NSN	NOMENCLATURE	QTY
SEMI-ANNUAL (1500 MILE)				
1	D5-19-2353 (42765)	4240-01-026-3112	PRECLEANER AND PART (A1 ONLY)	01
2	MS24665-285 (42765)	5315-01-061-2060	PIN, COTTER	01
3	MS35333-42 (42765)	5310-00-595-7237	WASHER, LOCK	03
4	MS35338-43 (42765)	5310-00-045-3296	WASHER, LOCK	01
5	MS35338-44 (42765)	5310-00-582-5965	WASHER, LOCK	16
6	MS35338-46 (42765)	5310-00-004-5033	WASHER, LOCK	09
7	MS51922-1 (42765)	5310-00-088-1251	NUT, SELF-LOCKING	04
8	MS51922-17 (42765)	5310-00-087-4652	NUT, SELF LOCKING	17

FIGURE E-1. Example of a PMCS mandatory replacement parts list.

EXAMPLE OF TABULAR RAM DATA

Table 2. Requirements for XXX System

System	MTBF	MTR	A_o
Track	500 mi	30 min	0.89
Engin	70 hr	43 min	0.92
Hull	1,000 mi	80 min	0.86
Radi	400 hr	10 min	0.95
Night Sight	145 hr	10 min	0.88
Gun Tube	10,000 rds	45 min	0.95

Table 3. Maintenance Ratio for XXX System 0.35

Field	Below Depot	Depot
0.05	0.08	0.07

EXAMPLE OF NARRATIVE RAM DATA

Requirements for XXX System

Maintainability

When maintenance procedures shown in the technical manuals are followed, the mature maintainability data are as follows:

1. Mean Operator Preventive Maintenance Time shall not exceed 0.25 man- hours per mission. This time shall not be included in field preventive maintenance time.
2. Maximum operator Corrective Maintenance Time shall not exceed 1.00 man-hours per mission without being classified as a mission failure.
3. The ratio of total corrective and field preventive maintenance man- hours to operating hours shall not exceed 0.10.
4. The ratio of total field preventive maintenance man- hours to total operating hours shall not exceed 0.04.
5. The ratio of total corrective maintenance man - hours to operating hours shall not exceed 0.06.
6. Mean man-hours to perform a corrective maintenance action shall not excee d 2.5.
7. The Mean Time Between Corrective Maintenance Actions shall not be less than 150 operating hours.
8. The engine shall have an 80 percent probability of not requiring replacement in 20,000 miles of operation.
9. The gun tube shall have an 80 percent probability of not requiri ng replacement in 50,000 rounds of operation.
10. The truck shall have a 92 percent probability of not requiring r eplacement in 5,450 miles of operation.

EXAMPLE OF NARRATIVE RAM DATA

FIGURE E-2. Example of tabular and narrative reliability, availability, and maintainability data.

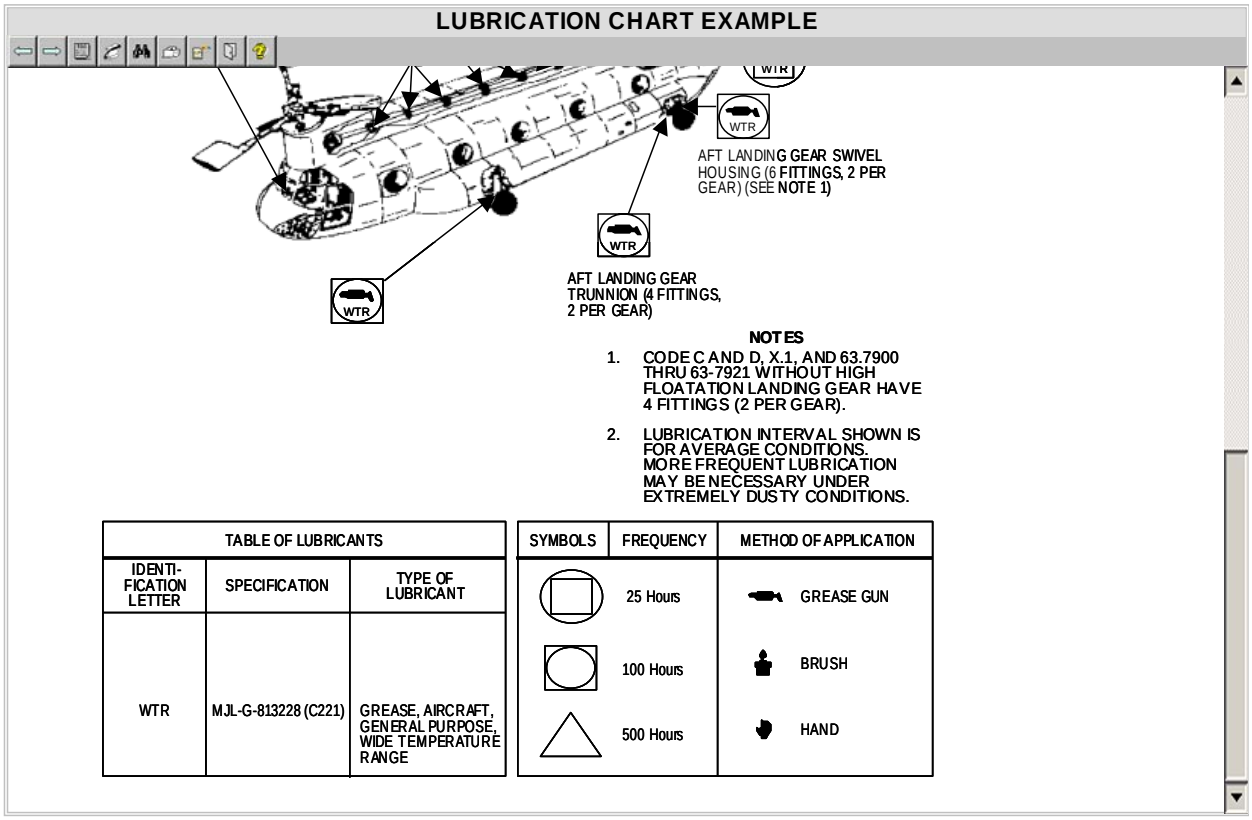

FIGURE E-3. <u>Example of a lubrication chart.</u>

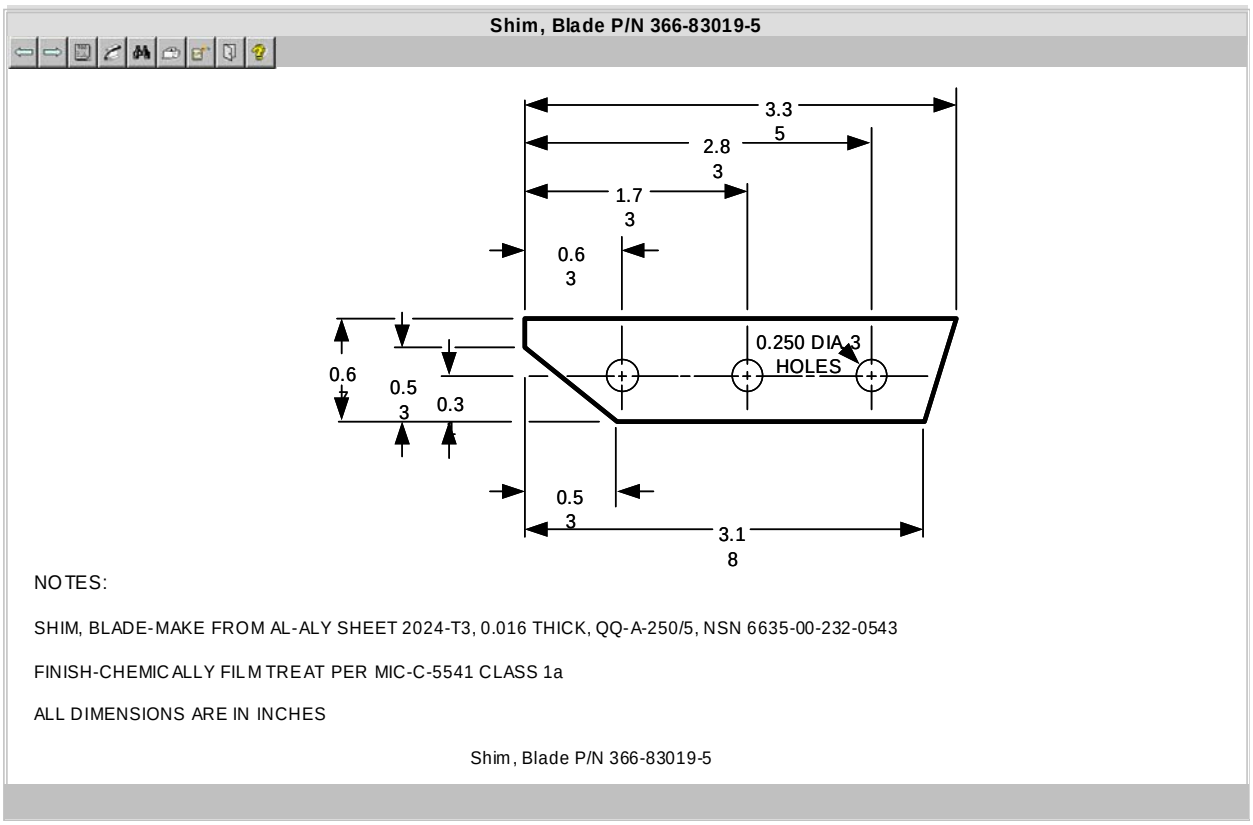

FIGURE E-4. <u>Example of an illustrated list of manufactured items.</u>

SUSTAINMENT MAINTENANCE

TORQUE LIMITS

TORQUE TABLES

How To Use Torque Tables

1. Measure the diameter of the screw you are installing.

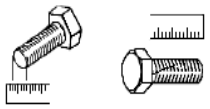

Figure 1. Measuring Screw.

2. Count the number of threads per inch or use a pitch grade.
3. Under the heading SIZE, look down the left-hand column until you find the diameter of the screw you are installing. (There will usually be two lines beginning with the same size).
4. In the second column under SIZE, find the numbers of threads per inch that matches the number of threads you counted in Step 2. (Not required for metric screws.)

Figure 2. Capscrew Head Markings.

NOTE

Manufacture's mark may vary. Standard are all SAE Grade 5 (3-Line). Metric screws are of three grades: 8.8, 10.9, and 12.9 Grades and manufacturer's marks appear on the screw head.

FIGURE E-5. Example of torque limits data.

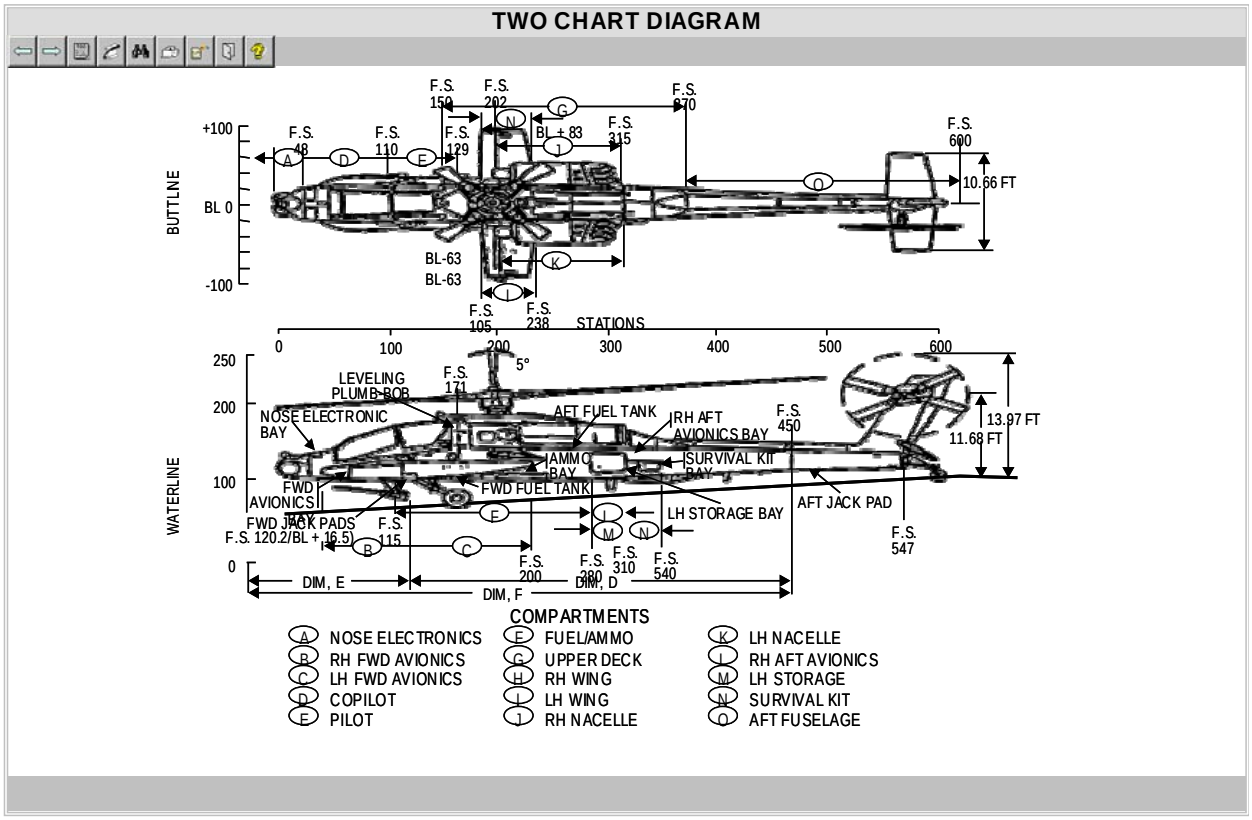

FIGURE E-6. <u>Example of two-chart diagram.</u>

AREA DIAGRAM

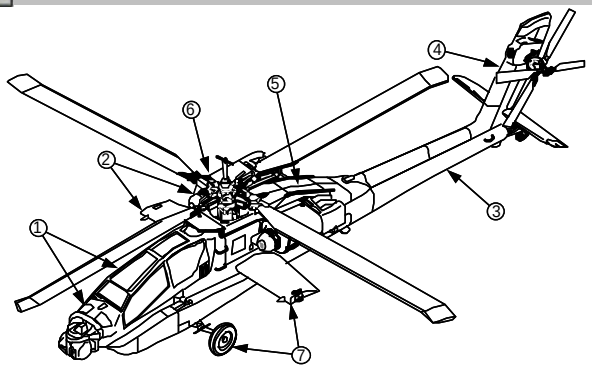

AREA NO. 1	CANOPY, CREW STATION, AVIONICS COMPARTMENTS, FORWARD FUSELAGE
AREA NO. 2	RIGHT FUSELAGE, WING, PYLONS, RIGHT MAIN LANDING GEAR, NO.2 ENGINE AND NACELLE, BATTERY COMPARTMENT
AREA NO. 3	AFT FUSELAGE, TAIL ROTOR DRIVE AND CONTROLS
AREA NO. 4	STABILIZER, STABILATOR, TAIL WHEEL, TAIL ROTOR DRIVES AND CONTROLS
AREA NO. 5	AFT EQUIPMENT BAY (ALL EQUIPMENT)

FIGURE E-7. Example of area diagram for PMD.

AREA DIAGRAM

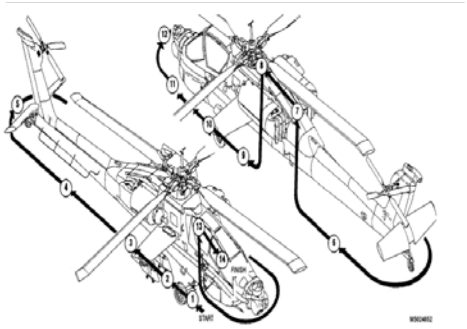

TM 1-1520-238-PMS

AREA NO. 1	**WP 0002 00**	Fuselage - Right Side Forward	All surfaces, components, and equipment in forward avionics bay. Includes landing gear and search light.
AREA NO. 2	**WP 0003 00**	Fuselage - Right Side Center	All surfaces, components, and equipment aft of crew station to engine nacelle. Includes transmission deck, right nose gearbox, engine installation components, wing and stores.
AREA NO. 3	**WP 0004 00**	Engine Nacelle - Right	All surfaces, components, and equipment aft of APU exhaust duct. Includes lower nacelle, aft electronics compartment, and IR suppressor.
AREA NO. 4	**WP 0005 00**	Fuselage - Right Side Aft	All surfaces, components, and equipment aft of APU exhaust duct and forward of intermediate gearbox. Includes hydraulic ground service panel and aft horizontal tail rotor drive shaft.
AREA NO. 5	**WP 0006 00**	Tail Section	All surfaces, components, and equipment aft of tailboom area. Includes horizontal stabilator, tail landing gear, intermediate and tail rotor gearboxes, aft vertical tail rotor drive shaft, and tail rotor.
AREA NO. 6	**WP 0007 00**	Fuselage - Left Side Aft	All surfaces, components, and equipment forward of intermediate gearbox and aft of ENCU exhaust duct.
AREA NO. 7	**WP 0008 00**	Catwalk	All surfaces, components, and equipment in catwalk area. Includes shaft-driven compressor, forward tail rotor drive shaft, fire extinguisher containers, environmental control unit (ENCU), and APU.

FIGURE E-8. <u>Example of area diagram for PMS.</u>

INSPECTION AREA DIAGRAM

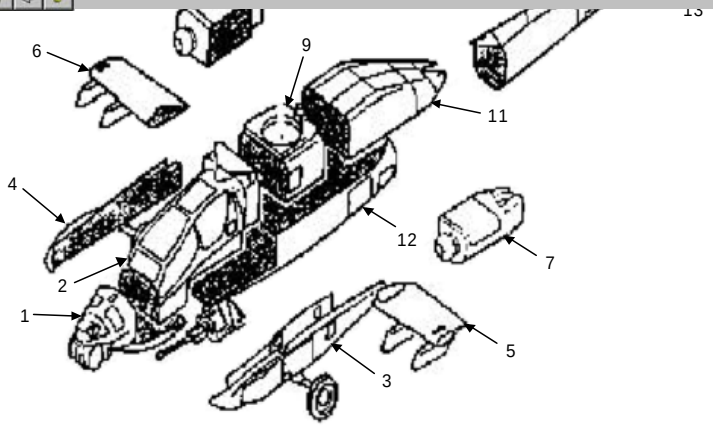

AREA NO.	AREA TITLE
1	FORWARD FUSELAGE
2	CREW STATIONS
3	LEFT FORWARD AVIONICS BAY AND MAIN LANDING GEAR
4	RIGHT FORWARD AVIONICA BAY AND MAIN LANDING GEAR
5	LEFT WING AND PYLONS
6	RIGHT WING AND PYLONS
7	LEFT ENGINE AND NOSE GEARBOX
8	RIGHT ENGINE AND NOSE GEARBOX
9	MAIN TRANSMISSION
10	MAIN ROTOR
11	AFT EQUIPMENT BAY

FIGURE E-9. Example of an inspection area diagram.

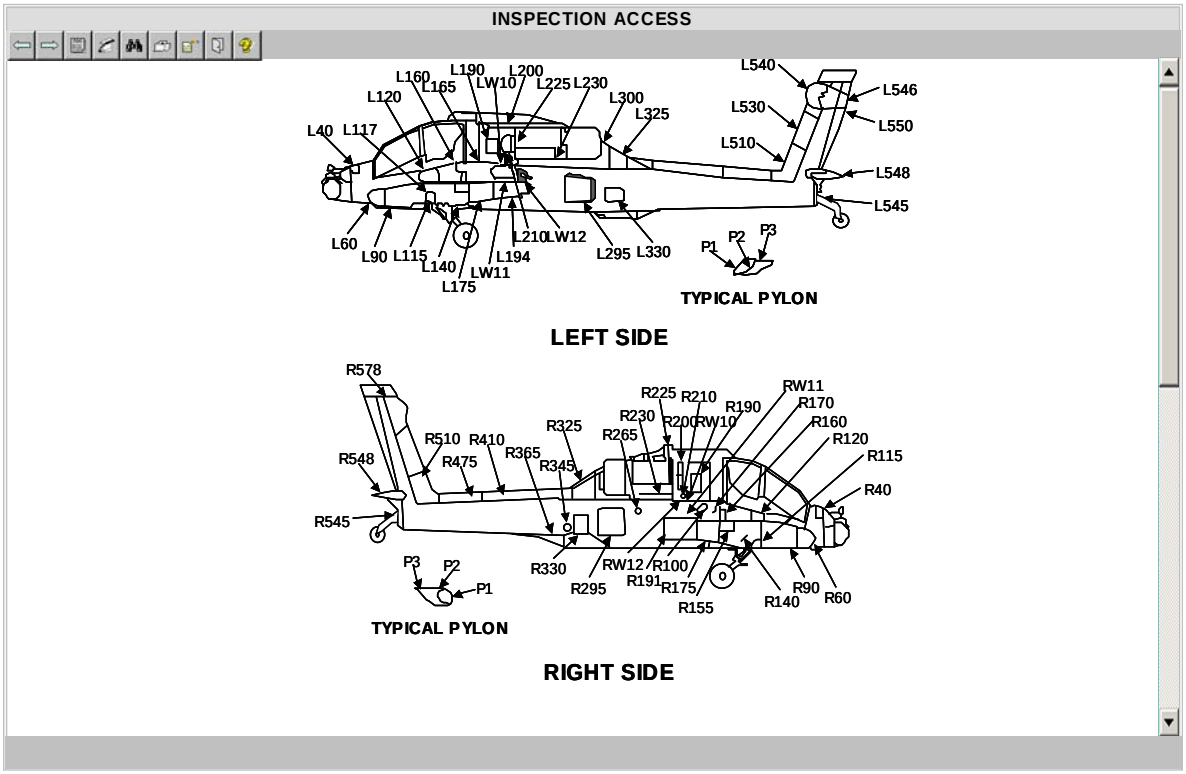

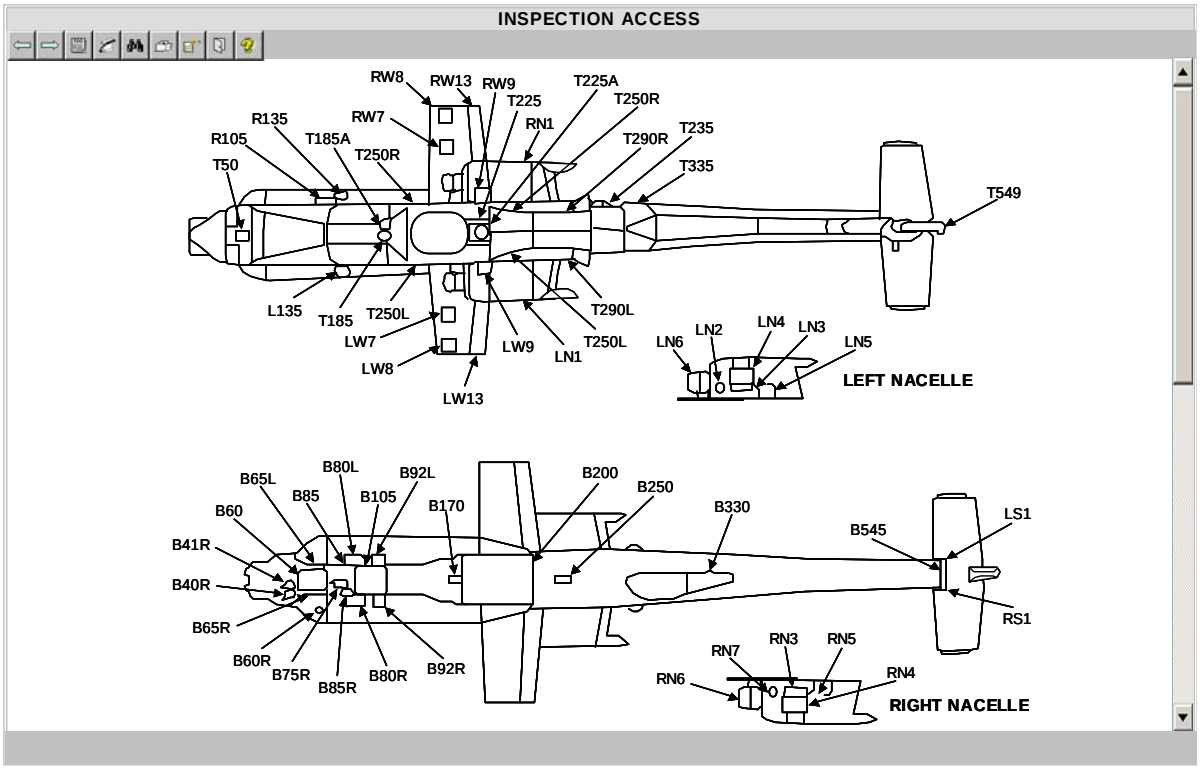

FIGURE E-10. <u>Example of inspection access provisions.</u>

This page intentionally left blank.

APPENDIX F
PARTS INFORMATION

F.1 SCOPE.

F.1.1 Scope. This appendix establishes the technical content requirements for the preparation of parts information for major weapon systems and their related systems, subsystems, equipment, WRAs, and SRAs. This appendix is a mandatory part of this standard. The information contained herein is intended for compliance. The requirements are applicable for all maintenance levels/classes through overhaul (depot), including DMWRs and NMWRs.

F.2 APPLICABLE DOCUMENTS.

The applicable documents in section 2 apply to this appendix.

F.3 DEFINITIONS.

The definitions in section 3 apply to this appendix.

F.4 GENERAL REQUIREMENTS.

F.4.1 General. The parts information provides authorized spares and repair parts; special tools; special Test, Measurement, and Diagnostic Equipment (TMDE); and other special support equipment required for performance of all levels of maintenance of the weapon system/ equipment, subsystems, assemblies, and components. It authorizes the requisitioning, issue and disposition of spares, repair parts and special tools in accordance with the SMR codes.

F.4.2 Maintenance level/class applicability. Requirements contained in this appendix are applicable to all maintenance levels/classes unless specifically labeled in bold and in parentheses. The labeled requirement may specify a specific level (e.g., **Field**) (refer to 3.82) or a specific maintenance class (refer to 3.80) (e.g., **Maintainer** or **AMC**). The labeled requirement shall be applicable to all TMs containing that maintenance level/class. An explanation of applicable DA maintenance levels/classes is provided in section 3. Unless otherwise specified by the acquiring activity, all parts information for all levels of maintenance, including depot, shall be contained together. When separate parts information is specified by the acquiring activity, they shall be grouped either by system, subsystem, or maintenance level. Duplication of the parts information data should be avoided.

F.4.3 Preparation of digital data for electronic delivery. Data prepared and delivered digitally in accordance with this standard shall be XML tagged using the DTD. Data shall be formatted for presentation using stylesheets in accordance with MIL-STD-2361. Stylesheets may be prepared using XSL or other languages as specified by the acquiring activity. Where possible and when available, Army developed and provided stylesheets shall be used. (Refer to 4.6 for information on obtaining or accessing the DTD and stylesheets.) XML tags used in the DTD are noted throughout the text of this standard in bracketed, bold characters (e.g., **<plwp>**) as a convenience for the author and to ensure that the tags are used correctly when developing a document instance.

F.4.4 Use of the Document Type Definition (DTD)/stylesheet. The DTD referenced in this appendix interprets the technical content and structure for the functional requirements contained in this standard. Its use is mandatory. Development of IETMs is accomplished through the use

of this standard, the DTD, and the guidance contained in MIL-HDBK-1222. Where possible and when available, Army developed and provided stylesheets shall be used. For additional information on DTD and specific stylesheets, refer to MIL-STD-2361.

F.4.5 Content structure. The examples provided herein are an accurate representation of the content structure requirements contained in this appendix and shall be followed to permit the effective use of the DTD.

F.4.6 Style and format. This standard provides style and format requirements for the technical content requirements described in this appendix. These requirements are considered mandatory and are intended for compliance.

F.4.7 Interactive Electronic Technical Manual (IETM) functionality. The specific level of functionality and user interaction to be provided in the IETMs shall be in accordance with the functionality matrix contained in Appendix A.

F.4.8 Work package development. Data developed in accordance with this appendix shall be divided into work packages. For task-related work packages, the tasks shall be in the logical order of the work sequence. These work packages should be stand alone and are broken into the following work package types: general information, operator instructions, troubleshooting procedures, maintenance instructions, parts information, supporting information, destruction of Army materiel to prevent enemy use, preventative maintenance checklist, and lubrication orders. A work package shall contain all information and references required to support the work package type.

F.4.9 Selective application and tailoring. This standard contains some requirements that may not be applicable to the preparation of all IETMs. Selective application and tailoring of requirements contained in this standard are the responsibility of the acquiring activity and shall be accomplished using Appendix A. The applicability of some requirements is also designated by one of the following statements: unless specified otherwise by the acquiring activity; as specified by the acquiring activity; or when specified by the acquiring activity.

F.5 **DETAILED REQUIREMENTS.**

F.5.1 General. The requirements provided in this appendix provide the technical content requirements for the preparation of parts information data.

F.5.2 Parts information development. Parts information requirements include:

a. Introductory information;
b. Listings of all authorized spare and repair parts, special tools, special TMDE, and other support equipment required for performance of maintenance; and
c. Illustrations to identify and locate the spare and repair parts.

F.5.3 Preparation of parts information. Parts information shall be prepared for weapon systems, major components, and applicable support and interface equipment. This information shall be contained in one of the following:

a. parts information work packages included in a DMWR, or
b. parts information work packages included in a NMWR.

F.5.3.1 Parts information work packages requirements. When parts information for repair parts and/or special tools is required, the work packages described previously shall be prepared as specified in F.5.3.1.1 or F.5.3.1.2.

F.5.3.1.1 Parts information work packages **<pim>** included in maintenance Interactive Electronic Technical Manuals (IETM). Parts information data shall be included in a separate parts information section <pim>. Introductory matter requirements shall be part of the IETM that includes the parts information work packages.

F.5.3.1.2 Parts information work packages included in a DMWR/NMWR. If an item of equipment is programmed for depot overhaul and no repair parts (including modules, printed circuits, and components) are authorized for replacement below depot level maintenance, authorized repair parts data shall be included in the applicable DMWR/NMWR. The work packages described in F.5.3.3 through F.5.3.9 shall be included as specified herein.

F.5.3.1.2.1 Depot repair parts. Unless otherwise specified by the acquiring activity, depot level repair parts shall be included in the parts information. (Refer to F.5.3.) When the acquiring activity specifies a depot (DMWR/NMWR) level parts information, only depot level parts shall appear in the depot parts information. Figure(s) in the lower maintenance level parts information that contain both depot coded and non-depot coded parts shall identify all parts. The appropriate SMR code shall identify the repair level. If the parts information TM includes depot repair parts, the statement "Including Depot Maintenance Repair Parts" shall be added to the title of the parts information TM.

F.5.3.2 Repair parts list, special tools, and kits work package layout. (Refer to MIL-HDBK-1222 for possible layout scenarios.)

F.5.3.3 Introduction work package **<introwp>**. The introduction work package shall be prepared to the requirements contained in F.5.3.3.1 through F.5.3.3.3.3. (Refer to Figure F-1.)

F.5.3.3.1 Work package identification information **<wpidinfo>**. Work package identification information is required for this work package. (Refer to 4.9.6.2.)

F.5.3.3.2 Work package initial setup **<initial_setup>**. Initial setup is not required for this work package.

F.5.3.3.3 Introduction. One of the following introductions shall be included. The content of F.5.3.3.3.1 covers non-aviation and F.5.3.3.3.2 covers aviation. The verbatim text (within the quotation marks) shall be included. The italicized text shall be replaced with the required system-specific information or select the corresponding phrase for the specific system. The publication list shall identify the publication number and title in numerical sequence. If the publication is non-government, the source shall be given and shall be listed alphabetically by title.

F.5.3.3.3.1 Non-aviation parts information introduction.

"**INTRODUCTION**

SCOPE

This parts information lists the authorized spares and repair parts; special tools; special test, measurement, and diagnostic equipment (TMDE); and other special support equipment required for performance of (*enter maintenance level*) maintenance of the (*enter item name*). It authorizes the requisitioning, issue, and disposition of spares,

repair parts, and special tools as indicated by the source, maintenance, and recoverability (SMR) codes.

GENERAL

In addition to the Introduction work package, this parts information is divided into the following work packages.

1. Repair Parts List Work Packages. Work packages containing lists of spare and repair parts authorized for use in the performance of maintenance at the levels determined by the MAC/SMR code. These work packages also include parts which must be removed for replacement of the authorized parts. Parts lists are composed of functional groups in ascending alphanumeric sequence, with the parts in each group listed in ascending figure and item number sequence. Sending units, brackets, filters, and bolts are listed with the component they mount on. Bulk materials are listed by item name in the Bulk Items work package which follows (*select the work package the bulk items follow: the last Parts List work package, the Special Tools Repair Parts work package, or Kits*) work package. *(choose one of the following) Repair parts kits are listed separately in their own functional group and work package* **OR** *Repair parts kits are listed at the end of the individual work packages.* Repair parts for reparable special tools are also listed in a separate work package. Items listed are shown on the associated illustrations.

2. *(Include the text in items 2 through 4 only if the described work package is included in the TM.)* Special Tools Repair Parts Work Package. This work package lists any spare parts required for the special tools, TMDE, or other support equipment listed in the Special Tools Work Package that are not listed in any other publication.

3. Kits work package. This work package lists all repair kits and their component parts.

4. Bulk Items Work Package. This work package lists all items identified as 'bulk' in the parts lists. Due to the nature of bulk items, this work package does not include a figure.

5. Special Tools List Work Packages. This work package lists those special tools, special TMDE, and special support equipment authorized by this parts information (as indicated by Basis of Issue (BOI) information in the DESCRIPTION AND USABLE ON CODE (UOC) column). Tools that are components of common tool sets and/or Class VII are not listed.

6. Cross-Reference Indexes Work Packages. There are (*enter applicable number*) cross-reference indexes work packages in this Parts Information. The National Stock Number (NSN) Index work package refers you to the figure and item number for each NSN listed in the Parts Information. The Part Number Index work package refers you to the figure and item number for each part number listed in the Parts Information. (*If reference designator is used enter: 'The Reference Designator Index work package refers you to the figure and item number of each reference designator listed in the Parts Information').*

EXPLANATION OF ENTRIES IN THE REPAIR PARTS LIST AND SPECIAL TOOLS LIST WORK PACKAGES

ITEM NO. (Entry 1). Indicates the number used to identify items called out in the illustration.

SMR CODE (Entry 2). The SMR code containing supply/requisitioning information, maintenance level authorization criteria, and disposition instruction, as shown in the following breakout. This entry may be subdivided into 4 subentries, one for each service.

TABLE 2. SMR Code Explanation.

Source Code	**Maintenance Code**		**Recoverability Code**
XX XX		___	X
1st two positions: How to get an item.	3rd position: Who can install, replace, or use the item.	4th position: Who can do complete repair on the item	5th position: Who determines disposition action on unserviceable items.

NOTE

Complete Repair: Maintenance capacity, capability, and authority to perform all corrective maintenance tasks of the "Repair" function in a use/user environment in order to restore serviceability to a failed item.

Source Code. The source code tells you how you get an item needed for maintenance, repair, or overhaul of an end item/equipment. Explanations of source codes follow:

TABLE 3. Source Code Explanation

Source Code Application	**/Explanation**
PA PB PC PD PE PF PG PH PR PZ	Stock items; use the applicable NSN to requisition/request items with these source codes. They are authorized to the level indicated by the code entered in the third position of the SMR code. NOTE Items coded PC are subject to deterioration.
KD KF KB	Items with these codes are not to be requested/requisitioned individually. They are part of a kit that is authorized to the maintenance level indicated in the third position of the SMR code. The complete kit must be requisitioned and applied.

Source Code Application	**/Explanation**
MF-Made at maintainer class MH-Made at below depot sustainment class ML-Made at SRA MD-Made at depot MG - Navy only	Items with these codes are not to be requisitioned/requested individually. They must be made from bulk material which is identified by the P/N in the DESCRIPTION AND USABLE ON CODE (UOC) entry and listed in the bulk material group work package of the PI. If the item is authorized to you by the third position code of the SMR code, but the source code indicates it is made at higher level, order the item from the higher level of maintenance.
AF-Assembled by maintainer class AH-Assembled by below depot sustainment class AL-Assembled by SRA AD-Assembled by depot AG	Items with these codes are not to be requested/requisitioned individually. The parts that make up the assembled item must be requisitioned or fabricated and assembled at the level of maintenance indicated by the source code. If the third position of the SMR code authorizes you to replace the item, but the source code indicates the item is assembled at a higher level, order the item from the higher level of maintenance.
XA	Do not requisition an "XA" coded item. Order the next higher assembly. (Refer to NOTE below.)
XB	If an item is not available from salvage, order it using the CAGEC and P/N.
XC	Installation drawings, diagrams, instruction sheets, field service drawings; identified by manufacturer's P/N.
XD	Item is not stocked. Order an XD-coded item through local purchase or normal supply channels using the CAGEC and P/N given, if no NSN is available.

NOTE

Cannibalization or controlled exchange, when authorized, may be used as a source of supply for items with the above source codes except for those items source coded "XA" or those aircraft support items restricted by requirements of AR 750-1.

Maintenance Code. Maintenance codes tell you the level(s) of maintenance authorized to use and repair support items. The maintenance codes are entered in the third and fourth positions of the SMR code as follows:

Third Position. The maintenance code entered in the third position tells you the lowest maintenance class authorized to remove, replace, and use an item. The maintenance code entered in the third position will indicate authorization to the following levels of maintenance:

Maintenance Code Application	**/Explanation**
C -	Crew
F -	Maintainer maintenance can remove, replace, and use the item.
H -	Below Depot Sustainment maintenance can remove, replace, and use the item.
L -	Specialized repair activity can remove, replace, and use the item.
G -	Afloat and ashore intermediate maintenance can remove, replace, and use the item (Navy only)
K -	Contractor facility can remove, replace, and use the item
Z -	Item is not authorized to be removed, replace, or used at any maintenance level
D -	Depot can remove, replace, and use the item.

NOTE

Army will use C in the third position. However, for joint service publications, other services may use O.

Fourth Position. The maintenance code entered in the fourth position tells you whether or not the item is to be repaired and identifies the lowest maintenance class with the capability to do complete repair (perform all authorized repair functions).

Maintenance Code Application	**/Explanation**
C -	Crew (operator) is the lowest class that can do complete repair.
F -	Maintainer is the lowest class that can do complete repair of the item.
H -	Below Depot Sustainment is the lowest class that can do complete repair of the item.
L -	Specialized repair activity (*enter specialized repair activity designator*) is the lowest class that can do complete repair of the item.
D -	Depot is the lowest class that can do complete repair of the item.

Maintenance Code Application	**/Explanation**
G -	Both afloat and ashore intermediate levels are capable of complete repair of item. (Navy only)
K -	Complete repair is done at contractor facility
Z -	Nonreparable. No repair is authorized.
B -	No repair is authorized. No parts or special tools are authorized for maintenance of "B" coded item. However, the item may be reconditioned by adjusting, lubricating, etc., at the user level.

Recoverability Code. Recoverability codes are assigned to items to indicate the disposition action on unserviceable items. The recoverability code is shown in the fifth position of the SMR code as follows:

Recoverability Code Application	**/Explanation**
Z -	Nonreparable item. When unserviceable, condemn and dispose of the item at the level of maintenance shown in the third position of the SMR code.
F -	Reparable item. When uneconomically reparable, condemn and dispose of the item at the field level.
H -	Reparable item. When uneconomically reparable, condemn and dispose of the item at the below depot sustainment.
D -	Reparable item. When beyond lower level repair capability, return to depot. Condemnation and disposal of item are not authorized below depot.
L -	Reparable item. Condemnation and disposal not authorized below Specialized Repair Activity (SRA).
A -	Item requires special handling or condemnation procedures because of specific reasons (such as precious metal content, high dollar value, critical material, or hazardous material). Refer to appropriate manuals/directives for specific instructions.

NSN (Column (3)). The NSN(s) for the item is listed in this column.

CAGEC (Column (4)). The Commercial and Government Entity Code (CAGEC) is a five-digit code which is used to identify the manufacturer, distributor, or Government agency/activity that supplies the item.

PART NUMBER (Column (5)). Indicates the primary number used by the manufacturer (individual, company, firm, corporation, or Government activity), which controls the design and characteristics of the item by means of its engineering drawings,

specifications, standards, and inspection requirements to identify an item or range of items.

NOTE

When you use an NSN to requisition an item, the item you receive may have a different part number from the number listed.

DESCRIPTION AND USABLE ON CODE (UOC) (Column (6)). This column includes the following information:

1. The federal item name, and when required, a minimum description to identify the item.

2. Part numbers of any bulk materials required if the item is to be locally manufactured or fabricated.

3. Hardness Critical Item (HCI). Items that require special handling or procedures to ensure protection against electromagnetic pulse (EMP) damage are marked with the letters 'HCI.'

4. The statement END OF FIGURE appears below the last item description in column (6) for each figure in the repair parts list, special tools repair parts, kits, bulk items, and special tools list work packages.

QTY (Column (7)). The QTY (quantity per figure) column indicates the quantity of the item used in the breakout shown on the illustration/figure. A "V" appearing in this column instead of a quantity indicates that the quantity is variable and quantity may change from application to application.

(MC) Include for Marine Corps manuals only.

USMC QTY per Equip (Column (8)). This column indicates the total quantity of the item used on the equipment.

EXPLANATION OF CROSS-REFERENCE INDEXES WORK PACKAGES FORMAT AND COLUMNS

1. National Stock Number (NSN) Index Work Package. NSNs in this index are listed in National Item Identification Number (NIIN) sequence.

STOCK NUMBER Column. This column lists the NSN in NIIN sequence. The NIIN consists of the last nine digits of the NSN. When using this column to locate an item, ignore the first four digits of the NSN. However, the complete NSN should be used when ordering items by stock number.

For example, if the NSN is 5385-01-574-1476, the NIIN is 01-574-1476.

FIG. Column. This column lists the number of the figure where the item is identified/located. The figures are in numerical order in the repair parts list and special tools list work packages.

ITEM Column. This column identifies the item associated with the figure listed in the adjacent FIG. column. This item is also identified by the NSN listed on the same line.

2. Part Number (P/N) Index Work Package. Part numbers in this index are listed in ascending alphanumeric sequence (vertical arrangement of letter and number

combinations which places the first letter or digit of each group in order A through Z, followed by the numbers 0 through 9 and each following letter or digit in like order).

PART NUMBER Column. This column indicates the part number assigned to the item.

FIG. Column. This column lists the number of the figure where the item is identified/located in the repair parts list and special tools list work packages.

ITEM Column. The item number is the number assigned to the item as it appears in the figure referenced in the adjacent figure number column.

Include item 3 if reference designator index is used.

3. Reference Designator Index Work Package. Reference designators in this index are listed in ascending alphanumeric sequence (vertical arrangement of letter and number combination which places the first letter or digit of each group in order "A" through "Z," followed by the numbers "0" through "9" and each following letter or digit in like order).

REFERENCE DESIGNATOR Column. This column indicates the reference designator assigned to the item.

FIG. Column. This column lists the number of the figure where the item is identified/located in the repair parts list or special tools list work package.

ITEM Column. The item number is the number assigned to the item as it appears in the figure referenced in the adjacent figure number column.

SPECIAL INFORMATION

UOC. The UOC appears in the lower left corner of the Description Column heading. Usable on codes are shown as "UOC:" in the Description Column (justified left) on the first line under the applicable item/nomenclature. Uncoded items are applicable to all models. Examples of the UOCs used in the parts information are:

Code	Used On
PAA Model	M114
PAB Model	M114A
PAC Model	M114B

Include appropriate UOC content, as applicable.

Fabrication Instructions. Bulk materials required to manufacture items are listed in the bulk material work package of this parts information. Part numbers for bulk material are also referenced in the Description Column of the line item entry for the item to be manufactured/fabricated. Detailed fabrication instructions for items source coded to be manufactured or fabricated are found in (*enter applicable TM number*).

Index Numbers. Items which have the word BULK in the figure column will have an index number shown in the item number column. This index number is a cross-reference between the NSN/Part Number (P/N) Index work packages and the bulk material list in the bulk items work package.

For a combined narrative-parts information manual associated publications shall not be included.

Associated Publications. The publication(s) listed below pertain to the (*enter item name*):

Publication	**Short Title**

The following paragraph shall appear only in the field maintenance parts information special instructions.

Illustrations List. The illustrations in this parts information contain field authorized items. Illustrations published in (*enter applicable TM number for the higher maintenance level parts information*, *e.g., for field, below depot sustainment, etc.*) that contain field authorized items also appear in this parts information. The tabular list in the repair parts list work package contains only those parts coded "F" in the third position of the SMR code, therefore, there may be a break in the item number sequence.

HOW TO LOCATE REPAIR PARTS

1. When NSNs or Part Numbers Are Not Known.

First. Using the table of contents, determine the assembly group to which the item belongs. This is necessary since figures are prepared for assembly groups and subassembly groups, and lists are divided into the same groups.

Second. Find the figure covering the functional group or the sub functional group to which the item belongs.

Third. Identify the item on the figure and note the number(s).

Fourth. Look in the repair parts list work packages for the figure and item numbers. The NSNs and part numbers are on the same line as the associated item numbers.

2. When NSN Is Known.

First. If you have the NSN, look in the STOCK NUMBER column of the NSN index work package. The NSN is arranged in NIIN sequence. Note the figure and item number next to the NSN.

Second. Turn to the figure and locate the item number. Verify that the item is the one for which you are looking.

3. When Part Number Is Known.

First. If you have the part number and not the NSN, look in the PART NUMBER column of the part number index work package. Identify the figure and item number.

Second. Look up the item on the figure in the applicable repair parts list work package.

Include item 4 only if the parts information has a reference designator index work package.

4. When Reference Designator Is Known.

First. If you know the reference designator, look in the REFERENCE DESIGNATOR column of the reference designator index work package. Note the figure and item number.

Second. Turn to the figure and locate the item number. Verify that the item is the one for which you are looking.

ABBREVIATIONS

Abbreviation	**Explanation**

Include uncommon abbreviations used in the parts information. List/define those not found in ASME Y14.38”

F.5.3.3.3.2 Aviation parts information introduction.

"**INTRODUCTION**

SCOPE

This parts information (PI) lists and authorizes spares and repair parts; special tools; special test, measurement, and diagnostic equipment (TMDE); and other special support equipment required for performance of (*enter maintenance level*) maintenance of the (*enter item name*). It authorizes the requisitioning, issue, and disposition of spares, repair parts, and special tools as indicated by the source, maintenance, and recoverability (SMR) codes.

GENERAL

In addition to the Introduction work package, this PI is divided into the following work packages.

1. Repair Parts List Work Packages. Work packages containing lists of spare and repair parts authorized for use in the performance of maintenance at the levels determined by the MAC/SMR code. These work packages also include parts which must be removed for replacement of the authorized parts. Parts lists are composed of functional groups in ascending alphanumeric sequence, with the parts in each group listed in ascending figure and item number sequence. Sending units, brackets, filters, and bolts are listed with the component they mount on. Bulk materials are listed by item name in the Bulk Items work package which follows (*select the work package the bulk items follow: the last Parts List work package, the Special Tools Repair Parts work package, or Kits*) work package. *(choose one of the following) Repair parts kits are listed separately in their own functional group and work package* **OR** *Repair parts kits are listed at the end of the individual work packages.* Repair parts for reparable special tools are also listed in a separate work package. Items listed are shown on the associated illustrations.

2. *(Include the text in items 2 through 4 only if the described work package is included in the TM.)* Special Tools Repair Parts Work Package. This work package lists any spare parts required for the special tools, TMDE, or other support equipment listed in the Special Tools Work Package that are not listed in any other publication.

3. Kits work package. This work package lists all repair kits and their component parts.

4. Bulk Items Work Package. This work package lists all items identified as ‘bulk’ in the parts lists. Due to the nature of bulk items, this work package does not include a figure.

5. Special Tools List Work Packages. This work package lists those special tools, special TMDE, and special support equipment authorized by this parts information (as indicated by Basis of Issue (BOI) information in the DESCRIPTION AND USABLE ON CODE (UOC) column). Tools that are components of common tool sets and/or Class VII are not listed.

6. Cross-Reference Indexes Work Packages. There are (*enter applicable number*) cross-reference indexes work packages in this Parts Information. The National Stock Number (NSN) Index work package refers you to the figure and item number for each NSN listed in the Parts Information. The Part Number Index work package refers you to the figure and item number for each part number listed in the Parts Information. (*If*

reference designator is used enter: "The Reference Designator Index work package refers you to the figure and item number of each reference designator listed in the Parts Information.")

EXPLANATION OF ENTRIES IN THE REPAIR PARTS LIST AND SPECIAL TOOLS LIST WORK PACKAGES

ITEM NO. (Entry 1). Indicates the number used to identify items called out in the illustration.

SMR CODE (Entry 2). The SMR code containing supply/requisitioning information, maintenance level authorization criteria, and disposition instruction, as shown in the following breakout. This entry may be subdivided into 4 subentries, one for each service.

TABLE 1. SMR Code Explanation.

Source Code	**Maintenance Code**		**Recoverability Code**
XX XX		___	X
1st two positions: How to get an item.	3rd position: Who can install, replace, or use the item.	4th position: Who can do complete repair on the item	5th position: Who determines disposition action on unserviceable items.

NOTE

Complete Repair: Maintenance capacity, capability, and authority to perform all corrective maintenance tasks of the "Repair" function in a use/user environment in order to restore serviceability to a failed item.

Source Code. The source code tells you how you get an item needed for maintenance, repair, or overhaul of an end item/equipment. Explanations of source codes follow:

TABLE 2. Source Code Explanation.

Source Code Application	**/Explanation**
PA PB PC PD PE PF PG PH PR PZ	Stock items; use the applicable NSN to requisition/request items with these source codes. They are authorized to the level indicated by the code entered in the third position of the SMR code. **NOTE** Items coded PC are subject to deterioration.
KD KF KB	Items with these codes are not to be requested/requisitioned individually. They are part of a kit that is authorized to the maintenance level indicated in the third position of the SMR code. The complete kit must be requisitioned and applied.

MO-Made at AMC level MF-Made at ASB level ML-Made at TASMG MD-Made at depot MG (Navy only)	Items with these codes are not to be requisitioned/requested individually. They must be made from bulk material which is identified by the P/N in the DESCRIPTION AND USABLE ON CODE (UOC) entry and listed in the bulk material group work package of the PI. If the item is authorized to you by the third position code of the SMR code, but the source code indicates it is made at higher level, order the item from the higher level of maintenance.
AO-Assembled at AMC level AF-Assembled at ASB level AL-Assembled at TASMG AD-Assembled at depot AG- Navy only	Items with these codes are not to be requested/requisitioned individually. The parts that make up the assembled item must be requisitioned or fabricated and assembled at the level of maintenance indicated by the source code. If the third position of the SMR code authorizes you to replace the item, but the source code indicates the item is assembled at a higher level, order the item from the higher level of maintenance.
XA	Do not requisition an "XA" coded item. Order the next higher assembly. (Refer to NOTE below.)
XB	If an item is not available from salvage, order it using the CAGEC and P/N.
XC	Installation drawings, diagrams, instruction sheets, field service drawings; identified by manufacturer's P/N.
XD	Item is not stocked. Order an XD-coded item through local purchase or normal supply channels using the CAGEC and P/N given, if no NSN is available.

NOTE

Cannibalization or controlled exchange, when authorized, may be used as a source of supply for items with the above source codes except for those items source coded "XA" or those aircraft support items restricted by requirements of AR 750-1.

Maintenance Code. Maintenance codes tell you the level(s) of maintenance authorized to use and repair support items. The maintenance codes are entered in the third and fourth positions of the SMR code as follows:

Third Position. The maintenance code entered in the third position tells you the lowest maintenance class authorized to remove, replace, and use an item. The maintenance code entered in the third position will indicate authorization to the following classes of maintenance:

Maintenance Code	**Application /Explanation**
O -	AMC maintenance can remove, replace, and use the item
F -	ASB maintenance can remove, replace, and use the item.

Maintenance

Code	Application /Explanation
L -	TASMG can remove, replace, and use the item.
G -	Afloat and ashore in termediate maintenance can rem ove, r eplace, and use the item (Navy only)
K -	Contractor facility can remove, replace, and use the item
Z -	Item is not authorized to be removed, replace, o r us ed at any maintenance level
D -	Depot can remove, replace, and use the item.

Fourth Position. The maintenance code entered in the fourth position tells you whether or not the item is to be repaired and identifies the lowest maintenance class with the capability to do complete repair (perform all authorized repair functions).

Maintenance

Code	Application /Explanation
O-	AMC is the lowest class that can do complete repair of item
F -	ASB is the lowest class that can do complete repair of the item.
L -	TASMG is the lowest class that can do complete repair of the item.
D -	Depot is the lowest class that can do complete repair of the item.
G -	Both afloat and ashore intermediate levels are capable of complete repair of item. (Navy only)
K -	Complete repair is done at contractor facility
Z -	Nonreparable. No repair is authorized.
B -	No repair is authorized. No parts or special tools are authorized for maintenance of "B" coded item. However, the item may be reconditioned by adjusting, lubricating, etc., at the user level.

Recoverability Code. Recoverability codes are assigned to items to indicate the disposition action on unserviceable items. The recoverability code is shown in the fifth position of the SMR code as follows:

Recoverability

Code	Application /Explanation
Z -	Nonreparable item. When unserviceable, condemn and dispose of the item at the level of maintenance shown in the third position of the SMR code.
O -	Reparable item. When uneconomically reparable, condemn and dispose of the item at the AMC level.
F -	Reparable item. When uneconomically reparable, condemn and dispose of the item at the ASB level.
D -	Reparable item. When beyond lower level repair capability, return to depot. Condemnation and disposal of item are not authorized below depot level.
L -	Reparable item. Condemnation and disposal not authorized below TASMG.
A -	Item requires special handling or condemnation procedures because of specific reasons (such as precious metal content, high dollar value,

Recoverability

Code	**Application /Explanation**
	critical material, or hazardous material). Refer to appropriate manuals/directives for specific instructions.
G -	Field level reparable item. Condemn and dispose at either afloat or ashore intermediate levels. (Navy only)
K -	Reparable item. Condemnation and disposal to be performed at contractor facility.

NSN (Entry 3). The NSN for the item is listed in this entry.

CAGEC (Entry 4). The Commercial and Government Entity Code (CAGEC) is a five-digit code that is used to identify the manufacturer, distributor, or Government agency/activity that supplies the item.

PART NUMBER (Entry 5). Indicates the primary number used by the manufacturer (individual, company, firm, corporation, or Government activity), which controls the design and characteristics of the item by means of its engineering drawings, specifications, standards, and inspection requirements to identify an item or range of items.

NOTE

When you use an NSN to requisition an item, the item you receive may have a different P/N from the number listed.

DESCRIPTION AND USABLE ON CODE (UOC) (Entry (6)). This entry includes the following information:

1. The federal item name, and when required, a minimum description to identify the item.

2. P/Ns of bulk materials are referenced in this entry in the line entry to be manufactured or fabricated.

3. Hardness Critical Item (HCI). A support item that provides the equipment with special protection from electromagnetic pulse (EMP) damage during a nuclear attack.

4. The statement END OF FIGURE appears just below the last item description in entry (6) for a given figure in both the repair parts list and special tools list work packages.

QTY (Entry (7)). The QTY (quantity per figure) entry indicates the quantity of the item used in the breakout shown on the illustration/figure, which is prepared for a functional group, sub functional group, or an assembly. A "V" appearing in this entry instead of a quantity indicates that the quantity is variable and quantity may change from application to application.

(MC) Include for Marine Corps manuals only.

USMC QTY per Equip (Entry 8). This entry accommodates the Marine Corps quantity per equipment requirement.

EXPLANATION OF CROSS-REFERENCE INDEXES WORK PACKAGES FORMAT AND ENTRY

1. National Stock Number (NSN) Index Work Package. NSNs in this index are listed in National Item Identification Number (NIIN) sequence.

STOCK NUMBER Column. This column lists the NSN in NIIN sequence. The NIIN consists of the last nine digits of the NSN. When using this column to locate an item, ignore the first four digits of the NSN. However, the complete NSN should be used when ordering items by stock number.

For example, if the NSN is 5385-01-574-1476, the NIIN is 01-574-1476.

FIG. Entry. This entry lists the number of the figure where the item is identified/located. The figures are in numerical order in the repair parts list and special tools list work packages.

ITEM Entry. The item number identifies the item associated with the figure listed in the adjacent FIG. entry. This item is also identified by the NSN listed on the same line.

2. Part Number (P/N) Index Work Package. P/Ns in this index are listed in ascending alphanumeric sequence (vertical arrangement of letter and number combinations which places the first letter or digit of each group in order A through Z, followed by the numbers 0 through 9 and each following letter or digit in like order).

PART NUMBER Entry. Indicates the P/N assigned to the item.

FIG. Entry. This entry lists the number of the figure where the item is identified/located in the repair parts list and special tools list work packages.

ITEM Entry. The item number is the number assigned to the item as it appears in the figure referenced in the adjacent figure number entry.

Include 3, as applicable.

3. Reference Designator Index Work Package. Reference designators in this index are listed in ascending alphanumeric sequence (vertical arrangement of letter and number combination which places the first letter or digit of each group in order "A" through "Z," followed by the numbers "0" through "9" and each following letter or digit in like order).

REFERENCE DESIGNATOR Entry. Indicates the reference designator assigned to the item.

FIG. Entry. This entry lists the number of the figure where the item is identified/located in the repair parts list or special tools list work package.

ITEM Entry. The item number is the number assigned to the item as it appears in the figure referenced in the adjacent figure number entry.

SPECIAL INFORMATION

UOC. The UOC appears in the lower left corner of the Description Entry heading. Usable on codes are shown as "UOC: ..." in the Description Entry (justified left) on the first line under the applicable item/nomenclature. Uncoded items are applicable to all models. Identification of the UOCs used in the PI are:

Code	**Used On**
PAA	Model M114
PAB	Model M114A
PAC	Model M114B

Include appropriate UOC content, as applicable.

Fabrication Instructions. Bulk materials required to manufacture items are listed in the bulk material functional group of this PI. Part numbers for bulk material are also referenced in the Description Entry of the line item entry for the item to be manufactured/fabricated. Detailed fabrication instructions for items source coded to be manufactured or fabricated are found in (*enter applicable TM number*).

Index Numbers. Items which have the word BULK in the figure entry will have an index number shown in the item number entry. This index number is a cross-reference between the NSN / P/N index work packages and the bulk material list in the repair parts list work package."

For a combined narrative-PI manual associated publications shall not be included.

Associated Publications. The publication(s) listed below pertains to the (*enter item name*):

Publication	**Short Title"**

The following paragraph shall appear only in the unit maintenance PI special instructions.

Illustrations List. The illustrations in this PI contain field authorized items. Illustrations published in (*enter applicable TM number for the higher maintenance level PI, e.g., for field, below depot sustainment, etc.*) that contain field authorized items also appear in this PI. The tabular list in the repair parts list work package contains only those parts coded "O" in the third position of the SMR code, therefore, there may be a break in the item number sequence.

HOW TO LOCATE REPAIR PARTS

1. When NSNs or P/Ns Are Not Known.

First. Using the table of contents, determine the assembly group to which the item belongs. This is necessary since figures are prepared for assembly groups and subassembly groups, and lists are divided into the same groups.

Second. Find the figure covering the functional group or the sub functional group to which the item belongs.

Third. Identify the item on the figure and note the number(s).

Fourth. Look in the repair parts list work packages for the figure and item numbers. The NSNs and part numbers are on the same line as the associated item numbers.

2. When NSN Is Known.

First. If you have the NSN, look in the STOCK NUMBER entry of the NSN index work package. The NSN is arranged in NIIN sequence. Note the figure and item number next to the NSN.

Second. Turn to the figure and locate the item number. Verify that the item is the one you are looking for.

3. When P/N Is Known.

First. If you have the P/N and not the NSN, look in the PART NUMBER entry of the P/N index work package. Identify the figure and item number.

Second. Look up the item on the figure in the applicable repair parts list work package.

Include 4 only if the PI has a reference designator index work package.

4. When Reference Designator Is Known.

First. If you know the reference designator, look in the REFERENCE DESIGNATOR entry of the reference designator index work package. Note the figure and item number.

Second. Turn to the figure and locate the item number. Verify that the item is the one you are looking for.

ABBREVIATIONS

Abbreviation	**Explanation**
Include uncommon abbreviations used in the PI. List/define those not found in ASME Y14.38."	

F.5.3.3.3.3 Indexed parts information illustration and legend **<figure>**. When specified by the acquiring activity, an indexed parts information illustration and legend shall be added to the end of the introduction work package. The illustration shall have a legend that defines the item number, major functional group figure title, and the respective figure number. (Refer to Figure F-2.)

F.5.3.4 Repair parts list work package **<plwp>**. Each stand-alone parts information TM or parts information chapter in a combined manual shall contain at least one repair parts list work package **<plwp>**. For less complex equipment with a small parts information, the parts information may be contained in a single work package or a few work packages. For complex equipment, each parts information work package shall have one figure and one parts list. The figure may have multiple sheets. The repair parts list(s) shall contain the data requirements in F.5.3.4.1 through F.5.3.4.3.2.7.

F.5.3.4.1 Work package identification information **<wpidinfo>**. Work package identification information is required for this work package. (Refer to 4.9.6.2.)

F.5.3.4.2 Work package initial setup **<initial_setup>**. Initial setup is not required for this work package.

F.5.3.4.3 Repair parts list **<pi.category>**. The repair parts lists shall have a figure **<figure>** and a list of repair part items **<pi.item>** as specified in F.5.3.4.3.1 and F.5.3.4.3.2.

F.5.3.4.3.1 Repair parts figure title **<title>**. When available, figure titles shall be taken from provisioning documentation. The parts information figure title, the functional group title, and the applicable MAC title shall be the same. When no provisioning documentation is provided, the acquiring activity or contractor shall develop a title. This title shall be used consistently throughout the TM.

F.5.3.4.3.2 Repair part item **<pi.item>**. Each repair part shall include the column requirements in F.5.3.4.3.2.1 through F.5.3.4.3.2.8. Each repair may also include the optional items in F.5.3.4.3.2.9 through F.5.3.4.3.2.13.

F.5.3.4.3.2.1 Item number column **<callout>**. Items shall be listed on the repair parts list (in the ITEM NO. column) by the same callout number shown on the associated figure. The items shall be listed in ascending alphanumeric sequence.

F.5.3.4.3.2.2 Source, Maintenance, and Recoverability (SMR) code column **<smr>**. The SMR code column shall include SMR codes assigned to the applicable items. For multiple service TMs, the SMR code column shall be divided into subcolumns, one for each service involved. Each service shall identify the appropriate SMR code subentry. When services share the same SMR code for an item, the SMR code shall be listed for each service.

F.5.3.4.3.2.3 National Stock Number (NSN) column **<nsn>**. The NSN column shall include the NSN assigned to the applicable item.

F.5.3.4.3.2.4 Commercial And Government Entity Code (CAGEC) column **<cageno>**. The applicable five-digit CAGEC number, as listed in *Catalog Handbook H4/H*8, shall appear in the CAGEC column.

F.5.3.4.3.2.5 Part number column **<partno>**. Each assigned part number shall be listed in the PART NUMBER column. When multiple part numbers exist for a single item, such as an end-item design number and a subsidiary suppliers number, the part number column shall list the manufacturer's number. The subsidiary identification information shall be included in the description column. (Refer to F.5.3.4.3.2.6.)

F.5.3.4.3.2.6 Description and Useable On Code (UOC) column. The DESCRIPTION AND USABLE ON CODE (UOC) column shall include the following information.

F.5.3.4.3.2.6.1 Functional group header **<fncgrp>**. The functional group header shall precede the first repair part item in the description column. The header shall consist of the functional group number and title <**fnccode**> appearing on the top line(s). The next line(s) below shall include the figure number and the figure title <**fnctitle**>.

F.5.3.4.3.2.6.2 Item name **<name>**. The item name shall consist of the official nomenclature. (Refer to 4.9.23.2.) If the item is an HCI or ESD item, the symbol **HCI** and/or **ESD** shall precede the item name.

F.5.3.4.3.2.6.3 Description **<desc>**. The description shall consist of the data from the provisioning document. The **<desc>** may also contain other information to assist in identifying the item. This includes but is not limited to original manufacturer's part number, Military Specification (MS) part numbers, or specific physical information about the item.

F.5.3.4.3.2.6.4 Indentions. The item name listed in the DESCRIPTION AND USABLE ON CODE (UOC) column shall be indented to show components of assemblies and next higher assemblies.

F.5.3.4.3.2.6.5 Useable On Code (UOC) **<uoc>**. When an item has multiple configurations or multiple models, the three-position alphanumeric UOC representing the applicable configuration in which the item is used shall be placed on the last line under the item description. The letters "UOC:" followed by the applicable UOC shall be indented. When an item is used on all

configurations or when only one configuration is covered by the parts information, UOCs shall not be shown.

F.5.3.4.3.2.6.6 Serial number application **<usbefserno>**. When part numbers of spare/repair items are not the same for all serial numbered equipment of the same model, a statement identifying the Usable Effective (USBL EFF) serial numbers shall be placed on the last line under the item description. The letters "USBL EFF" followed by the applicable serial numbers shall be indented. (e.g., USBL EFF SER NOS 1719-1941). When an item is used on all models or when only one configuration is covered by the parts information, serial numbers shall not be shown.

F.5.3.4.3.2.6.7 Assembled items. Spare and repair parts that are part of a nonstocked assembled item (source coded "AO," "AF," "AH," "AL," or "AD") shall be assigned item numbers on illustrations and shall be listed in item number sequence on the repair parts list. These items/parts shall be listed immediately below the item to be assembled on the repair parts list. When a particular illustration does not show the parts breakdown of the nonstocked assembly, reference shall be made to the breakdown illustration in the parts information. Instructions, drawings, charts, and tables showing how to assemble assemblies source coded "A( )" shall not appear in the parts information, but shall appear in the "List of Manufactured Items" (refer to E.5.3.9) or by reference to the applicable assembled items maintenance TM if one is available.

F.5.3.4.3.2.6.8 Manufactured items. All items source coded "MO," "MF," "MH," "ML," or "MD" shall have the statement in the DESCRIPTION AND USABLE ON CODE (UOC) column **<desc>** as follows: "MAKE FROM (enter applicable bulk material or other replaceable item name, CAGEC, and part number)." Material that is used to make items shall also be shown in a separate bulk items work package **<bulk_itemswp>.** (Refer to F.5.3.7.) Instructions, drawings, charts, and tables required to show how items are made shall not be contained in the parts information, but shall appear in the illustrated list of manufactured items. (Refer to E.5.3.9.)

F.5.3.4.3.2.6.9 Kits and kit repair parts. Kits and repair parts shall conform to the format of either option 1 or option 2, as specified by the acquiring activity. Only one option is to be used in a weapons systems parts information listing:

a. Option 1 (kits).
   (1) Option 1 kits shall appear at the end of the associated parts list. As specified by the acquiring activity, the ITEM NO. column **<callout>** for kits shall be either left blank or list an alphabetical character(s). The QTY column **<qty>** for kits shall be a "V" (variable) when the exact quantity may vary.
   (2) Option 1 (parts) **<kititem>**. Option 1 kit repair parts shall be listed with their applicable figure and appear in item number sequence. The statement "part of Kit P/N (enter kit P/N)" shall follow item name **<name>**. Kit repair parts shall also be listed under the kit list at the end of the parts list .Parts of the kit list shall be indented and listed alphabetically by item name or in item number sequence immediately below the kit item name. The quantity **<qty>** (in parentheses), figure number, and item number **<callout>** shall follow the repair part item name.

b. Option 2 (kits) **<kitswp>**.

(1) Option 2 kits shall be listed in the kit parts list work package **<kitswp>.** (Refer to F.5.3.6.)

(2) Option 2 (parts) <pi.item>. Option 2 kit repair parts shall appear in the parts list by item number as shown on the associated figure. They shall be listed in item number sequence. The statement "PART OF KIT P/N *(enter kit part number)*" shall follow the item name.

F.5.3.4.3.2.6.10 End of work package statement. The statement "**END OF FIGURE"** shall appear below the last item described in the column for each figure of the tabular lists in the repair parts list and the special tools list work packages.

F.5.3.4.3.2.7 Quantity column **<qty>**. The number in the QTY column shall represent the number of times the item appears in the illustration/figure with the associated item number. When a definite quantity cannot be determined because the number of uses per equipment or the size/length of an item may vary with each piece of equipment, the letter "V" shall be placed in the left position of the QTY column.

F.5.3.4.3.2.8 (MC) United States Marine Corp. (USMC) quantity per equipment column **<qty_per_end_item>**. The number in the USMC QTY per Equip column shall represent the total quantity for all the occurrences of that part in all the repair parts lists.

F.5.3.4.3.2.9 Mandatory replacement **<mrp>**. Information on mandatory replacement may be included.

F.5.3.4.3.2.10 Unit of issue **<ui>**. The unit of issue for the item may be included.

F.5.3.4.3.2.10.1 Unit of measure 'um'. The unit of measure for the item may be included. When used, the unit of measure is an attribute of the **<ui>** element and the unit of issue **<ui>** must be entered.

F.5.3.4.3.2.11 Reference designator **<refdes>**. The reference designator for the item may be included.

F.5.3.4.3.2.12 Next higher assembly **<nha_item>**. Information on the next higher assembly may be included.

F.5.3.4.3.2.13 Parts breakdown reference **<part.breakdown.ref>**. A reference to parts breakdown for the item may be included.

F.5.3.4.4 Basic Issue Items (BII) (repair parts). Repair parts for reparable BII that do not have separate operator TMs, but are authorized in the parts information, shall be listed in a functional group titled <**fnctitle**> BASIC ISSUE ITEMS (REPAIR PARTS). Items listed in functional and sub functional groups shall be listed and identified with the same basic columnar data required for the end item repair parts. BII shall be supported by illustrations.

F.5.3.4.5 Expendable and durable items. Expendable and durable items shall not be listed in the parts information. These items shall appear in the expendable and durable items work package **<explistwp>** (refer to G.5.6) in the Supporting Information Chapter.

F.5.3.5 Repair parts for special tools list work package **<stl_partswp>**. The special tools repair parts list work package shall be prepared when all of the following conditions in a through

c are met. This work package shall follow the last repair parts list work package **<plwp>** and shall precede the kit parts list work package **<kitswp>,** bulk items work package **<bulk_itemswp>**, or specialty tools list work package **<stlwp>**. The work package data requirements are specified in F.5.3.5.1 through F.5.3.5.3.

a. The parts information identifies the special tool(s) in the special tools list work package. (Refer to F.5.3.8.)
b. The special tool has repair parts that may be replaced at any maintenance level covered in the TM.
c. The special tool does not have repair instructions and/or parts listed in a TM for the special tool.

F.5.3.5.1 Work package identification information **<wpidinfo>**. Work package identification information is required for this work package. (Refer to 4.9.6.2.)

F.5.3.5.2 Work package initial setup **<initial_setup>**. Initial setup is not required for this work package.

F.5.3.5.3 Special tools repair parts items list **<pi.category>**. When developing the special tools repair parts items list, the requirements in F.5.3.4.3.2 shall be used except as specified in F.5.3.5.3.1.

F.5.3.5.3.1 Functional group header **<fncgrp>**. The functional group header shall precede the first special tools repair part item in the DESCRIPTION AND USABLE ON CODE (UOC) column. The functional group number and title **<fnccode>** shall be "SPECIAL TOOLS (REPAIR PARTS)" appearing on the top line(s). The next line(s) below shall be the figure number and the figure title **<fnctitle>**.

F.5.3.6 Kit parts list work package **<kitswp>**. A kits parts work package **<kitswp>** shall be prepared when kit parts are listed separately in accordance with F.5.3.4.3.2.6.9b (Option 2 (kits)). The work package shall follow the last repair parts list work package **<plwp>** or repair parts for special tools list work package **<stl_partswp>**, when provided, and shall precede the bulk items list work package **<bulk_itemswp>**, if provided or special tools list work package **<stlwp>**. The work package consists of one or more kits part item lists **<pi.category>** organized by functional group. The work package data requirements are specified in F.5.3.6.1 through F.5.3.6.3.

F.5.3.6.1 Work package identification information **<wpidinfo>**. Work package identification information is required for this work package. (Refer to 4.9.6.2.)

F.5.3.6.2 Work package initial setup **<initial_setup>**. Initial setup is not required for this work package.

F.5.3.6.3 Kits part items list **<pi.category>**. The kits part items list shall be listed alphanumerically by part number in the PART NUMBER column. The requirements defined in F.5.3.4.3 shall be used except as specified in F.5.3.6.3.1 through F.5.3.6.3.3.

F.5.3.6.3.1 Functional group header **<fncgrp>**. The functional group header shall precede the first bulk item in the DESCRIPTION AND USABLE ON CODE (UOC) column. The functional

group number and title <**fnccode**> shall be "REPAIR KITS" appearing on the top line(s). The next line(s) below shall be the figure number and the figure title <**fnctitle**>.

F.5.3.6.3.2 Kit part item group **<kititem>**. Parts in the kit group, in the DESCRIPTION AND USABLE ON CODE (UOC) column, shall be indented two positions and listed alphabetically by item name or in item number sequence under their kit name. Kit parts shall be listed by item names **<name>**, the quantity (in parentheses) **<qty>**, the figure number, and the item numbers **<callout>** that appear in the basic parts list.

F.5.3.6.3.3 Kits part item quantity **<qty>**. The QTY column entry for kits part shall contain a V (variable) when the exact quantity may vary.

F.5.3.7 Bulk items work package **<bulk_itemswp>**. A bulk items work package shall be prepared whenever bulk items are required in the repair of any parts listed in a parts list, special tool list, or repair kit. The work package shall not have an illustration. The work package data requirements are specified in F.5.3.7.1 through F.5.3.7.3.

F.5.3.7.1 Work package identification information **<wpidinfo>**. Work package identification information is required for this work package. (Refer to 4.9.6.2.)

F.5.3.7.2 Work package initial setup **<initial_setup>**. Initial setup is not required for this work package.

F.5.3.7.3 Bulk item **<pi.item>**. Items in the bulk items list shall be listed alphabetically by item name in the DESCRIPTION AND USABLE ON CODE (UOC) column. The requirements defined in F.5.3.4.3.2 shall be used except as specified in F.5.3.7.3.1 and F.5.3.7.3.2.

F.5.3.7.3.1 ITEM column **<callout>**. Numbers in the ITEM column of bulk material list apply to the FIG. BULK only and shall not be associated with item numbers (callouts appearing on the illustrations/figures).

F.5.3.7.3.2 Functional group header **<fncgrp>**. The functional group header shall precede the first bulk item in the DESCRIPTION AND USABLE ON CODE (UOC) column. The functional group number and title <**fnccode**> shall be "BULK MATERIAL" appearing on the top line(s). The next line(s) below shall be the figure number and the figure title <**fnctitle**> and titled "FIG. BULK."

F.5.3.8 Special tools list work package **<stlwp>**. A special tools list work package shall be prepared for special tools, special TMDE, and other special support equipment authorized for maintenance of the end item/assembly. Repair parts for special tools listed in this work package that have their own TM shall not be listed in the repair parts for special tools list work package. (Refer to F.5.3.5.) These tools shall be listed in the format and data requirement in F.5.3.8.1 through F.5.3.8.3.6.

F.5.3.8.1 Work package identification information **<wpidinfo>**. Work package identification information is required for this work package. (Refer to 4.9.6.2.)

F.5.3.8.2 Work package initial setup **<initial_setup>**. Initial setup is not required for this work package.

F.5.3.8.3 Special tools list **<pi.category>**. The special tools list requirements in F.5.3.4.3 shall be used except as specified in F.5.3.8.3.1 through F.5.3.8.3.6.

F.5.3.8.3.1 Item number column. Items shall be listed on the special tools list (in the ITEM NO. column) by the same callout number shown on the associated figure. The items shall be listed in ascending alphanumeric sequence.

F.5.3.8.3.2 Functional group header **<fncgrp>**. The functional group header shall precede the first bulk item in the DESCRIPTION AND USABLE ON CODE (UOC) column. The functional group number and title **<fnccode>** shall be "SPECIAL TOOLS" appearing on the top line(s). The next line(s) below shall be the figure number and the figure title **<fnctitle>**.

F.5.3.8.3.3 D-coded items. When a depot level parts information does not exist and items are maintained at depot level, they shall be identified with a "D" in the third position of the SMR code in the highest level parts information prepared.

F.5.3.8.3.4 Basis of Issue (BOI) **<boi>**. The BOI **<boi>** shall be placed on the last line under the item description, in the DESCRIPTION AND USABLE ON CODE (UOC) column, for individual items, sets, or kits. The BOI shall indicate the quantity of the items, e.g., sets, or kits authorized to support a quantity of end items/assembly(s) or a specific military unit. For example, BOI: 1 auth for 1-12 equip or BOI: 1 per BN HQ when BN has SVC CO.

F.5.3.8.3.5 Quantity column. The QTY column shall be left blank.

F.5.3.8.3.6 Components list **<kititem>**. Components of special tool sets and kits, in the DESCRIPTION AND USABLE ON CODE (UOC) column, shall be listed in figure and item number sequence **<callout>**. The component shall be indented two positions and listed by item name **<name>**, the figure number, and the item numbers **<callout>**. Quantities of components **<qty>** shall be included in BOI statement. (Refer to F.5.3.8.3.4.)

F.5.3.9 Cross-reference index work packages.

F.5.3.9.1 National Stock Number (NSN) index work package **<nsnindxwp>**. This work package shall be prepared. The index (**standard information**) shall be in ascending numeric sequence by the National Item Identification Number (NIIN) (the last nine digits of the NSN). This index shall be listed in the format and data requirement in F.5.3.9.1.1 through F.5.3.9.1.3. (Refer to MIL-HDBK-1222 for an example.)

F.5.3.9.1.1 Work package identification information **<wpidinfo>**. Work package identification information is required for this work package. (Refer to 4.9.6.2.)

F.5.3.9.1.2 Work package initial setup **<initial_setup>**. Initial setup is not required for this work package.

F.5.3.9.1.3 National Stock Number (NSN) index **<nsnindx>**. Each line entry **<nsnindxrow>** shall list the complete NSN for each NSN assigned to the applicable repair part or special tool items figure number and item number **<callout>**. The NSN **<nsn>** line entry shall identify the first figure number and item number **<callout>** for which the stock number is applicable. The NSN shall not be repeated for each additional figure number and item number **<callout>** identified by that NSN.

F.5.3.9.2 Part number index work package **<pnindxwp>**. This work package shall be prepared. The index (**standard information**) shall be in ascending alphanumeric sequence by part number.

This index shall be listed in the format and data requirement in F.5.3.9.2.1 through F.5.3.9.2.3. (Refer to MIL-HDBK-1222 for an example.)

F.5.3.9.2.1 Work package identification information **<wpidinfo>**. Work package identification information is required for this work package. (Refer to 4.9.6.2.)

F.5.3.9.2.2 Work package initial setup **<initial_setup>**. Initial setup is not required for this work package.

F.5.3.9.2.3 Part number index **<pnindx>**. Each line entry **<pnindxrow>** shall list each part numbers assigned to applicable repair part or special tool items figure number and item number **<callout>**. The part number **<partno>** line entry shall identify the first figure number and item number **<callout>** for which the part number is applicable. The part number shall not be repeated for each additional figure number and item number **<callout>** identified by that part number.

F.5.3.9.3 Reference designator index work package **<refdesindxwp>**. A reference designator work package shall be prepared as required. The index (**standard information**) shall be in alphanumeric sequence by reference designators. This index shall be listed in the format and data requirement in F.5.3.9.3.1 through F.5.3.9.3.3. (Refer to MIL-HDBK-1222 for an example.)

F.5.3.9.3.1 Work package identification information **<wpidinfo>**. Work package identification information is required for this work package. (Refer to 4.9.6.2.)

F.5.3.9.3.2 Work package initial setup **<initial_setup>**. Initial setup is not required for this work package.

F.5.3.9.3.3 Reference designator index **<refdesindx>**. Each line entry **<refdesindxrow>** shall list each reference designator assigned to the applicable repair part or special tool items figure number and item number **<callout>**. The reference designator **<refdes>** line entry shall identify the first figure number and item number **<callout>** for which the reference designator is applicable. The reference designator shall not be repeated for each additional figure number and item number **<callout>** identified by that reference designator.

F.5.3.9.4 Bulk figure reference. When entries in either the NSN or the part number index references bulk material, the word “BULK” shall appear in the FIG. column. The numbers in the ITEM No. column shall refer to the item number listed in the bulk figure located in the bulk functional group list and shall not refer to item numbers on an illustration.

F.5.3.9.5 Sets and kits. Part numbers for sets/kits shall be cross-referenced to NSN, figure, and item number for the set/kit. When Option 1 is selected, the ITEM column shall either be blank or list an alphabetical character (e.g., "K" for KIT, "S" for SET, etc.). (Refer to F.5.3.4.3.2.6.9.a.) When Option 2 is selected, the FIG. column shall list the word KITS or SETS, as applicable. (Refer to F.5.3.4.3.2.6.9.b.)

F.5.3.10 Illustrations. Additional parts information specific illustration requirements are described in F.5.3.10.1 through F.5.3.10.4.

F.5.3.10.1 Arrangement of illustrations. All illustrations prepared for spares, repair parts, special tools, special TMDE, and other special support equipment shall be arranged in figure number

sequence. They shall precede their companion parts list. Illustrations shall not be duplicated to show different models or configurations of an assembly when UOCs can be assigned to indicate differences in configurations.

F.5.3.10.2 Use of illustrations. References to illustrations in other TMs or to illustrations in the narrative portion of a combined maintenance TM with a parts information shall not be made. For clarity, multisheet illustrations may be used.

F.5.3.10.3 Identical parts/item numbers. Identical parts (same part number) appearing in a figure (illustration) having only one FGC shall have the same item number. If a figure has two or more FGCs/assemblies, only the identical parts with identical SMR codes within each FGC/assembly shall have the same item number.

F.5.3.10.4 Identical assemblies. When two or more identical assemblies (same part number) exist in different places, i.e., in the equipment, a breakdown of the parts shall be illustrated only once, i.e., the first time the assembly appears in the parts information. For subsequent times that the identical assembly appears, the assembly item name shall appear in the description and UOC column and be followed by the statement "SEE FIG ## FOR BREAKDOWN."

F.6 **NOTES.**

The notes in section 6 apply to this appendix.

M198 HOWITZER INTRODUCTION

SCOPE

This RPSTL lists and authorizes spares and repair parts; special tools; special test, measurement, and diagnostic equipment (TMDE); and other special support equipment required for performance of unit maintenance of the M198 Howitzer. It authorizes the requisitioning, issue, and disposition of spares, repair parts, and special tools as indicated by the source, maintenance, and recoverability (SMR) codes.

GENERAL

In addition to the Introduction work package, this RPSTL is divided into the following work packages.

1. Repair Parts List Work Packages. Work packages containing lists of spares and repair parts authorized by this RPSTL for use in the performance of maintenance. These work packages also include parts which must be removed for replacement of the authorized parts. Parts lists are composed of functional groups in ascending alphanumeric sequence, with the parts in each group listed in ascending figure and item number sequence. Sending units, brackets, filters, and bolts are listed with the component they mount on. Bulk materials are listed by item name in FIG. BULK at the end of the work packages. Repair parts kits are listed separately in their own functional group and work package. Repair parts for reparable special tools are also listed in a separate work package. Items listed are shown on the associated illustrations.

FIGURE F-1. Example of an introduction work package.

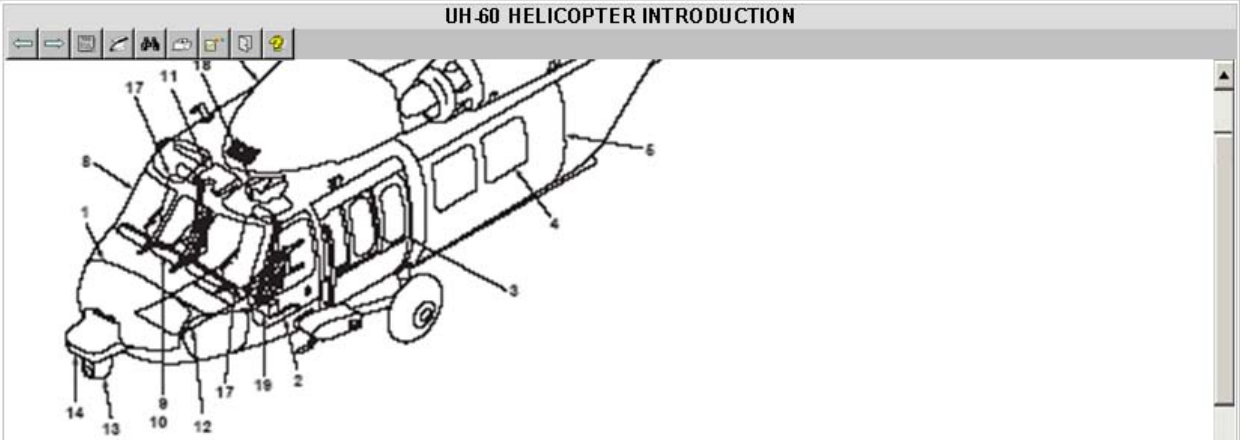

INDEX NO.	FIGURE TITLE	FIGURE NO.
1	Door Installation, Nose Section	3
2	Door Installation, Crew Nose Section	4
3	Gunners Window	12
4	Window Panel, Jettisonable, Cargo Door UH-60Q	25
5	Door Installation, Troop/Cargo	24
6	Stabilator Installation, Tail Rotor Pylon Horizontal	41
7	Stabilator Installation, Tail Rotor Pylon Horizontal	55

FIGURE F-2. Example of an indexed parts information illustration and legend.

This page intentionally left blank.

APPENDIX G
SUPPORTING INFORMATION

G.1 **SCOPE.**

G.1.1 Scope. This appendix establishes the technical content requirements for the preparation of supporting information for major weapon systems and their related systems, subsystems, equipment, WRAs, and SRAs. This appendix is a mandatory part of this standard. The information contained herein is intended for compliance. The requirements are applicable for all maintenance levels/classes through overhaul (depot), including DMWRs and NMWRs.

G.2 **APPLICABLE DOCUMENTS.**

The applicable documents in section 2 apply to this appendix.

G.3 **DEFINITIONS.**

The definitions in section 3 apply to this appendix.

G.4 **GENERAL REQUIREMENTS.**

G.4.1 General. Supporting information shall be prepared for weapon systems, major equipment, components, and applicable support and interface equipment. Supporting information requirements are included for the preparation of technical data that supplements the specific operation and maintenance information contained in the IETM. This supplemental information includes reference data and general maintenance and parts information with associated illustrations.

G.4.2 Maintenance level/class applicability. Requirements contained in this appendix are applicable to all maintenance levels/classes unless specifically labeled in bold and in parentheses. The labeled requirement may specify a specific level (e.g., **Field**) (refer to 3.82) or a specific maintenance class (refer to 3.80) (e.g., **Maintainer** or **AMC**). The labeled requirement shall be applicable to all TMs containing that maintenance level/class. An explanation of applicable DA maintenance level/class is provided in section 3.

G.4.3 Preparation of digital data for electronic delivery. Data prepared and delivered digitally in accordance with this standard shall be XML tagged using the DTD. Data shall be formatted for presentation using stylesheets in accordance with MIL-STD-2361. Stylesheets may be prepared using XSL or other languages as specified by the acquiring activity. Where possible and when available, Army developed and provided stylesheets shall be used. (Refer to 4.6 for information on obtaining or accessing the DTD and stylesheets.) XML tags used in the DTD are noted throughout the text of this standard in bracketed, bold characters (e.g., **<macwp>**) as a convenience for the author and to ensure that the tags are used correctly when developing a document instance.

G.4.4 Use of the Document Type Definition (DTD)/stylesheet. The DTD referenced in this appendix interprets the technical content and structure for the functional requirements contained in this standard. Its use is mandatory. Development of IETMs is accomplished through the use of this standard, the DTD, and the guidance contained in MIL-HDBK-1222. Where possible and when available, Army developed and provided stylesheets shall be used. For additional information on DTD and specific stylesheets, refer to MIL-STD-2361.

G.4.5 Content structure. The examples provided herein are an accurate representation of the content structure requirements contained in this appendix and shall be followed to permit the effective use of the DTD.

G.4.6 Style and format. This standard provides style and format requirements for the technical content requirements described in this appendix. These requirements are considered mandatory and are intended for compliance.

G.4.7 Interactive Electronic Technical Manual (IETM) functionality. The specific level of functionality and user interaction to be provided in the IETMs shall be in accordance with the functionality matrix contained in Appendix A.

G.4.8 Work package development. Data developed in accordance with this appendix shall be divided into work packages. For task-related work packages, the tasks shall be in the logical order of the work sequence. These work packages should be stand alone and are broken into the following work package types: general information, operator instructions, troubleshooting procedures, maintenance instructions, parts information, supporting information, destruction of Army materiel to prevent enemy use, preventative maintenance checklist, and lubrication orders. A work package shall contain all information and references required to support the work package type.

G.4.9 Safety devices and interlocks. Information shall be prepared pertaining to the purpose and location of all safety devices and interlocks in conjunction with the pertinent procedures.

G.4.10 Electrostatic Discharge (ESD) sensitive parts. If the equipment contains ESD sensitive parts, components, or circuits; cautions and ESD labels shall be incorporated into the applicable tasks and procedures to ensure ESD sensitive parts are not damaged or degraded during maintenance and operation. (Refer to 4.9.18 for requirements on labeling with ESD.) Actions which could damage ESD sensitive parts, but which are not directly related to handling or operation of ESD sensitive parts, shall not be annotated with the ESD acronym, but shall be preceded by a caution statement.

G.4.11 Nuclear hardness **<hcp>**. If the weapon system/equipment has nuclear survivability requirements (e.g., overpressure and burst, thermal radiation, electromagnetic pulse, or transient radiation effects on electronics), cautions and Hardness-Critical Process (HCP) labels shall be incorporated into the applicable tasks and procedures to ensure that the hardness of the equipment is not degraded during handling or operation. (Refer to 4.9.17 for requirements on labeling with HCP.) Actions which could degrade hardness, but which are not directly involved in establishing nuclear hardness, shall not be annotated with the acronym, but shall be preceded by a caution statement.

G.4.12 Selective application and tailoring. This standard contains some requirements that may not be applicable to the preparation of all IETMs. Selective application and tailoring of requirements contained in this standard are the responsibility of the acquiring activity and shall be accomplished using Appendix A. The applicability of some requirements is also designated by one of the following statements: unless specified otherwise by the acquiring activity; as specified by the acquiring activity; or when specified by the acquiring activity.

G.5 **DETAILED REQUIREMENTS.**

G.5.1 Preparation of supporting information. Supporting information shall be developed as work packages. Supporting information work packages are described in G.5.2 through G.5.11. Supporting information work packages shall be contained in a group titled "Supporting Information" within the ITEM. These work packages shall be placed in the IETM in the order in which they are presented herein, as applicable.

G.5.2 References work package **<refwp>**. This work package shall be prepared and list all publications referenced in the TM that are required by the user to operate and/or maintain the equipment. It shall consist of a scope and a publication list(s).

G.5.2.1 Work package identification information **<wpidinfo>**. This information is required for this work package. (Refer to 4.9.6.2.)

G.5.2.2 Work package initial setup **<initial_setup>**. Initital setup is not required for this work package.

G.5.2.3 Scope **<scope>**. Information concerning the use and content of the references work package shall be prepared. (Refer to Figure G-1.)

G.5.2.4 Publication list **<publist>**. Individual paragraphs shall be prepared for each publication type. All related/referenced publications, with the exception of those publications that are currently unpublished, shall be listed. This list shall identify the publication by number **<name>/<extref>/<link>** and title **<title>** in alphanumeric sequence. If a publication is non-government, the source shall be given and all such publications shall be listed alphabetically by title. (Refer to Figure G-1.) If a LOAP exists, it may be referenced.

G.5.3 Maintenance Allocation Chart **(MAC) (Field level only)**. The MAC shall be prepared and include an introduction work package and a MAC work package. Non-Aviation MAC preparation instructions are discussed in G.5.3.1 and Aviation MAC preparation instructions are discussed in G.5.3.2.

G.5.3.1 Introduction for non-aviation Maintenance Allocation Chart (MAC) work package **<macintrowp>**.

G.5.3.1.1 Work package identification information **<wpidinfo>**. This information is required for this work package. (Refer to 4.9.6.2.)

G.5.3.1.2 Work package initial setup **<initial_setup>**. Initital setup is not required for this work package.

G.5.3.1.3 Introduction **<intro>**. The following text shall be prepared and included verbatim. (Refer to Figure G-2.)

> **"INTRODUCTION**
>
> **The Army Maintenance System MAC**
>
> This introduction provides a general explanation of the maintenance and repair functions.
>
> The MAC (immediately following this introduction) designates overall authority and responsibility for the performance of maintenance tasks on the identified end item or

component. The application of the maintenance tasks to the end item or component shall be consistent with the capacities and capabilities of the designated maintenance levels/classes, which are shown in the MAC in column (4). Column (4) is divided into two secondary columns. These columns indicate the maintenance levels of 'Field' and 'Sustainment'. Each maintenance level column is further divided into two sub-columns. These sub-columns identify the maintenance classes and are as follows:

1. Field level maintenance classes:
    a. Crew (operator) maintenance. This is the responsibility of a using organization to perform maintenance on its assigned equipment. It normally consists of inspecting, servicing, lubricating, adjusting, and replacing parts, minor assemblies, and subassemblies. Items with a "C" ("O" for joint service reporting) in the third position of the Source, Maintenance, and Recoverability (SMR) code may be replaced at the crew(operator) class. A code of "C" ("O" for joint service) in the fourth position of the SMR code indicates complete repair is authorized at the crew (operator) class.
    b. Maintainer maintenance. This is maintenance accomplished on a component, accessory, assembly, subassembly, plug-in unit, or other portion by field level units. This maintenance is performed either on the system or after it is removed. An "F" in the third position of the SMR code indicates replacement of assemblies, subassemblies, or other components is authorized at this level. An "F" in the fourth position of the SMR code indicates complete repair of the identified item is allowed at the Maintainer class. Items repaired at this class are normally returned to the user after maintenance is performed.
2. Sustainment level maintenance classes:
    a. Below depot sustainment. This is maintenance accomplished on a component, accessory, assembly, subassembly, plug-in unit, or other portion either on the system or after it is removed. The item subject to maintenance has normally been forwarded to a maintenance facility away from the field level supporting units. An "H" in the third position of the SMR code indicates replacement of assemblies, subassemblies, or other components is authorized at this class. An "H" appearing in the fourth position of the SMR code indicates complete repair is possible at this class. Items are normally returned to the supply system after maintenance is performed at this class.
    b. Depot. This is maintenance accomplished on a component, accessory, assembly, subassembly, plug-in unit, or other portion either on the system or after it is removed. Assets to be repaired at this class are normally returned to an Army Depot or authorized contractor facility. The replace function for this class of maintenance is indicated by the letter "D" or "K" appearing in the third position of the SMR code. A "D" or "K" appearing in the fourth position of the SMR code indicates complete repair is

possible at the depot sustainment maintenance level. Items are returned to the supply system after maintenance is performed at this class.

The tools and test equipment requirements table (immediately following the MAC) lists the tools and test equipment (both special tools and common tool sets) required for each maintenance task as referenced from the MAC.

The remarks table (immediately following the tools and test equipment requirements) contains supplemental instructions and explanatory notes for a particular maintenance task.

Maintenance tasks

Maintenance tasks are limited to and defined as follows:

1. Inspect. A function to determine the serviceability of an item by comparing its physical, mechanical, and/or electrical characteristics with established standards through examination (e.g., by sight, sound, or feel).
2. Test. To verify serviceability by measuring the mechanical, pneumatic, hydraulic, or electrical characteristics of an item and comparing those characteristics with prescribed standards, e.g., load testing of lift devices or hydrostatic testing of pressure hoses.
3. Service. Operations required periodically to keep an item in proper operating condition such as replenishing fuel, lubricants, chemical fluids, or gases.
4. Adjust. To maintain or regulate, within prescribed limits, by bringing into proper position, or by setting the operating characteristics to specified parameters.
5. Align. To adjust specified variable elements of an item to bring about optimum or desired performance.
6. Calibrate. To determine and cause corrections to be made or to be adjusted on instruments of test, measuring, and diagnostic equipment used in precision measurement. It consists of comparisons of two instruments, one of which is a certified standard of known accuracy, to detect and adjust any discrepancy in the accuracy of the instrument being compared.
7. Remove. The act of taking a sub-component off an asset to allow repair or replacement of that sub component, or to facilitate other maintenance.
8. Install. The act of placing, positioning, or otherwise locating a component or sub-component to make it part of a higher level end item. Install can be to install a new asset for the first time or reinstall an asset previously removed. The maintenance level/class allowed to perform an installation is determined by the third position in the SMR code.
9. Replace. To install a serviceable component in place of one that is unserviceable or a required time change asset. “Replace” is authorized by the MAC and the assigned maintenance class is shown as the third position code of the SMR code.
10. Repair. The application of maintenance actions, including fault location/troubleshooting, removal, installation, disassembly, assembly, or other maintenance actions to restore serviceability to an item by correcting specific damage, fault, malfunction, or failure in the item.

11. Paint. This is a function to prepare and apply coats of paint. When used with munitions, the paint is applied so the ammunition can be identified and protected.

NOTE

The following definitions are applicable to the "repair" maintenance task:

Fault location/troubleshooting. The process of investigating and detecting the cause of equipment malfunctioning; the act of isolating a fault within a system or Unit Under Test (UUT).

Actions. Welding, grinding, riveting, straightening, facing, machining, and/or resurfacing.

12. Overhaul. This is the maintenance effort (service/action) prescribed to restore an item to a completely serviceable/operational condition as required by maintenance standards in the appropriate technical publications. Overhaul is normally the highest degree of maintenance performed by the Army. Overhaul does not normally return an item to a like new condition.

13. Rebuild. This consists of those services/actions necessary for the restoration of unserviceable equipment to a like new condition in accordance with original manufacturing standards. Rebuild is the highest degree of material maintenance applied to Army equipment. The rebuild operation includes the act of returning to zero those age measurements (e.g., hours/miles) considered in classifying Army quipment/components.

14. Lubricate. The act of applying a material (e.g., oil or grease) to reduce friction and allow a component to operate in a more efficient manner.

15. Mark. The process of restoring obliterated identification on an asset.

16. Pack. To place an item into a container for either storage or shipment after service and other maintenance operations have been completed.

17. Unpack. The act or removing an asset from a storage or shipping container in preparation to perform further maintenance (e.g., repair or install).

18. Preserve. The action required to treat systems and equipment whether installed or stored, to ensure a serviceable condition.

19. Prepare for use. Those steps required to make an asset ready for other maintenance (e.g., remove preservatives, lubricate, etc).

20. Assemble. The step-by step instructions to join the component pieces of an asset together to make a complete serviceable asset.

21. Disassemble. The step-by-step breakdown (taking apart) of a spare/functional group coded item to the level of its least component, that is assigned an SMR code for the level of maintenance under consideration (i.e., identified as maintenance significant).

22. Clean. Step-by-step instructions on how to remove dirt, corrosion or other contaminants from equipment.

23. Non destructive inspection. Step-by-step instructions on preparation and accomplishment of inspections which do not destroy or damage the equipment.
24. Radio interference suppression. Step-by-step instructions to ensure installed equipment, either communication or other electronics, does not interfere with installed communication equipment.
25. Place in service. Step-by-step instructions required to place an item into service that are not covered in the service upon receipt work package.
26. Towing. The step-by-step instructions to connect one vehicle to another for the purpose of having one vehicle moved through the motive power of the other vehicle.
27. Jacking. The step-by-step instructions to mechanically raise or lift a vehicle to facilitate maintenance on the vehicle.
28. Parking. Step-by-step instructions to safely place a vehicle in a lot, ramp area or other designated location.
29. Mooring. Step-by-step instructions to secure a vehicle by chains, ropes or other means to protect the vehicle from environmental conditions or secure for transportation.
30. Covering. Step-by-step instructions to place a protective wrapping over a vehicle to protect it from environmental conditions or to hide (e.g., camouflage) it.
31. Hoisting. Step-by-step instructions to allow a vehicle to be raised by cables or ropes through attaching points.
32. Sling loading. Step-by-step instructions to place a sling around a vehicle to allow it to be raised.
33. External power. Step-by-step instructions on how to apply electrical power from any authorized power source (e.g., external generator or facility power).
34. Preparation for storage or shipment. Step-by-step instructions for preparing the equipment for placement into administrative storage or for special transportation requirements.
35. Arm. Detailed instructions on activating munitions prior to use.
36. Load. This may be one of two tasks:
    a. For transportation, the act of placing assets onto a transportation medium (e.g., pallet, truck, container).
    b. For weapons/weapons systems, the act of placing munitions into the weapon/weapons system.
37. Unload. This may be one of two tasks:
    a. For transportation, the act of removing assets from a transportation medium (e.g., pallet, truck, container).

b. For weapons/weapons systems, the act of removing munitions from the weapon/weapons system.

38. Software maintenance. Step-by-step instructions for software maintenance (e.g., installing, un-installing, etc.).

Explanation of Columns in the MAC

Column (1) Group Number. Column (1) lists Functional Group Code (FGC) numbers, the purpose of which is to identify maintenance significant components, assemblies, subassemblies, and modules with the Next Higher Assembly (NHA).

Column (2) Component/Assembly. Column (2) contains the item names of components, assemblies, subassemblies, and modules for which maintenance is authorized.

Column (3) Maintenance task. Column (3) lists the functions to be performed on the item listed in column (2). (For a detailed explanation of these functions, refer to "Maintenance tasks" outlined previously.)

Column (4) Maintenance Level. Column (4) specifies each level/class of maintenance authorized to perform each function listed in column (3), by indicating work time required in the appropriate sub-column. This work time figure represents the active time required to perform that maintenance task at the indicated level/classs of maintenance. If the number or complexity of the tasks within the listed maintenance task varies at different maintenance classes, appropriate work time figures are to be shown for each class.

The work time figure represents the average time required to perform the prescribed task (assembly, subassembly, component, module, end item, or system) on the item under typical operating conditions for that maintenance level/class. This time includes preparation time (including any necessary disassembly/assembly time), troubleshooting/fault location time, and quality assurance time in addition to the time required to perform the specific tasks identified for the maintenance tasks authorized in the MAC. The symbol designations for the various maintenance levels and classes are as follows:

Field:

C Crew maintenance

F Maintainer maintenance

Sustainment:

L Specialized Repair Activity (SRA)

H Below depot maintenance

D Depot maintenance

NOTE

The "L" maintenance class is not included in column (4) of the MAC. Functions to this class of maintenance are identified by work time figure in the "H" column of column (4), and an associated reference code is

used in the REMARKS column (6). This code is keyed to the remarks and the SRA complete repair application is explained there.

Column (5) Tools and Equipment Reference Code. Column (5) specifies, by a number code, those common tool sets (not individual tools), common Test, Measurement and Diagnostic Equipment (TMDE), and special tools, special TMDE and special support equipment required to perform the designated function. Codes are keyed to the entries in the tools and test equipment table.

Column (6) Remarks Code. When applicable, Column (6) contains a letter code, in alphabetical order, which is keyed to the remarks table entries.

Explanation of Columns in the Tools and Test Equipment Requirements

Column (1) Tool or Test Equipment Reference Code. The tool or test equipment reference code correlates with a code used in column (5) of the MAC.

Column (2) Maintenance Level. The lowest class of maintenance authorized to use the tool or test equipment.

Column (3) Nomenclature. Name or identification of the tool or test equipment.

Column (4) National Stock Number (NSN). The NSN of the tool or test equipment.

Column (5) Tool Number. The manufacturer's part number.

Explanation of Columns in the Remarks

Column (1) Remarks Code. The code recorded in column (6) of the MAC.

Column (2) Remarks. This column lists information pertinent to the maintenance task being performed as indicated in the MAC."

G.5.3.2 Introduction for aviation Maintenance Allocation Chart (MAC) work package **`<macintrowp>`**.

G.5.3.2.1 Work package identification information **`<wpidinfo>`**. This information is required for this work package. (Refer to 4.9.6.1.)

G.5.3.2.2 Work package initial setup **`<initial_setup>`**. Initital setup is not required for this work package.

G.5.3.2.3 Introduction **`<intro>`**. The following text shall be prepared and included verbatim. (Refer to Figure G-3.)

"**INTRODUCTION**

Aviation Maintenance Allocation Chart

The MAC (immediately following the introduction) designates overall authority and responsibility for the performance of maintenance tasks on the identified end item or component. The application of the maintenance tasks to the end item or component shall be consistent with the capacities and capabilities of the designated maintenance level which are shown on the MAC as:

Field - includes two columns:

"O" which corresponds to Aviation Maintenance Company (AMC) and

"F" which corresponds to Aviation Support Battalion (ASB)

Sustainment - includes two columns:

"L" which corresponds to Theater Aviation Sustainment Maintenance Group (TASMG) and other organizations that have National Maintenance Program certification and

"D" which corresponds to Depot

The maintenance to be performed is described as follows:

1. Field maintenance activities:
   a. Aviation Maintenance Company (AMC). The aviation maintenance company is the lowest class of aviation field maintenance. The AMC provides direct support to aircraft operations, performing functions of aircraft servicing (daily, preflight, post-flight inspections, refuel, arming), Battle Damage Assessment and Repair (BDAR), and repair or replacement actions as specified in the MAC.
   b. Aviation Support Company (ASC) in the Aviation Support Battalion (ASB). The ASB performs the following types of maintenance:
   (1) Off equipment repair of LRUs or other components within the limits prescribed in the MAC.
   (2) Inspections beyond the capability of the AMC.
   (3) BDAR as required.
   (4) Provide support to AMC personnel during peak workload periods as determined by local policy.
2. Sustainment maintenance activities:
   a. Theater Aviation Sustainment Maintenance Group (TASMG). The TASMG performs the following:
   (1) Provides support to CONUS deploying forces
   (2) Provides support to OCONUS deployed forces (as the Theater Aviation Support Maintenance Group (TASMG).
   (3) Expands aviation maintenance capabilities of CONUS depots
   (4) Classifies and inspects aviation stocks and components.
   (5) Performs maintenance actions beyond the scope of the AMC or ASB within the limits prescribed in the MAC.
   (6) Augments ASB and AMC maintenance tasks.
   b. Depot. This is maintenance accomplished on a component, accessory, assembly, subassembly, plug-in unit, or other portion either on the system or after it is removed. Assets to be repaired at this class are normally returned to an Army Depot or authorized contractor facility. The replace function for this class of maintenance is indicated by the letter "D" or "K" appearing in the third position of the Source, Maintenance, and Recoverability (SMR) code. A "D" or "K" appearing in the fourth position of the SMR code indicates complete repair is possible at the

depot sustainment maintenance level. Items are returned to the supply system after maintenance is performed at this level/class.

Use of the MAC

NOTE

Approved item names are used throughout this MAC. Generic terms/nomenclature (if any) are expressed in parentheses and are not to be considered as official terminology.

The MAC assigns maintenance tasks to the lowest level/class of maintenance.

Maintenance tasks

Maintenance tasks are limited to and defined as follows:

1. Inspect. A function to determine the serviceability of an item by comparing its physical, mechanical, and/or electrical characteristics with established standards through examination (e.g., by sight, sound, or feel).
2. Test. To verify serviceability by measuring the mechanical, pneumatic, hydraulic, or electrical characteristics of an item and comparing those characteristics with prescribed standards, e.g., load testing of lift devices or hydrostatic testing of pressure hoses.
3. Service. Operations required periodically to keep an item in proper operating condition such as replenishing fuel, lubricants, chemical fluids, or gases.
4. Adjust. To maintain or regulate, within prescribed limits, by bringing into proper position, or by setting the operating characteristics to specified parameters.
5. Align. To adjust specified variable elements of an item to bring about optimum or desired performance.
6. Calibrate. To determine and cause corrections to be made or to be adjusted on instruments of test, measuring, and diagnostic equipment used in precision measurement. It consists of comparisons of two instruments, one of which is a certified standard of known accuracy, to detect and adjust any discrepancy in the accuracy of the instrument being compared.
7. Remove. The act of taking a sub-component off an asset to allow repair or replacement of that sub component, or to facilitate other maintenance.
8. Install. The act of placing, positioning, or otherwise locating a component or sub-component to make it part of a higher level end item. Install can be to install a new asset for the first time or reinstall an asset previously removed. The maintenance class allowed to perform an installation is determined by the third position in the SMR code.
9. Replace. To install a serviceable component in place of one that is unserviceable or a required time change asset. “Replace” is authorized by the MAC and the assigned maintenance class is shown as the third position code of the SMR code.
10. Repair. The application of maintenance actions, including fault location/troubleshooting, removal, installation, disassembly, assembly, or other maintenance actions to restore serviceability to an item by correcting specific damage, fault, malfunction, or failure in the item.

11. Paint. This is a function to prepare and apply coats of paint. When used with munitions, the paint is applied so the ammunition can be identified and protected.

NOTE

The following definitions are applicable to the "repair" maintenance task:

Fault location/troubleshooting. The process of investigating and detecting the cause of equipment malfunctioning; the act of isolating a fault within a system or Unit Under Test (UUT).

Actions. Welding, grinding, riveting, straightening, facing, machining, and/or resurfacing.

12. Overhaul. This is the maintenance effort (service/action) prescribed to restore an item to a completely serviceable/operational condition as required by maintenance standards in the appropriate technical publications. Overhaul is normally the highest degree of maintenance performed by the Army. Overhaul does not normally return an item to a like new condition.

13. Rebuild. This consists of those services/actions necessary for the restoration of unserviceable equipment to a like new condition in accordance with original manufacturing standards. Rebuild is the highest degree of material maintenance applied to Army equipment. The rebuild operation includes the act of returning to zero those age measurements (e.g., hours/miles) considered in classifying Army equipment/components.

14. Lubricate. The act of applying a material (e.g., oil or grease) to reduce friction and allow a component to operate in a more efficient manner.

15. Mark. The process of restoring obliterated identification on an asset.

16. Pack. To place an item into a container for either storage or shipment after service and other maintenance operations have been completed.

17. Unpack. The act or removing an asset from a storage or shipping container in preparation to perform further maintenance (e.g., repair or install).

18. Preserve. The action required to treat systems and equipment whether installed or stored, to ensure a serviceable condition.

19. Prepare for use. Those steps required to make an asset ready for maintenance (e.g., remove preservatives, lubricate, etc).

20. Assemble. The step-by step instructions to join the component pieces of an asset together to make a complete serviceable asset.

21. Disassemble. The step-by-step breakdown (taking apart) of a spare/functional group coded item to the level of its least component, that is assigned an SMR code for the level of maintenance under consideration (i.e., identified as maintenance significant).

22. Clean. Step-by-step instructions on how to remove dirt, corrosion or other contaminants from equipment.
23. Non destructive inspection. Step-by-step instructions on preparation and accomplishment of inspections which do not destroy or damage the equipment.
24. Radio interference suppression. Step-by-step instructions to ensure installed equipment, either communication or other electronics, does not interfere with installed communication equipment.
25. Place in service. Step-by-step instructions required to place an item into service that are not covered in the service upon receipt work package.
26. Towing. The step-by-step instructions to connect one vehicle to another for the purpose of having one vehicle moved through the motive power of the other vehicle.
27. Jacking. The step-by-step instructions to mechanically raise or lift a vehicle to facilitate maintenance on the vehicle.
28. Parking. Step-by-step instructions to safely place a vehicle in a lot, ramp area, or other designated location.
29. Mooring. Step-by-step instructions to secure a vehicle by chains, ropes, or other means to protect the vehicle from environmental conditions or secure for transportation.
30. Covering. Step-by-step instructions to place a protective wrapping over a vehicle to protect it from environmental conditions or to hide (e.g., camouflage) it.
31. Hoisting. Step-by-step instructions to allow a vehicle to be raised by cables or ropes through attaching points.
32. Sling loading. Step-by-step instructions to place a sling around a vehicle to allow it to be raised.
33. External power. Step-by-step instructions on how to apply electrical power from any authorized power source (e.g., external generator or facility power).
34. Preparation for storage or shipment. Those procedures necessary to prepare an item to be stored for an extended period or shipped.
35. Arm. Detailed instructions on activating munitions prior to use.
36. Load. This may be one of two tasks.
    a. For transportation, the act of placing assets onto a transportation medium (e.g., pallet, truck, container).
    b. For weapons/weapon systems, the act of placing munitions into the weapon/weapon system.

37. Unload. This may be one of two tasks:
    a. For transportation, the act of removing assets from a transportation medium (e.g., pallet, truck, container).
    b. For weapons/weapon systems, the act of removing munitions from the weapon/weapon system.
38. Software maintenance. Step-by-step instructions for software maintenance (e.g., installing, un-installing, etc.).

Explanation of Columns in the MAC

Column (1) Group Number. Column (1) lists Functional Group Code (FGC) numbers, the purpose of which is to identify maintenance significant components, assemblies, subassemblies, and modules with the Next Higher Assembly (NHA).

Column (2) Component/Assembly. Column (2) contains the item names of components, assemblies, subassemblies, and modules for which maintenance is authorized.

Column (3) Maintenance task. Column (3) lists the functions to be performed on the item listed in column (2). (For a detailed explanation of these functions refer to "Maintenance tasks" outlined above).

Column (4) Maintenance Level. Column (4) specifies each level/class of maintenance authorized to perform each function listed in column (3), by indicating work time required in the appropriate sub-column. This work time figure represents the active time required to perform that maintenance task at the indicated level of maintenance. If the number or complexity of the tasks within the listed maintenance task varies at different maintenance levels/classes, appropriate work time figures are to be shown for each level/class.

The man-hours represents the average time required to perform the prescribed task (assembly, subassembly, component, module, end item, or system) on the item under typical operating conditions for that maintenance level/class. This time includes preparation time (including any necessary disassembly/assembly time), troubleshooting/fault location time, and quality assurance time in addition to the time required to perform the specific tasks identified for the maintenance tasks authorized in the MAC. The symbol designations for the maintenance levels/classes are as follows:

<u>Field:</u>

O Aviation Maintenance Company

F Aviation Support Battalion

<u>Sustainment:</u>

L Theater Aviation Support Maintenance Group

D Depot

Column (5) Tools and Equipment Reference Code. Column (5) specifies, by a number code, those common tool sets (not individual tools), common TMDE, and special tools, special TMDE, and special support equipment required to perform the designated function.

Column (6) Remarks Code. When applicable, Column (6) contains a letter code, in alphabetical order, which is keyed to the remarks.

Explanation of Entries in the Tools and Test Equipment Requirements

Column (1) Tool or Test Equipment Reference Code. The tool or test equipment reference code correlates with a code used in column (5) of the MAC.

Column (2) Maintenance Level. The lowest class of maintenance authorized to use the tool or test equipment.

Column (3) Nomenclature. Name or identification of the tool or test equipment.

Column (4) National Stock Number (NSN). The NSN of the tool or test equipment.

Column (5) Tool Number. The manufacturer's part number.

Explanation of Entries in the Remarks

Column (1) Remarks Code. The code recorded in remarks code entry of the MAC.

Column (2) Remarks. This entry lists information pertinent to the maintenance task being performed as indicated in the MAC."

G.5.3.3 Maintenance Allocation Chart (MAC) work package **<macwp>**. This work package shall be prepared in Functional Group Code (FGC) sequence to consolidate and identify those groups on the list which involve identified maintenance tasks. The MAC shall be prepared according to the approved source data provided by the acquiring activity.

G.5.3.3.1 Work package identification information **<wpidinfo>**. Work package identification information is required for this work package. (Refer to 4.9.6.2.)

G.5.3.3.2 Work package initial setup **<initial_setup>**. Initital setup is not required for this work package.

G.5.3.3.3 Maintenance Allocation Chart (MAC) entries.

a. The basic entries in the MAC shall be a list of functional groups applicable to the end item which requires maintenance. The term functional group applies to reparable assemblies and subassemblies; e.g., spares; but not to repair parts. The end item group shall be numbered "00," or its equivalent "AA."
b. Entries shall be item names (a basic name and a noun or phrase modifier; e.g., transformer, pulse, low power) and, where applicable, type designators, without stock or part numbers (P/Ns) if possible, in order to minimize need for subsequent change; however, entries shall contain positive identification. Parts that are not subject to maintenance shall not be listed in the MAC.
c. All item names of MAC functional groups shall be the official nomenclature. (Refer to 4.9.23.2.) Reverse word order shall be used in the MAC.
d. The maintenance code entered in the third position of the SMR code in the parts information shall be used to identify the lowest category of maintenance that is authorized to remove, replace, and use the spare or repair part. SMR codes are further defined in Appendix F.
e. If the maintenance task is a replace function only for a repair part, the repair part shall not be listed in the MAC, unless not listing the repair part would result in omission of the

Next Higher Assembly (NHA) group number; in which case, the part shall be listed in order to list the NHA functional group number.

f. All items in the MAC shall specify the maintenance class(es) to which a function is authorized.

g. Exception is authorized to ammunition MACs to permit use of maintenance task headings that better describe or identify ammunition peculiar maintenance tasks. The headings used and their definitions shall be included in the appropriate ammunition TM(s).

G.5.3.3.4 Maintenance Allocation Chart (MAC) format. The non-aviation MAC **<mac>** (**standard information**) and aviation MAC **<avmac>** (**standard information**) shall be prepared as follows. (Refer to MIL-HDBK-1222 for examples of MAC **standard information**.)

a. For an explanation of data to be listed in entries of the MAC, refer to the introduction information presented in G.5.3.1 or G.5.3.2 as applicable.

b. The group number **<groupno>** shall be entered, the nomenclature of the spare (component/assembly) **<compassem>** shall be entered, and the maintenance task **<maintfunc>** shall be listed in the MAC.

c. The maintenance level entry shall be as follows:

(1) Column 4 of the non-aviation MAC shall be divided into two main headings, one for field and one for sustainment. Beneath the main headings, there shall be four subheadings **<maintclass-2lvl>.** Crew **<c>** and maintainer **<f>** shall be under field and below depot **<h>** and depot **<d>** shall be under sustainment. For joint service manuals, an asterisk shall be placed next to the "C" and the following note shall follow the table to explain the asterisk:

*NOTE

This is a joint service manual. While Army uses a "C," other service may use an "O" in this column."

(2) Column 4 of the aviation MAC shall be divided into two main headings, one for field and one for sustainment. Beneath the main headings, there shall be four subheadings **<avmaintclass-2lvl>**. Aviation maintenance company <**o**> and aviation support battalion <**f**> shall be under field and theater aviation sustainment maintenance group <**l**> and depot <**d**> shall be under sustainment.

d. A work time figure must appear in the entry for the maintenance class authorized to perform the maintenance listed in the maintenance task.

e. Reference numbers for all required tools and test equipment **<terefs>** shall be listed in the Tools and Equipment Reference Code entry of the MAC. These reference numbers shall correspond to the appropriate tools/test equipment listed in the tools and test equipment table.

f. Reference letters for applicable remarks **<remarkrefs>** shall be listed in the Remarks Code entry of the MAC. These reference letters shall correspond to the appropriate remarks listed in the remarks table.

G.5.3.4 Tools and test equipment requirements **<tereqtab>**. A tabular list (**standard information**) of all tools and test equipment, both special and common, required to maintain the equipment shall be prepared, as applicable. Common tools shall not be included on this list when

they are part of an existing set, kit, or outfit authorized to the intended user; however, the authorized set, kit, or outfit which contains the prescribed common tools shall be listed. (Refer to MIL-HDBK-1222 for example of tools and test equipment **standard information**.)

G.5.3.5 Remarks **<remarktab>**. Remarks **(standard information)** pertinent to maintenance tasks shall be prepared as applicable. (Refer to MIL-HDBK-1222 for example of remarks **standard information**.)

G.5.4 Components of End Item **(COEI) and Basic Issue Items (BII) lists work package (crew (operator) only) <coeibiiwp>**. This work package shall be prepared as an inventory for the equipment to ensure safe and efficient operation. The format of the COEI and BII shall be based on the number of items and usability. When only a few items are listed, the illustrations shall be placed above the tabular listing (Method A). When there are numerous items, the illustrations may be included within the tabular listing for better usability (Method B). The data described in G.5.4.1 through G.5.4.5 shall be prepared. (Refer to MIL-HDBK-1222 or example of COEI and BII **standard information.**)

G.5.4.1 Work package identification information **<wpidinfo>**. Work package identification information is required for this work package. (Refer to 4.9.6.2.)

G.5.4.2 Work package initial setup **<initial_setup>**. Initital setup is not required for this work package.

G.5.4.3 Introduction for Components of End Item (COEI) and Basic Issue Items (BII) lists work package **<intro>**. The following introduction shall be prepared and included verbatim. (Refer to Figure G-4.)

"**COMPONENTS OF END ITEM (COEI) AND BASIC ISSUE ITEMS (BII) LISTS**

INTRODUCTION

Scope

This work package lists COEI and BII for the (*insert the short end item name*) to help you inventory items for safe and efficient operation of the equipment.

General

The COEI and BII information is divided into the following lists:

Components of End Item (COEI). This list is for information purposes only and is not authority to requisition replacements. These items are part of the (*enter name of end item*). As part of the end item, these items must be with the end item whenever it is issued or transferred between property accounts. Items of COEI are removed and separately packaged for transportation or shipment only when necessary. Illustrations are furnished to help you find and identify the items.

Basic Issue Items (BII). These essential items are required to place the (*enter name of end item*) in operation, operate it, and to do emergency repairs. Although shipped separately packaged, BII must be with the (*enter name of end item*) during operation and when it is transferred between property accounts. Listing these items is your authority to request/requisition them for replacement based on authorization of the end

item by the Table of Organization and Equipment/Modified Table of Organization and Equipment (TOE/MTOE). Illustrations are furnished to help you find and identify the items.

Explanation of Entries in the COEI List and BII List

Select method A text.

"Illus Number. Gives you the number of the item illustrated.

National Stock Number (NSN). Identifies the stock number of the item to be used for requisitioning purposes.

Description, Part Number/Commercial and Government Entity Code (CAGEC). Identifies the Federal item name (in all capital letters) followed by a minimum description when needed. The stowage location of COEI and BII is also included in this entry. The last line below the description is the CAGEC (in parentheses) and the part number.

Usable On Code. When applicable, gives you a code if the item you need is not the same for different models of equipment. (*Add the following only as applicable. Replace Xs with appropriate codes and model numbers.*) These codes are identified below:

Code	Used on
XXX	*Model XXX*
XXX	*Model XXXX*
XXX	*Model XXXXX*

U/I. Unit of Issue (U/I) indicates the physical measurement or count of the item as issued per the National Stock Number entry.

Qty Rqr. Indicates the quantity required."

OR

Select method B text.

"Item Number. Gives you the reference number of the item listed.

National Stock Number and Illustration. Identifies the stock number of the item to be used for requisitioning purposes and provides an illustration of the item.

Description, Part Number/ Commercial and Government Entity Code (CAGEC). Identifies the Federal item name (in all capital letters) followed by a minimum description when needed. The stowage location of COEI and BII is also included in this entry. The last line below the description is the CAGEC (in parentheses) and the part number.

Usable On Code. When applicable, gives you a code if the item you need is not the same for different models of equipment. (*Add the following only as applicable. Replace Xs with appropriate codes and model numbers.*) These codes are identified below:

Code	Used on
XXX	*Model XXX*
XXX	*Model XXXX*
XXX	*Model XXXXX*

U/I. Unit of Issue (U/I) indicates the physical measurement or count of the item as issued per the National Stock Number entry.

Qty Rqr. Indicates the quantity required."

G.5.4.4 Components Of End Item (COEI) list **<coei>**. This list shall be prepared as an illustrated list of components of the end item (spare/repair parts that are removed from the major end item and separately packaged or stowed for transportation or movement; includes on-board spares). The illustrations shall be placed above the list (Method A) or within the list (Method B). (Refer to MIL-HDBK-1222 for an example arrangement for the COEI illustrations and list for Method A and Method B.)

G.5.4.4.1 List **<coeitab>**. The COEI list **(standard information)** shall include the following information and basic content applicable to the specific equipment. The description **<dcpno>** of each item shall consist of the approved Federal item name **<name>**, followed by a short description **<desc>** when needed. Items shall be listed alphabetically. The part number **<partno>** shall be located below the item. The CAGEC **<cageno>** shall follow the part number and in parentheses. The stowage location of COEI shall also be included with the description. When more than one model or configuration is applicable and Usable On Codes (UOCs) **<uoc>** are assigned, the UOC shall appear in a separate entry adjacent to the description entry. When on-board spares **<on-board-spares>** apply, there shall be a break in the text of the list and a new heading ON-BOARD SPARES shall be used. A list of the on-board spares shall appear in the same format as required for the basic COEI list. (Refer to MIL-HDBK-1222 for example of **standard information** for COEI list.)

G.5.4.5 Basic Issue Items (BII) list **<bii>**. This tabular list **(standard information)** shall be prepared in the same format and include similar content (tailored to the applicable BII) as required for the COEI list. The stowage location of BII shall also be included with the description entry. (Refer to G.5.4.1.) As noted in AR 25-30 "Ensure that equipment publications for operators are listed in the basic issue items list."

G.5.5 Additional Authorization List **(AAL) work package (crew (operator) only) <aalwp>**. This work package shall be prepared as directed by the acquiring activity and shall list all AAL items (i.e., items not issued with the end item; not listed on the end item engineering drawing as part of the end item, NSN configuration; not required to be turned in with the end item; separately authorized by MTOE, TDA, CTA, or JTA; and provided for information only). The data described in G.5.5.1 and G.5.5.4 shall be prepared.

G.5.5.1 Work package identification information **<wpidinfo>**. Work package identification information is required for this work package. (Refer to 4.9.6.2.)

G.5.5.2 Work package initial setup **<initial_setup>**. Initital setup is not required for this work package.

G.5.5.3 Introduction **<intro>**. The following introduction (text within the quotation marks) shall be prepared and included verbatim. (Refer also to Figure G-5.)

"**ADDITIONAL AUTHORIZATION LIST (AAL)**

INTRODUCTION

Scope

This work package lists additional items you are authorized for the support of the (*enter short item name*).

General

This list identifies items that do not have to accompany the (*enter short item name*) and that do not have to be turned in with it. These items are all authorized to you by CTA, MTOE, TDA, or JTA.

Explanation of Entries in the AAL

National Stock Number (NSN). Identifies the stock number of the item to be used for requisitioning purposes.

Description, Part Number/Commercial and Government Entity Code (CAGEC). Identifies the Federal item name (in all capital letters) followed by a minimum description when needed. The last line below the description is the part number and the CAGEC (in parentheses).

Usable On Code. When applicable, gives you a code if the item you need is not the same for different models of equipment. (*Add the following only as applicable. Replace Xs with appropriate codes and model numbers.*) These codes are identified below:

Code	Used on
XXX	*Model XXX*
XXX	*Model XXXX*
XXX	*Model XXXXX*

U/I. Unit of Issue (U/I) indicates the physical measurement or count of the item as issued per the National Stock Number.

Qty Recm. Indicates the quantity recommended."

G.5.5.4 Additional Authorization List (AAL) **<aal>**. A tabular list **(standard information)** of all additional authorized items shall be prepared. The entries and subsequent information for this list shall be the same as the COEI and BII lists except the ILLUS NUMBER entry required for the COEI and BII lists shall not apply since no illustrations are used, and the QTY entry shall be QTY RECM (quantity recommended). The items shall be listed alphabetically. (Refer to MIL-HDBK-1222 for examples of **standard information** for AAL list.)

G.5.6 Expendable and durable items list work package **<explistwp>**. This work package shall be prepared to provide the TM user with a list of all expendable and durable items called out in the TM text which are necessary to operate and/or maintain the equipment. The following data described in G.5.6.1 through G.5.6.4 shall be included.

G.5.6.1 Work package identification information **<wpidinfo>**. Work package identification information is required for this work package. (Refer to 4.9.6.2.)

G.5.6.2 Work package initial setup **<initial_setup>**. Initital setup is not required for this work package.

G.5.6.3 Introduction for expendable and durable items list work package **<intro>**. The following introduction (text within the quotation marks) shall be prepared and included verbatim. (Refer also to Figure G-6.)

"**EXPENDABLE AND DURABLE ITEMS LIST**

INTRODUCTION

Scope

This work package lists expendable and durable items that you will need to operate and maintain the (*enter equipment/end item name*). This list is for information only and is not authority to requisition the listed items. These items are authorized to you by CTA 50-970, Expendable/Durable Items (Except Medical, Class V Repair Parts, and Heraldic Items), CTA 50-909, Field and Garrison Furnishings and Equipment or CTA 8-100, Army Medical Department Expendable/Durable Items.

Explanation of Entries in the Expendable/Durable Items List

Item No. This number is assigned to the entry in the list and is referenced in the narrative instructions to identify the item (e.g., Use brake fluid (Expendable/Durable Items List)).

Level. This entry identifies the lowest class of maintenance that requires the listed item (*include as applicable: C = Crew, O = AMC, F = Maintainer or ASB, H = Below Depot Sustainment or TASMG, D = Depot*).

National Stock Number (NSN). This is the NSN assigned to the item which you can use to requisition it.

Item Name, Description, Part Number/(CAGEC). This column provides the other information you need to identify the item. The last line below the description is the part number and the Commercial and Government Entity Code (CAGEC) (in parentheses).

U/I. Unit of Issue (U/I) code shows the physical measurement or count of an item, such as gallon, dozen, gross, etc."

G.5.6.4 Expendable and durable items list **<explist>**. This list **(standard information)** shall be prepared in tabular format and include the following information:

a. Item number
b. Lowest maintenance class
c. National Stock Number (NSN)
d. Item name or nomenclature
e. If applicable, a description
f. Part number
g. Commercial and Government Entity Code (CAGEC)
h. Unit of Issue (U/I)

No illustrations shall be prepared for these items. Items appearing in the tabular list shall appear in alphabetical sequence by item name. Items to be listed shall be those approved by the acquiring activity. (Refer to MIL-HDBK-1222 for expendable and durable items **standard information**.)

G.5.7 Tool identification list work package (**Field level and above**) **<toolidwp>**. This work package shall be prepared as directed by acquiring activity and shall include a list of the tools authorized to the classes of maintenance covered in the narrative portion of the TM and as referenced by the initial setups. For DMWRs/NMWRs, a list of all special tools and TMDE not contained in lower level TMs or in the parts information and required to perform the procedures in the DMWR/NMWR shall be included. This list shall include any special inspection equipment used only for the item that the DMWR/NMWR covers. The following data described in G.5.7.1 through G.5.7.4 shall be included.

G.5.7.1 Work package identification information **<wpidinfo>**. Work package identification information is required for this work package. (Refer to 4.9.6.2.)

G.5.7.2 Work package initial setup **<initial_setup>**. Initital setup is not required for this work package.

G.5.7.3 Introduction for tool identification list work package **<intro>**. The following introduction (text within the quotation marks) shall be prepared and included verbatim. (Refer also to Figure G-7.)

"**TOOL IDENTIFICATION LIST**
INTRODUCTION

Scope

This work package lists all common tools and supplements and special tools/fixtures needed to maintain the (*insert equipment name*)."

OR

"This work package lists special tools and equipment needed to maintain the (*insert equipment name*)." (**DMWRs/NMWRs only**)

"**Explanation of Entries in the Tool Identification List**

Item No. This number is assigned to the entry in the list and is referenced in the initial setup to identify the item (e.g., Extractor (Tool Identification List, item 32)).

Item Name. This column lists the item by noun nomenclature and other descriptive features (e.g., Gauge, belt tension).

National Stock Number (NSN). This is the National Stock Number (NSN) assigned to the item; use it to requisition the item.

Part Number/(CAGEC). Indicates the primary number used by the manufacturer (individual, company, firm, corporation, or Government activity) which controls the design and characteristics of the item by means of its engineering drawings, specifications, standards, and inspection requirements to identify an item or range of items. The manufacturer's Commercial and Government Entity Code (CAGEC) is also included.

Reference. This column identifies the authorizing supply catalog or parts information for items listed in this work package." **(Not required for DMWRs/NMWRs)**

G.5.7.4 Tool identification list **<toolidlist>**. Applicable information for this list **(standard information)** shall be prepared and include the following information:

a. Item number
b. Item name or nomenclature
c. National Stock Number (NSN)
d. Part Number
e. Commercial and Government Entity Code (CAGEC)
f. Reference

Item names shall be in alphabetical order. A lead-in paragraph to the tool identification list may be included. (Refer to MIL-HDBK-1222 for tool identification **standard information**.)

G.5.8 Mandatory replacement parts work package (**Field level and above**) **<mrplwp>**. This work package shall be prepared as directed by acquiring activity and shall list all mandatory replacement parts referenced in the task initial setups and procedures. For DMWRs/NMWRs, a mandatory replacement parts list (consisting of all items that must be replaced during the repair and overhaul of the equipment) whether or not they have been disturbed shall be developed. When an item or component is not disassembled based on preshop analysis (PSA), the item will not be disassembled for the sole purpose to add a mandatory part. All items that must be replaced during overhaul or repair procedures (based on usage intervals such as miles, time, or rounds fired, or replaced on a time between overhaul (TBO) interval) shall be included in the parts list table. A reference shall be made to the TM that covers the equipment. The following data described in G.5.8.1 through G.5.8.4 shall be included.

G.5.8.1 Work package identification information **<wpidinfo>**. Work package identification information is required for this work package. (Refer to 4.9.6.2.)

G.5.8.2 Work package initial setup **<initial_setup>**. Initital setup is not required for this work package.

G.5.8.3 Introduction for mandatory replacement parts work package **<intro>**. This work package shall include an introduction.

G.5.8.4 Mandatory replacement parts list **<mprl>**. This work package shall include a tabular list **<mrpl>** **(standard information)** of mandatory replacement parts. Mandatory replacement parts shall be listed (standard column headings in quotes) by item number **<itemno>** "Item No.," part number **<partno>** and CAGEC **<cageno>** "Part Number/(CAGEC)," NSN **<nsn>** "National Stock Number (NSN)," nomenclature **<name>** "Nomenclature," and quantity **<qty>** "Qty." Items shall be listed in alphanumeric order by part number (refer to MIL-HDBK-1222 for mandatory replacement parts **standard information**).

G.5.9 Critical safety items (CSIs) work package **<csi.wp>**. When specified by acquiring activity, this work package shall be developed. The following data described in G.5.9.1 through G.5.9.3 shall be included in the work package.

G.5.9.1 Work package identification information **<wpidinfo>**. Work package identification information is required for this work package. (Refer to 4.9.6.2.)

G.5.9.2 Work package initial setup **<initial_setup>**. Initital setup is not required for this work package.

G.5.9.3 Critical Safety Items (CSI) (Flight Safety Critical Aircraft Parts (FSCAP)) **<csi>**. This work package shall be prepared on any aviation system that contains a CSI (FSCAP). All CSIs (FSCAPs) shall be listed (standard column headings are shown in quotes) by their nomenclature **<name>** "Nomenclature," part number **<partno>** and Commercial and Government Entity Code CAGEC **<cageno>** "Part Number/(CAGEC)" and critical characteristic **<desc>** "Critical Characteristic."

G.5.10 Support items work package **<supitemwp>**. This work package shall be prepared as directed by acquiring activity and shall combine any the supporting lists described in G.5.4 through G.5.9, as applicable. This work package shall be developed when the data contained in these supporting lists are minimal and creating a separate work package for each list is unnecessary.

G.5.10.1 Work package identification information **<wpidinfo>**. Work package identification information is required for this work package. (Refer to 4.9.6.2.)

G.5.10.2 Work package initial setup **<initial_setup>**. Initital setup is not required for this work package.

G.5.10.3 Introduction **<intro>**. The work package may include an introduction to the information.

G.5.10.4 Support items lists. The work package shall include the applicable lists described in G.5.4 through G.5.9.

G.5.11 Additional work packages **<genwp>**. When specified by the acquiring the activity additional work packages shall be prepared when the work packages previously described herein do not support the data/information to be presented.

G.5.11.1 Work package identification information **<wpidinfo>**. Work package identification information is required for this work package. (Refer to 4.9.6.2.)

G.5.11.2 Work package initial setup **<initial_setup>**. Initital setup is required for this work package. (Refer to 4.9.6.3.)

G.6 **NOTES.**

The notes in section 6 apply to this appendix.

FIELD MAINTENANCE REFERENCES

Scope

This work package lists all field manuals, forms, technical manuals and miscellaneous publications referenced in this manual.

FIELD MANUALS

FM 3-3	NBC Decontamination Avoidance
FM 3-19	NBC Reconnaissance
FM 4-25.11	First Aid for Soldiers
FM 9-207	Operation and Maintenance of Ordnance Material in Cold Weather
FM 20-22	Vehicle Recovery Operations
FM 31-70	Basic Cold Weather Manual
FM 31-71	Northern Operations
FM 90-3	Desert Operation
FM 90-6	Mountain Operations

FORMS

FIGURE G-1. Example of references.

MAINTAINER MAINTENANCE: MAINTENANCE ALLOCATION CHART (MAC)

INTRODUCTION

The Army Maintenance System MAC

This introduction provides a general explanation of the maintenance and repair functions.
The MAC (immediately following this introduction) designates overall authority and responsibility for the performance of maintenance tasks on the identified end item or component. The application of the maintenance tasks to the end item or component shall be consistent with the capacities and capabilities of the designated maintenance levels, which are shown in the MAC in column (4). Column (4) is divided into two secondary columns. These columns indicate the maintenance levels of 'Field' and 'Sustainment'. Each maintenance level column is further divided into two sub-columns. These sub-columns identify the maintenance classes and are as follows:

1. Field level maintenance classes:

A. Crew (operator) maintenance. This is the responsibility of a using organization to perform maintenance on its assigned equipment. It normally consists of inspecting, servicing, lubricating, adjusting, and replacing parts, minor assemblies, and subassemblies. Items with a "C" ("O" for joint service reporting) in the third position of the SMR code may be replaced at the crew(operator) class. A code of "C" ("O" for joint service) in the fourth position of the SMR code indicates complete repair is authorized at the crew(operator) class.

FIGURE G-2. Example of MAC introduction.

AMC MAINTENANCE: MAINTENANCE ALLOCATION CHART (MAC)

INTRODUCTION

Aviation Maintenance Allocation Chart

The MAC (immediately following the introduction) designates overall authority and responsibility for the performance of maintenance tasks on the identified end item or component. The application of the maintenance tasks to the end item or component shall be consistent with the capacities and capabilities of the designated maintenance level which are shown on the MAC as:

Field - includes two columns:
"O" which corresponds to Aviation Maintenance Company (AMC) and
"F" which corresponds to Aviation Support Battalion (ASB)

Sustainment - includes two columns:
"L" which corresponds to Theater Aviation Sustainment Maintenance Group (TASMG) and other organizations that have National Maintenance Program certification and
"D" which corresponds to Depot

FIGURE G-3. Example of aviation MAC introduction.

HMMWV - COMPONENTS OF END ITEM (COEI) AND BASIC ISSUE ITEMS (BII) LISTS

INTRODUCTION

Scope

This work package lists COEI and BII for the HMMWV to help you inventory items for safe and efficient operation of the equipment.

General

The COEI and BII information is divided into the following lists:

Components of End Item (COEI). This list is for information purposes only and is not authority to requisition replacements. These items are part of the HMMWV. As part of the end item, these items must be with the end item whenever it is issued or transferred between property accounts. Items of COEI are removed and separately packaged for transportation or shipment only when necessary. Illustrations are furnished to help you find and identify the items.

Basic Issue Items (BII). These essential items are required to place the HMMWV in operation, operate it, and to do emergency repairs. Although shipped separately packaged, BII must be with the HMMWV during operation and when it is transferred between property accounts. Listing these items is your authority to request/requisition them for replacement based on authorization of the end item by the TOE/MTOE. Illustrations are furnished to help you find and identify the items.

FIGURE G-4. Example of an introduction for COEI and BII lists.

HMMWV - COMPONENTS OF END ITEM (COEI) AND BASIC ISSUE ITEMS (BII) LISTS

Explanation of Entries in the COEI List and BII List

Illus Number. Gives you the number of the item illustrated.

National Stock Number (NSN). Identifies the stock number of the item to be used for requisitioning purposes.

Description, Part Number/(CAGEC). Identifies the Federal item name (in all capital letters) followed by a minimum description when needed. The stowage location of COEI and BII is also included in this entry. The last line below the description is the CAGEC (Commercial and Government Entity Code) (in parentheses) and the part number.

Usable On Code. When applicable, gives you a code if the item you need is not the same for different models of equipment.

U/I. Unit of Issue (U/I) indicates the physical measurement or count of the item as issued per the National Stock Number entry.

Qty Rqr. Indicates the quantity required.

FIGURE G-4. Example of an introduction for COEI and BII lists – Continued.

HMMWV - ADDITIONAL AUTHORIZATION LIST (AAL)

INTRODUCTION

Scope

This work package lists additional items you are authorized for the support of the HMMWV.

General

This list identifies items that do not have to accompany the HMMWV and that do not have to be turned in with it. These items are all authorized to you by CTA, MTOE, TDA, or JTA.

Explanation of Entries in the AAL

National Stock Number (NSN). Identifies the stock number of the item to be used for requisitioning purposes.

Description, Part Number/(CAGEC). Identifies the Federal item name (in all capital letters) followed by a minimum description when needed. The last line below the description is the part number and the Commercial and Government Entity Code (CAGEC) (in parentheses).

Usable On Code. When applicable, gives you a code if the item you need is not the same for different models of equipment.

U/I. Unit of Issue (U/I) indicates the physical measurement or count of the item as issued per the National Stock Number.

Qty Recm. Indicates the quantity recommended.

FIGURE G-5. Example of an introduction for an AAL.

HMMWV - EXPENDABLE AND DURABLE ITEMS LIST

INTRODUCTION

Scope

This work package lists expendable and durable items that you will need to operate and maintain the HMMWV. This list is for information only and is not authority to requisition the listed items. These items are authorized to you by CTA 50-970, Expendable/Durable Items (Except Medical, Class V Repair Parts, and Heraldic Items), CTA 50-909, Field and Garrison Furnishings and Equipment or CTA 8-100, Army Medical Department Expendable/Durable Items.

Explanation of Entries in the Expendable/Durable Items List

Item No. This number is assigned to the entry in the list and is referenced in the narrative instructions to identify the item (e.g., Use brake fluid (Expendable/Durable Items List).).

Level. This entry identifies the lowest level of maintenance that requires the listed item C = Operator/Crew, O = AMC, F = Maintainer or ASB, H = Below Depot Sustainment or TASMG, D = Depot.

National Stock Number (NSN). This is the NSN assigned to the item which you can use to requisition it.

Item Name, Description, Part Number/(CAGEC). This column provides the other information you need to identify the item. The last line below the description is the part number and the Commercial and Government Entity Code (CAGEC) (in parentheses).

U/I. Unit of Issue (U/I) code shows the physical measurement or count of an item, such as gallon,

FIGURE G-6. Example of an introduction for an expendable and durable items list.

HMMWV - TOOL IDENTIFICATION LIST

INTRODUCTION

Scope

This work package lists all common tools and supplements and special tools/fixtures needed to maintain the HMMWV.

Explanation of Entries in the Tool Identification List

Item No. This number is assigned to the entry in the list and is referenced in the initial setup to identify the item (e.g., Extractor (Tool Identification List, item 32)).

Item Name. This column lists the item by noun nomenclature and other descriptive features (e.g., Gauge, belt tension).

National Stock Number(NSN). This is the National Stock Number (NSN) assigned to the item; use it to requisition the item.

Part Number/(CAGEC). Indicates the primary number used by the manufacturer (individual, company, firm, corporation, or Government activity) which controls the design and characteristics of the item by means of its engineering drawings, specifications, standards, and inspection requirements to identify an item or range of items. The manufacturer's Commercial and Government Entity Code (CAGEC) is also included.

Reference. This column identifies the authorizing supply catalog or RPSTL for items listed in this work package.

FIGURE G-7. Example of an introduction for a tool identification list.

APPENDIX H
DESTRUCTION OF ARMY MATERIEL TO PREVENT ENEMY USE

H.1 SCOPE.

H.1.1 Scope. This appendix establishes the technical content requirements for developing generic information and/or specific procedures regarding the destruction of Army materiel to prevent enemy use for major weapon systems and their related systems, subsystems, equipment, WRAs, and SRAs. This appendix is a mandatory part of this standard. The information contained herein is intended for compliance. The requirements are applicable for all maintenance classes through overhaul (depot), including DMWRs and NMWRs.

H.2 APPLICABLE DOCUMENTS.

The applicable documents in section 2 of the basic standard apply to this appendix.

H.3 DEFINITIONS.

The definitions in section 3 of the basic manual apply to this appendix.

H.4 GENERAL REQUIREMENTS.

H.4.1 General. The requirements provided in this appendix provide the technical content requirements for the preparation of destruction of Army materiel procedures. Several approaches are available for preparing manuals for destruction of Army materiel. These include, but are not limited to:

a. Instructions or procedures developed for a particular stock class of materiel, as identified by its Federal Supply Classification (FSC).
b. Procedures that provide detailed destruction instructions for specific weapons system(s) or equipment and any installed subsystems.
c. Simple standardized destruction methods based on the assumption that time and demolition materials may not always be available for carrying out complicated demolition or other destruction procedures.

H.4.2 Types of manuals. Each weapon system or major item of equipment shall have destruction procedures prepared that cover the approaches in b and c mentioned previously. Equipment managers may direct that a generic destruction manual be developed for assets they control in approach a that are not covered in a weapons system-specific manual. Equipment managers and weapons system program managers should work together to ensure that destruction procedures do not provide conflicting destruction requirements or overly duplicated destruction procedures. Some duplication of destruction procedures is allowed for components in a weapons system, but only those specific procedures (refer to H.5.3.4) for the component shall be duplicated. Duplication of this information is preferred to having users in a combat situation looking for destruction information in multiple TMs.

H.4.2.1 Destruction manuals for a Federal Supply Classification (FSC). When directed by an AMC supply class custodian or manager, a separate destruction TM shall be prepared. The manual shall contain generic destruction procedures and when possible should include specific procedures for each item in the stock class. The requirements in H.5.1 through H.5.3 shall be used.

H.4.2.2 Destruction manuals/work packages for weapon systems. Each weapons system shall have destruction procedures developed. If a separate manual is used, these procedures will be contained in a minimum of three work packages. The first shall be a general information work package **<ginfowp>** containing the information specified in H.5.1. The second shall be the introduction work package **<destruct-introwp>** with the information specified in H.5.2. The third and any succeeding work packages shall contain specific destruction procedures **<destruct-materialwp>** as specified in H.5.3.

H.4.3 Use of the Document Type Definition (DTD)/stylesheet. The DTD referenced in this appendix interprets the technical content and structure for the functional requirements contained in this appendix. Its use is mandatory. Development of IETMs is accomplished through the use of this standard, the DTD, and the guidance contained in MIL-HDBK-1222. Where possible and when available, Army developed and provided stylesheets shall be used. For additional information on the DTD and specific stylesheets, refer to MIL-STD-2361.

H.4.4 Content structure. The examples provided herein are an accurate representation of the content structure requirements contained in this appendix and shall be followed to permit the effective use of the DTD.

H.4.5 Style and format. This standard provides style and format requirements for the technical content requirements described in this appendix. These requirements are considered mandatory and are intended for compliance.

H.4.6 Selective application and tailoring. This standard contains some requirements that may not be applicable to the preparation of all destruction IETMs. Selective application and tailoring of requirements contained in this standard is the responsibility of the acquiring activity and shall be accomplished using Appendix A. The applicability of some requirements is also designated by one of the following statements: unless specified otherwise by the acquiring activity; as specified by the acquiring activity; or when specified by the acquiring activity.

H.4.7 General destruction rules. When preparing any destruction manual, the following priority guidelines shall be followed. These are provided to ensure a common approach to destruction of material:

a. Any cryptographic equipment or material shall be destroyed first.
b. Classified equipment or material is to be destroyed after any cryptographic assets. A statement to this effect shall be included in the introductory material. The destruction of classified material statement is required regardless of the classification of the material covered in the current IETM.
c. Essential material shall be destroyed when time precludes the destruction of the entire system. In this case, essential material consists of such material identified for the system or stock class in the manual being prepared. The system manual shall include a list of essential material. A statement shall be included stating that essential material be destroyed in the order provided and that the same material be destroyed on each system (refer to H.5.2.7).
d. Any repair parts that may be on the verge of capture shall be destroyed in the same order as the essential material.

H.5 **DETAILED REQUIREMENTS.**

H.5.1 Front and rear matter. When a stand alone destruction manual is prepared, unless otherwise specified in this appendix, the front and rear matter requirements contained in 5.2.1 and 5.2.2. shall be used.

H.5.1.1 General information work package <**ginfowp**>. A general information work package shall be prepared. (Refer to B.5.2.) At a minimum, it shall contain a scope statement containing the following verbatim text:

> "This manual is for the guidance of those whose duty it is to render inoperable or destroy equipment which is in imminent danger of capture by an enemy."

For destruction procedures that will implement any international standards, the following text shall be included. For a stand-alone destruction manual, the statement shall be in the <**ginfowp**> scope paragraph. For destruction procedures included in a weapon system manual, this statement shall be included in the "How to Use the IETM" (italicized text within parentheses shall be replaced with the appropriate information).

> "Certain provisions of this technical manual (identify by chapter, work package, paragraph, or similar manner, if appropriate) are the subject of international standardization agreement (*insert the ABCA or ASCC standard number; the NATO, STANAG, NETR, or NEPR number; or appropriate documentary reference*). When revision or cancellation of this technical manual is proposed which will modify the international agreement concerned, the technical manual management activity will take appropriate action through international standardization channels, including departmental standardization offices, to change the agreement or make other appropriate accommodations."

H.5.1.2 Work package identification information **<wpidinfo>**. Work package identification information is required for this work package. (Refer to 4.9.6.2.)

H.5.1.3 Work package initial setup **<wpinfo>**. Initial setup is not required for this work package.

H.5.2 Destruction introduction work package **<destruct-introwp>**. The destruction introduction work package shall contain the following information as described in H.5.2.1 through H.5.2.7.

H.5.2.1 Work package identification information **<wpidinfo>**. Work package identification information is required for this work package. (Refer to 4.9.6.2.)

H.5.2.2 Work package initial setup **<wpinfo**>. Initial setup is not required for this work package.

H.5.2.3 Authority to destroy material **<authorize_to_destroy>**. The following paragraph shall be included verbatim:

> "Authorization. Only division or higher commanders have the authority to order destruction of equipment. They may however, delegate this authority to subordinate commanders when the situation demands it."

H.5.2.4 Reporting destruction **<report_destruct>**. A paragraph shall be included that requires any destruction activity be reported through command channels.

H.5.2.5 General destruction information **<general_destruct_info>**. Text shall be included that provides the user with information that is generic to most destruction processes. This data shall include, but is not limited to, the following types of information:

a. Information on types of destructive processes such as burning, use of explosives, burying, or self destruction devices/techniques. This explanation shall include the advantages and disadvantages of each process.
b. For complex weapons systems, the reason to perform any subordinate destruction procedures in conjunction with those for the weapons system.
c. Any considerations relative to physical location or weather related (wind, rain, temperature) that users should consider when destroying material.
d. Explanations on the priority for materiel destruction. (Refer to H.4.7.)

H.5.2.6 Degree of destruction. The following information shall be included verbatim:

"Methods of Destruction. Choose methods of destruction which will cause such damage that it will be impossible to restore the equipment to a usable condition within the combat zone.

Classified Equipment. Classified equipment must be destroyed to such a degree as to prevent duplication by, or revealing means of operation or function to the enemy.

Associated Classified Documents. Any classified documents, notes, instructions, or other written material pertaining to function, operation, maintenance, or employment, including drawings or parts lists, must be destroyed in a manner to render them useless to the enemy."

H.5.2.7 Essential components and spare parts **<component_spares>**. When specified by the acquiring activity, the destruction procedures may identify essential components whose destruction will incapacitate the weapons system. In certain conditions, the destruction of essential components may be used. If destruction of essential components is allowed, statements shall be included that for each weapons system, the same components will be destroyed. A similar statement shall be included that for any spare parts requiring destruction, the same essential spare parts shall be destroyed.

If a weapons system determines the component parts to be essential, they should notify the components item manager so that they may identify those items for higher priority destruction in any item-level destruction procedures manual.

H.5.3 Destruction procedures work package **<destruct-materialwp>**. The destruction procedures work package shall contain the following information as described in H.5.3.1 through H.5.3.5. The destruction procedures work package shall contain only destruction procedures. All general or explanatory information shall be contained in the destruction introduction work package. (Refer to H.5.2.)

H.5.3.1 Work package identification information **<wpidinfo>**. Work package identification information is required for this work package. (Refer to 4.9.6.2.)

H.5.3.2 Work package initial setup **<initial_setup >**. Any procedure, <**proc**>, required by this work package shall include initial setup <**initial_setup**>. Initial setup requirements are found in 4.9.6.3.

H.5.3.3 Parts list **<essential_spares>**. When a weapons system TM contains a requirement to allow destruction of essential or spare parts (refer to H.4.7), a list of essential components and spares shall be developed and included in the work package.

H.5.3.4 Specific destruction procedures **<proc>**. The destruction procedures work package shall include specific destruction procedures for the weapons system or items (for item-level IETMs). When required, specific procedures to destroy subordinate components shall be included. Specific destruction procedures for subordinate components shall not be referenced. As applicable, the order the procedures should be applied and the results of applying in the wrong order shall be included in this work package. When destruction procedures are developed, authors shall ensure the procedures use resources a soldier in the field would have readily accessible. The following methods shall be included as applicable:

a. Self-destruction options.
b. Explosive devices.
c. Improper operation.
d. Fire.
e. Mechanical devices (e.g., sledgehammers, crowbars, cranes, etc.).
f. Natural surroundings (e.g., rivers, lakes, caves, burying, hiding in vegetation, etc.).

As applicable, the procedures shall identify the points on the equipment that would be most advantageous to apply the previously described methods (e.g., where to place explosives or where to apply force with a mechanical device).

H.5.3.5 Classified equipment and documents. Special instructions for destruction of classified equipment and documents shall be provided.

H.6 **NOTES.**

The notes in section 6 apply to this appendix.

This page intentionally left blank.

APPENDIX I
BATTLE DAMAGE ASSESSMENT AND REPAIR (BDAR)

I.1 SCOPE.

I.1.1 Scope. The requirements provided in this appendix provide the technical content requirements for the preparation of BDAR procedures. This appendix covers only assessment and repair of equipment failures occurring on the battlefield. This repair is sometimes limited to such means of fixing as bypassing, patching, or jury-rigging components, or the use of alternative procedures to restore the equipment/system performance to a minimum operating condition. Fix procedures in BDAR information are for use in combat only. Standard maintenance procedures are used as soon as practicable. This appendix is a mandatory part of this standard. The information contained herein is intended for compliance.

I.2 APPLICABLE DOCUMENTS.

The applicable documents in section 2 of the basic standard apply to this appendix.

I.3 DEFINITIONS.

The definitions in section 3 of the basic manual apply to this appendix.

I.4 GENERAL REQUIREMENTS.

I.4.1 Maintenance level. Unless otherwise specified, BDAR repair functions shall be accomplished by the following maintenance level/classes:

a. Field (Crew (operator)/AMC). Performed by crew (operator) or by a forward organizational maintenance team (MT)
b. Field (Maintainer/ASB). Performed by maintainer or ASB, when damage exceeds service repair capability. When required repair time or tactical conditions dictate, the damaged/failed item will be recovered or evacuated as appropriate.

I.4.2 Maintenance level/class applicability. Requirements contained in this appendix are applicable to all maintenance levels/classes unless specifically labeled in bold and in parentheses. The labeled requirement may specify a specific level (e.g., **Field**) (refer to 3.82) or a specific maintenance class (refer to 3.80) (e.g., **Maintainer** or **AMC**). The labeled requirement shall be applicable to all TMs containing that maintenance level/class. An explanation of applicable DA maintenance levels/classes is provided in section 3.

I.4.3 Preparation of digital data for electronic delivery. Data prepared and delivered digitally in accordance with this standard shall be XML tagged using the DTD. Data shall be formatted for presentation using stylesheets in accordance with MIL-STD-2361. Stylesheets may be prepared using XSL or other languages as specified by the acquiring activity. Where possible and when available, Army developed and provided stylesheets shall be used. Refer to 4.6 for information on obtaining or accessing the DTD and stylesheets. XML tags used in the DTD are noted throughout the text of this standard in bracketed, bold characters (e.g., **`<genrepairwp>`**) as a convenience for the author and to ensure that the tags are used correctly when developing a document instance.

I.4.4 Use of the Document Type Definition (DTD)/stylesheet. The DTD referenced in this appendix interprets the technical content and structure for the functional requirements contained in this standard. Its use is mandatory. Development of IETMs is accomplished through the use of this standard, the DTD, and the guidance contained in MIL-HDBK-1222. Where possible and when available, Army developed and provided stylesheets shall be used. For additional information on DTD and specific stylesheets, refer to MIL-STD-2361.

I.4.5 Content structure. The examples provided herein are an accurate representation of the content structure requirements contained in this appendix and shall be followed to permit the effective use of the DTD.

I.4.6 Style and format. This standard provides style and format requirements for the technical content requirements described in this appendix. These requirements are considered mandatory and are intended for compliance.

I.4.7 IETM functionality. The specific level of functionality and user interaction to be provided in the IETMs shall be in accordance with the functionality matrix contained in Appendix A.

I.4.8 Work package development. Data developed in accordance with this appendix shall be divided into work packages. For task-related work packages, the tasks shall be in the logical order of the work sequence. These work packages should be stand alone and are broken into the following work package types: general information, operator instructions, troubleshooting procedures, maintenance instructions, parts information, supporting information, destruction of Army materiel to prevent enemy use, preventative maintenance checklist, and lubrication orders. A work package shall contain all information and references required to support the work package type.

I.4.9 Safety devices and interlocks. Information shall be prepared pertaining to the purpose and location of all safety devices and interlocks in conjunction with the pertinent procedures.

I.4.10 Electrostatic Discharge (ESD) sensitive parts. If the equipment contains ESD sensitive parts, components, or circuits; cautions and ESD labels shall be incorporated into the applicable tasks and procedures to ensure ESD sensitive parts are not damaged or degraded during maintenance and operation. (Refer to 4.9.18 for requirements on labeling with ESD.) Actions which could damage ESD sensitive parts, but which are not directly related to handling or operation of ESD sensitive parts, shall not be annotated with the ESD acronym, but shall be preceded by a caution statement.

I.4.11 Nuclear hardness **<hcp>**. If the weapon system/equipment has nuclear survivability requirements (e.g., overpressure and burst, thermal radiation, electromagnetic pulse, or transient radiation effects on electronics), cautions and Hardness-Critical Process (HCP) labels shall be incorporated into the applicable tasks and procedures to ensure that the hardness of the equipment is not degraded during handling or operation. (Refer to 4.9.17 for requirements on labeling with HCP.) Actions which could degrade hardness, but which are not directly involved in establishing nuclear hardness, shall not be annotated with the acronym, but shall be preceded by a caution statement.

I.4.12 Selective application and tailoring. This standard contains some requirements that may not be applicable to the preparation of all IETMs. Selective application and tailoring of requirements contained in this standard are the responsibility of the acquiring activity and shall be accomplished using Appendix A. The applicability of some requirements is also designated

by one of the following statements: unless specified otherwise by the acquiring activity; as specified by the acquiring activity; or when specified by the acquiring activity.

I.5 **DETAILED REQUIREMENTS.**

I.5.1 Content. A battle damage chapter <bim>. May be prepared using the system or functional hierarchy. Alternatively, a standalone battle damage manual <bdar. > may be prepared. When a standalone manual is prepared, unless otherwise specified herein, the front and rear matter requirements of 5.2.1 and 5.2.2 shall apply. Content shall be directed to fix-forward battlefield conditions; i.e., repairs must be made as quickly as possible and to the extent necessary to restore or maintain the applicable equipment/system. Unless otherwise specified by the acquiring activity, content and order of presentation shall be as specified in this appendix. The following statement shall appear at the beginning of each work package in the BDAR information:

> BDAR FIXES SHALL BE USED ONLY IN COMBAT OR FOR TRAINING AT THE DISCRETION OF THE COMMANDER. (AUTHORIZED TRAINING FIXES ARE LISTED IN THE BDAR TRAINING PROCEDURES WORK PACKAGE.) IN ANY CASE, DAMAGE SHALL BE REPAIRED BY STANDARD MAINTENANCE PROCEDURES AS SOON AS PRACTICABLE.

I.5.1.1 Operating procedures. Operating procedures in BDAR manuals shall be restricted to testing a system, subsystem, or component for the purpose of damage assessment or to testing after a field expedient repair has been performed. If any change to normal operating procedures is made, the new procedures to be followed shall be given.

I.5.2 BDAR information work packages **<baim>**. BDAR information shall consist of the **<baim>**. The **<baim>** shall contain the following as described in I.5.2.1 through I.5.2.8.

I.5.2.1 General information work package **<ginfowp>**. A general information work package shall be prepared IAW B.5.2. It shall contain those elements required to support all Army IETMs. This may include, but is not limited to a scope (required), equipment improvement reporting, etc.

I.5.2.2 BDAR unique general information work package **<bdar-geninfowp>**. This work package shall contain information that is general in nature, but unique to a BDAR manual. It shall inform the user/reader of the purpose of the BDAR information and its relationship to user personnel, other publications, and the end item/system it supports. It shall also contain the BDAR fixes statement. (Refer to I.5.1.)

I.5.2.2.1 Work package identification information **<wpidinfo>**. Work package identification information is required for this work package. (Refer to 4.9.6.2.)

I.5.2.2.2 BDAR fixes statement. The BDAR fixes statement given in I.5.1 shall be included in this work package.

I.5.2.2.3 Standards and practices **<bdar-std-practices>**. This paragraph shall contain information pertaining to standards and practices peculiar to combat conditions. It shall include, as a minimum, the following subparagraph headings and data (expanded as applicable):

a. BDAR Characteristics. An explanation of the expediency of repair, reason for deviation from standard maintenance practices, need to take greater risks, and other characteristics specific to repair under combat conditions shall be included.

b. Waiver of precautions. A reference to deviations from normal peacetime precautions shall be included. If such deviations are summarized in another portion of the BDAR information, reference shall be made to that portion.

c. Operating characteristics. The minimum functional combat capability criteria for the applicable end item/system shall be listed.

d. Training. The explanation/rationale concerning the use of BDAR fixes for training shall be addressed. It shall list all BDAR procedures which are authorized for training. The fix (training) procedures shall be grouped by major system(s) or components(s) as they appear in the BDAR information. Each procedure shall be cross-referenced to the work package where it appears. The following statement shall be included:

e. "After completion of training, the end item/system shall be returned to full serviceable condition using regular repair procedures as applicable."

I.5.2.2.4 Tasks and responsibilities **<bdar-task-resp>**. This paragraph shall consist of tasks that may be required as a result of battlefield damage. The person/group responsible for each task shall be identified. The tasks shall appear in the order in which they should be performed. This information shall be presented in narrative form. This section shall include the following subparagraphs:

I.5.2.2.4.1 Tagging/identifying BDAR repairs. Instructions for identifying components affected by BDAR fixes shall be included.

I.5.2.2.4.2 Reports. Instructions for completing reports resulting from BDAR fixes shall be addressed.

I.5.2.2.5 Combat threats **<bdar-combat-threat>** (**Aviation Only**). This paragraph shall consist of the description of damage from threats confronting aircraft while on combat missions from armor-piercing, armor piercing incendiary projectiles, and high-explosive incendiary projectiles. It shall also describe damage from exposure to bombs, mortars, and artillery fragments and blasts when on the ground. The resulting effects to the metal airframe structure and follow-on effects should the mission be continued shall be given. The effects of secondary damage such as cracks, crippling, or buckling and loss or damage to mechanical fasteners shall also be given. Structure damage modes shall be defined for the type of materials and structure affected.

I.5.2.3 Battle damage assessment work package(s) **<damage-assesswp>**. Multiple battle damage assessment work packages shall be prepared. Each of these work packages shall contain an introduction and fault assessment tables. The work packages shall be organized as follows:

a. End item. These shall be a battle damage assessment work package pertaining to the overall end item or major subsystems and shall discuss the capability of the end item/subsystem to perform its mission essential functions.

b. Major functional group. Unless otherwise specified by the acquiring activity, these work packages shall be titled, arranged, and shall correspond to the functional groups as they appear in the MAC and the parts information. The total number of work packages in the

BDAR information shall be determined by the number of major functional groups applicable to the equipment/system covered by the manual.

c. Auxiliary Equipment. As required, battle damage assessment work packages shall be prepared for any auxiliary equipment.

Each battle damage assessment work package shall contain the information in I.5.2.3.1 through I.5.2.3.4.

I.5.2.3.1 Work package identification information **<wpidinfo>**. Work package identification information is required for this work package. (Refer to 4.9.6.2.)

I.5.2.3.2 Work package initial setup **<initial_setup>**. Initial setup is not required for this work package.

I.5.2.3.3 BDAR fixes statement. The BDAR fixes statement given in I.5.1 shall be included in this work package.

I.5.2.3.4 Introduction **<intro>**. This paragraph shall introduce the assessment table(s) in the work package. It shall contain paragraphs that will cover the scope of the work package and application of assessment tables.

I.5.2.3.5 Fault assessment tables. This paragraph shall contain assessment tables that lead the user to a repair procedure or another chart/table that will further aid in analyzing/assessing damage. As specified by the acquiring activity, the format of the assessment tables shall be either a troubleshooting procedure or a table. (Refer to Figure I-1 and Figure I-2 for examples.) The assessment procedures shall be developed and arranged so that logical and expedient methods are used to locate trouble.

I.5.2.4 Repair work package **<genrepairwp>**. Unless otherwise specified by the acquiring activity, these work packages shall provide information for battlefield repair of end items, components, etc. The following types of repair work packages shall be included in the BDAR information module:

a. General repair. As required, procedures shall be provided for items that are not necessarily associated with a specific component or subsystem of the end item.
b. End item repair. Procedures for repair of the overall end item shall be provided.
c. Major functional group repair. Unless otherwise specified by the acquiring activity, these work package(s) shall be titled, arranged, and shall correspond to the functional groups as they appear in the MAC and the parts information. The total number of work packages in the BDAR repair information shall be determined by the number of major functional groups applicable to the equipment/system covered by the manual.
d. Auxiliary equipment. As required, procedures for repair of battle damage to auxiliary equipment shall be provided.

Each repair work package shall comply with the requirements contained in I.5.2.4.1 through I.5.2.4.5.

I.5.2.4.1 Work package identification information **<wpidinfo>**. Work package identification information is required for this work package. (Refer to 4.9.6.2.)

I.5.2.4.2 Work package initial setup **<initial_setup>**. Initial setup is required for this work package. (Refer to 4.9.6.2.)

I.5.2.4.3 BDAR fixes statement. The BDAR fixes statement given in I.5.1 shall be included in this work package.

I.5.2.4.4 Introduction **<geninfo>**. This paragraph shall contain the following subparagraphs.

I.5.2.4.4.1 Scope. A brief statement that describes the purpose and application of the overall coverage of the work package shall be included.

I.5.2.4.4.2 Repair procedure index. A list of all procedures shall be contained in this work package. The procedures shall be listed in the order in which they appear. Procedures authorized for training and listed in the training fixes work package shall be boxed in.

I.5.2.4.5 Repair procedure **<bdar-repair-proc>**. This paragraph shall contain the repair procedure for the item(s) covered in the work package. The format and content of these paragraphs shall be as follows.

I.5.2.4.5.1 General. Remarks concerning the general nature and causes related to the damage and repair of the item shall be included. These remarks shall be brief.

I.5.2.4.5.2 Item name, trouble. The item name and the trouble shall be used as the subparagraph side head. The side head shall be followed with a general statement(s) concerning the particular type of trouble and repair to be made. Statement(s) shall be brief and as concise as possible. Subparagraphs shall be as follows.

I.5.2.4.5.2.1 Limitations **<bdar-limitation>**. This statement(s) shall identify, in relation to operational capability, the limits that would be imposed on the equipment/end item if the fix that follows is performed.

I.5.2.4.5.2.2 Personnel/time required **<bdar-persn>**. The number of personnel and time required to accomplish the fix shall be listed. Time shall be expressed in decimal point hours to the nearest one-tenth hour. An example follows:

1 soldier - 1.5 hrs.

I.5.2.4.5.2.3 Materials/tools **<bdar-mtrl-tools>**. The materials and tools (peculiar) needed to make the BDAR fix shall be listed. Following each listed item shall be a reference (in parenthesis) to that work package and item number (e.g., hose (WP 0048, item 4). Reference to tools shall reference instructions for tool fabrication when applicable. Any other necessary information (such as quantities and sizes) shall be provided.

I.5.2.4.5.2.4 Procedural steps **<proc>**. Each step shall be listed numerically and placed in the sequential order in which it will be performed. Steps shall be as prescribed in 4.9.10. The last procedural step for every BDAR fix shall be: "Record BDAR action taken. When mission is complete, as soon as practical, repair the equipment/system using standard maintenance procedures."

I.5.2.4.5.3 Options. When more than one method of making the same repair/fix exists, multiple options shall be included. Options shall be listed in order of effectiveness and listed consecutively as option 1, option 2, etc. Each option provided under the item name/trouble

paragraph side head shall contain the subparagraphs required by I.5.2.4.5.2 above Alternatives that do not include fixes shall also be listed as options.

I.5.2.4.5.4 Item name, category. When the basic item, identified in the section title, is divided into categories or types, each specific item shall be titled and covered within a separate paragraph. Each of these paragraphs shall contain only the information that applies to that specific item. For example: Information or procedures under a heading "high pressure" shall pertain to high pressure; low pressure information/procedures (if applicable) shall appear under the heading, "low pressure."

I.5.2.5 References work package **<refwp>**. References for the BDAR information shall be included in the references work package for the system IETM. The BDAR shall not have its own references work package.

I.5.2.6 Special or fabricated tools work package **<bdartoolswp>**. The special or fabricated tools work package shall consist of the following information as described in I.5.2.6.1 through I.5.2.6.4.

I.5.2.6.1 Work package identification information **<wpidinfo>**. Work package identification information is required for this work package. (Refer to 4.9.6.2.)

I.5.2.6.2 Initial setup information **<initial_setup>**. Initial setup information is only required for this work package (refer to 4.9.6.3) if fabricated tools are used.

I.5.2.6.3 BDAR fixes statement. The BDAR fixes statement given in I.5.1 shall be included in this work package.

I.5.2.6.4 Content and format. This work package shall contain a list of all tools and test equipment that are required for BDAR procedures and that are not common. This list shall be prepared in accordance with the requirements for a tool identification list in G.5.7.4. When fabrication of tools is required for BDAR, this work package shall also contain fabrication instructions for those tools. The fabrication instructions shall be prepared in accordance with the requirements for an illustrated list of manufactured items contained in E.5.3.10.

I.5.2.7 Expendable and durable items work package **<explistwp>**. Expendable and durable items required for BDAR information shall be included in the expendable and durable items list work package for the system IETM. The BDAR shall not have its own expendable and durable items list work package.

I.5.2.8 Substitute materials/parts work package **<substitute-matwp>**. The substitute materials/parts work package shall consist of the following information as described in I.5.2.8.1 through I.5.2.8.4.

I.5.2.8.1 Work package identification information **<wpidinfo>**. Work package identification information is required for this work package. (Refer to 4.9.6.2.)

I.5.2.8.2 Initial setup information **<initial_setup>**. Initial setup information is not required for this work package.

I.5.2.8.3 BDAR fixes statement. The BDAR fixes statement given in I.5.1 shall be included in this work package.

I.5.2.8.4 Content. This work package shall list materials and parts that may be used for BDAR fixes. Lists or tables shall include the primary material/part, the substitute/alternate material/part, and remarks (when applicable) that identify the limitations or degradation effected by use of the substitutes. The work package shall be divided into paragraphs by material type. When paragraphs are required, the first paragraph shall be titled introduction and shall provide a general explanation of the purpose and content of the other paragraphs. When applicable, a paragraph shall be dedicated to Petroleum, Oil, and Lubricant (POL) substitutes. For example of alternate/substitute material listing, refer to Figure I-3. For examples of POL substitutes, refer to Figure I-4 and Figure I-5.

I.6 **NOTES.**

The notes in section 6 apply to this appendix.

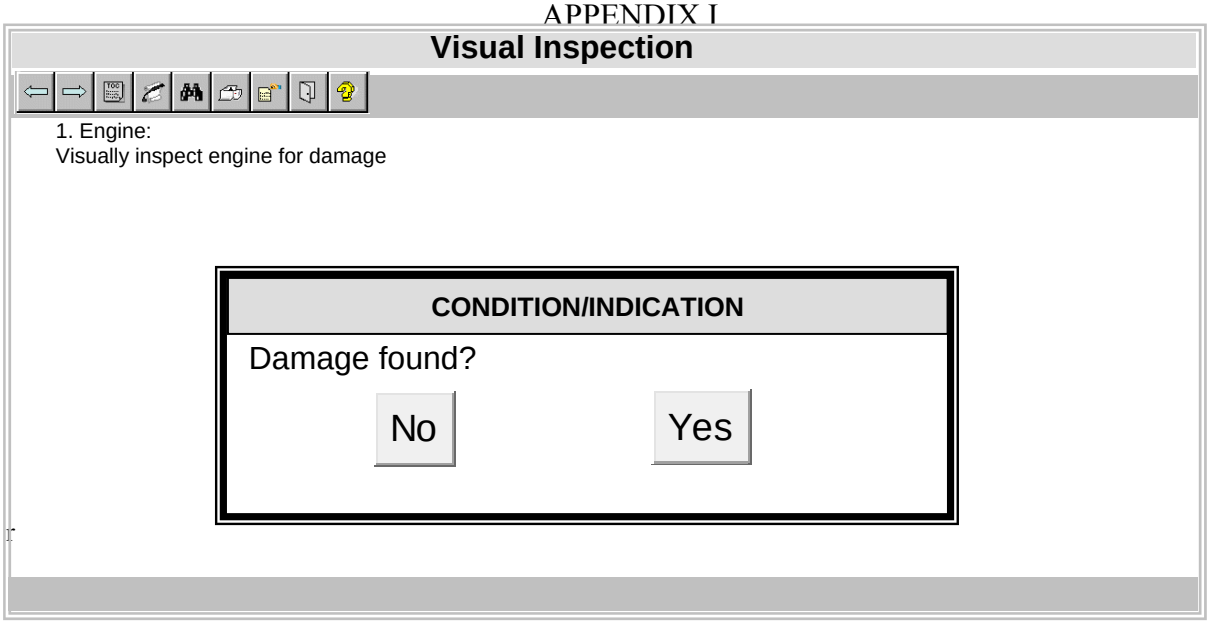

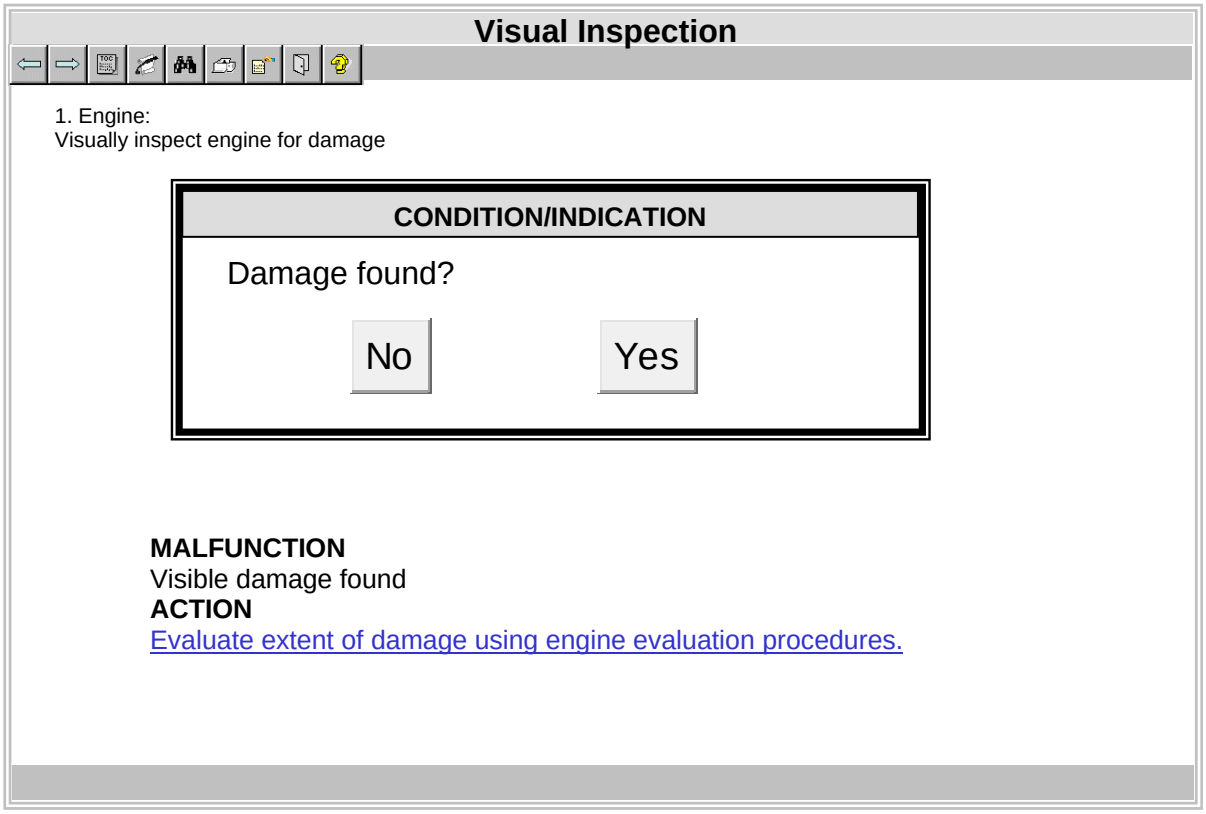

FIGURE I-1. Example of BDAR assessment troubleshooting procedure.

BDAR Fault Assessment Table

How to use the fault assessment tables:

a. A fault assessment table is organized so the user can quickly assess a particular system or capability by asking a series of questions.

b. First, ask a question. Your replay will be either a “yes” or “no”. If it is “yes,” then you have no problem so go to the next question.

c. If it is “no,” then click on link in column 2 to proceed to appropriate location.

Table 1. Mobility

Does engine start/run?	If no go to BDAR ignition repair
Does tank move in “D” and “R”?	If no go to BDAR transmission repair
Are the track and suspension in tact?	If no go to BDAR track repair Or go to BDAR suspension repair
Does tank steer/pivot?	If no go to BDAR steering repair
Does tank brake?	If no go to BDAR brake repair
Does tank have full power	If no go to BDAR battery repair

FIGURE I-2. Example of BDAR assessment table.

Substitute Materials/Parts for BDAR

Table 1. Hull Spares and Repair Parts

Parts		Applies To		From Weapons System					
NSN	Description	M1 (PM)	M1A1	M2 M3 Tank	M34 A2 Track	M48 A5 Family	M60 Family	M88 Family	M109 Veh
5935-00-001-7325	Connector Plug	X	X	X					
5315-00-014-1283	Pin, Straight, Headless	X	X			X	X		
2530-00-015-2774	Spacer, Hub Track	X	X	X		X	X	X	X
4730-00-018-9566	Plug, Pipe	X	X	X		X	X	X	X
4730-00-050-4203	Fitting, Lubrication	X	X			X	X		
4730-00-050-4208	Fitting, Lubrication	X	X			X	X		
5340-00-057-3537	Clevis, Road End	X	X			X	X		
2530-01-201-4816	Roadwheel Assembly	X	X				X	X	
4730-00-080-9847	Adaptor, Straight	X	X			X	X	X	X
5340-00-088-4254	Clamp, Loop	X	X			X	X		
5340-00-088-6655	Clamp, Loop	X	X			X	X		
2920-00-088-8613	Motor, Field Winding	X	X				X		

FIGURE I-3 Example of substitute materials list.

Substitute Lubricants and Hydraulic Fluids List

Table 2. Substitute Lubricants and Hydraulic Fluids

PRIMARY				ALTERNATE		EXPEDIENT NOTES	
Lubrication Point	Temperature Range	Military Specifications	NATO Product	US or NATO Equivalent	Soviet		
Gun Bore	Above 32°F +40°F/65°F	(PL-M) MIL-L-3150 PL-S VV-L-800	02-192 0-190				Not BDAR critical
Bore Evacuator	Above 32°F +40°F/65°F	(PL-M) MIL-L-3150 PL-S VV-L-800	0-192 0-190	OE/HDO-10 MIL-L-2104 OEA, MIL-G-46167			
Breech Block	Above 32°F +40°F/65°F	(PL-M) MIL-L-3150 PL-S VV-L-800	0-192 0-190	Any MIL-L-2104 OEA, MIL-G-46167			
Grenade Dischargers	Above 32°F +40°F/65°F	(PL-M) MIL-L-3150 PL-S VV-L-800	0-192 0-190	Any MIL-L-2104 OEA, MIL-G-46167			Not BDAR critical

FIGURE I-4. Example of substitute lubricants and hydraulic fluids list.

Table 3. Substitute Fuels for Diesel Fuel W-F-800, DF-1, and NATO-F-54

Primary Fuel	Alternate Fuel	Expedient Fuel	Military Specification	Commercial Specification
Diesel Fuel VV-F-800 DF-1 NATO-F-54	See Below	See Below	X	
	*Automotive Diesel: ASTM-D-975 (1-D and 2-D)			X
	Kerosene: ASTM-D-3699			X
	Fuel Oil: ASTM-D-396 (Numbers 1 and 2)			X
	Distillate: NATO-F-75 (Low pour point)		X	
	Kerosene: NATO-F-5B		X	
	Aviation Turbine: MIL-T-5624 (JP4 and JP5) NATO-F-40		X	X

FIGURE I-5. <u>Example of substitute fuels list.</u>

This page intentionally left blank.

APPENDIX J
PREVENTIVE MAINTENANCE CHECKLIST (PMC)

J.1 **SCOPE.**

J.1.1 Scope. This appendix establishes the technical content requirements for the preparation of a frame-based operator's Preventive Maintenance Checklist (PMC) for major weapon systems and their related systems, subsystems, equipment, WRAs, and SRAs. This appendix is a mandatory part of the standard. The information contained herein is intended for compliance. The requirements are applicable for all maintenance levels/classes through overhaul (depot), including DMWRs and NMWRs.

J.2 **APPLICABLE DOCUMENTS.**

The applicable documents in section 2 apply to this appendix.

J.3 **DEFINITIONS.**

The definitions in section 3 apply to this appendix.

J.4 **GENERAL REQUIREMENTS.**

J.4.1 General. The requirements provided in this appendix provide the technical content requirements for PMC.

J.4.2 Development of a Preventive Maintenance Checklist (PMC). A PMC shall be prepared when specified by the acquiring activity. The acquiring activity shall specify those inspection intervals for the PMC using those intervals as stated in E.5.3.4.2.3.1(b). (Refer to J.6.1.)

J.4.3 Preparation of digital data for electronic delivery. Data prepared and delivered digitally in accordance with this standard shall be XML tagged using the DTD. Data shall be formatted for presentation using stylesheets in accordance with MIL-STD-2361. Stylesheets may be prepared using XSL or other languages as specified by the acquiring activity. Where possible and when available, Army developed and provided stylesheets shall be used. Refer to 4.6 for information on obtaining or accessing this DTD and stylesheets. XML tags used in the DTD are noted throughout the text of this standard in bracketed, bold characters (e.g., **<ginfowp>**) as a convenience for the author and to ensure that the tags are used correctly when developing a document instance.

J.4.4 Use of the Document Type Definition (DTD)/stylesheet. The DTD referenced in this appendix interprets the technical content and structure for the functional requirements contained in this standard. Its use is mandatory. Development of IETMs is accomplished through the use of this standard, the DTD, and the guidance contained in MIL-HDBK-1222. Where possible and when available, Army developed and provided stylesheets shall be used. For additional information on the DTD and specific stylesheets, refer to MIL-STD-2361.

J.4.5 Content structure. The examples provided herein are an accurate representation of the content structure requirements contained in this appendix and shall be followed to permit the effective use of the DTD.

J.4.6 Style and format. This standard provides style and format requirements for the technical content requirements described in this appendix. These requirements are considered mandatory and are intended for compliance.

J.4.7 IETM functionality. The specific level of functionality and user interaction to be provided in the IETMs shall be in accordance with the functionality matrix contained in Appendix A.

J.4.8 Display area. The PMC shall have a display area that allows a clear view of the inspection item currently being performed. The PMC shall be able to be viewed using a Personal Digital Assistant (PDA) or similar device.

J.4.9 Preventive Maintenance Checklist (PMC) numbering. The PMC shall use the same basic TM identification number as the operator or field level maintenance manual from which the preventive maintenance checks and services were extracted. A "-##PMC" suffix shall be added to the basic TM number. (Refer to Figure J-1.)

J.4.10 National Stock Numbers (NSNs) and Part Numbers (P/Ns). NSNs shall not be used in procedural steps in the PMC. P/Ns shall not be used in procedural steps except when absolutely necessary for identification.

J.4.11 Illustrations. Illustrations may be used in the PMC.

J.4.12 Selective application and tailoring. This standard contains some requirements that may not be applicable to the preparation of all PMCs. Selective application and tailoring of requirements contained in this standard are the responsibility of the acquiring.activity and shall be accomplished using Appendix A. The applicability of some requirements is also designated by one of the following statements: unless specified otherwise by the acquiring activity; as specified by the acquiring activity; or when specified by the acquiring activity.

J.5 **DETAILED REQUIREMENTS.**

J.5.1 Basic content. The PMC shall consist of title frame information (refer to 5.2.1.7, J.5.2, and Figure J-1) and the checklist.

J.5.2 Usage note and reporting errors and recommending improvements statement **`<reporting>`**. The following statements shall appear on the introductory matter of the PMC (italicized text within parentheses shall be replaced with the appropriate information) (refer to Figure J-1):

"**NOTICE**

To effectively perform the tasks in this checklist, you must be experienced in using the preventive maintenance checks and services (PMCS) table in Technical Manual (TM) (*insert the applicable operator's TM number*). The checklist item numbers match those in the PMCS table in the TM.

REPORTING ERRORS AND RECOMMENDING IMPROVEMENTS

You can help improve this publication. If you find any errors, or if you know of a way to improve this publication, please let us know. Mail your letters or DA Form 2028-2 (Recommended Changes to Publications and Blank Forms) directly to: (*the address of proponent*). A reply will be sent to you."

J.5.3 Technical content. The PMC shall contain all items for the interval of inspections determined by the acquiring activity. The specified inspections shall be taken directly from the

applicable PMCS table (refer to .) in the operator or field level manual containing the inspection.

J.5.4 Item numbering. Item numbers in the checklist shall be the same as those assigned to the procedures in the operator or field level maintenance PMCS table.

J.5.5 Inspection checklist use. The PMC shall be used in the same manner as the PMCS table. (Refer to E.5.3.17.4.)

J.6 **NOTES.**

(This section contains information of a general or explanatory nature that may be helpful, but is not mandatory.)

J.6.1 Acquisition requirements. The acquiring activity should specify the inspection intervals to be included in the PMC. (Refer to J.4.2.)

TM 9-2350-252-10PMC

CREW (OPERATOR)
DAILY PREVENTIVE
MAINTENANCE CHECKLIST
FOR HULL

FIGHTING VEHICLE, INFANTRY
M2 AND M2A1

NOTICE

To effectively perform the tasks in this checklist, you must be experienced in using the PMCS table in TM 9-2350-252-10-1. The item numbers in this checklist are the same as those in the PMCS tables.

REPORTING ERRORS AND RECOMMENDING IMPROVEMENTS

You can help improve this publication. If you find any errors, or if you know of a way to improve this publication, please let us know. Mail your letters or DA Form 2028-2 (Recommended Changes to Publications and Blank Forms) directly to: (the address of proponent). A reply will be sent to you.

DISTRIBUTION STATEMENT A: Approved for public release; distribution is unlimited.

FIGURE J-1. Example PMC title frame.

APPENDIX K
LUBRICATION ORDERS

K.1 SCOPE.

K.1.1 Scope. This appendix establishes the technical content requirements for the preparation of stand-alone Lubrication Orders (LOs) for major weapon systems and their related systems, subsystems, equipment, WRAs, and SRAs. This appendix is a mandatory part of this standard. The information contained herein is intended for compliance. The requirements are applicable for all maintenance levels/classes through overhaul (depot) including DMWRs and NMWRs.

K.2 APPLICABLE DOCUMENTS.

The applicable documents in section 2 apply to this appendix.

K.3 DEFINITIONS.

The definitions in section 3 apply to this appendix.

K.4 GENERAL REQUIREMENTS.

K.4.1 General. The requirements provided in this appendix provide the technical content requirements for the LOs.

K.4.2 Development of lubrication instructions. Lubrication instructions shall be prepared for all equipment, except aircraft, that require lubrication. These lubrication instructions shall be prepared as a stand-alone work card except in the following cases:

a. When specified by the acquiring activity, the lubrication instructions may be included in the PMCS work package or as a lubrication work package. (Refer to E.5.3.5.)
b. When the lubrication procedures are classified, the lubrication instructions shall be included in the PMCS or a lubrication work package that is classified to at least the classification level of the instructions or higher. Classified instructions shall be marked and handled as specified in the current security regulations.

K.4.3 Preparation of digital data for electronic delivery. Data prepared and delivered digitally in accordance with this standard shall be XML tagged using the DTD. Data shall be formatted for presentation using stylesheets in accordance with MIL-STD-2361. Stylesheets may be prepared using XSL or other languages as specified by the acquiring activity. Where possible and when available, Army developed and provided stylesheets shall be used. Refer to 4.6 for information on obtaining or accessing the DTD and stylesheets. XML tags used in the DTD are noted throughout the text of this standard in bracketed, bold characters (e.g., **<ginfowp>**) as a convenience for the author and to ensure that the tags are used correctly when developing a document instance.

K.4.4 Use of Document Type Definition (DTD)/stylesheet. The DTD referenced in this standard interprets the technical content and structure for the functional requirements contained in this standard. Its use is mandatory. Development of IETMs is accomplished through the use of this standard, the DTD, and the guidance contained in MIL-HDBK-1222. Where possible and when available, Army developed and provided stylesheets shall be used. For additional information on the DTD and specific stylesheets, refer to MIL-STD-2361.

K.4.5 Content structure. The examples provided herein are an accurate representation of the content structure requirements contained in this appendix and shall be followed to permit the effective use of the DTD for LOs.

K.4.6 Style and format. This standard provides style and format requirements for the technical content requirements described in this appendix. These requirements are considered mandatory and are intended for compliance.

K.4.7 Work package development. Data developed in accordance with this appendix shall be divided into work packages. For task-related work packages, the tasks shall be in the logical order of the work sequence. These work packages should be stand alone and are broken into the following work package types: general information, operator instructions, troubleshooting procedures, maintenance instructions, parts information, supporting information, destruction of Army materiel to prevent enemy use, preventative maintenance checklist, and LOs. A work package shall contain all information and references required to support the work package type.

K.4.8 Warnings, cautions, and notes. Warnings and cautions shall be applied in accordance with 4.9.4. Notes shall be applied in accordance with 4.9.5.

K.4.9 Illustrations. Illustrations may be used in the LO.

K.4.9.1 Single illustrations. Illustrations shall be used to show the location of grease fittings and shall indicate the number of grease points (when applicable). A minimum number of illustrations shall be used. Foldouts shall not be used in lubrication orders.

K.4.9.2 Multiple illustrations. When it is necessary to provide multiple numbers of illustrations to show separate component parts, each illustration shall have an individual title.

K.4.10 Safety devices and interlocks. Information shall be prepared pertaining to the purpose and location of all safety devices and interlocks in conjunction with the pertinent procedures.

K.4.11 Electrostatic Discharge (ESD) sensitive parts. If the equipment contains ESD sensitive parts, components, or circuits, cautions and ESD labels shall be incorporated into the applicable tasks and procedures to ensure ESD sensitive parts are not damaged or degraded during maintenance and operation. (Refer to 4.9.18 for requirements on labeling with ESD.) Actions which could damage ESD sensitive parts, but which are not directly related to handling or operation of ESD sensitive parts, shall not be annotated with the ESD acronym, but shall be preceded by a caution statement.

K.4.12 Selective application and tailoring. This standard contains some requirements that may not be applicable to the preparation of all IETMs. Selective application and tailoring of requirements contained in this standard are the responsibility of the acquiring activity and shall be accomplished using Appendix A. The applicability of some requirements is also designated by one of the following statements: unless specified otherwise by the acquiring activity; as specified by the acquiring activity; or when specified by the acquiring activity.

K.5 **DETAILED REQUIREMENTS.**

K.5.1 Lubrication Order (LO) card **`<lubeorder>`**.

K.5.1.1 Lubrication order card format. LOs shall be prepared for display in screen format as specified in the body of the standard.

K.5.1.2 Lubrication order (LO) number. The LO number shall appear on the first screen in accordance with K.5.2.1 The LO number shall appear at the top of all the other screens in the LO.

K.5.2 Title screen (first screen) contents **<frntcover_abbreviated>**. The title screen shall contain the LO number, a heading, title, NSN, part number, CAGEC, the EIC, a reference line, reporting errors information, distribution statement/export control warning/destruction notice, and location of the LO statement. (Refer to Figure K-1 for an example of a title screen (first screen).)

K.5.2.1 Heading. The heading shall consist of the words "LUBRICATION ORDER," the date printed, the LO number, and a supersession notice (if applicable), formatted as shown in Figure K-1.

K.5.2.2 Title **<tmtitle>**. The title shall appear below the heading and read the same as the title on the related TM. When more than one piece of equipment is covered by the LO, the title for each shall appear separately.

K.5.2.3 National Stock Number (NSN), part number. , Commercial and Government Entity Code (CAGEC), and End Item Code (EIC). The applicable NSNs, part numbers, CAGECs, and EICs for each piece of equipment covered by the LO shall be entered beneath the title(s).

K.5.2.4 Reference line. A reference line consisting of the publication number(s) of the related TMs shall be placed below the title within the applicable area.

K.5.2.5 Reporting errors **<reporting>**. LOs shall contain a Reporting Errors and Recommending Improvements Statement.

K.5.2.6 Distribution statement, export control warning, and destruction notice **<notices>**. A distribution statement and, when required, an export control warning and destruction notice shall be placed in the identification information. Requirements for these notices are contained in 5.2.1.6.8 through 5.2.1.6.10 and in DODD 5230.24.

K.5.2.7 Lubrication order (LO) statement **<general_purpose_notices>**. The following statement shall be included in the identification information of the LO:

> "A copy of this lubrication order will remain with the equipment at all times; instructions contained herein are mandatory."

K.5.3 Introduction **<intro>**. The following statements shall be included in the LO, as applicable.

K.5.3.1 General statement(s)/notes.

K.5.3.1.1 General note placement. General statement(s)/notes shall be placed in the LO that are applicable to the overall understanding of requirements of the LO procedures. These statements/notes should be placed on the first screen when possible. If insufficient space is available for these notes on the first screen, they shall be placed before the first lubrication procedure.

K.5.3.1.2 General note content. The statement(s) shall include such information as adherence to lubrication intervals, explanation of interval symbols, maintenance levels/classes, exceptional operational requirements, abbreviations, fittings, and parts cleaning. A statement concerning corrosion control shall be used as applicable. The statement shall provide instructions or

reference corrosion control requirements provided in the applicable narrative TM. (Refer to Figure K-2 for an example.)

K.5.3.2 Oil filter statement. As applicable, a statement similar to the following shall be included:

"Oil filters shall be serviced/cleaned/changed as applicable, when:

a. They are known to be contaminated, or clogged,
b. Service is recommended by Army Oil Analysis Program (AOAP) laboratory analysis, or
c. At prescribed hardtime intervals."

K.5.3.3 Army Oil Analysis Program (AOAP) statements. One of the following statements shall be included for all equipment falling under the AOAP.

K.5.3.3.1 Army Oil Analysis Program (AOAP) sampling interval statement. A statement similar to the following shall be included:

"Engine oil/transmission oil/hydraulic fluids must be sampled at (*insert applicable hour/mileage time frame*) as prescribed by (*insert DA PAM 750-8 or DA PAM 738-751*)."

K.5.3.3.2 Army Oil Analysis Program (AOAP) not available/non-enrolled statement. When a component/equipment is not enrolled in the AOAP, or oil analysis support is not available, a statement similar to the following shall be used:

"This (*enter name of component/equipment*) is not enrolled in the Army Oil Analysis Program. HARDTIME INTERVALS APPLY."

K.5.3.4 Warranty hardtime statement. When applicable, the following statement shall be used:

"For equipment under manufacturer's warranty, hardtime oil service intervals shall be followed. Intervals shall be shortened if lubricants are known to be contaminated or if operation is under adverse conditions such as longer than usual operating hours, extended idling periods, extreme dust, etc."

K.5.4 Lubrication procedures **<lubewp>**. Lubrication procedures shall be prepared and shall include all applications, procedures, authorized lubricants, intervals, man-hour requirements, lubrication points, and AOAP requirements. Unless otherwise specified by the contracting activity, the lubrication procedures shall be presented in grouped sequence by interval to enable the user to receive, lubricate, and return to an acceptable performance standard all components of the equipment in a minimum amount of time with the skills, tools, test equipment, and spare parts authorized by the LMI or the MAC. Unless otherwise specified by the contracting activity, lubrication procedures shall be based upon the principles of RCM logic.

K.5.4.1 Work package identification information **<wpidinfo>**. Work package identification information is required for this work package. (Refer to 4.9.6.2.)

K.5.4.2 Work package initial setup **<initial_setup>**. Initial setup is required for this work package. (Refer to 4.9.6.3.)

K.5.4.3 Maintenance class. The lowest class of maintenance authorized to perform the task shown shall be identified. The applicable maintenance class symbol shall be shown in parentheses after the task. Applicable maintenance classes to be used are provided in Table K-I.

TABLE K-I. Maintenance classes.

Symbol Maintenance	Class
C Crew	
O (aviation only)	Aviation Maintenance Company (AMC)
F Maintaine	r or Aviation Support Battalion (ASB)
H Below	Depot
L	Specialized Repair Activity or Theater Aviation Support Maintenance Group (TASMG)
D Depot	

K.5.4.4 Grouped lubrication points. When grouped lubrication points require the same lubricant at the same interval, the type and number of points shall be identified and described by one of the following methods:

a. Multi-headed, solid-shafted arrows shall point to each of the lubrication points. (Refer to Figure K-3.)
b. Lubrication point notes shall provide instructions for applying lubricants, taking into account the following factors:
   (1) Type, grade, availability, and properties of prescribed lubricant.
   (2) Expected temperature.
   (3) Lubrication gun and tools available to authorized maintenance level.
   (4) Types of lubrication fittings.
   (5) Possible ill effects of excessive or insufficient lubrication.

Caution shall be stressed where over or under lubrication of a part will damage that part or closely associated parts. Such cautionary notes shall be included either as a portion of the point note or as a special note. (Refer to K.5.8.)

K.5.4.5 Disassembling and hand packing. If applicable, disassembling and hand packing instructions shall be provided for medium- and high-speed antifriction bearings which are sensitive to the amount of lubrication applied and do not have bleed holes or relief valves.

K.5.4.6 Cleaning, disassembling, and reassembling. Cleaning, disassembling, and reassembling instructions that are required before or after lubrication shall be provided. If instructions are extensive and contained in a TM, the TM shall be referenced.

K.5.4.7 Washing and natural drying. If applicable, instructions shall be given for washing and natural drying of finely machined and dirt-sensitive parts before relubricating. Use of compressed air jets or temperatures above 212 degrees Fahrenheit shall not be prescribed.

K.5.4.8 Preservative material. Instructions shall not specify a coating of preservative material, either before or after packing parts that are lubricated with grease; nor shall they specify an application of oil, solvent, or additional grease to a "sealed-for-life" or prepacked antifriction bearing.

K.5.5 Lubricants and military symbols. Unless otherwise specified by the acquiring activity, lubricants shall be identified by standard military symbols in accordance with MIL-HDBK-113 and MIL-HDBK-275. (Refer to Figure K-3.) The lubricant symbols and interval symbols shall be printed in separate, vertical columns on the inner side of the point names. These columns shall be headed by the words "LUBRICANT" and "INTERVAL." Those lubrication points that are serviced or lubricated by checking the level, replenishing the lubricant, or draining and refilling shall be indicated by the lubricant's symbol at the point on the illustration that is designated for replenishing or refilling. The amount of lubricant required shall be given either in the point note or in the "Capacity" column of the table, if applicable.

K.5.5.1 Lubrication interval symbols. Unless otherwise specified by the acquiring activity, the lubrication interval symbols in Table K-II shall be used:

TABLE K-II. Lubrication intervals.

Symbol	Definition
D	Daily
W	Weekly
M	Monthly
Q	Quarterly
S	Semiannually
A	Annually
B	Biannually
H	Hours (operated)
MI	Miles (operated)
KM	Kilometers (operated)
RDS	Rounds (fired)
OC	On Condition
MRA	Maintenance Repair Action

K.5.6 Measurements. Unless otherwise specified by the acquiring activity, all measurements expressed in the text, in tables, or in illustrations shall be expressed in both U.S. standard units and metric units. The order shall be in accordance with equipment markings.

K.5.7 Lubricant table. As applicable, a table(s) shall be prepared to provide information needed to select the proper lubricant for various temperature ranges and uses. The size and location of the table(s) shall be tailored to meet layout requirements and shall include, as applicable, information on temperature range, lubricant, military symbol, NATO code, specification, NSN, capacity, interval between service, and man-hours required to complete all service by type stated to the nearest tenth for all lubricants prescribed by the LO. (Refer to Figure K-4 for an example.)

K.5.7.1 Notes to tables. As necessary, when specific restrictions, preferred grades, and other conditions exist, notes shall be annotated on tables in accordance with MIL-STD-40051-1. For example: 1/"When MIL-PRF-2104 lubricant is authorized, use 15W-40 (OE/HDO-15/40) when available and applicable temperature range exists," or 2/"15W-40 oil is not authorized in this particular (enter component name)." Where applicable, the statement "For Arctic Operation, refer to FM 9-207" shall be included as a note.

K.5.8 Special notes.

K.5.8.1 Pertinent lubrication point information. As applicable, additional pertinent lubrication point information shall be incorporated into the LO. When applicable, the LO shall contain a special note referencing, but not repeating, instructions in TMs.

K.5.8.2 Effect of extreme conditions. If applicable, pertinent instructions relevant to the effect of extreme conditions such as temperature, humidity, or altitude on lubrication requirements for the equipment shall be included as a special note.

K.5.9 Lubrication order rear matter **<lubeorder_rear>**.

K.5.9.1 Reporting errors and recommending improvements DA Form 2028 **<da2028>**. A DA Form 2028 shall be included as prescribed in 5.2.2.1.

K.5.9.2 Authentication block **<authent>**. An authentication block, provided by the acquiring activity, shall be included in the LO. Distribution information, as applicable, shall be placed below the authentication block.

K.6 **NOTES.**

The notes in section 6 apply to this appendix.

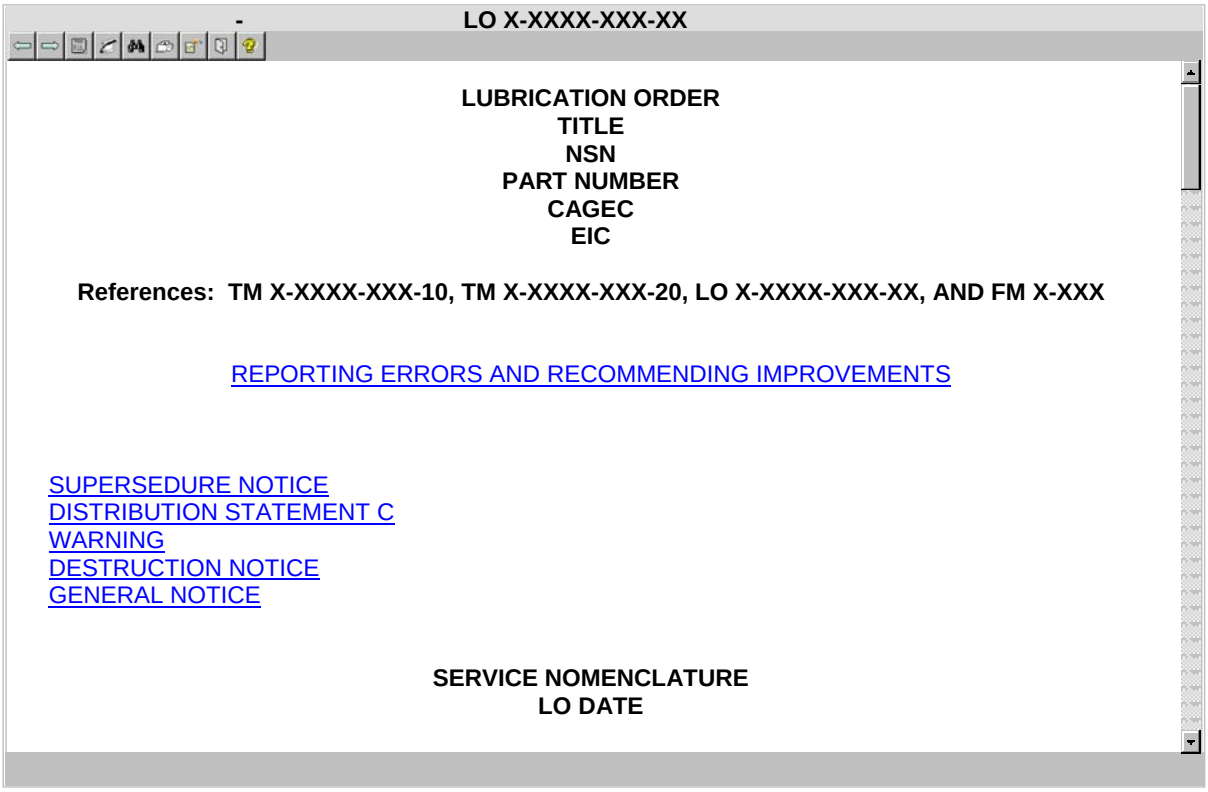

FIGURE K-1. Example of first screen.

- **LO X-XXXX-XXX-XX**

NOTES:

This LO is for crew (C) maintenance. Lube intervals (on-condition or hardtime) are based on normal operation. Lube more during constant use, and less during inactive periods. Use correct grade of lubricant for seasonal temperature expected.

On the picture, a dash line (--) means lube points on both sides.

Clean parts with dry solvent (SD), type II, or equivalent. Use cleaning compound solvent (RBC) on powder-fouled parts. Dry before lubricating. DO NOT use fluid or semi-fluid lubricant on SFD lubricated surface. Wipe surfaces dry.

Before you start your lube service.

ALWAYS	**NEVER**
a. Clean grease fittings before lubrication.	a. Use wrong type/grade grease.
b. Use the lubrication order as your guide.	b. Use too much lubricant.

FIGURE K-2. Example of general statements/notes.

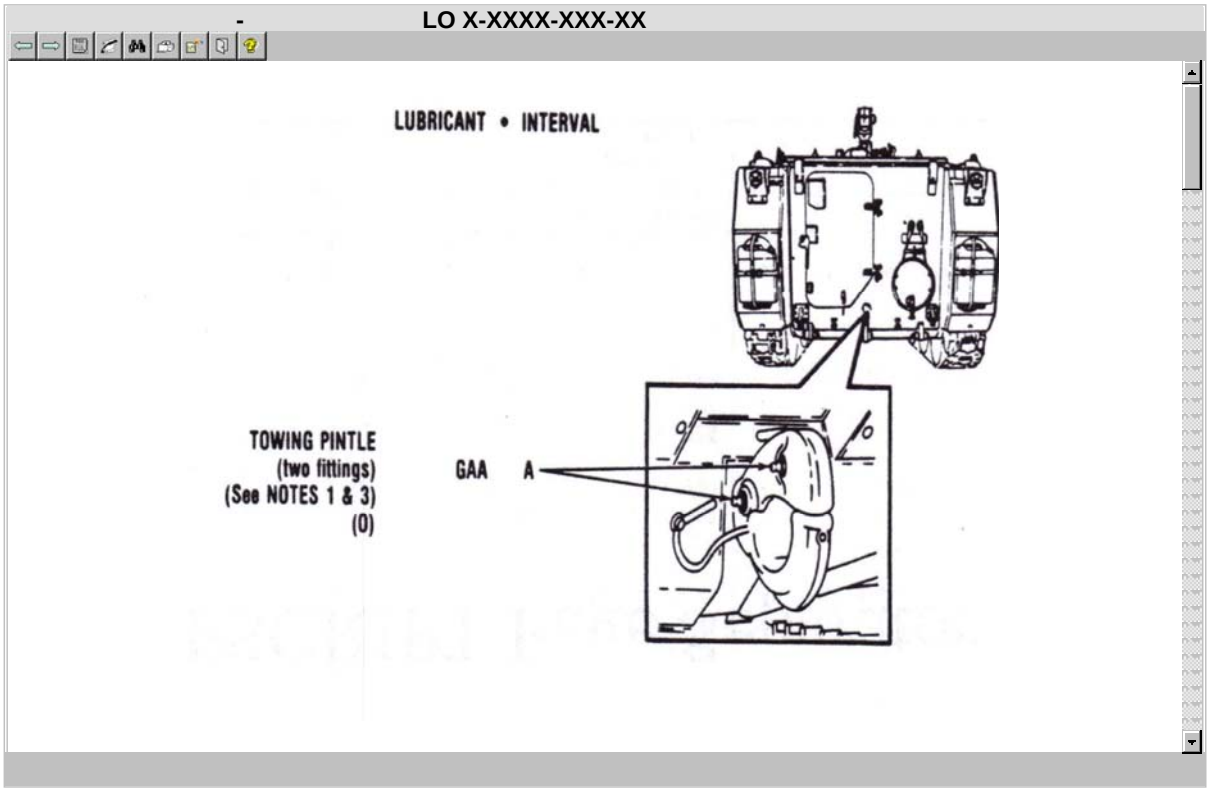

FIGURE K-3. <u>Example – identification of lubricant symbol and lubrication points, interval, and note</u>.

LO X-XXXX-XXX-XX

Table 1. Lubricant Table for Engine XXC

Temperature Range	Lubricant Mil. Symbol (NATO Code)	Capacity	Interval	Man-hour
-18°C to +49°C (zero to +120°F)	OE/HDO 14/40 (0-1236) MIL-PRF-2104	5 QTS	200 MI	.5
-25°C to +40°C (-15°F to +40°F)	OE/HDO 10 (0-237) MIL-PRF-2104	5 QTS	200 MI	.5
-10°C to +49°C (+15°F to +120°F)	OE/HDO 30 (0-238) MIL-PRF-2104	5 QTS	200 MI	.5
-05°C to +49°C (+25°F to +120°F)	OE/HDO 40 (N/A) MIL-PRF-2104	5 QTS	200 MI	.5
-57°C to +04°C (-70°F to +40°F)	OEA (D-183) MIL-PRF-46167	5 QTS	100 MI	.5

FIGURE K-4. Example of lubricant table.

This page intentionally left blank.

APPENDIX L
DMWR FOR MAINTENANCE/DEMILITARIZATION OF AMMUNITION

L.1 **SCOPE.**

L.1.1 Scope. This appendix establishes the technical content requirements for the preparation of DMWRs for the maintenance or demilitarization of conventional and chemical ammunition, hereafter referred to as ammunition for major weapon systems and their related systems, subsystems, equipment, WRAs, and SRAs. This appendix is a mandatory part of this standard. The information contained herein is intended for compliance.

L.2 **APPLICABLE DOCUMENTS.**

The applicable documents in section 2 of the basic standard apply to this appendix.

L.3 **DEFINITIONS.**

The definitions in section 3 of the basic standard apply to this appendix.

L.4 **GENERAL REQUIREMENTS.**

L.4.1 General. The requirements provided in this appendix provide the technical content requirements for the maintenance or demilitarization of ammunition.

L.4.2 Development of maintenance or demilitarization instructions. Maintenance or demilitarization instructions shall cover all items comprising the ammunition. Tasks shall be presented in the order in which they are performed. Procedures shall refer to specific maintenance tasks or demilitarization tasks to complete the tasks.

L.4.3 Preparation of digital data for electronic delivery. Data prepared and delivered digitally in accordance with this standard shall be XML tagged using the DTD. Data shall be formatted for presentation using stylesheets in accordance with MIL-STD-2361. Stylesheets may be prepared using XSL or other languages as specified by the acquiring activity. Where possible and when available, Army developed and provided stylesheets shall be used. Refer to 4.6 for information on obtaining or accessing the DTD and stylesheets. XML tags used in the DTD are noted throughout the text of this standard in bracketed, bold characters (e.g., **<ginfowp>**) as a convenience for the author and to ensure that the tags are used correctly when developing a document instance.

L.4.4 Use of Document Type Definition (DTD)/stylesheet. The DTD referenced in this appendix interprets the technical content and structure for the functional requirements contained in this standard. Its use is mandatory. Development of IETMs is accomplished through the use of this standard, the DTD, and the guidance contained in MIL-HDBK-1222. Where possible and when available, Army developed and provided stylesheets shall be used. For additional information on the DTD and specific XSL, refer to MIL-STD-2361.

L.4.5 Content structure and format. The examples provided herein are an accurate representation of the content structure and format requirements contained in this appendix and shall be followed to permit the effective use of the DTD for demilitarization or maintenance procedures.

L.4.6 Style and format. This standard provides style and format requirements for the technical content requirements described in this appendix. These requirements are considered mandatory and are intended for compliance.

L.4.7 IETM functionality. The specific level of functionality and user interaction to be provided in the IETMs shall be in accordance with the functionality matrix contained in Appendix A.

L.4.8 Work package development. Data developed in accordance with this appendix shall be divided into work packages. For task-related work packages, the tasks shall be in the logical order of the work sequence. These work packages should be stand alone and are broken into the following work package types: general information, DMWR introduction, operational requirements, quality acceptance requirements, and supporting information.

L.4.9 Electrostatic Discharge (ESD) sensitive parts. If the equipment contains ESD sensitive parts, components, or circuits, cautions and ESD labels shall be incorporated into the applicable tasks and procedures to ensure ESD sensitive parts are not damaged or degraded during maintenance and operation. (Refer to 4.9.18 for requirements on labeling with ESD.) Actions which could damage ESD sensitive parts, but which are not directly related to handling or operation of ESD sensitive parts, shall not be annotated with the ESD acronym, but shall be preceded by a caution statement.

L.4.10 Selective application and tailoring. This standard contains some requirements that may not be applicable to the preparation of all DMWRs. Selective application and tailoring of requirements contained in this standard are the responsibility of the acquiring activity and shall be accomplished using Appendix A. The applicability of some requirements is also designated by one of the following statements: unless specified otherwise by the acquiring activity; as specified by the acquiring activity; or when specified by the acquiring activity.

L.5 **DETAILED REQUIREMENTS.**

L.5.1 General. The requirements provided in this appendix provide the technical content requirements for the maintenance or demilitarization of ammunition.

L.5.2 Preparation of maintenance or demilitarization DMWRs. The DMWR shall contain the following work packages outlined below, as applicable, in addition to the introductory matter (5.2.1) and rear matter (5.2.2):

a. General Information Work Package
b. DMWR Introduction Work Package
c. Operational Requirements Work Package
d. Quality Acceptance Requirements Work Package
e. Supporting Information
    (1) References Work Package
    (2) Expendable and Durable Items List Work Package
    (3) Equipment and Special Facilities Work Package
    (4) Tabulated Data, Military Specifications, and Drawings Work Package
    (5) Approved Intraplant Transfer Equipment Work Package
    (6) Pentachlorophenol (PENTA)-Treated Packing Materials Work Package
    (7) Environmental Requirements Work Package

(8) Hazard Analysis Work Package

(9) Other Supporting Information Work Packages

L.5.3 General information work package **<ginfowp>**. A general information work package shall be prepared in accordance with B.5.2.

L.5.4 DMWR introduction work package **<dmwr_introwp>**. The DMWR introduction work package shall be prepared in accordance with the requirements contained in L.5.4.1 through L.5.4.15.

L.5.4.1 Work package identification information **<wpidinfo>**. Work package identification information is required for this work package. (Refer to 4.9.6.2.)

L.5.4.2 Work package initial setup **<initial_setup>**. Initial setup is not required for this work package.

L.5.4.3 Work planning **<work_planning>**. Accumulation of excess ammunition items, removal of line rejects or explosive waste/hazardous waste, and removal of items containing precious metals shall be addressed.

L.5.4.4 Disposition **<disposition>**. Disposition guidelines for serviceable and unserviceable components and materials shall be included as a part of each operation description, and also shall address removal of hazardous materials or components and inspection of salvaged materials prior to transfer to the Defense Reutilization Marketing Office (DRMO). Reference may be made to publications for information on packing, marking, and shipping generated assemblies, components, and materials.

L.5.4.5 Equipment **<equipment>**. The equipment information provided shall contain, but not be limited to, the following paragraph:

> "Equipment cited herein for the various operations has been approved for the operations specified. Activities intending to use other equipment for these operations must obtain approval from the publication's proponent agency by filing a deviation, waiver, or exception.
>
> Transfer and materials handling equipment must conform to requirements set forth in AR 385-10. The Approved Intraplant Transfer Equipment Work Package lists preferred approved Ammunition Peculiar Equipment (APE) for moving and handling ammunition and components.
>
> Use of APE or nonstandard APE is governed by AR 700-20. All modifications to existing APE and locally fabricated nonstandard APE must have prior approval in accordance with AR 700-20. Locally designed and fabricated equipment, other than APE or nonstandard APE, must be approved by the local safety office and the commander of the installation.
>
> APE and associated kits must be operated in accordance with the applicable operation and maintenance manual."

L.5.4.6 Safety requirements **<sfty_req>**. The safety requirements information provided shall contain, but not be limited to, the following paragraph:

> "Guidance for safety requirements as prescribed by current safety directives and regulations shall be addressed."

L.5.4.7 Protection against general hazards **<gen_hazards>**. Guidance for general hazards shall be addressed for the ammunition and materials requiring protection against the general hazards. Additionally, requirements for handling of ammunition, requirements for wearing of suitable protective clothing, and precautions when handling PENTA-treated packing materials and pallets shall be included. Reference shall be made to the PENTA-Treated Packing Materials Work Package for additional data on personal hygiene requirements, working with PENTA-treated wood, and the disposition of contaminated clothing.

L.5.4.8 Protection against specific hazards **<spec_hazards>**. Specific hazards shall be listed in each applicable operation for the ammunition and materials requiring protection against the specific hazards.

L.5.4.9 Hazard analysis **<haz_analysis>**. As a minimum, the Hazard Analysis information provided shall contain the following statement and shall reference the Hazard Analysis Work Package.

> "A hazard analysis identifies potential hazards associated with these operations and countermeasures to mitigate these hazards, and assesses the probability and effect of occurrence."

L.5.4.10 Environmental regulation compliance **<erc>**. Environmental regulations implemented by federal, state, and local governments, shall be addressed. (Refer to L.5.7.7.)

L.5.4.11 Resource conservation and recovery regulations **<rcrr>**. Pertinent resource conservation and recovery regulations, as contained in the Resource Conservation and Recovery Act, 42 U.S.C. 6901 et seq., shall be addressed.

L.5.4.12 Resource recovery **<resource_recovery>**. Resource recovery shall contain a paragraph similar to the following:

> "All items of salvageable value will be salvaged as scrap or reusable material. All explosives and hazardous materials that can be successfully recovered and reused will be recovered; otherwise, the materials will be disposed of by an environmentally safe and approved method."

L.5.4.13 Reporting requirements **<reporting_req>**. Guidance for reporting work accomplishments shall be addressed.

L.5.4.14 Tabulated data **<tabdata>**. Reference shall be made to the Tabulated Data, Military Specifications, and Drawings Work Package for the tabulated data.

L.5.4.15 Flowchart **<flowchart>**. A flowchart for the overview of all operations may be included but is not mandatory.

L.5.5 Operational requirements work package **<dmwr_operationalreqwp>**. The operational requirements work package shall be prepared in accordance with the requirements contained in L.5.5.1 through L.5.5.5. This work package may be repeated for each operation, as necessary, to meet all of the operational requirements. Refer to MIL-HDBK-1222 for an example of a demilitarization operational requirements work package.

L.5.5.1 Work package identification information **<wpidinfo>**. Work package identification information is required for this work package. (Refer to 4.9.6.2.)

L.5.5.2 Work package initial setup **<initial_setup>**. Initial setup is required for this work package. (Refer to 4.9.6.3.)

L.5.5.3 Special safety requirements **<special_sfty>**. Special safety requirements shall be prepared.

L.5.5.4 Operational steps **<op_steps>**. Specific operational steps, which are to include warnings, cautions, and notes, shall be prepared. The initial setup shall include equipment requirements, material requirements, and special facilities requirements.

L.5.5.5 Flowchart **<flowchart>**. Flowcharts for each specific operation may be included but are not mandatory.

L.5.6 Quality acceptance requirements work package **<dmwr_qarwp>**. The quality acceptance requirements work package shall contain either the QA requirements for demilitarization or maintenance of ammunition, but shall not contain information for both. The quality acceptance requirements work package shall address the quality acceptance requirements for the DMWR contained in L.5.6.1 through L.5.6.5, as applicable.

L.5.6.1 Work package identification information **<wpidinfo>**. Work package identification information is required for this work package. (Refer to 4.9.6.2.)

L.5.6.2 Work package initial setup **<initial_setup>**. Initial setup is not required for this work package.

L.5.6.3 Demilitarized ammunition **<demil_qar>**. The quality acceptance requirements for ammunition subject to demilitarization shall address the QA plan, inspection, and random sampling of salvaged materiel.

L.5.6.4 Maintenance of ammunition **<maintenance_qar>**. The quality acceptance requirements for ammunition subject to maintenance shall address ballistic test requirements (BTRs), product defect criteria, or site defect criteria identified in the operation requirements work package(s) to include defect classification or to incorporate appropriate statistical process control (SPC) statements for performing activities.

L.5.6.5 Definitions **<definitions>**. All peculiar quality terms used in the DMWR shall be listed and defined. Alternately, if the definitions are listed in another publication, that publication shall be referenced.

L.5.7 Supporting information work package **<dmwr_sim>**. Supporting information work packages shall be added to a DMWR as applicable, in the order in which they are presented herein, for purposes of illustration, application, and general information. Supporting information work package identification shall be referenced in the text by work package sequence number followed by the title. Each individual supporting information work package shall begin on a right-hand page.

L.5.7.1 References work package **<refwp>**. This work package shall be prepared in accordance with G.5.2. Military specifications and drawings that are listed in the Tabulated data, military specifications, and drawings work package shall not be listed.

L.5.7.2 Expendable and durable items list work package **<explistwp>**. This work package shall be prepared in accordance with G.5.6.

L.5.7.3 Equipment and special facilities work package **<facilwp>**. This work package shall be prepared in accordance with E.5.3.9.1. This work package shall consist of a list of equipment and special facilities required to perform the operations described in the DMWR. (Refer to MIL-HDBK-1222 for an example.)

L.5.7.4 Tabulated data, military specifications, and drawings work package **<genwp>**. This work package shall be prepared in accordance with G.5.11. This work package shall consist of a list of tabulated data extracted from Army Data Sheets and/or military specifications and drawings applicable to the DMWR operations. Refer to MIL-HDBK-1222 for an example.

L.5.7.5 Approved intraplant transfer equipment work package **<genwp>**. This work package shall be prepared in accordance with G.5.11. This work package lists suggested or commonly available equipment.

L.5.7.6 Pentachlorophenol (PENTA)-treated packing materials work package **<genwp>**. This work package shall be prepared in accordance with G.5.11. When specified by the contracting activity, this work package shall be used to include the latest PENTA-treated packing materials requirements.

L.5.7.7 Environmental requirements work package **<genwp>**. This work package shall be prepared in accordance with G.5.11. This work package shall be used to include the latest environmental requirements. As a minimum, this work package shall include air, noise, and emission problems and controls as applicable.

L.5.7.8 Hazard analysis work package **<genwp>**. This work package shall be prepared in accordance with G.5.11. This work package shall contain a hazard analysis updated to include the latest requirements. Potential hazards which may result in injury or death shall be identified. Appropriate countermeasures shall be provided.

L.5.7.9 Other supporting information work packages **<genwp>**. This work package shall be prepared in accordance with G.5.11. When specified by the contracting activity, other supporting information work packages may be added to the DMWR.

L.6 **NOTES.**

The notes in section 6 apply to this appendix.

CONCLUDING MATERIAL

Custodians:

Army - TM
Marine Corps - MC

Preparing Activity:

Army - TM

Review Activities:

Army - AC, AR, AT, AV,
CR, EA, MI, PT

Project Number:

TMSS 2008 012

NOTE: The activities listed above were interested in this document as of the date of this document. Since organizations and responsibilities can change, you should verify the currency of the information above using the ASSIST Online database at https://assist.daps.dla.mil/online/.