NOT MEASUREMENT SENSITIVE

MIL-HDBK-1222C
w/CHANGE 3
21 March 2008
SUPERSEDING
MIL-HDBK-1222C
w/Change 2
30 July 2007

DEPARTMENT OF DEFENSE HANDBOOK

GUIDE TO THE GENERAL STYLE AND FORMAT
OF
U.S. ARMY WORK PACKAGE TECHNICAL MANUALS

This handbook is for guidance only.
Do not cite this document as a requirement

AMSC N/A **AREA TMSS**

DISTRIBUTION STATEMENT A. Approved for public release, distribution is unlimited.

FOREWORD

1. This handbook is approved for use by all Departments and Agencies of the Department of Defense.

2. This handbook provides non-regulatory guidance for the preparation of technical manuals that are required to operate and maintain the various types of equipment and weapon systems within the Department of the Army. This handbook is for guidance only. This handbook cannot be cited as a requirement. If it is, the contractor does not have to comply.

3. This handbook expands and clarifies the requirements contained in MIL-STD-40051-1, Preparation of Digital Technical Information for Interactive Electronic Technical Manuals, and MIL-STD-40051-2, Preparation of Digital Technical Information for Page-Based Technical Manuals. This Handbook provides recommended writing style, comprehensibility, format, and graphics requirements used by the U. S. Army for the preparation of technical manuals to the work package concept.

4. Comments, suggestions, or questions should be addressed to USAMC Logistics Support Activity, ATTN: AMXLS-AP, Redstone Arsenal, Al 35898-7466 or emailed to logsa.tmss@conus.army.mil. Since contact information can change, you may want to verify the currency of this address information using the ASSIST Online database at http://assist.daps.dla.mil.

SUMMARY OF CHANGE 3 MODIFICATIONS

The following modifications to MIL-HDBK-1222C have been made:

Paragraph/Figure/Table	Modification
Figure A-12	Changed
Figure A-26	Changed
Figure A-27	Changed
Figure A-28	Changed
Figure A-29	Changed
Figure A-34	Changed
Figure B-1	Changed

CONTENTS

Paragraph Page

FOREWORD ..... **ii**

1. SCOPE **1**
1.1 Scope. 1
1.2 Paragraphs with limited applicability. 1

2. APPLICABLE DOCUMENTS **1**
2.1 General. 1
2.2 Government documents. 1
2.2.1 Specifications, standards, and handbooks. 1
2.2.2 Other Government documents and publications. 2
2.3 Non-Government publications. 2
2.4 Order of Precedence. 2

3. DEFINITIONS **3**

4. STYLE AND FORMAT **15**
4.1 Style sheets. 15
4.2 Figures contained in this handbook. 15
4.3 Selective application and tailoring. 15
4.4 How to develop a work package TM. 15
4.4.1 How to develop work packages. 16
4.4.2 Development of individual work packages. 16
4.5 Development of an XML source file. 17
4.6 Graphics 17
4.6.1 Illustration style and format preparation. 17
4.6.2 Illustration detail. 17
4.6.3 Scale. 18
4.6.4 Letter size. 18
4.6.5 Electrostatic discharge (ESD) sensitive acronym. 18
4.6.6 Callouts. 18
4.6.7 Nomenclature (Page-based). 18
4.6.8 Leader lines and arrowheads. 19
4.6.9 Illustration legends. 19
4.7 Standard English grammar. 19
4.8 Nomenclature -Neutral terms. 19
4.9 Narrative, nonprocedural text. 19
4.10 Procedural text. 20
4.10.1 Lead-in. 20
4.10.2 Form and content of procedures. 20
4.10.3 Limitations for procedural text. 20
4.10.4 Sentences in procedures. 20
4.10.5 Positive form. 20

CONTENTS

Paragraph Page

5. CD-ROM PREPARATION 20
5.1 CD label data 20
5.1.1 TM number. 21
5.1.2 CD set number. 21
5.1.3 EM number, IDN, and PIN. 21
5.1.4 Supersession data. 21
5.1.5 Copyright Notice, Distribution Restriction, and Arms Export Control Notice. 21
5.1.6 Protective markings. 22
5.1.7 Information not contained on CD-ROM face. 22
5.2 CD Mailer data. 22
5.2.1 Outside panel of CD mailer. 22
5.2.1.1 Outside panel of CD mailer (front). 22
5.2.1.2 Outside panel of mailer (back). 22
5.2.1.3 Outside of mailer (spine). 22
5.2.2 Inside of mailer (left panel) 23
5.2.3 Inside of mailer (right panel) 23
5.3 Jewel case flyleaf data 23

6. GRAPHICS 23
6.1 Types of graphics. 23
6.2 Illustrations for procedures. 24
6.3 Graphic formats. 24
6.4 Tools and test equipment illustrations. 24
6.5 Illustrations of special tools and test equipment. 24
6.6 Line drawings. 24
6.7 Photographs. 25
6.8 Multi-section illustrations (Page-based TMs only). 25
6.9 Multiview illustrations. 25
6.10 Foldout and multisheet illustrations (Page-based TMs only). 25
6.10.1 Multisheet RPSTL illustrations. 25
6.11 Exploded views. 26
6.12 Locator views. 26
6.13 Detail views. 26
6.14 Scanned images. 26
6.15 Cartoons. 26
6.16 Diagrams. 26
6.16.1 Designations, diagrams, and symbols. 27
6.16.2 General methods. 27
6.16.3 Portraying signal flow. 28
6.16.3.1 Signal connections. 28
6.16.3.1.1 Techniques within a single sheet of a diagram. 28
6.16.3.1.2 Techniques between sheets of a diagram. 28
6.16.3.1.3 Techniques between diagrams. 29
6.16.3.2 Signal difference. 29

CONTENTS

Paragraph Page

6.16.3.3 Signal junctions....29
6.17 Schematic and functional diagrams....29
6.17.1 Schematic diagrams....29
6.17.2 Functional diagrams....30
6.17.3 Test point identification symbols....30
6.18 Pictorial diagrams....30
6.19 Cutaway diagrams....31
6.20 Logic diagrams....31
6.21 Simplified diagrams....31
6.22 Partial diagrams....31
6.23 Test diagrams....31
6.24 Power distribution diagrams....31
6.25 Pyramid diagrams....31
6.26 Wiring and interconnection data....32
6.26.1 Cable diagrams....32
6.26.2 Wiring diagrams....32
6.26.3 Wire list....33
6.27 Piping diagrams....33
6.28 Electronic items....33
6.29 Line graphs....34
6.30 Prescreened photographs....34
6.31 Digitized artwork....34
6.32 Combination illustrations....34

7. COMPREHENSIBILITY WITH READING GRADE LEVEL (RGL)....34
7.1 Comprehensibility....34
7.2 Sampling plan for inspection....35
7.2.1 Derivation of samples....35
7.2.1.1 Critical scanning....35
7.2.1.2 Systematic sampling....35
7.2.2 Applicable tests....35
7.2.3 Extended local samples....35
7.2.4 Validation of readability....35
7.2.5 Critical scanning....35
7.2.5.1 Scanning criteria for procedures....35
7.2.5.2 Scanning criteria for nonprocedural text....36
7.2.5.3 Scanning criteria for illustrations and tables....36
7.2.6 Systematic sampling of page-based TMs....36
7.2.6.1 Identifying break pages....36
7.2.6.2 Samples of procedural text....37
7.2.6.3 Samples of nonprocedural text....37
7.2.6.3.1 Sample size....37
7.2.6.3.2 Other tests on nonprocedural text....37
7.2.6.4 Samples of illustrations and tables....37
7.2.6.4.1 Sampling method for illustrations....37

CONTENTS

Paragraph Page

7.2.6.4.2 Tables. 37
7.2.7 Systematic Sampling of IETMs. 37
7.2.7.1 Number of samples. 37
7.2.7.2 Samples of procedural text. 38
7.2.7.3 Samples of nonprocedural text. 38
7.2.7.3.1 Sample Size. 38
7.2.7.3.2 Other tests on nonprocedural text. 39
7.2.7.4 Samples of illustrations and tables. 39
7.2.7.4.1 Sampling method for illustrations. 39
7.2.7.4.2 Tables. 39
7.2.8 Extended local samples. 39
7.2.8.1 Procedural text. 39
7.2.8.2 Nonprocedural text in page-based TMs. 39
7.2.8.2.1 Samples for RGL calculation. 39
7.2.8.2.2 Other tests on nonprocedural text. 39
7.2.8.2.3 Nonprocedural text in IETMs. 39
7.2.8.2.3.1 Samples for RGL calculation. 39
7.2.8.2.3.2 Other tests on nonprocedural text. 39
7.2.8.2.4 Illustrations and tables. 40
7.2.9 Special cases of sampling. 40
7.2.9.1 Short TMs. 40
7.2.9.2 Material already sampled. 40
7.2.9.3 Availability of material. 40
7.3 Reading grade level measures. 40
7.3.1 Counts for narrative text. 40
7.3.1.1 Words. 40
7.3.1.2 Sentences. 40
7.3.1.3 Syllables. 40
7.3.2 Automatic counting equipment. 40
7.3.3 Manual counting technique. 40
7.4 Calculation of RGL. 40
7.4.1 Overall grade level. 41
7.4.2 Sample grade levels. 42

8. NOTES 42
8.1 Intended use. 42
8.2 Subject term (key word) listing. 43
8.3 Change notations. 43

A INTERACTIVE ELECTRONIC TECHNICAL MANUAL (IETM) DEVELOPMENT 99

A.1 SCOPE 99
A.1.1 Scope. 99
A.1.2 Philosophy. 99

CONTENTS

Paragraph Page

A.2 APPLICABLE DOCUMENTS....99

A.3 DEFINITIONS....99

A.4 IETM DATA GUIDANCE....99
A.4.1 Development of work package IETMs....99
A.4.2 How to develop a work package IETM....99
A.4.2.1 Technical Manual Outline....99
A.4.2.1.1 Initial outline development....99
A.4.2.1.2 Outline content and arrangement....100
A.4.2.2 Displaying IETMs....100
A.4.3 IETM divisions....100
A.4.3.1 Introductory matter and planning information....100
A.4.3.1.1 IETM installation data....101
A.4.3.1.2 CD content frame....101
A.4.3.1.3 Warning summary....101
A.4.3.1.3.1 General warnings....101
A.4.3.1.3.2 Hazardous material....101
A.4.3.1.3.3 First aid....101
A.4.3.1.4 Revision summary frame....101
A.4.3.1.5 Table of contents....101
A.4.3.1.6 "How To Use This IETM" information....102
A.4.3.2 Descriptive information and theory of operation....103
A.4.3.3 Troubleshooting information....103
A.4.3.3.1 Troubleshooting/Diagnostics....103
A.4.3.3.2 Dynamic troubleshooting....103
A.4.3.3.3 Test procedure design....103
A.4.3.3.3.1 Technician troubleshooting information....103
A.4.3.3.3.2 TM writer considerations....104
A.4.3.3.3.2.1 Dynamic diagnostic source information....104
A.4.3.3.3.2.1.1 Experienced technical interaction....104
A.4.3.3.3.2.1.2 Test equipment interaction....104
A.4.3.3.4 Test equipment interaction with IETM....104
A.4.3.3.4.1 Interface technician and ATE....104
A.4.3.3.4.2 Interface IETM and ATE....105
A.4.3.3.4.3 ATE result....105
A.4.3.3.4.4 Evaluate process result....105
A.4.3.4 Procedure information....105
A.4.3.4.1 Operator instructions....105
A.4.3.4.2 Maintenance instructions....105
A.4.3.5 Parts information (RPSTL)....106
A.4.3.5.1 Parts information in work packages....107
A.4.3.5.2 Preparation parts information....107
A.4.3.5.3 Parts information useful in an IETM....107

CONTENTS

Paragraph Page

A.4.3.6 Supporting information. 108
A.4.3.7 Work package content. 108
A.4.3.8 Identification information. 108
A.4.3.8.1 Initial setup information. 109
A.4.3.8.2 Identification number. 109
A.4.3.9 Revision mark. 109
A.4.3.10 Paragraphs. 109
A.4.3.11 Procedural steps. 109
A.4.3.11.1 Steps per data pane. 109
A.4.3.11.2 Novice vs. expert steps. 110
A.4.3.11.2.1 Novice vs. expert steps considerations. 110
A.4.3.11.2.2 Novice vs. expert steps format. 110
A.4.3.11.3 Subordinate steps. 111
A.4.4 Metadata. 111
A.4.4.1 Data mining metadata. 111
A.4.4.2 Administration metadata. 111
A.4.5 Comprehensibility. 112
A.4.6 Sharing and re-purposing data. 113
A.4.6.1 Sharing data. 113
A.4.6.2 Managing target links. 113
A.4.6.2.1 Unique target link ID. 113
A.4.6.2.2 Persistent target link ID. 113
A.4.7 IETM printing. 114

A.5 IETM USER INTERFACE 114
A.5.1 Format characters 114
A.5.1.1 Display of text. 114
A.5.1.2 Character font. 114
A.5.1.3 Character width. 114
A.5.1.4 Character height. 114
A.5.1.5 Character spacing. 114
A.5.1.6 Line dimensions. 114
A.5.1.7 Text data panes. 115
A.5.1.8 Margins. 115
A.5.1.9 Justification. 115
A.5.1.10 Word wrapping. 115
A.5.1.11 Hyphenation. 115
A.5.2 Hotspot or linking. 115
A.5.2.1 Narrative text hotspot. 116
A.5.2.2 Graphic hotspot. 116
A.5.2.3 Icon hotspot. 116
A.5.2.4 Change cursor shape over hotspot. 116
A.5.3 Dialog box. 116
A.5.3.1 Message. 116
A.5.3.2 Fill-in. 116

CONTENTS

Paragraph Page

A.5.3.3 Multiple-choice. 117
A.5.3.4 Menu. 117
A.5.3.5 Composite. 117
A.5.3.6 Tables. 117
A.5.3.6.1 Display of tables. 117
A.5.3.6.2 Table title. 118
A.5.3.6.3 Column header 118
A.5.3.6.4 Justification. 118
A.5.3.6.5 Column spacing. 118
A.5.3.6.6 Row spacing. 118
A.5.4 Graphics. 118
A.5.4.1 Display of graphic overlays. 118
A.5.4.2 Types of graphics. 118
A.5.4.2.1 Static graphic. 118
A.5.4.2.2 Interactive graphic. 118
A.5.4.3 Scale 119
A.5.4.4 Display. 119
A.5.5 Standard information. 119
A.5.5.1 Standard information formats. 119
A.5.5.2 Referenced items. 120
A.5.6 Multimedia presentation. 120
A.5.6.1 Multimedia and other items/functions. 120
A.5.6.2 Audio. 120
A.5.6.3 Sound. 120
A.5.6.4 Voice input/output (I/O). 122
A.5.6.5 Video. 122
A.5.6.6 Graphics. 122
A.5.6.7 CODEC 122
A.5.6.7.1 Compression considerations. 122
A.5.6.7.1.1 Lossy compression. 122
A.5.6.7.1.2 Lossless compression. 123
A.5.6.7.2 Selecting CODEC. 123
A.5.7 Technical Manual Deficiency Report (Form 2028). 123
A.5.8 Instructions for interactions with IETM utility functions. 124
A.5.9 Screen size resolution. 124
A.5.10 Inner shell colors. 125

A.6 LOGIC ENGINE AND STATE TABLE 125
A.6.1 State Table. 125
A.6.2 Logic Engine. 125
A.6.3 Logic Engine supported operations. 125
A.6.3.1 Expression. 126
A.6.3.2 Variable. 126
A.6.3.3 Values. 127
A.6.3.4 Binary operations. 127

CONTENTS

Paragraph Page

A.6.3.5 Unary operations. 129
A.6.4 Evaluation processes. 130
A.6.4.1 IF process. 130
A.6.4.2 Loop Iteration process. 130
A.6.4.3 Loop Until process. 131
A.6.4.4 Loop While process. 131
A.6.4.5 Infinite loop. 132
A.6.5 Error conditions. 132

B PAGED-BASED TECHNICAL MANUAL DEVELOPMENT 187

B.1 SCOPE 187
B.1.1 Scope. 187
B.1.2 Philosophy. 187

B.2 APPLICABLE DOCUMENTS 187

B.3 DEFINITIONS 187

B.4 TECHNICAL MANUAL DATA GUIDANCE 187
B.4.1 Development of work package technical manuals. 187
B.4.2 How to develop a work package TM. 187
B.4.2.1 Creating an outline for a TM. 187
B.4.2.2 Chapter ordering and content. 187
B.4.2.3 Printing the TM. 188
B.4.3 Types of work packages. 188
B.4.3.1 Information oriented work package. 188
B.4.3.2 Task oriented work package. 188
B.4.4 Technical manuals developed in accordance with MIL-STD-40051-2. 188
B.4.4.1 Front matter. 188
B.4.4.1.1 Front cover. 188
B.4.4.1.2 Warning Summary. 189
B.4.4.2 Rear matter. 189
B.4.4.3 General information, equipment description and theory of operation chapter. 189
B.4.4.4 Operator instructions chapter. 190
B.4.4.5 Troubleshooting procedures chapter. 190
B.4.4.6 Maintenance instructions chapter. 190
B.4.4.7 Repair parts and special tools lists chapter. 191
B.4.4.8 Supporting information chapter. 192
B.5 FORMAT AND STYLE. 192

B.5 FORMAT AND STYLE 192
B.5.1 Format 192
B.5.1.1 Presentation of procedural information. 192
B.5.1.2 Tables 194

CONTENTS

Paragraph Page

B.5.1.2.1 Table titles....194
B.5.1.2.2 Table format....194
B.5.1.2.2.1 Table readability and use....194
B.5.1.2.3 Footnotes to tables....195
B.5.1.3 Lists....195
B.5.1.4 Warnings, cautions, and notes format....195
B.5.1.4.1 Development of icons....195
B.5.1.5 Page sizes....195
B.5.1.6 Type sizes and styles....195
B.5.1.7 Placement of text and illustrations....200
B.5.1.7.1 Placement of text and related illustrations....200
B.5.1.7.2 Text wrapping....200
B.5.1.7.3 Illustration placement options....201
B.5.1.7.4 Figure number and title placement....201
B.5.1.7.5 Graphic size options....201
B.5.1.7.6 Multiple tasks using same illustrations....201
B.5.1.7.7 Repeating illustrations....201
B.5.2 Style....201
B.5.2.1 Equations....201
B.5.2.1.1 Symbols....201
B.5.2.1.2 Punctuation....202
B.5.2.1.3 Dividing an equation....203
B.5.2.1.4 Alignment of equations....203
B.5.2.1.5 Connecting words....203
B.5.2.1.6 Spacing....203
B.5.2.1.7 Numbering and referencing to equations....204

CONTENTS

Figure Page

Figure 1. Example of a filled-out content selection matrix 44
Figure 2. Example of an XML Source file. 51
Figure 3. Example of a multisheet illustration with border rules. 56
Figure 4. Example of a locator illustration and detail view.....57
Figure 5. Example of a pictorial diagram with nomenclature. 58
Figure 6. Example of a legend.....60
Figure 7. Example 1 of a CD label for first issue of an ETM.....61
Figure 8. Example of a CD label for superseded ETM. 62
Figure 9. Example of CD mailer outside front, spine, and back. 63
Figure 10. Example of CD mailer, inside (left side panel).....64
Figure 11. Example of CD mailer, inside (right side panel).....65
Figure 12. Example of use of patterns instead of color. 66
Figure 13. Example of a multiview illustration.....67
Figure 14. Example of page size multisheet continuous flow diagram.....68
Figure 15. Example of an exploded view illustration.....70
Figure 16. Example of highway and point-to-point methods for signal flow. 71
Figure 17. Example of oval connectors to continue signals. 72
Figure 18. Example of signal returns and breakoff symbols to continue signals - single sheet diagram. 73
Figure 19. Example of boat symbols, block technique, pyramid method to continue signals -multisheet diagram. 74
Figure 20. Example of signal difference techniques. 75
Figure 21. Example of subordinate and coordinate junctions. 76
Figure 22. Example of hardware schematic diagram. 77
Figure 23. Example of a functional schematic. 78
Figure 24. Example of a functional block diagram. 79
Figure 25. Example of a cutaway diagram. 80
Figure 26. Example of a logic diagram. 82
Figure 27. Example of a truth table. 83
Figure 28. Example of a timing diagram.....84
Figure 29. Example of a simplified diagram. 85
Figure 30. Example of a partial diagram. 86
Figure 31. Example of a test diagram.....87
Figure 32. Example of a test setup diagram 88
Figure 33. Example of a Power Distribution Diagram.....89
Figure 34. Example of a pyramid diagram. 90
Figure 35. Example of a cable diagram illustration with table.....91
Figure 36. Example of a cable interconnect diagram. 92
Figure 37. Example of a wiring diagram.....93
Figure 38. Example of a wire list.....95
Figure 39. Example of a piping diagram. 96
Figure 40. Example of an electronic component card illustration.....97
Figure 41. Example of an electronic equipment RPSTL illustration.....98
Figure A-1. Example of a linear IETM. 133
Figure A-2. Example of a non-linear (frame-based) IETM.....134

CONTENTS

Figure Page

Figure A-3. Example of a CD content frame. 135
Figure A-4. Example of assembly of introductory frames. 136
Figure A-5. Example of a revision summary frame. 137
Figure A-6. Example of an IETM table of contents frame. 138
Figure A-7. Example of theory of operation. 139
Figure A-8. Example of a troubleshooting procedure. 140
Figure A-9. Example of a maintenance procedure. 145
Figure A-10. Examples of Text Hotspots. 146
Figure A-11. Examples of Graphic Hotspots. 147
Figure A-12. Example of parts information. 148
Figure A-13. Example of a work package initial setup. 149
Figure A-14. Dialog box examples. 150
Figure A-15. Examples of revision marks. 153
Figure A-16. Examples of number of procedural step per screen. 154
Figure A-17. Example of expert steps. 156
Figure A-18. Example of procedural step and subordinate steps. 157
Figure A-19. Example of controls and indicators. 158
Figure A-20. Example checking unpacked equipment. 159
Figure A-21. Example of PMCS. 160
Figure A-22. Example of an OIP. 161
Figure A-23. Example of a classification of material defect. 162
Figure A-24. Example of an overhaul and retirement schedule. 163
Figure A-25. Example of Depot Mobilization Requirements. 164
Figure A-26. Example of special tools list. 165
Figure A-27. Example of kits option 1. 166
Figure A-28. Example of kits option 2. 167
Figure A-29. Example of bulk items. 168
Figure A-30. Example of NSN index. 169
Figure A-31. Example of part number index. 170
Figure A-32. Example of reference designator index. 171
Figure A-33. DELETED. 172
Figure A-34. Example of a two-level MAC. 173
Figure A-35. DELETED. 175
Figure A-35A. Example of a two level aviation MAC. 176
Figure A-36. Example of components of end item (COEI) list. 178
Figure A-37. Example of basic issue items (BII) list 179
Figure A-38. Example of an additional authorization list. 180
Figure A-39. Example of a expendable and durable items list. 181
Figure A-40. Example of a tool identification list. 182
Figure A-41. Example of a mandatory replacement parts list. 183
Figure A-42. Example of FSCAP. 184
Figure A-43. Inner shell colors. 185
Figure B-1. Sample TM Outline 205
Figure B-2. Example of a front cover. 208
Figure B-3. Example of warning summary. 209

CONTENTS

Figure Page

Figure B-4. Example of a general information work package.....211
Figure B-5. Example of an equipment description and data work package. 213
Figure B-6. Example of a system theory of operation work package. 216
Figure B-7. Example of an operation under usual conditions work package. 218
Figure B-8. Example of an operation under unusual conditions work package. 220
Figure B-9. Example of an emergency work package.....222
Figure B-10. Example of a stowage and decal/data plate guide work package 223
Figure B-11. Example of an on-vehicle equipment loading plan. 224
Figure B-12. Example of a troubleshooting malfunction/symptom index. 225
Figure B-13. Example of a troubleshooting work package initial setup and procedure.....226
Figure B-14. Examples of troubleshooting procedures. 227
Figure B-15. Example of a functional flow logic tree troubleshooting procedure. 228
Figure B-16. Example of a text-logic troubleshooting procedure. 229
Figure B-17. Example of packaging inspection/service upon receipt. 230
Figure B-18. Example of an equipment/user fitting instructions work package 232
Figure B-19. Example of PMCS table. 233
Figure B-20. Example of PMCS table format with crew member grouping. 235
Figure B-21. Example of an auxiliary equipment maintenance work package. 236
Figure B-22. Example of a facilities work package. 237
Figure B-23. Example of a general maintenance work package. 238
Figure B-24. DELETED. 240
Figure B-25. DELETED. 240
Figure B-26. DELETED. 240
Figure B-27. DELETED. 240
Figure B-28. Example of an ammunition marking information work package. 241
Figure B-29. Example of a foreign ammunition (NATO) work package.....243
Figure B-30. Example of Aircraft Inventory Master Guide work package. 244
Figure B-31. Example of a storage of aircraft work package.....245
Figure B-32. Example of a weighing and loading work package.....246
Figure B-33. Example of a QA requirements work package.....251
Figure B-34. Example of a wiring diagram work package. 253
Figure B-35. Example footnotes for tables. 254
Figure B-36. Example of tabular information and lists. 255
Figure B-37. Example of placement of warning icons in a procedure. 257
Figure B-38. Example of incorrect (wrapped text) and correct text placement with an illustration. 259
Figure B-39. Example of digital illustration. 260
Figure B-40. Example of a figure rotated 90 degrees. 261
Figure B-41. Examples of size options allowed for graphics. 262
Figure B-42. Example of equations. 263
Figure B-43. Example of numbering equations. 265

CONTENTS

Table Page

TABLE I. Determining Basic Number of Samples 36
TABLE II. Determining Basic Number of Samples....38
TABLE III. Sample Computations to Demonstrate Use of Formulas....41
TABLE IV. Sample Computations to Demonstrate Use of Formulas....42
TABLE A-I. Minimum and optimal character heights....115
TABLE A-II. Audio Media File Formats 121
TABLE A-III. Video Media File Formats....121
TABLE A-IV. Deficiency Report (Form 2028) Icons....124
TABLE A-V. Value Types 127
TABLE A-VI. Binary Operations....127
TABLE A-VII. Unary Operations. 129
TABLE A-VIII. Error Conditions 132
TABLE B-I. Style, capitalization, leading, and spacing....198

1. SCOPE.

1.1 Scope. This handbook provides non-regulatory guidance and information for the preparation of technical manuals (TM) required to operate and maintain the various types of equipment and weapon systems within the Department of the Army. Appendix A provides technical manual development guidance for the preparation of Interactive Electronic Technical Manuals (IETM). Appendix B provides technical manual development guidance for the preparation of page-based TMs. This handbook provides guidance only. It cannot be cited as a requirement. If it is, the contractor does not have to comply. Any guidance contained herein which is applicable to depot maintenance or Depot Maintenance Work Requirements (DMWR) is also applicable to National Maintenance Work Requirements (NMWR).

1.2 Paragraphs with limited applicability. This handbook contains guidance which is not applicable to all Services. Such guidance is prefixed to indicate the Services to which the guidance pertains: (A) Army; (N) Navy; (M) Marine Corps, and (F) Air Force.

2. APPLICABLE DOCUMENTS.

2.1 General. The documents listed below are not necessarily all of the documents referenced herein, but are those needed to understand the information provided by this handbook.

2.2 Government documents.

2.2.1 Specifications, standards, and handbooks. The following specifications, standards, and handbooks form a part of this document to the extent specified herein.

SPECIFICATIONS

DEPARTMENT OF DEFENSE

MIL-PRF-28000 — Digital Representation for Communication of Product Data: IGES Application Subsets and IGES Application Protocols

MIL-PRF-28001 — Markup Requirements and Generic Style Specification for Electronic Printed Output and Exchange of Text

MIL-PRF-28002 — Raster Graphics Representation in Binary Format, Requirements for

MIL-PRF-28003 — Digital Representation for Communication of Illustration Data: CGM Application Profile

STANDARDS

DEPARTMENT OF DEFENSE

MIL-STD-1686 — Electrostatic Discharge Control Program for Protection of Electrical and Electronic Parts, Assemblies, and Equipment (Excluding Electrically Initiated Explosive Devices) (Metric)

MIL-STD-2361 — Digital Publications Development

MIL-STD-40051-1 — Preparation of Digital Technical Information for Interactive Electronic Technical Manual (IETM)

MIL-STD-40051-2 — Preparation of Digital Technical Information for Page-Based Technical Manuals

HANDBOOKS

DEPARTMENT OF DEFENSE

MIL-HDBK-863 — Wiring Data and System Schematic Diagrams Preparation of

MIL-HDBK-9660 — Handbook for DoD-Produced CD-ROM Products

(Copies of these documents are available online at http://assist.daps.dla.mil/quicksearch/ or http://www.dodssp.daps.mil/ or from the Standardization Document Order Desk, 700 Robbins Avenue, Building 4D, Philadelphia, PA 19111-5094)

H4/H8 — Cataloging Handbook: Commercial and Government Entity Code (United States and Canada) - Name to Code.

(Copies of Handbooks H4/H8 are available from the Commander, Defense Logistics Services Center, Battle Creek, MI 49017-3084.)

2.2.2 Other Government documents and publications. The following other Government documents and publications form a part of this handbook to the extent specified herein.

AR 25-30 — The Army Publishing Program

DA PAM 25-40 — Army Publishing: Action Officers Guide

(Application for copies should be addressed to U.S. Army Publications Distribution Center, 1655 Woodson Road, St. Louis, MO 63114-6181.)

2.3 Non-Government publications. The following documents form a part of this document to the extent specified therein. Unless otherwise specified, the issues of the documents that are DOD adopted are those listed in the latest issue of the DODISS, and supplement thereto.

INSTITUTE OF ELECTRICAL AND ELECTRONICS ENGINEERS (IEEE)

IEEE 91-1991 — Graphic Symbols for Logic Functions

(Copies of the documents listed above are available from the Institute of Electrical and Electronics Engineers, Inc., 345 East 47th Street, New York, NY 10017 or online at http://assist.daps.dla.mil/quicksearch/ or http://www.dodssp.daps.mil/ or from the Standardization Document Order Desk, 700 Robbins Avenue, Building 4D, Philadelphia, PA 19111-5094.)

2.4 Order of Precedence. In the event of a conflict between the text of this document and the references cited herein, the text of the referenced document takes precedence. Nothing in this document, however, supersedes applicable laws and regulations unless a specific exemption has been obtained.

3. DEFINITIONS.

3.1 Acronyms used in this handbook. The acronyms used in this handbook are defined as follows:

AAL	Additional Authorization List
AIFF	Audio Interchange File Format
AMC	Aviation Maintenance Company
APD	Army Publishing Directorate
AR	Army Regulation
ASB	Aviation Support Battalion
ASCII	American Standard Code for Information Interchange
ASF	Advanced Streaming Format
ATE	Automated Test Equipment
AVI	Audio/Video Interleave
BDAR	Battlefield Damage Assessment and Repair
BII	Basic Issue Items
BIT	Built In Test
BITE	Built In Test Equipment
CAGEC	Commercial and Government Entity Code
CALS	Continuous Acquisition and Life-cycle Support
CASM	Case Management System
CCITT	Consultative Committee for International Telegraphy and Telephony
CD	Compact Disk
CD-ROM	Compact Disk - Read Only Mode
CGM	Computer Graphics Metafile
CODEC	Compressed / decompressed
COEI	Components of End Item
COTS	Commercial Off The Shelf
CPC	Corrosion prevention and control
CSI	Critical Safety Items
DA	Department of the Army
DMWR	Depot Maintenance Work Requirement
DOD	Department of Defense
DPI	Dots Per Inch
DTD	Document Type Definition
DVD	Digital Video Disc
ECM	Electronic Countermeasures
EDS	Electronic Display System or viewer
EIC	End Item Code

EIR	Equipment Improvement Recommendation
EM	Equipment Media
ESD	Electrostatic Discharge
ETM	Electronic Technical Manual
FDEP	Final Draft Equipment Publication
FM	Field Manual
FOUO	For Official Use Only
FRC	Final Reproducible Copy
FSCAP	Flight Safety Critical Aircraft Parts
GIF	Graphic Interchange Format
GL	Grade Level
HCP	Hardness Critical Process
HEX	Hexadecimal
HR	Hand Receipt
HTML	Hypertext Markup Language
I/O	Input/Output
IDN	Initial Distribution Number
IEC	International Electrotechnical Commission
IEEE	Institute of Electrical and Electronics Engineers
IETM	Interactive Electronic Technical Manual
IGES	Initial Graphics Exchange Specification
IPR	In-Process Review
ISO	International Organization for Standardization
JPEG	Joint Photographers Experts Group
KHz	Kilohertz (1000 hertz)
LMI	Logistics Management Information
LOGSA	Logistics Support Activity
MAC	Maintenance Allocation Chart
MC	Marine Corps
MIDI	Musical Instrument Digital Interface
MIME	Multipurpose Internet Mail Extensions
MOS	Military Occupation Specialist
MOV	Movie
MPEG	Moving Picture Experts Group
MTOE	Modified Table of Organization and Equipment
NATO	North Atlantic Treaty Organization
NBC	Nuclear, Biological, and Chemical
NDTI	Nondestructive Testing Inspection

NHA	Next Higher Assembly
NMP	National Maintenance Plan
NMWR	National Maintenance Work Requirement
NSA	National Security Agency
NSN	National Stock Number
OGL	Overall Grade Level
OIP	Overhaul Inspection Plan
OJCS	Organization of the Joint Chiefs of Staff
OS	Output Specification
OSD	Office of the Secretary of Defense
PAM	Pamphlet
PDF	Portable Document Format
PIN	Publication Identification Number
PMC	Preventive Maintenance Checklist
PMCS	Preventive Maintenance Checks and Services
PN	Part Number
PNG	Portable Network Graphics
QA	Quality Assurance
QT	Quick Time
RAM	Reliability, Availability, and Maintainability
RGB	Red Green Blue
RGL	Reading Grade Level
RPSTL	Repair Parts and Special Tools List
SGML	Standard Generalized Markup Language
SMIL	Synchronized Multimedia Integration Language.
SMR	Source, Maintenance and Recoverability
TASMG	Theater Aviation Sustainment Maintenance Group
TM	Technical Manual
TMDE	Test, Measurement, and Diagnostic Equipment
TMQA	Technical Manual Quality Assurance
TMSS	Technical Manuals Specifications and Standards
TOE	Table of Organization and Equipment
TRADOC	Training and Doctrine Command
TRAS	Army Training and Doctrine Command
USAMC	U.S. Army Materiel Command
VHS	Video Home System
W3C	World Wide Web Consortium
WAV	Waveform

WMA	Windows Media Audio
WMV	Windows Media File with Audio/Video
WP	Work Package
WWW	World Wide Web
WYSIWYG	What You See is What You Get
XML	Extensible Markup Language
XSL	XML Style sheet Language

3.2 Acquiring activity. The DOD component, activity, or organization of a using military service, or that organization delegated by a using service, which is responsible for the selection and determination of requirements for TMs.

3.3 Adjust. To maintain or regulate within prescribed limits, by bringing into proper position, or by setting the operating characteristics to specified parameters.

3.4 Align. To adjust specified variable elements of an item to bring about optimum or desired performance.

3.5 Assembly. Two or more parts or subassemblies joined together to perform a specific function and capable of disassembly (e.g., brake assembly, fan assembly, audio frequency amplifier). Note the distinction between an assembly and subassembly is determined by the individual application. An assembly in one instance may be a subassembly in another where it forms a portion of an assembly.

3.6 Auxiliary equipment. Equipment, accessories, or devices which, when used with basic equipment, extend or increase its capability (e.g., Modified Table of Organization and Equipment (MTOE) items, etc.).

3.7 DELETED.

3.8 DELETED.

3.9 Basic Issue Items (BII). Equipment essential for operation, and to do emergency repairs, but not listed on the drawings. These items may or may not be shipped separately packaged, but should be with the equipment when it is operated or transferred between property accounts.

3.10 Block diagram. A modified schematic diagram in that each group of maintenance-significant components that together performs one or more functions is represented by a single symbol or block. The block or symbol representing the group of components shows simplified relevant input and output signals pertinent to the subject diagram.

3.11 Bookmark. Bookmarks are the capability to mark areas of interest to allow quick access. In today's environment, the terminology bookmark has been expanded to include "Favorites" and "Shortcuts."

3.12 Calibrate. To determine and cause corrections or adjustments to be made to instruments or test, measuring, and diagnostic equipment used in precision measurement. Consists of comparisons of two instruments, one of which is a certified standard of known accuracy, to detect and adjust any discrepancy in the accuracy of the instrument being compared.

3.13 Callout. Anything placed on an illustration to aid in identifying the objects being illustrated, such as index numbers, nomenclature, leader lines, and arrows.

3.14 Caution. A statement or some other notification about an operating or maintenance procedure, practice, or condition that, if not strictly observed, could result in damage to, or destruction of, equipment or loss of mission effectiveness.

3.15 Change. A change is comprised of corrected pages/work packages to the basic manual (or previous edition). It consists of information that improves or clarifies the manual without requiring rewriting or reorganization of the technical content of the manual.

3.16 Commercial and Government Entity Code (CAGEC). A five character code assigned to commercial activities that manufacture or supply items used by the Federal Government and to Government activities that control design or are responsible for the development of certain specifications, standards, or drawings, which control the design of Government items. CAGE Code assignments are listed in the H4/H8 CAGE Publications.

3.17 Complete repair. Maintenance capacity, capability, and authority to perform all the corrective maintenance tasks of the repair function in a use or user environment in order to restore serviceability to a failed item. Excludes the prescriptive maintenance functions, overhaul and rebuild.

3.18 Comprehensibility. The completeness with which a user in the target audience understands the information in the TM.

3.19 Computer Graphics Metafile (CGM). A standard digital form for graphics preparation. Defined by MIL-PRF-28003.

3.20 Continuous Acquisition Life-Cycle Support (CALS) raster. Compressed scanned raster images (CCITT, Group 4) in accordance with MIL-PRF-28002.

3.21 Continuous Acquisition Life-cycle Support (CALS). A DOD initiative to transition from paper-intensive, non-integrated weapon systems design, manufacturing, and support processes to a highly automated and integrated mode of operation. This transition will be facilitated by acquiring, managing, and using technical data in standardized digital form.

3.22 Continuous tone photographs or drawings. Continuous tone photographs or drawings have a continuous gradation of tonal values ranging from light (white) to dark (black), including gray. These tonal values are not created by lines or dots.

3.23 Department of Defense (DOD). The Office of the Secretary of Defense (OSD) (including all boards and councils), the Military Departments (Army, Navy, and Air Force), the Organization of the Joint Chiefs of Staff (OJCS), the Unified and Specified Commands, the National Security Agency (NSA), and the Defense Agencies.

3.24 Depot-level maintenance. Maintenance that is beyond the capability of the field and below depot sustainment maintenance activities. Depot-level maintenance normally consists of overhaul, recondition, manufacture, repair, or modification and requires technical assistance beyond lower maintenance level capability.

3.25 Depot Maintenance Work Requirement (DMWR). A maintenance serviceability document for depot maintenance operations. The document prescribes the essential factors to ensure that an acceptable and cost-effective product is obtained. The following are some of the essential factors.

a. Scope of work to be performed by depot level maintenance facilities on an item, including organic or contract support.
b. Types and kinds of materiel to be used.

c. Quality of workmanship.
d. Repair methods, procedures, and techniques.
e. Modification requirements.
f. Fits and tolerances.
g. Equipment performance parameters to be achieved.
h. Quality assurance discipline.

3.26 Dialog. Dialogs are the pop-ups and in-line collection mechanisms for gathering information for the IETM from the user.

3.27 Digital graphics forms. A standard graphics form acceptable for graphics preparation in accordance with graphic standards as specified by acquiring activity and military and commercial standards. These forms include CGM, CALS raster, and Initial Graphics Exchange Specification (IGES), Joint Photographers Experts Group (JPEG) and Portable Network Graphics (PNG).

3.28 DELETED.

3.29 Disassemble. The step-by-step taking apart (or breakdown) of a spare or functional group-coded item to the level of its least componency identified as maintenance-significant (i.e., assigned an SMR code for the category of maintenance under consideration).

3.30 Document instance. The instance is the actual document text, it's accompanying XML tags conforming to the specifications, and restrictions set forth in the DTD.

3.31 Document Type Definition (DTD). The definition of the markup rules for a given class of documents. A DTD or reference to one should be contained in any XML conforming document.

3.32 Electronic Display System (EDS). An electronic device on which display images can be represented; most often a CRT or a liquid-crystal device.

3.33 Expendable items. Items, other than repair parts, that are consumed in use (e.g., paint, lubricants, wiping rags, tape, cleaning compounds, sandpaper).

3.34 Extensible Markup Language (XML). A subset of SGML. It enables generic SGML to be served, received, and processed on the Web in the way that is now possible with HTML. XML has been designed for ease of implementation and for interoperability with both SGML and HTML.

3.35 Final Reproducible Copy (FRC). The final document ready for reproduction and publication as an authenticated TM, including all necessary changes made as a result of validation/verification and acquisition activity conditions of acceptance or approval. The delivery media includes, but is not limited to, reproducible camera-ready copy, negatives, disks, tapes, etc., as specified. For Army, FRC equates to Final Draft Equipment Publication (FDEP).

3.36 Flyleaf. The paper insert for a jewel case for a CD, which provides information about the CD.

3.37 Frame-based technical manual. The format and style of the presented information are optimized for window presentation to assure maximum comprehension. The presentation format is "frame-oriented" and not "page oriented".

3.38 Functional diagram. A type of illustration in which symbols are connected by lines to show relationships among the symbols. The symbols may be rectangles or other shapes, standard electronic symbols representing components or functions, or pictorials representing equipment or components. Where appropriate, voltage readings are shown. The lines may represent procedures or processes, such as signal or logic flow, and physical items, such as wires. Functional diagram includes schematics, wiring and piping diagrams, logic diagrams, flow charts, and block diagrams.

3.39 DELETED.

3.40 Grade Level (GL). Level of reading comprehensibility to which a document is written. The required reading grade level of a document is specified by the contracting activity. For example, a level of about ninth grade may be required for materials of a technical nature to be included in maintenance manuals.

3.41 Graphic(s). Any type of presentation or representation, which gives a clear visual impression.

3.42 Guide Post. The Guide Post is the part of the Navigation Panel that allows the user to get to and initiate special advanced functions or to return to the standard default ribbon bar.

3.43 Header. One or more lines of standard text that appear at the top of each page (also called heads and running heads).

3.44 Horizontal (Landscape) TM format. Positioning of technical manual so that page horizontal (width) dimensions are greater than vertical (height) dimensions.

3.45 Icon. Pictorial representation; visual image to give immediate recognition of a hazard or to provide essential information.

3.46 Illustration. A general term meaning graphic presentations of all types. Illustrations include pictorials, functional diagrams, and line graphs. This term is used instead of such terms as figure, graphic, drawing, diagram, and artwork.

3.47 Index numbers and letters. A number or letter (on a graphic or an illustration) usually attached to a line or an arrow which points to an object on the illustration. This number or letter corresponds to the same number or letter in a legend or text, which defines or identifies the object in the illustration.

3.48 Initial Graphics Exchange Specification (IGES). A standard digital form for graphics preparation. Defined by MIL-PRF-28000.

3.49 Inner Shell. The Inner Shell is the portion of the IETM, within the viewer shell, provided as the client application display area. This is the only portion of the screen real-estate, which is under the developer's control.

3.50 Inspect. To determine the serviceability of an item by comparing its physical, mechanical, and/or electrical characteristics with established standards through examination (e.g., by sight, sound, or feel).

3.51 Institute of Electrical and Electronics Engineers (IEEE). Membership organization that includes engineers, scientists and students in electronics and allied fields. Founded in 1963, it has over 300,000 members and is involved with setting standards for computers and communications.

3.52 Interactive Electronic Technical Manual (IETM). A technical manual prepared in digital form and designed for interactive display to the maintenance technicians or system operator end users by means of a computer controlled Electronic Display System (EDS) or viewer.

3.53 International Organization for Standardization (ISO). Organization that sets international standards, founded in 1946 and headquartered in Geneva. It deals with all fields except electrical and electronics, which is governed by the older International Electrotechnical Commission (IEC), also in Geneva. With regard to information processing, ISO and IEC created JTC1, the Joint Technical Committee for information technology.

3.54 Jewel case. The plastic box used for storage of a compact disk.

3.55 Joint Photographers Experts Group (JPEG). JPEG is a file format for the transport of single JPEG compressed image. The JPEG compression format was standardized by ISO in August 1990. JPEG images are widely used on the Web.

3.56 Landscape mode. To print an image sideways on the page so that the longest edge of the form corresponds to the horizontal axis.

3.57 Legend. A tabular listing and explanation of the numbers or symbols on a figure or an illustration.

3.58 List of effective pages/work packages. A listing of all of the pages and work packages in a TM indicating the current change for each page/work package.

3.59 Logic tree. Diagram comprised of a branching series of questions, resulting in a "yes" or "no" answer, leading to determination and resolution of problem.

3.60 Logistics Management Information (LMI). The selective application of scientific and engineering efforts undertaken during the acquisition process, as part of the systems engineering process, to assist in acquiring the required support; and providing the required support during the operational phase at minimum cost.

3.61 Lubricant. Any solid, fluid, or semi-fluid material that performs a lubricating or related specialty function. Such materials include lubricating oils, greases, hydraulic fluids, damping fluids, dielectric coolants, anti-seize compounds, corrosion preventatives, and bonded or unbonded solid films.

3.62 Mailer. The cardboard envelope used to mail a compact disk to the user. The mailer consists of several panels, which contain information about the compact disk.

3.63 Maintenance Allocation Chart (MAC). A list of equipment maintenance functions showing maintenance level. The MAC is arranged in functional group code sequence or in top-down, breakdown sequence in a logical order of disassembly following the RPSTL order of assembly/subassembly listings.

3.64 Maintenance level. The separation of maintenance activities or functions in the U.S. Army according to the required skills and available facilities.

3.65 Modification Table of Organization and Equipment (MTOE). An authorization document that prescribes the modification of a basic TOE necessary to adapt it to the needs of a specific unit or type of unit.

3.66 National Maintenance Work Requirement (NMWR). A maintenance serviceability standard for depot level reparables that do not have an existing depot maintenance work requirement and for field level reparables that are repaired by maintenance activities below the depot level maintainers for return to the Army supply system.

3.67 National Stock Number (NSN). A 13-digit number assigned to a repair part to be used for requisitioning purposes.

3.68 Nomenclature. The approved name or alphanumeric identifier assigned to an item, equipment, or component in agreement with an organized designation system.

3.69 Note. A statement or some other notification that adds, emphasizes, or clarifies essential information of special importance or interest.

3.70 Operator maintenance. Consists of inspecting, servicing, lubricating, adjusting, replacing, and repairing those items authorized by Logistic Management Information (LMI) and/or Maintenance Allocation Chart (MAC).

3.71 Overall Grade Level (OGL). Computed average reading comprehensibility of specified number of document text samples. As expressed in the following formula:

OGL = 0.39(A) + 11.8(B) - 15.59 (rounded off to the nearest integer); where,

"A" is the average sentence length for all samples (ratio of words to sentences); and

“B" is the average number of syllables per word for all samples.

3.72 Overhaul. That maintenance effort (service/action) prescribed to restore an item to a completely serviceable/operational condition as required by maintenance standards in appropriate technical publications. Overhaul does not normally return an item to like new condition.

3.73 Page-based technical manual. A technical manual consisting of text, illustrations and tabular data presented in a standard page-oriented format.

3.74 Part Number (P/N). A primary number used to identify an item used by the manufacturer (individual, company, firm, corporation, or Government activity) that controls the design, characteristics, and production of the item by means of its engineering drawings, specifications, and inspection requirements.

3.75 Phantom. Portraying an item (i.e., part, equipment, etc.) on an illustration with broken lines rather than solid lines to de-emphasize the item.

3.76 Pictorial. A type of illustration showing the physical appearance of equipment or component parts. This term is used instead of such general terms as illustration, drawing, and diagram.

3.77 Portable Document Format (PDF). A self-contained cross-platform document file that appears the same on the screen and in print, regardless of the computer or printer used and regardless of the software package originally created.

3.78 Portable Network Graphics (PNG). PNG is an extensible file format for the portable, well-compressed storage of raster images. The PNG specification was issued as a *W3C Recommendation* in 1996.

3.79 Portrait mode. To print an image the regular way so that the longest edge of the form corresponds to the vertical axis.

3.80 Preventive maintenance (scheduled maintenance). The performance of scheduled inspections and maintenance functions necessary to keep the equipment in serviceable condition and ready for its primary mission.

3.81 Preventive Maintenance Checklist (PMC). A listing of all before, during, and after operation; preventive maintenance checks, including tactical and safety checks, that the operator or crew performs to ensure that the equipment is mission capable and in good operating condition.

3.82 Preventive Maintenance Checks and Services (PMCS). Periodic inspection and maintenance at scheduled intervals to ensure that the equipment and its components remain mission capable and in good operating condition. In aircraft, checks are required of mandatory safety-of-flight items. Lubrication is part of PMCS. PMCS can be performed by maintainers at any level not just by operators.

3.83 Procedural step. A single maintenance action, such as setting a switch to the OFF position. Usually, a step has one action, but in certain cases, there may be a series of identical actions, such as removing seven bolts.

3.84 Readability. Text comprehensibility measured by such variables as number of syllables, words, and sentences.

3.85 Reading Grade Level (RGL). A measurement of reading difficulty of text related to grade levels (such as ninth grade level, fourteenth grade level, etc.).

3.86 Reference designator. Letters or numbers, or both, used to identify and locate discreet units, portions thereof, and basic parts of a specific equipment, assembly, or subassembly.

3.87 Remove. To remove and install the same item when required to perform service or other maintenance functions. Install may be the act of emplacing, seating, or fixing into position a spare, repair part, or module (component or assembly) in a manner to allow the proper functioning of an equipment or system.

3.88 Repair part. Those support items that are an integral part of the end item or weapons system, which are coded as not repairable (i.e. consumable items).

3.89 Repair Parts and Special Tools List (RPSTL). The technical document, which contains an introduction, list of repair parts, list of special tools, NSN index, part number index, and reference designator index for a specified equipment item.

3.90 Repair. The application of maintenance services (inspect, test, service, adjust, align, calibrate, and/or replace), including fault location/troubleshooting, removal/installation, and disassembly/assembly procedures, and maintenance actions to identify troubles and restore serviceability to an item by correcting specific damage, fault, malfunction, or failure in a part, subassembly, module (component or assembly), end item, or system. Repair is authorized by the LMI/MAC and the assigned maintenance level is shown as the fourth position code of the SMR code.

3.91 Replace. To remove an unserviceable spare or repair part and install a serviceable counterpart in its place. Replace is authorized by the LMI/MAC and the assigned maintenance level is shown as the third position code of the SMR code.

3.92 Revision. A revision is comprised of corrected, updated, or additional pages or work packages to the current edition of a manual. It consists of replacement work packages that contain new or updated technical information, or improves, clarifies or corrects existing information in the current edition of the manual.

3.93 Schematic diagram. A graphic representation showing the interrelationship of each component or group of components in the equipment. The essential characteristic of these diagrams is that every maintenance-significant functional component is separately represented. In addition, where appropriate, voltage readings should be shown.

3.94 Sentence. A group of words conveying a complete thought and terminated by a semicolon, period, exclamation mark, or question mark. Headers, captions, and paragraph titles are not considered sentences.

3.95 Service. Operations required periodically to keep an item operating, i.e., to clean (includes decontaminate, when required), to preserve, to drain, to paint, or to replenish fuel, lubricants, chemical fluids, or gases.

3.96 Source, Maintenance, and Recoverability (SMR) code. The five-position code containing supply/requisitioning information, maintenance level authorization criteria, and disposition instruction. The first two positions of the SMR code determine how to get an item. The third position represents who can install, replace, or use the item. The fourth position dictates who can do complete repair on the item. The fifth position represents who determines disposition action on unserviceable items.

3.97 Spare part. Those support items that are an integral part of the end item or weapons system that are coded as repairable (i.e., reparable items). Spares include those equipment authorized by TOE line item plus equipment, assemblies, and modules designated as operational readiness float. TOE training equipment is excluded.

3.98 Special tools. Those tools that have single or peculiar application to a specific end item/system.

3.99 Standard Generalized Markup Language (SGML). A language for document representation that formalizes markup and frees it of system and processing dependencies.

3.100 Subassembly. Two or more parts that form a portion of an assembly or a component replaceable as a whole, but having a part or parts that are individually replaceable (e.g., gun mount stand, window recoil mechanism, floating piston, intermediate frequency strip, mounting board with mounted parts).

3.101 Table of Organization and Equipment (TOE). A document that prescribes the wartime mission, capabilities, organizational structure, and mission essential personnel and equipment requirements for military units.

3.102 Technical Manual Quality Assurance (TMQA) program. A systematic, coordinated effort to establish a high level of confidence that the TM product offered conforms to established, contractually defined technical requirements. A QA program includes efforts by the contracting activity and acquiring activity, including, but not limited to, IPRs, validation, and verification.

3.103 Technical Manuals (TMs). Manuals that contain instructions for the installation, operation, maintenance, and support of weapon systems, weapon system components, and support equipment. TM information may be presented, according to prior agreement between the contractor and the Government, in any form or characteristic, including hard printed copy, audio and visual displays, disks, other electronic devices, or other media. They normally include operational and maintenance instructions, parts lists, and related technical information or procedures exclusive of administrative procedures.

3.104 Test, Measurement, and Diagnostic Equipment (TMDE). Any system or device used to evaluate the operational condition of an end item or subsystem thereof, or to identify and/or isolate any actual or potential malfunction. TMDE includes diagnostic and prognostic equipment, semiautomatic and automatic test equipment (with issued software), and calibration test or measurement equipment.

3.105 Test. To verify serviceability by measuring the mechanical, pneumatic, hydraulic, electrical, or electronic characteristics of an item and comparing those characteristics with prescribed standards.

3.106 Text. The written parts of the technical sections excluding labels, legends, and callouts in illustrations.

3.107 Top-down breakdown. The pyramidal breakdown of an end item with the top item being the complete end item. The process of breakdown is established from the engineering drawing structure in an NHA progression until the lowest reparable in each family tree group is identified. All non-reparables can be identified in like manner to establish their NHA relationships.

3.108 DELETED.

3.109 Navigation Panel. This part of the Inner Shell provides a Main Menu Bar of the necessary common functions and/or options.

3.110 User. A person using the technical manual.

3.111 Validation. The process by which the contractor tests a TM for technical accuracy and adequacy, comprehensibility, and usability.

3.112 Verification. The final QA iteration by the Government for acceptance of the TM during which a TM is tested to determine its adequacy and operational suitability for operation and maintenance of equipment or systems using target audience personnel. The government may perform their verification by observing the contractor's validation.

3.113 Warning. A statement or some other notification about an operating or maintenance procedure, practice, or condition that, if not strictly observed, could result in long term health hazard, injury to, or death of personnel performing the task prescribed in the TM.

3.114 Wiring diagram. Diagram illustrating signal flow or wiring connections. Where appropriate, voltage readings should be shown.

3.115 Word. Any string of characters (including letters, numbers, symbols, and groups of letters) separated from other strings by one or more spaces. Hyphenated words and contractions count as one word. For example, each of the following counts as one word: couldn't; GFE; i.e.; 32,008; 19-inch; +25°F; left-hand. Thus, a sentence like "The left-hand MLG door shouldn't open more than 25°." consists of 9 words.

3.116 Work Packages (WPs). Presentation of information functionally divided into individual task packages in the logical order of work sequence. These WPs should contain stand alone general information, descriptive, theory, operating, maintenance, troubleshooting, parts, and supporting information units containing all information required for directing task performance.

3.117 World Wide Web Consortium (W3C). The World Wide Web Consortium (W3C) develops interoperable technologies (specifications, guidelines, software, and tools) to lead the Web to its full potential. W3C is a forum for information, commerce, communication, and collective understanding.

3.118 XML Style sheet Language (XSL). A language for transforming XML documents into other XML documents, such as HTML.

4. STYLE AND FORMAT.

This section is intended to provide guidance and further clarify the requirements contained in MIL-STD-40051-1, Preparation of Digital Technical Information for Interactive Electronic Technical Manuals (IETMs) and MIL-STD-40051-2, Preparation of Digital Technical Information for Page-Based Technical Manuals. The general style, format, and graphics guidance contained in this section is applicable for both IETMs and page-based TMs. Refer to Appendix A for further development guidance for IETMs and Appendix B for page-based TMs.

4.1 Style sheets. The style sheets developed in accordance with MIL–STD–2361 interpret the style and format requirements contained in MIL-STD-40051-1, MIL-STD-40051-2 and the style and format guidance provided in this handbook. This guidance is recommended for use when acquiring both IETMs and page based TMs. The acquiring activity should consider the use of XSL style sheets since they provide a standard based, non-proprietary method for documenting format requirements. Other style sheets can be used in lieu of a XSL style sheet to specify the desired appearance of the information content of the XML document instance. These style sheets can provide the same formatting requirements to a publishing/presentation system, as does an XSL style sheet. Other style sheets may be used if a publishing/presentation system does not support the use of XSL style sheets. Even if a system does support the use of XSL style sheets, it may be more cost effective to use existing style sheets. This can be especially true for system with integrated applications that require data to be input in specific formats

4.2 Figures contained in this handbook. The figures provided in this handbook are intended to illustrate style and format only. They should not be used for the interpretation of technical content or detailed maintenance task requirements. Text and language requirements are established by the applicable technical manual content requirements specification.

4.3 Selective application and tailoring. This handbook contains guidance, which may not be applicable for the preparation of all IETMs listed in MIL-STD-40051-1 and all page-based TMs listed in MIL-STD-40051-2. Selective application and tailoring of requirements is the responsibility of the acquiring activity and is accomplished using MIL-STD-40051-1 and MIL-STD-40051-2 as applicable. If an identifiable, written conflict exists between this handbook and the detailed content standard, the detailed content standard takes precedence.

4.4 How to develop a work package TM. The following general process should be followed when acquiring weapon system/equipment work package TMs. Refer to appendix A for Guidance specific to IETMs and to appendix B for guidance specific to page-based TMs.

a. Review contractual requirements and the filled-out TM content selection matrices supplied with the contract. Refer to Figure 1 for example.

b. Develop a detailed TM outline, for each TM, using the filled-out TM content selection matrices as a guide.
c. Access or obtain the required DTDs. Refer to MIL- STD-2361.
d. Develop an XML tagged source file for each work package.
e. Assemble individual work packages into specific TMs in accordance with TM content selection matrices, using the assembly DTD. Refer to MIL- STD-2361.

4.4.1 How to develop work packages. The proponent activity should apply the requirement of weapon systems, equipment or component engineering design to the development of the technical manuals. The acquiring activity together with the proponent activity should provide the TM developer with the filled-in TM content selection matrices (refer to MIL-STD-40051-1 and/or MIL-STD-40051-2 as appropriate). Figure 1 contains an example of a filled-out TM content selection matrix. The example is for a page-based 14&P type TM. As required by MIL-STD-40051-2, all blank blocks under the 14&P column have been filled in with an "R" for "REQUIRED" content, or a **"**P" for content that is "PROHIBITED" or has been shaded. All originally shaded blocks were left as is or changed to "R" or "P". For the purpose of illustrating how to fill in the matrix, the "R" and "P" entries that were filled in are shown in bold. A filled-out TM content selection matrix for an IETM would be similar. Based on the content selection matrix, it is suggested that a TM outline be developed reflecting the arrangement and alignment of the required technical information into the required work packages. The guidelines set forth in the approved LMI or maintenance plan dictate the technical content of the work package manuals.

4.4.2 Development of individual work packages. Ideally, each work package will be an independent, stand alone data unit and contain only a single task and/or configuration, thus providing enhanced data exchange. It may be required to group some information or maintenance tasks in one work package and divide others into several work packages of suitable length. Division or selection of coverage will depend on various factors. These factors may include but are not limited to:

a. A specific work package that is required by MIL-STD-40051-1 or MIL-STD-40051-2.
b. A specific work package that is required by the content selection matrix provided by the contract activity (refer to MIL-STD-40051-1 or MIL-STD-40051-2). As specified in MIL-STD-40051-1and MIL-STD-40051-2, an "R" included for a specific work package requirement contained in the content selection matrix denotes that a work package is mandatory.
c. A work package may be determined by the operational modes, complexity of the troubleshooting or maintenance action, or level(s) of maintenance covered. Separate work packages may be developed for the same equipment or component for different maintenance levels (e.g., a work package for operator's maintenance and a work package for field maintenance for the same item of equipment).
d. Two or more work packages for an identical maintenance task may be required because the task is performed differently due to differences in configurations.
e. More than one work package may be required because the size of a single work package would be excessive (e.g., a work package for a page-based TM should not exceed 30 pages).

f. Development of more than one work package because the reduction in the size of the work package would make it more useable. It is permissible to divide a set of maintenance tasks for a specific system, equipment or component into two or more work packages (e.g., removal and installation procedures could be placed in one work package and disassembly, cleaning, repair, and reassembly could be placed in a second work package). This is also done in page-based TMs to comply with the page size limitation.

g. Confining the information to one work package because dividing the information into several work packages would degrade the usability.

h. Splitting a disassembly procedure into two separate work packages would degrade the usability of the maintenance procedure.

i. Separate work packages due to different initial setup information for a set of maintenance tasks for a repairable component.

j. If the support equipment, tools, materials and personnel used to perform removal and installation is very different than the support equipment, tools, materials and personnel used to perform disassembly and reassembly for the same system or component, it may be better to separate this information into two work packages.

4.5 Development of an XML source file. Once an outline is prepared and all the work packages have been identified, a XML tagged source file (document instance) is developed for each work package. Figure 2 contains an example of an XML source file for an IETM. An XML source file for a page-based TM is similar. The XML tagged source file is composed of coded ASCII, marked up (tagged) in accordance with the applicable DTD. In order to tag work package text appropriately, the author inserting the tags should be familiar with the DTD or should provide the text file to a person who is experienced with the DTD and who understands the type of documentation being written, especially when content tags are used. A customized template modeled for the applicable DTD may be available or developed to assist the author in creating the document instance. A template can be implemented in a text editor, a WYSIWYG editor, a data base input form, or an XML authoring/composition system. The final deliverable will be an XML source file compliant to MIL–STD–2361 DTD.

4.6 Graphics.

4.6.1 Illustration style and format preparation. Plan, layout, and size illustrations to effectively portray the required details, and prepare to the latest technical data.

4.6.2 Illustration detail. Style and techniques should be of a quality that will produce illustrations, which will clearly, adequately, and economically portray the information to be illustrated. The amount of detail should be limited to that required to support the content of the illustration.

a. When text alone is not adequate, supplement the text by using illustrations for depicting procedures such as disassembly, assembly, removal, and installation. In addition, illustrations are used to describe an item, process, or procedure; call attention to details; and provide identification of assemblies, parts, and tools, etc. Number or nomenclature callouts can be used to key important items in the illustration to the text.

b. Present illustration views so that the TM user can best understand the text being supplemented. In most instances, this will be as the user would view the item in the performance of the associated task. In some cases, however, depicting the procedure or location of parts and controls described in a procedure would better serve the user if shown as viewed from a different position.

4.6.3 Scale. Prepare illustrations to the smallest scale possible to be consistent with effective use of space and with all essential details legible. For page-based TMs, make the sizes of the illustrations the same size as the areas they will occupy on the TM pages. For IETMs, graphics should be displayed at no smaller scale than that required to meet the minimum displayable size (see Appendix A) which has been designated for each individual graphic. Graphics should be prepared to a scale that ensures that all essential detail is legible. Line widths should be of sufficient density to register sharply and clearly when displayed at the designated minimum size in a viewer. Raster graphic resolution needs to be reviewed for presentation scaling (zooming) usage.

4.6.4 Letter size. For page-based TMs, the scale of text on illustrations should provide for a minimum final letter size, when printed, of 8 points. For IETMs, the scale of text should be consistent with the style and format for the display requirements presented in Appendix A.

4.6.5 Electrostatic discharge (ESD) sensitive acronym. Mark graphics, drawings, and schematics with the ESD acronym in accordance with MIL-STD-1686 and MIL-STD-40051-1 or MIL-STD-40051-2.

4.6.6 Callouts. Index numbers, reference designators, nomenclature, leader lines, sweep arrows, legends, and other identifiers are used, when necessary, to identify significant features.

a. Use leader lines or sweep arrows to help the readers orient themselves with respect to the illustration and to provide directional movement in tasks.
b. Callouts are prepared by a mechanical or electronic method.
c. Callouts and their leader lines should be easily distinguishable from components and other lines of the illustration.
d. Callout leader lines or arrows are straight lines where possible. Don't allow leader lines to cross each other.
e. When practical, all callouts should be placed outside the boundaries of the parts illustrated so that the parts are not obscured.
f. Use a type size no smaller than 8 points and no larger than 10 points. (page-based manuals).
g. Use uppercase lettering for nomenclature callouts.
h. Nomenclature may appear on illustrations only if it can be done without crowding or reducing type size so as to make reading difficult. (Use diagram callouts of no smaller than 8 points (page-based manuals).) Both nomenclature and numbers may be used in the same document but not on the same figure.
i. When an item is first illustrated and its location has not yet been specified, a simplified general locator illustration may be used to identify the location of the equipment item within the system (refer to Figure 4).

4.6.7 Nomenclature (Page-based). Nomenclature of more than one line should have the left margin justified when placed on the right side of the illustration, right margin justified when placed on the left side, or stacked with the text centered when on the top or bottom of the illustration. All lines of copy should parallel the horizontal edges of the figure, whenever possible (refer to Figure 5).

4.6.8 Leader lines and arrowheads. Do not allow leader lines to touch the callout. Do not allow arrowheads to enter the object to which they apply. If it is necessary to enter the object to provide for greater clarity, a breakoff symbol should be used in lieu of an arrowhead (refer to Figure 5).

a. Lines are to be uniform, short, and as straight as possible; avoid the use of dogleg-shaped lines unless absolutely necessary.
b. Leader lines should be placed at an angle.
c. Arrowheads may be added for clarity.
d. Arrowheads should be uniform in shape and size when multiple arrowheads are used on a page.
e. Lines and arrowheads should not cross or come in contact with other callout lines or arrowheads nor should they obscure essential details.

4.6.9 Illustration legends. When necessary for clarity, legends are prepared to identify index numbers on illustrations (refer to Figure 6 for an example). For IETMs, illustration legends should not be used.

a. Legends are a part of the illustration and are not being placed in the text area.
b. The header is prepared in the following format: Legend.
c. If the legend is continued, repeat the header, followed by a dash and the word "Continued."
d. The list is placed one line space below the heading. It is single spaced and indented two spaces.
e. The list consists of the index numbers corresponding to the index numbers on the illustration, followed by a period, two spaces, and the name/description of the item.
f. Only that information which is necessary to clearly identify the items is included in the legend.
g. Where methods such as tabular presentation are used (i.e., in a RPSTL), no legends are required.

4.7 Standard English grammar. The U.S. Government Printing Office Style Manual will be used as a general guide for standard American English usage, i.e., capitalization, punctuation, compounding of words, numerals in the text, spelling of non-technical words, etc. Colloquial and slang expressions will not be used.

4.8 Nomenclature -Neutral terms. TMs will make no reference to age, sex, race, or national origin. Use sex neutral terms. Terms such as "midshipman" and "workman" are considered sex neutral. Terms such as male and female connectors, pins, etc., are acceptable.

4.9 Narrative, nonprocedural text.

a. Word order. Narrative text (nonprocedural) will be written using simple word order (subject, verb, object) to the extent possible. Modifiers, including prepositional phrases, will be as close as possible to the word modified. Simple word order will ordinarily be used for description and discussion statements such as warnings, cautions, and notes.
b. Topical sentence. When necessary, for greater clarity, the first sentence of each paragraph will be the topical sentence. The topical sentence describes or summarizes the content of the paragraph. All information in the paragraph relates to the topical sentence.
c. Limitations for nonprocedural text. Explanatory, descriptive, or theoretical text will not contain procedures.

4.10 Procedural text. Detailed task steps will be identified and then properly worded for the target audience. Task steps will be organized in a logical order. They will be presented so that they sequentially show what action the user will be performing or what the user sees or detects on the equipment at each step of the procedure. Procedural steps will be worded and arranged in the order that will provide the most effective and efficient results. Emphasis will be placed on the specific steps to be followed, the results that may be expected or desired, and the corrective measures required when the expected results are not obtained.

4.10.1 Lead-in. Procedural steps will not be prefaced by a lead-in that merely duplicates the title as in the following example: "Disassembly of a sensing unit. The sensing unit is disassembled according to the following procedure: ..."

4.10.2 Form and content of procedures. A procedural step will be limited to a single operation or to repetitions of a single operation with the following exceptions:

a. If simultaneous operations are required, they will be listed together in the same step.
b. If the step represents a detailed procedure, so basic that the details should rarely be needed by the intended users, or if the procedure is very frequently repeated, such as turn on, turn off, and calibrate procedures, the written procedure for that step will use a single verb and cite a reference to the detailed steps (e.g., "Turn equipment ON. [See WP 0056 for details.]").
c. If needed, text will show verification of the result of a procedure performed in the step (e.g., "Press push-button A and be sure indicator A is lit.").

4.10.3 Limitations for procedural text. Procedures should not contain explanatory, descriptive, or theoretical material (except in notes, etc.).

4.10.4 Sentences in procedures. Sentences directing the actions of the user will begin with the verb (e.g., Remove four screws (Figure 1, Item 1) and cover (Figure 1, Item 2).). If more than one person is involved, the directions will be in the active voice, for example, Cannoneer 1 shall... while Cannoneer 2... .

4.10.5 Positive form. Procedural steps will be in positive form (i.e., "Close container." rather than "Do not leave container open.") unless the meaning demands the negative form.

5. CD-ROM PREPARATION.

The section includes guidance for the preparation of information for the CD-ROM face, flyleaf, jewel case, and mailer for Electronic Technical Manuals (ETMs) which is in addition to the instructions contained in DA PAM 25-40. Information provided for ETMs is utilized primarily by the U.S. Army Materiel Command (USAMC), Logistics Support Activity (LOGSA), subsequent to manual preparers' forwarding a copy of manuals in Portable Document Format (PDF) to LOGSA.

5.1 CD label data. The CD-ROM will have a label that includes at least the following information (refer to Figure 7 and Figure 8):

a. Branch(es) of Service.
b. Publication Number (e.g., TM 1-1520-453-13&P) (refer to 5.1.1).
c. CD set number, as applicable (e.g., 1 of 4) (refer to 5.1.2).
d. Equipment Media (EM) number (refer to5.1.3).
e. Initial Distribution Number (IDN) (refer to5.1.3).
f. Publication Identification Number (PIN) (refer to5.1.3).

g. Supersession data (see 5.1.4).
h. Copyright information, as applicable (e.g., FOUO) (refer to 5.1.5).
i. Distribution Restriction Statement (refer to 5.1.5).
j. Arms Export Control Notice, as applicable (refer to 5.1.5).
k. Destruction Notice.
l. Other protective markings (refer to 5.1.6).
m. Operating System Requirements (e.g., Windows 2000 or higher).
n. Date of CD-ROM.
o. Compression information, if applicable.

5.1.1 TM number. This should be the TM number assigned to the ETM. This number should be assigned in the same way they are assigned for any other TM. The TM number should never have IETM, ETM, or EM as the publication medium. The TM number does not contain any words such as APACHE or HEMMT.

5.1.2 CD set number. If there are two or more CDs utilized as a result of the series and size of related equipment/Weapon System manuals, then number the CDs, as applicable, 1 of 2, 1 of 3, etc. If only one CD is utilized, leave blank.

5.1.3 EM number, IDN, and PIN. Before generating a pre-master IETM, a request should be made for assignment of the numbered authentication block, EM number, PIN, and IDN from Army Publishing Directorate (APD). This request can be made either by accessing the Case Management System (CASM) database, PAILS database, or by e-mail 30 days prior to submission of a DA Form 260 to APD and release of the official CD to APD for replication.

5.1.4 Supersession data. For first-time CDs, the following statement should be printed on the label: "This is the first CD-ROM in this series." (Refer to Figure 7.) When a CD is superseded, the statement should be printed accordingly; e.g., "This CD supersedes EM XXXX, dated (date)." (Refer to Figure 8.)

5.1.5 Copyright Notice, Distribution Restriction, and Arms Export Control Notice. When one or all of these notices are applicable, the notice(s) should be printed on the CD label. Refer to Figure 7 and Figure 8 for examples of a Distribution Restriction Notice and an Arms Export Control Notice. The following Distribution Restriction statements should be used for either ETMs or IETMs, as applicable:

a. Distribution Restriction B. Use the following statement verbatim:

"DISTRIBUTION RESTRICTION STATEMENT B. Distribution authorized to U.S. Government agencies only. This determination was made on (*insert CD-ROM date*) based on the highest level of distribution restriction of any Electronic Technical Manual (ETM) on the CD-ROM. Requests for release of ETMs included on this CD should be referred to the proponent as listed on the front cover of the ETM."

b. Distribution Restriction C. Use the following statement verbatim:

"DISTRIBUTION RESTRICTION STATEMENT C. Distribution authorized to U.S. Government agencies and their contractors only. This determination was made on (*insert CD-ROM date*) based on the highest level of distribution restriction of any Electronic Technical Manual (ETM) on the CD-ROM. Requests for release of ETMs included on this CD should be referred to the proponent as listed on the front cover of the ETM."

c. Distribution Restriction D. Use the following statement verbatim:

"DISTRIBUTION RESTRICTION STATEMENT D. Distribution authorized to the DoD and U.S. DoD contractors only. This determination was made on (*insert CD-ROM date*) based on the highest level of distribution restriction of any Electronic Technical Manual (ETM) on the CD-ROM. Requests for release of ETMs included on this CD should be referred to the proponent as listed on the front cover of the ETM."

d. Distribution Restriction E. Use the following statement verbatim:

"DISTRIBUTION RESTRICTION STATEMENT E. Distribution authorized to DoD components only. This determination was made on (*insert CD-ROM date*) based on the highest level of distribution restriction of any Electronic Technical Manual (ETM) on the CD-ROM. Requests for release of ETMs included on this CD should be referred to the proponent as listed on the front cover of the ETM."

e. Distribution Restriction: For Official Use Only (FOUO). Distribution Statement B applies to FOUO.

5.1.6 Protective markings. Protective markings information (e.g., FOUO) should be printed on the CD-ROM label.

5.1.7 Information not contained on CD-ROM face. The face of the CD-ROM should not contain the following:

a. The command seal or emblem of the Department of Defense, Department of the Army, or local command.
b. More than two colors. Use of multicolor will be approved only when it makes a decisive contribution to the intended purpose of the product. The criteria and standards for using more than two colors on the face of the CD should follow the guidance in paragraph 7-17, AR 25-30, Army Publishing Program.
c. Contractor/company logos or names.

5.2 CD Mailer data.

5.2.1 Outside panel of CD mailer. Refer to Figure 9 for example.

5.2.1.1 Outside panel of CD mailer (front). The outside panel of the CD mailer (front) should contain the following:

a. The return address "Department of the Army, U.S. Army Publications Distribution Center, 1655 Woodson Road, St. Louis, MO 63114-6181" in the upper left-hand corner.
b. A bold, single line placed between the address and the capitalized words "OFFICIAL BUSINESS."
c. The word "CONTENT" above the EM number, date of the CD-ROM, and IDN.
d. The words "FRAGILE and "HANDLE WITH CARE" printed in the lower left-hand corner.

5.2.1.2 Outside panel of mailer (back). The PIN number should be printed in the lower right-hand corner.

5.2.1.3 Outside of mailer (spine). The spine should contain the EM number and the date of the CD-ROM.

5.2.2 Inside of mailer (left panel) . The branch of service, IDN, PIN, and name of weapon system/equipment should be printed, immediately followed by the FOUO notice, or other protective markings (if applicable), Destruction Notice, and Installation Instructions, using boldface type for emphasis, as follows (See Figure 10 for example):

a. Distribution Restriction. Use one of the statements in 5.1.5.

b. Destruction Notice. Use the following statement verbatim:

"DESTRUCTION NOTICE. Send to National Security Agency for destruction. See right side of mailer for instructions."

c. Installation Instructions and Operating Environment. Detailed installation instructions should be printed here according to the specific software being utilized. Instructions for uninstalling the CD should also be included.

5.2.3 Inside of mailer (right panel) . The following information should be printed verbatim, using boldface and/or capital letters for emphasis as indicated: The authentication of the CD should be printed immediately following the below information. The PIN should be printed in the lower right-hand corner of the mailer panel. (Refer to Figure 11 for example.)

"**DESTRUCTION INSTRUCTIONS**. National Security Agency (NSA) accepts Distribution Restricted CD-ROMs for destruction and meets environmental standards. If your local facility does not handle CD-ROMs, send expired ones FIRST CLASS to Director, National Security Agency, 9800 Savage Road, ATTN: CMC S714, Suite 6890, Fort George G. Meade, MD 20755-6000.

REQUIRED PROCEDURES: Ship ONLY WHOLE discs. Do not send sleeves, mailers, cases. No need to scratch discs going to NSA. Maximum box size and weight: 18 inches in height, width, or length, and 40 pounds. Send no more than 10 boxes at a time. If shipper wants receipt, include documentation/destruction form and enter total CD-ROMs in box; if others want receipt, also include self-addressed envelope. SINGLE wrap outside box with brown paper. If loose discs rattle, mark box "Rattle OK."

CHANGES AND REVISIONS. To get future changes and revisions to this IETM: Submit a subscription change requirement using Standard Army Publications Systems (STARPUBS) on-line system. For details, see DA Pam 25-33, User's Guide for Army Publications and Forms (Sep 96). Include the Initial Distribution Number (IDN) shown on the face of the CD. Also, include the quantity needed. Units who fail to submit a subscription change requirement will not get future changes and revisions to this IETM. If you submit a subscription for this CD, reduce or delete your requirements for the paper version of the publications contained on this CD, as appropriate."

5.3 Jewel case flyleaf data . If a jewel case is utilized, rather than a printed mailer, the flyleaf should contain the same information as indicated for the mailer.

6. GRAPHICS.

6.1 Types of graphics. As applicable, the following types of graphics should be used in the preparation of both paged-based TMs and IETMs.

a. Line drawings.

b. Photographs.

c. Engineering drawings.

d. Diagrams.

e. Charts and graphs.

f. Tools and test equipment illustrations.

6.2 Illustrations for procedures. Illustrations developed to support operator or maintenance procedures should not contain the text steps on the illustration (in the Figure area).

a. Illustrations for procedures should supplement the text by clarifying procedures, which are of a special nature or are not obvious.

b. Locate illustration(s) (except for foldouts) as close to the text step(s) as possible or, for IETMs, hotlink the illustration to the applicable step or steps.

c. It is not necessary to illustrate each step of a maintenance procedure, such as the removal of screws with an ordinary screwdriver, lifting off a cover after the screws have been removed, etc.

6.3 Graphic formats. Acceptable graphic formats should be delivered in one of the six graphic formats: W3C REC-WebCGM-20011217, Web Computer Graphic Metafile (WebCGM); MIL-PRF-28003, Computer Graphic Metafile (CGM); MIL-PRF-28002, Continuous Acquisition and Life-cycle Support (CALS) Raster; MIL-PRF-28000, Initial Graphics Exchange Specification (IGES); Portable Network Graphic (PNG) or Joint Photographers Experts Group (JPEG). If these formats do not meet your needs, other commercial graphic formats are acceptable if approved by the acquiring activity.

a. The CGM file format is the preferred graphics file format.

b. All graphics files for a particular IETM should be applied in the same graphics format if practical. Otherwise, files may be delivered in any combination of the allowable formats.

c. Appropriate header and identification information should be included in each graphics file. Refer to the applicable specification for the specific requirements.

6.4 Tools and test equipment illustrations. Only uncommon or unusual uses and connections for test purposes are illustrated if it is essential to do so to avoid misunderstanding. Unusual operations should also be illustrated. Standard tools and test equipment are not illustrated, nor should self-evident or generally known uses be shown.

6.5 Illustrations of special tools and test equipment. Special tools and test equipment should be illustrated.

6.6 Line drawings. Line drawings including exploded views, locator views, and detailed views should be used to support the operational, troubleshooting, and maintenance procedures. Line drawings should be of high reproduction quality.

a. Primary lines that create the basic outline (object line) of the drawing components should have sufficient density (darkness), line weight, and sharpness to accommodate reproduction. When electronically or optically reproduced, the primary lines should require no additional graphic enhancement.

b. Secondary lines, such as those used to indicate extensions or measurements, are lighter than primary lines, but strong enough to reproduce clearly at the required reproduction size.

c. Shading may be used to give substance and form to the item depicted, to sharpen the contrast between the subject and its background, or to increase effectiveness.

(1) Shading and shadows are used only when necessary to provide a clear understanding of form, shape, or depth.

(2) Shading effects are not to be used for decorative purposes.

d. Accented lines may be used to emphasize detail when necessary.

e. For page-based TMs, lined, cross-hatching, or mechanical patterns used instead of color should remain clearly defined on the Final Reproducible Copy (FRC) (refer to Figure 12).

6.7 Photographs. Digital photographs may be used for illustrations when a photograph provides for better clarity than a line drawing. If the intention is to use photographs in lieu of line art, a digital camera should be used to produce the required photos.

6.8 Multi-section illustrations **(Page-based TMs only)**. Prepare multi-section illustrations, when necessary, to identify significant features on an illustration (refer to Figure 3).

a. Each section of a multi-section illustration is identified by a capital letter.

b. Sections may or may not be titled, but if one section is titled, all are titled.

(1) Each title, with the identifying letter as its first character, is centered with respect to the section to which it applies.

(2) Where titles are not used, the identifying letters are centered.

(3) Identifying letters and titles are larger and bolder than any other lettering on the illustration.

c. Sections are clearly separated by lines. Separation by shading is not used.

6.9 Multiview illustrations. Multiviews may be prepared when necessary to identify significant features on an illustration (refer to Figure 13).

a. Each view should be oriented and enlarged as necessary to identify significant features of the item.

b. To show orientation, use arrows or text (i.e., "Rotated 180 degrees.") as it relates to the main illustration.

6.10 Foldout and multisheet illustrations **(Page-based TMs only)**. When specified by the acquiring activity, foldout/multisheet illustrations may be prepared. Foldout-foldup pages are not permitted. When an illustration should be larger than a single TM page for clarity or to be easily viewed by the TM user, multisheet and foldout presentation should be considered. Multisheet illustrations are the preferred format. When an illustration that normally would be presented as a foldout is instead prepared as a page size multisheet continuous flow diagram (refer to Figure 14), the following guidelines should be followed:

a. Allowance should be made on each page for the termination of data within a 7-1/2-inch image area.

b. Data (e.g., nomenclature or symbols), with the exception of horizontal lines, should be placed no closer than 1/8-inch from the image area limit after reduction.

c. Lines should not be vertically displaced during the transition from the image area on one sheet to the next sheet.

6.10.1 Multisheet RPSTL illustrations. Multisheet RPSTL illustrations should only be used as specified by the acquiring activity. If used, they should be limited to 3 or 4 sheets. RPSTL information should not be grouped into multisheet illustrations so as to disrupt the top-down breakdown structure.

6.11 Exploded views. An exploded view (refer to Figure 15) is an illustration that shows a unit separated or disassembled but with all the parts positioned in correct relationship to each other. Exploded views are used in RPSTLs and, when practical, to support removal/installation and disassembly/reassembly instructions. The following guidelines are recommended to ensure clarity of presentation:

a. Index numbers, keyed to a legend, list, or text reference, can be used to identify parts.
b. No more than 20 items should be called out in a 7- by 10-inch area if nomenclature is used.
c. Whenever possible, the average maximum number of callouts within a 7- by 10-inch area should be 70. All callouts (numerals) should be outside the boundaries of the parts being illustrated.
d. If the criteria of subordinate paragraphs b. and c. above cannot be met, use detail views of the figure.
e. If the equipment is of such a nature that it cannot be adequately illustrated by a single exploded view, it may be exploded by subassemblies as separate views. In such cases, locator views can be used, as needed, to orient the user to the proper area (refer to 6.12).
f. Items should be numbered sequentially, starting with the number 1 in clockwise sequence (beginning at 11 o'clock).
g. To assist in location, the relationship of all parts in an exploded view should be clearly indicated by axis lines.
h. Limit the level of detail to that required to positively identify parts. Excessive detail makes the illustration complex and does not contribute to usability.
i. Use straight (not dog-legged) arrowhead leader lines at all times, if possible.
j. Callout leader lines should not cross each other.
k. Use broken lines for parts shown merely for reference, but not called out. Ensure that the broken lines are legible. Items drawn in phantom need not be identified or indexed.
l. Center (axis) lines should be used on exploded views to show parts relationship.

6.12 Locator views. When required by the complexity of the equipment or to assist in user orientation of part(s), illustrations should contain a locator view. The overall equipment or item is shown with the area covered by the view highlighted (refer to Figure 4).

6.13 Detail views. A detail view of a part or subassembly should be illustrated when the subject matter cannot be clearly illustrated in the main view. The desired subject matter may be identified with detail letter(s), index number(s), or a hotspot on the main view and illustrated, as required, in the detail (refer to Figure 4).

6.14 Scanned images. Scanned images and photographs should be of such quality and resolution so as to meet reproduction and display requirements.

6.15 Cartoons. Do not use cartoon-type drawings and other similar visual techniques unless specified otherwise by the acquiring activity. When used, such drawings should not include copyrighted cartoon characters and should serve a functional purpose.

6.16 Diagrams. The following paragraphs describe various types of diagrams that may be required to support the operation and maintenance data contained in the TM.

6.16.1 Designations, diagrams, and symbols. Designations, diagrams, graphic symbols, and letter symbols used on illustrations are in accordance with MIL-STD-40051-1 or MIL-STD-40051-2, as applicable.

a. As specified by the acquiring activity, new designations, diagrams, and symbols not covered by the specifications may be used if explained in the "How To Use This Manual" or "How To Use This IETM" portion within the introduction of the TM.

b. Symbols are spelled out when the symbols cannot be reproduced by the equipment or software used to prepare the final reproducible copy (e.g., plus for +).

6.16.2 General methods. The following general guidance for diagram development is as follows,

a. Layout. Most diagrams, position of signals, and components are to be prepared in functional order. (For example, signals are shown in functional order, not connection pin number order.)

(1) Avoid clutter - allow no more than 3 components per square inch or 20 crossed lines per four square inches.

(2) Allow one-eighth inch between parallel lines. Functional flow within diagrams is left-to-right/top-to-bottom, with right-to-left feedback.

(3) Diagrams should be laid out to eliminate jogs in lines where possible.

b. Consistency. A standard referencing system for associated text, signal flow, and other diagrams should be used.

(1) Standard graphic symbols should be used when possible.

(2) If special graphic symbols are required, they should be made visually distinctive from other graphic symbols used and included in a special symbols chart.

(3) Official nomenclature is used for hardware, controls, indicators, switches, etc.; consistent, standard nomenclature is used for functions, signals, etc.

c. Appropriate detail. All information required to fulfill the intended purpose of the diagram should be used; overcrowding should be avoided.

(1) Complete detail should be provided for hardware, function, signal identification, measurement data (voltages and waveforms), explanatory text, connectors, terminal boards, pin numbers, signal names, reference designators, component values and tolerances, replacement components, etc.

(2) All inputs and outputs should be clearly labeled. In single-page/frame diagrams, termination points are shown for every relevant wire, pipe, etc. In multipage/frame diagrams, unterminated line segments should be identified by appropriate symbols with references maintaining continuity from page-to-page or frame-to-frame.

(3) To the extent possible and to keep diagram format consistent for readability, place inputs and associated labels near the diagram left or top edge and outputs and associated labels near the diagram right or bottom edge. The continued portions of multisheet or multiframe diagrams and schematics should align or should be labeled.

(4) For locating information, relevant components are identified on the diagram or referenced/linked to an explanatory listing. Where applicable, the wording on the diagram should correspond exactly with the wording in the text.

d. Inappropriate data. Data not related to the purpose of the diagram should not be included. Pertinent detail of nonrepairable and nonreplaceable components should be held to a minimum.

6.16.3 Portraying signal flow. Signal flow, especially for electrical and electronic equipment, critically affects the understandability of diagrams. To assist the TM user in following the diagram, where possible, major signal or pressure flow should be from left to right, and feedback or return flow should be from right to left. For IETMs, signal flow can be indicated using animation or color. As applicable, the methods for portraying signal flow outlined in 6.16.3.1 through 6.16.3.3 should be used.

6.16.3.1 Signal connections. Signal connections can be portrayed in one of three methods.

a. Point-to-point method. Shows each signal separately with a continuous line to represent its flow (refer to Figure 16).
b. Highway method. Blends two or more signals together in a single line (refer to figure 13). This method is useful in showing the flow of a group of related signals. Any number of signals may be blended together. Any signal that has been blended into the main line is blended out at some other point on the line. Once a signal has been blended out of a line, it can no longer be present on that line. Each signal blended in or blended out of the line should be identified.
c. Interrupted flow method. Use special symbols to interrupt signal flow. This method may be used within a single sheet of a diagram, between sheets/frames of a diagram, or between diagrams. Refer to 6.16.3.1.1 for types of special symbols used to interrupt signal flow.

6.16.3.1.1 Techniques within a single sheet of a diagram. Interrupted flow within a single sheet diagram is depicted using one of the following techniques.

a. Oval connector. Used to continue signals from one area of a sheet to another area.
   (1) Any number of signals may be bracketed together.
   (2) Each signal is identified at its source bracket and destination bracket.
   (3) Oval connectors should have a unique letter identifier inside the oval (refer to Figure 17).
   (4) The position of the source and destination connectors can be identified by zone numbers or hot linked (refer to 6.16.3.1.2b).
b. Signal returns. Used to continue signal returns within a single sheet/frame of a diagram.
   (1) Returns have a unique number identifier inside the network.
   (2) Each return is labeled the first time it appears on the diagram (preferably on the left edge of the diagram) (refer to Figure 18).
c. Breakoff symbols. Only power forms, clock pulses, and other multiuse, minor symbols use the breakoff symbol technique.
   (1) Each signal is identified adjacent to its break-off symbols.
   (2) The source of signals is shown at the left edge of the diagram (refer to Figure 18).

6.16.3.1.2 Techniques between sheets of a diagram. Interrupted flow between sheets/frames of a diagram should be depicted using one of the following techniques.

a. Boat symbol. Used to continue signals from the right edge of one sheet/frame to the left edge of the following sheet/frame within a multi-sheet/multi-frame diagram (adjacent sheets/frames of a diagram only). Used for single signals only.
   (1) Boat symbols have a unique letter inside the boat (refer to Figure 19).

b. Oval connector. Used to continue signals from one area of a diagram to another. Application is the same as within a single sheet/frame of a diagram (refer to Figure 17). For page-based TMs, identification of source and destination areas, the following zoning guidance is recommended for multi-sheet diagrams:

(1) Vertical zones are numbered; horizontal zones are lettered.

(2) The number of horizontal zones is limited to 10.

(3) Zones are always numbered as below, even if not all zones are used on any sheet.

Sheet1	Starts with Zone 1
Sheet2	Starts with Zone 11
Sheet3	Starts with Zone 21, etc.

6.16.3.1.3 Techniques between diagrams. Interrupted flow between diagrams/frames is depicted using one of the following techniques.

a. Block technique. Figure number (name optional), connector and pin numbers, and zone numbers are included (refer to Figure 19). For IETMs, hotlinks are used in lieu of zone numbers.

b. Oval connectors. Source and destination figure numbers are inserted before zone references (refer to Figure 17). For IETMs, hotlinks are used in lieu of zone references.

c. Pyramid diagram. Diagram number is included from one diagram to another. (For example, include reference to 1 on diagram 2 and reference to 2 on diagram 1.) (Refer to Figure 19.) For IETMs, hotlinks are used in lieu of diagram number references.

6.16.3.2 Signal difference. Various techniques are available to indicate signal flow, signal importance, and type, such as the following (refer to Figure 20).

a. Use wide lines to represent major signals.

b. Use special arrowheads to indicate signal types.

c. Use different colors if approved by the acquiring activity.

6.16.3.3 Signal junctions. The relative importance of signals may also be indicated by the way signal junctions are represented. Subordinate junctions are used to indicate differences in signal importance. Coordinate junctions are used to indicate equality in signal importance (refer to Figure 21).

6.17 Schematic and functional diagrams.

6.17.1 Schematic diagrams. Schematic diagrams show every maintenance significant functional component and functionalize complex assemblies, which are non-reparable.

a. Piece part details are shown only when replacement is authorized at the maintenance level covered or when understanding is required for fault isolation.

b. For nonrepairable assemblies, all inputs and outputs are shown with enough detail to understand how inputs relate to outputs (complete details for simple circuits and symbols for complex circuits). (Refer to Figure 22 and Figure 23.)

6.17.2 Functional diagrams. Functional diagrams include schematics, wiring and piping diagrams, logic diagrams, flow charts, and block diagrams.

a. Functional diagrams (block diagram only) show the complete system or subsystem on one sheet/frame (if possible) (refer to Figure 24). Methods to be used include functionalizing components; grouping sub-functions into functions; or continuing until the complete system or subsystem can be shown on one sheet/frame.
b. Functional diagrams should provide enough details to relate the input to output signals by using arrowheads to indicate signal flow direction when necessary and specifying signal characteristics and tolerances in pictorial or tabular form. For IETMs, signal flow can be indicated by animation or color.
c. Functional diagrams should account for all maintenance significant components by ensuring the user can relate the schematic diagram to the functional diagram; blocking the components on the schematic to correspond with blocks on the functional diagram; or providing a table relating components to functional blocks.
d. Functional diagrams should show hardware boundaries by using solid, dashed, or dotted lines; various line weights; or different colors or shades (when approved by the acquiring activity).

6.17.3 Test point identification symbols. Test points that are not readily identifiable on diagrams and illustrations (e.g., junction of R4 and R12) are considered artificial test points and should be identified by test point symbols. Identification of test points by symbol is not employed where test points are readily identifiable by other means (e.g., test jacks (TP-5), connector pin (J1-M), and relay pin (K4-2) are readily identifiable points and should not be identified by test point symbols). The symbol for artificial test points is composed of an encircled upper case letter (identifying the component on which the test point is located) and an Arabic numeral (in numerical sequence on the component). These test points are referred to in text as test point A1, test point A2, etc. Different letters should be assigned to each component (on a diagram); for example, test points A1, A2 and A3 in component 1, test points B1, B2 and B3 in component 2. All test points will be identified on the diagram by their assigned identifying code.

6.18 Pictorial diagrams. (Refer to Figure 5.)

a. Pictorial diagrams are used to show the physical view of components and show relative location and size when doing so aids in the understanding of relative information. When necessary to portray position or relative location, other equipment items may be shown in phantom.
b. All maintenance significant functional components are identified with leader lines.
c. Arrowheads are used to show direction of mechanical action or fluid flow. For IETMs, signal flow can be indicated by animation or color.
d. Data is presented from the user's viewpoint by only using orientations that are clearly visible to the user.
e. Unless specified otherwise by the acquiring activity, waveform data will be shown.
f. When required, waveforms are shown pictorially, and all necessary supporting data should also be shown.
g. If not provided on functional and schematic diagrams and required in support of maintenance tasks, waveform diagrams should provide the waveforms and nominal values at designated points for normally functioning equipment or systems as seen on an oscilloscope.

6.19 Cutaway diagrams. Cutaway diagrams (conventional cutaway techniques) are used only when necessary to show the internal functioning or flow. Fluid flow is identified using patterns or color when approved by the acquiring activity. For IETMs, signal flow can be indicated by animation or color (refer to Figure 25).

6.20 Logic diagrams. (Refer to Figure 26).

a. Logic diagrams are used to show digital circuitry operation. Graphic symbols from IEEE 91-1991 are used. If the logic circuit has no specified symbol, it can be identified with a rectangle that is labeled to show all circuit functions.
b. Power and clock connections are identified in a truth table or are connected using breakoff signals.
c. When necessary for clarity, a truth table or timing diagram should be prepared or should be referenced from another diagram. For logic functions, the truth table timing diagram may be shown inside a block or hot linked to the block to describe the relation of input to output signals. (Whenever possible, truth tables should be placed in the text area and not on the figure.) (Refer to Figure 27 and Figure 28.)

6.21 Simplified diagrams. Simplified diagrams (refer to Figure 29) include key components for explanatory purposes and omit selected components or groups of components, or details for clarity. Simplified circuitry and/or simplified functional divisions indicate excluded or included components in the diagram title.

6.22 Partial diagrams. Partial diagrams are used to show all circuit details completely and reference all destinations of input or output connections (refer to Figure 30).

6.23 Test diagrams. There are two types of diagrams used to support test procedures. Test diagrams (refer to Figure 31) are used to show test stimuli, item (or circuitry) under test, and test measurement components. Test setup diagrams (refer to Figure 32) are used to show the interconnection between the test equipment and the unit(s) under test. The setup diagram may be presented schematically or pictorially.

a. When diagrams exist for the item under test, a block diagram representation may be used.
b. In TMs containing testing data, the item under test should be emphasized (shown in detail); in test equipment maintenance TMs, the test equipment should be emphasized.

6.24 Power distribution diagrams. Power distribution diagrams depict components involved in power input, power form generation, and power distribution. They are grouped by power flow (refer to Figure 33).

6.25 Pyramid diagrams.

a. Pyramid diagrams are a set of interrelated diagrams consisting of:
   (1) A master block diagram.
   (2) Detailed block diagrams.
   (3) Schematic diagrams.
b. If the equipment covered is complex, several levels of detailed block diagrams may be required (refer to Figure 34).

6.26 Wiring and interconnection data. Weapon systems and equipment, which have wiring or cabling should include interconnection information in one or more forms such as cable diagrams, wiring diagrams (MIL-HDBK-863), or wire lists/tables. In general, the diagrams should meet the guidance for illustrations and diagrams presented above. Lists and tables will meet the requirements as specified in MIL-STD-40051-1 or MIL-STD-40051-2, as applicable. Additional guidance that applies to this information is given in the following paragraphs. Interconnection information has the following characteristics,

a. Information keyed to the appropriate maintenance level.
b. User experience level requirements met.
c. Diagrams simple and straightforward.
d. Only required data on diagrams.

6.26.1 Cable diagrams. Cable diagrams are included in a TM if the technician is installing or removing cables when performing installation, assembly, disassembly, modification, service, etc.

a. Cable diagrams provide all the information necessary to make the electrical connection between assemblies, chassis, bays, units, and systems in an easily understood format.
b. Each cable diagram should consist of an illustration and accompanying table. If cable routing is of a special nature, it should be so noted. For very complex systems where routing is of great importance, additional diagrams showing desired cable locations may be necessary (refer to Figure 35). The accompanying table should meet the following guidance:
   (1) Cable entries are listed in numerical order or by preferred connection sequence.
   (2) Cable origin is preceded by the cable destination.
   (3) Cable origin and destination includes assembly name, assembly jack number, and cable plug number.
   (4) Both table and illustration should appear on the same page or facing pages. For IETMs, the table should be hot linked to the illustration. The table is considered text and is not part of the figure.
c. Cable diagrams show all related connectors. Assembly names and jack numbers should be listed.
d. For simple equipment, a table may not be needed, and an interconnection diagram that actually shows the routing of the cables may be substituted (refer to Figure 36). The internal connections of the equipment or assemblies are usually omitted.

6.26.2 Wiring diagrams.

a. If complete coverage of wiring is included in the schematic, no special wiring diagrams are required.
b. Wiring diagrams provide an illustration of signal flow.
c. Wiring diagrams may also be used to show how to connect wires, when required (refer to Figure 37).
d. Wiring diagrams should include the following.
   (1) Each drawing should be limited to an individual system to eliminate overly large foldout illustrations that would be confusing to the user.
   (2) Point-to-point wiring between connectors and terminals is preferred.
   (3) Continuity of wiring through junction boxes and other equipment should be shown to permit following the wires from their origin to their termination.

(4) Terminal, connector, and wire identifiers that appear on the hardware should be used.

(5) Signal codes are assigned to wires to help the user follow signals in equipment that has complex wiring.

(6) Only the wiring that is appropriate for the level of maintenance for which the TM is written is shown.

(7) A list of components giving the reference designation, nomenclature, location, and access cover (as applicable) for every component for each diagram. For IETMs, every component should be hot linked to its parts data.

(8) Component outlines use heavier lines than those used for wires.

(9) Every wire or wire segment is labeled with its wire number.

(10) For paged-based TMs, turning any wiring diagram sideways (90 degrees) on a page should be avoided, when possible.

(11) A logical, easy-to-follow technique should be used to show the wire continuation onto other diagrams.

6.26.3 Wire list. Wire lists, if available, can be used in lieu of wiring diagrams when approved by the acquiring activity. Wire lists are normally prepared for cables and complex wire runs that the technician fault isolates and repairs. Wire lists are usually computer generated and are being used more and more by weapon system contractors in lieu of wiring diagrams in an effort to reduce design and life cycle costs.

a. Wire lists provide wiring data in tabular format (refer to Figure 38).

b. Connector keying diagrams can be included when necessary.

c. Wire lists are prepared in the following format.

(1) One table in hardware number order should be prepared.

(2) Another table in signal code number order should be prepared.

(3) Wire origin to wire destination should be listed.

(4) Terminal, connector, and wire identifiers that appear on the hardware should be listed.

(5) Only the wiring that is appropriate for the level of maintenance for which the TM is written is listed.

6.27 Piping diagrams. Weapon systems or equipment, which include piping in their design, are supported with information in the form of piping diagrams. These diagrams should meet the guidance for illustrations and diagrams presented in this handbook (refer to Figure 39).

6.28 Electronic items. (Refer to Figure 40.)

a. Exploded views should not be used to identify electronic items such as components on circuit cards that are not to be disassembled for repair. Item numbers should not be stacked (i.e., showing the item numbers next to a bar at the end of a leader line) unless each item and the item number are shown in a detailed view elsewhere on the illustrations. In the RPSTLs, all repairable electronic items are identified with a reference designator and an item number.

b. Tables are used rather than item leader lines to provide clarity. For page-based TMs, the table(s) should be part of the figure and not part of the textual data. For IETMs, the table should be hot linked to the parts on the figure. For RPSTLs, the reference designators for electronic items should cross-reference the item numbers used in the associated parts list (refer to Figure 41).

c. Applicable reference designators are placed above the item number.

6.29 Line graphs.

a. Clutter. The number of ideas conveyed per graph should be minimized. Line graphs should depict a maximum of four relationships between the axis variables. Lines depicting relationships are to be coded to distinguish one from another.

b. Orientation of axes. If there is a natural orientation for the axes (for example, altitude on the vertical axis) the axes are to be so oriented.

c. Grid lines. The number of grid lines used is such that the user can read values to the required degree of accuracy. Size of the illustration is such that the grid lines should be no less than 0.1 inch apart. Grid lines are lighter than the graph lines and should not obscure detail necessary for proper use of the graph.

d. Graph scales. Graph scales are linear or nonlinear as required for proper comprehension and use. The axes should be labeled to indicate the variables and units of measurement.

6.30 Prescreened photographs. Although not preferred, prescreened photographs are acceptable as final reproducible copy provided they are screened only once. The screen of the final sized illustration will be specified by the acquiring activity. When prescreened photographs are used, they should be clearly marked to indicate prescreening. Unscreened continuous tone photographs and/or original illustrations should be supplied with final reproducible copy.

6.31 Digitized artwork. Continuous tone artwork, whether photographs or drawings, should be clear in detail, sharp in contrast of tones, and have light and shadow in proper relation to a consistent light source. The background should be light enough to contrast fully with the subject photographed and should extend the full width and depth of the photograph or drawing.

6.32 Combination illustrations. Combining photographs or continuous tone artwork with line drawings is not recommended.

7. COMPREHENSIBILITY WITH READING GRADE LEVEL (RGL).

7.1 Comprehensibility. IETMs and page-based technical manuals are written to the capability of the target audience for which they are intended. The method employed to determine comprehensibility and readability is the Reading Grade Level (RGL). The RGL also provides useful quantitative measures for three characteristics contributing to comprehensibility of text, namely, number of syllables, words, and sentences. Calculating RGL may be performed using computer technology, whenever possible. The following paragraphs provide a uniform sampling plan, which may be used for surveying for Reading Grade Level (RGL) or comprehensibility for in-process reviews, validation, etc. Sampling is not to be used for conduct of verifications.

7.2 Sampling plan for inspection. Sampling inspection in quality conformance is an acceptable practice to ascertain conformance to requirements. A sampling plan is appropriate when automated tools are not available and the number of characteristics to be checked makes 100 percent evaluation excessively time consuming and costly for the TM being inspected. Simple random sampling of pages is not an adequate method as a TM is not a homogeneous mass and different tests require different types and amounts of sample material. The plan presented here uses a mixture of random sampling by type of material and scanning by the reviewer to detect instances of nonconformance.

7.2.1 Derivation of samples. Samples to be tested are obtained as a result of the processes of 7.2.1.1 and 7.2.1.2.

7.2.1.1 Critical scanning. The purpose of critical scanning by the reviewer is to locate instances of suspected nonconformance for specific testing. The entire IETM/TM should be scanned for obvious nonconformance with the comprehensibility guidance in this handbook; appropriate tests should then be applied to that material.

7.2.1.2 Systematic sampling. The purpose of systematic sampling is to provide semi-random samples of different types of material throughout the manual for detailed examination and testing. Different tests require different types and amounts of sample material. In general, for page-based TM the method of deriving samples is to identify a number of equally spaced break pages and to define sample material with reference to these break pages (refer to 7.2.6). For IETMs a number of work packages will be selected from each TM division (refer to 7.2.7).

7.2.2 Applicable tests. Sample material is to be examined or tested in detail for conformance with the guidance in this handbook. In most instances, the nature of the tests is implicit in the statement of the requirements. This is not the case for RGL requirements. Additional detail is provided in 7.3.

7.2.3 Extended local samples. Under the assumption that the material surrounding an instance of nonconformance has a higher probability of containing more such instances, extended local sampling provides additional sample material for examination (refer to 7.2.8 and 7.2.9 as appropriate).

7.2.4 Validation of readability. Narrative text is to be validated for conformance to the RGL as specified by the acquiring activity. If the Overall Grade Level (OGL) (including tolerance) is exceeded, the manual needs to be rewritten as required to meet the specified RGL. If a sample Grade Level (GL) is exceeded, the entire text surrounding each sample is to be rewritten as required.

7.2.5 Critical scanning. The reviewer should scan the entire manual. Grounds for suspected nonconformance include, but are not limited to, the criteria of 7.2.5.1 through 7.2.5.3.

7.2.5.1 Scanning criteria for procedures. Scanning criteria for procedures are as follows:

a. Procedural step does not begin with a verb.
b. Procedural step is in negative form (i.e., do not ...).
c. Procedural steps are prefaced by an unnecessary lead-in, which merely duplicates the title.
d. Procedure is not prefaced by relevant introductory information (i.e., initial setup) such as personnel required, special tools, test equipment, etc.

7.2.5.2 Scanning criteria for nonprocedural text. Scanning criteria for nonprocedural text are as follows:

a. Sentence(s) seem excessively long.
b. There is no topic sentence.
c. There are procedures in nonprocedural text.

7.2.5.3 Scanning criteria for illustrations and tables. Scanning criteria for illustrations and tables are as follows:

a. Portions of image area appear cluttered in the following circumstances:
   (1) Too many symbols on a functional or schematic diagram.
   (2) Too many line intersections on a functional, wiring, or piping diagram.
   (3) Too many lines on a graph.
b. Print seems too small.
c. Callouts are hard to distinguish; arrangement or placement of callouts appears unacceptable.
d. Inputs are not at the left or top or outputs are not at the right or bottom on a functional or schematic diagram.
e. Signal flow does not read from left to right or feedback/return flow from right to left on a functional or schematic diagram.
f. Arrows on a functional or schematic diagram do not indicate signal flow direction.
g. Locator view is required.
h. Table appears crowded – no aids for staying in correct row or column.
i. Illustration/table is not located close to the text where referenced.
j. Referenced table has no title.
k. Exploded view has no axis lines.

7.2.6 Systematic sampling of page-based TMs.

7.2.6.1 Identifying break pages. Break pages are pages that are equally spaced throughout the TM beginning with a randomly selected page. They are used as reference points to develop different types of samples as described in subsequent paragraphs. Count the number of pages of text or illustrations (or whatever is being sampled) in the TM. The count should include all full and partial pages that contain the item to be sampled. Record the number of pages.

a. The basic number of samples is determined in TABLE I.

TABLE I. Determining Basic Number of Samples.

		Basic No. of Samples	
No. of Pages	Divided by "N"	Min	Max
90 and above	10	9	30
54 to 89	9	6	9
32 to 53	8	4	6
1 to 31	6	2	4

b. Divide the number of pages by the appropriate divisor, "N." Round off the quotient to the next lowest whole number. For example, quotients of 17.3 and 17.7 are both rounded off to 17. This quotient will equal the basic number of samples to be analyzed.

c. For TMs of less than 12 pages, randomly select two samples and mark them for analysis.

d. For TMs of 12 pages or more, randomly select a number between one and "N." The number selected is to be marked as the first page to be analyzed. Starting at the selected page, mark every "Nth" page to the end of the TM. The marked pages will identify approximate starting points for the basic samples to be analyzed.

e. Check marked pages to verify that at least one sample has been selected for each information module of the TM. If any information module has been missed, randomly select one page from that information module and add it to the basic samples to be analyzed. Ensure that the portion sampled represents the type of text (or whatever) that makes up the majority of the information module (i.e., a procedure versus descriptive text).

7.2.6.2 Samples of procedural text. Beginning with each break page, the first complete procedure and subsequent complete procedures as needed are to be selected until the total number of procedural steps exceeds 20. For suspected nonconformance identified by critical scanning, the above sampling process is to be applied beginning with the suspected procedure.

7.2.6.3 Samples of nonprocedural text.

7.2.6.3.1 Sample size. Beginning with each break page, at least two hundred words should be sampled. For suspected nonconformance identified by critical scanning, material is selected as above, but begins with the suspected paragraph.

7.2.6.3.2 Other tests on nonprocedural text. Six-page samples beginning with each break page should be selected. For each instance of suspected nonconformance identified by critical scanning, a six-page sample surrounding each suspected instance should be selected.

7.2.6.4 Samples of illustrations and tables. A sample of each different type of illustration and a sample of each table needs to be obtained.

7.2.6.4.1 Sampling method for illustrations. Beginning with each break page, the first example encountered of each illustration type is to be selected (ignoring those already selected when text was sampled), no matter where in the manual it occurs. The intent of this procedure is to generate a sample for each illustration type no larger than the number of break pages and to sample each illustration type adequately, whether they are spread out through the manual or are clustered together.

7.2.6.4.2 Tables. A sample of tables is to be selected by the same method.

7.2.7 Systematic Sampling of IETMs.

7.2.7.1 Number of samples. Count the number of work packages in the IETM. The basic number of samples is determined in TABLE II.

TABLE II. Determining Basic Number of Samples.

No. of Work Packages	Divided by "N"	Basic No. of Samples Min	Max
90 and above	10	9	30
54 to 89	9	6	9
32 to 53	8	4	6
1 to 31	6	2	4

a. Divide the number of work packages by the appropriate divisor, "N." Round off the quotient to the next lowest whole number. For example, quotients of 17.3 and 17.7 are both rounded off to 17. This quotient will equal the basic number of samples to be analyzed.
b. For IETMs of less than 12 work packages, randomly select two work packages and mark them for analysis.
c. For IETMs of 12 work packages or more, randomly select a number between one and "N." The number selected is to be marked as the first work package in the TM outline to be analyzed. Using the TM outline, starting at the selected work package, mark every "Nth" work package to the end of the IETM. A sample will be taken from each of these work packages. Vary the starting points in the work packages from which the basic samples to be analyzed will be taken. This can be done by selecting the start of the first work package in the sample, the middle of the second work package in the sample, the end of the third work package. This method can be repeated for the remaining work packages in the sample, e.g., the start of the fourth work package in the sample, the middle of the fifth work package in the sample etc.
d. Check the selected samples to verify that at least one work package has been selected for each information module of the TM. If any information module has been missed, randomly select one work package from that information module and add it to the basic samples to be analyzed. Ensure that the portion sampled represents the type of text (or whatever) that makes up the majority of the information module (i.e., a procedure versus descriptive text).

7.2.7.2 Samples of procedural text. Beginning with the starting point in each sample work package, the first complete procedure and subsequent complete procedures as needed are to be selected until the total number of procedural steps exceeds 20. For suspected nonconformance identified by critical scanning, the above sampling process is to be applied beginning with the suspected procedure.

7.2.7.3 Samples of nonprocedural text.

7.2.7.3.1 Sample Size. Beginning with the starting point in each sample work package, at least two hundred words should be sampled. For suspected nonconformance identified by critical scanning, material is selected as above, but begins with the suspected paragraph.

7.2.7.3.2 Other tests on nonprocedural text. Several types of work packages will contain more nonprocedural text then other types of work packages (e.g., a general information work package, a theory of operation work package, a PMCS introduction work package, and various supporting information work packages). Select a sample from one of these types of work packages if there is an insufficient amount of nonprocedural text in a sample work package. Skip any boiler plate text since it cannot be altered.

7.2.7.4 Samples of illustrations and tables. A sample of each different type of illustration and a sample of each table needs to be obtained.

7.2.7.4.1 Sampling method for illustrations. Beginning with the starting point in each sample work package, the first example encountered of each illustration type is to be selected (ignoring those already selected when text was sampled), no matter where in the TM it occurs. The intent of this procedure is to generate a sample for each illustration type no larger than the number of work packages and to sample each illustration type adequately, whether they are spread out through the IETM or are clustered together.

7.2.7.4.2 Tables. A sample of tables is to be selected by the same method.

7.2.8 Extended local samples.

7.2.8.1 Procedural text. Material in the vicinity of a confirmed instance of nonconformance is to be checked for similar nonconformance, using the two procedures immediately before the nonconforming procedure and the two procedures immediately following. If three or more of the five procedures are nonconforming, the entire information module may be suspected of nonconformance and measures to correct it implemented.

7.2.8.2 Nonprocedural text in page-based TMs.

7.2.8.2.1 Samples for RGL calculation. If nonconformance is found, RGL should be calculated from the three pages before and three pages following the nonconforming material using the method described herein. If two or more of the three samples are nonconforming, the entire information module may be suspected of nonconformance and measures to correct it implemented.

7.2.8.2.2 Other tests on nonprocedural text. If nonconformance is found, material in the two six-page samples immediately adjacent to the nonconforming sample should also be tested for conformance. If two or more of the three samples are nonconforming, the entire information module may be suspected of nonconformance and measures to correct it implemented.

7.2.8.2.3 Nonprocedural text in IETMs.

7.2.8.2.3.1 Samples for RGL calculation. If nonconformance is found, RGL should be calculated using a 200 word sample before and a 200 word sample following the nonconforming material using the method described herein. If one or more of these two samples are also nonconforming, the entire information module may be suspected of nonconformance and measures to correct it implemented.

7.2.8.2.3.2 Other tests on nonprocedural text. Additional testing is recommended if nonconformance is found in the initial 200 word sample, and the material in the two additional 200 word samples adjacent to the nonconforming sample does conform. An additional 200 words immediately preceding and following those words should also be tested for conformance. If one or more of these two samples are also nonconforming, the entire information module may be suspected of nonconformance and measures to correct it implemented.

7.2.8.2.4 Illustrations and tables. Material in the vicinity of a confirmed instance of nonconformance is to be checked for similar nonconformance, using two examples of the same illustration type or table immediately before the nonconforming one and two examples immediately following it. All illustrations and tables in the information module should be rescanned for potential nonconformance of all kinds.

7.2.9 Special cases of sampling.

7.2.9.1 Short TMs. For page-based TMs, if there are fewer than six pages between break pages, use as samples all material between break pages instead of six-page samples previously specified.

7.2.9.2 Material already sampled. For any particular test, if the material has already been sampled, the test results already obtained will be used.

7.2.9.3 Availability of material. If the amount of material called for does not exist, all available material is to be used.

7.3 Reading grade level measures.

7.3.1 Counts for narrative text. For each sample, marked, raw data should be collected. Data collection will consist of counts of the numbers of words, sentences, and syllables in each sample. The size of the sample is based on the number of words to be analyzed. Samples will start at the beginning of the first full paragraph on each marked sample. If a sample starts on a page containing procedural instructions, start the sample at the beginning of the first full sentence.

7.3.1.1 Words. Count all words up to the end of the sentence containing the 200th word. If the marked sample is less than 200 words, the sample can be extended to the next section of text; but do not extend the sample into a new information module or text pertaining to a completely new subject. Record the number of words in each sample.

7.3.1.2 Sentences. Count all sentences in the sample including the sentence that contains the 200th word. Record the number of sentences in each sample.

7.3.1.3 Syllables. Count syllables the way the word is normally pronounced aloud. Count all numbers as one syllable. For example, 5.1, 65, and 300 each counts as one syllable. However, if a numeric expression contains several numbers separated by hyphens, count each number as a syllable. For example, the expression 9-1025-240-10 is counted as four syllables. Acronyms and abbreviations are counted as one syllable unless they actually spell out a word of more than one syllable. For example, Hz and DVM each count as one syllable, but TRADOC and ATCOM each count as two syllables. Record the number of syllables in each sample.

7.3.2 Automatic counting equipment. Devices for obtaining keystroke, word, and sentence counts automatically as text is input may be used. Keystroke counts will then substitute for syllable counts.

7.3.3 Manual counting technique. Obtaining accurate word and syllable counts rapidly can be aided by using a push-button operated counting device while reciting the text aloud. Certain hand-held electronic calculators can be used in this way.

7.4 Calculation of RGL. Automated equipment and software may be used to calculate RGL provided the computation meets the guidance in this document.

7.4.1 Overall grade level. The Overall Grade Level (OGL) (refer to TABLE III for a sample) of a TM is calculated as follows:

a. Add the total number of words (W) from all samples combined. Record total.
b. Add the total number of sentences (S) from all samples combined. Record total.
c. Add the total number of syllables (P) from all samples combined. Record total.
d. Calculate the average sentence length (A). Divide the total number of words (W) by total number of sentences (S): (A = W/S). Round off quotient to the nearest one hundredth. Record quotient.
e. Calculate the average number of syllables per word (B). Divide total number of syllables (P) by total number of words (W): (B = P/W). Round off quotient to the nearest one hundredth. Record quotient.
f. Calculate the OGL of the TM by the following formula. Round off the OGL to the nearest integer.

$$OGL = 0.39(A) + 11.8(B) - 15.59$$

TABLE III. Sample Computations to Demonstrate Use of Formulas.

Sample	Total No. Words	Total No. Sentences	Total No. Syllables
1	250	30	500
2	220	35	475
3	245	28	420
4	223	22	400
5	256	32	510
6	215	27	398
7	219	26	395
8	230	30	400
9	225	29	380
10	226	28	370
10	W=2309	S=287	P=4248

A = W/S	A = 2309/287	A = 8.05
B = P/W	B = 4248/2309	B = 1.84

$$OGL = 0.39(A) + 11.8(B) - 15.59$$
$$OGL = 0.39(8.05) + 11.8(1.84) - 15.59$$
$$OGL = 3.14 + 21.71 - 15.59$$
$$OGL = 9$$

7.4.2 Sample grade levels. Calculate the Grade Level (GL) (refer to TABLE IV for a sample) of each sample as follows:

a. Calculate the average sentence length (L). Divide the number of words (V) in the sample by the number of sentences (T) in the sample: (L = V/T). Round off quotient to the nearest one hundredth.
b. Calculate the average number of syllables per word (D). Divide the number of syllables (C) in the sample by the number of words (V) in the sample: (D = C/V). Round off quotient to the nearest one hundredth.
c. Calculate the GL of each sample by the following formula. Round off each GL to the nearest integer.

GL = 0.39(L) + 11.8(D) - 15.59

TABLE IV. Sample Computations to Demonstrate Use of Formulas.

Sample	Total No. Words	Total No. Sentences	Total No. Syllables
1	V1=250	T1=30	C1=500
2	V2=250	T2=35	C2=475

L1 = V1/T1	L2 = V2/T2	
D1 = C1/V1	D2 = C2/V2	
L2 = V2/T2	L2 = 220/35	L2=6.29
D2 = C2/V2	D2=475/220	D2 = 2.16

GL1 = 0.39(L1) + 11.8(D1) - 15.59
GL1 = 0.39(8.33) + 11.8(2) - 15.59
GL1 = 3.25 + 23.6 - 15.59
GL1 = 11

GL2 = 0.39(L2) + 11.8(D2) - 15.59
GL2 = 0.39(6.29) + 11.8(2.16) - 15.59
GL2 = 2.45 + 25.49 - 15.59
GL2 = 12

8. NOTES.

8.1 Intended use. Technical manuals prepared in accordance with the information and guidance contained in this handbook are used to support operation and maintenance of various types of equipment and weapons systems within the Department of the Army.

8.2 Subject term (key word) listing. The following terms are to be used to identify the MIL-HDBK-1222 document during retrieval searches.

a. Digitized artwork.
b. Graphics.
c. Hazardous materials warnings.
d. Icons.
e. Illustrations.
f. Interactive electronic technical manual (IETM).
g. Introductory material.
h. Maintenance instructions.
i. Operator instructions.
j. Reading grade level.
k. Repair parts and special tools list (RPSTL).
l. Revisions.
m. Supporting information.
n. Theory of operation.
o. Troubleshooting information.

8.3 Change notations. The margins of this handbook are marked with vertical lines to indicate modifications generated by this change. This was done as a convenience only and the Government assumes no liability whatsoever for any inaccuracies in these notations.

TABLE A-II. Page-based TM Requirements Matrix for **TM X-XXX-XXX-14&P**.

TM Content	-10	-13 -13&P	-14 -14&P	MIL-STD-40051-2 Reference	Element Name
FRONT MATTER	R	R	R	5.2.1	<paper.frnt>
Front cover	R	R	R	5.2.1.1	<frntcover>
(MC) Promulgation letter			**P**	5.2.1.2	<promulgation>
Warning summary			**R**	5.2.1.3	<warnsum>
Change transmittal page				5.2.1.4	<chgsheet>
List of effective pages / work packages *(Excluding pocket TMs and publications with less than eight pages)*	R	R	R	5.2.1.5	<loepwp>
Title block page	R	R	R	5.2.1.6	<titleblk>
Table of contents	R	R	R	5.2.1.8	<contents>
How to use this manual	R	R	R	5.2.1.9	<howtouse>
CHAPTER 1. GENERAL INFORMATION, EQUIPMENT DESCRIPTION AND THEORY OF OPERATION	R	R	R	B.5.1	<gim>
GENERAL INFORMATION WORK PACKAGE	R	R	R	B.5.2	<ginfowp>
Scope	R	R	R	B.5.2.3	<scope>
Maintenance forms, records, and reports	R	R	R	B.5.2.4	<mfrr>
Reporting equipment improvement recommendations (EIR)	R	R	R	B.5.2.5	<eir>
Hand receipt (HR) manuals			**P**	B.5.2.6	<handreceipt>
Corrosion prevention and control (CPC)	R	R	R	B.5.2.7	<cpcdata>
Ozone depleting substances (ODS)			**P**	B.5.2.8	<odsdata>
Destruction of Army materiel to prevent enemy use	R	R	R	B.5.2.9	<destructmat>
Preparation for storage or shipment	R	R	R	B.5.2.10	<pssref>
Warranty information			**P**	B.5.2.11	<wrntyref>
Nomenclature cross-reference list			**P**	B.5.2.12	<nomenreflist>
List of abbreviations/acronyms	R	R	R	B.5.2.13	<loa>
Quality of material	P			B.5.2.15	<qual.mat.info>
Safety, care, and handling				B.5.2.16	<sftyinfo>
Nuclear hardness			**P**	B.5.2.17	<hcp>
Calibration			**P**	B.5.2.18	<calref>
Supporting information for repair parts, special tools, TMDE, and support equipment	P		**R**	B.5.2.25	<supdata>
Copyright credit line			**P**	B.5.2.26	<copyrt>

Figure 1. Example of a filled-out content selection matrix.

TABLE A-II. Page-based TM Requirements Matrix for **TM X-XXX-XXX-14&P**.

TM Content	-10	-13 -13&P	-14 -14&P	MIL-STD-40051-2 Reference	Element Name
EQUIPMENT DESCRIPTION AND DATA WORK PACKAGE	R	R	R	B.5.3	<descwp>
Equipment characteristics, capabilities, and features	R	R	R	B.5.3.3	<eqpinfo>
Location and description of major components	R	R	R	B.5.3.4	<locdesc>
Differences between models			**R**	B.5.3.5	<eqpdiff>
Equipment data	R	R	R	B.5.3.6	<eqpdata>
THEORY OF OPERATION WORK PACKAGE	R	R	R	B.5.4	<thrywp>
CHAPTER X. OPERATOR INSTRUCTIONS	R	R	R	C.5.1	<opim>
DESCRIPTION AND USE OF OPERATOR CONTROLS AND INDICATORS WORK PACKAGE	R	R	R	C.5.2.3	<ctrlindwp>
OPERATION UNDER USUAL CONDITIONS WORK PACKAGE	R	R	R	C.5.2.4	<opusualwp>
Security measures for electronic data				C.5.2.4.3	<secref>
Siting requirements				C.5.2.4.4	<site>
Shelter requirements				C.5.2.4.5	<shelter>
Assembly and preparation for use				C.5.2.4.6	<prepforuse>
Initial adjustments, before use and self-test				C.5.2.4.7	<initial>
Operating procedures	R	R	R	C.5.2.4.8	<oper>
Decals and instruction plates				C.5.2.4.8.2	<instructplt>
Operating auxiliary equipment				C.5.2.4.9	<operaux>
Preparation for movement				C.5.2.4.10	<prepmove>
OPERATION UNDER UNUSUAL CONDITIONS WORK PACKAGE	R	R	R	C.5.2.5	<opunuwp>
Security measures for electronic data				C.5.2.5.3.1	<secref>
Unusual environment / weather	R	R	R	C.5.2.5.3.2	<unusualenv>
Fording and swimming				C.5.2.5.3.3	<fording>
Interim nuclear, biological, and chemical (NBC) decontamination procedures				C.5.2.5.3.4	<decon>
Jamming and electronic countermeasures (ECM) procedures				C.5.2.5.3.5	<ecm>
Degraded operation procedures				C.5.2.5.3.6	<degraded>
EMERGENCY WORK PACKAGE			**P**	C.5.2.6	<emergencywp>
STOWAGE AND DECAL / DATA PLATE GUIDE WORK PACKAGE			**P**	C.5.2.7	<stowagewp>
ON-VEHICLE EQUIPMENT LOADING PLAN WORK PACKAGE			**P**	C.5.2.8	<eqploadwp>

Figure 1. Example of a filled-out content selection matrix. – Continued.

TABLE A-II. Page-based TM Requirements Matrix for **TM X-XXX-XXX-14&P**.

TM Content	-10	-13 -13&P	-14 -14&P	MIL-STD-40051-2 Reference	Element Name
CHAPTER X. TROUBLESHOOTING MASTER INDEX			**P**	D.5.1 D.5.4.4	<tim> <masterindexcategory>
TROUBLESHOOTING INDEX WORK PACKAGE	R	R	R	D.5.5.5	<tsindxwp>
CHAPTER X. TROUBLESHOOTING PROCEDURES ***NOTE*** *The notation (*) indicates that, if required, at least one of the these content items shall be included*		R	R	D.5.1 D.5.4.2	<tim> <troublecategory>
TROUBLESHOOTING INDEX WORK PACKAGE				D.5.5.5	<tsindxwp>
**OPERATIONAL CHECKOUT WORK PACKAGES*				D.5.5.8.3	<opcheckwp>
**TROUBLESHOOTING PROCEDURES WORK PACKAGES*				D.5.5.8.4	<tswp>
**COMBINED OPERATIONAL CHECKOUT AND TROUBLESHOOTING PROCEDURES WORK PACKAGES*				D.5.5.8.5	<opcheck-tswp>
CHAPTER X. PMCS MAINTENANCE INSTRUCTIONS ***NOTE*** *PMCS is required as a minimum in one maintenance chapter*			**P**	E.5.2 E.5.2.1	<mim> <pmcscategory>
PMCS INTRODUCTION WORK PACKAGE	R	R	R	E.5.3.4.1	<pmcsintrowp>
PMCS, INCLUDING LUBRICATION INSTRUCTIONS, WORK PACKAGE	R	R	R	E.5.3.4.2	<pmcswp>
CHAPTER X. MAINTENANCE INSTRUCTIONS ***NOTE*** *PMCS is required as a minimum in one maintenance chapter*	R	R	R	E.5.2 E.5.2.2 E.5.2.3	<mim> <maintenancepmcscategory> <maintenancecategory>
SERVICE UPON RECEIPT WORK PACKAGE	P	R	R	E.5.3.2	<surwp>
Siting	P			E.5.3.2.3.1	<siting>
Shelter requirements	P			E.5.3.2.3.2	<shltr>
Service upon receipt of materiel	P	R	R	E.5.3.2.3.3	<surmat>
Installation instructions	P	R	R	E.5.3.2.3.4	<install>
Preliminary servicing of equipment	P			E.5.3.2.3.5	<preserv>

Figure 1. Example of a filled-out content selection matrix. – Continued.

TABLE A-II. Page-based TM Requirements Matrix for **TM X-XXX-XXX-14&P**.

TM Content	-10	-13 -13&P	-14 -14&P	MIL-STD-40051-2 Reference	Element Name
Preliminary checks and adjustment of equipment	P			E.5.3.2.3.6	<prechkadj>
Preliminary calibration of equipment	P			E.5.3.2.3.7	<precal>
Circuit alignment	P			E.5.3.2.3.8	<calign>
Ammunition markings	P			E.5.3.2.3.9.1	<ammo.markings>
Classification of defects	P			E.5.3.2.3.9.2	<ammo.defect>
Ammunition handling	P			E.5.3.2.3.9.3	<ammo.handling>
Procedures to activate ammunition	P			E.5.3.2.3.9.4	<arm>
Other service upon receipt task	P			E.5.3.2.3.10	<other.surtsk>
Follow-on maintenance	P			E.5.3.2.3.11	<followon.maintsk>
EQUIPMENT / USER FITTING INSTRUCTIONS WORK PACKAGE (PERSONAL USE EQUIPMENT)	P		**P**	E.5.3.3	<perseqpwp>
PMCS INTRODUCTION WORK PACKAGE	R	R	R	E.5.3.4.1	<pmcsintrowp>
PMCS, INCLUDING LUBRICATION INSTRUCTIONS, WORK PACKAGE	R	R	R	E.5.3.4.2	<pmcswp>
MAINTENANCE WORK PACKAGES ***NOTE*** *As applicable, the following maintenance tasks shall be presented in the general order listed below:*	R	R	R	E.5.3.5	<maintwp>
Servicing				E.5.3.5.3.3	<service>
Ground handling				E.5.3.5.3.4	<groundtsk>
Inspection of installed items				E.5.3.5.3.5	<inspinstitm>
Removal				E.5.3.5.3.6	<remove>
Disassembly				E.5.3.5.3.7	<disassem>
Cleaning				E.5.3.5.3.8	<clean>
Inspection-acceptance and rejection criteria				E.5.3.5.3.9	<acptrejinsp>
Nondestructive testing inspection (NDTI)				E.5.3.5.3.10	<ndti>
Repair or replacement				E.5.3.5.3.11	<repair-rplc>
Alignment				E.5.3.5.3.12	<align>
Painting				E.5.3.5.3.13	<paint>
Lubrication				E.5.3.5.3.14	<lube>
Assembly				E.5.3.5.3.15	<assem>
Test and inspection				E.5.3.5.3.16	<test-inspect>
Installation				E.5.3.5.3.17	<install>
Adjustment				E.5.3.5.3.18	<adjust>
Calibration				E.5.3.5.3.19	<calibration>

Figure 1. Example of a filled-out content selection matrix. – Continued.

TABLE A-II. Page-based TM Requirements Matrix for **TM X-XXX-XXX-14&P**.

TM Content	-10	-13 -13&P	-14 -14&P	MIL-STD-40051-2 Reference	Element Name
Radio interference suppression				E.5.3.5.3.20	<ris>
Placing in service				E.5.3.5.3.21	<pis>
Testing				E.5.3.5.3.22	<test-pass>
Preparation for storage or shipment				E.5.3.5.3.25	<pss>
Classification of defects				E.5.3.5.3.26	<ammo.defect>
Handling ammunition				E.5.3.5.3.27	<ammo.handling>
Ammunition markings				E.5.3.5.3.28	<ammo.markings>
Procedures for ammunition activation				E.5.3.5.3.29	<arm>
Additional maintenance task				E.5.3.5.3.30	<other.maintsk>
Follow-on maintenance				E.5.3.5.3.31	<followon.maintsk>
GENERAL MAINTENANCE WORK PACKAGE			**P**	E.5.3.6	<maintwp>
LUBRICATION INSTRUCTIONS WORK PACKAGE			**P**	E.5.3.7	<lubewp>
ILLUSTRATED LIST OF MANUFACTURED ITEMS WORK PACKAGE	P		**P**	E.5.3.9	<manuwp>
TORQUE LIMITS WORK PACKAGE	P		**P**	E.5.3.10	<torquewp>
WIRING DIAGRAMS WORK PACKAGE	P		**P**	E.5.3.11	<wiringwp>
CHAPTER X. AUXILIARY EQUIPMENT MAINTENANCE INSTRUCTIONS			**P**	E.5.2 E.5.2.6	<mim> <auxiliarycategory>
AUXILIARY EQUIPMENT MAINTENANCE WORK PACKAGE			**P**	E.5.3.13	<auxeqpwp>
ILLUSTRATED LIST OF MANUFACTURED ITEMS WORK PACKAGE	P		**P**	E.5.3.9	<manuwp>
TORQUE LIMITS WORK PACKAGE	P		**P**	E.5.3.10	<torquewp>
WIRING DIAGRAMS WORK PACKAGE	P		**P**	E.5.3.11	<wiringwp>
CHAPTER X. AMMUNITION MAINTENANCE INSTRUCTIONS			**P**	E.5.2 E.5.2.7	<mim> <ammunitioncategory>
AMMUNITION MAINTENANCE WORK PACKAGE			**P**	E.5.3.14.1	<ammowp>
AMMUNITION MARKING INFORMATION WORK PACKAGE	P		**P**	E.5.3.14.2	<ammo.markingwp>
FOREIGN AMMUNITION (NATO) WORK PACKAGE	P		**P**	E.5.3.14.3	<natowp>

Figure 1. Example of a filled-out content selection matrix. – Continued.

TABLE A-II. Page-based TM Requirements Matrix for **TM X-XXX-XXX-14&P**.

TM Content	-10	-13 -13&P	-14 -14&P	MIL-STD-40051-2 Reference	Element Name
CHAPTER X. **PARTS INFORMATION** *(-10 THROUGH -14)* *(-12&P THROUGH -14&P)*	 P P	 P R	 P R	F.5.3.2	<pim>
INTRODUCTION WORK PACKAGE	P	R	R	F.5.3.5	<introwp>
REPAIR PARTS LIST WORK PACKAGE	P	R	R	F.5.3.6	<plwp>
REPAIR PARTS FOR SPECIAL TOOLS WORK PACKAGE	P		**P**	F.5.3.7	<stl_partswp>
KIT PARTS LIST WORK PACKAGE	P		**P**	F.5.3.8	<kitswp>
BULK ITEM WORK PACKAGE	P		**P**	F.5.3.9	<bulk_itemswp>
SPECIAL TOOLS LIST WORK PACKAGE	P		**R**	F.5.3.10	<stlwp>
NSN INDEX WORK PACKAGE	P	R	R	F.5.3.11.1	<nsnindxwp>
P/N INDEX WORK PACKAGE	P	R	R	F.5.3.11.2	<pnindxwp>
REFERENCE DESIGNATOR INDEX WORK PACKAGE	P			F.5.3.11.3	<refdesindxwp>
CHAPTER X. **DESTRUCTION OF EQUIPMENT TO PREVENT ENEMY USE**			R	Appendix H	<destruct-ginfowp> <destruct-materialwp>
GENERAL INFORMATION WORK PACKAGE			R	H.5.1	<destruct-ginfowp>
DESTRUCTION OF EQUIPMENT TO PREVENT ENEMY USE WORK PACKAGE			R	H.5.2	<destruct-materialwp>
BATTLE DAMAGE ASSESSMENT AND REPAIR (BDAR) INFORMATION				I.5.1	
GENERAL INFORMATION WORK PACKAGE				I.5.2.1	
ASSESSING BATTLE DAMAGE WORK PACKAGE				I.5.2.2	
GENERAL REPAIR WORK PACKAGES				I.5.2.3	
MAJOR FUNCTIONAL GROUP WORK PACKAGES				I.5.2.4	
AUXILLARY EQUIPMENT WORK PACKAGE				I.5.2.5	
SPECIAL/FABRICATED TOOLS WORK PACKAGE				I.5.2.7	
SUBSTITUTE MATRIALS/PARTS WORK PACKAGE				I.5.2.9	
BDAR TRAINING PROCEDURES WORK PACKAGE				I.5.2.10	

Figure 1. Example of a filled-out content selection matrix. – Continued

TABLE A-II. Page-based TM Requirements Matrix for **TM X-XXX-XXX-14&P**.

TM Content	-10	-13 -13&P	-14 -14&P	MIL-STD-40051-2 Reference	Element Name
CHAPTER X. **SUPPORTING INFORMATION** ***NOTE*** *Applicable supporting information work packages shall be arranged in the order in which they are presented here and numbered accordingly.*	R	R	R	G.5.1	<sim>``
REFERENCES WORK PACKAGE	R	R	R	G.5.2	<refwp>
INTRODUCTION FOR STANDARD MAC WORK PACKAGE *(FIVE-LEVEL MAINTENANCE ONLY)* *OR* *(TWO-LEVEL MAINTENANCE ONLY)*	P	R	R	G.5.3.1 G.5.3.3	<macintrowp>
MAC WORK PACKAGE *(FIVE-LEVEL MAINTENANCE ONLY)* *OR* *(TWO-LEVEL MAINTENANCE ONLY)*	P	R	R	G.5.3.4	<macwp>
COMPONENTS OF END ITEM (COEI) AND BASIC ISSUE ITEMS (BII) LISTS WORK PACKAGE	R	R	R	G.5.4	<coeibiiwp>
ADDITIONAL AUTHORIZATION LIST (AAL) WORK PACKAGE			**R**	G.5.5	<aalwp>
EXPENDABLE AND DURABLE ITEMS LIST WORK PACKAGE	R	R	R	G.5.6	<explistwp>
TOOL IDENTIFICATION LIST WORK PACKAGE	P		**P**	G.5.7	<toolidwp>
MANDATORY REPLACEMENT PARTS WORK PACKAGE	P		**P**	G.5.8	<mrplwp>
CRITICAL SAFETY ITEMS AND FLIGHT SAFETY CRITICAL AIRCRAFT PARTS WORK PACKAGE			**P**	G.5.9	<csi.fscap.wp>
SUPPORT ITEMS WORK PACKAGE			**P**	G.5.10	<supitemwp>
ADDITIONAL SUPPORTING WORK PACKAGES			**R**	G.5.11	<genwp>
REAR MATTER	R	R	R	5.2.2	<rear>
Glossary			**R**	5.2.2.1	<glossary>
Alphabetical index			**R**	5.2.2.2	<aindx>
DA Form 2028	R	R	R	5.2.2.3	<da2028>
Authentication page	R	R	R	5.2.2.4	<authent>
Foldout pages			**R**	5.2.2.5	<foldsect>
Back cover	R	R	R	5.2.2.6	<back>

Figure 1. Example of a filled-out content selection matrix. – Continued.

```
<?xml version="1.0" encoding="utf-8"?>
<ammo.markingwp wpno="M00034-X-XXX-XX" tocentry="2" frame="yes" army="no" airforce="no"
navy="no" marines="no" wpseq="1839" deletewp="no" fit.paper.size="pocket.to.double">
<wpidinfo>
<maintlvl level="unitlvl"/>
<title>AMMUNITION MARKING INFORMATION</title>
</wpidinfo>
<wpinfo>
<title>NOT APPLICABLE</title>
<null insert="none"/></wpinfo>
<ammo.markings hcp="no" esd="no" frame="yes" tocentry="0">
<title>general</title>
<step1 skilllevel="novice_expert" hcp="no" esd="no" qa="no">
<para hcp="no" esd="no">Ammunition for the M199 cannon is the separate loading type. The loading of each
complete round into the cannon requires three separate operations: loading the fuzed projectile, the propelling
charge, and the primer.</para></step1>
<step1 skilllevel="novice_expert" hcp="no" esd="no" qa="no">
<para hcp="no" esd="no">These components are shipped separately; therefore, the cannon crew must know how
to store, unpack, inspect, prepare, and load each complete round every time the weapon is fired.</para>
<step2 skilllevel="novice_expert" hcp="no" esd="no" qa="no">
<para hcp="no" esd="no">The chief of section supervises the loading and the preparation duties performed by
cannoneers.</para></step2>
<step2 skilllevel="novice_expert" hcp="no" esd="no" qa="no">
<para hcp="no" esd="no">The chief of section must also see that the cannoneers and driver are cross-trained in
the specific duties of the care, handling, unpacking, inspection, preparation, and loading of the ammunition
components in order to sustain a 24-hour operation or to operate with a reduced crew.</para></step2></step1>
<step1 skilllevel="novice_expert" hcp="no" esd="no" qa="no">
<para hcp="no" esd="no">It is planned that future ammo for all new 155mm weapons will be interchangeable. This
will enable projectiles and propelling changes of one NATO nation to be fired from the 155mm weapons of all others.
Current items of interchangeability are contained in Chapter 5.</para></step1>
<step1 skilllevel="novice_expert" hcp="no" esd="no" qa="no">
<para hcp="no" esd="no">For maintenance of ammunition, <extref docno="TM 9-1300-251-20" pretext="see
"/>.</para></step1>
<step1 skilllevel="novice_expert" hcp="no" esd="no" qa="no">
<specpara hcp="no" esd="no">
<warning haz-abbrev="no">
<trim.para hcp="no" esd="no">Until safety and reliability testing is completed, the use of ammo other than
prescribed in this manual is prohibited.</trim.para></warning>
<warning haz-abbrev="no">
<trim.para hcp="no" esd="no" id="note1">
<ftnote id="note1" mark="ctr" label="1">
<ftnpara>Do not fire the M650 projectile if the obturating band is missing or broken. If the band is displaced and can
be repositioned and remain in the groove, the projectile can be fired. </ftnpara></ftnote>
Do not fire the M650 projectile if the obturating band is missing or broken. If the band is displaced and can be
repositioned and remain in the groove, the projectile can be fired. </trim.para></warning>
```


Figure 2. Example of an XML Source file.

```
<note acknowledge="no">
<trim.para hcp="no" esd="no" id="note2">
<ftnote id="note2" mark="ctr" label="2">
<ftnpara>M728 andM732 fired only with "VX" projectile and only in combat emergency. </ftnpara></ftnote>
M728 andM732 fired only with "VX" projectile and only in combat emergency. </trim.para>
<trim.para hcp="no" esd="no" id="note3">
<ftnote id="note3" mark="ctr" label="3">
<ftnpara>Fuze, MTSQ, M564 is restricted from firing with zone 9 M188A1 propelling charge.</ftnpara></ftnote>
Fuze, MTSQ, M564 is restricted from firing with zone 9 M188A1 propelling charge.</trim.para>
<trim.para hcp="no" esd="no" id="note4"><ftnote id="note4" mark="ctr" label="4">
<ftnpara>Authorized, requires removal of supplementary charge. </ftnpara></ftnote>
Authorized, requires removal of supplementary charge. </trim.para></note>
<para hcp="no" esd="no">Refer to <xref wpid="M0011"/> for information about the Loose Projectile Restraint
System (LPRS). The LPRS is a divider rack for securing loose unfuzed projectiles for transportation in a field artillery
companion vehicle.
<table tocentry="1">
<title>Authorized Projectile Fuze Combinations for 8-Inch Howitzer, M110A2 Cannon M201A1.</title>
<tgroup cols="12" align="left" charoff="50" char=" ">
<colspec colname="COLSPEC0" colwidth="1.80*"/>
<colspec colname="COLSPEC1" colwidth="0.93*"/>
<colspec colname="col1" colwidth="0.94*"/>
<colspec colname="col2" colwidth="0.93*"/>
<colspec colname="col3" colwidth="0.91*"/>
<colspec colname="col4" colwidth="0.93*"/>
<colspec colname="col5" colwidth="0.94*"/>
<colspec colname="col6" colwidth="0.93*"/>
<colspec colname="col7" colwidth="0.96*"/>
<colspec colname="col8" colwidth="0.93*"/>
<colspec colname="col9" colwidth="0.94*"/>
<colspec colname="col10" colwidth="0.94*"/>
<thead valign="bottom">
<row>
<entry morerows="2" rotate="0" valign="top">TYPE AND MODEL NUMBER OF PROJECTILE</entry>
<entry namest="COLSPEC1" nameend="col10" morerows="0" rotate="0" valign="top">FUZE</entry></row>
<row>
<entry namest="COLSPEC1" nameend="col1" morerows="0" rotate="0" valign="top">PD</entry>
<entry namest="col2" nameend="col3" morerows="0" rotate="0" valign="top">MT</entry>
<entry namest="col4" nameend="col6" morerows="0" rotate="0" valign="top">MTSQ</entry>
<entry namest="col7" nameend="col8" morerows="0" rotate="0" valign="top">PROX(VT)</entry>
<entry namest="col9" nameend="col10" morerows="0" rotate="0" valign="top">ET</entry></row>
<row>
<entry morerows="0" rotate="0" valign="middle">M739 SERIES</entry>
<entry morerows="0" rotate="0" valign="middle">M1557</entry>
<entry morerows="0" rotate="0" valign="middle">M572</entry>
```


Figure 2. Example of an XML Source file. – Continued.

```
<entry morerows="0" rotate="0" valign="middle">M565</entry>
<entry morerows="0" rotate="0" valign="middle">M564</entry>
<entry morerows="0" rotate="0" valign="middle">M557 SERIES</entry>
<entry morerows="0" rotate="0" valign="middle">M582 SERIES</entry>
<entry morerows="0" rotate="0" valign="middle">M728</entry>
<entry morerows="0" rotate="0" valign="middle">M732</entry>
<entry morerows="0" rotate="0" valign="middle">M762</entry>
<entry morerows="0" rotate="0" valign="middle">M767</entry></row>
</thead>
<tbody valign="top">
<row>
<entry morerows="0" rotate="0" valign="top">Agent GB, VX, M426</entry>
<entry morerows="0" rotate="0" valign="middle" align="center">X</entry>
<entry morerows="0" rotate="0" valign="middle" align="center">X</entry>
<entry morerows="0" rotate="0" valign="middle" align="center">X</entry>
<entry morerows="0" rotate="0" valign="middle" align="center"></entry>
<entry morerows="0" rotate="0" valign="middle" align="center"></entry>
<entry morerows="0" rotate="0" valign="middle" align="center"></entry>
<entry morerows="0" rotate="0" valign="middle" align="center"></entry>
<entry morerows="0" rotate="0" valign="middle" align="center">X<ftnref xrefid="note2"/></entry>
<entry morerows="0" rotate="0" valign="middle" align="center">X<ftnref xrefid="note2"/></entry>
<entry morerows="0" rotate="0" valign="middle" align="center"></entry>
<entry morerows="0" rotate="0" valign="middle" align="center"></entry></row>
<row>
<entry morerows="0" rotate="0" valign="top">HE, M106 (Shallow Cavity)</entry>
<entry morerows="0" rotate="0" valign="middle" align="center">X</entry>
<entry morerows="0" rotate="0" valign="middle" align="center">X</entry>
<entry morerows="0" rotate="0" valign="middle" align="center">X</entry>
<entry morerows="0" rotate="0" valign="middle" align="center">X<ftnref xrefid="note3"/></entry>
<entry morerows="0" rotate="0" valign="middle" align="center">X</entry>
<entry morerows="0" rotate="0" valign="middle" align="center">X</entry>
<entry morerows="0" rotate="0" valign="middle" align="center">X</entry></row>
<row>
<entry morerows="0" rotate="0" valign="top">HE, M106 (Deep Cavity)</entry>
<entry morerows="0" rotate="0" valign="middle" align="center">X</entry>
<entry morerows="0" rotate="0" valign="middle" align="center">X</entry>
<entry morerows="0" rotate="0" valign="middle" align="center">X</entry>
<entry morerows="0" rotate="0" valign="middle" align="center">X<ftnref xrefid="note3"/></entry>
```


Figure 2. Example of an XML Source file. – Continued.

```
<entry morerows="0" rotate="0" valign="middle" align="center"></entry>
<entry morerows="0" rotate="0" valign="middle" align="center">X</entry>
<entry morerows="0" rotate="0" valign="middle" align="center">X<ftnref xrefid="note4"/></entry>
<entry morerows="0" rotate="0" valign="middle" align="center">X</entry>
<entry morerows="0" rotate="0" valign="middle" align="center"></entry>
<entry morerows="0" rotate="0" valign="middle" align="center">X</entry></row>
<row>
<entry morerows="0" rotate="0" valign="top">HE, M404 ICM</entry>
<entry morerows="0" rotate="0" valign="middle" align="center"></entry>
<entry morerows="0" rotate="0" valign="middle" align="center"></entry>
<entry morerows="0" rotate="0" valign="middle" align="center"></entry>
<entry morerows="0" rotate="0" valign="middle" align="center">X</entry>
<entry morerows="0" rotate="0" valign="middle" align="center">X</entry>
<entry morerows="0" rotate="0" valign="middle" align="center"></entry>
<entry morerows="0" rotate="0" valign="middle" align="center">X</entry>
<entry morerows="0" rotate="0" valign="middle" align="center">X</entry>
<entry morerows="0" rotate="0" valign="middle" align="center"></entry>
<entry morerows="0" rotate="0" valign="middle" align="center">X</entry>
<entry morerows="0" rotate="0" valign="middle" align="center">X</entry></row>
<row>
<entry morerows="0" rotate="0" valign="top">HE, M509A1 ICM</entry>
<entry morerows="0" rotate="0" valign="middle" align="center">X</entry>
<entry morerows="0" rotate="0" valign="middle" align="center">X</entry></row>
<row>
<entry morerows="0" rotate="0" valign="top">HERA, M650 (Rocket Only)</entry>
<entry morerows="0" rotate="0" valign="middle" align="center">X</entry>
<entry morerows="0" rotate="0" valign="middle" align="center">X</entry></row>
```


Figure 2. <u>Example of an XML Source file.</u> – Continued.

```
<row>
<entry morerows="0" rotate="0" valign="top">HERA, M650 (Rocket Only)<ftnref xrefid="note1"/></entry>
<entry morerows="0" rotate="0" valign="middle" align="center">X</entry>
<entry morerows="0" rotate="0" valign="middle" align="center">X</entry>
<entry morerows="0" rotate="0" valign="middle" align="center">X</entry>
<entry morerows="0" rotate="0" valign="middle" align="center"></entry>
<entry morerows="0" rotate="0" valign="middle" align="center">X<ftnref xrefid="note3"/></entry>
<entry morerows="0" rotate="0" valign="middle" align="center"></entry>
<entry morerows="0" rotate="0" valign="middle" align="center">X</entry>
<entry morerows="0" rotate="0" valign="middle" align="center"></entry>
<entry morerows="0" rotate="0" valign="middle" align="center">X</entry>
<entry morerows="0" rotate="0" valign="middle" align="center"></entry>
<entry morerows="0" rotate="0" valign="middle" align="center">X</entry></row>
</tbody>
</tgroup>
</table>
</para>
</specpara></step1>
</ammo.markings>
</ammo.markingwp>
```


Figure 2. <u>Example of an XML Source file.</u> – Continued.

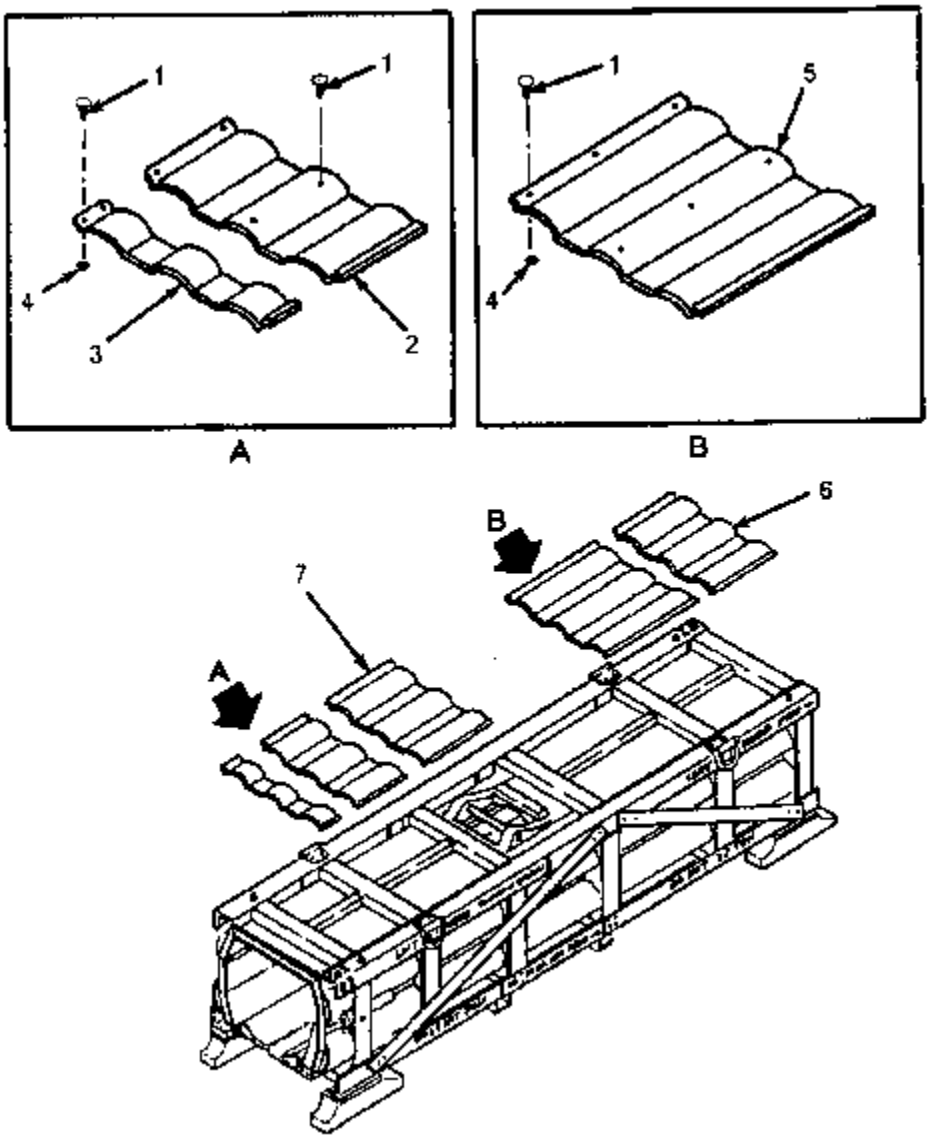

Figure 3. <u>Example of a multisheet illustration with border rules.</u>

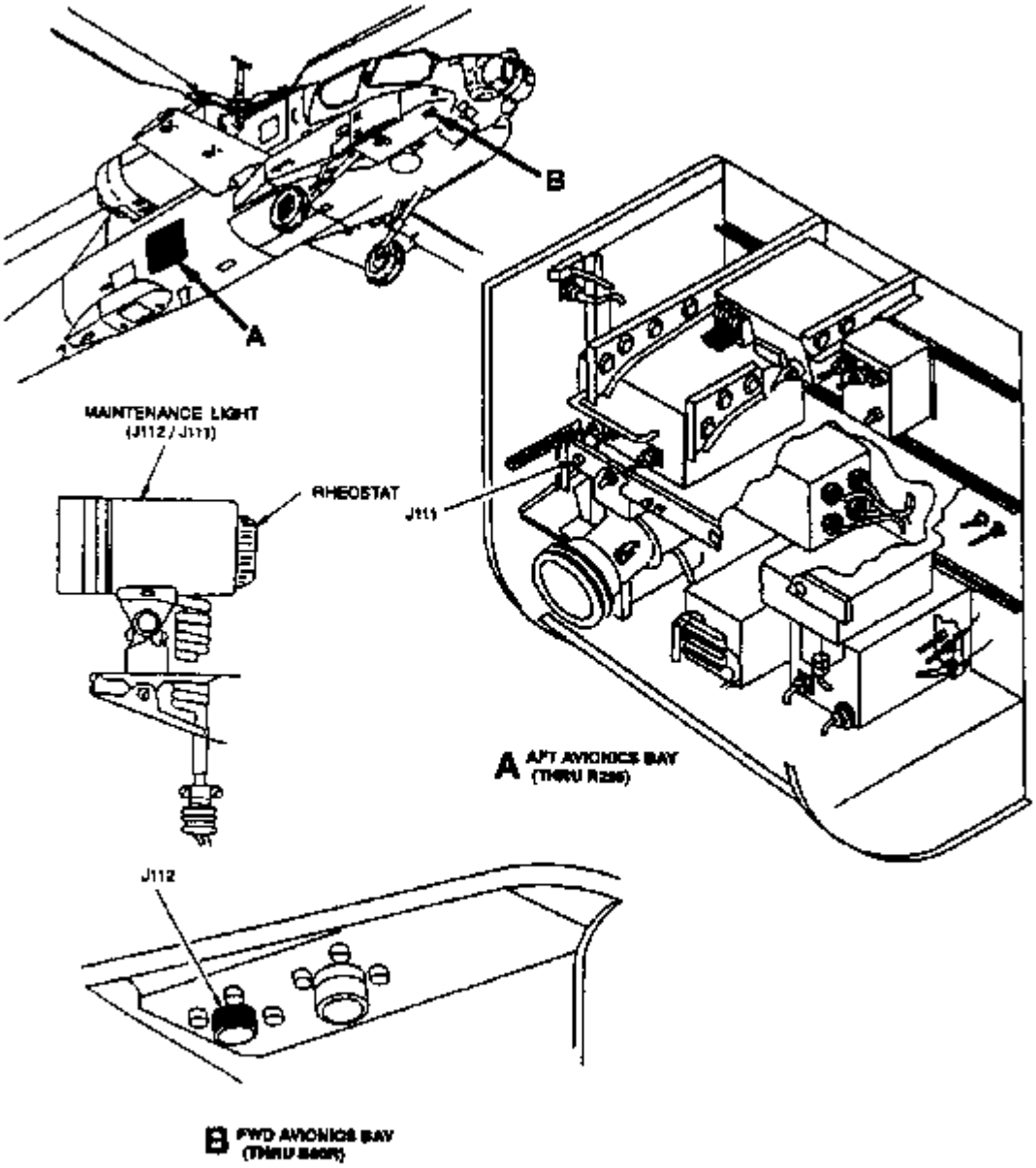

Figure 4. <u>Example of a locator illustration and detail view.</u>

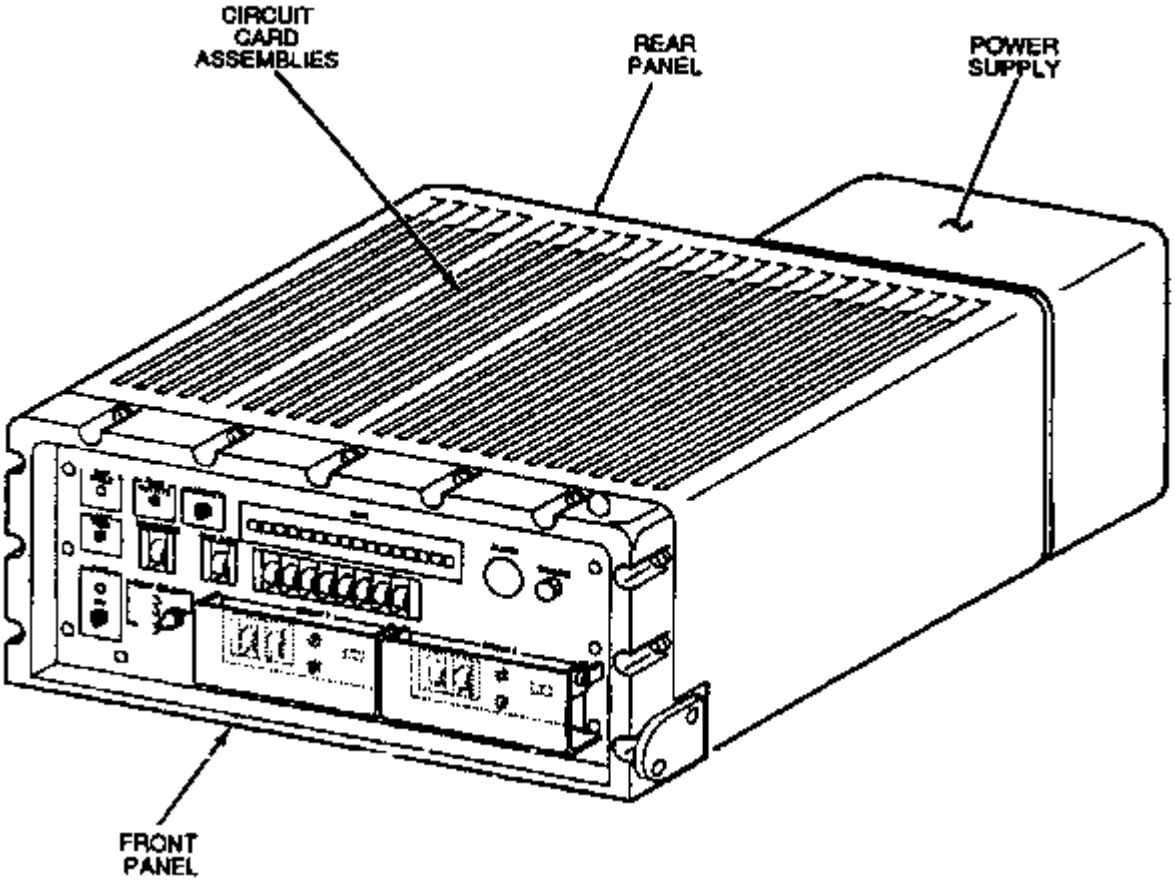

Figure 5. <u>Example of a pictorial diagram with nomenclature.</u>

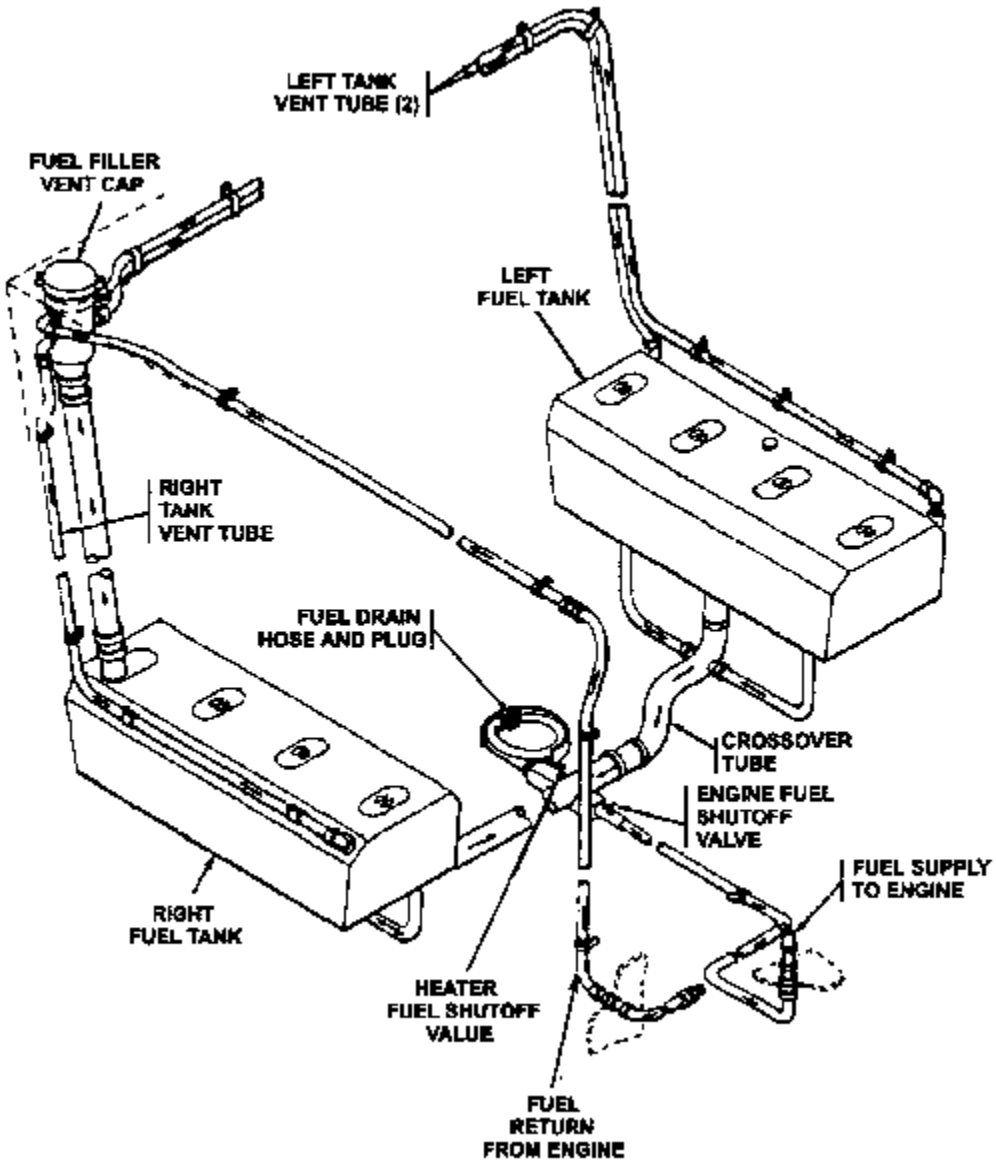

Figure 5. <u>Example of a pictorial diagram with nomenclature.</u> - Continued.

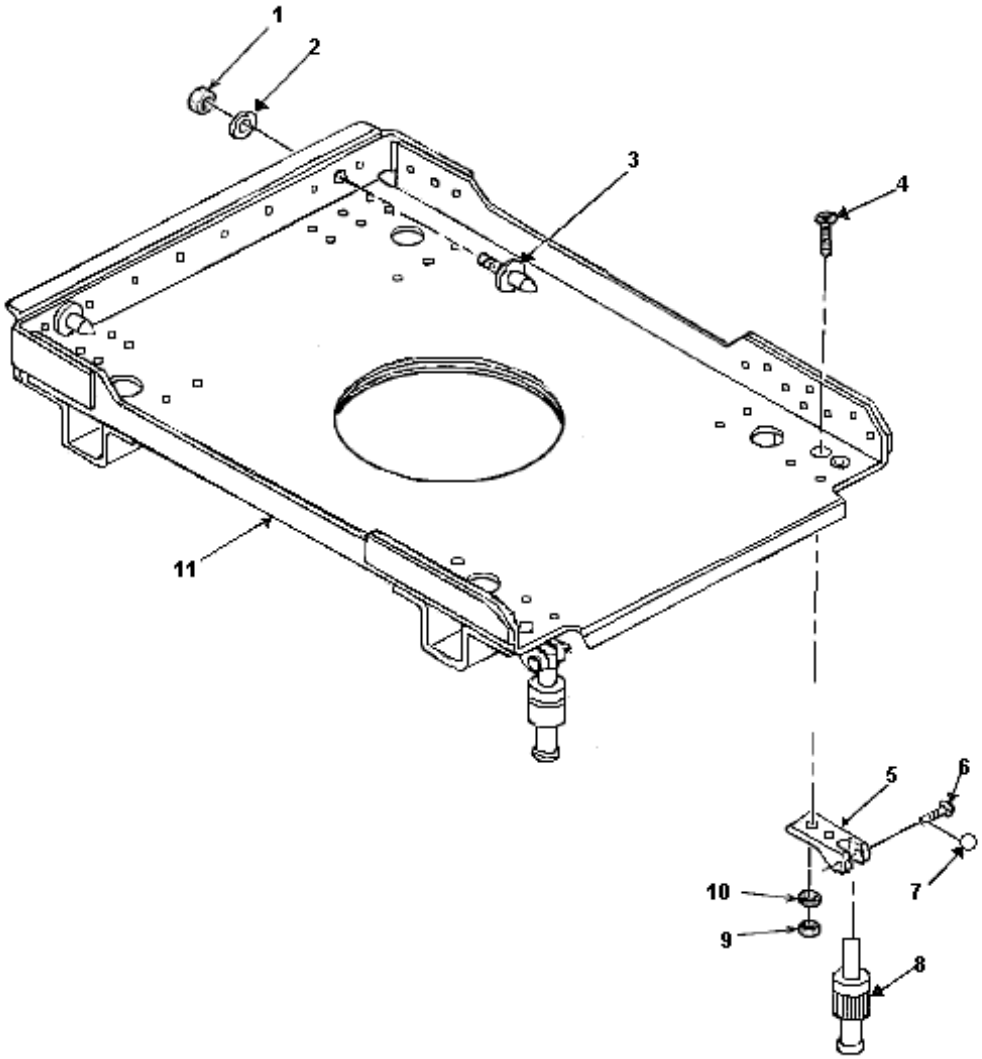

LEGEND

1 SELF-LOCKING NUT EX
2 FLAT WASHER
3 REAR GUIDE PIN
4 MACHINE SCREW
5 RACK HINGE
6 HINGE PIN
7 COTTER PIN
8 SELF LOCK FASTENER
9 SELF LOCKING NUT
10 FLAT WASHER
11 SUBASSEMBLY RACK

Figure 91. Electrical Equipment Rack, FMT 3234023-100

Figure 6. Example of a legend

DEPARTMENT OF THE ARMY
(*EQUIPMENT NOMENCLATURE*)

DISTRIBUTION RESTRICTION STATEMENT C.
Distribution authorized to U.S. government agencies and their contractors only. This determination was made on (*insert CD-ROM date*) based on the highest level of distribution restriction of any Electronic Technical Manual (ETM) on the CD-ROM. Requests for release of ETMs included on the CD should be referred to the proponent as listed on the front cover of the ETM.

SUPERSESSION DATA:
This is the first CD-ROM in this series

IDN xxxxxx
PIN xxxxxx-xxx

Windows 2000 or Higher

Date of CD-ROM

WARNING – This document contains technical data whose export is restricted by the Arms Export Control Act (Title 22, U.S.C., Sec 2751, et. Seq.) or the Export Administration Act of 1979, as amended, Title 50, U.S.C., App. 2401 et. Seq. Violations of these export laws are subject to severe criminal penalties. Disseminate in accordance with provisions of DoD Directive 5230.25.

DISTRUCTION INFORMATIOM
Send to National Security Agency for destruction.
See mailer/flyer for instructions.

EM xxxx

Figure 7. <u>Example 1 of a CD label for first issue of an ETM.</u>

DEPARTMENT OF THE ARMY
(*EQUIPMENT NOMENCLATURE*)

DISTRIBUTION RESTRICTION STATEMENT C.
Distribution authorized to U.S. government agencies and their contractors only. This determination was made on (*insert CD-ROM date*) based on the highest level of distribution restriction of any Electronic Technical Manual (ETM) on the CD-ROM. Requests for release of ETMs included on the CD should be referred to the proponent as listed on the front cover of the ETM.

SUPERSESSION DATA:
* This CD-ROM supercedes EM xxxx dtd *(date)*

IDN xxxxxx
PIN xxxxxx-xxx

Windows 2000 or Higher

Date of CD-ROM

WARNING – This document contains technical data whose export is restricted by the Arms Export Control Act (Title 22, U.S.C., Sec 2751, et. Seq.) or the Export Administration Act of 1979, as amended, Title 50, U.S.C., App. 2401 et. Seq. Violations of these export laws are subject to severe criminal penalties. Disseminate in accordance with provisions of DoD Directive 5230.25.

DISTRUCTION INFORMATIOM
Send to National Security Agency for destruction.
See mailer/flyer for instructions.
*** EM xxxx**

Figure 8. <u>Example of a CD label for superseded ETM.</u>

(FRONT)

DEPARTMENT OF THE ARMY
U.S. ARMY PUBLICATIONS
DISTRIBUITION CENTER
1655 WOODSON ROAD
ST. LOUIS, MO 63114-6181

OFFICIAL BUSINESS

CONTENT
EM NUMBER
DATE
CURRENT AS OF DATE
IDN

FRAGILE
HANDLE WITH CARE

(SPINE)

EM XXXX Date

(BACK)

PIN XXXXXX-XXX

Figure 9. <u>Example of CD mailer outside front, spine, and back.</u>

DEPARTMENT OF THE ARMY
IDN XXXXX PIN XXXXX-XXX
Equipment Nomenclature

Info printed on flap

DISTRIBUTION RESTRICTION STATEMENT D. Distribution authorized to DoD and U.S. DoD contractors only. This determination was made on 1 June 1998 based on the highest level of distribution restriction of any Electronic Technical Manual (ETM) on the CD-ROM. Requests for release of ETMs included on this CD should be referred to the proponent as listed on the front cover of the ETM.

DESTRUCTION NOTICE. Send to National Security Agency for destruction. See right side of mailer for instructions.

Info printed below flap

INSTALLATION INSTRUCTIONS AND OPERATING ENVIRONMENT. Place the ETM CD in the CD-ROM drive; **if previously installed:** In Windows 95 and above, Select programs from start menu, ETM Workgroup, and click on the ETM program. **If not previously installed**: In Windows 95 and above, Select Start/run form taskbar; Enter (CD-ROM drive letter):\Setup. Example: L:\setup. Click on "OK". Follow all instructions that appear on the screen. The ETM program will create an ETM Program Group and an ETM Program Group icon. To uninstall: Go to the ETM Program Group and double click the uninstall icon. Follow any instructions given.

Figure 10. Example of CD mailer, inside (left side panel).

DESTRUCTION INSTRUCTIONS. National Security Agency (NSA) accepts Distribution Restricted CD-ROMs for destruction and meets environmental standards. If your local facility does not handle CD-ROMs, send expired ones FIRST CLASS to Director, National Security Agency, 9800 Savage Road, ATTN: CMC S714, Suite 6890, Fort George G. Meade, MD 20755-6000.

REQUIRED PROCEDURES: Ship ONLY WHOLE discs. Do not send sleeves, mailers, cases. No need to scratch discs going to NSA. Maximum box size and weight: 18 inches in height, width, or length, and 40 pounds. Send no more than 10 boxes at a time. If shipper wants receipt, include documentation/destruction form and enter total CD-ROMs in box; if others want receipt, also include self-addressed envelope. SINGLE wrap outside box with brown paper. If loose discs rattle, mark box "Rattle OK."

CHANGES AND REVISIONS. To get future changes and revisions to this IETM: Submit a subscription change requirement using Standard Army Publications Systems (STARPUBS) on-line system. For details, see DA Pam 25-33, User's Guide for Army Publications and Forms (Sep 96). Include the Initial Distribution Number (IDN) shown on the face of the CD. Also include the quantity needed. Units who fail to submit a subscription change requirement will not get future changes and revisions to this IETM. If you submit a subscription for this CD, reduce or delete your requirements for the paper version of the publications contained on this CD, as appropriate."

By Order of the Secretary of the Army:

Official:

JOEL B. HUDSON
Administrative Assistant to the
Secretary of the Army

PETER J. SCHOOMAKER
General, United States Army
Chief of Staff

PIN: xxxxxx-000

Figure 11. Example of CD mailer, inside (right side panel).

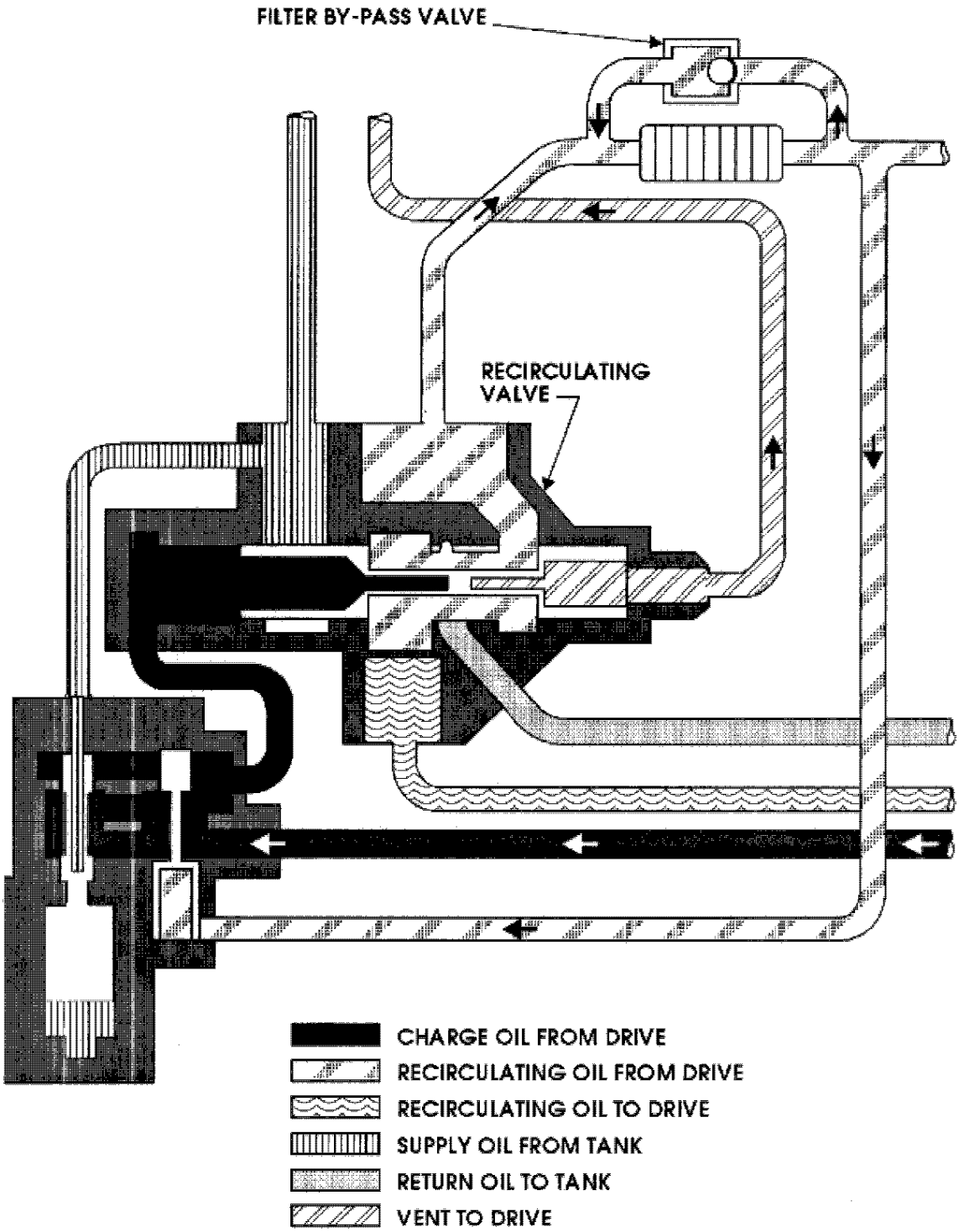

Figure 12. <u>Example of use of patterns instead of color.</u>

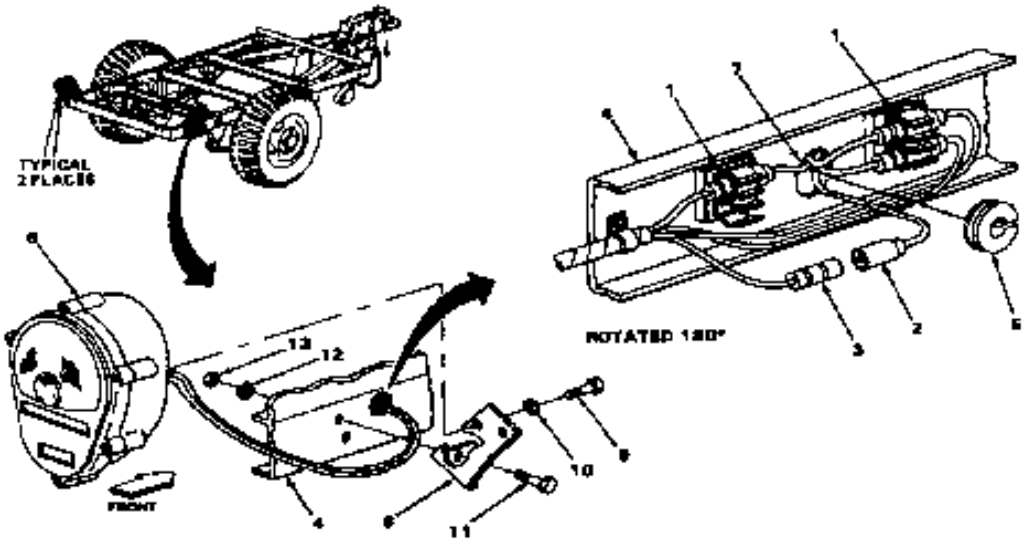

Figure 13. <u>Example of a multiview illustration.</u>

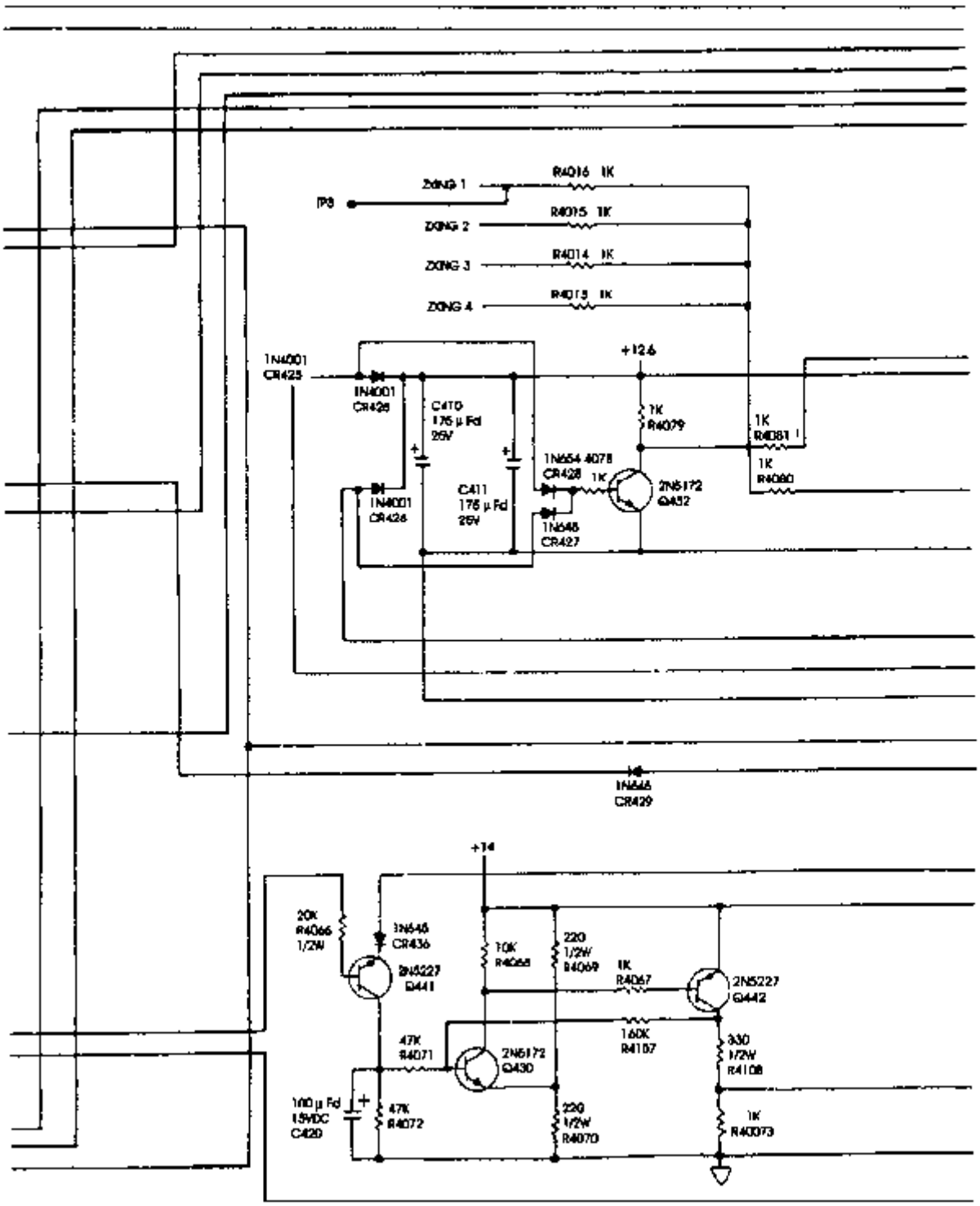

Figure 14. <u>Example of page size multisheet continuous flow diagram.</u>

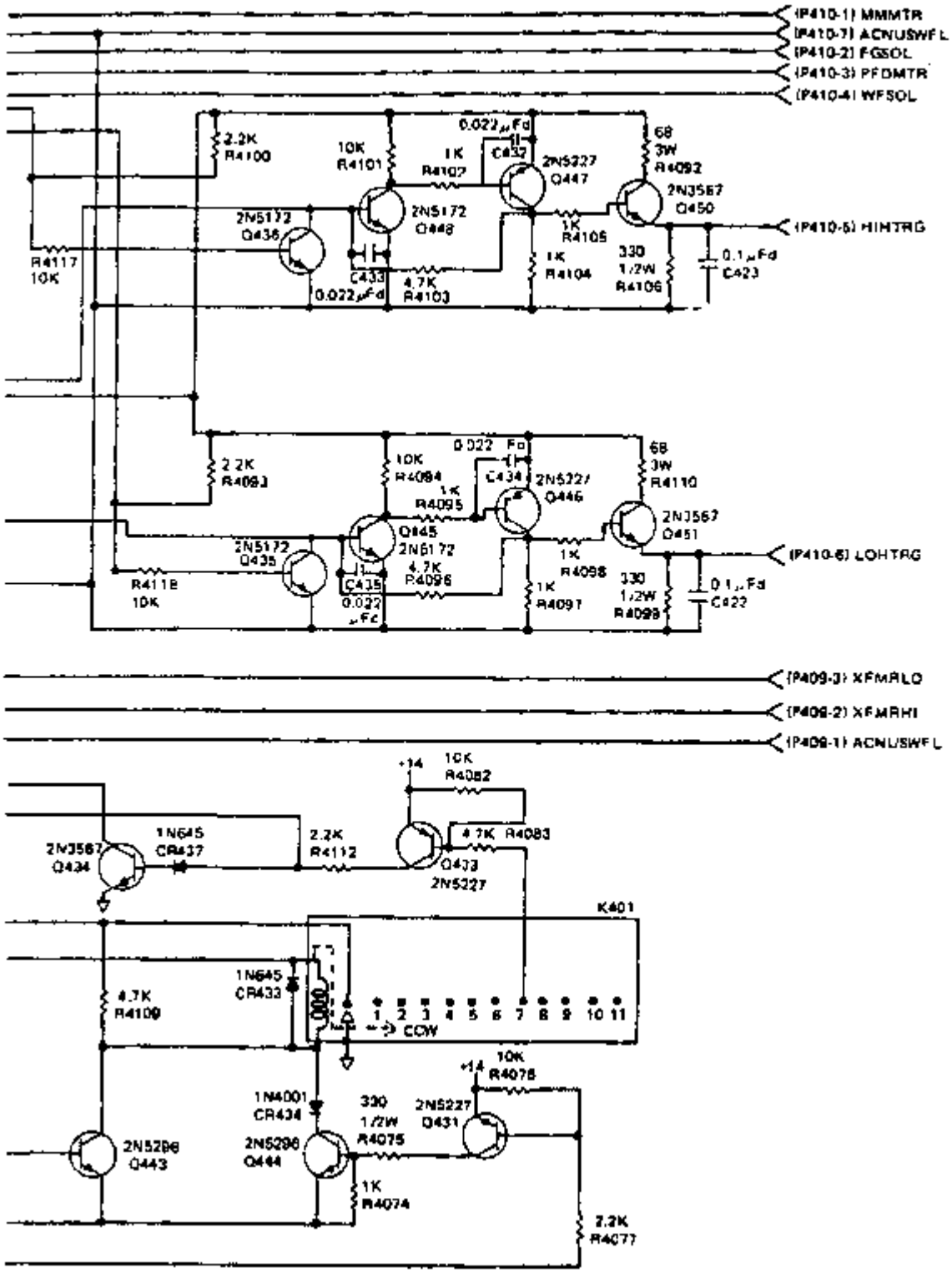

Figure 14. <u>Example of page size multisheet continuous flow diagram.</u> - Continued.

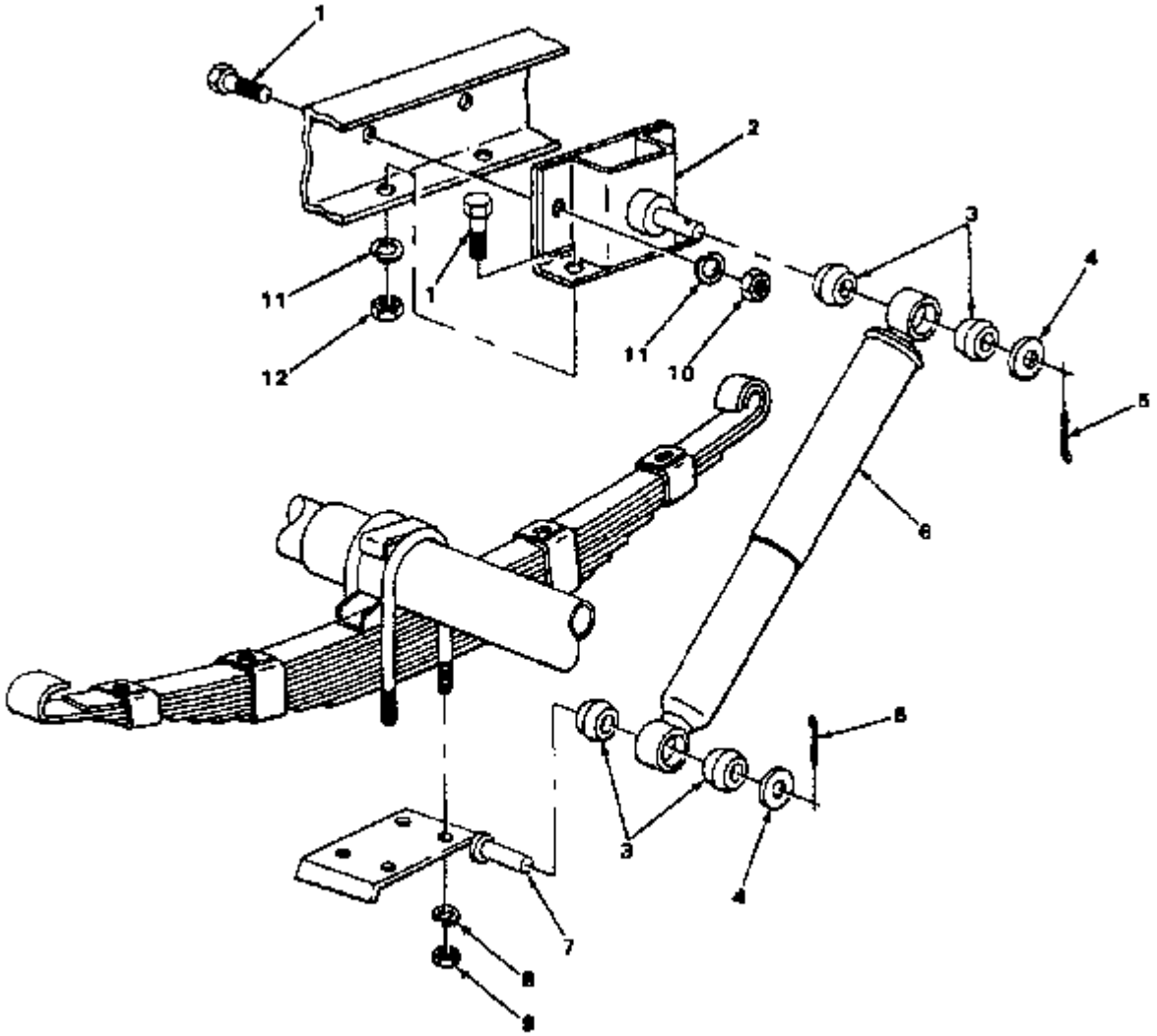

Figure 15. <u>Example of an exploded view illustration.</u>

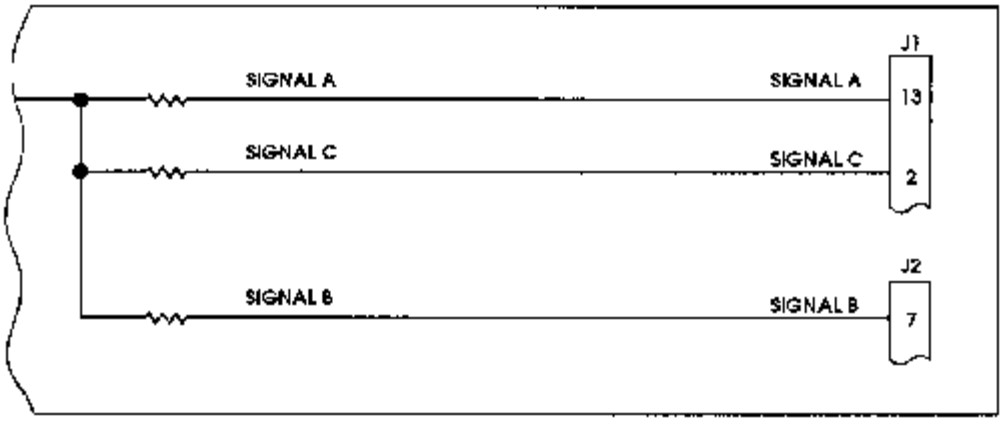

POINT-TO-POINT METHOD FOR SIGNAL FLOW

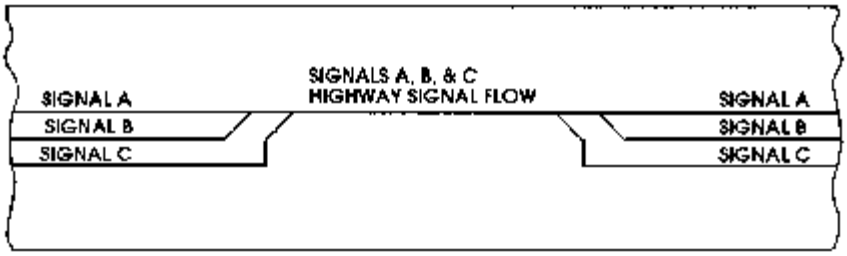

HIGHWAY METHOD FOR SIGNAL FLOW

Figure 16. <u>Example of highway and point-to-point methods for signal flow.</u>

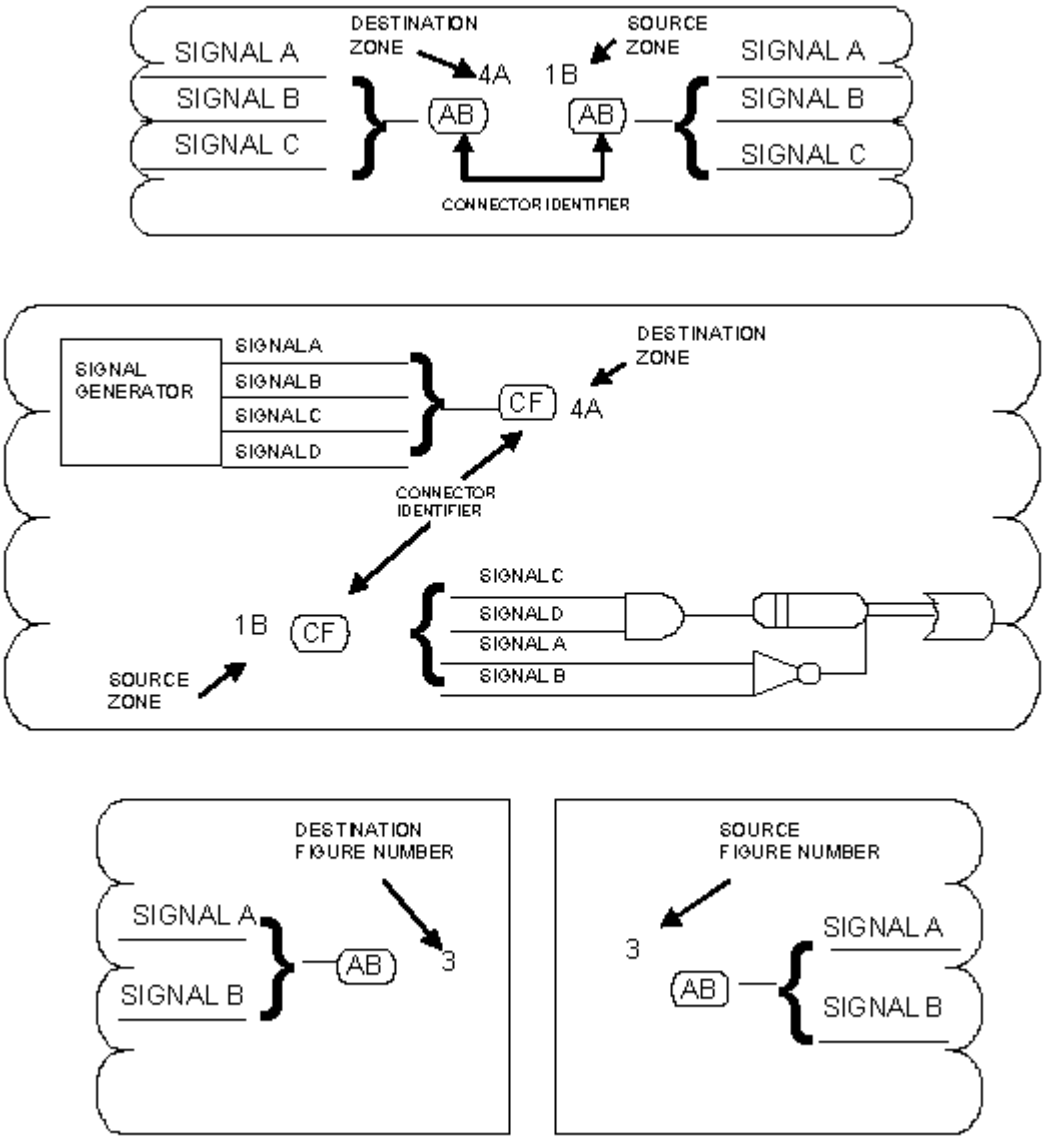

Figure 17. <u>Example of oval connectors to continue signals.</u>

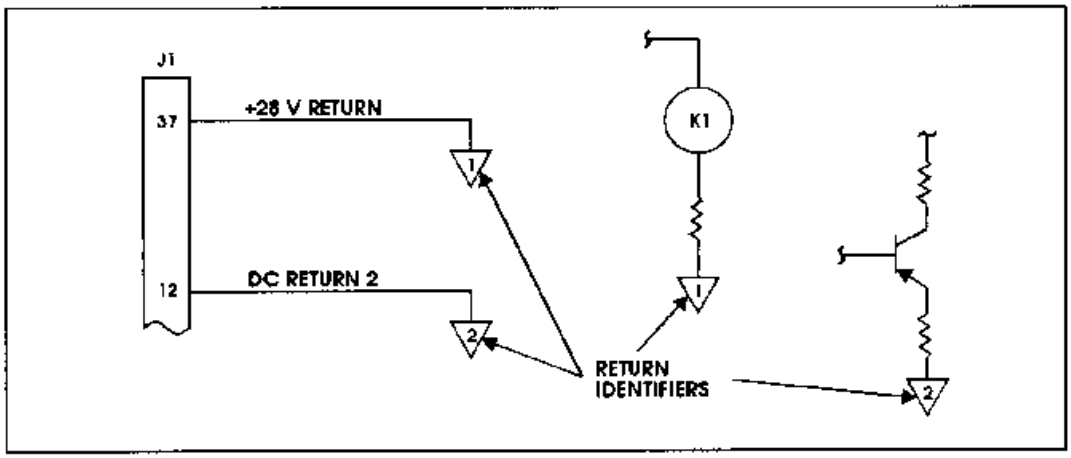

SIGNAL RETURNS USED TO CONTINUE SIGNAL

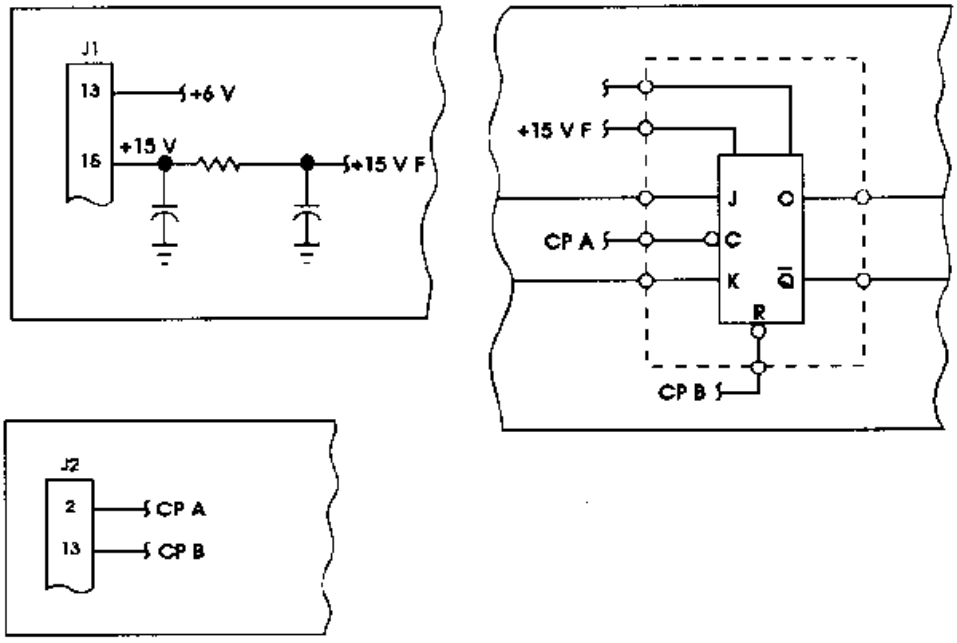

BREAKOFF SYMBOLS USED TO CONTINUE SIGNALS

Figure 18. <u>Example of signal returns and breakoff symbols to continue signals - single sheet diagram.</u>

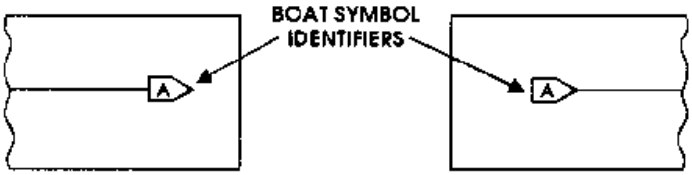

BOAT SYMBOLS USED TO CONTINUE SIGNALS
BETWEEN ADJACENT SHEETS OF A DIAGRAM

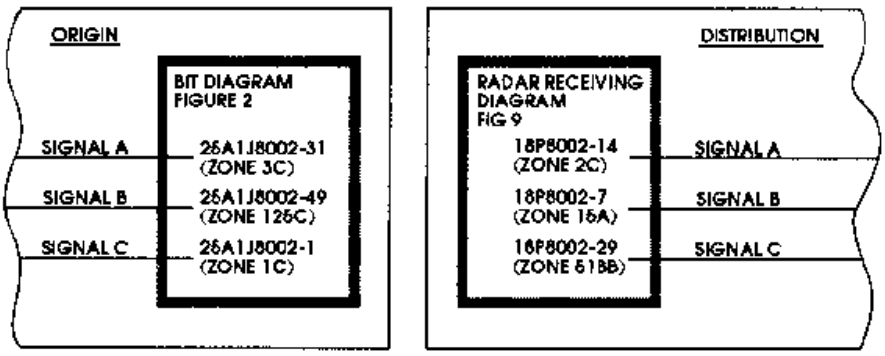

BLOCK TECHNIQUE FOR CONTINUING SIGNALS BETWEEN DIAGRAMS

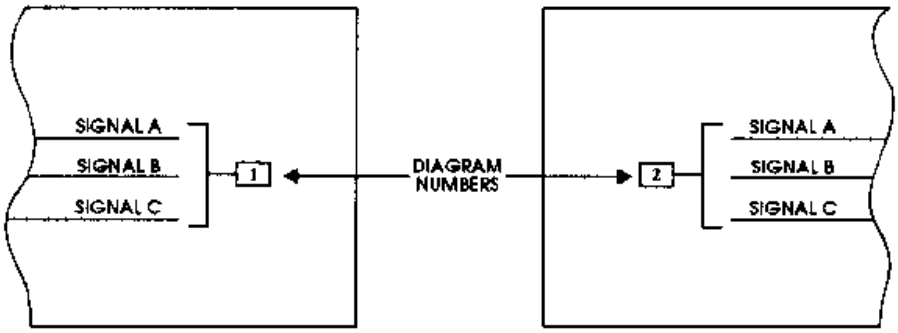

PYRAMID DIAGRAMS INTERDIAGRAM SIGNAL CONTINUATION

Figure 19. <u>Example of boat symbols, block technique, pyramid method to continue signals -multisheet diagram.</u>

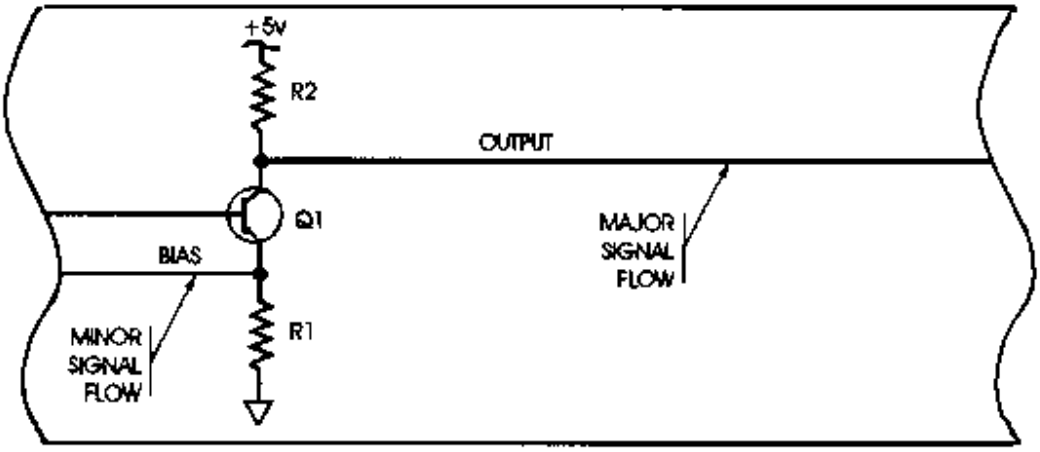

LINE WIDTH CODE USED TO INDICATE SIGNAL IMPORTANCE

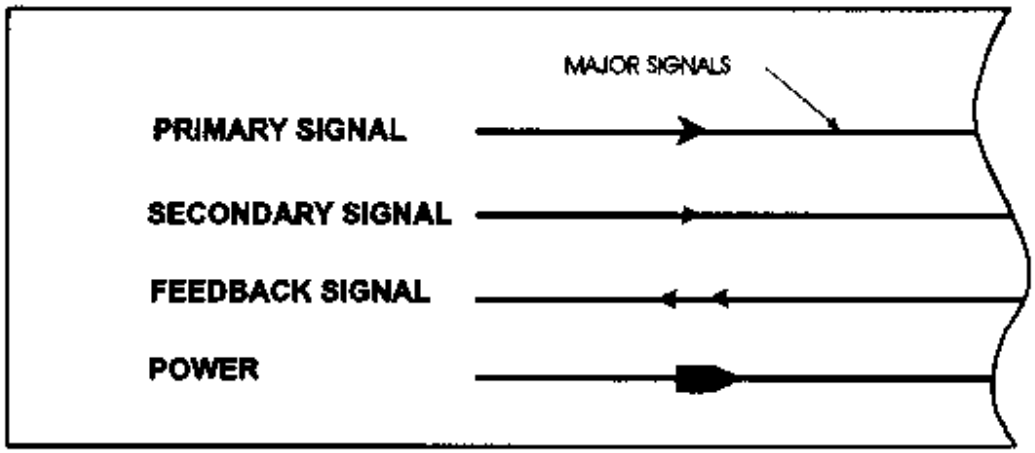

ARROWHEADS USED TO INDICATE SIGNAL TYPES

Figure 20. Example of signal difference techniques.

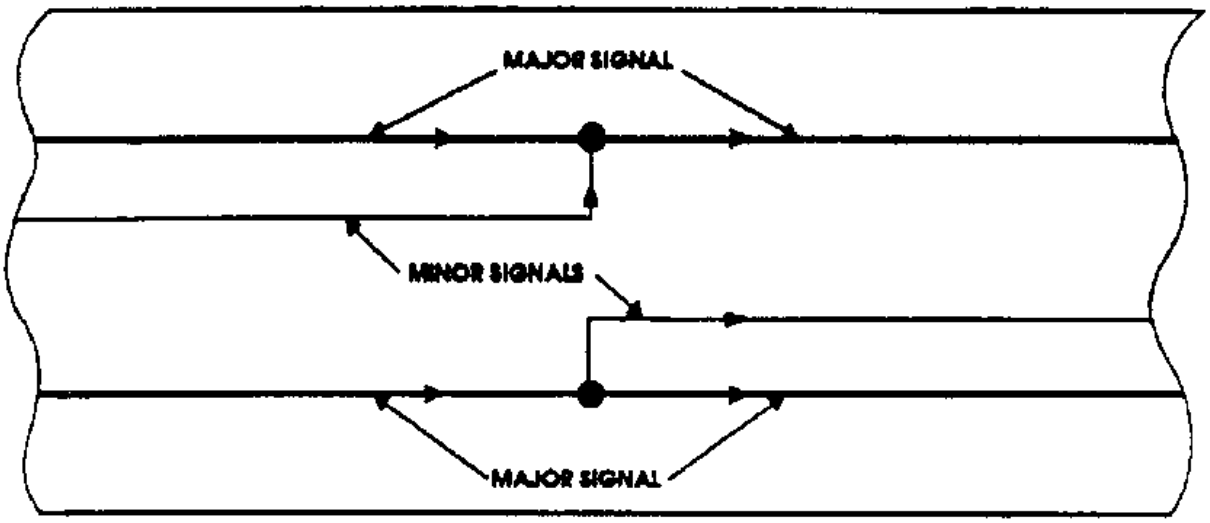

SUBORDINATE JUNCTIONS USED TO INDICATE DIFFERENCES IN SIGNAL IMPORTANCE

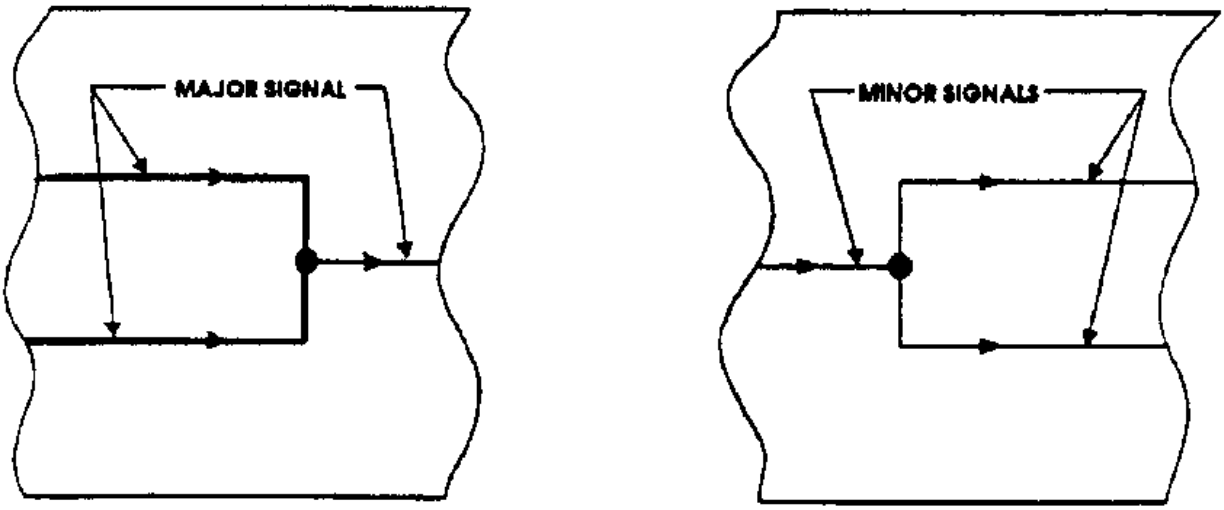

COORDINATE JUNCTIONS USED TO INDICATE EQUALITY IN SIGNAL IMPORTANCE

Figure 21. <u>Example of subordinate and coordinate junctions.</u>

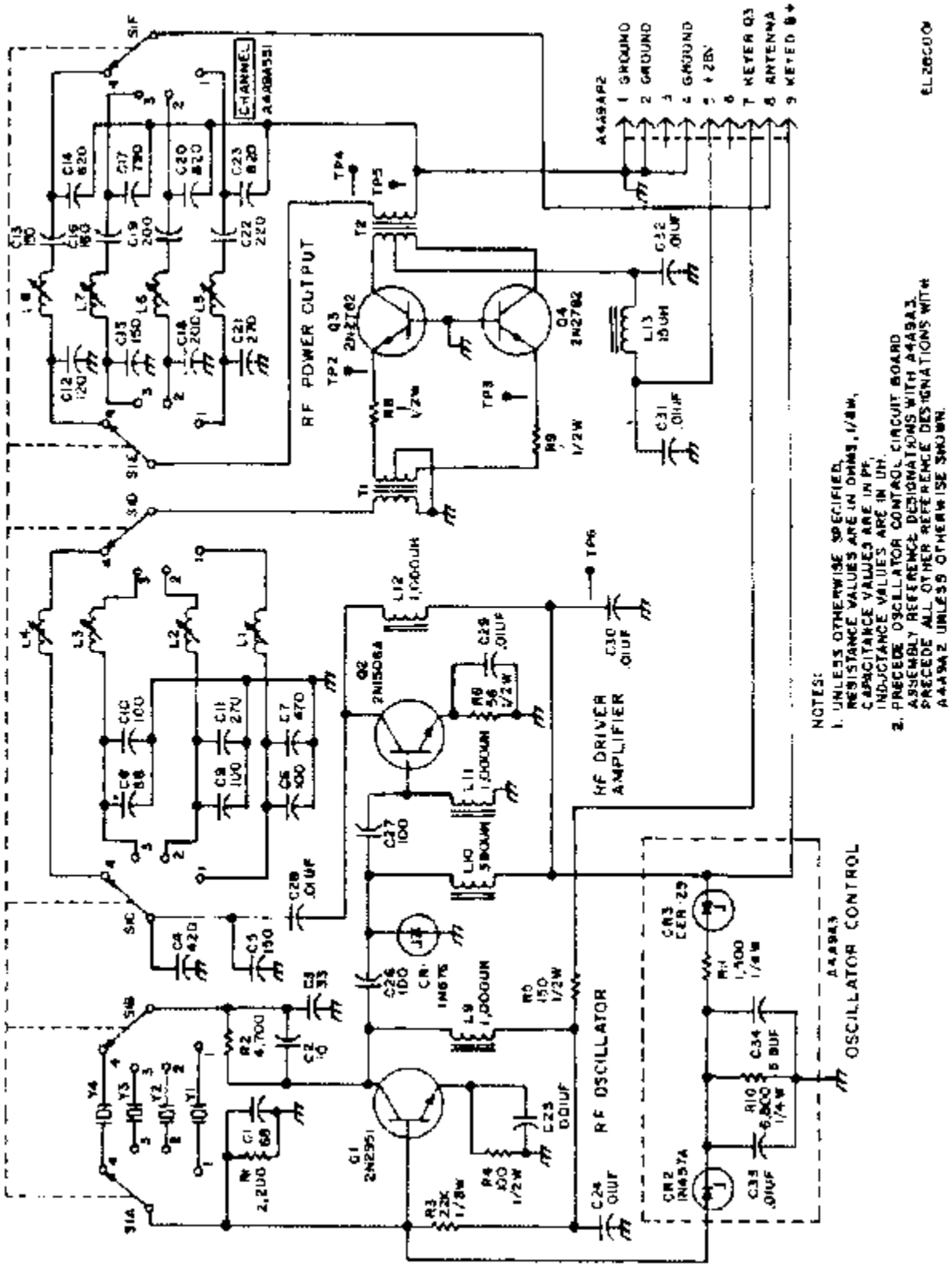

Figure 22. Example of hardware schematic diagram.

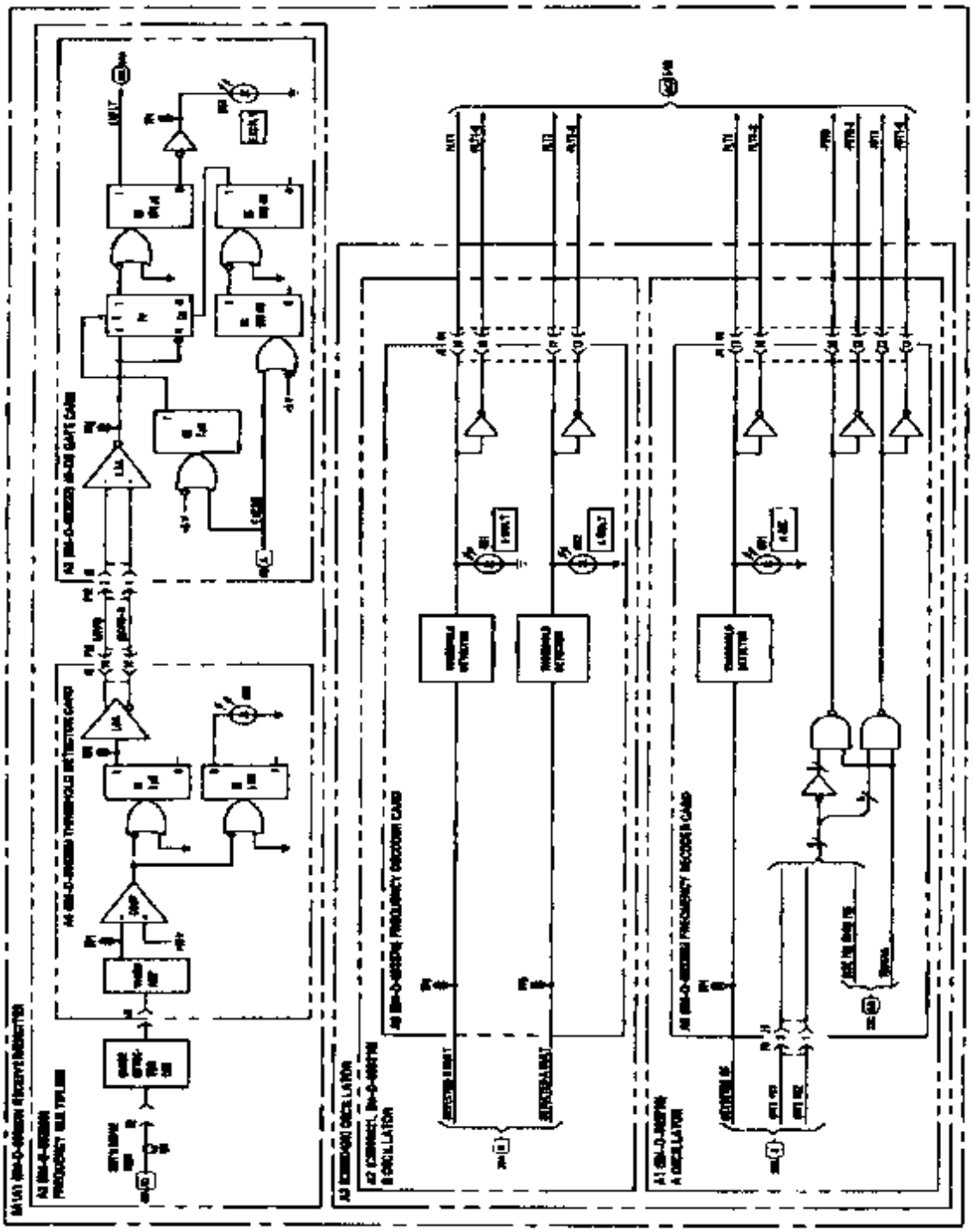

Figure 23. <u>Example of a functional schematic.</u>

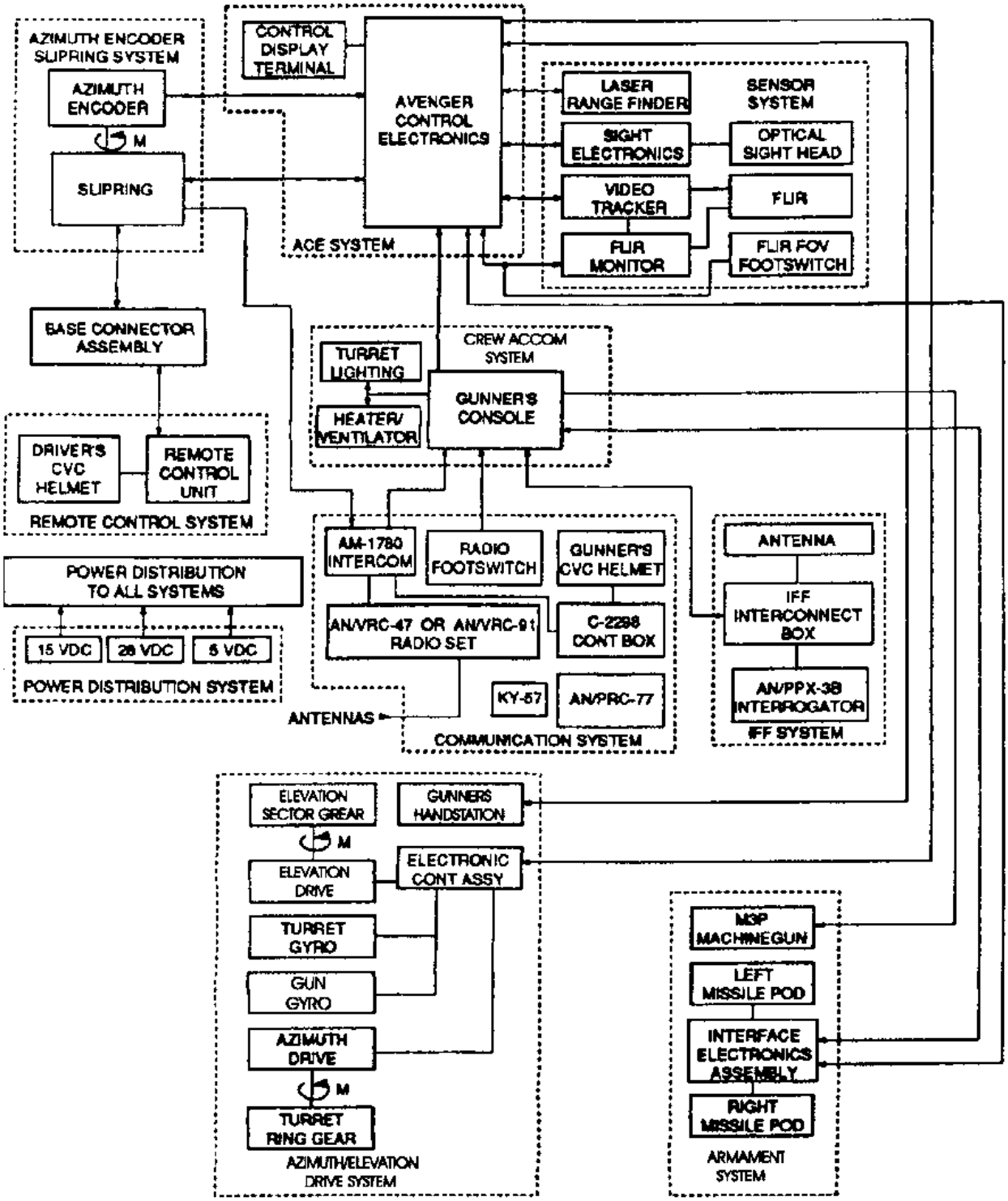

Figure 24. <u>Example of a functional block diagram.</u>

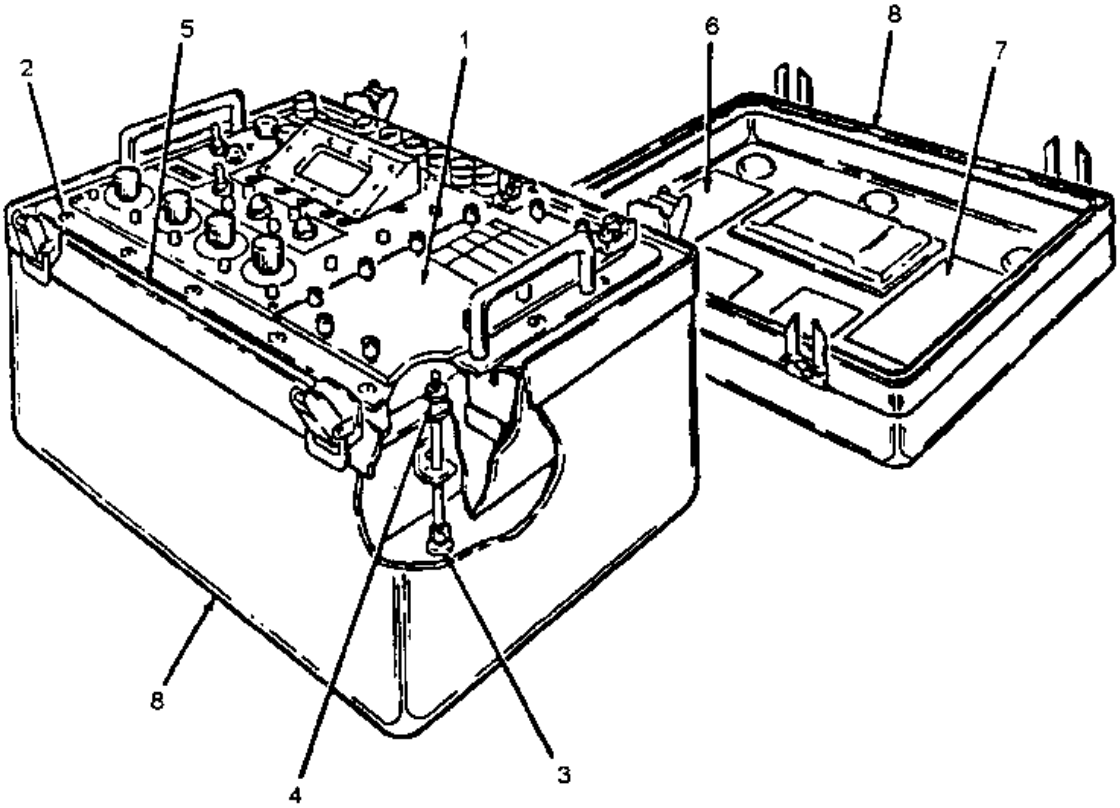

Figure 25. <u>Example of a cutaway diagram.</u>

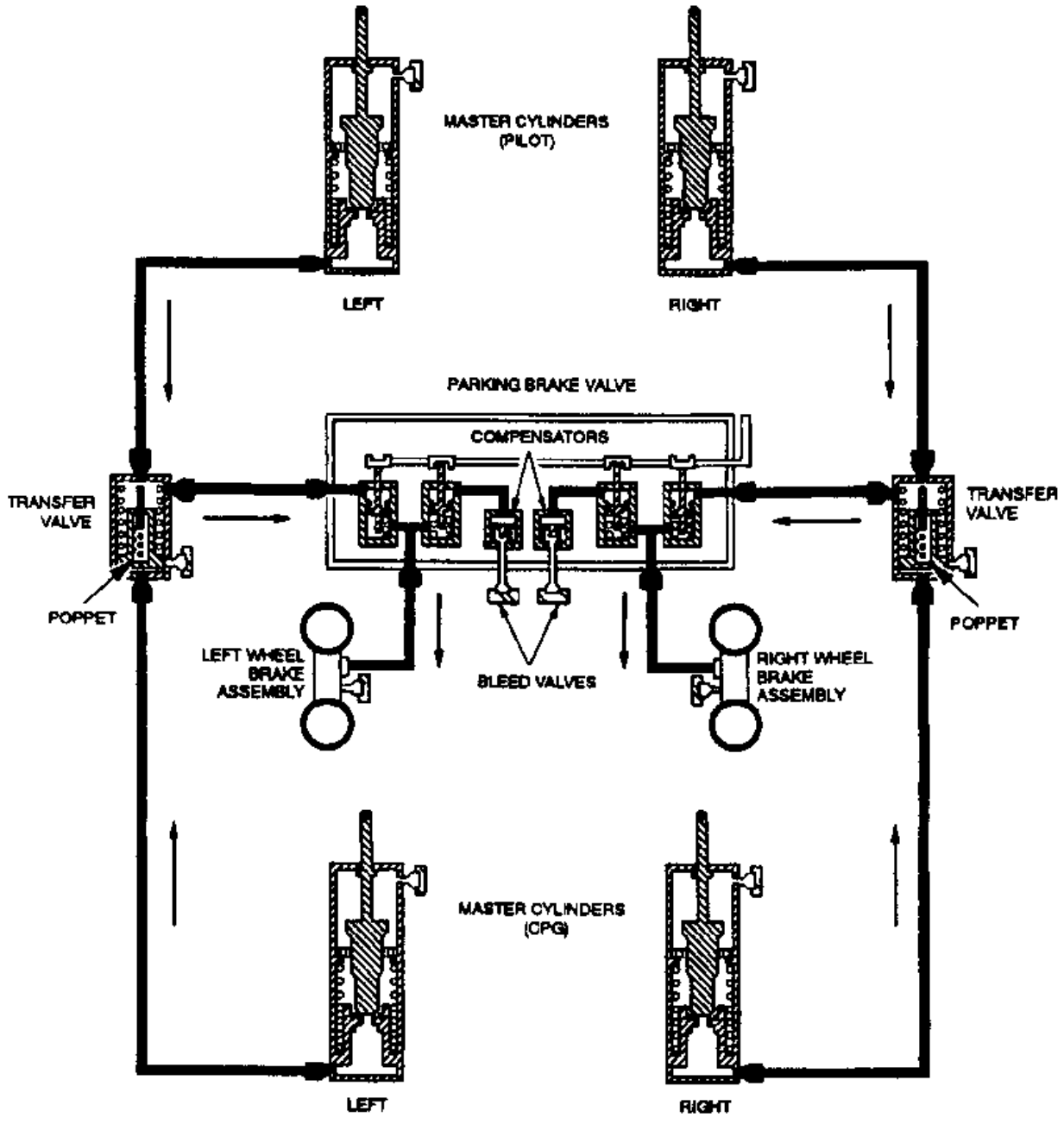

Figure 25. <u>Example of a cutaway diagram.</u> - Continued.

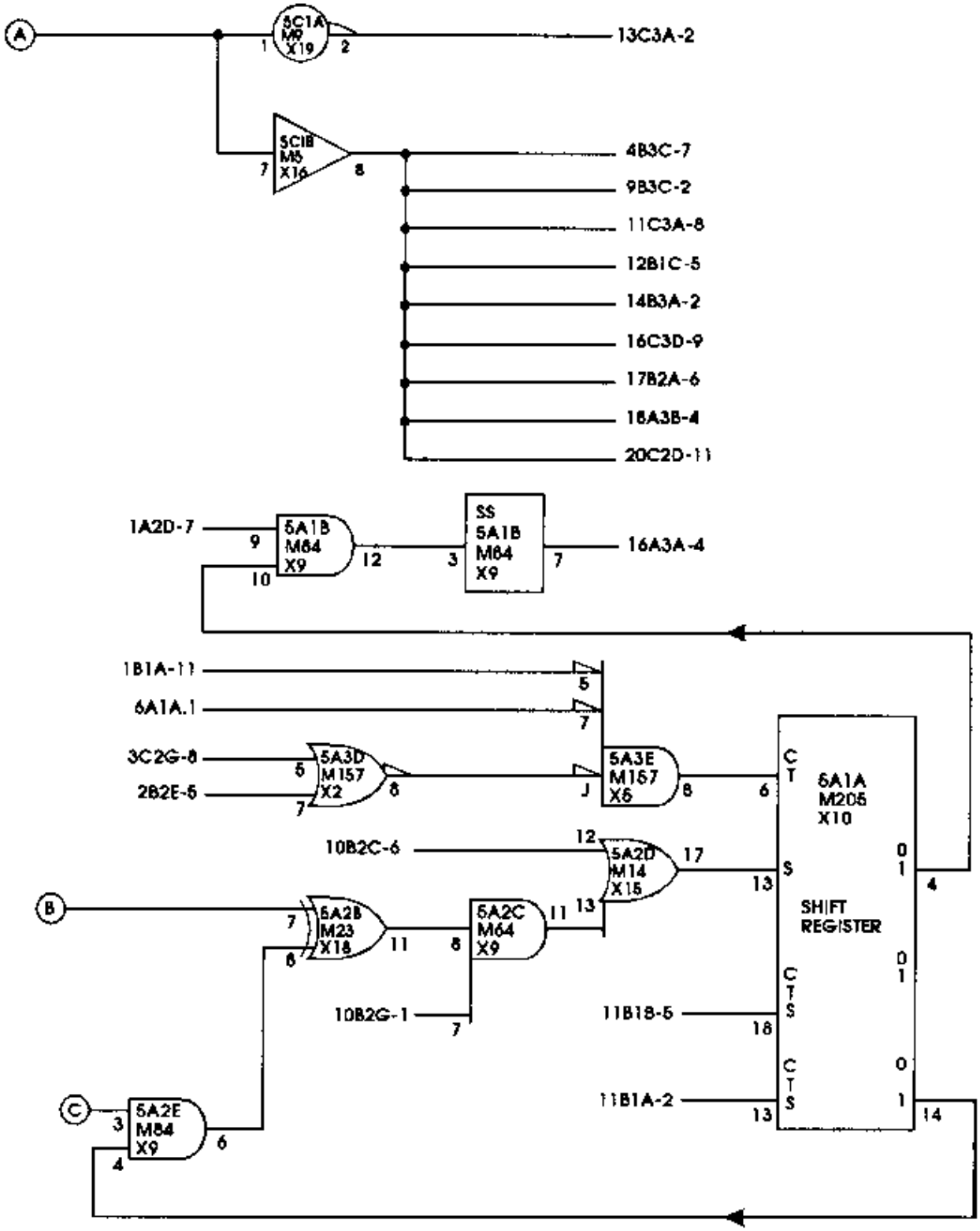

Figure 26. <u>Example of a logic diagram.</u>

J - $\overline{K}$ FLIP-FLOP TRUTH TABLE					
STARTING CONDITION (OUTPUT)		INPUT CONDITION		RESULT AT END OF CLOCK PULSE (OUTPUT)	
A	B	J	$\overline{K}$	A	B
L	H	L	L	NO CHANGE	
		L	H	NO CHANGE	
		H	L	H	L
		H	H	H	L
H	L	L	L	L	H
		L	H	NO CHANGE	
		H	L	L	H
		H	H	NO CHANGE	
A	B	SET	RESET	RESULT (OUTPUT)	
L	H	H	H	NO CHANGE	
		L	H	H	L
		L	L	DISALLOWED STATE	
		H	L	NO CHANGE	
H	L	H	H	NO CHANGE	
		L	H	NO CHANGE	
		L	L	DISALLOWED STATE	
		H	L	L	H

THE J-$\overline{K}$ FLIP-FLOP IS A MULTIPURPOSE STORAGE ELEMENT WHEREIN THE K INPUT IS INTERNALLY INVERTED. DEPENDING ON THE WIRING AT THE J-$\overline{K}$ INPUTS, THIS FF CAN BE CONFIGURED TO FUNCTION AS A J-K TYPE FF, J-$\overline{K}$ TYPE FF, D-TYPE FF OR A T-TYPE (TOGGLE) FF.

Figure 27. Example of a truth table.

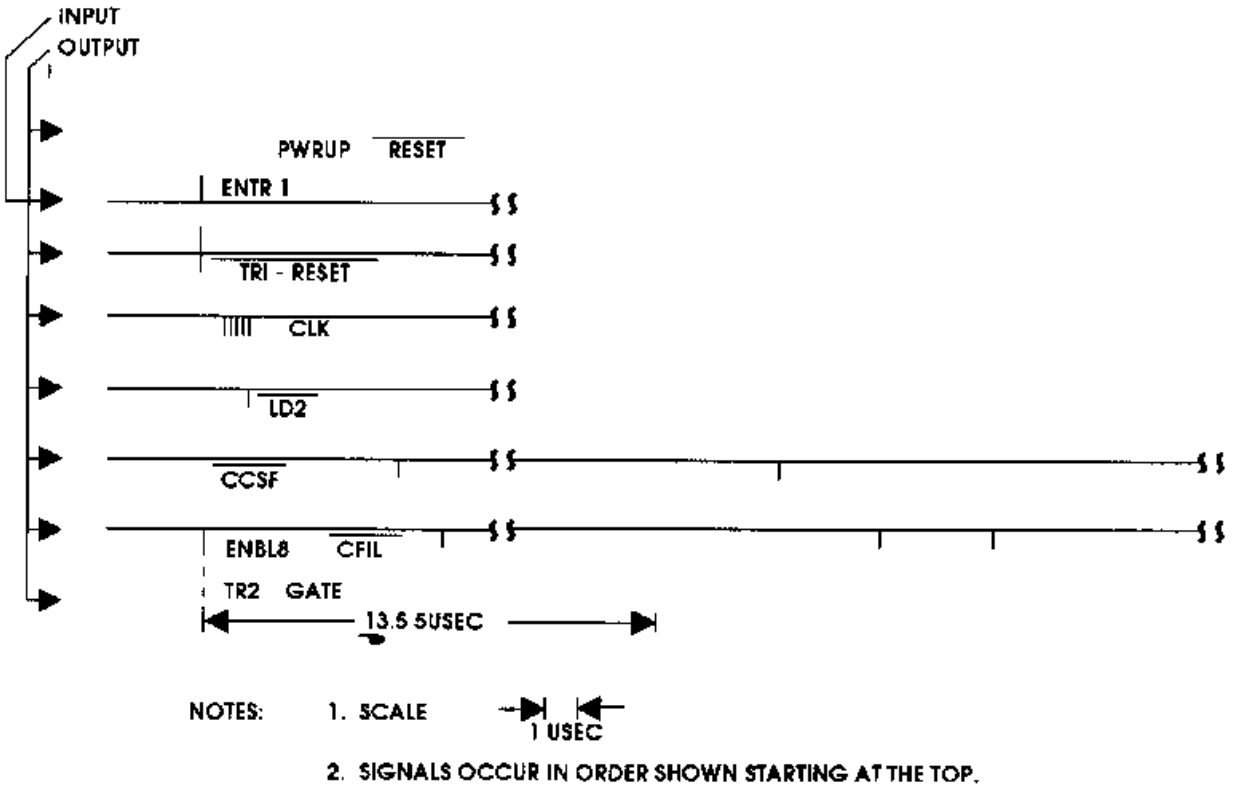

Figure 28. Example of a timing diagram.

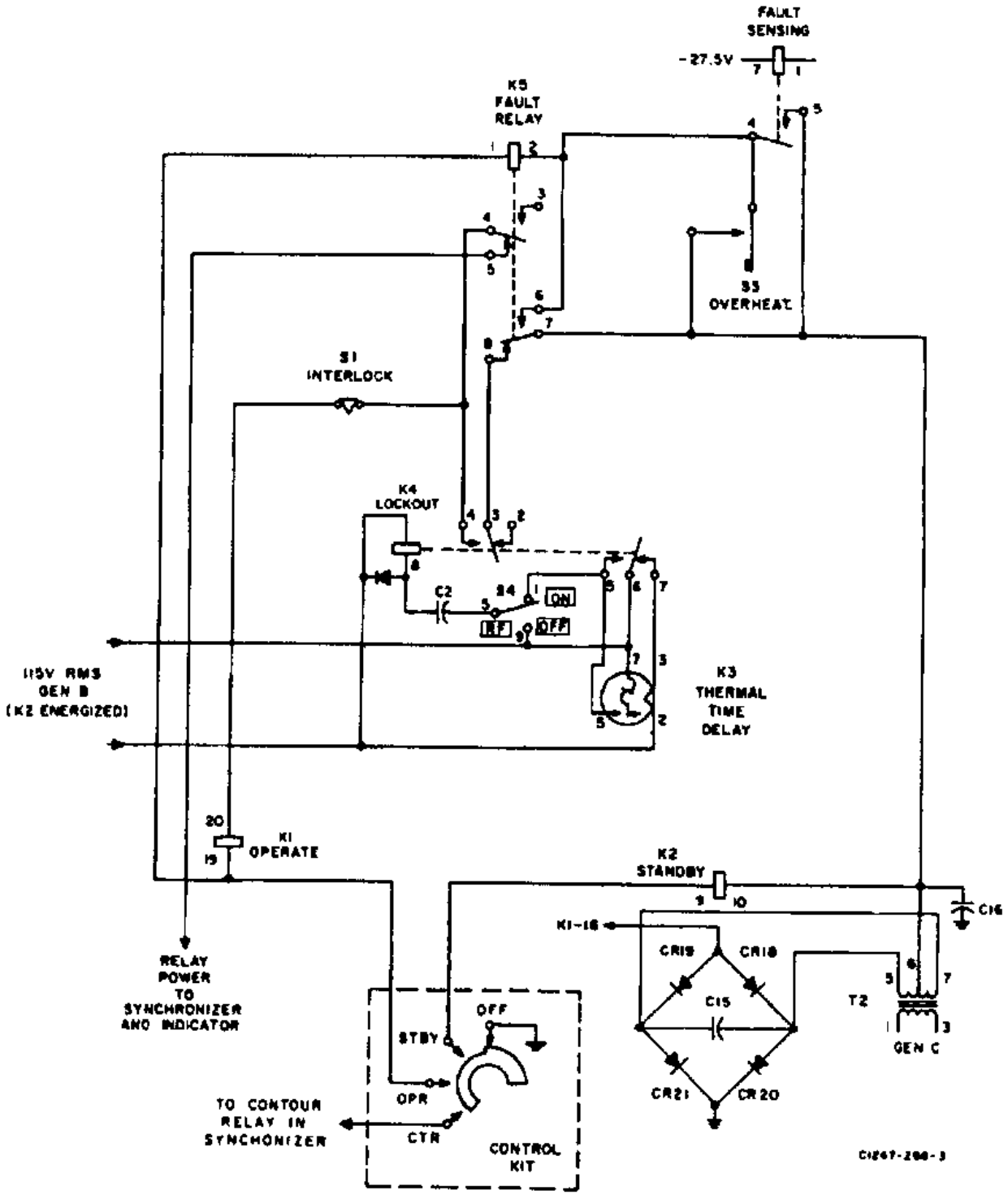

Figure 29. <u>Example of a simplified diagram.</u>

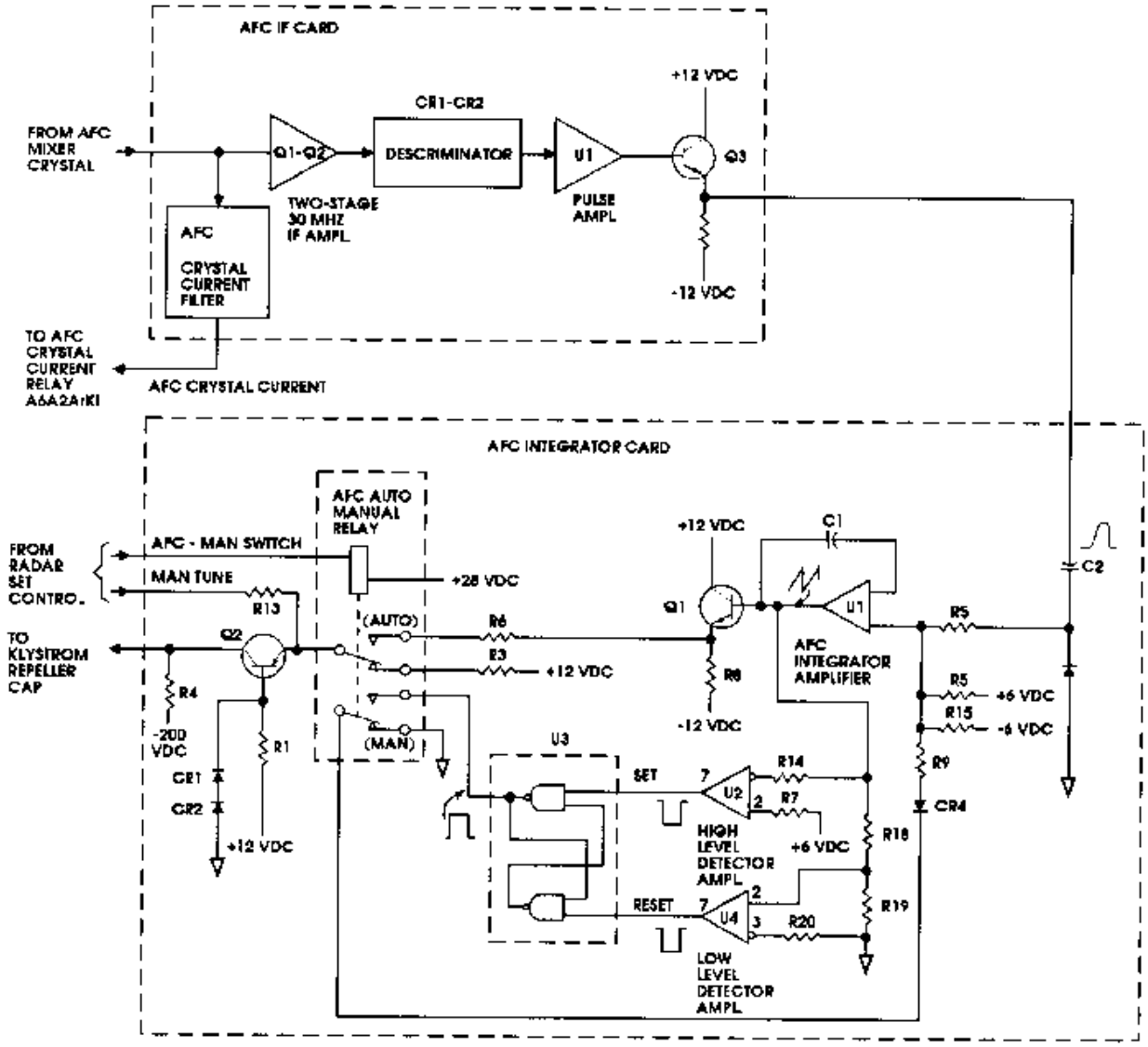

Figure 30. <u>Example of a partial diagram.</u>

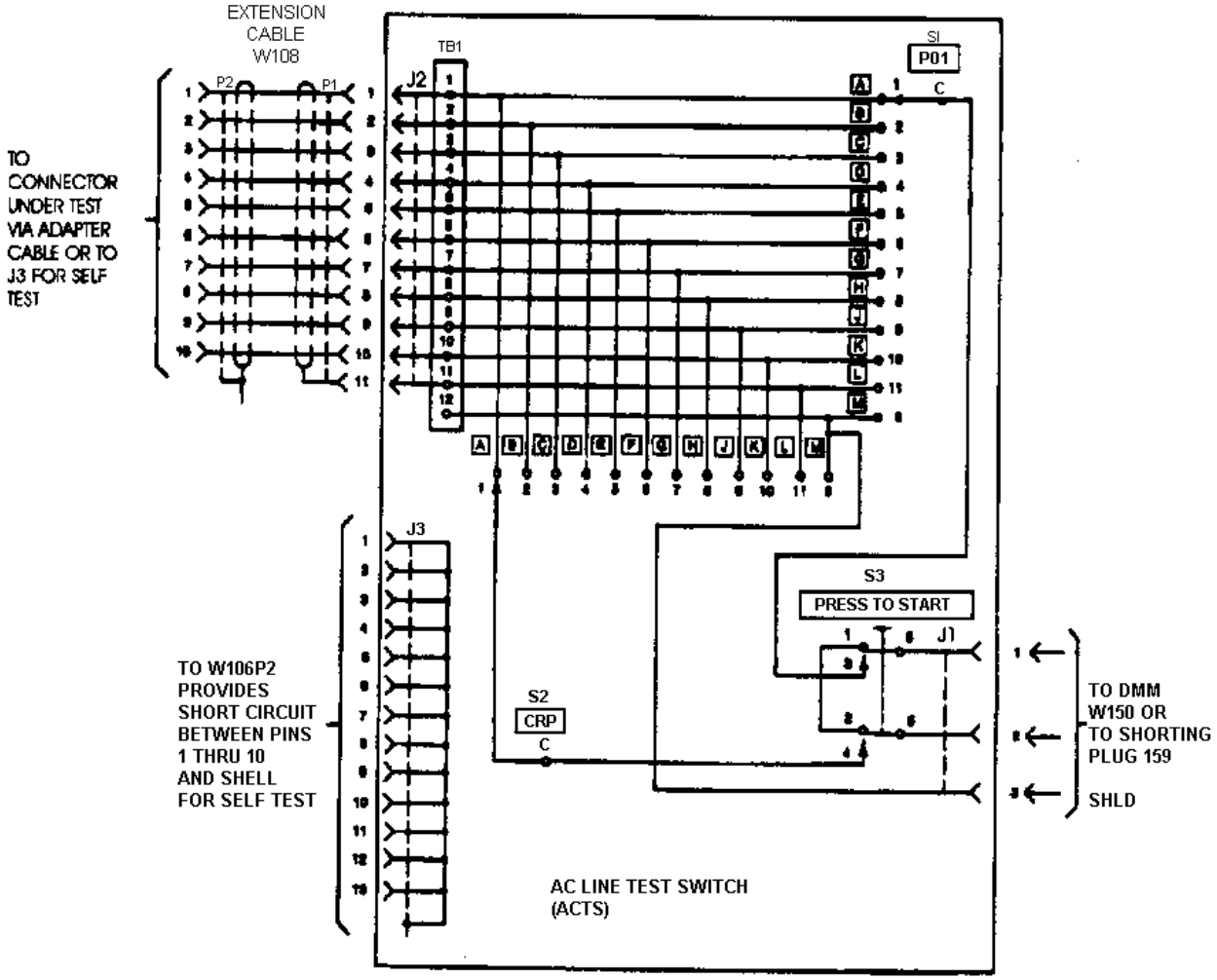

Figure 31. Example of a test diagram.

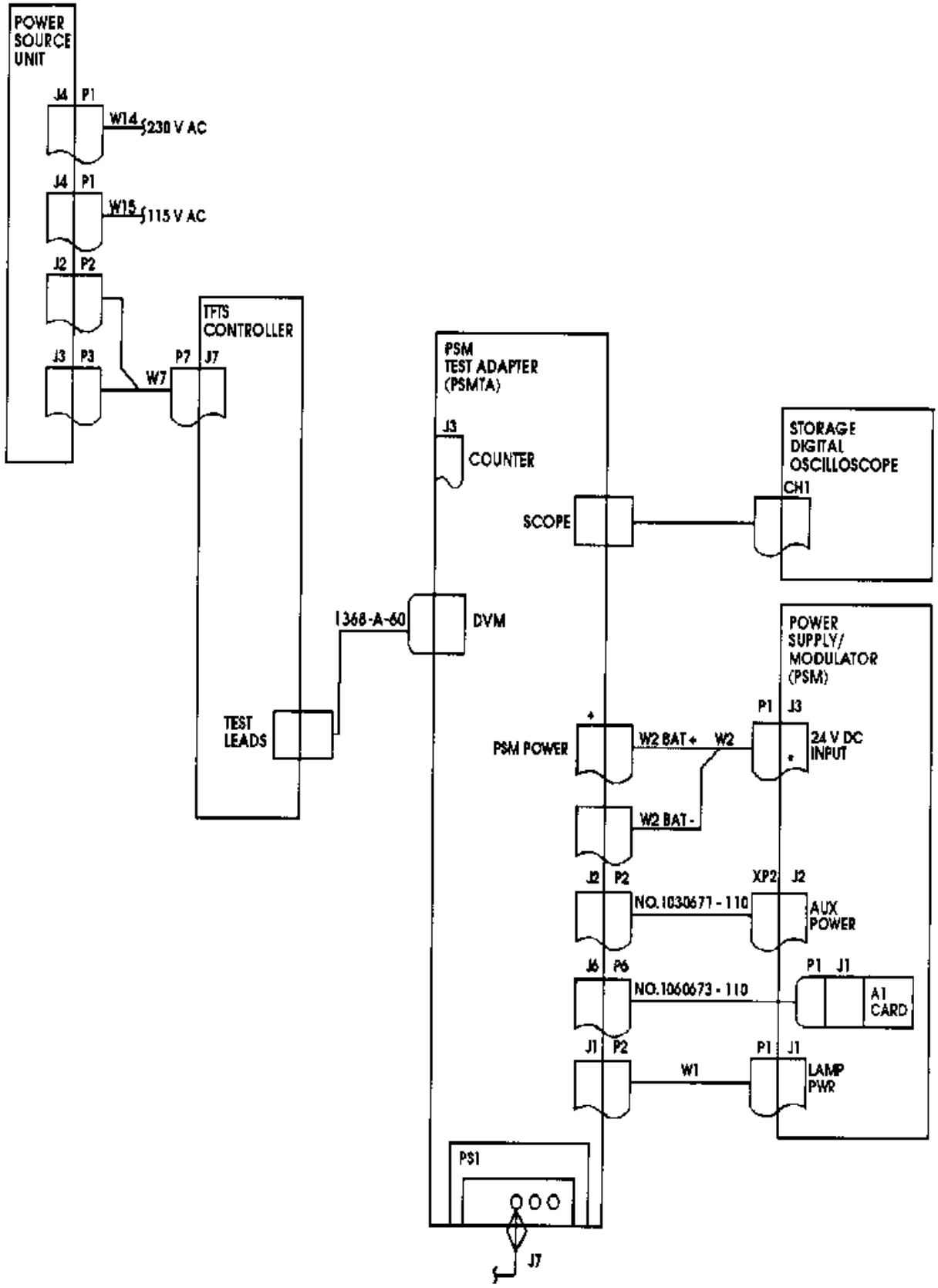

Figure 32. <u>Example of a test setup diagram</u>

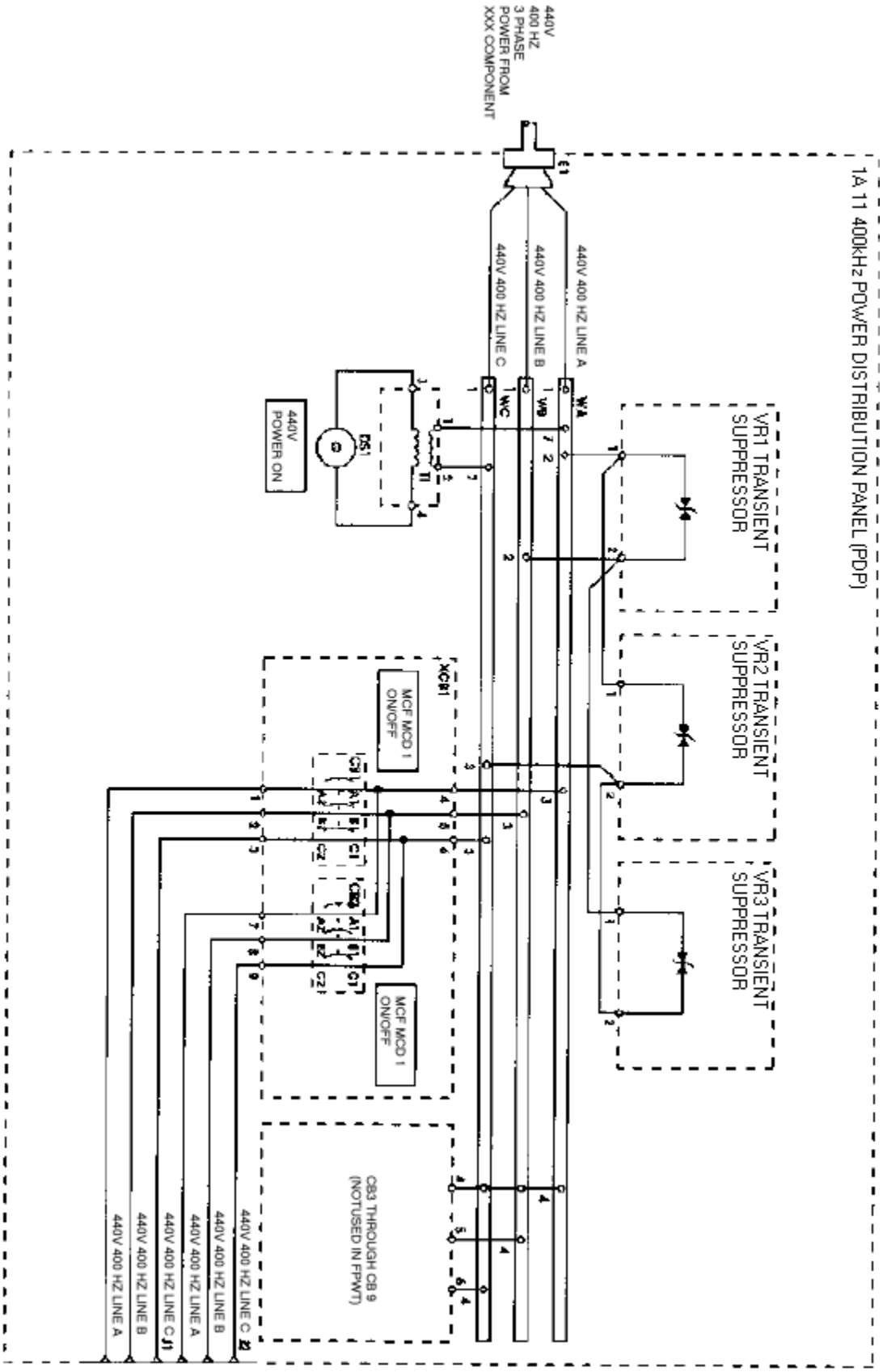

Figure 33. Example of a Power Distribution Diagram.

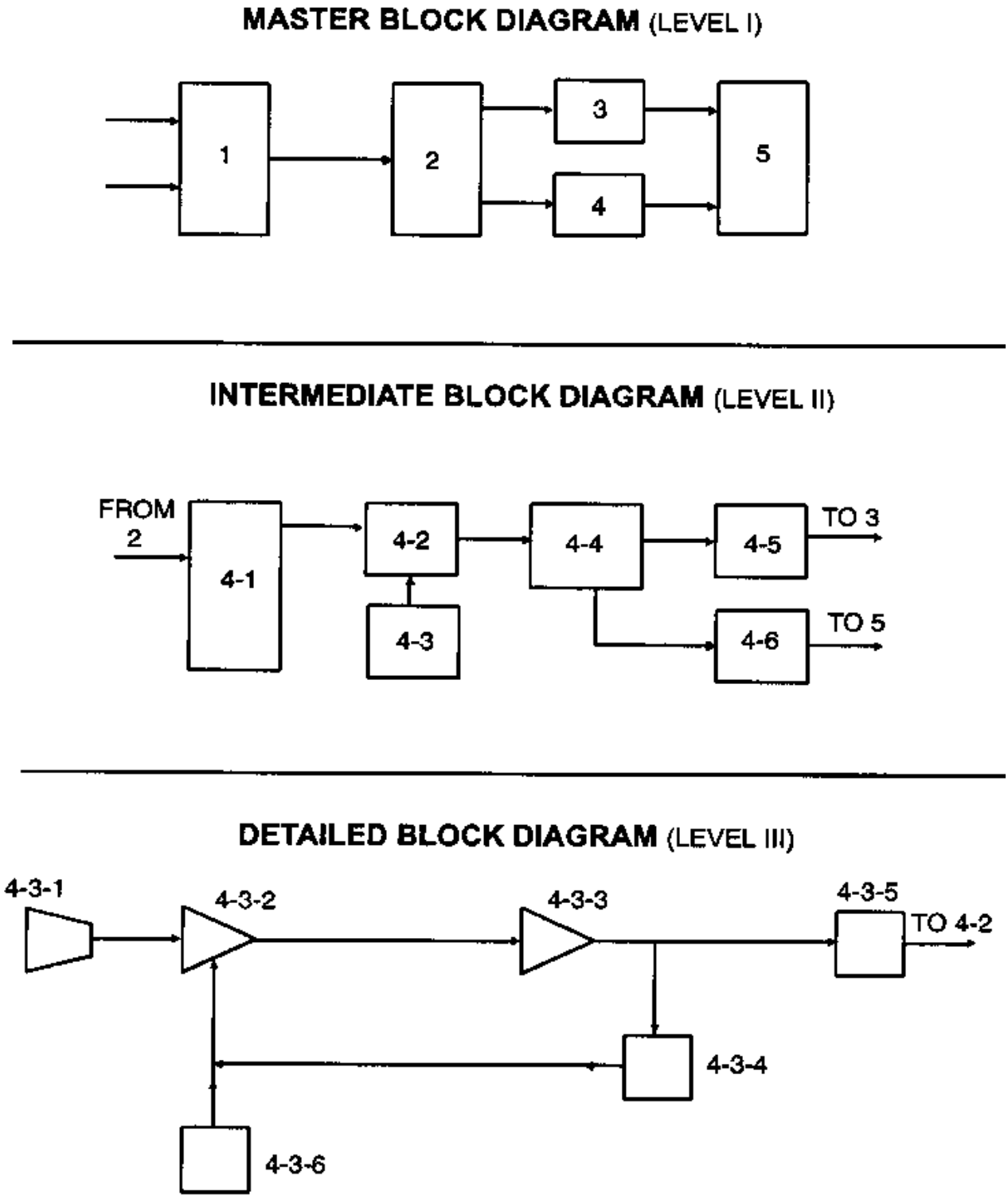

Figure 34. <u>Example of a pyramid diagram.</u>

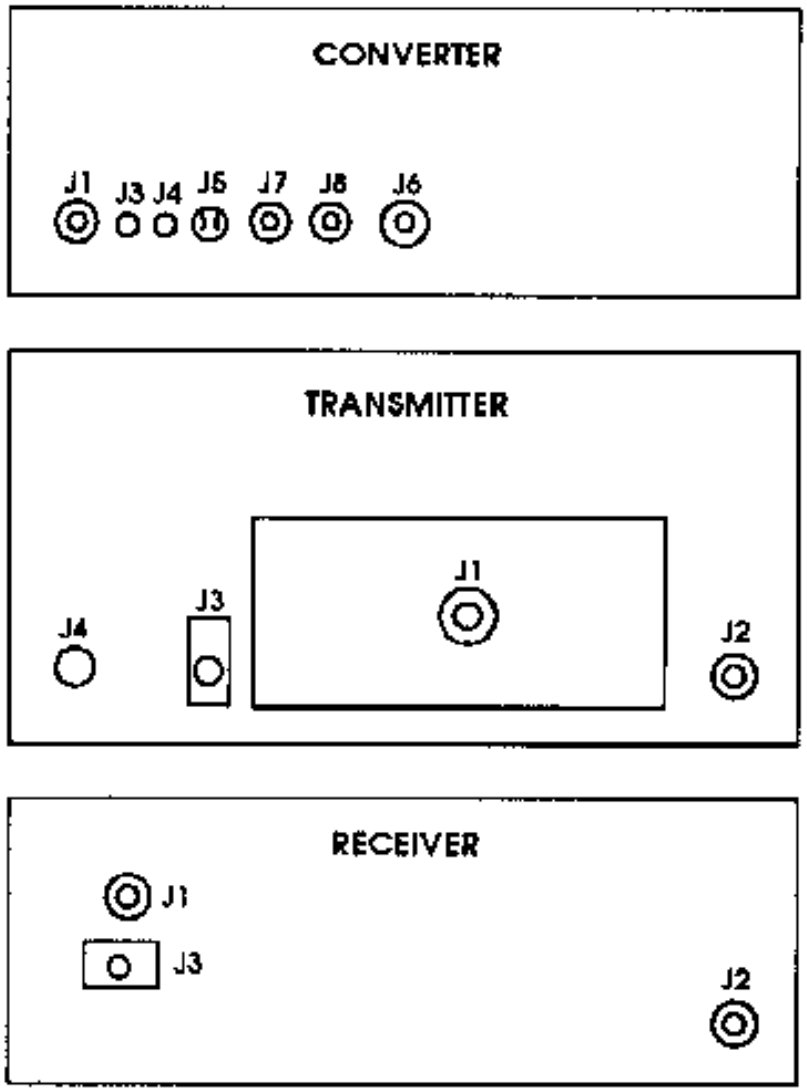

Figure 35. <u>Example of a cable diagram illustration with table.</u>

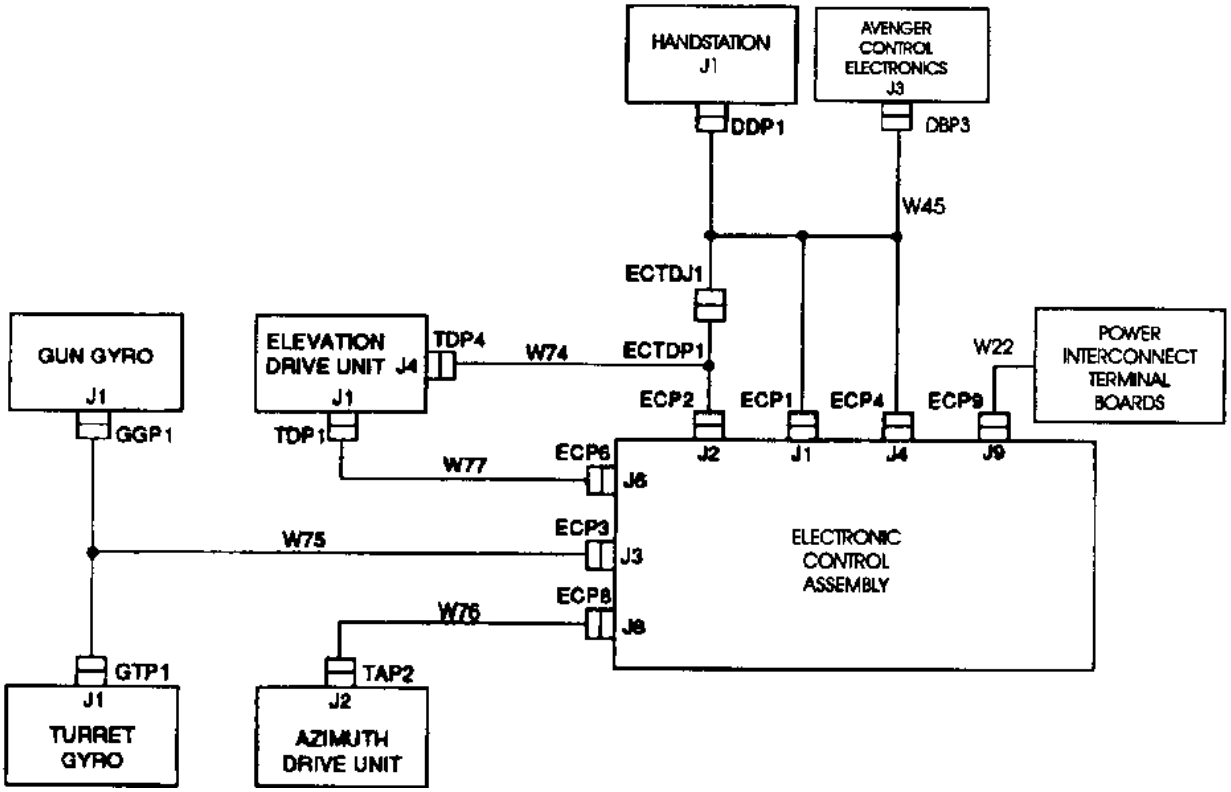

Figure 36. <u>Example of a cable interconnect diagram.</u>

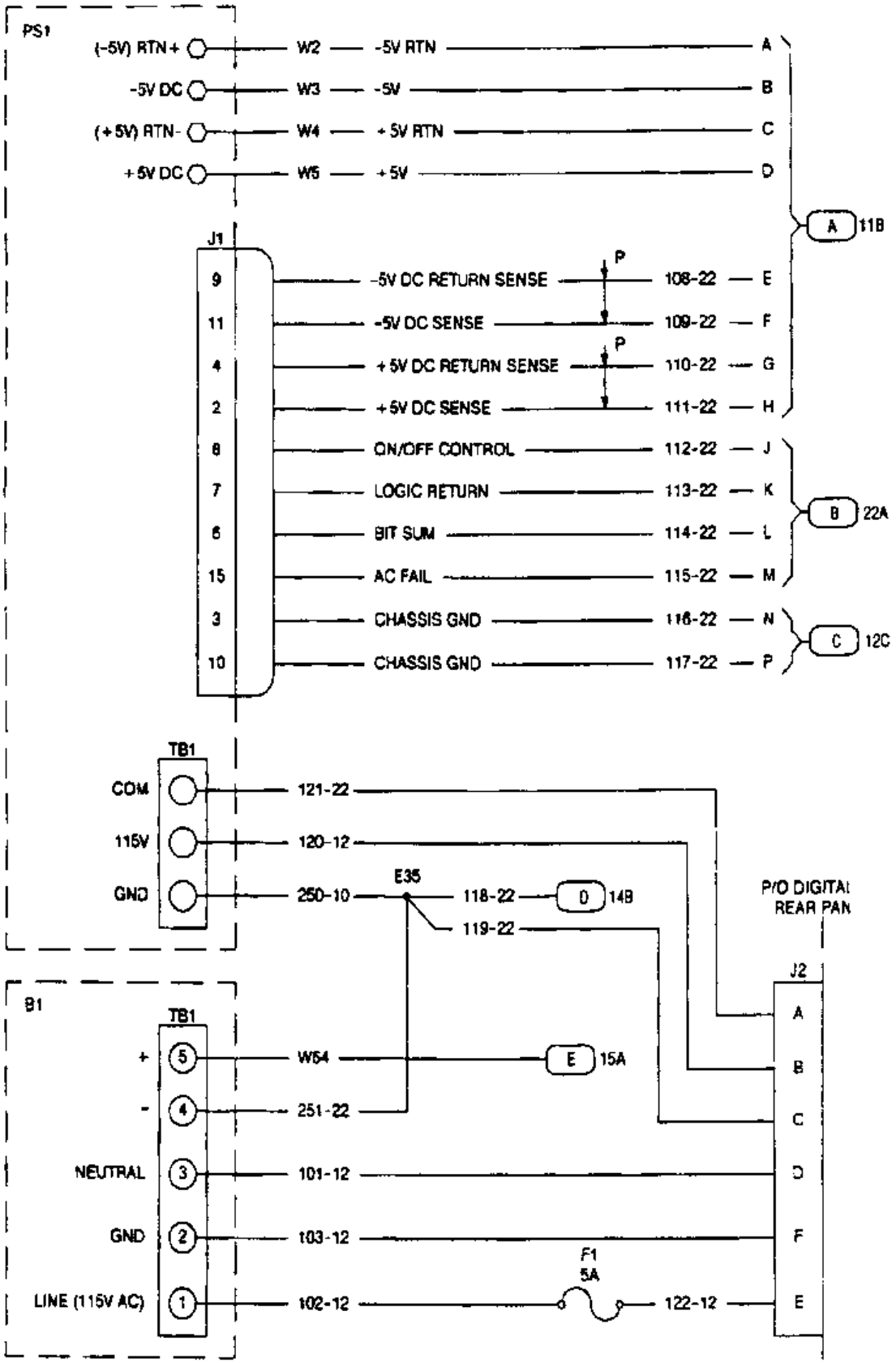

Figure 37. <u>Example of a wiring diagram.</u>

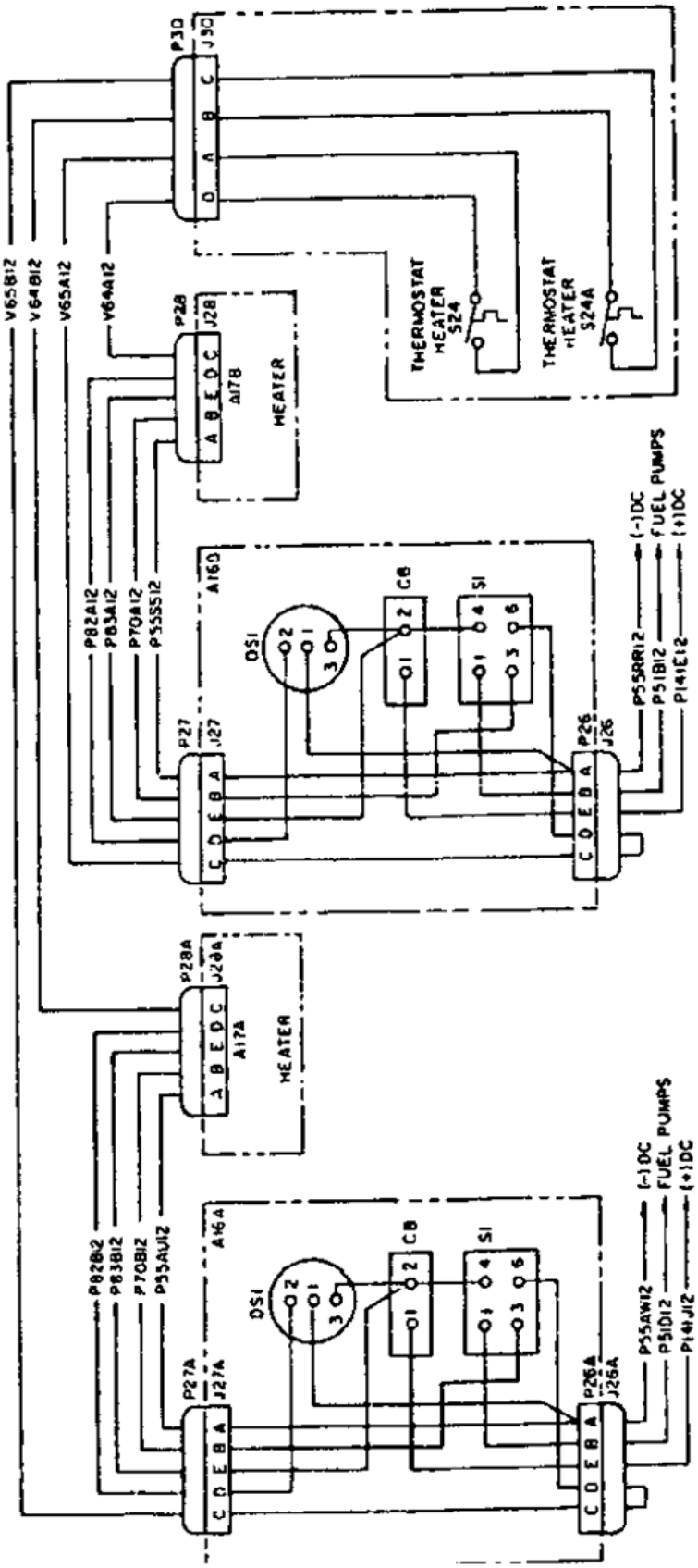

Figure 37. <u>Example of a wiring diagram.</u> - Continued.

FROM	SHD GRP	WIRE ID	TO		SHD GRP	ROUTE CODE
A17(Cont)						
J2-A		381	A17	J1-A		
J2-B		382	A17	J1-B		
J2-C		383	A17	J1-C		
J2-D		384	A17	J1-D		
S1	FS	385	A39	FT		
S1-1		351	A17	TB1-1		
S1-2		BLK385	A39			
S1-3		353	A17	TB1-3		
S1-4		352	A17	TB1-2		
S1-5		RED385	A39			
S1-6		354	A17	TB1-4		
S2-1		368	A17	S3-1		
S2-1		376	A17	TB2-1		
S2-2		355	A17	TB1-5		
S3-1		368	A17	S2-1		
S3-1		369	A17	S4-1		
S3-2		356	A17	TB1-6		
S4-1		369	A17	S3-1		
S4-1		370	A17	S5-1		
S4-2		357	A17	TB1-7		
S5-1		370	A17	S4-1		
S5-1		371	A17	S6-1		
S5-2		358	A17	TB1-8		
S6-1		371	A17	S5-1		
S6-1		372	A17	S7-1		
S6-2		359	A17	TB1-9		
S7-1		372	A17	S6-1		
S7-1		373	A17	S8-1		
S7-2		360	A17	TB1-10		
S8-1		373	A17	S7-1		
S8-1		374	A17	S9-4		
S8-2		361	A17	TB2-4		
S9-1		362	A17	TB2-5		
S9-2		363	A17	TB2-6		
S9-3		364	A17	TB2-7		
S9-4		374	A17	S8-1		
S9-4		375	A17	S10-4		
S10-1		365	A17	TB2-8		
S10-2		366	A17	TB2-9		
S10-3		367	A17	TB2-10		
S10-4		375	A17	S9-4		
TB1		386		TB12	A-D	
TB1-1		351	A17	S1-1		
TB1-1		386A		TB12-1	A-D	
TB1-2		352	A17	S1-4		
TB1-2		386B		TB12-2	A-D	
TB1-3		353	A17	S1-3		
TB1-3		386C		TB12-3	A-D	
TB1-4		354	A17	S1-6		
TB1-4		386D		TB12-4	A-D	
TB1-5		355	A17	S2-2		
TB1-5		386E		TB12-5	A-D	
TB1-6		356	A17	S3-2		
TB1-6		386F		TB12-6	A-D	
TB1-7		357	A17	S4-2		
TB1-7		386G		TB12-7	A-D	
TB1-8		358	A17	S5-2		

FROM	SHD GRP	WIRE ID	TO		SHD GRP	ROUTE CODE
A17(Cont)						
TB1-8		386H		TB12-8		A-D
TB1-9		359	A17	S7-2		
TB1-9		386J		TB12-9		A-D
TB1-10		360	A17	S7-2		
TB1-10		386K		TB12-10		A-D
TB2		387		TB13		A-D
TB2-1		376	A17	S2-1		
TB2-1		387A		TB13-2		A-D
TB2-2		388	A20	1		
TB2-2		387B		TB13-4		A-D
TB2-3		389	A20	2		
TB2-3		387C		TB13-6		A-D
TB2-4		361	A17	S8-2		
TB2-4		387D		TB12-11		A-D
TB2-5		362	A17	S9-1		
TB2-5		387E		TB12-12		A-D
TB2-6		363	A17	S9-2		
TB2-6		387F		TB12-13		A-D
TB2-7		364	A17	S9-3		
TB2-7		387G		TB12-14		A-D
TB2-8		365	A17	S10-1		
TB2-8		387H		TB13-12		A-D
TB2-9		366	A17	S10-2		
TB2-9		387J		TB13-13		A-D
TB2-10		367	A17	S10-3		
TB2-10		387K		TB13-14		A-D
A18						
E1		705	A18	STP	FU	
STP	FU	705	A18	E1		
J1-A		416		P10-A		
J1-A		420	A18	J2-A		
J1-B		417		P10-B		
J1-B		421	A18	J2-B		
J1-C		418		P10-C		
J1-C		422	A18	J2-C		
J1-D		419		P10-D		
J1-D		423	A18	J2-D		
J2-A		420	A18	J1-A		
J2-B		421	A18	J1-B		
J2-C		422	A18	J1-C		
J2-D		423	A18	J1-D		
S1	FU	424	A40		FV	
S1-1		390	A18	TB1-1		
S1-2		BLK424	A40			
S1-3		392	A18	TB1-3		
S1-4		391	A18	TB1-2		
S1-5		RED424	A40			
S1-6		393	A18	TB1-4		
S2-1		407	A18	S3-1		
S2-1		415	A18	TB2-1		
S2-2		394	A18	TB1-5		
S3-1		407	A18	S2-1		
S3-1		408	A18	S4-1		
S3-2		395	A18	TB1-6		
S4-1		408	A18	S3-1		
S4-1		409	A18	S5-1		
S4-2		396	A18	TB1-7		

Figure 38. <u>Example of a wire list.</u>

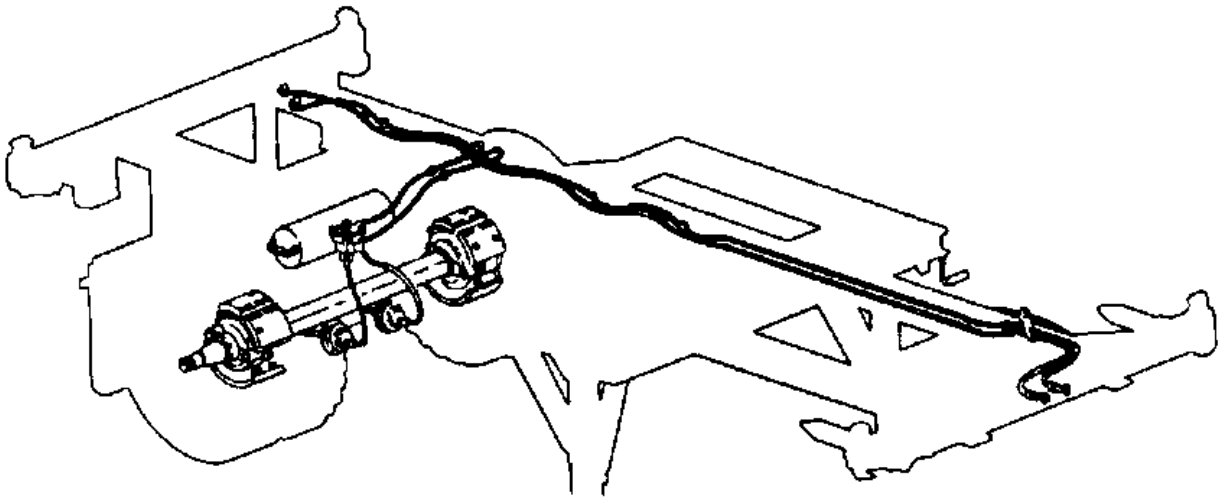

Figure 39. Example of a piping diagram.

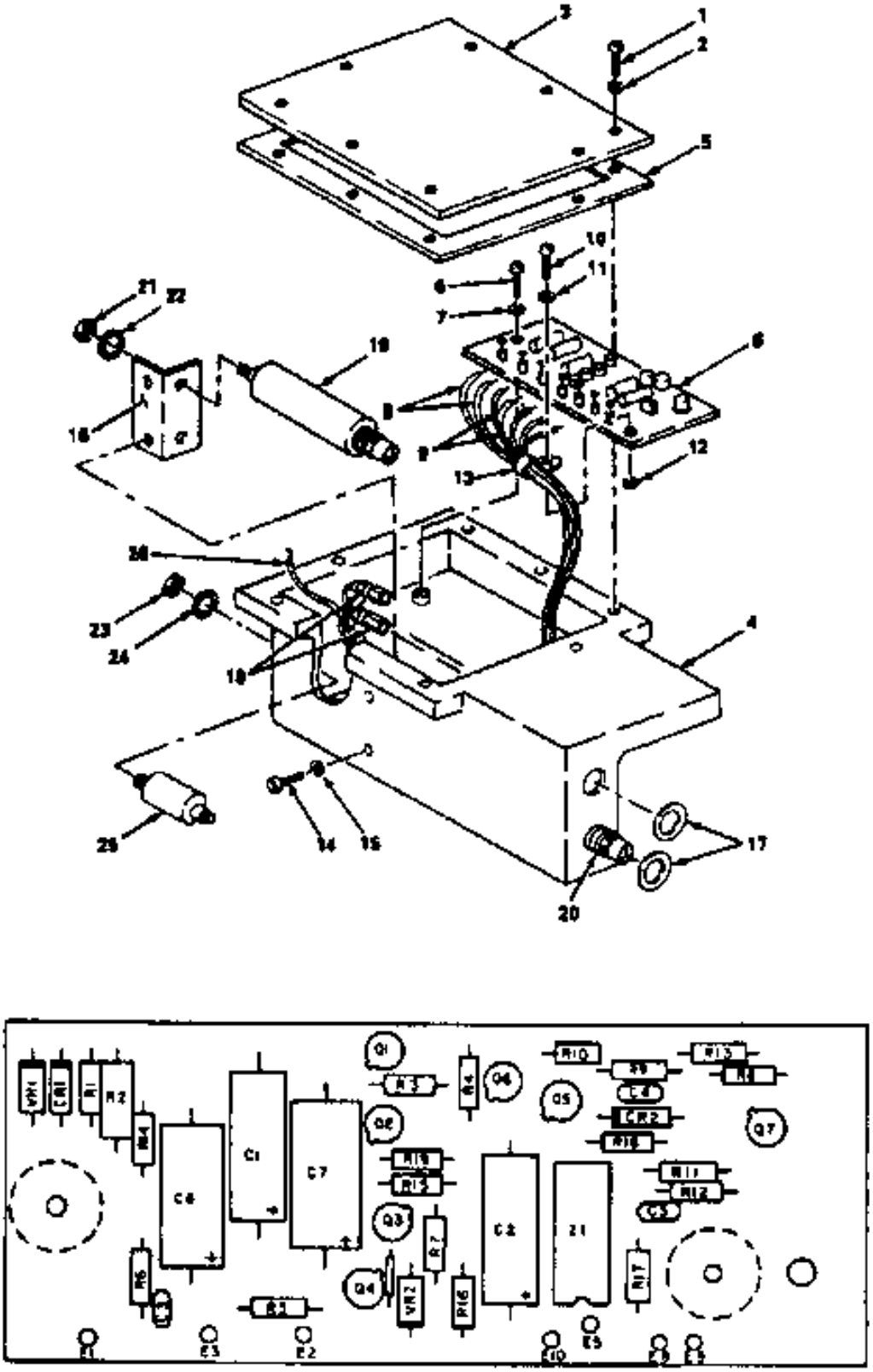

Figure 40. <u>Example of an electronic component card illustration.</u>

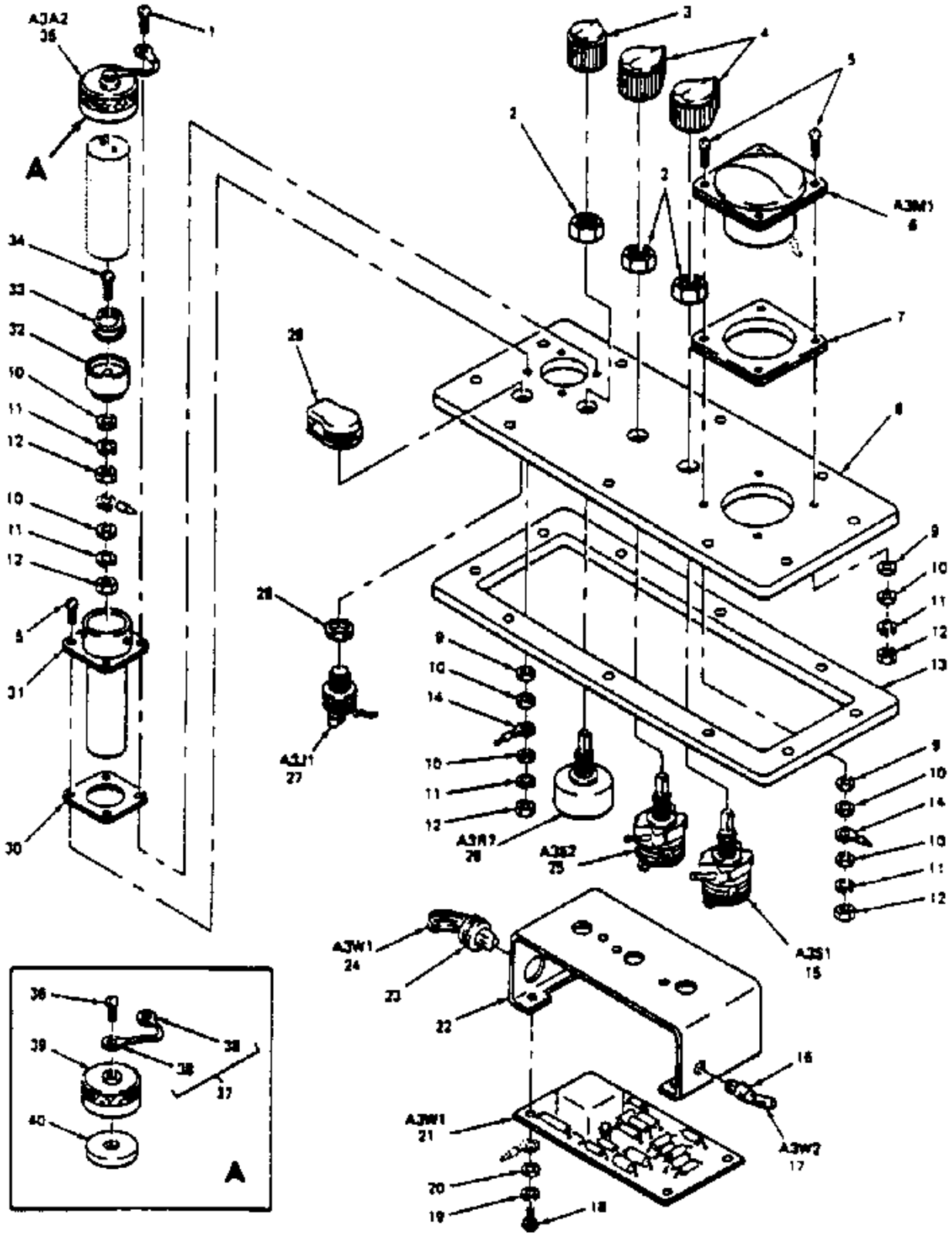

Figure 41. <u>Example of an electronic equipment RPSTL illustration.</u>

APPENDIX A
INTERACTIVE ELECTRONIC TECHNICAL MANUAL (IETM) DEVELOPMENT.

A.1 **SCOPE.**

A.1.1 Scope. This appendix is intended to provide guidance and further clarification of the requirements contained in MIL-STD-40051-1, Standard Practice: Preparation of Digital Technical Information for Interactive Electronic Technical Manuals (IETMs). The general style, format, and graphics guidance contained herein is applicable for the preparation of IETMs developed to the work package (WP) concept. The general guidance in section 4 through 7 of this handbook apply to this appendix unless specifically noted as "for page-based TMs only".

A.1.2 Philosophy. This handbook contains general information and examples. This appendix is used in conjunction with the handbook.

A.2 **APPLICABLE DOCUMENTS.**

The applicable documents in section 2 of this handbook apply to this appendix.

A.3 **DEFINITIONS.**

The definitions in section 3 of this handbook apply to this appendix.

A.4 **IETM DATA GUIDANCE**.

A.4.1 Development of work package IETMs. The style and format guidance provided in this appendix is recommended for use when acquiring IETMs for the U.S. Army. The WP concept is defined as a logical combination of requirements and improved presentation techniques designed to enhance digital display of linear and non-linear (frame-based) information. A work package IETM is specifically designed to support individual functional information including troubleshooting and maintenance work tasks for a weapon system or equipment in accordance with the requirements of MIL-STD-40051-1.

A.4.2 How to develop a work package IETM. The general process is discussed in paragraph 4.3. For IETMs, the preparation of an initial outline, and outline and methods of displaying the IETM are discussed in the following subparagraphs.

A.4.2.1 Technical Manual Outline. If required by the acquiring activity, an outline should be developed prior to the start of the scrollable or frame-based IETM development. Outlines need not be maintained current following initial delivery of the IETM.

A.4.2.1.1 Initial outline development. The proponent activity should apply the requirement of weapon systems, equipment, or component engineering design to the development of the technical manuals. The guidelines set forth in the approved LMI or maintenance plan dictates the technical content of the IETM and whether the IETM will be in a linear or non-linear (hereafter referred to as frame-based) format. The acquiring activity together with the proponent activity should provide the IETM developer with the filled-in TM content selection matrices provided in MIL-STD-40051-1. The first step in the development of an IETM outline is to determine if all descriptive and maintenance information required by the IETM content selection matrices is provided in the single IETM. It may be more logical or effective to provide specific weapon system maintenance information in a separate IETM. For instance, operator data, PMCS data, and DMWR data used in specific environments or sites. Therefore, it may be better to provide this data in separate IETMs. Once a determination is made as to how many IETMs are necessary for the weapon system, a detailed outline can be generated for each using the specific types of functional requirements listed in A.4.2.1.2.

A.4.2.1.2 Outline content and arrangement. An outline should be a detailed breakdown of descriptive, troubleshooting and maintenance data required for each system comprising the weapon system or equipment. The outline should indicate if any information should remain in a paper form. An outline should be developed reflecting each system, subsystem, equipment, or major component, as applicable. For each system, subsystem, equipment, and major component, the following types of data to be developed should be included in the outline.

a. Types of descriptive data (i.e., descriptive, theory of operation, use of controls and indicators, etc.).
b. Procedural tasks necessary to operate the system.
c. Test and troubleshooting.
d. Procedural tasks necessary to perform complete maintenance.
e. Schematics and wiring information required.
f. Supporting information about the IETM or for the weapon system/equipment.

A.4.2.2 Displaying IETMs. IETMs developed to the work package concept are displayed in either a linear (scrollable or frame-based), refer to Figure A-1, or non-linear (frame-based) format, refer to Figure A-2.

A.4.3 IETM divisions. The hierarchy of an IETM consists of introductory matter, planning data and a series of work packages that include the types of data listed in a through e. These data types can be used to develop IETMs for Operators through Below Depot Sustainment Maintenance, Aviation Maintenance Company (AMC), and Aviation Support Battalion Maintenance, Depot Maintenance Work Requirements (DMWRs) and National Maintenance Work Requirements (NMWR). Each of these parts provides instructions on how to develop and structure the required technical information into stand-alone units containing all information essential for directing task performance.

a. Descriptive information and theory of operation.
b. Troubleshooting information.
c. Procedural information (operating instructions, maintenance tasks, destruction information, and BDAR information).
d. Parts information
e. Supporting information.

A.4.3.1 Introductory matter and planning information. Each IETM includes introductory matter and planning information necessary to supplement the technical content work packages in MIL-STD-40051-1. Refer to MIL-STD-40051-1 for detailed requirements for the preparation of introductory matter and planning information. The typical examples provided for introductory matter and planning information (Figure A-3, Figure A-4, and **Figure A-5**) illustrates a suggested method of displaying the required content information. Depending on the type of presentation system used the required data may be displayed in various formats. It is recommended that the proponent activity be provided with samples of the display formats prior to finalizing the display format of this data. Figure A-4 shows how the introductory frames should be assembled on the CD.

A.4.3.1.1 IETM installation data. The IETM installation data should not be included on the CD-ROM itself. The data should include any external or COTS needed to operate the IETM. If a web browser is used for interface to IETM data, the data should note if a certain web browser provides a more optimal display or features not operable under.

A.4.3.1.2 CD content frame. The CD content frame provides a table of contents for multiple IETMs on a single CD-ROM. The multiple IETMs on single CD-ROM can reduce switching of CD-ROM from the display device for related IETMs. Refer to Figure A-3 for a typical example of a CD content frame.

A.4.3.1.3 Warning summary. Every IETM has a warning summary when at least one of the following conditions exists –

a. Warnings
b. Hazardous material warnings and/or icons
c. Additional equipment unique first aid data beyond FM 4-25.11.

A.4.3.1.3.1 General warnings. The general warnings shown are not acknowledged and can be shown continuously or individually in the data pane. When a general warning needs further details or explanation a titled description is added after the general warning.

A.4.3.1.3.2 Hazardous material. Each hazardous material icon and/or warning needs to explain the general danger(s) associated with this material and how to identify the material.

A.4.3.1.3.3 First aid. First aid data usually only needs a reference to FM 4-25.11, except when unique conditions (as identified from IETM warning) that require addition immediate action to treat an injury.

A.4.3.1.4 Revision summary frame. Every IETM has a revision summary frame unless this is the initial release of the IETM. The revision summary only provides the modifications or superseded information since the last revision. All previous revision summary information is removed from the user view, but should be maintained for configuration control of the previous revisions to the IETM. Hiding the previous revision data can be accomplished through the IETM viewer filtering or the data is removed from the XML source file. Linking the revision summary information to the work package allows the user to review any revisions to the task and determine how the task is performed with the revision. The description should be a brief explanation of the revision. Refer to **Figure A-5** for a typical examples of a revision summary frames. An IETM revision is the same as a paper TM change, except the Army uses CD-ROMs for the IETM that can only be written on once. The paper TM revision does not need a listing of changes (since it is a complete TM republished), however the IETM revision lists each work package that was modified. When an IETM is changed to implement two-level maintenance, a statement indicating this should be included on the revision summary frame (see MIL-STD-40051-1 for exact wording. An example of this is provided in Figure A-5.

A.4.3.1.5 Table of contents. Information listed at the same level is sorted in alphabetical order. When the IETM is grouped by system/subsystem the official nomenclature from the parts information is used. When the table of contents is initially displayed only the first level items are shown. When subordinate items are collapsed, a expand indicator is displayed before the item name. This is typically shown as a plus sign button. Clicking the expand indicator displays the subordinate items and changes the indicator to a collapse indicator, typically shown as a minus sign button. Refer to Figure A-6 for a typical example of a table of contents frame.

A.4.3.1.6 "How To Use This IETM" information. In addition to the information identified in MIL-STD-40051-1 the following should be reviewed to include:

a. Explanation of display and functionality with the IETM user interaction
   (1) Display of alerts and acknowledgement requirements
   (2) Typical types of user input dialog boxes (i.e., menu, multiple choice, fill-in, etc) and how the boxes function with various user input devices (i.e., keyboard, mouse, etc)
   (3) Typical message box
   (4) Description of the various buttons functions (i.e., OK, CANCEL, HELP, YES, NO, etc.)
   (5) Explain how to identify hotspots (visited and unvisited) in narrative
   (6) Explain how to identify hotspots (visited and unvisited) and what actions performed in a graphic
      (a) Hotspot is the callout number
      (b) Hotspot is the graphic part
b. IETM layout and function buttons
   (1) Panels, bars, and guidepost functions and positions
   (2) Toggle panels and bars for viewing
   (3) How to operate the table of contents
   (4) How to use guidepost menu items
   (5) Main menu and project specific bars
      (a) Nine mandatory functions icons and descriptions
      (b) IETM specific functions icons and descriptions
   (6) Status bar function
      (a) Persistent active alerts
      (b) Additional IETM status information
c. Recording and transmitting the user and system actions for data collection
d. Test equipment
   (1) How to interface with IETM,
   (2) How to diagnosis without specialized test equipment,
e. Description how to operate an interactive schematic or hydraulic system,
   (1) How to start and stop interaction
   (2) How to toggle valves or circuits
   (3) How to disable valve or circuit to simulate a malfunction
   (4) How to increase or decrease pressure or current
   (5) How to record actions performed
f. Web browsers, as defined by the acquiring activity
   (1) The IETM compatibility in web browsers
   (2) How the IETM displays or reacts in different web browsers

A.4.3.2 Descriptive information and theory of operation. Descriptive information and theory of operation data is divided into the following specific types of work packages, as defined in the contracted content matrix (refer to MIL-STD-40051-1) and applicable to the weapon system/equipment.

a. General information work package.
b. Equipment description and data work package.
c. Theory of operation work package.

A.4.3.3 Troubleshooting information. Troubleshooting information is divided into the following specific work packages, as defined in the contracted content matrix (refer to MIL-STD-40051-1) and applicable to the weapon system/equipment.

a. Operational checkout work package.
b. Troubleshooting index work package.
c. Preshop analysis work package (**DMWRs/NMWRs only**).
d. Component checklist work package (**DMWRs/NMWRs only**).
e. Combined operational checkout and troubleshooting work package.
f. Diagnostic work package
    (1) Simple model (IETM does not maintain State Table variables for action)
    (2) Complex model (IETM does maintain State Table variables for action)

A.4.3.3.1 Troubleshooting/Diagnostics. The main difference in diagnostic/troubleshooting information between a page-based TM and an IETM is how the data is presented. The page-based TM provides various diagrams, logic trees, fault code indices, and test procedures that may be located on the next page or a hundreds of pages later. An IETM can, if written correctly and the IETM system supports provide only the information necessary to determine the fault and, if sensors are present, can conduct one or more diagnostic tests to determine the item at fault automatically then display the corrective action. The questions are what and how does the author produce this interactive/dynamic troubleshooting?

A.4.3.3.2 Dynamic troubleshooting. Dynamic troubleshooting provides only the information necessary and determines the next action depending on the availability of information such as equipment state, test results, user interaction, and/or historical data/probability. This can be as simple as interaction using dialog boxes to as complex as an Automated Test Equipment (ATE) and IETM integrated with the equipment. The complexity depends on the equipment sophistication, available sensors, Built In Test (BIT)/Built In Test Equipment (BITE)/ATE, IETM device and software, and available funding.

A.4.3.3.3 Test procedure design. This paragraph is not for developing test procedure methodologies, but the human interface with the test procedure.

A.4.3.3.3.1 Technician troubleshooting information. The technician needs only to see the required IETM information to perform. As in page-based logic trees all the information has been authored and is available, but in an IETM the test result or dialog responses are evaluated (through a Logic Engine refer to A.6) and determines the next prescribed test or repair action. Using an ATE, the technician may only need hookup and disconnect test equipment procedures, test instructions, a button/icon to start the test, and resulting fault and/or repair action.

A.4.3.3.3.2 TM writer considerations. As a TM writer consideration should be given to more programmatic functions (i.e., initializing test equipment, declaring, tracking, updating and evaluating State Table variables refer to A.6.1), steps per data pane, multimedia usage, and mapping test flow paths. The legacy logic tree can repurpose each logic block and readily transform the test question and possible responses into dialog boxes (the use of State Table variables are generally not required). The integrated test equipment with the IETM requires more information and IETM functionality to use the data (refer to A.6 about State Table variables and Logic Engine).

A.4.3.3.3.2.1 Dynamic diagnostic source information. The TM writer needs to know the following information: preparation instructions, test equipment (consists, as applicable, a test number or name, input parameter(s) with a prescribed order, and output parameter(s) with a prescribed order), technical interaction with IETM through dialog boxes, possible results from the selected test, and/or the corrective action (repair or continue testing). The dynamic diagnostic authoring complexity is dependent of the IETM software application, IETM device, ATE, and writer's creativity.

A.4.3.3.3.2.1.1 Experienced technical interaction. Experienced technicians can reduce diagnostic time by the bypassing tests that, from experience, are not the problem. An example is a junior technician would conduct the tests as presented to him, such as Test #1, #2, #3, #4, and #5. An experienced technician has knowledge from Test #1, that Test #2 and #3 are not the problem and bypasses these tests to complete the diagnostics. Both determine the fault from Test #4, but the experienced technician does this in less time. Caution needs to be observed, since skipping a test may interfere with the remaining test. As the IETM writer, the ability to permit skipping tests should be reviewed to determine if a side effect may occur.

A.4.3.3.3.2.1.2 Test equipment interaction. Test equipment software is advancing to the point the technician starts a complete system check and then returns the corrective actions and the order to execute the actions. The IETM writer would then be concerned with corrective action tasks, configuration controlling the tasks with the test software, and test equipment connection instructions.

A.4.3.3.4 Test equipment interaction with IETM. The Army is upgrading more equipment to contain sensors, and BIT/BITE. The increased automated testing makes the IETM a vital tool by providing a human interface, isolating the fault, and finding the repair action for the technician through the test equipment.

A.4.3.3.4.1 Interface technician and ATE. The primary user interface, after the ATE is connected, is the technician starting the test. A message (information) dialog box is sufficient to prompt the technician to "Click on the OK button to start the test." and the IETM would begin the test. Additionally, user interaction may require that input parameters are needed from the technician. Depending on the data needed a menu, multiple-choice, or fill-in dialog box is used to store the data in State Table variables and the test uses the data for input parameters.

A.4.3.3.4.2 Interface IETM and ATE. A current issue with IETM interfacing are the various data bus interfaces and test equipment software. MIL-STD-40051-1 uses the concept that IETM source data and software have a standard method to communicate with all test equipment and data buses. This method provides common methods for all tests to communicate with the IETM however, the IETM software and the test equipment may need a translator that is middleware. The translator middleware acquires the IETM test data (i.e., test number and/or parameters); the test equipment interface (i.e., MIL-STD-1553, J1708) receives the transformed test data, and starts the prescribed test. After test completion, the test equipment interface transmits the resulting test parameter(s) to the translator middleware; the IETM receives the transformed test data, and evaluates the information for next action.

A.4.3.3.4.3 ATE result. The ATE results are assigned to variable, defined by the author, contained in the State Table. The variables may be used in an evaluate process that determines the next maintenance action or pass as input parameters for additional tests.

A.4.3.3.4.4 Evaluate process result. In a dynamic environment, the action order is not determined until run time. Since the IETM does not assume the next action occurs sequentially in the source data, each next action is pointed or linked. Each diagnostic test and evaluation should be considered a single diagnostic data block. Several diagnostic data blocks may be grouped into a single work package, but one diagnostic data block per work package would allow better data sharing and reuse. Some diagnostic data blocks are used many times, and since it is not advisable to jump into the middle of a work package (was the necessary ATE connected or initial setup performed?), individual work packages guarantees simpler data reuse and sharing.

A.4.3.4 Procedure information.

A.4.3.4.1 Operator instructions. Operator instructions are divided into the following specific work packages, as defined in the contracted content matrix (refer to MIL-STD-40051-1) and applicable to the weapon system/equipment.

a. Description and use of controls and indicators work package.
b. Operation under usual conditions work package(s).
c. Operation under unusual conditions work package(s).
d. Emergency work package.
e. Stowage and decal/data plate guide work package.
f. On-vehicle equipment loading plan work package.

A.4.3.4.2 Maintenance instructions. Maintenance instructions are divided into the following specific work packages, as defined in the contracted content matrix (refer to MIL-STD-40051-1) and applicable to the weapon system/equipment.

a. Service upon receipt work package (**field/AMC only**)
b. Equipment/user fitting instructions work package.
c. Preventive Maintenance Checks and Services (PMCS) work packages.
   (1) PMCS introduction work package.
   (2) PMCS work package.
d. Preventive maintenance inspections work package (**aircraft only**).
e. Ammunition maintenance work package.
f. Auxiliary equipment maintenance work package.

g. Facilities work package (**DMWRs/NMWRs only**).
h. Task oriented maintenance work packages. Task oriented maintenance work packages contain all authorized maintenance tasks for the overall weapon system/equipment and each maintainable subsystem, assembly, and component, such as
   (1) Remove
   (2) Inspect
   (3) Service
   (4) Test
   (5) Install
   (6) Replace
   (7) Disassemble
   (8) Assemble
   (9) Repair
   (10) Clean
   (11) Adjust
   (12) Align
i. General maintenance work package.
j. Lubrication instructions work package.
k. Phased maintenance inspection work package (**aircraft only**).
l. Preventive maintenance services inspection work package (**aircraft only**).
m. Overhaul inspection procedure (OIP) work package (**DMWRs/NMWRs only**).
n. Illustrated list of manufactured items work package (**field/AMC or above only**).
o. Torque limits work package (**field/AMC or above only**).
p. Ammunition marking information work package.
q. Foreign ammunition (NATO) work package.
r. Aircraft inventory master guide work package (**aircraft only**).
s. Storage of aircraft work package (**aircraft only**).
t. Weighing and loading work package (**aircraft only**).
u. Depot mobilization requirements work package (**DMWRs/NMWRs only**).
v. Quality Assurance (QA) requirements work package (**DMWRs/NMWRs only**).
w. Wiring diagram work package (**field/AMC or above only**).

A.4.3.5 Parts information. Parts information is divided into the following specific work packages, as defined in the contracted content matrix (refer to MIL-STD-40051-1) and applicable.

a. Introduction work package.
b. Repair parts list work package.
c. Special tools repair parts work packages.
d. Kit parts list work package
e. Bulk items work package.

f. Special tools list work package.
g. Cross-reference index work packages.

A.4.3.5.1 Parts information in work packages. Parts information should be available at the point of the presentation in any work package to which the specific weapon system and equipment replaceable and repairable part is identified. Inclusion of parts information should be used to:

a. Provide any additional parts data required to order the part.
b. Show the relationship of a part to other parts of the system or equipment.
c. Enhance or clarify the supporting operator, descriptive, or theory of operation data.

A.4.3.5.2 Preparation parts information. The development of parts information is identical between MIL-STD-40051-1 and MIL-STD-40051-2. This allows parts information to be used interchangeably between IETM and page-based systems. When entering parts information for both an IETM and page-based TMs the following data is required by MIL-STD-40051-1 and MIL-STD-40051-2.

a. Name.
b. Part number.
c. Description.
d. Commercial and Government Entity Code (CAGEC).
e. Source, Maintenance, and Recoverability (SMR).
f. Quantity.

A.4.3.5.3 Parts information useful in an IETM. Additional parts information which may be useful to include in a IETM includes but is not limited to:

a. Reference designation.
b. National Stock Number (NSN).
c. Next higher assembly.
d. Quantity per End Item.
e. Unit of Issue.
f. Additional parts information.
    (1) HCP item identification.
    (2) Electrostatic discharge sensitive parts (ESD).
    (3) Flight safety critical aircraft parts (FSCAP).
    (4) Mandatory replacement parts.
    (5) Durable and expendable items will be identified.
    (6) Components of end item (COEI).
    (7) Special tools and test equipment.
g. Illustration/Graphic.

A.4.3.6 Supporting information. Supporting information is divided into the following specific work packages, as defined in the contracted content matrix (refer to MIL-STD-40051-1) and applicable to the weapon system/equipment. The supporting information work packages listed below were formerly referred to as appendices, however, with the creation of the work package concept, it is no longer necessary to title this information as appendices. Necessary supporting data for a specific weapon system, equipment, or component, that does not fall under the supporting information categories listed below, may be placed into as many additional work packages as required.

a. References work package.
b. Maintenance allocation chart (MAC) work package.
   (1) Standard two-level maintenance MAC.
   (2) Aviation two-level maintenance MAC.
c. Components of end item (COEI) and basic issue items (BII) lists work package.
d. Additional authorization list (AAL) work package.
e. Expendable and durable items list work package.
f. Tool identification list work package.
g. Mandatory replacement parts work package.
h. Critical safety items (CSI) and flight safety critical aircraft parts (FSCAP) work package.
i. Support items work package.
j. Additional work packages.

A.4.3.7 Work package content. The work package is a structured block of the TM data that is designed to provide the user with a specific segment of information and may be used as a standalone document. As specified in MIL-STD-40051-1, work packages contain identification information, and contains initial setups, unless specified in MIL-STD-40051-1, descriptive information, and operating, troubleshooting, and maintenance tasks. These data types can be further divided into titled paragraphs, procedural steps, tables, lists, alerts (warnings and cautions), notes, and supporting graphics. Parts information should be accessible in any of the data types, as necessary. Refer to MIL-STD-40051-1 for the specific content requirements for each of the functional work package types (i.e., description information, operator's instructions, troubleshooting, and maintenance). Typical examples for descriptive and task oriented WPs, including troubleshooting and parts information are provided in Figure A-7 through Figure A-12. These figures provide a suggested method of displaying the required content information. Depending on the type of presentation system used, the required data may be displayed in various formats. It is recommended that the proponent activity be provided with samples of the display formats prior to finalizing the display format of this data.

A.4.3.8 Identification information. Work package identification information, as applicable, should be displayed in the title bar or if only using inner shell, subtitle bar area of the IETM viewer (Refer to Figure A-7 through Figure A-12).

A.4.3.8.1 Initial setup information. Initial setup information (refer to Figure A-13) is the first item in the narrative data pane and prior to the initial task step. It provides the maintenance technician with general information, links to equipment, parts, and material information, and authorized personnel required to perform and complete all the maintenance tasks included in the work package. The initial setup is used to provide the technician with a quick reference of the items needed and additionally more detailed data (i.e., part number) through a link to the specific information either in a table (pointing to the referenced information) or a dialog box (containing only the referenced information). For initial setup information requirements for specific types of work packages, refer to MIL-STD-40051-1.

A.4.3.8.2 Identification number. The work package identification number is for internal use only and is not seen by the IETM user. The number is unique to any other work package in the Army. The work package identification number components are an alpha designator as defined by the information type, a five digit unique identifier, and the TM number without maintenance level. The acquiring activity manages the unique five digit identifier by TM number. Since no TM number is duplicated, the management of the unique number needs to be controlled by the acquiring activity. Each information type manages its own set of unique five digit identifiers, thus each information type can start at "00000" as the first assigned number. For information on work package identification number structure, refer to MIL-STD-40051-1.

A.4.3.9 Revision mark. Revision to the IETM is tracked in two structures the revision summary frame (see A.4.3.1.4) and revision marks. Revision marks are vertical bars denoting the line where a change occurred. The text is not annotated what has been revised only that a revision has occurred. A useful feature is linking the revision mark with the revision summary frame to understand changes. Refer to Figure A-15 for examples.

A.4.3.10 Paragraphs. Paragraphs provide general information and description about the system/equipment. Paragraphs are not intended for instructional and should be addressed only in procedural steps. Each paragraph and subordinate paragraph is titled and may have one or more paragraphs relating to the title. Refer to MIL-STD-40051-1 for format requirements.

A.4.3.11 Procedural steps. Refer to MIL-STD-40051-1 for content and format requirements. The acquiring activity needs to define the requirements for how steps are displayed in the data pane. The data pane is scrollable, thus steps may be not viewable until the user scrolls the text. Subordinate steps are kept together in the data pane with the parent step. Procedural steps can be displayed in various methods. The two major presentation categories is the number of steps per data pane and novice vs. expert steps.

A.4.3.11.1 Steps per data pane. The following three options are the possible methods to display steps in a data pane. A consistent approach should be maintained throughout the IETM (Refer to Figure A-16).

a. Single primary step per data pane. This method can be defined in the IETM application (this method overrides the XML source data step breaks) or in the XML source data.
b. All primary steps per data pane. This method can be defined in the IETM application (this method overrides the XML source data step breaks) or in the XML source data.

c. Define the number of steps per data pane. The author can indicate the grouping of primary steps in the XML source data. The grouping is determined either by the steps that fit in a data pane without scrolling (i.e., three one line steps) or by steps that needs to be viewed together in a data pane. If no step grouping is identified in the XML source data, either single or all steps can be used depending on the acquiring activity direction.

A.4.3.11.2 Novice vs. expert steps. One of the key aspects of an IETM is to present only the data the end user needs. In page based TMs, procedural data has always been presented to support the least experienced users. This approach also ensured that all steps were documented and could be followed. Many tasks a more experienced user might skip over some of the detailed steps. For example, a task may require the user to remove an access panel. The experienced user would remove the panel; the less experienced user may need additional detail in how to remove the panel.

A.4.3.11.2.1 Novice vs. expert steps considerations. The source data allows the author to distinguish for the experienced and less experienced user, which is the expert/novice approach. As stated previously, the use of expert/novice is discouraged. Should the acquiring activity request data with an expert/novice breakdown; extreme care should be taken in authoring the data. The criteria to consider includes, but is not limited to, the following:

a. Complexity of the task.
b. Safety considerations. Safety steps are never novice only and are always displayed.
c. Need for special tools or procedures that are to be followed explicitly. For example, removing a stress panel may require a specific order in the removal of the attaching hardware.
d. Determining the step level for expert and for novice. The novice and expert do not intermix within a step level. Example is step a. is novice and step b. is expert is incorrect.
e. Acquiring activity approval of each task to what is an expert vs. novice step.

A.4.3.11.2.2 Novice vs. expert steps format. When the acquiring activity specifies a difference in displaying novice and expert, the following are possible methods to display the information. The use of novice and expert steps is not advised, since some instructions may be recalled incorrectly or forgotten. Displaying all steps reinforces the correct instructions when followed.

a. Expert steps. The steps can be displayed in either manner shown below, but the method needs to be consistent throughout the IETM.
   (1) The expert step is displayed with the ability to expand the subordinate novice steps. The view could be similar how to expand and reduce items in the table of contents (Refer to Figure A-17).
   (2) The expert step is only displayed without the ability to reference the subordinate steps, unless the mode is changed to novice. The method is discouraged, since it may cause error in performing the task when the technician is unsure or wants to review the subordinate steps.
b. Novice steps. All steps are presented to the technician, since the person is not confident or experienced in performing the tasks without the subordinate steps for references.

A.4.3.11.3 Subordinate steps. In trying to maximum the date pane usage, the ability to reduce subordinate steps should be considered. When the data pane is initially displayed or navigation function (i.e., previous, next, back, forward, history, etc.) (the requirements for navigation functions are in MIL-STD-40051-1), all the steps and subordinates steps are displayed (except as discussed in A.4.3.11.2). After a technician has completed a step, the following may occur to increase data pane area (Refer to Figure A-18).

a. The reduction button is selected to contract the subordinate steps.
b. The first level step is maintained for reference to the previous steps and content of the subordinate steps.

A.4.4 Metadata. Metadata or "data about data" describe the content, quality, condition, and other characteristics of data. The information provides descriptive and identification details about the work package that would aid with data interoperable, data mining, and administrative tracking. Metadata can come from many sources by authoring entering the data (i.e., maintenance level), system automatically filling information (i.e., date modified), and inferred through using MIL-STD-2361 XML tag names (i.e., <install> – indicates the information involves a maintenance installation task). Not all metadata is stagnant, but needs updating/refining to assist in administrative control, work package description, and keyword search data.

A.4.4.1 Data mining metadata. The information provides various metadata components to assist in searching and obtaining data. Some of the metadata components could be TM number, work package type, work package title, system/subsystem, applicability, maintenance level, skill level or MOS, keyword, parts information, etc. Each of these metadata components, either singly or grouped together, can be a tool to identify and obtain technical data. The metadata components can be used during IETM login to filter the data to the user (maintenance level and MOS) and equipment (system and applicable configuration).

A.4.4.2 Administration metadata. The information provides details about the work package to assist in configuration control and data ownership. Administration information of the IETM content requires a consistent approach to reduce confusion to the end user. Administrative information should be displayable. Administrative information should be available during the use of the IETM via the “Guide Post” or menu selection. This will provide a function that the user is able to access administrative information. IETMs contain the following administrative information for subsequent user selectable display, as applicable:

a. Identification of the technical manual title, assigned technical manual number, and document version, as applicable.
b. Classification level of the IETM (should also be presented upon initial entry to the IETM by the user).
c. Date, baseline date plus date of latest and all previous changes, if applicable.
d. Verification, change, or revision status, as applicable.
e. Preparing activity.
f. Activity with technical control of the IETM.
g. Activity responsible for configuration management of the equipment/system.
h. Method of obtaining additional copies of TM distribution statement.
i. Export control notice.

j. General notes describing the physical method for identifying the specific equipment to which this IETM applies, the method for identifying the change configuration status of equipment when not immediately obvious to a qualified user, and the relationship of the IETM to the particular equipment under maintenance.

A.4.5 Comprehensibility. To ensure comprehensibility of the IETM data, the following principles should be followed in authoring technical information.

a. Essential information in narrative descriptive text should:
   (1) Describe the system, components, etc., identifying special or outstanding features.
   (2) Describe what functions are performed, including inputs, outputs, interface with other systems, etc.; emphasize end results.
   (3) Describe how the functions are performed, including associated principles of operation.
   (4) Describe at what point in an overall system process the function is performed.
   (5) Describe the location of the component or part.
b. When procedural text is combined with graphics, the following rules should be used to abbreviate, so long as the meaning is not altered or obscured.
   (1) Eliminate articles.
   (2) Begin sentences with transitive verbs (action verbs).
   (3) Use the imperative mood whenever appropriate. The only time subjects should be implied is when –
      (a) They are unknown and the passive voice is being used
      (b) The imperative mood is being used to give an instruction, order, or command, in which case, the subject should always be omitted (i.e., implied).
c. When it is necessary to indicate time, begin sentences with "when" clauses. Example: "When power supply voltage stabilizes..."
d. Limit paragraphs to a single idea. Limit sentences to a single thought; use no compound or complex sentences. Whenever possible, limit words to those that are short and familiar to the target audience. Eliminate long, complex sentences and paragraphs with the use of lists. The resulting parallel portions of sentences should be individually listed as in the following example:

"The beat frequency oscillator has three components:
   (1) ...
   (2) ...
   (3) ..."

e. Sentence length should not exceed an average of 20 words. The average paragraph should not exceed six sentences. The desired paragraph length is three to four sentences. Each paragraph should have a topic entry or sentence. All material in the paragraph should relate to and develop the topic sentence.
f. Except in unusual circumstances, text modules (e.g., construct steps and explanations) should be fully integrated with graphics modules. Associate explanatory text to the graphic.

g. Present descriptive text in a logical order (e.g., in operational sequence or in signal flow sequence) and include summary headers for individual paragraphs whenever needed for clarity.
h. Keep descriptive text consistent in terminology, style, and format throughout the IETM.

A.4.6 Sharing and re-purposing data. The data within the IETM should be presented to allow re-purposing or sharing. Other logistics products such as training and work packages capture or reference IETM data either in whole or at sub-levels. The capability should exist to allow the data to be referenced through hyperlinks and transferred to another product by saving and "cutting and pasting."

A.4.6.1 Sharing data. Data sharing can occur prior to publication or post publication. Data sharing prior to publication should be via reference and at publication; the shared data should be embedded where used, though still referenced to the source data. Post publication data can be shared between logistics products by referencing through hyperlinks or copying. Sharing through referencing is the preferred method, but an implementation issue involved with ensuring referenced material is available to the user and the managed target link. The data should also be presented to allow sharing through copying either through saving using "Save as" or by "cut and paste".

A.4.6.2 Managing target links. Management of target link IDs need to be unique and persistent. The following paragraphs provide a method for implementing the target link ID.

A.4.6.2.1 Unique target link ID. The target link needs to be unique across not just the current IETM being referenced, but also other IETMs (since work package can be reused in other IETMs). Making an ID unique is accomplished by using the already required work package identification number (as specified in MIL-STD-40051-1) as a prefix to each ID (i.e., work package identification number is "M00134-9-999-9999" the target link ID is "M00134-9-999-9999-00001"). Since the work package identification number is not changed during the life-cycle of the work package (as specified in MIL-STD-40051-1), managing target link IDs would require managing only each individual work package IDs. Use caution when determining an unique ID scheme after work package identification number prefix. Using the step number as part of the identifier could cause problems when adding or deleting steps from a procedure. The unique ID after the prefix is best as sequence counts from the start of the work package. Any new data would be resumed from the last ID number count in the work package. An example is the last target link ID is "M00134-9-999-9999-00152", hence the next new target link is "M00134-9-999-9999-00153" (no matter where it is located in the work package).

A.4.6.2.2 Persistent target link ID. The target link ID also needs to be persistent to maintain connectivity with the referenced data. This is important to maintain when the work package data is modified, target link IDs are not modified. Currently through the World Wide Web (WWW) Uniform Resource Identifiers (URI) could be used maintain a persistent target link IDs globally, but will require a common and persistent URI scheme between the interrelated IETMs. When possible, known sharing of referenced target links should be tracked and maintained (best if automated). Any modifications or deletions to the target link could notify IETM authors of the changes within their IETM.

A.4.7 IETM printing. Printing of IETM data should be limited. IETM printing may involve printing the complete manual or a section such as a work package, paragraph, table, or graphic. By its nature, printing a complete IETM, especially a non-linear IETM is not conducive. The IETM printing capability is defined by the acquiring activity from the IETM functionality matrix. The complexity factor should be considered by the acquiring activity to determine the IETM printing capability. When the printing option is selected by the acquiring activity, it is recommended the maximum functionality is to the work package level. Local controls need to be developed to ensure that printed copies of an IETM are managed and updated as necessary. Assume the available printer can print only black-and-white and thus make sure that the use of colors lends itself to printing. Printing any IETM portion include considerations of the data type, such as highly interactive or classified. The acquiring activity should review the requirements in MIL-STD-40051-1 and the functionality matrix prior to contracting for print capabilities.

A.5 **IETM USER INTERFACE.**

A function of the IETM is to respond or interface with the technician and guide the technician through the task or test. The user interface is realized through character format, dialog boxes, multimedia (audio or video), voice recognition, and/or interactive graphics. Using one or all the user interfaces capabilities can assist in completing a task.

A.5.1 Format characters.

A.5.1.1 Display of text. All descriptive information and task text is displayed in a data pane. Text is displayed in upper and lower case characters, as applicable. Refer to Figure A-7, Figure A-8, Figure A-9, and for typical examples of screen text. Display of text in an IETM demands additional attention and details.

A.5.1.2 Character font. All titles, headings, narrative, callouts and special characters are a sans-serif font (i.e. San-serif font).

A.5.1.3 Character width. For basic narrative or procedural data, a proportional font is the best choice that is aligned in a vertical column, a mono-spaced font is more appropriate. Use either a mono-spaced font or proportional font consistently.

a. Proportional font. A font that adjusts size and spacing on the line to allow larger letters (i.e., “M” and “W”) to have more space than smaller letters (i.e. “i” and “l”). Spacing between letters is variable. The text in this handbook is proportional.
b. Mono-spaced font. A font that spacing between letters are fixed width. The letters “M” and “W” appear closer with little space between letters, and the letters “i” and “l” appear with greater space between letters. `This is an example of a mono-spaced font.`

A.5.1.4 Character height. TABLE A-I lists the minimum recommended character heights for various reference viewing distances and should be used to determine the appropriate character font size. Unless otherwise specified by the procuring activity, the minimum reference viewing distance is 36 inches.

A.5.1.5 Character spacing. Character spacing in textual displays should be no less than 0.1 character height. Word spacing for textual displays should be one character width (em space).

A.5.1.6 Line dimensions. Between line spacing for textual display distances 33% of character height exclusive of superscripts and subscripts and no less than 15% character height when superscripts and subscripts are displayed.

A.5.1.7 Text data panes. The width of the text in a data pane ranges from 30-60 characters per line.

A.5.1.8 Margins. Margins should be required for all text panes to prevent information from being obscured by borders or information in adjacent panes.

A.5.1.9 Justification. Left justification should be used for all lines of text displayed as sentences or paragraphs. Text at the right margin should have a ragged justification and right/full justification, text flush to the right margin, is discouraged.

A.5.1.10 Word wrapping. Lines of text should wrap, so that no line extends beyond the limits of the data pane or right margin, including when resized. Lines should be broken only between individual words or within a word when that word is explicitly hyphenated.

A.5.1.11 Hyphenation. Hyphenation should not be used to display normally non-hyphenated words on successive lines.

TABLE A-I. Minimum and optimal character heights.

Viewing Distance (Inches)	Minimum Character Height 16 Minutes of Arc*		Optimal Character Height 20 Minutes of Arc*	
	Inches	Points	Inches	Points
18	0.08	6	0.11	8
24	0.11	8	0.14	10
30	0.14	10	0.17	12
36	0.17	12	0.21	15
42	0.20	14	0.24	17
48	0.22	16	0.28	20
54	0.25	18	0.31	22
60	0.28	20	0.35	25
66	0.31	22	0.38	27
72	0.34	24	0.42	30

* The formula used for the above calculations is:

Character Height (Inches) = [(Min of Arc × Viewing Distance) / (57.3 × 60)]

Character Height (Points) = [Character Height (Inches) × 72].

A.5.2 Hotspot or linking. Hotspot (link) either provides additional information or when activated will display the referenced material in the current or adjacent pane in the inner shell. Hotspot formatting should be consistent throughout the IETM for each media category (narrative text, audio, video, image, etc).

A.5.2.1 Narrative text hotspot. Narrative text is generally formatted in a web browser as unvisited hotspot is blue text and underlined (i.e., More Detail) and visited hotspot is violet text and underlined (i.e., More Detail). A hotspot is denoted additional through highlighting when mouse-over (i.e., **More Detail**). A hotspot may provide additional information when mouse-over (i.e., **Parts Info**). A hotspot that only provides additional information should be formatted differently than a linked hotspot as blue text and dotted or dashed underline (i.e., More Detail). Refer to **Figure A-5** and Figure A-10 for examples.

A.5.2.2 Graphic hotspot. A hotspot in a graphic can be denoted by the narrative text hotspot (refer to A.5.2.1) or the graphic object is highlighted. The graphic object highlight outlines the object in a different color when mouse-over. A hotspot may provide additional information when mouse-over (i.e., **PN: M3469**). Refer to Figure A-11 for examples.

A.5.2.3 Icon hotspot. An icon, instead of word(s), can represent hotspots. Refer to MIL-STD-40051-1 for list of icons to be used for each media category.

A.5.2.4 Change cursor shape over hotspot. The cursor may change shapes to indicate the pointing device is over a hotspot. An example is the cursor is an arrow (↖) normally, but when over hotspot changes to a pointing finger (☝).

A.5.3 Dialog box. The most familiar interface is the dialog box. These are used extensively with most computer applications and the Internet. The dialog provides answers, information, and obtains information to be processed. A.5.3.1 through A.5.3.5 describes and provides an example for message, fill-in, menu, multiple choice, and composite dialog boxes.

A.5.3.1 Message. The message dialog box is strictly used to inform the technician about an action to perform, a statement describing a situation, a response to a question, or an answer to a requested calculation. The technician acknowledges the message, by pressing the OK button, and continues to the next action or uses the information provided.

a. Action message. The action message dialog box notifies the technician that an action is ready to perform. Figure A-14 shows a message dialog box that indicates the test equipment is connected to the IETM system and ready to start the test routine.
b. Information message. The information message dialog box is used to provide an answer to a calculation, result from a test, or indicate an action is completed. Figure A-14 shows requesting and receiving the answer from the inputted values to determine the missile launch trajectory. The technician knows the distance and speed of the missile, but requires the angle. The formula used is A[ngle] =arcsin(G[ravity]*R[ange]/V[elocity]^2), which would require a calculator to compute. Instead, a hot spot in the operator's text is presented to assist in the calculation and return the required angle.
c. Alert message. The alert message dialog box is formatted in accordance with MIL-STD-40051-1. The alert message should track that the alert was acknowledged. Figure A-14 shows an alert about danger to a person (Warning) or, not shown, damage to the equipment (Caution).

A.5.3.2 Fill-in. The fill-in dialog box has the technician enter an answer to a prompted question. This option is used when either too many possible answers exist (i.e., fault code) or the data could be within a certain value range (refer to Figure A-14). This dialog box is effective only for IETM systems with State Table and Logic Engine (refer to A.6). Additionally when entering a number, the author may specify a number range where the entered value falls between.

A.5.3.3 Multiple-choice. The multi-choice dialog box provides a prompt requesting a response from an options list. The technician selects one or more options to determine the next action to perform or to initiate an application. An example is entering error codes from a test. From an error code list, one or more can be selected to determine the next correct action to present (refer to Figure A-14).

A.5.3.4 Menu. The menu dialog box provides a prompt requesting a response from an options list. The technician selects only one option to determine the next action to perform or to initiate an application. If more than one option can be selected, use the multiple-choice dialog box (refer to A.5.3.3). The options can be arranged as a vertical list, as a horizontal list, or as horizontal buttons. The menu dialog box is used significantly in troubleshooting tasks. Generally the options are binary (true/false, yes/no, pass/fail), since many system tests are either OK or a fault.

a. Vertical list example 1. A troubleshooting task will determine if the multi-meter reading is within an acceptable range. The IETM prompts to perform a multi-meter test on the equipment. After acquiring the reading, the IETM prompts for three reading range options: a low range (i.e., < 30), a normal range (i.e., 30 – 60) and a high range (i.e., > 60) (refer to Figure A-14). The technician selects the option the reading range falls. Each of the three options would present to the technician a different solution to the reading entered.
b. Horizontal list example 2. A troubleshooting task will check if the engine indicator light is red, yellow, or green. The IETM prompts instructions to check the engine indicator light. After checking the engine indicator, the IETM prompts for the engine indicator light color: Red, Yellow, or Green (refer to Figure A-14). The “Red” answer would direct the IETM to further determine what engine fault has occurred. The “Yellow” answer would indicate some fault related to the engine, but may not be the engine. The “Green” answer would indicate to the IETM that the engine is OK and check the next component for a problem.
c. Horizontal button example 3. A troubleshooting task will check if the oil pressure gauge is in the red zone. The IETM prompts instructions to check the oil pressure. After checking the oil pressure gauge, the IETM prompts is the oil pressure gauge in the red zone and selects either the “YES” or “NO” button (refer to Figure A-14). Clicking the “YES” button would direct the IETM to determine why it is in the red zone. Clicking the “NO” answer would indicate to the IETM that the oil pressure is OK and check the next component for a problem.

A.5.3.5 Composite. The composite dialog box can combine fill-in(s), multiple choice(s), and/or menu(s) dialog boxes. This provides a single screen to acquire information for the IETM to process and direct to the next action. Figure A-14 requests the engine condition that is determined from the engine indicator, engine temperature, and engine fault code(s).

A.5.3.6 Tables. Requirements for table title and numbering are defined in MIL-STD-40051-1. Tabular information should be displayed as cells of textual information. When tables contain textual elements, those elements should conform to the guidance herein, for textual information. Graphical elements within a table should conform to the guidance herein, for graphic material. The IETM should display tables in a data pane as follows.

A.5.3.6.1 Display of tables. Preference for large tables or narrative references to table data is optimized in a separate data pane. The separate pane allows scrolling the table, but the referenced text unmoved. Tables are displayed in a left-to-right, top-to-bottom array of cells.

A.5.3.6.2 Table title. Table title and number is prior to the table, centered and remains in the data pane during scrolling.

A.5.3.6.3 Column Header. Tables should have column headers. When column headers are used, the headers remain in the data pane during scrolling. This allows the header information to be viewable while scrolling through long tables.

A.5.3.6.4 Justification. Lists of alphabetic data should be vertically aligned with left justification. Numerical data should be justified with respect to a fixed decimal point. In cases where there is no decimal point, the numerical data should be right justified. This information is identified in the XML source data and not by the IETM application.

A.5.3.6.5 Column spacing. Consistent column spacing should be maintained within a table. Sufficient spacing or column rules (lines) should be provided to clearly distinguish the data between columns.

A.5.3.6.6 Row spacing. For dense tables with more than ten rows, a grouping feature (i.e., a solid or blank line) may be inserted after every fifth row.

A.5.4 Graphics. The IETM should display graphics in a data pane as follows.

A.5.4.1 Display of graphic overlays. Encoded graphics should be displayed along with any associated callout overlays designed to indicate the specific components of the graphic. The graphic overlay determines an area (mapping the coordinates) or shape (i.e., circle around callouts or part outline) then when selected, is linked to the referenced information (i.e., part information).

A.5.4.2 Types of graphics. Two graphic types are static and interactive. Static graphics are displayed in full detail in the graphic area provided, with no ability for manipulation except for increasing or reducing (zooming) size. Interactive graphics has the capability for manipulation.

A.5.4.2.1 Static graphic. Static graphics are most times derived from legacy page-based documents and reused in the IETM. Depending on the graphical format, additional functionality can be added (i.e., CGM4). Graphical formats that do not add functionality can be given linking capability with a graphic overlay (refer to A.5.4.1).

A.5.4.2.2 Interactive graphic. Interactive graphics may manipulate with the IETM by linking to additional information, mouse over to display additional information, rotating, animating, etc. The following paragraphs describe some, but not all, the possible usages for interactive graphics.

a. A common use of an interactive graphic is to hotspot an item or callout information in a graphic. The capability provides the technician with the ability to select the hotspot to obtain detailed information about a item and/or requisition the part (i.e., part number, NSN).
b. The ability to mouse over an item is helpful in relating the item name and identification number(s) to the hotspot, especially when finding or requesting the item.
c. When using 3-D graphics, the ability to turn the item in various directions assists the technician in reviewing the item with different perspectives or angles. The cost in developing 3-D graphics is reducing, but as stated in the functionality matrix, in MIL-STD-40051-1, is a complex function, thus expensive. The implementation is greatly reduced when using vector graphics, which can be reposition by the features of the format.

d. Animated graphics can be as straightforward as showing the removal or installation of a part to viewing interactive schematic or hydraulic flow diagrams. These interactive graphics provide significant assistance with instructing the technician how to perform a maintenance task, diagnostics with an electrical or hydraulic system by conducting various scenarios to determine the fault(s) to the problem. Animated graphics have to been used prudently, since the complexity and cost can be extensive. The animated graphics do not replace the narrative task instructions, but is tool to provide additional support as specified in MIL-STD-40051-1.

A.5.4.3 Scale. Graphics should be displayed to a scale at least as large as its designated minimum size so that all essential detail is legible. Ensure the graphical resolution is great enough to display enlarged views (zoom-in) of details to be legible. Vector graphics, when presented; eliminate the zoom-in issue, since the vector objects are scalable. Higher resolution raster graphics are needed for increased or zoomed in viewing size. The resolution to the times increased in viewing size is generally proportional.

A.5.4.4 Display. Graphics are displayed in a pane of the inner shell. If a graphic cannot be displayed in its entirety and in full detail, it should be displayed using scrolling and zooming functionality. The following paragraphs describe possible methods of viewing a large graphic in a data pane.

a. Scrolling the graphic both horizontally and vertically to view different sections.
b. Resizing a data pane sometimes permits a full detail view of the graphic.
c. Zooming out can reduce a large graphic to fit completely in a data pane.

A.5.5 Standard information. Standard information is presented either as page-based tables (refer to MIL-STD-40051-2 for examples) and/or frame-based information (refer to Figure A-12 and Figure A-21 through Figure A-41 for examples). The frame-based examples can vary in format, but the content and labels do not vary (refer to MIL-STD-40051-1 for the requirements). Standard information formats, hotspot capabilities (refer to Figure A-33 through Figure A-35), and linking to other applications (i.e., ordering parts) (refer to Figure A-38) should be determined by the acquiring activity and the IETM developer.

A.5.5.1 Standard information formats. Standard information can be formatted in the display device as the following possibilities (this is not an exhausted list of the formats, but a representative sample).

a. Form (refer to Figure A-12). It is used to enter and submit additional information or the ability to review the data (i.e., parts ordering).
b. Page-based table (refer to Figure A-20). It is used to present the information that does not require or need any special interactive, but to provide reference information.
c. Frame-based table (refer to Figure A-23). It is used to present information in form better for frame view (i.e., the ability to reduce categories not needed).
d. List (refer to Figure A-33). It is used to list just enough information (i.e., item name, part number, NSN, etc.) to identify the data to provide a detailed view of the selected item in a separate data pane.

e. Checklist (refer to Figure A-21). It is used to record the item was checked and completed. Additionally, the item may denote possible issues of the checked item (i.e., red highlighted item as “Not ready”, yellow highlighted item as “Comment”, button for comments, etc.). Each item may be presented completely as a table (refer to b or c) or list (refer to d). Using the list method, the next check item’s detailed information could be automatically shown after marking the checked item task is completed.

A.5.5.2 Referenced items. Most standard information is accessed through links while performing a task and needs to resume the task after reviewing the data. When referencing standard information items, the referenced item needs to be clearly identified and denoted (i.e., highlighted text, marked, form, etc.) and not positioned at the top of the table or the list.

A.5.6 Multimedia presentation. The textual information for procedures, instructions, or steps is not replaced by multimedia. The information conveyed through multimedia greatly enhances the presentation of the subject matter and increases the retention of the material by the technician. Multimedia includes audio, graphics, video, and animation. Audio, video, and animation techniques should only be used in an IETM when it results in enhancing the presentation of the information or makes the procedures more effective. Every instance of use should be discussed with and approved by the acquiring activity before any audio, video, or animation presentation is included in an IETM. Multimedia techniques and standards to be used for presentation techniques are discussed below and are specified by the acquiring activity.

A.5.6.1 Multimedia and other items/functions. Audio, video clips and animations are not played automatically. The multimedia player is activated through a hotspot, inline with the narrative, or resident in a separate pane. Audio, video clips and animations are manually started by pressing "PLAY" on a multimedia player or plug-in control panel. Developers need to ensure that the technician can use the multimedia format being delivered. Several available multimedia players and plug-ins are RealNetworks RealPlayer®, Microsoft Windows Media Player®, MacroMedia Shockwave®, MacroMedia Flash Player®, Apple QuickTime Movie and Audio Viewer®, and Internet Pictures IPIX®, or equal. TABLE A-II and TABLE A-III shows different multimedia format files playable on some or all the multimedia players and plug-ins previously listed. If these media file formats do not meet your needs, contact acquiring activity.

A.5.6.2 Audio. Recent audio compression algorithms allow for acceptable audio quality using much smaller file sizes. The decision as to which CODEC to use should be based on compatibility with the audio player, and obtaining acceptable audio quality with the smallest possible file size. WAV and AIFF files for all audio should be avoided because of file sizes are the largest and require a significant amount of bandwidth when run over a computer network. Audio is not provided for classified information.

A.5.6.3 Sound. Sounds may be used by the technician to identify possible faults or system is producing the correct sound. Developers should use best commercial practices when implementing sound. The technician should take action to hear the sound. User controls muting and volume via system controls (versus embedded controls within the application). Optional: Application can provide convenient access to the system controls. In general, controls are provided within the control or operating system for audio.

TABLE A-II. Audio Media File Formats.

File Type	MIME	Compression	Advantage	Disadvantage
Waveform	wav	Dependent external CODEC	High quality audio, native to most devices, file format for playback	Large files, poor for low bandwidths, limited interaction
Audio Interchange File Format (AIFF)	aiff, aif, aifc	Dependent external CODEC	High quality audio, native to most devices, file format for playback	Large files, poor for low bandwidths, limited interaction
Windows Media Audio	wma, wax	Lossless, 24:1	Simple interaction, good for low bandwidths, high quality with small size	Decoding is not universal
Musical Instrument Digital Interface (MIDI)	mid , midi, rmi, smf, kar	Very small	Very small file size	Can not record sounds, limited audio controls, designed for song compression for device communication
Real Media	ra, ram, rpm	Lossy, smallest size	Reconfigures to bandwidth	Quality similar to radio or telephone,
Audio basic	au, uLaw, MuLaw, snd	Dependent external CODEC	High quality audio, native to most devices, file format for playback	Large files, poor for low bandwidths, limited interaction
MP3 format sound files	mp3, m3u, swa, m3url	Lossy, 12:1	Maintains high quality for low bandwidth, well supported	Can loss quality with compression.

TABLE A-III. Video Media File Formats.

File Type	MIME	Compression	Advantage	Disadvantage
Windows Media audio/video files	asf, asx, wm, wmx, wmp wmv, wvx	Lossless	Simple interaction, good for low bandwidths, high quality with small size	Decoding is not universal
Microsoft Audio Video Interleave	avi	Dependent external CODEC	Options are definable for video configuration	Hundreds of CODECs are used and not all players except the CODEC.
QuickTime	mov, qt, movie	Dependent external CODEC	Can integrate various media type, good compression, good quality low bandwidths	Inconsistencies in playback
Synchronized Multimedia Integration Language (SMIL)	smi, sml, smil	Dependent of media type used and reuse	XML based, integrates various media type	
Moving Pictures Expert Group (MPEG)	mpg, mpeg, mpe, mp2, mp2v, mpa, mp4, mpg4	Up to 10:1	Compressed file highest quality digitized video	
RealVideo	ram, rm	Lossy	High compression rate, small files	Lesser quality images, limited players
Shockwave Flash	swf		Integrated interactive content	

A.5.6.4 Voice input/output (I/O). Voice I/O should be used only as supplemental input/output and navigation. Keyboard and pointing devices should be the primary input, and visual display should be the primary output. The use of voice I/O can assist in conducting maintenance in confining area where click an input device would be difficult to perform. In general, controls are provided within the controls and operating system for voice I/O.

A.5.6.5 Video. Video can be a effective tool to show a technician how to conduct a task, to access a component, remove/install a component, a parts components, etc. Recent streaming video and video compression algorithms allow for acceptable video quality using much smaller file sizes. Video files that are compatible with Windows Media Player and QuickTime Movie and Audio Viewer, should be used. Streaming video such as ASF, WMV and MPEG are preferred over MOV and AVI. AVI files for all video should be avoided because of file sizes that require a significant amount of bandwidth when run over a computer network. Video is not provided for classified information.

A.5.6.6 Graphics. (Photos, etc. – other than traditional Line-art). Use digital graphic formats that are native to the browser such as JPEG or GIF. The JPEG format is preferred for half-tone images and photographs. For print purposes, provide 150 or 300 dpi resolution. Refer to 6.3 for a list of the acceptable graphic formats.

A.5.6.7 CODEC. CODEC is short for compressor/decompressor. A CODEC is any technology for compressing (shrinking the file size) and decompressing (restoring the file) data. CODECs can be implemented in software, hardware, or a combination of both. CODEC formats (Windows Media) are not file formats (Audio Video Interleave (AVI)), but an algorithms to compress multimedia files.

A.5.6.7.1 Compression considerations. Audio and video compression is necessary to reduce file size and transmission bandwidth. Audio and video files in raw form are large files (CD-quality audio is approximately 2.8 megabits per second (Mbps) and broadcast-quality video is approximately 160 Mbps). The ability to use audio and video for an IETM or World Wide Web (WWW) necessities compression of multimedia for speed and storage. Networked IETMs should consider carefully on the amount and quality multimedia files, since bandwidth needs to be kept at minimum. Bandwidth versus high quality multimedia has to be considered with how often and quality needed for usage. The compression methods for multimedia are classified in two categories lossy and lossless compression. The A.5.6.7.1.1 and A.5.6.7.1.2 discusses what each is, advantage and disadvantage with the technology.

A.5.6.7.1.1 Lossy compression. Lossy compression reduces (removes) some of the multimedia information for a less-than-best quality, but acceptable to view and/or hear. The original file and the file that has been compressed/decompressed are not the same. The original multimedia file needs to be preserved for editing, since a lossy compression changes (lesser quality) the file. A lossy compression example is a picture of green grass records 658 different colors. When the image is compressed and the colors reduced to 256, little quality is lost through the file size is smaller (4 to 1). Similarly, for audio, the higher (above 20 kHz) and lower (below 20 Hz) frequencies not easily discernable for the human ear are removed to reduce the file size. Using a lossy compression method lowers the multimedia quality in relation to the compression factor. This compression method is a good option for narrative audio, since the frequency range is vastly reduced (300 Hz to 4 kHz). When high quality multimedia is required, lossless compression is a better option.

A.5.6.7.1.2 Lossless compression. Lossless compression maintains the exact data as before compressed/decompressed multimedia files. Several methods are used to accomplish this compression method without data reduction or removal. File sizes are larger than the lossy compression, but high quality is maintained.

A.5.6.7.2 Selecting CODEC. The technology for CODEC is constantly changing and improving the compression and quality of the multimedia data. Currently there are over 50 CODEC (i.e., Windows Media, Moving Picture Experts Group (MPEG), Sorenson, DivX, Indeo, etc.) possessing various advantages and disadvantages. The following are consideration for selecting a CODEC for the IETM viewer.

a. Quality multimedia. Generally, the higher quality used the larger file size. Determine the amount of image detail (DVD or less than VHS quality) and audio (CD or radio quality).
b. File size. As stated previously the higher quality the larger file size. Consideration in file size is the transmission rate of the data file. If using the Internet at lower speeds (56 kilobytes per second (Kbps)) a large file may take several minutes to load. Additionally if numerous multimedia files are used in the IETM, space for storage becomes consideration.
c. Player/system compatibility. Some CODEC are preinstalled with the selected player while others require installation. Some CODEC require special software and/or hardware. Determine the user audience software and systems before selecting a CODEC.
d. Usability. Using a multimedia data the user may require capability to rewind, repeat, freeze, etc. functions to obtain complete knowledge from the multimedia clip. Some functions are proprieties of the multimedia players and some are functions how the software decodes the CODEC files. Some issues are
    (1) Jump back in a video clip requires several seconds to reposition the audio and several more seconds for the video.
    (2) Freezing the video the image is blurry or part of two different video frames.

A.5.7 Technical Manual Deficiency Report (Form 2028). The preferred user interface is the actual form. A single user interaction should be available to select the function (e.g., a button, double mouse click). There should be a “Form fill-in completed” function before returning to the IETM (e.g., “OK”). To invoke the Deficiency Report (Form 2028), a method similar to the one described TABLE A-IV should be provided.

TABLE A-IV. Deficiency Report (Form 2028) Icons.

ACTION	BUTTON	LOCATION	FUNCTION
User Feedback		Main Menu Bar	Initiates another window with the feedback form. The user can reposition the form to reference the IETM for feedback information.
Form Complete/ Submit	OK	Bottom of Form	Entered information is captured and user returns to previous location. Networked IETM transmits the information to a 2028 repository. A non-networked IETM preserves the information for later printing or uploading to the appropriate system, when available.
Form Cancel	CANCEL	Bottom of Form	Entered information is not maintained and user returns to previous location.
Form Print	PRINT	Bottom of Form	Prints the current 2028 information for records or submitting to the appropriate organization. If no printer is available, either disable or remove the button.

A.5.8 Instructions for interactions with IETM utility functions. Developers can be expected to deliver to different platforms and configuration environments. The importance of developers knowing and understanding what environments they are deploying to cannot be overstated. Some developers will be faced with deploying their products into a wide variety of environments while others may have the luxury of only delivering into the latest environments.

A.5.9 Screen size resolution. In determining screen size resolution, the acquiring activity needs to determine the display devices used in rendering the IETM. The worst display device should be used in determining the resolution requirements. The following is a guideline to determine the minimum screen resolution with various display devices.

a. Computer screen size. The minimum screen size that the IETM should be designed to operate, on a desktop or laptop, is 800 wide × 600 high pixels resolution.

b. Electronic book and tablet screen size. The minimum screen size that the IETM should be designed to operate, on an electronic book or tablet, is 800 wide × 600 high pixels resolution.

c. Personal digital assistant (PDA) and pocket PC screen size. The present marketplace has 3 different resolutions for the PDA and pocket PC. An IETM should be able to be used at these alternative pixel resolutions in both monochrome and color.

   (1) 160 wide × 160 high.

   (2) 320 wide × 240 high.

   (3) 320 wide × 480 high.

A.5.10 Inner shell colors. Design for the acquiring activity's worst display device of the lowest acceptable color (8-bit color PDAs, cellular phones etc). Computers are no longer limited to the 216 safe colors. The 8-bit color palette is acceptable for IETMs that are rendered on a device limited to 8-bits. Figure A-43 provides the 216 windows colors with their corresponding hexadecimal (HEX) values and Red-Green-Blue (RGB) values.

A.6 **LOGIC ENGINE AND STATE TABLE.**

A key to a dynamic IETM is the ability to save equipment conditions (states), user and integrated test inputs, and evaluating the information to determine a course of action.

A.6.1 State Table. The State Table is software, within the IETM, to collect and recall variable information for evaluation or information. A State Table is used to track equipment state (i.e., electrical panel is removed), test parameter data (i.e., result from BIT test), calculation equations (i.e., missile trajectory), dialog box answers, etc. The variable declaration is created by the TM author and is comprised of the identifier name, data type, and value. The value is assign by the TM author in the source data, result from integrated tests, and/or user inputs. The variables are released or lost at the end of a maintenance session, unless specifically requested to save and resume the State Table variable values. Evaluating the State Table variables is accomplished through the Logic Engine.

A.6.2 Logic Engine. The Logic Engine is software, within the IETM, to read the source data expression, recall the required State Table variables, evaluate the expression, and assign the result to a State Table variable identifier or perform the resolved evaluation process. The Logic Engine is part of IETM software that evaluates the IETM source data expressions using the State Table variable values. The expression generally determine a logic or Boolean value "TRUE" or "FALSE". An example is the ATE returns an "0034" error code, collects the result in the State Table variable identifier "engine_code", and evaluates the State Table variable through a IF-ELSEIF process until the "engine_code=0034" expression is "TRUE". The Logic Engine also evaluates mathematical formulas and store answer to State Table variables.

A.6.3 Logic Engine supported operations. The expression element contains one of four operation forms: a State Table variable, a constant value, a binary operation between two expressions, or a unary operation on a single expression. An expression is a single simple procedure that may contain a State Table value, binary operation, unary operation, or an expression. An expression is similar to parentheses as used an in mathematic equations.

Example shows an expression using the missile trajectory formula. The mathematical equation has parenthesis around each expression procedure.

Formula - A=arcsin((G * R) / (V^2)); where G *R, V^2, (***G *R***) / (***V^2***), and arcsin(***(G * R) / (V^2)***) are single expression procedures.

The expression in MIL-STD-2361 XML markup is shown below.

```
<statemanipulation>
    <variableref name="A"/>
    <expression>
        <arcsin/>
        <expression>
            <expression>
                <variableref name="G"/>
                <times/>
                <variableref name="R"/>
            </expression>
            <div/>
            <expression>
                <variableref name="V"/>
                <exponent/>
                <integer>2</integer>
            </expression>
        </expression>
    </expression>
</statemanipulation>
```

A.6.3.1 Expression. An expression defines something to be evaluated by the Logic Engine. Expressions are used to assign values to a variable (i.e., the value of the Expression Counter + 1 might be assigned to variable Counter). Expression is used in preconditions, IF, and Loops to determine what is displayed to the user. In a precondition, for example, if the expression Model = A evaluates to TRUE, the element containing the precondition is displayed and vice versa. Expressions are authored by combining variables (or other expressions) and values with binary or unary operators. In their simplest form, an expression may be just a variable or a value.

A.6.3.2 Variable. A variable may have different values at different times in the same way as a programming variable. Variables and their values are stored in the State Table information and the values are used when evaluating expressions. In 0, Counter and Model are variables

A.6.3.3 Values. Values within an expression represent a constant. Value has an explicit data type through the value type declaration. Value type errors are captured by checking the characters against the defined value type. For instance, the **<integer>** type would fail if the value had alpha characters, such as "Yes". TABLE A-V lists the available data types.

TABLE A-V. Value Types.

Value Type	Name	Description
<boolean>	Boolean	Value can be True or False
<fault>	Fault code	Contains the fault code and description for possible, OK, and bad text.
<integer>	Integer	Whole numbers only
<real>	Real	Allows both whole numbers and decimals
<string>	String	A set of ASCII characters

A.6.3.4 Binary operations. Binary operations are defined as an operation between two expressions. TABLE A-VI lists the binary operations the Logic Engine needs to support. The table contains the operation, the forms that the operation can take, the return value data type, and a description. The form column defines the return value types for the expression on each side of the operator.

TABLE A-VI. Binary Operations

Binary Operation	Form	Return Value	Description
<and>	Boolean **<and>** Boolean	Boolean	'True' if both Booleans are 'true', otherwise 'False'.
<concat>	String **<concat>** String	String	Make a new string which is equal to the first string with the second string concatenated to the end of it.
<divide>	Integer **<divide>** Integer	Real	Return the value of the first number divided by the second number.
	Integer **<divide>** Real	Real	
	Real **<divide>** Integer	Real	
	Real **<divide>** Real	Real	
<eq>	Boolean **<eq>** Boolean	Boolean	If both operands are the same data type then the return value is 'true' if the values are the same or 'false' if they are different. If the operands are different types, the return value is 'false'.
	Integer **<eq>** Integer	Boolean	
	Real **<eq>** Real	Boolean	
	String **<eq>** String	Boolean	
<exponent>	Integer **<exponent>** Integer	Integer or Real	Return the value of the first number raised to the power of the second number. The return value is a real unless the first number is an integer and the second number is a positive integer.
	Integer **<exponent>** Real	Real	
	Real **<exponent>** Integer	Real	
	Real **<exponent>** Real	Real	
<ge>	Integer **<ge>** Integer	Boolean	'True' if the first number is greater than or equal to the second number, otherwise. 'False'.
	Integer **<ge>** Real	Boolean	
	Real **<ge>** Integer	Boolean	
	Real **<ge>** Real	Boolean	
<gt>	Integer **<gt>** Integer	Boolean	'True' if the first number is greater than the

TABLE A-VI. Binary Operations

Binary Operation	Form	Return Value	Description
	Integer <**gt**> Real	Boolean	second number, otherwise 'False'.
	Real <**gt**> Integer	Boolean	
	Real <**gt**> Real	Boolean	
<**idivide**>	Integer <**idivide**> Integer	Integer	Return the value of the first number divided by the second number, truncated to an integer.
	Integer <**idivide**> Real	Integer	
	Real <**idivide**> Integer	Integer	
	Real <**idivide**> Real	Integer	
<**le**>	Integer <**le**> Integer	Boolean	'True' if the first number is less than or equal to the second number, otherwise 'False'.
	Integer <**le**> Real	Boolean	
	Real <**le**> Integer	Boolean	
	Real <**le**> Real	Boolean	
<**lt**>	Integer <**lt**> Integer	Boolean	'True' if the first number is less than the second number, otherwise 'False'.
	Integer <**lt**> Real	Boolean	
	Real <**lt**> Integer	Boolean	
	Real <**lt**> Real	Boolean	
<**minus**>	Integer <**minus**> Integer	Integer	Returns the value of the first number minus the second number,
	Integer <**minus**> Real	Real	
	Real <**minus**> Integer	Real	
	Real <**minus**> Real	Real	
<**modulus**>	Integer <**modulus**> Integer	Integer	Returns the integer remainder after the first number is integer-divided by the second number.
<**ne**>	Boolean <**ne**> Boolean	Boolean	If both operands are the same data type then the return value is 'true' if the values are different or 'false' if they are the same. If the operands are different types, the return value is 'true'.
	Integer <**ne**> Integer	Boolean	
	Real <**ne**> Real	Boolean	
	String <**ne**> String	Boolean	
<**or**>	Boolean <**or**> Boolean	Boolean	'True' if either Boolean is 'true', otherwise 'False'.
<**plus**>	Integer <**plus**> Integer	Integer	Returns the value of the first number plus the second number,
	Integer <**plus**> Real	Real	
	Real <**plus**> Integer	Real	
	Real <**plus**> Real	Real	
<**substring**>	String <**substring**> String	Boolean	'True' if the first string occurs anywhere within the second string, otherwise 'False'.
<**times**>	Integer <**times**> Integer	Integer	Returns the value of the first number multiplied by the second number,
	Integer <**times**> Real	Real	
	Real <**times**> Integer	Real	
	Real <**times**> Real	Real	
<**xor**>	Boolean <**xor**> Boolean	Boolean	'True' if one and only one Boolean is 'true', otherwise 'False'.

A.6.3.5 Unary operations. Unary operations are defined as an operation on a single expression. The operation result and the returned value data type is returned. TABLE A-VII lists the unary operations the Logic Engine needs to support. The table contains the operation, the forms that the operation can take, the returned value data type, and a description.

TABLE A-VII. Unary Operations.

Unary Operation	Form	Return Value	Description
<arccos>	**<arccos>** Integer	Real	Returns the Inverse Cosine of the number.
	<arccos> Real	Real	
<arcsin>	**<arcsin>** Integer	Real	Returns the Inverse Sine of the number.
	<arcsin> Real	Real	
<arctan>	**<arctan>** Integer	Real	Returns the Inverse Tangent of the number.
	<arctan> Real	Real	
<cosh>	**<cosh>** Integer	Real	Returns the Hyperbolic Cosine of the number.
	<cosh> Real	Real	
<csc>	**<csc>** Integer	Real	Returns the Cosecant of the number.
	<csc> Real	Real	
<csch>	**<csch>** Integer	Real	Returns the Hyperbolic Cosecant of the number.
	<csch> Real	Real	
<defined>	**<defined><variableref>**	Boolean	'True' if variable exists in State Information and does not have a NIL value.
<empty>	**<empty>** String	Boolean	'True' if the string, set, or sequence is empty, 'false' otherwise.
<exp>	**<exp>** Integer	Real	Returns the exponential (e^x) of the number.
	<exp> Real	Real	
<factorial>	**<factorial>**Integer	Integer	Returns the product of all integers up to and including the given integer.
<float>	**<float>** Integer	Real	Returns the number converted to a real.
	<float> Real	Real	
<index>	**<index>** String	String	The index operator supports one or two index-values. A positive index-value means an index position counted from the beginning of the string. A negative index-value is counted from the end. A one means the start and a zero means the end of the string. A single index-value will return a single character string. A double index-value will return a sub-string.
<ln>	**<ln>** Integer	Real	Returns the Natural Logarithm of the number.
	<ln> Real	Real	
<log>	**<log>** Integer	Real	Returns the Common Logarithm of the number.
	<log> Real	Real	
<neg>	**<neg>** Integer	Integer	Returns the negative value of the number.
	<neg> Real	Real	
<not>	**<not>** Boolean	Boolean	'True' if operand is 'false'. 'False' if operand is 'true'.

TABLE A-VII. Unary Operations.

Unary Operation	Form	Return Value	Description
<sec>	**<sec>** Integer	Real	Returns the Secant of the number.
	<sec> Real	Real	
<sech>	**<sech>** Integer	Real	Returns the Hyperbolic Secant of the number.
	<sech> Real	Real	
<sin>	**<sin>** Integer	Real	Returns the Sine of the number.
	<sin> Real	Real	
<sinh>	**<sinh>** Integer	Real	Returns the Hyperbolic Sine of the number.
	<sinh> Real	Real	
<size>	**<size>** String	Integer	Number of characters in the string
<sqrt>	**<sqrt>** Integer	Integer or Real	Returns the square root of a number.
	<sqrt> Real	Real	
<tan>	**<tan>** Integer	Real	Returns the Tangent of the number.
	<tan> Real	Real	
<tanh>	**<tanh>** Integer	Real	Returns the Hyperbolic Tangent of the number.
	<tanh> Real	Real	
<trunc>	**<trunc>** Integer	Integer	Returns the number truncated to an integer.
	<trunc> Real	Integer	

A.6.4 Evaluation processes. The evaluation process uses the State Table variables to determine the next action. The four (4) processes are IF, Loop Iteration, Loop Until, and Loop While.

A.6.4.1 IF process. The IF process evaluates a logic expression, when evaluated to TRUE the THEN action is performed or when evaluated to FALSE the ELSE action is performed. A variable when evaluated against a list of possible answers (i.e., error codes) use the ELSEIF process to evaluate each possible answer. The Logic Engine continues checking the possible expression results until one logic expression is TRUE and the associated THEN action is performed. If no expressions are TRUE, the ELSE action is performed.

Example: List of error codes (1, 2, 3, 4) and test result is stored in State Table variable "code". The IF process would be the following:

IF code=1 THEN action1
ELSEIF code=2 THEN action2
ELSEIF code=3 THEN action3
ELSEIF code=4 THEN action4
ELSE action5

A.6.4.2 Loop Iteration process. The Loop Iteration process repeats a set of actions for a number of times. A variable is set to the initial count (i.e., x = 1), then is incremented in an expression (i.e., x = x + 1), and stops when the variable is incremented to the end condition (i.e., x < 12). Use the Loop Iteration when a set of actions or tests requires a certain number of iterations to complete the action.

Example: A test requires 10 test readings; then averages the returned test results.

Initial result total counter: total=0

Loop (Start: x = 1, Increment: x = x + 1, End Condition: x ≤ 10)
  Run Test 59HD and save test results to variable: result
  Add test result to the total: total = total + result
End Loop Action

The average of 10 test iterations: average = total / 10

A.6.4.3 Loop Until process. The Loop Until process repeats a set of actions at least once through and continues until the expression is TRUE. This process may be used when adjusting a system until the resulting values (through dialog box or test reading) are within an acceptable range or repeat an action until error/incorrect value is rectified.

Example: Adjusting the air pressure in vehicle until within an acceptable range or excessive pressure.

Set iteration variable counter: cnt = 0

Loop
  Message dialog box: "Press OK after adjusting pressure for reading"
  Run air pressure test and save result to variable: air
  cnt = cnt + 1
Until (50 < air AND air < 70) OR (air > 100) OR (cnt > 30)

IF air > 100 THEN Alert message dialog box: "Tire may explode air pressure above 100psi"
ELSEIF cnt=30 THEN Message dialog box: "Problem more than 30 tries. Report problem to supervisor"
ELSE Message dialog box: "Tire is properly inflated."

A.6.4.4 Loop While process. The Loop While process repeats a set of actions while the expression is TRUE. This process is used when a variable(s) have been previously set through either a previous action or user interface.

Example: Adjusting the air pressure in vehicle until within acceptable range or excessive. Since the air pressure was previous checked and acceptable, no additional testing takes places.

Previous air pressure adjustment was performed and air pressure was 63psi: air = 63

Set iteration variable counter: cnt = 0

While (air ≤ 50 OR 70 ≤ air) AND (air ≤ 100) AND (cnt ≤ 30)
  Message dialog box: "Press OK after adjusting pressure for reading"
  Run air pressure test and save result to variable: air
  cnt = cnt + 1
Loop

IF air > 100 THEN Alert message dialog box: "Tire may explode air pressure above 100psi"
ELSEIF cnt=30 THEN Message dialog box: "Problem more than 30 tries. Report problem to supervisor"
ELSE Message dialog box: "Tire is properly inflated."

A.6.4.5 Infinite loop. An infinite loop is when an ending condition never occurs. Caution is needed to ensure a terminating condition is reached. An iteration loop counter will guarantee that the loop terminates. When the counter obtains the set maximum, the loop condition is satisfied. The examples in A.6.4.3 and A.6.4.4 demonstrate that the loop has a maximum of 30 iterations, thus an infinite loop cannot occur. If the counter was used to exit the loop, an error in the loop action has occurred and appropriate results taken (i.e., Fault condition action or Message dialog box).

A.6.5 Error conditions. Due to the programmatic nature of the State Table and Logic Engine, there exists the possibility of runtime errors occurring. Upon detection of an error, the Logic Engine error processing records in detailed the error information that is sufficient to reconstruct the errors to determine the problem. The technician is presented a message dialog box to identifying the problem and the next appropriate action. TABLE A-VIII contains, at a minimum, the error conditions and actions that are trapped and reported by the Logic Engine.

TABLE A-VIII. Error Conditions.

Error	Message	Action
A value is assigned to a variable that is declared as a different data type	Fatal	Fatal error, processing cannot continue
A referenced variable was not declared in the State Table	Fatal	Fatal error, processing cannot continue
Assigned variable data type and expression result data type do not match	Fatal	Fatal error, processing cannot continue
Division by zero	Fatal	Fatal error, processing cannot continue
Calculating the nth root of a negative integer or negative real	Fatal	Fatal error, processing cannot continue
Binary operation with incorrect data type operand(s)	Fatal	Fatal error, processing cannot continue
Unary operation with incorrect data type operand	Fatal	Fatal error, processing cannot continue
Expression can not be evaluated	Fatal	Fatal error, processing cannot continue

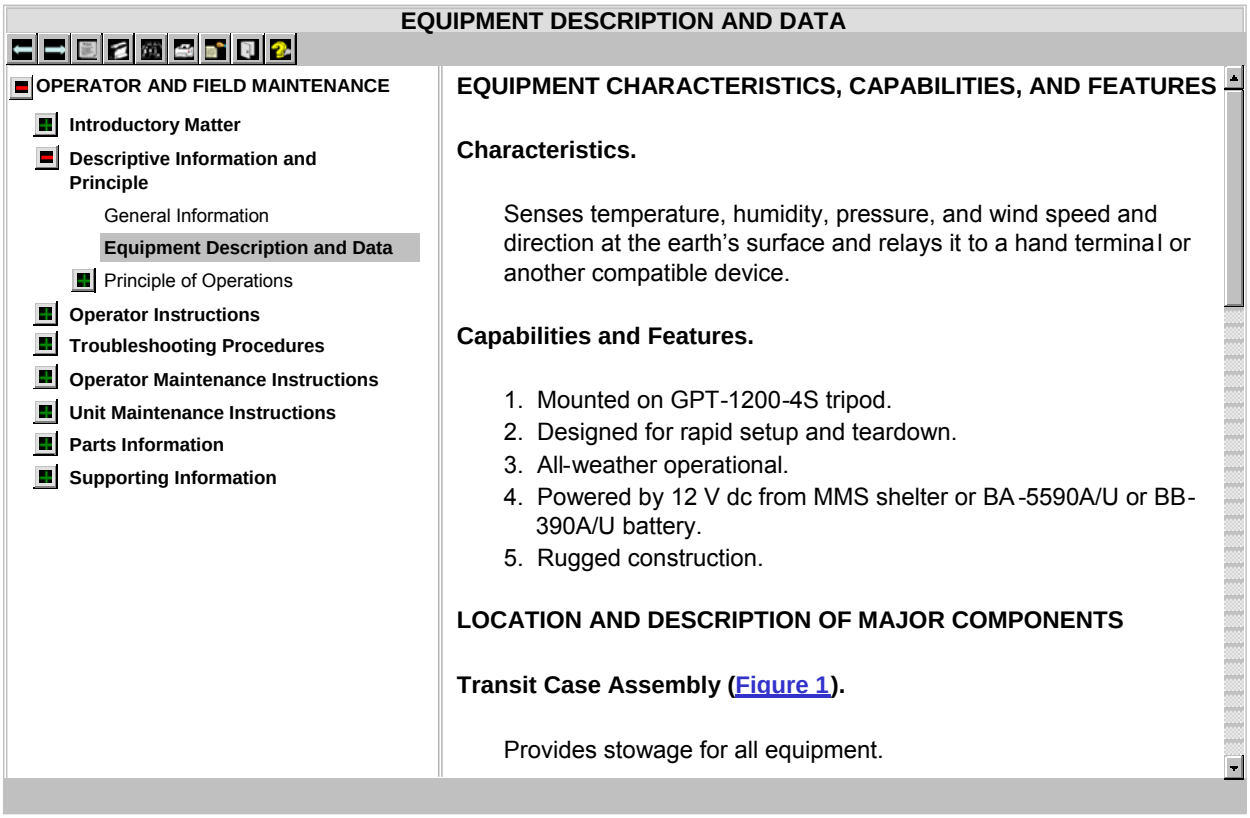

Figure A-1. Example of a linear IETM.

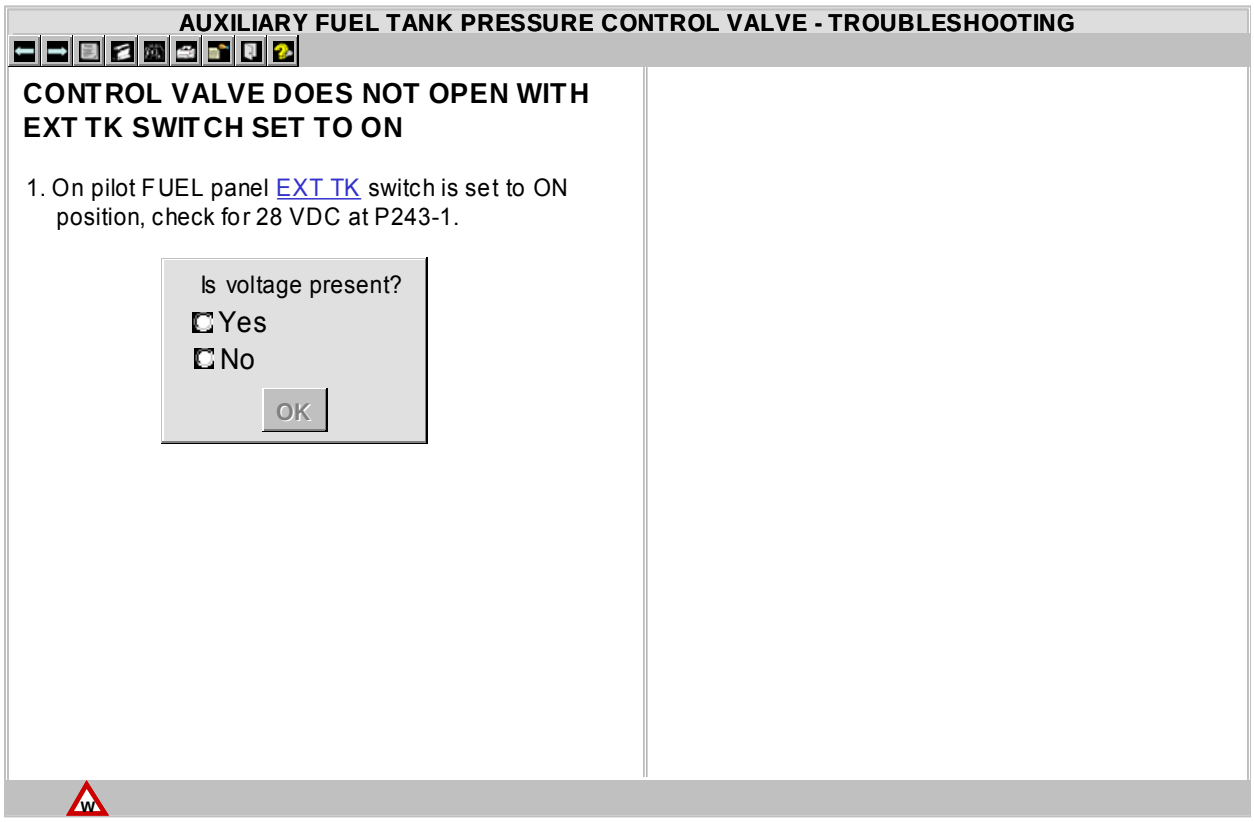

Figure A-2. <u>Example of a non-linear (frame-based) IETM.</u>

CD CONTENTS

This CD contains the following IETMs:

TM 11-5821-260 –	**Field and Sustainment Maintenance Repair/RPSTL, Radio Set AN/ARC-115**
TM 11-5841-286 –	**Field Maintenance/RPSTL, Radio Set AN/ARC-164(V) 12 and Radio Set AN/ARC-164(V) 16**
TM 11-6665-236 –	**Sustainment Maintenance, Radio Set AN/PDR-75**

NOTE: See Figure A-4 **for assembly guidance**

Figure A-3. Example of a CD content frame.

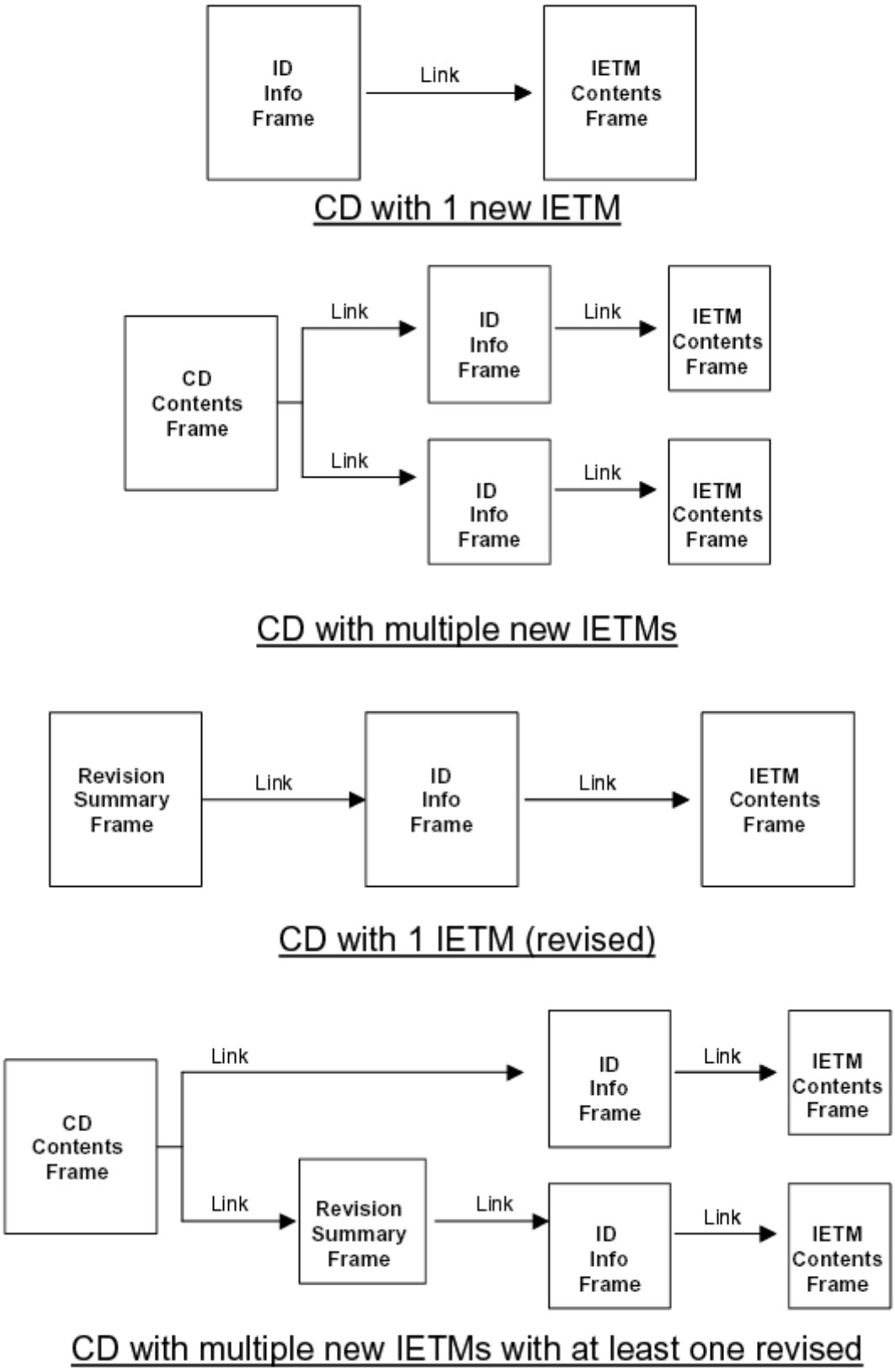

Figure A-4. Example of assembly of introductory frames.

REVISION SUMMARY

The following work packages have been changed in this IETM:

WP TITLE	REASONS FOR CHANGE
Generator Assembly AM1 Removal and Installation	Addition of a new electrical connector.
10-AMP Cold Start System Circuit Breaker on Driver Lib Shuts Off Troubleshooting	Additional test equipment required to perform Troubleshooting.

Example of standard revision summary frame.

REVISION SUMMARY

This revision implements Army Maintenance Transformation and changes the Maintenance Allocation Chart (MAC) to support Field and Sustainment Maintenance.

The following work packages have been changed in this IETM:

WP TITLE	REASON FOR CHANGE
Generator Assembly AM1 Removal and Installation	Addition of new electrical connector
10-AMP Cold Start System Circuit Breaker on Driver Lib Shuts Off Troubleshooting	Additional test equipment required to perform Troubleshooting
Maintenance Allocation Chart (MAC)	Change to two-level maintenance

Example of revision summary frame for maintenance transformation implementation.

NOTE: See Figure A-4 **for assembly guidance**

Figure A-5. Examples of a revision summary frames.

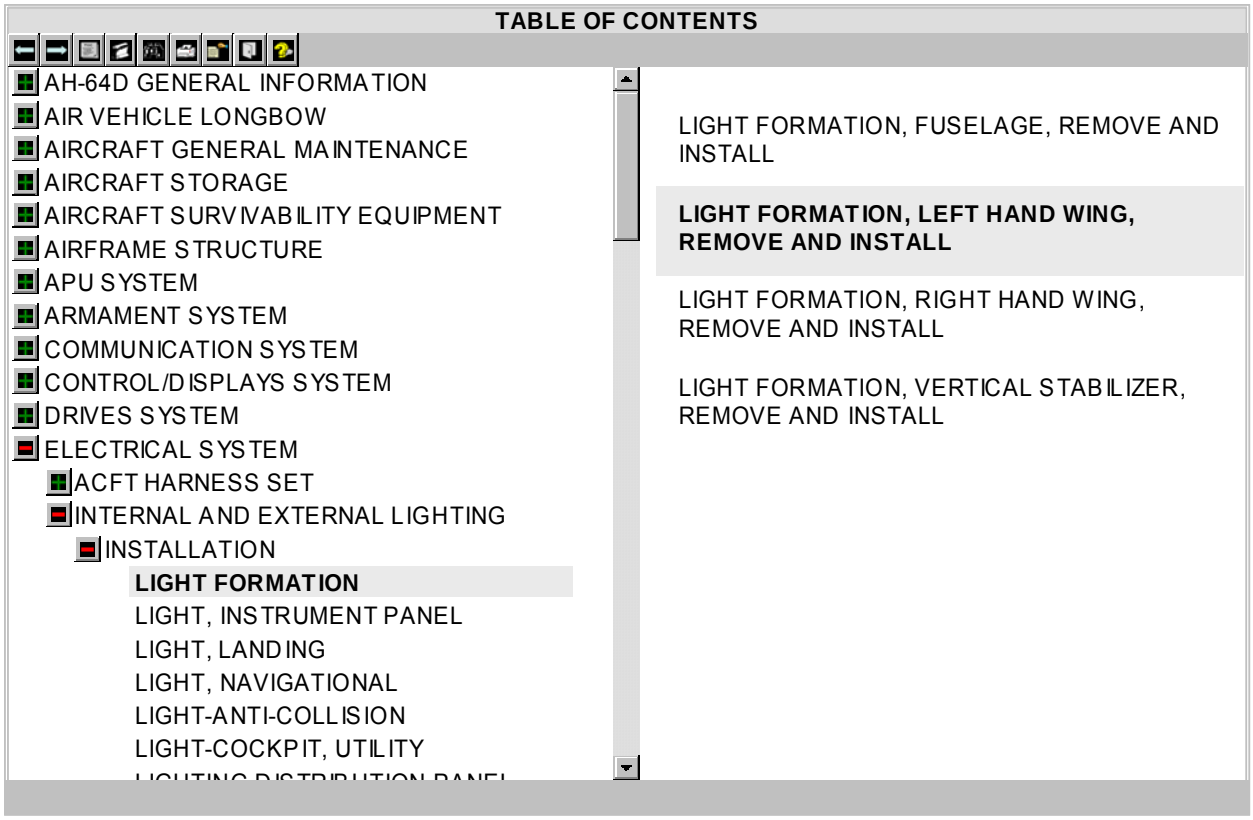

NOTE: See Figure A-4 **for assembly guidance**

Figure A-6. <u>Example of an IETM table of contents frame</u>.

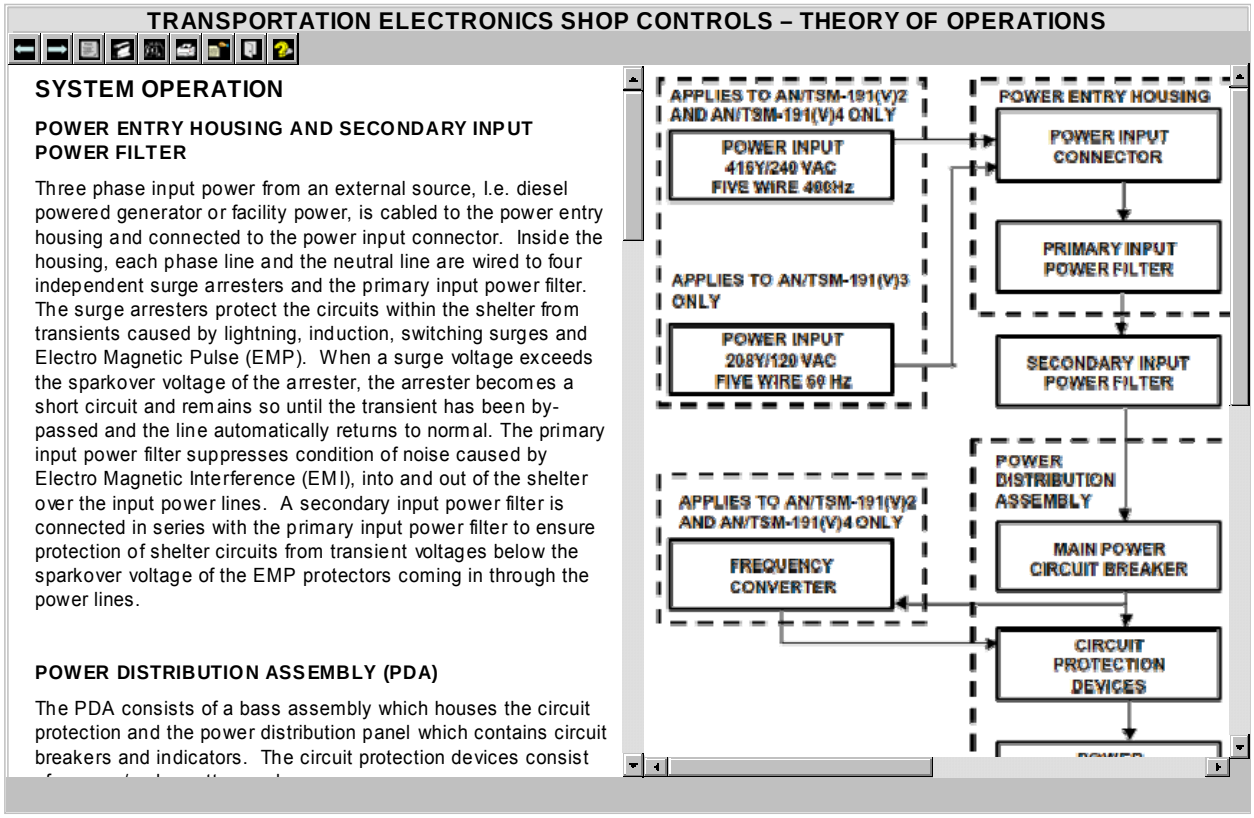

Figure A-7. Example of theory of operation.

AUXILIARY FUEL TANK PRESSURE CONTROL VALVE - TROUBLESHOOTING

CONTROL VALVE DOES NOT OPEN WITH EXT TK SWITCH SET TO ON

INITIAL SETUP

Tools And Special Tools

Tool Kit, Electrical Repairer's

Multimeter, Digital

Personnel Required

Aircraft Electrician 68F

Assistant (1)

References

TM 1-1520-238-T-6

Equipment Condition

Access provisions – L200 cover removed (TM 55-1520-238-23)

Access provision – T250L, T250R, T290L, T290R, AND L325 doors open (TM 55-1520-238-23)

AUXILIARY FUEL TANK PRESSURE CONTROL VALVE - TROUBLESHOOTING

CONTROL VALVE DOES NOT OPEN WITH EXT TK SWITCH SET TO ON

WARNING

Turn off power before detaching or attaching wires and connectors. High current 28 VDC or 115 VAC is present. Failure to do so could result in death or serious injury.

OK

Figure A-8. Example of a troubleshooting procedure.

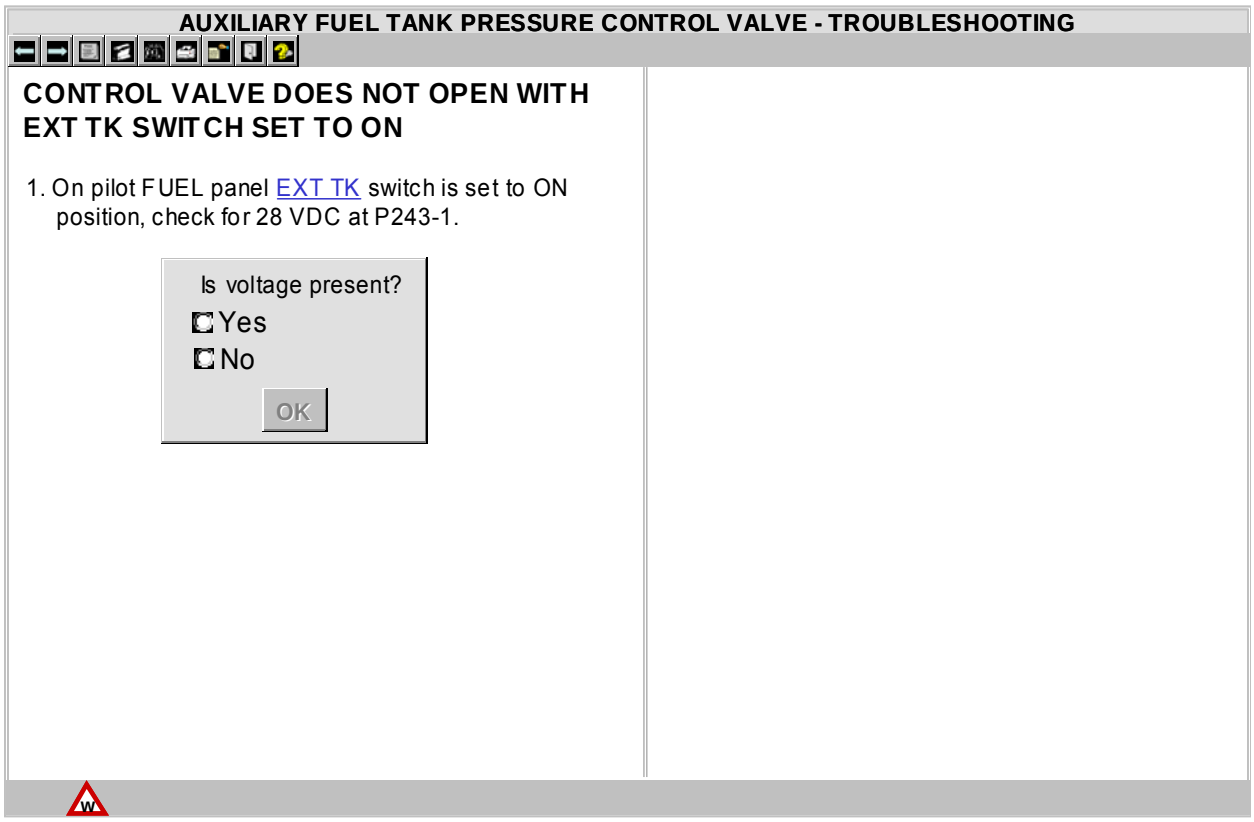

Figure A-8. Example of a troubleshooting procedure. - Continued.

AUXILIARY FUEL TANK PRESSURE CONTROL VALVE - TROUBLESHOOTING

CONTROL VALVE DOES NOT OPEN WITH EXT TK SWITCH SET TO ON

2. Check for open between P243-3 and GS576-A.

Does open exist?
- Yes
- No

OK

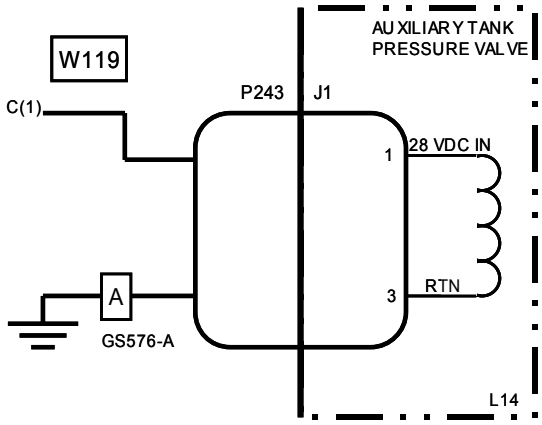

"

YES" RESPONSE BRANCHING

AUXILIARY FUEL TANK PRESSURE CONTROL VALVE - TROUBLESHOOTING

CONTROL VALVE DOES NOT OPEN WITH EXT TK SWITCH SET TO ON

2. Check for open between P243-3 and GS576-A.
3. Repair open wire.

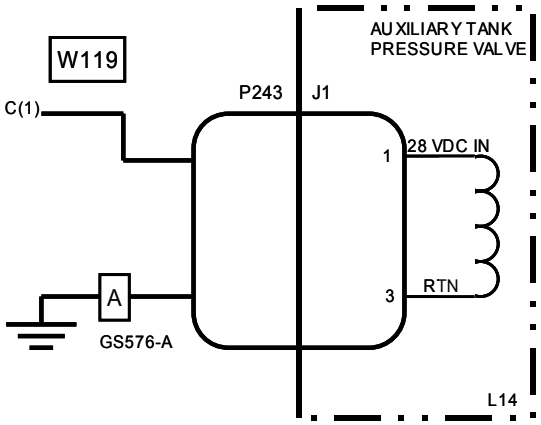

Figure A-8. Example of a troubleshooting procedure. - Continued.

AUXILIARY FUEL TANK PRESSURE CONTROL VALVE - TROUBLESHOOTING

CONTROL VALVE DOES NOT OPEN WITH EXT TK SWITCH SET TO ON

2. Check for open between P243-3 and GS576-A.

Does open exist?
- Yes
- No

OK

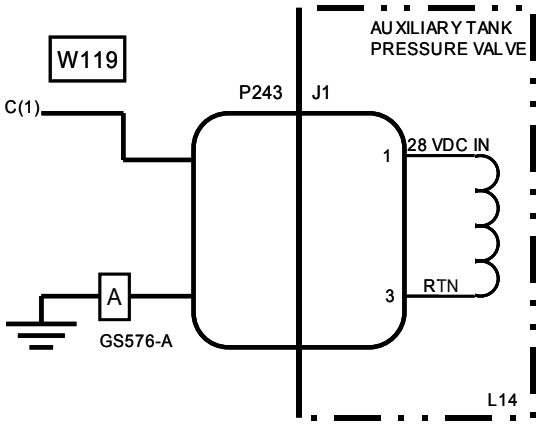

"NO" RESPONSE BRANCHING

AUXILIARY FUEL TANK PRESSURE CONTROL VALVE - TROUBLESHOOTING

CONTROL VALVE DOES NOT OPEN WITH EXT TK SWITCH SET TO ON

4. Check for 28 VDC at P174-B11.

Is voltage present?
- Yes
- No

OK

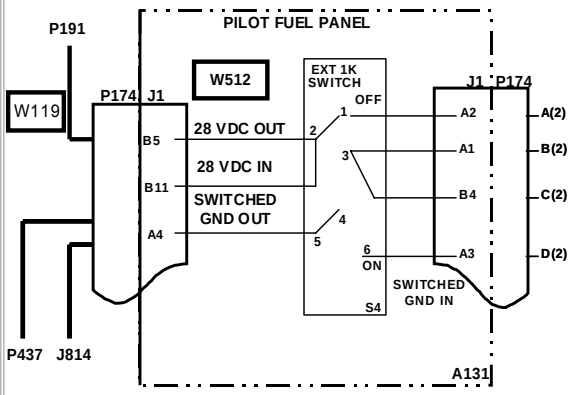

Figure A-8. Example of a troubleshooting procedure. - Continued.

AUXILIARY FUEL TANK PRESSURE CONTROL VALVE - TROUBLESHOOTING

CONTROL VALVE DOES NOT OPEN WITH EXT TK SWITCH SET TO ON

5. Check for 28 VDC at P2-D.

Is voltage present?

☐ Yes

☒ No

OK

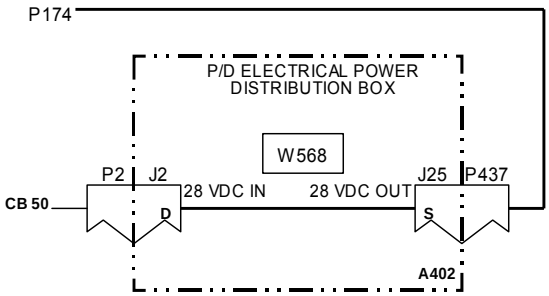

"NO" RESPONSE BRANCHING (CONTINUED)

AUXILIARY FUEL TANK PRESSURE CONTROL VALVE - TROUBLESHOOTING

CONTROL VALVE DOES NOT OPEN WITH EXT TK SWITCH SET TO ON

6. Troubleshoot circuit protection system (DC essential bus 2-pilot station.)

Figure A-8. Example of a troubleshooting procedure. - Continued.

REMOVE GUN MOUNT SUPPORT/TRACK (A)ME

INITIAL SETUP

Tools and Special Tools

General mechanic's tool kit, automotive

Torque wrench, ½ inch drive, 0.175 ft-lb

Personal Required

Unit Mechanic 63T10

References

TM 9-2350-291-10

Equipment Condition

Engine Stopped

REMOVE GUN MOUNT SUPPORT/TRACK (A)ME

1. **Remove Skate Mount Track (Figure 1, Item 4) from Gun Mount Support (Figure 1, Item 5).**

   a. Remove screw (Figure 1, Item 2) and remaining stop (Figure 1, Item 1) from gun mount support (Figure 1, Item 5) and track (Figure 1, Item 4).

   b. Remove six screws (Figure 1, Item 3) and track (Figure 1, Item 4) from gun mount support (Figure 5, Item 1).

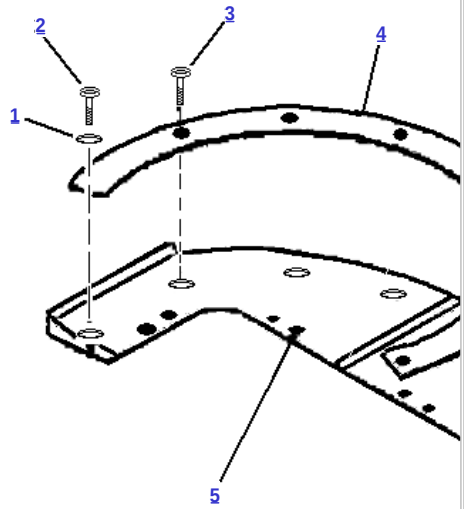

Figure 1. Gun Mount Support

Figure A-9. Example of a maintenance procedure.

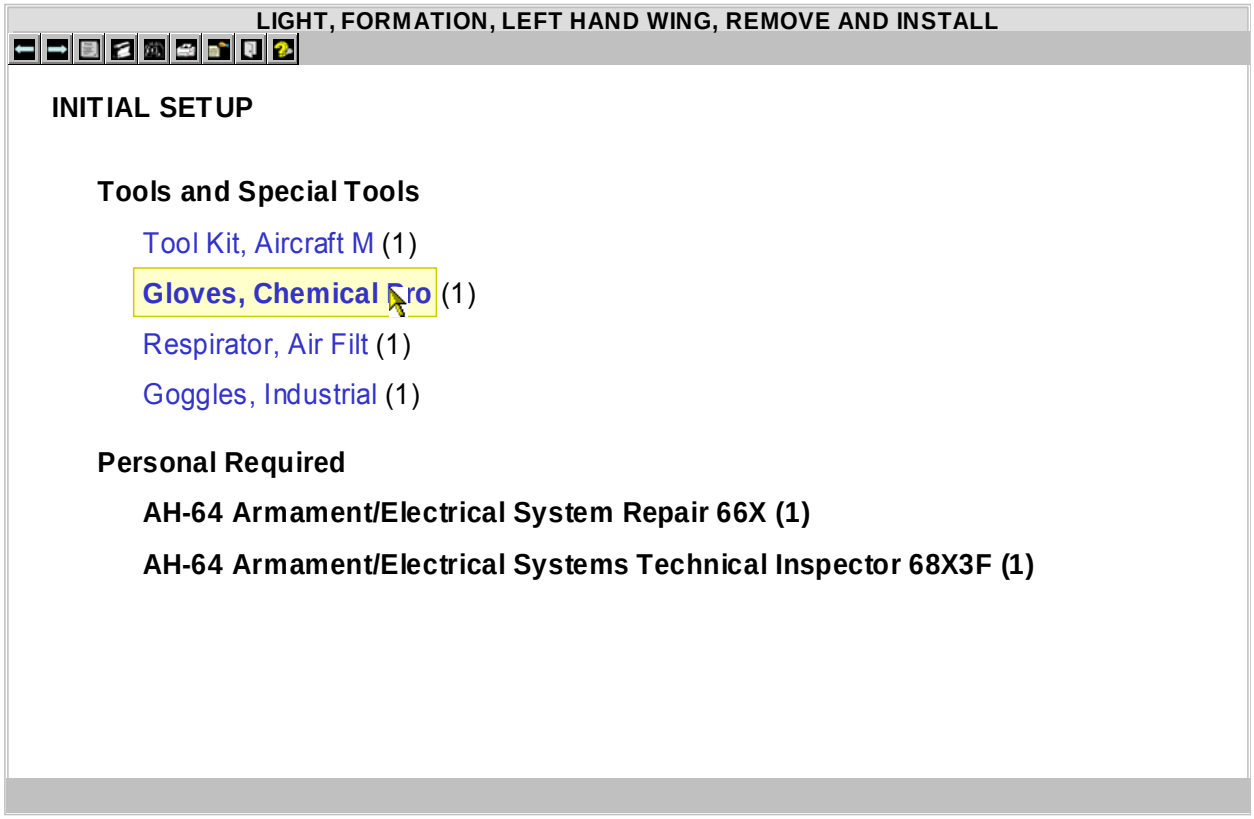

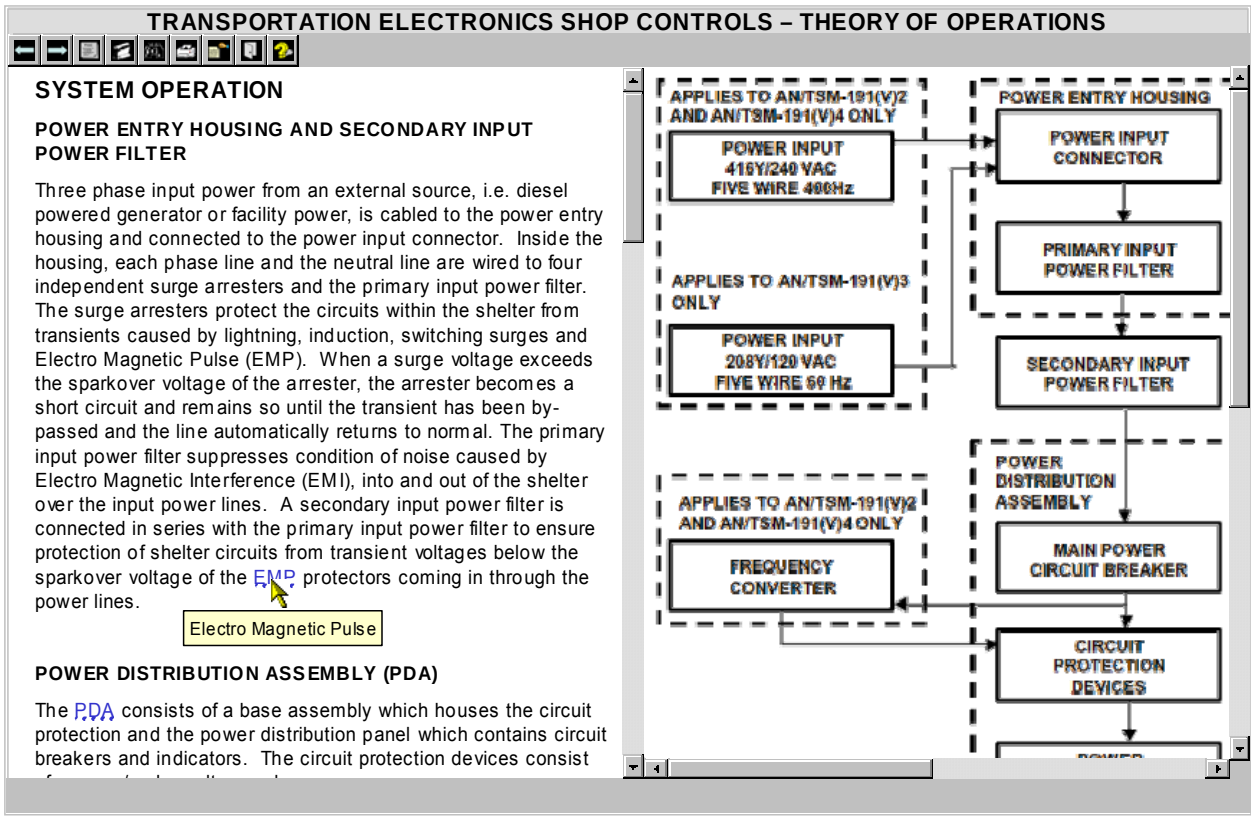

Figure A-10. Examples of Text Hotspots.

REMOVE GUN MOUNT SUPPORT/TRACK (A)ME

1. **Remove Skate Mount Track (Figure 1, Item 4) from Gun Mount Support (Figure 1, Item 5).**

   a. Remove screw (Figure 1, Item 2) and remaining stop (Figure 1, Item 1) from gun mount support (Figure 1, Item 5) and track (Figure 1, Item 4).

   b. Remove six screws (Figure 1, Item 3) and track (Figure 1, Item 4) from gun mount support (Figure 5, Item 1).

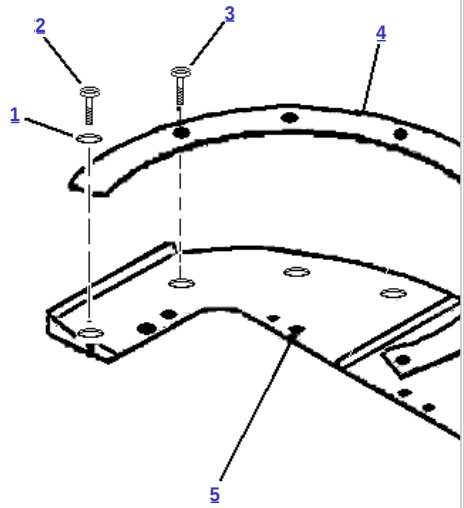

Figure 1. Gun Mount Support

FAST CONTROL STATION PILOT HOUSE

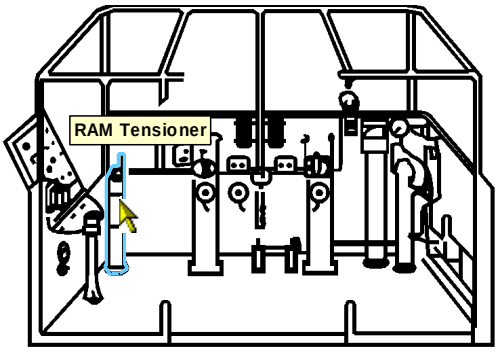

FAST CONTROL STATION PILOT HOUSE

Figure A-11. Examples of Graphic Hotspots.

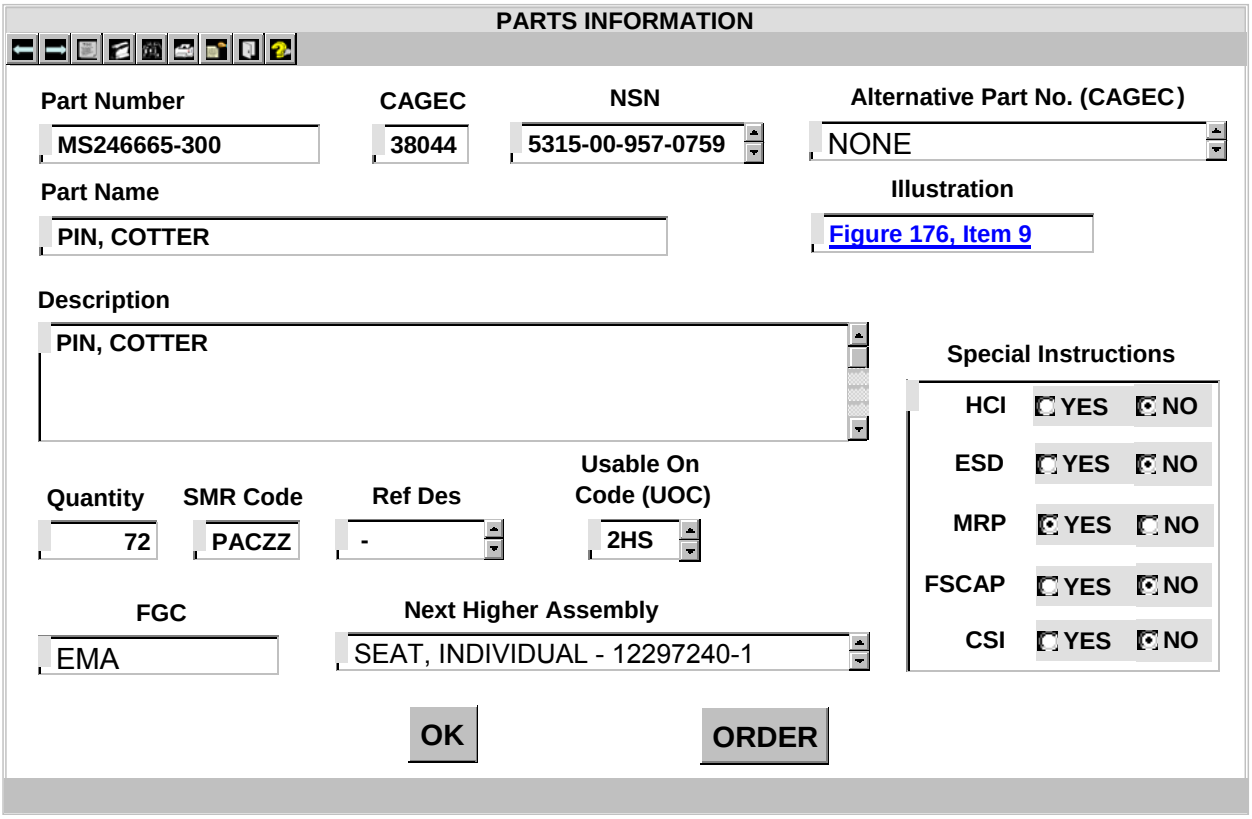

Figure A-12. Example of parts information.

LIGHT, FORMATION, LEFT HAND WING, REMOVE AND INSTALL

INITIAL SETUP

Tools and Special Tools

Tool Kit, Aircraft M (1)

Gloves, Chemical Pro (1)

Respirator, Air Filt (1)

Goggles, Industrial (1)

Personal Required

AH-64 Armament/Electrical System Repair 66X (1)

AH-64 Armament/Electrical Systems Technical Inspector 68X3F (1)

Figure A-13. Example of a work package initial setup.

INFORMATION MESSAGE

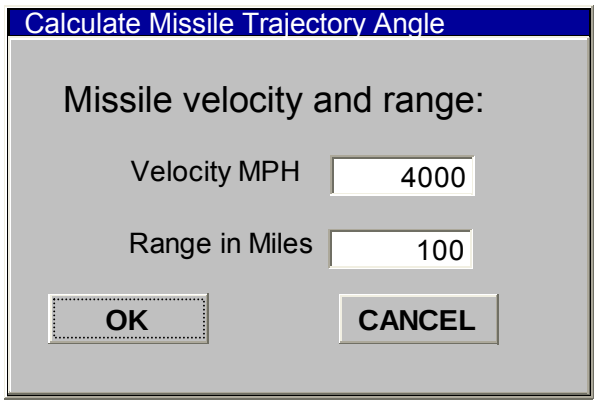

FILL-IN

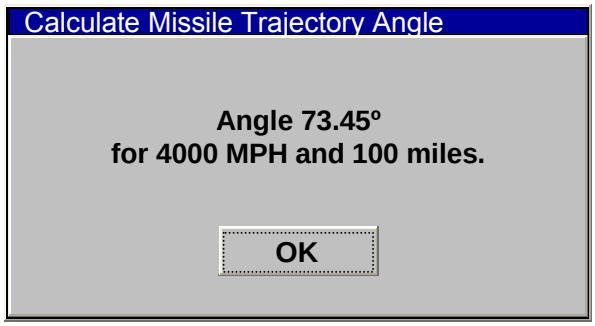

ANSWER MESSAGE

Figure A-14. Dialog box examples.

ALERT MESSAGE

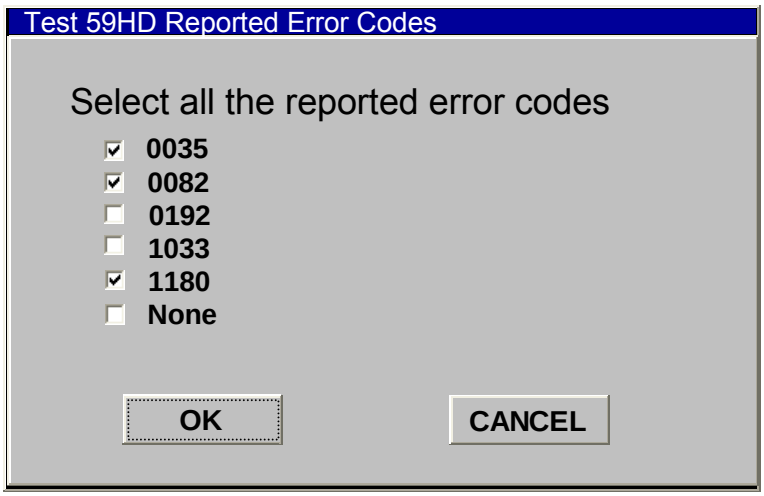

MULTIPLE CHOICE

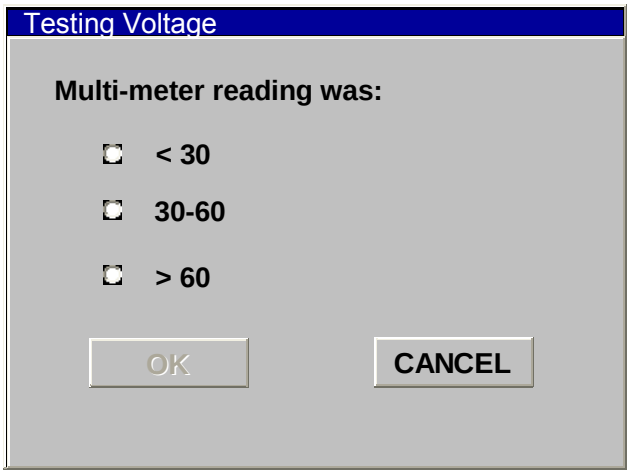

VERTICAL MENU

Figure A-14. Dialog box examples. - Continued

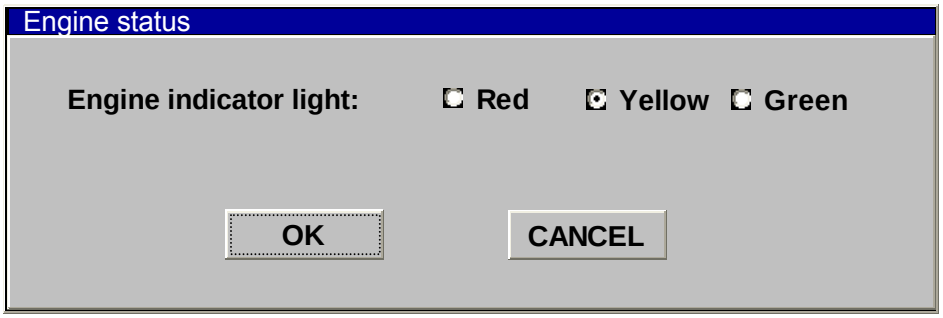

HORIZONTAL MENU

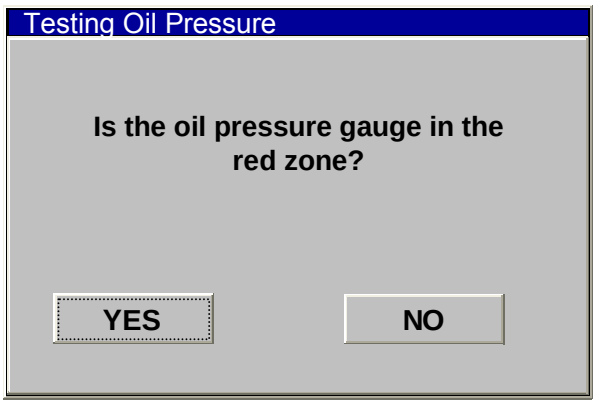

HORIZONTAL MENU USING BUTTONS

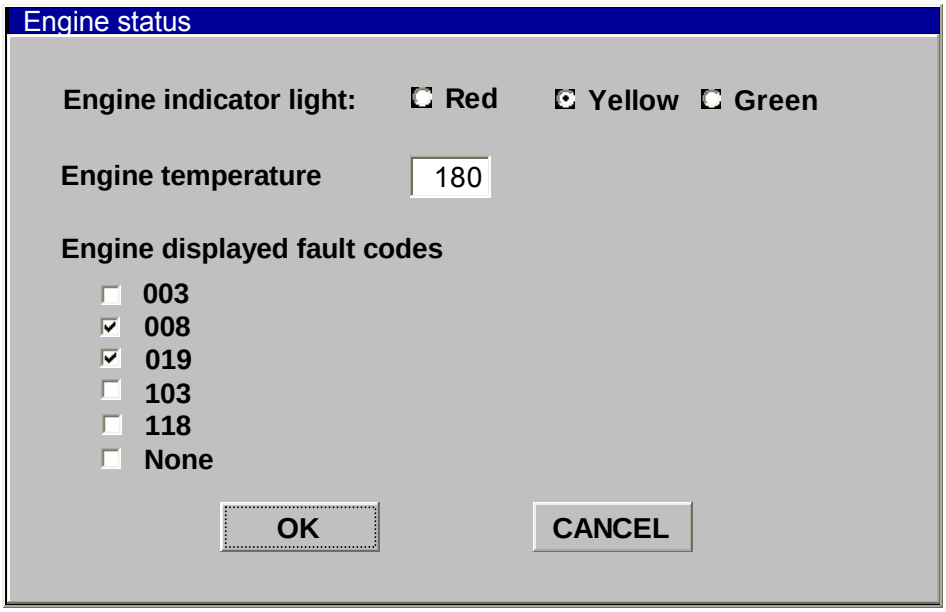

COMPOSITE

Figure A-14. Dialog box examples. - Continued

REMOVE GUN MOUNT SUPPORT/TRACK (A)ME

1. **Remove Skate Mount Track (Figure 1, Item 4) from Gun Mount Support (Figure 1, Item 5).**

   a. Remove screw (Figure 1, Item 2) and remaining stop (Figure 1, Item 1) from gun mount support (Figure 1, Item 5) and track (Figure 1, Item 4).

   b. Remove six screws (Figure 1, Item 3) and track (Figure 1, Item 4) from gun mount support (Figure 5, Item 1).

Review Revision

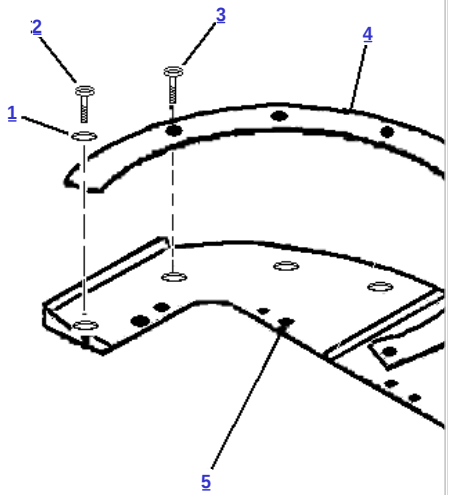

Figure 1. Gun Mount Support

REVISION SUMMARY

The following work packages have been changed in this IETM:

WP TITLE	REASONS FOR CHANGE
Generator Assembly AM1 Removal and Installation	Addition of a new electrical connector.
10-AMP Cold Start System Circuit Breaker on Driver Lib Shuts Off Troubleshooting	Additional test equipment required to perform Troubleshooting
Remove Gun Mount Support/Track (A)ME	Modified from five screws to six screws

Figure A-15. Examples of revision marks.

REPLACE ENGINE FUEL SUPPLY CHECK VALVE

INSTALL

1. Install tee (Figure 3, Item 1) and elbow (Figure 3, Item 2) on new check valve (Figure 3, Item 3).
   a. Place check valve (Figure 3, Item 3) in vise. Use jaw caps.
   b. Apply sealing compound to threads on tees (Figure 3, Item 1) and elbows (Figure 3, Item 2).
   c. Install tees (Figure 3, Item 1) in outlet end of check valve (Figure 3, Item 3). Tighten jamnut (Figure 3, Item 4).
   d. Turn check valve (Figure 3, Item 3) over in vise.
   e. Install elbow (Figure 3, Item 2) on check valve (Figure 3, Item 3).
   f. Remove check valve (Figure 3, Item 3) from vise.

ONE STEP PER DATA PANE

REPLACE ENGINE FUEL SUPPLY CHECK VALVE

INSTALL

1. Install tee (Figure 3, Item 1) and elbow (Figure 3, Item 2) on new check valve (Figure 3, Item 3).
   a. Place check valve (Figure 3, Item 3) in vise. Use jaw caps.
   b. Apply sealing compound to threads on tees (Figure 3, Item 1) and elbows (Figure 3, Item 2).
   c. Install tees (Figure 3, Item 1) in outlet end of check valve (Figure 3, Item 3). Tighten jamnut (Figure 3, Item 4).
   d. Turn check valve (Figure 3, Item 3) over in vise.
   e. Install elbow (Figure 3, Item 2) on check valve (Figure 3, Item 3).
   f. Remove check valve (Figure 3, Item 3) from vise.
2. Install clamp (Figure 3, Item 6) on check valve (Figure 3, Item 3).
3. Install clamp (Figure 3, Item 1) with check valve (Figure 3, Item 2) on engine.
   a. Position clamp (Figure 3, Item 1) with check valve (Figure 3, Item 2) on engine.

ALL STEPS PER DATA PANE

Figure A-16. Examples of number of procedural step per screen.

REPLACE ENGINE FUEL SUPPLY CHECK VALVE

INSTALL

3. Install clamp (Figure 3, Item 1) with check valve (Figure 3, Item 2) on engine.
   a. Position clamp (Figure 3, Item 1) with check valve (Figure 3, Item 2) on engine.
   b. Install spacer (Figure 3, Item 3) and new screw with captive lock washer (Figure 3, Item 4) on clamp (Figure 3, Item 1) and engine. Do not tighten screw with captive lock washer.
4. Install three tubes (Figure 3, Item 5, Figure 3, Item 6, Figure 3, Item 7) on tee (Figure 3, Item 8).
   a. Position three tubes (Figure 3, Item 5, Figure 3, Item 6, Figure 3, Item 7) on tee (Figure 3, Item 8).
   b. Thread tube fitting (Figure 3, Item 9) on elbow (Figure 3, Item 10) on tee (Figure 3, Item 8).
   c. Tighten tube fitting (Figure 3, Item 9), Use tubing wrench.
   d. Thread tube fitting (Figure 3, Item 11) on tee (Figure 3, Item 8).
   e. Tighten tube fitting (Figure 3, Item 11). Use tubing wrench.

SELECTED STEPS PER DATA PANE

Figure A-16. Examples of number of procedural step per screen. - Continued

REPLACE ENGINE FUEL SUPPLY CHECK VALVE

INSTALL

1. Install tee (Figure 3, Item 1) and elbow (Figure 3, Item 2) on new check valve (Figure 3, Item 3).
2. Install clamp (Figure 3, Item 6) on check valve (Figure 3, Item 3).
3. Install clamp (Figure 3, Item 1) with check valve (Figure 3, Item 2) on engine.
4. Install three tubes (Figure 3, Item 5, Figure 3, Item 6, Figure 3, Item 7) on tee (Figure 3, Item 8).
5. Install tube (Figure 3, Item 13) on elbow (Figure 3, Item 14).
6. Tighten screw with captive lock washer (Figure 3, Item 4) against clamp (Figure 3, Item 1).
7. Install transmission oil cooler (Detail Instructions).
8. Install engine coolant radiator (Detail Instructions).
9. Install radiator surge tank (Detail Instructions).
10. Fill coolant system (Detail Instructions)
11. Check and add transmission oil. See LO-X-XXX-XXX.

Figure A-17. Example of expert steps.

REPLACE ENGINE FUEL SUPPLY CHECK VALVE

INSTALL

1. Install tee (Figure 3, Item 1) and elbow (Figure 3, Item 2) on new check valve (Figure 3, Item 3).
   a. Place check valve (Figure 3, Item 3) in vise. Use jaw caps.
   b. Apply sealing compound to threads on tees (Figure 3, Item 1) and elbows (Figure 3, Item 2).
   c. Install tees (Figure 3, Item 1) in outlet end of check valve (Figure 3, Item 3). Tighten jamnut (Figure 3, Item 4).
   d. Turn check valve (Figure 3, Item 3) over in vise.
   e. Install elbow (Figure 3, Item 2) on check valve (Figure 3, Item 3).
   f. Remove check valve (Figure 3, Item 3) from vise.
2. Install clamp (Figure 3, Item 6) on check valve (Figure 3, Item 3).
3. Install clamp (Figure 3, Item 1) with check valve (Figure 3, Item 2) on engine.
   a. Position clamp (Figure 3, Item 1) with check valve (Figure 3, Item 2) on engine.

ALL SUBORDINATES SHOWN INITIALLY

REPLACE ENGINE FUEL SUPPLY CHECK VALVE

INSTALL

1. Install tee (Figure 3, Item 1) and elbow (Figure 3, Item 2) on new check valve (Figure 3, Item 3).
2. Install clamp (Figure 3, Item 6) on check valve (Figure 3, Item 3).
3. Install clamp (Figure 3, Item 1) with check valve (Figure 3, Item 2) on engine.
   a. Position clamp (Figure 3, Item 1) with check valve (Figure 3, Item 2) on engine.
   b. Install spacer (Figure 3, Item 3) and new screw with captive lock washer (Figure 3, Item 4) on clamp (Figure 3, Item 1) and engine. Do not tighten screw with captive lock washer.
4. Install three tubes (Figure 3, Item 5, Figure 3, Item 6, Figure 3, Item 7) on tee (Figure 3, Item 8).
   a. Position three tubes (Figure 3, Item 5, Figure 3, Item 6, Figure 3, Item 7) on tee (Figure 3, Item 8)
   b. Thread tube fitting (Figure 3, Item 9) on elbow (Figure 3, Item 10) on tee (Figure 3, Item 8).
   c. Tighten tube fitting (Figure 3, Item 9), Use tubing wrench.

REDUCED STEP 1 SUBORDINATE STEPS

Figure A-18. Example of procedural step and subordinate steps.

DESCRIPTION AND USE OF OPERATOR'S CONTROLS AND INDICATORS

Table 1. Instrument Panel Controls and Indicators.

Key	Control/Indicator
1	Radiator Fan Off Switch
2	Lamp Test Switch
3	Ether Start Switch
4	FRONT BRAKE AIR Pressure Gage
5	Lighted Indicator Display
6	OIL Pressure Gage

Function

When positioned to on, radiator fan off switch will illuminate to indicate the radiator fan is disabled. Radiator fan off switch will remain in the off position and not illuminated, unless otherwise directed.

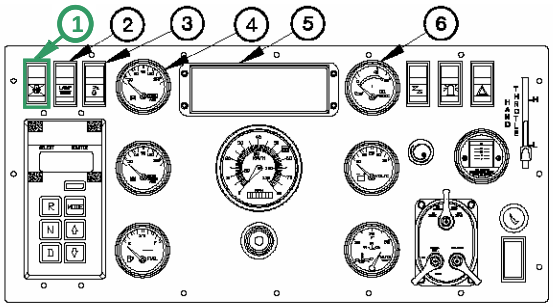

Figure 1. Instrument Panel Controls and Indicators

Figure A-19. Example of controls and indicators.

SERVICE UPON RECEIPT

Table 1. Inspection Criteria for Packaging

COMPONENT	ACCEPTABLE	REPARABLE	NONREPARABLE
Wooden Boxes and Crates			
Hardware	Operative and tight. Nails, screws, and fasteners	Inoperative or loose Nails, screws, and fasteners	None. None.
Ends	Free from damage	Broken or missing clears and handles	Damage that requires disassembly of box.
Wood	Splits less than 3 inches long, no closer than 1 inch to edge of board or adjoining split. The board must be secured by at least one nail on each side of the split when it extends to the end of the board	Splits more than 3 inches but no closer than 1 inch to edge of board or adjoining split, or ½-inch wide. That can be repaired by use of corrugated fasteners.	Splits closer than 1 inch to edge of board or adjoining split or over ½-inch wide.
Fiber Containers			

Figure A-20. Example checking unpacked equipment.

PREVENTIVE MAINTENANCE CHECKS AND SERVICES

Table 1. Preventative maintenance Checks and Services for Model M2A3/M3A3

ITEM NO.	INTERVAL	ITEM TO BE CHECKED OR SERVICED
☑ 1	Before	Vehicle exterior
☑ 2	Before	Final Drive Hull Drain Plugs
☑ 3	Before	Cooling System
☑ 4	Before	Driver's Hatch Cover
☑ 5	Before	Ramp
☑ 6	Before	Hull Drain Plugs
☑ 7	Before	Internal Fire Extinguisher
☐ 8	Before	Driver's Periscopes
☐ 9	Before	Internal Fire Extinguisher
☐ 10	Before	Driver's Instrument Panel Indicators

PROCEDURE

DRIVER

1. Check driver's periscope lenses for dirt and cracks.
   ☐ **EQUIPMENT NOT READY/AVAILABLE IF:** Over 50% loss of visibility through driver's center periscope lens.
2. Check that driver's blackout covers for tears.
3. Check that driver's blackout covers stay in place when closed

Discerpancies

PREVENTIVE MAINTENANCE CHECKS AND SERVICES

Table 2. PMCS Mandatory Replacement Parts List (A0/A1)

ITEM NO.	PART NUMBER	NSN	NOMENCLATURE	QTY
1 Order	DR-19-2353 (42765)	4240-01-026-3112	PRECLEANER AND PART (A1 ONLY)	01
2 Order	MS24665-285 (42765)	5315-01-061-2060	PIN, COTTER	01
3 Order	MS35333-42 (42765)	5310-00-595-7237	WASHER, LOCK	03
4 Order	MS35338-43 (42765)	5310-00-045-3296	WASHER, LOCK	01
5 Order	MS35338-44 (42765)	5310-00-582-5965	WASHER, LOCK	16
6 Order	MS35338-46 (42765)	5310-00-004-5033	WASHER, LOCK	09
7 Order	MS51922-1 (42765)	5310-00-088-1251	NUT, SELF-LOCKING	04
8	MS51922-17	5310-00-087-4652	NUT, SELF LOCKING	17

Figure A-21. Example of PMCS.

OVERHAUL INSPECTION PROCEDURES

Table 1. Overhaul Inspection Procedures for Spur Gear (Figure 4, Item, 5).

QA REQ	NO	REF LTR	CHARACTERISTIC	INSP METHOD	REQUISITE
NO	1		Serviceability	Visual/ measure	Examine for nicks, gouges, burrs, and corrosion, identified below repair damaged areas, 0.020 inch (0.508mm) or less deep, by blending.
YES	2		Metal fatigue	Magnetic particle inspection	No fractures or cracks.
YES	3	A	Tooth wear	Visual	No pitting, scuffing, scoring, metal flow, or wear steps allowed.
YES	4	B	Journal wear	Measure	Minimum diameter, 0.9841 inch (24.99mm). Repair WP.

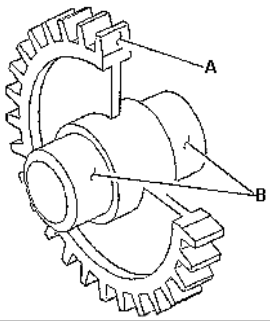

Figure A-22. Example of an OIP.

TEST AND INSPECTION

Table 1. Classification of Material Defects.

CATEGORIES OF DEFECTS/COMPONENTS AND DEFECTS	WP OR TM WITH CORRECTIVE ACTION	INSPECTION METHODS AFTER CORRECTIVE ACTION	ACCEPTABLE QUALITY LEVEL
CRITICAL			
1. Fuze not set on SAFE	WP Corrective Action	Visual	Fuze set on SAFE.
2. Fuze well liner missing	WP Corrective Action	Visual	Fuze well liner in place.
MAJOR			
MINOR			

Figure A-23. Example of a classification of material defect.

OVERHAUL AND RETIREMENT SCHEDULE

Units of operating equipment that are to be overhauled or retired at the period specified are listed here. Unless otherwise specified in TM 1-1500-328-23, Aeronautical Equipment Maintenance Management Policies and Procedures, removal of equipment for overhaul may be accomplished at the inspection nearest the time when overhaul is due.

Table 1. Overhaul and Retirement Schedule.

Part Name	Part Number/ CAGEC	Overhaul Interval Hours	Overhaul Interval Notes	Retirement Interval Hours	Retirement Interval Notes
Clutch Assembly	7-31131003 (02771)	1,000		4,500	1
	7-31131003-3 (02771)	1,000		14,500	1
	7-31131003-7 (02771)	1,000		14,500	1
	7-31131003-9 (02771)	1,000		14,500	1
Main Rotor Drive Shaft					
Main Rotor Drive Plate					

Figure A-24. Example of an overhaul and retirement schedule.

DEPOT MOBILIZATION REQUIREMENTS

Table 1. Mobilization Requirements.

WORK PACKAGE	ACTION
WP Details	Material and Fabrication, Step 6. Add "Depending on the urgency of requirements, availability of materials, and fabrication lead time, provisions of this work package may be relaxed. When that occurs, any practical method may be used to inscribe or attach the data to the equipment, i.e., decals."
WP Details	Cleaning, Step 3. Add "Clean only to the extent necessary to perform preshop analysis."
WP Details	Cleaning, Step 8. Add "Clean only to the extent necessary to inspect components."
WP Details	Painting, Step 3. Add "Painted surfaces will be treated for corrosion and scratches that expose bare metal. Touch-up painting need not correlate in hue and gloss."
WP Details	Delete

END OF WORK PACKAGE

Figure A-25. Example of Depot Mobilization Requirements.

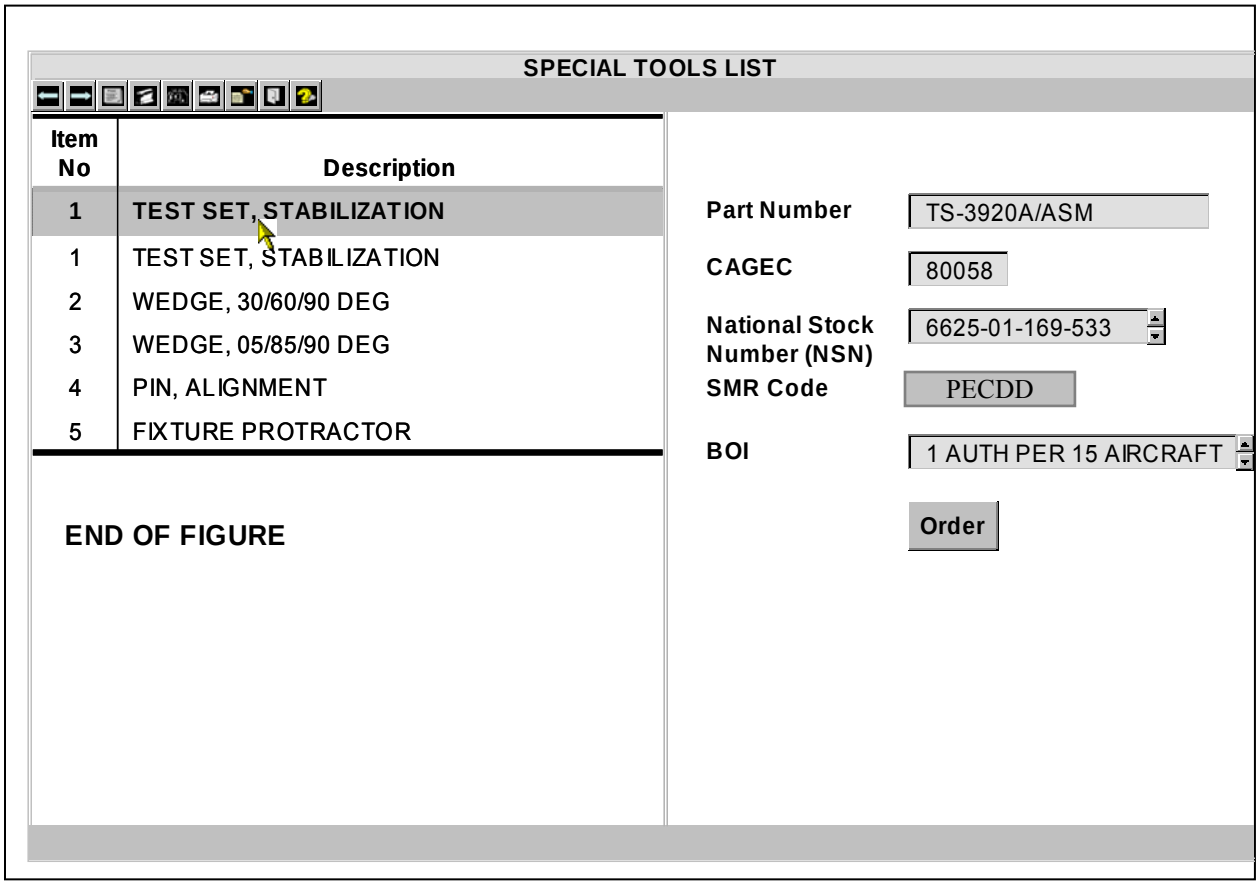

Figure A-26. Example of special tools list.

GROUP 15 AUXILIARY POWER UNIT

Check Supply

GROUP 15 AUXILIARY POWER UNIT
FIG. 10 T62T-2A, T62T-2A1 GAS TURBINE ENGINE

ITEM NO.	SMR CODE	NSN	CAGEC	PART NUMBER	DESCRIPTION AND USABLE ON CODE (UOC)	QTY
3	PACZZ	5310-00-877-5797	96906	MS21044N3	. NUT, SELF-LOCKING UOC: NB4, NB5	2
4	PACZZ		88044	AN960DD10	. WASHER, FLAT UOC: NB4, NB5, NB6	2
5	KACZZ	5330-00-263-8030	96906	MS29512-06	. PACKING, PREFORMED PART OF KIT P/N 31766-1	10
6	PACCC	2910-00-919-2021	58220	28022-4	.NOZZLE ASSEMBLY STATOR UOC: NB4, NB5, NB6	1
7	KDCZZ	5330-00-961-1463	96906	MS35769-5	. . GASKET PART OF KIT P/N 31766-1 UOC: NB4, NB5, NB6	1
8	PACZZ		71895	970HE1UPPH	. . NOZZLE, STATOR UOC: NB4, NB5, NB6	1
9	KACZZ	5330-00-961-1463	55820	26793-1	. . GASKET PART OF KIT P/N 31766-1 UOC: NB4, NB5, NB6	1
	PACZZ		**55820**	**31766-1**	**SEAL KIT, TURBINE** **GASKET (1) 10–7** **GASKET (1) 10–9** **PACKING, PREFORMED (10) 10–5**	**V**

END OF FIGURE

Figure A-27. <u>Example of kits option 1.</u>

GROUP 94 REPAIR KITS

Item No.	Description and Usable On Code (UOC)
1	PARTS KIT, HEATER, VE PERSONNEL HEATER 1
2	PARTS KIT, HEATER, VE PERSONNEL HEATER 1
3	MOUNT, ENGINE TO BE INSTALLED ONLY AS A SET 1
4	PARTS KIT, HYDRAULIC

END OF FIGURE

Part Number G704528
CAGEC 78385
National Stock Number (NSN) 2540-00-255-0775
SMR Code PACZZ
Qty 1

Kit Items

GASKET	(1)	239–5
PACKING, PREFORMED	(1)	239–4
PACKING, PREFORMED	(1)	239–6
PACKING, SEAL	(4)	239–8
PARTS KIT, ROTARY PU	(2)	239–9
PARTS KIT, ROTARY PU	(10)	239–10
PIN	(20)	239–14
PLATE, INLET SUPPORT	(1)	239–13
PLATE, OUTLET SUPPORT	(1)	239–7
RETAINER, PACKING	(1)	239–12

Order

Figure A-28. Example of kits option 2.

GROUP 9501 BULK MATERIAL

Check Supply

GROUP 95 GENERAL USE STANDARDIZED PARTS GROUP 9501 BULK MATERIAL FIG. 15 BULK

ITEM NO.	SMR CODE	NSN	CAGEC	PART NUMBER	DESCRIPTION AND USABLE ON CODE (UOC)	QTY
1	PACZZ	5330-00–982–5130	81349	MILC7637TYP2	ASBESTOS SHEET, WOVE	1
2	XBCZZ		19207	RRC271	CHAIN, WELDLESS	1
3	PACZZ	5975-00-285-0907	97030	LOOM	3/8 ID CONDUIT, NONMETALIC	1
4	PACZZ	9340-00-142-6860	19207	11633348	GLASS, LAMINATED	1
5	PACZZ	9340-00-285-6775	19200	8635931	GLASS, LAMINATED	1
6	PFFZZ	4720-00-809-2429	30299	FT3548-5	HOSE, AIR DUCT	1
7	**PAFZZ**	**4720-00-001-0093**	**81349**	**MIL-H-13531**	**NOSE ASSEMBLY, NONME**	**1**
8	XBCZZ		85757	3250-0610	HOSE, NONMETALLIC	1
9	PAFZZ	4720-00-999-8994	01276	303-8	HOSE, NONMETALLIC	1
10	PACZZ	4720-00-951-2433	96909	MS521301A229R	HOSE, NONMETALLIC	1
11	PACZZ	4720-01-009-9058	85757	3250-1010	HOSE, NONMETALLIC	1
12	PACZZ	4720-00-683-8830	81349	MIL-H-8788-4	HOSE, NONMETALLIC	1
13	PACZZ	4720-00-999-4044	11083	3R7752	HOSE, PREFORMED	1

Figure A-29. Example of bulk items.

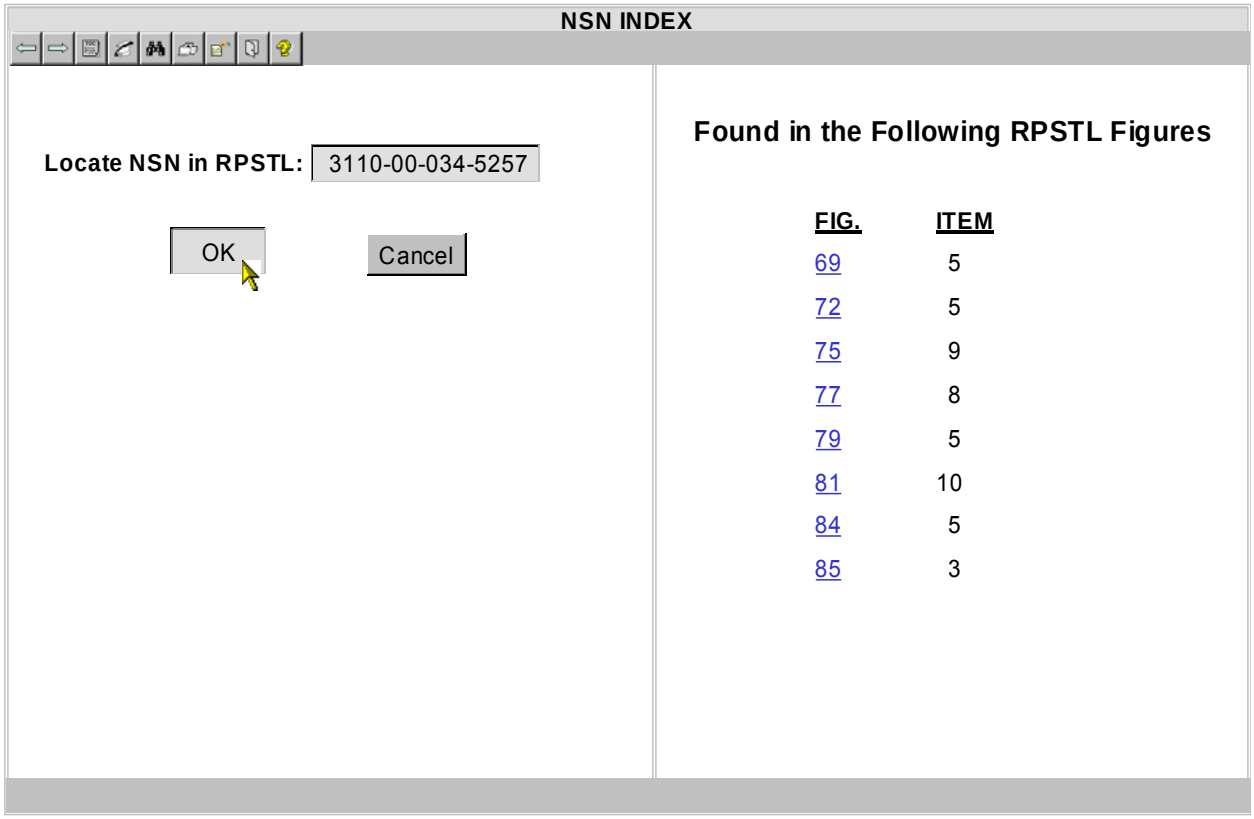

Figure A-30. Example of NSN index.

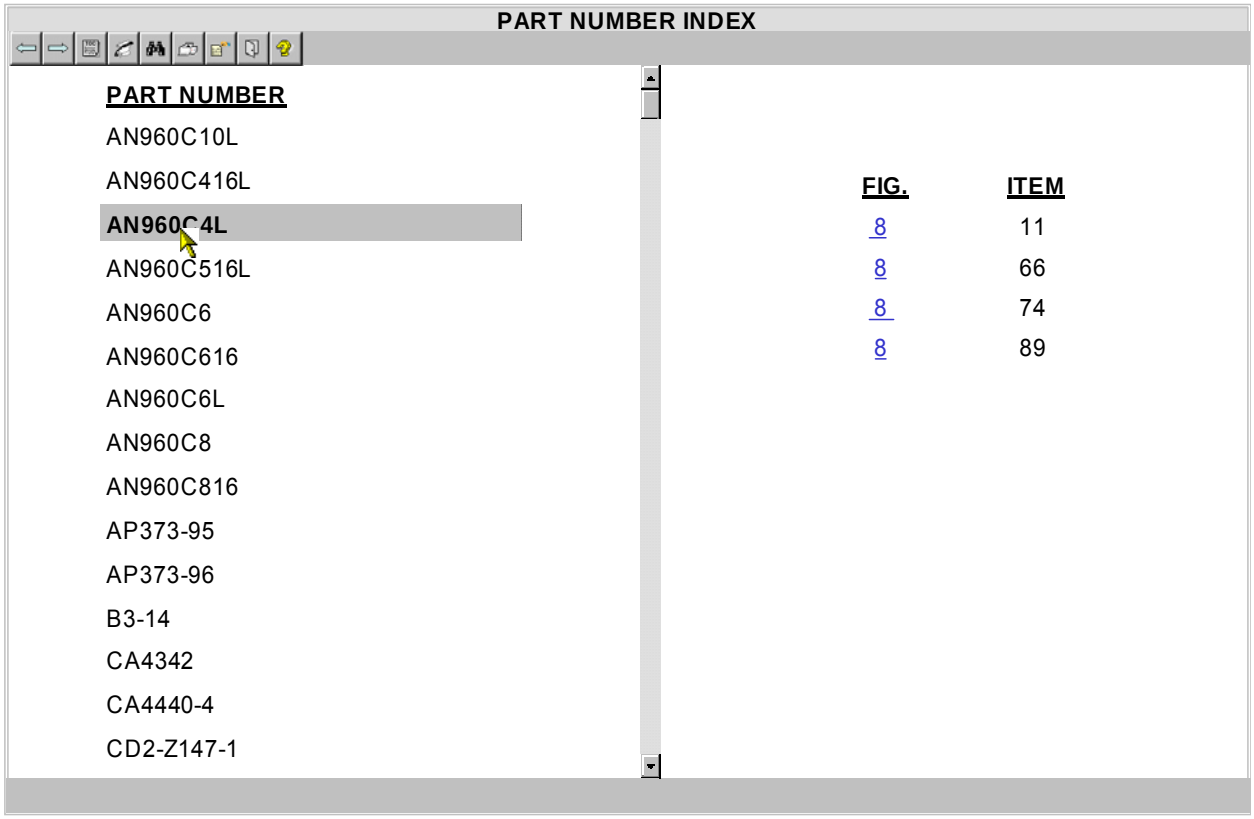

Figure A-31. Example of part number index.

REFERENCE DESIGNATOR INDEX

REFERENCE DESIGNATOR	FIG.	ITEM
2AT1	2	309
2AT10	2	552
2AT11	2	699
2AT12	2	699
2AT13	2	479
2AT14	2	479
2AT2	2	309
2AT3	2	558
2AT4	2	564
2AT5	2	479
2AT5	2	705
2AT6	2	494
S1	1	15
W2	1	3

Figure A-32. Example of reference designator index.

Figure A-33. DELETED.

MAINTENANCE ALLOCATION CHART

Group No.	Component/ Assembly
00	BSTF
01	Shelter
0101	Power Distribution Assembly
0102	Power Entry Filter
010201	Filter, Power Input
0103	Filter, Second Power
0104	Thermal Detection and Alarm
0105	Land Line Assembly
0106	NBC Filter System
010601	System Control Mod
0107	Air Conditioner (Vertical)
0108	Air Conditioner (Horizontal)
010801	Air Control Module
02	Frequency Converter
0201	Frequency Converter Sub Assembly

Group No. 0105
Component/ Assembly Land Line Assembly

Maint Function	Maintenance Level				Tools/ Equip Ref Code	Remarks Code
	Field		Sustainment			
	Crew	Maintainer	Below Depot	Depot		
	C	F	H	D		
Test	0.3				10	
Replace	2.6				6, 10	
Repair		1.0			1, 6, 10, 12	E

Figure A-34. Example of a standard two-level MAC.

MAINTENANCE ALLOCATION CHART

Group No.	Component/ Assembly
00	BSTF
01	Shelter
0101	Power Distribution Assembly
0102	Power Entry Filter
010201	Filter, Power Input
0103	Filter, Second Power
0104	Thermal Detection and Alarm
0105	**Land Line Assembly**
0106	NBC Filter System
010601	System Control Mod
0107	Air Conditioner (Vertical)
0108	Air Conditioner (Horizontal)
010801	Air Control Module
02	Frequency Converter
0201	Frequency Converter Sub Assembly

Group No. 0105
Component/ Assembly Land Line Assembly

Maint Function	Maintenance Level: Field		Maintenance Level: Sustainment		Tools/ Equip Ref Code	Remarks Code
	Crew	Maintainer	Below Depot	Depot		
	C	F	H	D		
Test	0.3				10	
Replace	2.6				6, 10	
Repair		1.0			1, 6, 10, 12	E

Tools or Test Equipment Ref Code 10
Maint Level O, F
Nomenclature Telephone Set
National Stock Number SM-D-283351
Tool Number 5805-00-177-7033

MAINTENANCE ALLOCATION CHART

Group No.	Component/ Assembly
00	BSTF
01	Shelter
0101	Power Distribution Assembly
0102	Power Entry Filter
010201	Filter, Power Input
0103	Filter, Second Power
0104	Thermal Detection and Alarm
0105	**Land Line Assembly**
0106	NBC Filter System
010601	System Control Mod
0107	Air Conditioner (Vertical)
0108	Air Conditioner (Horizontal)
010801	Air Control Module
02	Frequency Converter
0201	Frequency Converter Sub Assembly

Group No. 0105
Component/ Assembly Land Line Assembly

Maint Function	Maintenance Level: Field		Maintenance Level: Sustainment		Tools/ Equip Ref Code	Remarks Code
	Crew	Field	Below Depot	Depot		
	C	F	H	D		
Test	0.3				10	
Replace	2.6				6, 10	
Repair		1.0			1, 6, 10, 12	E

Remarks Code E
Remarks Fault isolate during schedule PMCS per TM XX-XXX-XX-12 or during BSTF operation.

Figure A-34. Example of a standard two-level MAC. - Continued

Figure A-35. DELETED.

MAINTENANCE ALLOCATION CHART

Group No.	Component/ Assembly
02	AIR FRAME STRUCTURE
0201	FORWARD FUSELAGE ASSY
020101	ACCESS DOOR
020102	KEEL BEAM ASSY
020103	FORWARD FUSELAGE GUN AND AMMO SUPPORT CONTROL SURFACE
020104	FORWARD FUSELAGE UPPOER STRUCTURE SUPPORT FITTING (BRU)
020105	FORWARD FUSELAGE ELECTRONIC DOOR ASSY
02010601	FORWARD FUSELAGE TRAY ASSY

Group No. 0105
Component/ Assembly Land Line Assembly

Maint Function	Maintenance Level				Tools/ Equip Ref Code	Remarks Code
	Field		Sustainment			
	AMC (O)	ASB (F)	TASMG (L)	Depot (D)		
Inspect	- -	- -			376	
Remove		- -				
Install		- -				
Repair		- -	- -			
Test		- -	- -			D

FIGURE A-35A. Example of a aviation two-level MAC.

MAINTENANCE ALLOCATION CHART

Group No.	Component/ Assembly
02	AIR FRAME STRUCTURE
0201	FORWARD FUSELAGE ASSY
020101	ACCESS DOOR
020102	KEEL BEAM ASSY
020103	FORWARD FUSELAGE GUN AND AMMO SUPPORT CONTROL SURFACE
020104	FORWARD FUSELAGE UPPER STRUCTURE SUPPORT FITTING (BRU)
020105	FORWARD FUSELAGE ELECTRONIC DOOR ASSY
02010601	FORWARD FUSELAGE TRAY ASSY

Group No. 0105
Component/ Assembly Land Line Assembly

Maint Function	Maintenance Level				Tools/ Equip Ref Code	Remarks Code
	Field		Sustainment			
	AMC (O)	ASB (F)	TASMG (L)	Depot (D)		
Inspect	- -	- -			376	
Remove		- -				
Install		- -				
Repair		- -	- -			
Test		- -	- -			D

Tools or Test Equipment Ref Code: 376
Maint Level: O
Nomenclature: Tool kit, aircraft mechanic's
National Stock Number: 5180-00-323-4692
Tool Number: SC518099CLA01

MAINTENANCE ALLOCATION CHART

Group No.	Component/ Assembly
02	AIR FRAME STRUCTURE
0201	FORWARD FUSELAGE ASSY
020101	ACCESS DOOR
020102	KEEL BEAM ASSY
020103	FORWARD FUSELAGE GUN AND AMMO SUPPORT CONTROL SURFACE
020104	FORWARD FUSELAGE UPPOER STRUCTURE SUPPORT FITTING
020105	FORWARD FUSELAGE ELECTRONIC DOOR
02010601	FORWARD FUSELAGE TRAY ASSY

Group No. 0105
Component/ Assembly Land Line Assembly

Maint Function	Maintenance Level				Tools/ Equip Ref Code	Remarks Code
	Field		Sustainment			
	AMC (O)	ASB (F)	TASMG (L)	Depot (D)		
Inspect	- -	- -			376	
Remove		- -				
Install		- -				
Repair		- -	- -			
Test		- -	- -			D

Remarks Code: D
Remarks: Repair by removing surface corrosion.

FIGURE A-35A. Example of an aviation two-level MAC - Continued.

COMPONENT OF END ITEM (COEI)

Table 1. Component of End Item List.

Item No	Description
1	MOUNT, MACHINE GUN 1:cal. .50 (in mount on cupola)
2	PERISCOPE:M27 (chief of section) (stowage box cab wall)
3	PERISCOPE:M45 (driver's) (stowage box driver's compartment)
4	TELESCOPE, PANORAMIC M117 (in mount M145 or telescope box)
5	TELESCOPE, ELBOW: M118CA1 (in mount M146)

Part Number	7068880
CAGEC	19204
National Stock Number (NSN)	1005-00-706-8880
Usable On Code	PAA
U/I	EA
Qty Rqr	1

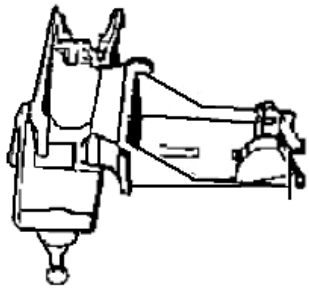

Figure A-36. Example of components of end item (COEI) list.

BASIC ISSUE ITEM (BII)

Table 2. Basic Issue Item List.

Item No	Description
1	LIGHT, AIMING POST;M14
2	LUBRICATING GUN, HAND : high pressure (in tool bag)
3	MITTENS, CLOTH : (pair) M1942 (in oddment tray)
4	OILER, HAND : steel, pump type, 1pt, spout 9 lg (in left cab door stowage box)
5	PAIL, UTILITY : 14-qt capability (on vehicle Floor)

Part Number	7197188
CAGEC	19200
National Stock Number (NSN)	1290-00-535-7629
Usable On Code	PAA
U/I	EA
Qty Rqr	2

Order

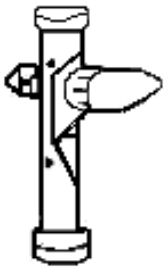

Figure A-37. Example of basic issue items (BII) list

ADDITIONAL AUTHORIZATION LIST

Table 1. Additional Authorization List

National Stock Number	Description, Part Number/(CAGEC)	Usable On Code	U/I	Qty Recm
MTOE AUTHORIZED ITEMS				
665-01-105-5623 Order	ALARM, CHEMICAL AGENT 8762101 (19200)		EA	1
1240-01-207-5787 Order	BINOCULARS, MOD, CON M22 9370122 (19200)		EA	1
2590-01-148-7961 Order	CABLE KIT, SPECIAL PURPOSE 223592-2000 (19200)		EA	1
1080-00-623-7295 Order	CAMOUFLAGE SCREEN WOODLAND/DST POLES 11655722 (34623)		EA	1
1080-00-103-1246 Order	CAMOUFLAGE SCREEN WOODLAND RAD SCT 11655720 (34623)		EA	1
6665-01-199-4153 Order	CHEMICAL AGENT MONITOR 11645620 (34623)		EA	1

Figure A-38. Example of an additional authorization list.

EXPENDABLE AND DURABLE ITEMS LIST

Item Name, Description, Part Number/(CAGEC). This column provides the other information you need to identify the item. The last line below the description is the part number and the Commercial and Government Entity Code (CAGEC) (in parentheses).

U/I. Unit of Issue (U/I) code shows the physical measurement or count of an item, such as gallon, dozen, gross, etc.

Table 1. Expendable and Durable Items List.

Item No.	Level	National Stock Number (NSN)	Item Name, Description	Part Number/ (CAGEC)	U/I
1	C	6810-00–201–0906	Alcohol, denatured, Grade III, 16 ounce bottle	O-E-760 (81348)	BT
2	C	8030-01-138-1666	Antiseize Compound, 250-gram tube	MIL-T-5544 (81349)	TU
3	C	6515-00-059-5235	Applicator, disposable, package of 1000	A-A-30016 (58536)	PK
4	C	8020-00-224-8024	Brush, artist, MTL ferrule, round, tapered point, Type I, camel hair	H-B-118 (81348)	EA
5	C	9150-01-054-6453	Cleaner, Lubricant & Preservation (CLP), 1-pint bottle with sprayer	MIL-L-63640 (81349)	P

Figure A-39. Example of a expendable and durable items list.

TOOLS IDENTIFICATION LIST

Table 1. MICLIC Tools Identification List

Item No.	Item Name	National Stock Number (NSN)	Part Number/ (CAGEC)	Reference
1	Adapter, socket wrench, 1/2 inch-3/4 inch	5120-00-114-5207	11655788-3 (81349)	TM 9-2350-252-20P-1
2	Adapter, socket wrench, 3/8 inch-1/2 inch	5120-00-240-8703	EX503B (81349)	TM 9-2350-252-20P-1
3	Adapter, test	4910-01-138-9334	11629693-1 (81349)	TM 9-2350-252-20P-1
4	Adapter, test	4910-01-138-9335	11629693-2 (81349)	TM 9-2350-252-20P-1
5	Adapter, torque wrench, 1/2 inch drive,1/2 inch	5120-00-399-1157	2588756 (81349)	TM 9-2350-252-20P-1
6	Adapter, torque wrench, 1/2 inch drive, 3/4 inch	5120-00-399-1154	2588757 (81349)	TM 9-2350-252-20P-1
7	Adapter, torque wrench, 1/2 inch drive, 5/16 inch	5120-01-115-1891	12298105-1 (81349)	TM 9-2350-252-20P-1

Figure A-40. Example of a tool identification list.

MANDATORY REPLACEMENT PARTS LIST

Table 1. Mandatory Replacement Parts List

Item No.	Part Number/ (CAGEC)	National Stock Number (NSN)	Nomenclature	Qty
1 Order	12286941 (19207)	2940-01-086-1605	Filter assembly (part of kit, P/N 5705132)	1
2 Order	M83248/1-014 (81349)	5330-00-166-0990	Preformed packing (item 54 is part of kit, P/N 5705132)	4
3 Order	M83248/1-115 (81349)	5330-00-166-1066	Preformed packing	2
4 Order	M83248/1-904 (81349)	5330-00-020-0203	Preformed packing	5
5 Order	M83248/1-905 (81349)	5330-00-167-5166	Preformed packing	2
6 Order	M83248/1-906 (81349)	5330-00-020-0186	Preformed packing	2
7 Order	M83248/1-908 (81349)	5330-00-020-0105	Preformed packing	3
8	M83248/1-910	5330-00-020-0067	Preformed packing	3

Figure A-41. Example of a mandatory replacement parts list.

Flight Safety Critical Aircraft Parts (FSCAP)

Table 1. Flight Safety Critical Aircraft Parts (FSCAP)

Nomenclature	Part Number	CAGEC	Critical Characteristics
Cluster Gear	7-211310027-3	02731	Process core and surface hardness.
Spur Gear	7-113100029-3	02731	Dimensions and contour of root area.
Nut	7-113100121-3	02731	Process surface hardness.
Spindle	**7-113100141-3**	**02731**	**Process core hardness.**
Carrier Hub	7-311310016-3	02731	Process core and surface hardness.
Gearshaft	7-211310035-3	02731	Process core and surface hardness.
Gearshaft	7-211310039-5	02731	Process core and surface hardness.
Gear	7-311310025-3	02731	Process core and surface hardness.

END OF WORK PACKAGE

Figure A-42. Example of FSCAP.

990033 R: 153 G: 000 B: 051	FF3366 R: 255 G: 051 B: 102	CC0033 R: 204 G: 000 B: 051	FF0033 R: 255 G: 000 B: 051	FF9999 R: 255 G: 153 B: 153	CC3366 R: 204 G: 051 B: 102	FFCCFF R: 255 G: 204 B: 255	CC6699 R: 204 G: 051 B: 153
FF0066 R: 255 G: 000 B: 102	FF3399 R: 255 G: 051 B: 153	FF0099 R: 255 G: 000 B: 153	FF33CC R: 255 G: 051 B: 204	FF00CC R: 255 G: 000 B: 204	FF66FF R: 255 G: 102 B: 255	FF33FF R: 255 G: 051 B: 255	FF00FF R: 255 G: 000 B: 255
CC00CC R: 204 G: 000 B: 204	CC00FF R: 204 G: 000 B: 255	9900CC R: 153 G: 000 B: 204	990099 R: 153 G: 000 B: 153	CC99CC R: 204 G: 153 B: 204	996699 R: 153 G: 102 B: 153	663366 R: 102 G: 051 B: 102	660099 R: 102 G: 000 B: 153
6600CC R: 102 G: 000 B: 204	9966FF R: 153 G: 102 B: 255	330066 R: 051 G: 000 B: 102	6600FF R: 102 G: 000 B: 255	6633FF R: 102 G: 051 B: 255	CCCCFF R: 204 G: 204 B: 255	9999FF R: 153 G: 153 B: 255	9999CC R: 153 G: 153 B: 204
3333FF R: 051 G: 051 B: 255	3333CC R: 051 G: 051 B: 204	0066FF R: 000 G: 051 B: 255	3366FF R: 051 G: 102 B: 255	3366FF R: 051 G: 102 B: 255	3366CC R: 051 G: 102 B: 204	000066 R: 000 G: 000 B: 102	000033 R: 000 G: 000 B: 051
003366 R: 000 G: 051 B: 102	6699CC R: 102 G: 153 B: 204	006699 R: 000 G: 102 B: 153	3399CC R: 051 G: 153 B: 204	0099CC R: 000 G: 153 B: 204	66CCFF R: 102 G: 204 B: 255	3399FF R: 051 G: 153 B: 255	003399 R: 000 G: 051 B: 153
009999 R: 000 G: 153 B: 153	669999 R: 102 G: 153 B: 153	99CCCC R: 153 G: 204 B: 204	CCFFFF R: 204 G: 255 B: 255	33CCCC R: 051 G: 204 B: 204	66CCCC R: 102 G: 204 B: 204	339999 R: 051 G: 153 B: 153	336666 R: 051 G: 102 B: 102
00FF99 R: 000 G: 255 B: 153	339966 R: 051 G: 153 B: 102	006633 R: 000 G: 102 B: 051	336633 R: 051 G: 102 B: 051	669966 R: 102 G: 153 B: 102	66CC66 R: 102 G: 204 B: 102	99FF99 R: 153 G: 255 B: 153	66FF66 R: 102 G: 255 B: 102
009933 R: 000 G: 153 B: 051	33FF66 R: 051 G: 255 B: 102	00FF66 R: 000 G: 255 B: 102	CCFFCC R: 204 G: 255 B: 204	CCFF99 R: 204 G: 255 B: 153	99FF66 R: 153 G: 255 B: 102	99FF33 R: 153 G: 255 B: 051	00FF33 R: 000 G: 255 B: 051
009900 R: 000 G: 153 B: 000	33FF00 R: 051 G: 255 B: 000	66FF00 R: 102 G: 255 B: 000	99FF00 R: 153 G: 255 B: 000	66CC00 R: 102 G: 204 B: 000	00CC00 R: 000 G: 204 B: 000	33CC00 R: 051 G: 204 B: 000	339900 R: 051 G: 153 B: 000
CCFF00 R: 204 G: 255 B: 000	999900 R: 153 G: 153 B: 000	CCCC00 R: 204 G: 204 B: 000	CCCC33 R: 204 G: 204 B: 051	333300 R: 051 G: 051 B: 000	666600 R: 102 G: 102 B: 000	999933 R: 153 G: 153 B: 051	CCCC66 R: 204 G: 204 B: 102
FFCC00 R: 255 G: 204 B: 000	FFCC66 R: 255 G: 204 B: 102	FFCC33 R: 255 G: 204 B: 051	CC9933 R: 204 G: 153 B: 051	996600 R: 153 G: 102 B: 000	CC9900 R: 204 G: 153 B: 000	FF9900 R: 255 G: 153 B: 000	CC6600 R: 204 G: 102 B: 000
996633 R: 153 G: 102 B: 051	330000 R: 051 G: 000 B: 000	663333 R: 102 G: 051 B: 051	996666 R: 153 G: 102 B: 102	CC9999 R: 204 G: 153 B: 153	993333 R: 153 G: 051 B: 051	CC6666 R: 204 G: 102 B: 102	FFCCCC R: 255 G: 204 B: 204
CC9966 R: 204 G: 153 B: 102	FFCC99 R: 255 G: 204 B: 153	FFFFFF R: 255 G: 255 B: 255	CCCCCC R: 204 G: 204 B: 204	999999 R: 153 G: 153 B: 153	666666 R: 102 G: 102 B: 102	333333 R: 051 G: 051 B: 051	000000 R: 000 G: 000 B: 000

Figure A-43. Inner shell colors.

993366 R: 153 G: 051 B: 102	660033 R: 102 G: 000 B: 051	CC3399 R: 204 G: 051 B: 153	FF99CC R: 255 G: 153 B: 204	FF66CC R: 255 G: 102 B: 204	FF99FF R: 255 G: 153 B: 255	FF6699 R: 255 G: 102 B: 153	CC0066 R: 204 G: 000 B: 102
CC0099 R: 204 G: 000 B: 153	990066 R: 153 G: 000 B: 102	CC66CC R: 204 G: 102 B: 204	CC33CC R: 204 G: 051 B: 204	CC99FF R: 204 G: 153 B: 255	CC66FF R: 204 G: 102 B: 255	CC33FF R: 204 G: 051 B: 255	993399 R: 153 G: 051 B: 153
9933CC R: 153 G: 051 B: 204	660066 R: 102 G: 000 B: 102	9900FF R: 153 G: 000 B: 255	9933FF R: 153 G: 051 B: 255	9966CC R: 153 G: 102 B: 204	330033 R: 051 G: 000 B: 051	663399 R: 102 G: 051 B: 153	6633CC R: 102 G: 051 B: 204
6666CC R: 102 G: 102 B: 204	6666FF R: 102 G: 102 B: 255	666699 R: 102 G: 102 B: 153	333366 R: 051 G: 051 B: 102	333399 R: 051 G: 051 B: 153	330099 R: 051 G: 000 B: 153	3300CC R: 051 G: 000 B: 204	3300FF R: 051 G: 000 B: 255
0000FF R: 000 G: 000 B: 255	000099 R: 000 G: 000 B: 153	0033CC R: 000 G: 051 B: 204	0000CC R: 000 G: 000 B: 204	336699 R: 051 G: 102 B: 153	0066CC R: 000 G: 102 B: 204	99CCFF R: 153 G: 204 B: 255	6699FF R: 102 G: 153 B: 255
0099FF R: 000 G: 153 B: 255	33CCFF R: 051 G: 204 B: 255	00CCFF R: 000 G: 204 B: 255	99FFFF R: 153 G: 255 B: 255	66FFFF R: 102 G: 255 B: 255	33FFFF R: 051 G: 255 B: 255	00FFFF R: 000 G: 255 B: 255	00CCCC R: 000 G: 204 B: 204
006666 R: 000 G: 102 B: 102	003333 R: 000 G: 051 B: 051	00FFCC R: 000 G: 255 B: 204	33FFCC R: 051 G: 255 B: 204	33CC99 R: 051 G: 204 B: 153	00CC99 R: 000 G: 204 B: 153	66FFCC R: 102 G: 255 B: 204	99FFCC R: 153 G: 255 B: 204
339933 R: 051 G: 153 B: 051	99CC99 R: 153 G: 204 B: 153	66FF99 R: 102 G: 255 B: 153	33FF99 R: 051 G: 255 B: 153	33CC66 R: 051 G: 204 B: 102	00CC66 R: 000 G: 204 B: 102	66CC99 R: 102 G: 204 B: 153	009966 R: 000 G: 153 B: 102
33FF33 R: 051 G: 255 B: 051	00CC33 R: 000 G: 204 B: 051	33CC33 R: 051 G: 204 B: 051	66FF33 R: 102 G: 255 B: 051	00FF00 R: 000 G: 255 B: 000	66CC33 R: 102 G: 204 B: 051	006600 R: 000 G: 102 B: 000	003300 R: 000 G: 051 B: 000
99CC66 R: 153 G: 204 B: 102	669933 R: 102 G: 153 B: 051	99CC33 R: 153 G: 204 B: 051	336600 R: 051 G: 102 B: 000	669900 R: 102 G: 153 B: 000	99CC00 R: 153 G: 204 B: 000	CCFF66 R: 204 G: 255 B: 102	CCFF33 R: 204 G: 255 B: 051
666633 R: 102 G: 102 B: 051	999966 R: 153 G: 153 B: 102	CCCC99 R: 204 G: 204 B: 153	FFFFCC R: 255 G: 255 B: 204	FFFF99 R: 255 G: 255 B: 153	FFFF66 R: 255 G: 255 B: 102	FFFF33 R: 255 G: 255 B: 051	FFFF00 R: 255 G: 255 B: 000
993300 R: 153 G: 051 B: 000	CC6633 R: 204 G: 102 B: 051	663300 R: 102 G: 051 B: 000	FF9966 R: 255 G: 153 B: 102	FF6633 R: 255 G: 102 B: 051	FF9933 R: 255 G: 153 B: 051	FF6600 R: 255 G: 102 B: 000	CC3300 R: 204 G: 051 B: 000
FF3333 R: 255 G: 051 B: 051	CC3333 R: 204 G: 051 B: 051	FF6666 R: 255 G: 102 B: 102	660000 R: 102 G: 000 B: 000	990000 R: 153 G: 000 B: 000	CC0000 R: 204 G: 000 B: 000	FF0000 R: 255 G: 000 B: 000	FF3300 R: 255 G: 051 B: 000

Figure A-43. Inner shell colors. - Continued

PAGED-BASED TECHNICAL MANUAL DEVELOPMENT.

B.1 **SCOPE.**

B.1.1 Scope. This appendix is intended to provide guidance and further clarify the requirements contained in MIL-STD-40051-2, Standard Practice: Preparation of Digital Technical Information for Page-Based Technical Manuals. The general style, format, and graphics guidance contained herein is applicable for the preparation of page-based technical manuals developed to the work package (WP) concept. The general guidance in section 4 through 7 of this handbook apply to this appendix unless specifically noted as "for frame-based IETMs onl**y".**

B.1.2 Philosophy. This handbook contains general information and examples. This appendix is used in conjunction with the handbook.

B.2 **APPLICABLE DOCUMENTS.**

The applicable documents in section 2 of this handbook apply to this appendix.

B.3 **DEFINITIONS.**

The definitions in section 3 of this handbook apply to this appendix.

B.4 **TECHNICAL MANUAL DATA GUIDANCE**.

B.4.1 Development of work package technical manuals. The style and format guidance provided in this appendix has been established to facilitate the development of technical information for the WP concept. The WP concept is defined as a logical combination of requirements and improved presentation techniques designed to enhance digital display of page-formatted pages. A work package technical manual is specifically designed to support individual functional information or maintenance work tasks for a weapon system or equipment in accordance with the requirements of MIL-STD-40051-2.

B.4.2 How to develop a work package TM. The general process is discussed in paragraph 4.3. The hierarchical breakdown of a page-base TM is: volumes (if required), chapters, and work packages (WP). Each division used should have at least two occurrences (for example where there is a Volume 1, there should be a Volume 2; where there is a Chapter 1, there should be a Chapter 2; etc.). Multiple volumes should be partitioned only between chapters. For page-based TMs, the preparation of an outline, the determination of chapter ordering/content and methods of printing the TM are discussed in the following subparagraphs.

B.4.2.1 Creating an outline for a TM. An outline for the -14&P, Operator's, Organizational, Direct Support, and General Support Maintenance Including RPSTL TM for a typical Van Semitrailer may look similar to the sample outline as shown in Figure B-1.

B.4.2.2 Chapter ordering and content. Chapters are used to divide the TM data into the specific functional information listed in paragraphs B.4.4.3 through B.4.4.8. Each chapter is made up of one or more work packages. Chapters should be ordered. For simple equipment, a single chapter may suffice for each functional element (e.g., all maintenance at all maintenance levels for a rifle may be placed in one combined chapter.). For complex weapon systems/equipment, it may be necessary to create several chapters for each of the functional elements (e.g., maintenance of an aircraft's electrical system, fuel system, and flight control system may be placed in separate chapters).

B.4.2.3 Printing the TM. Document formatting requirements such as page layout and hyphenation rules are specified in style sheets, as well as how document elements such as paragraph titles, tables, and lists are to be formatted. Style sheets (refer to paragraph 4.1) provide the composition and imaging characteristics to be applied to the XML tagging (including attributes) of an XML tagged text source file (document instance) in order to present the text material in paginated presentation form..

B.4.3 Types of work packages. There are two types of work packages: information oriented and task oriented.

B.4.3.1 Information oriented work package. Information oriented work packages provide support information such as general information about the TM or weapon system/equipment, theory of operation, and operating instructions. Additional data that supports the maintenance tasks (i.e., Lists of Expendable and Durable Items, Manufactured Items, Components of End Item (COEI) and Basic Issue Items (BII) lists) are also considered information oriented WPs.

B.4.3.2 Task oriented work package. Task oriented work packages reflect all required maintenance and testing and troubleshooting tasks at the assigned level of maintenance, and environment, material, and support equipment required for each defined task. WPs are written to reflect the engineering design, Logistics Management Information (LMI), approved maintenance plan, and the established repair concept (SMR Codes).

B.4.4 Technical manuals developed in accordance with MIL-STD-40051-2. The hierarchy of a page-based TM consists of front and rear matter, and a series of work packages that include the types of data listed in paragraphs B.4.4.1 through B.4.4.8. These data types are used to prepare page-based technical manuals at all levels of maintenance through depot. Each of these parts provides instructions on how to develop and structure the required technical information into chapters containing individual work packages in a logical order of work sequence. These WPs are stand-alone units containing all information essential for directing task performance. The specific functional information listed in paragraphs B.4.4.1 through B.4.4.8 is presented by categories in MIL-STD-40051-2, were applicable. Categories are used to define a specific type of manual and are dependent on the type and complexity of the weapon system. They identify the type of work packages that go into the TM as well as any required ordering.

B.4.4.1 Front matter. Each TM and DMWR/NMWR includes front matter necessary to supplement the manual. Refer to MIL-STD-40051-2 for detailed requirements for the preparation of front matter.

B.4.4.1.1 Front cover. The front cover of a TM and DMWR/NMWR contains required and optional content that is presented in a prescribed order unless otherwise directed by the acquiring activity. The material that appears on the cover varies depending on the type of publication. An example of a TM front cover is shown in Figure B-2. Refer to MIL-STD-40051-2 for examples of other types of covers.

a. TM title. The TM title area of the cover includes the type of publication and maintenance levels of the TM and DMWR/NMWR. For TMs, the type of TM (operator instructions, maintenance, RPSTL, etc) is placed beneath the “Technical Manual” header. The levels of maintenance, as appropriate, are placed beneath the TM type. For a DMWR/NMWR the header and maintenance level is combined (e.g., “DEPOT MAINTENANCE WORK REQUIREMENT”). For TM/DMWR/NMR with NMP Overhaul standards, the title is followed by a national overhaul standard statement.

b. The nomenclature of the equipment, type, model, part number, or subject (blocks, serial numbers, or registration numbers, if appropriate) is positioned below the words identifying the TM type or maintenance level, if applicable. The NSN, EIC and identification of other equipment covered in the TM are also indicated. The information in the TM title area is the same for all volumes of a multivolume set.

c. Subtitle (when required). If applicable, a subtitle is located immediately below the TM title area to indicate the volume number and contents of every separately bound volume of a TM

d. Equipment illustration. A photograph or a line drawing illustration of the equipment/end item can be included on the front cover. If a line drawing is used, a three dimensional drawing is preferred.

e. Distribution Statement.

(1) A distribution statement is used in marking a technical document to denote the extent of its availability for distribution, release, and disclosure without additional approvals or authorizations. A distribution statement marking is distinct from and in addition to a security classification marking assigned in accordance with DoD 5200.1-R. MIL-STD-40051-2 specifies that all TMs, DMWRs and NMWRs have a distribution statement placed on the front cover for each manual or revision.

(2) The appropriate distribution statement is provided by the acquiring activity as selected from DOD 5230.24. Some distribution statements require a reason for assigning that distribution statement, the date of determination, and the name of the controlling DoD office. Guidance is provided in DOD 5230.24.

B.4.4.1.2 Warning Summary. A general description of the warnings should be included in the warning summary provided in the front of the TM (refer to Figure B-3). The warning summary is not a word-for-word repetition of all the warnings in the TM and should be limited to alerting the user of the different types of hazards, in general terms, that will be encountered in operating and maintaining the weapon system or equipment covered within the TM. Icons used throughout the manual should be included in the warning summary at the beginning of the manual along with their definitions.

B.4.4.2 Rear matter. Each TM and DMWR/NMWR includes the following rear matter. Refer to MIL–STD–40051-2 for detailed requirements for the preparation of rear matter. For RPSTLs, the glossary and the alphabetical index are not included.

a. Glossary.

b. Alphabetical index

c. Reporting errors and recommending improvements DA Forms 2028.

d. Authentication page.

e. Foldout pages

f. Back cover.

B.4.4.3 General information, equipment description and theory of operation chapter. General information, equipment description, and theory of operation chapter data are divided into the following specific types of work packages, as applicable to the weapon system/equipment. The specific work packages to use are defined in the Content Selection Matrix provided by the acquiring activity.

g. General information work package (refer to Figure B-4). Equipment description and data work package (refer to Figure B-5).
h. Theory of operation work package (Except Conventional and Chemical Ammunition only) (refer to Figure B-6).
i. General information work package (Preventive Maintenance Services Manual only) (refer to MIL-STD-40051-2 for wording).
j. General information work package (Phased Maintenance Inspection Manual only) (refer to MIL-STD-40051-2 for wording).

B.4.4.4 Operator instructions chapter. Operator instructions data is divided into the following specific work packages, as applicable to the weapon system/equipment. The specific work packages to use are defined in the Content Selection Matrix provided by the acquiring activity.

a. Description and use of controls and indicators work package (refer to MIL-STD-40051-2 for an example).
b. Operation under usual conditions work package (refer to Figure B-7).
c. Operation under unusual conditions work package (refer to Figure B-8).
d. Emergency work package (refer to Figure B-9).
e. Stowage and decal/data plate guide work package (refer to Figure B-10).
f. On-vehicle equipment loading plan work package (refer to Figure B-11).

B.4.4.5 Troubleshooting procedures chapter. Troubleshooting procedures data is divided into the following specific work packages, as applicable to the weapon system/equipment and category. The specific work packages to use are defined in the Content Selection Matrix provided by the acquiring activity.

a. Troubleshooting index work package (refer to Figure B-12).
b. Troubleshooting work package (refer to Figure B-13, Figure B-14, Figure B-15, and Figure B-16 and MIL-STD-40051-2 for examples).
c. Operational checkout work package (refer to MIL-STD-40051-2 for an example).
d. Combined operational checkout and troubleshooting work package(refer to MIL-STD-40051-2 for an example).
e. Preshop analysis work package (**DMWRs/NMWRs only**) (refer to MIL-STD-40051-2 for an example).
f. Component checklist work package (**DMWRs/NMWRs only**) (refer to MIL-STD-40051-2 for an example).
g. Introduction work package (Aircraft Troubleshooting Manual only).
h. Technical description work package (Aircraft Troubleshooting Manual only).

B.4.4.6 Maintenance instructions chapter. Maintenance instruction data is divided into the following specific work packages, as applicable to the weapon system/equipment. The task oriented maintenance work packages contain all authorized maintenance tasks, such as remove, inspect, service, test, install, replace, disassemble, assemble, repair, clean, adjust, align, etc., for the overall weapon system/equipment and each maintainable subsystem, assembly, and component. The specific work packages to use are defined in the Content Selection Matrix provided by the acquiring activity.

i. Service upon receipt work package (refer to Figure B-17 and MIL-STD-40051-2).
j. Equipment/user fitting instructions work package (refer to Figure B-18).
k. Preventive Maintenance Checks and Services (PMCS) work packages.
   (1) PMCS introduction work package.
   (2) PMCS work package(refer to Figure B-19, Figure B-20 and MIL-STD-40051-2).
l. Preventive maintenance inspections work package (**aircraft only**).
m. Lubrication instructions work package (refer to MIL-STD-40051-2).
n. Ammunition maintenance work package.
o. Auxiliary equipment maintenance work package (refer to Figure B-21).
p. Facilities work package (**DMWRs/NMWRs only**) (refer to Figure B-22).
q. Maintenance work package.
r. General maintenance work package (refer to Figure B-23).
s. Phased maintenance inspection work package (Aircraft preventive maintenance services only).
t. Preventive maintenance services inspection work package (Aircraft preventive maintenance services only) .
u. Overhaul inspection procedure (OIP) work package (**DMWRs/NMWRs only**) (refer to MIL-STD-40051-2).
v. Illustrated list of manufactured items work package **(Field/AMC or above only**) (refer to MIL-STD-40051-2).
w. Torque limits work package (**Field/AMC or above only**) (refer to MIL-STD-40051-2).
x. Ammunition marking information work package (refer to Figure B-28).
y. Foreign ammunition (NATO) work package (refer to Figure B-29).
z. Aircraft inventory master guide work package (**aircraft only**) (refer to Figure B-30).
aa. Storage of aircraft work package (**aircraft only**) (refer to Figure B-31).
bb. Weighing and loading work package (**aircraft only**) (refer to Figure B-32 and MIL- STD-40051-2).
cc. Depot mobilization requirements work package (**DMWRs/NMWRs only**) (refer to MIL-STD-40051-2).
dd. QA requirements work package (**DMWRs/NMWRs only**) (refer to Figure B-33).
ee. Wiring diagram work package (refer to Figure B-34).

B.4.4.7 Repair parts and special tools lists chapter. Repair parts and special tools lists data is divided into the following specific work packages, as applicable. The specific work packages to use are defined in the Content Selection Matrix provided by the acquiring activity.

a. Introduction work package (refer to MIL-STD-40051-2).
b. Repair parts list work package (refer to MIL-STD-40051-2).
c. Special tools list work package (refer to MIL-STD-40051-2).
d. Repair parts for special tools work package.
e. Kit parts list work package (refer to MIL-STD-40051-2).
f. Bulk items work package (refer to MIL-STD-40051-2).

g. Cross-reference index work packages.
   (1) NSN index work package (refer to MIL-STD-40051-2).
   (2) Part number index work package (refer to MIL-STD-40051-2).
   (3) Reference designator index work package (refer to MIL-STD-40051-2).

B.4.4.8 Supporting information chapter. Supporting information data is divided into the following specific work packages, as applicable to the weapon system/equipment. Necessary supporting data for a specific weapon system, equipment, or component, that does not fall under the supporting information categories listed below, may be placed into as many additional work packages as required. These additional work packages should follow the last required work package of those listed in a through j. The supporting information work packages listed below were formerly referred to as appendices, however, with the creation of the work package concept, it is no longer acceptable to title this information as appendices. The specific work packages to use are defined in the Content Selection Matrix provided by the acquiring activity.

a. References work package (refer to MIL-STD-40051-2).
b. Introduction for maintenance allocation chart (MAC) work package (refer to MIL-STD-40051-2).
c. MAC work package (refer to MIL-STD-40051-2).
d. Components of end item (COEI) and basic issue items (BII) lists work package (operator only) (refer to MIL-STD-40051-2).
e. Additional authorization list (AAL) work package (operator only) (refer to MIL-STD-40051-2).
f. Expendable and durable items list work package (refer to MIL-STD-40051-2).
g. Tool identification list work package (Field/AMC level or above only) (refer to MIL-STD-40051-2).
h. Mandatory replacement parts work package (Field/AMC level or above only) (refer to MIL-STD-40051-2).
i. Critical safety items (CSI) and flight safety critical aircraft parts (FSCAP) work package (refer to MIL-STD-40051-2).
j. Support items work package.
k. Additional work packages.

B.5 **FORMAT AND STYLE.**

B.5.1 Format

B.5.1.1 Presentation of procedural information. Procedural steps present detailed, step-by-step instructions for performing an operational or maintenance task - such as turning on a test set; changing oil; replacing a part; repairing an assembly; or inspecting, cleaning, or removing an item of equipment, etc. Procedural steps are presented in a logical sequence and reflect the sequence in which the tasks are actually performed. Procedural steps are placed immediately after task or procedure titles, or, if applicable, after a small paragraph that introduces the procedural steps. The following demonstrates, by example, how procedural steps are placed after a task title or procedure title.

EXAMPLE 1

REMOVAL ***(Example of a task title)***

There are two gunner-plug eyecups. One is on the commander's relay assembly and one is on the ISU. Both are replaced the same way. The ISU gunner-plug eyecup is illustrated below.

1. Remove gunner-plug eyecup (Figure 1, Item 1) from eyepiece assembly (Figure 1, Item 3).
2. Remove screw (Figure 1, Item 4), screw sleeve (Figure 1, Item 5), washer (Figure 1, Item 6), and gunner-plug eyecup (Figure 1, Item 1) from ISU (Figure 1, Item 2).

OR

REMOVAL

1. Move SENSOR SELECT knob (Figure 1, Item 5) to NEUTRAL.
2. Loosen two setscrews (Figure 1, Item 7).
3. Remove SENSOR SELECT knob (Figure 1, Item 5) from SENSOR SELECT shaft (Figure 1, Item 6).

EXAMPLE 2

REMOVAL ***(Example of a task title)***

There are two gunner-plug eyecups. One is on the commander's relay assembly and one is on the ISU.

Commander's Relay Assembly Gunner-Plug Eyecup. ***(Example of a procedure title)***

1. Remove gunner-plug eyecup (Figure 1, Item 1) from eyepiece assembly (Figure 1, Item 3).
2. Remove screw (Figure 1, Item 4), screw sleeve (Figure 1, Item 5), washer (Figure 1, Item 6), and gunner-plug eyecup (Figure 1, Item 1) from the commander's relay assembly (Figure 1, Item 2).

ISU Gunner-Plug Eyecup. ***(Example of a procedure title)***

1. Remove gunner-plug eyecup (Figure 1, Item 1) from eyepiece assembly (Figure 1, Item 3).
2. Remove screw (Figure 1, Item 4), screw sleeve (Figure 1, Item 5), washer (Figure 1, Item 6), and gunner-plug eyecup (Figure 1, Item 1) from ISU relay assembly (Figure 1, Item 2).

B.5.1.2 Tables.

B.5.1.2.1 Table titles.

a. The table title consists of the word "Table" followed by the table number, a period, two spaces, and the title. A period follows the last word of the title. Capitalize the first letter of the first and each major word of the title. Table titles are in boldface type.
b. Center table titles above the table. If the title is too long to fit on one line, align the second line with the first letter of the title.
c. Identify tables applicable to one Service only in a joint service TM. (For example, **Table 3. Fuel Indicator Correction Factors (Army Only)**.)
d. Identify tables applicable to more than one service in a joint service TM. (For example, **Table 1. UHF Radio Controls (Army and Navy Only)**.)
e. When a table is continued on more than one page, the table number and title is repeated followed by a dash and the word "Continued". The closing rule is omitted at the foot of a continued table; the opening rule is continued at the head of the continued portion along with the heading title data.

B.5.1.2.2 Table format. Formatting in this paragraph does not pertain to “standard information”. Refer to MIL-STD-40051-2 for “standard information” formatting. The following applies to all non-“standard information” tables developed for a TM.

a. Use the CALS table model when possible (Refer to MIL-STD-2361).
b. Place a horizontal rule at the beginning (head) and at the end (foot) of a table. Title columns appropriately in boldface, uppercase letters. Place a horizontal rule under the column titles. All tables have outside vertical rules and, if required for clarity, vertical rules between columns.
c. Design tables so that related entries in different columns are aligned.
d. Align data within one column of a table by one method only, i.e., left justified, left justified with subordinate steps indented, centered, etc. However, different columns within the same table may be presented differently, i.e., one column may have the data left justified while another column may have the data centered.
e. Tables may contain procedural steps and subordinate steps, with a maximum of four levels (i.e., (a), (b), etc.). Number steps in accordance with MIL-STD-40051-2. When space allows, indent the subordinate steps two spaces.
f. Illustrations may be included within a table, if necessary.

B.5.1.2.2.1 Table readability and use.

a. There is clear space between columns. Row entries in tables may also be arranged in groups separated with clear space.
b. Entries are aligned within columns as follows:
   (1) For decimal data, decimal points are aligned.
   (2) For scientific notation, multiplication signs are aligned.
   (3) All other numeric data are aligned flush right.
   (4) Alphabetic or alphanumeric data may be aligned flush left, flush right, or centered. Data may also be indented.
c. Units of measure are identified in appropriate row entries or as separate column headings.

d. The user will not be required to interpolate (estimate between tabled values). Avoid interpolation by expanding the table or by presenting the data in a graph.

B.5.1.2.3 Footnotes to tables.

a. Unless numbers would cause confusion, use consecutive superior numbers beginning with 1 for numbering footnotes to tables. (Refer to Figure B-.) The numbering system is by table. Superior lowercase letters, asterisks, or other designations may be used where numbers would cause confusion. Place footnote references at the right of letters, words, or symbols, and at the left of numbers (also at the left of such words as "None" in columns with numbers). Number references to footnotes across the page from left to right. Separate two or more footnote references occurring together by spaces, not commas.
b. Place footnotes to tables below the closing line of the applicable table unless the table is continued. (Refer to Figure B-.) If the table is continued on other pages, place all footnotes at the bottom of the page on which they are referenced.
c. For footnotes coming before the end of the table, place a one-inch horizontal rule flush left two line spaces below the table and place the footnote under the rule. Start footnotes at the end of the table on the second line below the closing rule.
d. Indent all footnotes five spaces from the left margin of the table and return carryover lines to the left margin of the table. Separate footnote numbers or other designators from the footnote text by two spaces. (Refer to Figure B-35.)

B.5.1.3 Lists. Examples of Definition List, Random List and Sequential List are shown in Figure B-36.

B.5.1.4 Warnings, cautions, and notes format. Refer to MIL-STD-40051-2 for requirements concerning warnings, cautions, and notes. An example of placement of warning icons in a procedure is presented in Figure B-37. See also TABLE B-I for additional style, capitalization, leading, and spacing information.

B.5.1.4.1 Development of icons. Type size for signal word(s) should be no smaller than 10-point; 12-point boldface type is recommended. Refer to Figure B-37.

B.5.1.5 Page sizes. The maximum printing area includes all printed matter on the page (e.g., text, illustrations, revision bars, TM numbers, page numbers, etc.). Refer to MIL-STD-40051-2 for page size requirements.

B.5.1.6 Type sizes and styles. TABLE B-I lists preferred type sizes and styles. All type sizes may be plus or minus one point. Slight variations in spacing and leading are permitted.

a. The preferred fonts for Portable Document Format (PDF) files are listed below.

AdobeSansMM
AdobeSerifMM
Courier-Bold
Courier-BoldOblique
CourierCourier-Oblique
Helvetica
Helvetica-Bold
Helvetica-BoldOblique
Helvetica-Oblique

Symbol
Times-Bold
Times-BoldItalic
Times-Italic
Times-Roman
ZapfDingbats

b. The following are True Type fonts for PDF files that may be used, but not preferred.

AllegroBT-Regular
Arial
Arial-Black
Arial-Bold
Arial-BoldItalic
Arial-Italic
ArialNarrow
ArialNarrow-Bold
ArialNarrow-BoldItalic
ArialNarrow-Italic
BenguiatITCbyBT-Bold
BernhardFashionBT-Regular
BernhardModernBT-Bold
BernhardModernBT-BoldItalic
BookAntiqua
BookAntiqua-Bold
BookAntiqua-BoldItalic
BookAntiqua-Italic
BookmanOldStyle
BookmanOldStyle-Bold
BookmanOldStyle-BoldItalic
BookmanOldStyle-Italic
CenturyGothic
CenturyGothic-Bold
CenturyGothic-BoldItalic
CenturyGothic-Italic
CenturySchoolbook
CenturySchoolbook-Bold
CenturySchoolbook-BoldItalic
CenturySchoolbook-Italic
CharlesworthBold
CIA Code 39-Medium-Text-Regular
CIA-POSTNET-Regular
ComicSansMS
ComicSansMS-Bold
DauphinPlain
English111VivaceBT-Regular
Garamond
Garamond-Bold
Garamond-Italic

GoudyHandtooledBT-Regular
GoudyOldStyleBT-Bold
GoudyOldStyleBT-BoldItalic
GoudyOldStyleBT-Italic
GoudyOldStyleBT-Roman
Haettenschweiler
Impact
LetterGothicMT
LetterGothicMT-Bold
LetterGothicMT-BoldOblique
LetterGothicMT-Oblique
Lithograph-Bold
LucidaConsole
LucidaSansUnicode
Staccato222BT-Regular
Swiss911BT-ExtraCompressed
SymbolMT
Tahoma
Tahoma-Bold
TimesCgATT
TimesCgATT-Bold
TimesCgATT-BoldItalic
TimesCgATT-Italic
TimesNewRomanMT-ExtraBold
TimesNewRomanPS-BoldItalicMT
TimesNewRomanPS-BoldMT
TimesNewRomanPS-ItalicMT
TimesNewRomanPSMT
TypoUprightBT-Regular
UniversATT
UniversATT-Bold
UniversATT-BoldItalic
UniversATT-Italic
Verdana
Verdana-Bold
Verdana-BoldItalic
Verdana-Italic
Wingdings-Regular
ZapfElliptical711BT-Bold
ZapfElliptical711BT-BoldItalic
ZapfElliptical711BT-Italic
ZapfElliptical711BT-Roman
ZurichBT-BlackExtended
ZurichBT-RomanExtended

TABLE B-I. Style, capitalization, leading, and spacing.

Use	Preferred Font Type/Size	Capitalization	Leading	Vertical Spacing
Cover: Security Classification	Sans serif bold 24	Uppercase		
Cover: TM Number	Sans serif bold 24	Uppercase		
Cover: Words "Technical Manual"	Sans serif bold 14	Uppercase		
Cover: Type of Publication	Sans serif bold 14	Uppercase		
Cover: Maintenance Levels, National Overhaul Standard statement	Sans serif bold 14	Uppercase		
Cover: Nomenclature of Equipment	Sans serif bold 18–24	Uppercase		
Cover: Type, Model, Part Number, National Stock Number, EIC, or Subject	Sans serif bold 18–24	Uppercase		
Cover: Subtitle (Volume Title and Number)	Sans serif bold 14	Uppercase		
Cover: Availability Statement, Supersession Notice, Disclosure Notice, Distribution Statement, Export Control Notice, Destruction Notice	Sans serif 8 (for header bold)	Uppercase for header and upper- and lowercase for text		
Cover: Service Nomenclature	Sans serif bold 18	Uppercase		
Cover: Change Number and Date	Sans serif bold 14	Uppercase		
Cover: TM Date	Sans serif bold 18	Uppercase		
Front/Back Matter Headers: Warning Summary, Table of Contents, How to Use This Manual, Index, and Glossary headers.	Sans serif bold 14	Uppercase	6	48 points below TM number; 18 points above text, maintenance task, procedural, or paragraph headers, table, or illustration; 12 points above warning, caution, and note headers
Change Sheet	Sans serif 10 (See change requirements for bolds)	Upper-and lower case	1	
Title Block Page	Sans serif 10 (See cover requirements for bolds)	Upper-and lower case		
TM Number	Sans serif bold 10	Uppercase		30 points from top of page
Page Number	Sans serif bold 10			30 points from top of page
Change Number	Sans serif bold 10	Uppercase for first letter of Change		30 points from bottom of page

TABLE B-I. Style, capitalization, leading, and spacing.

Use	Preferred Font Type/Size	Capitalization	Leading	Vertical Spacing
Security Classification	Sans serif bold 14	Uppercase		*30 points from top and bottom of page
Deleted Page Notation	Sans serif bold 8	Upper- and lowercase	2	30 points from top or bottom of page
Chapter Number and Header	Sans Serif Bold 14	Uppercase	6	Centered left to right and top to bottom on page; 18 points between chapter number and header
Work Package	Sans serif bold 10	Uppercase		30 points from top of page opposite TM Number
Work Package Title Block Horizontal Rules				Top rule 18 points below TM No.; bottom rule 18 points above headers, text, table, or illustration
Work Package Title Block	Sans serif bold 10	Uppercase	2	8 points below WP title block top rule and 8 points above bottom rule
Initial Setup	Title Sans serif bold 10	Uppercase	2	18 points below WP title block bottom rule
Initial Setup Bottom Horizontal Rule				18 points below initial
Maintenance Task Titles and Narrative Text Titles (same level as maintenance titles)	Sans serif bold 10	Uppercase	2	18 points below TM front/back matter header, WP title block or initial setup horizontal bottom rule; 12 points above/below text, table, or illustration,; 12 points above/below warning, caution, and note headers/text
Procedural Text Titles or Paragraph Titles	Sans serif bold 10	All uppercase or uppercase for first letter of each principal word (depending upon emphasis)	2	18 points below TM number, front/back matter header, WP title block or initial setup horizontal bottom rule, maintenance task or narrative text title; 12 points above/below text table, or illustrations; 12 points above/below warning, caution, and note headers/text
Text	Sans serif 10	Upper and lowercase,	1	18 points below TM header; 12 points above/below table or illustration; 6 points above page no.; 6 points above/below warning, caution, and note headers
Emphasis	Italic bold 10	Upper and lowercase	1	
Formulas and Equations	Italic 10	Upper- and lowercase	1	12 points above/below text, table, or illustration
Figure Number and Title	Serif or italic 10	Uppercase for first letter of each principal word	2	18 points below illustration (within the figure area)

TABLE B-I. Style, capitalization, leading, and spacing.

Use	Preferred Font Type/Size	Capitalization	Leading	Vertical Spacing
Legend on Illustrations	Sans serif 8	Uppercase for first letter of first word	1	As required
Illustration Callouts	Sans serif 8	Uppercase		As required
Illustration Captions (titles)	Sans serif bold 10	Uppercase	2	18 points below illustration
Table Number and Title	Sans serif or italic bold 10	Uppercase for first letter of each principal word	2	6 points above title
Column Headers	Sans serif bold 10	Uppercase	1	
Table Text	Sans serif 10	Upper- and lowercase	2	
List Headers	Sans serif bold 10	Uppercase for first letter of each principal word	2	12 points above list
Footnotes	Sans serif 8	Upper- and lowercase	1	18 points below text or table
Warnings, Cautions, and Notes Headers	Sans serif extra bold 12	Uppercase		12 points below text and 6 points above text
RPSTL Parts List, Special Tools List, and Cross-Reference Indexes (National Stock Number Index WP, Part Number Index WP, and Reference Designator Index WP) Column Headers	Sans serif bold 8–10	Uppercase	1	
RPSTL Text	Sans serif 8–10	Upper- and lowercase	1	
Rules	¾ of a point (0.010)	Upper- and lowercase	1	

*NOTE: When a TM is classified, the TM number is 48 points from the top of the page and the page number 48 points from the bottom of the page. All other spacing is adjusted accordingly.

B.5.1.7 Placement of text and illustrations.

B.5.1.7.1 Placement of text and related illustrations. Place text and illustrations in such a manner that will conserve space without crowding or degrading the usability or clarity of the material. Whenever possible avoid blank spaces and place illustrations on the same or facing page of associated text. If this is not possible (for example, more than one full-page illustration), place the illustration as close to the related text as possible.

B.5.1.7.2 Text wrapping. Always position text within the required image area. Do not wrap text around illustrations (refer to Figure B-38).

B.5.1.7.3 Illustration placement options. Illustrations are placed either immediately above or below the supporting text or the procedural step or group of steps. When developing an XML document instance, use the following words to indicate placement options for digital illustrations: " Above", "Below", "Immediate (default)", "Facing", and "Float". Tag the appropriate position in the text with the correct option (refer to Figure B-39). For additional information on the methods used to indicate how to place illustrations in a document instance, refer to MIL-HDBK-2361.

a. Use the "Above" reference to place the illustration above the referenced text or steps.
b. Use the "Below" reference to place the illustration below the referenced text or steps.
c. Use the "Intermediate (default)" reference to place the illustration immediately below the referenced text or steps.
d. Use the "Facing" reference to place the illustration on the page facing the referenced text or steps.
e. Use the "Float" reference to place the illustration anywhere on the page with the referenced text or steps.

B.5.1.7.4 Figure number and title placement. The figure number will precede the figure title and be placed beneath the figure (Refer to *TABLE* B-V for formatting). When inserting a figure into a TM in the horizontal (landscape) position, the preferred method is that the figure number and title is located at the bottom of the page as it exists before rotation. (Refer to Figure B-40.)

B.5.1.7.5 Graphic size options. Size options for graphics are full page, ½ page, ¼ page, and 1/8 page. Determine the size of the graphic by measuring from the top of the graphic to the bottom. More than one illustration may be placed in the designated graphic area (refer to Figure B-41). The illustrator should design the graphic to fit the given dimension. Shrinking and enlarging may lose clarity of the illustration.

B.5.1.7.6 Multiple tasks using same illustrations. When two separate tasks appear on the same page one illustration can be used to support both tasks if space permits.

B.5.1.7.7 Repeating illustrations. Illustrations are not repeated unless necessary to support multipage descriptions of tasks or to support a different requirement in another part of the TM.

B.5.2 Style.

B.5.2.1 Equations. (refer to Figure B-42).

B.5.2.1.1 Symbols. .

a. Any enclosing symbol, such as parentheses ( ) or braces { }, are prepared just wide enough to align with the highest and lowest points of the matter enclosed. Similarly, any dividing or covering element, such as the horizontal division symbol (_____) or the top of the radical sign SQRT √ , is prepared just wide enough to align with the right and left outer edges of the matter divided or covered. For example,

The input impedance is determined by:

$$Z_1' = Z_1 \left[m (1-m) \frac{(K-1)^2}{K} + 1\right]$$

The frequency of peak attenuation, f_∞ , is

$$f_\infty = \sqrt{\frac{f_c^2}{1-m^2}} = \frac{(15 \times 10^3)}{1-(0.6)^2} = 18.75 \text{ kHz}$$

b. Use parentheses, brackets, and braces in the following order to set off parts of equation: { [( )] }.

c. Whenever possible, integral signs and summation signs should be of the same height as the mathematical expressions they include.

d. Inferiors (subscripts) precede superiors (exponents) if they appear together; but if either inferior or superior is too long, the two are aligned on the left.

e. Avoid the use of the slant bar.

f. In mathematical equations, use italics for all letter symbols - capitals, lower case, small capitals, and superiors and inferiors (exponents and subscripts).

B.5.2.1.2 Punctuation.

a. Punctuate mathematical equations in much the same manner as text, but do not use commas to set off nonrestrictive expressions placed in a clear space between lines of text. For example:

Figure 12 shows that the described condition

$$E_c + \frac{E_b}{\mu} = 0$$

exists when the grid of V35 is just sufficiently negative to neutralize the attracting power of the plate at the cathode.

(The commas that would be required in an equivalent nonrestrictive situation in text are omitted.)

b. Use periods after equations at the end of sentences, except where their use would be meaningless or confusing to the TM user. For example,

The equivalent circuit (refer to Figure 39) shows that range of frequencies

Amplification in middle } $\frac{e_o}{e_s} = \mu n$

range of frequencies

c. Do not introduce an equation with a colon (:) unless the words "as follows," "the following," etc., are also used. For example,

The impedance formed by the reactance in series with resistor R7 is

$$Z = \sqrt{R2 + \left(\omega L - \frac{1}{\omega c}\right)^2}$$

(The terminal period is omitted for clarity.)

B.5.2.1.3 Dividing an equation.

a. Place an equation too long for one line flush on the left margin. Place the second portion flush on the right margin and balance the two parts as closely as possible. The equation is divided:

   (1) Just before an equals sign (=) (Equals signs are clear on the left of other beginning mathematical signs.),

   (2) Just before a plus (+) or minus (-) sign separating elements of comparable rank, or,

   (3) Just before a multiplication sign (x). This type of multiplication indication should be used whenever line interruption is necessary at a multiplication point.

For example,

$$15r + 16f - 11z + 38f\,(r - 1) + 23fz =$$
$$38f\,(r + 14z\,(r^2 + f^2))$$

...in this circuit the plate current is given by the equation

$$I_t = o_1\,(E_g + E_p) + o_2\,\left(E_g + \frac{E_p}{\mu}\right)$$
$$+ o_3\,\left(E_g + \frac{E_p}{\mu}\right)^2$$

b. Do not break a short equation at the end of a line. Begin the equation on the next line or center it on a line by itself.

c. All equations included in a single line should be free from ambiguity.

B.5.2.1.4 Alignment of equations. In a series of equations, align the major equal signs. For example,

Solution: Since $P = EI$

The line current is $I = \frac{P_f}{E_L} = \frac{21{,}400}{2}\,(30) = 93.0$ amp

And the field current is $I_f = \frac{E_L}{P_f} = \frac{230}{100} = 2.3$ amp

B.5.2.1.5 Connecting words. Place connecting words of explanation, such as "therefore" and "similarly," flush left either on the same line with the equation or on a separate line.

B.5.2.1.6 Spacing. Use clear space above and below equations as needed. Center and indent any complex or hard-to-read expressions in a clear space between the lines of text. Start a series of such expressions at the left margin or indent in any consistent manner. Center and indent any important expression, regardless of complexity, to introduce or emphasize it. For example,

The value of the cutoff wavelength c is

$$\lambda c = \left(\frac{90^\circ}{\theta^1 + \theta^2}\right)\lambda co$$

where co = 2a cutoff wavelength without ridges and satisfies the approximate equation

$$\cot \theta^2 + (b1/b2) \cot \theta^1 = 0$$

B.5.2.1.7 Numbering and referencing to equations. When it is necessary to reference equations in the text, give the equation a reference number. The reference number consists of EQ, followed by an Arabic numeral beginning with 1 within each work package. (For example, EQ 1, EQ 2, etc.) (Refer also to Figure B-43.)

Front Matter

Front Cover
Warning Summary
List of effective pages/work packages
Title Block Page
Table of Contents
How to Use This Manual

Chapter 1. General Information, Equipment Description, and Theory of Operation

Work Packages

0001 General Information
0002 Semitrailer Equipment Description and Data
0003 Air Over Hydraulic Brake System Theory of Operation
0004 Electrical System Theory of Operation

Chapter 2. Operator Instructions

Work Packages

0005 Semitrailer Description and Use of Operator Controls and Indicators
0006 Semitrailer Operation Under Usual Conditions
0007 Semitrailer Operation Under Unusual Conditions

Chapter 3. Operator Troubleshooting Procedures

Work Packages

0008 Symptom Index
0009 Operator Troubleshooting

Chapter 4. Operator Maintenance Instructions

Work Packages

0010 Operator/Crew PMCS Introduction
0011 Operator/Crew PMCS
0012 Electrical Connectors Maintenance
0013 Couplings Maintenance
0014 Air Reservoir Maintenance
0015 Tire and Wheel Assembly Maintenance

Figure B-1. Sample TM Outline

Chapter 5. Maintainer Troubleshooting Procedures

Work Packages

0016 Symptom Index
0017 Air Over Hydraulic Brake System Troubleshooting
0018 24-Volt Electrical System Troubleshooting
0019 110-Volt Electrical System Troubleshooting

Chapter 6. Maintainer Maintenance Instructions

Work Packages

0020 Semitrailer Service Upon Receipt
0021 Organizational PMCS Introduction
0022 Organizational PMCS
0023 Semitrailer General Maintenance Procedures
0024 Semitrailer Lubrication Procedures
0025 Electrical System Maintenance
0026 Body Maintenance
0027 00-0031 Additional Maintenance WPs

Chapter 7. Maintainer and Below Depot Maintenance - Electrical Systems

Work Packages

0032 110-Volt Connector Receptacle Repair
0033 24-Volt Connector Receptacle Repair
0034 24-Volt Domelights Wire Harness Repair
0035 Wall Receptacle Cables Repair

Chapter 8. Maintainer and Below Depot Maintenance - Semitrailer Body

Work Packages

0036 Side Door and Right Rear Door Repair
0037 Deck Repair
0038 Semitrailer Body Repair

Chapters 9-12. Additional Semitrailer Systems Maintainer and Below Depot Maintenance Chapters

Figure B-1. Sample TM Outline - Continued

Chapter 13. RPSTL Information Chapter

0096 Introduction
0097 Repair Parts List
0098 Special Tools List
0099 NSN Index
0100 Part Number Index

Chapter 14. Supporting Information

Work Packages

0101 References
0102 MAC Introduction
0103 MAC
0104 COEI/BII Lists
0105 AAL List
0106 Expendable and Durable Items List
0107-0114 Additional Supporting Information WPs

Rear Matter

Glossary Pages
Alphabetical Index Pages
DA Form 2028
Authentication Page
Foldout Pages
Back Cover

Figure B-1. Sample TM Outline – Continued

SECURITY CLASSIFICATION

TM NUMBER(S)

TYPE OF PUBLICATION
MAINTENANCE LEVELS
FOR

NOMENCLATURE OF EQUIPMENT
TYPE, MODEL, PART NUMBER
NATIONAL STOCK NUMBER (EIC)
OR
SUBJECT

SUBTITLE

WEAPON SYSTEM NAME

ILLUSTRATION

AVAILABILITY STATEMENT ,

SUPERSEDURE NOTICE *

DISCLOSURE NOTICE

DISTRIBUTION STATEMENT

WARNING

DESTRUCTION NOTICE

GENERAL NOTICE

SERVICE NOMENCLATURE

TM DATE

SECURITY CLASSIFICATION

Figure B-2. Example of a front cover.

WARNING SUMMARY

This warning summary contains general safety warnings and hazardous materials warnings that must be understood and applied during operation and maintenance of this equipment. Failure to observe these precautions could result in serious injury or death to personnel. Also included are explanations of safety and hazardous materials icons used within the technical manual.

EXPLANATION OF SAFETY WARNING ICONS

ELECTRICAL - electrical wire to hand with electricity symbol running through hand shows that shock hazard is present.

HEAVY OBJECT - human figure stooping over heavy object shows physical injury potential from improper lifting technique.

GENERAL SAFETY WARNINGS DESCRIPTION

WARNING

Whenever possible shut off system power before beginning work on equipment.

Do not come in contact with electrical connectors.

Don't be misled by low voltage. Low potentials can be dangerous.

Do not work on electrical equipment alone. Be sure another person is nearby who can give first aid.

WARNING

Some objects covered in this manual are heavy and need two soldiers to lift them.

EXPLANATION OF HAZARDOUS MATERIALS ICONS

CHEMICAL - drops of liquid on hand shows that the material will cause burns or irritation to human skin or tissue.

Figure B-3. Example of warning summary.

EXPLANATION OF HAZARDOUS MATERIALS ICONS - Continued

VAPOR - human figure in a cloud shows that material vapors present a danger to life or health.

FIRE - flame shows that a material may ignite and cause burns.

EYE PROTECTION - person with goggles shows that the material will injure the eyes.

HAZARDOUS MATERIALS DESCRIPTION

WARNING

DRYCLEANING SOLVENT P-D-680

P-D-680 solvent vapors are toxic. Avoid prolonged or repeated breathing of vapors or solvent contact with skin. Use only with adequate ventilation. Solvent is flammable and should not be used near open flame. Fire extinguishers should be readily available when solvent is used.

Figure B-3. Example of warning summary. - Continued.

TM X-XXXX-XXX-XX 0001

OPERATOR, FIELD, AND SUSTAINMENT MAINTENANCE TRANSPORTABLE ELECTRONIC SHOP GENERAL INFORMATION

SCOPE

This technical manual contains instructions for operation, checks, and adjustments, and corrective maintenance for the AN/TSM-191(V)* Transportable Electronic Shop (shelter). The shelter provides a field level maintenance, protected test facility which is used to support and improve the operational readiness of Army electronic and avionic systems.

Type of Manual: Operator, Field and Sustainment Maintenance.
Model Number and Equipment Names: AN/TSM-191(V)2 Transportable Electronic Shop, AN/TSM-191(V)2 Transportable Electronic Shop, AN/TSM-191(V)2 Transportable Electronic Shop.

Purpose of Equipment: The shelter provides a field level maintenance, protected test facility which is used to support and improve the operational readiness of Army electronic and avionic systems.

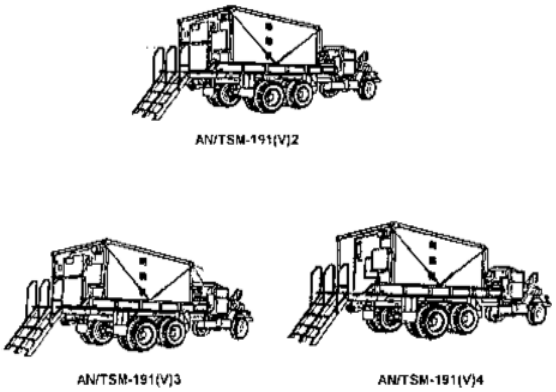

Figure 1. Family AN/TSM-191 Vehicles

MAINTENANCE FORMS, RECORDS, AND REPORTS

Department of the Army forms and procedures used for equipment maintenance will be those prescribed by (as applicable) DA PAM 750-8, The Army Maintenance Management System (TAMMS) Users Manual; DA PAM 738-751, Functional Users Manual for the Army Maintenance Management System- Aviation (TAMMS-A); or AR 700-138, Army Logistics Readiness and Sustainability.

REPORTING EQUIPMENT IMPROVEMENT RECOMMENDATIONS (EIR)

If your shelter needs improvement, let us know. Send us an EIR. You, the user, are the only one who can tell us what you don't like about your equipment. Let us know why you don't like the design or performance. If you have Internet access, the easiest and fastest way to report problems or suggestions is to go to https://aeps.ria.army.mil/aepspublic.cfm (scroll down and choose the "Submit Quality Deficiency Report" bar). The Internet form lets you choose to submit an Equipment Improvement Recommendation (EIR), a Product Quality Deficiency Report (PQDR or a Warranty Claim Action (WCA). You may also submit your information using an SF 368 (Product Quality Deficiency Report). You can send your SF 368 via e-mail, regular mail, or facsimile using the addresses/facsimile numbers specified in DA PAM 750-8, The Army Maintenance Management System (TAMMS) Users Manual. We will send you a reply.

0001-1

Figure B-4. Example of a general information work package.

CORROSION PREVENTION AND CONTROL (CPC)

Corrosion Prevention and Control (CPC) of Army materiel is a continuing concern. It is important that any corrosion problems with this item be reported so that the problem can be corrected and improvements can be made to prevent the problem in future items.

While corrosion is typically associated with rusting of metals , it can also include deterioration of other materials, such as rubber and plastic. Unusual cracking, softening, swelling, or breaking of these materials may be a corrosion problem.

If a corrosion problem is identified, it can be reported using SF 368, Product Quality Deficiency Report. Use of key words such as “corrosion”, “rust”, “deterioration”, or “cracking” will ensure that the information is identified as a CPC problem.

The form should be submitted to the address specified in DA PAM 750-8.

DESTRUCTION OF ARMY MATERIEL TO PREVENT ENEMY USE

For procedures to destroy this equipment to prevent its use by the enemy, refer to TM 750-244-2, Procedures for Destruction of Electronic Materiel to Prevent Enemy Use.

NOMENCLATURE CROSS-REFERENCE LIST

Common Name	Official Nomenclature
Shelter	Transportable Electronic Shop (all models)
AN/TSM-191(*)	Transportable Electronic Shop (all models)

LIST OF ABBREVIATIONS/ACRONYMS

Abbreviation/Acronym	Name
ac	Alternating Current
BIT	Built-in Test
C	Celsius
ECU	Environmental Control Unit
MCPE	Modular Collective Protection Equipment

SAFETY, CARE, AND HANDLING

The following procedures should be observed when handling all ESD sensitive components and units containing such components. Failure to observe all of these precautions can cause permanent damage to the electrostatic device. This damage can cause the device to fail immediately or at a later date when exposed to an adverse environment.

1. Turn off and /or disconnect all power, signal sources and loads used with the unit.
2. Place the unit on a grounded non-conductive work surface.
3. Ground the repair operator using a non-conductive wrist strap or other device using 1 mega-ohm series resistor to protect the operator.
4. Ground any tools (including soldering equipment) that will contact the unit. Contact with the operator’s hand provides sufficient ground for tools that are otherwise electrically isolated.
5. All electrostatic sensitive replacement components are shipped in non-conductive foam or tubes and must be stored in the original shipping container until installed.
6. When these devices and assemblies are removed from the unit, they should be placed on the non-conductive work surface or in non-conductive containers.
7. When not being worked on, place disconnected circuit boards in plastic bags that have been coated or impregnated with a non-conductive material.
8. Do not handle these devices unnecessarily or remove them from their packages until actually used or tested.

Figure B-4. Example of a general information work package - Continued.

TM X-XXXX-XXX-XX 0002

OPERATOR, FIELD, AND SUSTAINMENT MAINTENANCE
TRANSPORTATION ELECTRONIC SHOP
DESCRIPTION AND DATA

EQUIPMENT CHARACTERISTICS, CAPABILITIES, AND FEATURES
The Transportable Electronic Shop, AN/TSM-191(*) is a truck mounted, modified S-280C/G electronic shelter which contains and Electrical-Electronic Equipment Test Station AN/USM-632(*), an Environmental Control Unit (ECU), Modular Collective Protection Equipment (MCPE) (applies to AN/TSM-191(V)2 and AN/TSM-191(V)3 only), a power distribution system and interconnecting cables. The shelter is a frontline automatic test system used to perform diagnostic checks and trouble shoot designated electronic systems. The modified S-280C/G shelter provides housing, equipment, and work space for the AN/USM-632(*). The AN/USM-632(*) performs computer controlled testing on suspected faulty Units Under Test (UUTs).
The test station is installed in a truck mounted shelter. The shelter cooling and heating is provided by a built in ECU which allows operation under a wide range of weather conditions. Environmental protection against chemical and biological contamination is provided by the MCPE (applies to AN/TSM-191(V)2 and AN/TSM-191(V)3 only). The shelter is powered by an external power source. The test station is capable of running self-test and self-alignment programs with fault isolation routines. Tests and isolates faults in the UUTs automatically via computer controlled test programs.
LOCATION AND DESCRIPTION OF MAJOR COMPONENTS
EXTERIOR COMPONENTS
Environmental Control Unit (ECU)

NOTE
Horizontal ECU is used only on AN/TSM-191(V)3. Vertical ECU is used only on AN/TSM-191(V)2 and AN/TSM-191(V)4. The following paragraph applies to both models of ECUs.

The ECU is compact, electric motor driven unit which provides filtered, cooled air (and heated air, as required) to maintain the service conditions of the AN/USM-632(*), The horizontal unit has a cooling capacity of 35,000 BTU/hr and a heating capacity of 31,200 BTU/hr. The input power requirements for the horizontal ECU are three phase, 208 delta volts ac, 50/60 Hz at 13.5 kw. The vertical unit has a cooling capacity of 36,000 Btu/hr and a heating capacity of 28,000 BTU/hr. The input requirements for the vertical ECU are three phase, 208 delta volts ac, 400 Hz at 110 kw. A detailed description of both model air conditioners can be found in the technical manuals referenced in WP 0205.
MODUALR COLLECTIVE PROTECTION EQUIPMENT (MCPE)
The MCPE removes toxic gases and dust form air supplied to the shelter in a Nuclear, Biological Chemical (NBC) environment. The MCPE consists of an XM20 external Integrated Protective Entrance (external IPE) and an XM93-100 CFM Gas-Particulate Filter Unit (GPFU). The external IPE is a collapsible assembly which provides a pressurized transition area between the shelter and the outside contaminated environment. The external IPE assembly consists of top and bottom pan assemblies, support assemblies and a biological and chemical resistant fabric assembly that attaches to the pan assemblies. The fabric forms the entrance assembly walls and has a zipper sewn in which forms the access door to the protective entrance from the outside contaminated zone. A door assembly consists of inner and outer door assemblies. the protective entrance mounts to the outside of the outer door. During non-NBC operation, the entrance is collapsed against the outer door. In this operating mode, the outer door functions as a normal shelter door to allow access to the shelter and ventilation for shelter personnel. During NBC operation, the entrance assembly is erected and access to the shelter is through the inner door and the zipper door on the entrance assembly. A Protective Entrance Module (PEM) is mounted in the roof shell of the top pan assembly. When the entrance assembly is erect, the PEM provides white or blackout (red) lighting, decontamination purge timing and low pressure warning for the protective entrance.

0002-1

Figure B-5. Example of an equipment description and data work package.

TM X-XXX-XXXX-XX **0002**

LOCATION AND DESCRIPTIONS OF MAJOR COMPONENTS–CONTINUED

Figure 1. Exterior Components

INTERIOR COMPONENTS

The AN/USM-632(*) is an automatic test system used to perform diagnostic checks and troubleshoot designated electronic subsystems. It is mounted to the base assembly on the roadside of the modified shelter. A detailed description of the AN/USM-632(*) is provided in TM 11-6625-3173-12-1.

A thermal detector and alarm assembly is mounted to the inside wall of the shelter near the air conditioner. This unit monitors the air temperature inside the shelter via a thermocouple mounted inside the air conditioner, behind the return air vent. A meter on the front panel provides a visual indication of shelter temperature in degrees Fahrenheit and a horn provides an audible alarm to alert shelter personnel of a potentially damaging condition for the AN/USM-632(*) equipment due to a rising ambient temperature or a temperature below the minimum operating level. This horn will sound when the temperature is above 90° F or below 50° F.

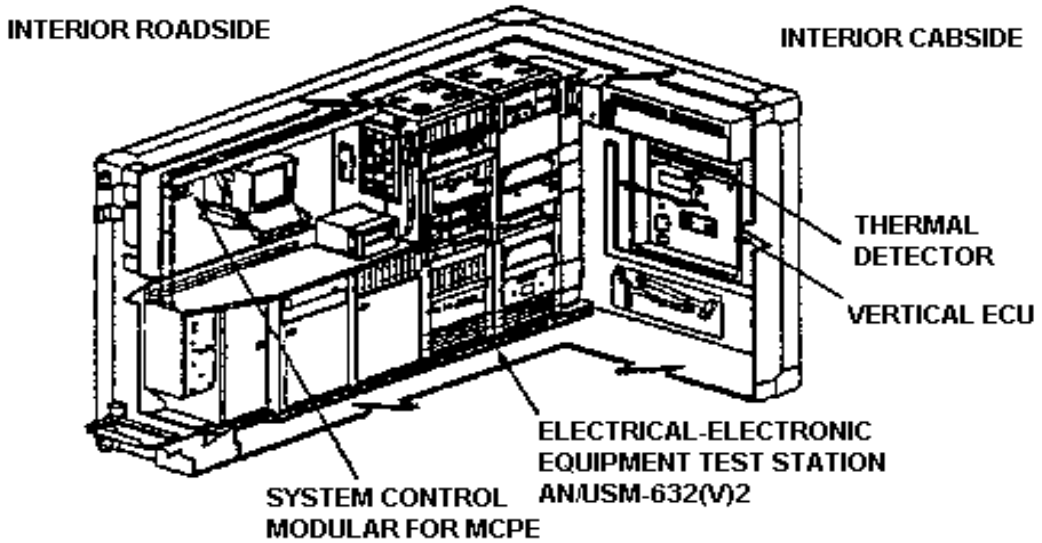

Figure 2. Interior Components

0002-2

Figure B-5. Example of an Equipment Description and Data Work Package- Continued.

DIFFERENCES BETWEEN MODELS

Table 1 summarizes the differences between the three models of the shelter covered in this manual.

Table 1. Differences Between Models.

EQUIPMENT DESCRIPTION	AN/TSN-191(v)2 P/N A3070220-4	AN/TSN-191(v)3 P/N A3100860-2	AN/TSN-191(v)4 P/N A3143250
Electrical-Electronic Equipment Test Station Mode-lAN/USM-632(V)2	X		X
Electrical-Electronic Equipment Test Station Model AN/USM-632(V)3		X	
Air Conditioner, Vertical, Compact, Keco Model: F36T4-2SB	X		X
Air Conditioner, Horizontal, Compact, Keco Model: F36H-2S		X	
Frequency Converter, Avionics Instruments, Model: 4A3000-1B-HRP	X		X

END OF WORK PACKAGE

Figure B-5. Example of an Equipment Description and Data Work Package - Continued.

TM X-XXX-XXXX-XX 0015

OPERATOR, FIELD, AND SUSTAINMENT MAINTENANCE
TRANSPORTATION ELECTRONIC SHOP
THEORY OF OPERATION

POWER ENTRY HOUSING AND SECONDARY INOUT POWER FILTER

Three phase input power from an external source, i.e. diesel powered generator or facility power, is cabled to the power entry housing and connected to the power input connector. Inside the housing, each phase line and the neutral line are wired to four independent surge arresters and the primary input power fitter. The surge arresters protect the circuits within the shelter from transients caused by lightning induction, switching surges and Electro Magnetic Pulse (EMP). When a surge voltage exceeds the spark over voltage of the arrester, the arrester becomes a short circuit and remains so until the transient has been by-passed and the line automatically returns to normal. The primary input power filter suppresses condition of noise caused by Electro Magnetic Interference (EMI), into and out of the shelter over the input power lines. A secondary input power filter is connected in series with the primary input power fitter to ensure protection of shelter circuits from transient voltages below the spark over voltage of the EMP protectors coming in through the power lines.

POWER DISTRIBUTION ASSEMBLY (PDA)

The PDA consists of a bass assembly which houses the circuit protection and the power distribution panel which contains circuit breakers and indicators. The circuit protection devices consist of an over/undervoltage-relay, a phase sequence relay and an over current relay. If a condition exists in a circuit that does not meet the parameters of any one of these devices, that fault will cause the MAIN POWER circuit breaker to reset to the OFF position, thereby removing power to the internal circuits of the shelter and causes the AC POWER FAULT light to come on. When set to ON, the MAIN POWER circuit breaker applies power to the inputs of the other breakers and three green power indicators showing power applied for each phase will come on. As each of the remaining circuit breakers are set to ON, the corresponding indicators will come on providing a visual indication of power applied to each circuit.

ENVIRONMENTAL CONTROL UNIT (ECU)

(Horizontal ECU is used only on the AN/TSM-191(V)3 model of the shelter. Vertical ECU is used only on the AN/TSM-191(V)2 and AN/TSM-191(V)4 models of the shelter.) Once started, the air conditioner operates automatically due to the relationship of the components, controls and instruments. With the model selector switch in the OFF position, all electrical components are isolated from electrical power except for the crankcase heater. This device must be energized for 30 minutes prior to operation in the cool mode. The following operating modes of the ECU are controlled by the mode selector switch.

Ventilation

Ventilation is provided in the VENT position by energizing the fan motor which forces air out of the evaporator discharge louver. The amount of outdoor air used for ventilation is determined by the position of the fresh air damper.

0015-1

Figure B-6. Example of a system theory of operation work package.

ENVIRONMENTAL CONTROL UNIT (ECU)–CONTINUED

VENTILATION–CONTINUED

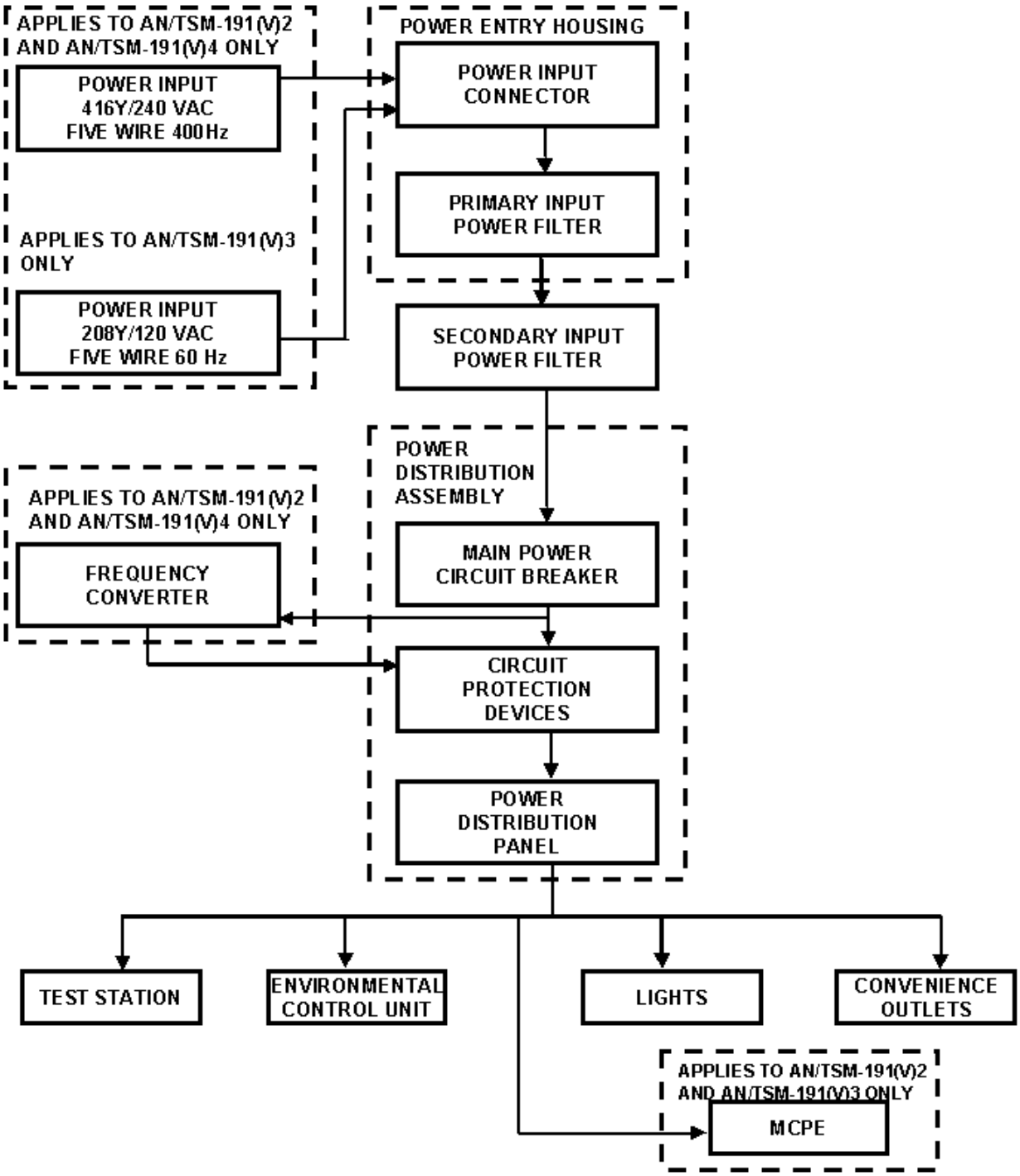

Figure 1. Power Entry Housing, PDA, and ECU Interconnectivity.

Figure B-6. <u>Example of a system theory of operation work package</u>. - Continued.

TM X-XXX-XXXX-XX **0304**

OPERATOR MAINTENANCE

TRANSPORTATION ELECTRONIC SHOP
OPERATION UNDER USUAL CONDITIONS

INITIAL SETUP:

Personnel Required
Electrical Technician (2)

GENERAL

The equipment contained within this test facility is normally shipped assembled. The assembly paragraph provides the data and procedures for the steps to be taken when AN/TSM-191(*) is emplaced. The items included are ladder installation, ground rod installation, primary power connection and air conditioner drain plug removal.

SITING

WARNING

The power source must be placed at least 75 feet from the test facility.

CAUTION

If the outside ambient temperature is expected to be 90° or above, position the shelter with roadside shaded, if possible, to minimize the effect of direct sunlight.

1. The site requirements for emplacement of the AN/TSM-191 (*) consist of a three-phase 416 wye/ 240 volt ac, 400 Hz (applies to theAN/TSM-191(V) 2 and AN/TSM-191 (V) 4 only or three phase 208 wye/120 volts ac, 60 HZ (applies to the AN/TSM-191 (V)3 only) primary power source.
2. The AN/TSM-191 (*) should be placed on a minimum of 15 by 25 feet of firm level ground with a six percent slope or less.
3. The power source should be placed at least 75 feet from the facility.

END OF TASK

ASSEMBLY AND PREPARATION FOR USE
LADDER INSTALLATION

WARNING

The ladder must be installed to provide access to the AN/TSM-191 Ladder weighs 75 lbs. Two people are required to lift the ladder.

1. Remove ladder (Figure 1 , Item 1) from storage brackets on exterior entry end of shelter.
2. Remove hooks (Figure 1 , Item 5) from retainer slots on both sides of tail gate (Figure 1 , Item 4).
3. Grasp top of tail gate and pull It back. Do not allow tail gate to drop.
4. Replace hooks in slots of tail gate to secure tail gate in horizontal position.
5. Pull out retaining pins and remove railings (Figure 1 , Item 2) from ladder.

NOTE

Ladder should be positioned for use while strapped in the folded position.

6. Slide U-brackets (Figure 1 , Item 3) at top end of ladder over edge of tail gate.

0304-1

Figure B-7. Example of an operation under usual conditions work package.

NOTE

When ladder is unfolded, do not separate. Ensure hinge pins are engaged.

7. Loosen straps (Figure 1 , Item 9) and unfold ladder.
8. To release lanyards (Figure 1 , Item 7) from the stored position. pull up on center locking pin and pull cord through.
9. Hook retaining brackets (Figure 1 , Item 6) on bottom of tail gate, pull free and of cord (Figure 1 , Item 8) and push down on center locking pin to secure ladder in position.
10. Install railing (Figure 1 , Item 2) on ladder.

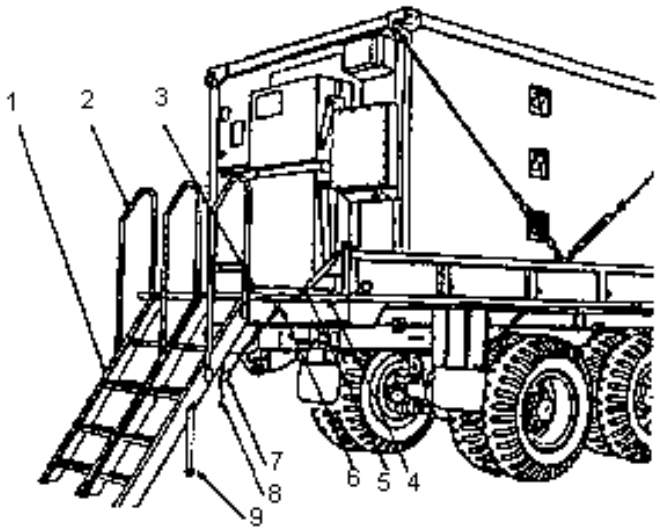

Figure 1. Ladder Installation

END OF TASK

END OF WORK PACKAGE

Figure B-7. Example of an operation under usual conditions work package. - Continued.

TM NUMBER 0052

OPERATOR MAINTENANCE
OPERATE SECONDARY SIGHT UNDER UNUSUAL CONDITIONS

INITIAL SETUP:

Personnel Required
Vehicle Commander

Equipment Condition
Vehicle commander's hatch cover opened (WP 0008)
Turret operating in power mode (WP 0010)

OPERATE

1. Raise front sight reticle.

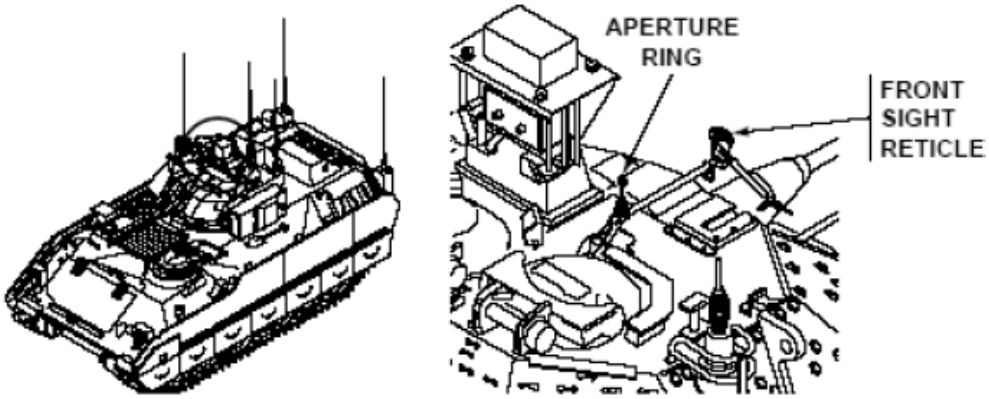

Figure 1. Aperture Ring

2. Raise aperture ring.

NOTE

Turret may be traversed and elevated in MANUAL or in POWER mode.

3. Locate target using front sight reticle.

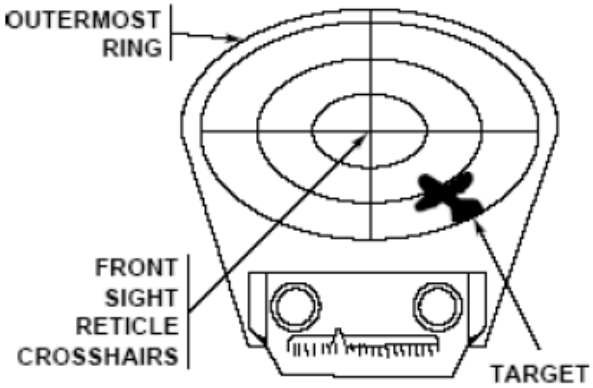

Figure 2. Front sight reticle.

a. Traverse turret until target is located between front sight reticle crosshairs and outermost ring (WP 0010 00).

0052-1

Figure B-8. <u>Example of an operation under unusual conditions work package.</u>

OPERATE –CONTINUED

NOTE

Weapons should be fired before target reaches center crosshairs in front sight reticle and pointer post in aperture ring.

4. Track target from outermost ring to center crosshairs on front sight reticle and pointer post in aperture ring.

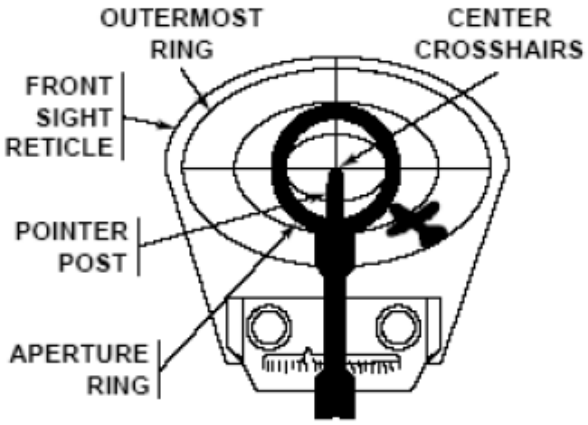

Figure 3. Center crosshair.

5. Lower aperture ring (see Figure 1).
6. Lower front sight reticle (see Figure 1).

END OF TASK

END OF WORK PACKAGE

Figure B-8. Example of an operation under unusual conditions work package. -Continued

TM NUMBER 0331

OPERATOR MAINTENANCE

IMMEDIATE ACTION FOR LOSS OF BRAKES

INITIAL SETUP:

Personnel Required
Driver

Equipment Condition
Brake system failed

References
WP 0003

IMMEDIATE ACTION

1. Warn personnel of emergency vehicle stop.

NOTE

TEC control will bring the vehicle to a quick stop when throttle is released and gear selector is placed in PVT (pivot steer) or N (neutral).

2. Place gear selection PVT (pivot steer) or N (neutral).

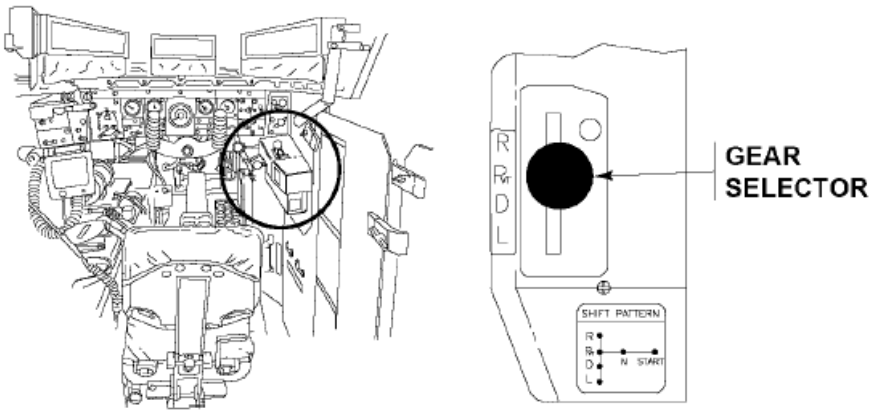

Figure 1. Gear Selector Locator

3. Shut down engine when vehicle stops (WP 0003)

END OF TASK

END OF WORK PACKAGE

0331-1/(2 blank)

Figure B-9. Example of an emergency work package

TM NUMBER 0568

OPERATOR MAINTENANCE
STOWAGE AND DECAL/DATA PLATE GUIDE

INTRODUCTION

Scope

This work package shows stowage location for equipment, metal signs, and stencils that must be in place on the M915A2 and M916A1.

General

The Illustrations on the following pages show stowage locations for Basic Issue Items (BII), tire chains, and personnel gear. Also shown are locations for metal signs and stencils that contain cautions or information required to operate the vehicle safely.

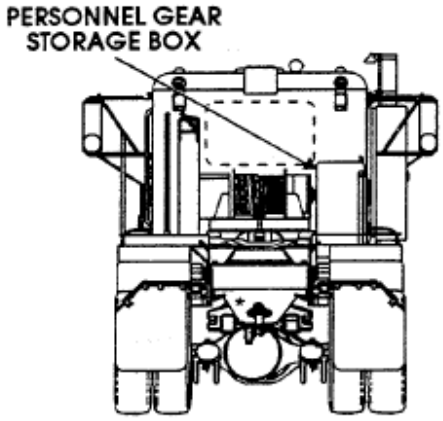

M916A1

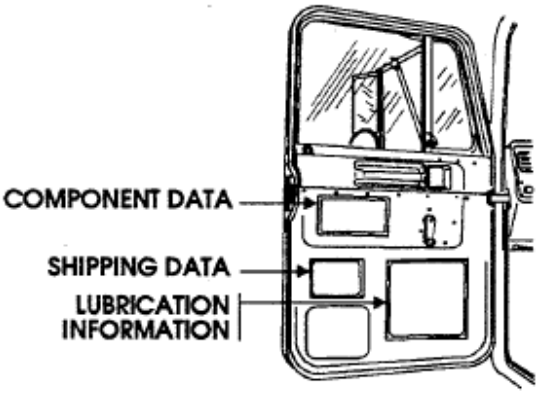

M915A2 and M916A1

Figure B-10. <u>Example of a stowage and decal/data plate guide work package</u>

TM NUMBER 0167

OPERATOR MAINTENANCE

ON-VEHICLE EQUIPMENT LOADING PLAN

INTRODUCTION

Scope

This work package lists user equipment and its location on the NBCRS FOX M93A1.

General

The following illustrations and tables will assist you in locating user equipment on the NBCRS FOX M93A1.

EXTERNAL LEFT SIDE VIEW

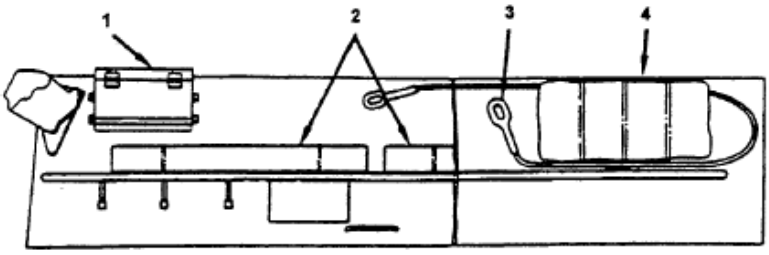

Figure 1. External left side view.

Item No.	Item Name
1	Stowage Box Spare Smoke Grenades (12)
2	Camouflage Screen Equipment
3	Tow Cables (2)
4	Camouflage Screens (2)

END OF WORK PACKAGE

0167-1/(2 blank)

Figure B-11. Example of an on-vehicle equipment loading plan.

TM X-XXX-XXXX-XX **1303**

OPERATOR MAINTENANCE

NBCRS FOX M93A1
TROUBLESHOOTING INDEX

Malfunction/Symptom **Troubleshooting Procedure**

LEFT DATA WORD DISPLAY WARNINGS

1. BRAKE comes on ..... WP 1203
2. AIR PRESSURE does not come on - brake pressure is low ..... WP 1203
3. COOLANT comes on and ENG. COOLING gage indicates excessive coolant temperature ..... WP 1203
4. ENG. OIL PRESS comes on and engine oil pressure is lowWP ..... WP 1203
5. HYDRAULIC OIL comes on ..... WP 1203
6. HYDRAULIC OIL does not come on - reservoir level is low ..... WP 1203

DRIVER'S LEFT INSTRUMENT PANEL INDICATOR LIGHTS

7. STANDBY HYDRAULIC indicator light does not come on with emergency hydraulic system on ..... WP 1300
8. TRUCK TURN SIGN light does not come on when push lever on steering column switch is pulled upward or pushed downward - vehicle flasher lights operate normally ..... WP 1304
9. UPPER BEAM indicator light does not come on - high beam headlights operate normally ..... WP 1304

RIGHT DATA WORD DISPLAY WARNINGS

10. BATT. CHARGER does not come on when MAIN SWITCH is set to position 1 ..... WP 1405
11. Flasher warning lights do not work ..... WP 1405
12. FUEL does not come on and fuel gage does not indicate low fuel level - fuel level is low ..... WP 1405
13. HYDR PRESS comes on ..... WP 1405
14. BRAKE LINING does not come on - brake lines are leaking ..... WP 1405
15. NORMAL MODE or SIL WATCH does not appear on commander s data word display when NBC CP SYS. switch is set to either NORMAL MODE or SIL WATCH ..... WP 1506
16. PRESSURE GAGE does not read properly when NBC collective protection system is in NORMAL MODE or SIL WATCH ..... WP 1506
17. DUST FILTER appears on commander's data word display when NBC CP SYS. switch is set to either NORMAL MODE or SIL WATCH ..... WP 1506

END OF WORK PACKAGE

Figure B-12. Example of a troubleshooting malfunction/symptom index.

TM X-XXX-XXXX-XX 1264

FIELD MAINTENANCE
ARRESTING HOOK ACTUATOR PROPERLY SERVICED

INITIAL SETUP:

Test Equipment
Multimeter (WP 0234, Item 4)

References
WP 0046

References (cont.)
WP 0061

TROUBLESHOOTING PROCEDURE
916 CODE DISPLAYED WITH ARRESTING HOOK ACTUATOR PROPERLY SERVICED

CAUTION

To prevent damage to low level devices (switches/relay contacts), do not test for continuity with multimeter on the RX1 scale. Pin to pin tests that do not go through switches/relay contacts may use RX 1 scale.

NOTE

The question used in logic tree "Does continuity exist" means to test for the items listed below:

1. Pin to pin test per procedural step.
2. Shorts to ground.
3. Shorts between surrounding pins on connectors.
4. Shorts between shield and conductors.
5. Shield continuity.

When testing for resistance, also test for shorts to ground.

STEP
1. Do substeps below:
   a. Make sure arresting hook is up and latched.
   b. Open door 32R (WP 0061).
   c. Disconnect 85P-N002C from signal Data Converter CV-3493/ASM-612.

CONDITION/INDICATION
Does continuity exist between 85P-N002C pin 32 and aircraft ground?

DECISION
NO–Step 2 YES–Step 5

STEP
2. Do substeps below:
   a. Manually raise speedbrake and install speedbrake aircraft ground safety lock (WP 0046}.
   b. Remove door 103 (WP 0061}
   c. Disconnect 19P-T012 from temperature compensation pressure switch.

CONDITION/INDICATION
Does continuity exist between 19J-T012 pins 3 and 4.

1264-1

Figure B-13. Example of a troubleshooting work package initial setup and procedure.

0232

OPERATOR MAINTENANCE
ENGINE TROUBLESHOOTING PROCEDURES

INITIAL SETUP:

References	References (cont.)
WP 0011	
WP 0020	WP 0253
WP 0023	WP 0264

TROUBLESHOOTING PROCEDURE

ENGINE

SYMPTOM

Engine oil press gauge is in red zone.

MALFUNCTION

ENGINE OIL LOW PRESS indicator light is flashing.

CORRECTIVE ACTION

STEP 1. If indicator light is flashing, stop engine immediately (WP 0023).

WARNING

Hot power unit can burn you. Use care when working near power unit.

STEP 2. Check engine oil level (WP 0253).

STEP 3. Check bilge for oil.

a. If oil is present, check engine hoses, clamps, and fittings for leaks.

STEP 4. Start engine (WP 0020).

STEP 5. Check if ENGINE OIL PRESS gauge is still in the red zone.

a. Stop engine immediately (WP 0023). Notify unit maintenance.

MALFUNCTION

ENGINE COOLANT TEMPERATURE GAUGE IS IN RED ZONE.

CORRECTIVE ACTION

STEP 1. Check if COOLANT LOW LEVEL indicator light is flashing.

a. If COOLANT LOW LEVEL indicator light is off.

b. Press TEST SENSOR BUTTON.

(1) If COOLANT LOW LEVEL indicator does not flash, notify unit maintenance.

(2) If COOLANT LOW LEVEL indicator light is flashing,

(a) Stop engine immediately (WP 0023).

WARNING

Hot coolant can burn you. Do not remove radiator cap until coolant temperature gauge reads in bottom one-quarter of green zone. Turn cap slowly to release pressure.

(b) Check coolant level (WP 0264).

STEP 2. Open power unit access door (WP 0011).

0232-1

Figure B-14. Examples of troubleshooting procedures.

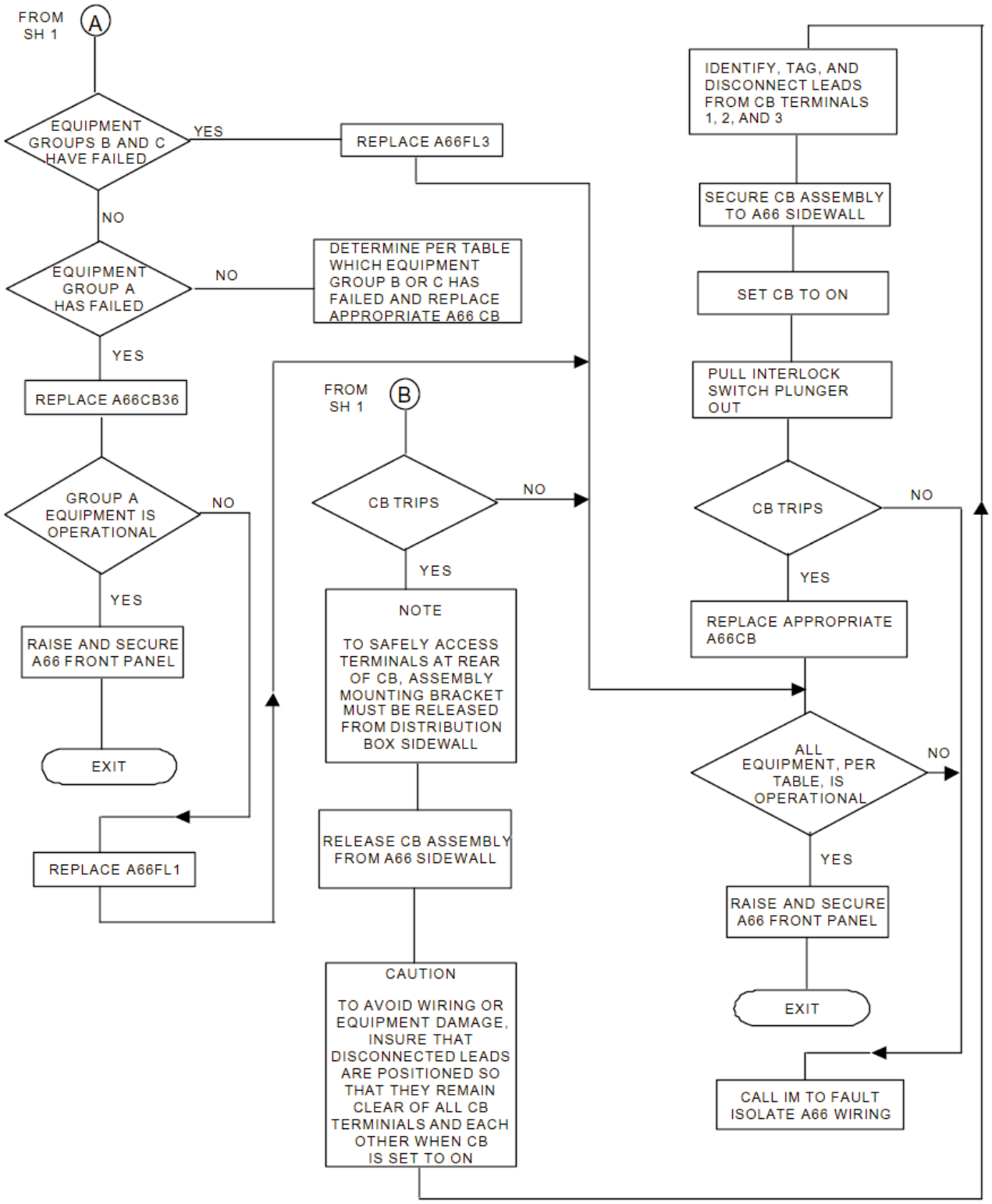

Figure B-15. <u>Example of a functional flow logic tree troubleshooting procedure.</u>

23. SIGNAL NAME: DASEC STATUS WORD DC ANALOG OUTPUT BIT
MEMORY LOCATION: 002150
MEMORY DATA BIT(S): 15 (BINARY)
CONDITION: (None)
SIGNAL FUNCTION: Indicates status of DC analog circuits.
REMARKS: From DASEC to FCC.
PASS: If second digit displayed on HOD is 3 or 7, go to Step 24.
FAIL: Location of fault: replace DASEC (TM 1-1520-238-23 Series).

24. SIGNAL NAME: DASEC STATUS WORD AD/DA BIT
MEMORY LOCATION: 002150
MEMORY DATA BIT(S): 13 (BINARY)
CONDITION: (None)
SIGNAL FUNCTION: Indicates status of analog-to-digital and digital-to-analog circuits.
REMARKS: From DASEC to FCC.
PASS: If third digit displayed on HOD is 1, 3, 5, or 7, go to Step 25.
FAIL: Location of fault: replace DASEC (TM 1-1520-238-23 Series).

25. SIGNAL NAME: DASEC STATUS WORD FD/LS TEST
MEMORY LOCATION: 002150
MEMORY DATA BIT(S): 12 (BINARY)
CONDITION: (None)
SIGNAL FUNCTION: Indicates FD/LS ground test is being run.
REMARKS: From DASEC to FCC.
PASS: If third digit displayed on HOD is 1 or 5, go to Step 26.
FAIL: Location of fault: replace DASEC (TM 1-1520-238-23 Series).

26. SIGNAL NAME: DASEC STATUS WORD ASE BIT
MEMORY LOCATION: 002150
MEMORY DATA BIT(S): 11 (BINARY)
CONDITION: (None)
SIGNAL FUNCTION: Indicates last FD/LS test ASE bit status.
REMARKS: DASEC to FCC.
PASS: If third digit displayed on HOD is 1, go to Step 27.
FAIL: Location of fault: replace DASEC (TM 1-1520-238-23 Series).

27. SIGNAL NAME: DASEC STATUS WORD VD TEST
MEMORY LOCATION: 002150
MEMORY DATA BIT(S): 10 (BINARY)
CONDITION: (None)
SIGNAL FUNCTION: Indicates last FD/LS test VD bit status.
REMARKS: DASEC to FCC.
PASS: If third digit displayed on HOD is 3 or 4, go to Step 28.
FAIL: Location of fault: replace DASEC (TM 1-1520-238-23 Series).

28. SIGNAL NAME: DASEC STATUS WORD AGD BIT
MEMORY LOCATION: 002150
MEMORY DATA BIT(S): 9 (BINARY)
CONDITION: (None)
SIGNAL FUNCTION: Indicates last FD/LS test AGD bit status.
REMARKS: DASEC to FCC.
PASS: If third digit displayed on HOD is 3 or 6, go to Step 29.
FAIL: Location of fault: replace DASEC (TM 1-1520-238-23 Series).

Figure B-16. Example of a text-logic troubleshooting procedure.

TM X-XXXX-XXX-XX 0109

FIELD MAINTENANCE
SERVICE UPON RECEIPT

INITIAL SETUP:

Tools and Special Tools
Measuring Tape (WP 0240, Item 3)

References
WP 0125

References (cont.)
WP 0128
SF 361, Transportation Discrepancy Report

Checking Unpacked Equipment
Inspect the equipment for damage incurred during shipment.
If the equipment has been damaged, report the damage on SF 361, Transportation Discrepancy Report. Check the equipment against the packing slip to see if the shipment is complete. Report all discrepancies in accordance with applicable service instructions (e.g., for Army instructions, see DA PAM 750-8).
Check to see of the equipment has been modified.

Table 1. Inspection Criteria for Packaging.

COMPONENT	ACCEPTABLE	REPARABLE	NONREPARABLE
Wooden Boxes and Crates			
Hardware	Operative and tight. Nails, screws, and fasteners.	Inoperative or loose. Nails, screws, and fasteners.	None. None.
Ends	Free from damage.	Broken or missing cleats and handles.	Damage that requires disassembly of box.
Wood	Splits less than 3 inches long, no closer than 1 inch to edge of board or adjoining split. The board must be secured by at least one nail on each side of the split when it extends to the of the board.	Splits more than 3 inches but no closer than 1 inch to edge of board or adjoining split, or ½-inch wide, that can be repaired by use of corrugated fasteners.	Splits closer than 1 inch to edge of board or adjoining split or over ½-inch wide.
Fiber Containers			
Metal Ends	Minor rust, cracks, indentations, or splits that would not impair water proofing or serviceability of container.	None.	Perforations, excessive rust, or ends which are crushed or not securely crimped to body.
Body and Cap	No leaks, cuts, or gouges.	Cuts, tears, or gouges not closer than 1 inch to closure, less than ½ square inch in area, and unpenetrated layers that can be spot painted.	Cuts, tears, or gouges closer than 1 inch to closure, more than ½ square inch in area, or through all impregnated layers.

0109-1

Figure B-17. Example of packaging inspection/service upon receipt.

CHECKING UNPACKED EQUIPMENT– CONTINUED

Table 2. M29 and M30 Control Surfaces and Containers.

LOCATION	ITEM	ACTION	REMARKS
Container	Components	1. Inspect for rust, fungus, paint damage, and deformation. 2. Reject container if damage prevents it from functioning properly.	WP 0125 –
M29	Control Surfaces	1. Inspect for dents and scratches on post, trailing edge phenolic, skin, and closure plate. 2. Reject control surface: a. If post dents or scratches exceed 0.002 in. (0.051 mm). b. If trailing edge phenolic dents exceed 0.040 in. (10.160 mm). c. If skin dents exceed 0.030 in. (7.620 mm) within 2 in. (50.800 mm) of post. d. If closure plate dents exceed 0.030 in. (7.620 mm) within 2 in. (50.800 mm) of post.	WP 0128 –
M30	Control Surfaces	1. Inspect for dents and scratches on post and skin. 2. Skin dents or scratches up to 0.050 in. (12.700 mm) are allowable, but should be blended. 3. Reject control surface if post dents or scratches exceed 0.002 in. (0.051 mm).	– – –

END OF TASK

END OF WORK PACKAGE

Figure B-17. Example of packaging inspection/service upon receipt - Continued.

TM NUMBER 1324

FIELD MAINTENANCE
DONNING AND FITTING THE SRU-37/P

INITIAL SETUP:

GENERAL
This container assembly is designed to be worn on the user's chest, upper back, or lower back. If the SARVIP is to be worn, it shall be donned first. The SRU-37/P shall be donned over the SARVIP.
CHEST MOUNTING OPTION

WARNING
FLIGHT CONTROL RESTRICTION
When the SRU-37/P is worn on the chest, certain size individuals in certain helicopters may experience aft cyclic control restriction.

1. Position the SRU-37/P across the chest and place both shoulder straps over the shoulders and back. the right shoulder strap with male buckle shall be passed under the left armpit and securely inserted into the female buckle of the left cross strap. The left shoulder strap with male buckle shall be passed under the right armpit and securely inserted into the female buckle of the right cross strap. Ensure that both buckle assemblies are securely fastened. This is essential for the prevention of inadvertent release while performing air crew duties or during emergencies.
2. Adjust the straps, taking up the slack until snug against the body. Be sure to allow for unobstructed access to the beaded inflation handle.

HIGH BACK MOUNTINH OPTION

WARNING
When the SRU-37/P is worn on the high back position, the strap must be loosened to allow the aviator/crew members to reach the beaded activation handle.

1. Place the SRU-37/P across the top of the back (between shoulder blades). Place the shoulder straps over the chest and attach buckles in the same manner as step 1, above-right to left to right. Ensure that the buckle assemblies are securely fastened.
2. Adjust the straps, taking up the slack until snug against the body.

END OF WORK

1324-1/(2 BLANK)

Figure B-18. Example of an equipment/user fitting instructions work package

TM X-XXXX-XXX-10 0132

Table 1. Preventive Maintenance checks and Services for NBCRS FOX M93A1.

ITEM NO.	INTERVAL	ITEM TO BE CHECKED OR SERVICED	PROCEDURE	EQUIPMENT NOT READY/ AVAILABLE IF:
			NOTE Driver, commander and crew will inspect for damaged or missing items while performing checks in walkaround sequence.	
1	Before	Vehicle Exterior	**COMMANDER**	
			1. Check for damaged and missing items. Check lighting fixtures. Make sure all stowed items (pioneer equipment, etc.) are secured to vehicle for travel.	
			2. Secure stowed items. Replace missing items. Report major damage of lighting fixtures. Report minor damage after operations.	Any damage or missing items that will prevent operation.
2	Before	Left Side Exercise	**DRIVER**	
			NOTE If leakage is detected, further investigation is needed to determine the location and cause of the leak.	
			Check underneath vehicle for evidence of fuel, or coolant.	Any class III leak of oil, fuel leakage.
3	Before	Left Side Tires	**DRIVER**	
			WARNING Operating a vehicle with an improperly inflated tire or with a questionable defect may lead to premature tire failure and cause equipment damage, injury, or death to personnel.	
			Check for missing or damaged tires and wheels. Visually check for proper tire inflation.	Missing or damaged tires or wheels. Flat or deflated tires.

Figure B-19. Example of PMCS table.

Before "Vehicle Exterior Walkaround" PMCS Procedures

These illustrations will help you perform BEFORE vehicle exterior walkaround PMCS. The callouts match PMCS item number/procedures.

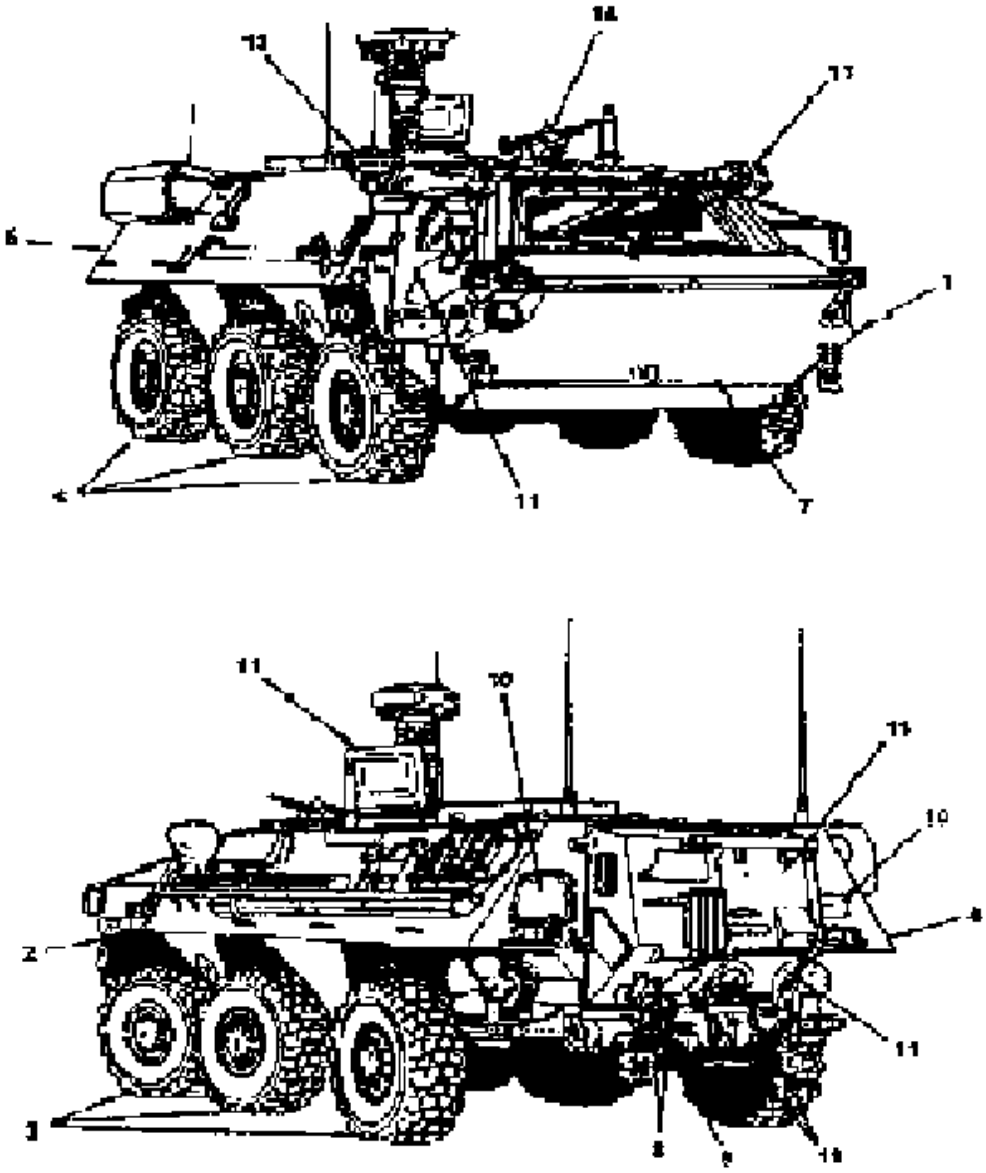

Figure 1. Vehicle check points.

Figure B-19. <u>Example of PMCS table</u>. - Continued.

Table 1 Preventive Maintenance Checks and Services for Model M2A3/M3A3, Before –Continue

ITEM NO.	INTERVAL	ITEM TO BE CHECKED OR SERVICED	PROCEDURE	EQUIPMENT NOT READY/ AVAILABLE IF:
			WARNING **Hydraulic fluid is poisonous and can be absorbed through your skin. Never service hydraulic system when fluid is hot or under pressure. Avoid skin contact. Wash hands with soap immediately after servicing, and wash off any fluid which comes in contact with skin. If fluid gets into eyes, wash eyes immediately and get medical help.** b. Check ramp hydraulic power unit. 1. Lower ramp (WP 0090). 2. Remove ramp hydraulic power unit cover and check sight glass. If fluid level is below ADD mark, add FRH (MIL-H-46170) as needed. Never fill over halfway between ADD and FULL with ramp down. Ramp hydraulic power unit will be overfilled with ramp up. 3. Install ramp hydraulic power unit cover. 4. Raise ramp (WP 0090).	
6	Before	Hull Drain Plugs	**Driver** a. Check for open or missing front hull drain plug and that bridge plates are fully seated.	Front hull drain plug is missing or bridge plates will not seat.
7	Before	Internal Fire Extinguisher	**Driver** a. Check engine compartment fire extinguisher. 1. Check wire or lead seals on engine compartment fire extinguisher. 2. Check that pressure gage on engine compartment fire extinguisher is in green or yellow zone. **NOTE** **If engine compartment fire extinguisher is in yellow zone, notify unit maintenance after mission is completed.**	Wire or lead seals on engine compartment fire extinguisher are missing, broken or improperly laced. Pressure gage on engine compartment fire extinguisher reads in red zone.

Figure B-20. Example of PMCS table format with crew member grouping.

TM NUMBER **0062**

SUSTAINMENT MAINTENANCE
BLANK FIRING ATTACHMENT (M15A2) MAINTENANCE

INITIAL SETUP:

Materials/Parts

Cleaner, lubricant, and preservative (CLP) (WP 1132, Item 9)
Coating compound, enamel (RedM16A2) (WP 1132, Item 23

WARNING

Do not keep live ammunition near the work area.
Only blank cartridge M200 is to be used when the blank firing attachment is attached to the weapon.

GENERAL

This work package contains information and instructions to keep auxiliary equipment used with your weapon in good repair.

REMOVAL

CAUTION

Do not use tools to tighten the blank firing attachment. **USE HANDS ONLY**.

1. Unscrew slide (Figure 1, Item 1) to remove from compensator (Figure 1, Item 2).

2. Unhook blank firing attachment (Figure 1 Item 3) from behind the first groove of compensator (Figure 1, Item 2).

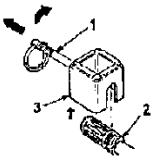

Figure 1. Unlock blank firing from compensator.

3. Screw slide (Figure 2, Item 1) all the way in on blank firing attachment (Figure 2, Item 3).

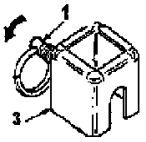

Figure 2. Blank firing attachment.

END OF TASK

CLEANING
Clean blank firing attachment with CLP. Wipe dry and coat with CLP.
END OF TASK

0062-1

Figure B-21. Example of an auxiliary equipment maintenance work package.

TM NUMBER **0025**

DEPOT MAINTENANCE
FACILITIES

INITIAL SETUP:

NOT APPLICABLE

FACILITIES

The Main Fuel Control (MFC) must be overhauled or maintained in an enclosed and controlled area. The following items are required and should be installed in the area for safety and the most expeditious execution of overhaul and maintenance procedures.

1. Facilities to perform parts cleaning and protective finishes application are required as follows:
   a. Well-ventilated areas for adequate protection when toxic chemical and flammable vapors are emitted during cleaning and repair operations.
   b. Emergency washing facilities for personnel who may accidentally become contaminated or endangered by contact with toxic or otherwise injurious materials.
   c. Sinks, containers, spray booths, and manipulating fixtures to facilities dip, spray, flushing, and air-dry methods of cleaning and application using: hydrocarbon solvents; corrosion preventative fingerprint remover (water displacing bath); chemical conversion materials for aluminum.
   d. A cold chest with a temperature range of 0° to -90°F (-17.8° to -67.71°C) is required for installation of interference fit parts.
   e. Oil flushing station capable of driving MFC pump to 1500 RPM and supplying flushing oil pressure to 25 psig (172.38 kPa). This station to include a gage capable of monitoring an MFC P1 pressure of 0-100 psi (0.689.50 kPa).
2. Hazardous area, for test and calibration operations, including adequate ventilation and fire protection.
3. Clean, dry, dust-free area for parts storage between overhaul/maintenance operations.

END OF WORK PACKAGE

0025-1/(2 blank)

Figure B-22. Example of a facilities work package.

TM X-XXXX-XXX-XX **0029**

FIELD
24-VOLT CONNECTOR RECEPTACLE REPAIR
ASSEMBLY, REPAIR, REASSEMBLY

INITIAL SETUP:

Tools

Pliers, diagonal cutting (WP 0060, Item 3)

Screwdriver, flat-tip 3/16-inch (WP 0060, Item 43)

Soldering iron, gun type (WP 0060, Item 48)

Stripper, wire, hand (WP 0060, Item 55)

Material/Parts

Alcohol, denatured (WP 0059, Item 2)

Brush, acid swabbing (WP 0059, Item 4)

Flux, rosin (WP 0059, Item 8)

Solder, non-acid (WP 0059, Item 17)

Personnel Required

One

References

WP 0023

WP 0030

Equipment Condition

24-volt connector receptacle removed (WP 0038).

DISASSEMBLY

NOTE

Tag wires to aid in installation (WP 0023). If circuit marker bands are missing or not readable, replace (WP 0038).

1. Unscrew, and pull back bushing retaining nut (Figure 1, Item 2) from shell (Figure 1, Item 1).
2. Using screwdriver, pry off shell (Figure 1, Item 1) from bushing (Figure 1, Item 3).
3. Using pliers, pull out 12 inserts (Figure 1, Item 4) from bushing (Figure 1, Item 3).

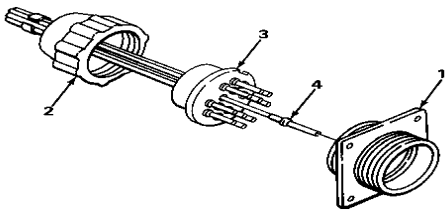

Figure 1. 24-Volt Connector Receptacle

END OF TASK

REPAIR

1. Using soldering iron, heat insert (Figure 2, Item 5) and pull form wires (Figure 2, Item 3).
2. Pull out 12 wires (Figure 2, Item 3).
3. Position wires in bushing (Figure 2, item 2) according to chart (Figure 2, Item 1)
4. Push wire stripper, strip insulation back 1/4 inch.

0029-1

Figure B-23. Example of a general maintenance work package.

REPAIR –CONTINUED

6. Slip an insert (Figure 2 , Item 5) over each wire, and solder using non-acid solder and soldering iron.

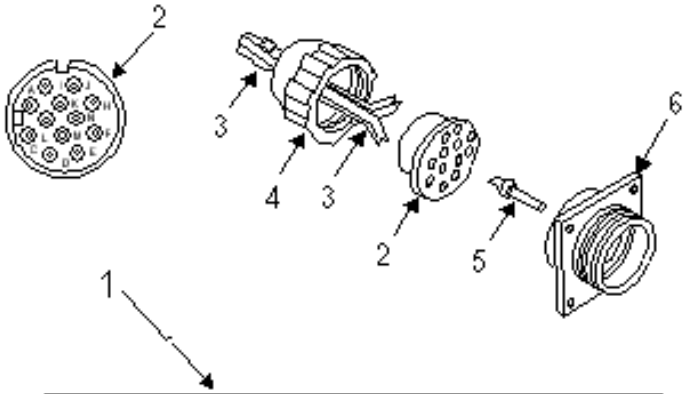

Terminal Designation	Circuit No.	Terminal Designation	Circuit No.
A	24 & 484	H	490
B	22 & 481	J	22 & 440
C	24 & 483	K	37
D	80	L	90
E	21 & 489	M	53
F	23	N	53

Figure 2. 24–Volt Connector Receptacle Wiring Diagram

END OF TASK

REASSEMBLY

NOTE

Make sure wire ends are clean before soldering. If necessary, clean with cleaning solvent and stiff fiber brush. Solder must be non-acid type; use rosin flux. Wires and soldering iron must be pre-tinned for good connection and maximum transfer of heat. After soldering, clean all solder joints with an acid swabbing brush and alcohol.

1. Push wires (Figure 2 , Item 3) and inserts (Figure 2 , Item 5) into bushing (Figure 2 , Item 2) until inserts (Figure 2 , Item 5) are seated.
2. Put bushing (Figure 2 , Item 2) in place within shell (Figure 2 , Item 6).
3. Screw on bushing retaining nut (Figure 2 , Item 4) to shell (Figure 2 , Item 7). Tighten busing retaining nut (Figure 2 , Item 4).
4. Install 24–volt connector receptacle (WP 0030).

END OF TASK

END OF WORK PACKAGE

Figure B-23. Example of a general maintenance work package. - Continued.

Figure B-24. DELETED.

Figure B-25. DELETED.

Figure B-26. DELETED.

Figure B-27. DELETED.

TM X-XXXX-XXX-XX **1839**

FIELD MAINTENANCE
AMMUNITION MARKING INFORMATION

GENERAL

1. Ammunition for the M199 cannon is the separate loading type. The loading of each complete round into the cannon requires three separate operations: loading the fuzed projectile, the propelling charge, and the primer.

2. These components are shipped separately; therefore, the cannon crew must know how to store, unpack, inspect, prepare, and load each complete round every time the weapon is fired.

   a. The chief of section supervises the loading and the preparation duties performed by cannoneers.

   b. The chief of section must also see that the cannoneers and driver are cross-trained in the specific duties of the care, handling, unpacking, inspection, preparation, and loading of the ammunition components in order to sustain a 24-hour operation or to operate with a reduced crew.

3. It is planned that future ammo for all new 155mm weapons will be interchangeable. This will enable projectiles and propelling changes of one NATO nation to be fired from the 155mm weapons of all others. Current items of interchangeability are contained in Chapter 5.

4. For maintenance of ammunition, see TM 9-1300-251-20.

WARNING

Until safety and reliability testing is completed, the use of ammo other than prescribed in this manual is prohibited.

5. Refer to Work Package 0011 for information about the Loose Projectile Restraint System (LPRS). The LPRS is a divider rack for securing loose unfuzed projectiles for transportation in a field artillery companion vehicle.

1839-1

Figure B-28. Example of an ammunition marking information work package.

GENERAL-Continued

Table 1. Authorized Projectile Fuze Combinations for 8-Inch Howitzer, M110A2 Cannon M201A1.

TYPE AND MODEL NUMBER OF PROJECTILE	FUZE										
	PD		MT		MTSQ			PROX(VT)		ET	
	M739 SERIES	M1557	M572	M565	M564	M557 SERIES	M582 SERIES	M728	M732	M762	M767
Agent GB, VX, M426	X	X	X					X[2]	X[2]		
HE, M106 (Shallow Cavity)	X	X	X		X[3]		X		X		X
HE, M106 (Deep Cavity)	X	X	X		X[3]		X	X[4]	X		X
HE, M404 ICM				X		X				X	
HE, M509A1 ICM						X				X	
HERA, M650 (Rocket Only)	X	X	X								X
HERA, M650 (Rocket Only)[1]	X	X	X		X[3]		X		X		X

[1] Do not fire the M650 projectile if the obturating band is missing or broken. If the band is displaced and can be repositioned and remain in the groove, the projectile can be fired.
[2] M728 and M732 fired only with "VX" projectile and only in combat emergency.
[3] Fuze, MTSQ, M564 is restriced from firing with zone 9 M188A1 propelling charge.
[4] Authorized, requires removal of supplementary charge.

END OF WORK PACKAGE

Figure B-28. Example of an ammunition marking information work package. - Continued.

TM NUMBER 0101

FIELD MAINTENANCE
FOREIGH AMMUNITION (NATO)

INITIAL SETUP:
N/A

GENERAL
Agreements between the United States and NATO allies have n established the interoperability of weapon systems and ammunition of the nations. The agreements enable the safe and effective firing of major types of ammunition of the same size from the same compatible size and type of weapon of the NATO armies.

The following pages cover only authorized German (GE), United Kingdom (UK), Canadian (CA), Netherlands (NL), French (FR), Norwegian (NO), Italian (IT), Danish (DA), Greek (GR), or Belgian (BE) 155mm components. If munitions item has not yet been authorized, it is because it has not yet been determined to be safe to fire or it has been determined that the munitions item cannot be safely fired form the US weapon system.

M198 HOWITZERS

WARNING

Only under emergency combat conditions will zone 1 of the M3A1 and DM62 propelling charge be fired form the M199 cannon tube of the M198 howitzer weapon system.

Do not mix US, GE, UK, CA, NL, FR, NO, IT, DA, GR, or BE components (i.e., projectile, propelling charge, flash reducer, fuze). Fire only components form one nation, except GE primer DM9141. GE must use DM191A1 when firing US, GE, UK, CA, NL, FR, NO, IT, DA, GR, or BE 155mm ammunitions. Mixing may cause injury to personnel.

NOTE

At the conclusion of any training exercise, ammunition drawn form a NATO nation and not fired should be returned to the troops of the NATO nation form whom it was obtained.

AUTHORIZED PROJECTILE - GE
The following GE munitions are authorized for use in M198 howitzers:

Projectile	155mm, HE, M107 (TNT-loaded only)
Charge, propelling	Green bag, M3A1, zones 1-5
Charge, propelling	White bag, M4A2, zones 3-7
Fuze	Point-detonating, M557, L85A2
Primer	M82

AUTHORIZED PROJECTILE - UK
The following UK munitions are authorized for use in M198 howitzers:

Projectile	155mm, HE, M107 (TNT-loaded only)
Charge, propelling	Green bag, M3A1, zones 1-5
Charge, propelling	White bag, M4A2, zones 3-7
Fuze	Point-detonating, M557, L85A2
Primer	M82

0101-1

Figure B-29. Example of a foreign ammunition (NATO) work package

TM NUMBER 0347

DIRECT SUPPORT MAINTENANCE
AIRCRAFT INVENTORY MASTER GUIDE

INITIAL SETUP:

N/A

INTRODUCTION

Scope

This work package includes a listing of all inventoriable items of installed and loose equipment authorized and required by the aircraft in performance of its mission. Refer to DA PAM 738-751 for applicable forms and records to use in performing the inventory.

SECURITY

Aircraft inventory records should be unclassified, but any classification of the contents, if necessary, should be in accordance with the existing security regulations.

INVENTORIABLE ITEMS

Modification kits which are reissued or distributed to using organizations for installation, and which are not immediately placed in use, shall be recorded on the aircraft s DA Form-2408-17, Aircraft Inventory Record, and identified as loose equipment until modification is complete. Refer to table 1 for a list of inventoriable items for the aircraft.

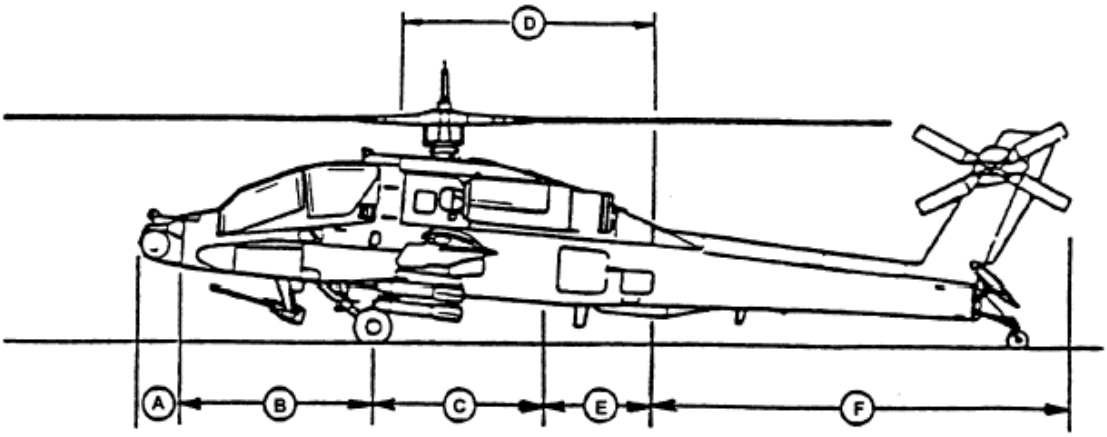

Figure 1. Aircraft Inventory Section

Table 1. Inventoriable Items.

NOMENCLATURE	PART NUMBER	NSN	QTY RQD
SECTION A - NOSE ELECTRONICS			
TADS Turret	130760000	1270-01-188-4138	1
PNVS Turret and Faring	130900000	1090-01-169-9415	1
Multiplex Terminal - Type 3	4032298-956	7025-01-210-7768	1
Signal Data Converter - Eng.	7-311C20019	6629-01-160-3518	1

0347-1

Figure B-30. Example of Aircraft Inventory Master Guide work package.

TM NUMBER 0007

UNIT MAINTENANCE
STORAGE OF AIRCRAFT

INITIAL SETUP:

Tools and Special Tools

Aircraft mechanic's kit (WP 2653, Item 376)
Adjustable air filtering respirator (WP 2652, Item 262)
Chemical protective gloves (WP 2652, Item 154)
Light duty laboratory apron (WP 2652, Item 27)

Materials/Parts

Barrier material (WP 1846, Item 32)
Cloth (WP 1846, Item 52)
Dry cleaning solvent (WP 1846, Item 74)
Lubricating oil (WP 1846, Item 117)
Tape (WP 1846, Item 207)

Personnel Required

Attack Helicopter Repairer67R1
Attack Helicopter Repairer/Technical Inspector67R3F1
Maintenance Test Pilot152FG1

References

TM 1-1500-204-23
TM 9-1090-208-23
TM 11-6140-203-14-1
TM 11-6140-203-14-2
TM 55-1500-344-23
TM 55-1520-238-10

Equipment Condition

Helicopter safed (WP 1765)
Engine 10–hour/14 day inspection performed (TM 55-2840-248-23)
10–hour/14 day inspection performed (TM 1-1520-238-PMS)

GENERAL INFORMATION

Components Involved of Storage

Any component removed for reason of accident shall not be preserved, but shall be shipped in the same condition it was in after the accident.

Categories of Storage

1. Flyable storage — no time limit.
2. Short term (administrative storage) — 1 to 45 days.
3. Intermediate storage — 46 to 180 days.

NOTE

Refer to TM 1–1500–204–23 for general procedures for storage of aircraft.

FLYABLE STORAGE — NO TIME LIMIT

1. Start and operate auxiliary power unit (APU) (WP 0431).
   a. Allow APU to run for 10 to 15 minutes.
2. Perform engine ground run-up procedures (TM 55-1520-238-10).
   a. Allow engines to run at idle for 5 minutes.
   b. Shut engines down and allow to cool.
3. Services fuel system (WP 0113).
   a. Drain residual water from fuel cells and service to full.

CAUTION

If ambient temperature is below –40°F (-40°C), remove battery from helicopter (WP 1654) and store in heated buliding (TM 11-6140–203–14–1 and TM 11-6140–203–14–2).

4. Disconnect battery plug and battery sensor from battery.
   a. Connect sensor plug to stowage receptacle.
5. Clean helicopter (TM 55–1500–344–23).

0007-1

Figure B-31. Example of a storage of aircraft work package

TM NUMBER 0367

FIELD MAINTENANCE

HELICOPTER WEIGHING (AIRCRAFT ON JACKS)

INITIAL SETUP:

Personnel Required (cont.)

Tools and Special Tools

Aircraft mechanic's tool kit (WP 0893, Item 376)
Fuselage jack adapter (2) (WP 0893, Item 1) (p/o WP 0893, Item 391)
3-ton tripod hydraulic jack (WP 0893, Item 184)
5-ton aircraft landing gear jack (WP 0893, Item 183)
Weighing kit (WP 0893, Item 196)
Strut locks (2) (WP 0893, Item 203) (p/o WP 0893, Item 25 and WP 0893, Item 194)
Aircraft maintenance kit (plumb bob leveling kit) (WP 0893, Item 207) (p/o WP 0893, Item 25 and WP 0893, Item 194)
Tripod aircraft tail stand (2) (extension legs removed) (WP 0893, Item 344)

Materials/Parts

Wood block, 2 in. x 6 in. x 12 in.

Personnel Required

Attack Helicopter Repairer/Technical Inspector67R3F
Assistants3

Equipment Condition

Helicopter safed (WP 0057)
Helicopter defueled, SPA method (WP 0019)
Engine oil system serviced (WP 0024)
APU oil system serviced (WP 0026)
Engine nose gearboxes serviced (WP 0028)
Intermediate gearbox serviced (WP 0030)
Tail rotor gearbox serviced (WP 0031)
Main transmission serviced (WP 0032)
Hydraulic system serviced (WP 0034)
Access doors L135 and R135 opened (WP 0102)
Main landing gear shock struts collapsed (WP 0041)

WARNING

Helicopter is unstable on jacks. Jack helicopter evenly and carefully on a firm, level, flat surface. Death or serious injury can result if helicopter should fall off jacks.

When weighing helicopter, ensure that area is roped off and that multiple warning signs that read "HELICOPTER ON JACKS" are prominently displayed. Do not allow unauthorized persons in or around helicopter while it is on jacks.

CAUTION

Weighing should be done inside a hangar with all doors closed. Weighing the helicopter outdoors is not recommended as wind velocities may affect the accuracy of scale readings.

GENERAL INFORMATION

Work package contains description, information, and procedures for helicopter weighing and loading. This information replace the Chart E (Loading Data and Special Weighing Instructions) placed in the individual aircraft weight and balances files by the aircraft manufacture. Chart E in the aircraft file will no longer be required.

0367-1

Figure B-32. Example of a weighing and loading work package

TM NUMBER 0367

FORM CHART

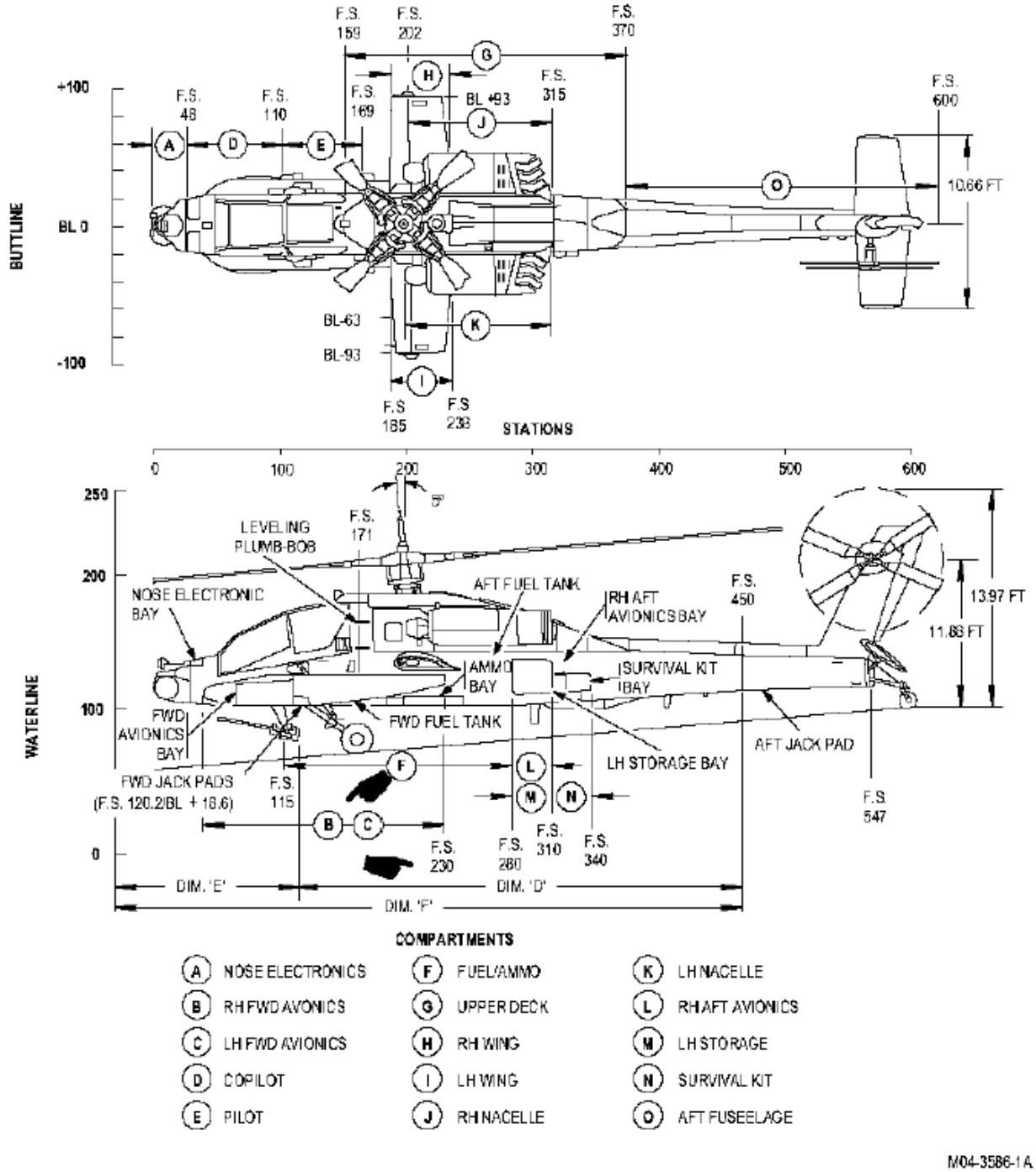

Figure 1. Two view Chart E diagram.

0367-2

Figure B-32. Example of a weighing and loading work package -Continued

TM NUMBER **0367**

PRELIMINARY

1. This work package describes helicopter weighing procedures with the use of aircraft jacks and electronic load cells. Helicopter is weighed in a 3.5 degree nose up attitude with the main landing gear locked in a collapsed position. (See Figure 1 for two view chart diagram.)
2. Helicopter shall be weighed in the BASIC WEIGHT condition. BASIC WEIGHT condition is established with all doors closed, except L135 and R135, seats in the mid position, and includes usable engine and APU oil, trapped fuel, 30mm gun and ammo magazine, and wing pylons.
3. Check for and remove all non-basic weight items such expendable ordnance, clipboards, helmets, personal equipment, tools, etc.
4. Defuel helicopter before weighing. Helicopter Center of Gravity (CG) cannot be accurately determined when weighed with fuel on board.
5. Defuel helicopter on the ground attitude with the use of a defueling pump. Drain remainder of fuel from each tank through sump drains. Sump drains are found on helicopter bottom centerline at fuselage stations (F.S.) 172.3 and 255.4. When the fuel drainage diminishes to dripping, allow five minutes for balance of fuel to drain.
6. Pylons are a part of helicopter basic weight and should be listed on DD Form 365-1 (ChartA) as follows:

Table 1. Helicopter basic weight.

COMPARTMENT AND ITEM NUMBER	ITEMS AND LOCATION (Grouped by compartment)	WEIGHT (lbs)	ARM (in)	MOMENT/100 ENTER CONSTANT (in-lbs)
H	Right Wing (F.S. 185 – 238)			
H	Wing Pylon 318000001200	58	199.0	115
H	Wing Pylon 31800001	58	199.0	115
I	Left Wing (F.S. 185 – 238)			
I	Wing Pylon 318000001100	58	199.0	115
I	Wing Pylon 31800001	58	199.0	115

7. Perform a complete inventory of items installed on helicopter. Use Basic Weight Check List, DD Form 365-1 found in the helicopter weight and balance file. Record all discrepancies from DD Form 365-1 in Column I or II (as applicable) on the reverse side of the Aircraft Weighing Record, DD Form 365-2.
8. Failure to weigh helicopter in the BASIC WEIGHT condition with four pylons installed will cause an incorrect center of gravity calculation when converting from "as weighed" condition to "corrected to level attitude" condition.

HELICOPTER WEIGHING

Preparation

CAUTION

Ensure that there are no adverse air currents from fans, heater blowers, etc., which could affect the accuracy of scale readings.

1. a. Position helicopter in hangar.
   a. Move helicopter to designated weighing area in hangar
   b. Close all hangar doors and rope off weighing area.
2. Position helicopter rotor blades.
   a. Turn main rotor blades clockwise to a position of 45 degrees relative to helicopter's longitudinal axis.

0367-3

Figure B-32. Example of a weighing and loading work package -Continued

PREPARATION – CONTINUED

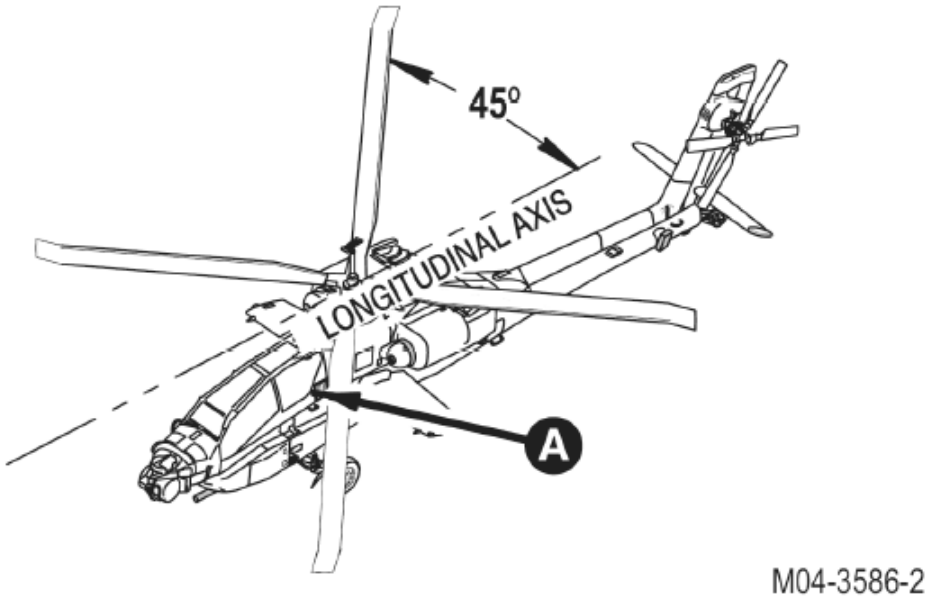

Figure 2. Helicopter longitude axis.

Figure 3.

3. Assemble aircraft weighing kit.
   a. Assemble weighing kit per manufacturer's instructions supplied with kit. Use weighing kit.

CAUTION

Plumb bob bracket and target installation screws are not removable. Damage to bracket and target will result if removal is attempted.

4. Install plumb bob bracket (Figure 3 , Item 1) and target (Figure 3 , Item 2)on helicopter left side at F.S. 171.0. Use aircraft maintenance kit.

Figure B-32. Example of a weighing and loading work package -Continued

PREPARATION – CONTINUED

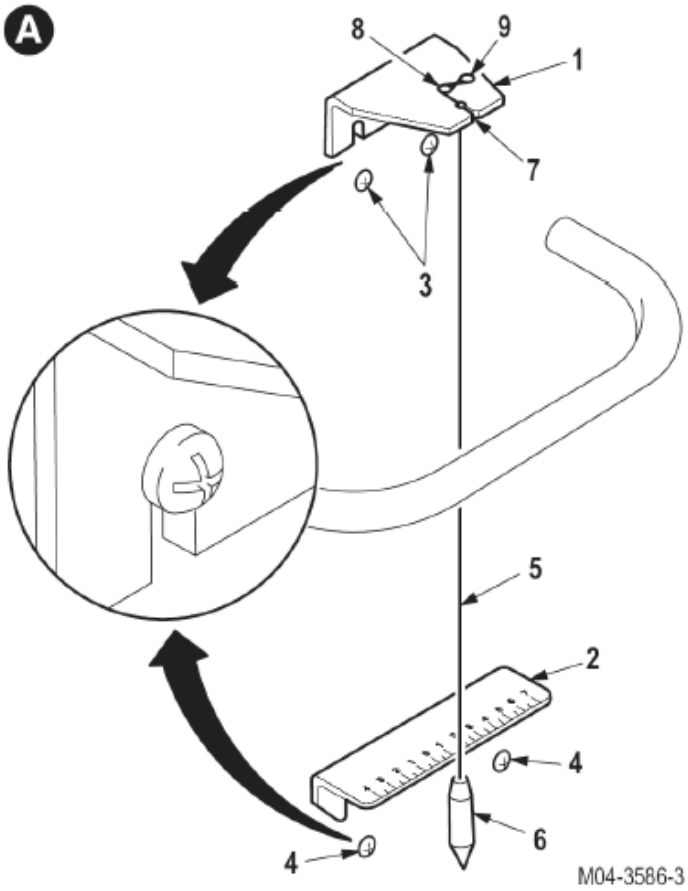

Figure 4. Install plumb bob bracket

a. Loosen two upper screws (Figure 3 , Item 3).

b. Loosen two lower screws (Figure 3 , Item 4).

c. Slide bracket (Figure 3 , Item 1)down on screws (Figure 3 , Item 3).

d. Slide target (Figure 3 , Item 2)down on screws (Figure 3 , Item 4).

e. Tighten screws (Figure 3 , Item 3) and (Figure 3 , Item 4).

5. Install and secure plumb bob line (Figure 3 , Item 5)with plumb bob (Figure 3 , Item 6) in bracket (Figure 3 , Item 1). Use aircraft maintenance kit.

a. Insert line (Figure 3 , Item 5) in bracket slot (Figure 3 , Item 7).

b. Lower plumb bob (Figure 3 , Item 6) until just below edge of target (Figure 3 , Item 2).

c. Secure line (Figure 3 , Item 5) to bracket (Figure 3 , Item 1)by wrapping line (Figure 3 , Item 5) around rivets (Figure 3 , Item 8) and (Figure 3 , Item 9).

END OF WORK PACKAGE

Figure B-32. Example of a weighing and loading work package -Continued

TM NUMBER **0163**

DEPOT MAINTENANCE

QUALITY ASSURANCE REQUIREMENTS

INITIAL SETUP:

References

AR 750–43
DESCOM-R 702–1
MIL-I-45607B

References (cont.)

MIL-STD-410

STATEMENT OF RESPONSIBILITY

The depot/contractor is responsible for complying with the quality assurance requirements contained in this work package and in accordance with DESCOM-R 702–1 (DESCOM Product Assurance Program). the commodity manager reserves the right to perform inspections or make changes that ensure the depot work being done meets the quality standards of the DMWR and preserves the inherent reliability of the item.

DEFINITIONS

For quality assurance terms and definitions, refer to the glossary in this DMWR.

SPECIAL REQUIREMENTS FOR INSPECTION TOOLS AND EQUIPMENT

The overhaul facility is responsible for acquisitions, maintenance, calibration, and disposition of all inspection and test equipment. Test equipment to be used by AMC (Army) elements will be acquired in accordance with AR 750–43. All instrumentation and inspection equipment used in compliance with this DMWR shall be calibrated and controlled in accordance with MIL-I-45607B or DESCOM-R-702–1, Depot Quality System (Army facility), with all standards traceable to the National Bureau of Standards. Descriptions of inspecting and measuring equipment are left to the discretion of the over hauling facility to be considered as good shop practice.

CERTIFICATION REQUIREMENTS

The contractor/depot QA activity shall be responsible for ascertaining and certifying personnel skills, equipment, and materiel meet the requirements of the work to be accomplished. unless otherwise specified in the contract or by PA/CM representative, the contractor/depot QA activity shall provide the PA/CM with statements or other evidence that specifications for such special processes as welding, nondestructive testing, plating, etc., have been complied with. Personnel performing magnetic particle and penetrant tests shall be certified in accordance with MIL-STD-410.

IN-PROCESS INSPECTIONS

In-process quality assurance inspections are contained throughout the overhaul procedures of this DMWR. These inspections are prefixed with the boldfaced letter "QA" to identify them, and they are the minimum inspections required. Additional quality assurance inspections may be established by the depot or the commodity manager.

ACCEPTANCE INSPECTIONS

Items overhauled in accordance with this DMWR will be accepted based on the following criteria;

1. Conformance to quality of material requirements.
2. Conformance to all in-process quality assurance inspections.
3. Conformance to all final assembly testing requirements.
4. Conformance to the preservation, packaging, and marking requirements.

0163-1

Figure B-33. Example of a QA requirements work package

FIRST ARTICLE INSPECTION

The contractor/depot quality assurance activity shall perform a first article inspection on each of the first overhauled assemblies produced in accordance with the DMWR. After contractor/depot acceptance, the procuring agency's quality assurance representative may perform a separate first overhauled article inspection. The first article inspection shall be conducted as follows: (1) Component Inspection (Chapter 3), (2) Final Inspection (Chapter 4), and (3) Processing for Storage and Shipment (Chapter 6).

Submission of Product

The inspection of lot size, lot formation, and presentation of lots shall be as specified by the contracting activity.

Quality Assurance Component Inspection

The component inspection shall be conducted by the procuring activity's quality assurance representative during production of first overhauled item to evaluate conformance of materials and workmanship to drawings and overhaul technical data package.

Final Acceptance

The contractor's/depot's quality assurance activity, along with the procuring activity's quality assurance representative, shall conduct the final acceptance inspection in accordance with the requirements specified herein, During this time, the contractor/depot quality assurance activity shall have available the written inspection system plan, procedures, inspection records, and components.

Processing for Storage and Shipment

Inspection of processing for storage and shipment shall be conducted in accordance with applicable specifications on the first overhauled item and on one of the next ten processed items under the procedure established during the first overhauled item.

END OF WORK PACKAGE

Figure B-33. Example of a QA requirements work package -Continued

TM NUMBER 0306

SUSTAINMENT MAINTENANCE

WIRING DIAGRAMS

INITIAL SETUP:

References

ASME-Y14.38

INTRODUCTION

Scope

This work package describes the wiring provisions contained in the aircraft, including all systems or equipment which can be installed or removed later (e.g., mission-related systems/equipment). wiring diagrams and essential wiring information are provided for all electrical and electronic systems and circuits. All critical wire and cable data has been included.

WIRE IDENTIFICATION

All wires have been identified by number. A tabular list of circuit designators and wire identification diagrams are included. (Refer to Table 1.)

ABBREVIATIONS

all abbreviations are in accordance ASME-Y14.38, except when the abbreviation stands for a marking actually found in the aircraft.

WIRING DIAGRAMS

Wiring diagrams have been included for all electrical and electronic systems and circuits.

0306-1

Figure B-34. Example of a wiring diagram work package.

Table 3. Signal Amplitude and Duration.

SIGNAL NAME	AMPLITUDE	DURATION
1. xxxxxxxxxxxxx	xxxxxxxxxxxxxxxx	xxxxxxxxxxxxx
2. xxxxxxxxxx[1]	xxxxxxxxxxxxxxxxx xxxxxxxxxxxxxxxx	xxxxxx[2]

[1] xxxxxxxxxxxxxxxxxxxxxxxxxxxxxxxxxxxxxxxxxxxxxxxxx.

[2] xxxxxxxxxxxxxxxxxxxx

Tightening Metal Fasteners

When torquing a fastener, select a wrench whose range fits the required torque value. A torque wrench is most accurate from 25% to 75% of its stated range. A wrench with a stated range of 0 to 100 pound-feet (0- 135 N-m) will be most accurate from 25 to 75 pound-feet (33.8-101.3 N-m). The accuracy of readings will decrease as you approach 0 pound-feet (0 N-m) or 100 pound-feet (135 N-m). The following ranges are based on this principle:

Stated Range	**Most Effective Range**
0-200 lb-in. (0-22.6 N-m)	4-13 lb-ft (5.4-17.6 N-m)
0-600 lb-ft (0-810.0 N-m)	50-450 lb-ft (67.5-607.5 N-m)
0-170 lb-ft (0-229.5 N-m)	44-131 lb-ft (59.4-176.9 N-m)
15-75 lb-ft (20.3-101.3 N-m)	30-60 lb-ft (40.5-81.0 N-m)

TABULAR INFORMATION (NOT LABELED AS A TABLE)

= = = =

Check the following for damage during shipment:

Tool Box Cabinet and Tool Kits.
Drawer Assembly.
Filing Cabinet, Security.
Rifle Mount Assembly.
Cabinet Assembly.
Shelf Assembly-wall.
Shelf Assembly-wall.
Radio.

RANDOM LIST

= = = =

SAFETY WARNING

9. Secure locknut cylinder (Figure 3, Item 1) to hull with three washers (Figure 3, Item 2), and bolts (Figure 3, Item 3). Using torque wrench tighten bolts to 315 - 325 lb ft (427-441 N.m) torque.

WARNING

If road wheel lifter slips you could get severely injured by carrier track. Keep feet clear of track when using road wheel lifter.

10. Install road lifter. Lower carrier and remove jack from under carrier.

==========

HAZARDOUS MATERIAL WARNING

7. Slowly discharge pressure to 0 pig by closing shutoff valve and opening biased valve.

WARNING

Fluorinated compound OT20 is an irritant to the eyes and skin. Use safety glasses and latex gloves or barrier cream. Keep sparks, flames, and heat away. Keep grease off skin, eyes, and clothes.

8. Remove plug and O-ring from adapter (Figure 5, Item 37) orifice. Lubricate seal (Figure 5, Item 36) with fluorinated compound OT20 and install seal and relief valve (Figure 5, Item 35) in adapter.

==========

ABBREVIATED HAZARDOUS MATERIAL WARNING (THIS FORMAT MAY BE USED FOR COMMONLY USED SUBSTANCES. COMPLETE EXPLANATION OF WARNING IS PLACED IN WARNING SUMMARY.)

8. Insert plug connector kits wiring (Figure 2, Item 7) and (Figure 2, Item 8) and contacts/wiring (Figure 2, Item 9), (Figure 2, Item 10), and (Figure 2, Item 11) through electrical cable clamps kit (Figure 2, Item 5) or (Figure 2, Item 6) and appropriate capsule cable entry tube. Maintain wire lists.

WARNING

ISOPROPYL ALCOHOL, TT-I-735

9. Isopropyl alcohol (WP 0062, Item 5) may be used as a lubricant during insertion and removal of contacts. Apply isopropyl alcohol by brushing on capsule insert or by dipping contact or tool.

Figure B-37. Example of placement of warning icons in a procedure.

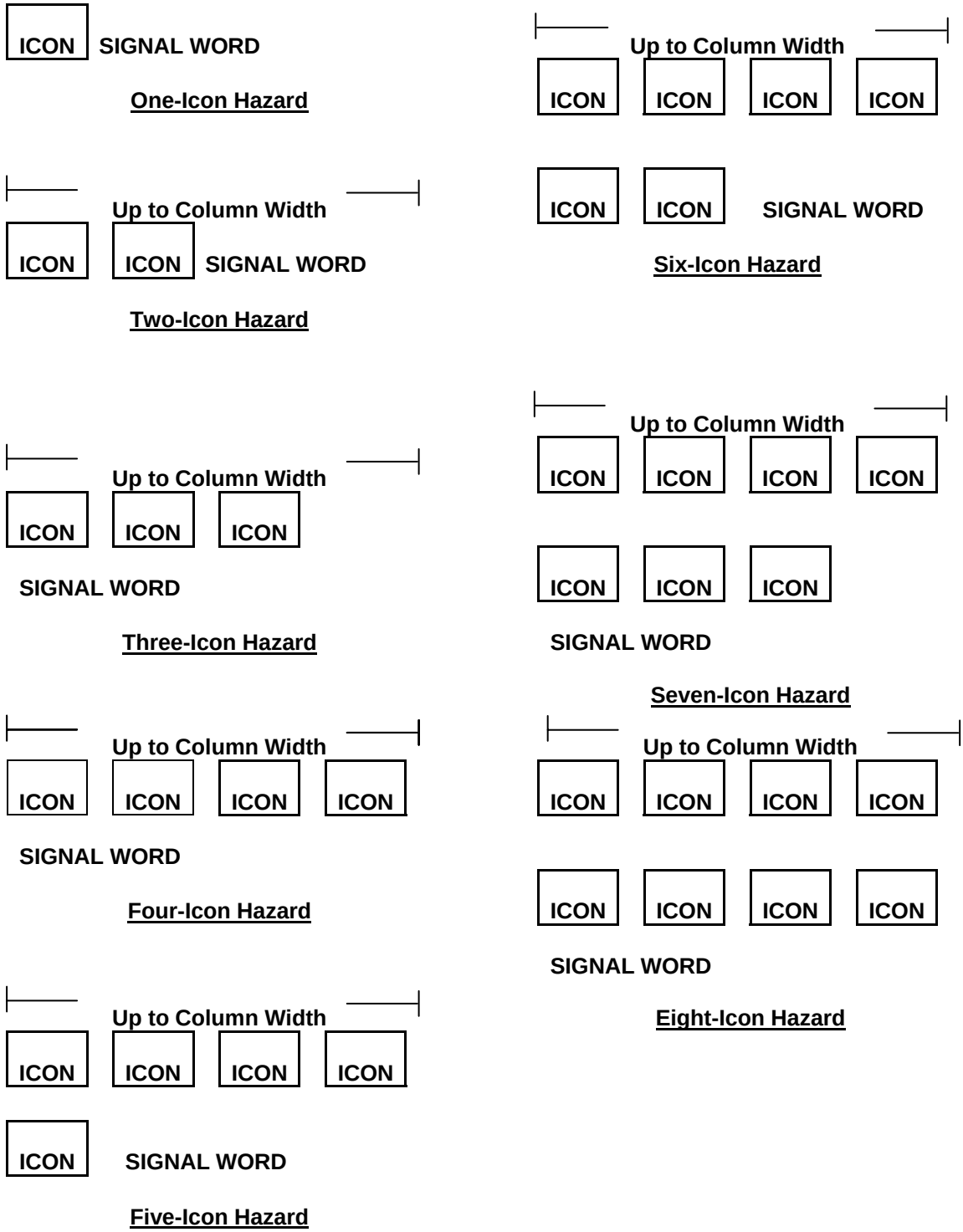

Figure B-37. Example of placement of warning icons in a procedure. - Continued.

TORQUE LIMITS

How To Use Torque Tables

1. Measure the diameter of the screw you are installing.

2. Count the number of threads per inch or use a pitch grade.

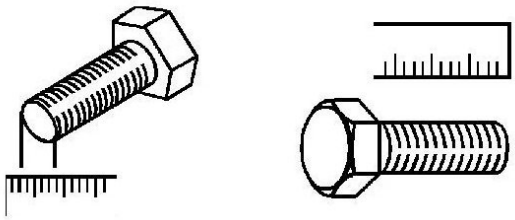

3. Under the heading SIZE, look down the left-hand column until you find the diameter of the screw you are installing. (There will usually be two lines beginning with the same size.)

4. In the second column under SIZE, find the number of threads per inch that matches the number of threads you counted in step 2. (Not required for metric screws.)

INCORRECT

==========

TORQUE LIMITS

How To Use Torque Tables

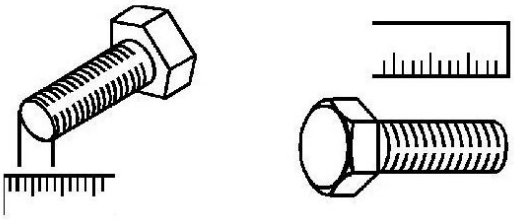

Figure 3. Measuring the Diameter of a Screw.

1. Measure the diameter of the screw you are installing.

2. Count the number of threads per inch or use a pitch grade.

3. Under the heading SIZE, look down the left-hand column until you find the diameter of the screw you are installing. (There will usually be two lines beginning with the same size.)

4. In the second column under SIZE, find the number of threads per inch that matches the number of threads you counted in step 2. (Not required for metric screws.)

CORRECT

Figure B-38. <u>Example of incorrect (wrapped text) and correct text placement with an illustration</u>.

REMOVAL

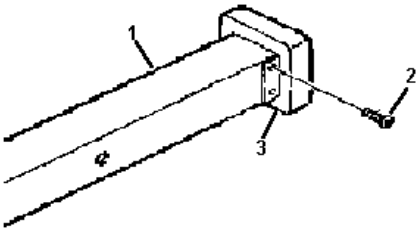

Figure 4. Removal of Screws.

1. Remove four screws (Figure 4, Item 2) securing end guard (Figure 4, Item 3) to beam (Figure 4, Item 1).

2. Remove end guard (Figure 4, Item 3) and discard.

"ABOVE" PLACEMENT OPTION

==========

INSTALLATION

1. Install end guard (Figure 5, Item 3) over beam (Figure 5, Item 1) and align screw holes.

2. Install screws (Figure 5, Item 2)

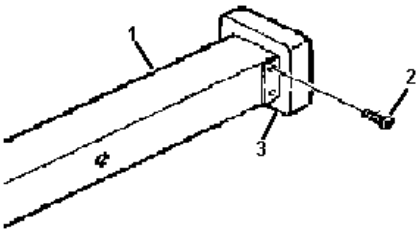

Figure 5. Installing End Guard.

"BELOW" PLACEMENT OPTION

Figure B-39. <u>Example of digital illustration</u>.

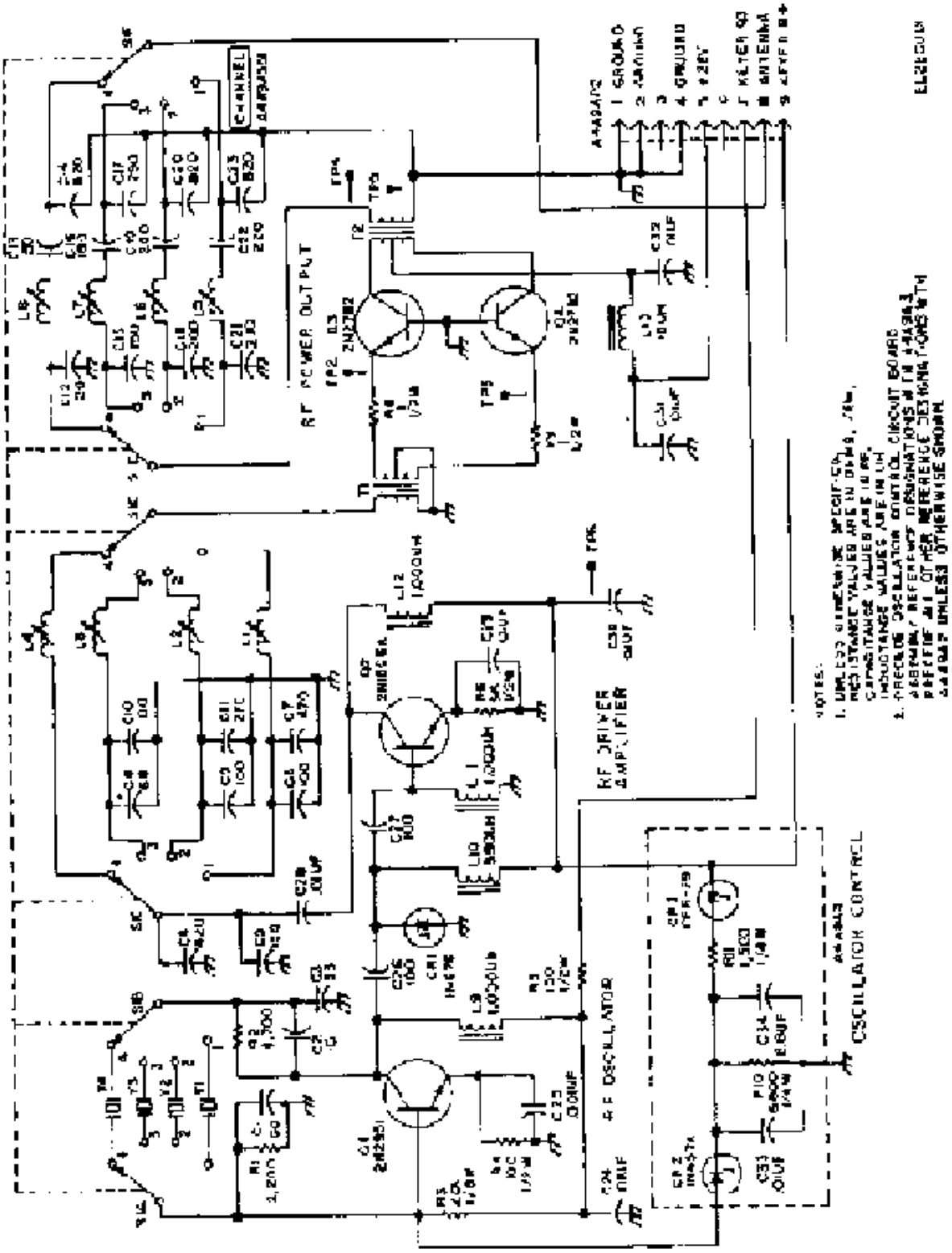

Figure 5. Schematic for Radio Frequency Oscillator.

Figure B-40. <u>Example of a figure rotated 90 degrees</u>.

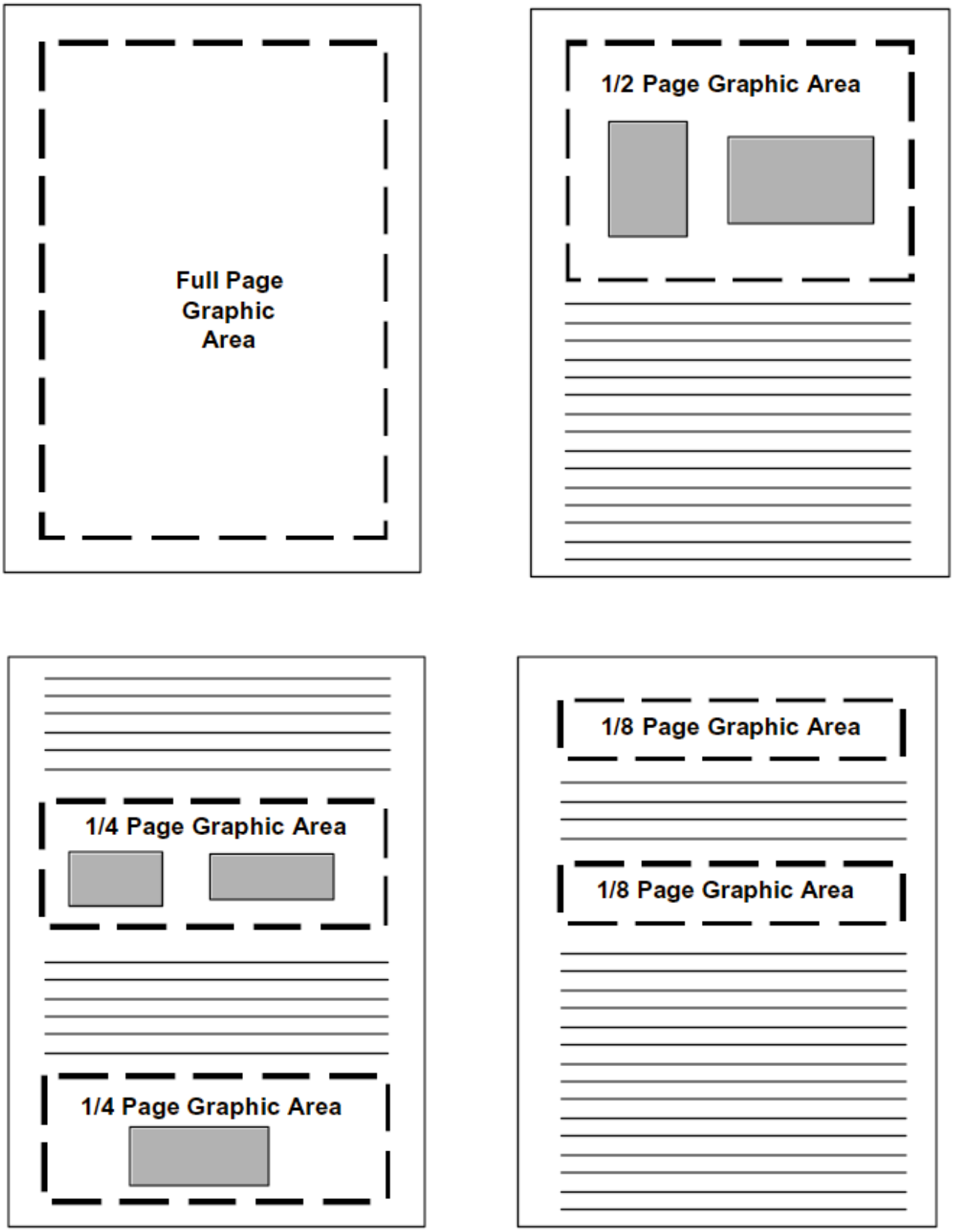

Figure B-41. Examples of size options allowed for graphics.

Similarly, the mass leaving the shock front is:

$$m_1 = p_1 V_1$$

$$m_1 = p_1 A L_1$$

$$m_1 = p_1 At\,(v - u_1) \qquad \text{EQ 10}$$

Invoking the principle of conversation of mass:

$$m_0 = m_1$$

$$p_0 At\,(v - u_0) = p_1 At\,(v - u_1)$$

$$p_0 (v - u_0) = p_1 (v - u_1) \qquad \text{EQ 11}$$

EXAMPLE A

==========

Equating the work done on the system with the rate of energy increases and canceling the t's:

$$p_1 u_1 A - p_0 u_0 A =$$

$$Ap_1\ (v - u_1)(e_1 - 0.5u_1^2) - ap_0 (v - u_0)(e_0\ 0.5_0 2)$$

EXAMPLE B

==========

Cylinder Expansion Test

An important problem faced by the designer of fragmentation warheads is that he must maximize the energy which is transferred from explosive to metal during the detonation. The most frequently encountered configuration is that of an explosive-filled metal cylinder detonated by a wave moving axially. The best scaling law that has been devised for this condition is that of Gurney, who disregarded detonation conditions and shock effects in the metal assumed implicitly that all the energy of the explosive is conserved. His equation for the cylinders is:

$$V = \sqrt{2E\left(\frac{C/M}{1 + 0.5\ C/M}\right)}$$

where v is the velocity to which the metal is accelerated by the explosive, E is the unit energy content of the explosive, C is the weight of the explosive, and M is the metal weight. The expression of velocity in terms of C/M implies that weight-ration scaling of explosive and metal is of prime importance and that dimensional scaling need not be considered at all. The term 2E has the dimensions of a velocity as was pointed out by Gurney in his original report.

EXAMPLE C

Figure B-42. <u>Example of equations</u>.

Recovery can be accomplished by adding dilute acetic acid, but the product obtained will be impure. The heat of formation at constant pressure is -112 to 126.3 kilocalories per mote. The calculated heat of detonation is 0.367 kilocalories per gram. Lead azide is used extensively as an ingredient in initating compositions.

*[N = N = N] - Pb** [N = N = N] -*

EXAMPLE D

==========

In the manufacturing process ethyl nitrate ($C_2H_5ONO_2$), ethyl nitrite (C_2H_5ONO), and nitroethane (C_2H_5NO) also are produced. The immediate products of oxidation and nitration involved in the preparation of mercury fulminate are as follows:

$CH_3.CH_2OH \rightarrow CH_3CHO \rightarrow$
Ethanol Acetaldeyde

EXAMPLE E

==========

Two equation are given for the specific heat of PETN as a function of temperature:

$C = 0.257 + (5.21 \times 10^4)T$ for $T < 140^\circ C$
and $C = 0.239 + (8.0 \times 10^4)T$ for $32^\circ C < T < 127^\circ C$

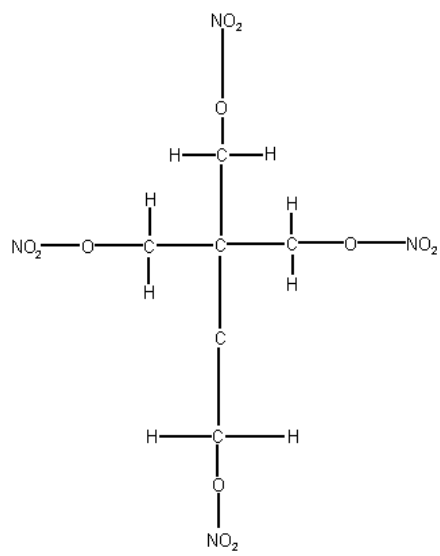

EXAMPLE F

==========

Figure B-42. <u>Example of equations</u>. - Continued.

In a given amount of time, t, mass moves from one side of the shock front to the other side. By definition, mass, m, is given as function of density, p, and volume, V, by the equation:

$$m = pV \qquad \text{EQ 1}$$

The volume, can be expressed in terms of area, A, and length, L, by the equation:

$$V = AL \qquad \text{EQ 2}$$

The length, L, is the distance a particle travels in our assumed time interval, t, times the velocity, v:

$$L = tv \qquad \text{EQ 3}$$

By figure 3 the velocity can be seen to equal:

$$v_0 = (v - u_0) \qquad \text{EQ 4}$$

and

$$v_1 = (v - u_1) \qquad \text{EQ 5}$$

==========

By equations 1 through 5:

momentum change/t - $[p_1 At\ u_1\ (v - u_1) - p_0 At\ u_0\ (v - u_0)/t$

EQ 9

Figure B-43. <u>Example of numbering equations.</u>

Concluding Material

Custodians:
Army - TM
Marine Corps - MC

Preparing Activity:
Army - TM

Review Activities:
Army - AC1, AR, AT, AV, CR, EA, MI, PT

Project Number:
TMSS 2008 006

NOTE: The activities listed above were interested in this document as of the date of the document. Since organizations and responsibilities can change, you should verify the currency of the information above using the ASSIST Online database at http://assist.daps.dla.mil.