LTAS Ring Mounts Available

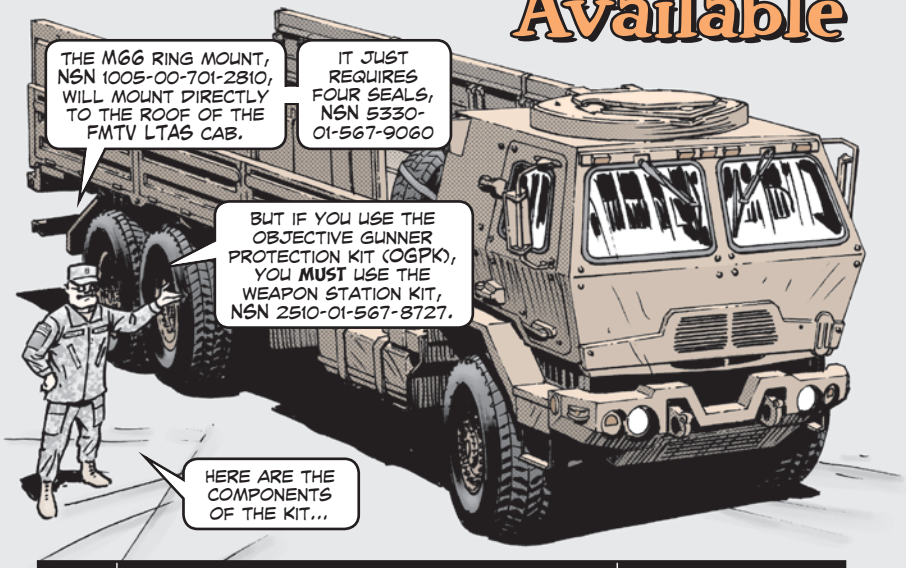
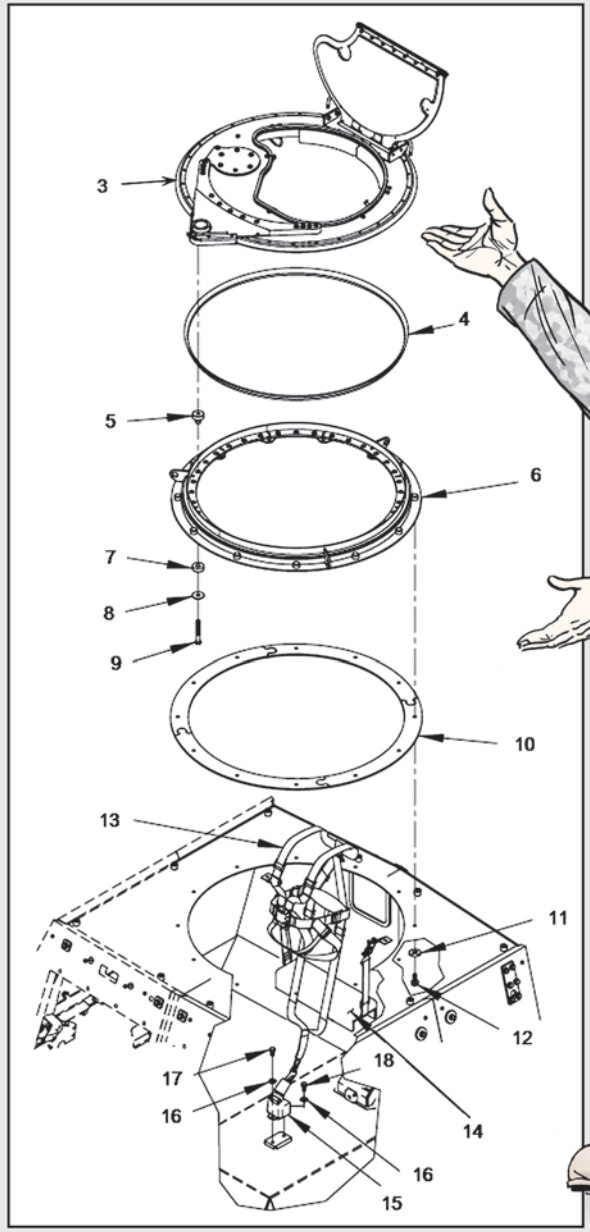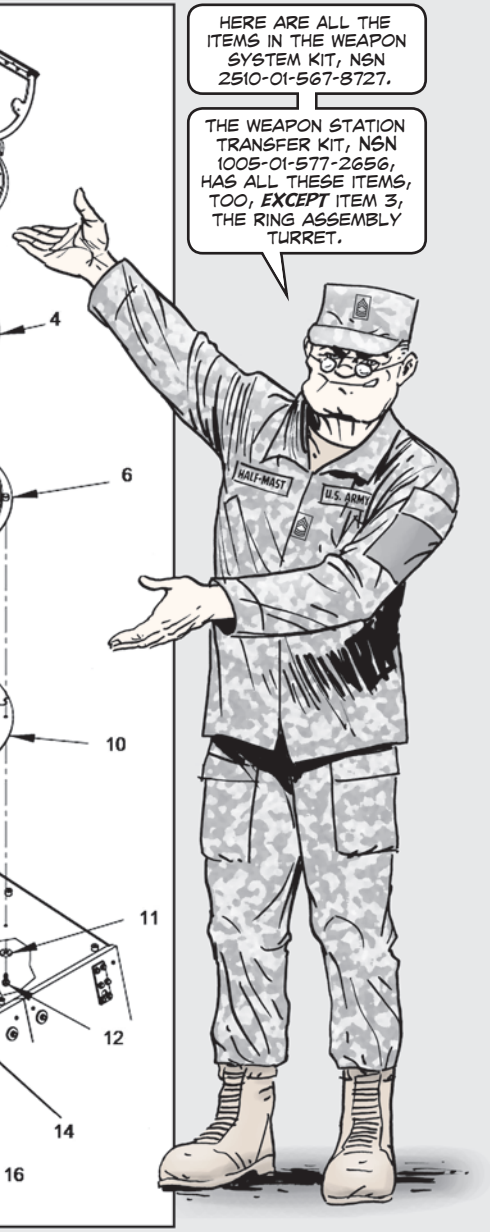
Item	Name	NSN/PN
1	Weapon station kit (includes items 3-18)	2510-01-567-8727
2	Weapon station assembly (includes items 3, 4, and 6)	2510-01-583-8987
3	Ring assembly turret	2510-01-578-4322
4	Wipe seal	5330-01-573-8894
5	Upper bushing	5365-01-571-1041
6	Interface ring	1005-01-575-6054
7	Lower bushing	5365-01-570-7459
8	Snubber washer	5310-01-570-7676
9	Hexagon cap screw	AEB021375C00AW8A2
10	Non-metallic seal	5330-01-567-9060
11	Flat washer	5310-01-375-0659
12	Machine bolt	5306-01-567-6548
13	Personnel safety device	4240-01-542-8160
14	Vehicular seat	2540-01-550-7246
15	Seat belt parts kit	2540-01-543-0747
16	Flat washer	12422608-015
17	Hexagon cap screw	5305-00-709-8523
18	Hexagon cap screw	5305-00-709-8517