AGSE...

Nitrogen Bottle Fill Kit Parts Needed for GANG

Item No.	Nomenclature	NSN	P/N
1	Photographic case	6790-01-491-2028	1300NF black
3	O-ring	5331-00-579-8108	01077C6283U24B7
4	Gas cylinder nipple	4730-01-068-2379	15-4
5	Manifold assembly hand nut	4730-01-300-3048	692P
6	QD male adapter	4730-01-281-4398	3010-2
8	Air inflating chuck	4730-00-142-5207	734114-1
9	Pipe-to-tube straight adapter	4730-01-443-9822	6505-4-4
11	Air inflating chuck	4730-00-142-5164	7347114-30
13	Air inflating chuck	4730-00-277-6948	698
14	Pipe nipple	4730-01-380-0435	5404-04-04
16	Dust & moisture protective plug	5340-00-157-5661	3005-2
17	Self-sealing coupling half	4730-01-281-4399	3050-2
18	Pipe-to-boss straight adapter	4730-00-580-8171	MS51503B4-4S
19	Self-indicating thermometer	6685-01-233-3481	312F
20	QD coupling half	4730-00-511-0794	TL-251-4MP

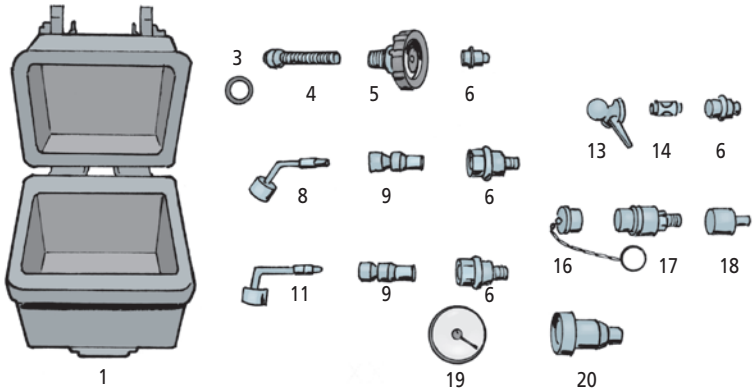

Make a note that TM 1-3655-245-13&P will have the nitrogen bottle fill kit information added in the next change.

Information on the nitrogen bottles is on the Joint Tactical Data Integration (JTDI) website: **https://upw.jtdi.mil**

It is CAC-enabled. Once there, click on the AGSE tab and then look under Equipment. Click on Generic Aircraft Nitrogen Generator (GANG). Then click on the GANG Nitrogen Bottle Fill Kit Breakdown link to view the parts list.

OH-58D...

Protect Your Aircraft With Covers

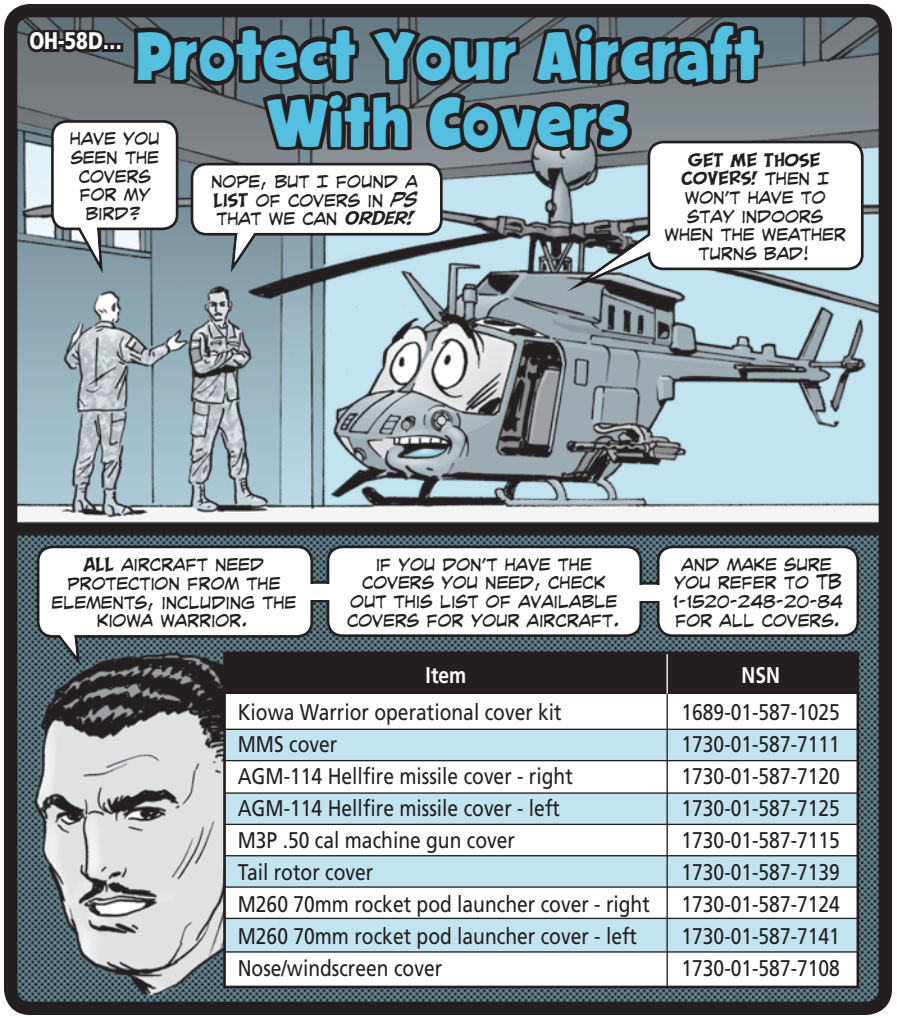

Item	NSN
Kiowa Warrior operational cover kit	1689-01-587-1025
MMS cover	1730-01-587-7111
AGM-114 Hellfire missile cover - right	1730-01-587-7120
AGM-114 Hellfire missile cover - left	1730-01-587-7125
M3P .50 cal machine gun cover	1730-01-587-7115
Tail rotor cover	1730-01-587-7139
M260 70mm rocket pod launcher cover - right	1730-01-587-7124
M260 70mm rocket pod launcher cover - left	1730-01-587-7141
Nose/windscreen cover	1730-01-587-7108

732 22-23.indd 1-2 10/2/13 12:59 PM