Tactical Quiet Generators...

WANTED

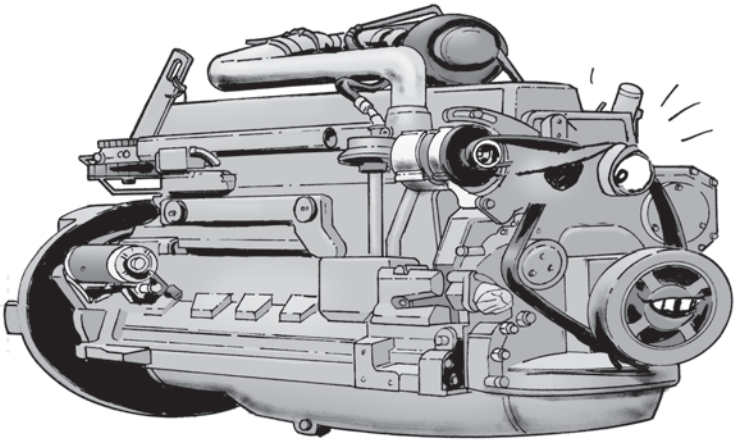

DEAD OR ALIVE

NAME: MODEL B DIESEL ENGINE, NSN 2815-01-462-3596, IN THE 60-KW TACTICAL QUIET GENERATOR

LAST SEEN IN THE FIELD, DEPOTS AND JUNKYARDS!

REWARD

DEAD (UNSERVICEABLE CREDIT): **$5,853.00**

ALIVE (SERVICEABLE CREDIT): **$12,013.00**

IF FOUND, CONTACT R.W. BURKE, ITEM MANAGER, CECOM LCMC

POWER AND ENVIRONMENTAL DIVISION,
GENERATORS ABERDEEN PROVING GROUND

PHONE DSN 648-6933 OR (443) 395-6933. OR EMAIL:
ROOSEVELT.W.BURKE.CIV@MAIL.MIL