MK 19 Machine Gun...
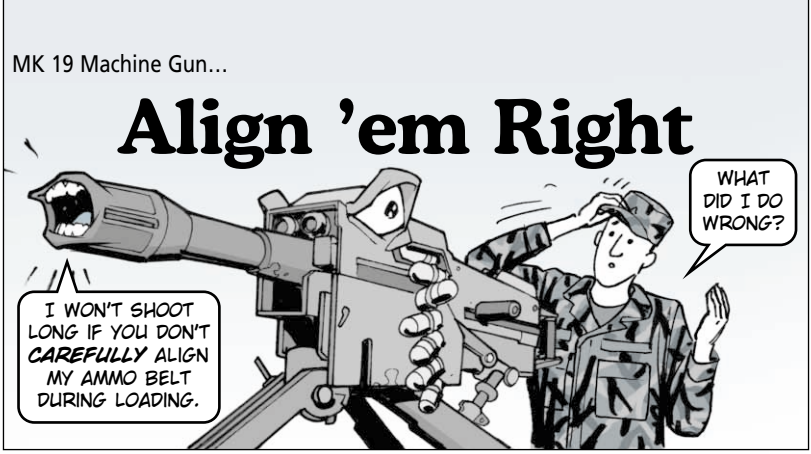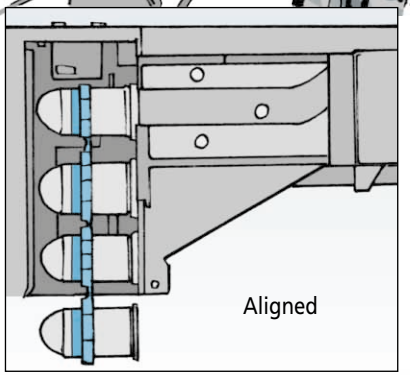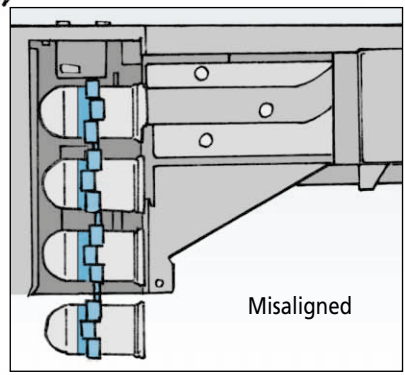
Align 'em Right