USAMC Logistics Support Activity (LOGSA)

PowerLOG-J V1.7.0 and Army Provisioning

Provisioning under the Logistics Modernization Program

FOREWORD

This guide was prepared to explain the aspects of the Army provisioning process which relate to provisioning data development, data interrelationships, and powerLOG provisioning-related report generation. It also explains the tools provided by the LOGSA powerLOG software to assist in this effort. It is intended to give both contractor and Government personnel an understanding of the scope and complexity of options to process provisioning technical documentation, and of the automated tools available to assist in this data development.

The guide was updated from the 1994 MIL-STD-1388-2B Provisioning Guide to align with the changes in the Government Logistic Support Analysis Record (LSAR) software systems from Personal Computer (PC) LSAR to powerLOG; and to changes in the Life Cycle Management Commands' software provisioning systems from the Commodity Command Standard System to the Logistics Modernization Program (LMP). It also addresses the changes which occurred with the publishing of the Government Electronics and Information Technology Association (GEIA) Standard 0007, Logistics Products Data, in Aug 2007. The powerLOG V1.7.0 version contains the latest LMP default edits based on the actual edits used by the US Army Communications-Electronics Command (CECOM) and Tank automotive and Armaments Command (TACOM), and shows changes to the pre-made database alterations utility and the Reference Data Environment (now Federal Item X-Reference (FIXR)) upload and Import screens; and LSAR-080 report.

The Standard Terminology in the GEIA document uses the term Entity for a powerLOG relational Table, and Attribute for a powerLOG Data Element.

The powerLOG software can be obtained from LOGSA at the website below. The software can be downloaded and test data and training modules are contained with the software. A monthly class is also offered by LOGSA. Information about class requirements and schedules may be obtained by sending a message to the LOGSA powerLOG e-mail Help Desk below or by telephone: (256) 955-9847.

https://www.logsa.army.mil/lec/

Questions or comments about this guide may be directed to USAMC Logistics Support Activity, ATTN: AMXLS-AL, Redstone Arsenal, AL 35898-5000 or e-mail at:

logsa.powerlog.help@conus.army.mil

CONTENTS

Paragraph Page

Chapter One - Introduction

1.1 Purpose 1

1.2 Definitions 1

1.3 References 2

1.4 Product Reports and Their Interrelationship 2

Chapter Two - Coding Requirements and Report Selection Logic for Provisioning Reports

2.1 Assignment of the Logistic Support Analysis (LSA) Control Number (LCN) 7

2.2 Usable On Code (UOC) Assignment 7

2.3 PCCN Relationships 8

2.4 ALC Assignment. 9

2.5 TM Functional Group Code Versus LCN Assignment 12

2.6 TM Code 16

2.7 LCN Indenture Code (IC) and IC 16

2.8 Importing Provisioning Data into PowerLOG 20

2.9 Technical Drawings and Review of PowerLOG Data for Provisioning 20

Chapter Three - Maintenance Allocation Chart (MAC)

3.1 Purpose of the MAC 23

3.2 MAC Man-hour Computations 24

3.3 Relationship of the MAC and Tool and Test Equipment Requirements Sections 25

3.4 MAC Source Data 25

3.5 The MAC and Two-Level Maintenance 27

3.6 Importing MAC Data using Excel…… ……..... .29

3.7 ezMAC Builder……29

Chapter Four - Defense Logistics Information System Provisioning Screening

4.1 Purpose of Provisioning Screening..... 26

4.2 Provisioning and Other Pre-Procurement Screening …… … ….26

4.3 Cataloging Actions ……30

4.4 Cataloging Methods …….. 31

4.5 LSAR-032 Report Output Files …… …….. ….…31

Chapter Five - Provisioning Requirements

5.1 Preparation of the H Data Table ……..…… ……35

5.2 Powerlog-J Provisioning Edits, and the Army Logistics Modernization Program……...36

5.3 LSAR-036 System 51

5.3.1 Control Data..... 51

5.3.2 -2A To -2B Differences 51

5.3.3 Report Sequence 52

5.3.4 Report Format..... 53

5.3.5 Report Options..... 56

5.3.6 Provisioning Baseline File 60

5.3.7 QPEI Calculation..... 60

5.3.7.1 Option 1 Quantity Per End Item 61

5.3.7.2 Option 2 Quantity Per End Item 64

5.3.7.3 Option 3 Quantity Per End Item 66

5.3.8 Same as PLISN 68

5.3.9 LSAR-036 Updates 68

5.3.9.1 Update Transactions 68

5.3.9.2 Update Processing 72
5.3.10 The LSAR-036 Report Header 74
5.3.11 The LSAR-036 Part II Error Report 76
5.3.12 LSAR-036 Part III 77
5.3.13 Provisioning Data Alterations for Two-Level Maintenance 77
5.3.14.LSAR-036 Deliverable Output File 77
Chapter Six - Allowance Items
6.1 Component of End Item 79
6.2. Basic Issue Items List 79
6.3. Additional Authorization List Items 79
6.4. Expendable Durable Supplies and Materials List 80
Chapter Seven - Repair Parts and Special Tools List (RPSTL)
7.1 RPSTL Content 83
7.2 Report Selection 83
7.3 Documentation of Kits for RPSTL 84
7.4 Data Content 84
7.5 Draft/Proof RPSTL Review 85
7.6. RPSTL Illustrations and Parts Listings 86
Chapter Eight - GEIA-STD-0007 and PowerLOG
8.1 Source Document for Contracting 91
8.2 GEIA Entity and PowerLOG Table Differences 91
8.3 PowerLOG and GEIA STD INTERRELATIONSHIP 93
Chapter Nine - PowerLOG Review Reports and Tools for Generation and Validation of Provisioning Data
9.1 PowerLOG Report Selection 95
9.2 LSAR-019 Task 95

9.3 LSAR-068 Task Code and SMR Code Verification 97

9.4 LSAR-080 Bill of Materials 98

9.5 LSAR-126 LCN/PCCN Indentured Structure Tree 100

9.6 LSAR-151 Provisioning Parts List Index 101

9.7 LSAR-152 PLISN Assignment/Reassignment 102

9.8 Calculation Utilities: Maintenance Replacement Rate 103

9.9 Database Alterations 105

Appendix A - Acronym Listing

Figures

Figure 1. Primary Provisioning Related Reports and Data Transfers……..…… 4

Figure 2. LCN A05AC Mapped to both UOCs, CD2 and CE1 8

Figure 3. PLISN Assignment of Alternate Models with Common Components 10

Figure 4. PLISN Assignment of Alternate Models with No Common Components..... 10

Figure 5. PLISN Assignment of Alternate Repair Parts on Alternate Models (Different ALC)..... 11

Figure 6. PLISN Assignment of Alternate Repair Parts on Alternate Models Using Different LCNs (Same ALC) 11

Figure 7. LCN Versus FGC Assignment..... 14

Figure 8. FGC Assignment in the powerLOG Data Tables..... 15

Figure 9. PLISN Assignment with Sequential LCN Structure 18

Figure 10. PLISN Assignment of Separately Provisioned End Items with Sequential LCN Structure 18

FIGURE 11. Example of an Engineering Drawing with Tolerances and Dimensions..... 21

Figure 12. Example of an Assembly Drawing with a Bill of Materials List……..…..21

Figure 13. Example of an Exploded View Assembly Drawing ……22

Figure 14. Example of an Illustration which may be linked to a powerLOG subtask..... 26

Figure 15. LSAR-036 Report Format..... 55

Figure 16. QPEI Roll-Up for Multiple Applications Under Basic/Nonbasic ALC..... 61

Figure 17. Option 1 Quantity Per End Item. 63

Figure 18. Option 2 Quantity Per End Item 65

Figure 19. Option 3 Quantity Per End Item. 67

Figure 20. Example of LSAR-036 Report Selection Summary 78

Figure 21. LSAR-040 Authorization List Items Summary 81

Figure 22. Example of an RPSTL Illustration and Listings 87

Figure 23. GEIA Standard Graphical Representation of Provisioning, Packaging and Cataloging Data..... 92

Figure 24. LSAR-019 Task Analysis Summary 96

Figure 25. PLISN View, HG Data MTD/RTD/RCT Tab with cross data views of SMR Code and Task Codes for the item 97

Figure 26. LSAR-068 Task Code to SMR Code Verification 98

Figure 27. LSAR-080 Bill of Material List..... 100

Figure 28. LSAR-126 LCN PCCN Indentured Item Tree 101

Figure 29. LSAR-151 Provisioning Parts List Index 102

Figure 30. LSAR-152 PLISN Assignment/Reassignment..... 103

Figure 31. Calculation Utility: Maintenance Replacement Rate..... 104

Figure 32. Pre-Made Database Alteration Selection Screen 105

TABLES

Table 1. PowerLOG Provisioning LMP Edits.....37

Table II. PowerLOG Business Rules And LMP.....47

Table III. EBCDIC Versus ASCII Sequence..... 53

Table IV. Provisioning Key and Associated Data 71

Table V. TABLE V. LSAR-036 - LMP Data Requirements 73

CHAPTER ONE

INTRODUCTION

1.1 PURPOSE. This guide is designed to be used as a procedural supplement to GEIA-STD-0007, Logistics Product Data. It is anticipated that the GEIA standard will become the official source of logistics data for DOD and MIL-PRF-49506, Logistics Management Information, will be cancelled. This document is also a provisioning functional guide to powerLOG-J. There are several report processes that can be generated by powerLOG which directly result in functional, provisioning-related products. A basic understanding of the functional/system requirements is needed in order to properly code the Logistics Product Data and prepare the report inputs to produce these reports.

1.2 DEFINITIONS.

a. Provisioning. Provisioning, according to the traditional definition, is “the process of determining and acquiring the range and quantity of support items necessary to operate and maintain a major item for an initial period of service.” The standard initial period of service as defined by the Army is 2 years. This timeframe is considered the demand development period or the time between initial fielding and the establishment of demand-based requirements in the supply system using a standard or weighted 12 to 24 month moving averages. Current Weapon Systems acquisitions rely more on Sparing to Availability modeling rather than traditional supply demand based models; or, rely on Performance Based Logistics contracting with either the development contractor/other Government agencies. Using all of these methods to calculate the range and quantity of spares and repair parts requires the development of Provisioning Technical Documentation (PTD). PTD is both data (identification information, codes, engineering replacement estimates) and Engineering Data for Provisioning (drawings, illustrations, specifications), necessary to independently re-procure the support item.

b. PowerLOG-J. PowerLOG-J is a Government software system for developing and maintaining logistics data. PowerLOG is based on data relationships which were defined under MIL-STD-1388-2B, Logistic Support Analysis Record, and was enhanced with additional tables (or Entities) and elements (or Attributes) to comply with the GEIA Standard and S1000D, the International specification for technical publications. PowerLOG is available free-of-charge to all Government and DOD contractors (US only). PowerLOG-J (Version 1.7) is GEIA-STD-0007 compliant in that it can transfer data in eXtensible Mark-up Language (XML) as prescribed by the standard. The powerLOG software contains the 108 basic tables of Military Standard, 12 tables resulting from the GEIA Standard, and 5 additional tables which assist with mapping

Parts Manual data to an associated Illustration and Unique Item Identification (UII) mapping. PowerLOG has 52 standard review and product reports and utilities to edit/validate logistics data and automatically assign or update the database with provisioning data control keys and information, i.e., PLISN, NHA PLISN, Indenture Code, Same as PLISN, Quantity per End Item. PowerLOG can be downloaded from the LOGSA website: https://www.logsa.army.mil/lec/.

c. Government Electronic Information Technology Association (GEIA)-Standard (STD)-0007. The GEIA-STD-0007 represents a new approach to the definition of a Logistics Support Analysis Record (LSAR) data structure. Unlike MIL-STD-1388-2B, it defines a structured vocabulary for logistics product data that is implementation independent and tailorable, rather than specifying how data must be stored (e.g. relational tables) in a database. Also, it does not prescribe the supportability analyses required to generate this data. It does this by focusing on only the structural information needed to facilitate data transfers between systems and defines this structure using the World Wide Web Consortium (W3C)'s XML Schema.

1.3 REFERENCES.

a. Standards and Handbooks

GEIA-STD-0007, Logistics Product Data

GEIA-HBK-0007, Logistics Product Data

MIL-STD-400051, Preparation of Digital Technical Information for Page-Based Technical Manuals

MIL-HBK-1222, Guide to the General Style and Format of US Army Work Package Technical Manuals

DOD-4100.38-M, DOD Provisioning and Other Pre-procurement Screening Manual

b. Specifications.

MIL-PRF-49056, Logistics Management Information

S1000D, International Specification for Technical Manuals

1.4 PRODUCT REPORTS AND THEIR INTERRELATIONSHIP.

a. The product reports, described in this guide, are the Maintenance Allocation Chart (MAC), Defense Logistics Information System Provisioning Screening, Provisioning

Technical Documentation (PTD), Authorization List Items Report, and Repair Parts and Special Tools List (RPSTL). An overview of the various products is shown in Figure 1.

(1) The MAC identifies the maintenance task functions and associated maintenance man-hours, maintenance-level allocations, tool and test equipment requirements, and other remarks. The MAC is produced directly from the LSAR-004, Maintenance Allocation Chart Summary. The MAC will appear as appendix B to Crew/Maintainer level maintenance manuals. While the MAC is an Army-oriented summary, the Air Force uses the LSAR-023, Maintenance Plan Summary, and the Navy/Marine Corps uses the LSAR-024, Maintenance Plan, as the primary planning, analysis, and review tools for maintenance requirements.

(2) The LSAR-032, Defense Logistics Information System (DLIS) Submittals, may be used to perform provisioning screening and to obtain National Stock Numbers and related cataloging and management control data, which can then be used to update powerLOG. Returned information from DLIS, in turn, is used to produce the proof RPSTL, Authorization Lists, and PTD with the latest results of the provisioning screening.

(3) PTD is used by the requiring authority for the identification selection and determination of initial requirements and cataloging of support items to be procured through the provisioning process. The various types of provisioning lists are automatically produced using the LSAR-036 report. Each service uses the LSAR-036 summary for receipt of PTD as inputs to their in-house provisioning ADP system. Accompanying the PTD is the LSAR-151, Provisioning Parts List Index (PPLI).

(4) The Authorization List Items report, LSAR-040, contains four categories of items which are published in the Crew/Maintainer Technical Manual, which follows: components of end item, basic issue items list, additional authorization list, and expendable durable supplies and materials list. The items placed into the categories above are identified within the provisioning data.

(5) The RPSTL, or illustrated parts breakout manual, contains lists of repair parts and special tools and illustrations of the parts and tools peculiar to the end item. The RPSTL manual format includes a table of contents, a tabular listing of authorized spare/repair parts, a listing of special tools and support equipment, illustrations that show all spare/repair parts and special tools and support equipment, and part number/National Stock Number (NSN) to figure and item number indexes. The listings and indexes are produced directly from the LSAR-030, Indenture Parts List. In addition to the parts manual listings, the Logistics Product Data produces the listing of various authorization/ancillary equipment requirements required for the operator's manual. These listings are the basic issue items, component of end items list items, additional authorization list items, and expendable/durable supplies and materials list items

b. The MAC is a summary of the maintenance concept for each reparable or maintenance significant item. The Functional Group Code (FGC) sequence of the MAC will dictate the sequence of entries in the narrative technical manual and RPSTL. This maintenance concept establishes the basic guidelines under which a materiel system is to be maintained and repaired. The MAC evolves from the maintenance concept that is documented in the LSAR, i.e., CA data table during the task analysis process. The support item requirements portion of the task analysis, i.e., CG Table serves as a baseline for determination of the Source, Maintenance and Recoverability (SMR) Code. The third position of the SMR code provides authorization for requisition and stockage of an item. The SMR code is provided to the user in the field in the RPSTL or -P (parts) manual. The SMR code and other provisioning related data elements, i.e., Replacement Task Distribution, Repair Cycle Time, Maintenance and Replacement Task Distributions, and Maintenance Replacement Rates are used for determination of initial spares and repair requirements.

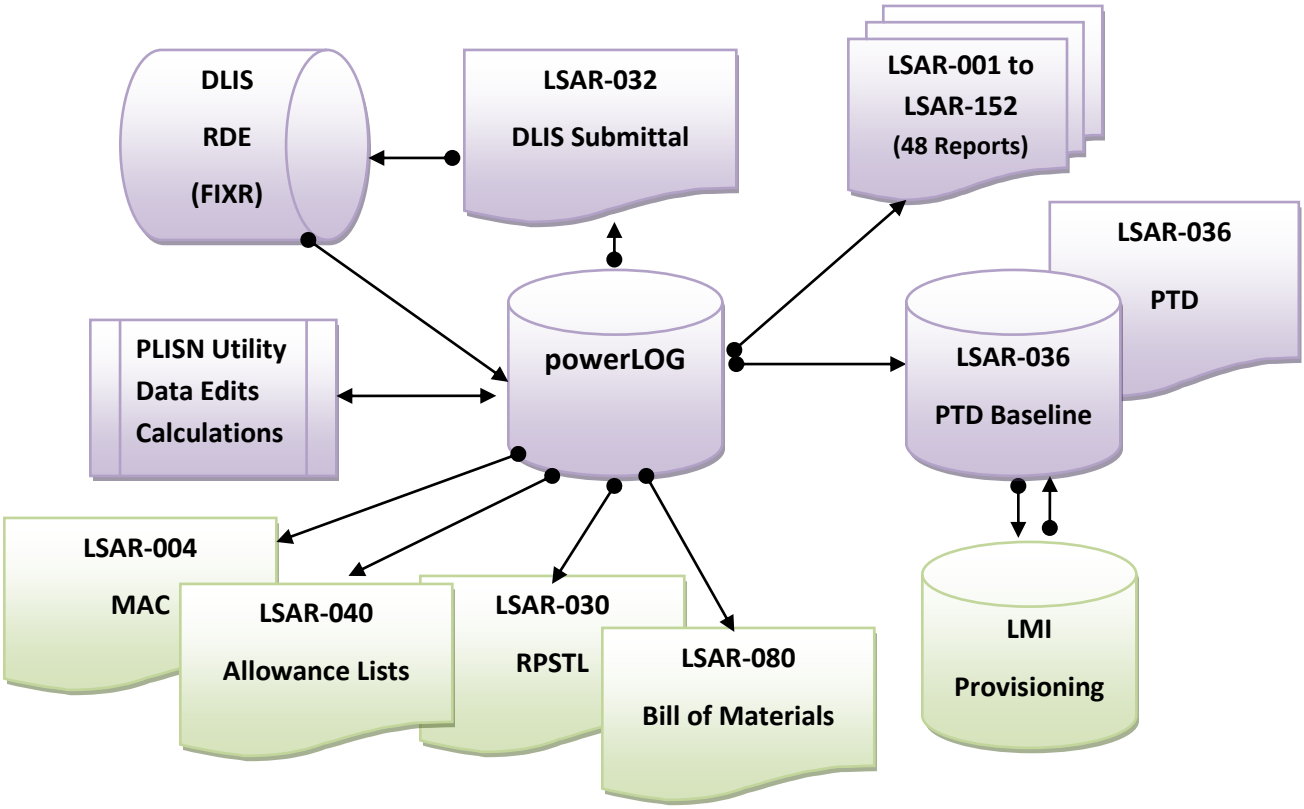

FIGURE 1. Primary Provisioning Related Reports and Data Transfers

c. Maintenance Replacement Rates (MRR) can be determined by summing the products of the Task Frequency (CA table) times the Quantity per Task (CI Table) for all tasks using the particular Reference Number within a given component of LSA candidate. This information must be aligned with the task analysis documentation, so the provisioning requirement computations are performed in accordance with the

maintenance concept, or MAC, and the support item authorization or RPSTL. The powerLOG-J software contains a utility program which automatically performs the MRR calculations based on the Task Frequency, and updates the powerLOG database with these values. Support items that are determined by the task analysis as necessary to be procured and stocked, but are not currently in the Federal Supply System, must be cataloged and have National Stock Numbers (NSN) assigned. These NSNs are also reflected in the RPSTL.

d. The MAC and other service maintenance plans are produced from data contained in both the Task Analysis and Parts Identification/Application areas. All other provisioning oriented summaries are produced exclusively from the Parts identification/Application. The Parts Identification stores data using the CAGE and Reference Number. Single or multiple application of an item is stored by LCN/Alternate LCN/Usable On Code/LCN TYPE.

e. In order to review/validate the data and file structure to produce these product reports, a discussion of various interrelated Logistics Product Data review reports will also be conducted, such as the LSAR-068, Task Code to SMR Code Validation; LSAR-080, Bill of Materials; LSAR-151, Provisioning Parts List Index; LSAR-152, PLISN Assignment/Reassignment; also the LSAR-019, Task Analysis Summary.

CHAPTER TWO

CODING REQUIREMENTS AND REPORT SELECTION LOGIC FOR PROVISIONING REPORTS

2.1 ASSIGNMENT OF THE LOGISTIC SUPPORT ANALYSIS (LSA) CONTROL NUMBER (LCN).

a. The LCN assignment techniques described in Appendix B of GEIA-HB-0007, Logistics Product Data Handbook, may be used for developing the powerLOG database for provisioning purposes. It is important to emphasize that LCNs are assigned for provisioning (H-data tables) in hardware generation breakdown sequence and not by Work Unit Code/Technical Manual (TM) Functional Group Code (FGC) or work breakdown structure codes. By the GEIA business rules, only “P” or Physical Type LCNs can be documented for Parts related LCNs.

b. When LCNs are assigned sequentially, the LCN-Indenture Code (IC) must be manually entered in the Logistics Product Data, XB table, before Provisioning Contract Control Number (PCCN), Provisioning List Item Sequence Numbers (PLISN), IC or Next Higher Assembly (NHA) PLISNs can be automatically assigned.

2.2 USABLE ON CODE (UOC) ASSIGNMENT.

a. The UOC is a key data element used to identify the model/configuration relationship of each LCN comprising a system/equipment, and to control these relationships for LSAR report generation. Each System End Item/Separately Provisioned End Item record, in the XC table, will contain a UOC. The part application records in the HG table are linked to the applicable UOC through the HO table. A part application may be tied to multiple UOCs by having multiple HO records, but may have only one PCCN. The Maintenance Allocation Chart (MAC) data is tied to the UOC through the XF table. The UOC eliminates the need to enter an item multiple times just when it applies to multiple configurations/models.

b. An item should be broken out at each location unless all failure rates, maintenance actions, quantities and other application-related information is the same for each application. Or, to put it another way, multiple UOCs should not be assigned to the same part application when application-related information, such as Source, Maintenance and Recoverability (SMR) Code, quantity data, or analysis data is

different. This is one of the most common mistakes made during LCN structure development that affects provisioning.

c. The Logistics Modernization Program treats provisioning data as a series of Parent/Children or Assembly and Components relationships from one indenture to the next. Assemblies are only broken out once with the parts relationships, technical coding, and model applications (UOC) which are all contained within this one breakdown. Analysis and documentation of data affected by application locations must be considered when consolidating all technical data in a single breakdown.

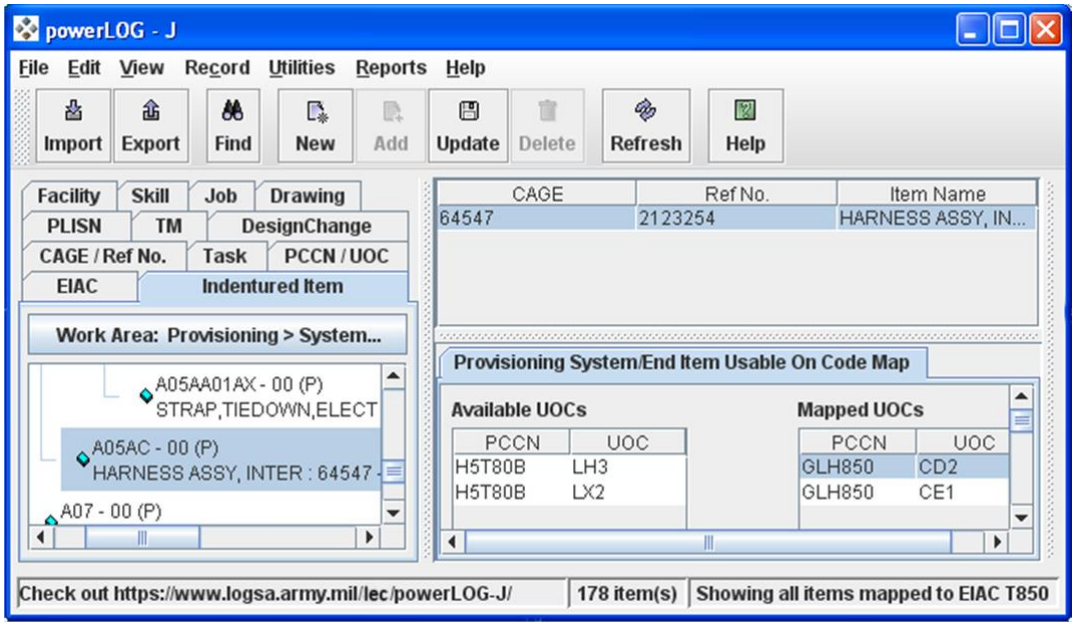

XC Table – HO Table Mapping

EIAC	LCN	ALC	TYPE	PCCN	UOC
T850	A05	00	P	GLH850	CD2
T850	A05	01	P	GLH850	CE1

FIGURE 2. LCN A05AC mapped to both UOCs CD2 and CE1.

2.3 PCCN RELATIONSHIPS.

a. The PCCN is a mandatory data element assigned by the requiring authority to identify a specific contract or group of end items/components that can have many configurations/models. It is a mandatory selection on the LSAR-152 and LSAR-036 reports, and is an optional selection the LSAR-032, LSAR-080, LSAR-126, and LSAR-151 reports. When the provisioning data is entered, HO records tie the HG part application data back to their end items located in the XC table. A part application can have several UOCs, but can only be tied to one end item or PCCN. In other words, a

part application (HG record) may have several HO records tying it back to several XC records, but all of the XC records must have the same PCCN. In the example below, the LCN A05AC is tied to UOCs CE1 and CD2, but both have the PCCN GLH850.

b. There can be only one LCN assigned to each PCCN in the XC table, but there may be multiple UOCs (see the example below) assigned to the same LCN but different ALCs. Both of the XC records have the same LCN, A05, same PCCN, GLH850, but different UOCs CE1 and CD2. The reason for this is to avoid duplication of common parts. All common parts will be documented under the basic ALC item, and only parts peculiar to the alternate assembly will be documented under the alternate assembly. When the PCCN, GLH850 is selected, parts under both UOCs CE1 and CD2 will be selected. See sections 2.2 and 2.4 for more information on UOC and ALC assignment.

2.4 ALC ASSIGNMENT.

a. ALC assignment techniques are described in the GEIA Handbook and are appropriate for developing the powerLOG database for provisioning and maintenance-related purposes. ALC should be used to document alternate vendor or model (UOC) items, but under no circumstances should be used to document an alternate end item (PCCN).

b. ALC coded assemblies, subassemblies, or piece parts are sequenced immediately following the breakdown of the basic item for which it is interchangeable when using the LSAR-152, PLISN Assignment/Reassignment routine. Great care should be used when assigning ALCs, other than the basic 00 to items, since a break in the alternate models' indentured breakdown structure will not create an error condition, but will cause the alternate item to be sequenced as part of the basic item. For example, suppose a B indenture Power Supply is documented against two models by carrying both model UOCs, but within the power supply there is a connector, plug that is different for each configuration. Since there is no B indenture power supply documented for the "01" model ALC structure, the "C" indenture "01" ALC connector plug would be documented as part of the basic "00" system, and will have its PLISN assigned as if it appeared in the power supply equally with the original connector. If any of the Power Supply parts are different for either model, then the power supplies should be assigned separate Reference Numbers and PLISNs in the breakdown within its appropriate model UOC. If there is no difference in the Power Supply between the two models, then it should be documented under the basic model and it and all its subordinate items should carry the UOCs of both models. See Figure 3.

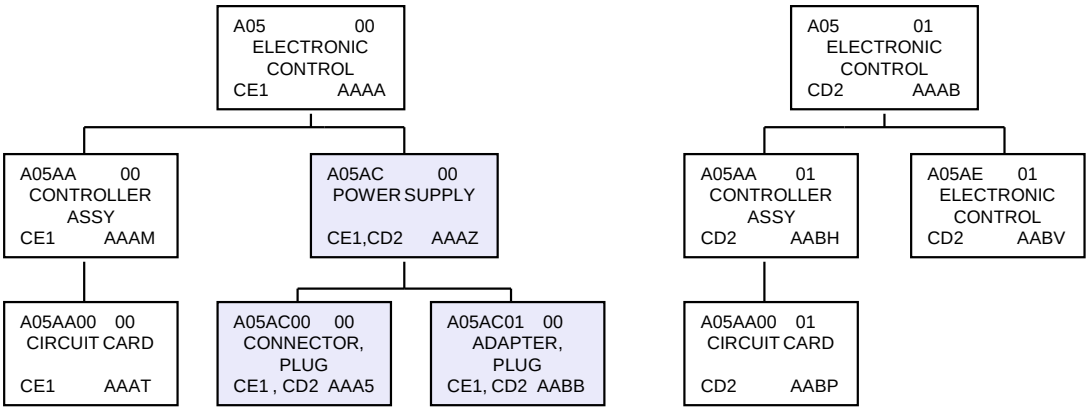

FIGURE 3. PLISN Assignment of Alternate Models with Common Components

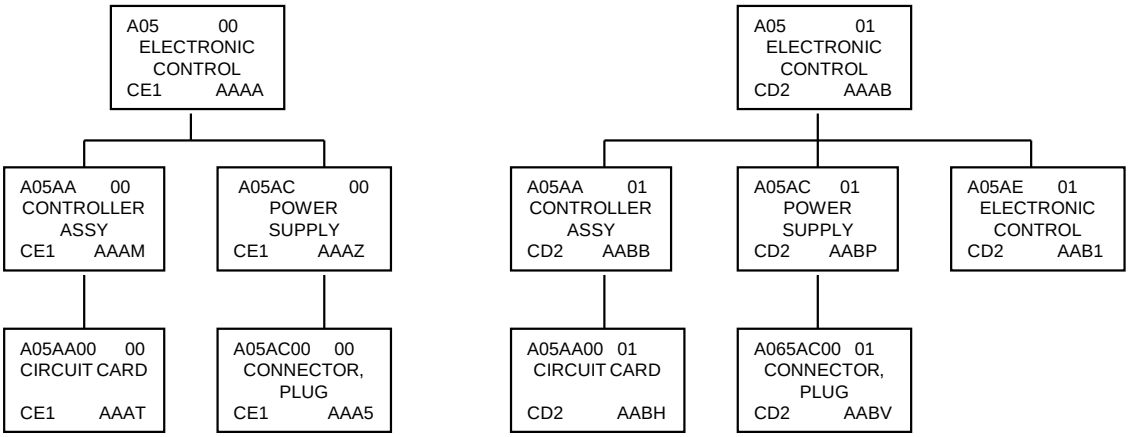

FIGURE 4. PLISN Assignment of Alternate Models with No Common Components

PLISN Assignment Selections:

Model PLISN: AAAA
Start PLISN: AAAM
PLISN Gap: 0005

LEGEND

LCN ALC
ITEM NAME
UOC PLISN

NOTE: Reserved Model PLISNs are from AAAA to AAAHZ.

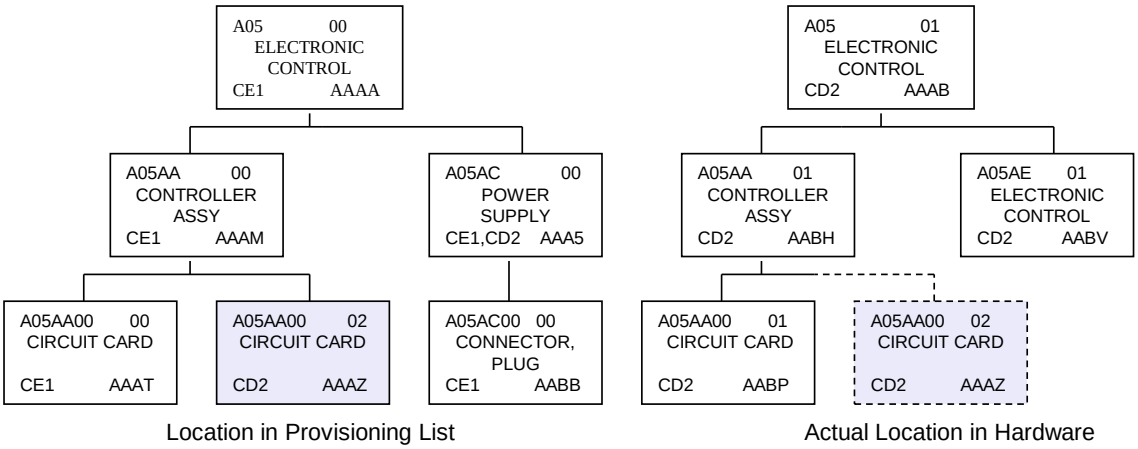

FIGURE 5. PLISN Assignment of Alternate Repair Parts on Alternate Models (Different ALCs)

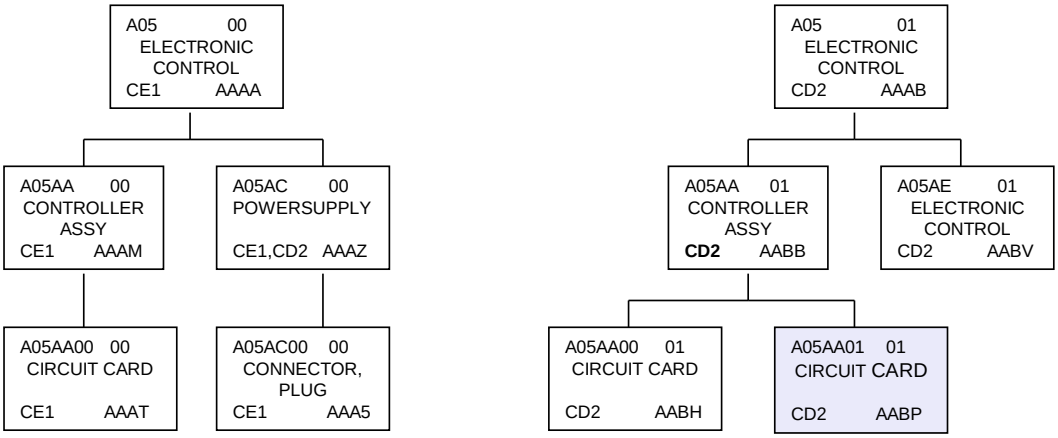

FIGURE 6. PLISN Assignment of Alternate Repair Parts on Alternate Models Using Different LCNs (Same ALC)

c. In the previous example, the power supply was used on both modes, CE1 and CD2. If there was a different power supply for each electronic control unit, the PLISNs would be assigned as shown in Figure 4. Note that if the same power supply could be used on both models, the re-documentation of the power supplies common components would be avoided.

d. Specific guidance for documentation of alternate assemblies in the LSAR should be received from the requiring authority, since this documentation may lead to "doubling" the spares requirements when requirements computations are performed.

e. When multiple alternate models are to be documented, the first to be sequenced will be the model with the lower assigned ALC, i.e., an item with an ALC "01" will appear before an item with an ALC "02" when both have the same LCN. When a break occurs in the structure of an additional model, these items will be sequenced/inserted within the basic system LCN ("00" ALC) structure. This will preclude the documenting of alternate assemblies within additional models, since instead of sequencing the alternate assembly within the additional model, the item is inserted back to the basic system (see figure 5). In this example, there are two applicable circuit cards for the Controller Assembly on the additional "01" model. The "02" circuit card will not be assigned a PLISN as if it were under the alternate "01" controller assembly, but rather it would be documented as part of the "00" controller assembly. This is because the PLISN assignment routine does not consider the UOC of the alternate circuit card, and cannot find a model with an ALC "02." To document the above situation, it is necessary to assign the alternate assembly the next available LCN following the breakdown of the assembly that it replaces, and code the alternate assemblies with the same ALC (see figure 6).

2.5 TM FUNCTIONAL GROUP CODE VERSUS LCN ASSIGNMENT.

a. A standardized method of FGC assignment for commodity types of components/items is normally established by the requiring authority (e.g., technical publications community). These standardized assignments make it easier for the user in the field to cross-reference between different TMs of equipment maintained by that organization. For instance, engines may always be documented under an FGC of "04" across all Army helicopter types. The FGC assigned to the XB table is displayed as the Group Number on the MAC report, while the FGC used in the Parts Application (HK table) is not displayed in the formal Repair Parts and Special Tools List (RPSTL) report portion of the summary; however, it is the prime sequencing key for the report generation. The matching FGC between the MAC and RPSTL is not necessarily contained in the Parts File for the identical LCN/ALC combination. The matched FGC is a throughput on the report selection FGC headers when the RPSTL report is generated. When an alternate vendor assembly is to be documented in the MAC and RPSTL, a unique FGC should be assigned to this item even though the item may be contained in the LSAR under an identical LCN distinguished by ALC. An example of FGC versus LCN assignment in the Parts File is provided at figure 7

b. Figure 8 illustrates a technique for assigning FGCs to both the XB and HK. Notice that a distinct FGC is assigned to each reparable (illustrated) item in the Task Analysis (XB) table. Each of these items will then appear as a separately, called-out item on the MAC. When the FGC is then assigned to the HK table, the same FGC that is assigned to the assembly (illustration) level is used for each item (reparable and non-reparable) that comprises the assembly. Using this technique, the Item Number then becomes the primary sequencing criteria within an illustration because the FGCs are equal for all items in the figure. The XB and HK tables FGCs will not match on LCN, but will "track" based on LCN and subordinate LCN relationships from the Task Analysis and Provisioning Application data, respectively, and the RPSTL FGC header for the same assembly will match the corresponding MAC FGC for the same assembly.

c. This technique will work for most illustrations. An RPSTL illustration review should be made when assigning FGCs to the HK table, since it is possible to illustrate smaller subassemblies completely within a higher assembly illustration. This is documented in the RPSTL data by using the TM IC. Standard practice calls for subassembly parts, documented in the illustration of an assembly, to be TM indentured by "2." This will cause these parts to appear in the RPSTL with two leading periods (.) before the item names.

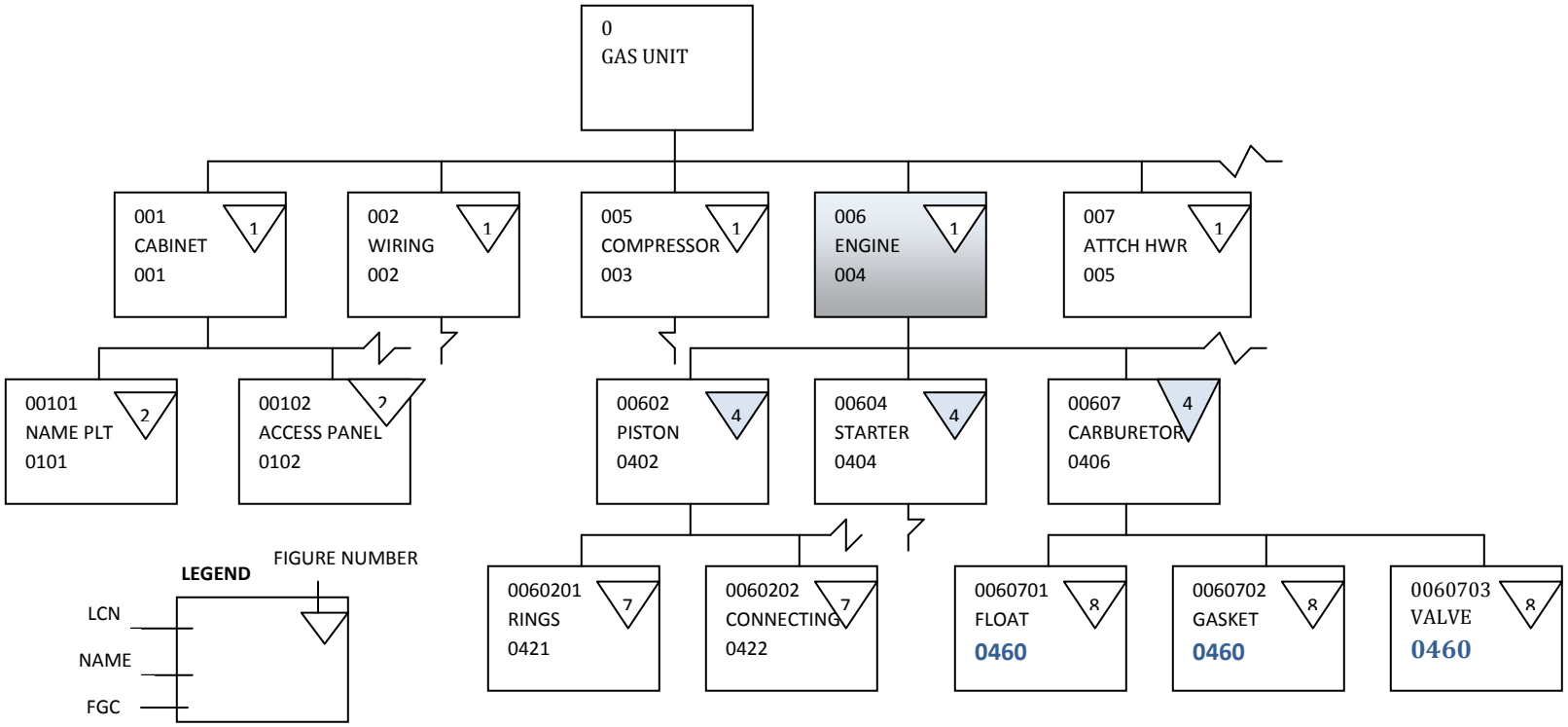

NOTE: Functional Group Codes are assigned across to group items making up an illustration. All illustration top level items, e.g. Fig 4, ENGINE, are identified on the RPSTL FGC header and not in the HK table as Figure 4. The Engine is contained as a component of the Gas Unit, Figure 1.

The Carburetor components above and Figure 8 on the following page of this guide depict documentation using the option of assigning an identical FGC to all items contained in the illustration. This method is preferred for PowerLOG users.

FIGURE 7. LCN Versus FGC Assignment

XB TABLE (MAC FGC)

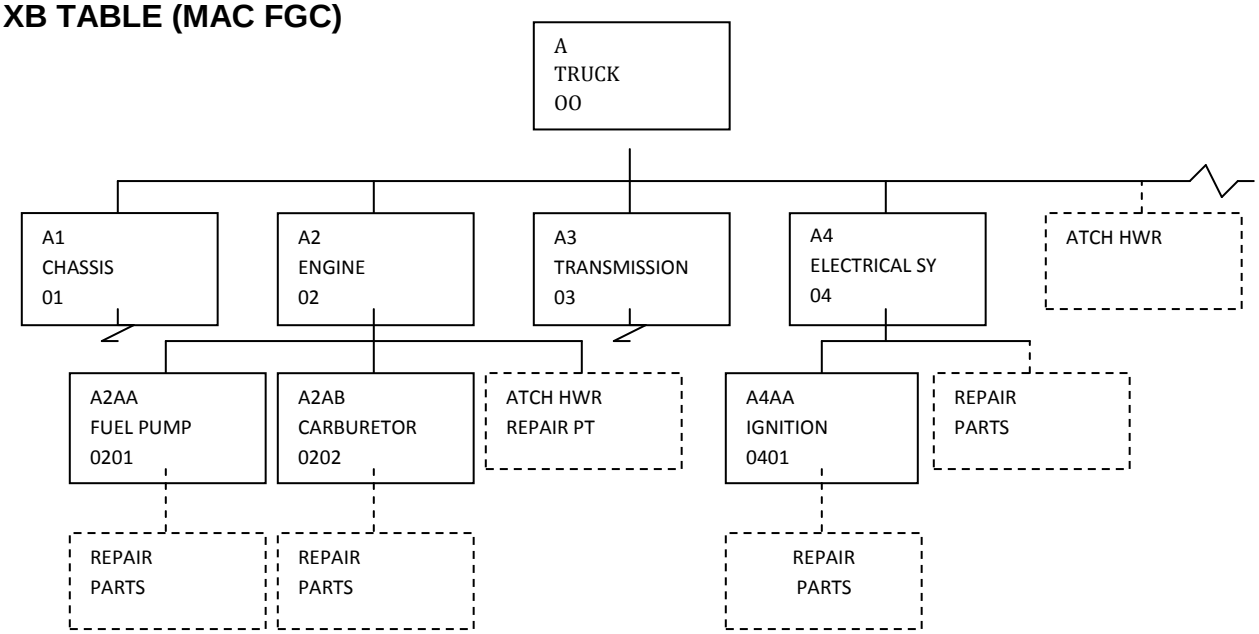

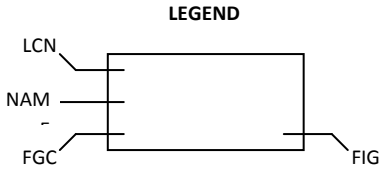

HK TABLE (RPSTL FGC)

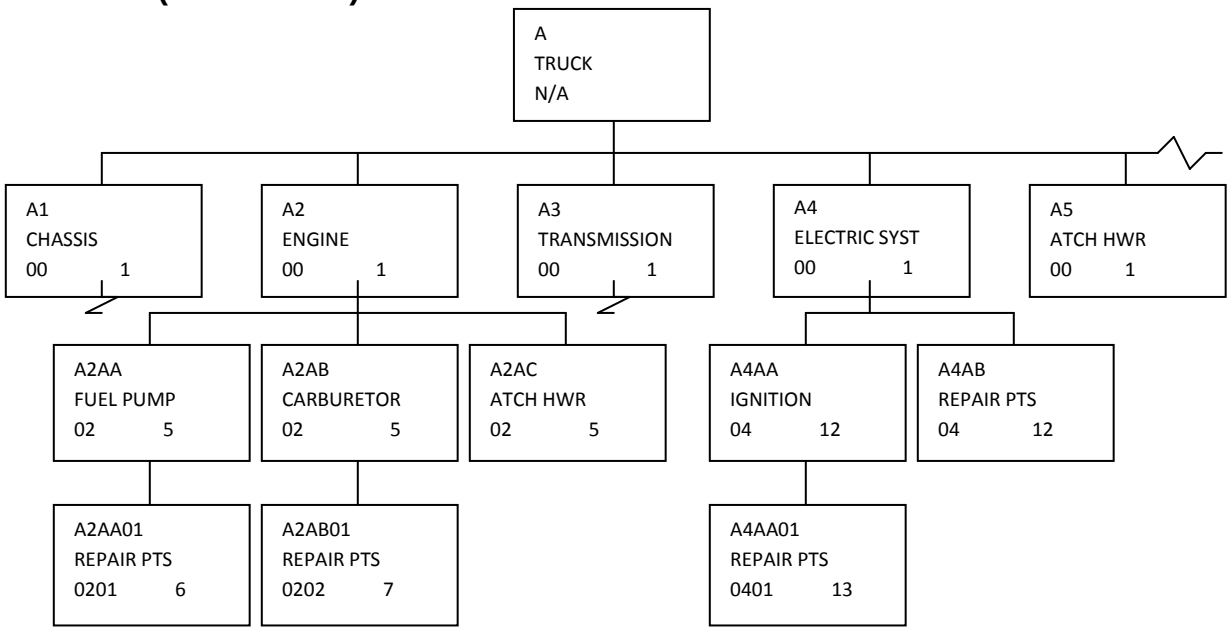

FIGURE 8. FGC Assignment in the PowerLOG Data Tables

2.6 TM CODE.

a. The TM Code can be assigned to the Task Analysis CH table and the Provisioning HJ, HK, and HL tables. Use of the TM Code in the Task Analysis area is optional to generate a proof MAC. It is used to distinguish specific tasks within an LSA candidate, which may be applicable to two separate MACs. TM Code selection of the MAC can be significant when a system-level MAC report is required, which needs to document only the removal/replacement of a subordinate end item. In this case, the LCN of the end item would have the Replace task function entered with the TM Code of the system and other maintenance functions, i.e., repair, inspect, fault locate, entered with the TM Code for the subordinate end item. This, of course, is applicable when separate organizational (-20) manuals are to be developed for the system itself and the end item within the system.

b. Use and assignment of the TM Code within the Task Analysis area are much less restrictive than use in the Parts File. The preparing activity may control TM codes assigned to the Task Analysis without worrying about interfacing with a Government software system. If the preparer does opt to utilize the TM Code to designate tasks to be contained in the proof MAC, he must assign the same TM code throughout the file to all CH Task Codes depicted in the MAC being developed. Then, LCN will no longer become the primary selection item for the LSAR-004 report.

c. The TM Code entered in the Provisioning area is assigned by the requiring authority. The TM code represents a TM Designation series for an RPSTL e.g., -20P, -34P, of the same TM series (TM9-2350-300-XXP)). For the Army, the TM Code must correspond to a TM Code to TM Designation Index maintained within the Commodity Command Standard System and the Logistics Modernization Program (LMP). The TM Code is a provisioning Key Data Element to all the other RPSTL data, meaning that without the TM Code, the associated RPSTL data, i.e., Figure Number, Item Number TM IC, will not be displayed on the LSAR-036 report and submitted to the requiring authority. The proof RPSTL report selection keys to TM Code for report generation.

2.7 LCN INDENTURE CODE (IC) AND IC.

a. There are two types of ICs documented in the LSAR, which depict either a total system or end item relationship:

(1) The LCN-IC is used to depict a relationship of an item's application to the entire system being analyzed. The LCN-IC is only required when a sequential LCN assignment method is utilized, i.e., where the LCN structure is not present.

(2) The IC is used to identify the hardware breakdown of an item's application to its provisioned end item. The IC can be either automatically assigned, based upon the LCN structure logic using a classical LCN assignment method, or by LCN-IC and relationship of the provisioned end item to the total LSAR system.

b. The IC can be automatically assigned to the powerLOG HG table using the LSAR-152, PLISN Assignment/Reassignment process.

(1) When a sequential LCN assignment method is utilized, the LCN-IC must be entered in the XB table. The LCN-IC entered should represent the indenture in relation to the total system (LCN), not the IC of the provisioned end item, if the user intends to utilize the LSAR-152 system to assign PLISNs. For example, suppose the LSAR is developed for a main battle tank, and the requiring authority decides to manage the tank engine, which has a "B" indenture to the tank, as a separately provisioned end item, i.e., under a different PCCN. The engine will be documented in the LSAR as follows: a record will be placed in the XC table denoting the engine is a separately provisioned end item; the LCN-IC would have been developed in the XB table as a "B"; and the engine will be in the HG table with two records in the HO table showing its relationship to the tank and itself. (Note: Only separately provisioned end items are allowed to have multiple HO records mapped to multiple PCCNs in XC.) When the PLISN assignment routine is run on the tank, the ADP system finds the engines relationship to the tank from the LCN-IC (table XB) and assigns a "B" to the HG table IC (see Figure 9).

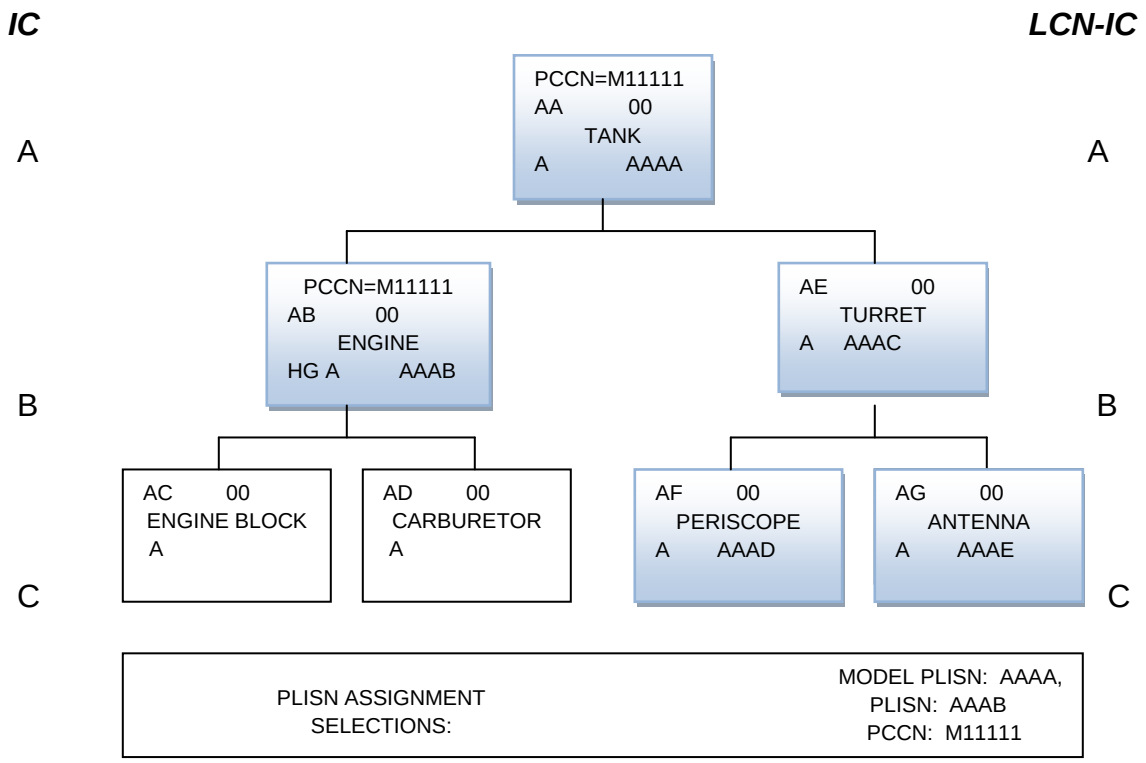

FIGURE 9. PLISN Assignment with Sequential LCN Structure

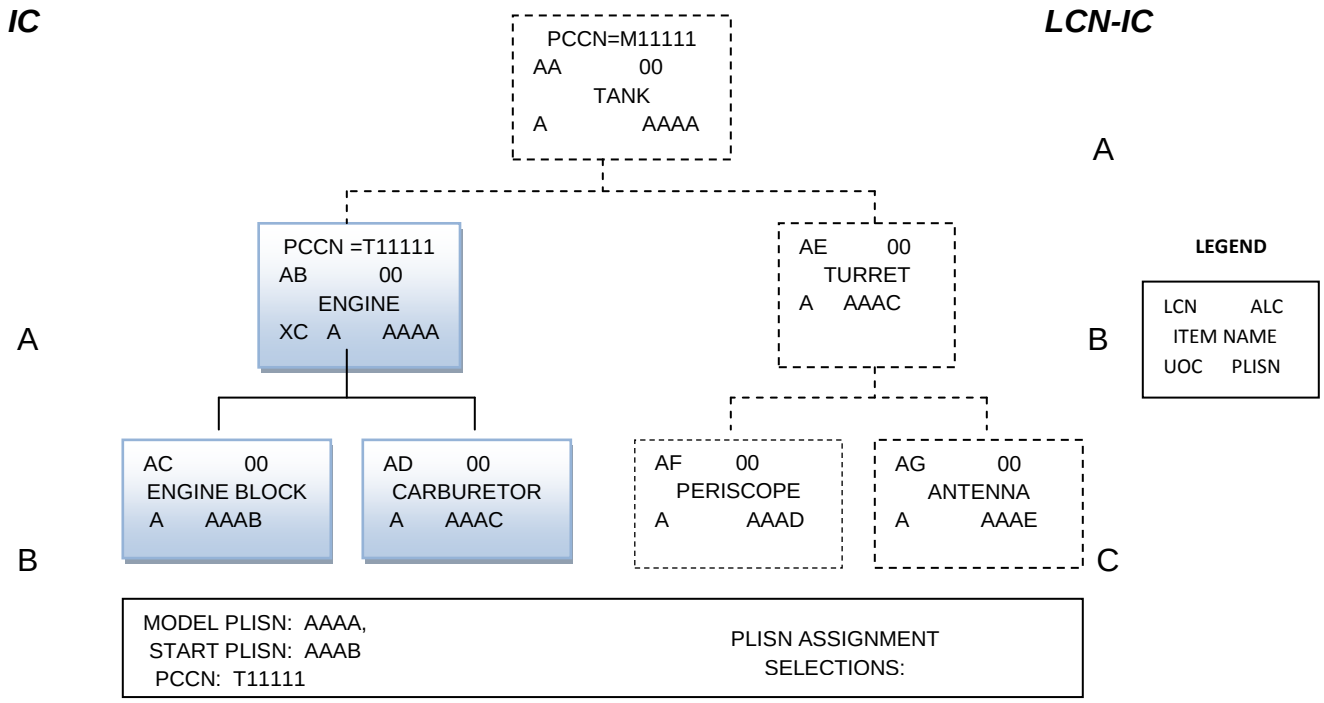

FIGURE 10. PLISN Assignment of Separately Provisioned End Items With Sequential LCN Structure

PowerLOG does not automatically assign PLISNs to End Items with ONLY Sequentially Assigned LCNs.

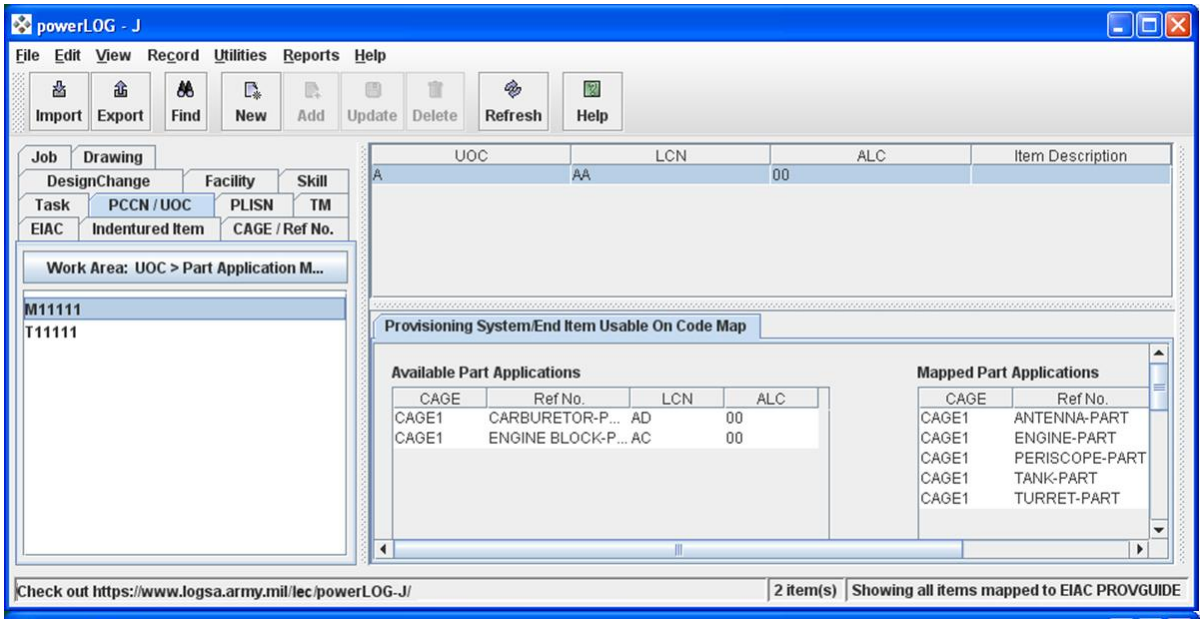

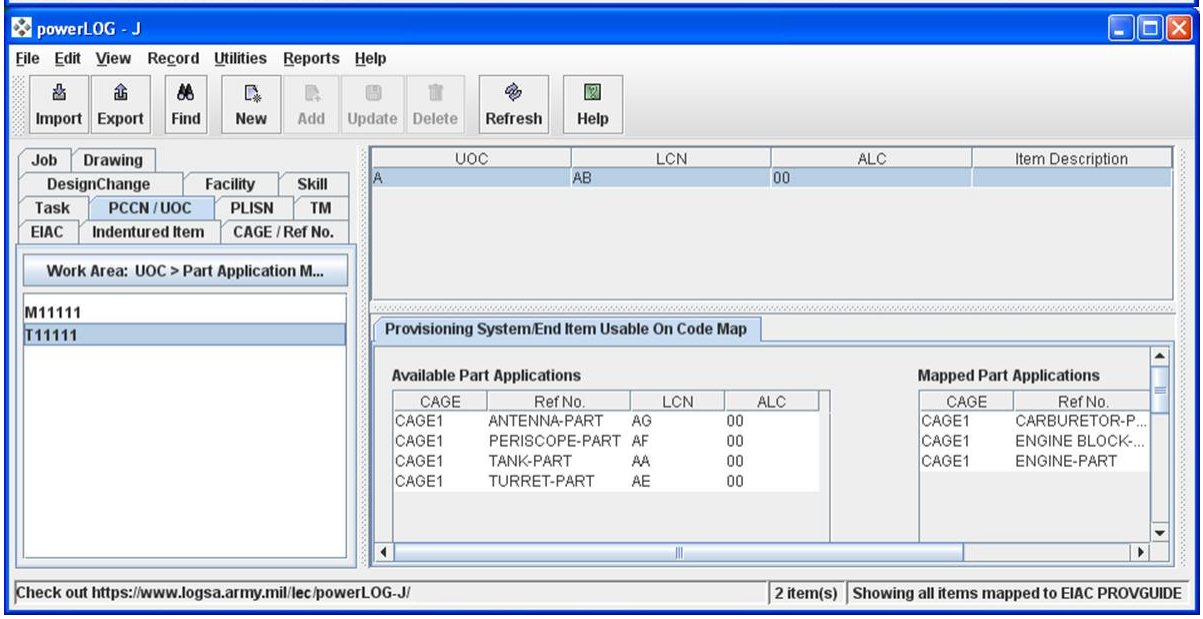

(2) At the next indenture below the engine are the engine block and carburetor assembly. When the PLISN assignment is run for the engine, the ADP system will compare the engine block and carburetor assembly LCN-IC with that of the engine and assign the proper IC. Figure 10 shows this example. Since the ADP system will only build HO records to one PCCN for each part application record in HG, the ADP system will be able to determine which "C" indenture items are related to the engine and which

are related to the turret. Note the IC of the Engine is only output "A" on the LSAR-152 and LSAR-036, but not updated in the HG table. This situation only arises for separately provisioned end items.

(3) Manual IC, PCCN/PLISN, and NHA PLISN assignment can be reviewed by using the LSAR-080 report.

2.8. IMPORTING PROVISIONING DATA INTO POWERLOG.

a. Many Weapon Systems which were provisioned in the ‘80s and ‘90s are now contracted for major modifications or product improvements. With the transition to the LMP from CCSS, many more Weapon Systems, data is being reviewed and scrutinized to determine if it can pass the more rigorous edits of LMP. PowerLOG can import provisioning data in the several standard legacy and current formats.

MIL-STD-1552/CCSS PMR

LSAR-036/MIL-STD-1338-2A

LSAR-036/MIL-STD-1388-2B

b. The CCSS PMR import will take the logic of PLISNs and NHA PLISN values of the imported file to create LCNs, or if available, use the stored LCNs contained on the PMR 083L card. The LSAR-036 imports will use the 01H card LCN to regenerate the powerLOG data tables. The existing provisioning data file keys are maintained during import. The data is not edited other than basic file integrity logic to import the data.

2.9 TECHNICAL DRAWINGS AND REVIEW OF POWERLOG DATA FOR PROVISIONING.

a. Technical drawings can be used to verify the breadth of the data documentation in powerLOG. By reviewing the Materials List on the drawing package with the LSAR-080 report listings, the parts and items which make up each assembly can be verified.

b. PowerLOG enables the user to store Technical Drawings in the database using various formats, i.e., BMP, EPS, GIF, JPEG, JPG, PNG, SVG, and TIFF. These drawings for provisioning can then be mapped to an LCN or Reference Number and CAGE early in the development (prior to PLISN assignment). Later the same drawings can be mapped to the individual PLISNs. The technical drawings or vendor data can thus be linked to assemblies to verify component listings. The technical drawings can also be linked to new items, either spare or repair parts, to assist in the cataloging process.

Drawings may be categorized as follows: Shop Drawings (detail drawings) – Two dimensional multiview drawings of each component for the purpose of fabrication; Assembly and Subassembly Drawings – three dimensional drawings showing all parts assembled. Parts list or a Bill Of Materials (BOM) should be included; Exploded View Drawings – three dimensional drawings showing how parts should be assembled.

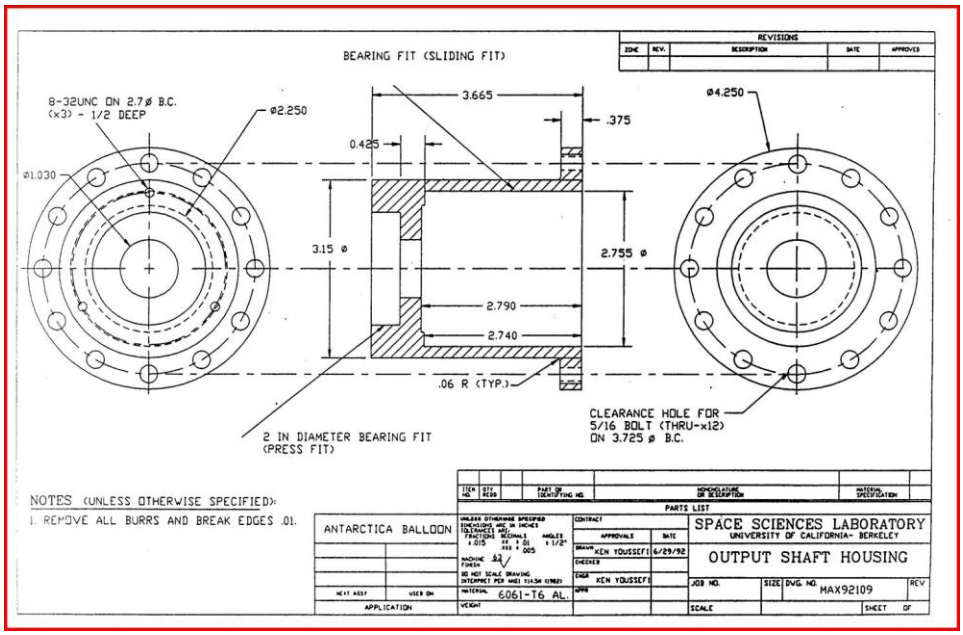

FIGURE 11. Example of an Engineering Drawing with Tolerances and Dimensions

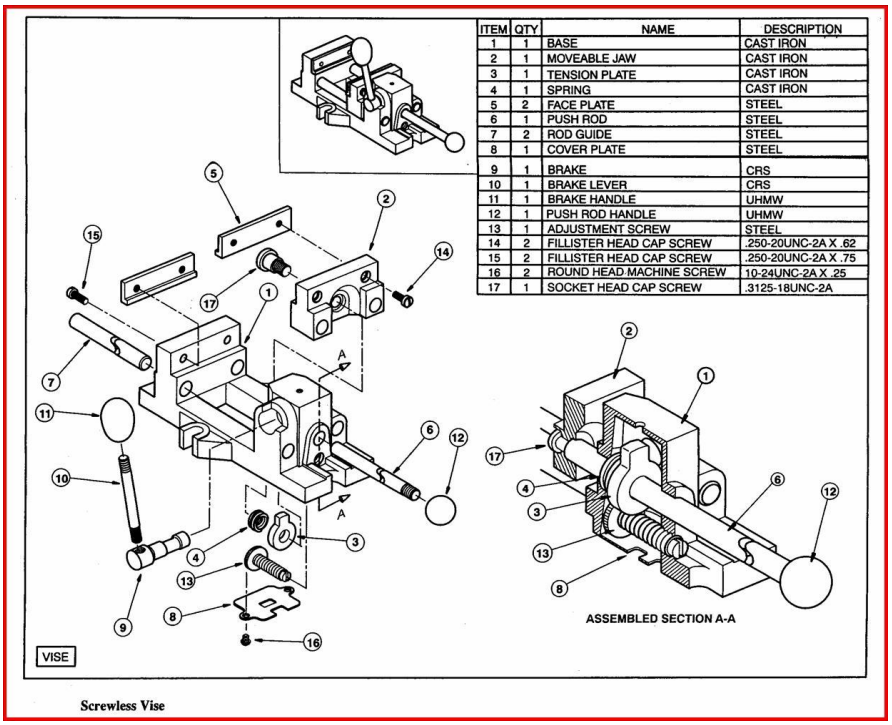

ITEM	QTY	NAME	DESCRIPTION
1	1	BASE	CAST IRON
2	1	MOVEABLE JAW	CAST IRON
3	1	TENSION PLATE	CAST IRON
4	1	SPRING	CAST IRON
5	2	FACE PLATE	STEEL
6	1	PUSH ROD	STEEL
7	2	ROD GUIDE	STEEL
8	1	COVER PLATE	STEEL
9	1	BRAKE	CRS
10	1	BRAKE LEVER	CRS
11	1	BRAKE HANDLE	UHMW
12	1	PUSH ROD HANDLE	UHMW
13	1	ADJUSTMENT SCREW	STEEL
14	2	FILLISTER HEAD CAP SCREW	.250-20UNC-2A X .62
15	2	FILLISTER HEAD CAP SCREW	.250-20UNC-2A X .75
16	2	ROUND HEAD MACHINE SCREW	10-24UNC-2A X .25
17	1	SOCKET HEAD CAP SCREW	.3125-18UNC-2A

Screwless Vise

FIGURE 12. Example of an Assembly Drawing with a Bill of Materials List

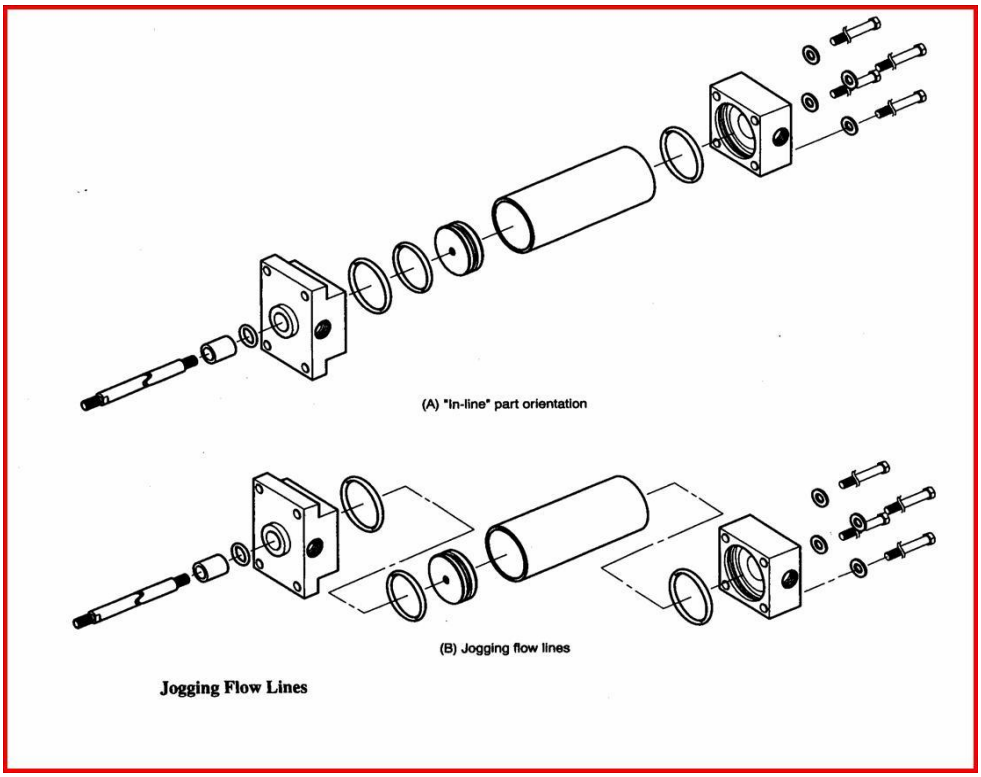

FIGURE 13. Example of an Exploded View Assembly Drawing

CHAPTER THREE

MAINTENANCE ALLOCATION CHART (MAC)

3.1 PURPOSE OF THE MAC.

a. The MAC is contained in appendix B of the Crew/Maintainer Level Maintenance Manual (-13 or -3X series). It depicts maintenance authorizations and average maintenance times by function and maintenance level. It also contains a reference to peculiar tools and test equipment required against each maintenance function. The MAC consists of four sections developed In Accordance With (IAW) MIL-M-40051 (TM). The proof LSAR-004 report is capable of producing sections II-IV. The report is also exportable in xml formatted work packages compatible with MIL-STD-2361 requirements.

(1) Section I, Introduction. This is developed IAW MIL-M-40051 (TM).

(2) Section II, MAC. The proof LSAR-004 report is formatted according to the requirements of this section.

(3) Section III, Tool and Test Equipment Requirements. The proof LSAR-004 report fulfills the requirements to produce this section.

(4) Section IV, Remarks. The proof LSAR-004 report fulfills the requirements to produce this section.

b. The draft MAC report contains all maintenance levels and functions, as they are defined under the Task Code data element definition in GEIA-STD-0007. Man-hours in the report are rounded to the nearest hundredth of an hour. When a task is documented against a particular item, but the computation of mean man-hours for the function is not rounded to 1/100 of an hour, the man-hour field of the draft MAC will be filled with asterisks; however, on the proof MAC, a value of 1/10 of an hour will be displayed. If the man-hours are zero or are not entered against a proof MAC's qualified task, asterisks will appear in the man-hour column. When the section III contains a tool Reference Number, which is not matched with a Parts Identification Reference Number, asterisks will appear in the National Stock Number column. The proof MAC contains the maintenance functions, as defined in MIL-HDBK-1222 (TM):

(1) Access, Disassemble/Assemble, and Fault Locate times are included as part of the repair time.

(2) Remove and Install times are included as part of the Remove/Install time.

(3) Lubricate times are included as part of service times.

(4) End of Runway Inspection is included as part of Inspect time.

(5) Mission Profile Change, Package/Unpackage, Preserve, Operate, Transport, and Transportation Preparation are not included on the proof MAC.

c. An aviation MAC formatted according to MIL-STD-40051(TM) requirements using the Operations/Maintenance (O/M) levels Aviation Unit Maintenance or "O"; Aviation Intermediate Maintenance or "F"; and Depot or "D" can also be produced from the Logistics Product Data. A Two-level Aviation MAC containing Maintenance category Aviation Maintenance Company (AMC) "O", Aviation Support Battalion (ASB) "F", Theater Aviation Sustainment Maintenance Group (TASMG) “L”, and Depot (D) "D" can be produced.

3.2 MAC MAN-HOUR COMPUTATIONS.

a. For each maintenance level determined by the O/M level subfield of the Task Code, the Mean Man-hours are calculated for all tasks with the same task function or consolidated task functions as follow:

$$\text{M-Hm} = \frac{\sum_{i=1}^{N} (\text{TFi})\,(\text{M-Hi})}{\sum_{i=1}^{N} \text{TFi}}$$

M-Hm = Mean man-hours

M-Hi = Total man-hours for task i (calculated by summing the man-hours for each SSC of Task i)

TFi = Task Frequency for task i

N = Total number of tasks performed

b. For each unique O/M level entry within an LSA Control Number (LCN), a separate maintenance function row is required. When the Task Frequency value for the only task function documented against an LSA candidate is zero, then the total man-hours for that task will be displayed in the Man-hour column of the MAC. Documentation of a task in this manner may be necessary when the only repair task against a higher-level assembly consists in the removal/replacement of a lower-indentured assembly. The man-hours should be documented against both assembly (REPAIR task function) and

subassembly (REPLACE task function), but in order to preclude "double counting" of man-hours to perform the same task under the assembly and subassembly, i.e., the LSAR-001 report, a zero task frequency for the higher assembly with the repair task function is entered into the LSAR.

c. By reviewing the format of the MAC, it should become obvious the only way to properly allocate maintenance man-hours against a particular "GROUP" or Work Unit Code/Technical Manual Functional Group Code (FGC), is to document those task codes pertaining to an item against the item's LCN. It should also be noted that a Replace function is applicable to removal/replacement of the LSA candidate itself, and not of a lower-indentured spare/repair part.

3.3 RELATIONSHIP OF THE MAC AND TOOL AND TEST EQUIPMENT REQUIREMENTS SECTIONS.

a. The MAC section is derived directly from the CA and CG task analysis documentation for the selected LCN range or TM Code, respectively. When producing the Tool and Test Equipment Requirements section, the appropriate Item Category Codes (ICC) for these types of items must be entered on the report selection. These items (ICC) are matched with the CG/EA record ICCs of the qualified tasks.

b. When producing a draft MAC, any combination of ICCs may be entered in order to review/validate any group of support equipment or items required for the selected tasks; however, when the proof MAC is developed, the ICCs should be limited to those categories which represent system peculiar tools and existing or new tool kits and outfits. It should not contain common tools as separately selected items.

c. A consolidated list of all tools/tool kits across all qualified tasks is generated (section III), and a numerical reference is assigned to this list in ascending part number sequence. This numerical reference is then included in the Tool and Test Equipment column of the MAC for every qualified task in which the referenced tool is utilized. The numerical reference is displayed on a line across from the task function listed on the MAC. On the Tool and Test Equipment Requirements section, under the Maintenance Category column, a consolidation of all maintenance levels requiring the particular tool/test equipment is displayed. This is determined by the O/M Levels subfield of the task codes requiring the item.

d. A consolidated list of all remarks for qualified tasks is generated in section IV. Remarks are limited to applicable section II (or Technical Manual FGCs) and Maintenance Functions by Remarks Reference Codes (table CF).

3.4 MAC SOURCE DATA.

a. The MAC is a reflection of the results of maintenance planning. It does not provide either the analyst or the reviewer with a tool to assess the optimization of

supportability requirements for the weapon system. By reviewing other LSAR output reports, the analyst may obtain a better picture of the true impact the system will have on logistics resources. For example:

(1) The LSAR-001 can be used to review the following data:

(a) The LSAR-001, Annual Man-hours By Skill Specialty Code and Level of Maintenance, will provide the analyst with a one or two-page summary of the total O/M man-hours required to support the weapon system. This data can be used to assess the new system impact on field/depot manpower by Military Occupational Specialty (MOS)/Wage Grade (WG).

(b) The LSAR-001 also provides the analyst with a one-line summary of all tasks requiring a given MOS/WG. Also provided on the report are a summary of MOS skill levels required, as well as any requirement for special training equipment to acquire the skill to perform the task. Review of this report may lead the analyst to request a detailed, step-by-step task review by means of the LSAR-019, Task Analysis Summary, or a review of the E table data for training material requirements. Note that illustrations may also be included to support the task sequence narratives.

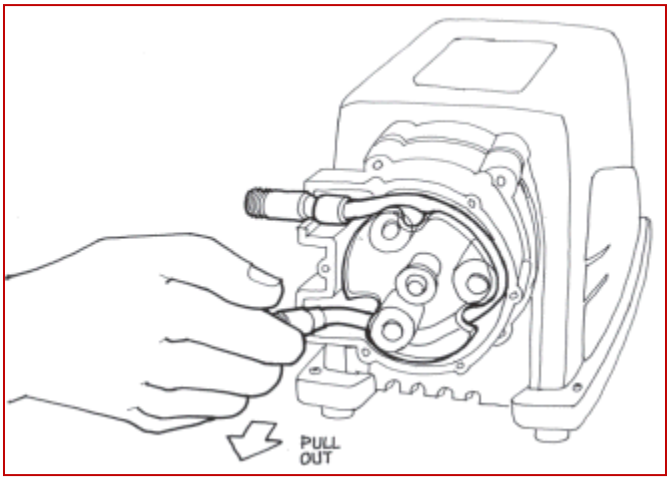

Figure 14. Example of an Illustration which may be linked to a powerLOG subtask

(2) The LSAR-006, Critical Maintenance Task Summary, provides the analyst with a listing of tasks which exceed a report parameter in descending sequence of the selected parameter values. The report may be selected against four categories of data: task frequency; elapsed time; man-hours; or annual man-hours. Again, as with the LSAR-001 report, tasks depicted on the LSAR-006 report as "high drivers" of the weapon system's logistics requirements may be reviewed in great detail, and on an exception basis, by requesting an LSAR-019 report against those tasks that are contained in this report.

(3) The LSAR-007, Support Equipment Requirements; LSAR-011, Requirement for Special Training Device; LSAR-012, Requirements for Facility; and LSAR-014, Training Task List.

b. The above report utilizations represent only one technique to review the information that is available using the LSAR and powerLOG. Ad hoc queries can also be used as a review tool.

3.5 THE MAC AND TWO-LEVEL MAINTENANCE.

a. The LSAR-004, MAC can be produced in new versions which are compatible with two-level maintenance. These versions or options are available for the Standard Ground and Aviation MACs.

b. There is also a powerLOG utility available (a Tank-automotive and Armaments Command request) which modifies all CA table Organizational Level, O, Tasks and subordinate tables to either Crew, C, or Maintainer, F, based on logic of Allowance Item Codes assigned to CI support items documentation about the tasks and on Allowance Item Codes assigned to the Provisioned Items in table HG.

(1) If more than one CI record exists for a given Task Code, all items must have an Basic Issue Item designation to be changed. Items with all Basic Issue Item associated items are converted to task Code O/M level Crew.

(2) Items without any Basic Issue Items associated items are converted to Task Code O/M level Maintainer (F).

3.6 IMPORTING MAC DATA USING EXCEL FILES. PowerLOG has a data tool which can be used to import legacy MAC data. The MAC importer or ezMAC, uses an Excel file with built-in Macros to generate an Extensible Markup Language (xml) importable file into the powerLOG relational data tables. MAC formatted data is entered into the spreadsheet, and the file is converted into a 2361 Importable xml file.

3.7 ezMAC BUILDER. For Release 1.7, powerLOG has an embedded MAC data entry utility which creates the necessary data table keys and elements to produce the MAC. Like the excel file version, this will create the minimum set of task, tools, and remarks data to produce an LSAR-004, MAC, but does not create a complete task analysis breakdown of the item under review. The user of this utility has the option of choosing a Wizard with a dropdown menu style entry, or data spreadsheets to enter the information into powerLOG.

CHAPTER FOUR

DEFENSE LOGISTICS INFORMATION SYSTEM

PROVISIONING SCREENING

4.1 PURPOSE OF PROVISIONING SCREENING. All Federal agencies, and contractors acting as their agents, are required to perform provisioning and procurement screening and cataloging of all support items recommended or being considered for procurement. The Defense Logistics Services Center (DLSC) maintains the database and responds to all requests for screening information.

4.2 PROVISIONING AND PREPROCUREMENT SCREENING.

a. Provisioning and pre-procurement screening is an operation where all known reference/part numbers associated with a support item are screened by DLSC for validation against the Defense Logistics Information Systems (DLIS) files to reveal their association with existing NSNs. PowerLOG produces output files in either traditional 80- card column images or in xml by using the LSAR-032, DLSC Screening Report, to submit to DLSC for that agency to perform provisioning screening.

b. Normally, provisioning screening is by reference/part number, and this method is used by the LSAR-032 output. It may be accomplished by the contractor prior to submission of PTD to or by the Government provisioning agency upon receipt of unscreened reference numbers from the contractor. The actual timeframe for provisioning screening varies among contracts; however, screening results provided prior to support item selection and coding reduces the overall effort required to accomplish provisioning.

c. Government provisioning agencies and contractors participating in the provisioning screening process must be registered with DLSC. To register with DLSC, a letter must be prepared IAW DOD 4100.38-M and forwarded to DLSC at least 10 days prior to the initial submission of screening requests. Alternatively, users may request access to the DLIS Reference Data Environment (RDE) portal since renamed the Federal Item Cross Reference (FIXR) to perform screening by posting an xml formatted file to the portal site.

d. The purpose of screening is to reduce the number of new support items entering the supply system; to prevent duplicate entry of support items into the system, to provide a database for the continuation and accomplishment of provisioning, cataloging, and procurement functions, to determine if the item has been competitively procured,

and to ensure maximum utilization of available stocks of support items presently in the supply system.

e. At the option of the provisioning activity, the contractor may insert data elements obtained as a result of valid NSN matches through DLSC screening into the PTD.

f. Screening Concepts.

(1) In order to provide a means to search the contents of the DLSC/DIDS files, three types of reference number screening concepts are utilized. Type "F" described below, is a part of the provisioning cataloging process.

(a) Type "P" Screening Concept - Input must consist of a reference number, CAGE, Reference Number Control Code (RNCC) and the Reference Number Variation Code (RNVC). The output will either be an Actual, Possible, or Probable match or possibly an Association match.

(b) Type "S" Screening Concept - Input consists of a reference number and a CAGE. The output will consist of an Exact or Partial match or possibly Association matches. When an Exact match is encountered, no Partial matches revealed will be output. Conversely, when no Exact match is encountered, all Partial matches will be output.

(c) Type "F' Screening Concept - Input will consist of a reference number and its CAGE. The output will be a complete file extraction of all Exact and Partial match conditions encountered or possible Association matches.

(2) The three different screening concepts listed above differ primarily in terms of output required and the types of matches each concept produces. For more detailed information, see DOD 4100.38-M.

4.3. CATALOGING ACTIONS. With the DLSC screening results, the provisioning agency can determine whether the parts are available within the supply system or are new to the DOD supply system.

a. DLSC screening procedures will reveal if the item is available within the supply system. After completion of the computation procedures used in support item requirements determination process, the provisioning agency will notify the appropriate item manager of the additional requirement for the item by preparing and issuing a Supply Support Request (SSR) to the item manager.

b. When the support item is not in the supply system, the DLSC response will so indicate. This notifies the provisioning agency that cataloging actions must be initiated to establish a National Stock Number and record cataloging and management data to DLSC.

4.4 CATALOGING METHODS.

a. The reference method of item identification is an indirect process of identifying items of supply, not through words, but by reference to the item-identifying number(s) and the supporting technical data of one or more manufacturers. The reference method is used primarily for peculiar parts, proprietary items, special application items, or other items which cannot economically be identified by the descriptive method. Aircraft structural parts, engine parts, and technical repair parts are examples. Many of these items are designed for a single application and often are proprietary to a single manufacturer. The reference method of item identification is based upon reference to, and is supported by, the manufacturer's data which includes the name of manufacturer, his address (coded), and his identifying number(s) for the item being identified. The manufacturer's number for the item is supported by his blueprints, specifications, and methods of manufacture and is considered to be the most authoritative identification available.

b. The descriptive method of item identification requires use of Approved Item Name (AIN) and item identification such as descriptions and Federal Item Identification Guides (FIIG). Each item name approved for use in the descriptive method is referenced to a specific FIIG, which contains a series of requirements pertaining to the technical characteristics of the item of supply covered by the item name. Illustrations and drawings are also employed in the descriptive method of item identification to represent pictorial characteristics that cannot be presented exactly in words. Replies to identification guides requirements result in a statement of the requirement and a reply, in a prescribed sequence, of the characteristics of the item of supply forming the item identification.

4.5 LSAR-032 REPORT OUTPUT FILES.

a. As stated earlier, powerLOG users can employ the LSAR-032 report to generate an output file to submit to DLSC for provisioning screening. If the user registers through the DLIS website by downloading a website password/access request, the RDE portal option can then be used to generate an xml file to post to the DLIS website for screening. Using this technique, the screening results can normally be obtained within 24 hours. An e-mail is returned to the submitter, notifying him that the results are available.

b. Browse to the LSAR-032 file found in the powerLOG-jem, reports folder with the name of the PCCN selected for the 032 report and with a suffix of .rde. This is the xml file to submit to DLIS (see illustrations below) by posting it on the RDE portal.

c. Screening results are posted to the portal with an appended name of “RESPONSE” to the original name of the screened file.

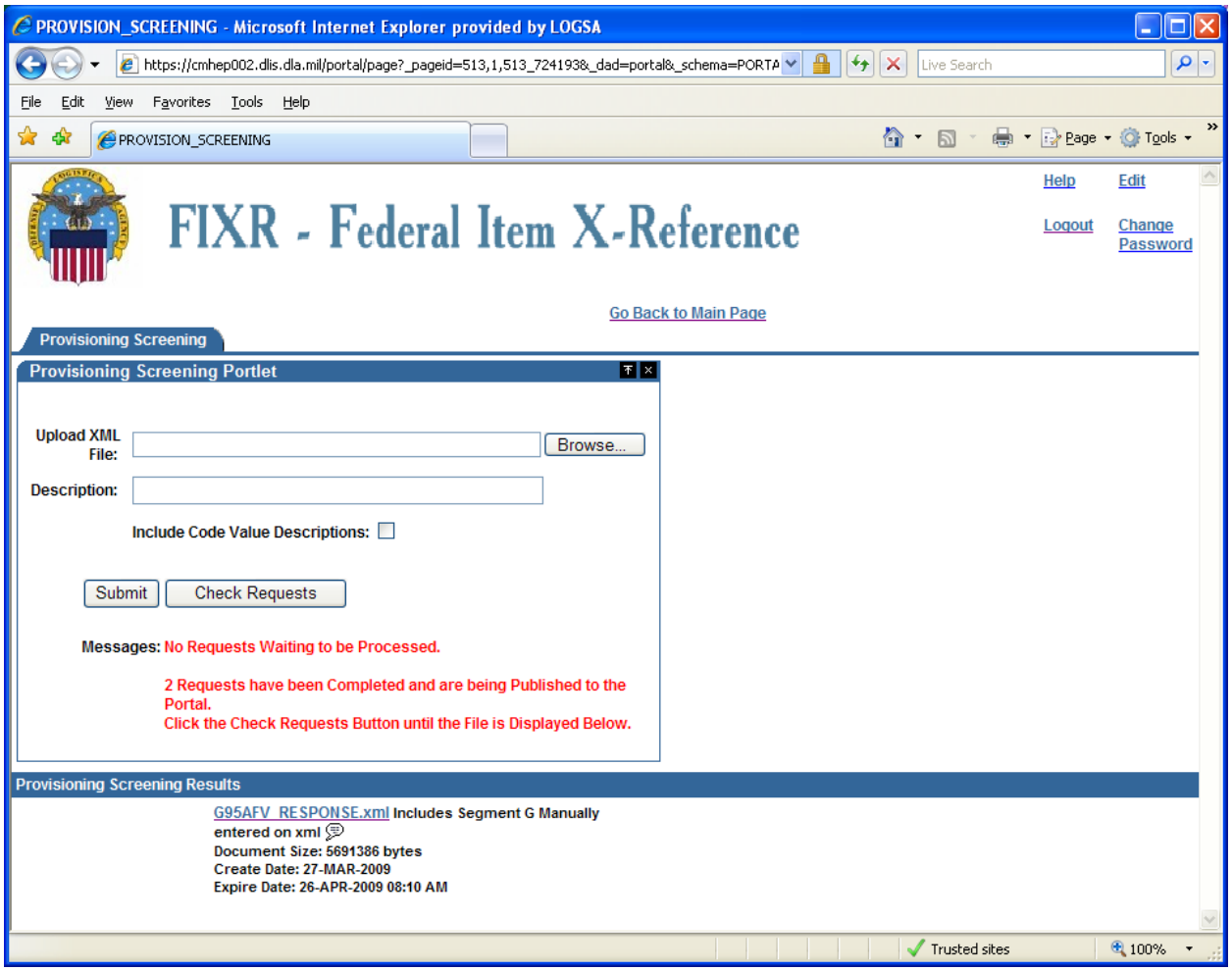

d. The returned file is also in xml format. Data results from this file can be entered into powerLOG by using the RDE Import option. The results are displayed in summary format below which allows the user to then select logic for global updates of result condition types and to set a template for the particular screening data to be updated.

e. Items which are returned with multiple possible matches are displayed for the user/analyst to determine which of the possible NSNs is a correct match for the screened item. The Segment C with additional Reference Numbers and Segment H, Unit of Issue, may assist in this determination.

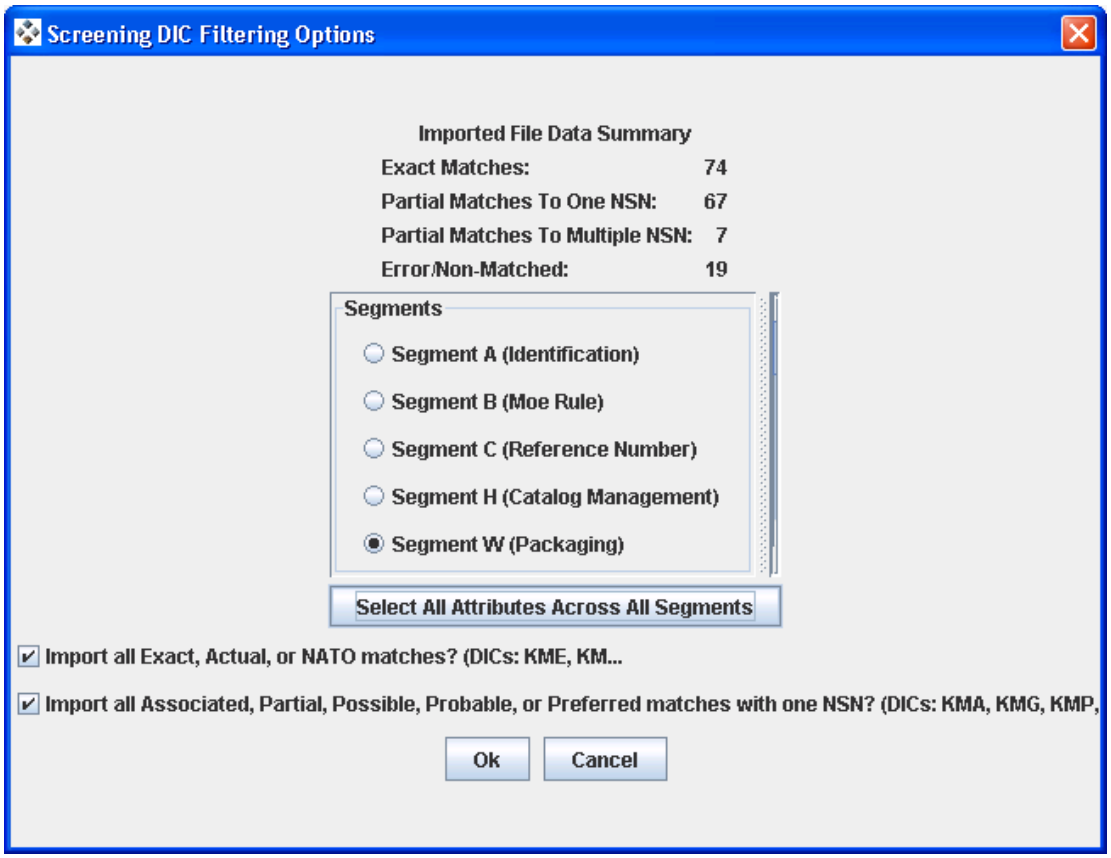

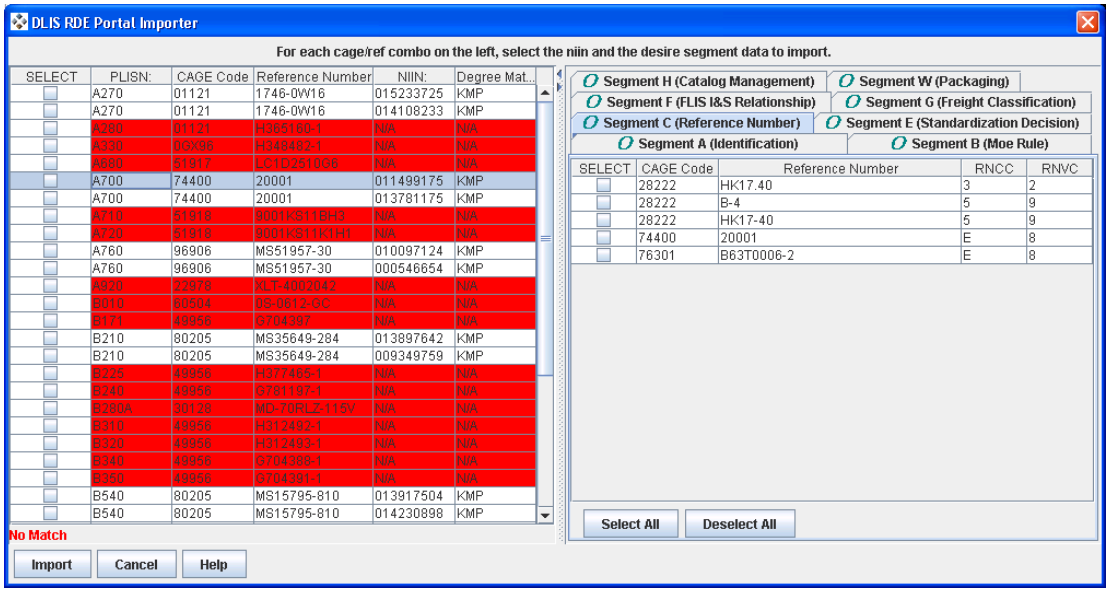

e. If the traditional 80-Card Column or “LSR” Document Identifier Code file is used, this is generated and labeled as “lsar032.tap” in the reports folder of powerLOG-jem after the analyst runs the LSAR-032 selecting the DLSC TAPE option.

CHAPTER FIVE

PROVISIONING REQUIREMENTS

5.1 PREPARATION OF THE H DATA TABLES PARTS IDENTIFICATION AND APPLICATION.

a. In order to ensure the Logistics Product Data Parts Identification and Application data is accurate and complete to perform provisioning, e.g., to generate an LSAR-036 report, there are several review and analysis reports which can be used to ascertain the file condition such as:

(1) LSAR-009, Support Items List.

(2) LSAR-019, Task Analysis Summary.

(3) LSAR-068, Task Code to SMR Code Validation.

(4) LSAR-080, Bill of Materials.

(5) LSAR-151, Provisioning Parts List Index.

b. The Support Items List, LSAR-009, allows simplified review of all repair parts, tool and test equipment necessary to support the system or piece of equipment. This is a useful report due to the ability to review by NSN, PTD list, and ICC, and can be sorted by LCN or Reference Number.

c. The Task Analysis Summary, LSAR-019, provides a detailed breakout of the task procedures to include spares and repair parts required to perform maintenance actions. The report provides a review tool for both the MAC and PTD since it documents all the resources required to perform the maintenance tasks.

(1) Illustrations required to demonstrate the performance of Maintenance Tasks can be stored in powerLOG and linked to the specific subtask describing the action being performed.

(2) These illustrations can be viewed as an option in the LSAR-019 report.

d. The LSAR-068 report displays a comparison of the Replacement and Repair Task Codes, and displays the SMR to validate this critical provisioning data. Basic Task information (CA table) is displayed followed by the associated CI Table Provisioned

Items for each task. These, in-turn, will display the associated provisioned items SMR Code for easy comparison with the Operations/Maintenance Level of the Task Code.

e. The LSAR-080 report provides a detailed analysis of the provisioning data contained in powerLOG. The Bill of Materials Report, Part I, identifies assembly level items, and a one indenture lower listing of the spare/repair parts that comprise the assembly. The LSAR-080 report can be used to check for completeness of the provisioning data against assembly drawings and may also be useful for RPSTL data development. The report is sequenced by the assembly level reference number, so that it can track with a drawing package provided in drawing number sequence. Basic data related to the development of a properly structured PPL is also displayed. An LSAR-80 report should accompany an LSAR-036 report when performing an LSA/Logistics Product Data Provisioning Review.

f. The LSAR-151, Provisioning Parts List Index (PPLI) provides a cross-reference between reference numbers and the applicable PLISN of the provisioning list. It provides a reference of usage and location within the provisioning list for a given reference number. It will also show all items that have been deleted against a PCCN but still remain in the parts application data (an HG "D" TOCC entry).

5.2 POWERLOG PROVISIONING EDITS AND THE ARMY LOGISTICS MODERNIZATION PROGRAM (LMP).

a. PowerLOG has incorporated provisioning edits specifically matched to the LMP edits. By selecting the Utilities, – Edits, – Provisioning, and the LMP Button, the edits are activated. The edits may also be selectively turned on or off.

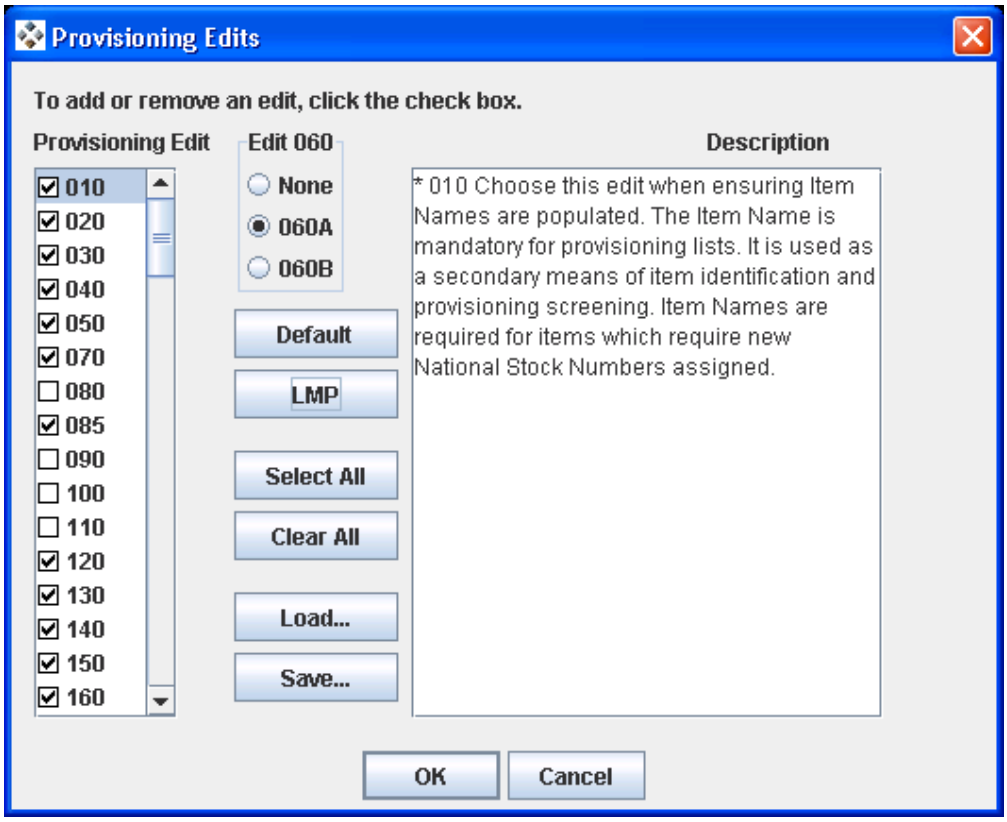

b. The following table shows the specific LMP edits available in the powerLOG Provisioning Edit Utility.

LMP EDIT	POWERLOG DATA EDITED	EXPLANATION
010	HA.ITNAMEHA	Choose this edit when ensuring Item Names are populated. The Item Name is mandatory for provisioning lists. It is used as a secondary means of item identification and provisioning screening. Item Names are required for items which require new National Stock Numbers assigned.
020	HA.UNITMSHA HE.UMPRICHE HE.PROUMPHE	Choose this edit when ensuring the Unit of Measure/the Unit of Measure Price is populated. The Unit of Measure (UM) and UM Price are required for provisioning demand-based/sparing to availability models.
030	HO.UOCSEIXC	Choose this edit to ensure the Usable On Code is exactly three positions. MIL-STD-1388-2B allows the Usable on Code to be a one, two, or three-position code. However, LMP dictates that the UOC is a three character, fixed position code. Note: The UOC

LMP EDIT	POWERLOG DATA EDITED	EXPLANATION
		Suppress must be turned off for Army LSAR-036 runs.
040	HG.INDCODHG	Use this edit to identify any missing Indenture Codes. Indenture Codes help to identify the top-down and lateral descending breakdown of the provisioning data.
050	HB.ADRNCCHB	Choose this edit to identify missing Reference Number Category Codes (RNCC), or if there are multiple drawings (D), or specifications (C), or (7) RNCCs. All Additional Reference Numbers (ARN) must each have an associated RNCC and for the same HA Reference Number and CAGE combination, HB Alternate Reference Numbers can have no more than one drawing and one specification number Reference Number Category Code. LMP/CCSS requires identification of specific ARNs associated with drawings and specifications by RNCC in order to place these numbers in the correct “reserved” card sequence number locations in the Provisioning Master Record.
060A	HG.ESSCODHG	Use this edit to identify missing Essentiality Codes (EC). EC must be entered for all items. EC is used by Sparing to Availability Models to identify items critical to the Systems Operation.
070	HA.SHLIFEHA	This edit identifies missing any Shelf Life entries.
085	HA.FSCNSNHA	Use this edit to identify missing NSN Federal Supply Classifications for items with P-SMR Source Codes (other than PB).
120	HG.SMRCODHG	Use this edit to identify missing Source, Maintenance, and Recoverability Code (SMR) codes or codes that are not allowed by the Army. This edit ensures the Source Code portion of the SMR (positions 1 and 2) are not MG or AG. This edit also identifies incorrect codes in position 3 (Maintenance Removal) of the SMR. Allowed code in position 3 (Maintenance Repair) are C, O, F, H, K, L, and D. Allowed codes in position 4 are O, F H, K, L, D, Z, and B. Allowed codes in position 5 (Recoverability Code) are O, F, H, K, L. D, Z and A. Code G is not allowed in positions 2 -6. SMR Source Codes (positions 1 and 2) MG and AG are for Navy use only. Code G is not allowed in positions 3 – 6. G is for Navy use only.

LMP EDIT	POWERLOG DATA EDITED	EXPLANATION
130	HG.SMRCODHG	Use this edit to evaluate the SMR Maintenance Level Codes SMR (positions 3 and 4) for compatibility. The following combinations of maintenance (remove) 3rd position and maintenance (repair) 4th position of the SMR are invalid: DO, DF, DH, HO, HF, and FO, LO, LF, LH, KO, KF, KH.
140	HG.SMRCODHG	Choose this edit to identify inconsistencies with the Source, Maintenance, and Recoverability Code (SMR) Code. Position 3 of the SMR Code must be D when positions 1 and 2 are K and D, respectively. SMR Source Code (positions 1 and 2) indicate that this is an item of depot repair/overhaul kit a Maintenance Removal Code (position 3) of D indicates that support items that are removed, replaced, used at depot only.
150	HG.SMRCODHG	Use this edit to evaluate SMR Code positions 4 and 5. When option B is selected, this edit indicates where SMR Maintenance Code (position 4) and Recovery Code (option 5) are not equal. Under SMR Edit Option B, the SMR Code position 4 and position 5 must be equal. Or SMR position 4 must be B. Or position 5 must be A.
160	HG.SMRCODHG	Choose this edit to show where the SMR Maintenance and Recovery Codes (positions 4 and 5) are not compatible. The following combinations are permitted in positions 4 and 5 of the SMR: B-, -A, OO, OF, OH, OK, OL, OD, FF, FH, FK, FL, FD, HH, HK, HL, HD, KK, KL, LK, KD, LL, LD, DD, and ZZ.
170	HG.SMRCODHG HG.OMTDOOHG HG.FMTDFFHG HG.HMTDHHHG HG.LMTDLLHG HG.DMTDDDHG HG.CBDMTDHG HG.CADMTDHG	Choose this edit to identify when the Maintenance Task Distribution (MTD) is not compatible with positions 3 and 4 of the Source, Maintenance, and Recoverability Code (SMR). The MTD is a mandatory entry for all PA, PC, or PG source coded items (1st and 2nd position of the SMR) when SMR position 4 is not Z or B. Otherwise, the MTD should be blank. Allowable SMR values are based on the following order: C, O, F, H, K, L (or L, K), and D and the SMR 3rd and 4th position range. SMR position 4 must have a comparable MTD subfield entry. When the SMR Code position 4 is K, a value must

LMP EDIT	POWERLOG DATA EDITED	EXPLANATION
		be entered in the L MTD subfield. When the SMR Code position 4 is C, a value is entered in the O MTD subfield. Additionally, the sum of all MTD subfields must equal 100. The Condemnation Below Depot (CBD) value is entered when position 4 of the SMR is a value other than D and the Condemnation At Depot (CAD) value is entered when position 4 of the SMR is equal to D. Code G is not allowed.
190	HG.SMRCODHG HG.ORTDOOHG HG.FRTDFFHG HG.HRTDHHHG HG.LRTDLLHG HG.DRTDDDHG	Use this edit to identify when the Source, Maintenance, and Recoverability Code (SMR) and Replacement Task Distribution (RTD) are not compatible. For example: all PA, PC, and PG SMR Source Coded items must have an RTD. Otherwise, the RTD should be blank. Allowable SMR values are based on the following order: C, O, F, H, K, L, (OR L, K) and D and the SMR 3rd and 4th position range. The Replacement Task Distribution for items where the 4th position of the SMR is Z allows all subfields greater than the 3rd position of the SMR to be utilized. The 3rd position of the SMR must have a comparable RTD subfield entry. For example, for SMR K, a value is entered in “L RTD” subfield. For SMR C, a value is entered in “O RTD” subfield. G is not allowed. RTD Subfield totals must equal 100 percent.
210	HG.SMRCODHG HG.MRRONEHG HG.MRRTWOHG HG.MRRMODHG	Use this edit to locate missing Maintenance Replacement Rates (MRR) One (I), Two (II), and Modifier (MOD) from those items with an SMR Source Code of PA, PC or PG. These Source Codes indicate the item is procured and stocked for later use. The MRR is the replacement rate of the item. The MRR II Wartime, MRR I Peacetime and MRR Modifier fields must have an entry to determine the rate of replacement for a program..
230	HG.SMRCODHG HA.DEMILHA	Choose this edit to ensure the Source, Maintenance, and Recoverability Code (SMR) and Demilitarization Code (DEMIL) are either both blank or both have entries. LMP requires that items that are coded with an SMR, must also be coded with a DEMIL code indicating the degree of demilitarization required.
240	HA.PRDLDTHA	This edit shows where the Production Lead Time is missing for a particular item. Production Lead Times are the computed or expected time interval in months between placement of a new contract and shipment of the first deliverable quantity. This field is used to satisfy DI-ILSS-

LMP EDIT	POWERLOG DATA EDITED	EXPLANATION
		81285, Long Lead Times Item List.
250	HA.PHYSECHA	Choose this edit to identify missing Physical Security Pilferage Codes.
251	HG.QTYASYHG	Use this edit to identify when the Quantity per Assembly field is blank. Quantity per Assembly is not a key field; however, the field plays an important role in provisioning. LMP requires that the quantity per assembly is entered for items. The Quantity per Assembly is the standard value that is displayed in the RPSTL.
260	HH.NHAPLIHH HH.NHAINDHH HG.INDCODHG	Use this edit to identify missing Next Higher Assembly Provisioning List Item Sequence Numbers (NHA PLISN) for items other than Provisioning Indenture Code A or when the NHA PLISN does not have an associated NHA PLISN Indicator of N, B, C, or E. NHA PLISNs must have NHA PLISN Indicator for the Immediate Next Higher Assembly, Major Component, both an NHA and Major Component, or an End Item.
270	HG.QTYASYHG HG.QTYPEIHG	Choose this edit to identify missing Quantity per Assembly (QPA) or Quantity Per End Item (QPEI). The QPA must be greater than zero. Per this edit, both the QPA and the QPEI must be entered for an item. Additionally, the QPA must be greater than zero as the QPA is used in calculations.
280	HG.MRRONEHG HG.MRRTWOHG HG.MRRMODHG	Use this edit to identify where one or more of the MR Rates or Modifiers is missing. When a value is entered for the MRRI, II, or modifier, all three must be entered. The MR Rates and the modifier are used in calculating replacement rates under various conditions and at various levels. MRRI is the peacetime replacement rate factor for the item indicating the number of expected failures. MRRII is the replacement rate of the line item per wartime operating program. The modifier is a series of codes used to modify (multiply) the MRR for environmental conditions by area of system/equipment deployment.
310	HG.PLISNOHG HH.NHAPLIHH	Use this edit to identify where the NHA PLISN is alphanumerically (EBCDIC sequence) higher than the

LMP EDIT	POWERLOG DATA EDITED	EXPLANATION
		PLISN on which it is contained. The NHA PLISN must be alphanumerically lower than the associated PLISN. Extended Binary Coded Decimal Interchange Code (EBCDIC sequence) example; AAAA, AAAJ, AAAJA, ABJAA, AJA1.
320	HG.INDCODHG HH.NHAPLIHH HH.NHAINDHH	Use this edit to ensure Indenture Codes of asterisk (*) are associated with two NHA PLISNs. One NHA PLISN must have an NHA Indicator of N, B, C, or E, and the other an NHA Indicator of asterisk (*). Codes of F or A are not allowed with this edit. A kit component must be associated to both an End Item, NHA, Major Component, or an item that is both an NHA and Major Component and a Kit. Fabricated Items and Assembled items are not allowed with Indenture Codes of asterisk (*).
325	HG.MRRMODHG	Use this edit to ensure the Maintenance Replacement Rate Modifier contains a valid entry. Valid entries are A, B, C, 0, 1, 2, 3, 4, 5, 6, 7, 8, or 9 in each of the first six positions. The seventh position can be W or blank. Other codes are not valid for this edit.
326	HG.ESSCODHG	Choose this edit to check the validity of the Essentiality Code. Valid values are A, B, 1, 3, 5, 6, and 7. Other codes are not valid for this edit. Note: PowerLOG does not accept A and B codes (used for model records only) from the GUI data input, but will accept these from 1552/036 input files.
339	HA.PHYSECHA	This edit validates the Physical Security/Pilferage Code (PS/PC). Allowable codes are 1-9 and A-Z. For more information see DOD 4l00.38-M.
350	HG.SMRCODHG HH.NHAPLIHH	Choose this edit to check for compatibility between the Source, Maintenance, and Recoverability Code (SMR) for a part and the assembly's parts. If position 4 of the SMR (Maintenance Repair) is not Z or B, then position 3 of the SMR (Maintenance Level) of the next lower indentured items cannot be coded with a Maintenance Level that is higher than position 4 of the SMR of the assembly, Example: An assembly with SMR of PAF**F**F cannot have components with SMR codes of PA**H**ZZ, PA**D**ZZ, or PA**H**HH. Maintenance levels in ascending order are C, O, F, G, H, K, L (OR L, K), and D.

LMP EDIT	POWERLOG DATA EDITED	EXPLANATION
360	HG.INDCODHG HH.NHAPLIHH XC.INDCODXC	Use this edit to locate Indenture Codes of Next Higher Provisioning List Item Sequence Numbers (NHA PLISN) that are not one less than the corresponding PLISN. The NHA PLISN must contain an Indenture Code that is alphabetically one less than the Indenture Code of the PLISN Record, e.g., A, B, C, D. There is one exception: when there is an Asterisk for the Indenture Code for the PLISN record.
380	HG.SMRCODHG HH.NHAPLIHH HH.OVHREPHH	Choose this edit to identify a missing Overhaul Replacement Rate for items where the Source, Maintenance, and Recoverability Code (SMR) Source Code (position 1) equals P and a Next Higher Assembly SMR of P - - D -.
390	H HG.PLISNOHG HG.INDCODHG XC.INDCODXC XC.PLISNOXC	This edit identifies discrepancies between Indenture Code (IC) and the PLISN. If the IC is A, then the PLISN must be between AAAA and AAAHZ. If the IC is greater than A, then the PLISN must be greater than AAAHZ.
410	HG.SMRCODHG	Use this edit when the Source, Maintenance, and Recoverability Code (SMR) Source Code (positions 1 and 2) are AD, AF, AH, AL, AO, KD, MD, MF, MH, ML, or MO. This edit identifies where the SMR Maintenance Level Replace (position 3) is greater than the 2nd position of the source code (SMR position 2).
420	HG.SMRCODHG	This edit checks the Source, Maintenance, and Recoverability Code (SMR) Maintenance Repair Code (position 4) and the Recoverability Code (position 5). Positions 4 and 5 of the SMR must be the following combinations: BA, BZ, DA, DD, FA, FD, FF, FH, FL, FK, HA, HD, HH, HL, HK, LA, LD, LL, LK, KK, KA, KL, KD, OA, OD, OF, OH, OL, OK, OO, ZA, or ZZ.
430	HG.SMRCODHG HG.MRRONEHG HG.MRRTWOHG HG.MRRMODHG	This edit checks the Source, Maintenance, and Recoverability Code (SMR positions 1 and 2). If the SMR Source Code (positions 1 and 2) is equal to PA, PC, or PG and the SMR Maintenance-level (SMR-3) is equal to C, O, F, L, K, or H, then Maintenance Replacement Rates (MRR) One and Two must be greater than 0 and MRR Modifier must not be blank. This edit used to ensure the data can be used in calculations for reporting purposes.

LMP EDIT	POWERLOG DATA EDITED	EXPLANATION
440	HG.SMRCODHG HG.MRRONEHG HG.MRRTWOHG HG.MRRMODHG HG.ESSCODHG	Use this edit to check the Source, Maintenance, and Recoverability Code (SMR positions 1 and 2) against the Maintenance Replacement Rates and Essentiality Code. If the SMR Source Code (positions 1 and 2) are PB, then Maintenance Replacement Rates must be blank and the Essentiality Code must not equal 3. An SMR Source Code of PB indicates the item is essential, and is therefore, stocked for insurance against failure so the Essentiality Code must indicate the part is essential (not Code 3). The two codes cannot conflict.
460	HG.SMRCODHG HA.SHLIFEHA	Use this edit to validate that if the Source, Maintenance, and Recoverability Code (SMR) Source Code (positions 1 and 2) is PC, then the Shelf Life is greater than zero. SMR PC indicates that the Item procured and stocked and is deteriorative in nature. Because the item is deteriorative, there is a finite shelf life; therefore, the Shelf Life cannot be 0.
500	HG.SMRCODHG HG.OMTDOOHG HG.FMTDFFHG HG.HMTDHHHG HG.LMTDLLHG HG.DMTDDDHG HG.CONRCTHG	Use this edit to ensure the Maintenance Task Distribution (MTD) and Contractor Repair Cycle Time (RCT) are blank when the SMR Source Code (positions 1 and 2) is PA, PC, or PG and the SMR Maintenance Repair Code (position 4) is B or Z. The MTD and Contractor RCT must be blank when no repairs will be performed on the item, i.e., SMR Maintenance Repair Code B or Z.
510	HG.PLISNOHG HH.NHAPLIHH	This edit identifies those PLISNs where the Next Higher Assembly PLISN does not exist as a PLISN item. Since an item's NHA PLISN provides a reference to the Assembly PLISN on which the item is contained, it needs to be a valid PLISN in the provisioning list.
520	HG.PLISNOHG HH.NHAPLIHH	Choose this edit to identify PLISNs equal to the Next Higher Assembly. The NHA PLISN cannot equal the PLISN item itself. It is illogical for an item to be its own Next Higher Assembly.
525	XC.UOCSEIXC HG.PLISNOHG HH.NHAPLIHH	Use this Edit to identify items whose Next Higher Assembly (NHA) items do not have the same type and number of UOCs mapped against it as its NHA.

LMP EDIT	POWERLOG DATA EDITED	EXPLANATION
530	HH.NHAPLISHH HH.NHAINDHH	Use this edit to ensure Indenture Codes of asterisk (*) are associated with at least two NHA PLISNs. One NHA PLISN must have an NHA Indicator of asterisk (*). The other NHA PLISNs must have a code other than asterisk (*). Indenture Codes with a value of asterisk (*) are kits or kit components. Kit components must be part of a kit (NHA PLISN *) and have a NHA PLISN with a value of other than * in the Indenture Code.
540	HG.PLISNOHG HH.NHAPLISHH	Use this edit to ensure the Indenture Code of the PLISN is one lower than the Indenture Code of the NHA PLISN with highest Indenture being A, then B, then C, etc. Note: NHA PLISNs with NHA PLISN Indicators and PLISNs with Indenture Codes of asterisk are ignored. This ensures a “family tree” relationship between the PLISNs and its NHA PLISNs.
550	HG.PLISNOHG HH.NHAPLISHH	Use this edit to ensure the Indenture Code of a given PLISN is Indenture Code of the PLISN is not more than one step lower than the Indenture Code of the NHA PLISN.
560	HG.SMRCODHG HH.NHAPLISHH HH.OVHREPHH	This edit identifies items where the Source, Maintenance, and Recoverability Code (SMR) Maintenance Repair Code (position 4) is equal to D, and the NHA PLISN and Overhaul Quantity is blank. SMR Maintenance Repair Code D indicates the item is the lowest maintenance level capable of complete repair of the support item is the depot level. Because the item is a support item and capable of repair at the depot level, the item must have an NHA PLISN and there must be an Overhaul Quantity available. This item may be a planned overhaul candidate.
580	HG.SMRCODHG HH.NHAPLISHH	Use this edit to ensure that for a given Provisioning List Item Sequence Number (PLISN), when the Source Maintenance, and Recoverability Code Source Code (position 1) is equal to A, then that PLISN must also appear as a Next Higher Assembly PLISN for the same PCCN.
590	HG.REFNUMHA	Choose this edit to ensure the Quantity per Assembly

LMP EDIT	POWERLOG DATA EDITED	EXPLANATION
	HG.CAGECDXH HG.QTYASYHG	equals the Reference Number and the CAGEC/Manufacturer Part Number has only one appearance. If not, an error displays.
600	HG.REFNUMHA HG.CAGECDXH HG.QTYPEIHG	Choose this edit to ensure the Quantity per End Item equals the Reference Number and the CAGEC/Manufacturer Part Number has only one appearance. If not, an error displays.
660	HG.PLISNOHG	Choose this edit to ensure Indenture Code is B or greater for non-model PLISNs. Only model record PLISNs (AAAA-AAAHZ) can have an Indenture Code of A.
670	HG.SMRCODHG	Use this edit to ensure only the following SMR Maintenance Replace (position 3) and Maintenance Repair (position 4) combinations are used: CB, CO, CF, CH, CK, CL, CD, CZ, OB, OO, OF, OH, OK, OL, OD, OZ, FB, FF, FH, FK, FL, FD, FZ, HB, HH, HK, HL, HD, HZ, LB, LZ, LK, LL, LD, KL, KB, KZ, KK, KD, DB, DD, and DZ. These are the only code combinations allowed with this edit.
720	HG.OMTDOOHG HG.FMTDFFHG HG.HMTDHHHG HG.LMTDLLHG HG.DMTDDDHG HG.ORCTOOHG HG.FRCTFFHG HG.HRCTHHHG HG.LRCTLLHG HG.DRCTDDHG	Use this edit to ensure that If the Maintenance Task Distribution (MTD) is blank, then the Repair Cycle Time (RCT) must be blank. Both the MTD and RCT are used when determining the amount of time it takes to repair an item so that if there is urgency, other spares can be utilized. The MTD specifies where the item is during the repair, while the RCT specifies how long it will take for a spare to be returned to service. Together, the MTD and RCT indicate how long it will take for the spare to be returned to service, and if there is a need for additional spares.
780	HG.SMRCODHG HL.PROVNOHL	Choose this edit to identify blank Provisioning Nomenclature when the Source, Maintenance, and Recoverability first position is M. Blank Provisioning Nomenclature is not allowed when the SMR Source Code (position 1) equals M. Items that are manufactured or fabricated (SMR position 1 code M) cannot have a blank Provisioning Nomenclature field. Provisioning Nomenclature provides additional identification of an item. The Provisioning Nomenclature will identify what the fabricated or manufactured item is made from.

LMP EDIT	POWERLOG DATA EDITED	EXPLANATION
790	XC.PLISNOXC XC.UOCSEIXC HO (UOC map)	Choose this edit to identify where a model record Provisioning List Item Sequence Number (PLISN) item (PLISN between AAAA and AAAHZ) can only have one Usable on Code (UOC) value. Both powerLOG and LMP dictates that only one UOC per model record PLISN is allowed.
820	HG.SAPLISHG	A PLISN's true Same as PLISN cannot also be part of the PLISN's higher assembly tree.

TABLE I. POWERLOG PROVISIONING EDITS

d. The following LMP edits are applied as powerLOG data table "business rules." The edit number refers to the GEIA Standard data Entity and paragraph of the specific rule. Several of these rules are redundant with the provisioning edit utility.

BUSINESS RULE	POWERLOG DATA EDITED	EXPLANATION
HA.c	HA.FSCNSNHA HA.NIINSNHA	The NIIN is not allowed without the FSC.
HA.e	HA.UNITMSHA HA.UNITISHA HA.UICONVHA	If the UM equals the UI, then the UI Conversion Factor must equal 00001. Conversely, if UM does not equal UI, then the UI Conversion Factor cannot equal 00001.
HG.b	HG.MAIACTHG HG.MAOTIMHG	The Maintenance Action Code is not allowed without the Maximum Allowable Operating Time.
HG.c	HG.OMTDOOHG HG.FMTDFFHG HG.HMTDHHHG HG.LMTDLLHG HG.DMTDDDHG HG.CBDMTDHG HG.CADMTDHG	The Maintenance Task Distribution subfields must always total to 100 percent.
HG.d	HG.ORTDOOHG HG.FRTDFFHG HG.HRTDHHHG	The Replacement Task Distribution subfields must always total to 100 percent.

BUSINESS RULE	POWERLOG DATA EDITED	EXPLANATION
	HG.LRTDLLHG HG.DRTDDDHG	
HG.f	HG.SAPLISHG HG.PLISNOHG	The Same as PLISN must be contained as a PLISN item having the same PCCN. The Same as PLISN must be the lowest (EBCDIC value) PLISN in the table for the same Reference Number, CAGE, and PCCN combinations (without a D TOCC).
HG.h	HG.QTYASYHG HG.QTYPEIHG	When numeric, the Quantity per End Item must be greater than or equal to the Quantity per Assembly.
HG.j	MTD and RTD subfields (see above)	1. Maintenance Task Distribution (MTD)-O must be less than or equal to Replacement Task Distribution (RTD)-O 2. MTD-O + MTD-F must be less than or equal to RTD-O + RTD-F. 3. MTD-O + MTD-F + MTD-H must be less than or equal to RTD-O + RTD-F + RTD-H. 4. MTD-O + MTD-F + MTD-H + MTD-L must be less than or equal to RTD-O + RTD-F + RTD-H + RTD-L. 5. MTD-O + MTD-F + MTD-H + MTD-L + MTD-D must be less than or equal to RTD-O + RTD-F + RTD-H + RTD-L + RTD-D.
HG.g	MTD and RCT Subfields.	Maintenance Task Distribution and Repair Cycle Time corresponding Operations/Maintenance Levels must either both have entries or both be blank.
HG.k	HG.ALIQTYHG HG.ALLOWCHG	An Allowance Item Quantity cannot be entered without an Allowance Item Code.
HG.m	HG.SMRCODHG HA.SHLIFEHA	When the SMR Code Source code is PC, the Shelf Life cannot be 0.
HG.n	HG.SMRCODHG HG.ESSCODHG	If the SMR Source Code is PB, then Essentiality Code cannot be 3.
HG.o	HG.LRUNITHG	If the LRU is Y, then the Essentiality Code

BUSINESS RULE	POWERLOG DATA EDITED	EXPLANATION
	HG.ESSCODHG	cannot be 3.
HM.a	HM.QTYBOIHM HM.RATIOBHM HM.LVLBOIHM	Either BOI-level or BOI-EI must be entered to establish a row of information in this entity. When one of these is entered, the other must be blank. Each value must be a unique value for a given Reference Number and CAGE combination.
HM.b	HA.DDPLCCHA HK.REFNUMHA HK.CAGECDXH HM.BOICTRHM HM.QTYBOIHM HM.RATIOBHM HM.LVLBOIHM	A PLCC entry must be contained in table HA and an entry in table HK for the Reference Number and CAGE combination to allow an entry in the HM table.

TABLE II. PowerLOG LMP Business Rules

e. A report of Edit Results is generated when the Provisioning Edit utility is run. The edits are sorted in ascending PLISN then edit number order. It contains a Hot Link to the powerLOG data table/elements affected by the data check.

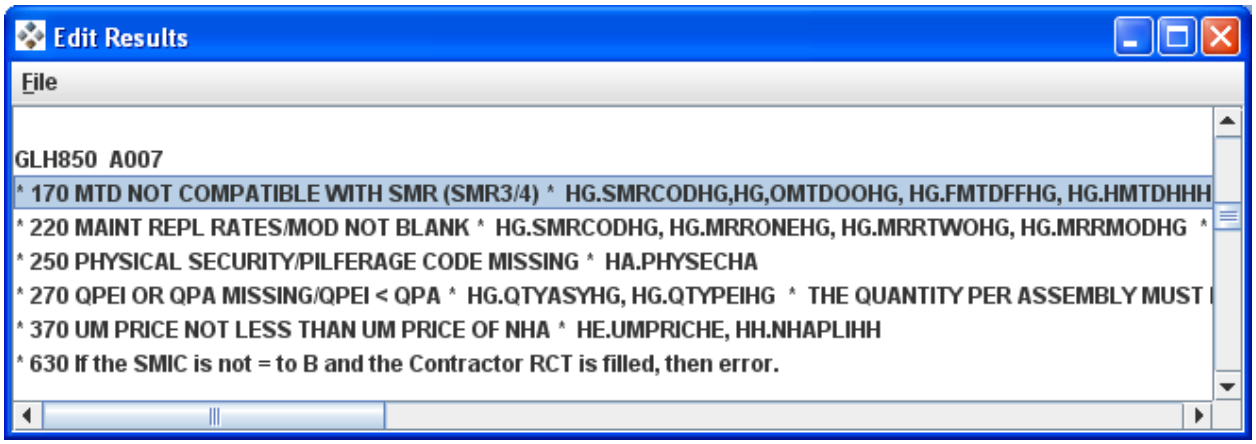

A “double click” of the highlighted edit above, will open the powerLOG window below. In this example, notice that the MTD has a value for an item that is SMR coded as non-repairable. Note also that both the associated SMR (which is updateable on the

General Tab of this window) and the matched CI table item with the Task Code data key are also displayed in this view. From this data, you can observe that the O/M level of D matches both SMR and Task Codes (position 3).

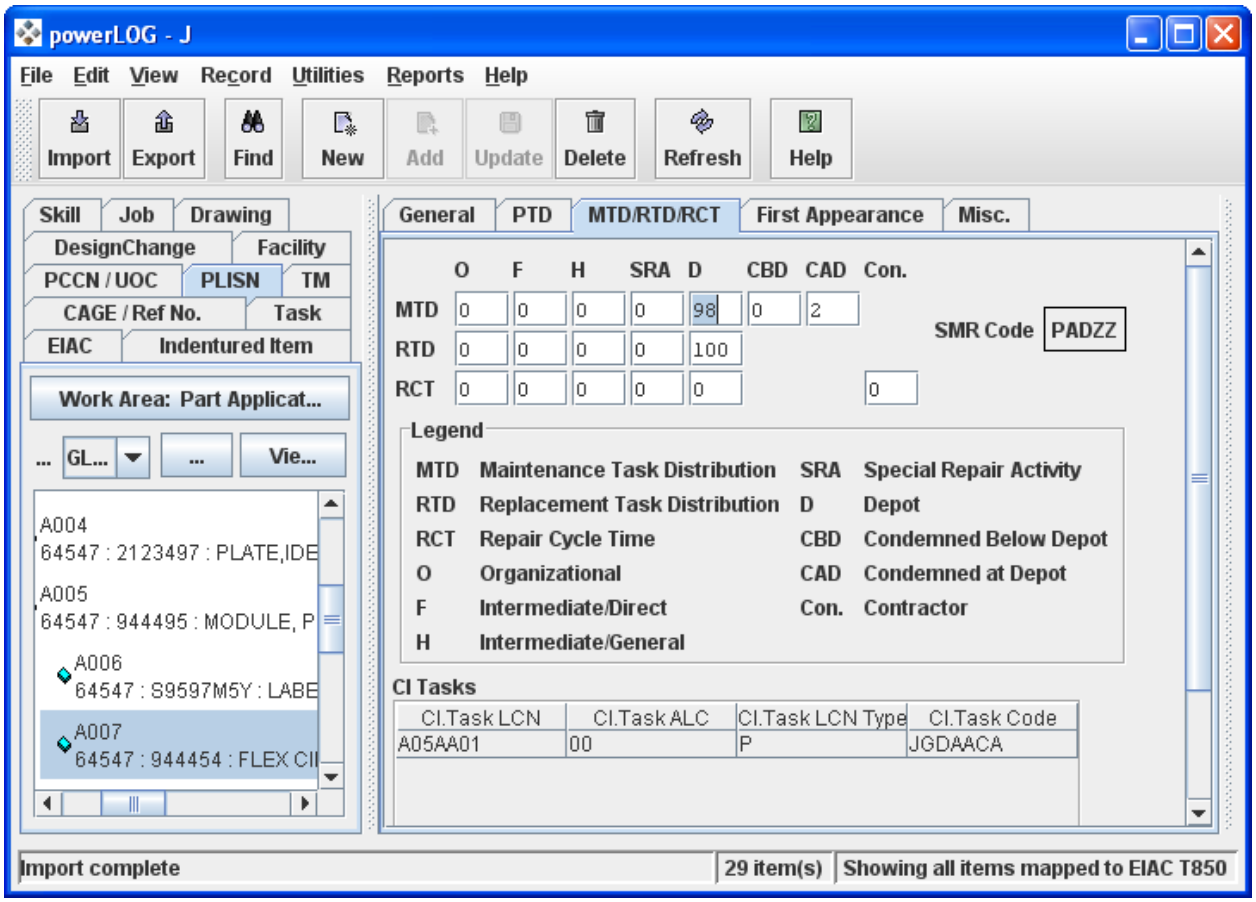

5.3 LSAR-036 SYSTEM.

a. This report is a summary of those data recorded on the LSAR data tables identified for provisioning requirements. The summary contains that data required for review at various provisioning conferences (e.g., long-lead time items conference, provisioning conference, etc.) and is used in the selection procedures to identify spare/repair part requirements in support of the equipment to be fielded.

b. The minimum data required to establish a powerLOG PLISN record are the PCCN, PLISN, Reference Number, CAGE, UOC, LCN, ALC, LCN Type, and EIAC. These satisfy the key data elements of the XC, HO, HA, and HG data tables in -2B which are required for a PLISN record. These minimum data are less than the minimum data needed to establish a PLISN record in the Army Logistics Modernization Program and conditional data are contained in Table V.

5.3.1 CONTROL DATA. The report will display the following provisioning report control data not contained in the LSAR:

a. Card Sequence Number (CSN). A two-position numeric code which is used to sequence multiple data input cards for a specific card format indicator. The initial card entry is coded 01. Subsequent cards are coded 02-99.

b. Card Format Indicator (CFI). A one-position alphabetic code: A-H, J-M used to identify a card format and content.

c. Reference Designation Overflow Code (RDOC). A one-position alphabetic code, "A" or "B", used to link a long Reference Designation which exceeds 32 characters. Code "A" is entered against the first 32 characters, and code "B" is entered against the last 32 characters.

5.3.2 -2A TO -2B DIFFERENCES.

a. The differences between the -2B LSAR-036 and the -2A LSAR-036 format are as follows.

(1) The MRR MOD, block 36 on the C card, was increased from 6 to 7 positions moving all the succeeding data elements on the C card to the right one position. Since the C card had no empty columns, the LRU, which was the last data element on the C card, was moved from block 43 to Block 90 on theJ card. This change also caused the block numbers for the remainder of the report to be different than -2A. For example the first block on the D card, UOC, was block 44 and is now block 43.

(2) The LCN was expanded from 11 characters to 18 characters, and the ALC was expanded from 1 to 2. These changes result in the Remarks block beginning in column 33 versus column 25 of the LSAR-036 01H card.

(3) Criticality Code and the Item Name Code were added on the "J" card just after the Basis of Issue information.

(4) The "M" card was added to incorporate material requirements.

b. The following changes, which do not affect the physical layout of the report, may change the way service unique provisioning system process the provisioning lists.

(1) Work Unit Code (WUC) and TM Functional Group Code are contained in different tables and, therefore, may exist concurrently. If both codes exist, the TM information should show on the "01J" and consecutive "J" cards and the WUC should show on the last "J" card by itself. Note: there are no key data elements required for processing on a "J" card that contains a WUC.

(2) Many of the codes in DOD 4100.38-M have not been updated concurrently with DOD 4100.39-M, its parent document, and, therefore, contains outdated codes. Since the LSAR references .38-M, PowerLOG will edit 4100.39M data entry in generic terms, i.e., two positions fixed and not by specific code entries. Several powerLOG provisioning edits will edit code values.

(3) In -2B, a 'D' Type of Change Code (TOCC) is only allowed on the "01A" card to signify deletion of an entire PLISN. In -2A, a 'D' TOCC was allowed on all cards to show deletion of all cards of a particular CFI. For example, in -2A, a 'D' TOCC on a '01C' card would delete the '01C', '02C', '03C', etc.

(4) If a "01A" delete is requested and Reference Designation information exists, it will come out with a 'G' TOCC as well as update transactions for the "F", "G", and "H" cards.

5.3.3 REPORT SEQUENCE. The first record on the LSAR-036 summary is the report header. Following this, the report is sequenced in ascending PLISN. Within PLISN records are sequenced in ascending CFI. Within CFI, records are sequenced in ascending TOCC in the following order: D or G before M, Q, or L. Within TOCC, items are sorted in ascending CSN. The LSAR-036 PLISNs are sorted in Extended Binary Coded Decimal Interchange Code (EBCDIC) versus the current standard sorting of ASCII. For the differences in EBCDIC versus American Standard Code for Information Interchange (ASCII) sorting refer to the table below: PowerLOG generally uses standard ASCII sequence (e.g., LCN sorting for reports).

Collating Sequence	*sequence*	Description
ASCII	ASCII	The default collating sequence for character data. The ASCII sequence orders numbers (0 to 9) first, then uppercase letters (A to Z), and then lowercase letters (a to z).
EBCDIC	EBCDIC	Generates an output file that is ordered in EBCDIC sequence. The data remains in the ASCII representation. The EBCDIC sequence orders lowercase letters (a to z) first, then uppercase letters (A to Z), and then numbers (0 to 9).

Table III. EBCDIC versus ASCII Sequence

5.3.4 REPORT FORMAT. The data format of the LSAR-036 is contained in figure 15. When an LSAR-036 is generated, all data contained in the Parts Identification and Application that applies to a PLISN record is output.

a. The "A" Card. The LSA 036 "A" Card is the main card for a PLISN processing. The "01A" Card contains the Prime Reference Number and subsequent (i.e., "02A", "03A") "A" Cards will contain Additional Reference Numbers. This is the only card that can have a "D" TOCC which signifies a PLISN Delete.

b. The "B" Card. The "B" Card contains the NSN, SMR code, and Price data as well as other static part data. The only data element that may have multiple values in the LSAR is the quantity per unit pack. If more than one exists, pick the quantity associated with the highest degree of protection. There should never be more than one "B" card for any PLISN.

c. The "C" Card. This card contains the ORR, QPEI, MRR, Prior Item PLISN, and Same As PLISN, as well as other application related data. The QPEI can be calculated based on the option selected (see section 4.2.7). ORR values can be generated to show the percentage of time an item is replaced during overhaul of each one of its higher assemblies. These generated ORRs, along with the PLISN for which the ORR was calculated, the NHA PLISN Indicator, and any other NHA PLISNS that may exist (such as kit PLISNS), are the only data elements on "C" cards other than the "01C."

d. The "D" Card. The LSAR-036 "D" Card contains the UOC, Reference Designation data, and several other non-related provisioning data. There can be multiple "D" cards based on the length and number of UOCs/Reference Designations.

e. The "E" Card. This card contains the Repair Cycle Time, and Maintenance and Replacement Task Distributions, Contractor and Technical Information Codes, and other related provisioning data. There is a maximum of one "E" card per PLISN.

f. The "F" Card. If an engineering change proposal or other changes assigned a Change Authority Number (CAN) exist in the database, an "F" card will be produced showing the CAN information. This CAN data may consist of a list of Serial Numbers Effected, a PLISN it replaced or taking its place, and which UOCs were affected by this change. There can be multiple "F" cards based on the number of Change Authority Number, Serial Number Effectivity, or the number of UOC affected.

g. The "G" Card. This card contains additional change information. There can be multiple "G" cards if there are multiple CANs.

h. The "H" Card. This card contains the LCN, ALC, and provisioning remarks. There will be multiple "H" Cards when the remarks block is greater than 45 characters. If there is, the 46th character will begin in column 13 on the '02H' card and subsequent "H" cards as needed.

i. The "J" Card. The "J" card contains the Technical Manual Information, along with Basis of Issue Information. There can be multiple "J" cards based on the number of TM Code, Figure Number, Item Number, and TM Functional Group Code (FGC)/Work Unit Code (WUC) combinations, and the number of Basis of Issues (BOI). If both TM FGC and WUC codes exist, the TM information should show on the first "J" card and the WUC should show on the last "J" card by itself. If more than one BOI exits the first will be output on the "J" card columns 41-55, the second in columns 56-70 on the same card, the third on the next "J" card in columns 41-55, the fourth on the same card, and so on.

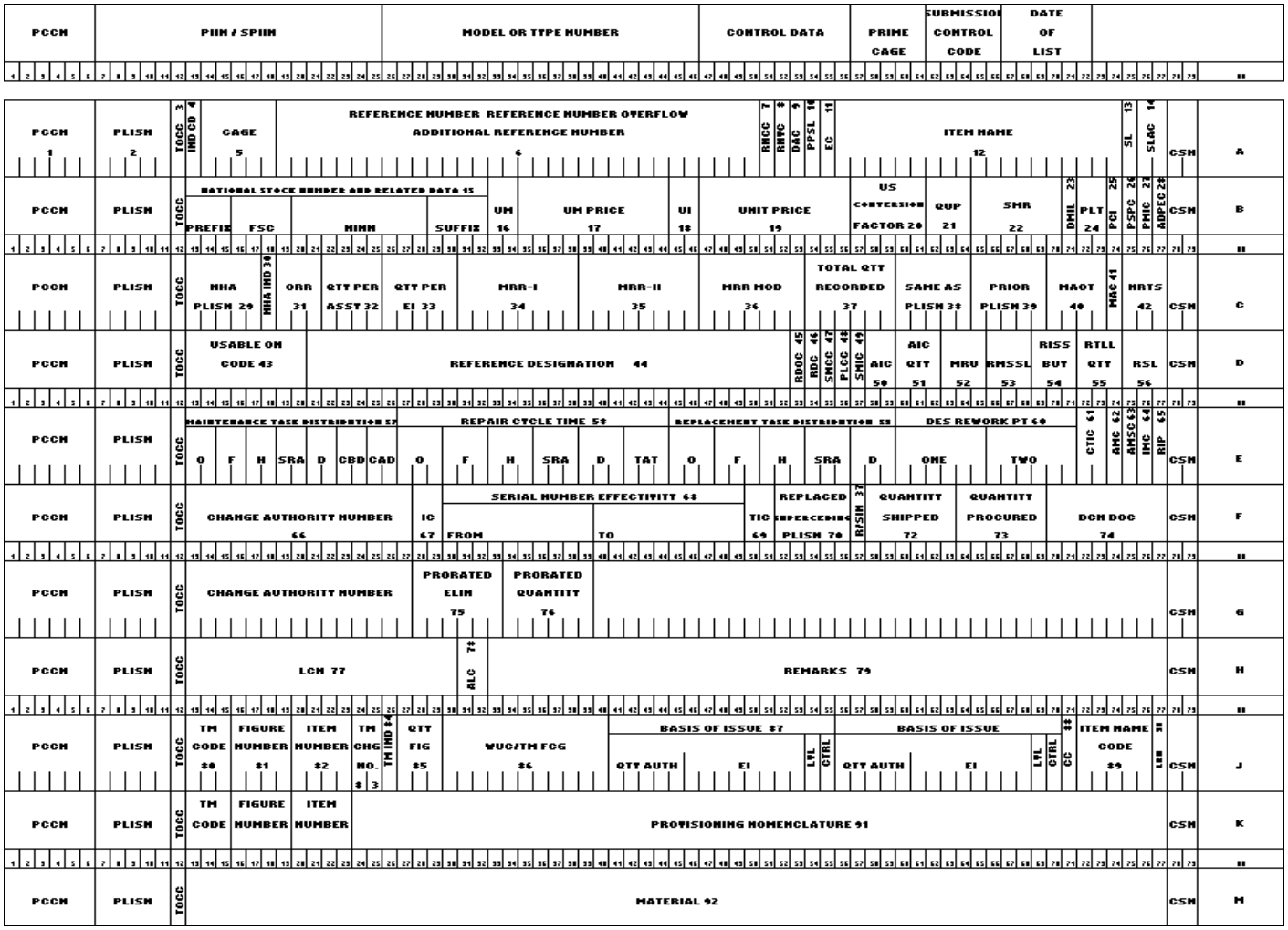

FIGURE 15, LSAR-036 Report Layout

j. The "K" Card. This card contains provisioning nomenclature against a TM Code, Figure Number and Item Number. There will be multiple "K" cards when the provision nomenclature is greater than 54 characters or narrative exists against multiple TM Code, Figure Number, and Item Numbers.

k. The "M" Card. The "M" Card contains narrative to describe the material used to fabricate the item. A maximum of 4 "M" cards can be generated due to the field length of "240" characters in the GEIA-STD.

4.3.5 REPORT OPTIONS.

a. The summary will satisfy the deliverables cited in GEIA-STD-0007. These deliverables or Provisioning Technical Documentation (PTD) lists are:

(1) Provisioning Parts List (PPL).

(2) Short Form Provisioning Parts List (SFPPL).

(3) Long Lead Time Items List (LLTIL).

(4) Repairable Items List (RIL).

(5) Interim Support Items List (ISIL).

(6) Tools and Test Equipment List (TTE).

(7) Common and Bulk Items List (CBIL).

(8) Post Conference List (PCL).

(9) System Configuration Provisioning List (SCPL).

b. A Design Change Notice (DCN) is a report listing the changes of at least one of the above lists.

c. The report may be selected for review only, i.e., without updating either the powerLOG data tables or the LSAR-036 system Parts Baseline File (PBF). This option may be utilized in two ways: a review report may be generated, which is a completely independent and complete Provisioning List (PL), i.e., is not bumped against the PBF; or the report may be generated for review, which consists of change transactions only which does not update either the data tables or PBF. A standard, approved PL should be run with the option to generate an electronic output and update the LSAR files. A more complete description will be provided later in this chapter.

d. When a PLISN item is qualified by basic PCCN selection, it must be further qualified by matching through table HO or HN to at least one selected Usable On Code (UOC). The UOCs are then displayed on the LSAR-036 D cards. Other UOC selection options follow:

(1) Multiple Configuration UOC. A three-position, alphanumeric code that indicates the configuration(s) of a system/equipment on which the item under analysis is used, based on the UOC (DED 501) assignments. The generated combinations of model UOCs is shown on the header page of the LSAR-036. This was a good idea but impractical because of the exponential nature of the combinations of UOCs. ***The requirement for Multi-configuration UOCs originated with the USAF; and, powerLOG does not generate a Multi-Configuration UOC***.

(2) Full Effectivity UOC Suppression. If the user specifies this option, when all of the selected UOCs match a qualified record, no UOC is displayed on the D card. These are matched from table HO to the selected UOCs (for all UOC combinations of a PCCN in XC). ***This option is used by the Marine Corps and should not be used by Army data preparers for LMP input.***

(3) Serial Number (S/N) UOC (DED 375) display. If the items are managed by S/Ns, the S/N for a model and the associated S/N UOCs are documented in table XD, and HN records are established to relate the HG part applications to the S/N UOCs. If the report is selected by S/N, the S/N UOCs will be displayed on the "D" card instead of the XC/HO UOCs and the following S/N information will be displayed on the header page: ***This option is not used by the Army***.

ITEM DESIGNATOR	**SERIAL NUMBER**		**UOC**
(XC)	**FROM**	**TO**	**(XD)**
C18	SN0001	SN015	A
	SN017	SN017	B
	SN062	SN071	C
C18A1	SN016	SN016	E
	SN018	SN018	F

e. Subsequent UOC and PTD Selections. The selection criteria that cannot be narrowed are the UOC and PTD. For example, if UOCs of CE1 and CD2 are selected on the first 36 selection, all future selections must contain these UOCs. Any attempt to narrow UOC selection would result in the error message similar to "CANNOT NARROW UOC SELECTION." PTD selection is accumulated, meaning that if a PPL is selected on the first run, and an LLTIL is selected on the second, any changes to the PPL data will come out on the LLTIL. Any of the other report options, e.g., QPEI Calculation,

Overhaul PLISN creation, or Change Authority selection, may be changed between selections.

f. Using the LSAR-036 system, the Quantity Per End Item (QPEI) can be automatically computed, based upon either options 1, 2, or 3 Quantity Per Assembly (QPA). The QPEI option must match the QPA option assigned if the QPEI values are to be valid. The Army will always use option 1 QPA, which requires that a QPA be entered for each component/piece part and an assembly be broken out completely for each application. See section 4.5.6 of this document for further explanation of QPEI processing.

g. Change Authority Number (CAN). Up to six CANs may be selected for the LSAR-036 report. Only those items matching the CAN(s) in the HP table will be selected. This report is called a Design Change Notice (DCN). When a DCN is run, all PLISN record changes (A-M cards) which have occurred against a PLISN record that matches on the selected CAN are output.

h. PLISN range selection. The user may select up to five Start and Stop PLISN ranges for inclusion on the LSAR-036. Both the Start and Stop PLISN and all qualified PLISNs between are included on the report. All other PLISNs are excluded.

i. Overhaul PLISN (DED 258) and Overhaul Replacement Rate (ORR) DED 281) Assignment. The overhaul PLISNs may be assigned during the LSAR-036 report preparation based on the item having a P-source code, an ORR entry, and at least one of its higher assembly PLISNs having an SMR Code of P--D-. Only those higher assembly PLISNs with an SMR code of P--D- will be assigned overhaul PLISNs. The ORR is an estimate of the percent of time that a support item will be replaced at the NHA during overhaul. The base ORR is manually entered in the HH table against its NHA. This base ORR of the item is multiplied by the QPA for each succeeding indenture level, beyond the NHA, using the following approach for assignment:

PLISN HG	IC HG	SMR HG	QPA HG	NHA PLISN HH	NHA-IND HH	ORR HH
CFFF	F	PADZZ	0002	CEAA	N	005
CEAA	E	PAODD	0002	CDEE	N	002
CDEE	D	PAFDD	0003	CCDD	N	
CCDD	C	PAOHH	0001	CB12	N	003
CB12	B	PAFDD	0002	AAAA	E	006

AAAA	A	PAODD	0001			

For PLISN CFFF, the LSAR-036 C Card Generated Overhaul PLISNs and associated ORRs follow:

PLISN	Overhaul PLISN	Overhaul ORR	Calculation
CFFF	CEAA	005	
CFFF	CDEE	010	0002 (QPA of CEAA) * 005
CFFF	CB12	030	0003 (QPA of CDEE * 0001 (QPA of CCDD) * 010
CFFF	AAAA	060	0002 (QPA of CB12) * 030

In this example, PLISN CEAA is the item's immediate NHA PLISN and, therefore, no calculation is needed. The PLISN CCDD is disqualified because it is SMR coded PAOHH. These Overhaul PLISNs in the HH table will come out on the same C card that contains the items actual NHA having an "N", "B", "C", OR "E" NHA PLISN indicator. If the QPA is a "V" or null, an error message should appear on Part II of this report and ORR processing for that PLISN should quit.

The LMP Provisioning System no longer requires Overhaul PLISNs and the Overhaul Replacement Rate (Factor) calculations on incoming or updated PTD. This calculation is performed when creating Parts Explosions or BOMs internal to LMP.

j. Part III selections. Part III Contains the Air Force (AF) L card merge. The merged records are data that is entered on the Report selection CONTENT tab. Since L cards (three different card formats by Card Sequence Number) can be entered for each PLISN, the selection file inputs should be saved.

The Air Force L Cards are not used by the Army.

k. Output options are combinations of the following: live run without headers (which will allow QPEI, ORR, calculations, Same as PLISN recognition, and updates the Provisioning Baseline File (PBF) and the LSAR data tables); test bump without headers (which will look exactly like the live run except does not update the baseline file or data tables); data base dump without headers (this will be a straight dump of the LSAR data base without any calculations and will not update the data tables or PBF); and all of the above with headers. When PBF update occurs, an ASCII file sorted in EBCDIC

sequence will be created which contains the LSAR-036 header card followed by the A-M records (see Figure 9), with no spaces between PLISNs.

5.3.6 PROVISIONING BASELINE FILE.

a. The PBF is a file within the powerLOG system, which is only accessible through the LSAR-036 system. It is an exact image of the LSAR-036 formatted data, which is delivered to the requiring authority. The PBF contains all provisioned end items included in the LSAR, i.e., all PCCNs qualified from the LSAR, and is sequenced in ascending PCCN/PLISN.

b. Each PCCN contained in the PBF includes all previously selected provisioning lists. Updates against a PCCN will reflect changes to the data tables since the last LSAR-036 processing cycle. The items included in the PBF must match at least one of the PTD Selection Code subfields from the LSAR to qualify. If an item qualifies under more than one selected provisioning list, only one consolidated file is maintained and updated.

c. A PBF can be developed against any PL. For instance, if an LLTIL is required 2 years before generation of the completed PPL, this list can be established in the PBF, and updates to the LLTIL can be provided for the time between its delivery and the delivery of the PPL. A reserved set of PLISNs can be used for these items, and prior to delivery of the PPL, these PLISNs can be reassigned to the appropriate locations within the PPL. At this point, no update of the PBF should be requested and only hard copy review LSAR-036 reports should be prepared until the PPL is reviewed by the requiring authority. After approval when the PBF is updated with the PPL submission, the LSAR-036 report would contain the LLTIL items incorporated into the PPL and delete PLISN transactions for the long-lead items under their reserved PLISNs.

d. Each ADP system will maintain additional information on prior submissions of the LSAR-036. This information should consist of the most recent LSAR-036 report selection to include, UOCs, QPEI option, type of output, and previous PLs selected. When selecting an update LSAR-036 report, the UOCs entered must be equal to or greater in content than the UOCs entered on previous selections against the PCCN, and the UOC suppression must be identical to previous selections for that PCCN or the report will reject.

5.3.7 QPEI CALCULATION.

The LMP Provisioning System does not require a QPEI roll-up on the first appearance or Same As PLISN, and only edits that if a Numeric QPEI is entered, it must be equal to or greater than the PLISN item's Quantity per Assembly (QPA). Guidance for QPEI for TACOM includes copying the QPA value for the PLISN item to the QPEI field.

a. The LSAR-036 system can compute QPEI based upon the QPA option chosen when quantities were assigned. There are three QPEI options to go along with three QPA options. These options will be discussed in greater detail.

b. Within the LSAR-036 system, the QPEI calculation is performed before final qualification of a PLISN record for inclusion on the LSAR-036 report.

c. For all options of QPEI, if the QPA is "V" or blank, an error message should appear on part II for all items attempting to reference the QPA and all subsequent lower assemblies will not be calculated. The subtotal not calculated at a part application for this reason will be omitted from the sum of applications of the same CAGE/REF during QPEI calculation.

5.3.7.1 OPTION 1 QUANTITY PER END ITEM.

a. ***If required for display purposes only, the Army will use option 1, QPA/QPEI.*** For this option, each part is rolled up at each location (part application) and then each location is summed up to give the total QPEI for that item. Figure 17 shows an example of option 1 processing. Notice that every part in the system is broken out to the piece part level.

b. For all QPEI options, the QPA contained on LCNs with ALCs, other than "00", is not included in the grand total for a reference number. An example of the QPEI and ALC relationship is depicted in figure 16. Note: Items with asterisk ICs are not included in the QPEI total.

APPLICATIONS OF REFERENCE NUMBER 1430-0926

PLISN	IC	LCN	ALC	SAME AS PLISN	SUB-TOTAL	QPEI
AAKN	C	00208	00		4	60
AALY	D	0030602	01	AAKN	10	REF
ABCC	E	0040802AA	00	AAKN	24	REF
ABLD	E	0060201CC	00	AAKN	32	REF
ACFR	*	00703	00	AAKN	NS	REF
ADCM	E	00801AA01	01	AAKN	14	REF

FIGURE 16. QPEI Roll-up for Multiple Applications Under Basic/Nonbasic ALC.

As an example, the subtotal of ABCC is calculated by multiplying its QPA by all NHA QPA(s).

EXAMPLE:

PLISN	IC	NHA PLISN	QPA	SUBTOTAL CALCULATION
AAAA	A		1	ABCC SUBTOTAL = 3 * 4 * 2 * 1 * 1 = 24
AAYQ	B	AAAA	1	
AAZF	C	AAYQ	2	
ABBL	D	AAZF	4	
ABCC	E	ABBL	3	

QPEI does not include PLISNs "AALY" AND "ADCM" subtotals because of nonbasic ALCs. A subtotal is not computed for PLISN "ACFR" because of the asterisk IC. Subtotals are added together to determine QPEI (32 + 24 + 4 = 60).

Note that this is NOT an exact computation of the number of items that are required per end item, but is instead an estimate based on the number in the basic model. If the item does not exist in the basic model, all occurrences are used in the computation. PLISNs "AALY" may require a larger quantity than required in the basic model and, therefore, the computed QPEI would be smaller than required for the alternate model. On the other hand, if you include the alternate models quantities in the QPEI, the quantity will be doubled, tripled, or larger for all items that are documented under the basic and the alternate model(s). This value, therefore, is a good estimate of the quantity of an item per end item. This value, in conjunction with the Maintenance Replacement Rates/Failure Factors, should be used to estimate the number of spares needed to support an item for an initial period for which the true failure rates are unknown.

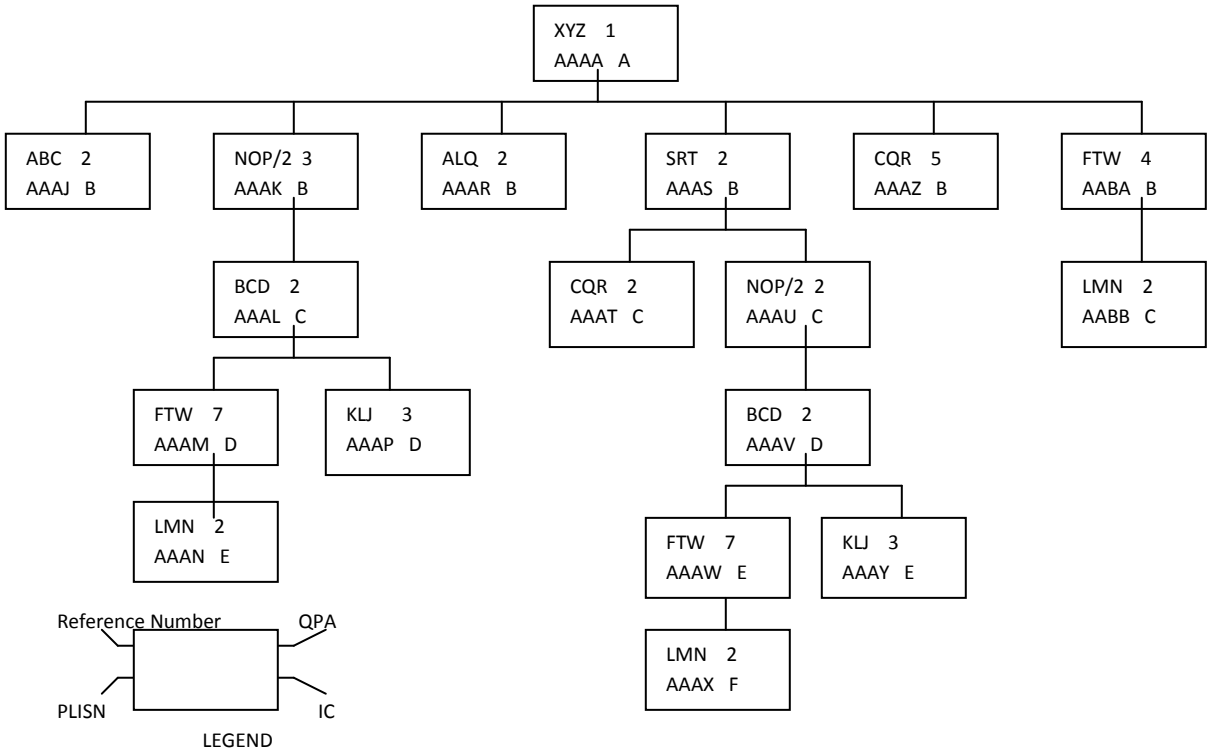

REFERENCE NUMBER	PLISN	SUBTOTAL	PLISN	SUBTOTAL	PLISN	SUBTOTAL	QPEI
XYZ	AAAA	1					1
ABC	AAAJ	2					2
NOP/2	AAAK	3	AAAU	4			7
BCD	AAAL	6	AAAV	8			14
FTW	AAAM	42	AAAW	56	AABA	4	102
LMN	AAAN	84	AAAX	112	AABB	8	204
KLJ	AAAP	18	AAAY	24			42
ALQ	AAAR	2					2
SRT	AAAS	2					2
CQR	AAAT	4	AAAZ	5			9

* Subtotal determined by multiplying the application QPA by all NHA QPA(S)
e.g. Reference Number "KLJ", PLISN "AAAP" subtotal equals (3x2x3x1)
** QPEI for all occurrences of an item other than its first occurrence is "REF"
** QPEI for all occurrences of an assembly other than its first occurrence is "REFX"

FIGURE 17. Option 1 Quantity Per End Item.

c. The formula for option 1/option 1 QPA-QPEI is as follows:

$$QPEI = \sum_{i=1}^{N} \left[\sum_{j=1}^{M} QPAj \right] i$$

Where:

N = Number of applications for unique part

M = Number of indenture levels

i = Application of unique part

j = Indenture level of application

5.3.7.2 OPTION 2 QUANTITY PER END ITEM.

a. The option 2 QPA/QPEI combination is primarily utilized by the Navy. The primary difference between this option and option 1, is option 2 QPA represents a roll-up of the assembly piece parts, which includes the totals for the subsequent appearances of the assembly. Intermediate totals, which are entered by the analyst in the QPA field, are merely added together using this option. A sample of this calculation is shown in Figure 18. ***This option is primarily used by the Navy. The Army does not use this option.***

b. The following formula applies for option 2 QPA/QPEI:

$$QPEI = \sum_{i=1}^{N} QPAi$$

Where: N = Number of applications for unique part

i = Application of unique part

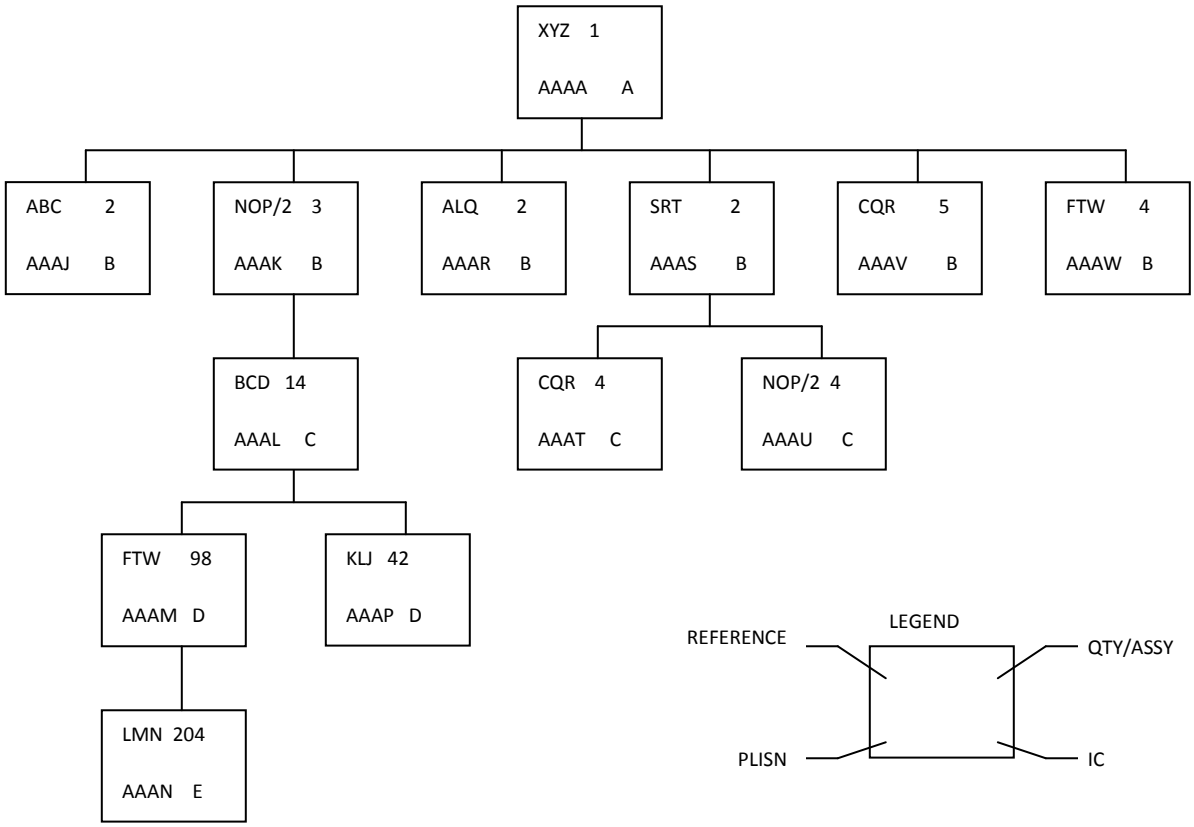

REFERENCE NUMBER	PLISN	QTY/ASSY	QTY/EI	PLISN	QTY/ASSY	QTY/EI	SAME AS PLISN
XYZ	AAAA	1	1				
ABC	AAAJ	2	2				
NOP/2	AAAK	3	7	AAAU	4	REFX	AAAK
BCD	AAAL	14	14				
FTW	AAAM	98	102	AAAW	4	REFX	AAAM
LMN	AAAN	204	204				
KLI	AAAP	42	42				
ALQ	AAAR	2	2				
SRT	AAAS	2	2				
CQR	AAAT	4	9	AAAV	5	REF	AAAT

FIGURE 18. Option 2 Quantity Per End Item.

5.3.7.3 OPTION 3 QUANTITIES PER END ITEM.

a. The option 3, QPA/QPEI, requires that the LSAR-036 system generate assembly breakdowns, where only the "first appearance" or application of the assembly is completely broken down to piece part level. These generated breakdowns are then used to compute the QPEI for each of the items applications. This is performed by determining what items are assemblies (have lower indentured parts), and then by means of the Same as PLISN, determining whether or not these assemblies are "broken out" at their subsequent appearance(s). When a subsequent appearance is detected, the first appearance breakdown is generated in the file following the subsequent appearance assembly PLISN record by using this basic PLISN, and then appending to it the PLISN assigned to the assembly components in the first appearance breakdown. Utilizing this "mother PLISN" and the IC to maintain descending family tree relationships, the breakdown legs of the generated piece parts are then subtotaled to the reference number QPEI total. The "mother PLISNs" ICs are reassigned at the generated breakdown based upon the difference between the IC of the first appearance and subsequent appearance(s) of the assembly.

b. This technique of generated breakdowns is illustrated in Figure 19. ***This option is used primarily by the US Marine Corps and their contractors. The Army does not use this option.***

c. The following formula applies to option 3 QPA/QPEI:

$$QPEI = \sum_{i=1}^{N} \left[\left[\sum_{j=1}^{M} QPAj \right] + \sum_{k=1}^{P-1} \left[\tau_{l=1}^{Q} QPAl \right] k \right] i$$

Where:

N = Number of applications of unique part (first appearance of NHA only)
i = Application of unique part
M = Number of indenture levels
j = Indenture level of application of first appearance
P = Number of applications of unique assembly containing unique part
k = Application of unique part (other than first appearance of a higher assembly)
Q = Number of indenture levels at assembly application (other than first appearance of a higher assembly)
l = Indenture level of application (other than first appearance o a higher assembly)

Note: The Greek "Σ", or SIGMA, represents the mathematical symbol for a series summation, while the symbol "τ" or TAU, is the mathematical expression for a series multiplication.

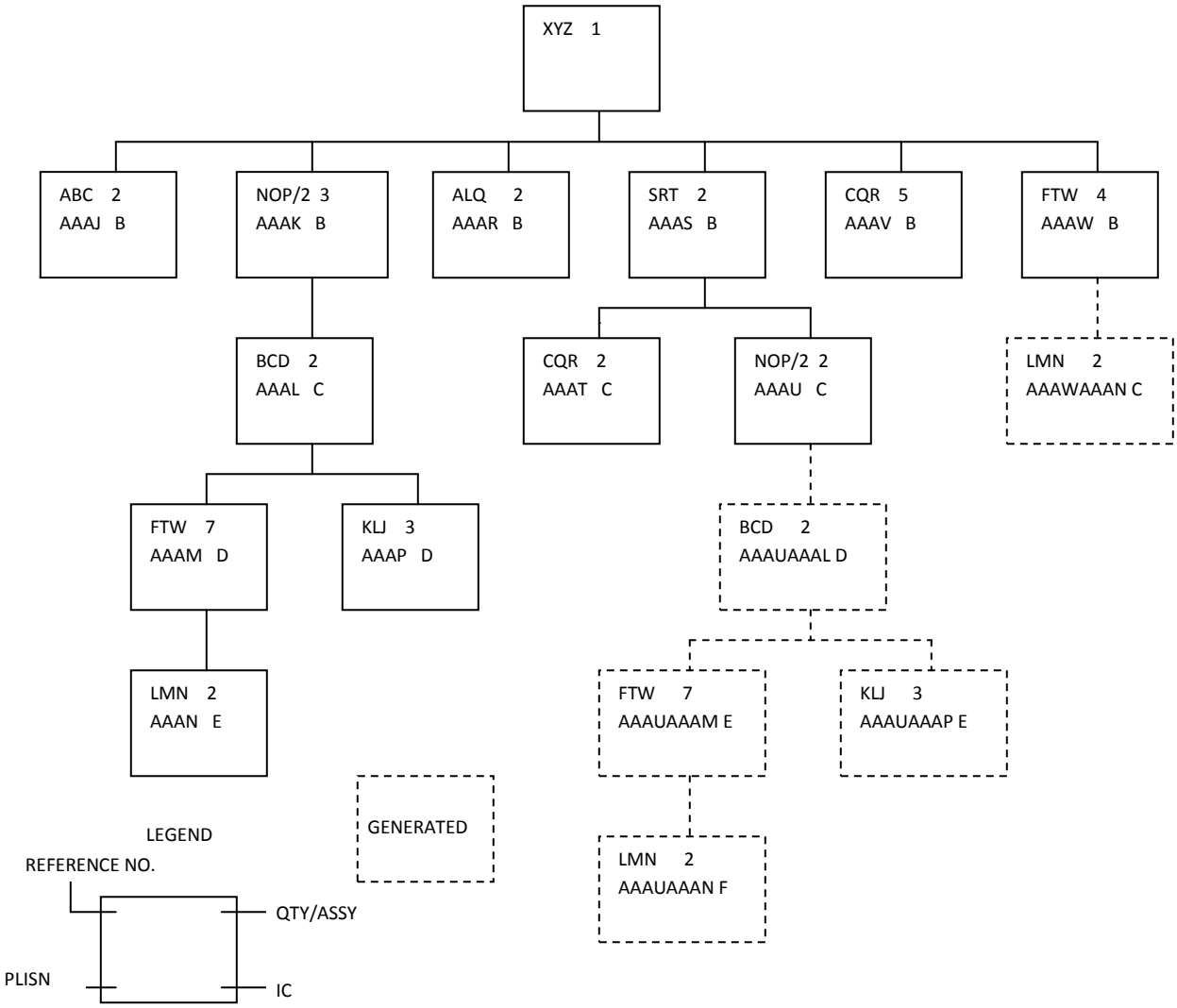

REFERENCE NUMBER	PLISN	SUBTOTAL	PLISN	SUBTOTAL	PLISN	SUBTOTAL	QT Y/EI
XYZ	AAAA	1					1
ABC	AAAJ	2					2
NOP/2	AAAK	3	AAAU	4			7
BCD	AAAL	6	AAUAAL	8			14
FTW	AAAM	42	AAUAAAM	56	AAAW	4	102
LMN	AAAN	24	AAAUAAAN	112	AAAWAAAN	8	204
KLJ	AAAP	18	AAAUAAAP	24			42
ALQ	AAAR	2					2
SRT	AAAS	2					2
CQR	AAAT	4	AAAAV	5			9

*SUBTOTAL DETERMINED BY MULTIPLYING THE APPLICATION QTY/ASSY BY ALL NHA QTY/ASSY(S).
e.g., REFERENCE NUMBER "KLJ", PLISN "AAAP" SUBTOTAL EQUALS (3x2x3x1).

FIGURE 19. Option 3 Quantity Per End Item

(2) The first product and summation in this formula are performed against the first appearance of an item. These applications are documented in the LSAR hardware breakdown. The second product and summation are performed against subsequent appearances of an item which are not documented in the LSAR (e.g., will not appear on a PPL). These item applications are identified by the first appearance of the item in an assembly (either NHA or higher), and the Reference Number of the higher assembly containing the unique part appearing in multiple applications.

5.3.8 SAME AS PLISN.

With the transition to LMP, the SAME AS PLISN and referencing to the first appearance of Provisioning Data is no longer important since each part application will have the associated technical factors to independently provision the item. Separate Roll-ups are also done internally by UOC model within a PCCN.

a. Same as PLISN (DED 364). The QPEI is one of two data elements that is assigned or updated during LSAR-036 processing. The other, the Same as PLISN (SAP), will be assigned during LSAR-036 summary preparation. The SAP will be automatically updated in the HG data table and the PBF, except if a selection is made not to update the baseline or master file. The SAP is the lowest EBCDIC value PLISN (first application) of all part applications for a given reference number.

b. The Same As PLISN is used to determine the QPEI. After the QPEI calculation is performed, the actual QPEI is entered on the lowest value PLISN and reference requirements for subsequent or higher valued PLISN applications of the same reference number are determined, and the appropriate reference code (REF, reference; or REFX, reference assembly) is assigned to the QPEI field. The REFX code is assigned using option 2, QPEI, in the same manner as the determination of the nonbreakout of a subsequent appearance of an assembly. Figures 11, 12, and 13 also depict the assignment of Same as PLISN and REF/REFX.

4.3.9 LSAR-036 UPDATES. There are five basic types of LSAR-036 updates which can result when LSAR data is added, changed, or deleted affecting PLs previously delivered. These transactions can be automatically generated using a validated LSAR ADP system by establishing baseline records upon initial submission of the LSAR-036. These transactions are based upon a comparison of the current LSAR provisioning oriented data tables and provisioning data baselined by a previous LSAR-036 submittal.

5.3.9.1 UPDATE TRANSACTIONS. The five basic types of LSAR-036 updates are the following:

a. Standard Data Update. For each LSAR-036 card affected by data which has been added or changed since the previous PL delivery or LSAR-036 update, mandatory data, i.e., PCCN, PLISN, CSN, and CFI, and "M" TOCC and the added/changed data only are entered. If data has been deleted, a "G" is entered in the TOCC, and in the left most

position of each field, deleted on the appropriate LSAR-036 card. Data deletions and changes/additions occurring on the same LSAR-036 card will require both a change and deletion card for the appropriate data. It should be noted that "T" TOCC is not used by the automated LSAR-036 reports and only applies to manually prepared LSAR-036 reports.

(1) If all data on an LSAR-036 CFI is deleted, a delete transaction will be generated consisting of the PCCN, PLISN, CSN "01", CFI (except A), the key data associated with that CFI, and a "G" TOCC. Conversely, if data is contained in the data tables which does not appear in the PBF, and this data would cause a new LSAR-036 record, an "M" TOCC will be generated for the added card record. TOCCs will only be displayed for established PLISN records. A new or "first time" appearance of a PLISN will always have a blank TOCC.

(2) When an entire PLISN record is deleted (HG record), a delete transaction will be generated consisting of the appropriate PCCN, PLISN, CAGE, Reference Number, and a "D" TOCC on the "01A" card. Also, if reference designations exist, they are displayed with the PCCN and PLISN, Reference Designation, and RDOC (if applicable) on the "D" card with a "G" TOCC. In addition, if any change authority related information is changed, i.e., new CANs only, CFIs "F", "G", and "H" update transactions are also processed.

b. Quantity Data Update. When a quantity field is updated, mandatory data, a "Q" TOCC and the updated quantity data field(s) are entered. This will only apply to the following data: Quantity Per Assembly, Quantity Per End Item, Total Quantity Recommended, Allowance Item Code Quantity, Minimum Replacement Unit, Recommended Initial System Stock Buy, Recommended Minimum System Stock Level, Recommended Tender Load List Quantity, Quantity Shipped, Quantity Procured, and Prorated Quantity. When additional data displayed on the same LSAR-036 card also changes during the update, only one change card is entered with TOCC, "Q". When quantity data is deleted, a change card is entered with a zero filled quantity field and TOCC "Q". Note: When a quantity field is initially established, e.g., from a blank to a numeric value, a TOCC of "M" is assigned.

c. Key Data Update. Changes to key data require the submission of both a delete and change card for the appropriate key data. The deletion card should contain a "G" TOCC and the original key data. The change card should contain an "M" TOCC with the new key data and the applicable associated data. Deletion of key data will result in deletion of the corresponding associated data. Table I lists the key and associated data fields. When a key is made up of more than one data element, all the data elements that make up that key must not be null. A deletion of the key data in the data tables results in deletion of associated data to the key data in the PBF and generation of an LSAR-036 deletion transaction only "G" TOCC and the key data. The associated data will only be reinstated when the key data is reentered into the parts file.

d. A PLISN record may have multiple one to three position UOCs/DCN-UOCs that will be placed in the eight position field allocated for these data elements on the LSAR-036 report. Each of these UOCs, however, are treated as a separate data element, and therefore, the addition of UOC to the list of applicable UOCs does not require a delete and a change transaction but rather just a change transaction showing the new UOC.

e. Associated Data Update. Changes to associated data require the submission of a change card consisting of an "M" TOCC with the changed data and entry of the applicable key data. Deletion of associated data requires the submission of a deletion card with a "G" TOCC, a "G" in the left-most position of the associated data field, and entry of the key data.

KEY DATA	H TABLE	036 CARD/ BLOCK	ASSOCIATED DATA	H TABLE	036 CARD/ BLOCK
CAGE Additional Reference Number	HB	A02/5 A02/6	RNCC RNVC	HB HB	A02/7 A02/8
NHA PLISN	HH	C/29	NHA Indicator ORR	HH HH	C/30 C/31
UOC	XC	D/43	None		
Reference Designation	HJ	D/44	RDOC (Generated) RDC	N/A HJ	D/45 D/46
Change Authority No	HP	F-G/66	Serial Number Effect Prorated ELIN Prorated Quantity Interchg Code Repl/Sup PLISN R/S PLISN Ind DCN-UOC Total Item Changes Quantity Shipped Quantity Procured	HQ HP HP HP HP HP HR HP HP HP	F/68 G/75 G/76 F/67 F/70 F/71 F/74 F/69 F/72 F/73
Serial Number Eff	HQ	F/68	None		
DCN-UOC	HR	F/74	None		
TM Code Figure Number Item Number TM-Funct Grp Cd	HK HK HK HK	J/80 J/81 J/82 J/86	Basis of Issue (BOI) TM Chg Number TM Indenture Code Quantity Per Figure	HM HK HK HK	
TM Code Figure Number Item Number	HK HK HK	K/80 K/81 K/82	Provisioning Nomenclature	HL	K/91
BOI-CTRL	HM	J/87	BOI QTY-AUTH BOI-EI BOI-LVL	HM HM HM	J/87 J/87 J/87

Table IV. Provisioning Key and Associated Data

f. Limited S/N Effectivity. Serial Numbers will be entered in the HQ table when a limited number of S/Ns are affected by a design change. When these serial numbers are entered, the following change transaction may occur: when a Change Authority Number and Serial Number Effectivity, and Replaced or Superseded (RS) PLISN are entered, and the RS PLISN Indicator is blank, an "L" TOCC is entered for the replaced

item. If a quantity change occurs on limited effectivity item, an "L" TOCC is entered in lieu of a "Q".

g. Design Change Notices (DCN). During the provisioning process, design changes occur to the system hardware. Prior to these changes, a PPL or any of the PTD lists are run and the provisioning baseline is created. Any subsequent submission of the PTD lists will reflect design changes to that data, and hence the name DCN. Therefore, a DCN is just the changes to a previously selected PTD. When a DCN is selected, the LSAR ADP system will match the HG PTD Selection Code for the previously selected lists baselined under the same PCCN. It will not search the HG PTD Selection Code for DCN because DCN is not a PTD list, but rather the differences between two submissions of a PTD list.

5.3.9.2 UPDATE PROCESSING.

a. Several data elements are combined/updated as one field. These are the Reference Number and CAGE on the 01A card, and all CSN for Remarks,

b. Provisioning Nomenclature within its TM Code, Figure and Item Number keys, and Material. Since an update to Remarks, Provisioning Nomenclature, or Material may change field length, all of the original data is deleted using data element deletes (or "G" TOCC) in either the standard or key data delete format, respectively, prior to updating these elements. This means that the entire narrative, i.e., "01H", "02H" and "03H", will be deleted prior to adding in the new narrative. Key, subordinate key, and associated/combined data relationships are depicted in Table I.

c. The CSN will always begin with CSN "01" for any CFI update transaction. An exception is the CFI "A" update of an Additional Reference Number which will begin with CSN "02". If there are multiple data updates of a PLISN CFI, the CSN will be incremented by one for each multiple update required. The TOCC type within a set of CFI is also used to determine the CSN. Delete transactions (TOCC "G") are grouped for determination of the CSN for a PLISN CFI. If a CFI update includes both delete/change transactions, the CSN will be re-sequenced back to "01" when the transactions transition from the delete to the change types.

d. Deletion transactions will always appear before change transactions within a given CFI. A new PLISN can only have a blank TOCC, which will include an incremented CSN for multiple CFI data.

LOGISTICS MODERNIZATION PROGRAM MANDATORY DATA

MANDATORY DATA FOR ALL PLISNS

Indenture Code

Prime CAGE and Reference Number, Reference Number Category Code and Reference Number Variation Codes

Document Availability Code

Essentiality Code

Item Name

Shelf Life

Unit of Measure and Unit of Measure Price

Unit of Issue and Unit of Issue Price

Source Maintenance and Recoverability Code

Demilitarization Code

Production Lead Time

Physical Security/Pilferage Code

Next Higher Assembly PLISN

Quantity per Assembly

Usable On Code(s)

Replacement Task Distribution

MANDATORY FOR P SMR SOURCE CODE ITEMS (EXCEPT: PB)

Maintenance Replacement Rates One, Two and Modifier

MANDATORY FOR REPARABLE P SMR SOURCE CODE ITEMS

Maintenance Task Distribution

Replacement Task Distribution

REQUIRED CONDITIONAL DATA

RPSTL Information

Design Change Data,

Special Condition Type Items Data

TABLE V. LSAR-036 - LMP Data Requirements

e. There are no "reserved" Additional Reference Numbers (ARN) (e.g., the "02A" may have been reserved for drawing numbers in previous provisioning systems). It is

necessary to control ARN, e.g., drawing number, by using the Reference Number Category Code (RNCC). RNCC "D" indicates a drawing reference number and RNCC "C", or "7" depicts non-definitive Military Specifications or Standards. The ARN will be displayed on CSN based upon a sort in ascending CAGE and ARN (first 29 positions).

f. DCN-UOC and Serial Number Effectivity are depicted as subordinate keys, and as such, multiple entries against a single Change Authority Number are permitted. The same is true of BOI-CTRL within a TM Code Figure Number-Item Number combination key, or Figure Number/Item Number within a TM Code key.

g. Multiple, independent key data deletes/updates contained on the same CFI, e.g., UOC and Reference Designation are consolidated on one card record under the appropriate TOCC.

h. Identical key data within a PLISN record will be merged and processed as a single update transaction. Care should be exercised to ensure this condition does not exist in the file.

i. If multiple, subordinate key data are contained within another key, e.g., Basis of Issue Control within a TM Code-Figure Number Item Number combination key and DCN-UOC within a Change Authority key, the non-multiple associated data, i.e., TM Indenture or Total Item Changes, only appear on the first CSN containing the basic key.

j. If an entire PLISN record is deleted from the PBF, a one-line record in the image of the PLISN deletion transaction will remain on the PBF. If that exact, deleted PLISN is reinstated/reestablished in the data tables, it must match the CAGE and Reference Number that were contained on the record when it was originally deleted.

k. If both Prorated ELIN and Prorated Quantity are null, do not output "G" card.

l. Work Unit Code (WUC) and TM Functional Group Code are contained in different tables and, therefore, may exist concurrently. If both codes exist, the TM information should show on the "01J" and consecutive "J" cards and the WUC should show on the last "J" card by itself. Note: There are no key data elements required for processing on a "J" card that contains a WUC.

m. The subfields for Replacement Task Distribution (RTD), Maintenance Task Distribution (MTD), and Repair Cycle Time (RCT) representing values for the Operations/Maintenance Levels are processed independently. If an Organizational (O) level RTD value is moved from O level to Maintainer/Direct Support (F) level, then two transactions are generated, a TOCC G with a G in RTD-O, and a TOCC M with the value in RTD-F.

5.3.10 THE LSAR-036 REPORT HEADER.

a. The following "header" data required to identify the specified list(s) are not a part of the LSAR but are contained in the LSAR-036 summary:

(1) Procurement Instrument Identification (PII). A 19-position, alphanumeric entry used to identify a specific contractual document. The PII includes the PII Number (PIIN) (13 positions), and the supplementary PII number (SPIIN) (6 positions).

(2) Nomenclature of model or type number. A 21-position, alphanumeric entry used to specify the name, model, or type of equipment being provisioned.

(3) Control Data. A 10-position, alphanumeric entry used for control information as specified by the requiring authority. This information may consist of such items as identification of provisioning data in MIL-STD-1388-2 format or a Weapons System Code.

(4) Prime Contractor's CAGE. A five-position, alphanumeric entry which identifies the prime contractor for the equipment being provisioned.

(5) Submission Control Code. A five-position, numeric entry used to control the submission of provisioning data. The first submission will be 0000l, and each subsequent submission is to be numbered sequentially, one greater than the prior submission.

(6) Date list submitted. A six-position, numeric entry used to identify the date of submission. The first two positions will identify the year, the next two will identify the month, and the last two will identify the day.

b. The LSAR-036 report contains a one-page header that provides the analyst with specific information about the current selection and a history of previous provisioning list selections. It also provides a series of counters with regard to the numbers and types of total PLISN records, as well as Card Format Indicator (CFI) counts and types of transactions against these CFIs.

c. The first line of counters on the header page concerns PLISN record totals for the PCCN selected.

(1) The count under the header, "EXTRACTED FROM H DATA TABLES", consists of all powerLOG table records, which are initially qualified by the selected PCCN.

(2) Under "NOT SELECTED" are records with a blank PLISN, PLISN records disqualified on either PTD Selection or UOC, or duplicate PLISNs.

These conditions are shown on the LSAR-036 Part II error listing with a message similar to, "PLISN bypassed in 36". This error message and most error messages on this report will depend on the software vendor's choice of words.

(3) The next four columns of information are PLISN record (or "01A" record) totals extracted from the PBF. "EXTRACTED FROM PROV BASELINE" are the PLISN

records established on the input PBF. "ADDED TO PROV BASELINE" are the new PLISN records added in this processing cycle. "DELETED FROM PROV BASELINE" is a total of all PLISNs contained in the PBF, which have a "D" TOCC. This total represents the output file condition and not simply a total of the current processing cycle. The last column, "NEW PROVISIONING BASELINE", is a total number of PLISNs contained in the baseline file after all adds and deletes have been processed.

d. The last set of counters, "LSAR-036 RECORD COUNTS", are card record totals by CFIs and three groupings of TOCC (additions, changes, and deletions) for those items appearing in the LSAR-036 report listing on the current processing cycle.

e. Also appearing on the LSAR-036 report header are a recapitulation of the current report selection parameters, as well as a listing of all previously selected provisioning lists which comprise the consolidated PBF. These previous lists will only appear if the current selection requires a PBF comparison and an extract of change transactions only.

f. The header section is used for error messages when a subsequent LSAR-036 report selection violates the previously selected report criteria by either narrowing the UOC selections, or by changing the UOC suppression option between selections. Only the header page of the LSAR-036 report is generated.

5.3.11. THE LSAR-036 PART II ERROR REPORT.

a. The LSAR-036 Part II error listing is automatically produced when an LSAR-036 is requested. The standard section lists those PLISNs matching the PCCN selected which were disqualified or would degrade the provisioning list. This list must be reviewed by the user to ascertain what corrections, if any, are needed to update the parts data tables for subsequent update(s) to the provisioning list.

b. Since the LSAR-036 does not match the input edits of the PMR, the LSAR-036 Part II error listing can be used to review the parts file for the minimum mandatory data requirements to establish a PMR PLISN record. These "minimum data" are the same elements which were originally established under MIL-STD-1552 and are included in table II. Also included in the table are the data edit relationships required by the PMR, which are not in the LSAR-036 system, and the PMR edits which can only be satisfied using the selection options of the LSAR-036 and 152 reports.

c. The LSAR-036 Part II error listing is displayed in PLISN sequence and should be made available by the preparing activity during LSAR/Provisioning reviews. It also includes the Reference Number and LCN keys, so that the preparer may readily make corrections to the powerLOG data tables.

d. The ability to tailor this report is dependent on the LSAR ADP system being used. The only errors that must come out on this report are items that were bypassed, based on PTD selection or UOC, or because the PLISN was duplicated.

5.3.12. LSAR-036 PART III. The LSAR-036 Air Force "L" card merged records are displayed in the LSAR-036 part III.

5.3.13. PROVISIONING DATA ALTERATIONS FOR TWO-LEVEL MAINTENANCE. PowerLOG contains a pre-made database alteration utility which can modify the SMR Codes in the database to place the Organizational, O, level Maintenance Replace items at either the Crew, C, level or the Intermediate/Direct Support, F, level based on whether the item is contained as an Authorization List, Basic Issue Item.

5.3.14. LSAR-036 DELIVERABLE OUTPUT FILE.

a. When the “Live Run” option is selected for the LSAR-036, an 80-card column text file without data headers and card-column, locator grids is created which can be delivered to the customer or requiring authority. The file is located in the powerLOG-jem folder under reports. It is labeled: “<PCCN>.036”, where <PCCN> is the selected PCCN for the live run.

b. It is strongly recommended that formal deliveries be backed up and renamed since an update to the delivery will “overwrite the .036 text file with the new data. If the file is “Changes Only”. It is also recommended that both the powerLOG file and PTD baseline be exported and stored/archived in case it becomes necessary to regenerate the PTD delivery.

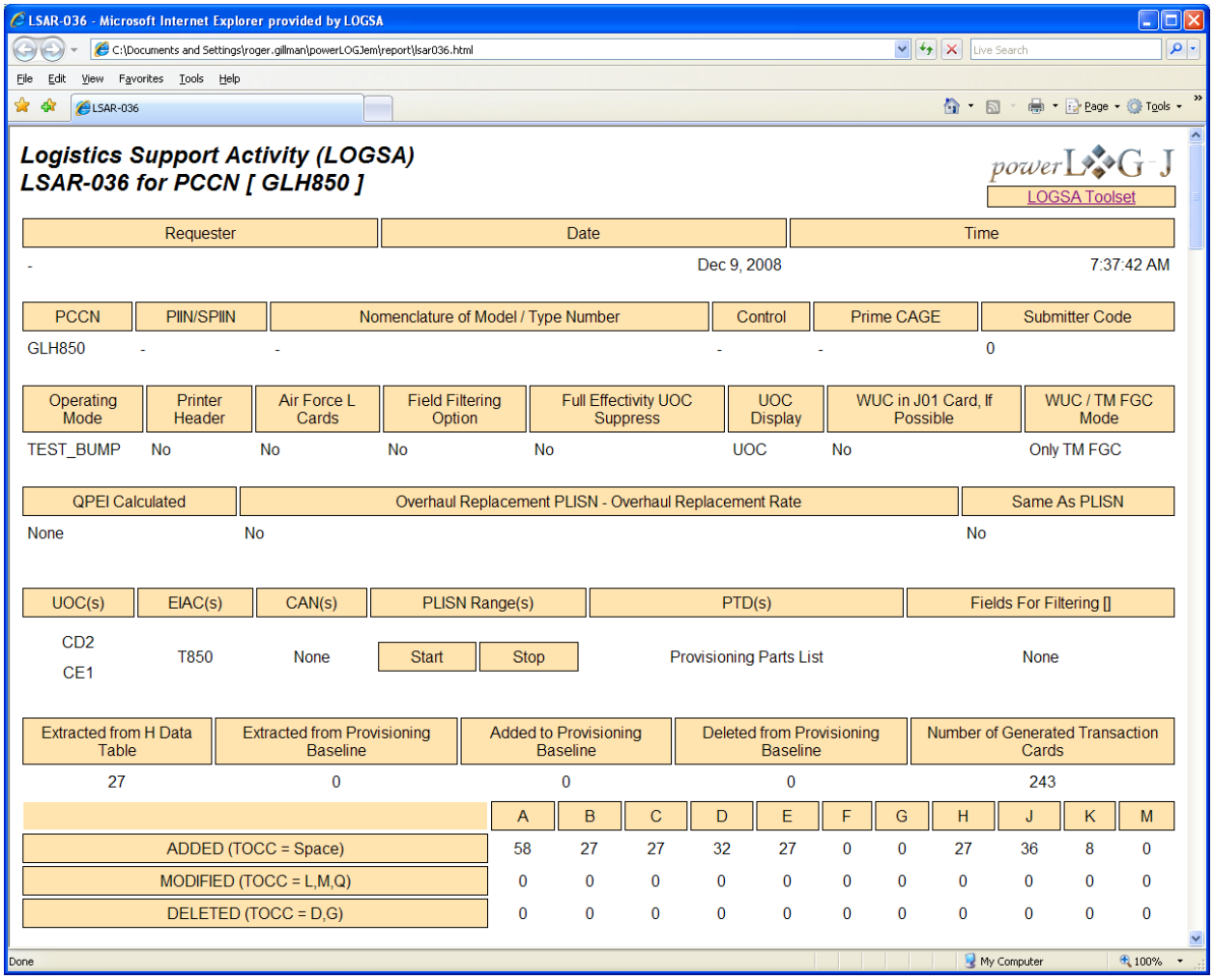

LSAR-036 - Microsoft Internet Explorer provided by LOGSA

C:\Documents and Settings\roger.gillman\powerLOGJem\report\lsar036.html

File Edit View Favorites Tools Help

LSAR-036

Logistics Support Activity (LOGSA)
LSAR-036 for PCCN [GLH850]

powerLOGJ
LOGSA Toolset

Requester	Date	Time
-	Dec 9, 2008	7:37:42 AM

PCCN	PIIN/SPIIN	Nomenclature of Model / Type Number	Control	Prime CAGE	Submitter Code
GLH850	-	-	-	-	0

Operating Mode	Printer Header	Air Force L Cards	Field Filtering Option	Full Effectivity UOC Suppress	UOC Display	WUC in J01 Card, If Possible	WUC / TM FGC Mode
TEST_BUMP	No	No	No	No	UOC	No	Only TM FGC

QPEI Calculated	Overhaul Replacement PLISN - Overhaul Replacement Rate	Same As PLISN
None	No	No

UOC(s)	EIAC(s)	CAN(s)	PLISN Range(s)		PTD(s)	Fields For Filtering []
			Start	Stop		
CD2 CE1	T850	None			Provisioning Parts List	None

Extracted from H Data Table	Extracted from Provisioning Baseline	Added to Provisioning Baseline	Deleted from Provisioning Baseline	Number of Generated Transaction Cards
27	0	0	0	243

	A	B	C	D	E	F	G	H	J	K	M
ADDED (TOCC = Space)	58	27	27	32	27	0	0	27	36	8	0
MODIFIED (TOCC = L,M,Q)	0	0	0	0	0	0	0	0	0	0	0
DELETED (TOCC = D,G)	0	0	0	0	0	0	0	0	0	0	0

Done My Computer 100%

FIGURE 20. Example of LSAR-036 Report Selection Summary.

CHAPTER SIX

ALLOWANCE ITEMS

6. The Allowance Items are divided into four categories or groups of items.

6.1 SECTION I, COMPONENTS OF END ITEM (COEI) LIST. This section provides a listing of those items which are part of the end item, but are removed and separately packaged for transportation or shipment. The items are listed in alphabetical sequence of Item Name and are identified by a "C" in the second position of the AIC. This list is for information purposes only and is not authority to requisition replacement. As part of the end item, these items must be with the end item whenever it is issued or transferred between property accounts. Items of COEI are removed and separately packaged for transportation or shipment only when necessary. Illustrations are furnished to help find and identify the items.

a. As an optional format, the following may apply: Column (1) Item Number provides the reference number of the item listed.

b. When on-board spares apply, there shall be a break in the text of the list and a new heading ON-BOARD SPARES shall be used. A list of the on-board spares shall appear in the same format as required for the basic COEI list.

PowerLOG does not identify or produce the options contained in paragraphs a and b above.

6.2 SECTION II, BASIC ISSUE ITEMS (BII) LIST. This section provides a listing of those minimum essential items required to place an equipment in operation, to operate it, and to perform emergency repairs. The items are listed in alphabetic sequence of Item Name and are identified by "A" in the second position of the AIC.

a. These essential items are required to place the end item in operation, operate it, and to do emergency repairs. Although shipped separately packaged, BII must be with the end item during operation and when it is transferred between property accounts. Listing these items is authority to request/requisition them for replacement based on authorization of the end item by the TOE/MTOE. Illustrations are furnished to help find and identify the items.

b. This tabular list is prepared in the same format as the COEI. The stowage location of BII shall also be included in the description

6.3 SECTION III, ADDITIONAL AUTHORIZATION LIST (AAL). This section provides a listing of those items which are not issued with an end item and are not listed/identified on the end item engineering drawings as part of the end item configuration. The items are listed in alphabetic sequence by item name within each subsection. AAL-MTOE

Authorized are identified by AIC of "E" and AAL-Other Authorized are identified by AIC, second position of "F".

a. This list identifies items that do not have to accompany the end item and that do not have to be turned in with it. These items are all authorized to you by CTA, MTOE, TDA, or JTA. Explanation of columns in the AAL

b. The Description column contains the Reference Number and (CAGE), identifies the Federal item name (in all capital letters), followed by a minimum description when needed.

c. The headings and subsequent information for this list are the same as the COEI and BII lists, except the ILLUS NO column required for the COEI and BII lists does not apply since there are no illustrations used, and the QTY column shall be QTY RECM (quantity recommended). The items are listed alphabetically
.

6.4 SECTION IV, EXPENDABLE/DURABLE SUPPLIES AND MATERIALS LIST (ESML).

a. The ESML provides a listing of those expendable/durable supplies and materials required to operate and maintain the equipment. The items are listed in alphabetic sequence by item name (ITNAMEHA) and are identified by AIC, second position of "D". ITEM NO is computer generated. Level is determined by the SMR (3d position).

b. The list of expendable and durable items are items needed to operate and maintain the end item. This list is for information only and is not include the authority to requisition the listed items. These items are authorized by CTA 50-970, Expendable/Durable Items (except Medical, Class V Repair Parts, and Heraldic Items), CTA 50-909, Field and Garrison Furnishings and Equipment or CTA 8-100, Army Medical Department Expendable/Durable Items. Explanation of Columns in the Expendable/Durable Items List.

c. Item No. This number is assigned to the entry in the list and is referenced in the narrative instructions to identify the item (e.g., use brake fluid (WP 0098, item 5)). The column, Level, identifies the lowest level of maintenance that requires the listed item.

LSAR-040 MAINTENANCE SUMMARY - Microsoft Internet Explorer provided by LOGSA

C:\Documents and Settings\roger.gillman\powerLOGJem\report\lsar040.html

File Edit View Favorites Tools Help

LSAR-040 MAINTENANCE SUMMARY

LSAR-040 MAINTENANCE SUMMARY

powerLOGJ

LOGSA Toolset

Requester:	Time:	Date:
r	12:31:57 PM	Dec 8, 2008

AUTHORIZATION LIST ITEMS SUMMARY

EIAC	ITEM NAME	START LCN	ALC	LCN TYPE	STOP LCN	UOC	AUTH LISTS SELECTED
T850	ENGINE ASSEMBLY	A		P			C,A,E/F,D

PART I COMPONENTS OF END ITEM LIST

(1)	(2)	(3)	(4)	(5)	(6)
ILLUS NO	NATIONAL STOCK NUMBER	DESCRIPTION, CAGE AND PART NUMBER	UOC	U/M	QTY RQR
1	2840-01-084-7392	GAS GENERATOR MODUL SEE FGC 05, FIGURE 6 FOR BREAKDOWN OF THIS ITEM. (64643), LH10481	LH3 LX2	EA	3
2	2840-01-672-3497	TURBINE ROTOR (64643), LH50516	LH3 LX2	EA	3

PART II BASIC ISSUE ITEMS LIST

(1)	(2)	(3)	(4)	(5)	(6)
ILLUS NO	NATIONAL STOCK NUMBER	DESCRIPTION, CAGE AND PART NUMBER	UOC	U/M	QTY RQR
1	5865-01-565-4999	CONTROLLER ASSY (64547), 2118539A	CD2	EA	2
2	5520-01-045-9947	HARNESS ASSY, ENGIN (64643), LH10577	LH3 LX2	EA	2

PART III ADDITIONAL AUTHORIZATION LIST

(1)	(2)	(3)	(4)	(5)
NATIONAL STOCK NUMBER	DESCRIPTION, CAGE AND PART NUMBER	UOC	U/M	QTY RECM
MTOE AUTHORIZED				
	TANK ASSY, OIL (64643), LH10572	LH3 LX2	EA	3
OTHER AUTHORIZED				
2840-01-459-8236	ROTOR & NOZZLE ASSY (64643), LH50546	LH3 LX2	EA	3
2840-01-023-7645	UNIT HYDROMECHANICA SEE FGC 02, FIGURE 3 FOR COMPLETE BREAKDOWN OF THIS ITEM BEGINNING WITH THE FILTER ELEMENT ASSY AND METERING UNIT ASSY. N (64643), LH10674	LH3 LX2	EA	1

PART IV EXPENDABLE/DURABLE SUPPLIES AND MATERIALS LIST

(1)	(2)	(3)	(4)	(5)
ITEM NO	LEVEL	NATIONAL STOCK NUMBER	DESCRIPTION, CAGE AND PART NUMBER	U/M
1	O	3260-00-542-3454	JET PROPULSION NO 8 (81343), MIL-L-1642	GL
2	O	3260-01-564-3284	OIL,LUBRICATING (81343), MIL-L-7808	GL
3	O		RAG, WIPING	EA

Done My Computer 100%

FIGURE 21. Authorization List Items Summary

CHAPTER SEVEN

REPAIR PARTS AND SPECIAL TOOLS LIST (RPSTL)

7.1 RPSTL CONTENT. The draft/proof RPSTL consists of four sections prepared IAW MIL-STD-40051-2 (TM):

a. Section I, Introduction.

b. Section II, Repair Parts List.

c. Section III, Special Tools List.

d. Section IV, Cross-Reference Indexes.

Sections II, III, and IV listings are produced as separate sections of this report.

7.2 REPORT SELECTION. The proof option is selected by mandatory TM Code from table HK. The draft option is selected by mandatory EIAC, Start LCN, and TM Code. The draft has optional Stop LCN, ALC, and UOC selections. Additional optional selections for both the proof and draft are by O/M Level determined by the third (remove) position of the Source, Maintenance and Recoverability Code (SMR Code) and Start and Stop range(s) of FGCs. NOTE: The only differences between the proof and draft RPSTL format involve display of the file control keys following the standard columns 1 through 6 (or 7). Both the proof and draft RPSTL have the option of depicting the formats prescribed by MIL-STD-40051(TM).

a. The three cross-reference indices in part IV of the RPSTL are each separately selectable. A fourth powerLOG RPSTL cross reference index, Figure-Item Numbers to NSN, is no longer required.

b. FGC Headers are also optional inputs for the RPSTL report. For the 30 report you have header information which is a throughput. For each Functional Group header there will be a Start and Stop TM-FGC header. Each Functional Group Header can consist of up to nine lines of header information. Each line of header information is 36 positions long. There is not a minimum or a maximum number of FGC headers/Start and Stop TM-FGC.

c. There is an additional selection option, Start/Stop TM-FGC. There is a maximum number of four start and stops TM-FGCs. The Start/Stop TM-FGC will allow the report requester to select specific TM FGCs to be output.

7.3 DOCUMENTATION OF KITS FOR RPSTL. In order to produce kit/kit component listings for the RPSTL, a kit record first must be established and a Provisioning List Item Sequence Number (PLISN) assigned to this item. In the HH data table, an Overhaul-Kit

NHA PLISN, against the application of the kit component record, and an NHA PLISN entry of the Kit PLISN with an NHA PLISN Indicator of "*" is required. Where the kit component appears in the RPSTL hardware breakout, the phrase "PART OF KIT P/N" (automatically generated), followed by the reference number of the kit, will be displayed following the provisioning nomenclature in the description column. The Kit Reference Number is determined by a match of the Kit NHA PLISN to a PLISN under the same PCCN in the parts application provisioning data table. One item may be used in multiple "kits" by multiple kit NHA PLISN HH entries. The kit components are automatically generated beneath the kit. The component listing contains the applicable figure number, item number, and quantity per assembly/figure duplicated from the hardware breakout information.

7.4 DATA CONTENT.

a. The FGC Headers are placed in the description column preceding the first row of data matching an FGC with the FGC header key. Since FGC headers can be very extensive, it is recommended these be retained by saving the powerLOG LSAR-030 report selection parameters. This is done by going into the powerLOG folder, Reports Subfolder and extracting and renaming the file called: lsar030.rpt. This parameter set can then be run by selecting the “run report” from the report pull down menu and browsing to the saved parameters.

b. The PART NUMBER column contains 16 positions of the Reference Number. If the Reference Number exceeds 16 positions, the remainder is printed immediately beneath the first 16 on the next line.

c. Rows are sorted by section and FGC sequence. For the description column, the item name will first appear, then two spaces followed by the provisioning nomenclature, if applicable. If the Hardness Critical Item (Table HG) is "Y", then the symbol "(HCI)” is printed one space following the Item Name and two spaces before the provisioning nomenclature. If the row also has a TM Indenture Code entry, then leading periods are placed prior to the item name of the row, equaling the number in the TM Indenture Code field.

d. Following the provisioning nomenclature, on a separate line, applicable UOCs of the row are entered preceded by "UOC:" If the row has full effectivity, no UOCs are displayed. Full effectivity is determined by: A Row in HG has full effectivity if it is represented in HO for Every XC entry which contains its PCCN. If there is provisioning Change Authority data on the item containing from and to Serial Number Effectivity, this is displayed as a separate line on the report preceded by “USBL EFF:”

e. The quantity per figure is displayed, unless blank, then the quantity per assembly is shown.

f. Under the PLCC column, only entries of "D"s are shown.

g. After all rows of data are displayed following an FGC Header, and before the next FGC header, the phrase "END OF FIGURE" is printed. Rows of information are printed with no line skips between rows. At the end of a page, a page number is

assigned using the figure number from the first record following the FGC header, followed by dash then "1", multiple pages of the same figure follow the same pattern, e.g., 3-1, 3-2, 3-3, etc. A page break will occur with each new FGC Header set under a different FGC. If no FGC Header inputs are provided, then the sorted rows are "page break" each time the figure number changes.

h. The Section III description column is similar to the Section II description with the addition of the interpreted Basis of Issue (BOI). Each BOI is displayed by "BOI:" and its quantity, then either Basis of Issue Level or Basis of Issue End Item is interpreted (see GEIA-STD-0007, basis_of_issue, and Data Type No. 3780, organizational_level_Type). Basis of Issue End Item is preceded by "PER" and followed by "END ITEMS". The BOI is inserted between provisioning nomenclature and the Usable on Code lines.

i. Section IV cross-reference indexes are produced as optional outputs as specified by the requester. The Reference Designations for the Reference Designation Index will either only include those items having a non-identifying migrating key of the appropriate Figure Number, Item Number, and TM Code from the HJ table, or will include all related Figure Numbers, Item Numbers, and TM Codes from the HK table. Overflows of Reference Numbers or Reference Designations exceeding 16 or 32 positions, respectively, are printed on the next line immediately below the first portion of the element.

j. An optional Marine Corps format is also produced which displays an additional column, “USMC QTY PER EQUIP”. This column contains the numeric only values of the Provisioning Quantity per End Item. These are repeated for same part for rows where the Quantity per End Item is REF or REFX.

7.5 DRAFT/PROOF RPSTL REVIEW.

a. While the formal RPSTL report ends after the QUANTITY field column, additional information is provided on each draft report line record to assist the analyst in correcting/refining the final RPSTL product, which includes:

(1) TM Code. This is the basic selection criteria of the Proof RPSTL and is displayed for review when selecting the draft/proof report.

(2) WUC/TM FGC and LCN/ALC. These are selectable primary sort criteria of the report line records.

(3) PLCC. This determines the section, repair part, or tool. The report line record will be displayed on the proof and draft RPSTL, respectively.

(4) Figure Number. Figure Number is a secondary sort criteria of the draft RPSTL and must be accurate to produce cross-reference indices.

b. The PLISN does not appear in the line of review data; however, if a duplicate PLISN is contained in the proof RPSTL records which matches exactly on WUC/TM FGC and Item Number, then an error message "*** DUPLICATE PLISN ***" will appear

in the description column of the report record. This can occur when a PLISN record contains multiple TM Code, Figure Number, and Item Number key with an identical associated WUC/TM FGC and a different Figure Number, or on the rare occasion, when the WUC/TM FGC Item Number and PLISN match for items contained under different PCCNs.

7.6. RPSTL ILLUSTRATIONS AND PARTS LISTINGS.

a. The RPSTL illustrations normally are assembly level drawings with parts identified by a call-out number. The Illustrations can be documented in powerLOG and linked to the RPTSL TMC, Figure and Functional Group Codes. The option is available to insert and display the RPSTL illustrations on the LSAR-030 output. An example of an RPSTL illustration is contained below.

b. When reviewing the RPSTL parts listings against the illustrations, the analyst should match the Item Numbers on the illustration with the Table HK ITEM NUMBER data field. The analyst should count the appearances of the ITEM NUMBER. If the Quantity per Assembly is greater than the actual items appearing on the particular illustration, the correct number should be entered in the QUANTIY PER FIGURE block. Note that if the quantity is less, there should be another Figure or Figures for the assembly which will contain the remainder of the Quantity per Assembly item.

CAUTION. PowerLOG contains two additional tables, XU and XS, to link and sort RPSTL illustrations to the associated parts listings by mapping the drawing to HK level Technical Manual Code, Figure Number and Functional Group Code. These tables are not available in the GEIA standard. If data is exported in GEIA-STD format, the data links will be broken. Furthermore, if these links are the only mapping of the illustrations, then the XT level parent illustrations, also will be lost if exporting for a specific EIAC. It is recommended that if RPSTL illustrations are stored in powerLOG, the data exchange be performed using the powerLOG-J importer and exporter option.

*TM 11-5840-382-23P

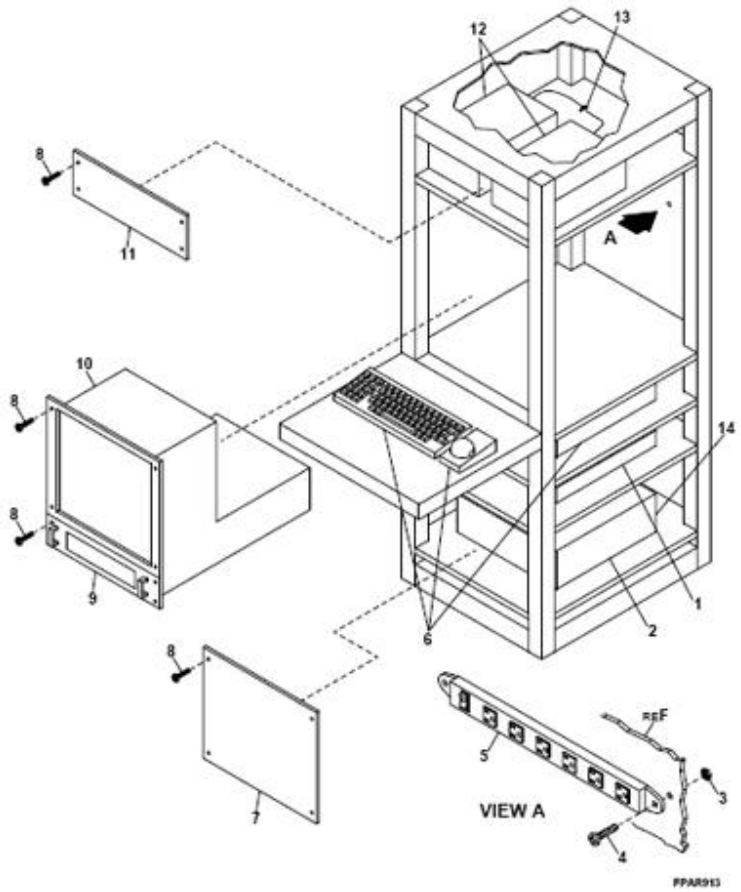

Figure 12. FBPAR REMOTE DISPLAY (OJ-734/M) (Unit 2)

FIGURE 22a. Example of a RPSTL Illustration

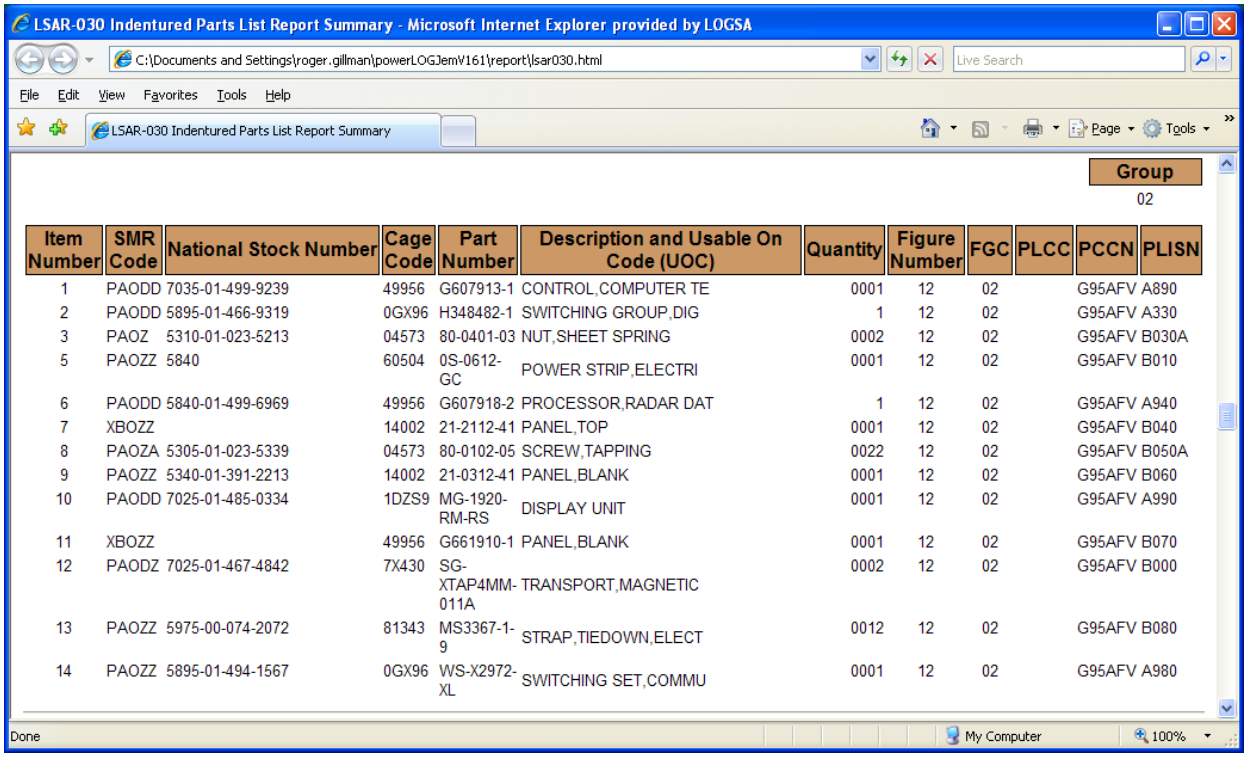

Item Number	SMR Code	National Stock Number	Cage Code	Part Number	Description and Usable On Code (UOC)	Quantity	Figure Number	FGC	PLCC	PCCN	PLISN
1	PAODD	7035-01-499-9239	49956	G607913-1	CONTROL,COMPUTER TE	0001	12	02		G95AFV	A890
2	PAODD	5895-01-466-9319	0GX96	H348482-1	SWITCHING GROUP,DIG	1	12	02		G95AFV	A330
3	PAOZ	5310-01-023-5213	04573	80-0401-03	NUT,SHEET SPRING	0002	12	02		G95AFV	B030A
5	PAOZZ	5840	60504	0S-0612-GC	POWER STRIP,ELECTRI	0001	12	02		G95AFV	B010
6	PAODD	5840-01-499-6969	49956	G607918-2	PROCESSOR,RADAR DAT	1	12	02		G95AFV	A940
7	XBOZZ		14002	21-2112-41	PANEL,TOP	0001	12	02		G95AFV	B040
8	PAOZA	5305-01-023-5339	04573	80-0102-05	SCREW,TAPPING	0022	12	02		G95AFV	B050A
9	PAOZZ	5340-01-391-2213	14002	21-0312-41	PANEL,BLANK	0001	12	02		G95AFV	B060
10	PAODD	7025-01-485-0334	1DZS9	MG-1920-RM-RS	DISPLAY UNIT	0001	12	02		G95AFV	A990
11	XBOZZ		49956	G661910-1	PANEL,BLANK	0001	12	02		G95AFV	B070
12	PAODZ	7025-01-467-4842	7X430	SG-XTAP4MM-011A	TRANSPORT,MAGNETIC	0002	12	02		G95AFV	B000
13	PAOZZ	5975-00-074-2072	81343	MS3367-1-9	STRAP,TIEDOWN,ELECT	0012	12	02		G95AFV	B080
14	PAOZZ	5895-01-494-1567	0GX96	WS-X2972-XL	SWITCHING SET,COMMU	0001	12	02		G95AFV	A980

FIGURE 22b. LSAR-030, Draft RPSTL Listing Data for Figure 22a Illustration.

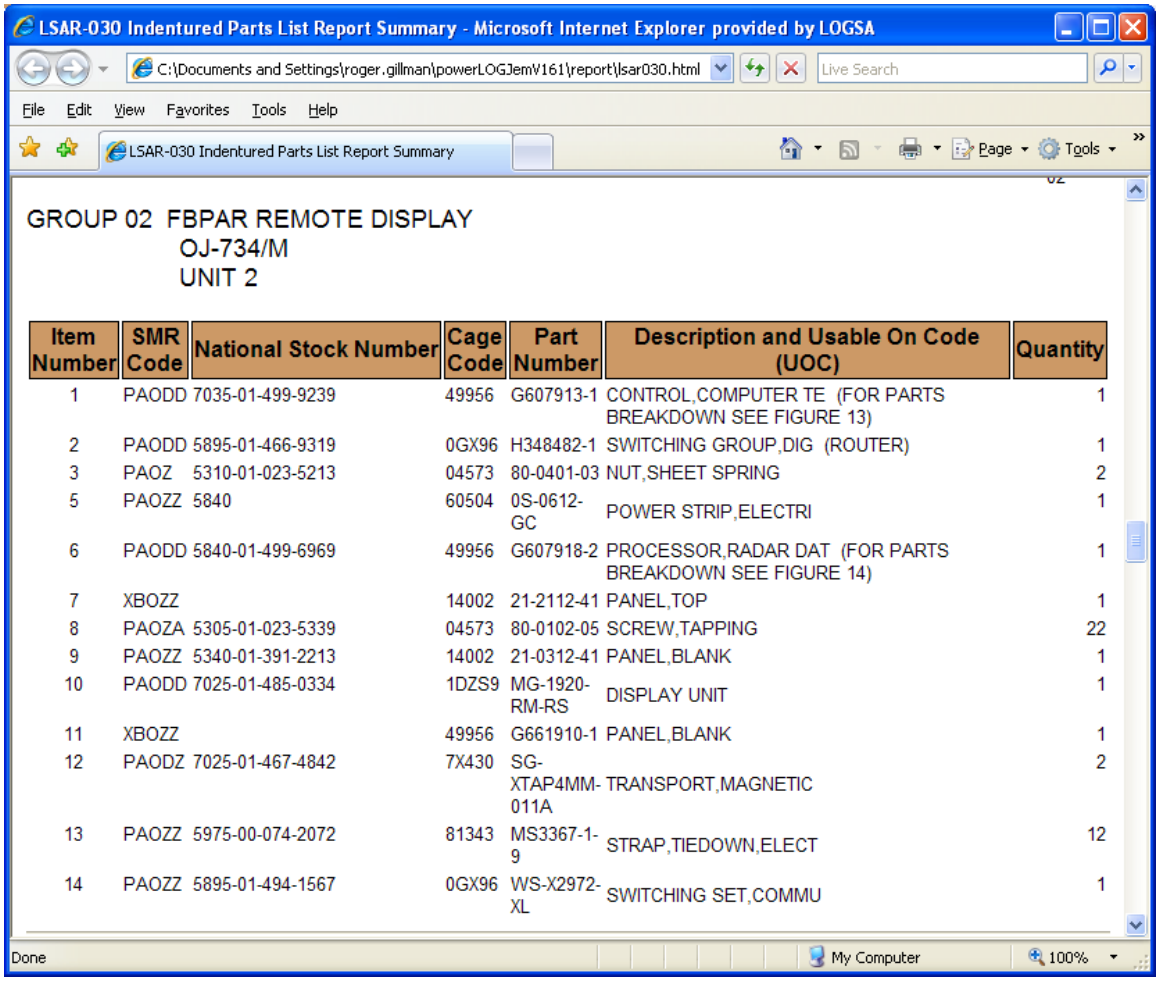

GROUP 02 FBPAR REMOTE DISPLAY
OJ-734/M
UNIT 2

Item Number	SMR Code	National Stock Number	Cage Code	Part Number	Description and Usable On Code (UOC)	Quantity
1	PAODD	7035-01-499-9239	49956	G607913-1	CONTROL,COMPUTER TE (FOR PARTS BREAKDOWN SEE FIGURE 13)	1
2	PAODD	5895-01-466-9319	0GX96	H348482-1	SWITCHING GROUP,DIG (ROUTER)	1
3	PAOZ	5310-01-023-5213	04573	80-0401-03	NUT,SHEET SPRING	2
5	PAOZZ	5840	60504	0S-0612-GC	POWER STRIP,ELECTRI	1
6	PAODD	5840-01-499-6969	49956	G607918-2	PROCESSOR,RADAR DAT (FOR PARTS BREAKDOWN SEE FIGURE 14)	1
7	XBOZZ		14002	21-2112-41	PANEL,TOP	1
8	PAOZA	5305-01-023-5339	04573	80-0102-05	SCREW,TAPPING	22
9	PAOZZ	5340-01-391-2213	14002	21-0312-41	PANEL,BLANK	1
10	PAODD	7025-01-485-0334	1DZS9	MG-1920-RM-RS	DISPLAY UNIT	1
11	XBOZZ		49956	G661910-1	PANEL,BLANK	1
12	PAODZ	7025-01-467-4842	7X430	SG-XTAP4MM-011A	TRANSPORT,MAGNETIC	2
13	PAOZZ	5975-00-074-2072	81343	MS3367-1-9	STRAP,TIEDOWN,ELECT	12
14	PAOZZ	5895-01-494-1567	0GX96	WS-X2972-XL	SWITCHING SET,COMMU	1

FIGURE 22c. LSAR-030 Proof RPSTL with FGC Headers and Provisioning Nomenclatures Added.

CHAPTER EIGHT

GEIA-STD-0007

AND POWERLOG

8.1. SOURCE DOCUMENT FOR CONTRACTING.

a. The Government Electronics Information Technology Association (GEIA) Standard (STD) 0007 contains the approved content for logistics data. The standard built on the core requirements contained in MIL-STD-1388-2B and is structured to present and exchange logistics data based on the military standard's data modeling design.

b. Data Item Descriptions (DID) to contract for Logistics Product Data with the GEIA-STD-0007 as the associated or source document follow:

(1) DI-SESS-81758, Logistics Product Data

(2) DI-SESS-81759, Logistics Product Data Summaries

(3) DI-ALSS-81557, Supplemental Data for Provisioning (SDFP)

8.2. GEIA ENTITY AND POWERLOG TABLE DIFFERENCES. The GEIA standard describes the Provisioning data entities using the legacy identifiers of MIL-STD-1388-2B. A graphical representation of the entities is contained in Figure 21. There are several differences between the GEIA and MIL standards.

a. Although the HF (Packaging) entity is broken out separately, the GEIA standard removed the Degree of Protection as a data key for packaging data.

b. The Provisioning Nomenclature (Narrative) attribute was rolled into the parent entity HK. PowerLOG retained the HL table.

c. The Remarks attribute was rolled into the parent entity HG. PowerLOG retained the HI table.

d. UM and UI Prices were rolled into the HD entity with an attribute to identify each type. PowerLOG retained separate HD and HE tables for UI and UM prices, respectively.

e. The new XT entity, Document Data (Drawings/Illustrations), was added, then linked to provisioning and cataloging data in three ways:

(1) Entity HZ, CAGE and Reference Number

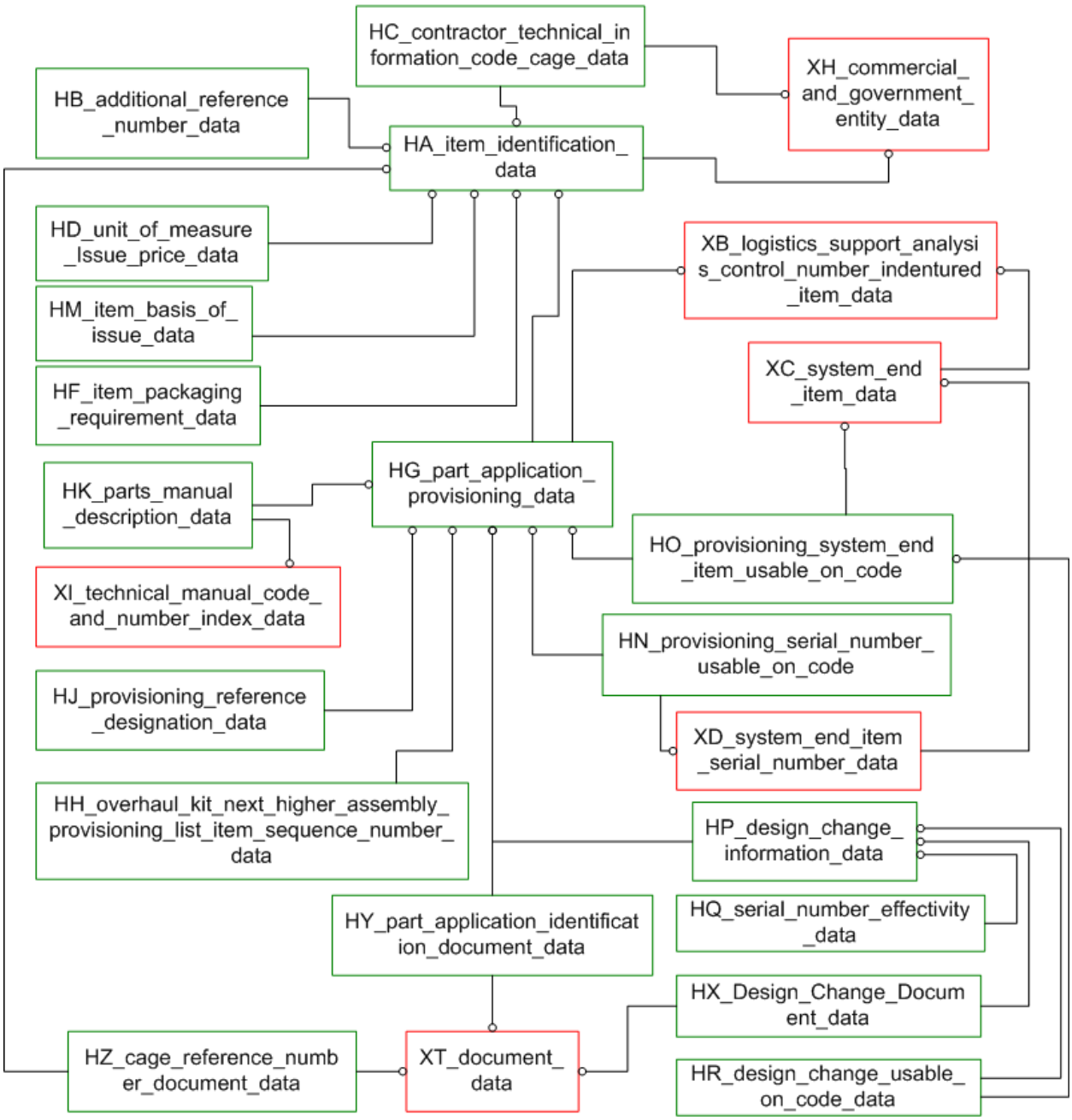

FIGURE 23. GEIA Standard Graphical Representation of Provisioning, Packaging and Cataloging Data © 2007 TechAmerica (formerly GEIA)

(2) Entity HY, Part Application (PLISN)

(3) Entity HX, Design Change (Change Authority Number)

(4) There are three new tables, HS, HT, and HU in powerLOG version 1.7 to capture Unique Item Identifier Information (UII). The primary parents for these tables are the HA (for HS) and HG (for HT and HU).

f. PowerLOG also created a new XU mapping table to link XT drawings/illustrations to the Repair Parts Manual or HK data keys. Another new table, XS, was created to sort multiple illustrations which are mapped to the same key. These tables are not available in the GEIA standard.

g. PowerLOG uses the standard data schema and file identifiers called out by GEIA for full file GEIA import and export. When exporting data, however, powerLOG uses a file comparison (powerLOG baseline versus current data file) to generate xml change files. For key field changes, this essentially becomes an entire old key delete with the new data key and attributes added. This changed data is displayed in the xml schema relationship.

h. PowerLOG does not use the data schemas called out in the GEIA standard to produce the specific functional areas such as Provisioning. The GEIA standard calls out the same Provisioning key and associated data and transaction types (for initial and updates) as those generated by the LSAR-036.

8.3 POWERLOG AND GEIA-STD INTERRELATIONSHIP.

a. PowerLOG uses the same Entity identifiers called out in the GEIA standard to identify the equivalent powerLOG data table. PowerLOG uses the attribute names to tag the data when creating the xml files for data transfer (GEIA Import and Export).

b. PowerLOG has adopted xml as one of the primary tools for report generation and data transfer.

CHAPTER NINE

POWERLOG REVIEW REPORTS AND TOOLS FOR GENERATION AND VALIDATION OF PROVISIONING DATA

9.1. POWERLOG REPORT SELECTION. The powerLOG Report selections provide a wide range of options for report to be generated. Generally, a report may be selected on a Start and/or Stop LCN range (or PCCN), and UOC. Depending on the type of report, items may be further selected by Task Code Operations/Maintenance Level or Function, or Technical Manual Code.

a. There are 52 standard reports in powerLOG covering seven major functional areas.

(1) Maintenance Planning

(2) Reliability and Maintainability

(3) Provisioning

(4) Technical Manuals/Documentation

(5) Support Equipment

(6) Unique-Item Identification

(7) Other (Facilities, Transportation, Training, Manpower and Personnel Integration)

b. Contained in the following paragraphs are a brief summary and example of selected powerLOG reports which may be useful to the provisioning analyst.

9.2. LSAR-019, MAINTENANCE SUMMARY. The Maintenance Task Analysis Summary report was originally developed in LSAR to serve as a tool to validate Maintenance Tasks during a Logistics or Maintenance Demonstration and to verify or mark up changes resulting from the demonstration. The report contains all data pertaining to performing a task including the Spares and Repair Parts identified and used.

a. A Maintenance Engineer can use this summary to verify the tasks are at the proper Operations/Maintenance Level and that all people and support items, i.e., maintainers, tools, spares, facilities or ancillary equipment, are available. See Figure 24 for a sample of this report. The provisioning analyst can take the results of the logistics demonstration and updated powerLOG database to begin assigning SMR Codes and Spare/Repair Part factors used for provisioning requirements determination.

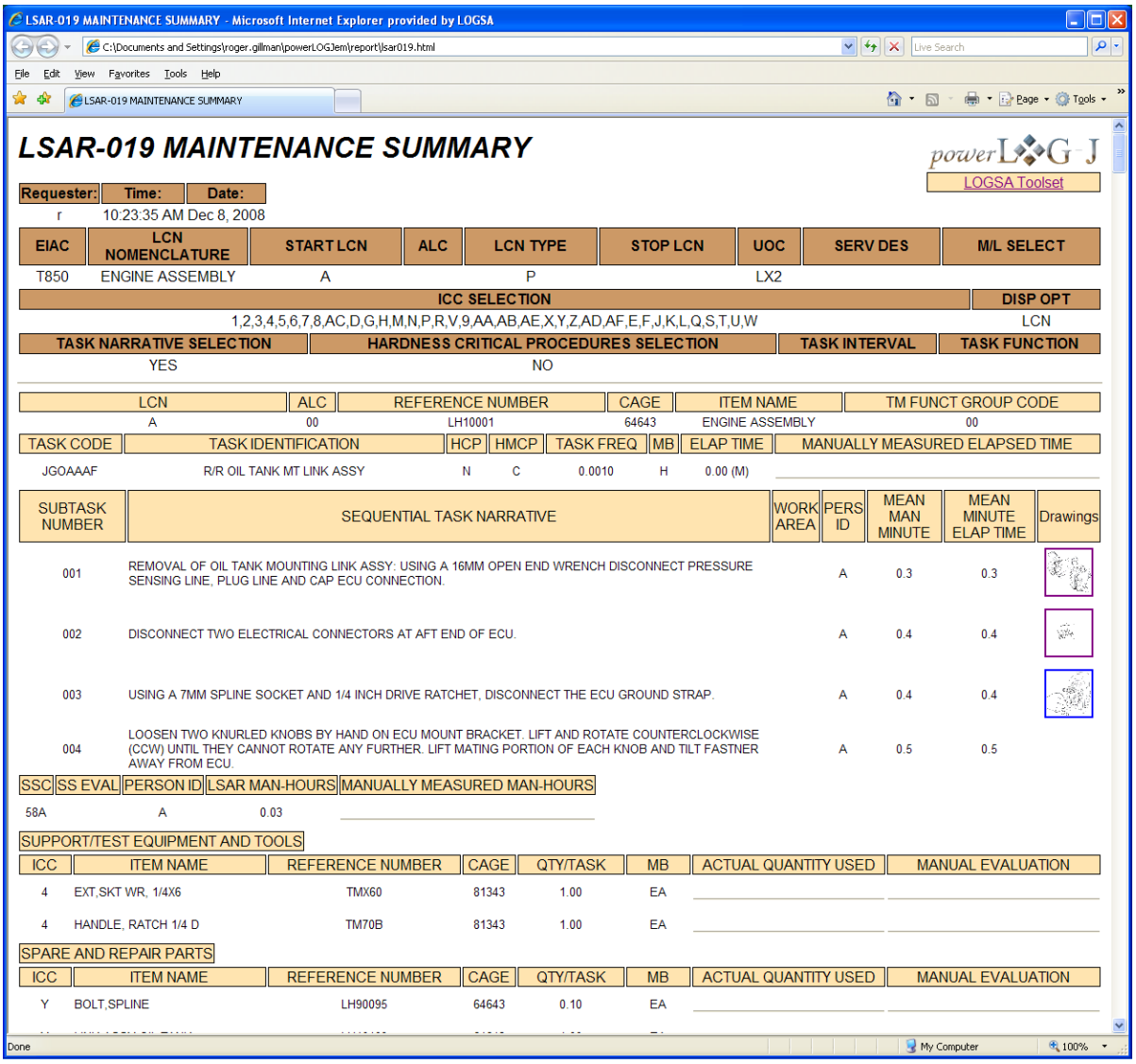

LSAR-019 MAINTENANCE SUMMARY - Microsoft Internet Explorer provided by LOGSA

C:\Documents and Settings\roger.gillman\powerLOGJem\report\lsar019.html

File Edit View Favorites Tools Help

LSAR-019 MAINTENANCE SUMMARY

LSAR-019 MAINTENANCE SUMMARY

powerLOGJ

LOGSA Toolset

Requester:	Time:	Date:
r	10:23:35 AM Dec 8, 2008	

EIAC	LCN NOMENCLATURE	START LCN	ALC	LCN TYPE	STOP LCN	UOC	SERV DES	M/L SELECT
T850	ENGINE ASSEMBLY	A		P		LX2		

ICC SELECTION	DISP OPT
1,2,3,4,5,6,7,8,AC,D,G,H,M,N,P,R,V,9,AA,AB,AE,X,Y,Z,AD,AF,E,F,J,K,L,Q,S,T,U,W	LCN

TASK NARRATIVE SELECTION	HARDNESS CRITICAL PROCEDURES SELECTION	TASK INTERVAL	TASK FUNCTION
YES	NO		

LCN	ALC	REFERENCE NUMBER	CAGE	ITEM NAME	TM FUNCT GROUP CODE
A	00	LH10001	64643	ENGINE ASSEMBLY	00

TASK CODE	TASK IDENTIFICATION	HCP	HMCP	TASK FREQ	MB	ELAP TIME	MANUALLY MEASURED ELAPSED TIME
JGOAAAF	R/R OIL TANK MT LINK ASSY	N	C	0.0010	H	0.00 (M)	

SUBTASK NUMBER	SEQUENTIAL TASK NARRATIVE	WORK AREA	PERS ID	MEAN MAN MINUTE	MEAN MINUTE ELAP TIME	Drawings
001	REMOVAL OF OIL TANK MOUNTING LINK ASSY: USING A 16MM OPEN END WRENCH DISCONNECT PRESSURE SENSING LINE, PLUG LINE AND CAP ECU CONNECTION.		A	0.3	0.3	
002	DISCONNECT TWO ELECTRICAL CONNECTORS AT AFT END OF ECU.		A	0.4	0.4	
003	USING A 7MM SPLINE SOCKET AND 1/4 INCH DRIVE RATCHET, DISCONNECT THE ECU GROUND STRAP.		A	0.4	0.4	
004	LOOSEN TWO KNURLED KNOBS BY HAND ON ECU MOUNT BRACKET. LIFT AND ROTATE COUNTERCLOCKWISE (CCW) UNTIL THEY CANNOT ROTATE ANY FURTHER. LIFT MATING PORTION OF EACH KNOB AND TILT FASTNER AWAY FROM ECU.		A	0.5	0.5	

SSC	SS EVAL	PERSON ID	LSAR MAN-HOURS	MANUALLY MEASURED MAN-HOURS
58A		A	0.03	

SUPPORT/TEST EQUIPMENT AND TOOLS

ICC	ITEM NAME	REFERENCE NUMBER	CAGE	QTY/TASK	MB	ACTUAL QUANTITY USED	MANUAL EVALUATION
4	EXT,SKT WR, 1/4X6	TMX60	81343	1.00	EA		
4	HANDLE, RATCH 1/4 D	TM70B	81343	1.00	EA		

SPARE AND REPAIR PARTS

ICC	ITEM NAME	REFERENCE NUMBER	CAGE	QTY/TASK	MB	ACTUAL QUANTITY USED	MANUAL EVALUATION
Y	BOLT,SPLINE	LH90095	64643	0.10	EA		

Done My Computer 100%

FIGURE 24. LSAR-019 Task Analysis Summary.

b. The provisioning analyst can then use the HG Tab Data View to cross-check Provisioning and Task Analysis data for consistent coding. Note that on Figure 25 below, the Task Code where the item is replaced is coded at the “D” O/M level and the SMR and RCT of this repair part also are coded as D items and that MTD and RCT are blank, since this particular item is non-reparable.

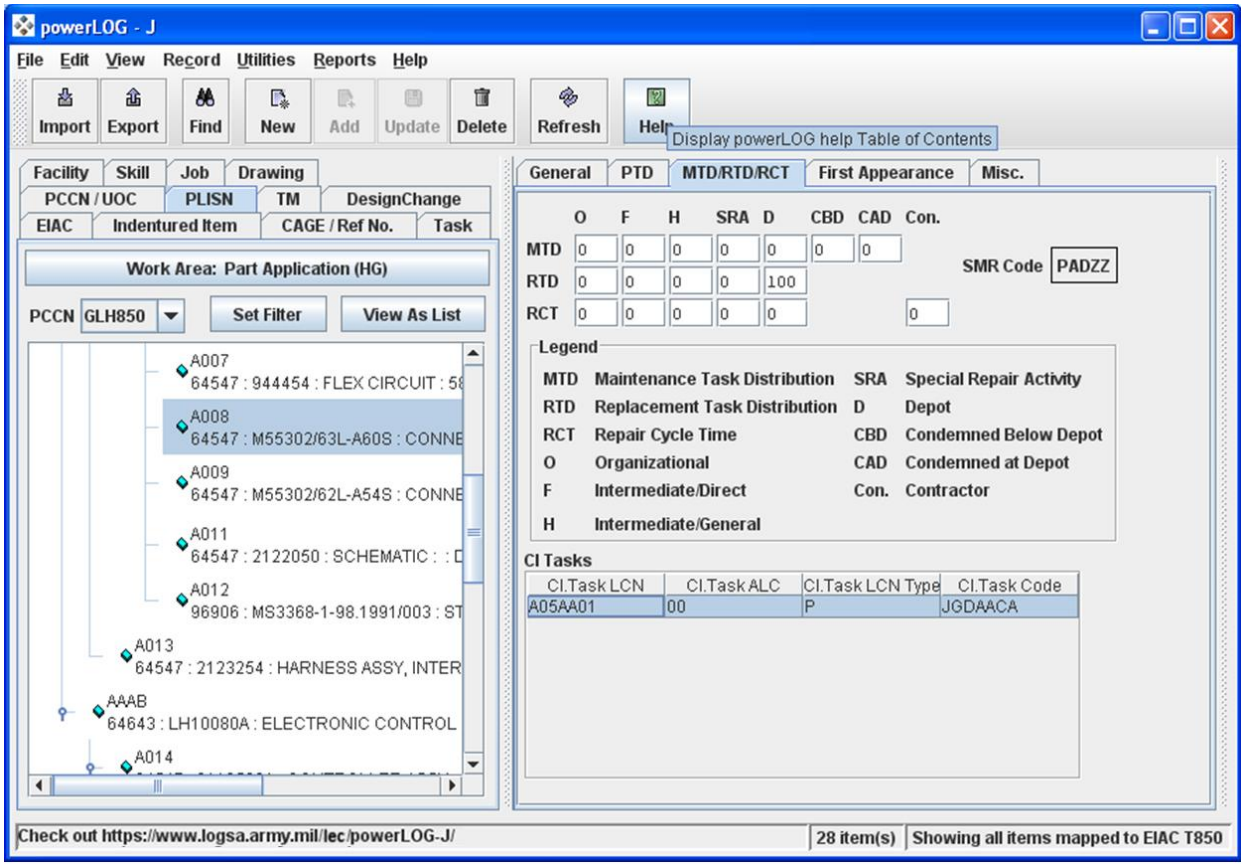

FIGURE 25. PLISN View, HG Data MTD/RTD/RCT Tab with cross data views of SMR Code (HG Table, General Tab) and Task Codes for the provisioned item (CI Table).

9.3. LSAR-068 TASK CODE AND SMR CODE VERIFICATION. This report was created to verify that Tasks and Maintenance Codes are assigned with consistent Operations/ Maintenance levels. Both the Task Code (with the Operations/Maintenance level shown in position 3 of this data element) and the SMR Code of parts used in performing the task are grouped and displayed together. After Tasks and SMR Codes are assigned in powerLOG, this report can give an analyst a tool to easily identify inconsistencies between the Task Analysis and Provisioning documentation using this report. See Figure 26.

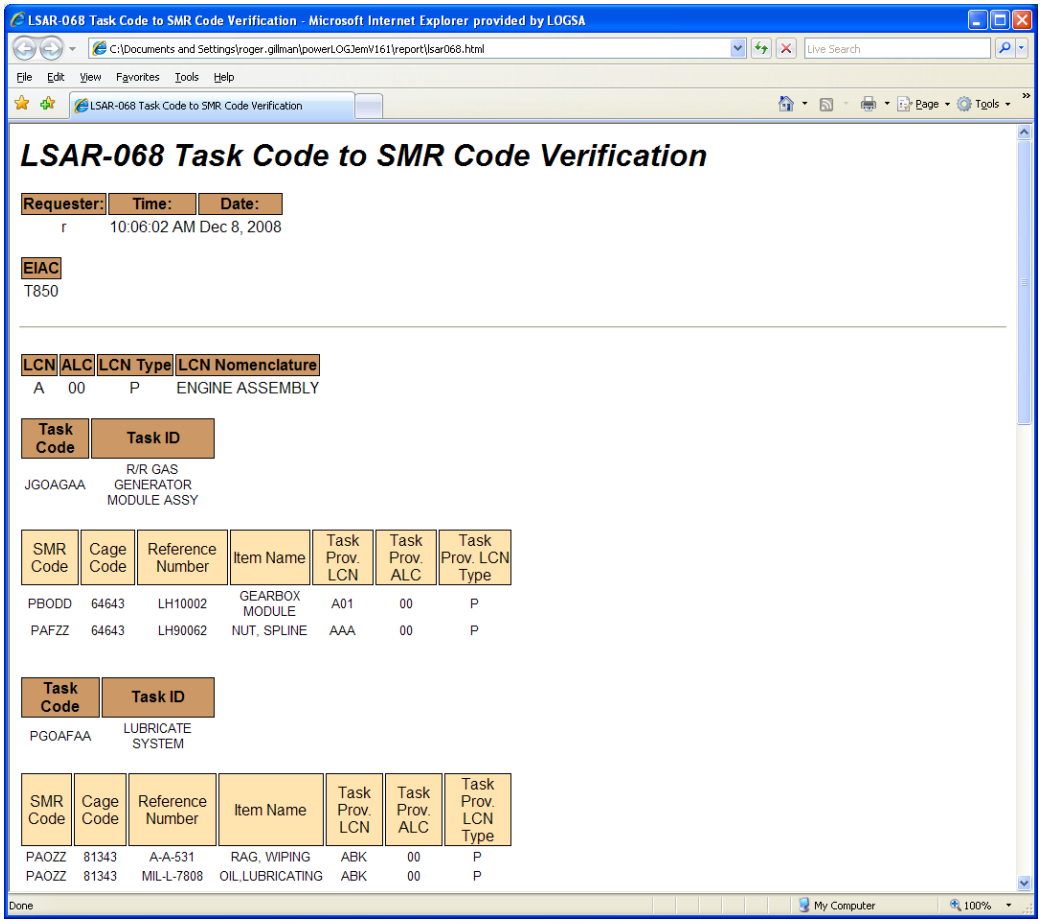

LSAR-068 Task Code to SMR Code Verification - Microsoft Internet Explorer provided by LOGSA

C:\Documents and Settings\roger.gillman\powerLOGJemV161\report\lsar068.html

File Edit View Favorites Tools Help

LSAR-068 Task Code to SMR Code Verification

LSAR-068 Task Code to SMR Code Verification

Requester:	Time:	Date:
r	10:06:02 AM Dec 8, 2008	

EIAC
T850

LCN	ALC	LCN Type	LCN Nomenclature
A	00	P	ENGINE ASSEMBLY

Task Code	Task ID
JGOAGAA	R/R GAS GENERATOR MODULE ASSY

SMR Code	Cage Code	Reference Number	Item Name	Task Prov. LCN	Task Prov. ALC	Task Prov. LCN Type
PBODD	64643	LH10002	GEARBOX MODULE	A01	00	P
PAFZZ	64643	LH90062	NUT, SPLINE	AAA	00	P

Task Code	Task ID
PGOAFAA	LUBRICATE SYSTEM

SMR Code	Cage Code	Reference Number	Item Name	Task Prov. LCN	Task Prov. ALC	Task Prov. LCN Type
PAOZZ	81343	A-A-531	RAG, WIPING	ABK	00	P
PAOZZ	81343	MIL-L-7808	OIL,LUBRICATING	ABK	00	P

Done My Computer 100%

NOTE inconsistency that LCN A, ALC 00, and Task Code JGOAGAA requires two parts SMR Coded PBOOD and PAFZZ

FIGURE 26. LSAR-068, Task Code to SMR Code Verification.

9.4. LSAR-080 BILL OF MATERIALS LIST. The Bill of Materials list contains two parts. Part I (Parts List) identifies each assembly and provides a listing of the items related to or contained in the assembly. The summary provides a vehicle for comparing the powerLOG database against the assembly drawings to ensure items in the top-down breakdown of the assembly are contained in the LSAR data tables. Part II (Error Listing) is automatically produced when the LSA-080 is requested. See Figure 27. Part I, identifies parts to the assemblies of which they are contained. Each assembly will only show parts one indenture lower, e.g., a "C" indentured assembly will only show "D" indentured items. These items may be both repair parts and spares. If the item is a spare, a separate page breakdown of the item will appear on the report. When selected by PCCN, PLISN and IC are used to sort items to assemblies, with all items sorted in ascending PLISN sequence of one IC greater than the IC of the assembly PLISN record placed below the assembly PLISN, until an IC is encountered that is equal to or greater than the assembly IC. The NHA PLISN is a value found in table HH which is one indenture less than the item with a value closest to the item's PLISN value and without an NHA-Indicator of "*".

The Part II is produced automatically when the LSAR-080 report is requested and data errors are found. The report identifies the items having erroneous data, and provides a message describing the type of error found. The errors that the edit routine will detect

follows:

a. Error Code 1. If an item is SMR coded, with "Z" or "B" in the fourth position, but parts are contained below this item with source codes other than K- or XA, then this error is output (appears on Part I with asterisks by both the assembly/part location).

b. Error Code 2. An item does not have an identifiable NHA, e.g., if the Indenture structure lists the item as an "F" and the logical NHA by file sort is a "D", this error is output (Part II only).

c. Error Code 3. No IC. This item appears on Part II only, when the selection is made by PCCN. If the selection is by LCN, the item is shown on both Parts I and II.

d. Error Code 4. This is an item whose SMR code is blank or incomplete (without 3rd/4th positions).

e. Error Code 5. The following are allowable SMR recoverability codes based on the repair code:

If position 4 (repair) is:	position 5 (recoverability) must be:
Z	Z, A
O (2, 3, 4, 5, 6) Navy only	O, F, H, G, L, K, D, A
F	F, H, G, L, K, D, A
H	H, G, L, K, D, A
G	G, L, K, D, A
K	L, K, D, A
L	L, K, D, A
D	D, A
B	Z, A

f. Error Code 6. An assembly is SMR-coded repairable (e.g., SMR-4 is not Z or B), but has no parts breakout beneath it.

g. Error Code 7. A warning that the item is identified as part of a kit, by NHA Indicator of Asterisk.

h. Items having the error codes 2 and 3 with PCCN selection are listed on the LSAR-080, Part II only. Other errors are flagged with "**" to the right of the line the error appears in Part I and also displayed in Part II. The error messages are displayed on Part II.

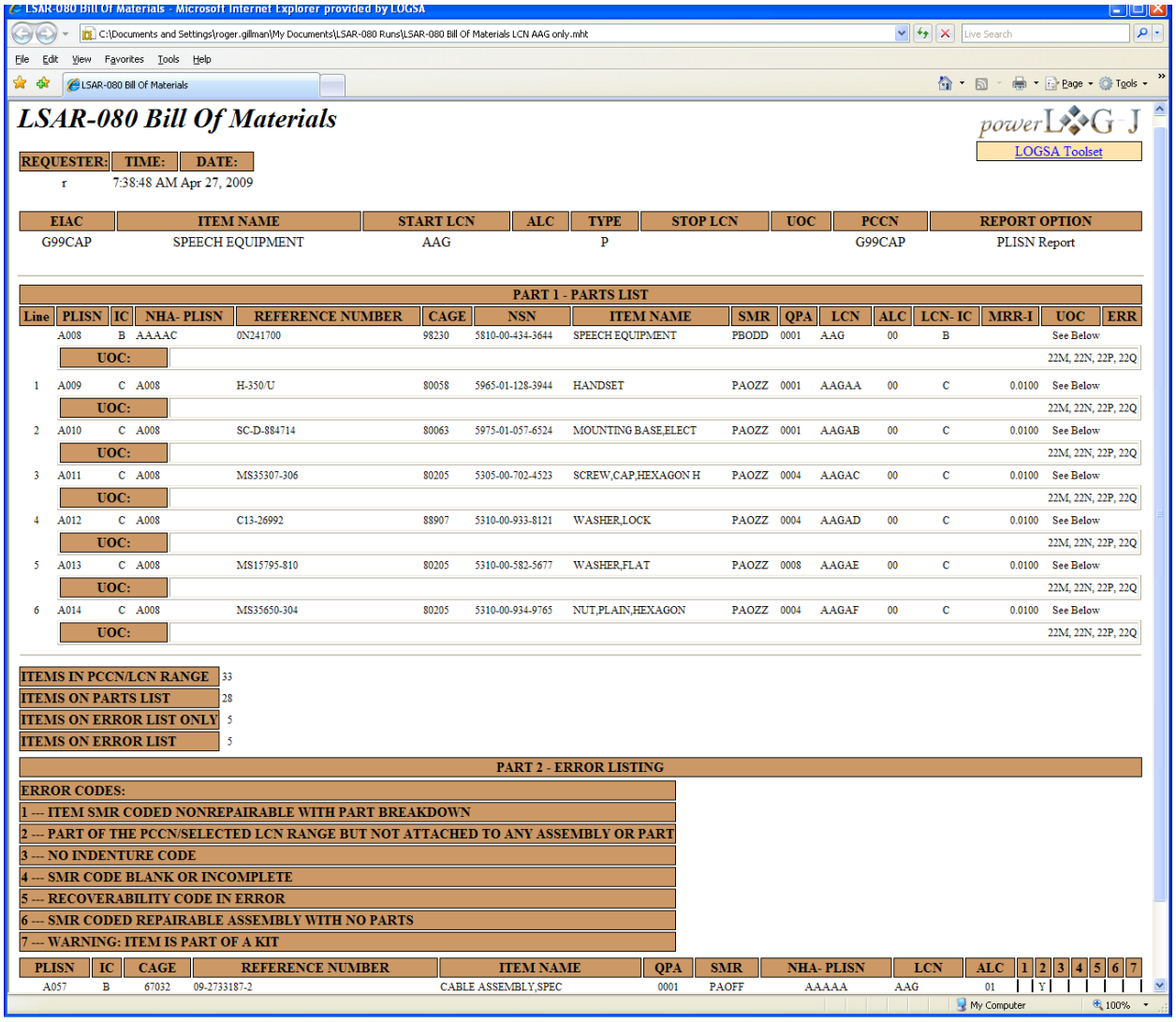

LSAR-080 Bill Of Materials - Microsoft Internet Explorer provided by LOGSA

C:\Documents and Settings\roger.gillman\My Documents\LSAR-080 Runs\LSAR-080 Bill Of Materials LCN AAG only.mht

File Edit View Favorites Tools Help

LSAR-080 Bill Of Materials

LSAR-080 Bill Of Materials

powerLOGJ

LOGSA Toolset

REQUESTER:	TIME:	DATE:
r	7:38:48 AM	Apr 27, 2009

EIAC	ITEM NAME	START LCN	ALC	TYPE	STOP LCN	UOC	PCCN	REPORT OPTION
G99CAP	SPEECH EQUIPMENT	AAG		P			G99CAP	PLISN Report

PART 1 - PARTS LIST

Line	PLISN	IC	NHA- PLISN	REFERENCE NUMBER	CAGE	NSN	ITEM NAME	SMR	QPA	LCN	ALC	LCN- IC	MRR-I	UOC	ERR
	A008	B	AAAAC	0N241700	98230	5810-00-434-3644	SPEECH EQUIPMENT	PBODD	0001	AAG	00	B		See Below	
	UOC:													22M, 22N, 22P, 22Q	
1	A009	C	A008	H-350/U	80058	5965-01-128-3944	HANDSET	PAOZZ	0001	AAGAA	00	C	0.0100	See Below	
	UOC:													22M, 22N, 22P, 22Q	
2	A010	C	A008	SC-D-884714	80063	5975-01-057-6524	MOUNTING BASE,ELECT	PAOZZ	0001	AAGAB	00	C	0.0100	See Below	
	UOC:													22M, 22N, 22P, 22Q	
3	A011	C	A008	MS35307-306	80205	5305-00-702-4523	SCREW,CAP,HEXAGON H	PAOZZ	0004	AAGAC	00	C	0.0100	See Below	
	UOC:													22M, 22N, 22P, 22Q	
4	A012	C	A008	C13-26992	88907	5310-00-933-8121	WASHER,LOCK	PAOZZ	0004	AAGAD	00	C	0.0100	See Below	
	UOC:													22M, 22N, 22P, 22Q	
5	A013	C	A008	MS15795-810	80205	5310-00-582-5677	WASHER,FLAT	PAOZZ	0008	AAGAE	00	C	0.0100	See Below	
	UOC:													22M, 22N, 22P, 22Q	
6	A014	C	A008	MS35650-304	80205	5310-00-934-9765	NUT,PLAIN,HEXAGON	PAOZZ	0004	AAGAF	00	C	0.0100	See Below	
	UOC:													22M, 22N, 22P, 22Q	

ITEMS IN PCCN/LCN RANGE	33
ITEMS ON PARTS LIST	28
ITEMS ON ERROR LIST ONLY	5
ITEMS ON ERROR LIST	5

PART 2 - ERROR LISTING

ERROR CODES:
1 --- ITEM SMR CODED NONREPAIRABLE WITH PART BREAKDOWN
2 --- PART OF THE PCCN/SELECTED LCN RANGE BUT NOT ATTACHED TO ANY ASSEMBLY OR PART
3 --- NO INDENTURE CODE
4 --- SMR CODE BLANK OR INCOMPLETE
5 --- RECOVERABILITY CODE IN ERROR
6 --- SMR CODED REPAIRABLE ASSEMBLY WITH NO PARTS
7 --- WARNING: ITEM IS PART OF A KIT

PLISN	IC	CAGE	REFERENCE NUMBER	ITEM NAME	QPA	SMR	NHA- PLISN	LCN	ALC	1	2	3	4	5	6	7
A057	B	67032	09-2733187-2	CABLE ASSEMBLY,SPEC	0001	PAOFF	AAAAA	AAG	01		Y					

My Computer 100%

FIGURE 27. LSAR-080, Bill of Materials List

9.5. LSAR-126 LCN/PCCN INDENTURED STRUCTURE TREE. This summary provides a concise, graphical summary of information pertaining to a system/equipment breakdown. Each item is blocked in and indented to the proper level in the hardware family tree, and displayed by line relationship beneath the appropriate assembly in which the item is contained. The format is contained on Figure 28.

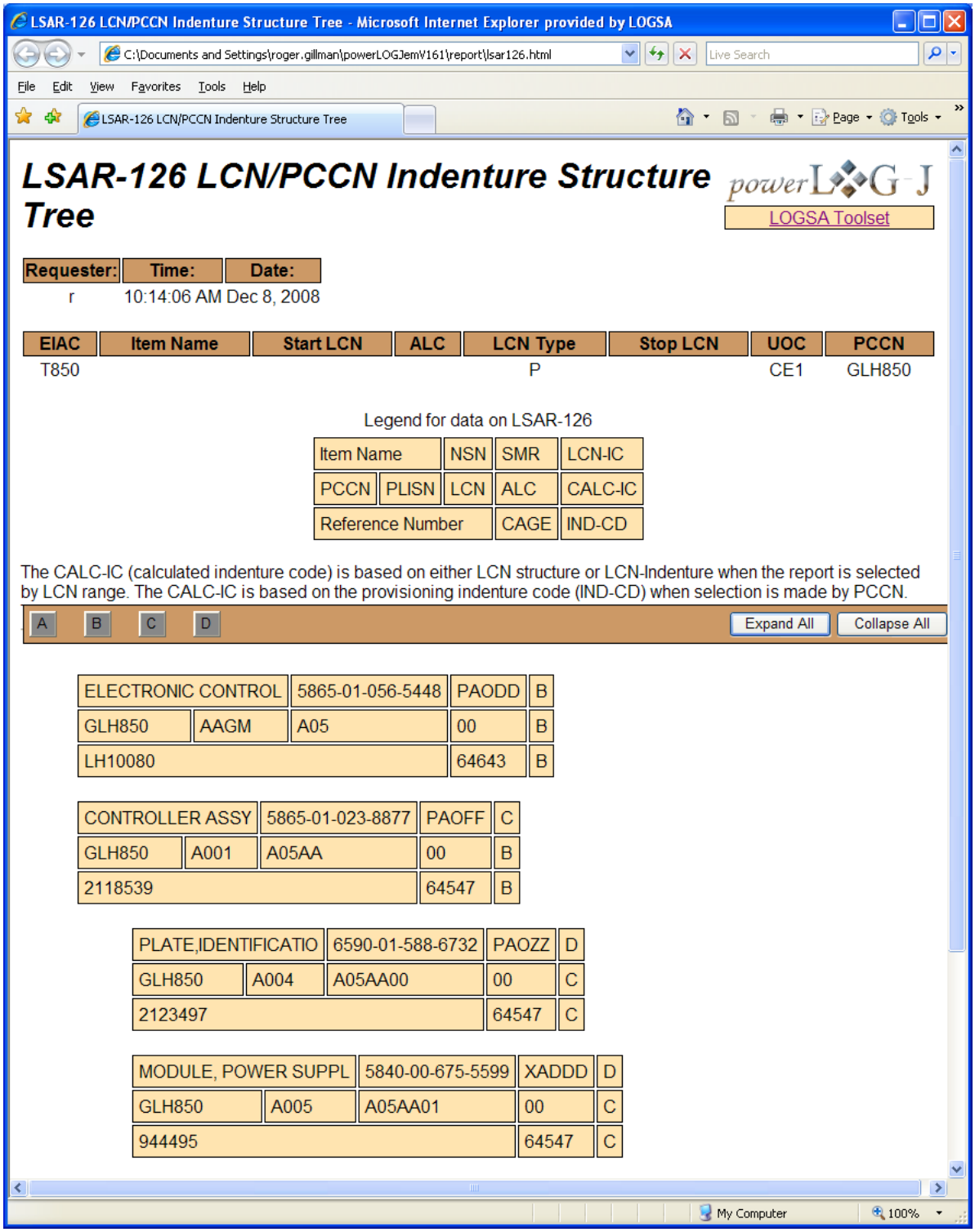

LSAR-126 LCN/PCCN Indenture Structure Tree - Microsoft Internet Explorer provided by LOGSA

C:\Documents and Settings\roger.gillman\powerLOGJemV161\report\lsar126.html

File Edit View Favorites Tools Help

LSAR-126 LCN/PCCN Indenture Structure Tree

LSAR-126 LCN/PCCN Indenture Structure Tree

powerLOGJ

LOGSA Toolset

Requester:	Time:	Date:
r	10:14:06 AM	Dec 8, 2008

EIAC	Item Name	Start LCN	ALC	LCN Type	Stop LCN	UOC	PCCN
T850				P		CE1	GLH850

Legend for data on LSAR-126

Item Name		NSN	SMR	LCN-IC
PCCN	PLISN	LCN	ALC	CALC-IC
Reference Number			CAGE	IND-CD

The CALC-IC (calculated indenture code) is based on either LCN structure or LCN-Indenture when the report is selected by LCN range. The CALC-IC is based on the provisioning indenture code (IND-CD) when selection is made by PCCN.

A B C D Expand All Collapse All

ELECTRONIC CONTROL		5865-01-056-5448	PAODD	B
GLH850	AAGM	A05	00	B
LH10080			64643	B

CONTROLLER ASSY		5865-01-023-8877	PAOFF	C
GLH850	A001	A05AA	00	B
2118539			64547	B

PLATE,IDENTIFICATIO		6590-01-588-6732	PAOZZ	D
GLH850	A004	A05AA00	00	C
2123497			64547	C

MODULE, POWER SUPPL		5840-00-675-5599	XADDD	D
GLH850	A005	A05AA01	00	C
944495			64547	C

My Computer 100%

FIGURE 28. LCN/PCCN Indenture Structure Tree.

9.6. LSAR-151 PROVISIONING PARTS LIST INDEX. This summary provides a Cross-reference between reference numbers and the applicable PLISN of the

provisioning list. It provides a ready reference of usage and location within the provisioning list for a given reference number. The report can be generated in reference number, LCN, or PLISN sequence. Additional data which further describes the item at its usage level(s) are provided for the user's information (i.e., item name, quantities, SMR, etc.). The report can be used as a cross check of NHA PLISN assignment since this information is used to determine the report NHA Reference Number that is displayed in the far right column. The format is contained on Figure 29.

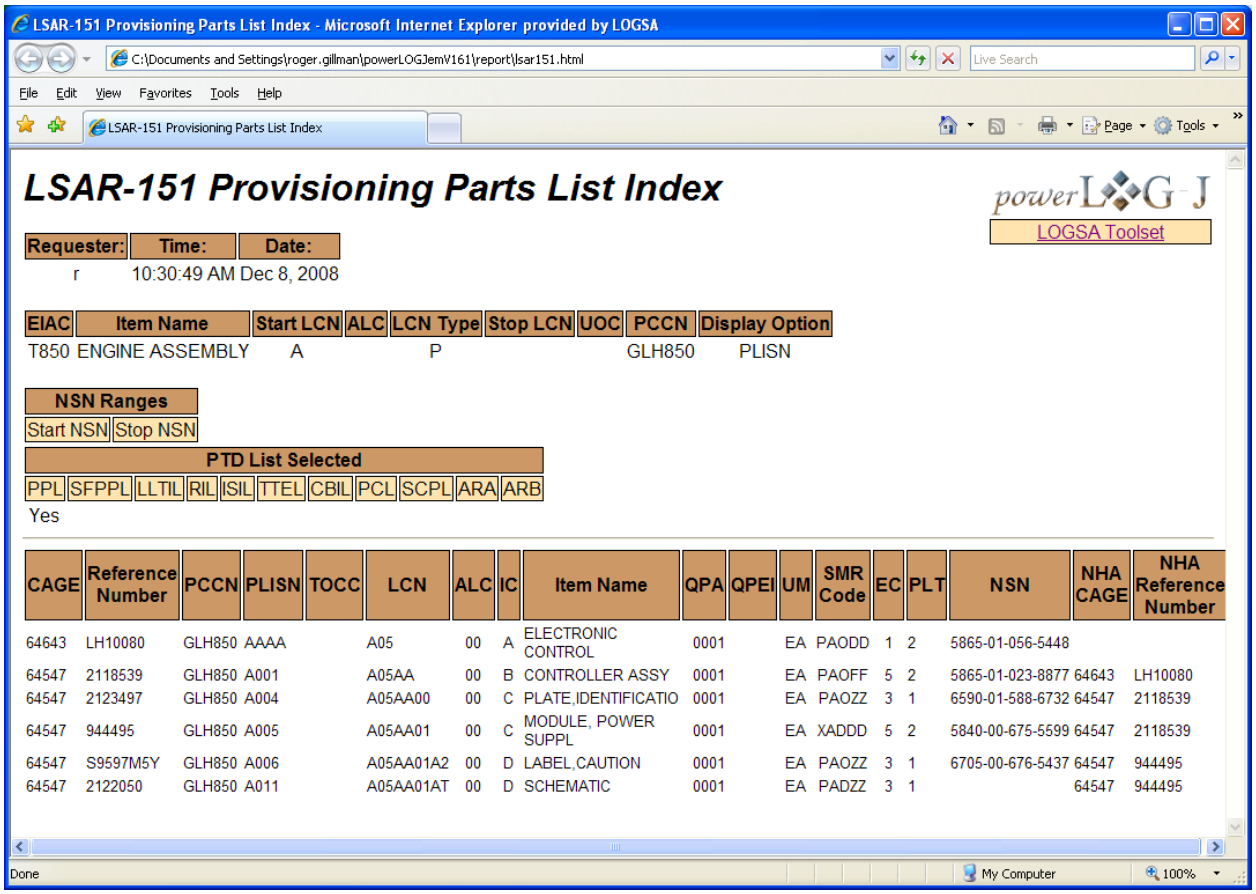

LSAR-151 Provisioning Parts List Index

Requester:	Time:	Date:
r	10:30:49 AM Dec 8, 2008	

EIAC	Item Name	Start LCN	ALC	LCN Type	Stop LCN	UOC	PCCN	Display Option
T850	ENGINE ASSEMBLY	A		P			GLH850	PLISN

NSN Ranges	
Start NSN	Stop NSN

PTD List Selected										
PPL	SFPPL	LLTIL	RIL	ISIL	TTEL	CBIL	PCL	SCPL	ARA	ARB
Yes										

CAGE	Reference Number	PCCN	PLISN	TOCC	LCN	ALC	IC	Item Name	QPA	QPEI	UM	SMR Code	EC	PLT	NSN	NHA CAGE	NHA Reference Number
64643	LH10080	GLH850	AAAA		A05	00	A	ELECTRONIC CONTROL	0001		EA	PAODD	1	2	5865-01-056-5448		
64547	2118539	GLH850	A001		A05AA	00	B	CONTROLLER ASSY	0001		EA	PAOFF	5	2	5865-01-023-8877	64643	LH10080
64547	2123497	GLH850	A004		A05AA00	00	C	PLATE,IDENTIFICATIO	0001		EA	PAOZZ	3	1	6590-01-588-6732	64547	2118539
64547	944495	GLH850	A005		A05AA01	00	C	MODULE, POWER SUPPL	0001		EA	XADDD	5	2	5840-00-675-5599	64547	2118539
64547	S9597M5Y	GLH850	A006		A05AA01A2	00	D	LABEL,CAUTION	0001		EA	PAOZZ	3	1	6705-00-676-5437	64547	944495
64547	2122050	GLH850	A011		A05AA01AT	00	D	SCHEMATIC	0001		EA	PADZZ	3	1		64547	944495

FIGURE 29. LSAR-151. Provisioning Parts List Index.

9.7. LSAR-152 PLISN ASSIGNMENT REASSIGNMENT. This summary provides a listing, by reference number, of PLISN, Indenture Code (IC), NHA PLISN, and PRIOR ITEM PLISN, assigned by the powerLOG system based on parameters of the assignment selections. The summary will depict the file content before and after the assignments or reassignments are made (PLISNs are assigned using the EBCDIC collating sequence). This report can be used to assign provisioning-related control and reference data to powerLOG. An example of the report is contained on Figure 30. The report can also be run as a review report only, and then used by a provisioning analyst to verify the database structure, since missing indenture levels will be displayed on a Part II error report.

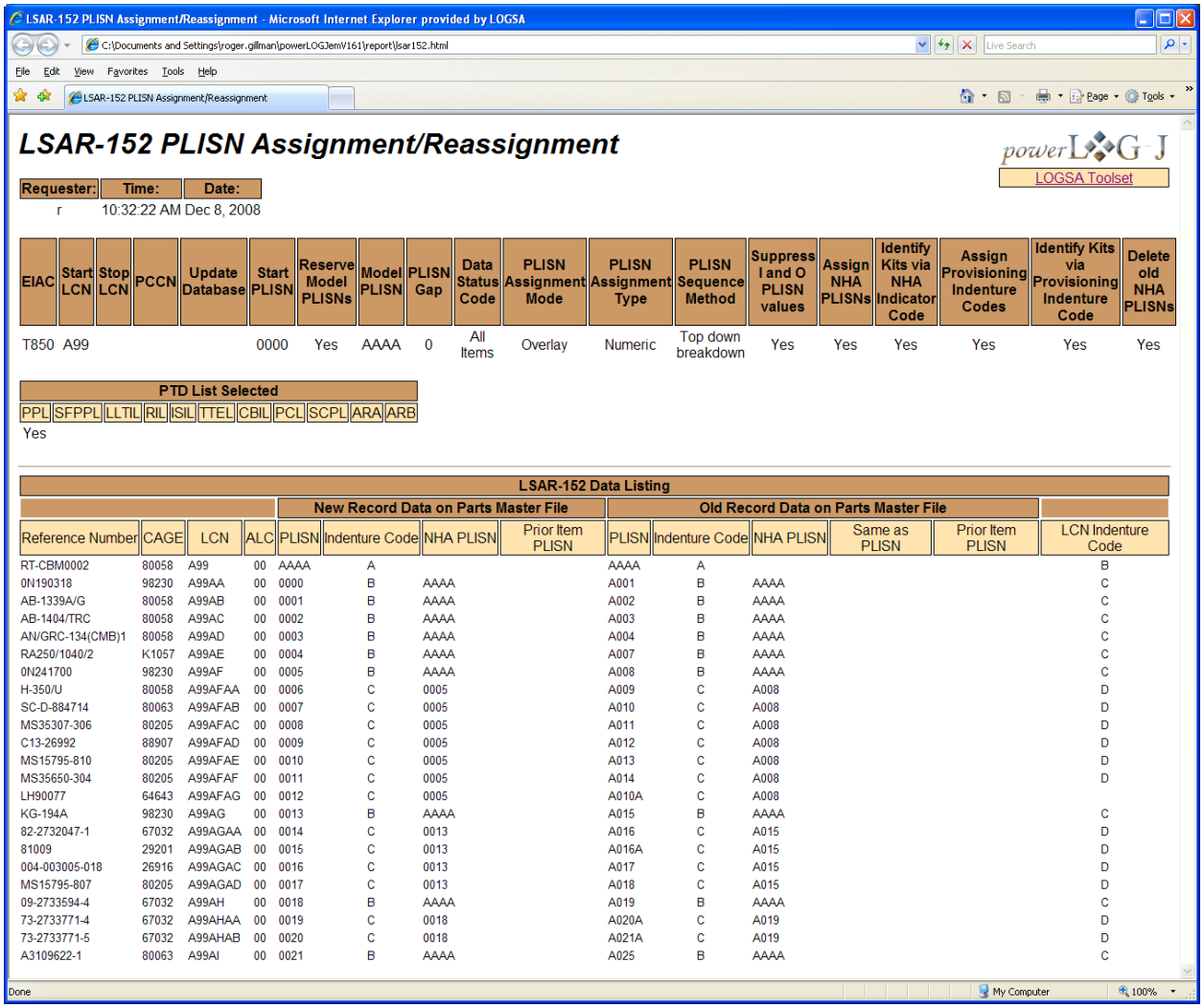

LSAR-152 PLISN Assignment/Reassignment

Requester:	Time:	Date:
r	10:32:22 AM	Dec 8, 2008

EIAC	Start LCN	Stop LCN	PCCN	Update Database	Start PLISN	Reserve Model PLISNs	Model PLISN	PLISN Gap	Data Status Code	PLISN Assignment Mode	PLISN Assignment Type	PLISN Sequence Method	Suppress I and O PLISN values	Assign NHA PLISNs	Identify Kits via NHA Indicator Code	Assign Provisioning Indenture Codes	Identify Kits via Provisioning Indenture Code	Delete old NHA PLISNs
T850	A99				0000	Yes	AAAA	0	All Items	Overlay	Numeric	Top down breakdown	Yes	Yes	Yes	Yes	Yes	Yes

PTD List Selected										
PPL	SFPPL	LLTIL	RIL	ISIL	TTEL	CBIL	PCL	SCPL	ARA	ARB
Yes										

LSAR-152 Data Listing

				New Record Data on Parts Master File				Old Record Data on Parts Master File					
Reference Number	CAGE	LCN	ALC	PLISN	Indenture Code	NHA PLISN	Prior Item PLISN	PLISN	Indenture Code	NHA PLISN	Same as PLISN	Prior Item PLISN	LCN Indenture Code
RT-CBM0002	80058	A99	00	AAAA	A			AAAA	A				B
0N190318	98230	A99AA	00	0000	B	AAAA		A001	B	AAAA			C
AB-1339A/G	80058	A99AB	00	0001	B	AAAA		A002	B	AAAA			C
AB-1404/TRC	80058	A99AC	00	0002	B	AAAA		A003	B	AAAA			C
AN/GRC-134(CMB)1	80058	A99AD	00	0003	B	AAAA		A004	B	AAAA			C
RA250/1040/2	K1057	A99AE	00	0004	B	AAAA		A007	B	AAAA			C
0N241700	98230	A99AF	00	0005	B	AAAA		A008	B	AAAA			C
H-350/U	80058	A99AFAA	00	0006	C	0005		A009	C	A008			D
SC-D-884714	80063	A99AFAB	00	0007	C	0005		A010	C	A008			D
MS35307-306	80205	A99AFAC	00	0008	C	0005		A011	C	A008			D
C13-26992	88907	A99AFAD	00	0009	C	0005		A012	C	A008			D
MS15795-810	80205	A99AFAE	00	0010	C	0005		A013	C	A008			D
MS35650-304	80205	A99AFAF	00	0011	C	0005		A014	C	A008			D
LH90077	64643	A99AFAG	00	0012	C	0005		A010A	C	A008			
KG-194A	98230	A99AG	00	0013	B	AAAA		A015	B	AAAA			C
82-2732047-1	67032	A99AGAA	00	0014	C	0013		A016	C	A015			D
81009	29201	A99AGAB	00	0015	C	0013		A016A	C	A015			D
004-003005-018	26916	A99AGAC	00	0016	C	0013		A017	C	A015			D
MS15795-807	80205	A99AGAD	00	0017	C	0013		A018	C	A015			D
09-2733594-4	67032	A99AH	00	0018	B	AAAA		A019	B	AAAA			C
73-2733771-4	67032	A99AHAA	00	0019	C	0018		A020A	C	A019			D
73-2733771-5	67032	A99AHAB	00	0020	C	0018		A021A	C	A019			D
A3109622-1	80063	A99AI	00	0021	B	AAAA		A025	B	AAAA			C

FIGURE 30. PLISN Assignment/Reassignment.

9.8. CALCULATIONS UTILITIES: MAINTENANCE REPLACEMENT RATE (MRR). PowerLOG contains utilities which can perform data calculations based on existing reliability and maintainability data in powerLOG. Using these utilities will result in consistent values for both reliability failure rates, inherent maintainability factors, and Task Frequencies, and provisioning usage rates (MRRs). The results can be shown in a report form only, or can update the powerLOG database with the calculated results.

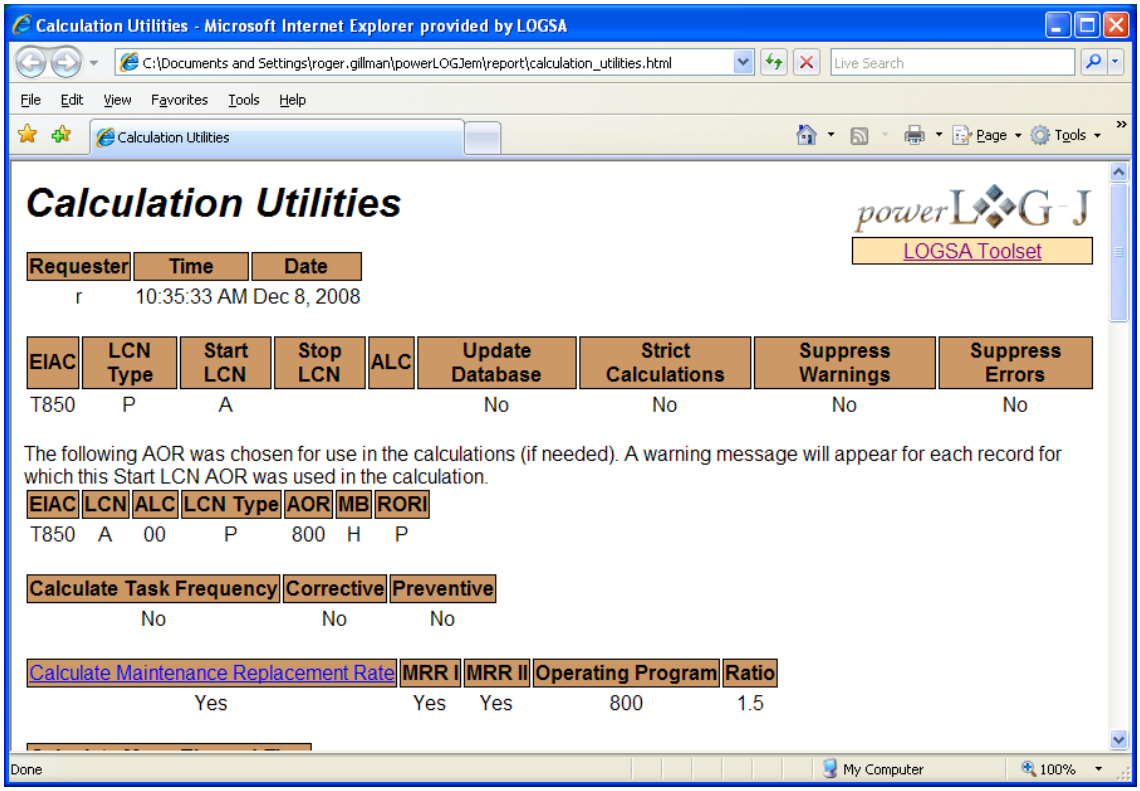

Calculation Utilities - Microsoft Internet Explorer provided by LOGSA

C:\Documents and Settings\roger.gillman\powerLOGJem\report\calculation_utilities.html

Calculation Utilities

powerLOGJ

LOGSA Toolset

Requester	Time	Date
r	10:35:33 AM Dec 8, 2008	

EIAC	LCN Type	Start LCN	Stop LCN	ALC	Update Database	Strict Calculations	Suppress Warnings	Suppress Errors
T850	P	A			No	No	No	No

The following AOR was chosen for use in the calculations (if needed). A warning message will appear for each record for which this Start LCN AOR was used in the calculation.

EIAC	LCN	ALC	LCN Type	AOR	MB	RORI
T850	A	00	P	800	H	P

Calculate Task Frequency	Corrective	Preventive
No	No	No

Calculate Maintenance Replacement Rate	MRR I	MRR II	Operating Program	Ratio
Yes	Yes	Yes	800	1.5

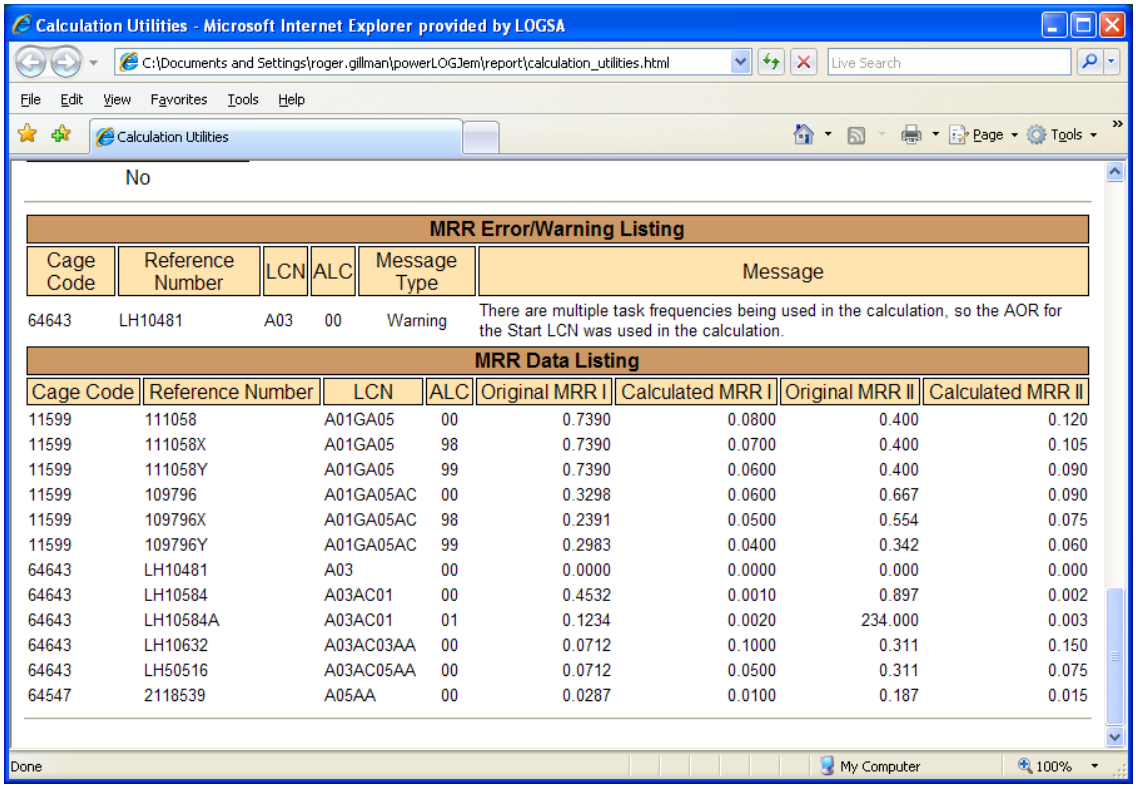

Calculation Utilities - Microsoft Internet Explorer provided by LOGSA

C:\Documents and Settings\roger.gillman\powerLOGJem\report\calculation_utilities.html

No

MRR Error/Warning Listing

Cage Code	Reference Number	LCN	ALC	Message Type	Message
64643	LH10481	A03	00	Warning	There are multiple task frequencies being used in the calculation, so the AOR for the Start LCN was used in the calculation.

MRR Data Listing

Cage Code	Reference Number	LCN	ALC	Original MRR I	Calculated MRR I	Original MRR II	Calculated MRR II
11599	111058	A01GA05	00	0.7390	0.0800	0.400	0.120
11599	111058X	A01GA05	98	0.7390	0.0700	0.400	0.105
11599	111058Y	A01GA05	99	0.7390	0.0600	0.400	0.090
11599	109796	A01GA05AC	00	0.3298	0.0600	0.667	0.090
11599	109796X	A01GA05AC	98	0.2391	0.0500	0.554	0.075
11599	109796Y	A01GA05AC	99	0.2983	0.0400	0.342	0.060
64643	LH10481	A03	00	0.0000	0.0000	0.000	0.000
64643	LH10584	A03AC01	00	0.4532	0.0010	0.897	0.002
64643	LH10584A	A03AC01	01	0.1234	0.0020	234.000	0.003
64643	LH10632	A03AC03AA	00	0.0712	0.1000	0.311	0.150
64643	LH50516	A03AC05AA	00	0.0712	0.0500	0.311	0.075
64547	2118539	A05AA	00	0.0287	0.0100	0.187	0.015

FIGURE 31. Calculation Utility: Maintenance Replacement Rate.

9.9 DATABASE ALTERATIONS. PowerLOG contains several pre-made database alterations which were developed, based on changing maintenance policy or data uses. These include database changes for both LMP and Two-Level Maintenance requirements. Shown below are the current database alterations available.

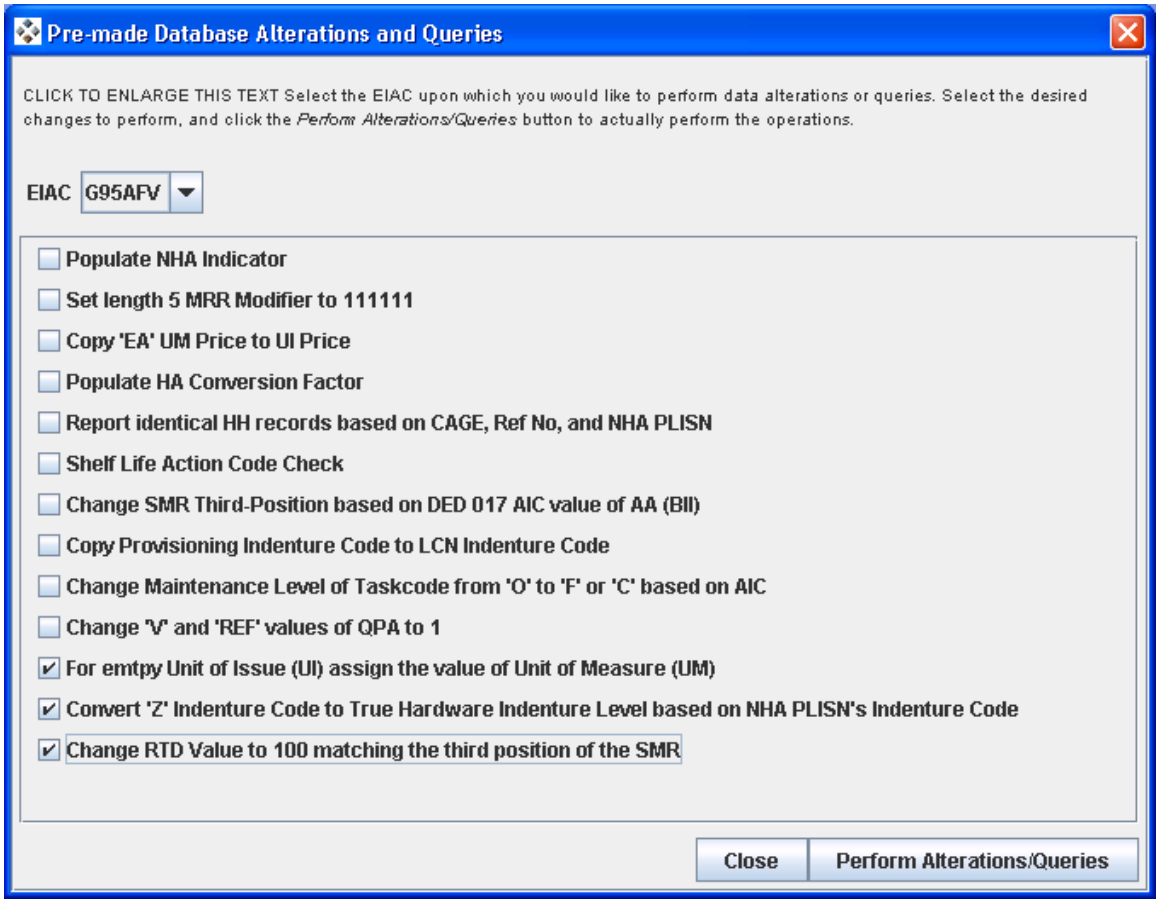

FIGURE 32. Pre-Made Database Alterations Selection Screen.

APPENDIX A

ACRONYM LISTING

ADP	Automated Data Processing
ALC	Alternate Logistic Support Analysis Control Number Code
ARN	Additional Reference Number
ASCII	American Standard Code for Information Interchange
AVIM	Aviation Intermediate Maintenance
AVUM	Aviation Unit Maintenance
BOI	Basis of Issue
CAGE	Commercial and Government Entity Code
CBIL	Common and Bulk Items List
CCSS	Commodity Command Standard System
CFI	Card Format Indicator
CSN	Card Sequence Number
DCN	Design Change Notice
DIC	Document Identifier Code
DLIS	Defense Logistic Information System
DLSC	Defense Logistics Services Center
DSRC	DLSC Screening Requirement Code
DOD	Department of Defense
EBCDIC	Extended Binary Coded Decimal Interchange Code
EIAC	End Item Acronym Code
FGC	Functional Group Code
FSC	Federal Supply Class
GEIA	Government Electronic Information Technology Association
IAW	In Accordance With

IC	Indenture Code
ICC	Item Category Code
ISIL	Interim Support Items List
LCN	Logistic Support Analysis Control Number
LLTIL	Long Lead Time Items List
LMP	Logistics Modernization Program
LSAR	Logistic Support Analysis Record
MAC	Maintenance Allocation Chart
MOS	Military Occupational Specialty
MRR	Maintenance Replacement Rate
MSC	Major Subordinate Command
MTD	Maintenance Task Distribution
NHA	Next Higher Assembly
NHA-IND	NHA PLISN Indicator
NIIN	National Item Identification Number
NSN	National Stock Number
ORDC	Output Data Request Code
ORR	Overhaul Replacement Rate
PBF	Provisioning Baseline File
PCCN	Provisioning Contract Control Number
PCL	Post Conference List
PIC	Priority Indicator Code
PII	Procurement Instrument Identification
PIIN	PII Number
PL	Provisioning List
PLCC	Provisioning List Category Code
PLISN	Provisioning List Item Sequence Number

PMAC	Preliminary Maintenance Allocation Chart
PMR	Provisioning Master Record
PPL	Provisioning Parts List
PPLI	Provisioning Parts Listing Index
PTD	Provisioning Technical Documentation
PSN	Package Sequence Number
PUC	Provisioning Unit of Measure Price Code
QPA	Quantity per Assembly
QPEI	Quantity per End Item
RDOC	Reference Designation Overflow Code
RILSA	Resident Integrated Logistic Support Activity
RNCC	Reference Number Category Code
RNVC	Reference Number Variation Code
RPSTL	Repair Parts and Special Tools List
RIL	Repairable Items List
RTD	Replacement Task Distribution
SCN	Submitter Control Number
SCPL	System Configuration Provisioning List
SESAME	Selected Essential-Item Stockage for Availability Method
SFPPL	Short Form Provisioning Parts List
SIC	Suppression Indicator Code
SMR	Source, Maintenance and Recoverability Code
SPCC	Ships Parts Control Center
SPIIN	Supplementary PIIN
SRA	Specialized Repair Activity
SSC	Skill Specialty Code
TM	Technical Manual

TMDE	Test, Measurement and Diagnostic Equipment
TOCC	Type of Change Code
TTEL	Tools and Test Equipment List
UIi	Unique Item Identifier
UOC	Usable On Code
UM	Unit of Measure
USAMC	U.S. Army Materiel Command
WG	Wage Grade
WUC	Work Unit Code

The proponent for this pamphlet is the USAMC Logistics Support Activity and it is available in electronic, Portable Document Format (PDF) only. Users are invited to send comments to the Commander, USAMC Logistics Support Activity, ATTN: AMXLS-AL, Redstone Arsenal, AL 35898-5000, DSN: 645-984, COMM: (256) 955-9847 or E-MAIL: logsa.powerlog_help@conus.army.mil

JAMES E. RENTZ
Colonel, LG
Commanding

Distribution: S
Pub Control OFF- 2