TECHNICAL MANUAL

OPERATOR'S AND UNIT-MAINTENANCE MANUAL

20K GALLON WATER STORAGE AND DISTRIBUTION SYSTEM MODEL 2OKWSDS (NSN: 4320-01-382-2684) (EIC: ZIN)

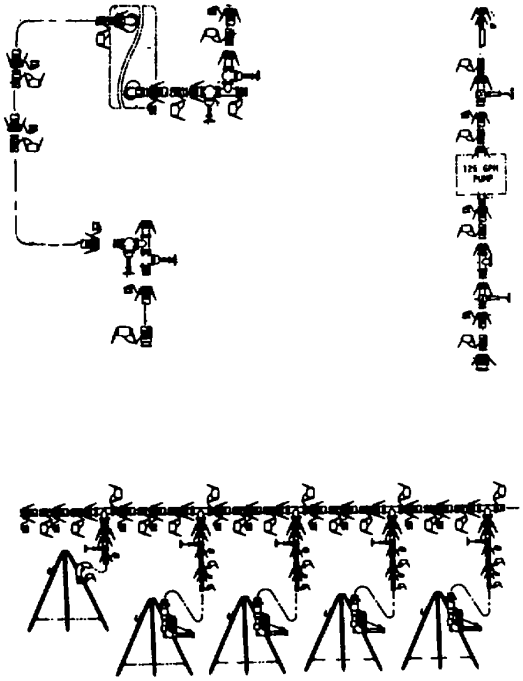

HOW TO USE THIS MANUAL iii

EQUIPMENT DESCRIPTION AND DATA 1-3

OPERATION UNDER USUAL CONDITIONS 2-15

OPERATOR TROUBLESHOOTING PROCEDURES 3-1

UNIT MAINTENANCE PROCEDURES 4-17

MAINTENANCE ALLOCATION CHART B-1

COMPONENTS OF END ITEM AND BASIC ISSUE ITEMS LIST C-1

EXPENDABLE/DURABLE SUPPLIES AND MATERIALS LIST E-1

ALPHABETICAL INDEX INDEX-1

DISTRIBUTION STATEMENT A: Approved for public release; distribution is unlimited.

HEADQUARTERS, DEPARTMENT OF THE ARMY
31 AUGUST 1994

DPS/USAPPC - 13 Oct 94 - 700 00394 1618-M

CHANGE

NO.1

HEADQUARTERS
DEPARTMENT OF THE ARMY
WASHINGTON, D.C., 31 July 1996

OPERATOR'S AND UNIT
MAINTENANCE MANUAL

20K GALLON WATER STORAGE
AND
DISTRIBUTION SYSTEM
MODEL 20KWSDS
(NSN: 4320-01-382-2684) (EIC: ZIN)

DISTRIBUTION STATEMENT A: Approved for public release; distribution is unlimited

TM 10-4610-237-12, 31 August 1994, is changed as follows:

1. Remove and insert pages as indicated below. New or changed text material is indicated by a vertical bar in the margin. An illustration change is indicated by a miniature pointing hand.

Remove pages	Insert pages
2-21 and 2-22	2-21 and 2-22
2-25 and 2-26	2-25 and 2-26
2-31 and 2-32	2-31 and 2-32
2-35 and 2-36	2-35 and 2-36
4-27 through 4-30	4-27 through 4-30
B-7/(B-8 Blank)	B-7/(B-8 Blank)
C-1 and C-2	C-1 and C-2

2. Retain this sheet in front of manual for reference purposes.

By Order of the Secretary of the Army:

DENNIS J. REIMER
General, United States Army
Chief of Staff

Official:

JOEL B. HUDSON
Administrative Assistant to the
Secretary of the Army
02019

DISTRIBUTION:
To be distributed in accordance with DA Form 12-25-E, block no. 6238, requirements for TM 10-4610-237-12.

WARNINGS

HIGH PRESSURE

Do not open hose couplings when water system is under pressure. Hose end can whip, causing injury to personnel and damage to equipment.

CONTAMINATION HAZARD

To prevent contamination of drinking water, make sure all couplings are capped and plugged when components are not connected or not in use.

Keep dirt, mud, sand and debris from entering open couplings during assembly and disassembly.

Have water tested by medical personnel before dispensing to users.

Do not use petroleum based lubricants in the water system.

HEAVY EQUIPMENT HAZARD

Lifting or moving heavy equipment incorrectly can cause serious injury. Do not try to lift or move more than 50 pounds by yourself. Get an assistant. Bend legs while lifting. Don't support heavy weight with your back.

Always use assistants during lifting operations. Use guide ropes to move hanging assemblies.

A lack of attention or being in an improper position during lifting operations can result in serious injury or death. Pay close attention to movements of assemblies being lifted. Do not stand under lifted assembly or in a position where you could be pinned against another object. Watch your footing.

Hoist used to lift water tank from water tank chest must have minimum lifting capacity of 750 pounds.

FIRE HAZARD

To prevent injury to personnel and damage to equipment, do not over-fill fuel tanks on a 125 gpm pump.

Make sure a fire extinguisher is nearby when refueling or operating the water pump. Refer to the applicable TM for correct filling procedures.

FIRST AID

For artificial respiration, refer to FM21-1 1.

TECHNICAL MANUAL

NO. 10-4610-237-12

HEADQUARTERS
DEPARTMENT OF THE ARMY
WASHINGTON D.C., 31 August 1994

OPERATOR'S AND UNIT MAINTENANCE MANUAL

20K GALLON WATER STORAGE AND DISTRIBUTION SYSTEM MODEL 2OKWSDS (NSN: 4320-01-382-2684) (EIC: ZIN)

REPORTING ERRORS AND RECOMMENDING EIMPROVEMEENTS

You can help improve this manual. If you find any rnistakes or if you know of a way to improve the procedures, please let us know. Mail your letter or DA Form 2028 (Recommended Changes to Publications and Blank Forms), or DA Form 2028-2 located in the back of this manual directly to: Commander, US Army Aviation and Troop Command, ATTN: AMSAT-I-MP, 4300 Goodfellow Blvd., St. Louis, MO 63120-1798. In either case, a reply will be furnished directly to you.

DISTRIBUTION STATEMENT A: Approved for public release; distribution is unlimited.

TABLE OF CONTENTS

		PAGE
HOW TO USE THIS MANUAL		iii
CHAPTER 1.	**INTRODUCTION**	
Section I.	General Information	1-1
Section II.	Equipment Description and Data	1-3
Section III.	Principles of Operation	1-8
CHAPTER 2.	**OPERATING INSTRUCTIONS**	
Section I.	Description and Use of Operator's Controls and Indicators	2-1
Section II.	Operator's Preventive Maintenance Checks and Services (PMCS)	2-4
Section III.	Operation Under Usual Conditions	2-15
Section IV.	Operation Under Unusual Conditions	2-40
CHAPTER 3.	**OPERATOR MAINTENANCE INSTRUCTIONS**	
Section I.	Lubrication Instructions	3-1
Section II.	Operator Troubleshooting	3-1
Section III.	Operator Maintenance Procedures	3-15
CHAPTER 4.	**UNIT MAINTENANCE INSTRUCTIONS**	
Section I.	Lubrication Instructions	4-1
Section II.	Repair Parts and Special Tools List	4-2
Section III.	Service Upon Receipt	4-2
Section IV.	Unit Troubleshooting Procedures	4-5
Section V.	Unit Maintenance Procedures	4-17
Section VI.	Preparation for Storage or Shipment	4-54

TABLE OF CONTENTS - Continued.

		PAGE
APPENDICES		
Appendix A.	References	A-1
Appendix B.	Maintenance Allocation Chart	B-1
Appendix C.	Components of End Item and Basic Issue Items List	C-1
Appendix D.	Additional Authorization List	D-1
Appendix E.	Expendable/Durable Supplies and Materials List	E-1
Appendix F.	Lubricating Instructions	F-1
Appendix G.	List of Manufactured Items	G-1
Appendix H.	Torque Limits	H-1
Appendix I.	Mandatory Replacement Parts	I-1
Alphabetical Index		Index-1

HOW TO USE THIS MANUAL

Be sure to read all Warnings before using your equipment.

This manual contains operating and maintenance instructions for operation and maintenance of the 20K Water Storage and Distribution System.

- Chapter 1 Introduces you to the equipment and gives you information such as weight, height, length, generally used abbreviations and information on how the unit works. The chapter is preceded by a full page illustration of the equipment.

- Chapter 2 Provides information necessary to identify and use the equipment's operating controls. Operating instructions in this chapter tell you how to use the equipment in both usual and unusual weather conditions. In addition, preventive maintenance instructions provide information needed to inspect and service the 20K Water Storage and Distribution System.

- Chapter 3 Provides operator troubleshooting procedures for identifying equipment malfunctions and maintenance instructions for performing operator maintenance tasks.

- Chapter 4 Provides unit maintenance personnel with troubleshooting procedures for identifying equipment malfunctions and maintenance instructions for repairing defective equipment.

- Appendix A Provides a list of frequently used forms and publications referenced or used in this manual.

- Appendix B The Maintenance Allocation Chart identifies repairable components and the maintenance level authorized to perform the repairs.

- Appendix C Lists components that are not mounted on the equipment, but are required to make the unit functional. All components in the Components of End Item and Basic Issue Items Lists are illustrated for easy identification.

- Appendix D Lists additional equipment authorized for your unit for use with the 20K system, but not supplied as part of the system. This equipment list may include fire extinguishers, buckets, protective clothing, etc.

- Appendix E Provides you with information about expendable supplies such as sealants, lubricants, chemicals, etc. that are used when operating or maintaining the equipment.

- Appendix F Contains lubrication instructions that are required to keep the equipment in good working condition.

- Appendix G Provides a list of items and instructions on how to make certain tools and devices required to perform some of the maintenance tasks contained in this manual.

- Appendix H Provides the torque values and related information for the fasteners used in the water system and related items of equipment.

- Appendix I Lists parts that must be replaced when performing maintenance on components of the water system. This list includes such things as gaskets, lockwashers, and seals.

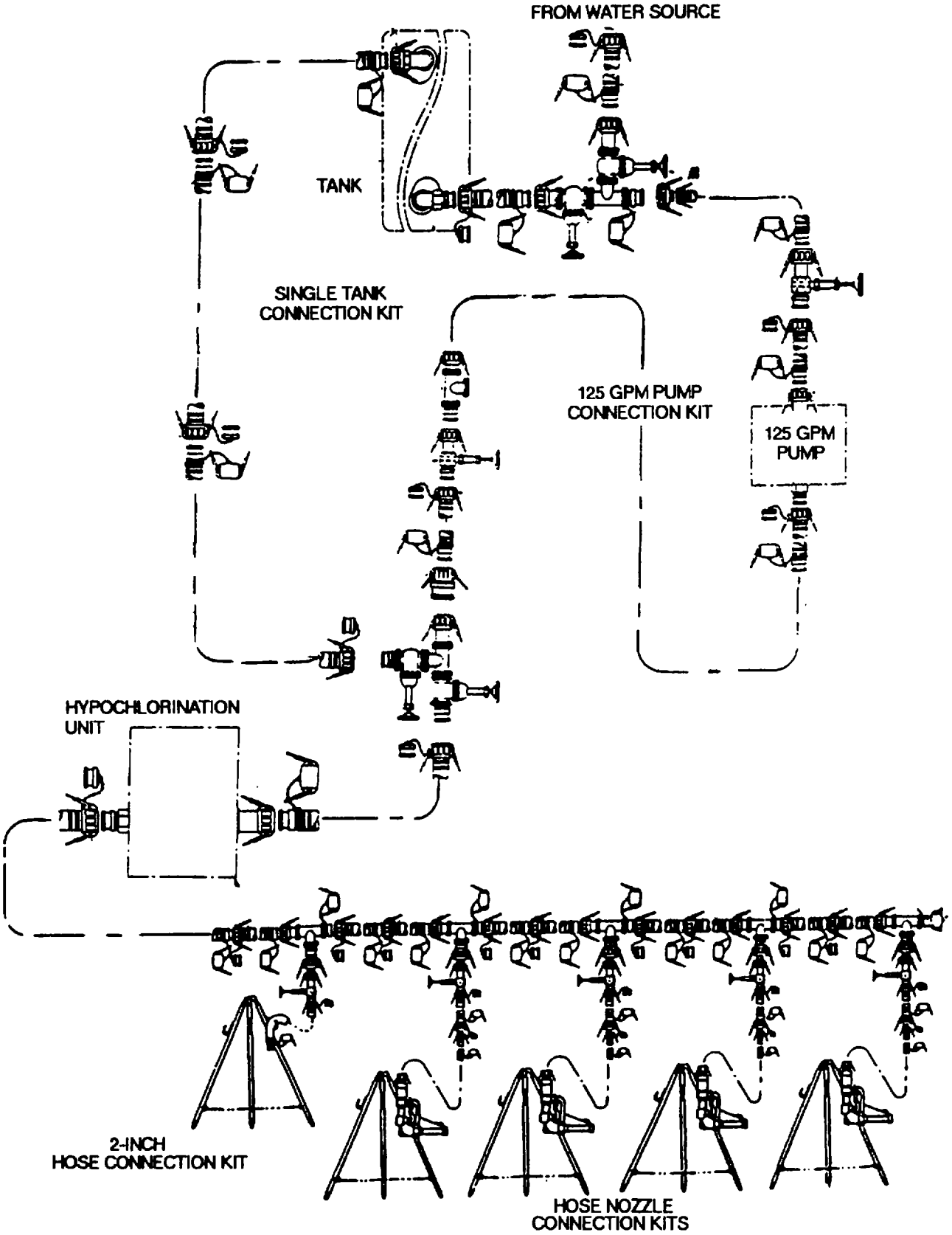

Figure 1-0. 20K Gallon Water Storage and Distribution System

CHAPTER 1

INTRODUCTION

Paragraph		Page
Section I.	**General Information**	1-1
1.1	Scope	1-1
1.2	Maintenance Forms, Records and Reports	1-1
1.3	Corrosion Prevention and Control (CPC)	1-1
1.4	Destruction of Army Materiel to Prevent Enemy Use	1-2
1.5	Reporting Equipment Improvement Recommendations (EIRs)	1-2
1.6	Nomenclature Cross Reference List	1-2
1.7	List of Abbreviations	1-2
1.8	Glossary	1-2
Section II.	**Equipment Description and Data**	1-3
1.9	Equipment Characteristics, Capabilities and Features	1-3
1.10	Location and Description of Major Components	1-4
1.11	Equipment Data	1-6
Section III.	**Principles of Operation**	1-8
1.12	System Technical Principles of Operation	1-8

Section I. GENERAL INFORMATION

1.1 SCOPE.

This manual contains Operating instructions, and Unit maintenance procedures required to operate and maintain the 20K Gallon Water Storage and Distribution System, Model 2OKWSDS. The purpose of the water system is receive, store and distribute potable water to individual water bags, tanker trucks and trailer mounted water tanks (water buffaloes).

1.2 MAINTENANCE FORMS. RECORDS AND RFPORTS.

Department of the Army forms and procedures used for equipment maintenance will be those prescribed by DA Pam 738-750 (The Army Maintenance Management Systems (TAMMS)).

1.3 CORROSION PREVFNTION AND CONTROL (CPC).

1.3.1. Corrosion Prevention and Control (CPC) of Army materiel is a continuing concern. It is important that any corrosion problems with this item be reported so that the problem can be corrected and improvements can be made to prevent the problem in future items.

1.3 CORROSION PREVENTION AND CONTROL. - Continued.

1.3.2 While corrosion is typically associated with rusting of metals, it can also include deterioration of other materials, such as rubber and plastic. Unusual cracking, softening, swelling or breaking of the materials may be a corrosion problem.

1.3.3 If a corrosion problem is identified, it can be reported using Standard Form 368, Product Duality Deficiency Report. Using key words such as "rust", "deterioration", or "cracking" will insure that the information is identified as a CPC problem. The form should be submitted to the address specified in DA Pam 738-750.

1.4 DESTRUCTION OF ARMY MATERIAL. TO PREVENT ENEMY USE.

Methods and procedures for destruction of Army materiel to prevent enemy use are covered in TM 750-244-3.

1.5 REPORTING EQUIPMENT IMPROVEMENT RECOMMENDATIONS (EIRs).

If your 20K system needs improvement, let us know. Send us an EIR. You, the user, are the only one who can tell us what you don't like about your equipment. Let us know why you don't like the design. Tell us why a procedure is hard to perform. Put it on a Standard Form 368 (Product Quality Deficiency Report). Mail it to us at Headquarters Commander, US Army Aviation and Troop Command, ATTN: AMSAT-I-MDO, 4300 Goodfellow Blvd., St. Louis, MO 63120-1798. We'll send you a reply.

1.6 NOMENCLATURE CROSS REFERENCE LIST.

Common Name	Official Nomenclature
Water Tank	20,000 Gallon Collapsible Fabric Tank

1.7 LIST OF ABBREVIATIONS.

Abbreviation	Nomenclature
GPM	Gallons Per Minute
K	Kilo (Thousand)
OF	Degrees Fahrenheit
TM	Technical Manual
TWDS	Tactical Water Distribution System
20K WSDS	20,000 Gallon Water Storage and Distribution System

1.8 GLOSSARY.

Term	Description
Hypochlorination	Purification of water by combining water with a solution made from calcium hypochlorite powder.

Section II. EQUIPMENT DESCRIPTION AND DATA

1.9 EQUIPMENT CHARACTERISTICS. CAPABILITIES AND FEATURES.

a. Characteristics.

(1) Self contained. All components required to make the system operational are supplied with the system.

(2) Easily transportable.

(3) Reusable containers provide storage for water tank and components.

(4) Quick disconnect couplings on all components allow rapid setup and take down.

(5) Adaptable to meet varying mission and site requirements.

(6) No external electrical power source required.

b. Capabilities and Features.

(1) One collapsible water tank provides a storage capacity of 20,000 gallons.

(2) Engine driven pumping system.

(3) No special tools required for setup or operation.

(4) Automatic water chlorination.

1.10 LOCATION AND DESCRIPTION OF MAJOR COMPONENTS. (REFER TO FIGURE 1-1)

1.10.1 125 GPM Pump Connection Kit. The connection kit consists of hoses and valves needed to connect the 125 gpm pump and in line check valve to the water tank. The 125 gpm pump serves two purposes. It is used to pump water from the water source as needed to fill the water tank. The pump also is used to pump water out of the single tank to supply the remaining components in the water system. The in line check valve prevents back flow of water through the 125 gpm pump during pumping operations.

1.10.2 125 GPM Pump. The 125 gpm, engine driven, centrifugal pump is skid mounted with handles at both ends to aid lifting and positioning. Refer to the applicable TM for location and description of major components on the pump.

1.10.3 Single Tank Connection Kit. The single tank connection kit consists of hoses, valves and tees needed to connect the 20K collapsible water tank to the water system. Hand operated gate valves serve two purposes. They are used to control the flow of source water pumped by the 125 gpm pump into the tank. The gate valves are also used to control water flow out of the tank for pumping by the 125 gpm pump to the water system.

1.10.4 Tank. The tank can store up to 20,000 gallons of potable water. The tank expands and becomes pillow shaped when filled. Handles on the sides of the tank aid movement and positioning of the tank during setup and take down. The tank is supplied with a ground cloth, couplings, vent tubes, elbows and a drain valve. Refer to the applicable TM for location and description of major components on the water tank.

1.10.5 2-Inch Hose Connection Kit. The connection kit consists of hoses, a tee, a gate valve, and couplings needed to connect and dispense water to trailer mounted water tanks (water buffaloes) and other large containers. A hand operated gate valve is used to control water flow to the transport container. One 2-inch hose connection kit is used in the water system.

1.10.6 Hose Nozzle Connection Kits. The connection kits consist of hoses, tees, couplings, reducers, valves and distribution nozzles to dispense water to large portable containers. Hand operated gate valves and distribution nozzles are used to control water flow to the containers. Each nozzle is equipped with a swivel coupling to ease operation. Nozzle stands are provided to prevent dirt, sand and contamination from entering the distribution nozzles. Four hose nozzle connection kits are used in the water system.

1.10.7 Hypochlorination Unit. The hypochlorination unit treats the water supplied from the 125 gpm pump with hypochlorite solution. The solution is injected into the water based on the water flow rate.

The water must be tested and the unit adjusted to provide the correct ratio of hypochlorite solution as required by medical personnel. Refer to the applicable TM for additional information on the hypochlorination unit.

1.10 LOCATION AND DESCRIPTION OF MAJOR COMPONENTS - Continued.

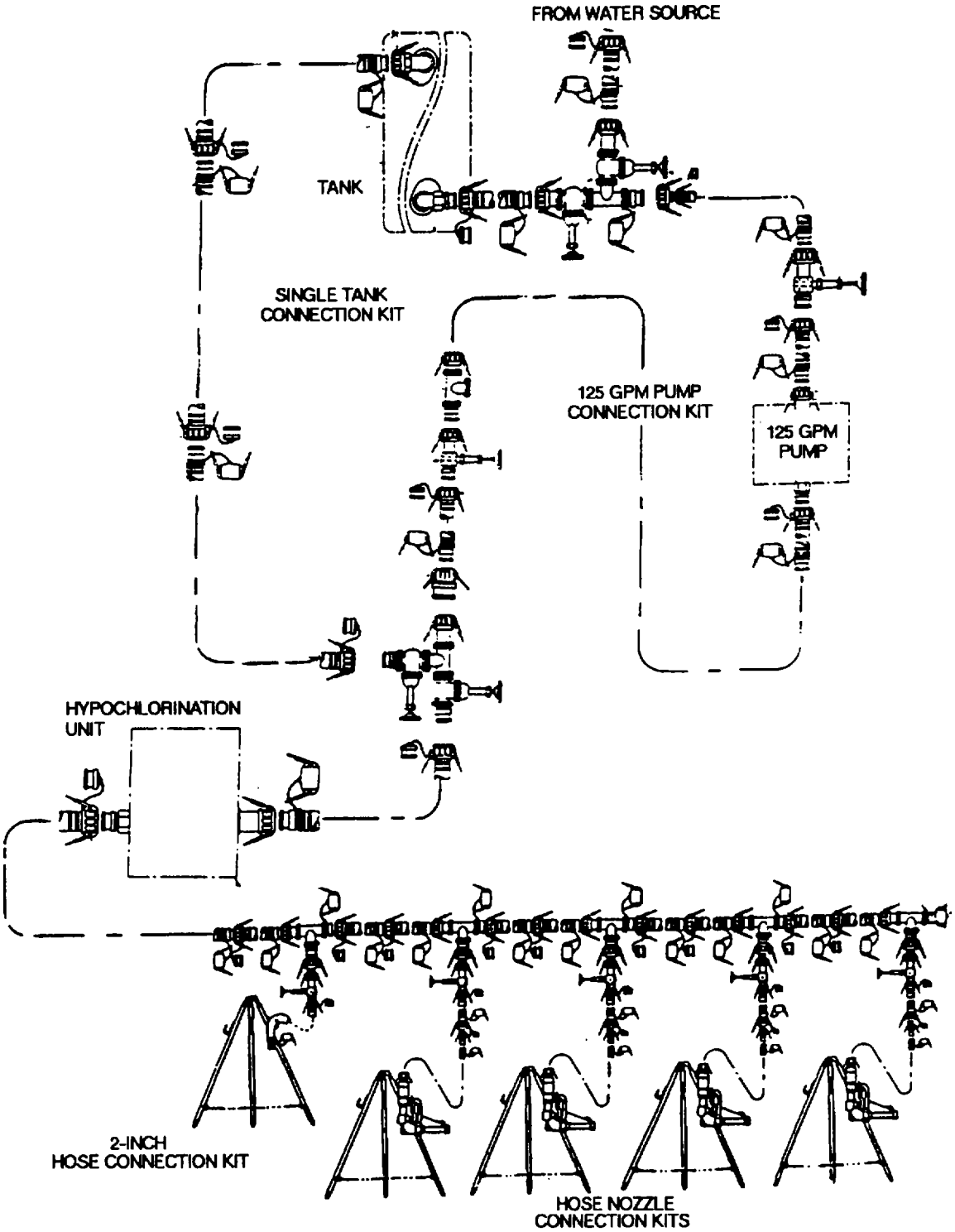

Figure 1-1. 20K Gallon Water Storage and Distribution System

1.11 EQUIPMENT DATA.
Refer to Table 1-1.

Table 1-1. Equipment Data

NOTE

The following equipment data is provided for system interface only and may not be accurate for the equipment supplied with your system. Refer to the applicable equipment TM for specific equipment data.

HYPOCHLORINATION UNIT

Weight (dry)	241 pounds (109.31 kilograms)
Length	33 inches (83.82 centimeters)
Width	26 inches (66.04 centimeters)
Height	28 inches (71.12 centimeters)
Chemical Tank Capacity	6 gallons (22.7 liters)
Flow Rate (0-1324.89 liters per minute)	0-350 gallons per minute

125 GPM PUMP

Length	22 inches (55.88 centimeters)
Width	18 inches (45.72 centimeters)
Weight (dry)	146 pounds (133.50 kilograms)
Fuel	Gasoline/Diesel
Output	125 gallons (473.18 liters) per minute at 50 foot (15.24 meters) head

20K COLLAPSIBLE WATER TANK

Length (empty)	26.5 feet (8.08 meters)
Width (empty)	22.5 feet (6.86 meters)
Height (full)	5.5 feet (1.68 meters)
Weight (empty)	480 pounds (217.72 kilograms)
Capacity	20,000 gallons (75708.23 liters)

Table 1-1. Equipment Data - Continued.

WATER TANK CHEST

Length	14 feet (4.28 meters)
Width	44 inches (111.76 centimeters)
Height	36 inches (91.44 centimeters)
Gross Weight	1,350 pounds (612.35 kilograms)
Tare Weight	850 pounds (385.55 kilograms)
Capacity	1,000 pounds (453.59 kilograms)
Volume	114.14 cubic feet (3.23 cubic meters)

TRIPLE CONTAINER

Length	96 inches (243.84 centimeters)
Width	77.5 inches (196.85 centimeters)
Height	96 inches (243.84 centimeters)
Gross Weight	5,100 pounds (2313.32 kilograms)
Tare Weight	2,500 pounds (1133.98 kilograms)
Volume	360 cubic feet (10.20 cubic meters)

Section III. PRINCIPLES OF OPERATION

1.12 SYSTEM TECHNICAL PRINCIPLES OF OPERATION.

1.12.1 General. The 20K water distribution system (Figure 1-2) described in this manual is set up for maximum storage and distribution. Your operating needs will determine how many of the system components must be connected and in what configuration. Additional components are available in the accessory kit to support varying site and operating needs. Water is supplied to the 20K system by the Tactical Water Distribution System pipeline or other water source.

1.12.2 125 GPM Pump Connection Kit. The 125 gpm pump connection kit and related 125 gpm pump serve two purposes. They are used to pump water from the water source as needed to fill the storage tank. The pump also is used to pump water out of the storage tank as needed to supply the water distribution system loading stations.

Water to fill the tank is supplied to the 125 gpm pump through a pipe line or outside water source. The 125 gpm pump draws water from the source and pumps it through the single tank connection kit to the 20K gallon tank. Water flow between the source and the storage tank is controlled by opening and closing gate valves in both the 125 gpm pump and single tank connection kits. A check valve installed on the discharge side of the 125 gpm pump prevents back flow of water through the pump. Refer to the applicable TM for detailed information on the 125 gpm pump.

Potable water is stored in the 20K gallon tank until needed. When water at the loading stations is required, water flows from the storage tank, through the single tank connection kit, to the suction side of the 125 gpm pump. Control of water flow between the storage tank and loading stations is performed by opening and closing the proper gate valves in both the 125 gpm pump and single tank connection kits. The 125 gpm pump supplies water on demand and at a rate determined by the discharge hose and nozzles at the loading stations.

Water discharging from the 125 gpm pump for supply to the loading stations is treated with a hypochlorite solution by the hypochlorination unit. The solution is injected into the water supply based on the water flow rate. The water supply must be tested and the hypochlorination unit adjusted to provide the correct ratio of hypochlorite solution as required by medical personnel. Refer to the applicable TM for additional information on the hypochlorination unit.

1.12.3 Single Tank Connection Kit. Water flows into and from the storage tank through the single tank connection kit. Water flow into the storage tank is controlled by opening or closing the proper gate valves on the inlet (fill) side of the single tank connection kit. Water is stored in the tank until needed, then the proper gate valves on the discharge side of the single tank connection kit are opened or closed to allow the water to be pumped from the tank, through the 125 gpm pump connection kit and hypochlorination unit, to the hose and hose nozzle kit loading stations.

1.12.4 Loading Stations (Hose and Hose Nozzle Kits). Loading stations dispense water to field users through quick disconnect discharge hoses or distribution nozzles. Water flow through the loading stations is controlled by hand operated gate valves and/or distribution nozzles.

1.12 SYSTEM TFCHNICAL PRINCIPL.FS OF OPERATION - Continued.

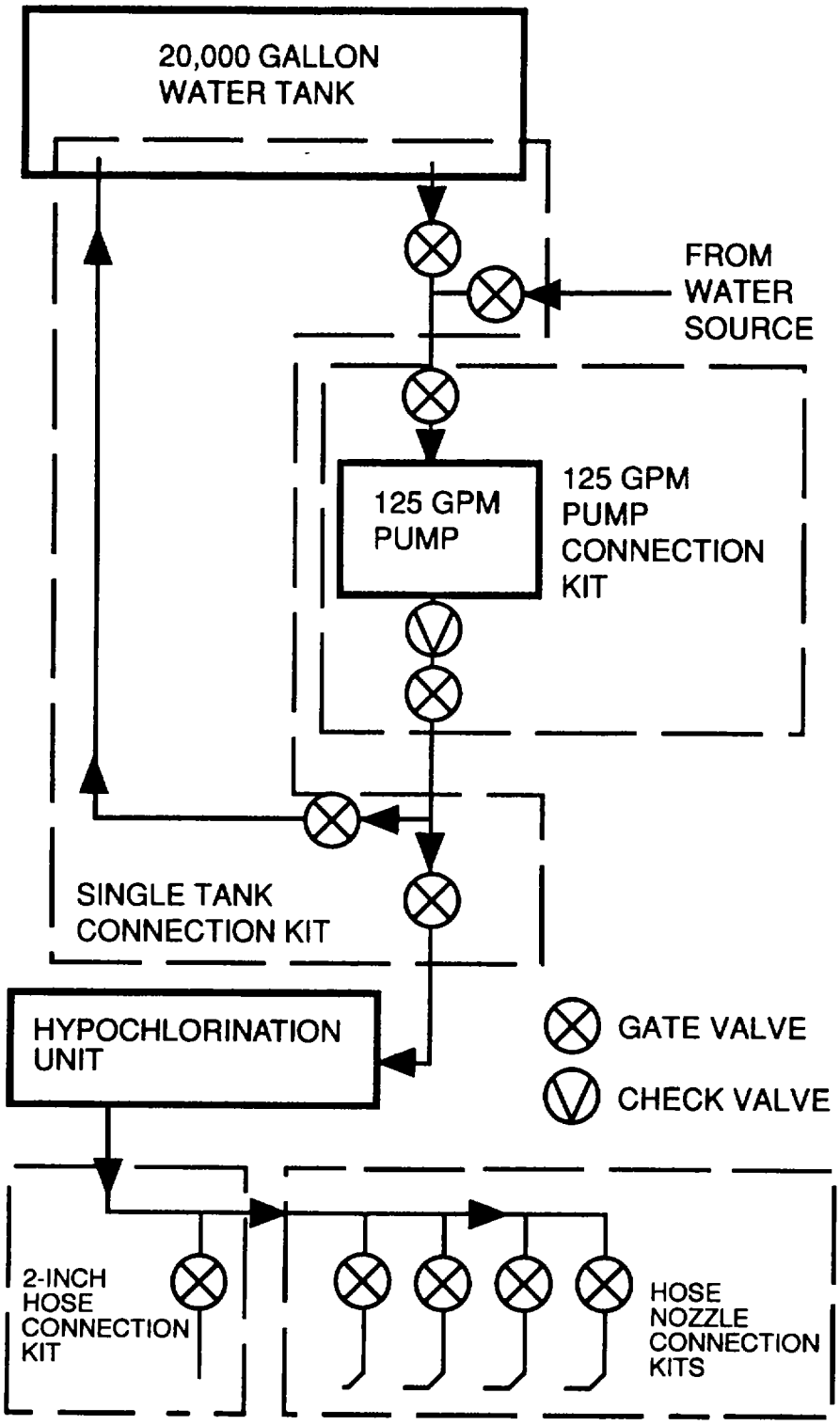

Figure 1-2. Flow Diagram

CHAPTER 2

OPERATING INSTRUCTIONS

Paragraph		Page
Section I.	**Description and Use of Operator's Controls and Indicators**	2-1
2.1	Gate Valves	2-2
2.2	Distribution Nozzle (1/2-Inch)	2-3
Section II.	**Operator's Preventive Maintenance Checks and Services (PMCS)**	2-4
2.3	General	2-4
2.4	PMCS Procedures	2-4
2.5	Leakage Definitions for Operator PMCS	2-5
2.6	Operator Preventive Maintenance Checks and Services	2-7
Section III.	**Operation Under Usual Conditions**	2-15
2.7	Assembly and Preparation for Use	2-15
2.8	Initial Adjustment	2-26
2.9	Operating Procedures	2-26
2.10	Decals and Instruction Plates	2-29
2.11	Operating Auxiliary Equipment	2-31
2.12	Preparation for Movement	2-31
Section IV.	**Operation Under Unusual Conditions**	2-40
2.13	Operation in Extreme Cold (Below 32'F (00C))	2-40
2.14	Operation in Extreme Heat	2-42
2.15	Operation in Dusty or Sandy Areas	2-42
2.16	Operation in Salt Water Areas	2-42
2.17	Emergency Procedures	2-43
2.18	Decontamination Procedures	2-44

Section I. DESCRIPTION AND USE OF OPERATOR'S CONTROLS AND INDICATORS

This section provides the operator with information needed to locate, identify, and use the controls and indicators on the 20K Water Storage and Distribution System. The components and controls identified in this section are applicable to the entire system. Many of the controls are used repeatedly throughout the system.

Various models of 125 gpm pumps, hypochlorination units, and 20K collapsible fabric tanks can be supplied with your water system. Refer to the applicable technical manuals for specific information on this equipment.

Refer to applicable TM for description and use of operator's control and indicators on the triple container.

2.1 GATE VALVES.

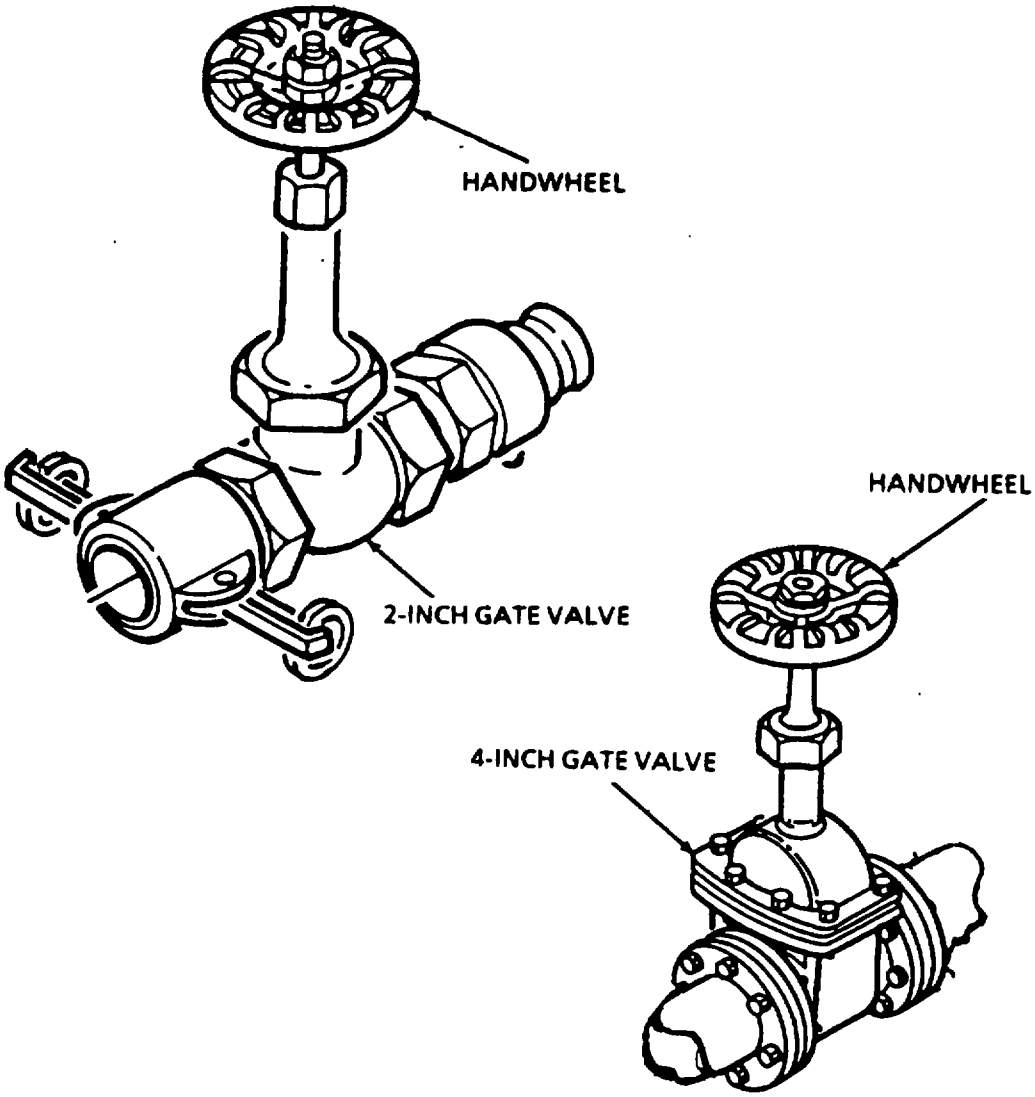

Figure 2-1. 2-Inch and 4-Inch Gate Valves

2.1.1 Handwheel (2-Inch Gate Valve). Handwheels on the 2-inch gate valves are used to open or close the valve. Turning the handwheel all the way to the right closes the valve; to the left opens the valve. The 2-inch gate valves are used in the 125 gpm pump, 2-inch hose, and hose nozzle connection kits to control and direct the flow of water.

2.1.2 Handwheel (4-Itich Gate Valve). Handwheels on the 4-inch gate valves are used to open or close the valve. Turning the handwheel all the way to the right closes the valve; to the left opens the valve. The 4-inch gate valves are supplied as part of the dual tee and gate valve assemblies. The valves are used in the single tank connection kit to control and direct the flow of water.

2.2 DISTRIBUTION NOZZLE (1 1/2-INCH).

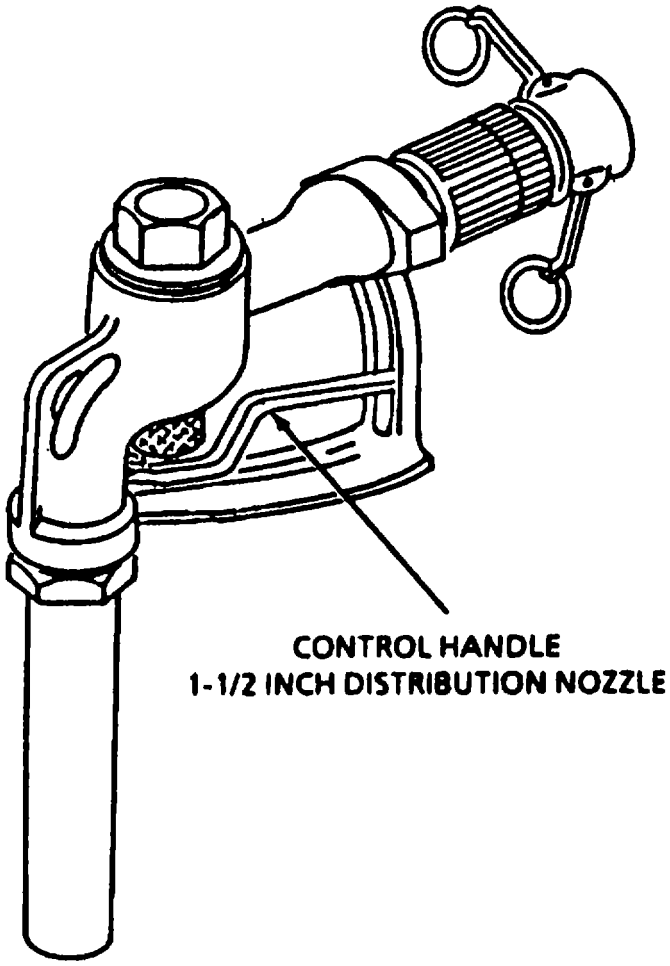

Figure 2-2. 1 1/2-Inch Distribution Nozzle

The 1 1/2-inch distribution nozzle is operated by gripping the nozzle body and pulling up (squeezing) on the spring loaded control handle. Squeezing the handle opens an internal poppet valve and allows water flow through the nozzle. Releasing the handle stops waterflow. The 1 1/2-inch distribution nozzle is used in the hose nozzle connection kits.

Section II. OPERATOR PREVENTIVE MAINTENANCE CHECKS AND SERVICES (PMCS)

2.3 GENERAL.

Preventive Maintenance Checks and Services (PMCS) means systematic caring, inspecting, and servicing of equipment to keep it in good condition and to prevent breakdowns. As the operator of the 20K Water Storage and Distribution System, your mission is to:

a. Be sure to perform your PMCS each time you operate the 20K Water Storage and Distribution System. Always do your PMCS in the same order, so it gets to be a habit. Once you've had some practice, you'll quickly spot anything wrong.

b. Do your BEFORE (B) PMCS just before you operate the equipment. Pay attention to WARNINGs, CAUTIONs and NOTEs.

c. Do your DURING (D) PMCS while you operate the equipment. During operation means to monitor the equipment and its related components while it is actually being operated. Pay attention to WARNINGs, CAUTIONs and NOTEs.

d. Do your AFIER (A) PMCS right after operating your equipment. Pay attention to WARNINGs, CAUTIONs and NOTEs.

e. Use DA Form 2404 (Equipment Inspection and Maintenance Worksheet) to record any faults that you discover before, during, or after operation, unless you can fix them. You DO NOT need to record faults that you fix.

f. Be prepared to assist unit maintenance when required.

g. When a check and service procedure is required for both WEEKLY and BEFORE intervals, it is not necessary to do the procedure twice if the equipment is operated during the weekly period.

2.4 PMCS PROCEDURES.

a. Your Preventive Maintenance Checks and Services, Table 21, lists inspections and care required to keep your equipment in good operating condition. It is setup so you can make BEFORE (B) OPERATION checks as you walk around the equipment.

b. The "INTERVAL" column of Table 2-1 tells you when to do a certain check or service.

c. The "LOCATION, ITEM TO CHECKISERVICE" column of Table 2-1 tells you the name of the item to be checked or serviced and where the item is located.

d. The "PROCEDURE" column of Table 2-1 tells you how to do required checks and services. Carefully follow these instructions. If you do not have tools, or if the procedure instructs you to, notify your supervisor.

2.4 PMCS PROCEDURES - Continued.

e. The "NOT FULLY MISSION CAPABLE IF:" column in Table 2-1 tells you when your equipment is not ready to perform its combat mission and why the system cannot be used.

f. If the equipment does not perform as required, refer to Chapter 3, Section II, Troubleshooting.

g. If anything looks wrong and you can't fix it, write it on your DA Form 2404. IMMEDIATELY, report it to your supervisor.

h. The following are checks that are common to the entire water system:

(1) Keep the equipment clean. Remove dirt, sand and debris from quick disconnect couplings, hose ends, gate valves and distribution nozzles to prevent excessive wear and contamination of the water system. Use soap and water to remove dirt. Do not contaminate system with any type of cleaning solvent.

(2) Bolts, nuts and screws. Check them for obvious looseness, missing, bent or broken condition on gate valves. If you find a bolt, nut or screw you think is loose, tighten it or report it to your supervisor.

(3) Hoses. Look for wear, damage and leaks. Make sure clamps and quick disconnect couplings are tight. Wet spots show leaks, but a stain around a fitting or connector can also mean a leak. If a leak comes from a loose fitting or coupling, tighten it. If something is broken or worn out, report it to your supervisor.

i. When you check for "operating condition", look at the component to see if it's serviceable. Refer to Figure 2-3 for a PMCS routing diagram that shows the typical order by which the checks and services are done.

2.5 LEAKAGE DEFINITIONS FOR OPERATOR PMCS.

It is necessary for you to know how fluid leakage affects the status of the equipment. Following are types/ classes of leakage an operator needs to know to be able to determine the status of the water system. Learn these leakage definitions and remember when in doubt, notify your supervisor.

CAUTION

- **Equipment operation is allowable with minor leakages (Class I or II). Of course, consideration must be given to fluid capacity in the system. When in doubt, notify your supervisor.**
- **When operating with Class I or II leaks, continue to check fluid levels as required in your PMCS.**
- **Class III leaks should be reported immediately to your supervisor.**

a. Class I Seepage of fluid (as indicated by wetness or discoloration) not great enough to form drops.

2.5 LEAKAGE. DEFINITIONS FOR OPERATOR PMCS - Continued.

b. CLASS II Leakage of fluid great enough to form drops but not enough to cause drops to drip from item being checked/inspected.

c. CLASS III - Leakage of fluid great enough to form drops that fall from item being checked/inspected.

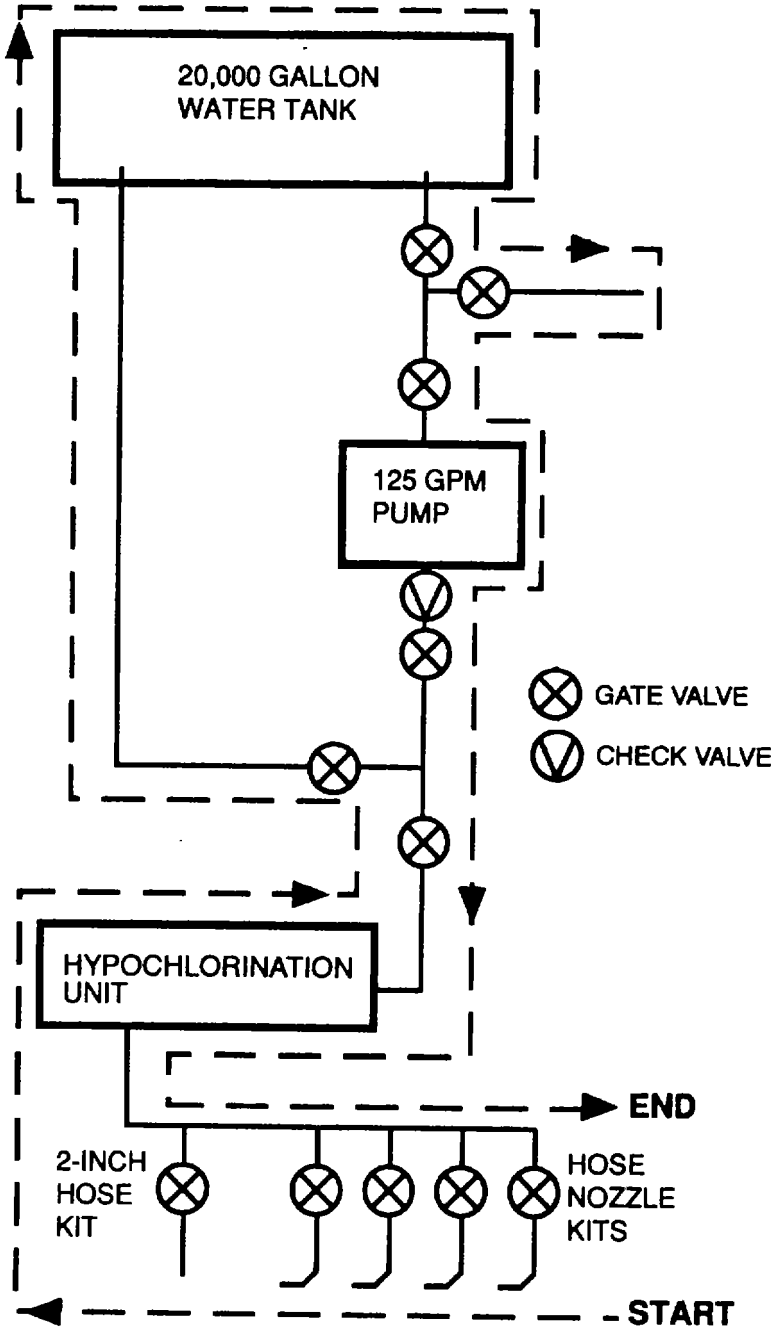

Figure 2-3. PMCS Routing Diagram

2.6 OPERATOR PREVENTIVE. MAINTENANCE CHECKS AND SERVICES (Refer to Table 2-1).

Table 2-1. Operator Preventive Maintenance Checks and Services for Model 2OKWSDS.

NOTE

If the equipment must be kept in continuous operation, do only the procedures that can be done without disturbing operation. Make complete checks and services when the equipment is shut down.

ITEM NO.	Interval	Location / Items to Check/Service	Procedures	Not Fully Mission Capable If:
		HOSE NOZZLE CONNECTION KIT		
1	Before	Nozzle Stand	Inspect for broken chains, missing hardware, and bent or cracked legs.	
2	Before	Distribution Nozzle (1 1/2-inch)	a. Inspect for bent or damaged nozzle body and tube. b. Inspect for bent, broken, or stuck control handle.	Distribution nozzle damaged or defective.
3	Before	Discharge Hoses	a. Inspect for cuts, tears and deep abrasions. b. Inspect for cracked and bent or broken couplings. c. Check for and straighten kinked hoses.	Hoses cut or torn. Couplings cracked or broken.
4	Before	Gate Valves (2-inch)	a. Inspect for loose, broken, or missing hand wheel. Rotate hand wheel. Valve should turn freely. b. Inspect valve body for cracks and external damage.	Valve cracked, broken or stuck.
5	Before	Tee Assemblies	Inspect tee bodies for cracks and corrosion.	Tee bodies cracked or damaged.

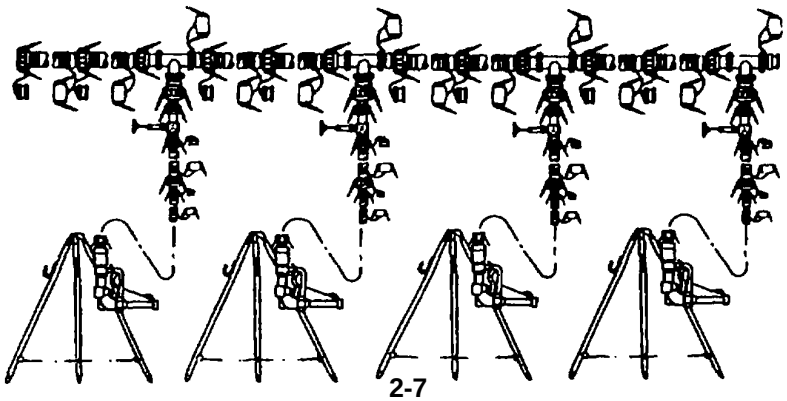

Table 2-1. Operator Preventive Maintenance Checks and Services for Model 2OKWSDS - Continued.

ITEM NO.	Interval	Location / Items to Check/Service	Procedures	Not Fully Mission Capable If:
		2-INCH HOSF. CONNFCTION KIT		
6	Before	Nozzle Stand	Inspect for broken chains, missing hardware, and bent or cracked legs.	
7	Before	Discharge Hoses	a. Inspect for cuts, tears and deep abrasions. b. Inspect for cracked and bent or broken couplings. c. Check for and straighten kinked hoses.	Hoses cut or torn. Couplings cracked or broken.
8	Before	Gate Valve (2-inch)	a. Inspect for loose, broken, or missing hand wheel. Rotate hand wheel. Valve should turn freely. b. Inspect valve body for cracks and external damage.	Valve cracked, broken or stuck.
9	Before	Tee Assembly	Inspect tee body for cracks and corrosion.	Tee body cracked or damaged.
10	Before	Hypochlorination Unit	Perform "BEFORE" PMCS contained in applicable TM.	

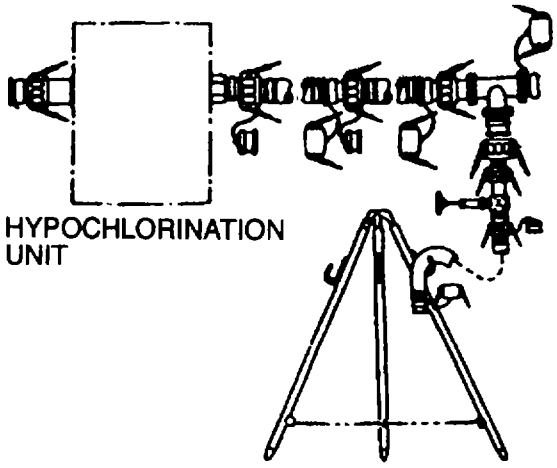

Table 2-1. Operator Preventive Maintenance Checks and Services for Model 2OKWSDS - Continued.

ITEM NO.	Interval	Location / Items to Check/Service	Procedures	Not Fully Mission Capable If:
		SINGLE TANK CONNECTION KIT		
11	Before	Suction and Discharge Hoses	a. Inspect for cuts, tears and deep abrasions. b. Inspect for cracked and bent or broken couplings. c. Check for and straighten kinked hoses.	Hoses cut or torn. Couplings cracked or broken.
12	Before	Tee Assemblies	Inspect tee bodies for cracks and corrosion.	Tee bodies cracked or damaged.
13	Before	Gate Valves (4-inch)	a. Inspect for loose, broken, or missing hand wheel. Rotate hand wheel. Valve should turn freely. b. Inspect valve body for cracks and external damage. c. Inspect for loose or missing hardware.	Valve cracked, broken or stuck. Hardware missing.
14	Before	20K Collapsible Fabric Tank	Perform "BEFORE" PMCS contained in applicable TM.	

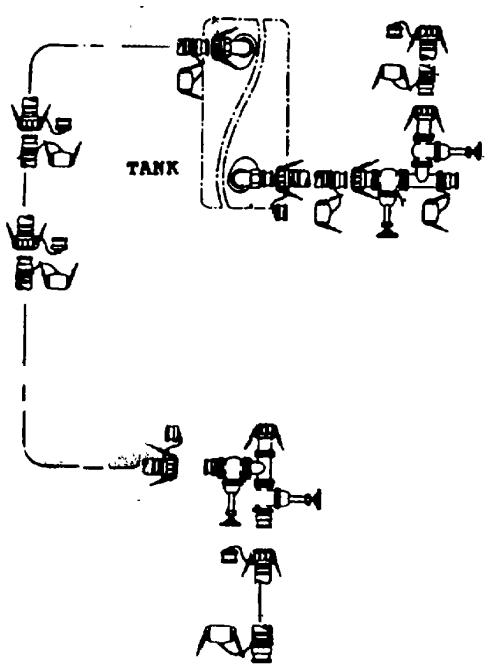

Table 2-1. Operator Preventive Maintenance Checks and Services for Model 2OKWSDS - Continued.

ITEM NO.	Interval	Location Items to Check/Service	Procedures	Not Fully Mission Capable If:
		125 GPM PUMP CONNECTION KIT		
15	Before	Suction and Discharge Hoses	a. Inspect for cuts, tears and deep abrasions. b. Inspect for cracked and bent or broken couplings. c. Check for and straighten kinked hoses.	Hoses cut or torn. Couplings cracked or broken.
16	Before	Gate Valves (2-inch)	a. Inspect for loose, broken, or missing hand wheel. Rotate hand wheel. Valve should turn freely. b. Inspect valve body for cracks and external damage.	Valve cracked, broken or stuck.
17	Before	Check Valve	Inspect valve body for cracks and external damage.	Valve cracked or broken.
18	Before	125 GPM Pump	Perform "BEFORE" PMCS contained in applicable TM.	

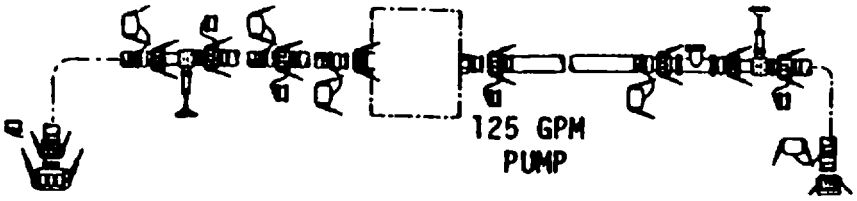

Table 2-1. Operator Preventive Maintenance Checks and Services for Model 2OKWSDS - Continued.

ITEM NO.	Interval	Location / Items to Check/Service	Procedures	Not Fully Mission Capable If:
		HOSE NOZZLE CONNECTION KIT		
19	During	Distribution Nozzle	Check for leaks when control handle is released.	Class III leak.
20	During	Discharge Hoses	a. Inspect hoses for leaks and loose or unlocked couplings. b. Check hoses for kinks.	Class III leak. Unkink hoses.
21	During	Gate Valves (2-inch)	Inspect for leaking valve stems.	Class III leak.
22	During	Tee Assemblies	Inspect tees for leaking gaskets.	Class m leak.
		2-INCH HOSF CONNECTION KTT		
23	During	Discharge Hoses	a. Inspect hoses for leaks and loose or unlocked couplings. b. Check hoses for kinks.	Class III leak. Unkink hoses.
24	During	Gate Valve (2-inch)	Inspect for leaking valve stem.	Class III leak.
25	During	Tee Assembly	Inspect tee for leaking gaskets.	Class III leak.
26	During	Hypochlorination Unit	Perform "DURING" PMCS contained in the applicable TM.	

Table 2-1. Operator Preventive Maintenance Checks and Services for Model 2OKWSDS - Continued.

ITEM NO.	Interval	Location / Items to Check/Service	Procedures	Not Fully Mission Capable If:
		SINGLE TANK CONNECTION KIT		
27	During	Suction and Discharge Hoses	a. Inspect hoses for leaks and loose or unlocked couplings. b. Check hoses for kinks.	Class III leak. Unkink hoses.
28	During	Tee Assemblies	Inspect tees for leaking gaskets.	Class III leak.
29	During	Gate Valves (4-inch)	Inspect for leaking valve stems.	Class III leak.
30	During	20K Collapsible Fabric Tank	Perform "DURING" PMCS contained in the applicable TM.	
		125 GPM PUMP CONNECTION KIT		
31	During	Suction and Discharge Hoses	a. Inspect hoses for leaks and loose or unlocked couplings. b. Check hoses for kinks.	Class II[leak. Unkink hoses.
32	During	Gate Valves (2-inch)	Inspect for leaking valve stems.	Class m leak.
33	During	Check Valve	Inspect valve body for leaks.	Class m leak.
34	During	125 GPM Pump	Perform "DURING" PMCS contained in the applicable TM.	

Table 2-1. Operator Preventive Maintenance Checks and Services for Model 2OKWSDS - Continued.

ITEM NO.	Interval	Location / Items to Check/Service	Procedures	Not Fully Mission Capable If:
		WATER SYSTFM		
35	After	Suction and Discharge Hoses	a. Inspect quick disconnect couplings for damage and missing gasket, caps, or plugs. b. Inspect for torn, punctured, or damaged hoses. c. Check for and straighten kinked hoses.	Couplings damaged; gasket damaged or missing; hose punctured or torn.
36	After	Gate Valves	a. Inspect quick disconnect couplings for damage and missing gasket, caps, or plugs. b. Inspect for missing attaching bolts, nuts, and hardware.	Coupling damaged; gasket damaged or missing; hardware missing.
37	After	Tee Assemblies	a. Inspect quick disconnect couplings for damage and missing gasket, caps, or plugs. b. Inspect for missing attaching bolts, nuts, and hardware.	Coupling damaged; gasket damaged or missing; hardware missing.
38	After	Distribution Nozzles	a. Inspect quick disconnect couplings for damage and missing gasket, caps, or plugs. b. Inspect for missing nozzle tube caps.	Coupling damaged; gasket damaged or missing; hardware missing.

Table 2-1. Operator Preventive Maintenance Checks and Services for Model 2OKWSDS - Continued.

ITEM NO.	Interval	Location / Items to Check/Service	Procedures	Not Fully Mission Capable If:
39	After	Check Valve	a. Inspect quick disconnect couplings for damage and missing gasket, caps, or plugs. b. Inspect for missing attaching bolts, nuts, and hardware.	
40	After	Water Tank Chest	Perform "AFTER" PMCS contained in the applicable TM.	
41	After	125 GPM Pump	Perform "AFTER" PMCS contained in the applicable TM.	
42	After	20K Collapsible Fabric Tank	Perform "AFTER" PMCS contained in the applicable TM.	
43	After	Hypochlorination Unit	Perform "AFTER" PMCS contained in the applicable TM.	
44	After	Triple Container	Perform "AFRER" PMCS contained in the applicable TM.	

Section III. OPERATION UNDER USUAL CONDITIONS

2.7 ASSEMBLY AND PREPARATION FOR USE.

a. Site Selection.

NOTE

This manual covers installation of all connection kits, but you may not need all these components to perform your mission. You may adjust the number of components used and their position in the system to meet your operating requirements. The hypochlorinator may be installed on either the input or discharge side of the system.

(1) Select a level, debris-free installation area. Site requirements must consider location of water source and distribution points. Site must be large enough to contain all system components.

(2) Position triple container and water tank storage chest near installation site.

b. Unpacking.

(1) Open triple container. Refer to the applicable TM.

(2) Unpack contents of container. To aid assembly, separate components into groups of similar parts during removal. For example, group all the 4-inch discharge hoses together, then all the 2-inch gate valves, 2-inch discharge hoses and so on until all components are unpacked.

(3) Unpack hypochlorination unit. Refer to the applicable TM.

(4) Unpack 125 GPM pump. Refer to the applicable TM.

c. Quick Disconnect Couplings. (Refer to Figure 2-4).

All components of the 20K Water Storage and Distribution System are equipped with quick disconnect couplings to permit rapid assembly and disassembly of components. The following instructions apply to all operator installation and removal tasks.

WARNING

To prevent injury to personnel and damage to the equipment, use care when connecting coupling to avoid getting dirt, sand, and debris on coupling mating surfaces or in hoses. To prevent leaks and ensure tight connections, make sure gaskets are installed in all female quick disconnect couplings.

Connection.

(1) Lift locking arms (1) up and out from female coupling (2).

(2) Remove plug (3) from female coupling (2).

(3) Lift locking arms (4) up and out from cap (5).

2.7 ASSEMBLY AND PREPARATION FOR USE - Continued.

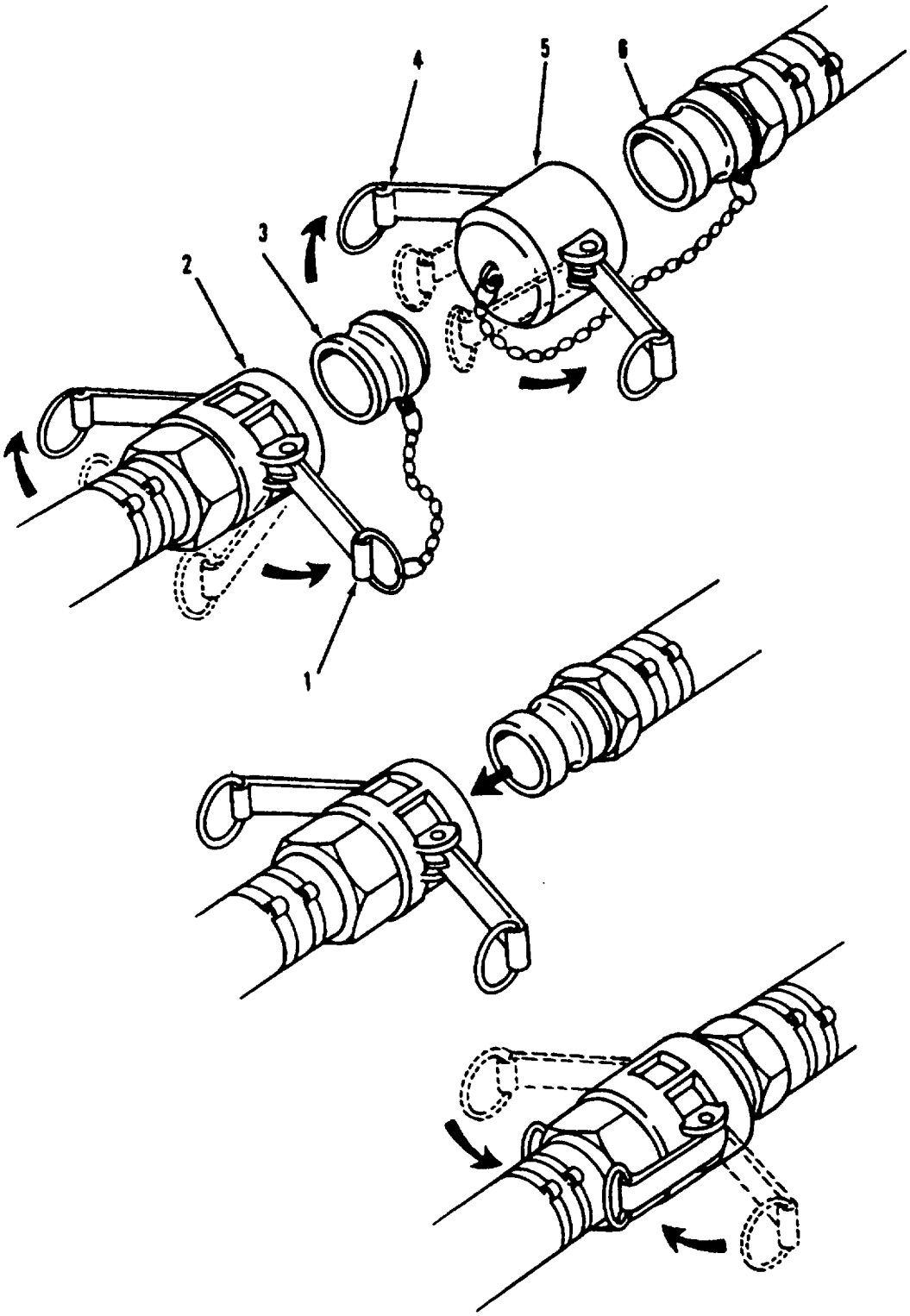

Figure 2-4. Quick Disconnect Couplings

2.7 ASSEMBLY AND PREPARATION FOR USE - Continued.

(4) Remove cap (5) from male coupling (6).

(5) Position male coupling (6) in female coupling (2) and hold in place.

(6) Pull both locking arms (1) back at the same time until arms are down against body of female coupling (2).

(7) Verify that male coupling (6) and female coupling (2) are connected by pulling on couplings. Couplings should remain securely connected and locking arms (1) must remain snug against coupling body.

Disconnection.

WARNING

Do not disconnect hose couplings while water system is pressurized. Hose ends may whip, causing injury to personnel and damage to equipment.

(8) Pull locking arms (1) up and out from female coupling (2).

(9) Pull female couplings (2) from male couplings (6).

(10) Insert plug (3) in female coupling (2) and pull locking arms (1) back against coupling body.

(11) Place cap (5) over male coupling (6) and pull locking arms (4) back against cap body.

d. Install Water Tank.

NOTE

A lifting device is required to remove the collapsible fabric tank from the storage chest and position the tank at the installation site. Notify unit maintenance to assist you with positioning heavy components.

(1) Place water tank in position at installation site.

(2) Assemble and prepare water tank for use in accordance with the applicable TM.

e. Assemble Single Tank Connection Kit. (Refer to Figure 2-5)

WARNING

To prevent contamination of drinking water make sure water tank elbows are capped and plugged when system hoses are not connected to tank. Do not remove caps and plugs from components until couplings are ready to be connected.

2.7 ASSEMBLY AND PREPARATION FOR USE - Continued.

NOTES

- **Install all tee and gate valve assemblies with hand wheels in upright position and valves fully closed.**
- **Reposition connection kit components as needed to prevent kinks or tight bends in hoses.**
- **Suction hoses are noncollapsible and discharge hoses are collapsible. All couplings in this kit are 4-inch diameter.**

(1) Connect 20foot suction hose (1) to male discharge elbow (2) on water tank (11).

(2) Connect suction hose (1) to tee and dual gate valve assembly (3) that has two female and one male coupling.

(3) Connect male end of 10-foot suction hose (4) to tee and dual gate valve assembly (3).

(4) Connect suction hose (4) to water source.

(5) Connect 20-foot discharge hose (5) to female filler elbow (6) on water tank (1).

(6) Connect 20-foot discharge hoses (7 and 8) to discharge hose (5).

(7) Connect discharge hose (8) to tee and dual gate valve assembly (9) that has two male and one female coupling.

(8) Connect I0foot discharge hose (10) to remaining male coupling on tee and dual gate valve assembly (9).

(9) Connect discharge hose (10) to female (inlet) coupling on hypochlorination unit (12).

2.7 ASSEMBLY AND PREPARATION FOR USE - Continued.

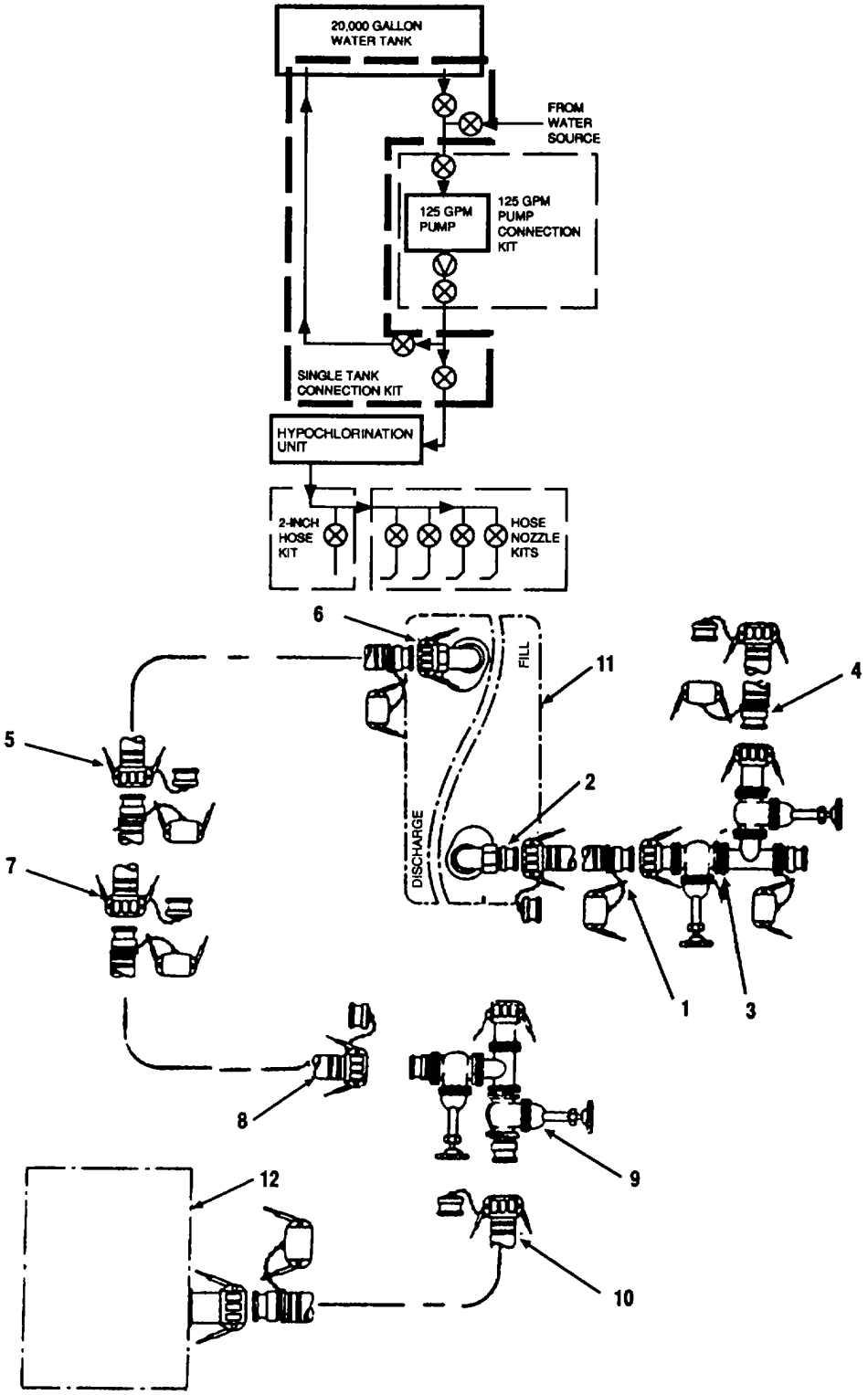

Figure 2-5. Single Tank Connection Kit Assembly

2.7 ASSEMBLY AND PREPARATION FOR USE - Continued.

f. Assemble 125 GPM Pump Assembly Connection Kit (Refer to Figure 2-6).

WARNING

To prevent contamination of drinking water, make sure protective caps and plugs are installed when components are not in use. Do not remove caps and plugs from components until couplings are ready to be connected.

NOTES

- **Install all gate valves with hand wheel in upright position and valve fully closed.**
- **Suction hoses are noncollapsible and discharge hoses are collapsible.**
- **With the exception of two adapters, all couplings in this kit are 2-inch diameter.**

(1) Connect reducer (4inch female x 2-inch male) (2) to tee and dual gate valve assembly (1) from single tank connection kit.

(2) Connect 20-foot suction hose (3) to reducer (2).

(3) Connect 2-inch gate valve (4) to 20-foot suction hose (3).

(4) Connect 20-foot suction hose (5) to 2-inch gate valve (4).

(5) Assemble and prepare 125 gpm pump (6) for use. Refer to the applicable TM.

(6) Position 125 gpm pump (6) in water system.

(7) Connect end of 20-foot suction hose (5) to female (suction) coupling (7) on pump (6).

(8) Connect 20-foot discharge hose (9) to male (discharge) coupling (8) on 125 gpm pump (6).

(9) Connect check valve (10) to 20-foot discharge hose (9).

(10) Connect 2-inch gate valve (11) to check valve (10).

(11) Connect 20-foot discharge hose (12) to 2-inch gate valve (11).

(12) Connect reducer (4-inch male x 2-inch female) (13) to tee and dual gate valve assembly (14) from single tank connection kit.

(13) Connect end of 20 foot discharge hose (12) to reducer (13).

2.7 ASSEMBLY AND PREPARATION FOR USE - Continued.

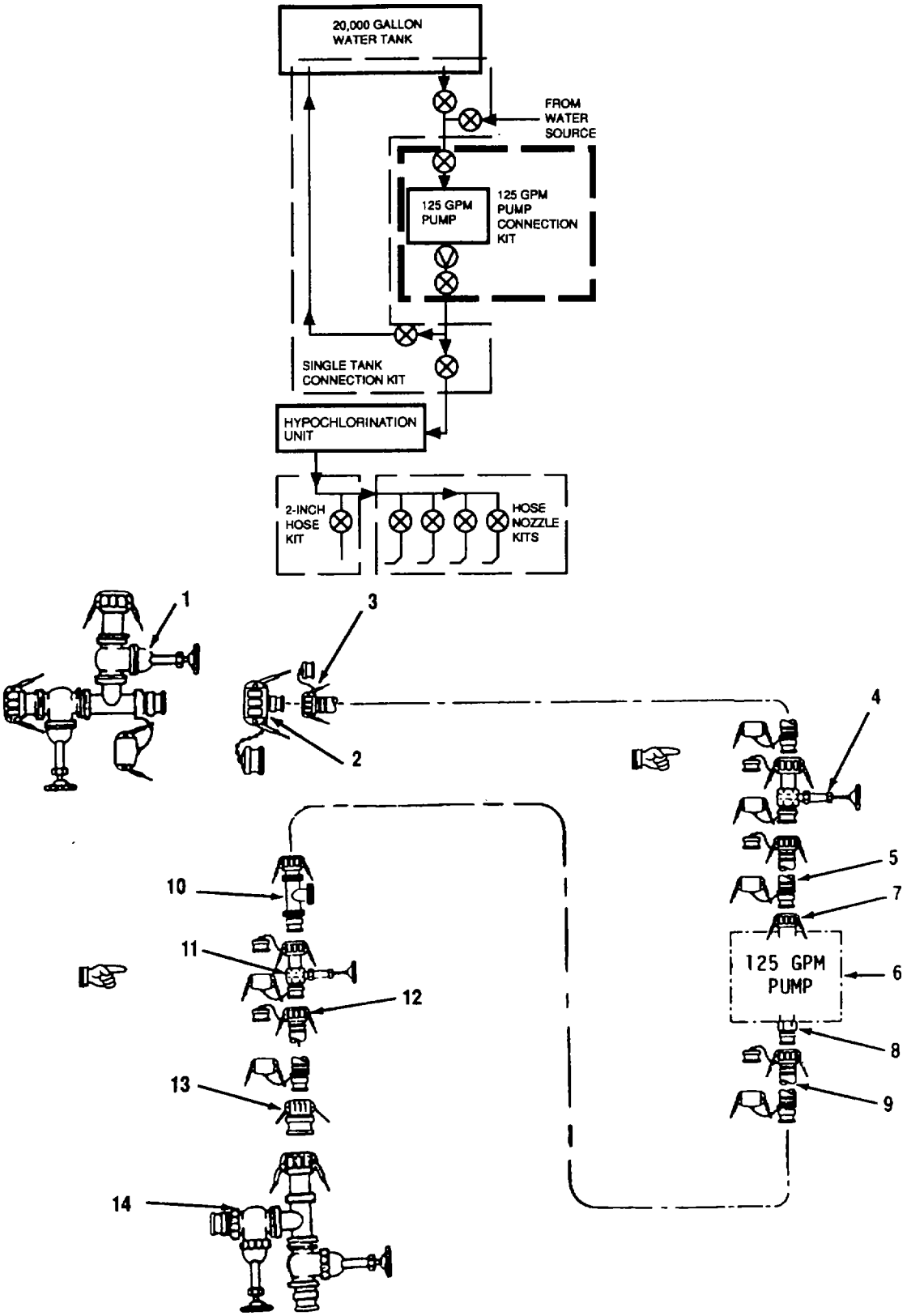

Figure 2-6. 125 GPM Pump Connection Kit Assembly

2.7 ASSEMBLY AND PREPARATION FOR USE - Continued.

g. Assemble 2-Inch Hose Connection Kit. (Refer to Figure 2-7).

WARNING

To prevent contamination of drinking water, make sure protective caps and plugs are installed when components are not in use. Do not remove caps and plugs from components until couplings are ready to be connected.

NOTE

- **Install gate valve with hand wheel in upright position and valve fully closed.**

(1) Connect 4-inch x 20*foot discharge hose (1) to male (outlet) coupling on hypochlorination unit (8).

(2) Connect 4-inch x 20-foot discharge hose (2) to 4-inch x 20foot discharge hose (1).

(3) Connect tee (3) to 4-inch x 20-foot discharge hose (2).

(4) Connect reducer (4-inch female x 2-inch male) (4) to tee (3).

(5) Connect 2-inch gate valve (5) to reducer (4).

(6) Connect 2-inch x 20-foot discharge hose (6) to 2-inch gate valve (5).

(7) Unfold nozzle stand assembly (7) and attach discharge hose (6) to bracket on stand.

2.7 ASSEMBLY AND PREPARATION FOR USE - Continued.

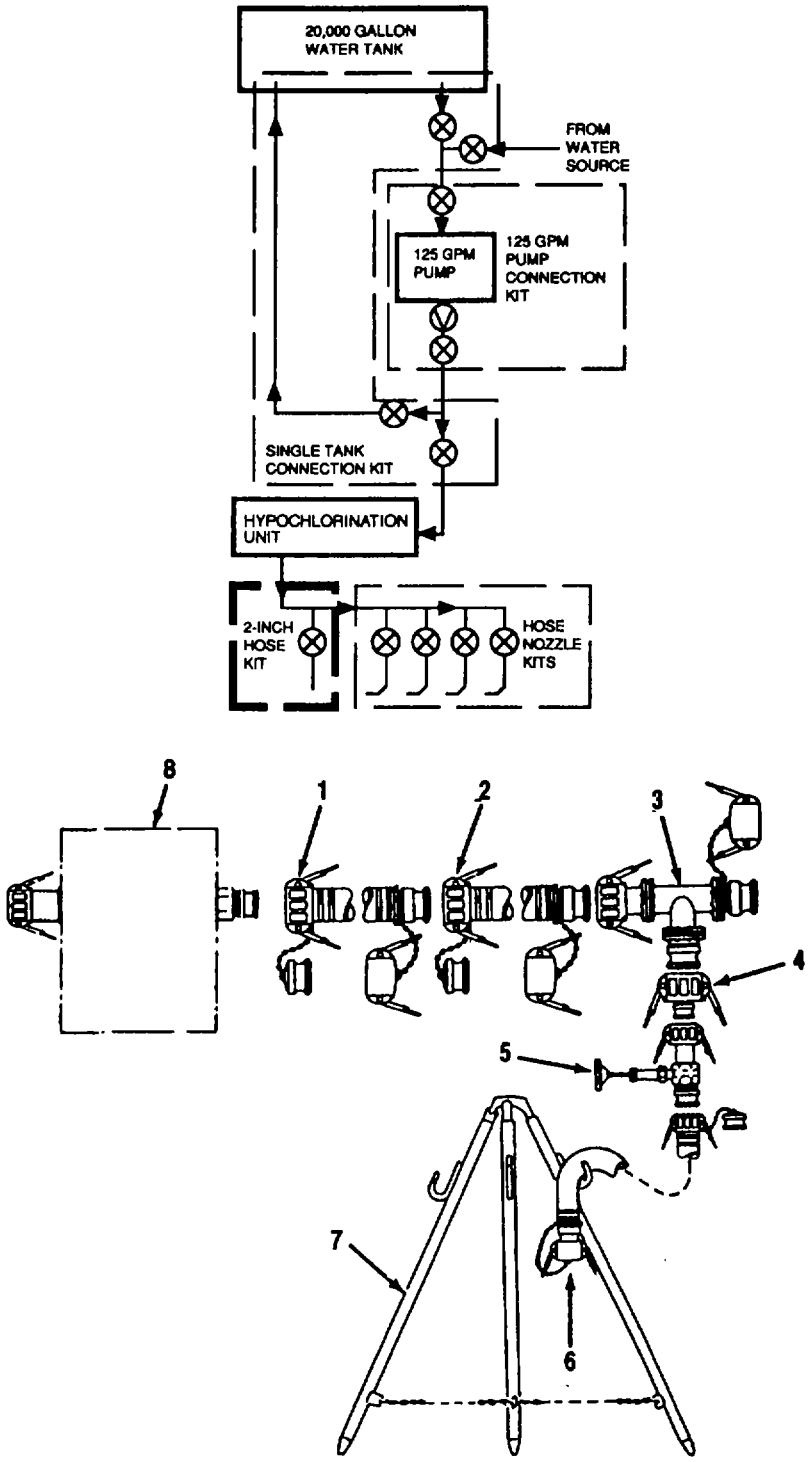

Figure 2-7. 2-Inch Hose Connection Kit Assembly

2.7 ASSEMBLY AND PREPARATION FOR USE - Continued.

h. Assemble Hose Nozzle Connection Kits. (Refer to Figure 2-8).

WARNING

To prevent contamination of drinking water, make sure protective caps and plugs are installed when components are not in use. Do not remove caps and plugs from components until couplings are ready to be connected.

NOTE

- **Install all gate valves with hand wheel in upright position and valve fully closed.**
- **Four 2-inch hose nozzle connection kits are used in the water system. One connection kit is shown. The kits are similar.**

(1) Connect 4-inch x 20-foot discharge hose (2) to tee assembly (1) (2-inch hose connection kit).

(2) Connect 4-inch x 20foot discharge hose (3) to 4-inch x 20-foot discharge hose (2).

(3) Connect tee (4) to 4-inch x 20-foot discharge hose (3).

(4) Connect reducer (4-inch female x 2-inch male) (5) to tee (4).

(5) Connect 2-inch gate valve (6) to reducer (5).

(6) Connect 2-inch x 20-foot discharge hose (7) to gate valve (6).

(7) Connect reducer (2-inch female x 1 1/2-inch male) (8) to 2-inch x 20-foot discharge hose (7).

(8) Connect 1 1/2-inch x 25-foot discharge hose (9) to reducer (8).

(9) Connect distribution nozzle (10) to 1 1/2-inch x 25-foot discharge hose (9).

(10) Unfold nozzle stand assembly (11) and attach distribution nozzle (10) to bracket on stand.

(11) Repeat steps 1 through 10 for Connection Kits 2, 3, and 4.

2.7 ASSEMBLY AND PREPARATION FOR USE - Continued.

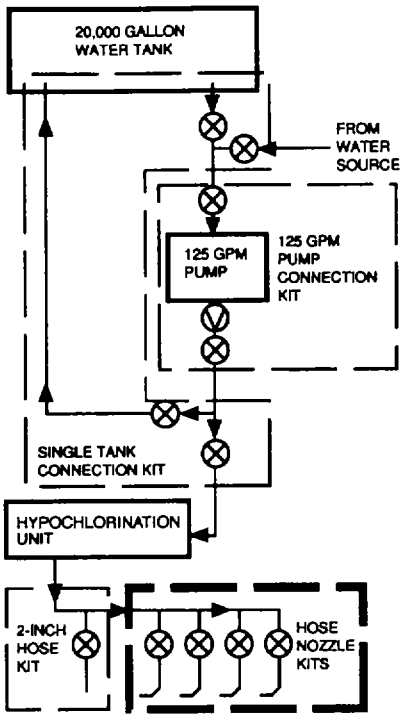

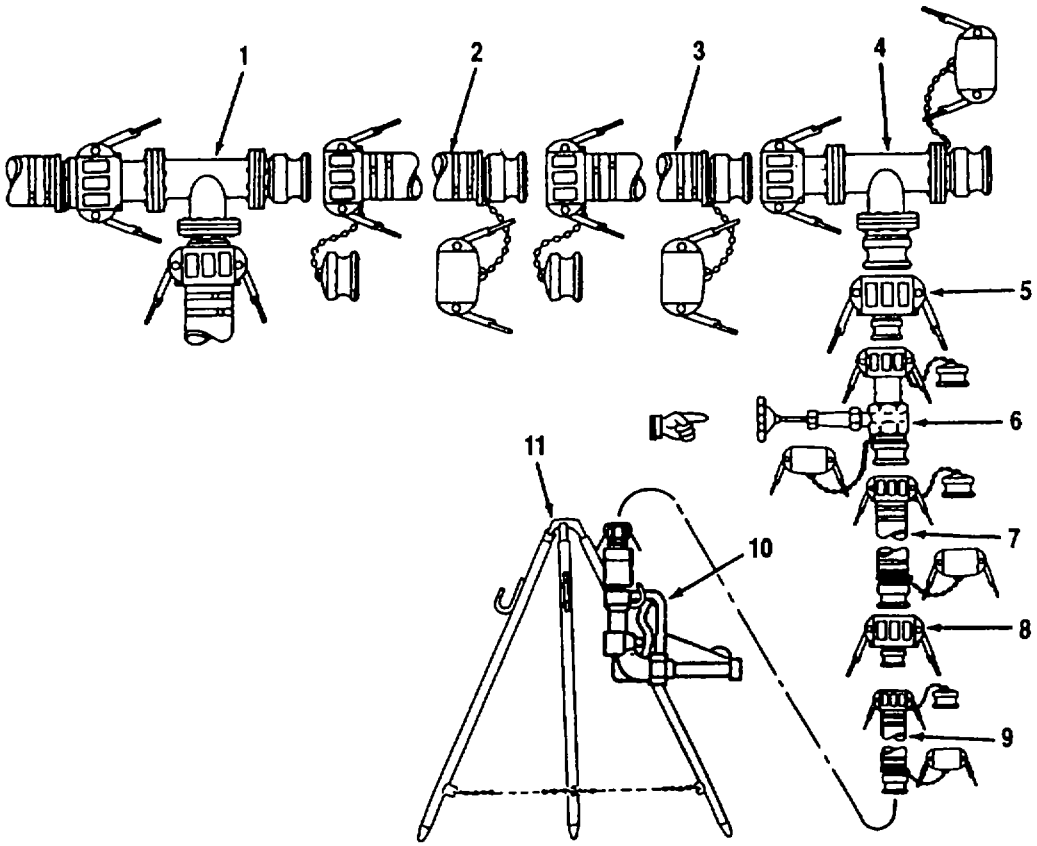

Figure 2-8. Hose Nozzle Connection Kit Assembly

2.8 INITIAL ADJUSTMENT.

a. Hoses, Couplings and Valves.

(1) Verify that all quick disconnect couplings are securely connected and locked.

(2) Verify that caps and plugs are installed on all open tees, fittings, and hoses.

(3) Inspect suction and discharge hoses for kinks. Straighten out kinks and tight bends.

(4) Verify that all gate valves are closed.

b. 20K Collapsible Fabric Tank. Perform initial adjustments in accordance with the applicable TM.

c. 125 GPM Pump. Perform initial adjustments in accordance with the applicable TM.

d. Hypochlorination Unit. Perform initial preparation in accordance with the applicable TM.

2.9 OPERATING PROCEDURES.

a. General. The 20K Water Storage and Distribution System has two primary modes of operation, fill and discharge. In the fill mode, water is drawn from the water source and stored in the water tank. During discharge, water is removed from the water tank and pumped to the distribution points. The water system cannot operate in both fill mode and discharge mode at the same time.

b. Water System Diagram. Refer to Figure 2-9. Water flow to and from the collapsible fabric tank is controlled by gate valves identified by the prefix "V." By opening or closing the respective gate valves, the tank may be filled or discharged.

c. Startup. Refer to Figure 2-9.

Fill Mode.

NOTE

The following procedure describes filling of collapsible water tank.

(1) Open gate valves Vl, V5, V6 and V3.

CAUTION

The 125 gpm pump volute must be filled with water before operating. Damage to the pump can occur.

(2) Start and operate the 125 gpm pump. Refer to the applicable TM.

(3) Allow water to flow into the tank until full, or required amount of water is stored (refer to the applicable TM), then close gate valve V3.

(4) When fill mode is complete, shut down 125 gpm pump (refer to the applicable TM) and close gate valves VI, V5 and V6.

2.9 OPERATING PROCEDURES - Continued.

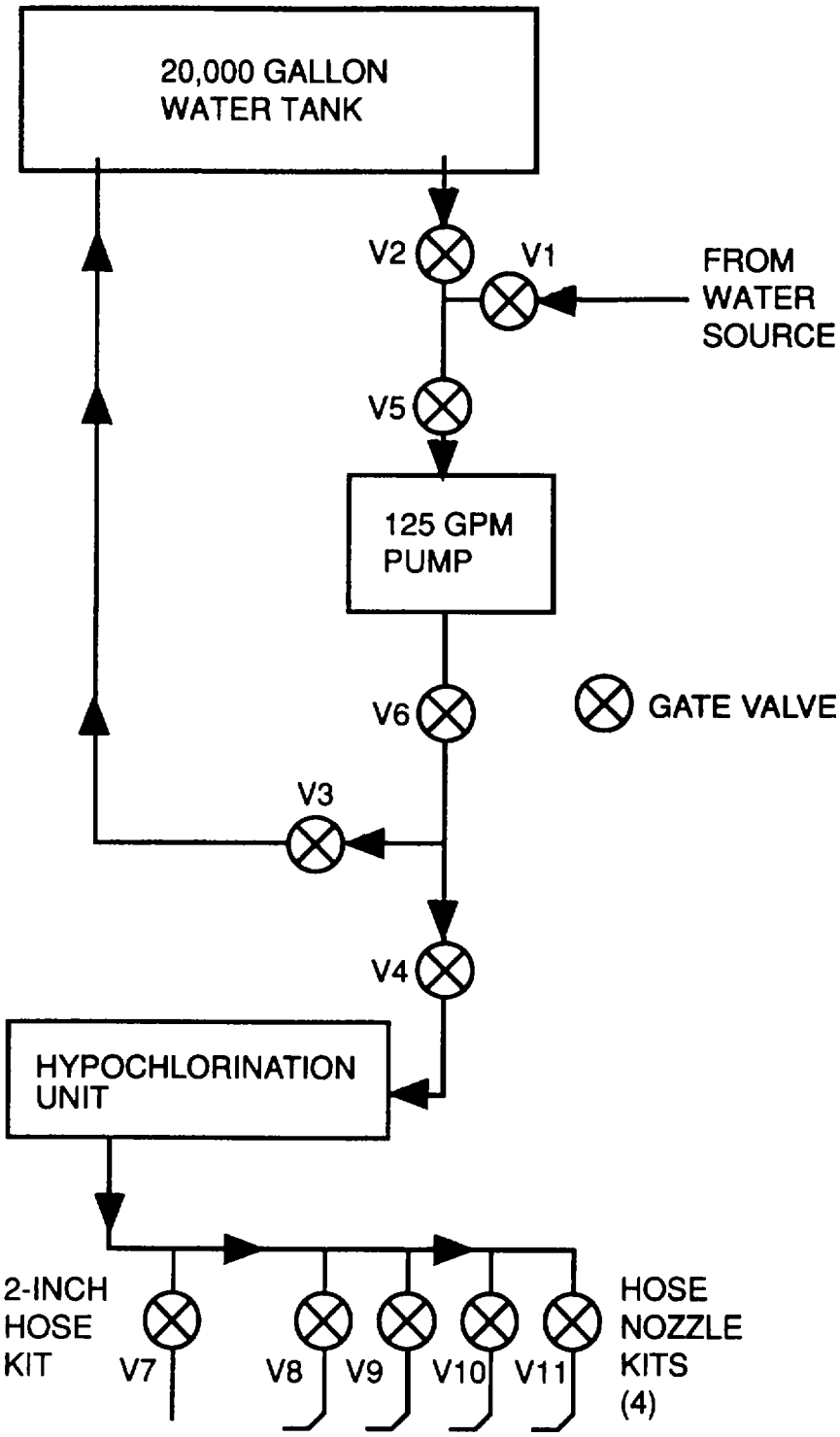

Figure 2-9. Water System Control Valves

2.9 OPERATING PROCEDURES - Continued.

Discharge Mode. Refer to Figure 2-9.

(5) Open gate valves V5, V6 and V4.

(6) Open tank outlet gate valve V2.

CAUTION

The 125 gpm pump volute must be filled with water before operating. Damage to the pump can occur.

(7) Start and operate 125 gpm pump. Refer to the applicable TM.

(8) At hypochlorination unit make final adjustments. Refer to the applicable TM.

(9) To dispense water through 2-inch hose connection kit, proceed as follows:

(a) Remove cap and connect end of dispensing hose to water storage container.

(b) Open gate valve V7.

(c) When water storage containers are full, close gate valve V7 and disconnect dispensing hose from water storage container.

(10) To dispense water through hose nozzle connection kits, proceed as follows:

(a) Open gate valves V8, V9, V10 and V11.

(b) Place distribution nozzles in water storage containers and squeeze distribution nozzle control handles to dispense water.

(c) When water storage containers are full, release control handles on distribution nozzles.

(d) Close gate valves V8, V9, V10 and V11 and remove nozzles from water storage container.

(11) When discharge mode is complete, shut down the 125 gpm pump (refer to the applicable TM).

d. Shutdown. Refer to Figure 2-9.

(1) Shut down 125 gpm pump. Refer to the applicable TM.

(2) Close gate valves V1 through V11 (if open).

(3) Shut down hypochlorination unit. Refer to the applicable TM.

2.10 DECALS AND INSTRUCTION PLATES.

Instruction plates are used on the 20K Water Storage and Distribution System to advise the operator of proper operating procedures. Stencils provide additional operating information and cautions to be observed during use of the equipment. Decals and instruction plates appear on major assemblies of the 20K water system.

a. 125 GPM Pump. For decals and instruction plates on the 125 gpm pump, refer to the applicable TM.

b. 20K Collapsible Fabric Tank. For decals and instruction plates on the 20,000 gallon collapsible fabric tank, refer to the applicable TM.

c. Hypochlorination Unit. For decals and instruction plates on the hypochlorination unit, refer to the applicable TM.

d. Triple Container. For decals and instruction plates on the triple container, refer to the applicable TM.

e. Water Tank Chest. Refer to Figure 2-10 for decals and instruction plates typical of those found on the tank chest.

2.10 DECALS AND INSTRUCTION PLATES. - Continued.

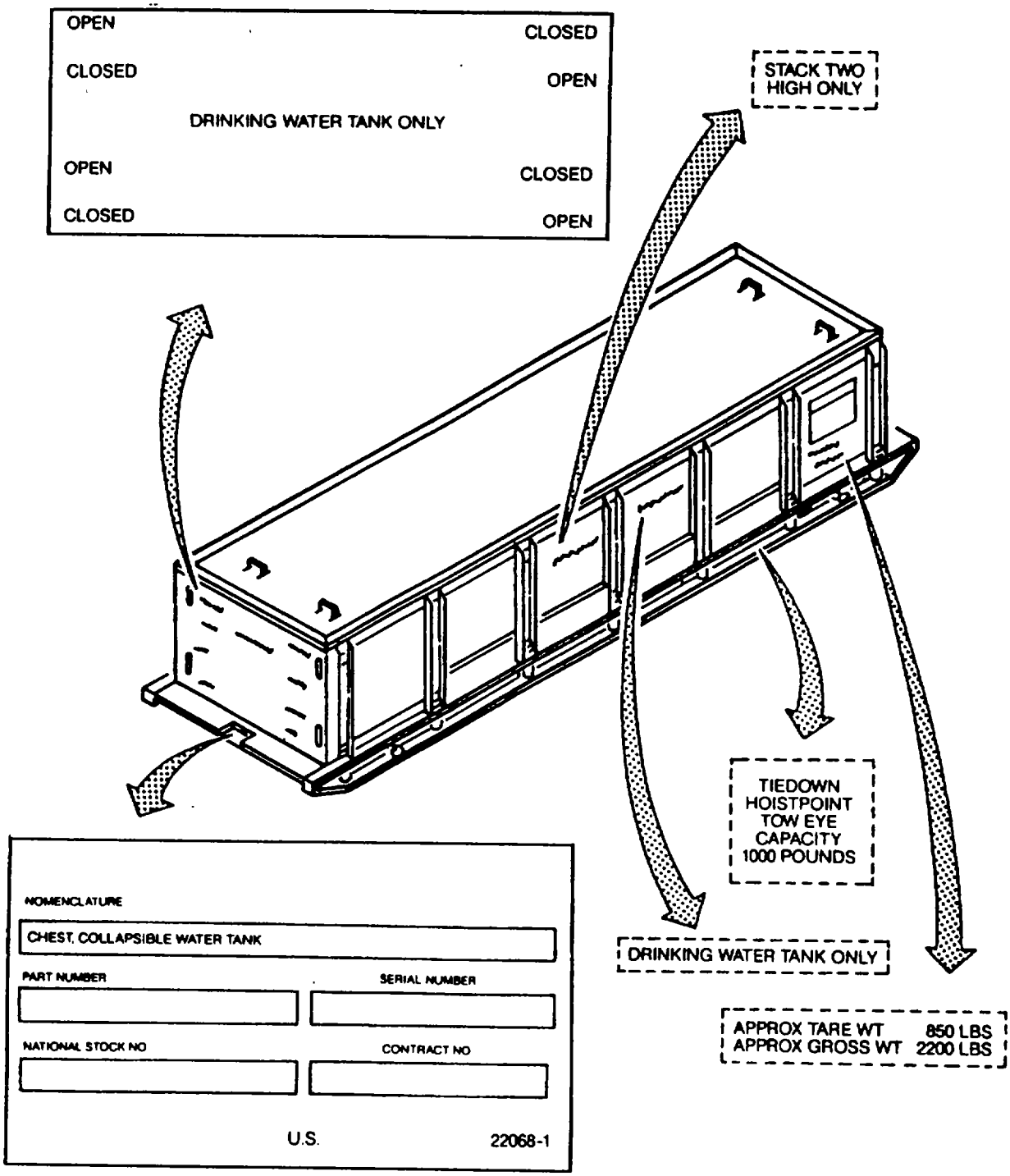

Figure 2-10. Decals and Instruction Plates (Typical)

2.11 OPERATING AUXILIARY EQUIPMENT.

WARNING

Engine driven water pumps must not be operated in enclosed areas unless exhaust discharge is properly vented to the outside. Be alert at all times during operation for odors and symptoms of carbon monoxide exposure. Death or serious injury could occur.

a. 125 GPM Pump. Instructions for operating the 125 gpm pump are contained in the applicable TM.

b. 20K Collapsible Fabric Tank. Instructions for operating the 20,000 gallon collapsible fabric tank are contained in the applicable TM.

WARNING

Chemicals used for operating the hypochlorination unit can kill you. The chemicals alone or in mixture can be dangerous. Always wear protective apron, goggles and gloves, and make sure area is well ventilated.

c. Hypochlorination Unit. Instructions for operating the hypochlorination unit are contained in the applicable TM.

d. Triple Container. Instructions for operating the triple container are contained in the applicable TM.

2.12 PREPARATION FOR MOVEMENT.

WARNING

- **To prevent contamination of water system components, keep dirt, mud, sand, and debris from entering open couplings during disassembly. Make sure protective caps and plugs are installed after components are disassembled.**
- **To prevent injury to personnel, the water pump must be shut down and water pressure relieved from discharge hoses before disconnecting couplings. a. Drain Collapsible Fabric Tank. Drain water from the collapsible fabric tank. Refer to the applicable TM.**

b. Disassemble Hose Nozzle Connection Kits. Refer to Figure 2-11.

WARNING

- **To prevent contamination of water system components, keep dirt, mud, sand, and debris from entering open couplings during disassembly. Make sure protective caps and plugs are installed after components are disassembled.**
- **To prevent injury to personnel, all water pumps must be shut down and water pressure relieved from discharge hoses before disconnecting couplings.**

2.12 PREPARATION FOR MOVEMENT - Continued.

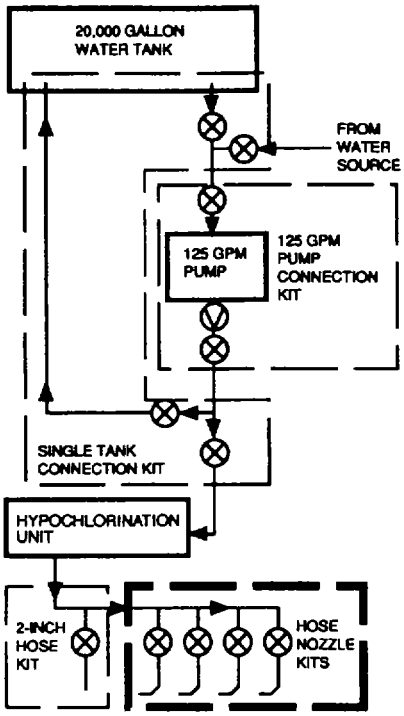

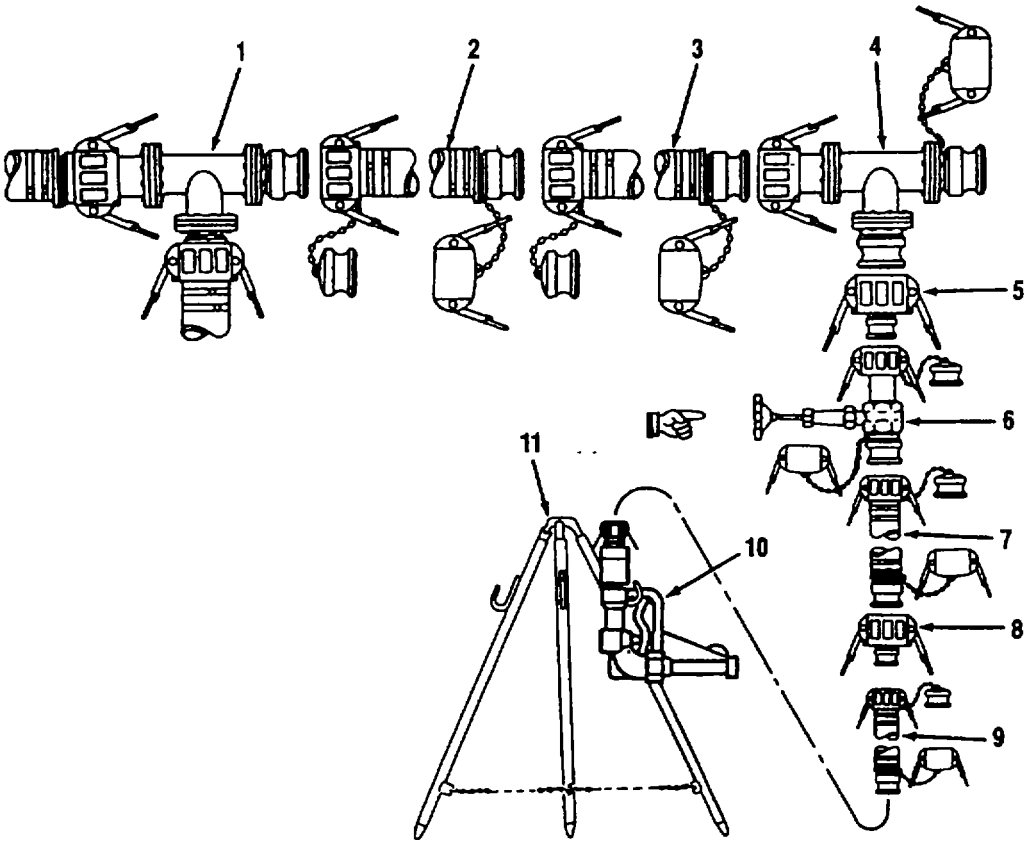

Figure 2-11. Hose Nozzle Connection Kit Disassembly

2.12 PREPARATION FOR MOVEMENT - Continued.

NOTE

Four hose nozzle connection kits are used in the water system. One is shown; the others are similar.

(1) Remove distribution nozzle (10) from nozzle stand assembly (11) and fold stand.

(2) Disconnect distribution nozzle (10) from 1 1/2-inch x 25-foot discharge hose (9).

(3) Disconnect 1 1/2-inch x 25-foot discharge hose (9) from reducer (8).

(4) Disconnect reducer (2-inch female x 1 1/2-inch male) (8) from 2-inch x 20-foot discharge hose (7).

(5) Disconnect 2-inch x 20-foot discharge hose (7) from gate valve (6).

(6) Disconnect 2-inch gate valve (6) from reducer (5).

(7) Disconnect reducer (4-inch female x 2-inch male) (5) from tee (4).

(8) Disconnect tee (4) from 4-inch x 20-foot discharge hose (3).

(9) Disconnect 4-inch x 20-foot discharge hose (3) from cinch x 20-foot discharge hose (2).

(10) Disconnect 4-inch x 20-foot discharge hose (2) from tee assembly (1) (2-inch hose connection kit).

(11) Repeat steps 1 through 10 for remaining hose nozzle connection kits.

(12) Drain and allow components to dry.

(13) Install caps and plugs on component couplings (para. 2.7c).

(14) Roll all discharge hoses and secure with tape.

c. Disassemble 2-Inch Hose Connection Kit. Refer to Figure 2-12.

WARNING

- **To prevent contamination of water system components, keep dirt, mud, sand, and debris from entering open couplings during disassembly. Make sure protective caps and plugs are installed after components are disassembled.**
- **To prevent injury to personnel, the water pump must be shut down and water pressure relieved from discharge hoses before disconnecting couplings.**

(1) Remove discharge hose (6) from nozzle stand assembly (7). Fold nozzle stand.

(2) Disconnect 2-inch x 20-foot discharge hose (6) from 2-inch gate valve (5).

(3) Disconnect 2-inch gate valve (5) from reducer (4).

2.12 PREPARATION FOR MOVEMENT - Continued.

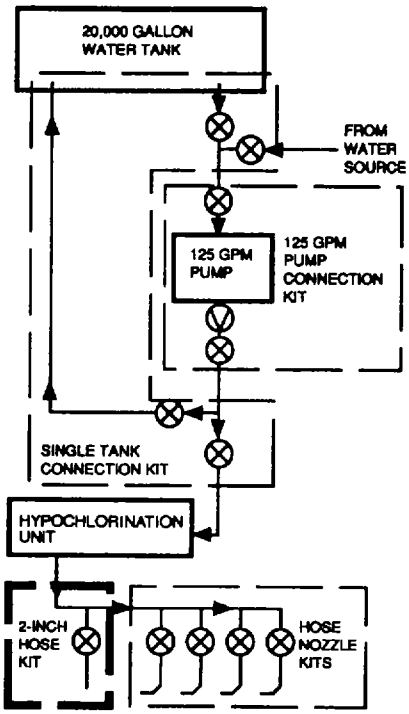

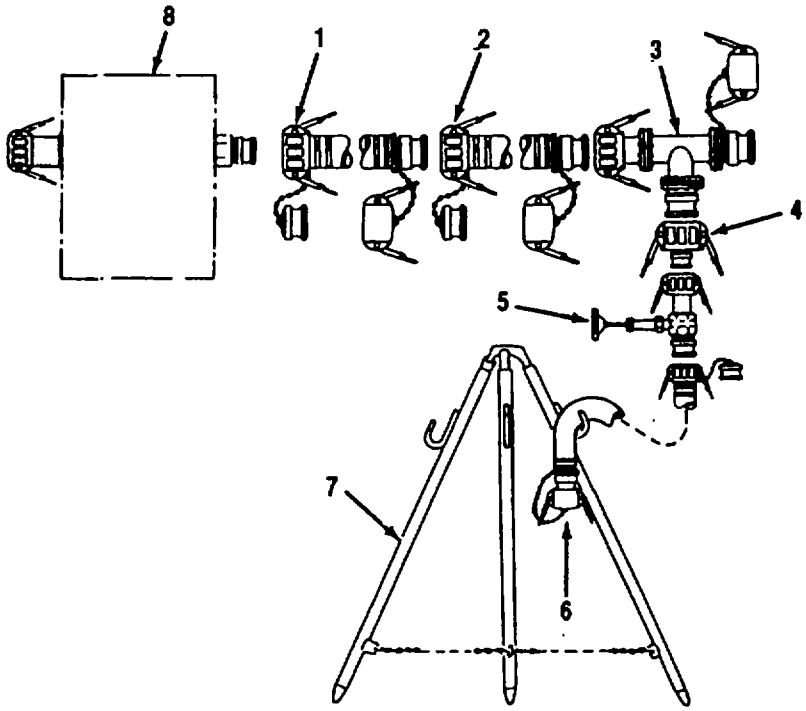

Figure 2-12. 2-Inch Hose Connection Kit Disassembly

2.12 PREPARATION FOR MOVEMENT - Continued.

(4) Disconnect reducer (4-inch female x 2-inch male) (4) from tee (3).

(5) Disconnect tee (3) from 4-inch x 20-foot discharge hose (2).

(6) Disconnect 4-inch x 20-foot discharge hose (2) from 4-inch x 20-foot discharge hose (1).

(7) Disconnect 4-inch x 20-foot discharge hose (1) from male (outlet) coupling on hypochlorination unit (8).

(8) Drain and allow components to dry.

(9) Install caps and plugs on component couplings (para. 2.7c).

(10) Roll all discharge hoses and secure with tape.

d. Disassemble 125 GPM Pump Assembly Connection Kit. Refer to Figure 2-13.

WARNING

- **To prevent contamination of water system components, keep dirt, mud, sand and debris from entering open couplings during disassembly. Make sure protective caps and plugs are installed after components are disassembled.**
- **To prevent injury to personnel, all water pumps must be shut down and water pressure relieved from discharge hoses before disconnecting couplings.**

(1) Disconnect end of 20-foot discharge hose (12) from reducer (13).

(2) Disconnect reducer (4-inch male x 2-inch female) (13) from tee and dual gate valve assembly (14) (part of single tank connection kit).

(3) Disconnect 20-foot discharge hose (12) from 2-inch gate valve (11).

(4) Disconnect 2-inch gate valve (11) from check valve (10).

(5) Disconnect check valve (10) from 20-foot discharge hose (9).

(6) Disconnect 20-foot discharge hose (9) from male (discharge) coupling (8) on 125 gpm pump (6).

(7) Disconnect end of 20-foot suction hose (5) from female (suction) coupling (7) on 125 gpm pump (6).

(8) Disconnect 20-foot suction hose (5) from 2-inch gate valve (4).

(9) Disconnect 2-inch gate valve (4) from 20-foot suction hose (3).

(10) Disconnect 20-foot suction hose (3) from reducer (2).

(11) Disconnect reducer (4-inch female x 2-inch male) (2) from tee and dual gate valve assembly (1) (part of single tank connection kit).

2.12 PREPARATION FOR MOVEMENT - Continued.

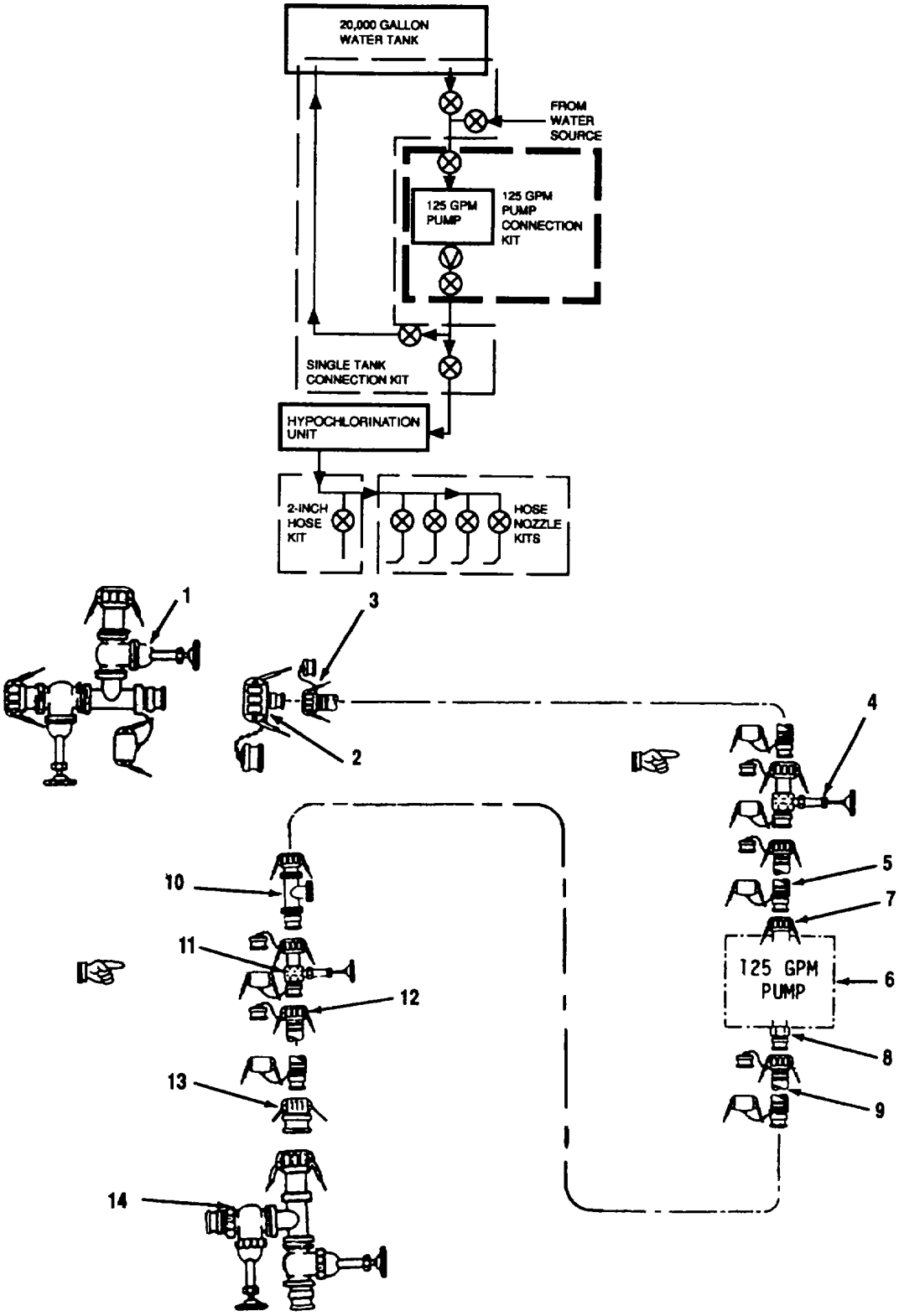

Figure 2-13. 125 GPM Pump Connection Kit Disassembly

2.12 PREPARATION FOR MOVEMENT - Continued.

(12) Drain and allow components to dry.

(13) Install caps and plugs on component couplings (para. 2.7c).

(14) Roll up all discharge hoses and secure with tape.

(15) Prepare 125 gpm pump (6) for movement. Refer to the applicable TM.

e. Disassemble Single Tank Connection Kit. Refer to Figure 2-14.

WARNING

To prevent contamination of water system components, keep dirt, mud, sand, and debris from entering open couplings during disassembly. Make sure protective caps and plugs are installed after components are disassembled.

(1) Disconnect 10-foot discharge hose (10) from female (inlet) coupling on hypochlorination unit (12).

(2) Disconnect discharge hose (10) from tee and dual gate valve assembly (9).

(3) Disconnect tee and dual gate valve assembly (9) from 20-foot discharge hose (8).

(4) Disconnect discharge hose (8) from 20-foot discharge hose (7).

(5) Disconnect discharge hose (7) from 20-foot discharge hose (5).

(6) Disconnect discharge hose (5) from female filler elbow (6) on water tank (11).

(7) Disconnect 10-foot suction hose (4) from water source.

(8) Disconnect suction hose (4) from tee and dual gate valve assembly (3).

(9) Disconnect tee and dual gate valve assembly (3) from 20-foot suction hose (1).

(10) Disconnect suction hose (1) from male elbow (2) on water tank (11).

(11) Drain and allow components to dry.

(12) Install caps and plugs on component couplings (para. 2.7c).

(13) Roll up all discharge hoses and secure with tape.

(14) Prepare hypochlorination unit (12) for movement. Refer to applicable TM.

(15) Prepare water tank (11) for movement. Refer to applicable TM.

2.12 PREPARATION FOR MOVEMENT - Continued.

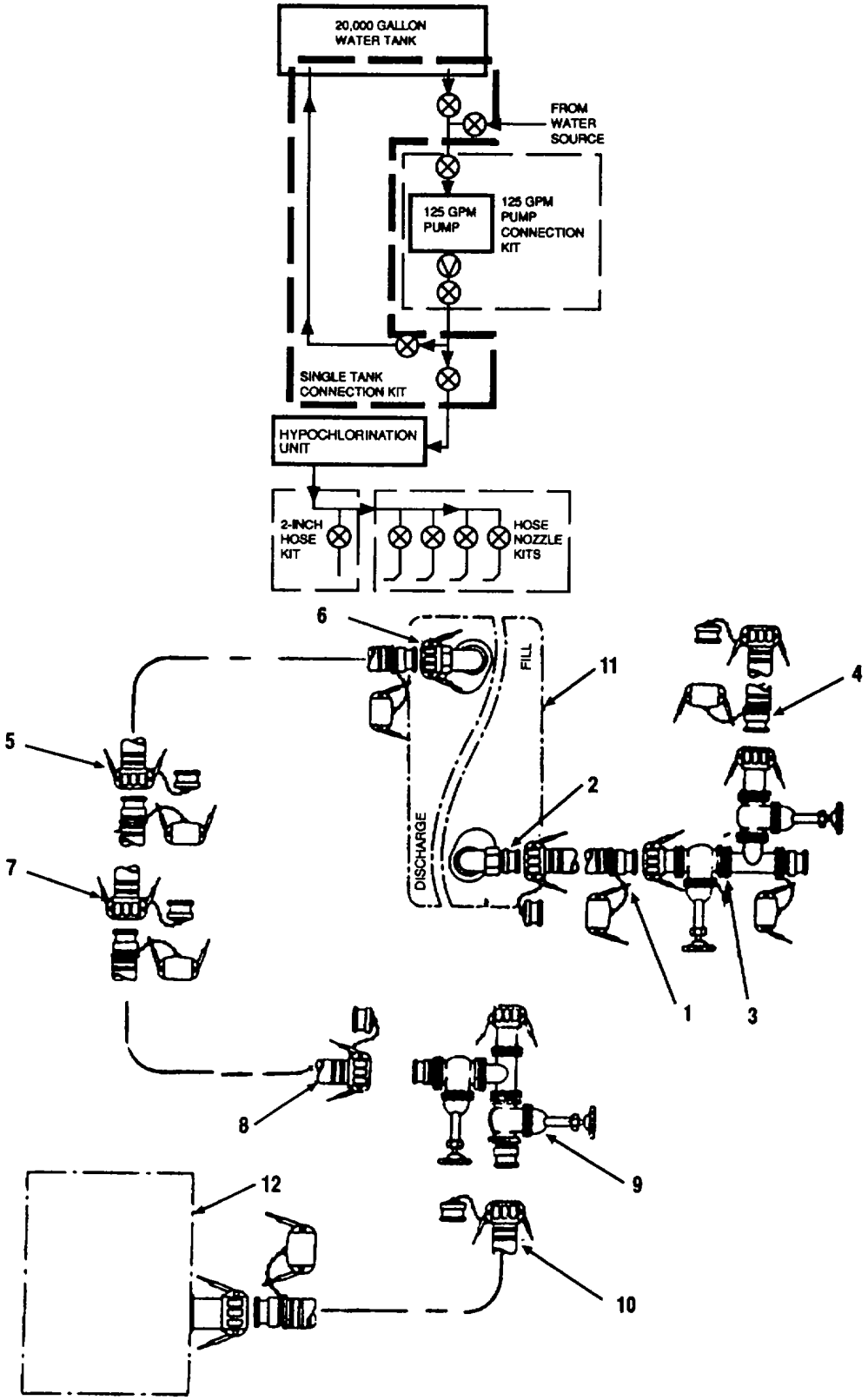

Figure 2-14. Single Tank Connection Kit Disassembly

2.12 PREPARATION FOR MOVEMENT - Continued.

f. Packing.

(1) Open triple container. Refer to the applicable TM.

(2) Pack water system components into triple container. If possible, keep similar components stowed together. For example, pack all 4inch discharge hoses together, then all the 2-inch gate valves, 2-inch discharge hoses and so on until all components are stowed.

(3) Pack hypochlorination unit into triple container.

(4) Pack 125 gpm pump into triple container.

(5) Close triple container. Refer to the applicable TM.

Section IV. OPERATION UNDER UNUSUAL CONDITIONS

2.13 OPERATION IN EXTREME. COLD (BELOW 32 °F (0 °C)).

a. When the air temperature is expected to be 32° F (0° C) or below, set up the water system torecirculate the water in the water tank.

(1) Close all control valves (V1 through V11), (Figure 2-15).

(2) Open control valves V2, V3, V5 and V6.

(3) Start and operate 125 gpm pump. Refer to the applicable TM.

(4) At the hypochlorination unit, disconnect 4-inch discharge hose from the input (pump side).

(5) At 2-inch hose connection kit, open control valve V7 and allow water to drain from components.

(6) At hose nozzle kits, open control valves V8, V9, V10 and VI I and the distribution nozzles to allow water to drain from components.

(7) Drain water and hypochlorite solution from the hypochlorination unit. Refer to the applicable TM.

CAUTION

To prevent damage to the equipment, all hoses must be disconnected from the water pump, hypochlorination unit and collapsible tank. The pump, tank, and hoses must be drained quickly. All control valves must be opened and all equipment inspected to assure complete drainage.

b. If equipment is shut down during cold weather (temperature falls below 32° F (0° C)), perform the following steps to ensure water is drained from the collapsible tank, hoses, valves, pump and connections.

(1) Open all control valves (V1 through V11), (Figure 2-9).

(2) Open all dispensing nozzles.

(3) Allow water to drain from hoses and couplings.

(4) Drain collapsible water tank. Refer to the applicable TM.

(5) Drain 125 gpm water pump. Refer to the applicable TM.

(6) Disconnect and drain hypochlorination unit. Refer to the applicable TM.

2.13 OPERATION IN EXTREME COLD (BELOW 32 °F (0 °C) - Continued.

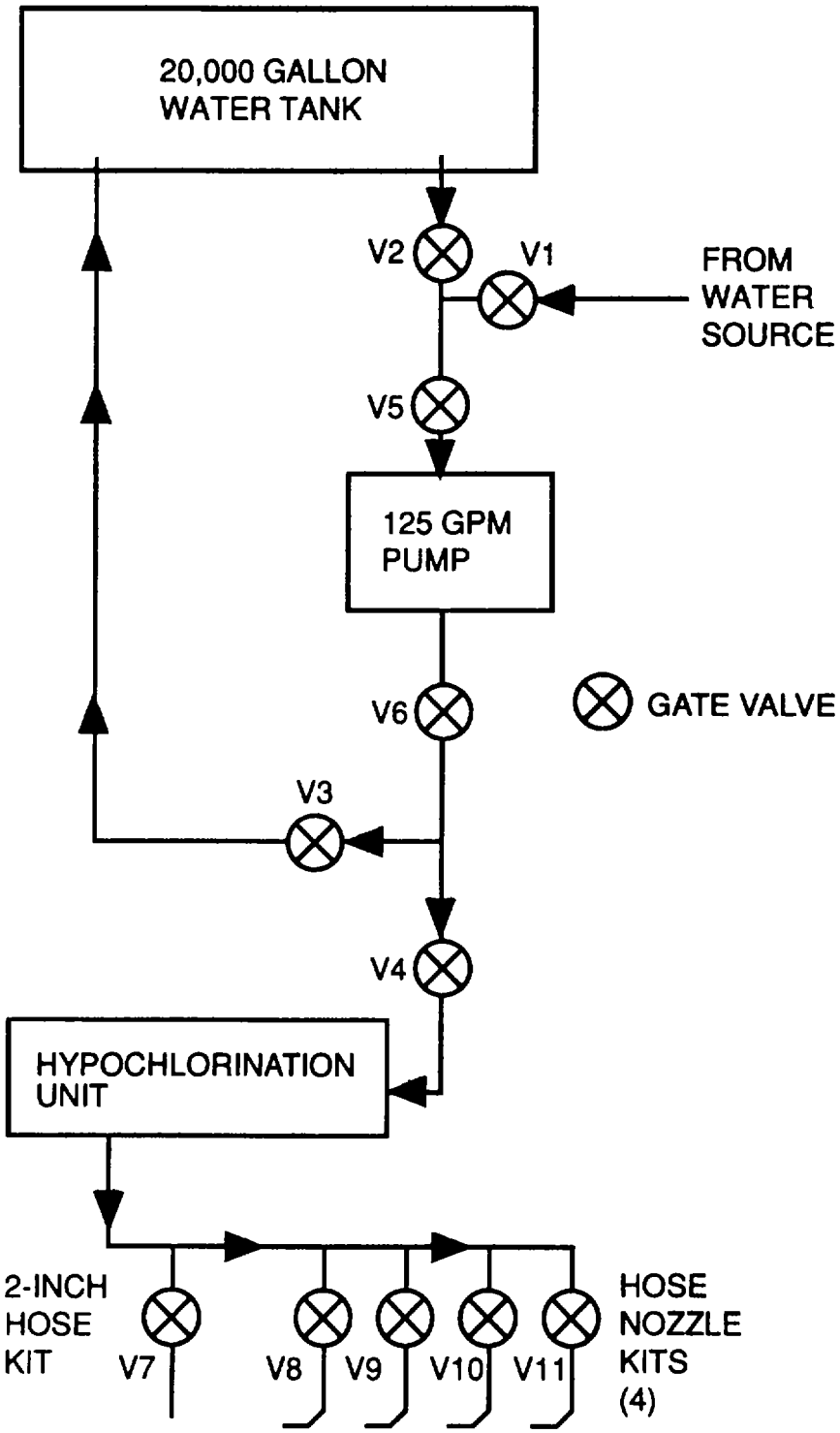

Figure 2-15. Water System Control Valves

2.14 OPERATION IN EXTREME HEAT.

Observe the following precautions when operating the water system in extreme heat:

(1) Set up collapsible tank, water pump, and hypochlorination unit in shaded area. If shade is not available, protect water tank from direct sunlight by constructing sun blocks or erecting portable shelters.

(2) Ventilate area around water tank. Make sure air can circulate freely around tank.

(3) Avoid unnecessary folding, unfolding or rolling of empty water tank and hoses. Do not store unused tank in direct sunlight.

(4) Refer to the applicable TM for operating the 125 gpm pump in extreme heat.

(5) Refer to the applicable TM for operating the hypochlorination unit in extreme heat.

(6) Refer to the applicable TM for operating the water tank in extreme heat.

(7) Monitor water supply for excessive bacterial and algae growth. Adjust output of hypochlorination unit as directed by medical personnel. Refer to the applicable TM.

2.15 OPFRAT1ON IN DUSTY OR SANDY AREAS.

Observe the following precautions when operating the water system in dusty or sandy areas:

(1) Keep dust caps in place on fittings and couplings until ready for use.

(2) Carefully inspect coupling gaskets before connecting fittings. Remove all dirt, sand and debris before making connections.

(3) Refer to the applicable TM for operating the 125 gpm pump in dusty or sandy areas.

(4) Refer to the applicable TM for operating the hypochlorination unit in dusty or sandy areas.

(5) Refer to the applicable TM for operating the water tanks in dusty or sandy areas.

(6) Following operation in dusty or sandy areas, rinse all components with clean, fresh water to remove sand, dust and grit. Direct special attention to quick disconnect coupling gaskets and locking arms.

2.16 OPERATION IN SALT WATER AREAS.

Operation in salt water areas accelerates corrosion on bare metal surfaces. Observe the following precautions when operating the water system in this environment:

(1) Carefully inspect water components during installation. If bare metal is found, notify unit maintenance to preserve or paint the metal as required.

(2) Following operation in salt water areas, rinse components with clean, fresh water to remove salt spray and/or deposits.

(3) Refer to the applicable TM for operation of the 125 gpm pump in salt water areas.

(4) Refer to the applicable TM for operation of the hypochlorination unit in salt water areas.

2.17 EMERGENCY PROCEDURES.

The 20K Water Storage and Distribution System allows isolation and redirection of water flow around failed components without a severe drop in operational capacity.

a. Component Failure. Refer to Figure 2-9. In the event of a hose, coupling, tank or valve rupture, the failed component must be isolated as soon as possible to stop the loss of water.

WARNING

To prevent injury to personnel, do not attempt to grab whipping hose.

(1) If ruptured hose is whipping, shut down water pump.

CAUTION

To prevent damage to the equipment, water system must be shut down if isolating failed component(s) will block water flow to or from the 125 gpm pump connection kit.

(2) Close nearest upstream and downstream control valves to stop water flow through failed component.

(3) If failed component is located in the 125 gpm pump connection kit, shut down the 125 gpm pump. Refer to the applicable TM.

(4) Continue operation with failed component isolated from the system.

b. Water Tank Failure. Refer to Figure 2-9. In the event the water tank fails, water can be pumped directly from a source through the hypochlorination unit to the loading stations.

(1) Connect the water source to the input of the single tank connection kit.

(2) Isolate tank from system by closing gate valves V2 and V3.

(3) Open gate valves V1, V5, V6 and V4.

(4) Start and operate 125 gpm pump. Refer to the applicable TM.

(5) Operate loading stations in the usual manner.

2.18 DECONTAMINATION PROCEDURES.

NOTE

Detailed decontamination procedures can be found in: FM 3-3, FM 3-4 and FM 3-5.

a. General. The following emergency procedures can be performed until field NBC DECON facilities are available. Assigned operators will assist the supporting NBC unit.

b. Emergency Procedures. If NBC attack is known or suspected, mask at once and:

(1) Stop dispensing water.

(2) Reduce the risk of introducing contamination into the water system by shutting down the 125 gpm pump. Refer to the applicable TM.

(3) Shut down hypochlorination unit (refer to the applicable TM). Hypochlorite solution container is not air tight and may have been contaminated.

(4) Do not connect or disconnect any components from the water system. System integrity must be maintained until decontamination of equipment is complete.

(5) Test water for contamination using the NBC kit and provide a water sample to medical personnel before resuming operation.

CHAPTER 3

OPERATOR MAINTENANCE INSTRUCTIONS

Section I.	**Lubrication Instructions**	3-1
Section II.	**Operator Troubleshooting**	3-1
3.1	Introduction	3-1
3.2	Malfunction Index	3-2
3.3	Troubleshooting	3-2
Section III.	**Operator Maintenance Procedures**	3-15
3.4	Component Replacement	3-15
3.5	Quick Disconnect Coupling Repair	3-17

Section I. LUBRICATION INSTRUCTIONS

Lubrication of the 20K Water Storage and Distribution System is limited to the 125 gpm pump. Refer to the applicable TM for lubrication requirements.

Section II. OPERATOR TROUBLESHOOTING

3.1 INTRODUCTION.

a. The troubleshooting procedures in this section cover the common malfunctions which you may find during operation of the 20K Gallon Water Storage and Distribution System. You should perform the tests, inspections and corrective actions in the order they appear in the section.

b. This section cannot list all the malfunctions that may occur, all the tests or inspections needed to find the fault, or all the corrective actions needed to correct the fault. If the equipment malfunction is not listed or actions listed do not correct the fault, notify your supervisor.

c. Refer to the applicable TM for troubleshooting malfunctions on the 125 gpm pump.

d. Refer to the applicable TM for troubleshooting malfunctions on the hypochlorination unit.

e. Refer to the applicable TM for troubleshooting malfunctions on the 20K collapsible fabric tank.

3.2 MALFUNCTION INDEX.

Malfunction	Page
1. No Water Flow to Loading Stations	3-3
2. Low Water Pressure at Loading Stations	3-4
3. Discharge or Suction Hose Leaks	3-5
4. Gate Valve Assembly (2-Inch) Leaks	3-6
5. Gate Valve Assembly (2-Inch) Stuck or Jammed	3-7
6. Tee Assembly (All) Leaks	3-8
7. Distribution Nozzle (1 1/2-Inch) Leaks	3-9
8. Distribution Nozzle (1 112-Inch) Stuck Open or Closed	3-10
9. Check Valve (2-Inch) Leaks	3-11
10. Check Valve (2-Inch) Stuck Open or Closed	3-12
11. Tee and Dual Gate Valve Assembly (All) Leaks	3-13
12. Tee and Dual Gate Valve Assembly (All) Stuck Open or Closed	3-14

3.3 TROUBLESHOOTING.

Troubleshoot the water system using the applicable malfunction logic trees provided in the remainder of this paragraph. Also refer to paragraph 3.2 for an index of the water system malfunctions covered in this section.

WARNING

Be sure to read ALL warnings in front of this manual before troubleshooting.

3.3 TROUBLESHOOTING - Continued.

MALFUNCTION 1. NO WATER FLOW TO LOADING STATIONS.

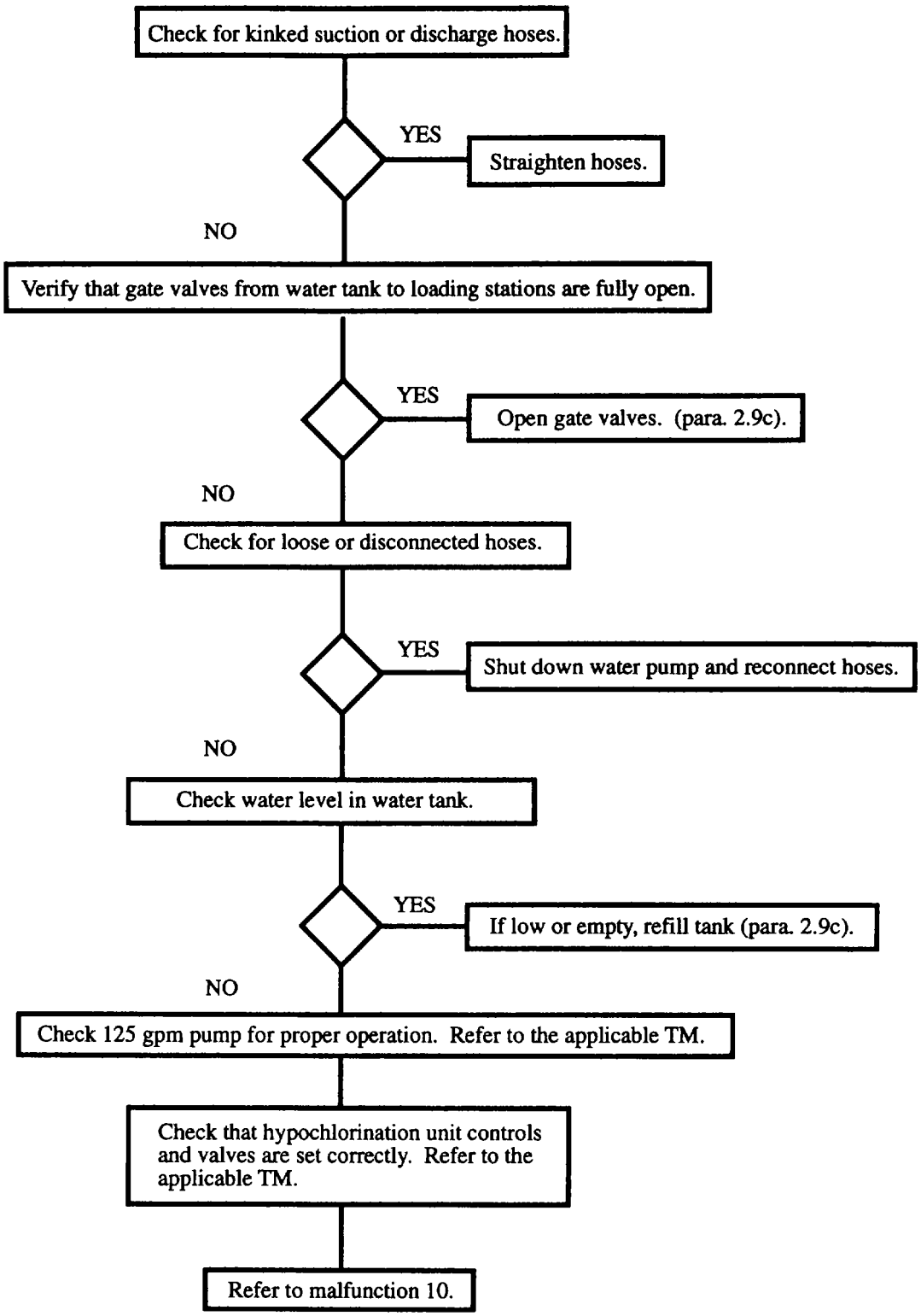

3.3 TROUBLESHOOTING - Continued.

MALFUNCTION 2. LOW WATER PRESSURE AT LOADING STATIONS.

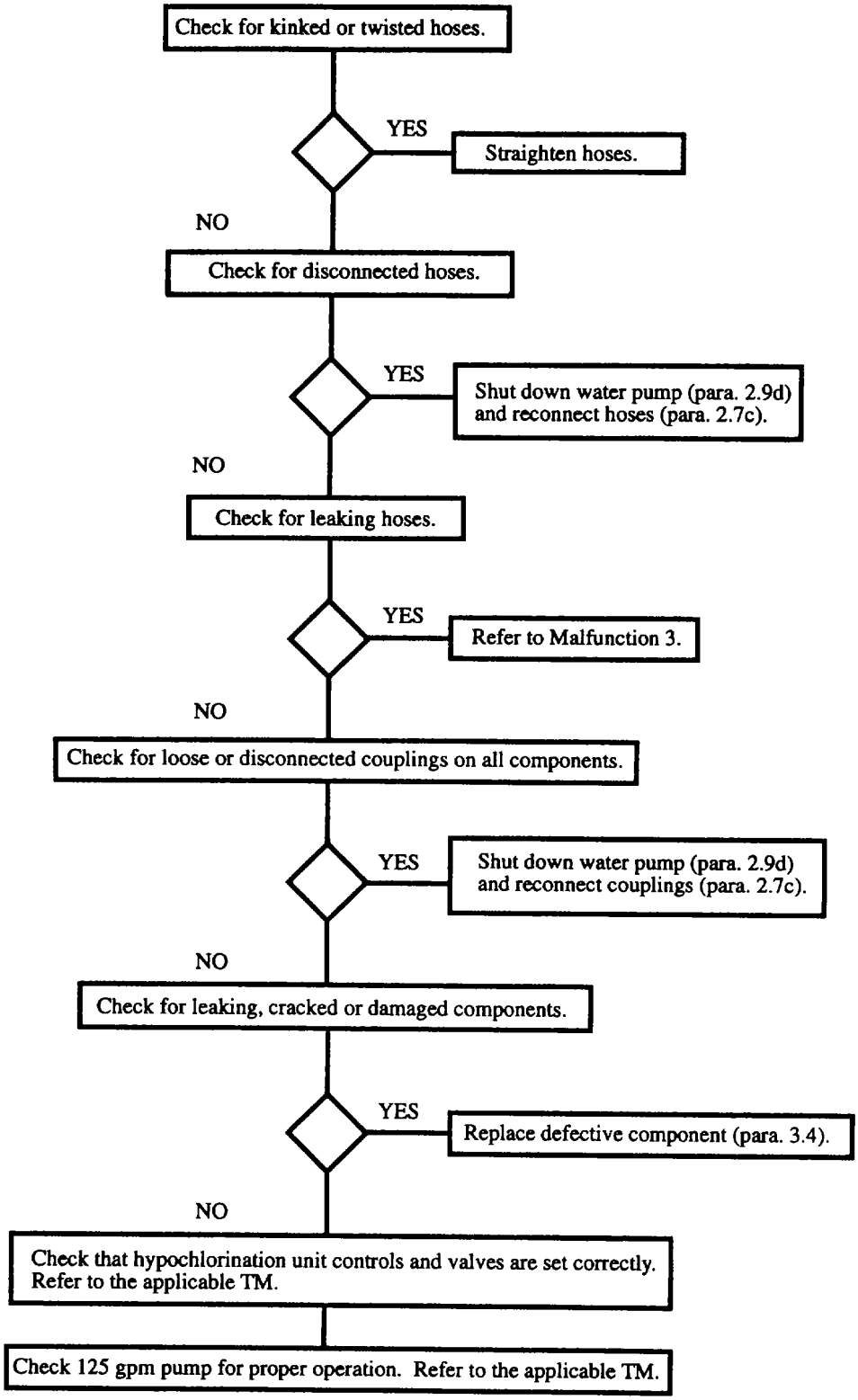

3.3 TROUBLESHOOTING - Continued.

MALFUNCTION 3. DISCHARGE OR SUCTION HOSE LEAKS.

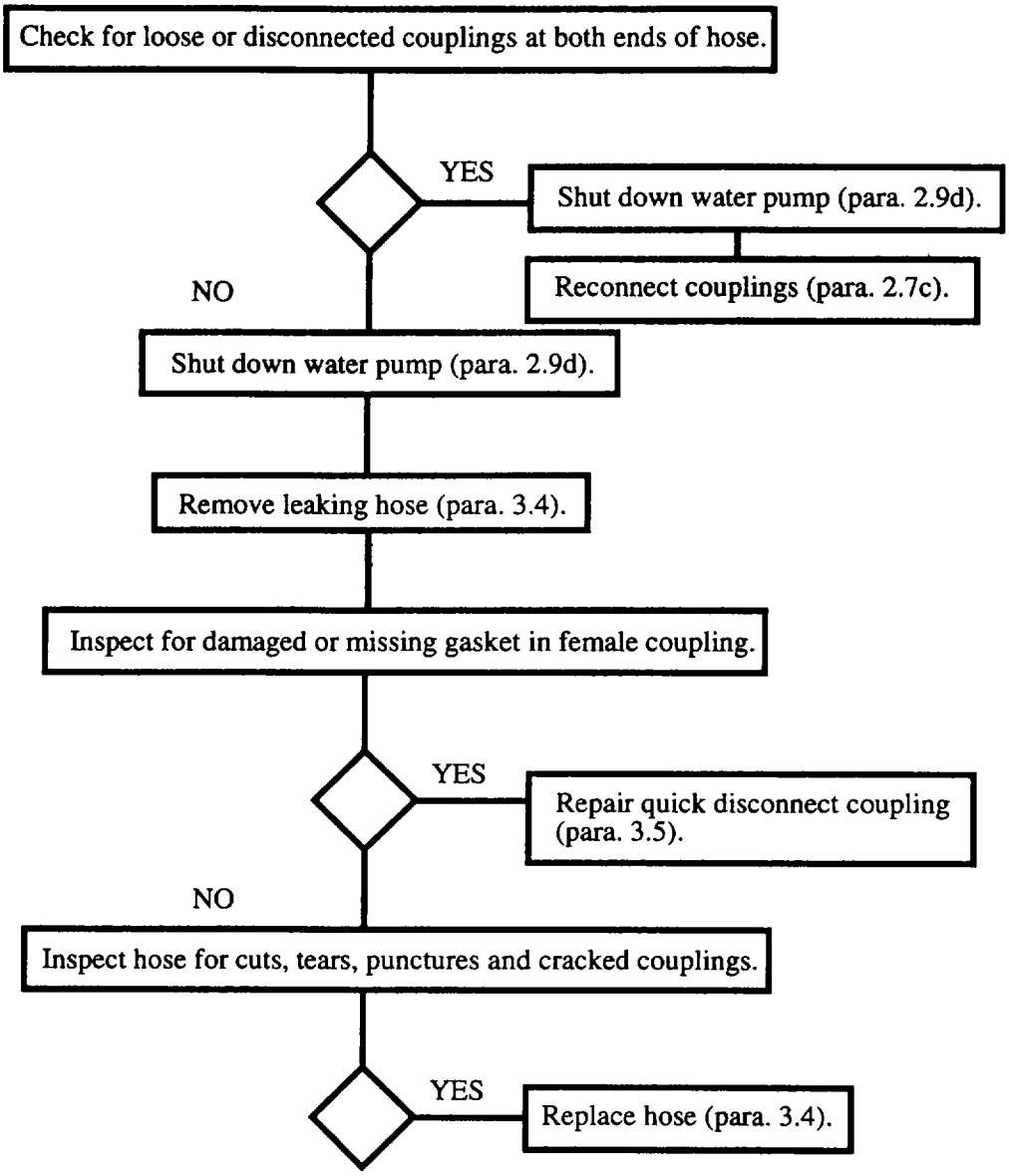

3.3 TROUBLESHOOTING - Continued.

MALFUNCTION 4. GATE VALVE ASSEMBLY (2-INCH) LEAKS.

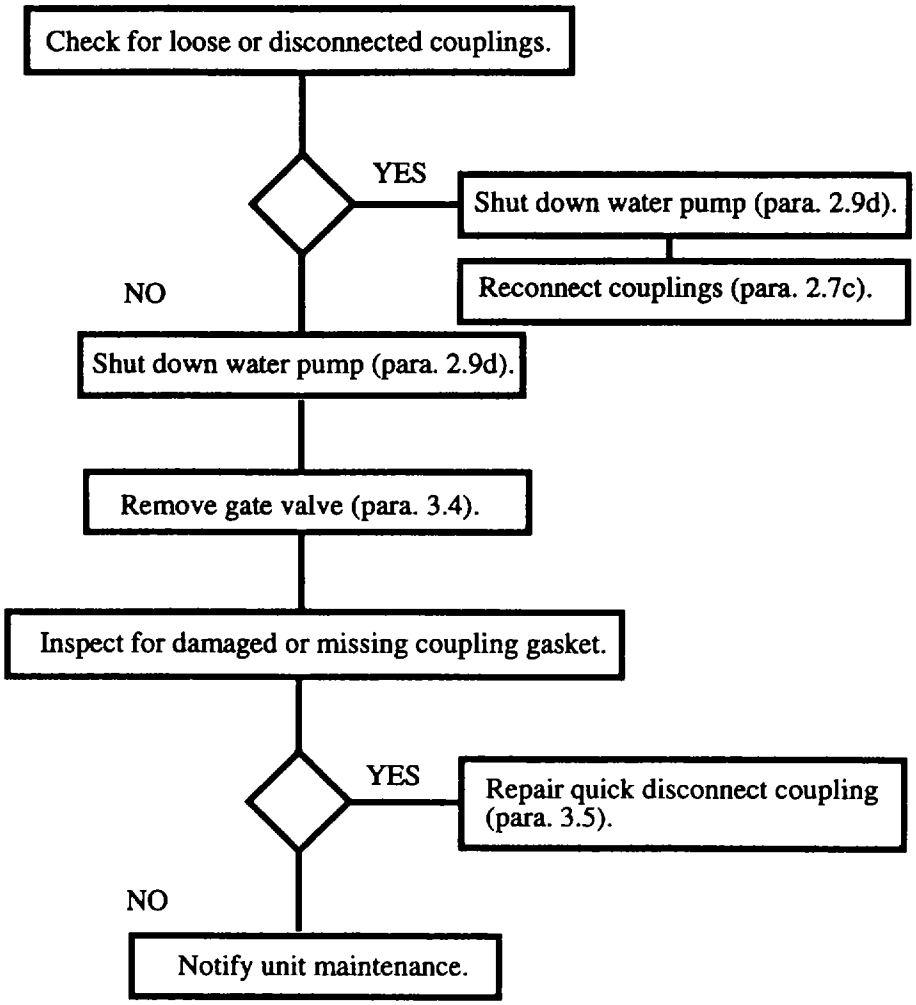

3.3 TROUBLESHOOTING - Continued.

MALFUNCTION 5. GATE VALVE ASSEMBLY (2-INCH) STUCK OR JAMMED.

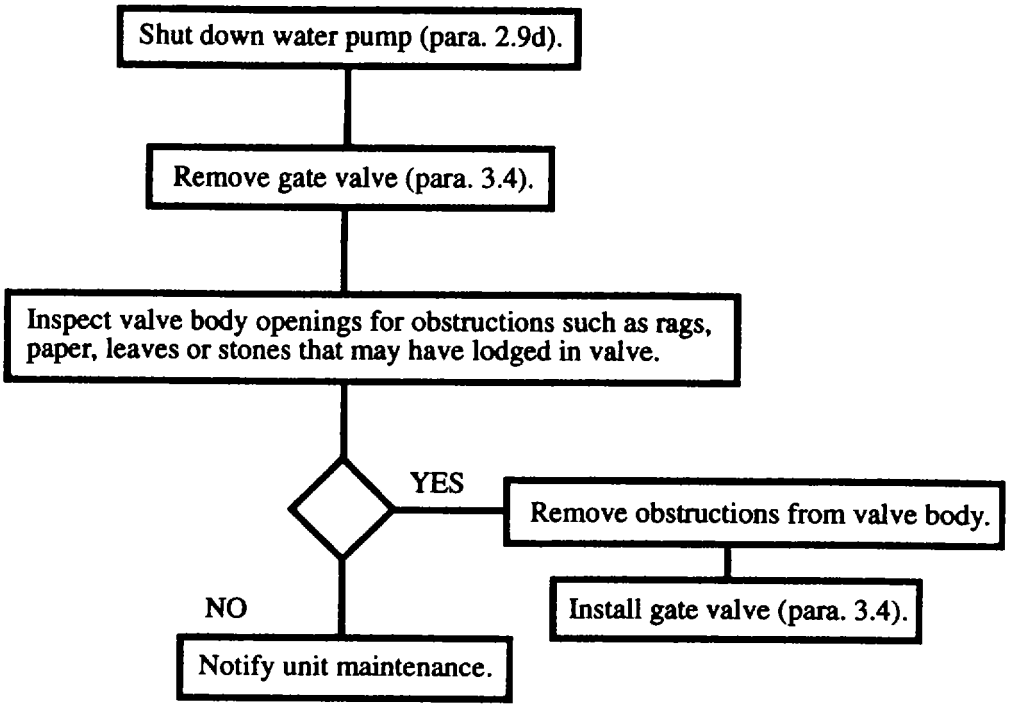

3.3 TROUBLESHOOTING - Continued.

MALFUNCTION 6. TEE ASSEMBLY (ALL) LEAKS.

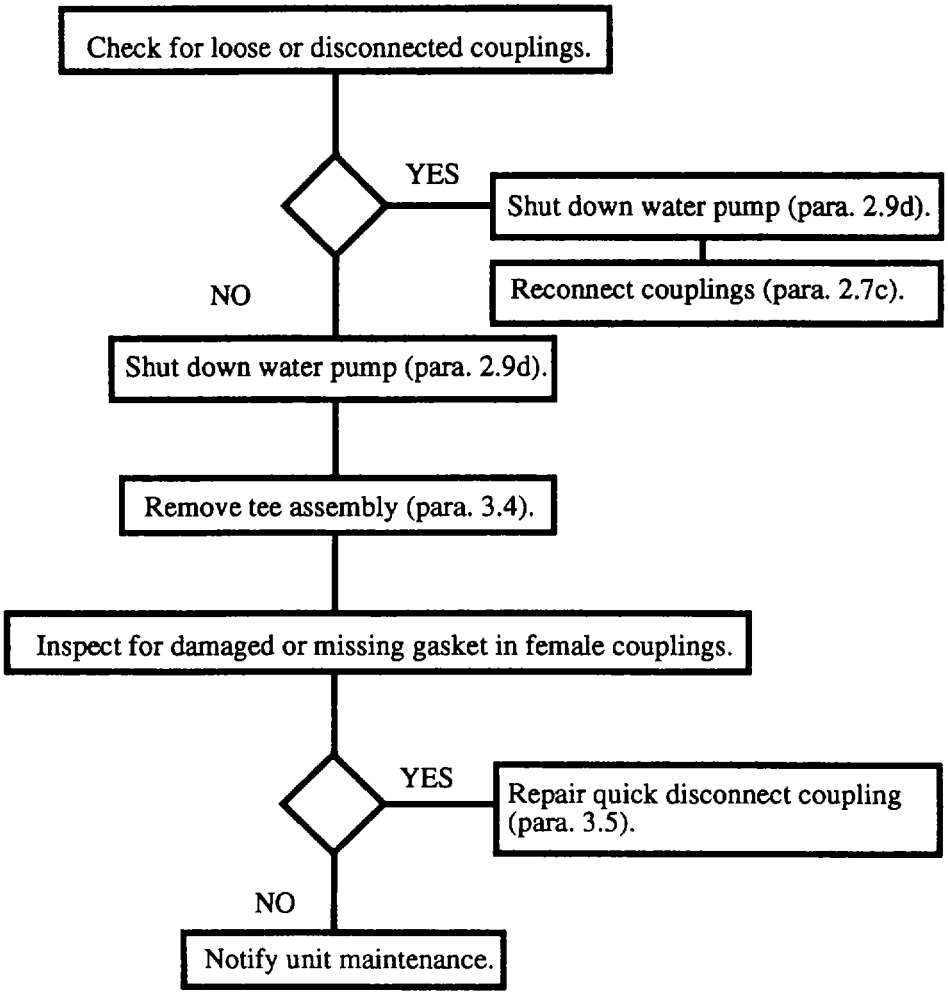

3.3 TROUBLESHOOTING - Continued.

MALFUNCTION 7. DISTRIBUTION NOZZLE (1 1/2-INCH) LEAKS.

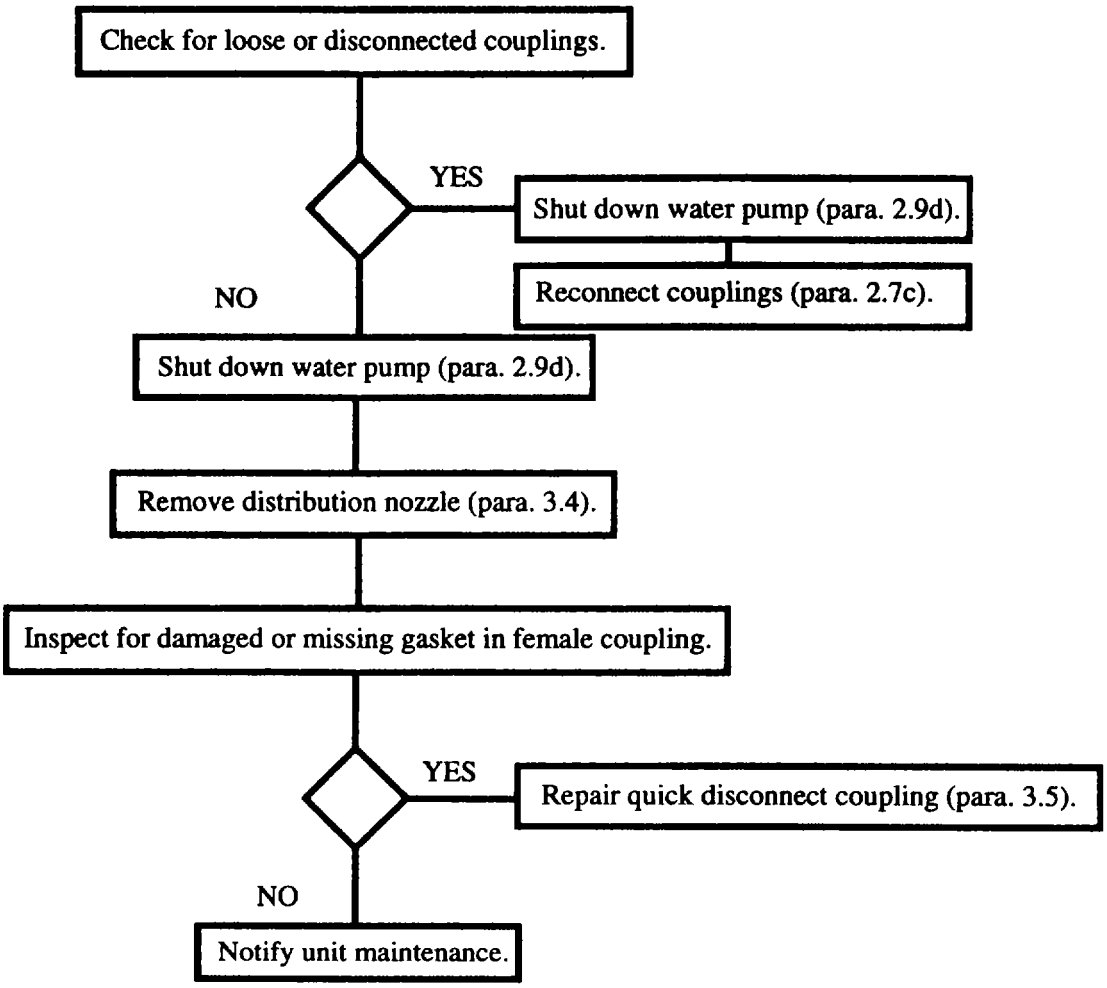

3.3 TROUBLESHOOTING - Continued.

MALFUNCTION 8. DISTRIBUTION NOZZLE (1 1/2-INCH) STUCK OPEN OR CLOSED.

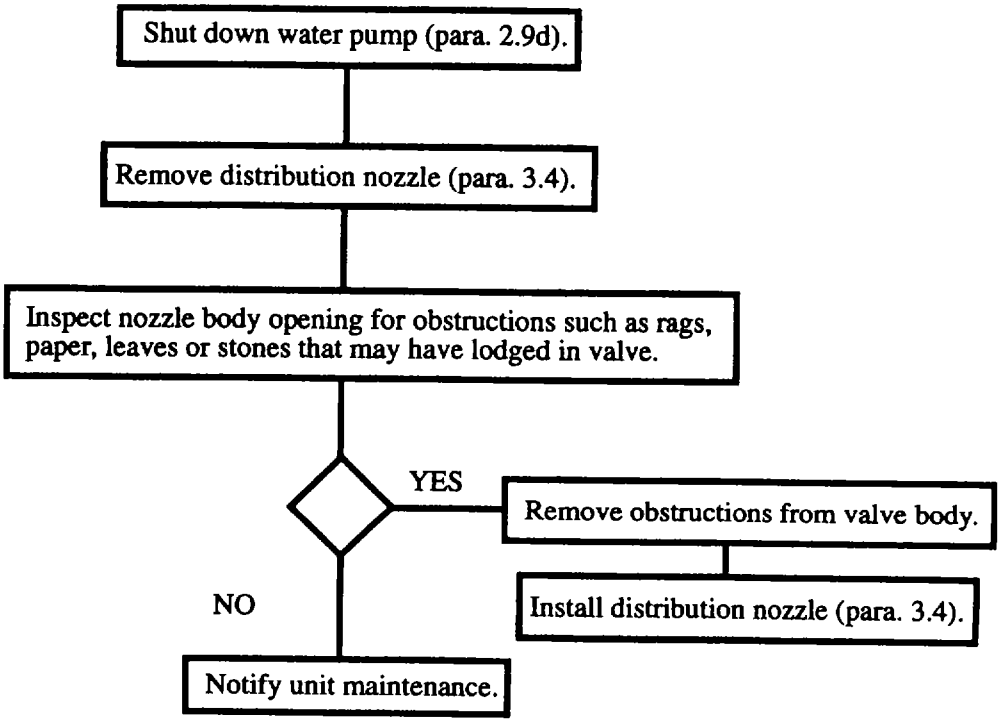

3.3 TROUBLESHOOTING - Continued.

MALFUNCTION 9. CHECK VALVE (2-INCH) LEAKS.

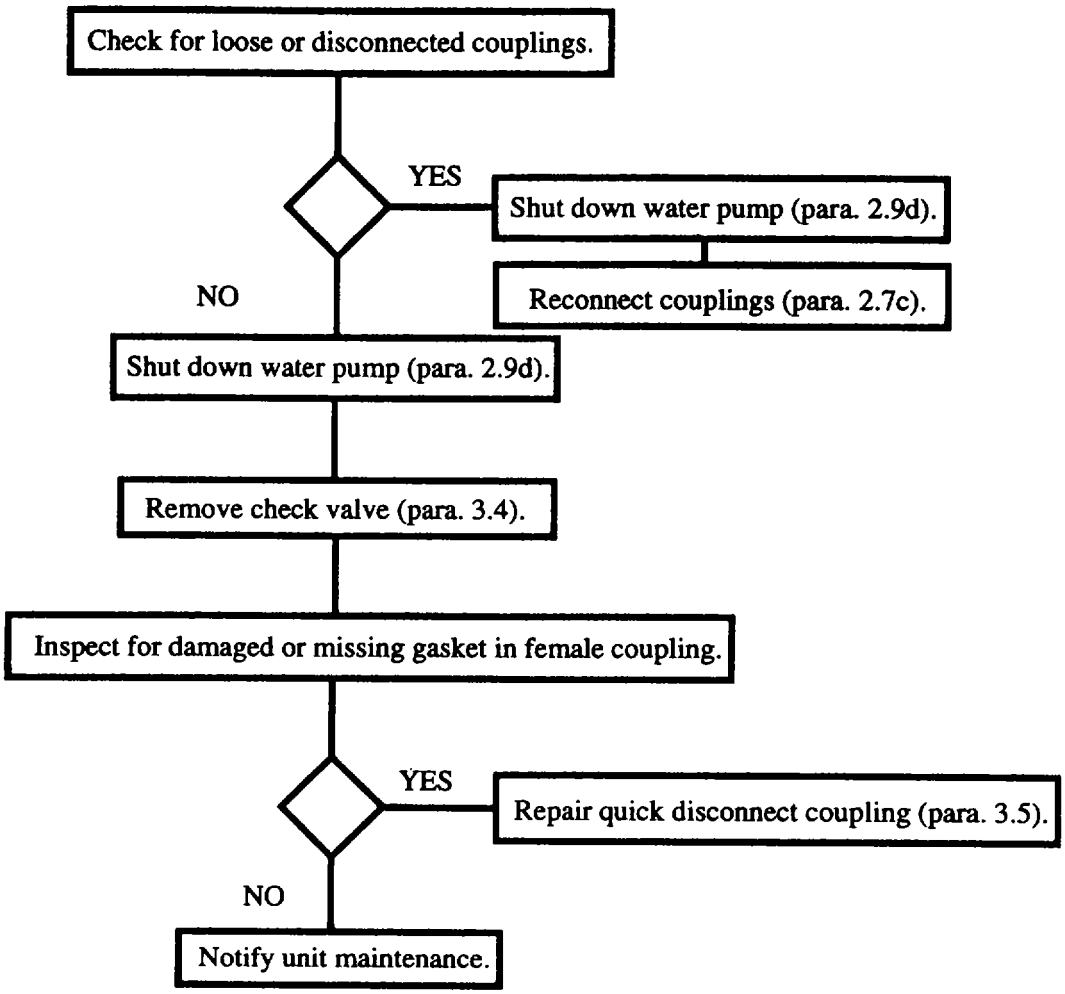

3.3 TROUBLESHOOTING - Continued.

MALFUNCTION 10. CHECK VALVE (2-INCH) STUCK OPEN OR CLOSED.

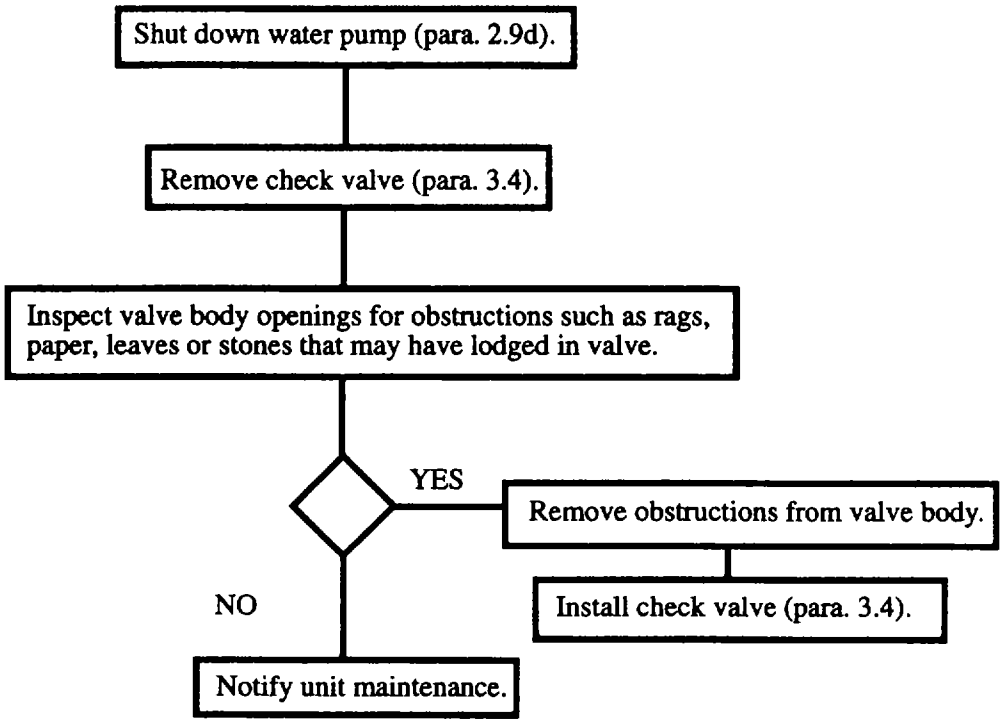

3.3 TROUBLESHOOTING - Continued.

MALFUNCTION 11. TEE AND DUAL GATE VALVE ASSEMBLY (ALL) LEAKS.

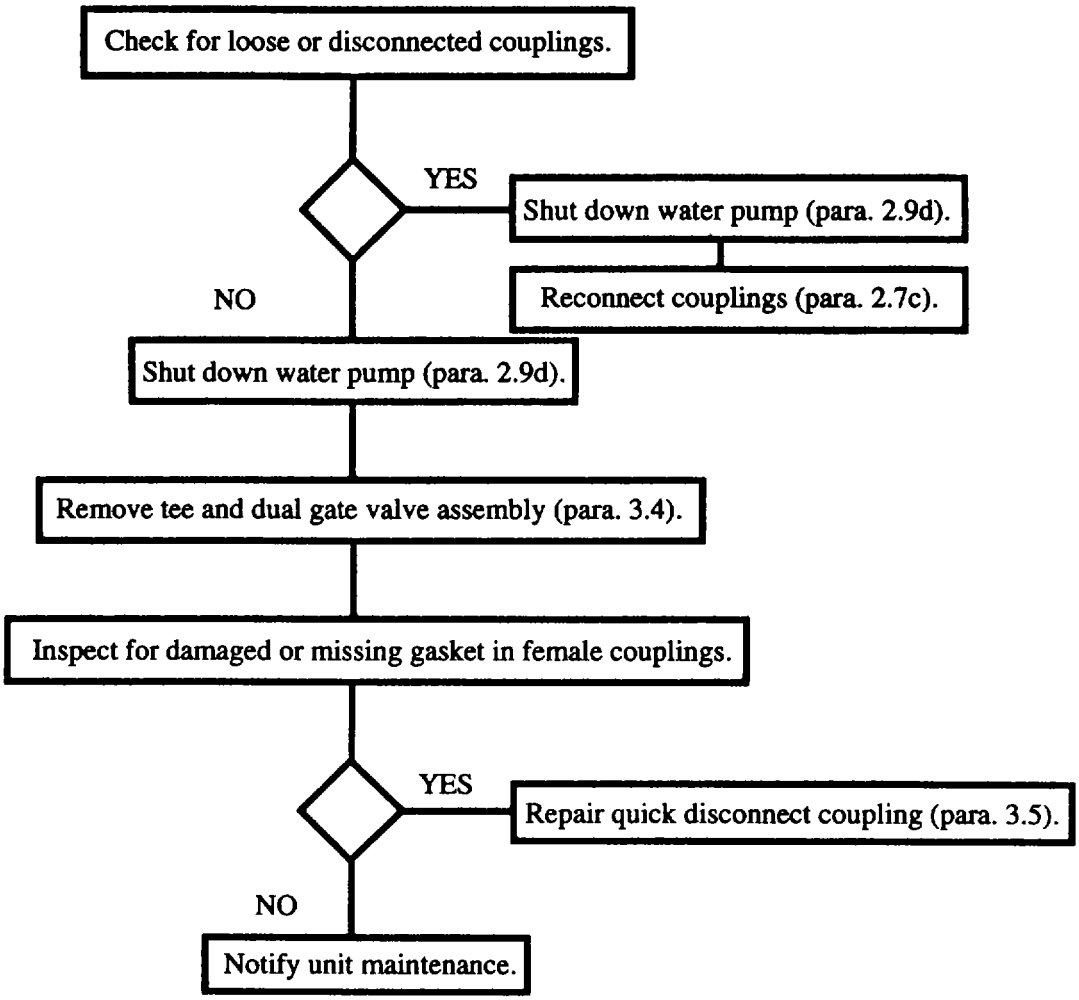

3.3 TROUBLESHOOTING - Continued.

MALFUNCTION 12. TEE AND DUAL GATE VALVE ASSEMBLY (ALL) STUCK OPEN OR CLOSED.

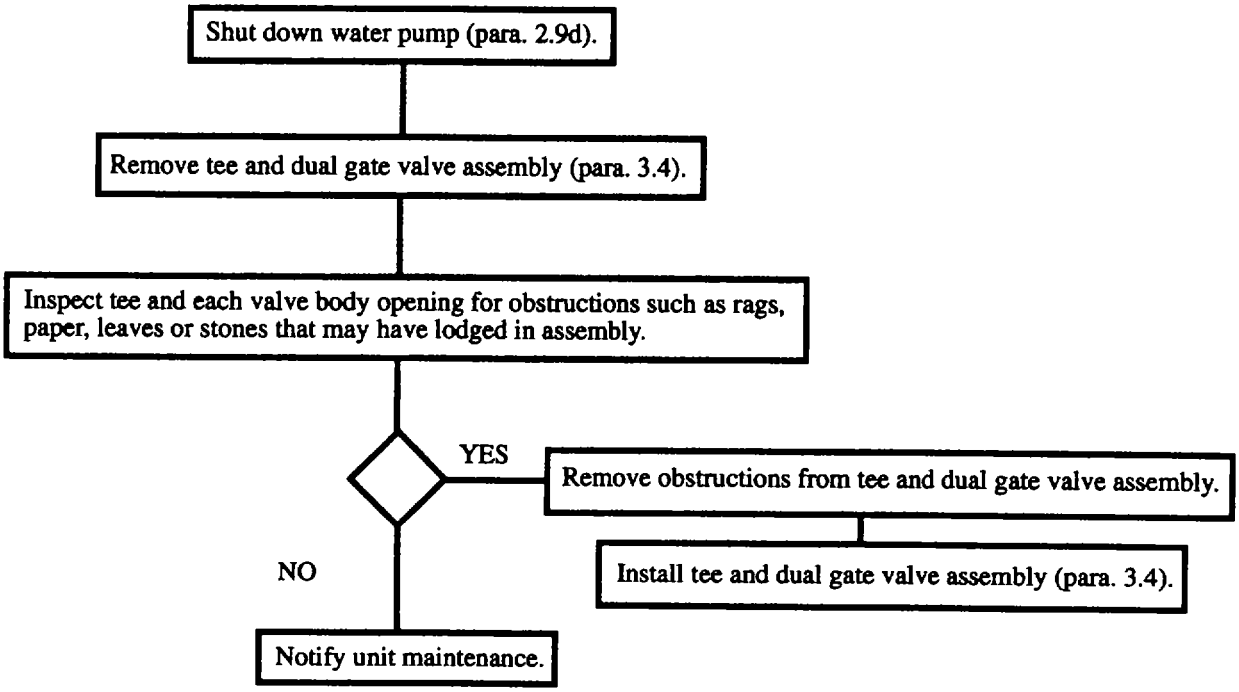

Section III. OPERATOR MAINTENANCE PROCEDURES

3.4 COMPONENT REPLACEMENT.

Removal of defective components from the assembled water system is accomplished by disconnecting the couplings at both ends of the component and removing the defective item. Installation of replacement components is performed by positioning the new component in the water system and connecting the couplings at both ends of the component.

This task consists of: a. Removal b. Installation

INITIAL SET-UP:

General Safety Instructions:

WARNING

To prevent injury to personnel, the water pump must be shut down and water pressure relieved from discharge hoses before disconnecting couplings. Cap all open couplings to prevent water system contamination.

Equipment Condition:
Water system shut down (para. 2.9d)

NOTE

Replacement of a typical 2-inch gate valve is shown. Replacement of all water system components is similar.

a. Removal. Refer to Figure 3-1.

(1) Disconnect female coupling (1) from male coupling (2).

(2) Disconnect female coupling (3) from male coupling (4).

(3) Remove defective 2-inch gate valve (5) from water system.

(4) Install cap (6) on male coupling (4).

(5) Install plug (7) in female coupling (1).

b. Installation. Refer to Figure 3-1.

(1) Remove plug (7) from female coupling (1).

(2) Remove cap (6) from male coupling (4).

(3) Position 2-inch gate valve (5) in water system.

(4) Connect female coupling (1) to male coupling (2).

(5) Connect female coupling (3) to male coupling (4).

(6) Start up water system (para. 2.9c) and check for leaks at 2-inch gate valve (5).

(7) Refer unserviceable component to unit maintenance for repair.

3.4 COMPONENT REPLACEMENT - Continued.

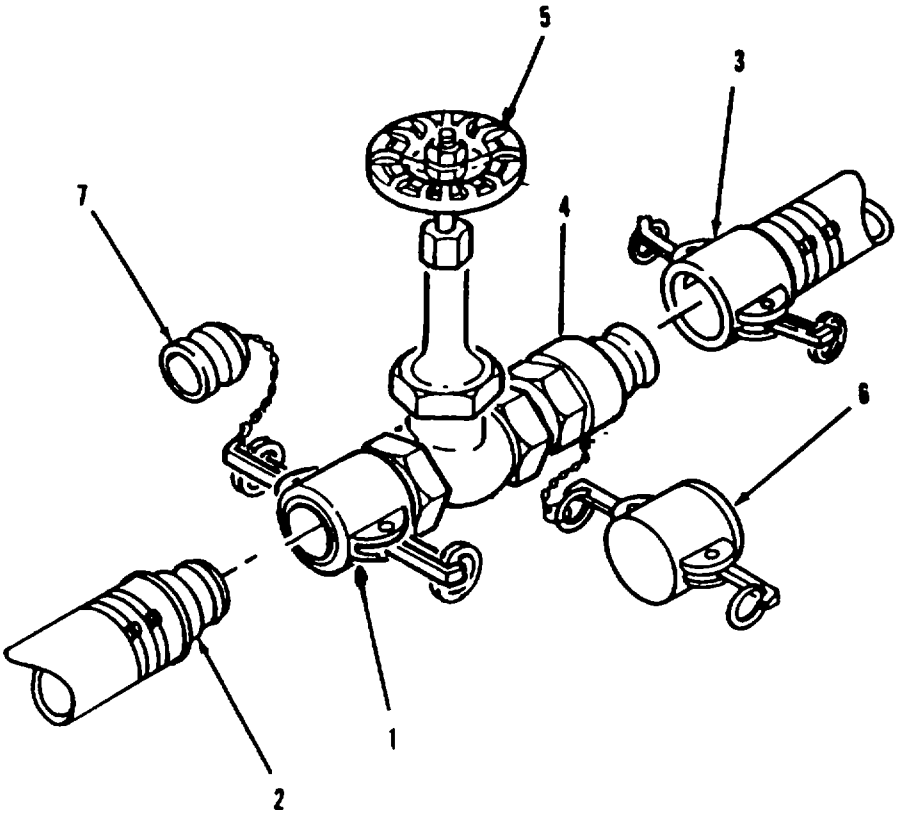

Figure 3-1. Component Replacement

3.5 QUICK DISCONNECT COUPLING REPAIR.

The following instructions are applicable to both female quick disconnect couplings and caps.

This task consists of: a. Removal b. Installation

INITIAL SET-UP:

Equipment Condition:
Water system shut down (para. 2.9d)

General Safety Instructions:

WARNING

To prevent injury to personnel, the water pump must be shut down and water pressure relieved from discharge hoses before disconnecting couplings. Cap all open couplings to prevent water system contamination.

Materials Required:
Wiping Rag (Item 2, App. E) Determine gaskets required from the following table:

Coupling Size	Gasket
1 1/2-inch	(Item 1, App. I)
2-inch	(Item 2, App. I)
4-inch	(Item 3, App. I)

NOTES

- Repair of a typical 4-inch female coupling and cap is shown. Repair of 2-inch and 1 1/2-inch couplings and caps is similar.
- Replacement gaskets are supplied in the accessory kit.

a. Removal. Refer to Figure 3-2.

(1 Disconnect female coupling (1) from water system (para. 2.7c).

(2) Pull gasket (2) from interior of female coupling (1).

b. Installation. Refer to Figure 3-2.

(1) Using clean wiping rag, remove grit, sand, and dirt from gasket seat inside female coupling (1).

(2) Position replacement gasket (2) in female coupling (1).

(3) Press gasket (2) into gasket seat inside female coupling (1). There will be no ripples or bumps in gasket material when gasket is properly installed.

(4) Connect coupling (1) to water system (para. 2.7c).

(5) Start up water system (para. 2.9c) and test coupling (1) for leaks.

3.5 QUICK DISCONNECT COUPLING REPAIR - Continued.

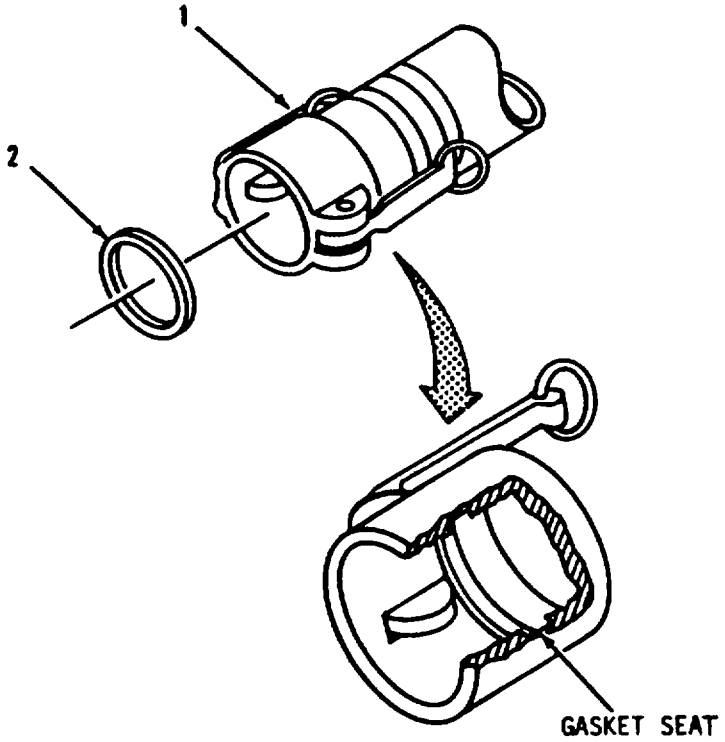

Figure 3-2. Quick Disconnect Repair

CHAPTER 4

UNIT MAINTENANCE INSTRUCTIONS

Section I.	**Lubrication Instructions**	4-1
Section II.	**Repair Parts and Special Tools List**	4-2
4.1	Common Tools and Equipment	4-2
4.2	Special Tools, TMDE and Support Equipment	4-2
4.3	Repair Parts	4-2
Section III.	**Service Upon Receipt**	4-2
4.4	Siting	4-2
4.5	Shelter Requirements	4-2
4.6	Checking Unpacked Equipment	4-2
Section IV.	**Unit Troubleshooting Procedures**	4-5
4.7	Introduction	4-5
4.8	Troubleshooting	4-5
4.9	Malfunction Index and Logic Trees	4-6
Section V.	**Unit Maintenance Procedures**	4-17
4.10	General	4-17
4.11	Personal Safety	4-17
4.12	Proper Equipment	4-17
4.13	Hose Nozzle Kit Maintenance	4-17
4.14	Distribution Nozzle Assembly (1 1/2-Inch) Repair	4-18
4.15	Discharge and Suction Hose Assembly Repair	4-23
4.16	Gate Valve Assembly (2-Inch) Repair	4-28
4.17	Tee Assembly (9117-Y1) Repair	4-31
4.18	Nozzle Stand Assembly Repair	4-35
4.19	2-Inch Hose Connection Kit Maintenance	4-37
4.20	125 GPM Pump Connection Kit Maintenance	4-37
4.21	Check Valve Assembly (2-Inch) Repair	4-37
4.22	Single Tank Connection Kit Maintenance	4-41
4.23	Tee and Dual Gate Valve Assembly (9148-Y1) Repair	4-41
4.24	Gate Valve (4-Inch) Repair	4-46
4.25	Tee and Dual Gate Valve Assembly (9148-Y2) Repair	4-49
Section VI.	**Preparation for Storage or Shipment**	4-54
4.26	Security Procedures	4-54
4.27	Administrative Storage	4-54

Section I. LUBRICATION INSTRUCTIONS

Lubrication of the 20K Water Storage and Distribution System is limited to the 125 gpm pump. Refer to the applicable TM for lubrication requirements on the 125 gpm pumps.

Section II. REPAIR PARTS AND SPECIAL TOOLS LIST

4.1 COMMON TOOLS AND EQUIPMENT.

For authorized common tools and equipment, refer to the Modified Table of Organization and Equipment (MTOE), CTA 50-970 or CTA 8-100, applicable to your unit.

4.2 SPECIAL TOOLS TEST MEASUREMENT AND DIAGNOSTIC EQUIPMENT (TMDE) AND SUPPORT EQUIPMENT.

Refer to the Maintenance Allocation Chart contained in Appendix B for maintenance tasks authorized at unit level maintenance and the TMDE and support equipment required to perform these tasks. No special tools are required to maintain the 20K Water Storage and Distribution System Pipe wrenches used to maintain system are supplied as part of the accessory kit.

4.3 REPAIR PARTS.

Repair parts are listed and illustrated in the repair parts and special tools list, TM 10O4610-237-20P, covering unit maintenance of this equipment.

Section III. SERVICE UPON RECEIPT

4.4 SITING.

4.4.1 Transport. The water system is designed to be packaged and shipped inside the triple container supplied with the system. Transport the water system only on equipment compatible with triple container transport requirements. Refer to the applicable TM.

4.4.2 Site Selection. When selecting a site for installation of the water system, consider the overall operating area. Siting must include access to the main water source (TWDS), adequate space to set up the water tank and associated hoses, and space for movement of water transport vehicles. Site should be level and provide good water drainage away from system components. If possible, site should slope downhill from water source to water dispensing points.

4.5 SHELTER REQUIREMENTS.

The water system does not require special sheltering during normal operation. Store unused water system components in the triple container to prevent damage and minimize routine maintenance.

4.6 CHECKING UNPACKED EQUIPMENT.

a. General. Except for the 20K water tank, all components of the water system are packaged and shipped in one triple container. The 20K water tank is packaged and shipped in a water storage chest. Where possible, save crating inside the triple container for reuse. It will make repacking easier. When uncrating the equipment, keep in mind that the system is made up of different connection kits. This manual addresses installation and use of all connection kits, but you may not need all of these components to perform your mission. Your operating requirements will determine which connection kit/components are needed to perform the mission.

4.6 CHECKING UNPACKED EQUIPMENT - Continued.

b. Unpacking Water Tank Chest. Refer to Figure 4- 1.

(1) Unfasten eight latches (1).

WARNING

The top cover is heavy and difficult to handle. Two personnel are required to lift top cover from water tank chest.

(2) Lift top cover (2) from water tank chest.

(3) Move four handles (3) to OPEN position and remove end panel (4) from water tank chest. Repeat for other end panel.

WARNING

The side panels are heavy and difficult to handle. Two personnel are required to lift side panels from skid.

(4) Unlatch four locking pins (5) and lift side panel (6) from skid (7).

(5) Remove accessory components from water tank chest.

(6) Lift divider pan (8) from skid (7).

(7) Unfasten tie down straps (9) at both ends of water tank (11).

WARNING

To prevent injury to personnel and damage to equipment, a hoist, crane or similar type equipment having a minimum lifting capacity of 750 pounds must be used to lift water tank from skid.

(8) Connect ends of two center hoisting straps (10) to hoist, crane or similar type equipment.

(9) Lift water tank (11) from skid (7).

c. Unpack Water Pump and Hypochlorination Unit.

(1) Locate hypochlorination unit in triple container.

(2) Using forklift, remove hypochlorination unit from triple container.

(3) Locate 125 gpm pump in triple container.

(4) Using two personnel, remove 125 gpm pump from triple container.

(5) Refer to the applicable TM and unpack 125 gpm pump.

(6) Refer to the applicable TM and unpack hypochlorination unit.

4.6 CHECKING UNPACKED EQUIPMENT - Continued.

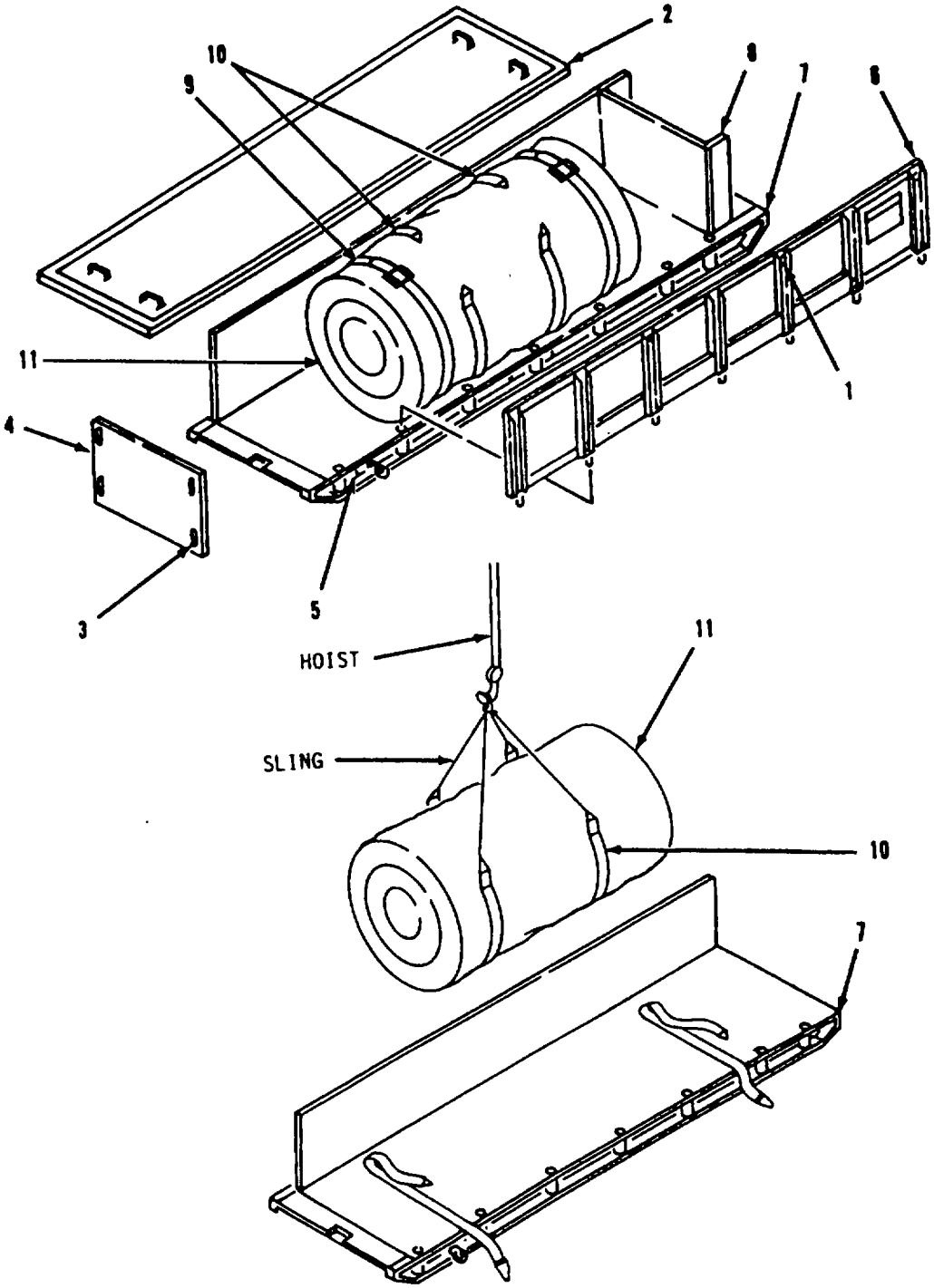

Figure 4-1. Unpacking Water Tank Chest

4.6 CHECKING UNPACKED EQUIPMENT - Continued.

d. Checking Unpacked Equipment.

(1) Inspect triple container and 20K water tank chest stencils, markings and information plates. All items should be clear and readable.

(2) Inspect the equipment for any damage incurred during shipment. If the equipment has been damaged, report the damage on SF 364, Report of Discrepancy.

(3) Inspect components to make sure they are in serviceable condition.

(4) Check equipment against the packing slip to see if the shipment is complete. Report all discrepancies in accordance with the instructions of DA Pam 738-750.

(5) Check to see if the equipment has been modified.

e. Processing Unpacked Equipment.

(1) Remove all tape, paper wrapping, plastic sheeting and packing materials from the water system components.

(2) Refer to the applicable TM for processing and servicing the 125 gpm pump, hypochlorination unit, 20K collapsible fabric tank, triple container and water tank chest.

Section IV. UNIT TROUBLESHOOTING PROCEDURES

4.7 INTRODUCTION.

This section provides the troubleshooting information for the 20K Water Storage and Distribution System at the Unit Maintenance level. It consists of the symptom index, listing the most common malfunction symptoms, and the related troubleshooting procedures. The procedures repeat the malfunctions, and provide the steps and corrective actions necessary to return the system to operational readiness.

4.8 TROUBLESHOOTING.

a. The troubleshooting procedures in this section cover the common malfunctions which you may find during operation of the water system. You should perform the tests, inspections and corrective actions in the order they appear in the procedures.

b. This section cannot list all the malfunctions that may occur, all the tests or inspections needed to find the fault, or all the corrective actions needed to correct the fault. If the equipment malfunction is not listed or actions listed do not correct the fault, notify your supervisor.

c. Refer to the applicable TM for troubleshooting malfunctions on the 125 gpm pump, hypochlorination unit, 20K collapsible fabric tank, triple container and water tank chest.

4.9 MALFUNCTION INDEX AND LOGIC TREES.

Troubleshoot the water system using the applicable malfunction logic tree identified in the index below.

Malfunction	Page
1. Suction or Discharge Hose Leaks	4-7
2. Gate Valve Assembly (2-Inch) Leaks	4-8
3. Gate Valve Assembly (2-Inch) Stuck or Jammed	4-9
4. Tee Assembly (All) Leaks	4-10
5. Distribution Nozzle (11/2-Inch) Leaks	4-11
6. Distribution Nozzle (1 1/2-Inch) Stuck Open or Closed	4-12
7. Check Valve (2-Inch) Leaks	4-13
8. Check Valve (2-Inch) Stuck Open or Closed	4-14
9. Tee and Dual Gate Valve Assembly (All) Leaks	4-15
10. Tee and Dual Gate Valve Assembly (AU) Stuck Open or Closed	4-16

4.9 MALFUNCTION INDEX AND LOGIC TREES - Continued.

MALFUNCTION 1. SUCTION OR DISCHARGE HOSE LEAKS.

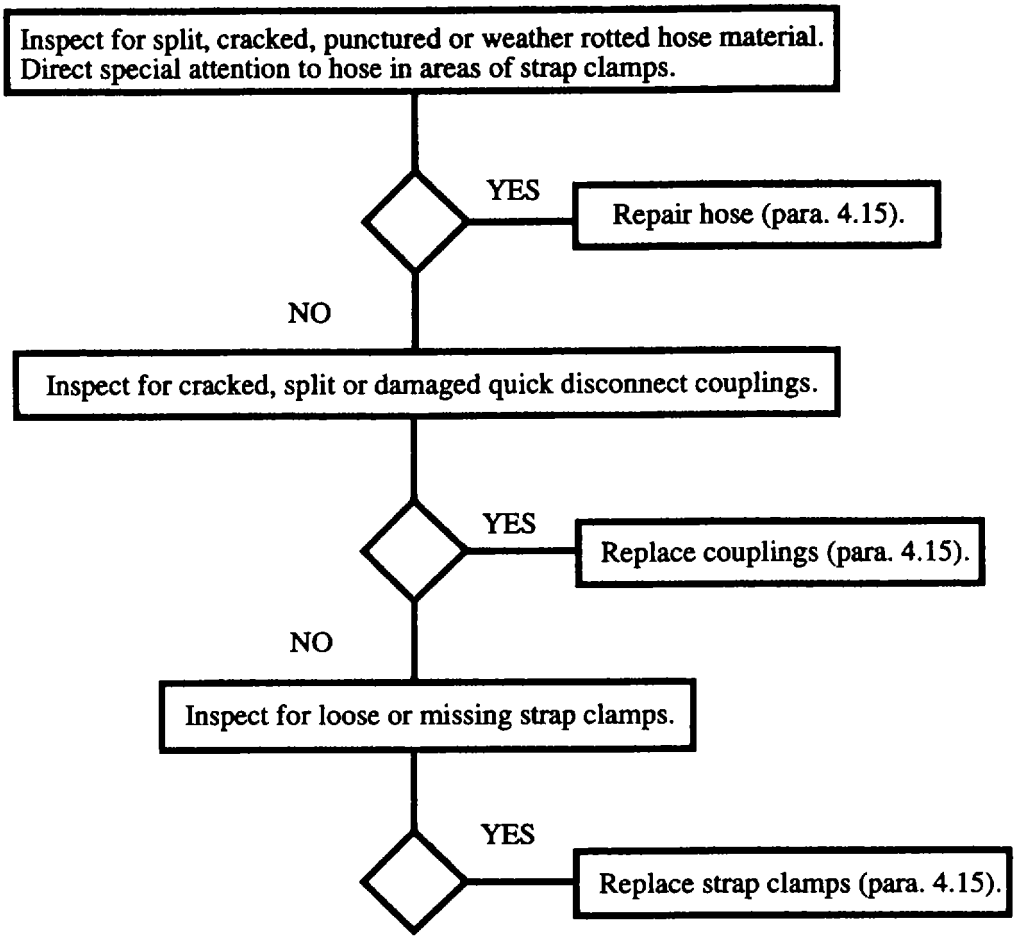

4.9 MALFUNCTION INDEX AND LOGIC TREES - Continued.

MALFUNCTION 2. GATE VALVE ASSEMBLY (2-INCH) LEAKS.

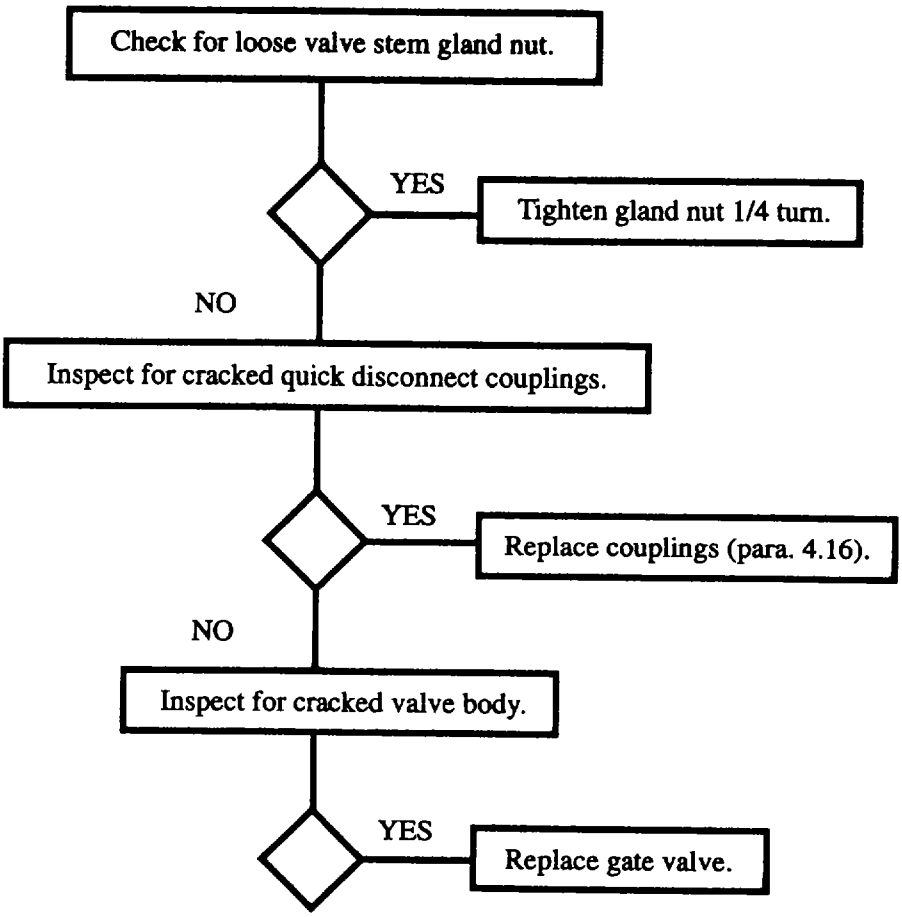

4.9 MALFUNCTION INDEX AND LOGIC TREES - Continued.

MALFUNCTION 3. GATE VALVE ASSEMBLY 2-NCH) STUCK OR JAMMED.

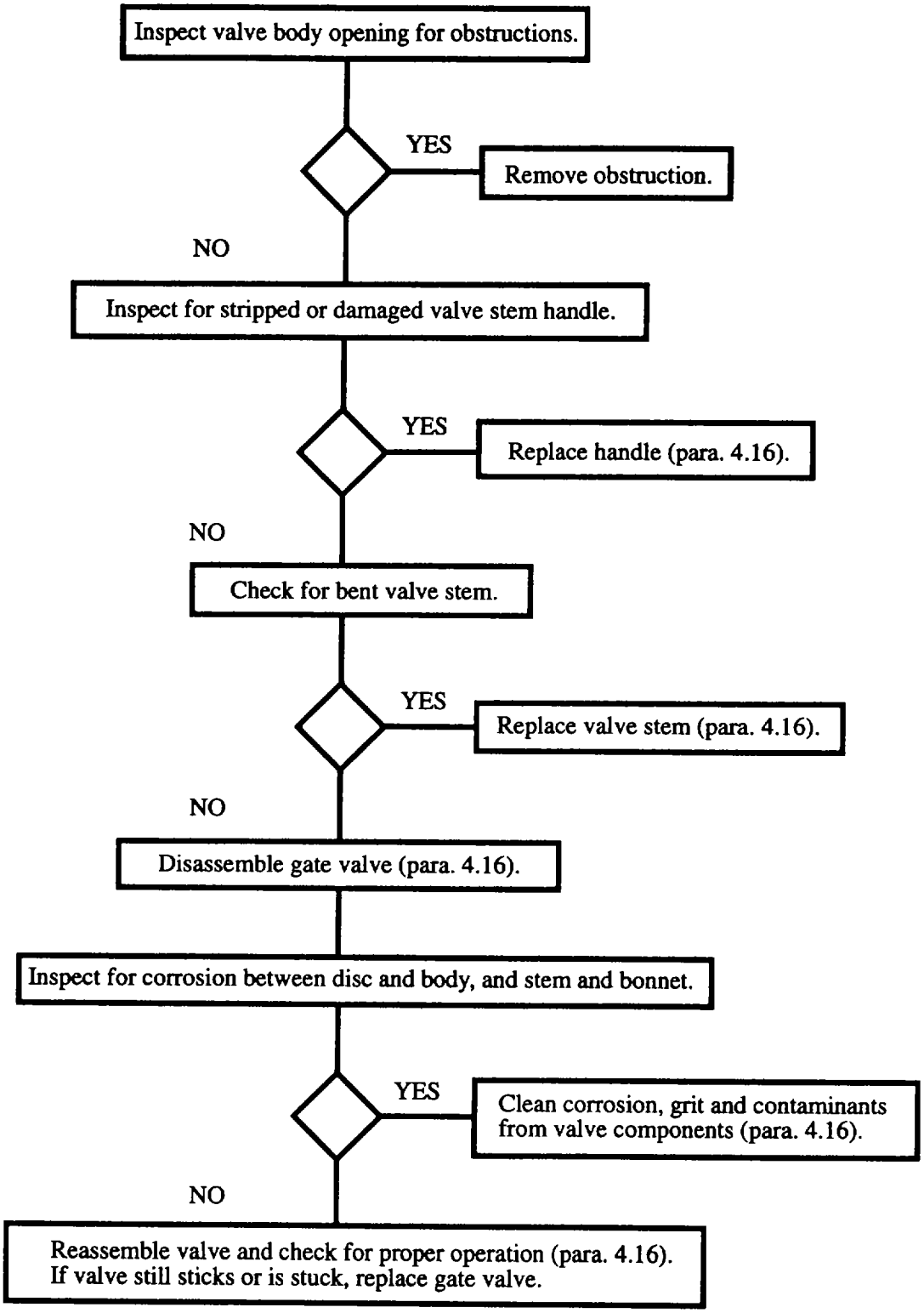

4.9 MALFUNCTION INDEX AND LOGIC TREES - Continued.

MALFUNCTION 4. TEE ASSEMBLY (ALL) LEAKS.

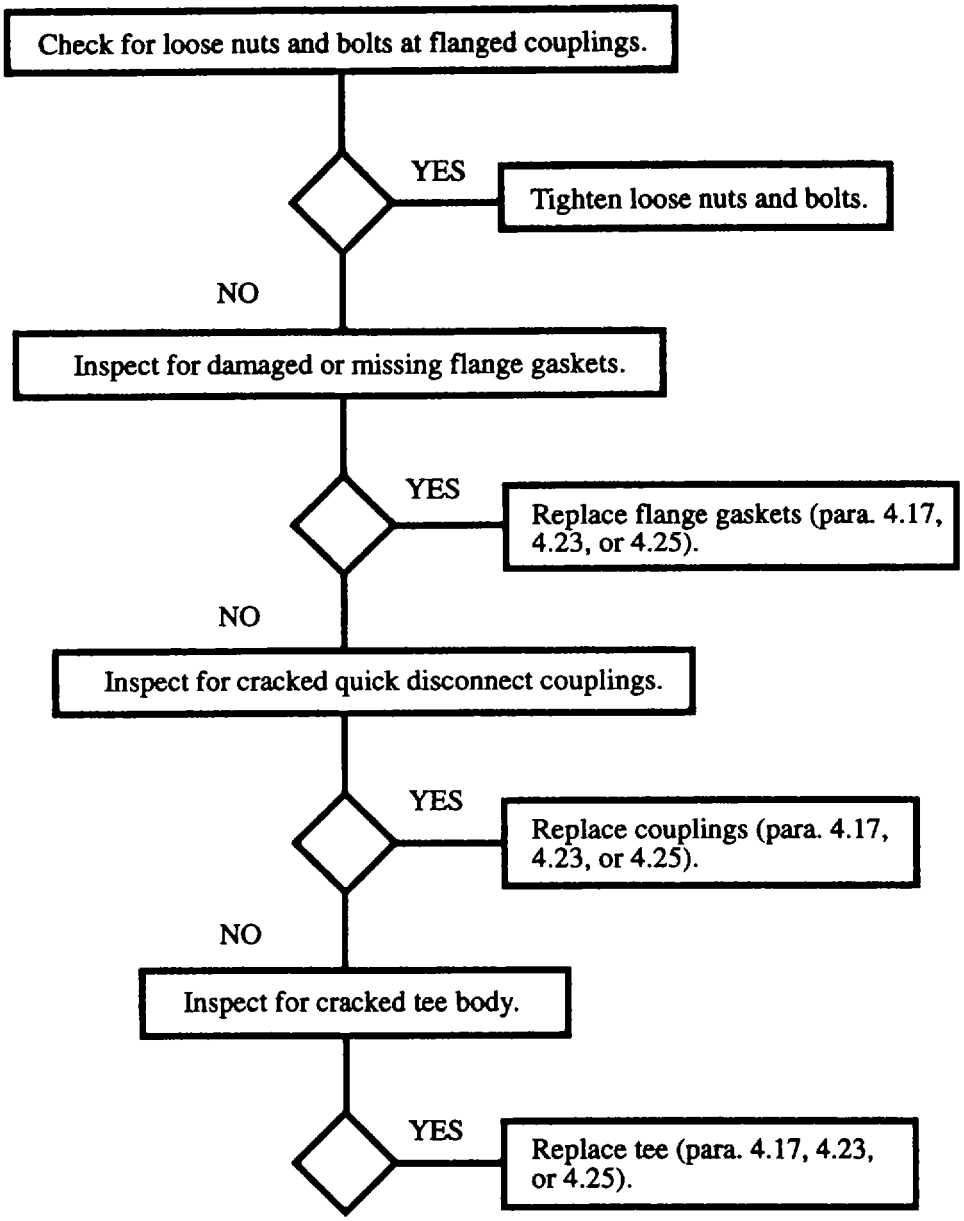

4.9 MALFUNCTION INDEX AND LOGIC TREES - Continued.

MALFUNCTION 5. DISTRIBUTION NOZZLE (1 1/2-INCH) LEAKS.

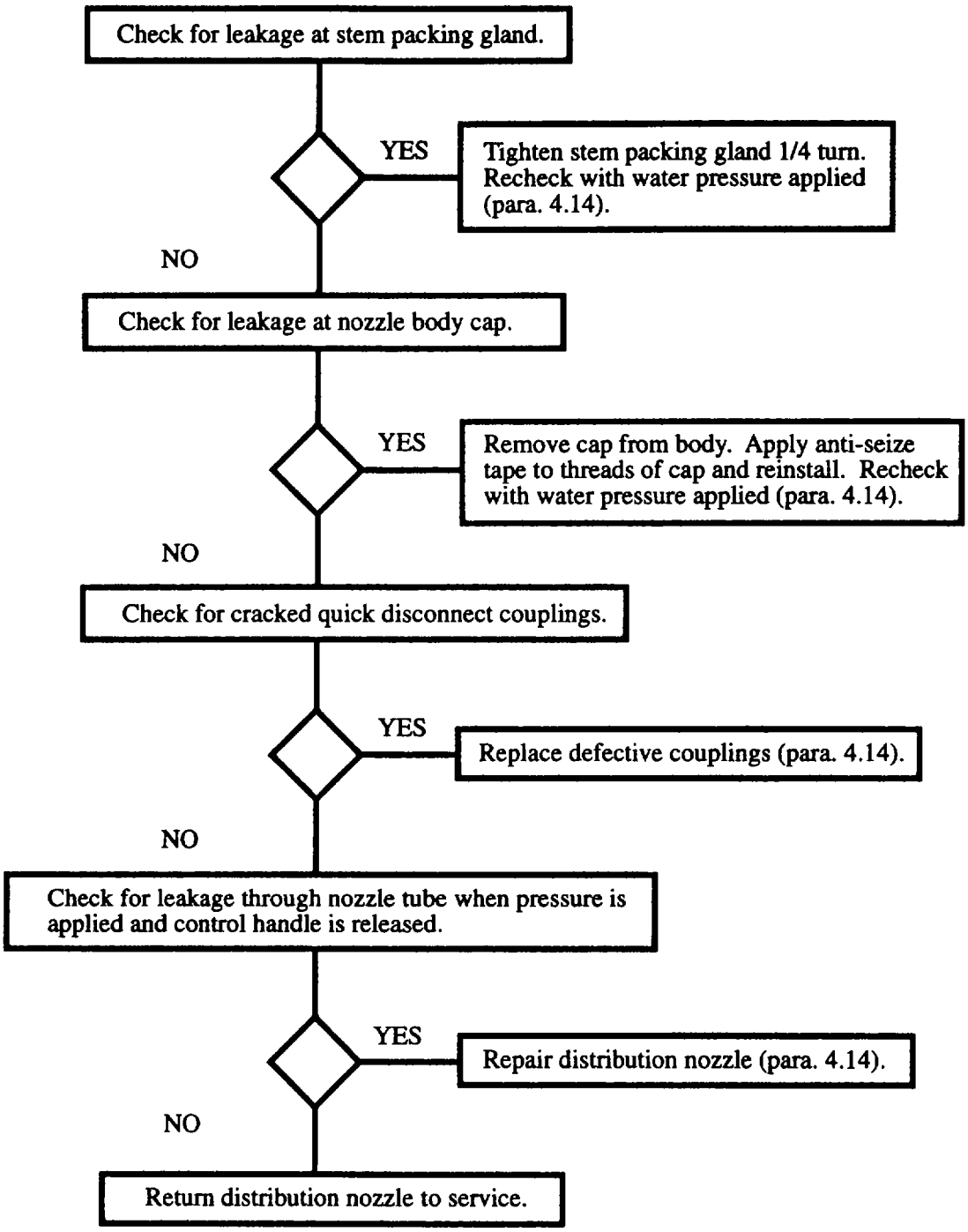

4.9 MALFUNCTION INDEX AND LOGIC TREES - Continued.

MALFUNCTION 6. DISTRIBUTION NOZZLE (1 1/2-INCH STUCK OPEN OR CLOSED.

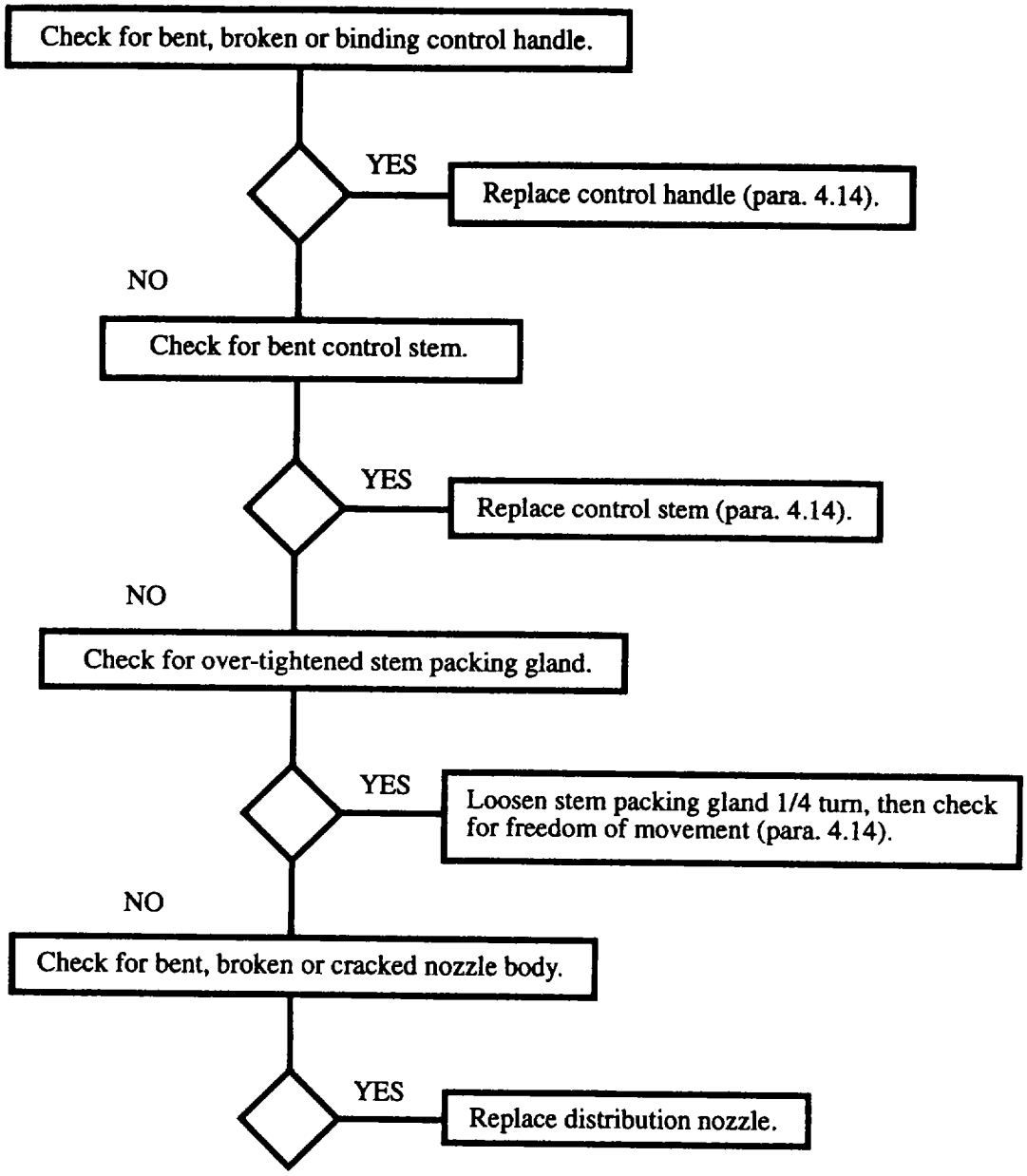

4.9 MALFUNCTION INDEX AND LOGIC TREES - Continued.

MALFUNCTION 7. CHECK VALVE (2-INCH) LEAKS.

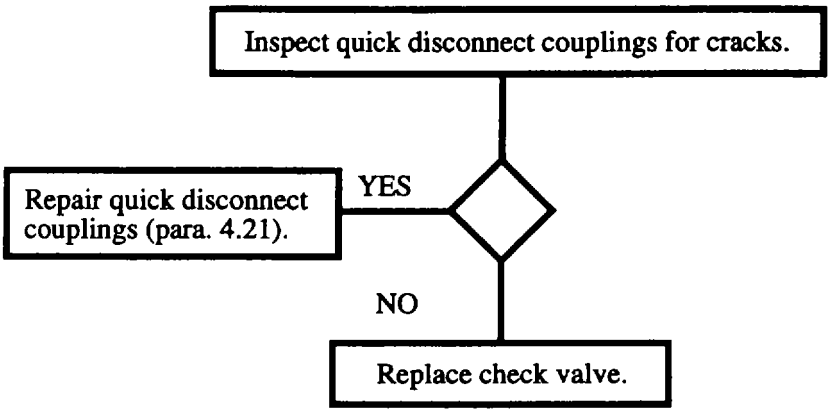

4.9 MALFUNCTION INDEX AND LOGIC TREES - Continued.

MALFUNCTION 8. CHECK VALVE (2-INCH) STUCK OPEN OR CIOSED.

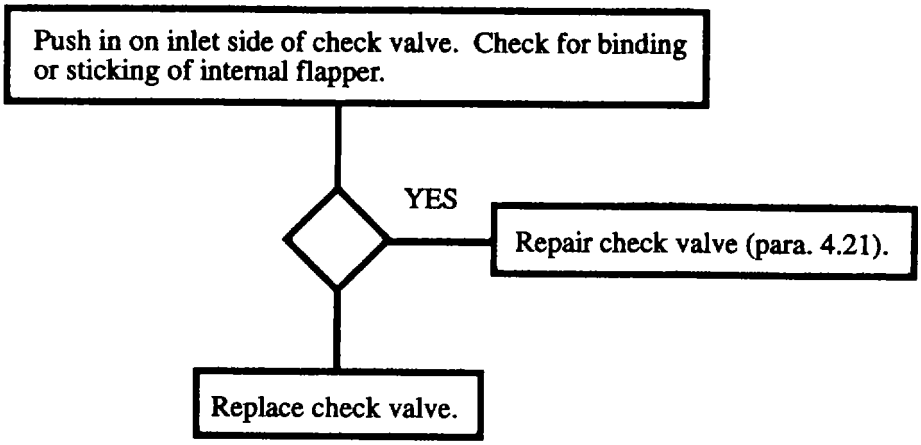

4.9 MALFUNCTION INDEX AND LOGIC TREES - Continued.

MALFUNCTION 9. TEE AND DUAL GATE VALVE ASSEMBLY (ALL) LEAKS.

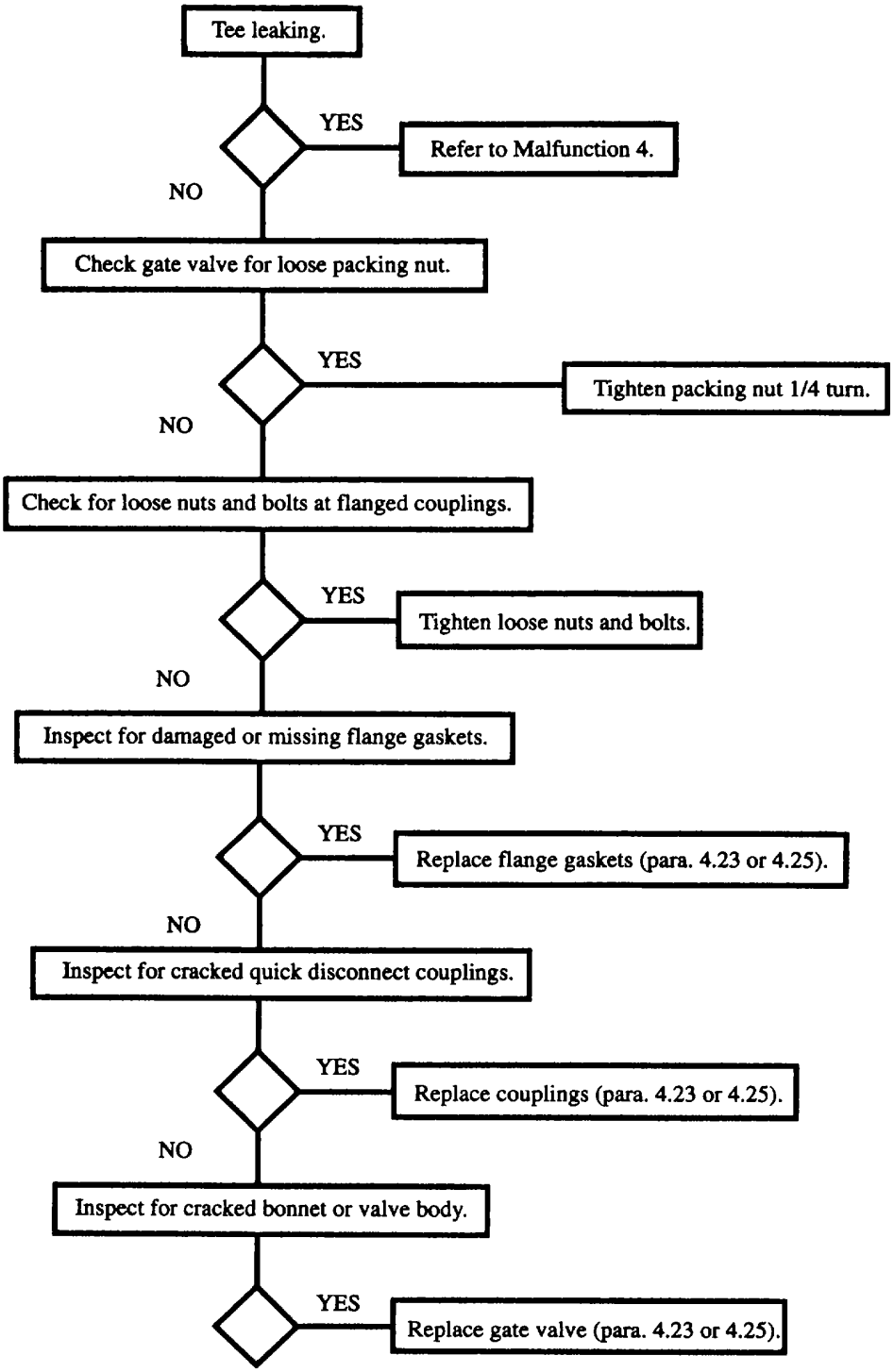

4.9 MALFUNCTION INDEX AND LOGIC TREES - Continued.

MALFUNCTION 10. TEE AND DUAL GATE VALVE ASSEMBLY (ALL) STUCK OPEN OR CLOSED.

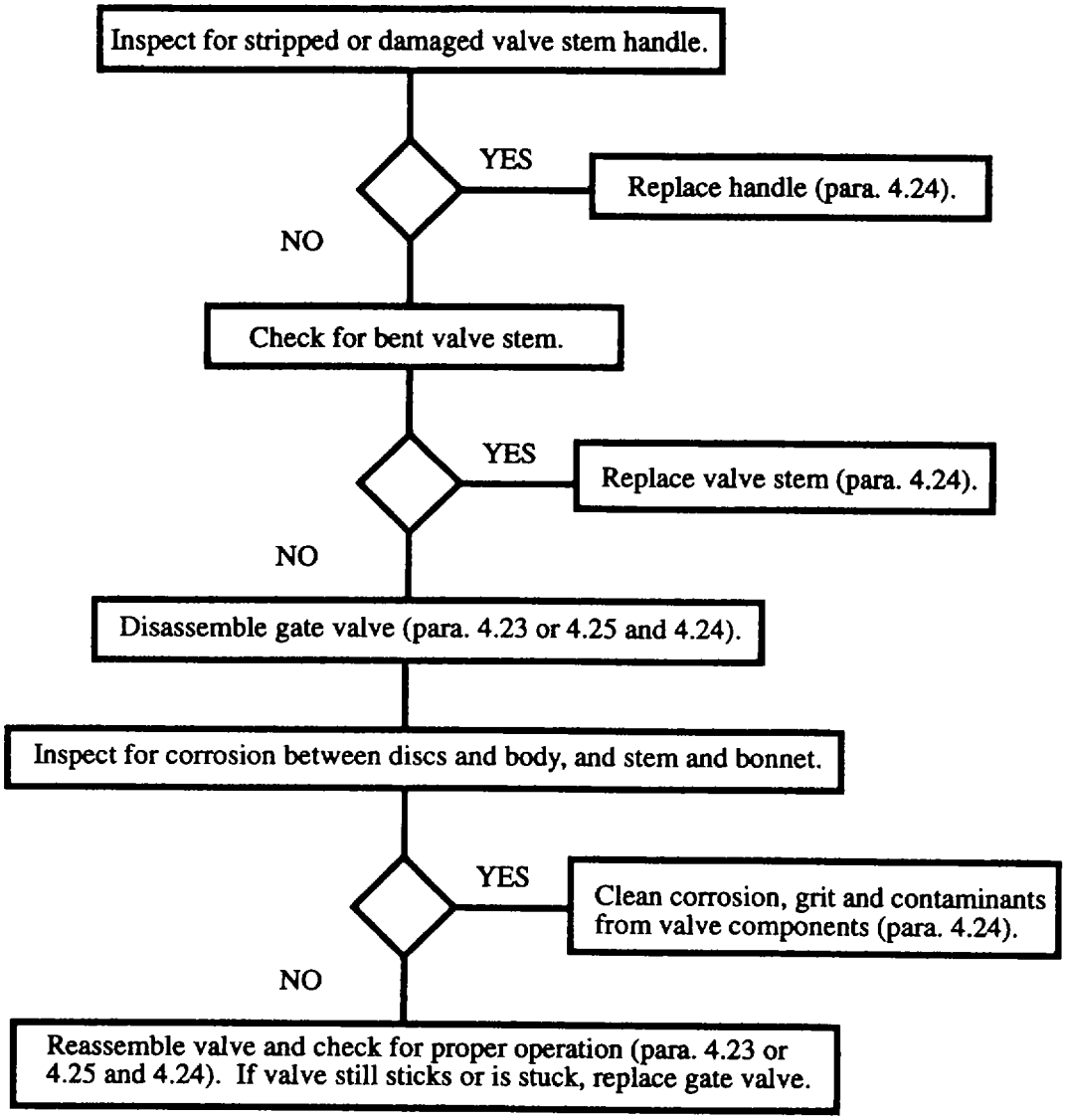

Section V. UNIT MAINTENANCE PROCEDURES

4.10 GENERAL.

This section contains instructions for performing unit level maintenance on the 20K Water Storage and Distribution System. Refer to the applicable technical manuals for unit maintenance on the following equipment:

Equipment	Technical Manual
Hypochlorination Unit	Applicable TM
125 GPM Pump Assembly	Applicable TM
20K Collapsible Fabric Tank	Applicable TM
Triple Container	Applicable TM
Water Tank Chest	Applicable TM

4.11 PERSONAL SAFETY.

To ensure safety of personnel, proper care should be used when handling assemblies and parts. Many assemblies are heavy. The assistance of another person, lifting device, or other support equipment may be required to move or position heavy items.

Personnel must remove all items of jewelry (rings, bracelets, watches, necklaces, etc.) and loose clothing before working on the equipment. Jewelry and loose clothing can get caught in moving equipment and result in injury to personnel. Jewelry can cause electrical shorts or severe injury when working around electrical equipment.

When performing maintenance on the water system, keep in mind that the purpose of the equipment is to store and distribute potable water. Cleaning fluids, lubricants, preservatives, paint or other chemicals must not be allowed to contaminate the water system. Clean water system components with only approved materials.

Operate the water system after performing maintenance to ensure repairs have been performed correctly and system can be returned to service.

4.12 PROPER EQUIPMENT.

Obtain proper equipment before beginning maintenance. This includes hand tools and/or special tools, receptacles for storing small parts, and expendable materials required by the maintenance task.

4.13 HOSE NOZZLE KIT MAINTENANCE.

The hose nozzle kit consists of the components listed below. Refer to the following paragraphs for applicable maintenance procedures.

Procedure	Para.
Distribution Nozzle Assembly (I 1/2-Inch) Repair	4.14
Discharge Hose Assembly Repair	4.15
Gate Valve Assembly (2-Inch) Repair	4.16
Tee Assembly (9117-Y1) Repair	4.17
Nozzle Stand Assembly Repair	4.18

4.14 DISTRIBUTION NOZZLE ASSEMBLY (1 1/2-INCH) REPAIR.

This task consists of: a. Disassembly b. Cleaning c. Inspection d. Repair e. Assembly

INITIAL SET-UP:

Tools:	Material/Parts:
General Mechanics Tool Kit (Item 1, App. B)	Detergent, General Purpose (Item 1, App. E)
Pipe Wrench (Item 2, App. B)	Wiping Rag (Item 2, App. E}
Equipment Condition:	Tape, Anti-seize (Item 3, App. E)
Distribution nozzle removed (para. 3.4a)	Gasket (Item 1, App. I)
	Packing (Item 4, App. I)
	Disc (Item 5, App. I)
	Disc (Item 6, App. I)

NOTE

Ensure that all parts identified as mandatory replacement parts are discarded and replaced with new components.

a. Disassembly. Refer to Figure 42.

(1) Disconnect S-hook (1) from body (26).

(2) Remove S-hook (1) from chain and spring (2).

(3) Remove tube cap (4) and S-hook (3) from chain and spring (2). Disconnect S-hook from tube cap.

(4) Remove gasket (5) from female coupling (6).

(5) Remove swivel (7) and female coupling (6) from body (26).

(6) Unscrew female coupling (6) from swivel (7).

(7) Drive out groove pin (8) and remove handle (9) from body (26).

4.14 DISTRIIBUTION NOZZLE ASSEMBLY (1 1/2-INCH) RFPAIR - Continued.

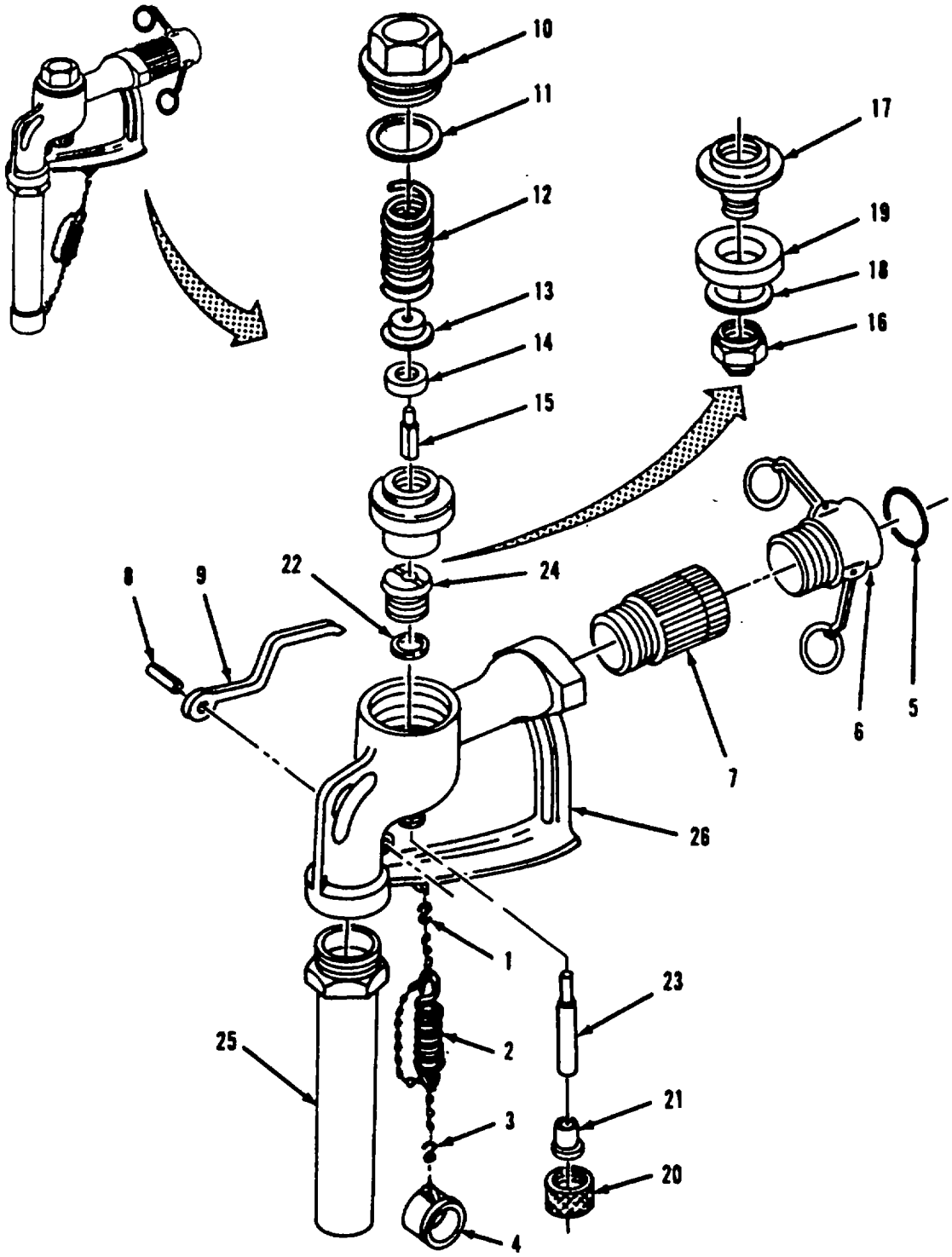

Figure 42. Distribution Nozzle (1 1/2-Inch) Disassembly

4.14 DISTRIBUTION NOZZLE ASSEMBLY (1 1/2-INCH) REPAIR - Continued.

WARNING

To prevent injury to personnel, remove cap slowly. Spring may be under tension.

(8) Remove cap (10), gasket (11), spring (12) from body (26).

(9) Remove assembled components (13, 14 and 15) from body (26).

(10) Unscrew disc guide (15) from disc holder (13) and remove small disc (14).

(11) Lift assembled components (16 through 19) from body (26).

(12) Unscrew disc nut (16) from holder (17), then remove washer (18) and disc (19) from holder.

(13) Loosen packing nut (20) and pull stem (23) from body (26).

(14) Remove packing nut (20) and packing gland (21) from body (26).

(15) Remove stuffing box (24) from body (26).

(16) Remove three packings (22) from bottom of stuffing box (24).

(17) Unscrew tube and adapter (25) from body (26).

b. Cleaning.

(1) Wash all components with clean water and detergent.

(2) Rinse components in clean water and dry with wiping rag.

c. Inspection.

(1) Inspect body (26) for cracks and stripped or damaged threads.

(2) Inspect handle (9) for cracks.

(3) Inspect tube and adapter (25) for bends, cracks, and deformation.

(4) Inspect stem (23) for scoring. Check that stem is straight.

d. Repair. Replace damaged parts and all sealing components. Do not reuse packing (22), disc (19), small disc (14) or gasket (5).

4.14 DISTRIBUTION NOZZLE ASSEMBLY (1 1/2-INCH) REPAIR - Continued.

e. Assembly. Refer to Figure 4-3.

(1) Screw tube and adapter (25) into body (26).

NOTE
When installing packings (22), ensure splices are staggered to prevent leakage.

(2) Install three packings (22) in stuffing box (24), then screw stuffing box down into body (26).

(3) Push stem (23) in through body (26) and into stuffing box (24).

(4) Place packing gland (21) and packing nut (20) over stem (23). Tighten packing gland onto body (26).

(5) Position disc (19) and washer (18) on holder (17). Screw disc nut (16) into holder (17).

(6) Position assembled components (16 through 19) in body (26).

(7) Position small disc (14) on disc holder (13). Screw disc guide (15) into disc holder.

(8) Position assembled components (13, 14 and 15) in body (26).

NOTE
Ensure that anti-seize tape is applied in the same direction as the threads.

(9) Apply anti-seize tape to threads of cap (10).

(10) Install gasket (11) on cap (10).

(11) Position spring (12) on top of disc holder (13).

(12) Install cap (10) over spring (12) and onto body (26).

(13) Position handle (9) on body (26) and install groove pin (8).

(14) Apply anti-seize tape to male threads of swivel (7) and female coupling (6).

(15) Screw female coupling (6) into swivel (7).

(16) Screw swivel (7) and attached female coupling (6) onto body (26).

(17) Install gasket (5) in female coupling (6).

(18) Connect tube cap (4) to chain and spring (2) with S-hook (3).

(19) Connect chain and spring (2) to body (26) with S-hook (1).

(20) Install distribution nozzle in water system (para. 3.4b).

(21) Start up water system (para. 2.9c) and test repaired nozzle for leaks.

4.14 DISTRIRUTION NOZZLE ASSEMBLY (1 1/2-INCH) REPAIR - Continued.

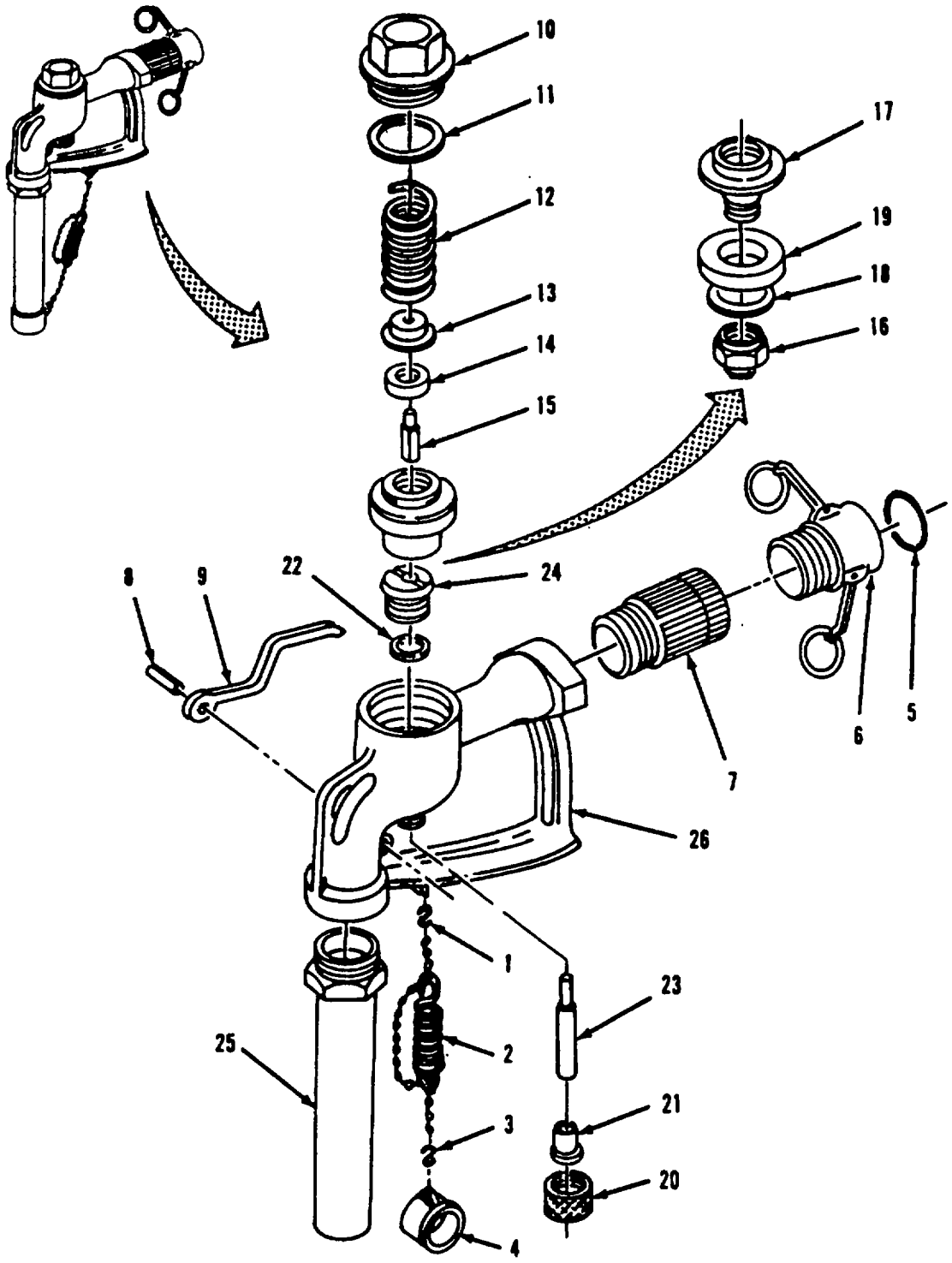

Figure 4-3. Distribution Nozzle (1 1/2-Inch) Assembly

4.15 DISCHARGE AND SUCTION HOSE ASSEMBLY REPAIR.

NOTE

The following procedure applies to all sizes and lengths of discharge and suction hoses used in the water system.

This task consists of: a. Disassembly b. Cleaning c. Inspection d. Repair e. Assembly

---

INITILAL SET-UP:

Tools:
General Mechanics Tool Kit (Item 1, App. B)
Clamping Tool (Item 3, App. B)
Equipment Condition:
Hose assembly removed (para. 3.4a)
Material/Parts:
Detergent, General Purpose (Item 1, App. E)
Wiping Rag (Item 2, App. E)
Determine additional materials required by hose size.

Hose Size:
1 1/2-in ..... Gasket (2) (Item 1, App. I)
Seal (4) (Item 7, App. I)
Strapping (Item 8, App. I)
2 in ..... .Gasket (2) (Item 2, App. I)
Seal (4) (Item 7, App. I)
Strapping (Item 8, App. I)
4 in ..... Gasket (2) (Item 3, App. I)
Seal (4) (Item 9, App. I)
Strapping (Item 10, App. I)

NOTE

Ensure that all parts identified as mandatory replacement parts are discarded and replaced with new components. Disassemble hoses only to the level required to make repairs.

a. Disassembly. Refer to Figure 4-4.

(1) Disconnect split ring (1) from female coupling (2) and remove dust plug (3).

(2) Disconnect split ring (4) from male coupling (5) and remove dust cap (6).

(3) Remove gasket (7) from dust cap (6).

(4) Remove gasket (8) from female coupling (2).

(5) Cut strapping (clamps) (9 and 10) from hose (11). Pull female coupling (2) from hose.

(6) Cut strapping (clamps) (12 and 13) from hose (11). Pull male coupling (5) from hose.

b. Cleaning.

(1) Wash all components with clean water and detergent.

(2) Rinse components in clean water and dry with wiping rag.

4.15 DISCHARGE AND SUCTION HOSE ASSEMBLY REPAIR - Continued.

c. Inspection.

(1) Inspect female coupling (2) and dust cap (6) for cracks, corrosion, and damaged locking arms.

(2) Inspect male coupling (5) and dust plug (3) for cracks and corrosion.

(3) Inspect hose (11) for cuts, tears, punctures, and delamination.

d. Repair. Replace damaged components. Do not reuse coupling gaskets (7 and 8) or strapping (9, 10, 12 and 13).

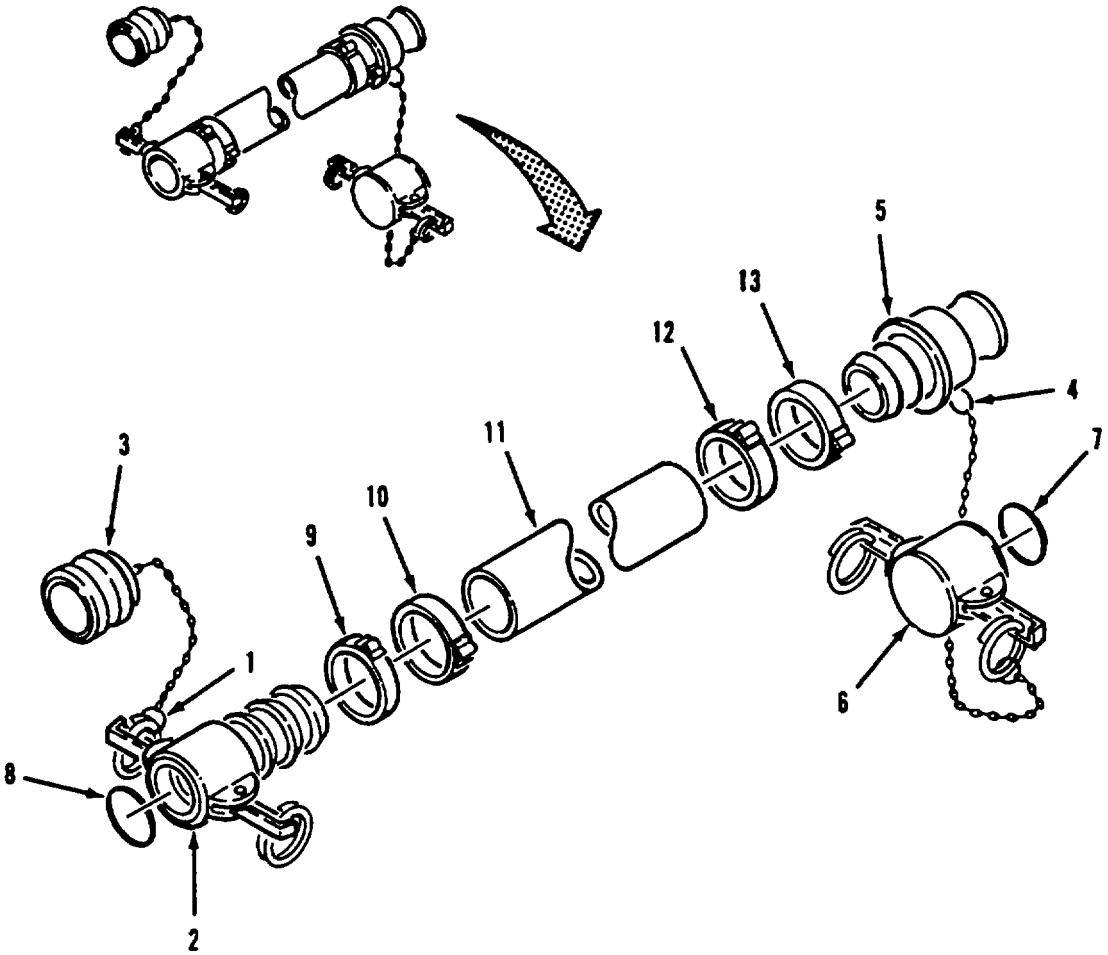

Figure 4-4. Discharge and Suction Hose Disassembly

4.15 DISCHARGE AND SUCTION HOSE ASSEMBLY REPAIR - Continued.

e. Assembly.

(1) Push male coupling (5, Figure 4-4) and female coupling (2) into hose (11).

NOTE
Strapping and seals are supplied in the accessory kit.

(2) Cut a piece of strapping (1, Figure 4-5) 36 inches long.

(3) Slide seal (2) onto strapping (1) as shown. Bend end of strapping under seal.

(4) Wrap other end of strapping (1) around hose (3) and through seal (2). Position strapping on hose about 1 inch from end of hose.

(5) Wrap another loop of strapping (1) around hose (3) and through seal (2).

(6) Position strapping (1) in slots of clamping tool (4). Tool nose (5) should fit snug against seal (2).

(7) Apply pressure to gripper lever (6) and turn handle (7) until strapping (1) is snug. Tool will lock in place when correct tension is applied. Reposition tool as required.

CAUTION

Strapping can damage hose if over tightened.

(8) Turn handle (7) clockwise to tighten strapping (1). Continue turning handle until strapping stops moving through seal (2).

CAUTION

Strapping may break if operator does not release tension on handle when bending over seal.

(9) While reversing handle (7) 3/4 turn, roll tool (4) to opposite side of seal (2). (This will bend strapping and prevent it from slipping through seal when tool is removed.).

(10) Pull cutting handle (8) on tool to cut strapping (1).

(11) Remove tool (4) while holding strapping stub down on seal (2) with thumb.

(12) Clinch end of strapping (1) by hammering down tabs of seal (2) over strapping stub.

(13) Repeat steps (2) through (12) for three remaining straps (10, 12, and 13). Straps should be 1-inch from end of hose and 1-inch apart. Ensure strapping seals are installed on the opposite side of the hose.

4.15 DISCHARGF AND SUCTION HOSF ASSFMBT.Y REPAIR - Continued.

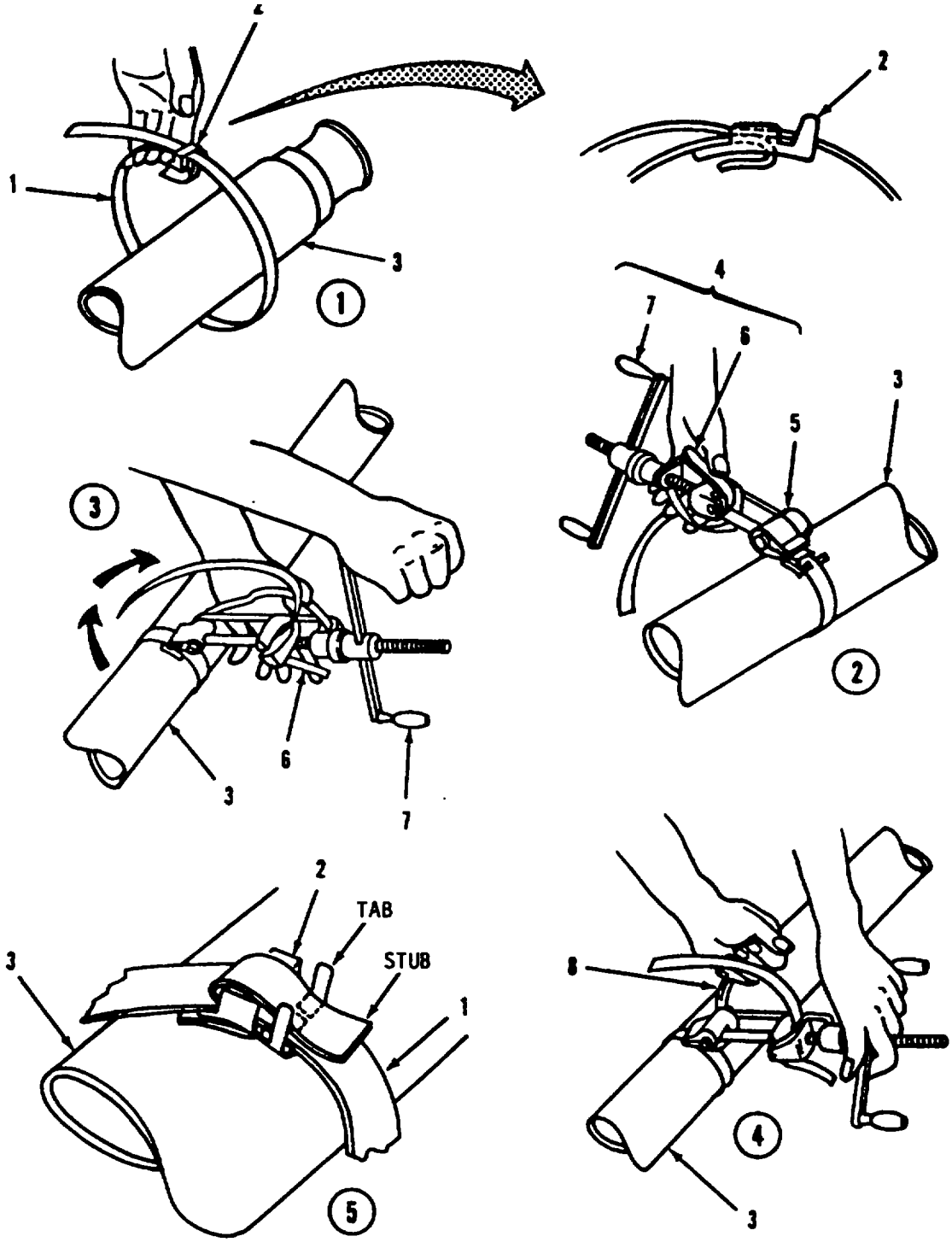

Figure 4-5. Strapping and Seal Installation

4.15 DISCHARGF AND SUCTION HOSE ASSEMBLY REPAIR - Continued.

CAUTION

Ensure gasket is fully seated in gasket seat of coupling/dust cap to prevent leaks in assembled components.

(14) Install gasket (8, Figure 4-6) in female coupling (2).

(15) Install gasket (7) in dust cap (6).

(16) Connect split ring (4) to male coupling (5). Install dust cap (6) on coupling.

(17) Connect split ring (1) to female coupling (2). Install dust plug (3) on coupling.

(18) Install hose in water system (para. 3.4b).

(19) Start up water system (para. 2.9c) and test repaired hose for leaks.

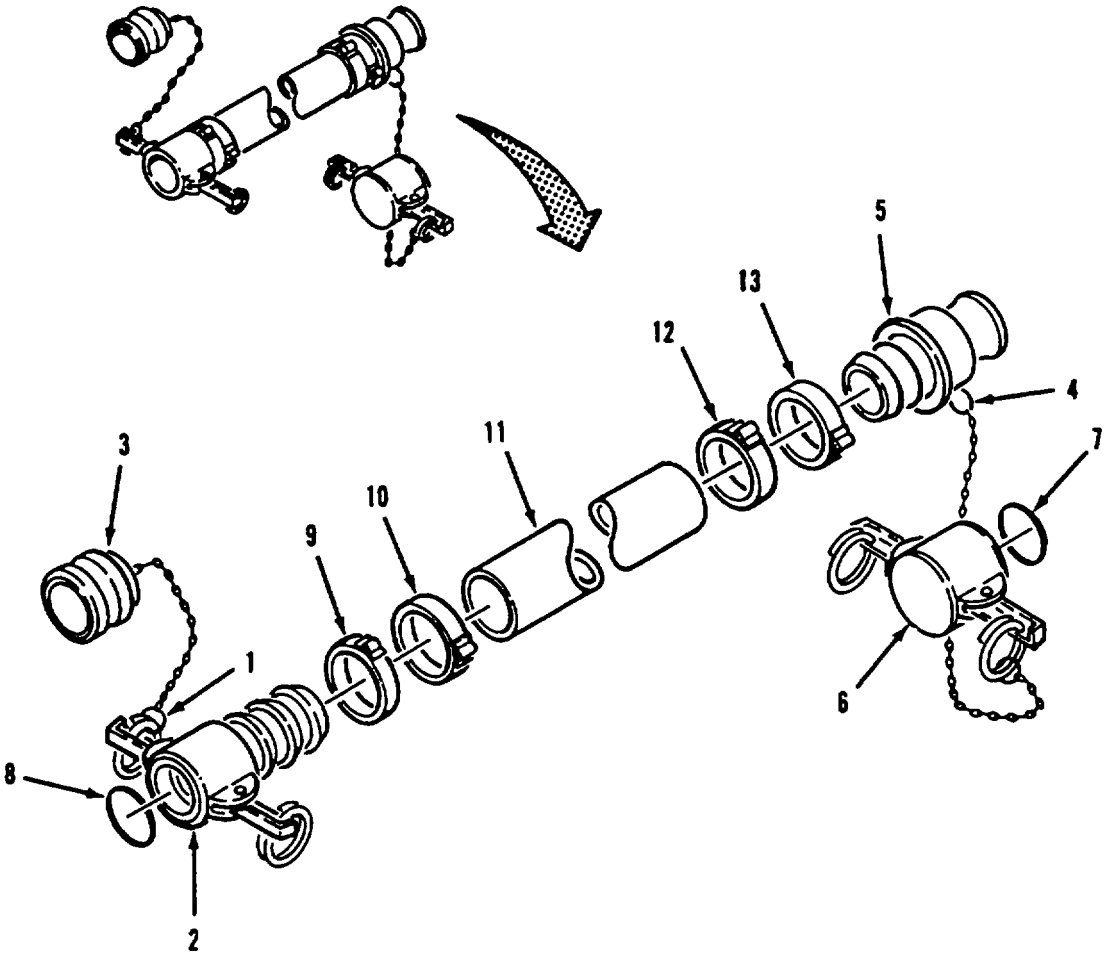

Figure 4-6. Discharge and Suction Hose Assembly

4.16 GATE VALVE ASSEMBLY (2-INCH) REPAIR.

This task consists of. a. Disassembly b. Cleaning c. Inspection d. Repair e. Assembly

INITIAL SET-UP:	
Tools:	Material/Parts:
General Mechanics Tool Kit (Item 1, App. B)	Detergent, General Purpose (Item 1, App. E)
Pipe Wrench (Item 4, App. B)	Wiping Rag (Item 2, App. E)
Vice (Item 2, App. B)	Tape, Anti-seize (Item 3, App. E)
Equipment Condition:	Coupling Gasket (Item 2, App. I)
Gate valve assembly removed (para. 3.4a)	Packing (Item 11, App. I)

NOTE

Ensure that all parts identified as mandatory replacement parts are discarded and replaced with new components.

a. Disassembly. Refer to Figure 4-7.

(1) Clamp gate valve body (13) in vise.

(2) Remove plug (1) from female coupling (2).

(3) Disconnect ring (1A) from female coupling (2).

(4) Remove gasket (2A) from female coupling (2).

(5) Using pipe wrench, unscrew female coupling (2) from valve body (13).

(6) Using pipe wrench, unscrew male coupling (3) from valve body (13).

(7) Remove cap (3A) from male coupling (3) and remove gasket (3B) from male coupling (3).

(8) Disconnect ring (3C) from male coupling (3).

(9) Turn handwheel (5) fully clockwise to close valve.

(10) Remove handwheel nut (4) and handwheel (5) from stem (11).

(11) Using pipe wrench, remove bonnet ring (9) from valve body (13). Lift bonnet (10) and attached parts from valve body.

(12) Slide disc (12) from end of stem (11).

(13) Unscrew packing nut (6) from bonnet (10).

(14) Remove packing gland (7) and packing (8) from bonnet (10).

(15) Unscrew stem (11) from bottom of bonnet (10).

4.16 GATE VALVE ASSEMBLY (2-Inch) REPAIR - Continued.

b. Cleaning.

(1) Wash all components with clean water and detergent.

(2) Rinse components in clean water and dry with wiping rag.

c. Inspection.

(1) Inspect valve body (13) for cracks and stripped or damaged threads.

(2) Inspect disc (12) for cuts or scratches across sealing surfaces.

(3) Inspect bonnet (10) for cracks and stripped threads.

(4) Inspect stem (11) for stripped, galled or damaged threads.

(5) Inspect female coupling (2) for cracks, broken lock arms and damaged threads.

(6) Inspect male coupling (3) for cracks and damaged threads.

d. Repair. Replace al defective parts. Do not reuse packing (8) or gasket (1). If disc (12) or valve body (13) is damaged, replace entire valve.

e. Assembly. Refer to Figure 4-7.

(1) Screw stem (11) into bottom of bonnet (10).

(2) Install new packing (8) and packing gland (7) over stem (11) and into bonnet (10).

(3) Screw packing nut (6) onto bonnet (10) only finger tight.

(4) Slide disc (12) onto end of stem (11).

(5) Lower bonnet (10) and attached parts onto valve body (13). Make sure disc (12) fits in valve body seat

(6) Install bonnet ring (9) on valve body (13). Tighten packing nut (6).

(7) Install handwheel (5) and handwheel nut (4) on stem (11).

NOTE
Ensure gasket is fully seated in groove of coupling.

(8) Install gasket (2A) in female coupling (2).

NOTE
Ensure that anti-seize tape is applied in the same direction as the threads.

(9) Apply anti-seize tape to threads of female coupling (2). Using pipe wrench, screw coupling into valve body (13).

(10) Secure plug (1) to female coupling (2) using ring (1 A).

4.16 GATE VALVE. ASSEMBLY (2-INCH) RFPAIR - Continued.

(11) Apply anti-seize tape to threads of male coupling (3). Using pipe wrench, screw coupling (3) into valve body (13).

(12) Install gasket (3B) into cap (3A).

(13) Secure cap (3A) to male coupling (3) using ring (3C).

(14) Install gate valve assembly in water system (para 3.4a).

(15) Startup water system (para 2.9c) and check valve assembly for leaks. If valve leaks at stem (11), tighten packing nut (6) 1/4 turn until leak stops. Do not over tighten.

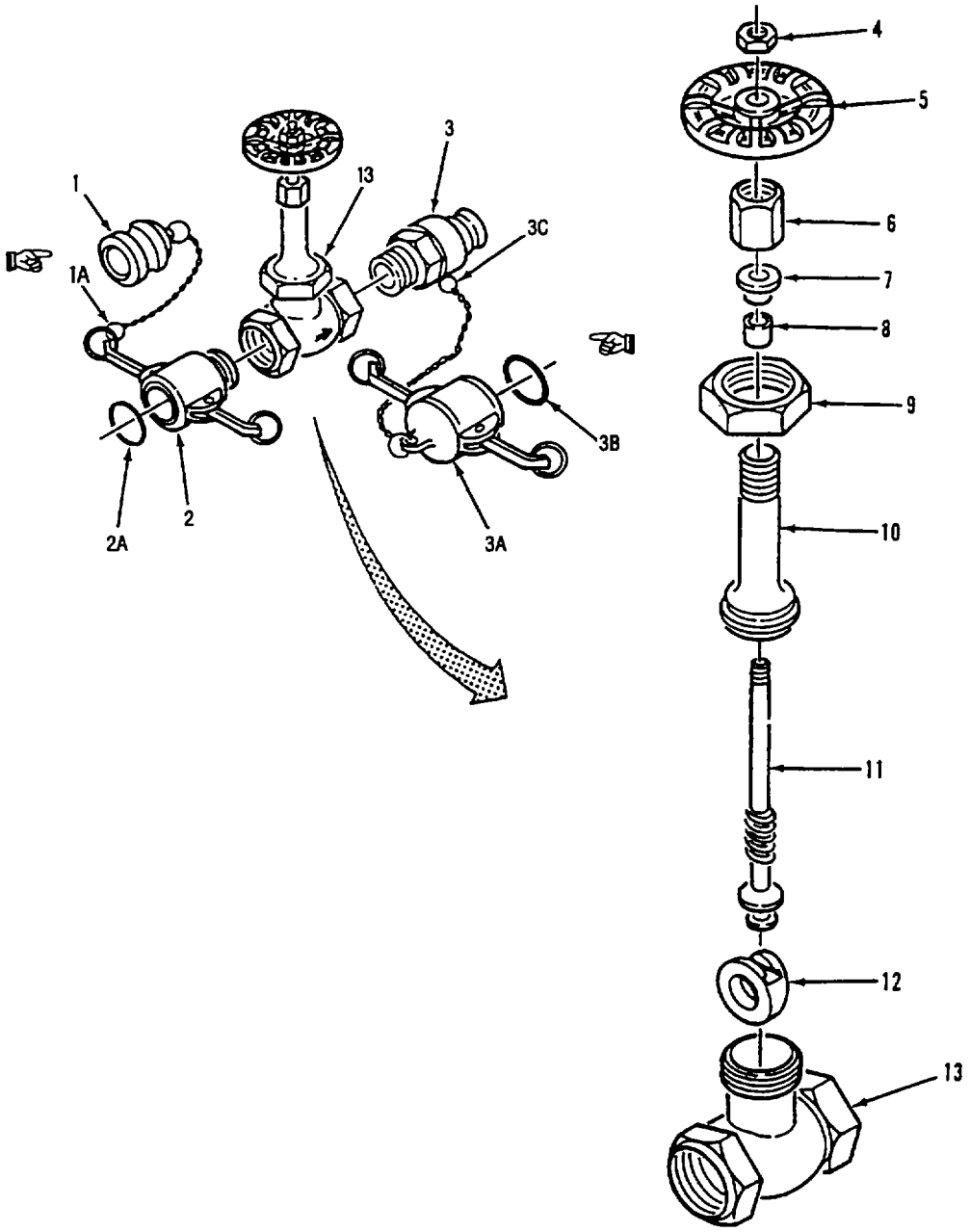

Figure 4-7. Gate Valve Assembly (2-Inch) Repair

4.17 TEE ASSEMBLY (9117-Y1) REPAIR

This task consists of: a. Disassembly b. Cleaning c. Inspection d. Repair e. Assembly

INTIAL SET-UP:	
Tools:	Material/Parts:
General Mechanics Tool Kit (Item 1, App. B)	Detergent, General Purpose (Item 1, App. E)
Equipment Condition:	Wiping Rag (Item 2, App. E)
Tee assembly removed (para. 3.4a)	Tape, Anti-seize (Item 3, App. E)
	Gasket (2) (Item 3, App. I)
	Gasket (3) (Item 12, App. I)
	Lockwasher (24) (Item 13, App. I)

NOTE

Ensure that all parts identified as mandatory replacement parts are discarded and replaced with new components.

a. Disassembly. Refer to Figure 4-8.

(1) Disconnect ring (1) from female coupling (9) and remove plug (2).

(2) Remove gasket (3) from female coupling (9).

(3) Remove eight nuts (4), lockwashers (5), flat washers (6 and 8), and bolts (7).

(4) Separate female coupling (9) and gasket (10) from tee (28).

(5) Remove eight nuts (11), lockwashers (12), flat washers (13 and 15), and bolts (14).

(6) Separate male coupling (16) and gasket (17) from tee (28).

(7) Disconnect ring (18) from male coupling (26) and remove cap (20).

(8) Remove gasket (19) from cap (20).

(9) Remove eight nuts (21), lockwashers (22), flat washers (23 and 25), and bolts (24).

(10) Separate male coupling (26) and gasket (27) from tee (28).

b. Cleaning.

(1) Wash all components with clean water and detergent.

(2) Rinse components in clean water and dry with wiping rag.

4.17 TEE ASSEMBLY (9117-Y1) REPAIR - Continued.

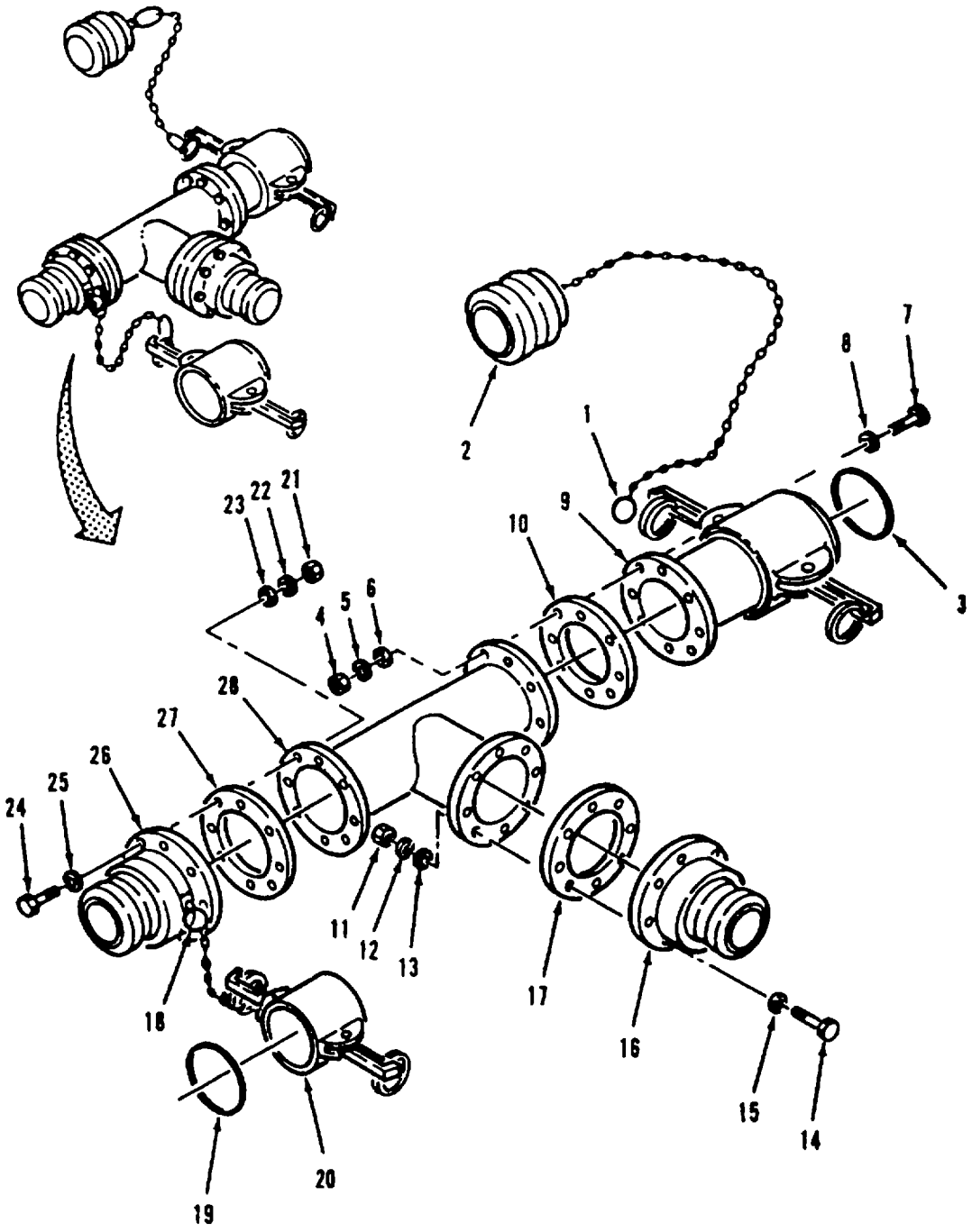

Figure 4-8. Tee Assembly (9117-Y1) Disassembly

4.17 TEE ASSEMBLY (9117-Y1) REPAIR - Continued.

c. Inspection.

(1) Inspect male couplings (16 and 26) for cracks.

(2) Inspect female coupling (9) for cracks and damaged lock arms.

(3) Inspect tee (28) for cracks and corrosion.

d. Repair. Replace defective components. Do not reuse flange gaskets (10, 17 and 27), gaskets (3 and 19) or lockwashers (22, 12 and 5).

e. Assembly. Refer to Figure 4-9.

(1) Position gasket (27) and male coupling (26) on tee (28).

(2) Install eight flat washers (23 and 25), bolts (24), lockwashers (22) and nuts (21).

NOTE
Ensure gasket is fully seated in groove of coupling.

(3) Install gasket (19) in cap (20).

(4) Connect cap (20) to male coupling (26) with ring (18).

(5) Position gasket (17) and male coupling (16) on tee (28).

(6) Install eight flat washers (13 and 15), bolts (14), lockwashers (12) and nuts (11).

(7) Position gasket (10) and female coupling (9) on tee (28).

(8) Install eight flat washers (6 and 8), bolts (7), lockwashers (5) and nuts (4).

NOTE
Ensure gasket is fully seated in groove of coupling.

(9) Install gasket (3) in female coupling (9).

(10) Connect plug (2) to female coupling (9) with ring (1).

(11) Install tee assembly in water system (para. 3.4b).

(12) Start up water system (para. 2.9c) and check tee assembly for leaks.

4.17 TEE ASSEMBLEY (9117-Y1) REPAIR - Continued.

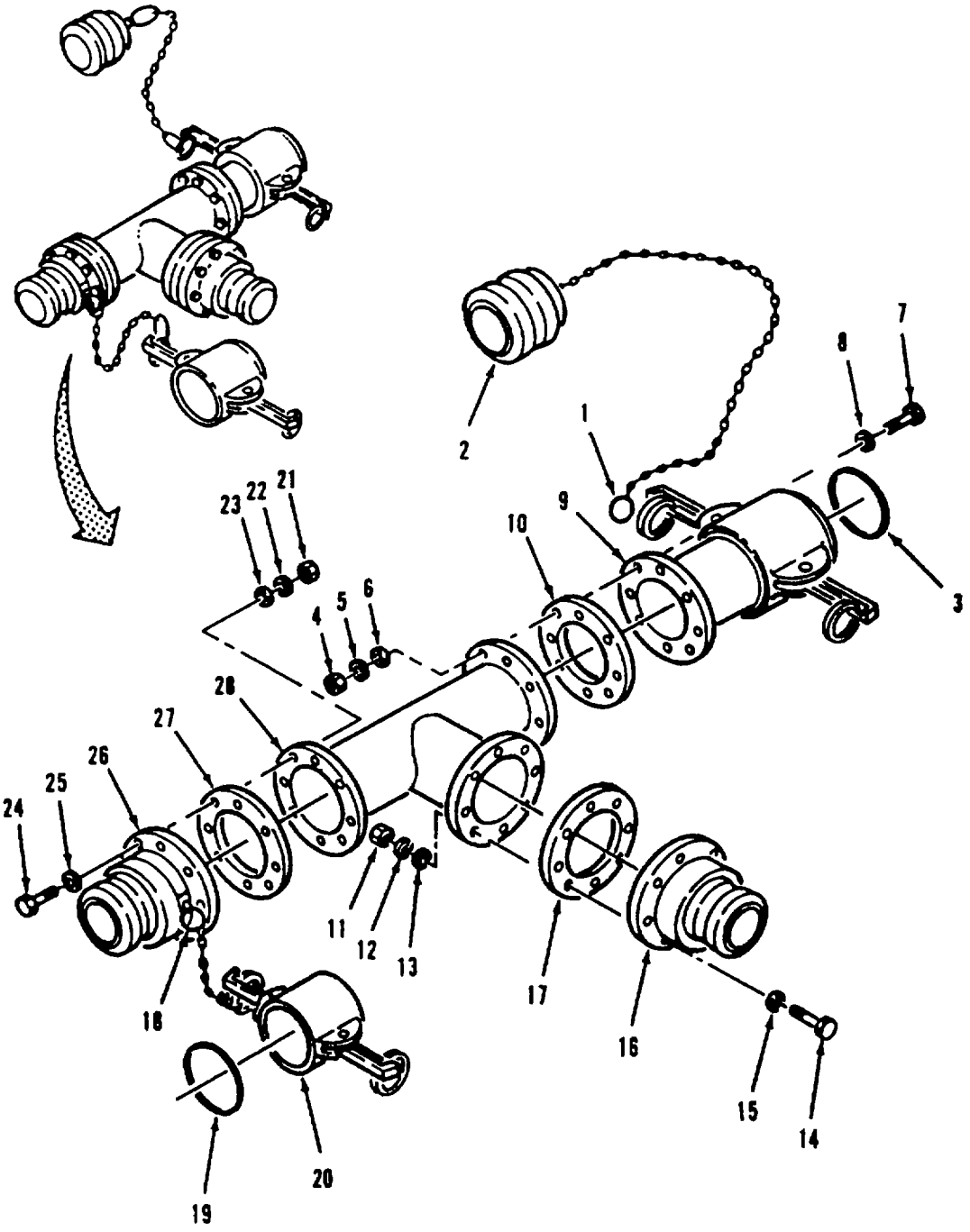

Figure 4-9. Tee Assembly (9117-Y1) Assembly

4.18 NOZZLE STAND ASSEMBLY REPAIR.

This task consists of: a. Disassembly b. Cleaning c. Inspection d. Repair e. Assembly

INITIAL SET-UP:

Tools:
General Mechanics Tool Kit (Item 1, App. B)

Material/Parts:
Detergent, General Purpose (Item 1, App. E)
Wiping Rag (Item 2, App. E)
Cotter Pin (2) (Item 14, App. I)

NOTE

Ensure that all parts identified as mandatory replacement parts are discarded and replaced with new components.

a. Disassembly. Refer to Figure 4- 10.

(1) Unbend and remove S-hooks (1, 3 and 5) and disconnect chains (2, 4 and 6).

(2) Remove cotter pin (7) and straight pin (8), then remove leg (11) from leg (13).

(3) Remove cotter pin (10) and straight pin (9), then remove leg (12) from leg (13).

b. Cleaning.

(1) Wash all components with clean water and detergent.

(2) Rinse components in clean water and dry with wiping rag.

c. Inspection.

(1) Inspect legs (11, 12 and 13) for cracks, broken clevis ends and bent or missing nozzle hangers.

(2) Inspect chains (2,4 and 6) for broken links.

d. Repair. Replace defective components. Do not reuse cotter pins (10 and 7).

e. Assembly. Refer to Figure 4-10.

(1) Position clevis fitting on leg (12) over pivot fitting on leg (13).

(2) Install straight pin (9) through pivot fitting and clevis. Install cotter pin (10) in straight pin.

(3) Align clevis fitting on leg (13) with pivot fitting on leg (11).

(4) Install straight pin (8). Install cotter pin (7) in straight pin.

(5) Connect chains (2, 4, and 6) to legs (11, 12, and 13) with S-hooks (1, 3, and 5).

(6) Position nozzle stand in water system.

4.18 NOZZLE STAND ASSEMBLY REPAIR - Continued.

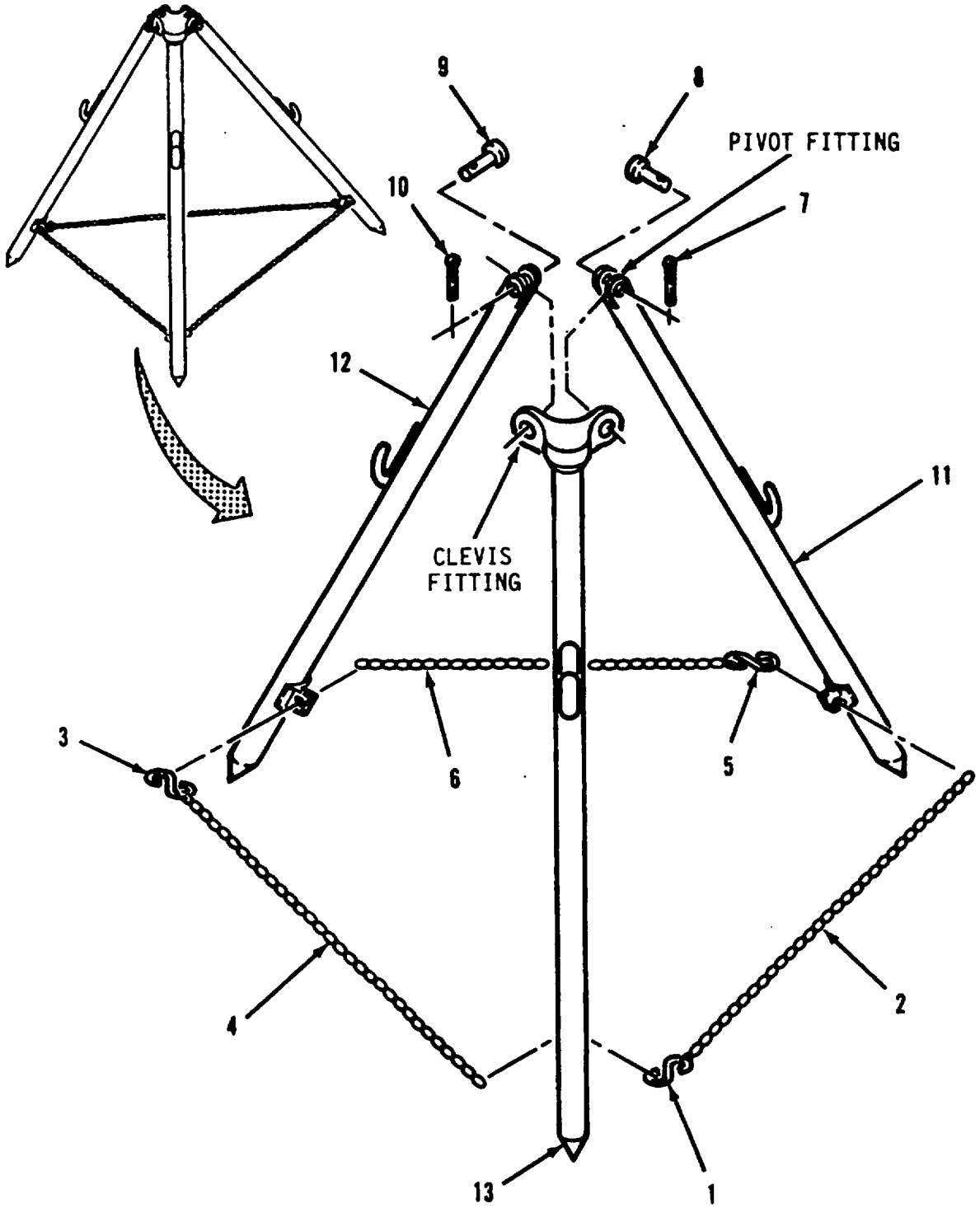

Figure 4-10. Nozzle Stand Repair

4.19 2-INCH HOSE CONNECTION KIT MAINTENANCE..

The 2-inch hose connection kit consists of the components listed below. Refer to the following paragraphs for applicable maintenance procedures.

Procedure	Para.
Discharge Hose Repair	4.15
Gate Valve Assembly (2-Inch) Repair	4.16
Tee Assembly (9117-YI) Repair	4.17
Nozzle Stand Assembly Repair	4.18

4.20 125 GPM PUMP CONNFCTION KIT MAINTENANCE.

The 125 gpm pump connection kit consists of the components listed below. Refer to the following paragraphs for applicable maintenance procedures.

Procedure	Para.
Discharge and Suction Hose Assembly Repair	4.15
Gate Valve Assembly (2-Inch) Repair	4.16
Check Valve Assembly (2-Inch) Repair	4.21

4.21 CHECK VAVE ASSEMBLY (2-INCH) REPAIR.

This task consists of: a. Disassembly b. Cleaning c. Inspection d. Repair e. Assembly

INITIAL SET-UP:

Tools:
- General Mechanics Tool Kit (Item 1, App. B)
- Pipe Wrench (Item 4, App. B)
- Vice (Item 2, App. B)

Equipment Condition:
- Check valve assembly removed (para. 3.4a)

Material/Parts:
- Detergent, General Purpose (Item 1, App. E)
- Wiping Rag (Item 2, App. E)
- Tape, Anti-seize (Item 3, App. E)
- Gasket (1) (Item 2, App. I)

NOTE

Ensure that all parts identified as mandatory replacement parts are discarded and replaced with new components.

4.21 CHECK VALVE ASSEMBLY (2-INCH) REPAIR - Continued .

a. Disassembly. Refer to Figure 4-11.

(1) Disconnect split ring (1) from female coupling (2) and remove dust plug (3).

(2) Disconnect split ring (4) from male coupling (5) and remove dust cap (6).

(3) Remove gasket (7) from dust cap (6).

(4) Remove gasket (8) from female coupling (2).

(5) Place check valve assembly in vice.

(6) Remove male coupling (5) from assembly valve (9).

(7) Remove female coupling (2) from assembled valve (9).

(8) Remove cap (10) from body (16).

(9) Remove plug (11) from body (16).

(10) Pull pin (12) out from body (16) and lift out lever (14) and attached parts.

(11) Remove nut (13) and separate disc (15) from lever (14).

b. Cleaning.

(1) Wash all components with clean water and detergent.

(2) Rinse components in clean water and dry with wiping rag.

c. Inspection.

(1) Inspect body (16), male coupling (5), dust cap (6), cap (10) and plug (11) for cracks, corrosion and stripped or damaged threads.

(2) Inspect female coupling (2) and dust plug (3) for cracks, corrosion, and damaged locking arms.

(3) Inspect disc (15) for cracks, distortion and scored sealing surface.

d. Repair. Replace damaged parts. Do not reuse gasket(s) (7 and 8).

4.21 CHECK VALVE (2-INCH) REPAIR - Continued.

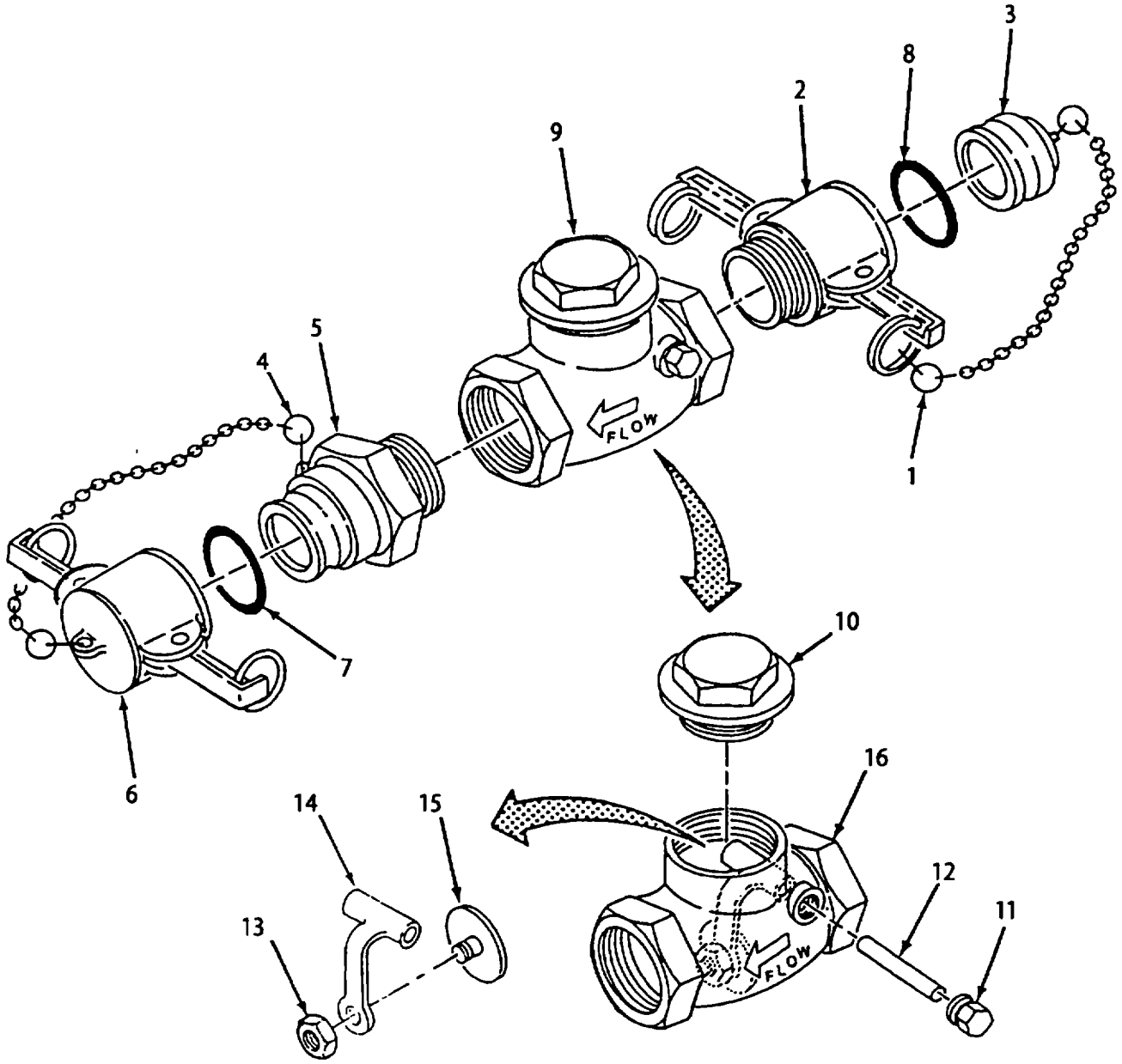

Figure 4-11. Check Valve Assembly (2-Inch) Repair

4.21 CHECK VALVE ASSEMBLY (2-INCH) REPAIR - Continued.

e. Assembly. Refer to Figure 4-11.

(1) Position disc (15) on lever (14) and secure with nut (13).

(2) Lower lever (14) and attached parts into body (16). Make sure sealing surface of disc (15) is positioned as shown.

(3) While alining hole in lever (14) with hole in body (16), insert pin (12) through body and lever. Make sure pin is fully seated.

NOTE

Ensure that anti-seize tape is applied in the same direction as the threads.

(4) Apply anti-seize tape to threads of plug (11). Install plug in body (16).

(5) Apply anti-seize tape to threads of cap (10). Install cap (10) on body (16).

(6) Apply anti-seize tape to threads of female coupling (2). Screw female coupling into assembled valve (9).

NOTE
Ensure gasket is fully seated in groove of coupling.

(7) Install gasket (8) in female coupling (2).

(8) Apply anti-seize tape to threads of male coupling (5). Screw male coupling (5) into assembled valve (9).

(9) Install gasket (7) in dust cap (6).

(10) Connect split ring (4) to male coupling (5).

(11) Install dust cap (6) on male coupling (5).

(12) Install split ring (1) on female coupling (2).

(13) Install dust plug (3) on female coupling (2).

(14) Install check valve assembly in water system (para 3.4b).

(15) Start up water system (para. 2.9c) and inspect check valve assembly for leaks.

4.22 SINGLE TANK CONNECTION KIT MAINTENANCE.

The single tank connection kit consists of the components listed below. Refer to the following paragraphs for applicable maintenance procedures.

Procedure	Para.
Discharge and Suction Hose Assembly Repair	4.15
Tee and Dual Gate Valve Assembly (9148-Y1) Repair	4.23
Gate Valve (4-Inch) Repair	4.24
Tee and Dual Gate Valve Assembly (9148-Y2) Repair	4.25

4.23 TEE AND DUAL. GATE. VALVE ASSEMBLY (9148-Y1) REPAIR.

This task consists of: a. Disassembly b. Cleaning c. Inspection d. Repair e. Assembly

INITIAL SET-UP:

Tools:
General Mechanics Tool Kit (Item 1, App. B)
Equipment Condition:
Tee and dual gate valve assembly removed (para. 3.4a)

Material/Parts:
Detergent, General Purpose (Item 1, App. E)
Wiping Rag (Item 2, App. E)
Gasket (3) (Item 3, App. I)
Gasket (5) (Item 12, App. I)
Lockwashers (40) (Item 13, App. I)

NOTE

Ensure that all parts identified as mandatory replacement parts are discarded and replaced with new components.

a. Disassembly. Refer to Figure 4-12.

(1) Disconnect ring (1) from female coupling (9) and remove plug (2).

(2) Remove gasket (3) from female coupling (9).

(3) Remove eight nuts (4), lockwashers (5), flat washers (6), screws (7) and ten flat washers (8).

(4) Separate female coupling (9) and gasket (10) from gate valve (16).

(5) Remove eight nuts (11), lockwashers (12), flat washers (13), screws (14) and ten flat washers (15).

(6) Separate gate valve (16) and gasket (17) from tee (45).

(7) Disconnect ring (18) from female coupling (26) and remove plug (19).

(8) Remove gasket (20) from female coupling (26).

(9) Remove eight nuts (21), lockwashers (22), flat washers (23), screws (24) and ten flat washers (25).

(10) Separate female coupling (26) and gasket (27) from gate valve (33).

4.23 TEE AND DUAL GATE VALVE ASSEMBLY (9148-Y1) REPAIR - Continued.

a Disassembly - Continued.

(11) Remove eight nuts (28), lockwashers (29), flat washers (30), screws (31) and ten flat washers (32).

(12) Separate gate valve (33) and gasket (34) from tee (45).

(13) Disconnect ring (35) from male coupling (43) and remove cap (37).

(14) Remove gasket (36) from cap (37).

(15) Remove eight nuts (38), lockwashers (39), flat washers (40), screws (41), and flat washers (42).

(16) Separate male coupling (43) and gasket (44) from tee (45).

b. Cleaning

(1) Wash all components with clean water and detergent.

(2) Rinse components in clean water and dry with wiping rag.

c. Inspection.

(1) Inspect female couplings (9 and 26) for cracks and damaged lock arms.

(2) Inspect male coupling (43) for cracks.

(3) Inspect tee (45) for cracks or corrosion.

d. Repair.

(1) Refer to para. 4.24 to repair gate valve.

(2) Replace defective components. Do not reuse gaskets (3, 20 and 36), flange gaskets (10, 17, 27, 34 and 44) or lockwashers (5, 12, 22, 29 and 39).

4.23 TEE AND DUAL GATE VALVE ASSEMBLY (9148-Y1) REPAIR - Continued.

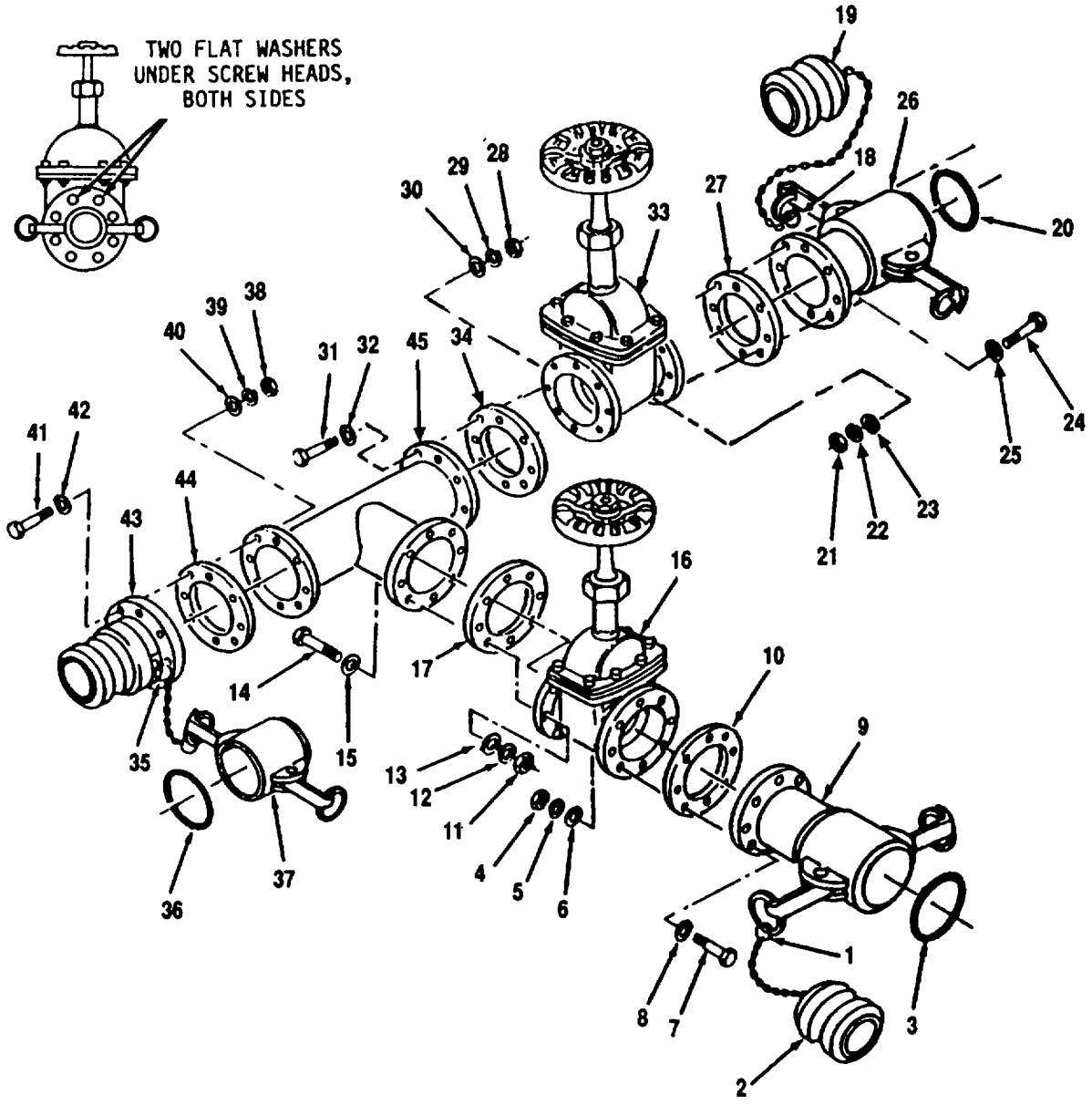

Figure 4-12. Tee and Dual Gate Valve Assembly (9148-Y1) Disassembly

4.23 TEE AND DUAL GATE VALVE ASSEMBLY (9148-Y1) REPAIR - Continued.

e. Assembly. Refer to Figure 4-13.

(1) Position gasket (44) and male coupling (43) on tee (45).

(2) Install eight flat washers (42), screws (41), flat washers (40), lockwashers (39) and nuts (38).

NOTE

Ensure gasket is fully seated in groove of female cap.

(3) Install gasket (36) in cap (37). Connect cap to male coupling (43) with ring (35).

(4) Position gasket (34) and gate valve (33) on tee (45).

NOTE

Two additional flat washers (32 and 25) are used at the top two screw holes (four per gate valve) to prevent the screws from coming in contact with the gate valve body and assure proper torque.

(5) Install ten flat washers (32), and eight screws (31), flat washers (30), lockwashers (29) and nuts (28).

(6) Position gasket (27) and female coupling (26) on gate valve (33).

(7) Install ten flat washers (25), and eight screws (24), flat washers (23), lockwashers (22) and nuts (21).

NOTE

Ensure gasket is fully seated in groove of female coupling.

(8) Install gasket (20) in female coupling (26). Connect plug (19) to female coupling (26) with ring (18).

(9) Position gasket (17) and gate valve (16) on tee (45).

NOTE

Two additional flat washers (15 and 8) are used at the top two screw holes (four per gate valve) to prevent the screws from coming in contact with the gate valve body and assure proper torque.

(10) Install ten flat washers (15), and eight screws (14), flat washers (13), lockwashers (12) and nuts (11).

(11) Position gasket (10) and female coupling (9) on gate valve (16).

(12) Install ten flat washers (8), and eight screws (7), flat washers (6), lockwashers (5) and nuts (4).

NOTE

Ensure gasket is fully seated in groove of female coupling.

(13) Install gasket (3) in female coupling (9). Connect plug (2) to female coupling (9) with ring (1).

(14) Install tee and dual gate valve assembly in water system (para. 3.4b).

(15) Start water system (para. 2.9c) and check tee and dual gate valve assembly for leaks.

4.23 TEE AND DUAL GATE VALVE ASSEMBLY (9148-Y1) REPAIR - Continued.

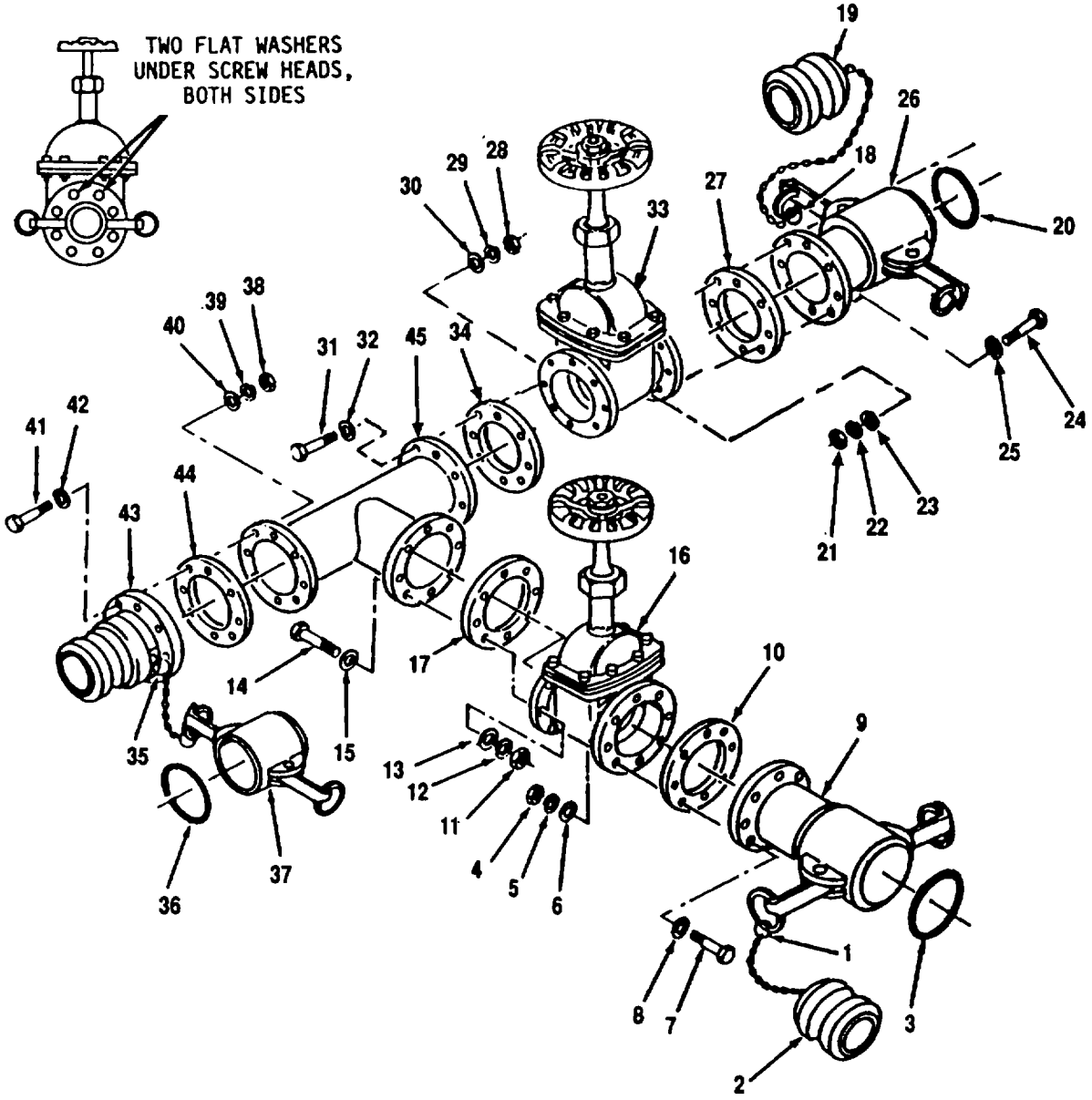

Figure 4-13. Tee and Dual Gate Valve Assembly (9148-Y1) Assembly

4.24 GATE VALVE (4-INCH) REPAIR.

This task consists of: a. Disassembly b. Cleaning c. Inspection d. Repair e. Assembly

INITIAL SET-UP:

Tools:
General Mechanics Tool Kit (Item 1, App. B)

Equipment Condition:
4-inch gate valve assembly removed (para. 4.23 or 4.25)

Material/Parts:
Detergent, General Purpose (Item 1, App. E)
Wiping Rag (Item 2, App. E)
Tape, Anti-seize (Item 3, App. E)
Packing Ring (Item 15, App. I)
Flange Gasket (Item 16, App. I)
Lockwashers (8) (Item 17, App. I)

NOTE

Ensure that all parts identified as mandatory replacement parts are discarded and replaced with new components.

a. Disassembly. Refer to Figure 4^14.

(1) Remove nut (1) and handwheel (2) from stem (12).

(2) Remove packing nut (3), gland spring (4), packing gland (5) and packing ring (6) from top of bonnet (10).

(3) Remove eight nuts (7), lockwashers (8), and screws (9) from valve body (17) and bonnet (10).

(4) Remove bonnet (10), gasket (11), and attached parts from valve body (17).

(5) Remove two screws (13) and separate discs (14 and 15) from disc riser (16).

(6) Remove disc riser (16) from stem (12).

(7) Unscrew stem (12) from bottom of bonnet (10).

b. Cleaning.

(1) Wash all components with clean water and detergent.

(2) Rinse components in clean water and dry with wiping rag.

4.24 GATE VALVE (4-INCH) REPAIR - Continued.

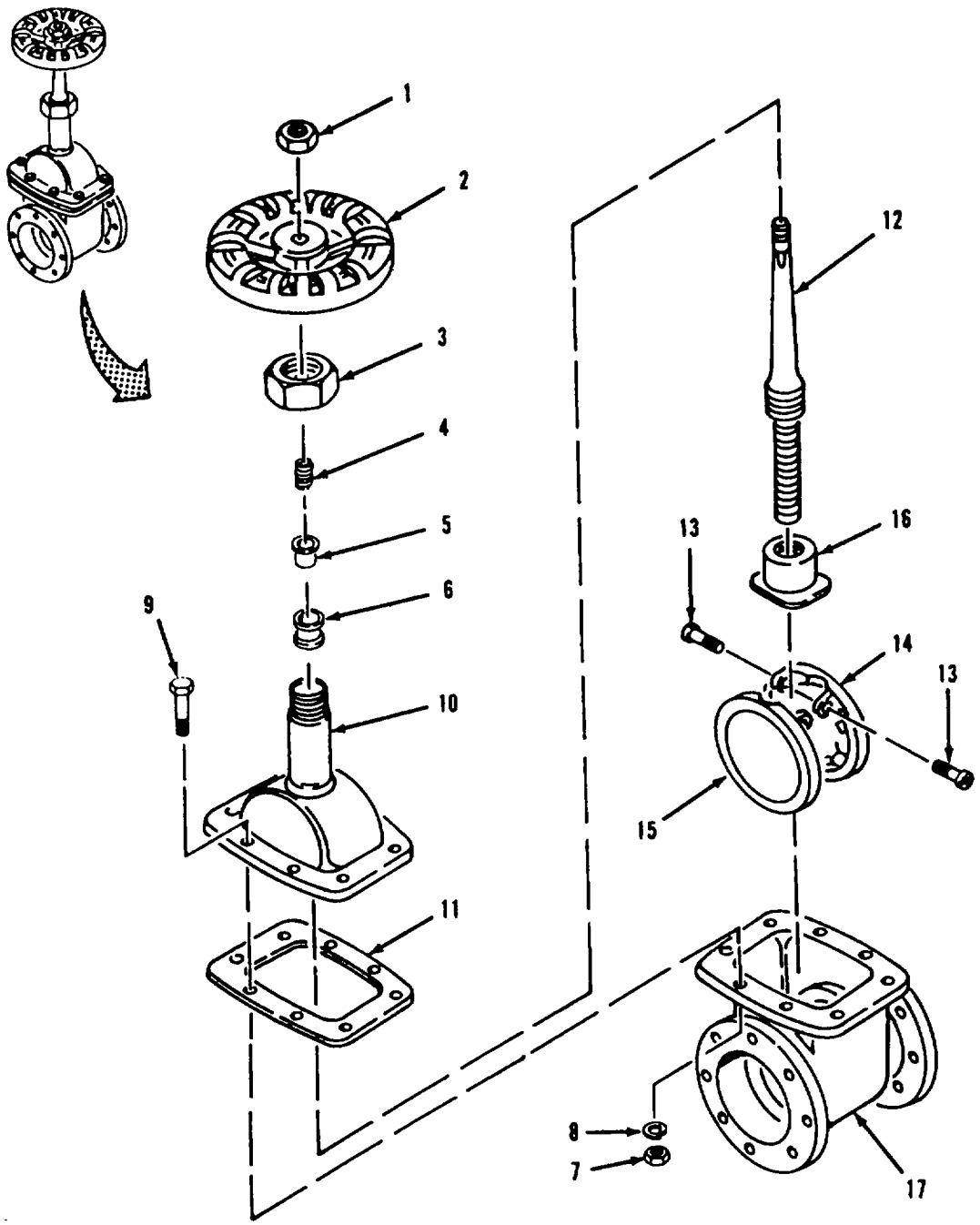

Figure 4-14. Gate Valve (4-Inch) Repair

4.24 GATE VALVE (4-INCH) REPAIR - Continued.

c. Inspection.

(1) Inspect bonnet (10) and valve body (17) for cracks, scored mating surfaces, stripped threads and corrosion.

(2) Inspect for bent stem (12) for galled or stripped threads.

(3) Inspect sealing surfaces of discs (14 and 15) and valve body (17) for deep scratches and cracks.

d. Repair. Replace damaged or defective parts. Do not reuse packing ring (6), flange gasket (11) or lockwashers (8).

e. Assembly. Refer to Figure 4-14.

(1) Screw stem (12) all the way into bottom of bonnet (10), then back out stem three full turns. Do not allow stem to move from this position.

(2) While holding stem (12) in place, screw disc riser (16) onto stem until bottom of riser is flush with end of stem.

(3) Position discs (14 and 15) on riser (16) and install two screws (13).

(4) While preventing stem (12) from turning in bonnet (10), turn discs (14 and 15) and riser (16) counterclockwise onto stem until top of discs contact bottom of bonnet.

(5) Position gasket (11) on valve body (17).

(6) While holding stem (12) in position, lower bonnet (10) and discs (14 and 15) into valve body (17). Do not rotate discs more than 1/4 turn to aline discs with body.

(7) Install eight screws (9), lockwashers (8), and nuts (7), in valve body (17) and bonnet (10).

(8) Slide packing ring (6) over stem (12) and down into bonnet (10).

(9) Slide packing gland (5) and gland spring (4) over stem (12).

(10) Slide packing nut (3) over stem (12) and tighten onto top of bonnet (10).

(11) Position handwheel (2) on stem (10) and secure with nut (1).

(12) Install gate valve in tee and dual gate valve assembly (para. 4.23 or 4.25).

4.25 TEE AND DUAL GATE VALVE ASSEMBLY (9148-Y2) REPAIR.

This task consists of: a. Disassembly b. Cleaning c. Inspection d. Repair e. Assembly

INITIAL SET-UP:	
Tools: General Mechanics Tool Kit (Item 1, App. B) Equipment Condition: Tee and dual gate assembly removed (para. 3.4a)	Material/Parts: Detergent, General Purpose (Item 1, App. E) Wiping Rag (Item 2, App. E) Gasket (3) (Item 3, App. I) Gasket (5) (Item 12, App. I) Lockwashers (40) (Item 13, App. I)

NOTE

Ensure that all parts identified as mandatory replacement parts are discarded and replaced with new components.

a. Disassembly. Refer to Figure 4-15.

(1) Disconnect ring (1) from male coupling (9) and remove cap (2).

(2) Remove gasket (3) from cap (2).

(3) Remove eight nuts (4), lockwashers (5), flat washers (6), screws (7), and ten flat washers (8).

(4) Separate male coupling (9) and gasket (10) from gate valve (16).

(5) Remove eight nuts (11), lockwashers (12), flat washers (13), screws (14), and ten flat washers (15).

(6) Separate gate valve (16) and gasket (17) from tee (45).

(7) Disconnect ring (18) from male coupling (26) and remove cap (19).

(8) Remove gasket (20) from cap (19).

(9) Remove eight nuts (21), lockwashers (22), flat washers (23), screws (24), and ten flat washers (25).

(10) Separate male coupling (26) and gasket (27) from gate valve (33).

(11) Remove eight nuts (28), lockwashers (29), flat washers (30), screws (31), and ten flat washers (32).

(12) Separate gate valve (33) and gasket (34) from tee (45).

(13) Disconnect ring (35) from female coupling (43) and remove plug (36).

(14) Remove gasket (37) from female coupling (43).

(15) Remove eight nuts (38), lockwashers (39), flat washers (40), screws (41), and flat washers (42).

(16) Separate female coupling (43) and gasket (44) from tee (45).

4.25 TEE AND DUAL GATE VALVE ASSEMBLY (9148-Y2) REPAIR- Continued.

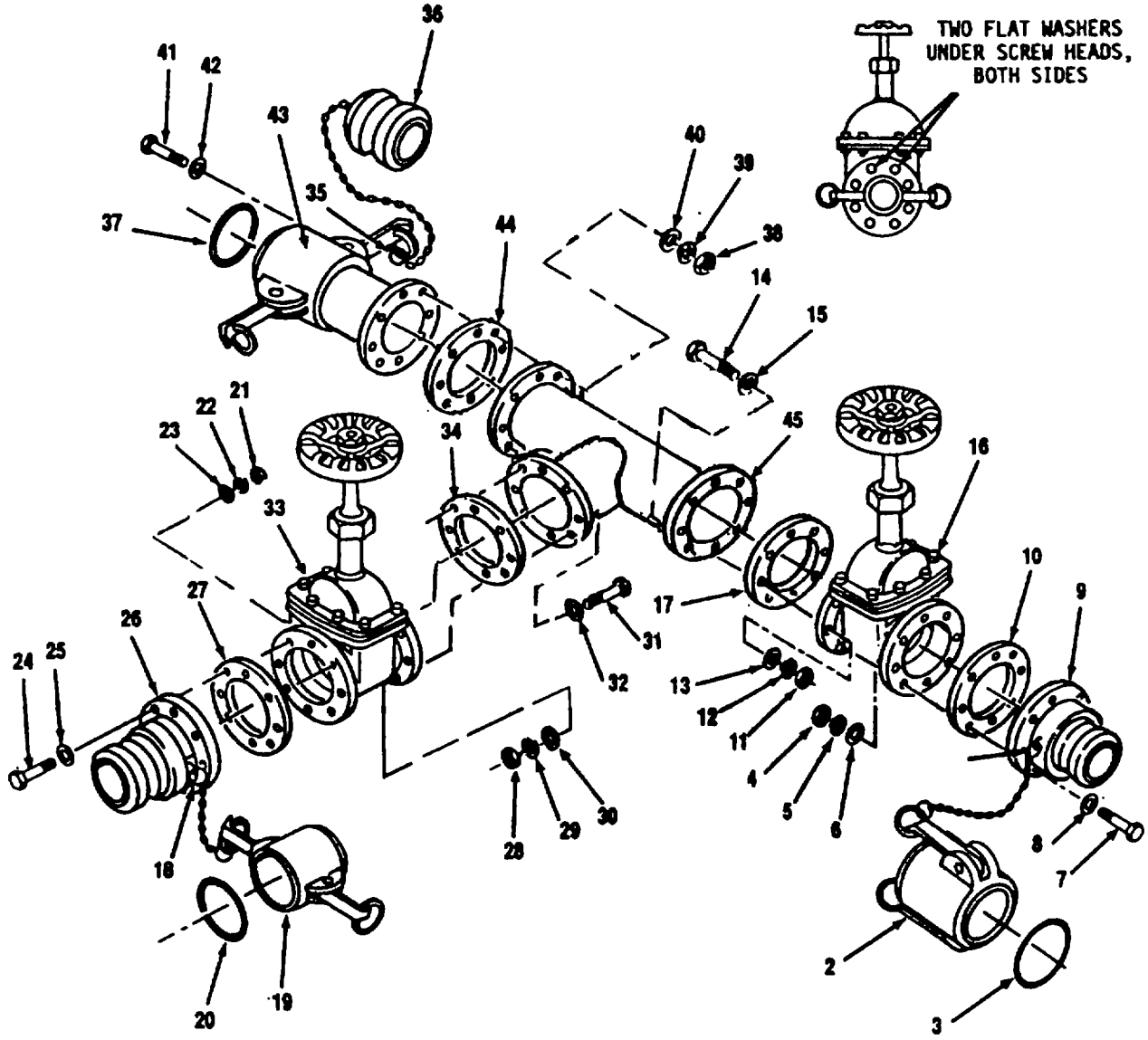

Figure 4-15. Tee and Dual Gate Valve Assembly (9148-Y2) Disassembly

4.25 TEE AND DUAL GATE VALVE ASSEMBLY (9148-Y2) REPAIR.

b. Cleaning.

(1) Wash all components with clean water and detergent.

(2) Rinse components in clean water and dry with wiping rag.

c. Inspection.

(1) Inspect male couplings (9 and 26) for cracks.

(2) Inspect female coupling (43) for cracks and damaged lock arms.

(3) Inspect tee (45) for cracks or corrosion.

d. Repair.

(1) Refer to para. 4.24 to repair gate valve.

(2) Replace defective components. Do not reuse gaskets (3, 20 and 37), flange gaskets (10, 17, 27, 34 and 44) or lockwashers (5, 12, 22, 29 and 39).

e. Assembly. Refer to Figure 4-16.

(1) Position gasket (44) and female coupling (43) on tee (45).

(2) Install eight flat washers (42), screws (41), flat washers (40), lockwashers (39) and nuts (38).

NOTE
Ensure gasket is fully seated in groove of female coupling.

(3) Install gasket (37) in female coupling (43). Connect plug (36) to female coupling (43) with ring (35).

(4) Position gasket (34) and gate valve (33) on tee (45).

NOTE
Two additional flat washers (32 and 25) are used at the top two screw holes (four per gate valve) to prevent the screws from coming in contact with the gate valve body and assure proper torque.

(5) Install ten flat washers (32), and eight screws (31), flat washers (30), lockwashers (29) and nuts (28).

(6) Position gasket (27) and male coupling (26) on gate valve (33).

(7) Install ten flat washers (25), and eight screws (24), flat washers (23), lockwashers (22) and nuts (21).

4.25 TEE AND DUAL GATE VALVE ASSEMBLY (9148-Y2) REPAIR - Continued.

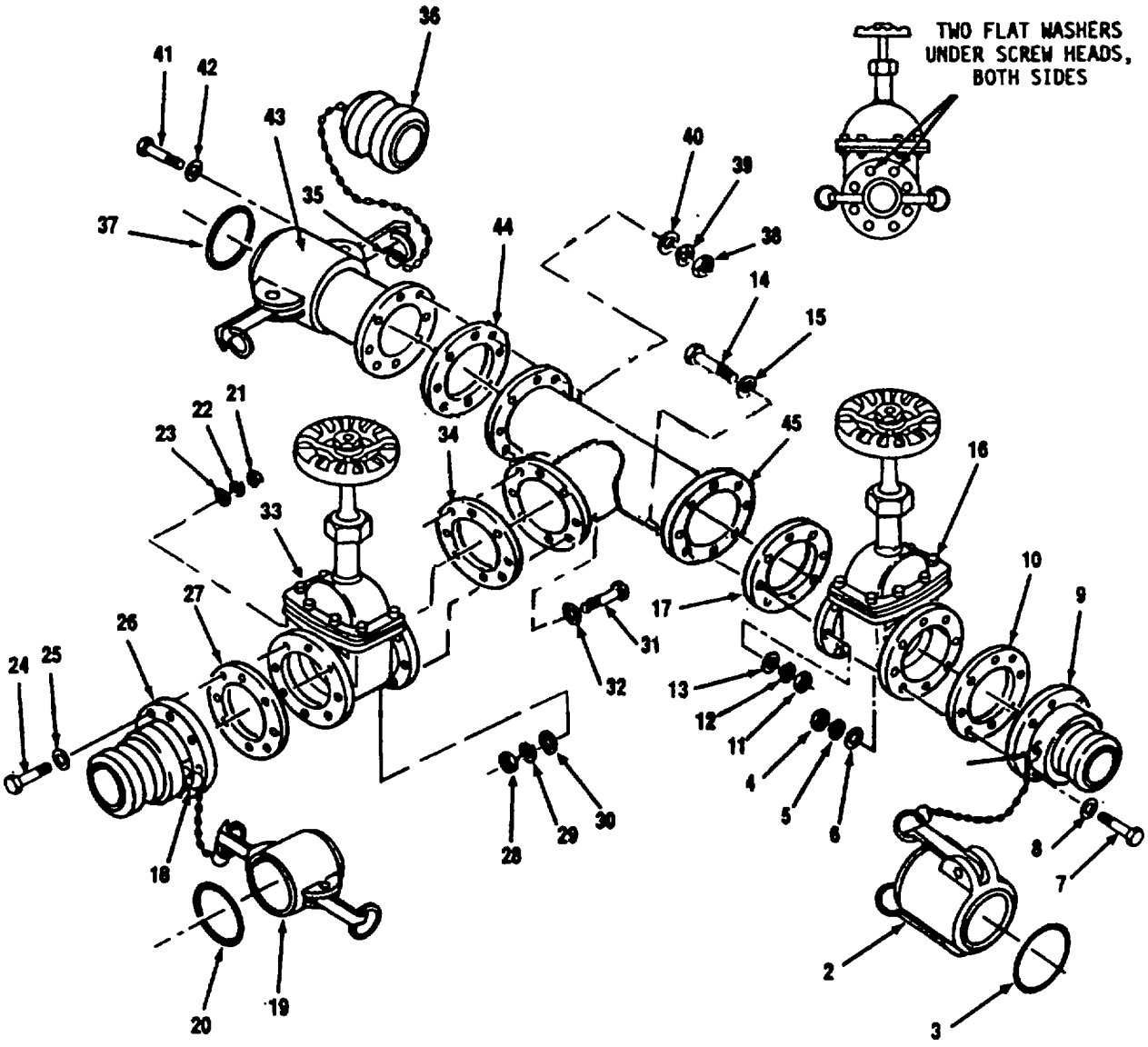

Figure 4-16. Tee and Dual Gate Valve Assembly (9148-Y2) Assembly

4.25 TEE AND DUAL GATE VALVE ASSEMBLY (9148-Y2) REPAIR - Continued .

NOTE
Ensure gasket is fully seated in groove of cap.

(8) Install gasket (20) in cap (19). Connect cap to male coupling (26) with ring (18).

(9) Position gasket (17) and gate valve (16) on tee (45).

NOTE
Two additional flat washers (15 and 8) are used at the top two screw holes (four per gate valve) to prevent the screws from coming in contact with the gate valve body and assure proper torque.

(10) Install ten flat washers (15), and eight screws (14), flat washers (13), lockwashers (12) and nuts (11).

(11) Position gasket (10) and male coupling (9) on gate valve (16).

(12) Install ten flat washers (8), and eight screws (7), flat washers (6), lockwashers (5) and nuts (4).

NOTE
Ensure gasket is fully seated in groove of cap.

(13) Install gasket (3) in female cap (2). Connect cap to male coupling (9) with ring (1).

(14) Install tee and dual gate valve assembly in water system (para. 3.4b).

(15) Start water system (para. 2.9c) and check tee and dual gate valve assembly for leaks.

Section VI. PREPARATION FOR STORAGE OR SHIPMENT

4.26 SECURITY PROCEDURES.

Refer to AR 190-11 or AR 190-13.

4.27 ADMINISTRATIVE STORAGE.

a. Placement of equipment in administrative storage should be for short periods of time when a shortage of maintenance effort exists. Items should be mission ready within 24 hours or within the time factors as determined by the directing authority. During the storage period, appropriate maintenance records will be kept.

b. Before placing equipment in administrative storage, current maintenance services and equipment serviceable criteria (ESC) evaluations should be completed, shortcomings and deficiencies should be corrected, and all modification work orders (MWOs) should be applied.

c. Storage Site Selection. Inside storage is preferred for items selected for administrative storage. If inside storage is not available, keep tricons away from corrosive materials, such as saltwater spray.

APPENDIX A

REFERENCES

A.1 SCOPE.

This appendix lists all forms, field manuals, technical manuals, and miscellaneous publications referenced in this manual.

A.2 FORMS.

Equipment Control Record	DA Form 2408-9
Equipment Inspection and Maintenance Worksheet	DA Form 2404
Product Quality Deficiency Report	SF 368
Recommended Changes to Equipment Technical Publications.	DA Form 2028-2
Recommended Changes to Publications and Blank Forms	DA Form 2028
Report of Discrepancy	SF 364

A.3 FIELD MANUALS.

First Aid for Soldiers	FM 21-11
Detailed Decontamination Procedures	FM 3-3, 34 and 3-5

A.4 MISCELLANEOUS.

Consolidated Index of Army Publications and Blank Forms	DA PAM 25-30
Destruction of Army Materiel to Prevent Enemy Use	TM 750-224-3
Painting Instructions for Army Materiel	TM 43-0139
The Army Maintenance Management System (TAMMS)	DA PAM 738-750
Physical Security of Arms, Ammunitions and Explosives	AR 190-11
The Army Physical Security Program	AR 190-13
Welding Theory and Application	TM 9-237
Unit Maintenance Repair Parts and Special Tools List for 20K Gallon Water Storage and Distribution System, Model 20K WSDS	TM 10-4610-237-20P

APPENDIX B

MAINTENANCE ALLOCATION CHART

Section I. INTRODUCTION

B.1 GENERAL

a. This section provides a general explanation of all maintenance and repair functions authorized at various maintenance categories.

b. The Maintenance Allocation Chart (MAC) in Section II designates overall authority and responsibility for performance of maintenance functions on the identified end item or component. The application of the maintenance functions to the end item or component will be consistent with the capacities and capabilities of the designated maintenance categories.

c. Section III lists the tools and test equipment (both special tools and common tool sets) required for each maintenance function as referenced from Section II.

d. Section IV contains supplemental instructions and explanatory notes for a particular maintenance function.

B.2 MAINTENANCE FUNCTIONS.

Maintenance functions will be limited to and are defined as follows:

a. Inspect. To determine the serviceability of an item by comparing its physical, mechanical, and/or electrical characteristics with established standards through examination (e.g., by sight, sound, or feel).

b. Test. To verify serviceability by measuring the mechanical, pneumatic, hydraulic, or electrical characteristics of an item and comparing those characteristics with prescribed standards.

c. Service. Operations required periodically to keep an item in proper operating condition, i.e., to clean (includes decontaminate, when required), to preserve, to drain, to paint, or to replenish fuel, lubricants, chemical fluids, or gases.

d. Adjust. To maintain or regulate, within prescribed limits, by bringing into proper or exact position, or by setting the operating characteristics to specified parameters.

e. Aline. To adjust specified variable elements of an item to bring about an optimum performance.

f. Calibrate. To determine and cause corrections to be made or to be adjusted on instruments or test, measuring, and diagnostic equipments used in precision measurement. Consists of comparisons of two instruments, one of which is a certified standard of known accuracy, to detect and adjust any discrepancy in the accuracy of the instrument being compared.

g. Remove/Install. To remove and install the same item when required to perform service or other maintenance functions. Install may be the act of emplacing, seating, or fixing into position a spare, repair part, or module (component or assembly) in a manner to allow the proper functioning of an equipment or system.

B.2 MAINTENANCE FUNCTIONS - Continued.

h. Replace. To remove an unserviceable item and install a serviceable counterpart in its place. "Replace" is authorized by the MAC and is shown as the 3rd position code of the SMR code.

i. Repair. The application of maintenance services, including fault location/troubleshooting, removal installation, and disassembly/assembly procedures, and maintenance actions to identify troubles, and restore serviceability to an item by correcting specific damage, fault, malfunction, or failure in a part, subassembly, module (component or assembly) end item, or system.

j. Overhaul. That maintenance effort (service/action) prescribed to restore an item to a completely serviceable/operational condition as required by maintenance standards in appropriate technical publications (i.e., DMWR). Overhaul is normally the highest degree of maintenance performed by the Army. Overhaul does not normally return an item to like new condition.

k. Rebuild. Consists of those services/actions necessary for the restoration of unserviceable equipment to a like new condition in accordance with original manufacturing standards. Rebuild is the highest degree of material maintenance applied to Army equipment. The rebuild operation includes the act of returning to zero those age measurements (hours/miles, etc.) considered in classifying Army equipment/components.

B.3 EXPLANATION OF COLUMNS IN THE MAC. SECTION II.

a. Column 1. Group Number. Column I lists functional group code numbers, the purpose of which is to identify maintenance significant components, assemblies, subassemblies, and modules with the next higher assembly. End item group numbers are "00."

b. Column 2. Component/Assembly. Column 2 contains the names of components, assemblies, subassemblies, and modules for which maintenance is authorized.

c. Column 3. Maintenance Function. Column 3 lists the functions to be performed on the item listed in Column 2. (For a detailed explanation of these functions, see paragraph B.2.)

d. Column 4. Maintenance Level. Column 4 specifies, by the listing of a work time figure (expressed as man-hours shown as whole hours or decimals) in the appropriate subcolumn(s), the level of maintenance authorized to perform the function listed in Column (3). This figure represents the active time required to perform that maintenance function at the indicated level of maintenance. if the number or the complexity of the tasks within the listed maintenance function vary at different maintenance levels, appropriate work time figures will be shown for each level. The work time figure represents the average time required to restore an item (assembly, subassembly, component, module, end item, or system) to a serviceable condition under typical field operating conditions. This time includes preparation time (including any necessary disassembly/assembly time), troubleshooting/fault location time, and quality assurance/quality control time in addition to the time required to perform the specific tasks identified for the maintenance functions authorized in the Maintenance Allocation Chart. The system designations for the various maintenance levels are shown below.

C .....Operator or Crew
O.....Unit Maintenance
F.....Direct Support Maintenance
H .....General Support Maintenance
D .....Depot Maintenance

B.3 EXPLANATION OF COLUMNS IN THE MAC. SECTION II - Continued.

e. Column 5. Tools and Equipment. Column 5 specifies, by code, those common tool sets (not individual tools) common TMDE, and special tools, special TMDE, and support equipment required

f. Column 6. Remarks. This column, when applicable, contains a letter code, in alphabetic order, which is keyed to the remarks contained in Section IV.

B.4 EXPLANATION OF COLUMNS IN TOOL AND TEST EQUIPMENT REQUIREMENTS, SECTION III.

a. Column 1. Reference Code. The tool and test equipment reference code correlates with a code used in the MAC, Section II, Column 5.

b. Column 2. Maintenance Level. The lowest category of maintenance authorized to use the tool or test equipment.

c. Column 3. Nomenclature. Name or identification of the tool or test equipment.

d. Column 4. National Stock Number. The national stock number of the tool or test equipment.

e. Column 5. Tool Number. The manufacturer's part number.

B.5 EXPLANATION OF COLUMNS IN REMARKS SECTION IV.

a. Column 1. Reference Code. The code recorded in Column 6, Section II.

b. Column 2. Remarks. This column lists information pertinent to the maintenance function being performed as indicated in the MAC, Section II.

Section II. MAINTENANCE ALLOCATION CHART

(1) GROUP NUMBER	(2) COMPONENT ASSEMBLY	(3) MAINTENANCE FUNCTION	MAINTENANCE LEVEL UNIT C	UNIT O	DS F	GS H	DEPOT D	(5) TOOLS AND EQUIP.	(6) REMARKS
00	20,000 Gallon Water Storage and Distribution System								
01	Hose Nozzle Connection Kit								
0101	Distribution Nozzle (11/2-inch)	Inspect	0.1						
		Replace		0.2					
		Repair		0.5				1,2,3	
0102	Discharge Hose, 1 1/2-in. x 25 ft	Inspect	0.1						
		Replace	0.2						
		Repair		1.0				1, 2, 3	
0103	Discharge Hose, 2 in. x 20 ft.	Inspect	0.1						
		Replace	0.2						
		Repair		1.0				1,2	
0104	Gate Valve, 2-inch	Inspect	0.1						
		Replace		0.2					
		Repair		1.5				1, 2, 4	
0105	Tee Assembly (9117-YI)	Inspect	0.1						
		Replace	0.2						
		Repair		1.0					
0106	Discharge Hose, 4-in. x 20 ft.	Inspect	0.1						
		Replace	0.2						
		Repair		1.0				1, 2, 3	
0107	Nozzle Stand Assembly	Inspect	0.1						
		Replace		0.2					
		Repair		1.5				1	
02	2-Inch Hose Connection Kit								
0201	Discharge Hose, 2-in. x 20 ft.	Inspect	0.1						
		Replace	0.2						
		Repair		1.0				1,2,3	
0202	Gate Valve, 2-inch	Inspect	0.1						
		Replace		0.2					
		Repair		1.5				1,2,4	

Section II. MAINTENANCE ALLOCATION CHART

(1) GROUP NUMBER	(2) COMPONENT ASSEMBLY	(3) MAINTENANCE FUNCTION	MAINTENANCE LEVEL UNIT C	UNIT O	DS F	GS H	DEPOT D	(5) TOOLS AND EQUIP.	(6) REMARKS
0203	Tee Assembly, 4-inch (91 17-YI)	Inspect	0.1						
		Replace		0.2					
		Repair		1.0				1	
0204	Discharge Hose, 4 in. x 20 ft.	Inspect	0.1						
		Replace	0.2						
		Repair		1.0				1, 2, 3	
0205	Nozzle Stand	Inspect	0.1						
		Replace		0.2					
		Repair		1.5				1	
03	Hypochlorination Unit								A
04	125 GPM Pump Connection Kit								
0401	Discharge Hoses, 2-in. x 20 ft.	Inspect	0.1						
		Replace	0.2						
		Repair		1.0				1,2,3	
0402	Gate Valve Assembly, 2-inch	Inspect	0.1						
		Replace		0.2					
		Repair		1.5				1,2	
0403	Check Valve, 2-inch	Inspect	0.1						
		Replace		0.2					
		Repair		1.0				1,2,4	
0404	Suction Hoses, 2-in. x 20 ft.	Inspect	0.1						
		Replace	0.2						
		Repair		1.0				1, 2,3	
05	Pump Assembly, 125 GPM								A
06	Single Tank Connection Kit								
0601	Discharge Hoses, 4-in. x 10 ft. and 4-in. x 20 ft.	Inspect	0.1						
		Replace	0.2						
		Repair		1.0				1,2,3	
0602	Tee and Dual Gate Valve Assemblies, 4-in. (9148-YI, Y2)	Inspect	0.1						
		Replace		0.2					
		Repair		2.0				1, 2	

Section II. MAINTENANCE ALLOCATION CHART

(1) GROUP NUMBER	(2) COMPONENT ASSEMBLY	(3) MAINTENANCE FUNCTION	MAINTENANCE LEVEL UNIT C	UNIT O	DS F	GS H	DEPOT D	(5) TOOLS AND EQUIP.	(6) REMARKS
0603	Suction Hoses, 4-in. x 10 ft. and 4-in. x 20 ft.	Inspect Replace Repair	0.1 0.2	 1.0				 1, 2,3	
07	Tank, Fabric Collapsible, 20,000 Gallon								A
08	Accessory Kit								B
09	Water Tank Chest								A
10	Triple Container								A

Section III. TOOLS AND TEST EQUIPMENT REQUIREMENTS

(1) REFERENCE CODE	(2) MAINEANCE CATEGORY	(3) NOMENCLATURE	(4) NATIONAL STOCK NUMBER (NSN)	(5) TOOL NUMBER
1	0	Tool Kit, General Mechanics	5180-M177-7033	SC 518090-CL-N26
2	0	Shop Equipment Automotive Maintenance, Common No. 1	491001754-0654	SC 4910-95-CL-A74
3*	0	Tool, clamping	51204)0-278-9975	
4*	0	Wrench, Pipe 48-inch	5120-M277-1482	

*Tool in 20K Accessory Kit

Section IV. REMARKS

REFERENCE CODE	REMARKS
A	Refer to applicable Technical Manual.
B	Repair limited to replacement of individual components.

APPENDIX C

COMPONENTS OF END ITEM AND BASIC ISSUE ITEMS LIST

Section I. INTRODUCTION

C.1 SCOPE.

This appendix lists components of end item and basic issue items for the 20K Water Storage and Distribution System to help you inventory items required for safe and efficient operation.

C.2 GENERAL.

The Components of End Item and Basic Issue Items List are divided into the following sections:

a. Section II. Components of End Item. This listing is for informational purposes only, and is not authority to requisition replacements. These items are part of the end item, but are removed and separately packaged for transportation or shipment. As part of the end item, these items must be with the end item whenever it is issued or transferred between property accounts. Illustrations are furnished to assist you in identifying the items.

b. Section III. Basic Issue Items. These are the minimum essential items required to place the 20K Water Storage and Distribution System in operation, to operate it, and to perform emergency repairs. Although shipped separately packaged, BHI must be with the distribution system during operation and whenever it is transferred between property accounts. The illustrations will assist you with hard-to- identify items. This manual is your authority to request/requisition replacement BII, based on TOE/MTOE authorization of the end item.

C.3 EXPLANATION OF COLUMNS.

The following provides an explanation of columns found in the tabular listing:

a. Column (1) - Illustration Number (Illus. Number). This column indicates the number of the illustration in which the item is shown.

b. Column (2) - National Stock Number. Indicates the national stock number assigned to the item and will be used for requisitioning purposes.

c. Column (3) - Description. Indicates the Federal item name and, if required, a minimum description to identify and locate the item. The last line for each item indicates the CAGE (in parentheses) followed by the part number.

d. Column (4) - Unit of Measure (U/M). Indicates the measure used in performing the actual operational/maintenance function. This measure is expressed by a two-character alphabetical abbreviation (e.g., ea., in., pr.).

e. Column (5) - Quantity Required (Qty Rqd). Indicates the quantity of the item authorized to be used with/on the equipment.

Section II. COMPONENTS OF END ITEM - MODEL 20KWSDS

(1) ILLUS NUMBER	(2) NATIONAL STOCK NUMBER	(3) DESCRIPTION CAGE and Part Number	Usable On Code	(4) U/M	(5) QTY
1	4610-01-175-0760	ACCESSORY KIT,20K GALLON SYEM (97403) 13225E9149		EA	1
		CONSISTING OF THE FOLLOWING COMPONENTS:			
	4730-00-935-1613	NIPPLE, QD, MXM, 4 IN. (96906) MS39352-19		EA	1
	4730-01-009-1735	NTPPLE, QD, MXM, 2 IN. (96906) MS39352-9		EA	1
	5120-00-278-9975	CLAMPING TOOL (70847) C001		EA	1
	4730-00-840-0797	COUPLING HALF, QD, MALE, 4 IN. (96906) MS27022-17		EA	1
	4730-00-840-5347	COUPLING HALF, QD, MALE, FLANGED, 4 IN. (96906) MS27023-17		EA	2
	4730-00-840 5348	COUPLING HALF, QD, FEMALE, FLANGED, 4 IN. (96906) MS27027-17		EA	2
	4730-00-649-9100	CAP, QD, DUST CAP, 2 IN. (96906) MS27028-11		EA	3
	4730-00-640-6156	CAP, QD, DUST CAP, 4 IN. (96906) MS27028-17		EA	2
	4730-00-915-5127	PLUG, QD, 2 IN. (96906) MS27029-11		EA	3
	4730-00-640-6188	PLUG, QD, 4 IN. (96906) MS27029-17		EA	2
	4730-00-649-9103	COUPLING, HALF, QD, FEMALE, 2 IN. (96906) MS27024-11		EA	1
	4730-00-088-9286	COUPLING, HALF, QD, FEMALE, 4 IN. (96906) MS27024-17		EA	2
	4730-00-088-9285	COUPLING, HALF, QD, FEMALE, 2 IN. (96906) MS27026- 11		EA	1
	4730-00-649-9118	COUPLING, HALF, QD, FEMALE, 4 IN. (96906) MS27026-17		EA	1
	5330-01-141-1864	GASKET, FLANGE,4 IN. (97403) 13220E1069-1		EA	18
	5330-00-167-6542	GASKET, FLANGE, 2 IN. (97403) 13220E1069-2		EA	6

Section II. COMPONENTS OF END ITEM - MODEL 20KWSDS

(1) ILLUS NUMBER	(2) NATIONAL STOCK NUMBER	(3) DESCRIPTION CAGE and Part Number	Usable On Code	(4) U/M	(5) QTY
	5330-00-899-4509	GASKET, QD, 4 IN. (96906) MS27030-9		EA	8
	5330-00-612-2414	GASKET, QD, 2 IN. (96906) MS27030-6		EA	9
	3835-00-967-9029	GUARD, ROADWAY CROSSING (97403) 13200E4793		EA	2
	4720-01-138-8986	HOSE ASSY, DISCHARGE, 2 IN. X 20 Fr. (97403) 13225E9136-2		EA	4
	4720-01-163-4684	HOSE ASSY, SUCTION, 2 IN. X 20 Fr. (97403) 13225E9135-2		EA	1
	4720-01-163-5089	HOSE ASSY, SUCTION, 4 IN. X 20 Fr. (97403) 13225E91354		EA	1
	4720-01-140-6288	HOSE ASSY, DISCHARGE, 4 IN. X 20 Fr. (97403) 13225E9136-4		EA	2
	4720-01-163-5088	HOSE ASSY, DISCHARGE, 2 IN. X 10 Fr. (97403) 13225E9136-1		EA	1
	4720-01-163-4683	HOSE ASSY, SUCTION, 2 IN. X 10 Fr. (97403) 13225E9135-1		EA	1
	4720-01-163-4685	HOSE ASSY, SUCTION, 4 IN. X 10 Fr. (97403) 13225E9135-3		EA	1
	4720-01-163-4682	HOSE ASSY, DISCHARGE, 4 IN. X 10 Fr. (97403) 13225E9136-3		EA	1
	4730-00-825-9705	NIPPLE, PIPE, FEMALE, 4 IN. X 6 IN. (81346) ASTM-B687		EA	1
	5321-00-732-0558	NUT, PLAIN, HEX (96906) MS51967-8		EA	84
	5365-00-926-5411	RING, SPLIT (9H113) H0143M		EA	5
	5305-00-269-3215	SCREW, CAP (96906) MS90725-65		EA	84
	5340-00-244-7325	SEAL, STRAPPING, 1/2 IN. (70847) C254		BX	1
	5340-00-244-7327	SEAL, STRAPPING, 3/4 IN. (70847) C256		BX	1

Section II. COMPONENTS OF END ITEM - MODEL 20KWSDS

(1) ILLUS NUMBER	(2) NATIONAL STOCK NUMBER	(3) DESCRIPTION CAGE and Part Number	Usable On Code	(4) U/M	(5) QTY
	5340-00-245-9438	STRAPPING, 1/2 IN. (70847) C204		RL	1
	5340-00-245-9440	STRAPPING, 3/4 IN. (70847) C06		RL	1
	8030-00-889-3535	TAPE, ANTISEIZE (81349) MIL-T-27730		EA	3
	4730-00-840-5346	TEE, FLANGED, 4 IN. (97403) 13216E8243		EA	1
	4820-01-159-0439	VALVE, GATE, 4 IN. (97403) 13220E1071		EA	1
	4820-01-167-6550	VALVE, ELBOW, 2 IN. (97403) 13219E0491		EA	1
	5310-00-080-6004	WASHER, FLAT (96906) MS27183-14		EA	168
	5310-00 637-9541	WASHER, LOCK SPRING (96906) MS35338-46		EA	84
	5120-01-NIIN	WRENCH, CHAIN (81348) GGG-W-00651 Type 2 Class B		EA	1
	5120-00-277-1482	WRENCH, PIPE, 48 IN. (81348) GGG-W-00651		EA	1
	4730-01-068-5070	WYE FTING, 2 IN., QD, FXFXM (9H113) 319K-2		EA	1
2	2910-00-066-1235	ADAPTER ASSY, FUEL DRUM (97403) 13211E7541		EA	1
3	7240-00-222-3088	CAN, GAS, MILITARY, 5 GAL. (81349) MIL C-1283		EA	2
4	5430-01-352-1397	CHEST, WATER TANK (97403) 13225E9210		EA	1
5	4320-01-120-7524	CONNECTION KIT, 125GPMPUMP (97403) 13225E9113 CONSISTING OF THE FOLLOWNG COMPONENT:		EA	1
	4720-01-138-8986	HOSE ASSY, DISCHARGE, 2 IN.X 20 Fr. (97403) 13225E9136-2		EA	2

Section II. COMPONENTS OF END ITEM - MODEL 20KWSDS

(1) ILLUS NUMBER	(2) NATIONAL STOCK NUMBER	(3) DESCRIPTION CAGE and Part Number	Usable On Code	(4) U/M	(5) QTY
	4730-01-186-0821	REDUCER, QD,2 IN. X 4 IN. (96906) MS49000- 19		EA	1
		VALVE ASSY, GATE, 2 IN. (97403) 13225E9113-Y2		EA	2
		VALVE ASSY, CHECK, 2 IN. (97403) 13225E9113-Y3		EA	1
	4730-00-222-1844	NIPPLE, PIPE, 2 IN. (96906) MS51846-152		EA	1
	4730-00-649-9100	CAP, QD, 2 IN. (96906) MS27028- 11		EA	1
	4730-00-915-5127	PLUG, QD, 2 IN. (96906) MS27029-11		EA	1
	4730-00-938-7997	COUPLING HALF, QD, MALE, 2 IN. (96906) MS27022- 11		EA	1
	4730-00-079-1132	COUPLING HALF, QD, FEMALE, 2 IN. (96906) MS27020- 11		EA	1
	4730-00-649-9103	COUPLING HALF, QD, FEMALE, 2 IN. (96906) MS27024-11		EA	1
	4720-01-163-4684	HOSE ASSY, SUCTION, 2 IN. X 20 Fr. (97403) 13225E9135-2		EA	2
	4730-01-064-0560	REDUCER, QD, 4 IN. X 2 IN. (96906) MS49000-17		EA	1
6	4610-01-141-8882	CONNECTION KIT, SINGLE TANK (97403)13225E9148 CONSISTING OF THE FOLLOWING COMPONENTS:		EA	1
	4720-01-163-4682	HOSE ASSY, DISCHARGE, 4 IN. X 10 FF. (97403) 13225E9136-3		EA	1
	4720-01-140-6288	HOSE ASSY, DISCHARGE, 4 IN. X 20 Fr. (97403) 13225E9136-4		EA	3
		TEE AND DUAL GATE VALVE ASSY, 4 IN. (97403) 13225E9148-Y2		EA	1

Section II. COMPONENTS OF END ITEM - MODEL 20KWSDS

(1) ILLUS NUMBER	(2) NATIONAL STOCK NUMBER	(3) DESCRIPTION CAGE and Part Number	Usable On Code	(4) U/M	(5) QTY
	4720-01-163-5089	HOSE ASSY, SUCTION, 4 IN. X 20 Fr. (94703) 13225E9135-4		EA	1
	4720-01-163-4685	HOSE ASSY, SUCTION, 4IN. X 10 Fr. (97403) 1322SE9135-3		EA	1
		TEE AND DUAL GATE VALVE ASSY, 4 IN. (97403) 13225E9148-Y1		EA	1
7	4610-01-123-7705	CONNECTION KIT, HOSE NOZZLE (97403) 13225E9117 CONSISTING OF THE FOLLOWING COMPONENTS:		EA	4
		NOZZLE ASSY, DISTRIBUTION, 1-1/2 IN. QD (97403) 13225E9117-Y		EA	1
	4720-01-174-8173	HOSE ASSY, DISCHARGE, 1-1/21IN. X 25 Fr. (97403) 13225E9136-11		EA	1
	4730-00-951-3295	REDUCER, QD,2 IN. X 1-1/2 IN. (96906) MS490005		EA	1
	4720-01-138-8986	HOSE ASSY, DISCHARGE, 2 IN. X 20 Fr. (97403) 13225E9136-2		EA	1
		VALVE ASSY,2 IN. QD (97403) 13225E9113-Y2		EA	1
	4730-01-064-0560	REDUCER, QD, 4 IN. X 2 IN. (96906) MS49000117		EA	1
		TEE ASSY, QD,4 IN. (97403) 13225E9117-Y1		EA	1
	4720-01-140-6288	HOSE ASSY, DISCHARGE (97403) 13225E9136-4		EA	2
	4936-01-106-8676	STAND ASSY, FUEL (97403) 13225E9140		EA	1
8	4610-01-140-6776	CONNECTION KIT, HOSE, 2-INCH (97403) 13225E9132 CONSISTING OF THE FOLLOWING COMPONENTS:		EA	1
	4720-01-138-8986	HOSE ASSY, DISCHARGE, 2 IN. X 20 FF. (97403) 13225E9136-2		EA	1

Section II. COMPONENTS OF END ITEM - MODEL 20KWSDS

(1) ILLUS NUMBER	(2) NATIONAL STOCK NUMBER	(3) DESCRIPTION CAGE and Part Number	Usable On Code	(4) U/M	(5) QTY
		VALVE ASSY, 2 IN. (97403) 13225E9113-Y2		EA	1
	4730-01-064-0560	REDUCER, QD, 4 IN. X 2 IN. (96906) MS49000-17		EA	1
		TEE ASSY,4 IN. (97403) 13225E9117-Y1		EA	1
	4720-01-140-6288	HOSE ASSY, DISCHARGE, 4 IN. X 20 Fr. (97403) 13225E9136-4		EA	2
	4936-01-106-8676	STAND ASSY, FUEL (97403) 13225E9140		EA	1
9	5411-01-132-1269	SHELTER, EQUIPMENT, MULTIPURPOSE (TRICON) (81349) MIL-S-28633		EA	1
10	4610-00-269-0163	HYPOCHLORINATION UNIT W/BYPASS (81349) MIL-H-12732		EA	1
11	4320-01-156-3873	PUMP, 125GPMAT 50'TDH (81349) MIL-P-52109		EA	1
12	7240-00-177-6154	SPOUT, CAN, FLEXIBLE (81349) ML-S-1285		EA	1
13	5430-01-372-6902	TANK, FABRIC COLLAPSIBLE (81349) MIL-T-53029		EA	1

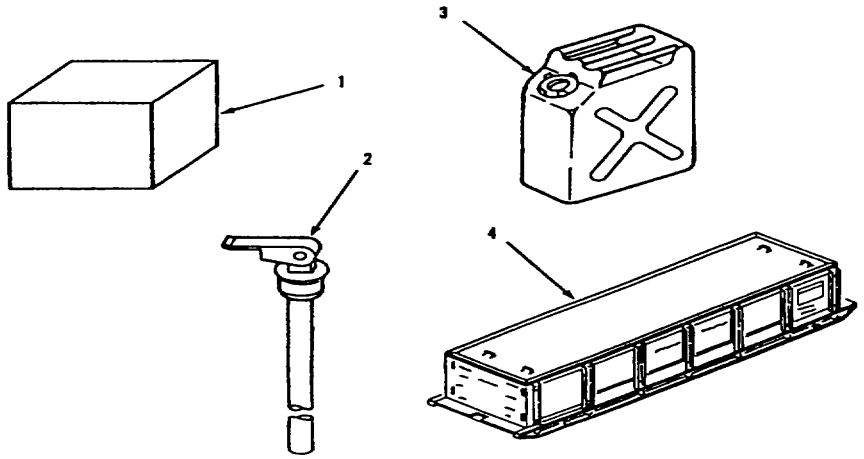

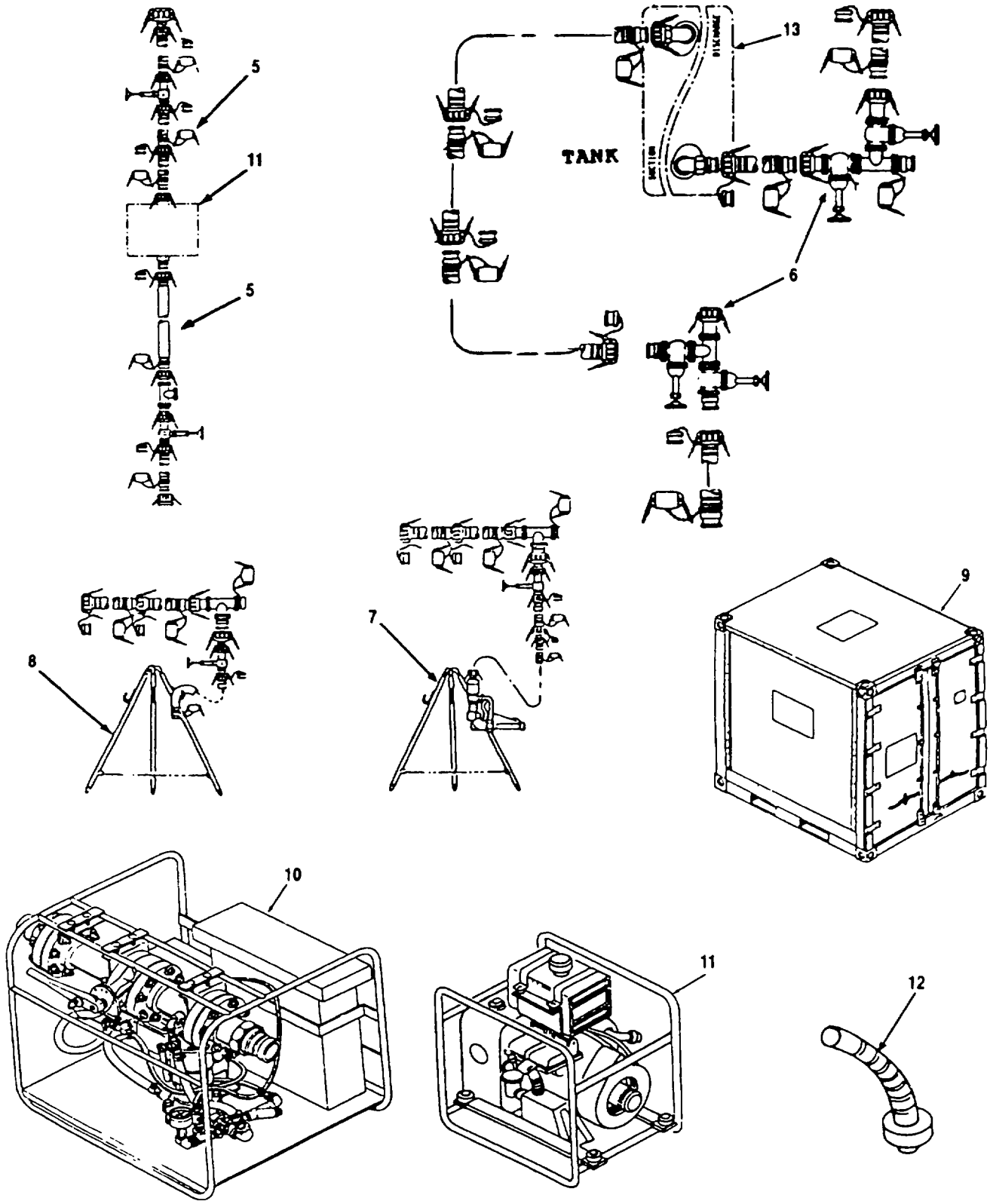
5
11
5
13
TANK
6
7
8
9
10
11
12

Section III. BASIC ISSUE ITEMS

(1) ILLUS. NUMBER	(2) NATIONAL STOCK NUMBER	(3) DESCRIPTION CAGE and Part Number	Usable on Code	(4) U/M	(5) QTY RQD
1		TECHNICAL MANUAL, OPERATOR'S AND UNIT MAINTENANCE MANUAL FOR 20K WATER STORAGE AND DISTRIBUTION SYSTEM, TM 10-4610-237-12		EA	1
		TECHNICAL MANUALS FOR: 20K WATER TANK, 125 GPM PUMP, HYPOCHLORINATION UNIT, TRIPLE CONTAINER AND WATER TANK CHEST.		EA	1

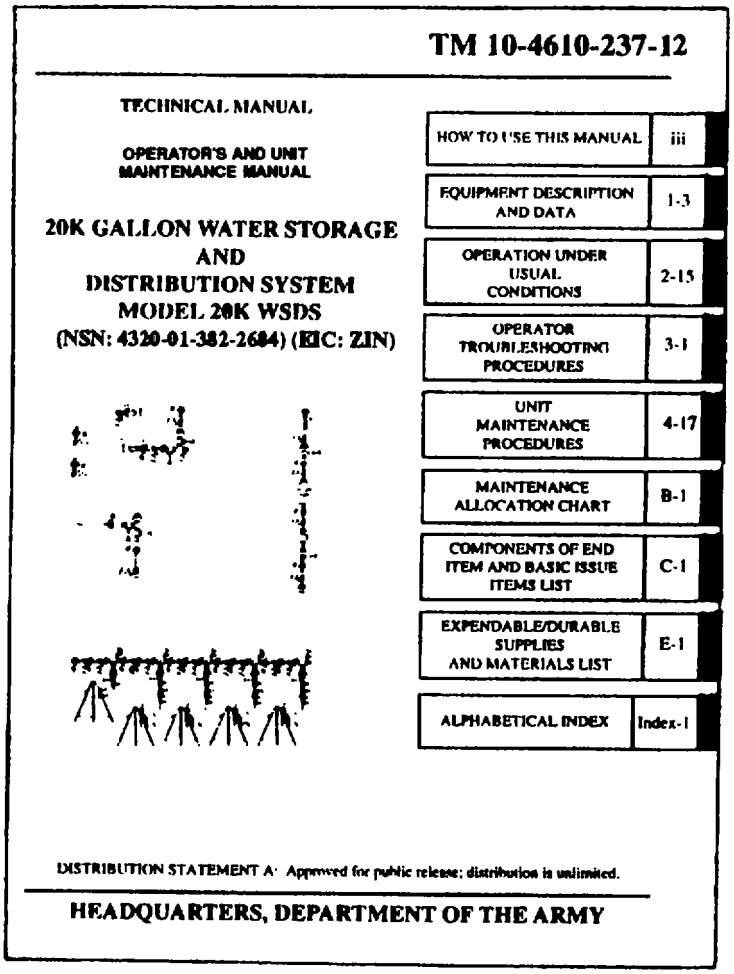

TM 10-4610-237-12

TECHNICAL MANUAL

OPERATOR'S AND UNIT MAINTENANCE MANUAL

20K GALLON WATER STORAGE AND DISTRIBUTION SYSTEM MODEL 20K WSDS (NSN: 4320-01-382-2684) (EIC: ZIN)

HOW TO USE THIS MANUAL	iii
EQUIPMENT DESCRIPTION AND DATA	1-3
OPERATION UNDER USUAL CONDITIONS	2-15
OPERATOR TROUBLESHOOTING PROCEDURES	3-1
UNIT MAINTENANCE PROCEDURES	4-17
MAINTENANCE ALLOCATION CHART	B-1
COMPONENTS OF END ITEM AND BASIC ISSUE ITEMS LIST	C-1
EXPENDABLE/DURABLE SUPPLIES AND MATERIALS LIST	E-1
ALPHABETICAL INDEX	Index-1

DISTRIBUTION STATEMENT A: Approved for public release; distribution is unlimited.

HEADQUARTERS, DEPARTMENT OF THE ARMY

APPENDIX D

ADDITIONAL AUTHORIZATION LIST

NOT APPLICABLE

APPENDIX E

EXPENDABLEIDURABLE SUPPLIES AND MATERIALS LIST

Section I. INTRODUCTION

E. 1 SCOPE.

This appendix lists expendable/durable supplies and materials you will need to operate and maintain the 20K Water Storage and Distribution System. This listing is for informational purposes only and is not authority to requisition the listed items. These items are authorized to you by CTA 50970, Expendable/Durable Items (except Medical, Class V, Repair Parts, and Heraldic Items) or CTA 8-100, Army Medical Department Expendable/Durable Items.

E.2 EXPLANATION OF COL.UMNS.

a. Column 1 - Item Number. This number is assigned to the entry in the listing and is referenced in the task Initial Setup instructions to identify the material; e.g., "Drycleaning Solvent (App. E)."

b. Column 2 - Category. This column identifies the lowest category of maintenance that requires the listed item:

C - Operator/Crew
0 - Unit Maintenance
F - Direct Support Maintenance
G - General Support Maintenance

c. Column 3 - National Stock Number. This is the national stock number assigned to the item; use it to request or requisition the items.

d. Column 4 - Description. Indicates the federal item name and, if required, a description to identify the item. The last line for each item indicates the part number followed by the Commercial And Government Entity (CAGE) Code for Manufacturer in parentheses, if applicable.

e. Column 5 - Unit of Measure (U/M). Indicates the measure used in performing the actual maintenance function. This measure is expressed by a two character alphabetical abbreviation (e.g., ea., in., pr.). If the unit of measure differs from the rest of the issue, requisition the lowest unit of issue that will satisfy your requirements.

Section II. EXPENDABLE/DURABLE SUPPLIES AND MATERIALS LIST

ITEM NUMBER	CATEGORY	NATIONAL STOCK NUMBER	DESCRIPTION	U/M
1	O	7930-W985-6911	Detergent, General Purpose (81349) MILD-16791	GL
2	O	7920-00205-1711	Rags, Wiping (58536) A-A-531	LB
3	O	8030-00-889-3535	Tape, Anti-Seize (80244) MWT-27730 SZ2	RL
4	O	8030-W251-5048	Corrosion Preventive Compound (81349) MIL-C-10382	GL

APPENDIX F

LUBRICATION INSTRUCTIONS

NOT APPLICABLE

APPENDIX G

LIST OF MANUFACTURED ITEMS

Section I. INTRODUCTION

G.1 SCOPE. This appendix includes complete instructions for making items authorized to be manufactured or fabricated at unit maintenance. A part number index in alphanumeric order is provided for cross-referencing the part number of the item to be manufactured to the figure which covers fabrication criteria. All bulk materials needed for manufacture of an item are listed by part number or specification number in a tabular list on the illustration.

G.2 MANUFACTURED ITEM PART NUMBER INDEX.

Part No. RR-C-271A, Sash Chain (All quick disconnect cap and plug attaching chains.) ..... Figure 1

Part No. RR-C-271A, Sash Chain (All stand assemblies clevis and pivot leg attaching chains.) ..... Figure 2

G.3 MANUFACTURFID ITEM ILLUSTRATIONS. See Figures 1 and 2.

Section II. MANUFACTURED ITEMS

PROCEDURE: Cut sash chain to 19 links or 45 links per Figure 1 or 2, as applicable.

MATERIALS	
DESCRIPTION	NSN
SASH CHAIN, RR-C-27 1-A, TYPE II, CLASS 3, LINK SIZE 35, BRONZE	4010-00228-9933

Figure 1. Attaching Chains, Quick Disconnect Cap and Plug.

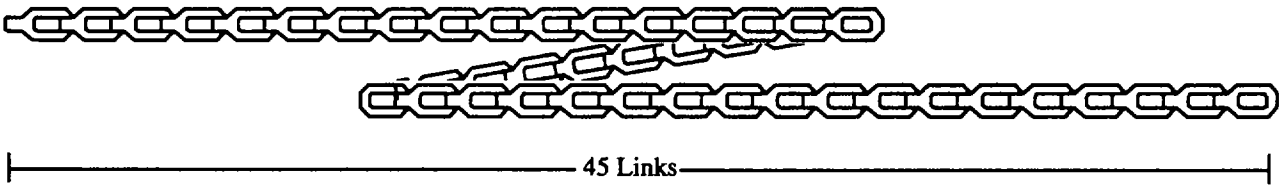

Figure 2. Attaching Chains, Stand Assemblies Clevis and Pivot Leg

APPENDIX H

TORQUE LIMITS

FASTENER	TYPE	MIN TENSILE STRNGN	MATERIAL	BODY SIZE OR OUTSIDE DIAMETER OF FASTENER														
				7/8	1	1 1/8	1 1/4	1 3/8	1 1/2	1 5/8	1 3/4	1 7/8	2	2 1/4	2 1/2	2 3/4	3	
	SAE 0-1-2	74,000 PSI	LOW CARBON STEEL	206	310	480	675	900	1100	1470	1900	2360	2750	3450	4400	7350	9500	
	SAE 3	100,000 PSI	MEDIUM CARBON STEEL	372	561	872	1211	1624	1943	2660	3463	4495	5427	7226	8049	13450	17548	
	SAE 5	120,000 PSI	MEDIUM CARBON HEAT TREAT STEEL	382	587	794	1105	1500	1775	2425	3150	4200	4550	6550	7175	13000	16000	
	SAE 6	133,000 PSI	MEDIUM CARBON STEEL QUENCHED TEMPERED	550	825	1304	1815	2434	2915	3985	5189	6960	7491	10825	14983	20151	26286	
	SAE 7	133,000 PSI	MEDIUM CARBON ALLOY STEEL	570	840	1325	1825	2500	3000	4000	5300	7000	7500	11000	15500	21000	27000	
	SAE 8	150,000 PSI	MEDIUM CARBON ALLOY STEEL	800	900	1430	1975	2650	3200	4400	5650	7600	8200	12000	17000	23000	29000	
	SOCKET HEAD CAP SCREW	160,000 PSI	HIGH CARBON CASE HARDENED STEEL	640	970	1520	2130	2850	3450	4700	6100	8200	8600	13000	18000	24000	31000	
	SOCKET SET SCREW	212,000 PSI	HIGH CARBON CASE HARDENED STEEL															
	MACHINE SCREW YELLOW BRASS	60,000 PSI	COPPER (CU) 63% ZINC (ZU) 37%	180	215	325	400		585									
	SILICONE BRONZE TYPE "B"	70,000 PSI	COPPER (CU) 96% ZINC (ZNI) 2% SILICON (SI) 2%	180	250	365	450		655									

There is no difference in the above chart between the torque figures for fine or coarse threads. The torque figures for a finely-threaded fastener as compared to a coarsely-threaded fastener of the same diameter may be slightly higher but hardly worth mentioning

APPENDIX H

TORQUE LIMITS - Continued.

FASTENER	TYPE	MIN TENSILE STRNGN	MATERIAL	BODY SIZE OR OUTSIDE DIAMETER OF FASTENER														
				2	3	4	5	6	8	10	1/4	1/10	1/8	1/16	1/2	5/16	3/8	3/4
	SAE 0-1-2	74 000 PSI	LOW CARBON STEEL								6	12	20	32	47	69	96	*55
	SAE 3	100 000 PSI	MEDIUM CARBON STEEL								8	17	30	47	69	103	145	234
	SAE 5	120,000 PSI	MEDIUM CARBON HEAT TREAT STEEL								10	19	33	54	78	114	154	257
	SAE 6	133 000 PSI	MEDIUM CARBON STEEL QUENCHED TEMPERED								12 5	24	43	69	106	150	209	350
	SAE 7	133 000 PSI	MEDIUM CARBON ALLOY STEEL								13	25	44	71	110	154	215	360
	SAE 8	150,000 PSI	MEDIUM CARBON ALLOY STEEL								14	29	47	78	119	169	230	380
	SOCKET HEAD CAP SCREW	180 000 PSI	HIGH CARBON CASE HARDENED STEEL	TORQUE VALUES All figures are foot-pounds except those marked with an asterisk (*), which are inch-pounds							16	33	54	84	125	180	250	400
	SOCKET SET SCREW	212,000 PSI	HIGH CARBON CASE HARDENED STEEL					9*	16*	30*	70*	140*	18	29	43	63	100	146
	MACHINE SCREW YELLOW BRASS	60 000 PSI	COPPER (CU) 63% ZINC (ZU) 37%	2*	3 3*	4 4*	6 4*	8*	16*	20*	65*	110*	17	27	37	49	78	104
	SILICONE BRONZE TYPE "B"	70 000 PSI	COPPER (CU) 96% ZINC (ZNI) 2% SILICON (SI) 2%	2.3*	3.7*	4 9*	7 2*	10*	19*	22*	70*	125*	20	30	41	53	88	117

There is no difference in the above chart between the torque figures for fine or coarse threads. The torque figures for a finely-threaded fastener as compared to a coarsely-threaded fastener of the same diameter may be slightly higher but hardly worth mentioning

APPENDIX I

MANDATORY REPLACEMENT PARTS

ITEM NO.	NOMENCLATURE	PART NUMBER
1	Gasket (1/2-inch)	MS27030-5
2*	Gasket (2-inch)	MS27030-6
3*	Gasket (4-inch)	MS27030-9
4	Packing	231AW-0219 2P
5	Disc	231A--0909 2D
6	Disc	231A--0913 2D
7	Seal	C254
8	Strapping	C204
9*	Seal	C256
10*	Strapping	C206
11	Packing	65103-J-992
12*	Gasket, Flange (4-inch)	13220E1069-1
13	Lockwasher	MS35338-46
14	Cotter Pin	MS24665-134
15	Packing Ring	235RF-05082P
16	Gasket, Flange (gate valve)	235RF-05092G
17*	Lockwasher	235RF-02212W

***** Located in accessory kit

ALPHABETICAL INDEX

Paragraph	Page
125 GPM Pump Connection Kit Maintenance	4-37
2-Inch Hose Connection Kit Maintenance	4-37
-A-	
Administrative Storage	4-54
Assembly and Preparation for Use	2-15
-B -	
-C-	
Check Valve Assembly (2-Inch) Repair	4-37
Checking Unpacked Equipment	4-2
Common Tools and Equipment	4-2
Component Replacement	3-15
Corrosion Prevention and Control (CPC)	1-1
- D -	
Decals and Instruction Plates	2-29
Decontamination Procedures	2-44
Destruction of Army Materiel to Prevent Enemy Use	1-2
Discharge and Suction Hose Assembly Repair	4-23
Distribution Nozzle Assembly (1 1/2-Inch) Repair	4-18
Distribution Nozzle (Description and Use)	2-3
- E -	
Emergency Procedures	2-43
Equipment Characteristics, Capabilities and Features	1-3
Equipment Data	1-6
-F-	
- G -	
Gate Valve (4-Inch) Repair	4-46
Gate Valve Assembly (2-Inch) Repair	4-28
Gate Valves (Description and Use)	2-2
General (PMCS)	2-4
General (Unit Maintenance Procedures)	4-17
Glossary	1-2
-H -	
Hose Nozzle Kit Maintenance	4-17

ALPHABETICAL INDEX

Paragraph	Page
- I -	
Initial Adjustment	2-26
Introduction (Operator Troubleshooting)	3-1
Introduction (Unit Troubleshooting)	4-5
-J-	
-K-	
- L -	
Leakage Definitions for Operator PMCS	2-5
List of Abbreviations	1-2
Location and Description of Major Components	1-4
Lubrication Instructions (Operator)	3-1
Lubrication Instructions (Unit)	4-1
- M -	
Maintenance Forms, Records and Reports	1-1
Malfunction Index and Logic Trees (Operator)	3-2
Malfunction Index and Logic Trees (Unit)	4-6
- N -	
Nomenclature Cross Reference List	1-2
Nozzle Stand Assembly Repair	4-35
- O -	
Operating Auxiliary Equipment	2-31
Operating Procedures	2-26
Operation in Dusty or Sandy Areas	2-42
Operation in Extreme Cold (Below 32'F (0°C))	2-40
Operation in Extreme Heat	2-42
Operation in Salt Water Areas	2-42
Operator Preventive Maintenance Checks and Services	2-7
- P -	
Personal Safety	4-17
PMCS Procedures (Operator)	2-4
Preparation for Movement	2-31
Proper Equipment	4-17

ALPHABETICAL INDEX

Paragraph	Page
- Q -	
Quick Disconnect Coupling Repair	3-17
-R-	
Repair Parts	4-2
Reporting Equipment Improvement Recommendations (EIR)	1-2
- S -	
Scope	1-1
Security Procedures	4-54
Shelter Requirements	4-2
Single Tank Connection Kit Maintenance	4-41
Siting	4-2
Special Tools, TMDE and Support Equipment	4-2
System Technical Principles of Operation	1-8
- T -	
Tee and Dual Gate Valve Assembly (9148-Y1) Repair	4-41
Tee and Dual Gate Valve Assembly (9148-Y2) Repair	4-49
Tee Assembly (9117-Yl) Repair	4-31
Troubleshooting (Unit)	4-5
Troubleshooting Table (Operator)	3-2
-U-	
-V-	
-W-	
-X-	
-Y-	
-Z-	

By Order of the Secretary of the Army:

GORDON R. SULLIVAN
General, United States Army
Chief of Staff

Official:

MILTON H. HAMILTON
Administrative Assistant to the
Secretary of the Army
07384

DISTRIBUTION:

To be distributed in accordance with DA Form 12-25-E, block no. 6238, requirements for TM 10-4610-237-12.

RECOMMENDED CHANGES TO EQUIPMENT TECHNICAL PUBLICATIONS

THEN...JOT DOWN THE DOPE ABOUT IT ON THIS FORM. CAREFULLY TEAR IT OUT, FOLD IT AND DROP IT IN THE MAIL.

SOMETHING WRONG WITH PUBLICATION

FROM: (PRINT YOUR UNIT'S COMPLETE ADDRESS)

DATE SENT

PUBLICATION NUMBER	PUBLICATION DATE	PUBLICATION TITLE

BE EXACT PIN-POINT WHERE IT IS

PAGE NO.	PARA-GRAPH	FIGURE NO.	TABLE NO.

IN THIS SPACE, TELL WHAT IS WRONG AND WHAT SHOULD BE DONE ABOUT IT.

PRINTED NAME, GRADE OR TITLE AND TELEPHONE NUMBER	SIGN HERE

DA FORM 1 JUL 79 2028-2

PREVIOUS EDITIONS ARE OBSOLETE.

P.S.--IF YOUR OUTFIT WANTS TO KNOW ABOUT YOUR RECOMMENDATION MAKE A CARBON COPY OF THIS AND GIVE IT TO YOUR HEADQUARTERS.

The Metric System and Equivalents

Linear Measure

1 centimeter = 10 millimeters = .39 inch
1 decimeter = 10 centimeters = 3.94 inches
1 meter = 10 decimeters = 39.37 inches
1 dekameter = 10 meters = 32.8 feet
1 hectometer = 10 dekameters = 328.08 feet
1 kilometer = 10 hectometers = 3,280.8 feet

Weights

1 centigram = 10 milligrams = .15 grain
1 decigram = 10 centigrams = 1.54 grains
1 gram = 10 decigram = .035 ounce
1 decagram = 10 grams = .35 ounce
acres
1 hectogram = 10 decagrams = 3.52 ounces
1 kilogram = 10 hectograms = 2.2 pounds
1 quintal = 100 kilograms = 220.46 pounds
1 metric ton = 10 quintals = 1.1 short tons

Liquid Measure

1 centiliter = 10 milliters = .34 fl. ounce
1 deciliter = 10 centiliters = 3.38 fl. ounces
1 liter = 10 deciliters = 33.81 fl. ounces
1 dekaliter = 10 liters = 2.64 gallons
1 hectoliter = 10 dekaliters = 26.42 gallons
1 kiloliter = 10 hectoliters = 264.18 gallons

Square Measure

1 sq. centimeter = 100 sq. millimeters = .155 sq. inch
1 sq. decimeter = 100 sq. centimeters = 15.5 sq. inches
1 sq. meter (centare) = 100 sq. decimeters = 10.76 sq. feet
1 sq. dekameter (are) = 100 sq. meters = 1,076.4 sq. feet
1 sq. hectometer (hectare) = 100 sq. dekameters = 2.47

1 sq. kilometer = 100 sq. hectometers = .386 sq. mile

Cubic Measure

1 cu. centimeter = 1000 cu. millimeters = .06 cu. inch
1 cu. decimeter = 1000 cu. centimeters = 61.02 cu. inches
1 cu. meter = 1000 cu. decimeters = 35.31 cu. feet

Approximate Conversion Factors

To change	*To*	*Multiply by*	*To change*	*To*	*Multiply by*
inches	centimeters	2.540	ounce-inches	Newton-meters	.007062
feet	meters	.305	centimeters	inches	.394
yards	meters	.914	meters	feet	3.280
miles	kilometers	1.609	meters	yards	1.094
square inches	square centimeters	6.451	kilometers	miles	.621
square feet	square meters	.093	square centimeters	square inches	.155
square yards	square meters	.836	square meters	square feet	10.764
square miles	square kilometers	2.590	square meters	square yards	1.196
acres	square hectometers	.405	square kilometers	square miles	.386
cubic feet	cubic meters	.028	square hectometers	acres	2.471
cubic yards	cubic meters	.765	cubic meters	cubic feet	35.315
fluid ounces	milliliters	29,573	cubic meters	cubic yards	1.308
pints	liters	.473	milliliters	fluid ounces	.034
quarts	liters	.946	liters	pints	2.113
gallons	liters	3.785	liters	quarts	1.057
ounces	grams	28.349	liters	gallons	.264
pounds	kilograms	.454	grams	ounces	.035
short tons	metric tons	.907	kilograms	pounds	2.205
pound-feet	Newton-meters	1.356	metric tons	short tons	1.102
pound-inches	Newton-meters	.11296			

Temperature (Exact)

°F	Fahrenheit temperature	5/9 (after subtracting 32)	Celsius temperature	°C

PIN: 073155-001