TM 10-4610-241-24P
TO 4OW4-13-44

UNIT, DIRECT SUPPORT, AND GENERAL SUPPORT MAINTENANCE REPAIR PARTS AND SPECIAL TOOLS LIST

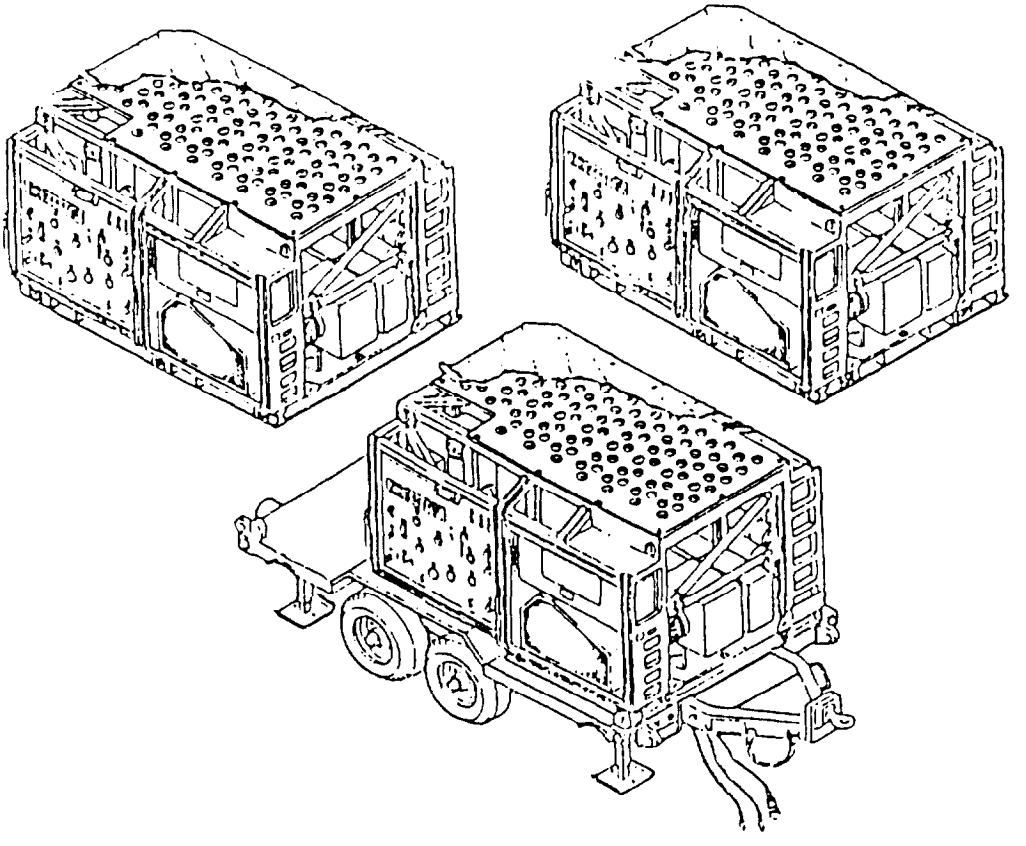

WATER PURIFICATION UNIT, REVERSE OSMOSIS, 600 GPH

TRAILER MOUNTED, FLATBED CARGO, 5 TON 4 WHEEL TANDEM
MODEL WPES-10 (ARMY)(NSN 4610-01-341-6289)
MODEL H-9518-1 (ARMY) (NSN 4610-01-420-7547)
AND
SKID MOUNTED
MODEL WPES-20 (AIR FORCE) (NSN 4610-01-341-6288)
MODEL H-9518-2 (AIR FORCE) (NSN 4610-01-420-7546)
MODEL WPES-30 (NAVY) (NSN 4610-01-341-6287)
MODEL H-9518-3 (NAVY) (NSN 4610-01-420-7548)

DISTIBUTION STATEMENT A: Approved for public release; Distribution is unlimited.

HEADQUARTERS, DEPARTMENT OF THE ARMY
31 MARCH 1993

CHANGE

NO. 2

HEADQUARTERS
DEPARTMENTS OF THE ARMY
AND AIR FORCE
WASHINGTON, D.C., 26 December 1997

Unit, Direct Support and General Support Maintenance
Repair Parts and Special Tools List

WATER PURIFICATION UNIT, REVERSE OSMOSIS 600 GPII TRAILER MOUNTED, FLATBED CARGO, 5 TON 4 WHEEL TANDEM

MODEL WPES-10 (ARMY) (NSN 4610-01-341-6289)
MODEL H-9518-1 (ARMY) (NSN 4610-01-420-7547)

AND

SKID MOUNTED

MODEL WPES-20 (AIR FORCE) (NSN 4610-01-341-6288)
MODEL H-9518-2 (AIR FORCE) (NSN 4610-01-420-7546)
MODEL WPES-30 (NAVY) (NSN 4610-01-341-6287)
MODEL H-9518-3 (NAVY) (NSN 4610-01-420-7548)

Approved for public release; distribution is unlimited.

TM 10-4610-241-24P, 31 March 1993, is changed as follows:

1. Remove and insert pages as indicated below. New or changed text material is indicated by a vertical bar in the margin. An illustration change is indicated by a miniature pointing hand. "Title was change as above"

Remove pages	Insert pages
i thru iv	i thru iv
1 and 2	1 and 2
5 and 6	5 and 6
7 and (8 blank)	7 and(8 blank)
1-1 and Figure 2	1-1 and Figure 2
	(blank) and Figure 22A
	22A-1 and 22A-2
27-1 and Figure 28	27-1 and Figure 28
29-1 and Figure 30	29-1 and Figure 30
30-1 and Figure 31	30-1 and Figure 31
33-1 and Figure 34	33-1 and Figure 34
Figure 35	Figure 35 (sheets 1 and 2)
35-1 and Figure 36 (sheet 1)	35-1 and 35-2
	(blank) and Figure 36 (sheet 1 of 3)
Figure 38 (sheets 1 and 2)	Figure 38(sheets 1 and 2)
38-1 and 38-2	38-1 and 38-2
40-1 and 40-2	40-1 and 40-2
44-1 and Figure 45	44-1 and Figure 45
45-1 and 45-2	45-1 and 45-2
47-1 and Figure 48	47-1 and Figure 48
48-1 and Figure 49	48-1 and Figure 49
49-1 and Figure 50	49-1 and Figure 50
58-1 and Figure 59	58-1 and Figure 59
59-1 and Figure 60	59-1 and Figure 60
70-1 and Figure 71	70-1 and Figure 71

Remove pages	Insert pages
71-1 and Figure 72	71-1 and (blank)
	Figure 71A (sheets 1 and 2)
	71A-1 and 71A-2
	(blank) and Figure 72
72-1 and Figure 73	72-1 and Figure 72A
	72A-1 and Figure 73
73-1 and (blank)	73-1 and (blank)
Figure 74 (sheets 1 and 2)	Figure 74 (sheets 1 and 2)
74-1 and Figure 75	74-1 and (blank)
	Figure 74A (sheets 1 and 2)
	74A-1 and 74A-2
	(blank) and Figure 75
75-1 and Figure 76	75-1 and Figure 76
76-1 and Figure 77	76-1 and Figure 77
77-1 and 77-2	77-1 and 77-2
(blank) and Figure 78	(blank) and Figure 78
78-1 and 78-2	78-1 and 78-2
	Figure 78A (sheets 1 and 2)
	78A-1 and 78A-2
(blank) and Figure 79	78A-3 and Figure 79
79-1 and Figure 80	79-1 and (blank)
	Figure 80 (sheets 1 and 2)
80-1 and Figure 81	80-1 and (blank)
	Figure 81 (sheets 1 and 2)
81-1 and Figure 82	81-1 and Figure 82 (sheet 1)
	Figure 82 (sheets 2 and 3)
82-1 and (blank)	82-1 and 82-2
Figure 83 (sheets 1 thru 4)	Figure 83 (sheets 1 thru 6)
83-1 and 83-2	83-1 thru 83-5 and (blank)
(blank) and Figure 84	Figure 84 (sheets 1 and 2)
84-1 and (blank)	84-1 and (blank)
90-1 and Figure 92	90-1 and Figure 92
91-1 and (blank)	91-1 and (blank)
92-1 and 92-2	92-1 and 92-2
93-1 and 93-2	93-1 and 93-2
94-1 thru 94-8	94-1 thru 94-8
97-1 and 97-2	97-1 and (blank)
100-1 and Figure 101	100-1 and Figure 101
103-1 and 103-2	103-1 and 103-2
104-1 and Figure 105	104-1 and Figure 105
106-1 and (blank)	106-1 and (blank)
107-1 and 107-2	107-1 and 107-2
107-3 and Figure 108	(blank) and Figure 108
108-1 and Figure 109	108-1 and Figure 109
109-1 and Figure 110	109-1 and Figure 110
110-1 and Figure 111	110-1 and Figure 111
111-1 and Figure 112	111-1 and Figure 112
112-1 and Figure 113	112-1 and Figure 113
113-1 and Figure 114	113-1 and Figure 114
114-1 and Figure 115 (sheet 1)	114-1 and Figure 115 (sheet 1)
115-1 and 115-2	115-1 and 115-2
116-1 and Figure 117	116-1 and Figure 117
117-1 and 117-2	117-1 and 117-2
118-1 and Figure 119	118-1 and Figure 119

Remove pages	Insert pages
119-1 and (blank)	119-1 and (blank)
120-1 and Figure 121	120-1 and Figure 121
121 and (blank)	121 and (blank)
122-1 and 122-2	122-1 and 122-2
(blank) and Figure 123	Figure 123 (2 sheets)
123-1 and 123-2	123-1 and 123-2
123-3 and Figure 124	123-3 and Figure 124
124-1 and Figure 125	124-1 and Figure 125
125-1 and 125-2	125-1 and (blank)
(blank) and Figure 126 (sheet 1)	Figure 126 (Sheets 1 and 2)
Figure 126 (sheet 2 and 3)	Figure 126 (3 and 4)
126-1 and 126-2	126-1 and 126-2
126-3 and (blank)	126-3 and (blank)
Bulk-1 and Bulk-2	Bulk-1 and Bulk-2
Bulk-3 and Figure 127	Bulk-3 and Figure 127
127-1 and (blank)	127-1 and (blank)
I-1 thru I-125	I-1 thru I-120
cover	cover

2. Retain this sheet in front of manual for reference purposes.

By Order of the Secretaries of the Amy and Air Force:

DENNIS J. REIMER
General, United States Army
Chief of Staff

MERRIL A. McPEAK
General, USAF
Chief of Staff

Official:

JOEL B. HUDSON
Administrative Assistant to the
Secretary of the Army
04287

Official:

RONALD W. YATES
General, United States Air force
Commander, Air Force Materiel Command

Distribution: To be distributed in accordance with the initial distribution number (IDN) 256041, requirements for TM 10-4610-241-24P.

CHANGE

NO. 1

HEADQUARTERS DEPARTMENTS OF
THE ARMY AND THE AIR FORCE
WASHINGTON, D.C., 30 MARCH 1995

Unit, Direct Support and General Support Maintenance
Repair Parts and Special Tools List

WATER PURIFICATION UNIT,
REVERSE OSMOSIS, 600-GPH
TRAILER-MOUNTED, FLATBED CARGO
STONY 4-WHEEL TANDEM
MODEL WPES-10 (ARMY)
(NSN 4610-01-341-6289)
AND
SKID MOUNTED
MODEL WPES-20 (AIR FORCE)
(NSN 4610-01-341-6288)
MODEL WPES-30 (NAVY)
(NSN 4610-01-341-6287)

DISTRIBUTION STATEMENT A: Approved for public release; distribution is unlimited

TM 10-4610-241-24P/T.O. 40W413-44, 31 March 1993, is changed as follows:

1. Cover and i page should be changed to read 'Headquarters, Departments of the Army and the Air Force."

2. Remove and insert pages as indicated below. New or changed text material is indicated by an asterisk in the margin. An illustration change is indicated by a miniature pointing hand.

Remove pages	Insert pages
126-1 and 126-2	126-1 and 126-2

3. Retain this sheet in front of manual for reference purposes.

By Order of the Secretaries of the Army and Air Force:

GORDON R. SULLIVAN
General, United States Army
Chief of Staff

Official:

JOEL B. HUDSON
Acting Administrative Assistant to the
Secretary of the Army
00129

RONALD R. FOGELMAN
General, USAF
Chief of Staff

RONALD W. YATES
General, USAF
Commander, Air Force Materiel Command

DISTRIBUTION:
To be distributed in accordance with DA Form 12-25-E, block no. 6041, requirements for TM 10-4610-241-24P.

TECHNICAL MANUAL

NO. 10-4610-241-24P

HEADQUARTERS
DEPARTMENTS OF THE ARMY
WASHINGTON D.C., 31 March 1993

TECHNICAL MANUAL

Unit, Direct Support and General Support Maintenance
Repair Parts and Special Tools List

WATER PURIFICATION UNIT, REVERSE OSMOSIS, 600-GPH
TRAILER MOUNTED, FLATBED CARGO,
5 TON 4 WHEEL TANDEM ROWPU
MODEL WPES-10 (ARMY) (NSN 4610-01-341-6289)
MODEL H-9518-1 (ARMY) (NSN 4610-01-420-7547)
AND
SKID MOUNTED
MODEL WPES-20 (AIR FORCE) (NSN 4610-01-341-6288)
MODEL H-9518-2 (AIR FORCE) (NSN 4610-01-420-7546)
MODEL WPES-30 (NAVY) (NSN 4610-01-341-6287)
MODEL H-9518-3 (NAVY) (NSN 4610-01-420-7548)

Current as of: 15 September 1997

REPORTING ERRORS AND RECOMMENDING IMPROVEMENTS

You can help improve this manual. If you find any mistakes or if you know of a way to improve the procedures, please let us know. Mail your letter, DA Form 2028 (Recommended Changes to Publications and Blank Forms) or DA Form 2028-2 located in the back of this manual directly to Commander, U.S. Tank-Automotive and Armaments Command, Attn:AMSTA-AC-NML, Rock Island, IL 61299-7630. You may also submit your recommended changes buy E-mail directly to amsta-ac-nml@ria-emh2.army.mil, or fax number 309/782-0726/DSN 793-0726. A reply will be furnished directly to you. Instructions for sending an electronic 2028 may be found at the back of this manual immediately preceding the hard copy 2028.
For Air Force, submit AFTO Form 22 (Technical Order System Publication Improvement Report and Reply) in accordance with paragraph 6-5, Section VI, T.O. 00-5-1. Forwad to WR-ALC/TIL, Robins AFB, GA 31098-5609.

Distribution Statement A: Approved for public release; distribution is unlimited

TABLE OF CONTENTS

		Page	Illus/ Figure
Section I.	INTRODUCTION	1	
	Water Purification Unit, Reverse Osmosis, 600-GPH		
Section II.	Repair Parts List		
Group 01	Storage Chests	1-1	1
Group 02	Backwash Pump Assembly	2-1	2
	Backwash Cover, Strap, and Cable Assembly	3-1	3
	Backwash Strainer Assembly	4-1	4
	Backwash Pump and Frame Assembly	5-1	5
	Backwash Centrifugal Pump	6-1	6

		Page	Illus/ Figure
	Backwash Centrifugal Pump Motor	7-1	7
Group 03	Raw Water Pump Assembly	8-1	8
	Raw Water Cover and Cable Assembly	9-1	9
	Raw Water Pump and Frame Assembly	10-1	10
	Raw Water Pump	11-1	11
	Raw Water Pump Electric Motor	12-1	12
Group 04	Distribution Pump Assembly	13-1	13
	Distribution Pump Cover and Cable Assembly	14-1	14
	Distribution Centrifugal Pump and Frame Assembly	15-1	15
	Distribution Centrifugal Pump	16-1	16
	Distribution Centrifugal Pump Electrical Motor	17-1	17
Group 05	Hose Assemblies	18-1	18
Group 06	1-1/2 Inch Gate Valve	19-1	19
	2 Inch Gate Valve	20-1	20
	Nozzle	21-1	21
	Fittings, Adapters, and Couplings, etc.	22-1	22
	Ocean Intake Structure (FMQ,FMR,FMS)	22A-1	22A
Group 07	Chemical Cans and Rack Holder	23-1	23
Group 08	Deionization Cartridge	24-1	24
Group 09	Monitor Meter Dissolved Solids Assembly..	25-1	25
Group 10	Water Tank Assembly 3,000 Gallons	26-1	26
Group 11	Portable Steps	27-1	27
	Grounding Rod	28-1	28
	Generator Set Diesel 30kW	29-1	29
Group 12	Reverse Osmosis Water Purification Unit 600-GPH	30-1	30
	ROWPU Cover	31-1	31
	Cover Plate	32-1	32
	Piping Installation	33-1	33
	Raw Water and Backwash (Black Tape) Piping	34-1	34
	Backwash Three-Way Valve Assembly	35-1	35
	Product Water (Light Blue Tape) Piping	36-1	36
	Brine Water Pump (Purple Tape) Piping	37-1	37
	Filtered Water (Yellow Tape) Piping	38-1	38
	Waste Water (Red Tape) Piping	39-1	39
	Pressure Tube Piping	40-1	40
	Filter Vent Valve and Tubing	41-1	41
	R.O. Pressure Gauges and Tubing	42-1	42
	Multimedia Filter Gauge and Tubing	43-1	43
	Filter Gauge and Tubing	44-1	44
	Drain Valves and Tubing	45-1	45
	Chemical Pump Feed and Discharge	46-1	46
	Cable Clamps and Mounting Hardware..	47-1	47
	Junction Box Ground Cable W38	48-1	48
	Generator Cable W40	49-1	49
	R.O. Pump Motor Cable Assembly W41	50-1	50
	Pressure Switch Cables	51-1	51
	Panel Light Cable W48	52-1	52
	Timer/Control Box Cable Assembly W49	53-1	53
	Chemical Feed Pump Cable Assembly W50	54-1	54
	Booster Pump Cable Assembly W51	55-1	55
	Control/Junction Box Cable Assembly W52	56-1	56
	Backwash Timer Cable Assembly W53	57-1	57
	Control Box/TDS Monitor Cable Assembly W56	58-1	58
	Dissolved Solid Sensor Cable Assembly W57	59-1	59

		Page	Illus/ Figure
	High and Low Pressure Switches	60-1	60
	Centrifugal Booster Pump	61-1	61
	Electric Motor Booster Pump	62-1	62
	Chemical Feed Valve Control Stand	63-1	63
	Chemical Feed Pump and Stand	64-1	64
	Chemical Feed Pump Electric Motor	65-1	65
	Chemical Feed Liquid Head Assembly	66-1	66
	Chemical Feed Pump Stroke Adjustment Assembly	67-1	67
	Chemical Feed Pump Housing and Drive Assembly	68-1	68
	Cartridge Filter Mounting Hardware	69-1	69
	Cartridge Filter Assembly	70-1	70
	High Pressure Pump Assembly (FAV, FAW, FAX)	71-1	71
	High Pressure Pump Assembly (FMQ, FMR, FMS)	71A-1	71A
	Fluid Pressure Dampener and Support Assembly (FAV, FAW, FAX)	72-1	72
	High and Low Pressure Hose Assemblies (FMQ, FMR, FMS)	72A-1	72A
	R.O. Pump Belt Guard Assembly(FAV, FAW, FAX)	73-1	73
	R.O. Pump Motor and Belts (FAV, FAW, FAX)	74-1	74
	R.O. Pump Motor (FMQ, FMR, FMS)	74A-1	74A
	High Pressure Pump Drain System (FAV, FAW, FAX)	75-1	75
	High Pressure Pump and Sheave Assembly (FAV, FAW, FAX)	76-1	76
	High Pressure Pump Power Section (FAV, FAW, FAX)	77-1	77
	High Pressure Pump Fluid Section (FAV, FAW, FAX)	78-1	78
	High Pressure Pump (FMQ, FMR, FMS)	78A-1	78A
	High Pressure Pump and Motor Stand (FAV, FAW, FAX)	79-1	79
	Multimedia Filter Assembly	80-1	80
	Multimedia Filter Timer Control Lines	81-1	81
	Multimedia Filter Timer Assembly	82-1	82
	Multimedia Control Valves and Piping	83-1	83
	Multimedia, Filter Tank Assembly	84-1	84
	R.O. Pressure Tubes	85-1	85
	Control Box Assembly	86-1	86
	Control Box Wiring Harness W1	87-1	87
	Control Box Wiring Harness W2	88-1	88
	Control Box Wiring Harness W58	89-1	89
	Junction Box	90-1	90
	Junction Box Cover Assembly	91-1	91
	Junction Box Electrical Connectors	92-1	92
	Junction Box Terminal Boards and Clamps	93-1	93
	Junction Box Circuit Breaker Assembly	94-1	94
	Junction Box Wiring Harness W3	95-1	95
	Junction Box Wiring Harness W4	96-1	96
	Junction Box Wiring Harness W5 and W40	97-1	97
	Junction Box Wiring Harness W6, W7, W8, W9, W10	98-1	98
	Junction Box Wiring Harness W39	99-1	99
	Junction Box Starter Motors	100-1	100
	Control Panel Light	101-1	101
	Storage Box	102-1	102
	Control Panel Frame	103-1	103
	Front Side Frame	104-1	104
	Right Side Frame	105-1	105
	Frame and Strap	106-1	106
Group 013	Flatbed Cargo Trailer	107-1	107
	Trailer Electrical Installation	108-1	108
	Composite Light Trailer	109-1	109
	Trailer Cable Assembly	110-1	110

		Page	Illus/ Figure
	Trailer Wiring Harness	111-1	111
	Trailer Electrical Clips and Grommets	112-1	112
	Trailer Airbrake Installation	113-1	113
	Trailer Airbrake Hose Assembly	114-1	114
	Trailer Airbrake Lines	115-1	115
	Trailer Air Cleaner Assembly..	116-1	116
	Trailer Airbrake Relay Valve	117-1	117
	Trailer Suspension Assembly	118-1	118
	Trailer Trunnion Axle..	119-1	119
	Trailer Spring Assembly..	120-1	120
	Trailer Axle Assembly	121-1	121
	Trailer Hub and Drum Assembly..	122-1	122
	Trailer Brake Assembly..	123-1	123
	Trailer Air Chamber Assembly..	124-1	124
	Trailer Frame Assembly	125-1	125
	Bulk Materials	Bulk-1	Bulk
Group 014	Special Tools List	127-1	127

Section III. SPECIAL TOOLS LIST (Not Applicable)

Section IV. CROSS REFERENCE INDEXES I-1
National Stock Number Index I-1
Part Number Index I-19
Figure and Item Number Index I-79

UNIT, DIRECT SUPPORT AND,GENERAL SUPPORT MAINTENANCE REPAIR PARTS AND SPECIAL TOOLS LIST

Section I. INTRODUCTION

1. SCOPE. This RPSTL lists and authorizes spared and, repair parts; special tools; special test, measurement, and diagnostic equipment (TMDE); and other special support equipment required for performance of unit, direct support, and general support maintenance of the Water Purification Unit, Reverse Osmosis, 600-GPH, Models WPES-10 and H-9518-1 (Army), Models WPES-20 and H-9518-2 (Air Force), and Models WPES-30 and H-9518-3 (Navy). It authorizes the requisitioning, issue, and disposition of spares, repair parts and special tools as indicated by the source, maintenance and recoverablifty (SMR) codes.

2. GENERAL. In addition to this section, Introduction, this Repair Parts and Special Tools List is divided into the following sections:

a. Section II. Repair Parts List A list of spares and repair parts authorized by this RPSTL for use in the performance of maintenance. This list also includes parts which must be removed for replacement of the authorized parts. Parts lists are composed of functional groups in ascending alphanumeric sequence, with the parts in each group listed in ascending figure and item number sequence. Bulk materials are listed in item name sequence. Items are shown in the associated illustration(s)/figure(s).

b. Section III. Special Tools List. A list of special tools, special TMDE, and other special support equipment authorized by this RPSTL (as indicated by Basis of Issue (BOI) information in DESCRIPTION AND USABLE ON CODE column) for the performance of maintenance.

c. Section IV. Cross-references indexes. A list, in National Item Identification Number (NIIN) sequence, of all national stock numbered items appearing in. the listing, followed by a list in alphanumeric sequence of all part numbers appearing in the listings. National stock numbers and part numbers are cross referenced to each illustration figure and item number appearance. The figure and item number index lists figure and item number in alphanumeric sequence and cross references NSN, CAGEC and pan number.

3. EXPLANATION OF COLUMNS (SECTIONS II AND III).

a. ITEM NO. (Column (1)). Indicates the number used to identify items called out in the illustration.

b. SMR Code (Column (2)). The Source, Maintenance, and Recoverablifty (SMR) code is a 5-position code containing supply/requisitoning information, maintenance category authorization criteria, and disposition instruction, as shown in the following breakout:

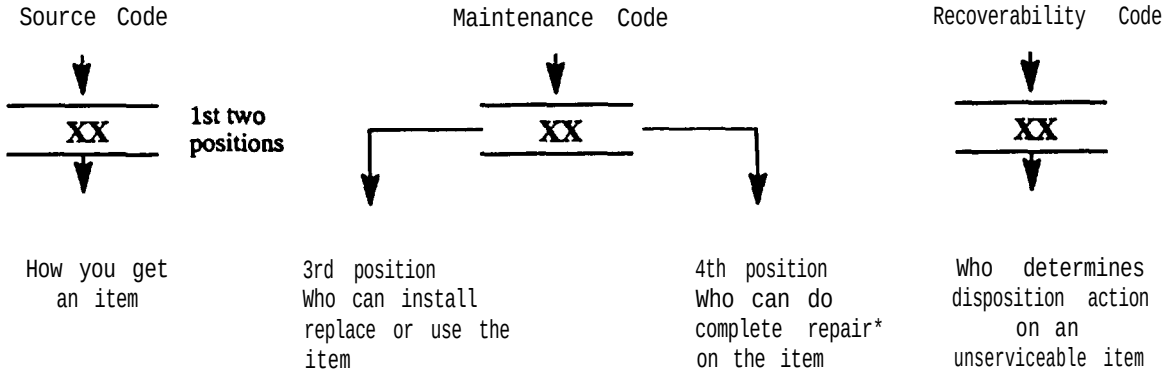

*Complete Repair: Maintenance capacity, capability, and authority to perform all corrective maintenance tasks of the "Repair" function in a use/user environment in order to restore serviceability to a failed item.

(1) Source Code. The source code tells you how to get an item needed for maintenance, repair, or overhaul of an end item/equipment. Explanations of source codes follows:

Code	Explanation
PA PB PC** PD PE PF PG	Stocked items; use the applicable NSN to requested/requisition items with these source codes. They are authorized to the category indicated by the code entered in the 3rd position of the SMR code. **NOTE: Items coded PC are subject to deterioration.
KD KF KB	Items with these codes are not to be requested/requisitioned individually. They are part of a kit which is authorized to the maintenance category indicated in the 3rd position of the SMR code. The complete kit must be requisitioned and applied.
MO - (Made at org/AVUM Level) MP - (Made at DS/AVUM Level) MH - (Made at GS Level) ML - (Made at Specialized Repair Activity (SRA)) MD - (Made at Depot)	Items with these codes are not to be requested/requisitioned individually. They must be made from bulk material which is identified by the part number in the DESCRIPTION and USABLE ON CODE (UOC) column and listed in the Bulk Material group of the repair parts list in this RPSTL. If the item is authorized to you by the 3rd position code of the SMR code, but the source code indicates it is made at a higher level, order the item from the higher level of maintenance.
AO - (Assembled by org/AVUM Level) AF - (Assembled by DS/AVIM Level AH - (Assembled by GS Category) AL - (Assembled by SRA) AD - (Assembled by Depot)	Items with these codes are not to be requested/ requisitioned individually. The parts that make up the assembled item must be requisitioned or fabricated and assembled at the level of maintenance indicated by the source code. If the 3rd position code of the SMR code authorizes you to replace the item, but the source code indicates the items are assembled at a higher level, order the item from the higher level of maintenance.

XA - Do not requisition "XA"-coded item. Order its next higher assembly. (Also, refer to the NOTE below.)

XB - If an "XB" item is not available from salvage, order it using the CAGEC and part number given.

XC - Installation drawing, diagram, instruction sheet, field service drawing, that is identified by manufacturer's part number.

XD - Item is not stocked. Order an "XD"-coded item through normal supply channels using the CAGEC and part number given if no NSN is available.

NOTE

Cannibalization or controlled exchange, when authorized, may be used as a source of supply for items with the above source codes, except for those source coded "XA" or those aircraft support items restricted by requirements of AR 750-1

(2) Maintenance Code. Maintenance codes tell you the level(s) of maintenance authorized to USE and REPAIR support items. The maintenance codes are entered in the third and fourth positions of the SMR code as follows:

(a) The maintenance code entered in the third position tells you the lowest maintenance level authorized to remove, replace, and use an item. The maintenance code entered in the third position will indicate authorization to the following levels of maintenance.

Code	Application/Explanation
C	Crew or operator maintenance done within unit/AVUM maintenance.
O	Unit level VAVUM maintenance can remove, replace, and use the item.
F	Direct support/AVIM maintenance can remove, replace, and use the item.
H	General support maintenance can remove, replace, and use the item.
L	Specialized repair activity can remove, replace, and use the item.
D	Depot can remove, replace, and use the item.

(b) The maintenance code entered in the fourth position tells whether or not the item is to be repaired and identifies the lowest maintenance level with the capability to do complete repair (i.e., perform all authorized repair functions). NOTE: Some limited repair may be done on the item at a lower level of maintenance, if authorized by the Maintenance Allocation Chart (MAC) and SMR codes. This position will contain one of the following maintenance codes.

Code	Application/Explanation
O	Unit VAVUM is the lowest level that can do complete repair of the item.
F	Direct support VAVIM is the lowest level that can do complete repair of the item.
H	General Support is the lowest level that can do complete repair of the item.
L	Specialized repair activity is the lowest level that can do complete repair of the item.
D	Depot is the lowest level that can do complete repair of the item.
Z	Nonreparable. No repair is authorized.
B	No repair is authorized. No parts or special tools are authorized for the maintenance of a "B" coded item. However, the item may be reconditioned by adjusting, lubricating, etc., at the user level.

(3) Recoverability Code. Recoverability codes are assigned to items to indicate the disposition action on unserviceable items. The recoverability code is entered in the fifth position of the SMR Code as follows:

Recoverability Codes	Application/Explanation
Z -	Nonreparable item. When unserviceable, condemn and dispose of the item at the level of maintenance shown in 3d position of SMR Code.
O -	Reparable item. When not economically reparable, condemn and dispose of the item at unit or aviation unit level.
F -	Reparable item. When uneconomically reparable, condemn and dispose of the item at the direct support or aviation unit level.
H -	Reparable item. When uneconomically reparable, condemn and dispose of the item at the general support level.
D -	Reparable item. When beyond lower level repair capability, return to depot. Condemnation and disposal of item not authorized below depot level.
L -	Reparable item. Condemnation and disposal not authorized below specialized repair activity (SRA).
A -	Item requires special handling or condemnation procedures because of specific reasons (e.g., precious metal content, high dollar value, critical material, or hazardous material). Refer to appropriate manuals/directives for specific instructions.

c. CAGEC (Column (3)). The Commercial and Government Entity Code (CAGEC) is a 5-digit numeric code which is used to identify the manufacturer, distributor, or Government agency/activity that supplies the item.

d. PART NUMBER (Column (4)). Indicates the primary number used by the manufacturer, (individual, company, firm, corporation, or Government activity), which controls the design and characteristics of the item by means of its engineering drawings, specifications, standards, and inspection requirements to identify an item or range of items.

NOTE

When you use an NSN to requisition an item, the item you receive may have a different part number from the number listed.

e. DESCRIPTION AND USABLE ON CODE (UOC) (Column (5). This column includes the following information:

(1) The Federal item name and, when required, a minimum description to identify the item.

(2) The physical security classification of the item is indicated by the parenthetical entry, e.g., Phy Sec C1 (C)-Confidential, Phy Sec C1 (S)-Secret, Phy Sec C1 (T)-Top-Secret.

(3) Items that are included in kits and sets are listed below the name of the kit or set.

(4) Spare/repair parts that make up an assembled item are listed immediately following the assembled item line entry.

(5) Part numbers of bulk materials are referenced in this column in the line entry for the item to be manufactured/fabricated.

(6) When the item is not used with all serial numbers of the same model, the effective serial numbers are shown on the last line(s) of the description (before UOC).

(7) The usable on code, when applicable (reference paragraph 5, Special Information).

(8) In the Special Tools List section, the basis of issue (BOI) appears as the last line(s) in the entry for each special tool, special TMDE, and other special support equipment. When density of equipments supported exceeds density spread indicated in the basis of issue, the total authorization is increased proportionately.

(9) The statement "END OF FIGURE" appears just below the last item description in Column 5 for a given figure in both Section II and Section III.

(10) The indenture, shown as dots appearing before the repair part, indicates that the item is a repair part of the next higher assembly.

f. QTY (Column (6)). The QTY (quantity per figure column) indicates the quantity of the item used in the breakout shown on the illustration figure, which is prepared for a functional group, subfunctional group, or an assembly. A"V" appearing In this column in lieu of a quantity indicates that the quantity is variable and may vary from application to application.

4. EXPLANATION OF COLUMNS (SECTION IV).

a. NATIONAL STOCK NUMBER (NSN) INDEX.

(1) STOCK NUMBER column. This column lists the NSN by National item identification number (NIIN) sequence. The NIIN consists of the last nine digits of the NSN, i.e.

NSN
5305-01-574-1467
NIIN

When using this column to locate an item, ignore the first 4 digits of the NSN. However, the complete NSN should be used when ordering items by stock number.

(2) FIG. column. This column lists the number of the figure where the item is identified/located. The figures are in numerical order in Section II and Section III.

(3) ITEM column. The item number identifies the item associated with the figure listed in the adjacent FIG. column. This item is also identified by the NSN listed on the same line.

b. PART NUMBER INDEX. Part numbers in this index are listed by part number in ascending alphanumeric sequence (i e., vertical arrangement of letter and number combination which places the first letter or digit of each group in order A through Z, followed by the numbers 0 through 9 and each following letter or digit in like order).

(1) CAGEC column. The Commercial and Government Entity Code (CAGEC) is a 5-digit numeric code used to identify the manufacturer, distributor, or Government agency, etc.,that supplies the item.

(2) PART NUMBER column. Indicates the primary number used by the manufacturer (individual, firm, corporation, or Government activity), which controls the design and characteristics of the item by means of its engineering drawings, specifications standards, and inspection requirements to identify an item or range of items.

(3) STOCK NUMBER column. This column lists the NSN for the associated part number and manufacturer identified in the PART NUMBER and CAGEC columns to the left.

(4) FIG. column. This column lists the number of the figure where the item is identified/located in Sections II and III.

(5) ITEM column. The item number is that number assigned to the item as it appears in the figure referenced in adjacent figure number column.

c. FIGURE AND ITEM NUMBER INDEX

(1) FIG. column. This column lists the number of the figure where the item is identified/located in Section II and III.

(2) ITEM column. The item number is that number assigned to the item as it appears in the figure referenced in the adjacent figure number column.

(3) STOCK NUMBER column. This column lists the NSN for the item.

(4) CAGEC column. The Commercial and Government Entity Code (CAGEC) is a 5-digit numeric code used to identify the manufacturer, distributor, or Government agency, etc., that supplies the item.

(5) PART NUMBER column. Indicates the primary number used by the manufacturer (individual, firm, corporation, or Government activity), which controls the design and characteristics of the item by means of its engineering drawings, specifications standards, and inspection requirements to identify an item or range of items.

5. SPECIAL INFORMATION.

a. USABLE ON CODE. The usable on code appears in the lower corner of the Description column heading. Usable on codes are shown as "UOC:.." in the Description Column justified left) on the last line applicable item description/nomenclature. Uncoded items are applicable to all models.

Code	Used On
FAV	Model WPES-1 0 (ARMY ONLY)
FAW	Model WPES-20 (AIR FORCE ONLY)
FAX	Model WPES-30 (NAVY ONLY)
FMQ	Model H-9518-1 (ARMY ONLY)
FMR	Model H-9518-2 (AIR FORCE ONLY)
FMS	Model H-9518-3 (NAVY ONLY)

b. ASSOCIATED PUBLICATIONS. The publications listed below pertain to the Water Purification Unit, Reverse Osmosis, 600-GPH and its components.

Publication	Short Title
LO 10-4610-241-12 TO 4OW4-13-42	Lubrication Order: Water Purification Unit, Reverse Osmosis 600-GPH, Trailer Mounted, Flatbed Cargo, 5-Ton, 4-Wheel Tandem, Models WPES-10 and H-9518-1, and Skid Mounted Models WPES-20, H-9518-2, WPES-30 and H-9518-3.
TM 10-4610-241-10 TO 4OW4-13-41	Operator's Manual; Water Purification Unit, Reverse Osmosis 600-GPH, Trailer Mounted, Flatbed Cargo, 5-Ton, 4-Wheel Tandem, Models WPES-10 and H-9518-1 and Skid Mounted Models WPES-20, H-9518-2, WPES-30, and H-9518-3.
TM 5-6115-465-12	Operator's and Organizational Maintenance for Generator Set, Diesel.
TM 5-6115-465-24P	Unit, Direct Support and General Support Maintenance Repair Parts and Special Tools List for Generator Set, Diesel.

TM 5-5430-227-12&P	Operator's and Organizational Maintenance for Water Tank Assembly, 3,000 gallons.
TO 1-1A-15	General Maintenance Instructions for Support Equipment (SE).

6. HOW TO LOCATE REPAIR PARTS.

a. When National Stock Number or Part Number is NOT Known.

(1) First. Using the table of contents, determine the assembly group or subassembly group to which the item belongs. This is necessary since figures are prepared for assembly groups and subassembly groups, and listings are divided into the same groups.

(2) Second. Find the figure covering the assembly group or subassembly group to which the item belongs.

(3) Third. Identify the item on the figure and note the item number.

(4) Fourth. Refer to the Repair Parts List for the figure to find the part number for the item number noted on the figure.

(5) Fifth. Refer to the Part Number Index to find the NSN, if assigned.

b. When National Stock Number or Part Number is Known.

(1)First. Using the Index of National Stock Numbers and Part Numbers, find the pertinent National Stock Number or Part Number. The NSN index is in National Item Identification Number (NIIN) sequence (see c-4a.(1)). The part numbers in the Part Number index are listed in ascending alphanumeric sequence (see paragraph c-4.b). Both indexes cross-reference you to the illustration figure and item number of the item you are looking for.

(2)Second. After finding the figure and Item number, verify that the item is the one you are looking for, then locate the Item number in the repair parts list for the figure.

7. ABBREVIATIONS. Abbreviations used in this manual are listed in MIL-STD-12.

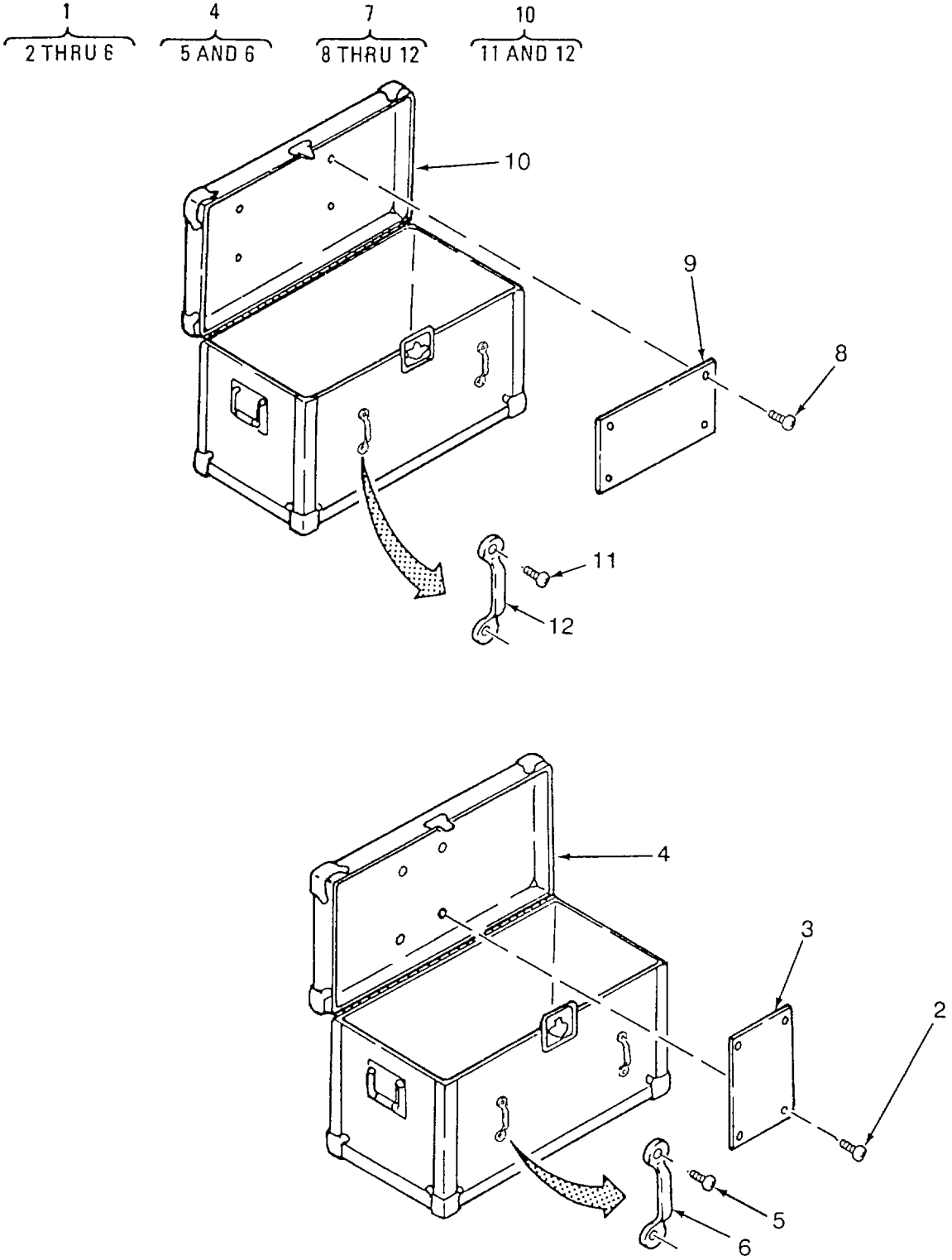

Figure 1. Storage Chests

(1) ITEM NO	(2) SMR CODE	(3) CAGEC	(4) PART NUMBER	(5) DESCRIPTION AND USABLE ON CODES (UOC)	(6) QTY
				GROUP 01 STORAGE CHESTS	
				FIG. 1 STORAGE CHESTS	
1	PBOOO	97403	13221E8380-2	.CHEST,TOOL KIT	1
2	PAOZZ	96906	MS35495-34	..SCREW,WOOD	4
3	PBOZZ	97403	13221E8275	..PLATE,LOADING PLAN UOC:FAV,FAW,FAX	1
3	PFOZZ	97403	13229E0385	..PLATE,LOADING PLAN UOC:FMQ,FMR,FMS	1
4	XAOZZ	97403	13221E8382	..CHEST,STORAGE	1
5	PAOZZ	96906	MS35495-34	...SCREW,WOOD	4
6	PBOZZ	97403	13219E0469	...LOOP,STRAP FASTENER	2
7	PBOOO	97403	13221E8380-1	.CHEST,TOOL KIT	1
8	PAOZZ	96906	MS35495-34	..SCREW,WOOD	4
9	PBOZZ	97403	13221E8274	..PLATE,LOADING PLAN UOC:FAV,FAW,FAX	1
9	PFOZZ	97403	13229E0386	..PLATE,LOADING PLAN UOC:FMQ,FMR,FMS	1
10	XAOZZ	97403	13221E8381	..CHEST,STORAGE	1
11	PAOZZ	96906	MS35495-34	...SCREW,WOOD	4
12	PBOZZ	97403	13219E0469	...LOOP,STRAP	2

END OF FIGURE

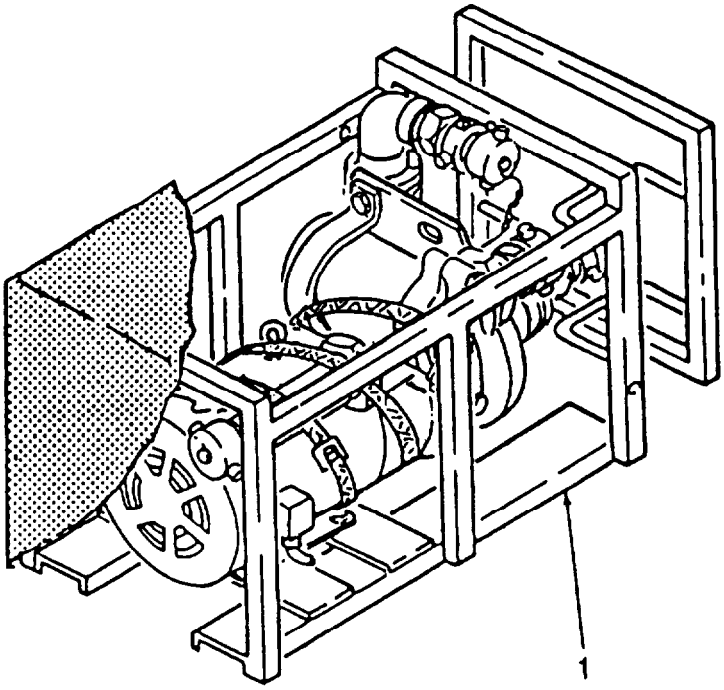

Figure 2. Backwash Pump Assembly

(1) ITEM NO	(2) SMR CODE	(3) CAGEC	(4) PART NUMBER	(5) DESCRIPTION AND USABLE ON CODES(UOC)	(6) QTY
				GROUP 02 BACKWASH PUMP ASSEMBLY	
				FIG. 2 BACKWASH PUMP ASSEMBLY	
1	PDOFF	97403	13222E5260	.PUMP UNIT, CENTRIFUG	1

END OF FIGURE

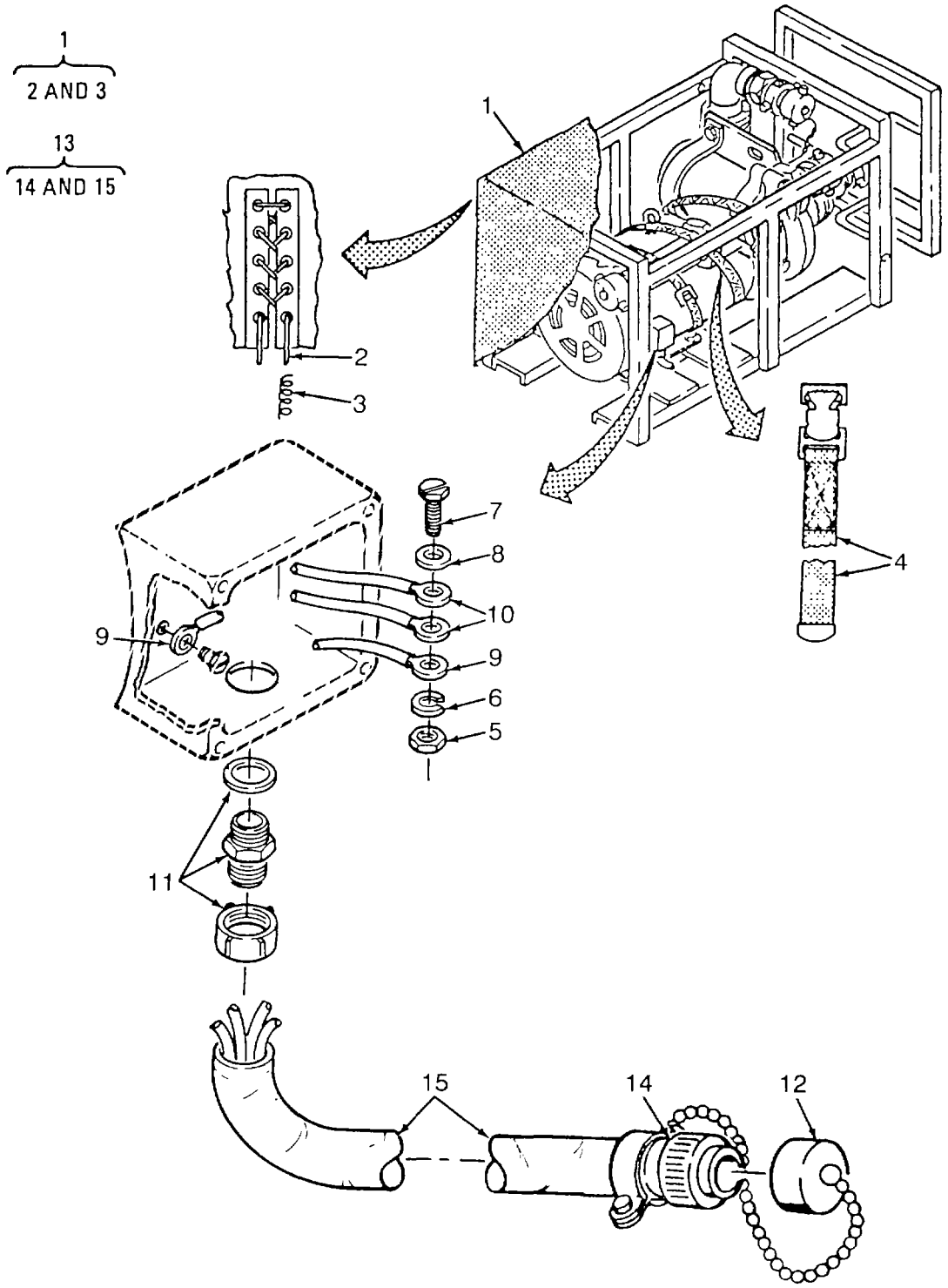

Figure 3. Backwash Cover, Strap, and Cable Assembly

(1) ITEM NO	(2) SMR CODE	(3) CAGEC	(4) PART NUMBER	(5) DESCRIPTION AND USABLE ON CODES(UOC)	(6) QTY
				GROUP 02 BACKWASH PUMP ASSEMBLY	
				FIG. 3 BACKWASH COVER, STRAP, AND CABLE ASSEMBLY	
1	PBOFF	97403	13222E5269 DESER T SAND	..COVER, BACKWASH PUMP	1
1	PBOFF	97403	13222E5269 OLIVE DRAB GREEN	..COVER, BACKWASH PUMP	1
2	MOOZZ	19099	13222E5269-11 DE SERT SAND	...ROPE, COTTON CUT 12 IN FROM BULK ..... P/N T-R-571. CL2, 3/4 IN. CIRCUMFERENCE	2
2	MOOZZ	19099	13222E5269-11 OL IVE DRAB GREEN	...ROPE, COTTON CUT 12 IN. FROM ..... BULK P/N T-R-571, CL2, 3/4 IN. CIRCUMFERENCE	2
3	MFFZZ	19099	13222E5269-4 DES ERT SAND	...THREAD MAKE FROM V-T-285, TYI, ... V CL1, SCB, SIZE FF	
3	MFFZZ	19099	13222E5269-4 OLI VE DRAB GREEN	...THREAD MAKE FROM V-T-285, TYI, ... V CL1, SCB, SIZE FF	
4	PAOZZ	97403	13220E5288-4	...STRAP, WEBBING USED TO SECURE ..... STRAINER DURING MOVEMENT	2
5	PAOZZ	96906	MS35650-3255	..NUT, PLAIN, HEXAGON	4
6	PAOZZ	96906	MS35333-108	..WASHER, LOCK	4
7	PAOZZ	96906	MS35310-303	..SCREW. CAP, HEXAGON	4
	PAOZZ	88044	AN9G1-416T	..WASHER, FLAT	4
9	PAOZZ	96906	MS25036-116	..TERMINAL, LUG USED ON CABLE LEADS.	4
10	PAOZZ	96906	FIS25036-154	..TERMINAL, LUG USED ON MOTOR LEADS.....	9
11	PAOZZ	97403	13226E2206-6	..BOX CONNECTOR, ELECT	1
12	PAOZZ	96906	MS25042-24DA	..COVER, ELECTRICAL CO	1
13	PAOFF	97403	13222E5311-5	..CABLE ASSEMBLY POWE	1
14	PAFZZ	96906	MS3106F24-22P	...CONNECTOR, PLUG, ELEC	1
15	MFFZZ	19099	13222E5311-5-424	...CABLE CUT 424 IN FROM BULK P/N..... C0-04H0F (4/8)0925.....	1

END OF FIGURE

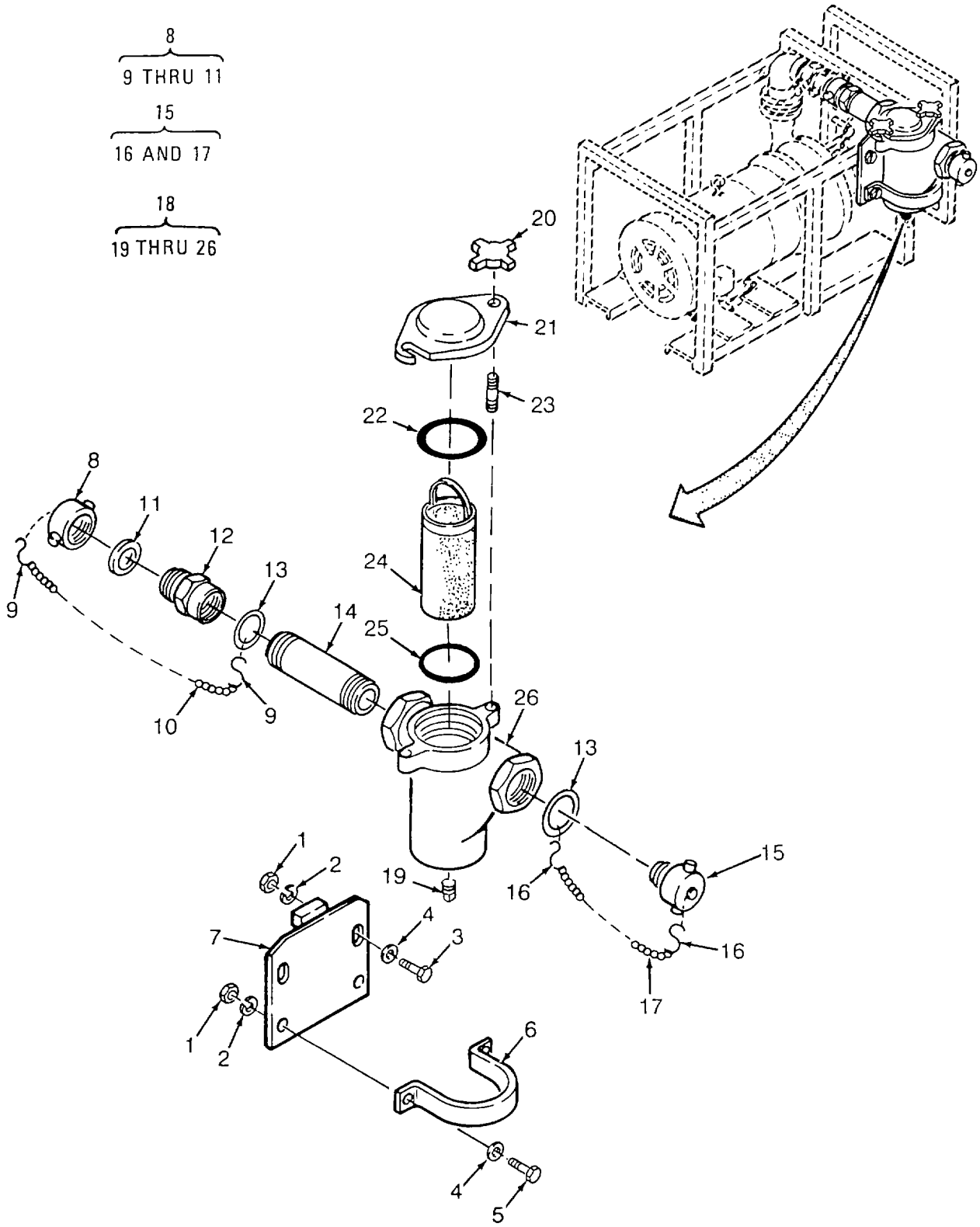

Figure 4. Backwash Strainer Assembly

(1) ITEM NO	(2) SMR CODE	(3) CAGEC	(4) PART NUMBER	(5) DESCRIPTION AND USABLE ON CODES(UOC)	(6) QTY
				GROUP 02 BACKWASH PUMP ASSEMBLY	
				FIG. 4 BACKWASH STRAINER ASSEMBLY	
1	PAOZZ	96906	MS51971-1	..NUT, PLAIN, HEXAGON	4
2	PAOZZ	96906	MS35338-139	..WASHER, LOCK	4
3	PAOZZ	96906	MS35307-314	..SCREW, CAP, HEXAGON H	2
4	PAOZZ	96906	MS15795-810	..WASHER, FLAT	4
5	PAOZZ	96906	MS35307-308	..SCREW, CAP, HEXAGON H	2
6	XDOZZ	97403	13221E8336-1	..STRAP, RETAINING	1
7	XDOZZ	97403	13222E5263	..PLATE, STR, MOUNTING	1
8	PAOZZ	97403	13222E5289-2	..CAP, HOSE	1
9	PAOZZ	96906	MS87006-32	...HOOK, CHAIN, S	2
10	MOOZZ	19099	YCH0105X010LYB	...CHAIN MAKE FROM BULK P/N 3603T904	1
11	PAOZZ	OBZ82	095X0200C0BUNA	...GASKET	1
12	PAOZZ	97403	13221E8278-2	..COUPLING, PIPE	1
13	MOOZZ	97403	13222E5260-31	..WIRE, BRASS MAKE FROM ASTM-B134, 072 DIA., 240 ALLOY	2
14	XDOZZ	97403	13222E5260-32	..PIPE 2 IN. NPT SCHED 40 ..STAINLESS STEEL, 7.75 IN	1
15	PAOZZ	97403	13221E8279-4	...PLUG, HOSE	1
16	PAOZZ	96906	MS87006-32	...HOOK, CHAIN, S	2
17	MOOZZ	19099	YCH0105X015LYB	...CHAIN MAKE FROM BULK P/N 3603T904	1
18	XDOOO	61054	F25-SS	..STRAINER 2.0 IN NPT	1
19	PAOZZ	61054	AN-2.0-125SS-E I TEM 8	...PLUG, PIPE 3/4 NPT STAINLESS STEEL	1
20	XDOZZ	61054	KN-3.0-125-03 15 0-3-0	...KNOBS	2
21	XDOZZ	61054	C-2.0-125-02 150 -18-0	...COVER	1
22	PAOZZ	61054	TG-2.0-125-01 Y-0	...GASKET, 0-RING COVER	1
23	XDOZZ	61054	FS-2.0-125-01 15 0-3-0	...STUD	2
24	PAOZZ	61054	BK-2.0-125-01 4-J-20-0	...BASKET	1
25	PAOZZ	61054	BG-2.0-125-01 Y-0	...GASKET, BASKET 0 RNG	1
26	XDOZZ	61054	B-2.0-125-01 150 -SC-18-0	...BODY	1

END OF FIGURE

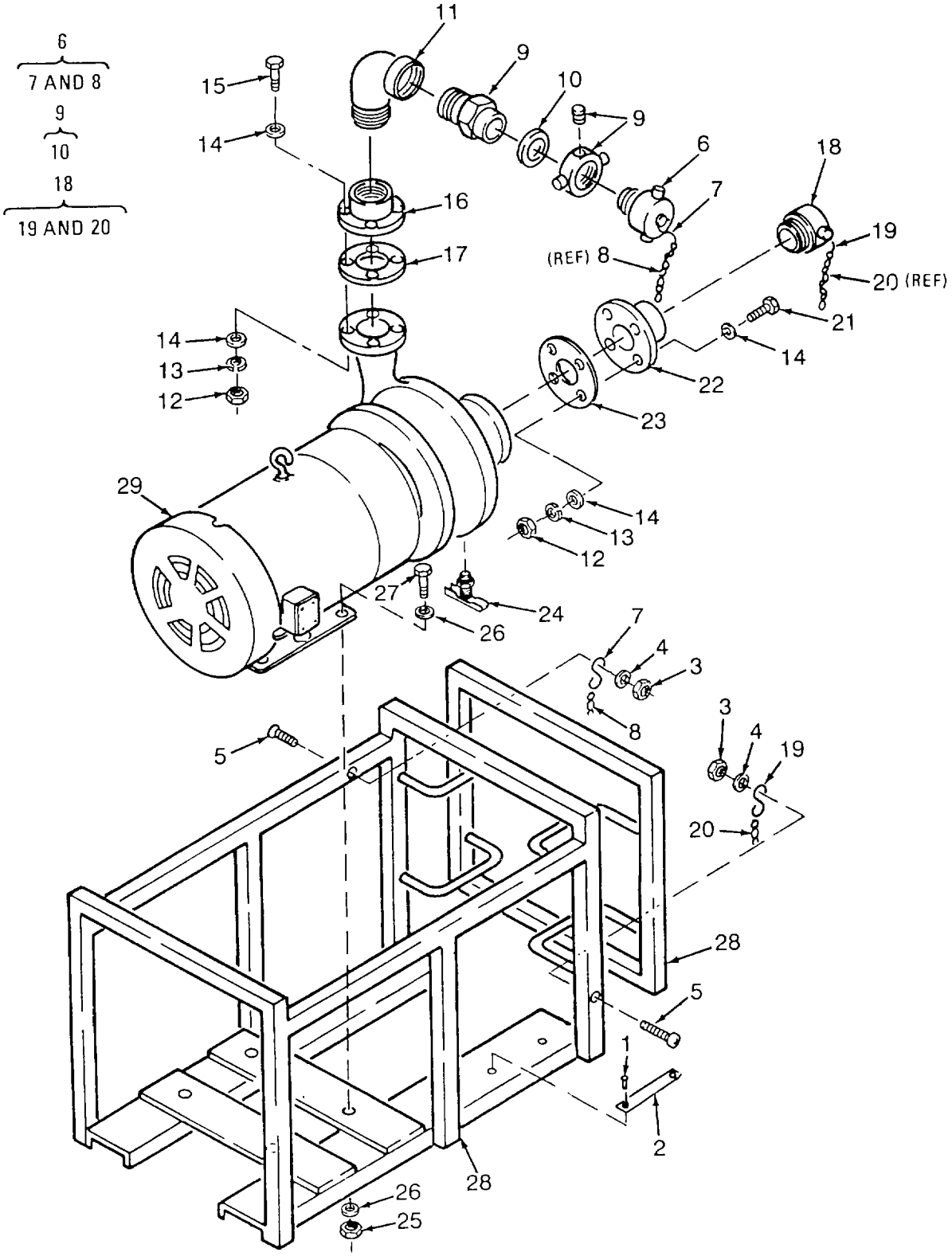

Figure 5. Backwash Pump and Frame Assembly

(1) ITEM NO	(2) SMR CODE	(3) CAGEC	(4) PART NUMBER	(5) DESCRIPTION AND USABLE ON CODES(UOC)	(6) QTY
				GROUP 02 BACKWASH PUMP ASSEMBLY	
				FIG. 5 BACKWASH PUMP AND FRAME ASSEMBLY	
1	PAOZZ	96906	MS21318-20	..SCREW, DRIVE	2
2	XDOZZ	97403	13222E5279-26	..PLATE, INFORMATION BACKWASH PUMP	1
3	PAOZZ	96906	MS17830-3C	..NUT, SELF-LOCKING, HE	2
4	PAOZZ	96906	MS15795-842	..WASHER, FLAT	2
5	PAOZZ	96906	MS51957-70	..SCREW, MACHINE	2
6	PAOZZ	97403	13221E8279-2	..PLUG, HOSE	2
7	PAOZZ	96906	MS87006-32	...HOOK, CHAIN, S	2
8	MOOZZ	19099	YCH0105X015LYB	...CHAIN MAKE FROM BULK P/N 3603T904	1
9	PAOZZ	97403	13221E8290-2	..ADAPTER, STRAIGHT, PI	1
10	PAOZZ	0BZ82	095X0200C0BUNA	...GASKET	1
11	PAOZZ	96906	MS51952-9	..ELBOW, PIPE	1
2	PAOZZ	96906	MS51971-7	..NUT, PLAIN, HEXAGON	8
13	PAOZZ	96906	MS35338-145	..WASHER, LOCK	8
14	PAOZZ	96906	MS15795-820	..WASHER, FLAT	16
15	PAOZZ	96906	MS35307-467	..SCREW, CAP, HEXAGON H	4
16	XDOZZ	97403	13222E5260-44	..FLANGE, PIPE, STD	1
17	PAOZZ	97403	13221E8287-1	..GASKET	1
18	PAOZZ	97403	13221E8279-4	..PLUG, HOSE	1
19	PAOZZ	96906	MS87006-32	...HOOK, CHAIN, S	2
20	MOOZZ	19099	YCH0105X015LYB	...CHAIN MAKE FROM BULK P/N 3603T904	1
21	PAOZZ	96906	MS35307-468	..SCREW, CAP, HEXAGON H	4
22	XDOZZ	97403	13222E5260-10	..FLANGE, REDUCER, THD	1
23	PAOZZ	97403	13221E8287-2	..GASKET	1
24	PAOZZ	96906	MS35782-6	..COCK, DRAIN	1
25	PAOZZ	96906	MS17830-5C	..NUT, SELF-LOCKING, HE	4
26	PAOZZ	96906	MS15795-812	..WASHER, FLAT	8
27	PAOZZ	96906	MS35307-338	..BOLT, MACHINE	4
28	XDOZZ	97403	13222E5261	..FRAME, BACKWASH PUMP	1
29	PBOFF	03306	2-1/2X2ZC2BRONZE	..PUMP, CNTFGL	1

END OF FIGURE

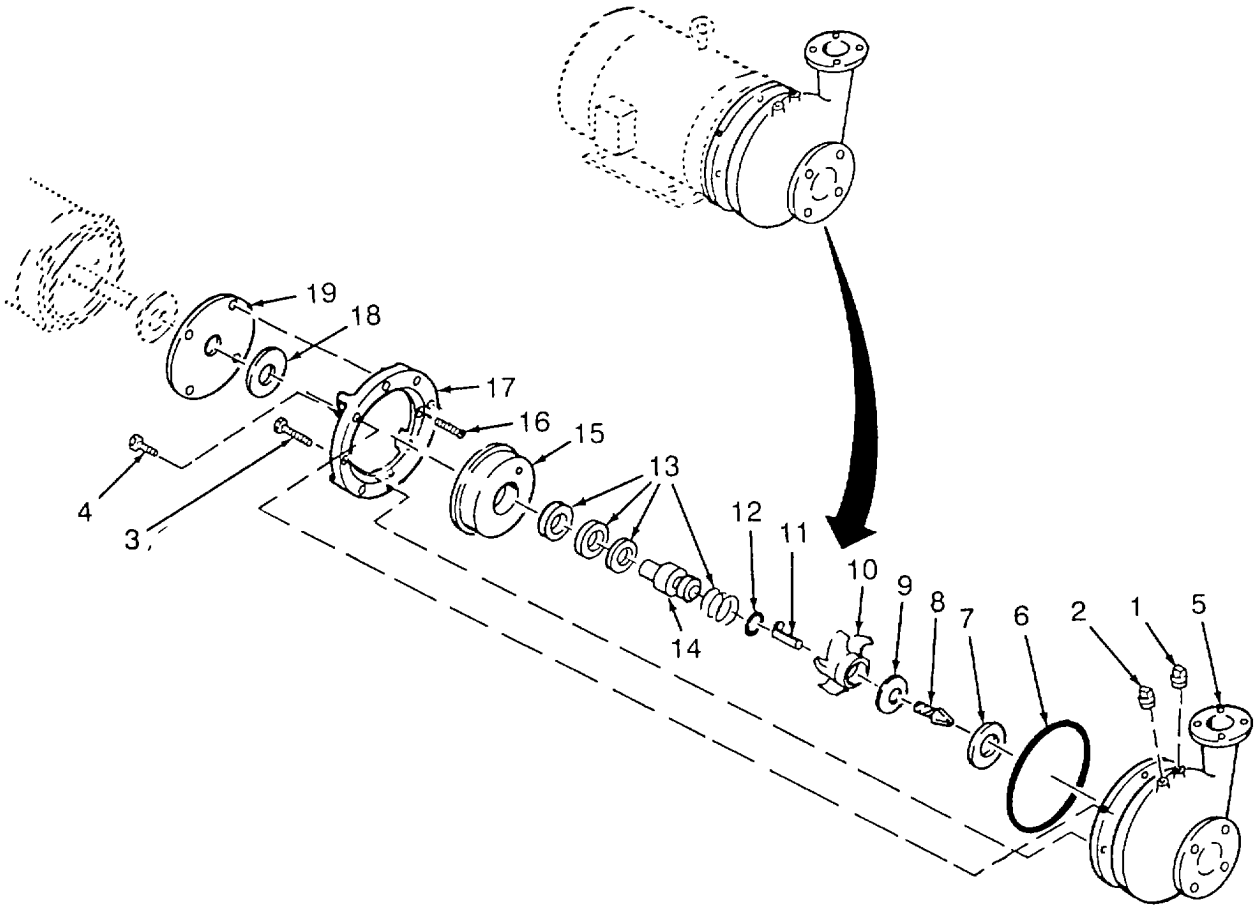

Figure 6. Backwash Centrifugal Pump

(1) ITEM NO	(2) SMR CODE	(3) CAGEC	(4) PART NUMBER	(5) DESCRIPTION AND USABLE ON CODES(UOC)	(6) QTY
				GROUP 02 BACKWASH PUMP ASSEMBLY	
				FIG. 6 BACKWASH CENTRIFUGAL PUMP	
1	PAOZZ	03306	500-755	...PLUG, PIPE 3/8 NPT STAINLESS STEEL	1
2	PAOZZ	03306	500-750	...PLUG, PIPE 1/8 NPT STAINLESS STEEL	1
3	XDFZZ	03306	500-772	...SCREW, CAP 3/8-16 X 1 1/4 STAINLESS STEEL	4
4	XDFZZ	03306	500-771	...SCREW9CAP 3/8-16 X 1 STAINLESS STEEL	4
5	XAFZZ	03306	48-4-0076-01	...CASING BRONZE	1
6	PAFZZ	03306	500-410	...GASKET PART OF KIT P/N 48-1-0696.	1
7	XDFZZ	03306	48-1-0003-02	...RING, WEAR	1
8	XDFZZ	03306	48-1-0127-01	...SCREW, IMPELLER BRONZE	1
9	PAFZZ	03306	61000504500	...GASKET PART OF KIT P/N 48-1-0696.	1
10	XDFZZ	03306	48-2-0001-04	...IMPELLER, PUMP, CENTR BRONZE	1
11	XDFZZ	03306	500-513-	...KEY, WOODRUFF	1
12	KFFZZ	03306	500-983	...PACKING, PREFORMED BUNA PART OF KIT P/N 48-1-0696	1
13	KFFZZ	03306	48-1-0341	...SEAL ASSEMBLY9 SHAFT PART OF KIT P/N 48-1-0696	1
14	XDFZZ	03306	48-1-0372-01	...SHAFT9SLEEVE STAINLESS STEEL	1
15	XDFZZ	03306	48-3-0133-01	...COVER	1
16	XDFZZ	03306	500-774	...SCREW9SOCKET HD 1/2-13 X 1 3/4, STAINLESS STEEL	4
17	XDFZZ	03306	48-3-0139-01	...ADAPTER CAST IRON	1
18	PBFZZ	03306	500-423-1	...DEFLECTOR, DIRT AND 1-7-32 ID	1
19	XDFZZ	03306	500-914	...PLATE9SPLASH STAINLESS STEEL	1
	PAFZZ	03306	48-1-0696	...KIT, SEAL	1
				GASKET (1) 6-6	
				GASKET (1) 6-9	
				PACKING, PREFORMED (1) 6-12	
				SEAL ASSEMBLY, SHAFT (1) 6-13	

END OF FIGURE

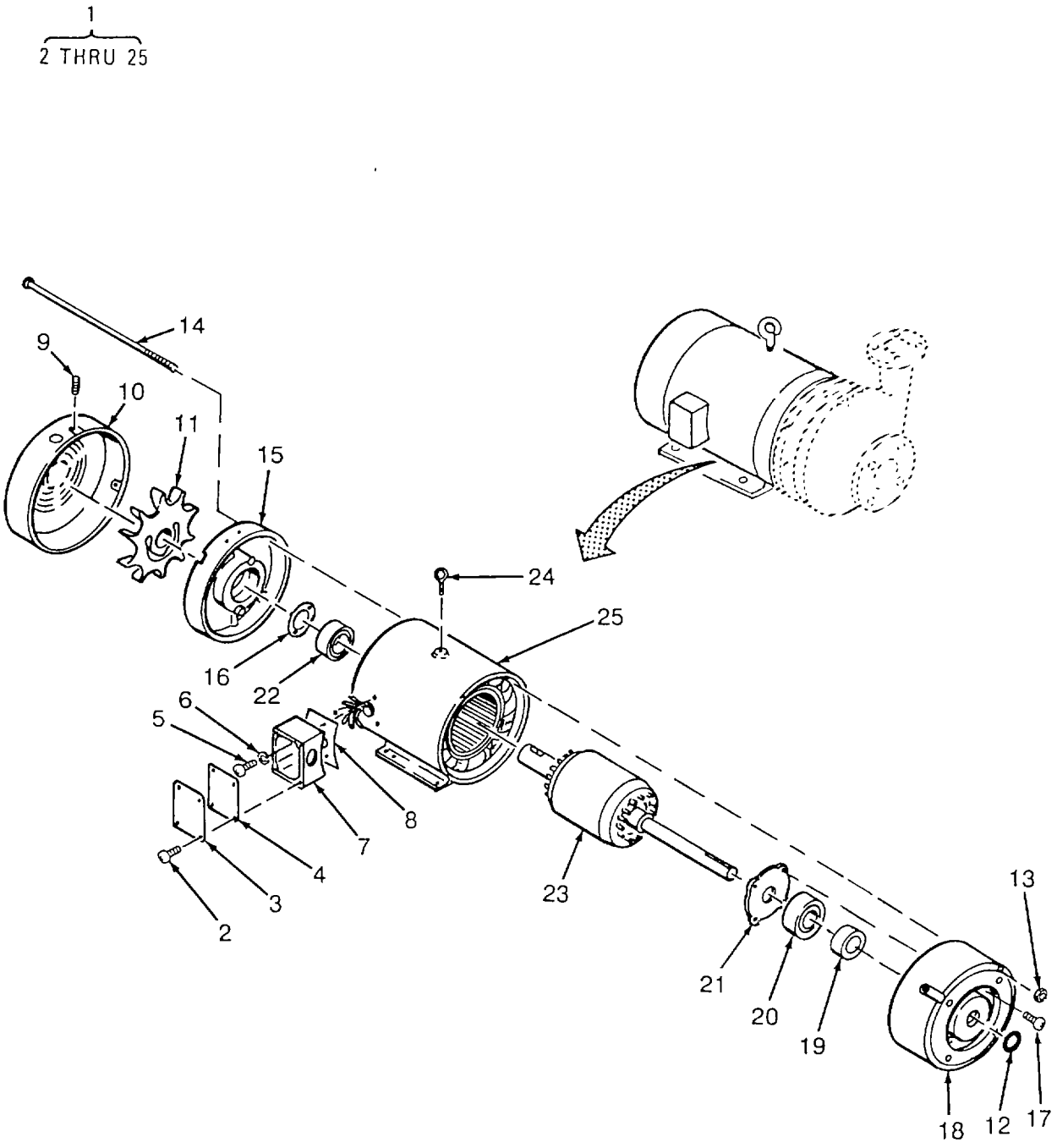

Figure 7. Backwash Centrifugal Pump Motor

(1) ITEM NO	(2) SMR CODE	(3) CAGEC	(4) PART NUMBER	(5) DESCRIPTION AND USABLE ON CODES(UOC)	(6) QTY
				GROUP 02 BACKWASH PUMP ASSEMBLY	
				FIG. 7 BACKWASH CENTRIFUGAL PUMP MOTOR	
1	PAFFF	05472	37E450X56	...MOTOR, ALTERNATING C.....	1
2	XDOZZ	05472	51XT0832A07	....SCREW, SLOTTED 8-32 X 7/16.....	4
3	XDOZZ	05472	37CB4500	....LID, CONDUIT BOX.....	1
4	PAOZZ	05472	37GS1001	....GASKET.....	1
5	XAFZZ	05472	10XN2520A10	....SCREW, SLOTTED 1/4-20 X 5/8.....	2
6	XAFZZ	05472	HW1001A25	....WASHER, LOCK 1/4 ID	2
7	XAFZZ	05472	37CB1001A05	....BOX, CONDUIT.....	1
8	PAFZZ	05472	37GS1000	....GASKET.....	1
9	XDFZZ	05472	11XF1032A06	....SCREW, HEX 10-32 X 3/8.....	3
10	XAFZZ	05472	37FH4000A01	....COVER, FAN	1
11	XDFZZ	05472	37FN3000A03	....FAN PLASTIC	1
12	XDFZZ	05472	HW4600A73	....SLINGER	1
13	XDFZZ	05472	XY3118A12	....NUT, HEX 5/16-18.....	4
14	XDFZZ	05472	HA3104A14	....BOLT, MACHINE.....	4
15	XAFZZ	05472	37FE3101A01	....ENDPLATE ASSY	1
16	XDFZZ	05472	HW5100A06	....WASHER, WAVY.....	1
17	XDFZZ	05472	10XN2520A36	....SCREW, HEX 1/4-20 X 2 1/4.....	4
18	XAFZZ	05472	37PE1302A01	....ENDPLATE ASSY	1
19	XDFZZ	05472	HA2006A10	....SLEEVE, TIGHT.....	1
20	PAFZZ	05472	BG6309B03	....BEARING, BALL, ANNULA	1
20	XDFZZ	05472	RB3001A01	....RETAINING, BEARING.....	1
22	PAFZZ	05472	BG62Q6B03	....BEARING.....	1
23	XAFZZ	05472	37RA10072035A01	....ROTOR ASSY.....	1
24	XDOZZ	05472	HW3200A01	....EYEBOLT.....	1
25	XAFZZ	05472	37SAE450X056	....STATOR ASSY	1

END OF FIGURE

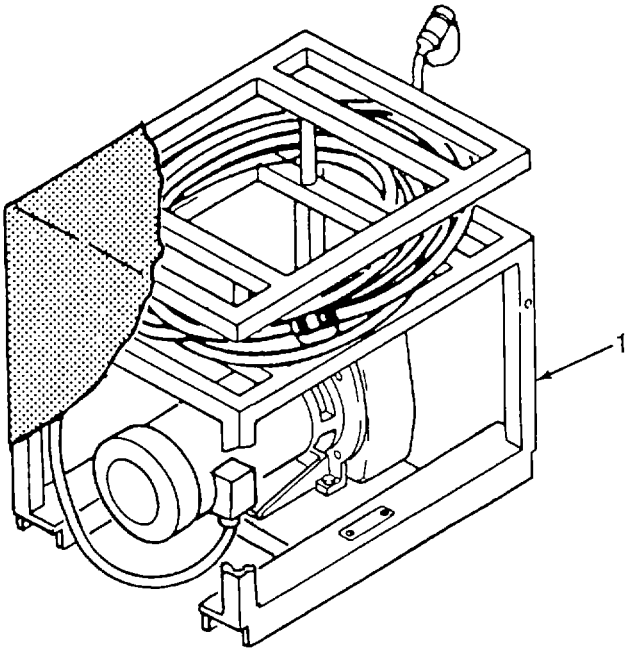

Figure 8. Raw Water Pump Assembly

(1) ITEM NO	(2) SMR CODE	(3) CAGEC	(4) PART NUMBER	(5) DESCRIPTION AND USABLE ON CODES(UOC)	(6) QTY
				GROUP 03 RAW WATER PUMP ASSEMBLY	
				FIG. 8 RAW WATER PUMP ASSEMBLY	
1	PDOFF	97403	13222E5250	.PUMP ASSY, RAW WATER	2

END OF FIGURE

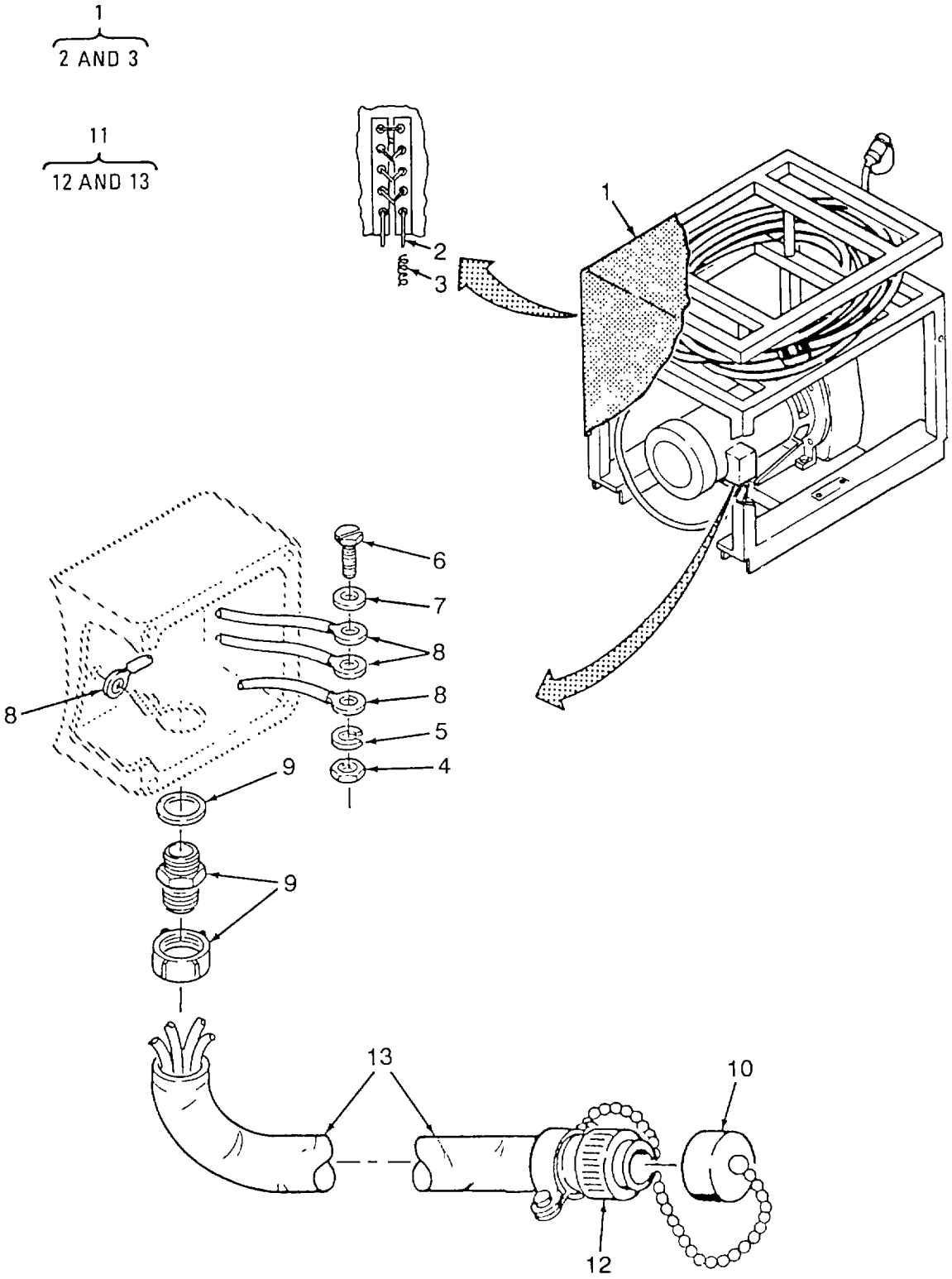

Figure 9. Raw Water Cover and Cable Assembly

(1) ITEM NO	(2) SMR CODE QTY	(3) CAGEC	(4) PART NUMBER	(5) DESCRIPTION AND USABLE ON CODES(UOC)	(6)
				GROUP 03 RAW WATER PUMP ASSEMBLY	
				FIG. 9 RAW WATER CO-YER AND CABLE ASSEMBLY	
1	PBOFF	97403	13222E5255 DESER T SAND	..COVER, RAW WATER PMP.....	1
1	PBOFF	97403	13222E5255 OLIVE DRAB GREEN	..COVER, RAW WATER PMP.....	1
2	MOOZZ	19099	13222E5255-11 DE SERT SAND	...ROPE, COTTON CUT 12 IN.FROM ..... BULK P/N T-R-571, CL2, 3/4 IN. CIRCUMFERENCE	1
2	MOOZZ	19099	13222E5255-11 OL IVE DRAB GREEN	...ROPE, COTTON CUT 12 IN.FROM ..... BULK P/N T-R-571, CL2, 3/4 IN. CIRCUMFERENCE	1
3	MFFZZ	19099	13222E5255-4 DES ERT SAND	...THREAD MAKE FROM BULK P/N V-T- ..... 285, TYI, CL1, SCB, SIZEFF	V
3	MFFZZ	19099	13222E5255-4 OLI VE DRAB GREEN	...THREAD MAKE FROM BULK P/N V-T- ..... 285, TYI, CL1, SCB, SIZEFF	V
4	PAOZZ	96906	MS35650-3255	..NUT, PLAIN, HEXAGON	4
5	PAOZZ	96906	MS35333-108	..WASHER, LOCK.....	4
6	PAOZZ	96906	MS35310-303	..SCREW, CAP, HEXAGON H.....	4
7	PAOZZ	88044	AN961-416T	..WASHER, FLAT.....	4
8	PAOZZ	96906	MS25036-154	..TERMINAL, LUG USED ON CABLE LEADS ..... AND MOTOR LEADS	13
9	PAOZZ	97403	13226E2205-5	..SEALING GRIP, CABLE.....	1
10	PAOZZ	96906	MS25042-18DA	..COVER, ELECTRICAL CO.....	1
11	PAOFF	97403	13222E5311-1	..CABLE ASSEMBLY, POWE.....	1
12	PAFZA	96906	MS3456W18-11P	...CONNECTOR, PLUG, ELEC.....	1
13	MFFZZ	19099	13222E5311-0605	...CABLE, POWER MAKE FROM P/N CO..... 04HOF(4/14)0605, 1084 IN	1

END OF FIGURE

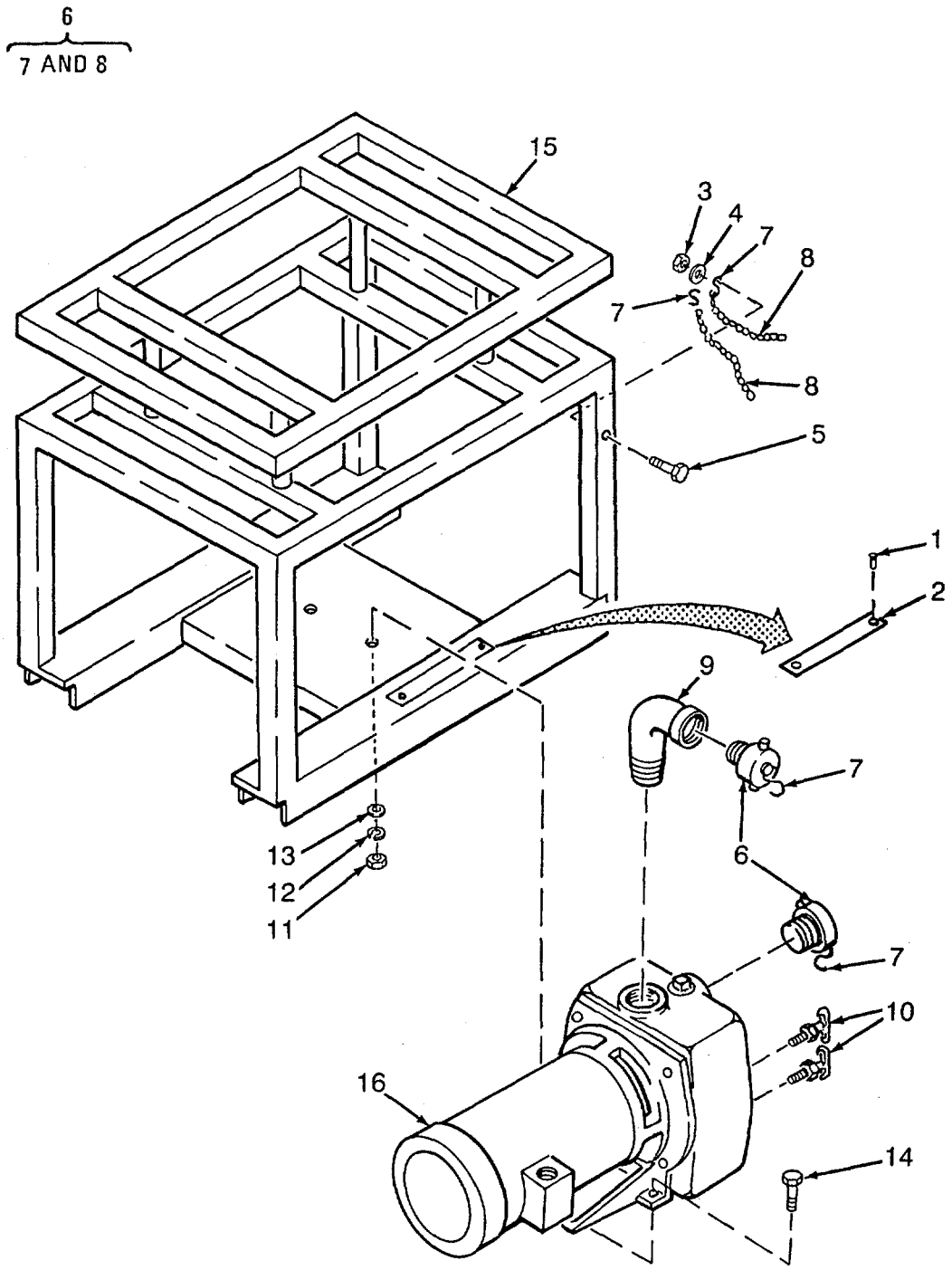

Figure 10. Raw Water Pump and Frame Assembly

(1) ITEM NO	(2) SMR CODE QTY	(3) CAGEC	(4) PART NUMBER	(5) DESCRIPTION AND USABLE ON CODES(UOC)	(6)
				GROUP 03 RAW WATER PUMP ASSEMBLY	
				FIG. 10 RAW WATER PUMP AND FRAME ASSEMBLY	
1	PAOZZ	96906	MS21318-20	..SCREW, DRIVE	2
2	XDOZZ	97403	13222E5279-27	..PLATE, INFORMATION RAW WTR PUMP	1
3	PAOZZ	96906	MS17830-3C	..NUT, SELF-LOCKING, HE	1
4	PAOZZ	96906	MS15795-842	..WASHER, FLAT	1
5	PAOZZ	96906	MS51957-70	..SCREW, MACHINE	1
6	PAOZZ	97403	13221E8279-3	..PLUG, HOSE	2
7	PAOZZ	96906	MS87006-32	...HOOK, CHAIN, S	2
8	MOOZZ	19099	YCH0105X015LYB	...CHAIN MAKE FROM BULK P/N 3603T904	1
9	PAOZZ	96906	MS51952-8	..ELBOW, PIPE	1
10	PAOZZ	96906	MS35782-2	..COCK, DRAIN	2
11	PAOZZ	96906	MS51971-3	..NUT, PLAIN, HEXAGON	2
12	PAOZZ	96906	MS35338-141	..WASHER, LOCK	2
13	PAOZZ	96906	MS15795-814	..WASHER, FLAT	2
14	PAOZZ	96906	MS35307-362	..SCREW, CAP, HEXAGON H	2
15	XDOZZ	97403	13222E5251-1	..FRAME, PUMP	1
16	PBOFF	62321	T320WA6ABSP	..PUMP, CENTRIFUGAL	1

END OF FIGURE

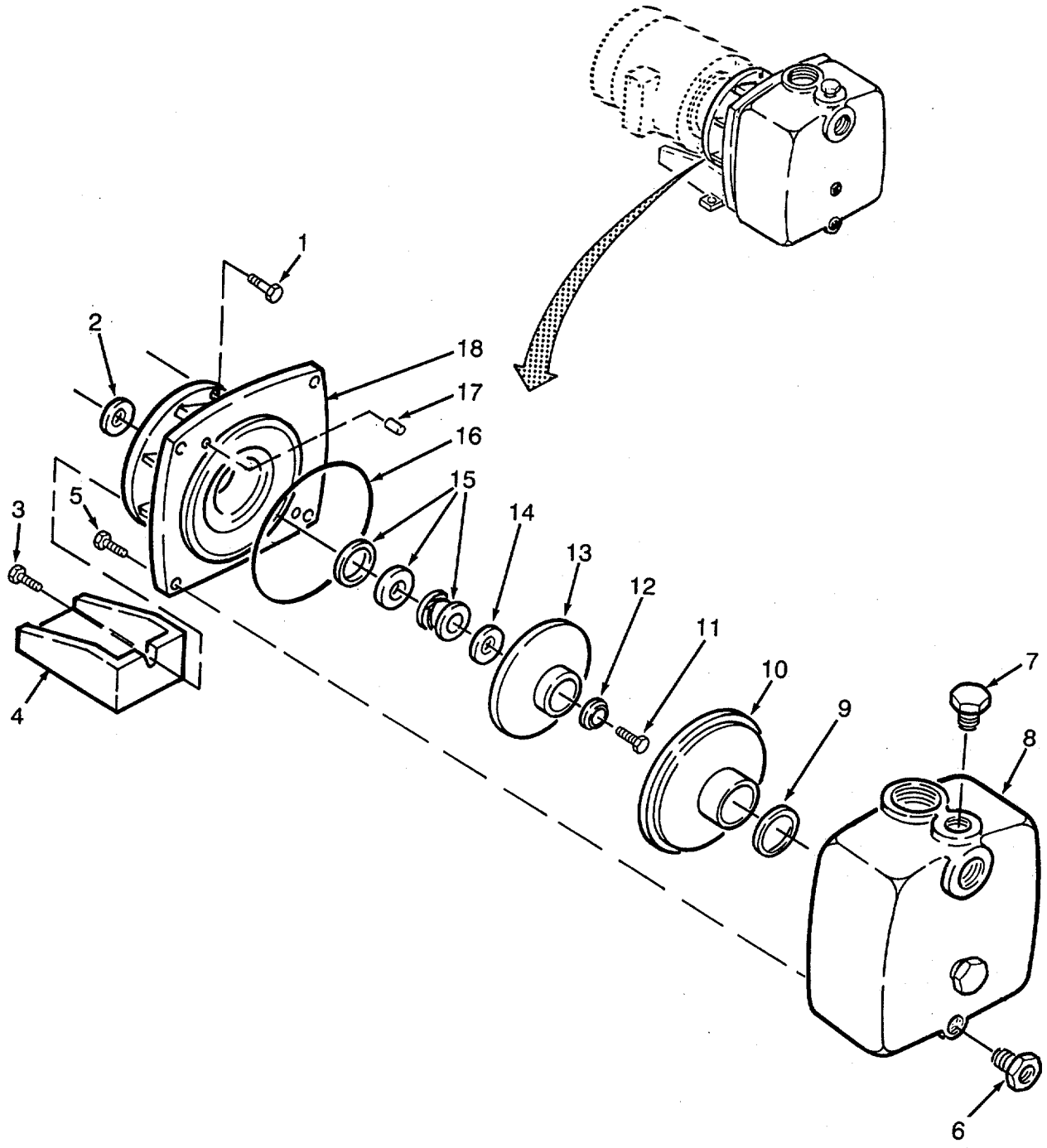

Figure 11. Raw Water Pump

(1) ITEM NO	(2) SMR CODE QTY	(3) CAGEC	(4) PART NUMBER	(5) DESCRIPTION AND USABLE ON CODES(UOC)	(6)
				GROUP 03 RAW WATER PUMP ASSEMBLY	
				FIG. 11 RAW WATER PUMP	
1	XDFZZ	62321	3122-A	...SCREW, CAP 3/8-16 X 0.75	4
2	PBFZZ	62321	8105	...DEFLECTOR, DIRT AND	1
3	XDFZZ	62321	21236	...SCREW, CAP 3/8-16 X 1.25	1
4	XDFZZ	62321	9744	...BASE	1
5	XDFZZ	62321	3288	...SCREW, CAP 3/8-16 X 1.25	4
6	XDOZZ	62321	3027-A	...BUSHING, PIPE 3/4 X 1/4 NPT, BRASS	1
7	XDOZZ	62321	947-A	...PLUG,PIPE	1
8	XAFZZ	62321	21123-A	...CASE	1
9	PAFZZ	62321	4231	...BUSHING, NONMETALLIC	1
10	XDFZZ	62321	21124-A	...DIFFUSER	1
11	XDFZZ	62321	21285	...SCREW,LOCK	1
12	XDFZZ	62321	21181	...WASHER.	1
13	XDFZZ	62321	9731-5.66	...IMPELLER 2 HP	1
14	XDFZZ	62321	2029	...WASHER	1
15	PAFZZ	62321	20888	...SEAL ASSEMBLY, SHAFT	1
16	PAFZZ	62321	8988	...GASKET	1
17	PAFZZ	62321	20101	...ROLL PIN	2
18	XDFZZ	62321	9740-A-1	...ADAPTER, FRAME	1

END OF FIGURE

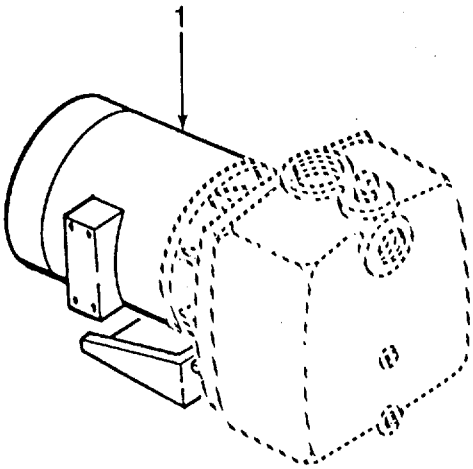

Figure 12. Raw Water Pump Electric Motor (Sheet 1 of 2)

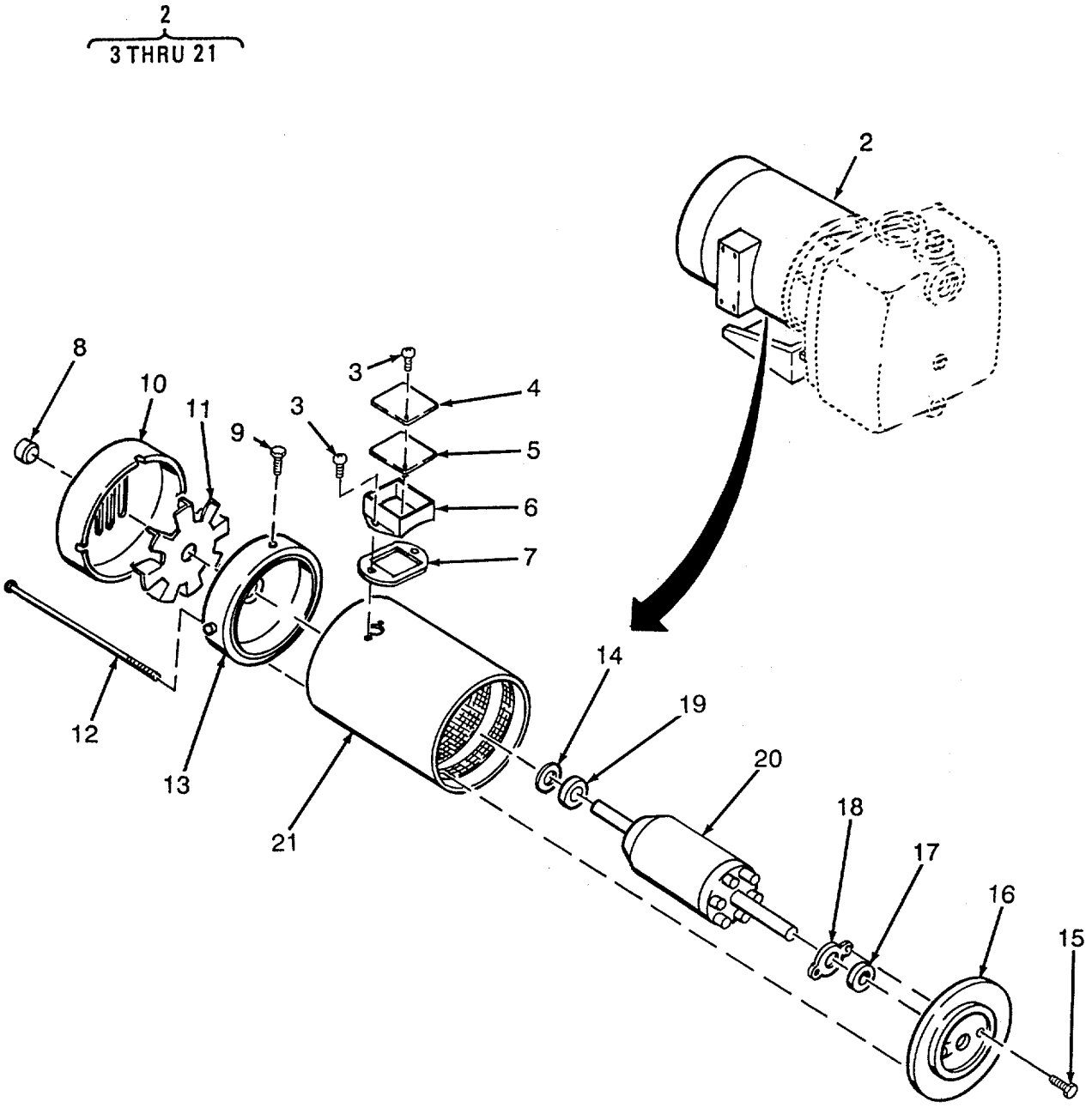

Figure 12. Raw Water Pump Electric Motor (Sheet 2 of 2)

(1) ITEM NO	(2) SMR CODE QTY	(3) CAGEC	(4) PART NUMBER	(5) DESCRIPTION AND USABLE ON CODES(UOC)	(6)
				GROUP 03 RAW WATER PUMP ASSEMBLY	
				FIG. 12 RAW WATER PUMP ELECTRIC MOTOR	
1	XDFZZ	38151	56T34F4MO	...MOTOR ASSEMBLY APPLICABLE ONLY 1 TO TYPE 1 WPES SERIAL NUMBERS -3001 THRU-3005, WHEN MOTOR REQUIRES REPAIR, REPLACE WITH P/N V56T34FS525B, ... FSCM 38151 UOC:FAY	
2	PAFFF	38151	Y56T34FS525B	...MOTOR ASSEMBLY	1
3	XDOZZ	38151	A-9775-31CC	....SCREW	4
4	XDOZZ	38151	A-102131-MM	....COVER, CONDUIT	1
5	XDOZZ	38151	A-102045	....GASKET, COYER	1
6	XAOZZ	38151	B-102373-A90	....BOX, CONDUIT BASE	1
7	XAOZZ	38151	A-102047	....GASKET, BASE	1
8	XDOZZ	38151	A-77531-7	....CAP, DUST	1
9	XDFZZ	38151	A-9775-38CC	....SCREW	3
10	XAFZZ	38151	A-102196A-1A	....GUARD, FAN	1
11	XDFZZ	38151	A-102176A-N	....FAN	1
12	XDFZZ	38151	A-90109-712NN	....BOLT, THRU	4
13	XAFZZ	38151	A-A102077A-A	....BRACKET, FRONT	1
14	XDFZZ	38151	A-9757-17A	....LOAD SPRING	1
15	XDFZZ	38151	A-76724-100CC	....SCREW	2
16	XAFZZ	38151	A-S102116A-1	....BRACKET, REAR	1
17	PAFZZ	38151	A-7823R-25	....BEARING, BALL, ANNULA	1
18	XDFZZ	38151	A-102021-A	....BEARING, LOCK	1
19	PAFZZ	38151	A-7823R-17	....BEARING, FRONT	1
20	XAFZZ	38151	5014-2201-0782	....ROTOR ASSEMBLY	1
21	XAFZZ	38151	3514-1400-391	....BODY ASSY-STATOR	1

END OF FIGURE

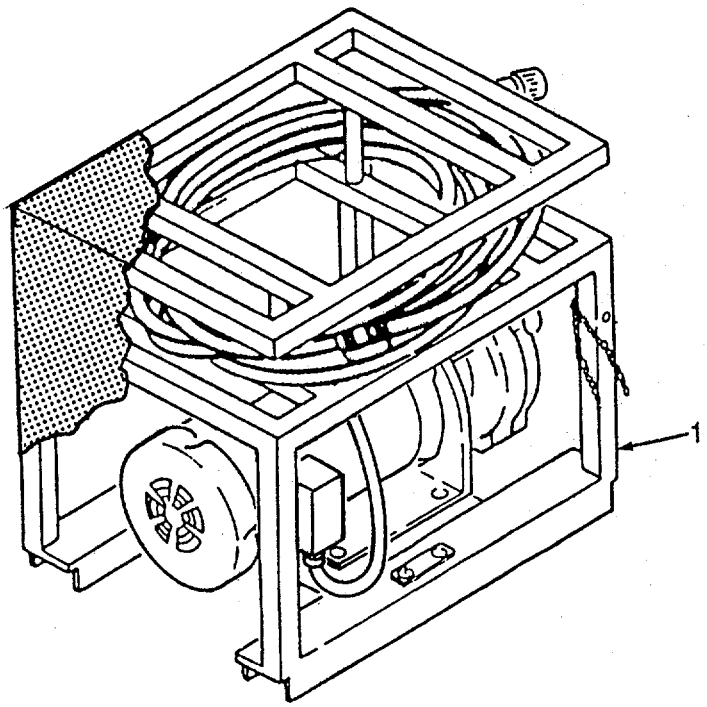

Figure 13. Distribution Pump Assembly

(1) ITEM NO	(2) SMR CODE QTY	(3) CAGEC	(4) PART NUMBER	(5) DESCRIPTION AND USABLE ON CODES(UOC)	(6)
				GROUP 04 DISTRIBUTION PUMP ASSEMBLY	
				FIG. 13 DISTRIBUTION PUMP ASSEMBLY	
1	PDOFF	97403	13222E5265	.PUMP, DISTRIBUTION A.....	1
				END OF FIGURE	

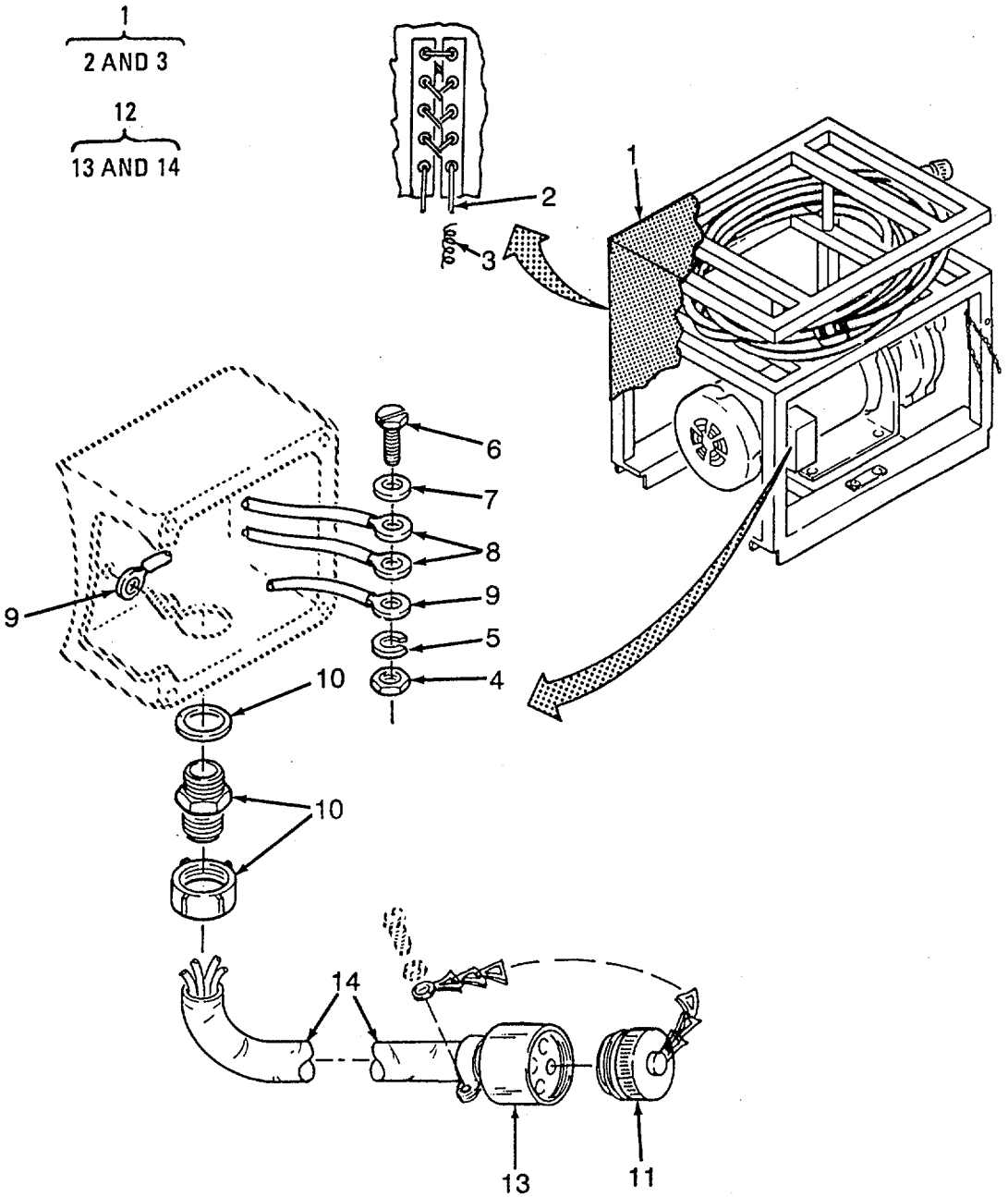

Figure 14. Distribution Pump Cover and Cable Assembly

(1) ITEM NO	(2) SMR CODE QTY	(3) CAGEC	(4) PART NUMBER	(5) DESCRIPTION AND USABLE ON CODES(UOC)	(6)
				GROUP 04 DISRIBUTION PUMP ASSEMBLY	
				FIG. 14 DISTRIBUTION PUMP COYER AND CABLE ASSEMBLY	
1	PBOFF	97403	13222E5268 DESERT SAND	..COVER, DISTRIBUTION.....	1
1	PBOFF	97403	13222E5268 OLIVE DRAB GREEN	..COVER, DISTRIBUTION.....	1
2	MOOZZ	19099	13222E5268-11 DESERT SAND BULK	...ROPE, COTTON CUT 12 IN. FROM ..... P/N T-R-571, CL2, 3/4 IN. CIRCUMFERENCE	1
2	MOOZZ	19099	13222E5268-11 OLIVE DRAB GREEN	...ROPE, COTTON CUT 12 IN. FROM ..... BULK P/N T-R-571, CL2, 3/4 IN. CIRCUMFERENCE	1
3	MFFZZ	19099	13222E5268-4 DESERT SAND	...THREAD MAKE FROM BULK P/N V-T- ..... 285, TYI, CL1, SCB, SIZEFF.....	V
3	MFFZZ	19099	13222E5268-4 OLI VE DRAB GREEN	...THREAD MAKE FROM BULK P/N V-T- ..... 285, TYI, CL1, SCB, SIZEFF.....	V
-1	PAOZZ	96906	MS35650-3255	..NUT, PLAIN, HEXAGON	4
5	PAOZZ	96906	MS35333-108	..WASHER, LOCK.....	4
6	PAOZZ	96906	MS35310-303	..SCREW, CAP, HEXAGON H.....	4
7	PAOZZ	88044	AN961-416T	..WASHER, FLAT.....	4
8	PAOZZ	96906	MS25036-150	..TERMINAL, LUG USED ON MOTOR LEADS.....	9
9	PAOZZ	96906	MS25036-154	..TERMINAL, LUG USED ON CABLE LEADS.	4
.3	PAUZZ	97403	13226E2205-5	..SEALING GRIP	1
11	PAOZZ	96906	MS25042-18DA	..COVER, ELECTRICAL CO.....	1
12	PADFF	97403	13222E5311-2	..CABLE ASSEMBLY, POWE.....	1
13	PAFZA	96906	MS3456W18-11P	...CONNECTOR, PLUG, ELEC.....	1
14	MFFZZ	19099	13222E5311-2-0605	...CABLE, POWER CUT 724 IN FROM ..... BULK P/N CO-04HOF(4/14)0605	1

END OF FIGURE

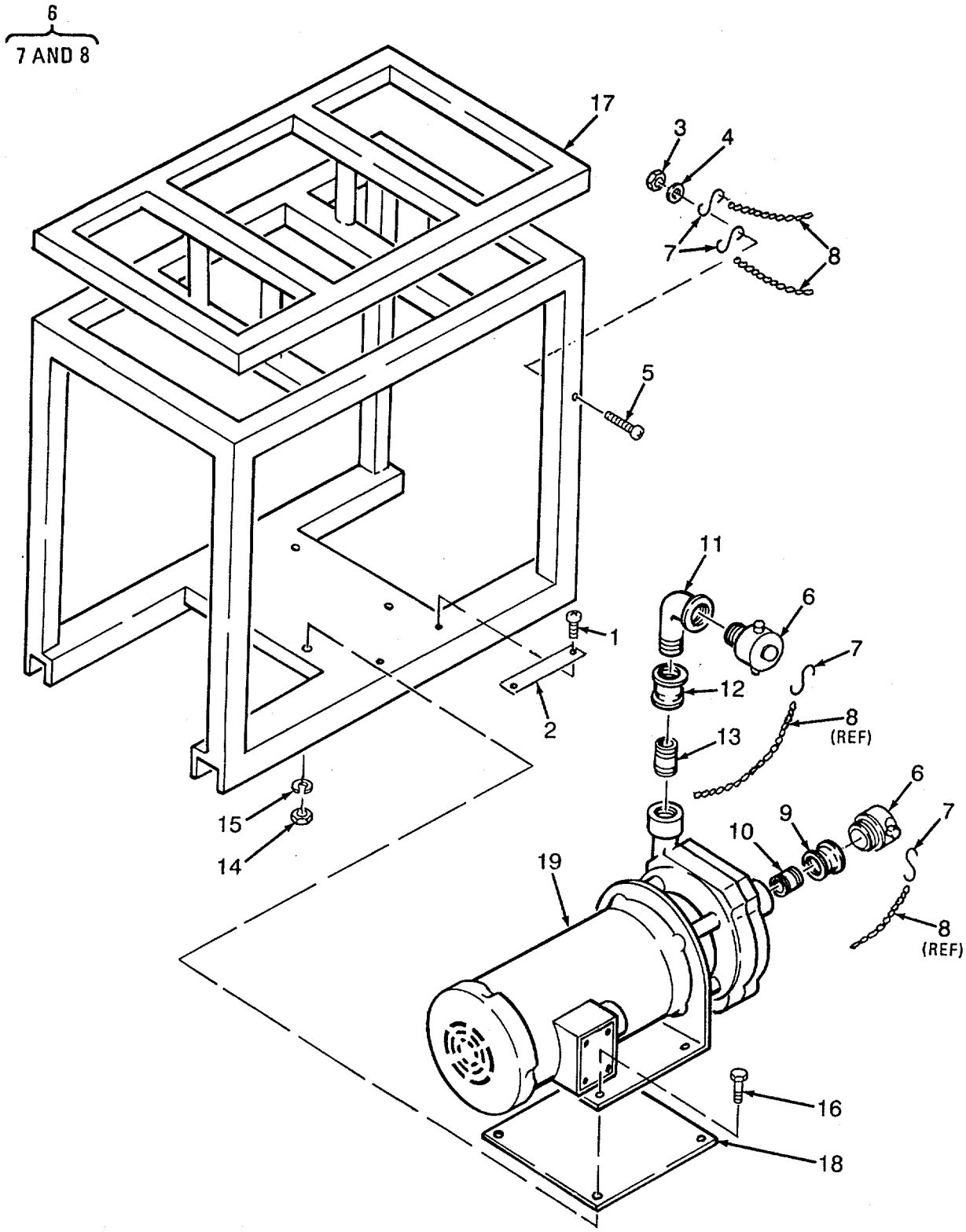

Figure 15. Distribution Centrifugal Pump and Frame Assembly

(1) ITEM NO	(2) SMR CODE QTY	(3) CAGEC	(4) PART NUMBER	(5) DESCRIPTION AND USABLE ON CODES(UOC)	(6)
				GROUP 04 DISTRIBUTION PUMP ASSEMBLY	
				FIG. 15 DISTRIBUTION CENTRIFUGAL PUMP AND FRAME ASSEMBLY	
1	PAOZZ	96906	MS21318-20	..SCREW, DRIVE	2
2	XDOZZ	97403	13222E5279-28	..PLATE, INFORMATION DISTRIBUTION PUMP	1
3	PAOZZ	96906	MS17830-3C	..NUT, SELF-LOCKING, HE	1
4	PAOZZ	96906	MS15795-842	..WASHER, FLAT	1
5	PAOZZ	96906	MS51957-70	..SCREW, MACHINE	1
6	PAOZZ	97403	13221E8279-1	..PLUG, HOSE	2
7	PAOZZ	96906	MS87006-32	...HOOK, CHAIN, S	2
8	MOOZZ	19099	YCH0105X015LYB	...CHAIN MAKE FROM BULK P/N 3603T904	1
9	PAOZZ	96906	MS14306-7U	..REDUCER, PIPE	1
10	PAOZZ	96906	MS51846-115	..NIPPLE, PIPE	1
11	PACZZ	96906	MS51952-8	..ELBOW, PIPE	1
12	PAOZZ	96906	MS14306-7V	..REDUCER, PIPE	1
13	PAOZZ	39428	4568K222	..NIPPLE, PIPE	1
14	PAOZZ	96906	MS51971-3	..NUT, PLAIN, HEXAGON	4
15	PAOZZ	96906	MS35338-141	..WASHER, LOCK	4
16	PAOZZ	96906	MS35307-363	..SCREW, CAP, HEXAGON H	4
17	XDOZZ	97403	13222E5251-2	..FRAME, PUMP	1
18	XDOZZ	97403	13222E5266	..PLATE, SPACER	1
19	PBOFF	03306	1-1/4X1KC2BRZ	..PUMP, CENTRIFUGAL	1

END OF FIGURE

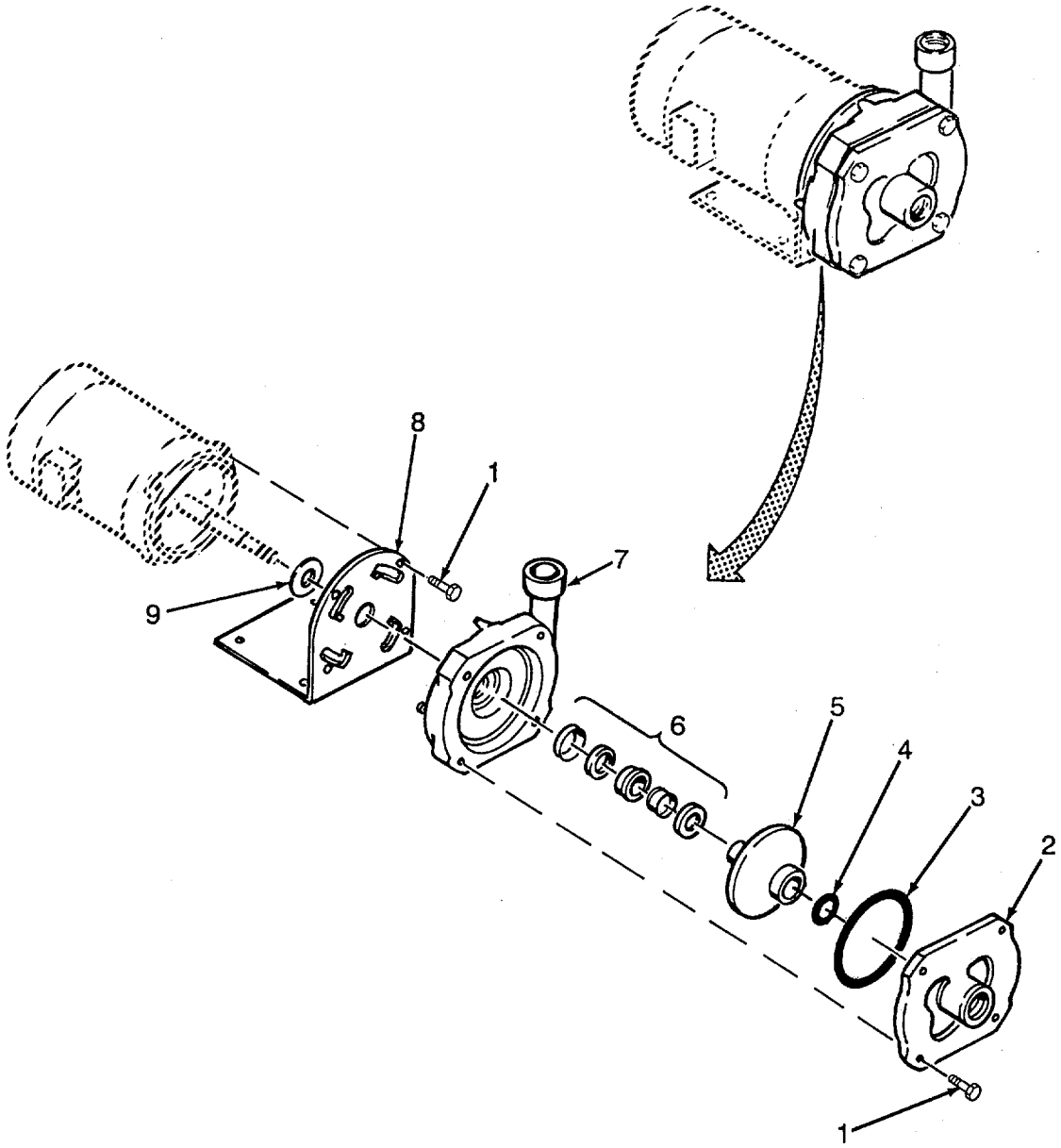

Figure 16. Distribution Centrifugal Pump

(1) ITEM NO	(2) SMR CODE QTY	(3) CAGEC	(4) PART NUMBER	(5) DESCRIPTION AND USABLE ON CODES(UOC)	(6)
				GROUP 04 DISTRIBUTION PUMP ASSEMBLY	
				FIG. 16 DISTRIBUTION CENTRIFUGAL PUMP	
1	XDFZZ	03306	500-771	...SCREW, CAP 3/8-16X1 STAINLESS STEEL	8
2	XDFZZ	03306	48-3-0167-01	...COVER	1
3	PAFZZ	03306	500-398	...GASKET PART OF KIT P/N 48-1-0697	1
4	KFFZZ	03306	511-004	...PACKING, PREFORMED BUNA PART OF KIT P/N 48-1-0697	1
5	XDFZZ	03306	48-2-0299-10	...IMPELLER	1
6	KFFZZ	03306	500-976	...SEAL, MECHANICAL PART OF KIT P/N 4B-1-0697	1
7	XAFZZ	03306	48-4-0120-01	...CASING	1
8	XDFZZ	03306	48-3-0159-01	...BRACKET, K-2	1
9	PBFZZ	03306	500-422	...DEFLECTOR, DIRT AND 19/32 ID	1
	PAFZZ	03306	48-1-0697	...KIT, SEAL	1
				GASKET (1) 16-3	
				PACKING, PREFORMED (1) 16-4	
				SEAL, MECHANICAL (1) 16-6	

END OF FIGURE

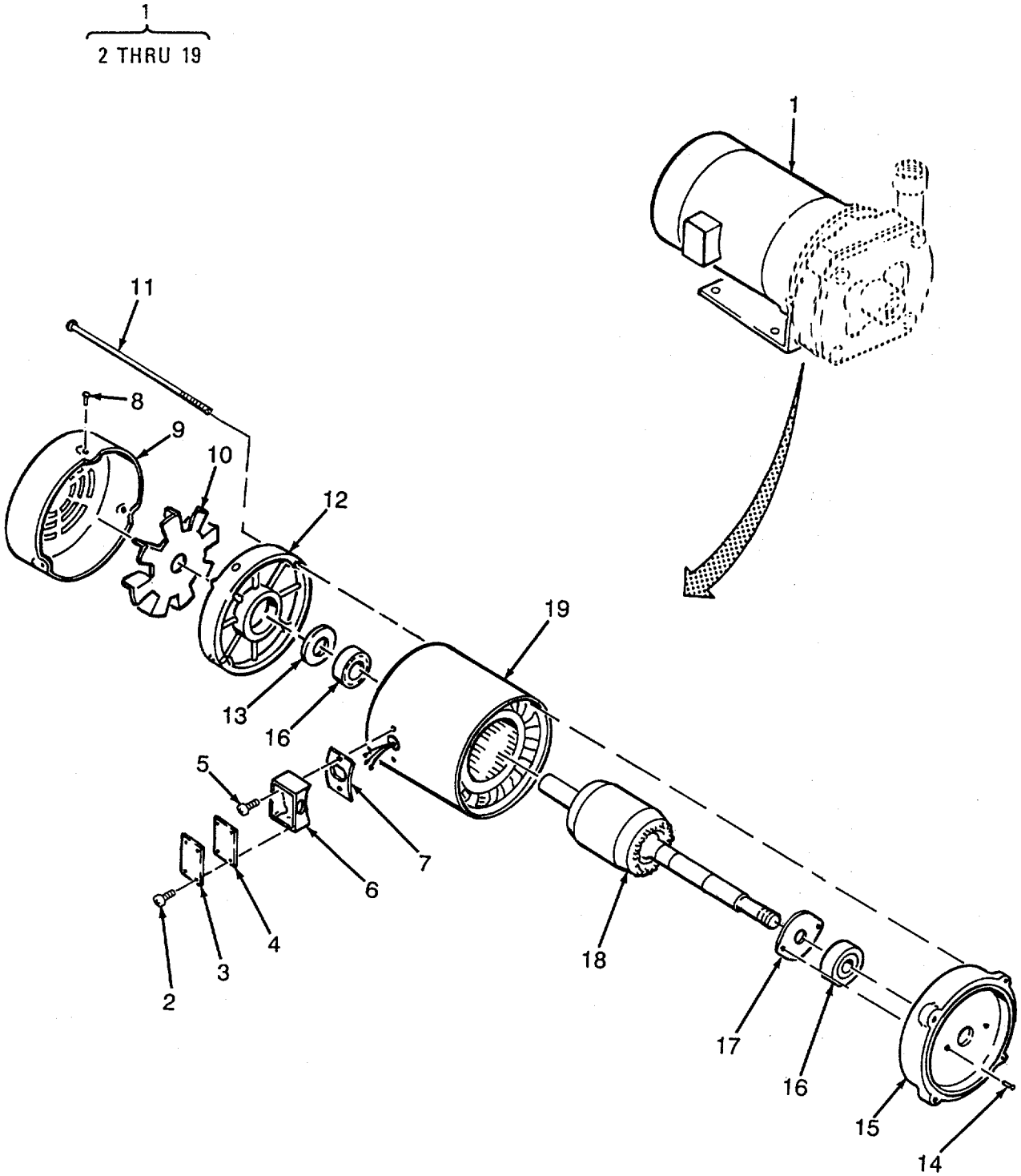

Figure 17. Distribution Centrifugal Pump Electrical Motor

(1) ITEM NO	(2) SMR CODE QTY	(3) CAGEC	(4) PART NUMBER	(5) DESCRIPTION AND USABLE ON CODES(UOC)	(6)
				GROUP 04 DISTRIBUTION PUMP ASSEMBLY	
				FIG. 17 DISTRIBUTION CENTRIFUGAL PUMP ELECTRICAL MOTOR	
1	PAFFF	05472	34-5104-3226	...MOTOR, ELECTRIC	1
2	XDOZZ	05472	51XT0832A07	....SCREW 8-32 X 7/16	4
3	XDOZZ	05472	34CB4500	....COVER, CONDUIT BOX	1
4	PBOZZ	05472	34GS1001	....GASKET	1
5	XAFZZ	05472	51XB1016A07	....SCREW.HEX 10-16 X 7/16	2
6	XAFZZ	0547Z	34CB1000A01	....BOX.CONDUIT	1
7	XAFZZ	05472	34GS1000	....GASKET, CONDUIT BOX	1
8	XDFZZ	05472	11XF1032A06	....SCREW, HEX 10-32 X 3/8	3
9	XAFZZ	05472	34FH4001A05	....COVER, FAN	1
10	XDFZZ	05472	34FN5002A01	....FAN ASSY, EXT	1
11	XDFZZ	05472	HA3100A15	....BOLT, MACHINE 10-32 X 8.375	4
12	XAFZZ	05472	34EP3102A01	....ENDPLATE	1
13	XDFZZ	05472	HW5100A03	....BEARING.WASHER.THRU	1
14	XDFZZ	05472	51XN1032A20	....SCREW 10-32 X 1.25	2
15	XAFZZ	05472	34EP3300A24	....ENDPLATE	1
16	PAFZZ	05472	BG6203C03	....BEARING.BALL.ANNULA	2
17	XDFZZ	05472	RB4003A01	....RETAINER, BEARING	1
18	XAFZZ	05472	34RA10032020A01	....ROTOR ASSY	1
19	XAFZZ	05472	34SA00053226A01	....STATOR ASSY	1

END OF FIGURE

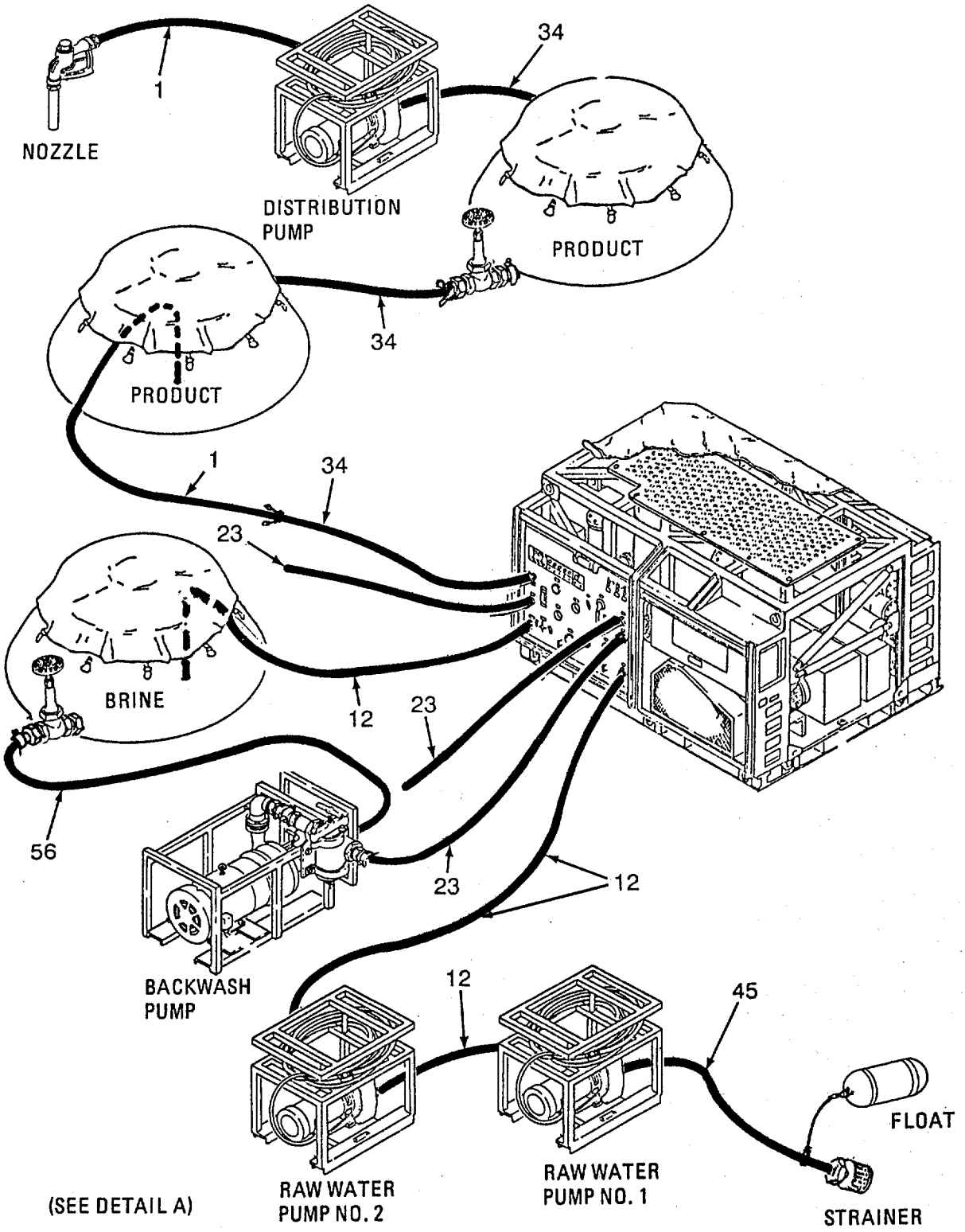

Figure 18. Hose Assemblies (Sheet 1 of 4)

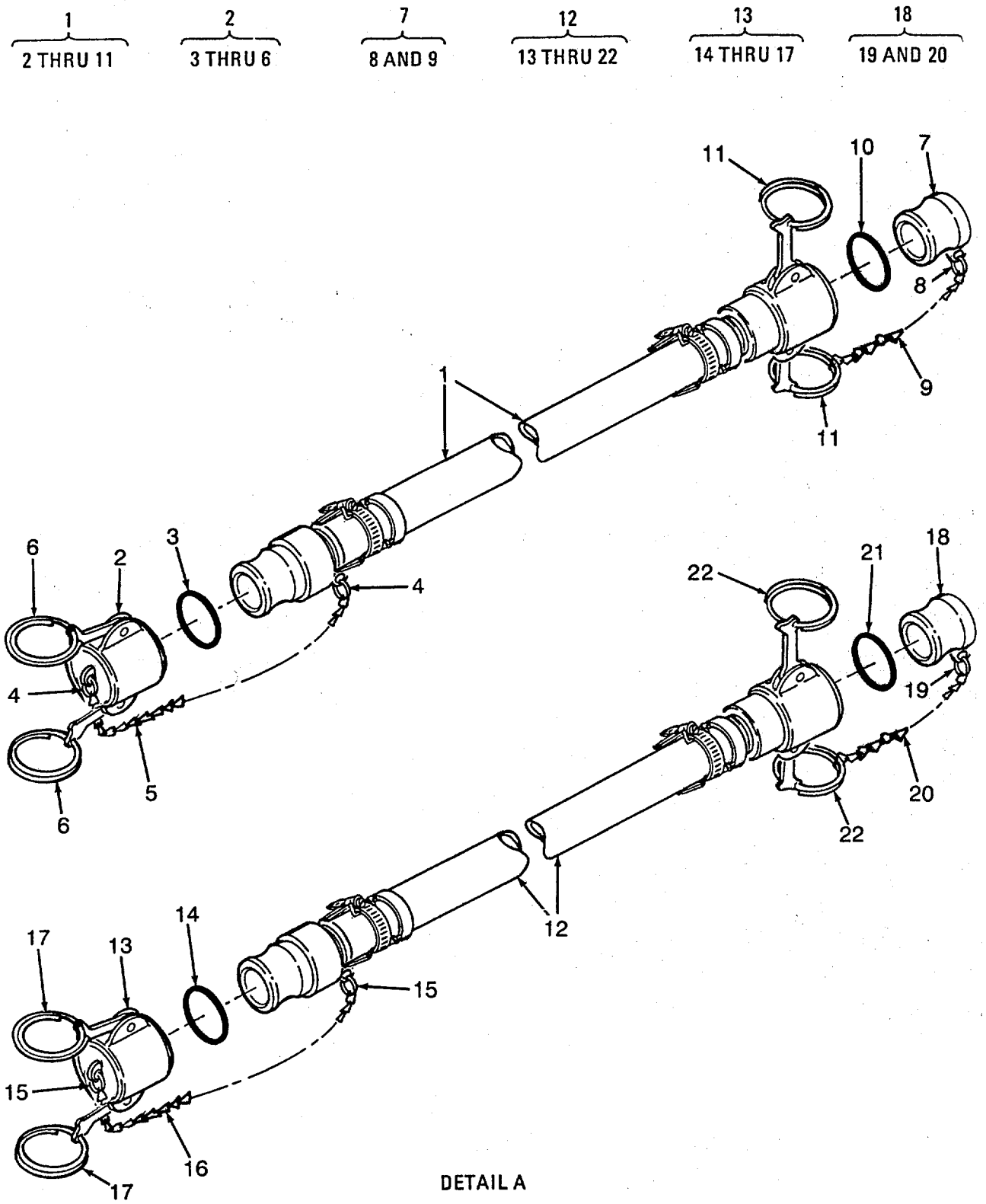

Figure 18. Hose Assemblies (Sheet 2 of 4)

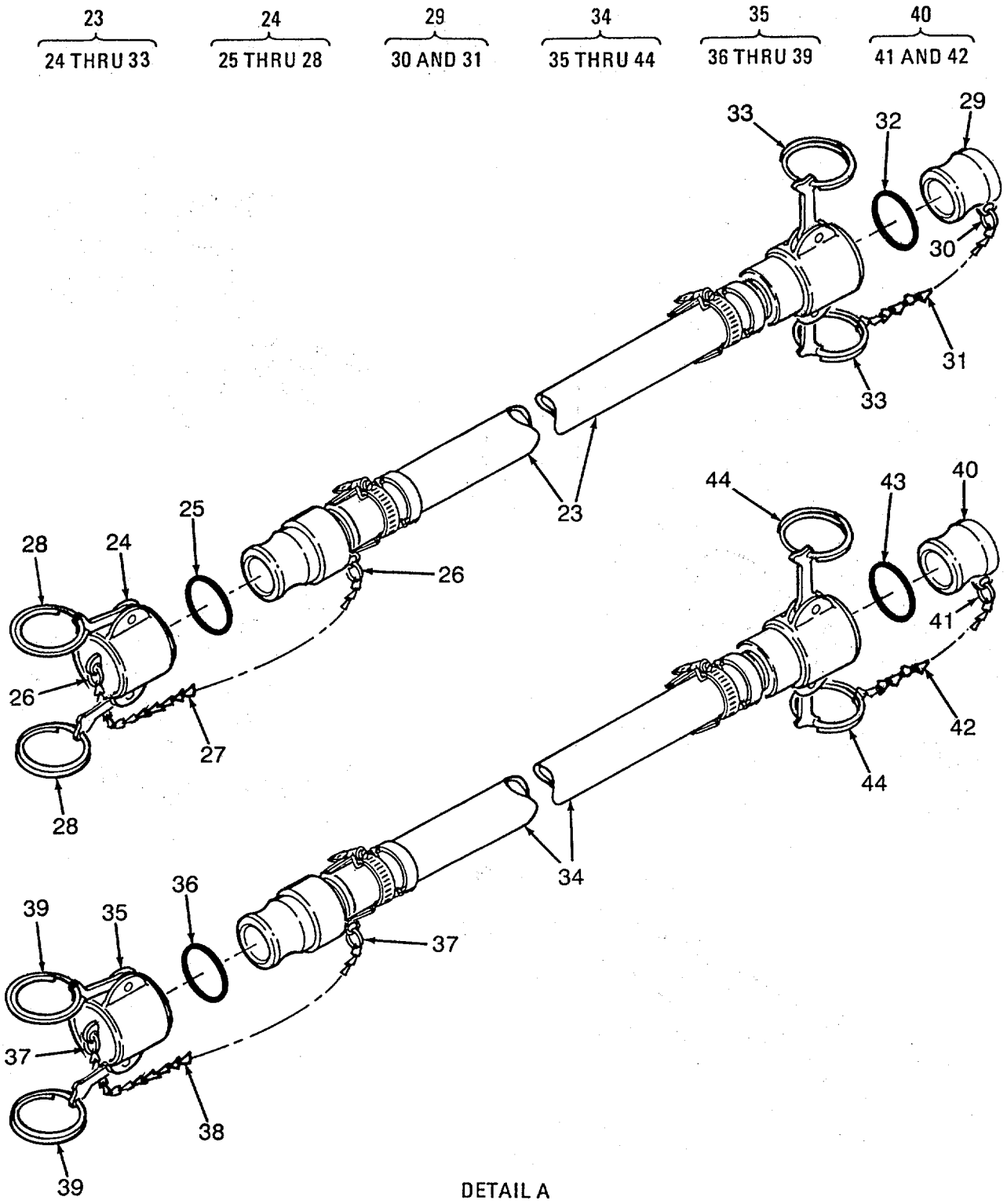

Figure 18. Hose Assemblies (Sheet 3 of 4)

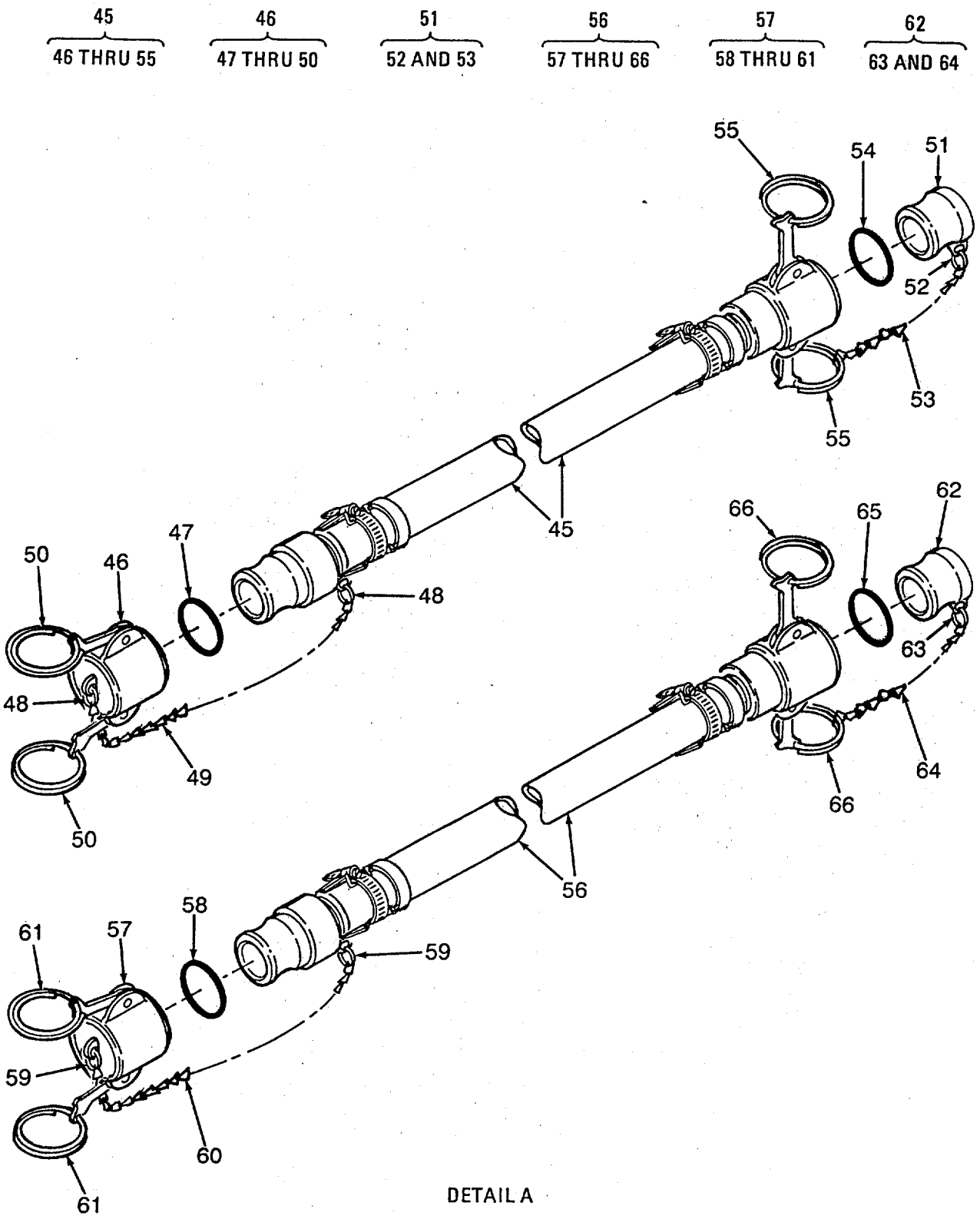

Figure 8. Hose Assemblies (Sheet 4 of 4)

(1) ITEM NO	(2) SMR CODE QTY	(3) CAGEC	(4) PART NUMBER	(5) DESCRIPTION AND USABLE ON CODES(UOC)	(6)
				GROUP 05 HOSE ASSEMBLIES	
				FIG. 18 HOSE ASSEMBLIES	
1	PAOOO	97403	13229E3795-1	..HOSE ASSY, DISCHARGE FABRIC, 1 1/2 X 25 FT. POTABLE WATER USE ONLY	2
2	PAOZZ	96906	MS27028-10	...CAP, QUICK DISCONNEC	1
3	PAOZZ	96906	MS27030-5	....GASKET	1
4	PAOZZ	39428	90177A221	....RING, RETAINING	2
5	MOOZZ	19099	394283607T57	....CHAIN, SASH, BRONZE CUT TO LENGTH FROM BULK P/N 3607T57	1
6	PAOZZ	39428	90177A224	....HOLDER, KEY	2
7	PAOZZ	96906	MS27029-10	...PLUG, QUICK DISCONNE	1
8	PAOZZ	39428	90177A221	....RING, RETAINING	1
9	MOOZZ	19099	394283607T57	....CHAIN, SASH, BRONZ E CUT TO LENGTH FROM BULK P/N 3607T57	1
10	PAOZZ	96906	MS27030-5	....GASKET	1
11	PAOZZ	39428	90177A224	...HOLDER, KEY	2
12	PAOOO	97403	13229E3795-2	..HOSE, ASSY, DISCHARGE FABRIC, 1-1/2 X 25 FT. NON-POTABLE WATER USE	4
13	PAOZZ	96906	MS27028-10	...CAP, QUICK DISCONNEC	1
14	PAOZZ	96906	MS27030-5	...GASKET	1
15	PAOZZ	39428	90177A221	....RING, RETAINING	2
16	MOOZZ	19099	394283607T57	....CHAIN, SASH, BRONZE CUT TO LENGTH FROM BULK P/N 3607T57	1
17	PAOZZ	39428	90177A224	....HOLDER, KEY	2
1B	PAOZZ	96906	MS27029-10	...PLUG, QUICK DISCONNE	1
19	PAOZZ	39428	90177A221	....RING, RETAINING	1
20	MOOZZ	19099	394283607T57	....CHAIN, SASH, BRONZE CUT TO LENGTH FROM BULK P/N 3607T57	1
21	PAOZZ	96906	MS27030-5	...GASKET	1
22	PAOZZ	39428	90177A224	...HOLDER, KEY	2
23	PAOZZ	97403	13229E3795-3	..HOSE, ASSY DISCHARGE FABRIC, 2 IN.X25 FT LENGTH, NON-POTABLE WATER USE ONLY	3
24	PAOZZ	96906	MS27028-12	...LOCKING CAP, HOSE	1
25	PAOZZ	96906	MS27030-6	....GASKET	1
26	PAOZZ	39428	90177A221	....RING, RETAINING	2
27	MOOZZ	19099	394283607T57	....CHAIN, SASH, BRONZE CUT TO LENGTH FROM BULKP/N 3607T57	1
28	PAOZZ	39428	90177A224	....HOLDER, KEY	2
29	PAOZZ	96906	MS27029-12	...PLUG, PROTECTIYE, DUS	1
30	PAOZZ	39428	90177A221	....RING, RETAINING	1
31	MOOZZ	19099	394283607T57	....CHAIN, SASH, BRONZE CUT TO LENGTH FROM BULK P/N 3607T57	1
32	PAOZZ	96906	MS27030-6	...GASKET	1
33	PAOZZ	39428	90177A224	...HOLDER, KEY	2
34	PAOOO	97403	13229E3794-1	...HOSE ASSY SUCTION 1-1/2 X 10 FT. POTABLE WATER USE	4
35	PAOZZ	96906	MS27028-10	...CAP, QUICK DISCONNEC	1
36	PAOZZ	96906	MS27030-5	....GASKET	1
37	PAOZZ	39428	90177A221	....RING, RETAINING	2

(1) ITEM NO	(2) SMR CODE QTY	(3) CAGEC	(4) PART NUMBER	(5) DESCRIPTION AND USABLE ON CODES(UOC)	(6)
38	MOOZZ	19099	394283607T57	....CHAIN, SASH, BRONZE CUT TO LENGTH FROM BULK P/N 3607T57	1
39	PAOZZ	39428	90177A224	....HOLDER, KEY	2
40	PAOZZ	96906	MS27029-10	...PLUG, QUICK DISCONNE	1
41	PAOZZ	39428	90177A221	....RING, RETAINING	1
42	MOOZZ	19099	394283607T57	....CHAIN, SASH, BRONZE CUT TO LENGTH FROM BULK P/N 3607T57	1
43	PAOZZ	96906	MS27030-5	...GASKET	1
44	PAOZZ	39428	90177A224	...HOLDER, KEY	2
45	PAOOO	97403	13229E3794-2	..HOSE, ASSY SUCTION 1-1/2 X 10 FT. NON-POTABLE WATER USE ONLY	5
46	PAOZZ	96906	MS27028-10	...CAP, QUICK DISCONNEC	1
47	PAOZZ	96906	MS27030-5	....GASKET	1
48	PAOZZ	39428	90177A221	....RING, RETAINING	2
49	MOOZZ	19099	394283607T57	....CHAIN, SASH, BRONZE CUT TO LENGTH FROM BULK P/N 3607T57	1
50	PAOZZ	39428	90177A224	....HOLDER, KEY	2
51	PAOZZ	96906	MS27029-10	...PLUG, QUICK DISCONNE	1
52	PAOZZ	39428	90177A221	....RING, RETAINING	1
53	MOOZZ	19099	394283607T57	....CHAIN, SASH, BRONZE CUT TO LENGTH FROM BULK P/N 3607T57	1
54	PAOZZ	96906	MS27030-5	...GASKET	1
55	PAOZZ	39428	90177A224	...HOLDER, KEY	2
56	PAOOO	97403	13229E3794-3	..HOSE, ASSY SUCTION 2 IN., 10 FT. LENGTH NON-POTABLE WATER USE ONLY	3
57	PAOZZ	96906	MS27082-12	...COUPLING, DUST CAP	1
58	PAOZZ	96906	MS27030-6	....GASKET	1
59	PAOZZ	39428	90177A221	....RING, RETAINING	2
60	MOOZZ	19099	394283607T57	....CHAIN, SASH, BRONZE CUT TO LENGTH FROM BULK P/N 3607T57	1
61	PAOZZ	39428	90177A224	....HOLDER, KEY	2
62	PAOZZ	96906	MS27029-12	...PLUG, PROTECTIVE, DUS	1
63	PAOZZ	39428	90177A221	....RING, RETAINING	1
64	MOOZZ	19099	394283607T57	....CHAIN, SASH, BRONZE CUT TO LENGTH FROM BULK P/N 3607T57	1
65	PAOZZ	96906	MS27030-6	...GASKET	1
66	PAOZZ	39428	90177A224	...HOLDER, KEY	2

END OF FIGURE

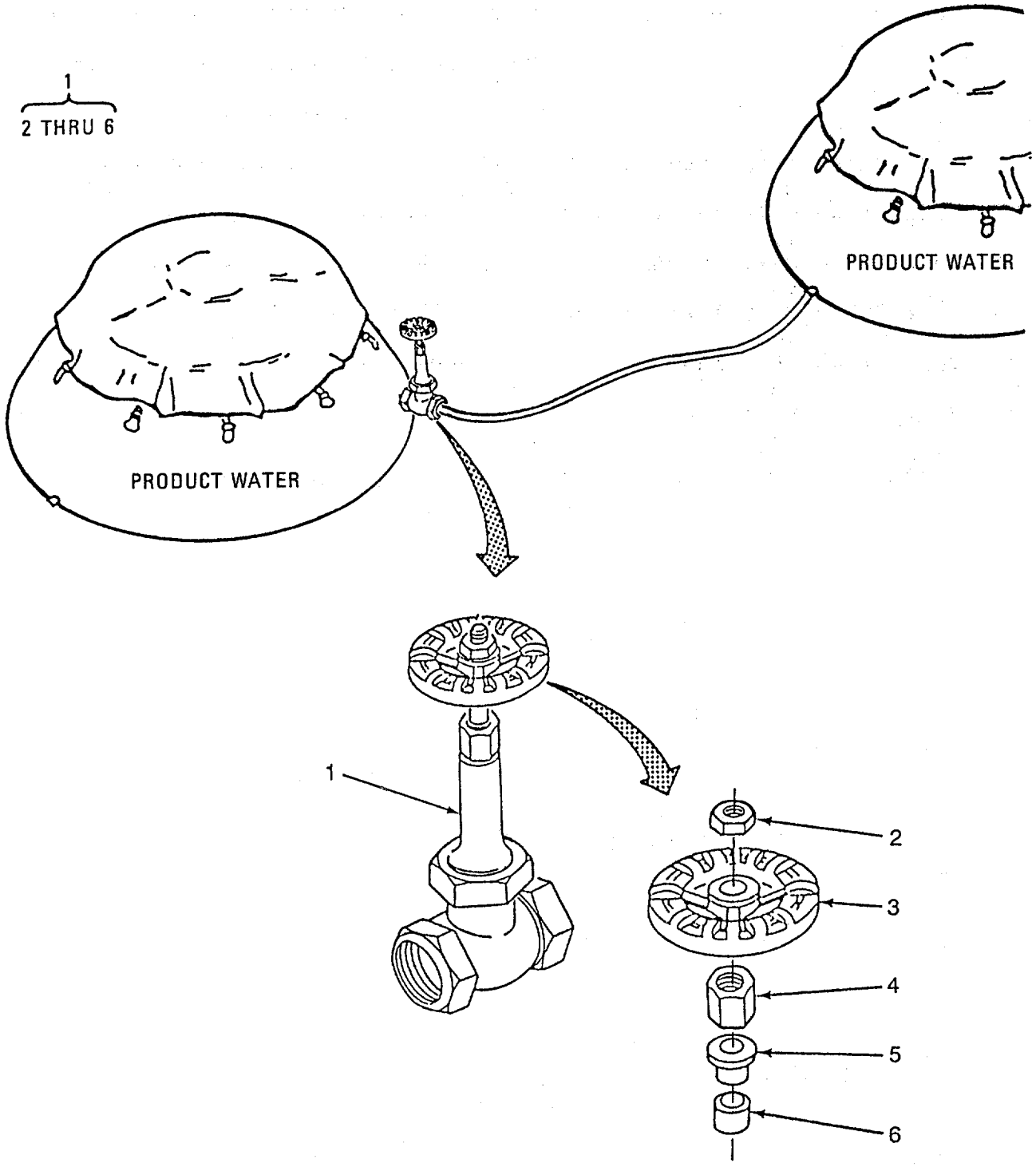

Figure 19. 1-1/2 Inch Gate Valve

(1) ITEM NO	(2) SMR CODE QTY	(3) CAGEC	(4) PART NUMBER	(5) DESCRIPTION AND USABLE ON CODES(UOC)	(6)
				GROUP 06 GATE VALVES AND FITTINGS	
				FIG. 19 1-1/2 INCH GATE VALVE	
1	PAOOO	76364	GATE 148-1-1/2 IN.	..VALVE, GATE TYPE 2.CLASS 125, BRONZE	1
2	XDOZZ	76364	GATE 148-7 1-1/2 IN	....NUT, WHEEL	1
3	XDOZZ	76364	GATE 148-8 1-1/2 IN	...HANDWHEEL	1
4	XDOZZ	76364	GATE 148-5 1-1/2 IN	...NUT, STUFF	1
5	XDOZZ	76364	GATE 148-6 1-1/2 IN	...GLAND	1
6	PAOZZ	76364	GATE 148-9 1-1/2 IN	...PACKING	1

END OF FIGURE

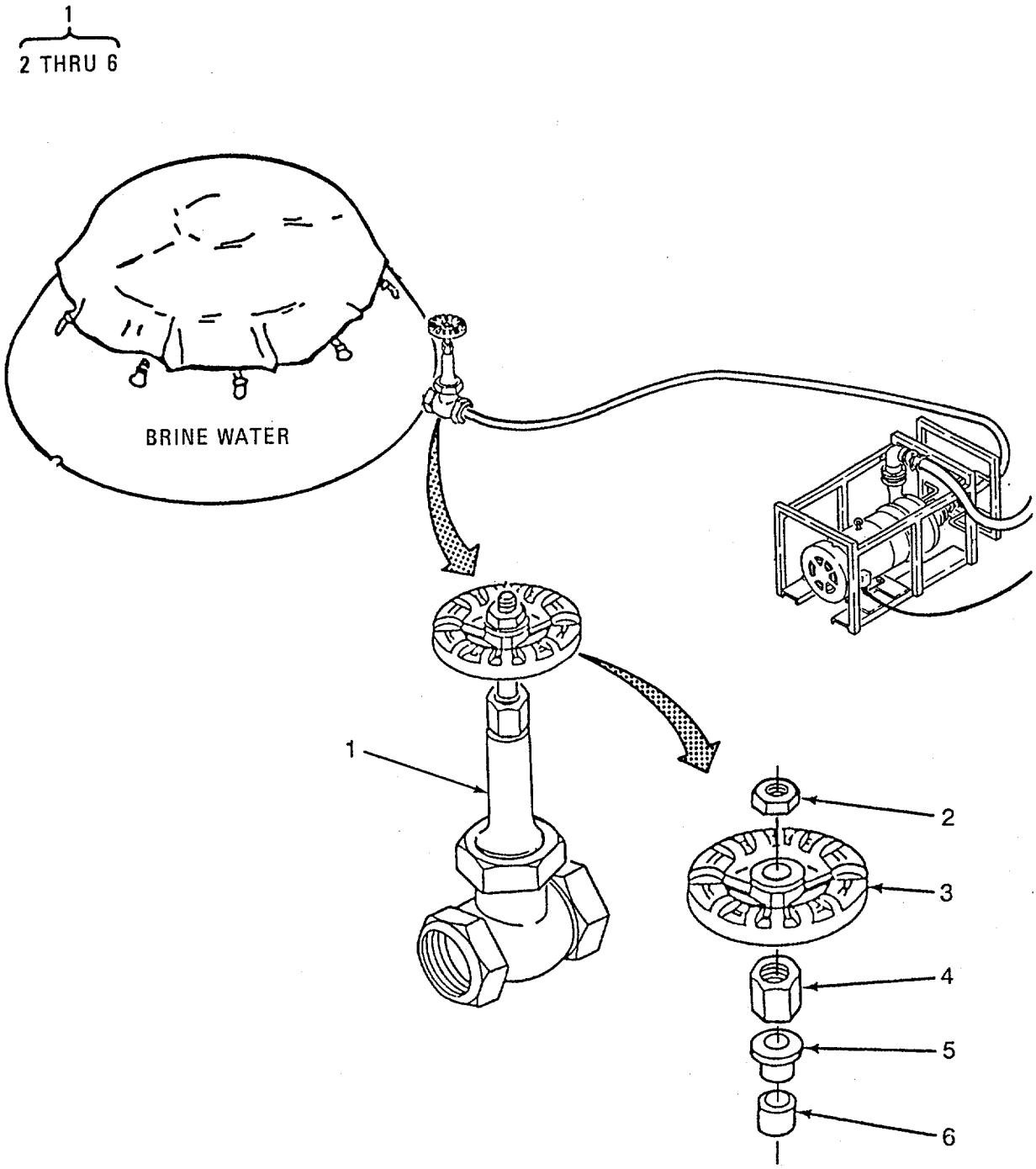

Figure 20. 2 Inch Gate Valve

(1) ITEM NO	(2) SMR CODE QTY	(3) CAGEC	(4) PART NUMBER	(5) DESCRIPTION AND USABLE ON CODES(UOC)	(6)
				GROUP 06 GATE VALVES AND FITTINGS	
				FIG. 20 2 INCH GATE VALVE	
1	PAOOO	76364	GATE 148-2 IN	..VALVE, GATE TYPE 2.CLASS 125..... BRONZE	1
2	XDOZZ	76364	GATE 148-7 2IN .	...NUT, WHEEL.....	1
3	XDOZZ	76364	GATE 148-8 2IN .	...HANDWHEEL	1
4	XDOZZ	76364	GATE 148-5 2IN	...NUT.STUFF	1
5	XDOZZ	76364	GATE 148-6 2IN	...GLAND.....	1
6	PAOZZ	76364	GATE 148-9 2IN	...PACKING	1

END OF FIGURE

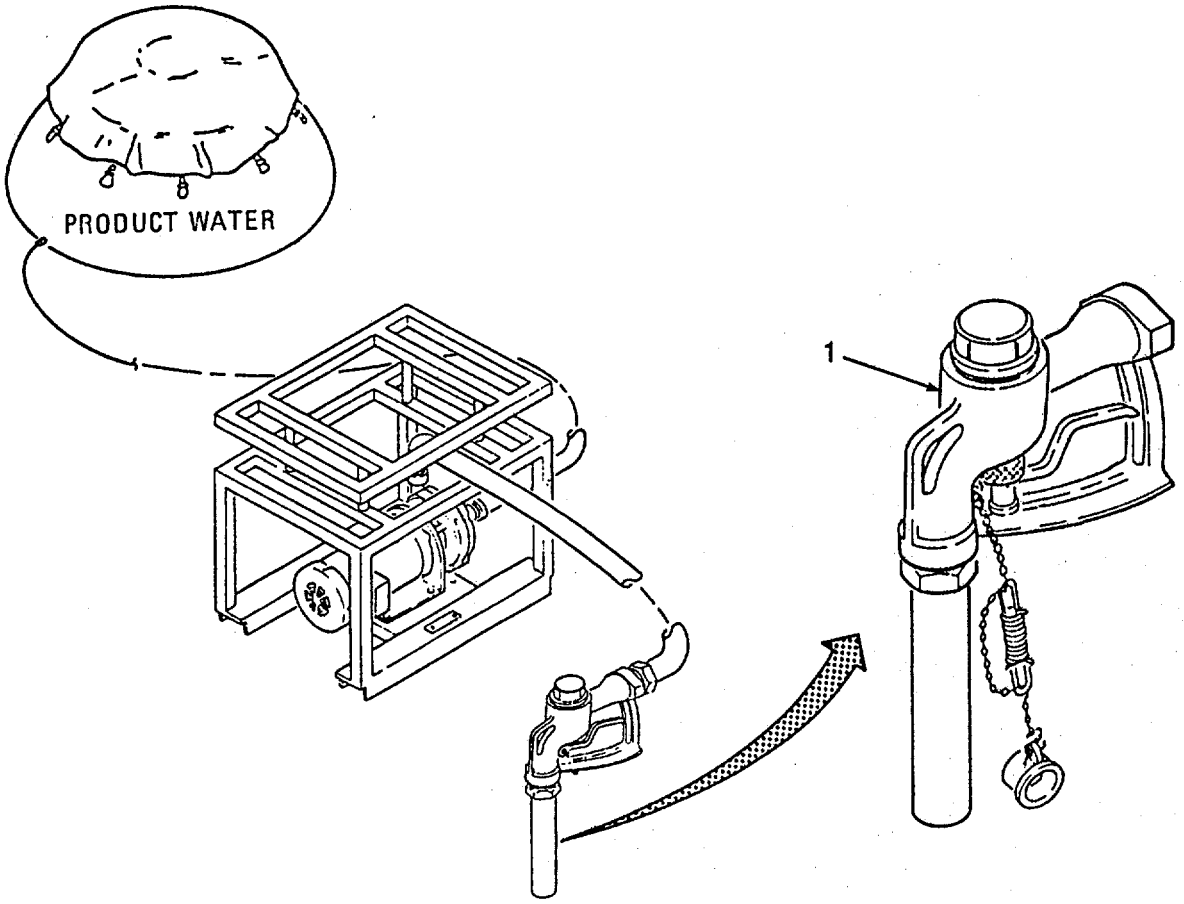

Figure 21. Nozzle

(1) ITEM NO	(2) SMR CODE	(3) CAGEC	(4) PART NUMBER	(5) DESCRIPTION AND USABLE ON CODES(UOC)	(6) QTY
				GROUP 06 GATE VALVES AND FITTINGS	
				FIG. 21 NOZZLE	
1	PAOZZ	81349	MIL-N-52110TYPEI SIZE2	NOZZLE, WATER 1-112 NPT	1

END OF FIGURE

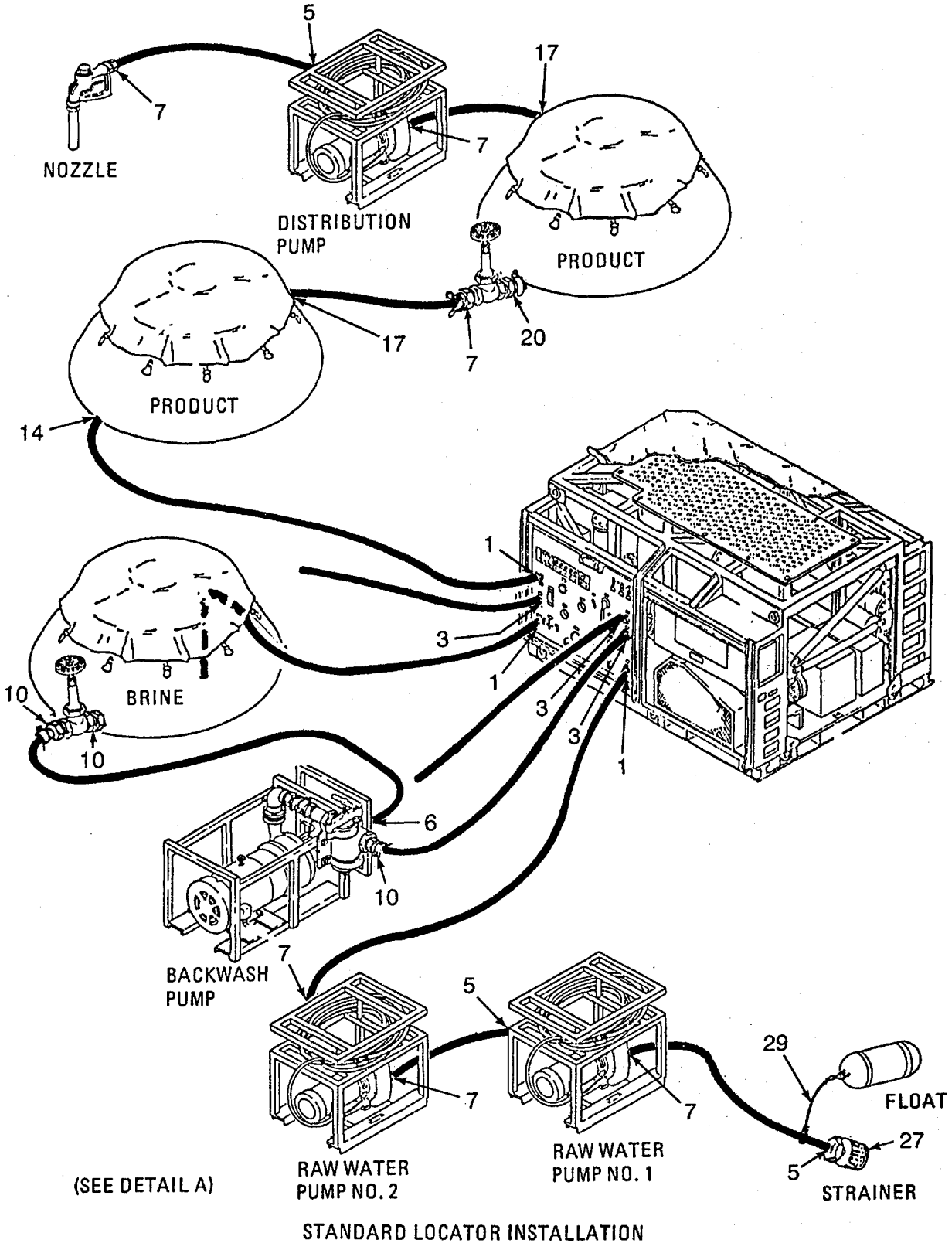

Figure 22. Fittings, Adapters, and Coupling, etc. (Sheet 1 of 3)

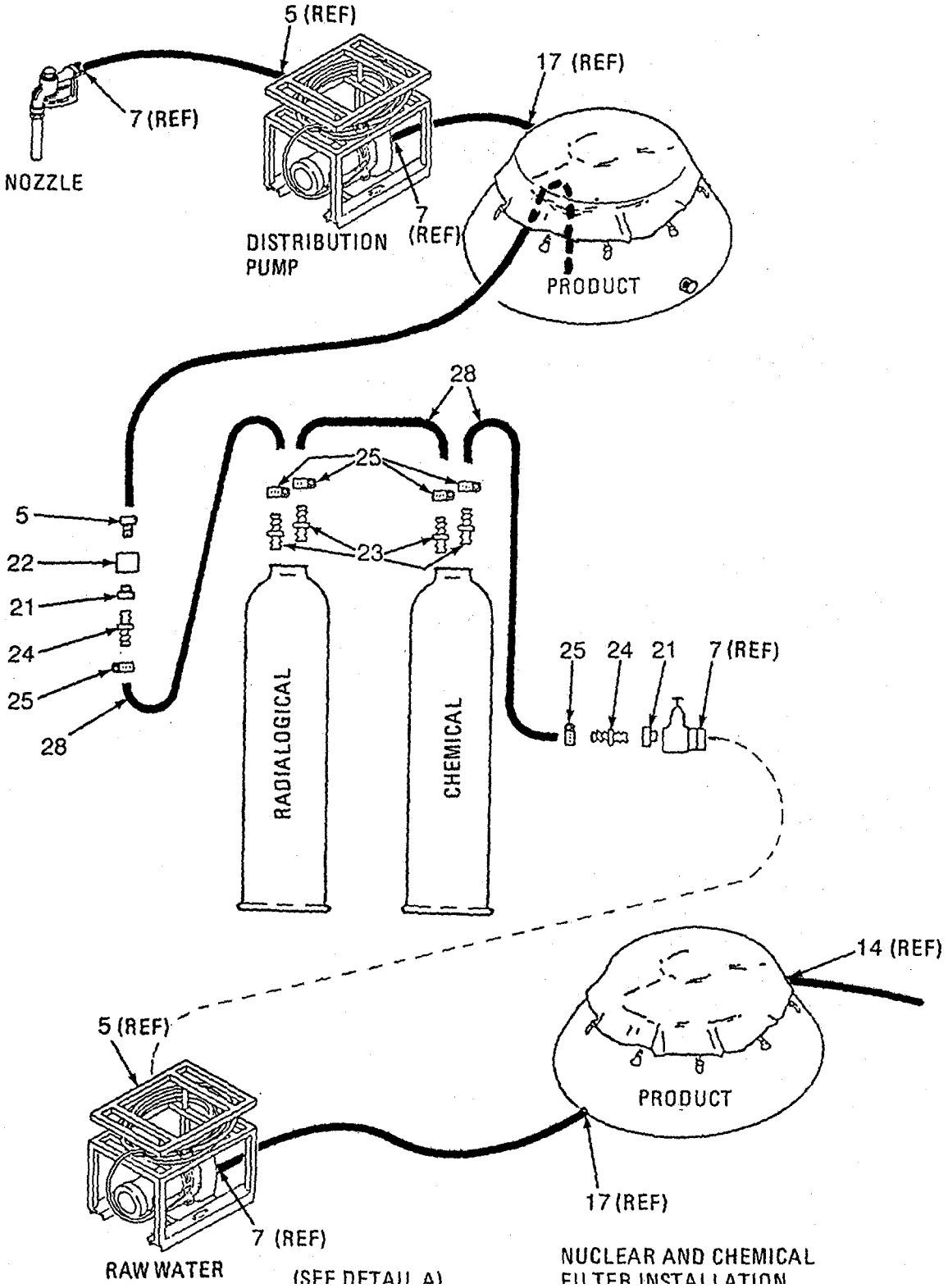

Figure 22. Fittings, Adapters, and Coupling, etc. (Sheet 2 of 3)

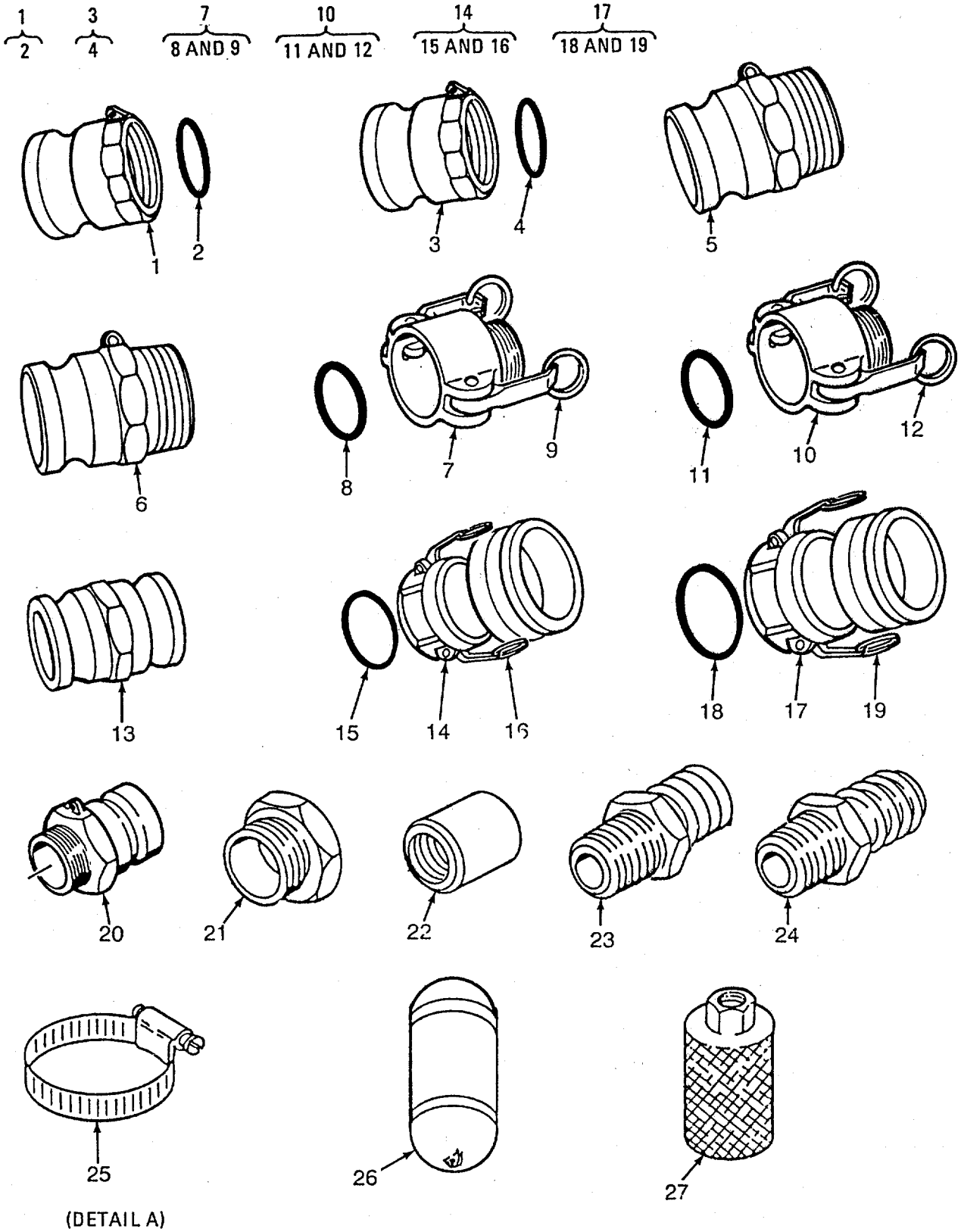

Figure 22. Fittings, Adapters, and Coupling, etc. (Sheet 3 of 3)

(1) ITEM NO	(2) SMR CODE	(3) CAGEC	(4) PART NUMBER	(5) DESCRIPTION AND USABLE ON CODES(UOC)	(6) QTY
				GROUP 06 GATE VALVES AND FITTINGS	
				FIG. 22 FITTINGS, ADAPTERS, AND COUPLING	
1	PAOZZ	96906	MS70095-3	..COUPLING HALF, QUICK 1-1/2 IN. FEMALE THREAD X 1-1/2 IN. MALE CAMLOCK	3
2	PAOZZ	96906	MS27030-5	...GASKET	1
3	PAOZZ	96906	MS70095-4	..COUPLING HALFJQUICK 2 IN. FEMALE X 2 IN. MALE CAM-LOCK	3
4	PAOZZ	96906	MS27030-6	...GASKET	1
5	PAOZZ	96906	MS27022-10	..COUPLING HALF, QUICK 1-lf2 IN. MALE THREAD X 1-1/2 IN. MALE CAMLOCK	4
6	PAOZZ	96906	MS27022-12	..COUPLING HALF.QUICK 2 IN. MALE THREAD X 2 IN. MALE CAM-LOCK	1
7	PAOZZ	96906	MS27026-10	..COUPLING HALF, QUICK 1-1/2 IN. MALE THREAD X 1-1/2 IN. FEMALE CAMLOCK	6
8	PAOZZ	96906	MS27030-5	...GASKET	1
9	PAOZZ	39428	90177A224	...HOLDER, KEY	2
10	PAOZZ	96906	MS27026-12	..COUPLING HALF, QUICK 2 IN. MALE THREAD X 2 IN. MALE CAM-LOCK	3
11	PAOZZ	96906	MS27030-6	...GASKET	1
12	PAOZZ	39428	90177A224	...HOLDER, KEY	2
13	PAOZZ	96906	MS39352-10	..ADAPTER, MALE 4D 2 IN. X 2 IN. MALE CAM-LOCK	1
14	PAOZZ	96906	MS49000-14	..REDUCER, MALE QD 1-1/2 IN. FEMALE X 2 IN. MALE CAM-LOCK	1
15	PAOZZ	96906	MS27030-5	...GASKET	1
16	PAOZZ	39428	90177A224	...HOLDER.KEY	2
17	PAOZZ	96906	MS49000-6	..REDUCER. FEMALE QD 2 IN. FEMALE X 1 1/2 IN. MALE CAM-LOCK	2
18	PAOZZ	96906	MS27030-6	...GASKET	1
19	PAOZZ	39428	90177A224	...HOLDER, KEY	2
20	PAOZZ	96906	MS49001-10	..REDUCER. FEMALE QD 1-1/2 IN. MALE THREAD X 2 IN. MALE CAM-LOCK	1
21	PAOZZ	96906	MS14315-20Y	..BUSHING.PIPE 3/4 IN. X 1-1/2 IN. OD THREAD	2
22	PAOZZ	97403	13218E0439-8	..COUPLING9PIPE 1-1/2 IN. ID NPT	1
23	PAOZZ	97403	13228E3312-14	..ADAPTER.STRAIGHT 1/2 NPT X 3/4 HOSE	4
24	PAOZZ	97403	13228E3312-16	..ADAPTER, STRAIGHT 3/4 NPT X 3/4 HOSE	2
25	PAOZZ	96906	MS35842-11	..CLAMP.HOSE	6
26	PAOZZ	81348	MIL-W-52482FIG4	..FLOAT	1
27	PAOZZ	97403	13228E8307	..STRAINER, SUCTION	1
28	MOOZZ	19099	SC-4610-97-CL-E1 6-92	..TUBING, FLEXIBLE MAKE FROM BULK P./ N 13221E8367-2, 80 IN	3
29	MOOZZ	19099	SC-4610-97-CL-E1 6-73	..ROPE, COTTON CUT 3 FT. FROM BULK P/N T-R-605, TYM. CL1 3/4 IN.	

(1) ITEM NO	(2) SMR CODE	(3) CAGEC	(4) PART NUMBER	(5) DESCRIPTION AND USABLE ON CODES(UOC)	(6) QTY
				CIRCUMFERENCE	
				END OF FIGURE	

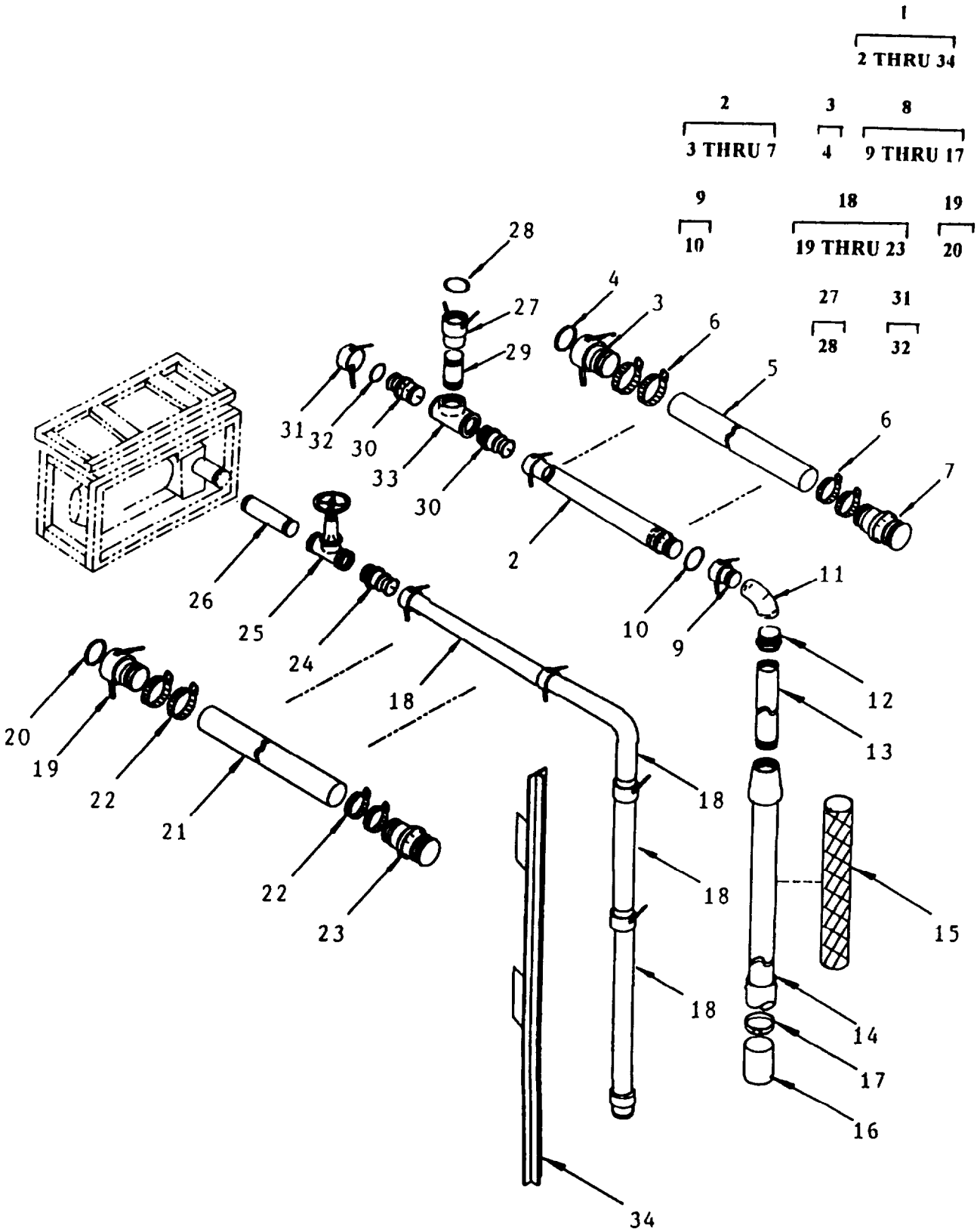

Figure 22A. Ocean Intake Structure
Models H-9518-1, H-9518-2, and H-9518-3 only

(1) ITEM NO	(2) SMR CODE	(3) CAGEC	(4) PART NUMBER	(5) DESCRIPTION AND USABLE ON CODES(UOC)	(6) QTY
				GROUP 06 GATE VALVES AND FITTINGS	
				FIG. 22A OCEAN INTAKE STRUCTURE	
1	PDOOO	97403	13229E0510	..ROWPU OCEAN INTAKE STRUCTURE RAW WATER PUMP SYSTEM UOC:FMQ,FMR,FMS	
2	PDOOO	97403	13229E0509-1	...HOSE ASSEMBLY UOC:FMQ,FMR,FMS	2
3	PAOZZ	96906	MS27025-12	....COUPLING HALF,QUICK,FEMALE,CAM-LOCK X 2 IN. HOSE SHANK UOC:FMQ,FMR,FMS	1
4	PAOZZ	96906	MS27030-6	.....GASKET UOC:FMQ,FMR,FMS	1
5	MOOOO	97403	13229E0523-2	....HOSE,SUCTION (2 IN. SIZE, 120 IN. L)MAKE FROM BULK P/N 43-0364-42 UOC:FMQ,FMR,FMS	
6	PAOZZ	01276	FF9311-36	....CLAMP,HOSE,1-13/16 TO 2-3/4 ID CRES UOC:FMQ,FMR,FMS	4
7	PAOZZ	96906	MS27021-12	....COUPLING HALF,QD,2 IN. MALE CAM-LOCK X 2 IN. HOSE SHANK UOC:FMQ,FMR,FMS	1
8	PDOOO	97403	13229E0512	...WELLPOINT ASSEMBLY UOC:FMQ,FMR,FMS	2
9	PAOZZ	96906	MS27026-12	....COUPLING HALF,QUICK,CAM-LOCK,MALE,HOSE SHANK 2 IN UOC:FMQ,FMR,FMS	1
10	PAOZZ	96906	MS27030-6	.....GASKET UOC:FMQ,FMR,FMS	1
11	PAOZZ	96906	MS51845-9	....ELBOW,PIPE 90 DEG 2 IN UOC:FMQ,FMR,FMS	1
12	PAOZZ	96906	MS14315-22X	....BUSHING,PIPE 2 X 1-1/2 IN UOC:FMQ,FMR,FMS	1
13	XDOZZ	39428	4512K73	....TUBE,METALLIC, 1-1/2 IN. X 60 IN. LG UOC:FMQ,FMR,FMS	1
14	PBOZZ	97403	13229E0528	....WELLPOINT MODIFIED UOC:FMQ,FMR,FMS	1
15	PBOZZ	45327	RN-0530	....GUARD UOC:FMQ,FMR,FMS	1
16	XDOZZ	97403	13229E0532	....BOOT UOC:FMQ,FMR,FMS	1
17	PAOZZ	96906	MS35842-14	....CLAMP,HOSE,2-9/16 TO 3-1/2 ID CRES UOC:FMQ,FMR,FMS	1
18	PDOOO	97403	13229E0509-2	...HOSE ASSEMBLY UOC:FMQ,FMR,FMS	4
19	PAOZZ	96906	MS27025-12	....COUPLING HALF,QUICK,2 IN. FEMALE, CAM-LOCK X 2 IN. HOSE SHANK UOC:FMQ,FMR,FMS	1
20	PAOZZ	96906	MS27030-6	.....GASKET UOC:FMQ,FMR,FMS	1
21	MOOOO	97403	13229E0523-1	....HOSE,SUCTION,(2 IN. SIZE, 600 IN. L)MAKE FROM BULK P/N 43-0364-42 UOC:FMQ,FMR,FMS	1
22	PAOZZ	01276	FF9311-36	....CLAMP,HOSE,1-13/16 TO 2-3/4 ID CRES UOC:FMQ,FMR,FMS	4
23	PAOZZ	96906	MS27021-12	....COUPLING HALF,QD,2 IN. MALE CAM-LOCK X 2 IN. HOSE SHANK UOC:FMQ,FMR,FMS	1

(1) ITEM NO	(2) SMR CODE	(3) CAGEC	(4) PART NUMBER	(5) DESCRIPTION AND USABLE ON CODES(UOC)	(6) QTY
24	PAOZZ	96906	MS49001-10	...REDUCER,PIPE THREAD BY QUICK DISCONNECT, MALE, 1-1/2 X 2 UOC:FMQ,FMR,FMS	1
25	PAOZZ	59646	MSS-SP-80	...VALVE,GATE,1-1/2 NPT BRONZE UOC:FMQ,FMR,FMS	1
26	PAOZZ	96906	MS51846-144	...NIPPLE,PIPE,BRASS,1-1/2 NOM PIPE SIZE X 6 LONG UOC:FMQ,FMR,FMS	1
27	PAOZZ	96906	MS27024-12	...COUPLING HALF,QUICK 2 IN. INTERNAL THREAD X 2 IN. FEMALE CAM-LOCK UOC:FMQ,FMR,EMS	1
28	PAOZZ	96906	MS27030-6	....GASKET UOC:FMQ,FMR,FMS	1
29	PAOZZ	17330	5002-316/2	...VALVE,CHECK UOC:FMQ,FMR,FMS	1
30	PAOZZ	96906	MS27022-12	...COUPLING HALF,QUICK,2 IN. PIPE THD,MALE CAM-LOCK UOC:FMQ,FMR,FMS	2
31	PAOZZ	96906	MS27028-12	...CAP,QUICK DISCONNEC,2 IN. CAM-LOCK UOC:FMQ,FMR,FMS	1
32	PAOZZ	96906	MS27030-6	....GASKET UOC:FMQ,FMR,FMS	1
33	PAOZZ	96906	MS14305-9U	...TEE,PIPE,2 IN. X 2 IN. X 2 IN. NPT UOC:FMQ,FMR,FMS	1
34	PAOZZ	97403	13229E0513	.STAKE UOC:FMQ,FMR,FMS	8

END OF FIGURE

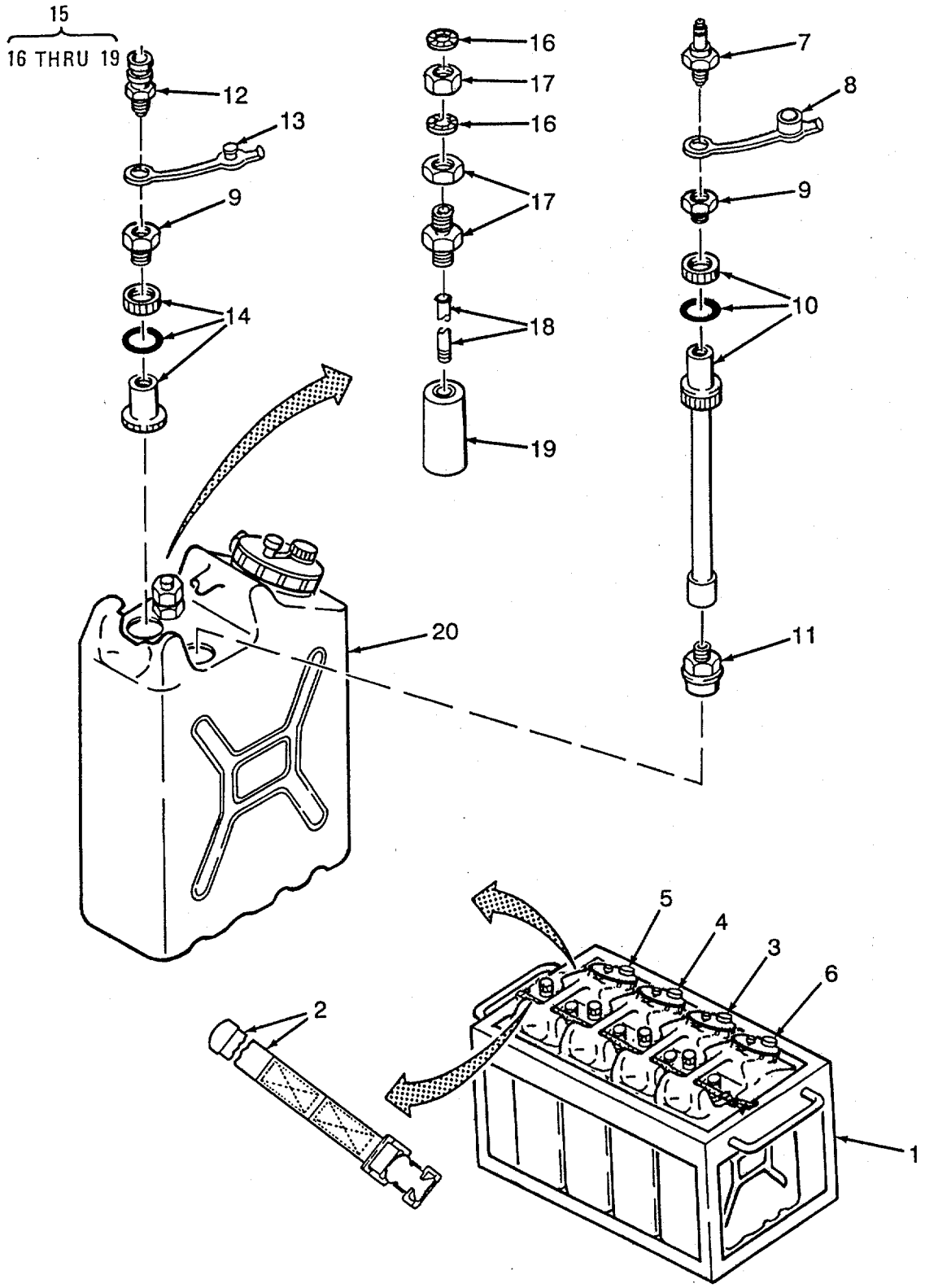

Figure 23. Chemical Cans and Rack Holder

(1) ITEM NO	(2) SMR CODE	(3) CAGEC	(4) PART NUMBER	(5) DESCRIPTION AND USABLE ON CODES(UOC)	(6) QTY
				GROUP 07 CHEMICAL CANS AND FRAME	
				.....FIG. 23 CHEMICAL CANS AND RACK HOLDER	
1	PBOZZ	97403	13226E8331	RACK, HOLDER CHEMICA CHEMICAL..... FEED CAN	1
2	PAOZZ	97403	13220E5288-5	STRAP, WEBBING	1
3	PAOOO	97403	13226E7990-1	CAN ASSEMBLY, POLYME CHEMICAL..... FEED, POLYMER	1
4	PAOOO	97403	13226E7990-2	CAN ASSEMBLY, SODIUM CHEMICAL..... FEED, SODIUM HEX	1
5	PAOOO	97403	13226E7990-3	CAN ASSEMBLY, CITRIC CHEMICAL..... FEED, CITRIC ACID	1
6	PAOOO	97403	13226E7990-4	CAN ASSEMBLY, CHLORI CHEMICAL ..... FEED, CHLORINE	1
7	PAOZZ	97403	13226E7993-1	COUPLING HALF, 4UICK USED ON ..... 13226E7990-1, -2, AND-3.....	3
7	PAOZA	97403	13226E7993-2	COUPLING HALF, QUICK USED ON..... 13226E7990-4	`
8	PAOZZ	97403	13226E7995-1	PLUG, PROTECTIVE, DUS USED ON ..... 13226E7990-1, -2, AND-3.....	
8	PAOZZ	97403	13226E7995-2	PLUG, PROTECTIVE, DUS USED ON..... 13226E7990-4	1
9	PAOZZ	97403	13226E7992-1	BUSHING, PIPE USED ON 13226E7990- ..... 1, -2, AND-3	2
'3	PAOZZ	97403	13226E7992-2	REDUCER, PIPE USED ON 13226E7990-..... 4.....	2
10	PAOZZ	97403	13226E8330	TUBE ASSEMBLY, TANK USED ON ..... 13226E7990-1, -2, -3, AND-4.....	1
11	PAOZZ	97403	13226E8328	STRAINER, SUCTION USED ON ..... 13226E7990-1, -2, -3, AND-4.....	1
12	PAOZZ	97403	13226E7994-1	COUPLING HALF, 4UICK USED ON ..... 13226E7990-1, -2, AND-3.....	1
12	PAOZZ	97403	13226E7994-3	SOCKET, COUPLING USED ON 13226E7990-4	1
13	PAOZZ	97403	13226E8327-1	PLUG, PROTECTIVE, DUS USED ON..... 13226E7990-1, -2, AND-3.....	1
13	PAOZZ	97403	13226E8327-2	PLUG, PROTECTIVE, DUS USED ON..... 13226E7990-4	1
14	PAOZZ	97403	13226E7991	BUSHING, TANK USED ON 13226E7990-..... 1, -2, -3, AND-4	1
15	PAOOO	76371	LL1-101	FLOAT, SIGHT INDICAT USED ON..... 13226E7990-1, -2, -3, AND-4.....	1
16	PAOZZ	61424	4GR	....RING, LOCK, SERRATED FOR 1/4 OD 2 TUBE	
17	PAOZZ	61424	P6BU6	....FITTING, BULKHEAD	1
18	PAOZZ	97403	13228E3321-2	....ROD 1/4 IN DIA 15 IN LENGTH	1
19	PAOZZ	81349	SE1-701	....FLOAT	1
20	XAOZZ	97403	13226E7989-1	...CAN, PLASTIC USED ON 13226E7990-1	1
20	XAOZZ	97403	13226E7989-2	...CAN, PLASTIC USED ON 13226E7990-2	1
20	XAOZZ	97403	13226E7989-3	...CAN, PLASTIC USED ON 13226E7990-3	1

(1) ITEM NO	(2) SMR CODE	(3) CAGEC	(4) PART NUMBER	(5) DESCRIPTION AND USABLE ON CODES(UOC)	(6) QTY
20	XAOZZ	97403	13226E7989-4	...CAN, PLASTIC USED ON 13226E7990-4	1

END OF FIGURE

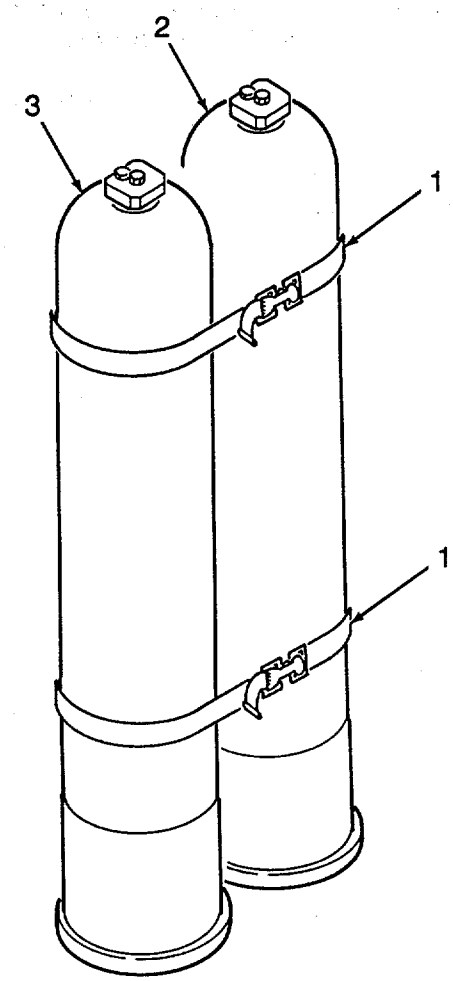

Figure 24. Deionization Cartridge

(1) ITEM NO	(2) SMR CODE	(3) CAGEC	(4) PART NUMBER	(5) DESCRIPTION AND USABLE ON CODES(UOC)	(6) QTY
				GROUP 08 DEIONIZATION CARTRIDGE	
				FIG. 24 DEIONIZATION CARTRIDGE	
1	PAOZZ	97403	13220E5288-5	..STRAP, WEBBING	2
2	PAOZZ	97403	13221E8341-1	..DEIONIZATION CARTRI RADIOLOGICAL..... CONTAMINANT REMOVAL	1
3	PAOZZ	97403	13221E8341-2	..DEIONIZATION CARTRI CHEMICAL..... AGENT REMOVAL.....	1

END OF FIGURE

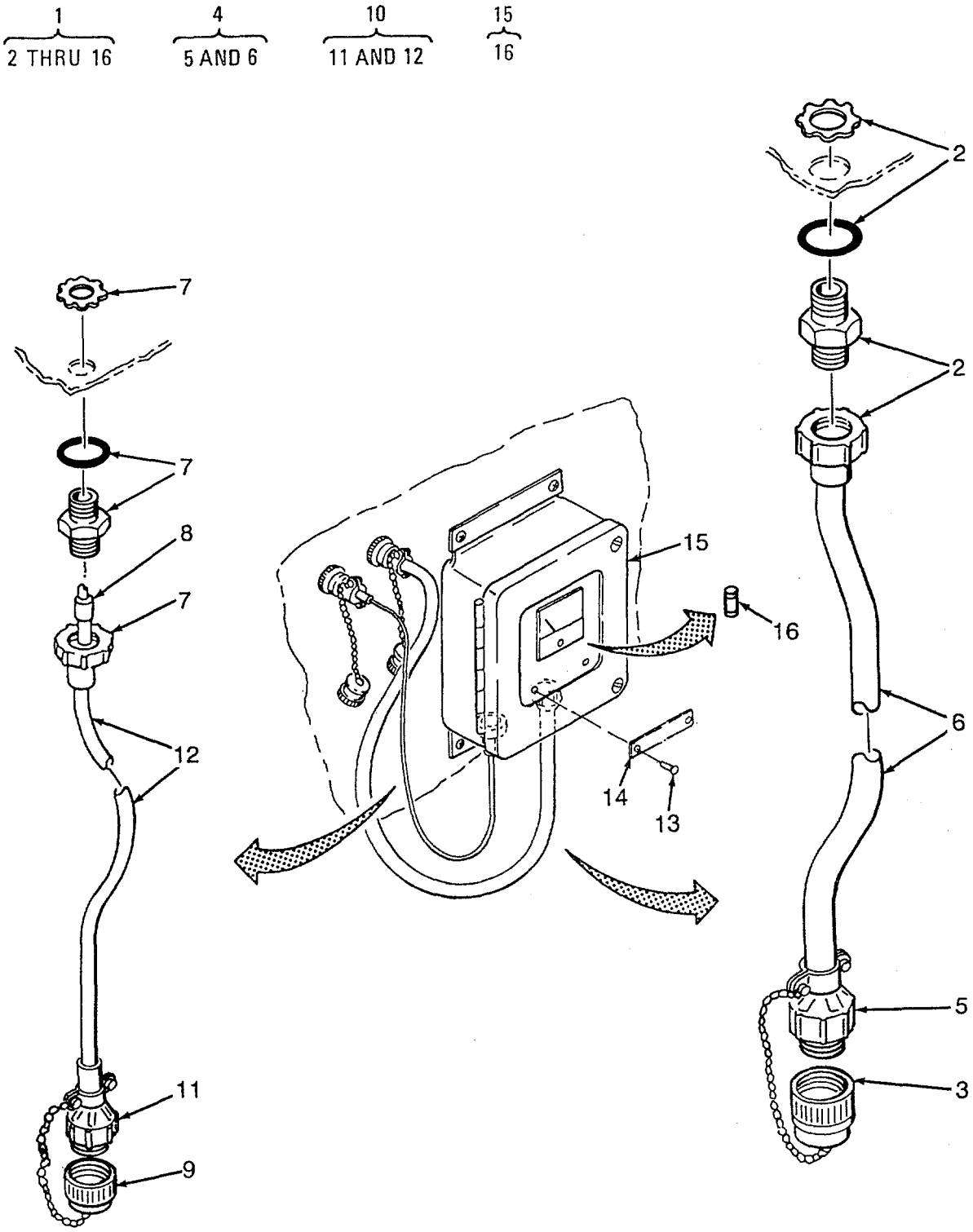

Figure 25. Monitor Meter Dissolved Solids Assembly

(1) ITEM NO	(2) SMR CODE	(3) CAGEC	(4) PART NUMBER	(5) DESCRIPTION AND USABLE ON CODES(UOC)	(6) QTY
				GROUP 09 TDS MONITOR	
				FIG. 25 MONITOR METER DISSOLVED SOLIDS ASSEMBLY	
1	XDOFF	97403	13227E7585	..METER, SALINITY INDI	1
2	PBFZZ	97403	13226E2205-5	...GRIP, SEALING, CABLE	1
3	PAOZZ	96906	MS25042-16DA	...COVER, ELECTRICAL CO	1
4	PAFFZ	97403	13221E8326-4	...CABLE ASSEMBLY, POWE W55	1
5	PAFZZ	96906	MS3456W16-1OP	....CONNECTOR, PLUG, ELEC	1
6	MFFZZ	19099	CO-03HOF-1-34	....CABLE, FLEXIBLE CUT 34 IN FROM BULK P/N CO-03HOF(3/14)0565	1
7	PBFZZ	97403	13226E2205-1	...GRIP, SEALING, CABLE	1
8	PAFZZ	96906	MS3420-4A	...BUSHING, NONMETALLIC	1
9	PAOZZ	96906	MS25042-14DA	...COVER, ELECTRICAL CO	1
10	PAFFZ	97403	13221E8326-3	...CABLE ASSEMBLY, POWE W54	1
11	PAFZZ	96906	MS3456W14S-5P	...CONNECTOR, PLUG, ELEC	1
12	MFFZZ	19099	13221E8326-10	...CABLE, FLEX, INSTM CUT 36 IN FROM BULK P/N 13227E7582	1
13	PAOZZ	81349	M24243/1-B402	...RIVET, BLIND	2
14	XDOZZ	97403	13222E5279-57	...PLATE, INFORMATION TDS MONITOR PRODUCT WATER	1
15	PAFFF	97403	13227E7581	...METER, SALINITY INDI	1
16	PAFZZ	81349	F02A25OV1/8A	....FUSE, CARTRIDGE 1/8 A M P	1

END OF FIGURE

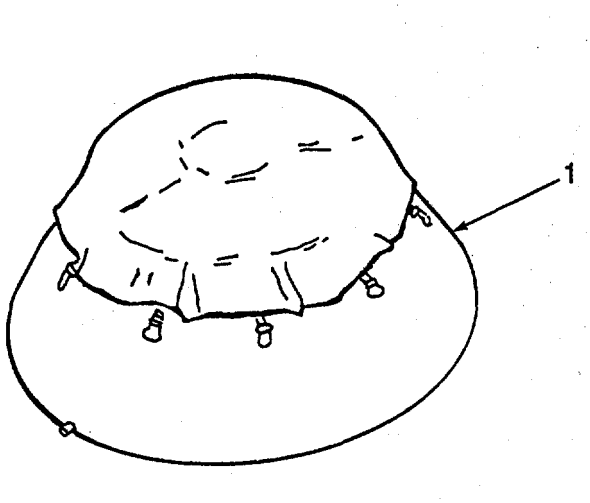

Figure 26. Water Tank Assembly 3,000 Gallons

(1) ITEM NO	(2) SMR CODE	(3) CAGEC	(4) PART NUMBER	(5) DESCRIPTION AND USABLE ON CODES(UOC)	(6) QTY
				GROUP 10 WATER TANK	
				FIG. 26 WATER TANK ASSEMBLY 3,000 GALLONS	
1	PAOFF	81349	MIL-T-53048	..TANK ASSEMBLY, 3, 000 GALLONS, ... (SEE TM5-5430-227-12&P FOR DETAILED BREAKDOWN).....	3

END OF FIGURE

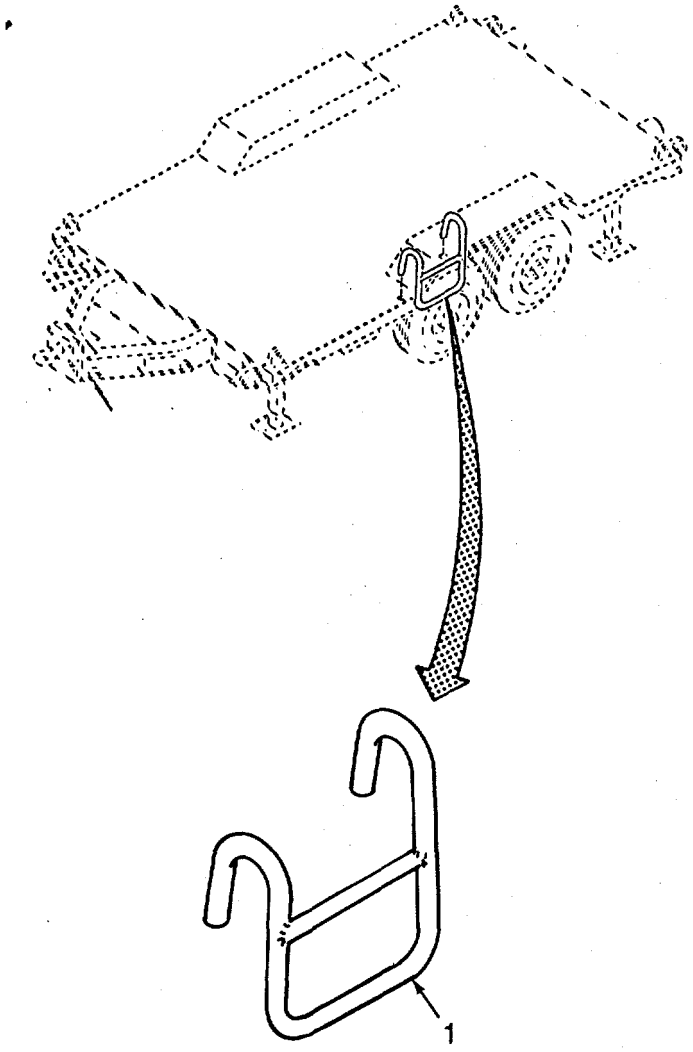

Figure 27. Portable Steps

(1) ITEM NO	(2) SMR CODE	CAGEC	(4) PART NUMBER	(5) DESCRIPTION AND USABLE ON CODES(UOC)	(6) QTY
				GROUP 11 GENERATOR SET DIESEL 30KW	
				FIG. 27 PORTABLE STEPS	
1	PBOZZ	97403	13221E8342	..LADDER,VEHICLE BOAR UOC:FAV,FMQ	1

END OF FIGURE

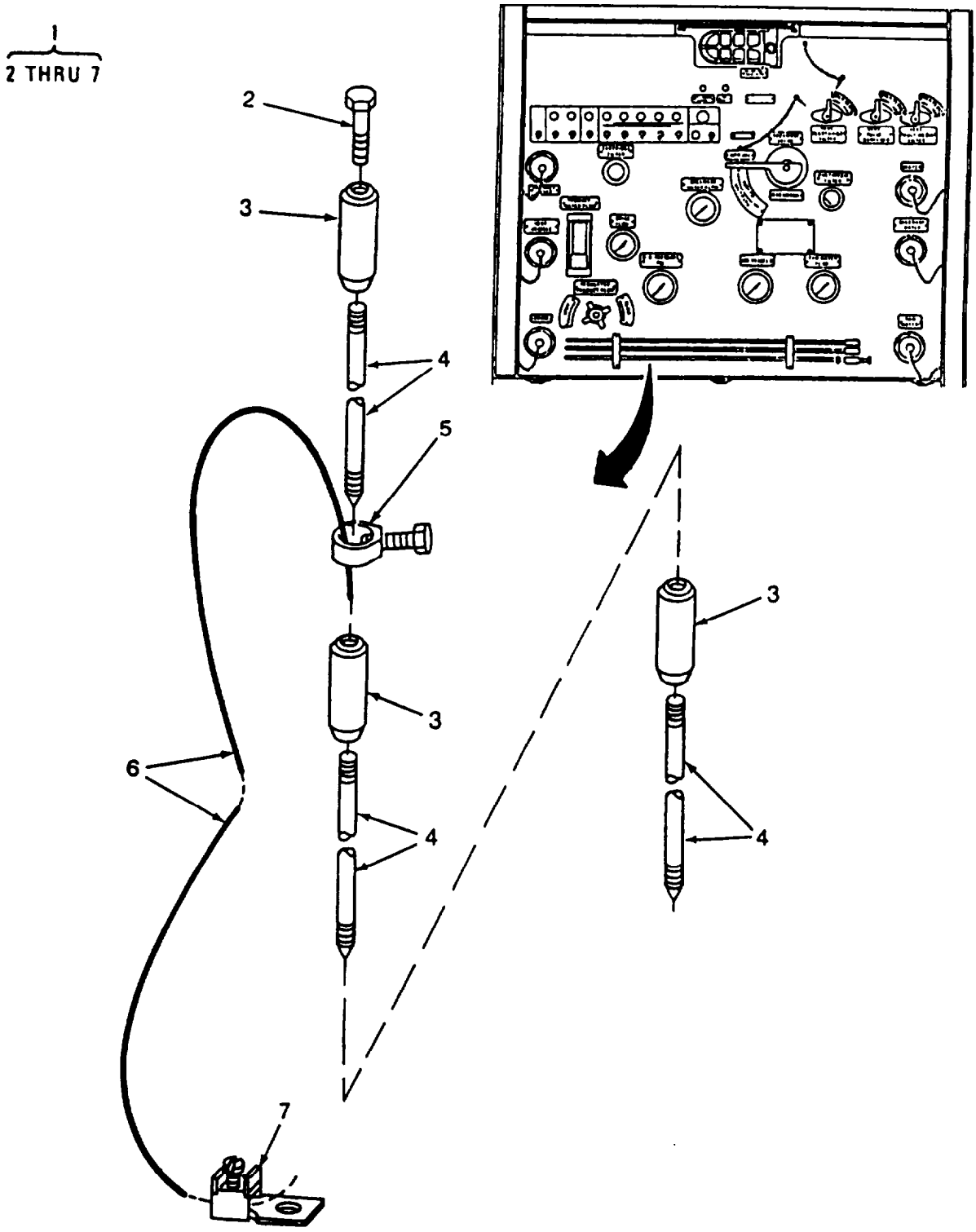

Figure 28. Grounding Rod

(1) ITEM NO	(2) SMR CODE	(3) CAGEC	(4) PART NUMBER	(5) DESCRIPTION AND USABLE ON CODES(UOC)	(6) QTY
				GROUP 11 GENERATOR SET	
				FIG. 28 GROUNDING ROD	
1	PAOOO	81348	W-R-550, TYIII, CL B	..ROD, GROUND ASSY 3-3 FT. SECTIONS.	1
2	XDOZZ	61882	DS58	...STUD, DRIVING.	1
3	XDOZZ	61882	SC58	...COUPLING, GND ROD	3
4	PAOZZ	61882	S358	...ROD, GROUND 5/8 IN. X 3 FT. LONG.	3
5	PAOZZ	61882	HDC58	...CLAMP, ELECTRICAL	1
6	MOOZZ	19099	N06STRANDED	...WIRE, COPPER, BARE CUT TO LENGTH FROM BULK P/N QQW343CO6BIB	1
7	XDOZZ	01667	CBA-70	...TERMINAL, LUG	1

END OF FIGURE

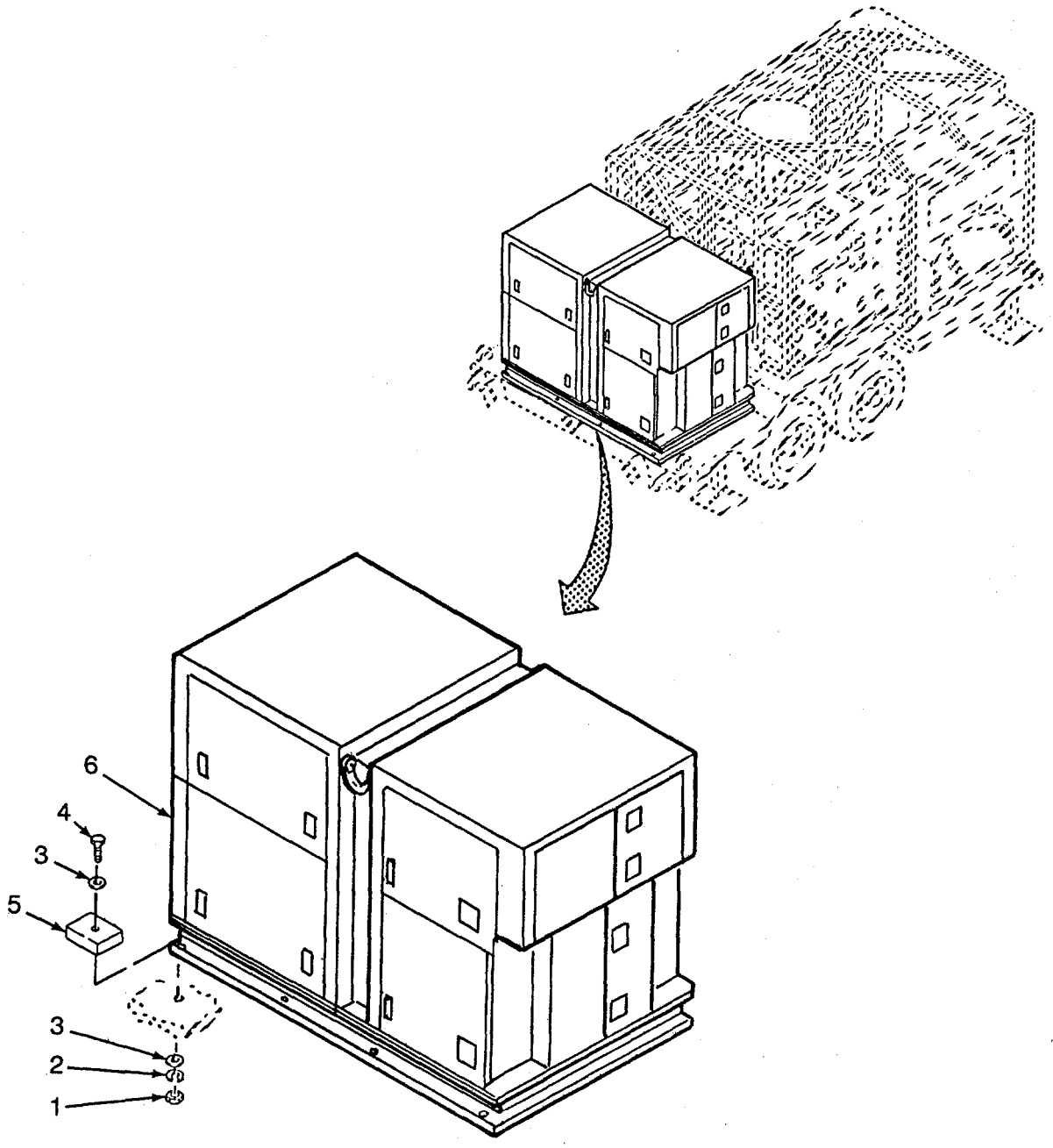

Figure 29. Generator Set Diesel 30Kw

(1) ITEM NO	(2) SMR CODE	(3) CAGEC	(4) PART NUMBER	(5) DESCRIPTION AND USABLE ON CODES(UOC)	(6) QTY
				GROUP 11 GENERATOR SET	
				FIG. 29 GENERATOR SET DIESEL 30 KW	
1	PAFZZ	96906	MS51967-20	NUT,PLAIN,HEXAGON UOC:FAV,FMQ	8
2	PAFZZ	96906	MS35338-50	WASHER,LOCK UOC:FAV,FMQ	8
3	PAFZZ	96906	MS27183-21	WASHER,FLAT UOC:FAV,FMQ	16
4	PAFZZ	80204	B1821BH063C250N	SCREW,CAP,HEXAGON H UOC:FAV,FMQ	8
5	PAFZZ	97403	13206E4482-3	WASHER,BEVEL UOC:FAV,FMQ	8
6	PAFHH	30554	70-005	GENERATOR SET,DIESEL 30 KW (SEE TM5-6115-465-24P FOR DETAILED BREAKDOWN) UOC:FAV,FMQ	1

END OF FIGURE

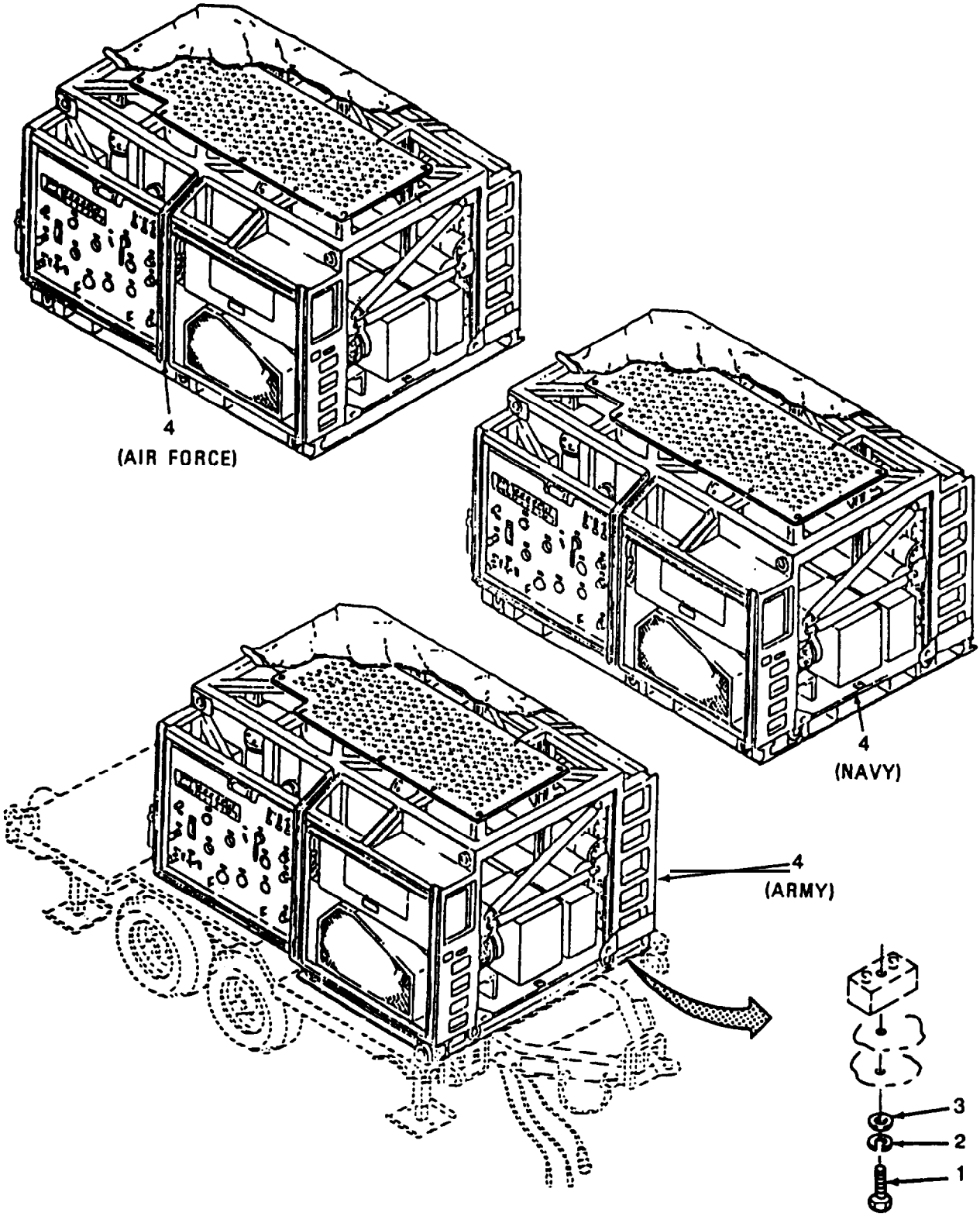

Figure 30. Reverse Osmosis Water Purification Unit 600 GPH

(1) ITEM NO	(2) SMR CODE	(3) CAGEC	(4) PART NUMBER	(5) DESCRIPTION AND USABLE ON CODES(UOC)	(6) QTY
				GROUP 12 REVERSE OSMOSIS WATER PURIFICATION UNIT 600 GPM	
				FIG. 30 REVERSE OSMOSIS WATER PURIFICATION UNIT 600 GPH	
1	PAFZZ	96906	MS90727-164	SCREW,CAP,HEXAGON H UOC:FAV,FMQ	16
2	PAFZZ	96906	MS35338-50	WASHER,LOCK UOC:FAV,FMQ	16
3	PAFZZ	96906	MS27183-21	WASHER,FLAT BRONZE UOC:FAV,FMQ	16
4	XDFHD	97403	13222E5330	ROWPU ASSY,600 GPH UOC:FAV,FMQ	1
4	XDFHD	97403	13226E0121	ROWPU ASSY,600 GPH UOC:FAW,FMR	1
4	XDFHD	97403	13225E8940	ROWPU ASSY,600 GPH UOC:FAX,FMS	1

END OF FIGURE

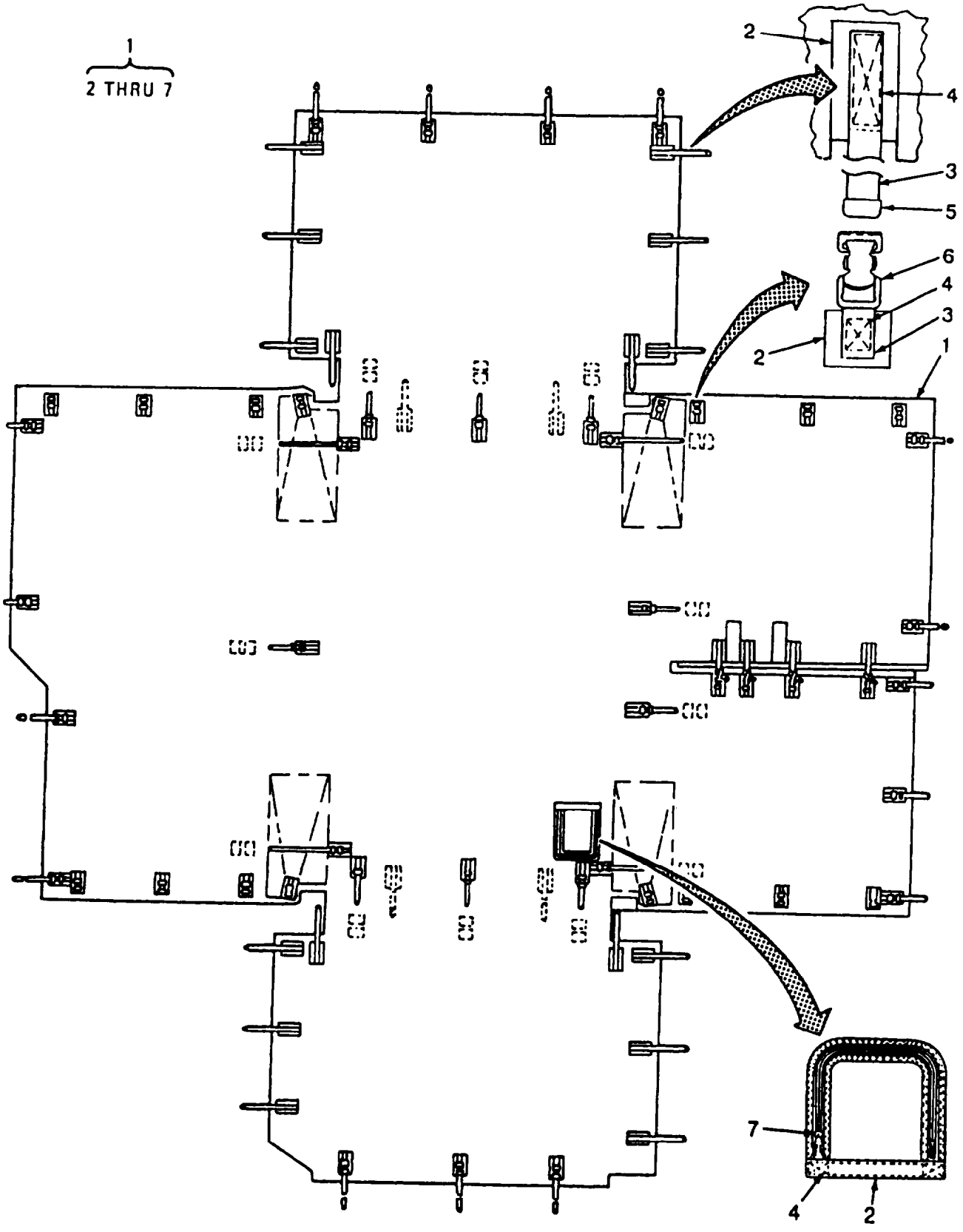

Figure 31. ROWPU Cover

(1) ITEM NO	(2) SMR CODE	(3) CAGEC	(4) PART NUMBER	(5) DESCRIPTION AND USABLE ON CODES(UOC)	(6) QTY
				GROUP 12 REVERSE OSMOSIS WATER PURIFICATION UNIT 600 GPH	
				FIG. 31 ROWPU COVER	
1	PBOFF	97403	13222E5239 DESER T SAND	COVER, 600 GPH ROWPU 1	
1	PBOFF	97403	13222E5239 OLIVE DRAB GREEN	COVER, 600 GPH ROWPU 1	
2	MFFZZ	19099	13222E5239-1-8 D ESERT SAND	..CLOTH, VINYL, REINFOR MAKE FROM..... BULK P/N MIL-C-43006, TYI, CL1, FORM 1.....	V
2	MFFZZ	19099	13222E5239-1-8 0 LIVE DRAB GREEN	..CLOTH, VINYL MAKE FROM BULK P/N..... MIL-C-43006, TYI, CL1, FORM1.	V
3	MFFZZ	19099	13222E5239-9-15 DESERT SAND	..WEBBING, TEXTILE MAKE FROM BULK P/ ..... N MIL-W-5665, TYII, CL2B, 1 IN. WIDTH0.040-0.050 THICK.	V
3	MFFZZ	19099	13222E5239-9-15 OLIVE DRAB GREEN	WEBBING, TEXTILE MAKE FROM BULK P/ ..... N MIL-W-5665, TYII, CL2B, 1 IN. WIDTH 0.040-0.050 THICK	V
4	MFFZZ	19099	13222E5239-17 DE SERT SAND	..THREAD MAKE FROM BULK P/N V-T- ..... 285, TYI, CL1, SCB, SIZEE.....	V
4	MFFZZ	19099	13222E5239-1 OLI VE DRAB GREEN	..THREAD MAKE FROM BULK P/N V-T- ..... 285, TYI, CL1, SCB, SIZEEE.....	V
5	PAFZZ	96906	MS51926-3	..CLIP, END, STRAP	69
6	PAFZZ	96906	MS51929-2	..BUCKLE.....	53
7	PAFZZ	81348	VF106CTY3STIASIZ EHX20IN D SAND	..FASTENERS, SLIDE D SAND.....	1
7	PAFZZ	81348	VF106CTY3STIASIZ EHX20IN 0 D GRN	..FASTENERS, SLIDE 0 D GRN.....	1

END OF FIGURE

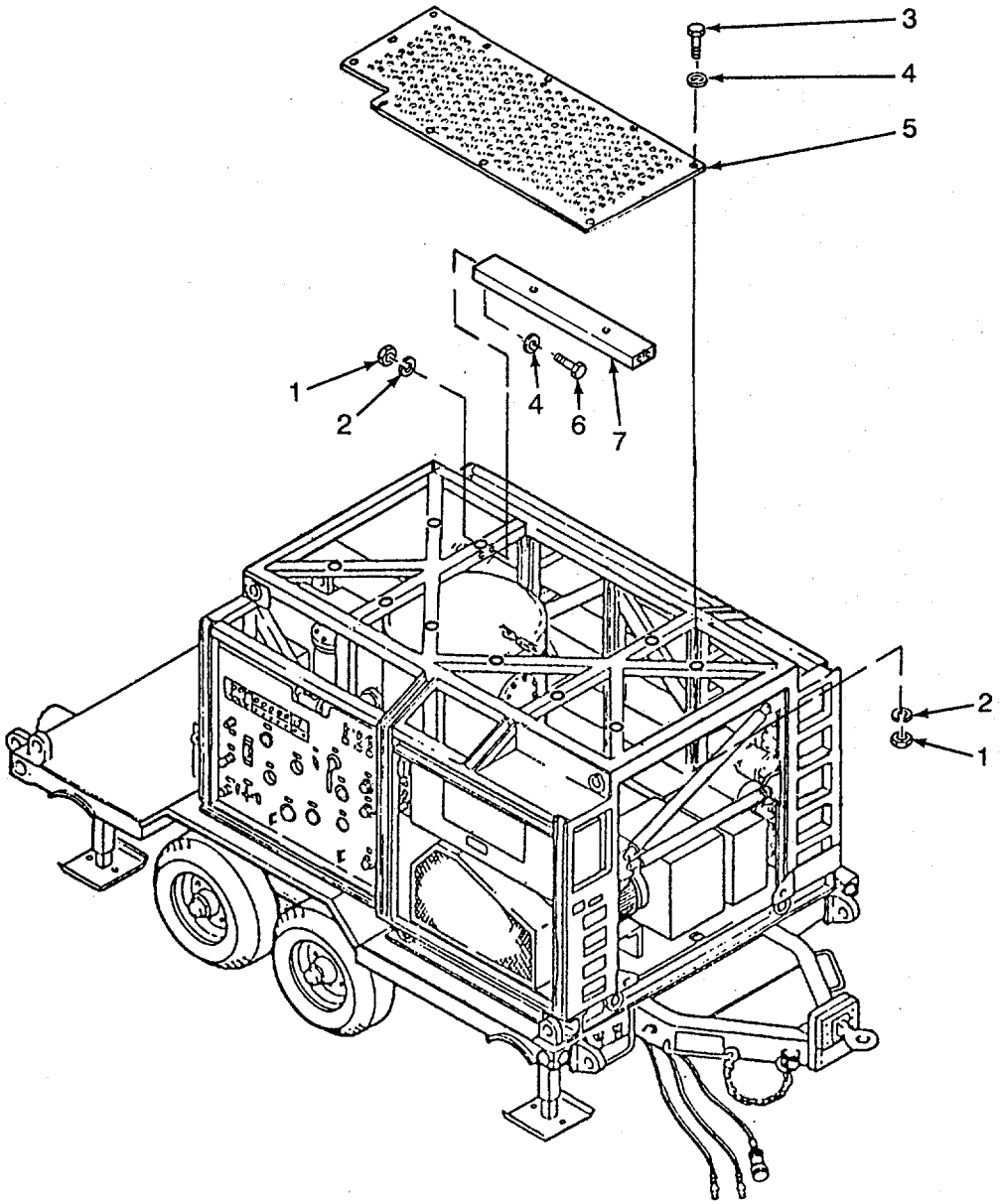

Figure 32. Cover Plate

(1) ITEM NO	(2) SMR CODE	(3) CAGEC	(4) PART NUMBER	(5) DESCRIPTION AND USABLE ON CODES(UOC)	(6) QTY
				GROUP 12 REVERSE OSMOSIS WATER PURIFICATION UNIT 600 GPH	
				FIG. 32 COVER PLATE	
1	PAOZZ	96906	MS35691-11	.NUT, PLAIN, HEXAGON	16
2	PAOZZ	96906	MS35338-140	.WASHER, LOCK	16
3	PAOZZ	96906	MS35307-334	.BOLT, MACHINE	12
4	PAOZZ	96906	MS15795-812	.WASHER, FLAT	16
5	XDOZZ	97403	13228E8306	.SHEET, METAL	1
6	PAOZZ	96906	MS35307-336	.BOLT, MACHINE	4
7	XDOZZ	97403	13229E3798	.SUPPORT	1

END OF FIGURE

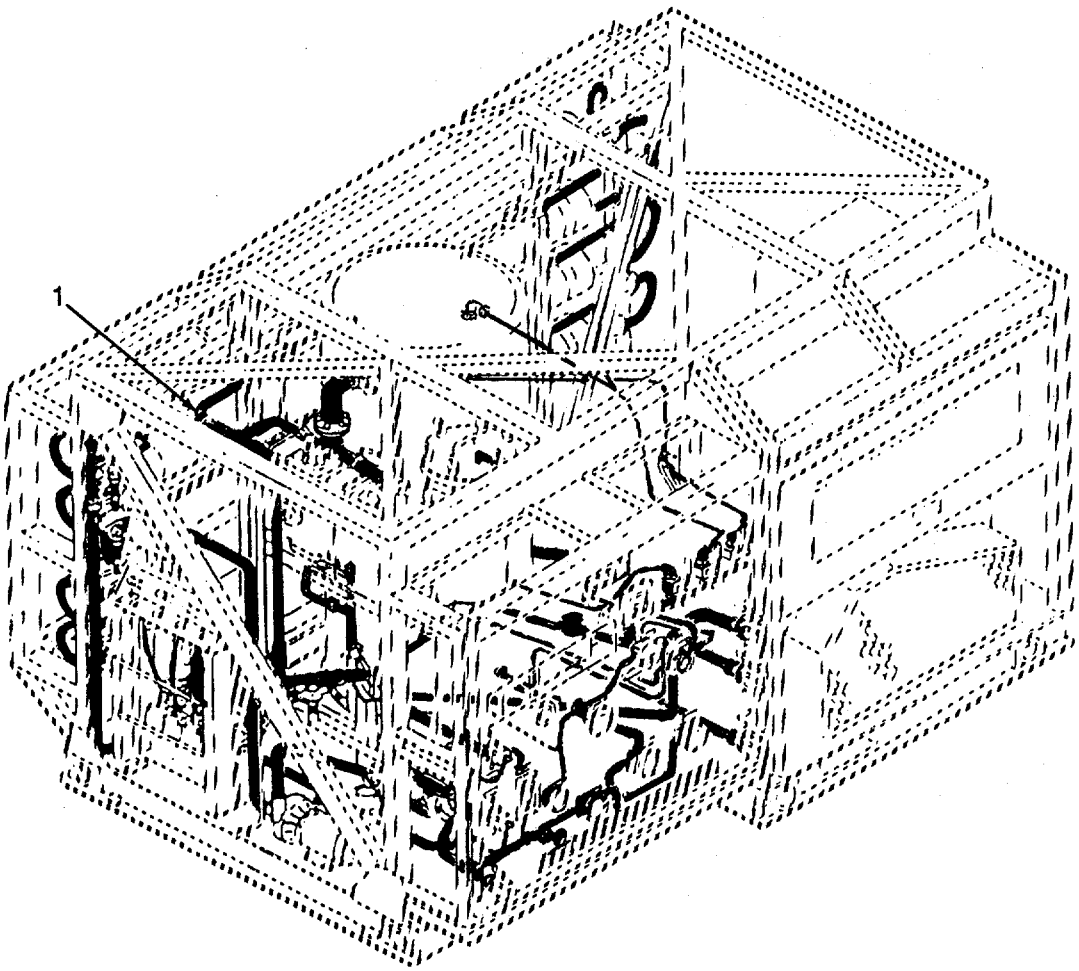

Figure 33. Piping Installation

(1) ITEM NO	(2) SMR CODE	(3) CAGEC	(4) PART NUMBER	(5) DESCRIPTION AND USABLE ON CODES(UOC)	(6) QTY
				GROUP 12 REVERSE OSMOSIS WATER PURIFICATION UNIT 600 GPH	
				FIG. 33 PIPING INSTALLATION	
1	XCOOO	97403	13228E8260	.PIPING INSTALLATION UOC:FAV,FMQ	1
1	XCOOO	97403	13228E8270	.PIPING INSTALLATION UOC:FAW,FAX,FMR,FMS	1

END OF FIGURE

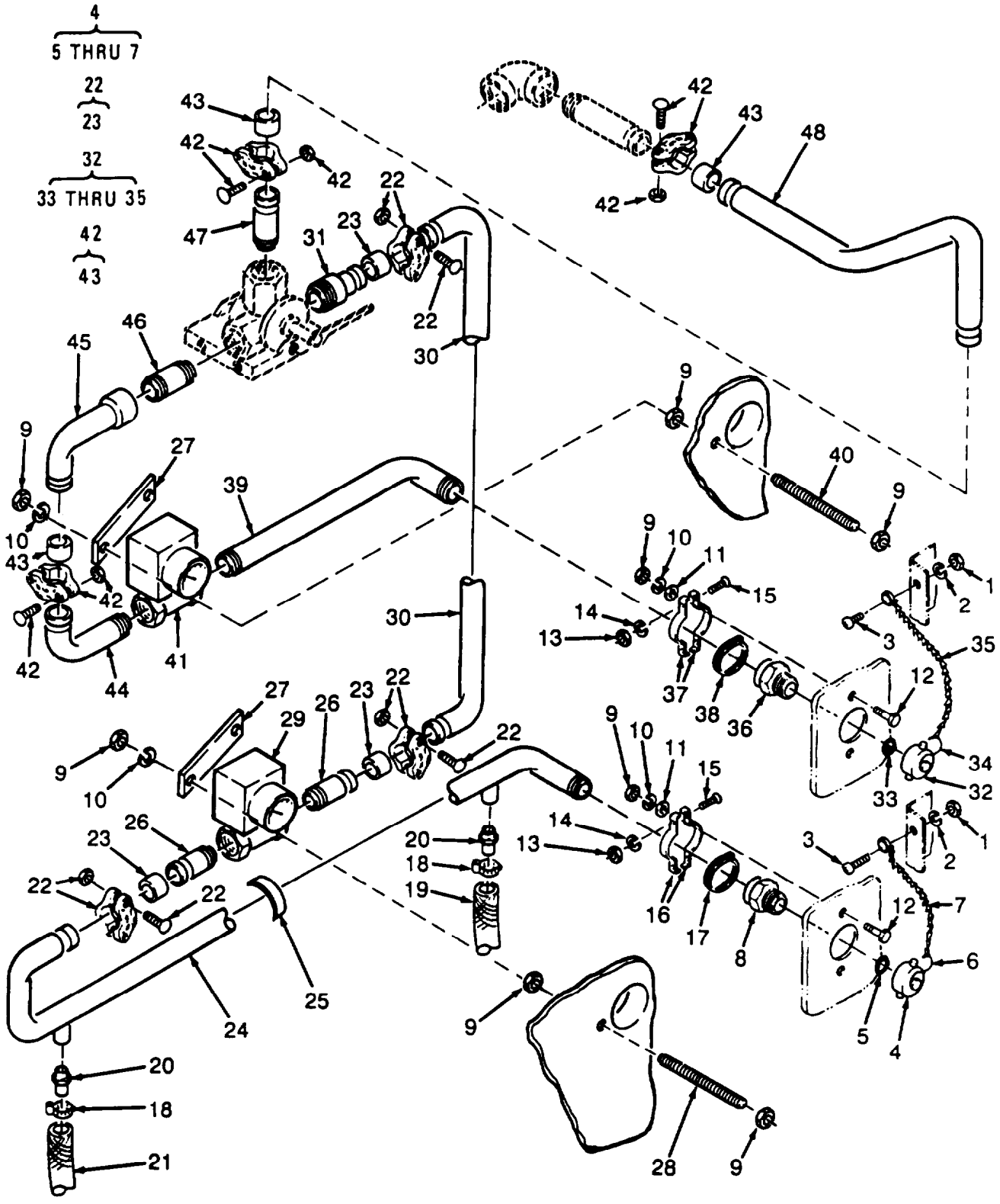

Figure 34. Raw Water and Backwash (Black Tape) Piping

(1) ITEM NO	(2) SMR CODE	(3) CAGEC	(4) PART NUMBER	(5) DESCRIPTION AND USABLE ON CODES(UOC)	(6) QTY
				GROUP 12 REVERSE OSMOSIS WATER PURIFICATION UNIT 1600 GPH	
				FIG. 34 RAW WATER AND BACKWASH (BLACK TAPE) PIPING	
1	PAOZZ	96906	MS35649-204	..NUT, PLAIN, HEXAGON	2
2	PAOZZ	96906	MS35338-138	..WASHER, LOCK	2
3	PAOZZ	96906	MS51957-65	..SCREW, MACHINE	2
4	PAOZZ	97403	13222E5289-1	..CAP, HOSE	1
5	PAOZZ	OBZ82	095X0150COBUNA	...GASKET	1
6	PAOZZ	96906	MS87006-32	...HOOK, CHAIN, S	1
7	MOOZZ	19099	YCH0105X010LYB	...CHAIN MAKE FROM BULK P/N 3603T904	1
8	PAOZZ	97403	13221E8278-1	..ADAPTER, STRAIGHT, PI 1-1/2 IN. NPSH MALE X 1-1/2 IN NPT FEMALE	1
9	PAOZZ	96906	MS51971-2	..NUT, PLAIN, HEXAGON	16
10	PAOZZ	96906	MS35338-140	..WASHER, LOCK	8
11	PAOZZ	96906	MS15795-813	..WASHER, FLAT	4
12	PAOZZ	96906	MS35307-339	..BOLT, MACHINE	4
13	PAOZZ	96906	MS51971-1	..NUT, PLAIN, HEXAGON	4
14	PAOZZ	96906	MS35338-139	..WASHER, LOCK	4
15	PAOZZ	96906	MS35307-312	.SCREW, CAP, HEXAGON H	4
16	PBOZZ	97403	13221E8322-3	..STRAP, WEBBING	2
17	PBOZZ	97403	13221E8320-4	..RING, RETAINING 2.25 IN. DIAMETER	1
18	PAOZZ	96906	MS35842-11	..CLAMP, HOSE	2
19	MOOZZ	19099	13228E8260-123	..TUBING, FLEXIBLE POLYMER FEED V LINE, MAKE FROM BULK P/N 13221E8367-1	
20	PAOZZ	97403	13228E3312-13	..ADAPTER, STRAIGHT 1/2 IN NPT X 1/ 2 IN. HOSE	2
21	MOOZZ	19099	13228E8266-124	..TUBING, FLEXIBLE SODIUM HEX FEED V LINE, MAKE FROM BULK P/N 13221E8367-1	
22	PBOZZ	81349	M103872D04	..COUPLING, CLAMP 1 1/2 IN	3
23	PAOZZ	81349	M103873D04	...GASKET	3
24	PBFZZ	97403	13228E8277	..PIPE,BENT,METALLIC	1
25	MOOZZ	19099	PPP-T-66TYICL2-3 37	..TAPE, PACKAGING MAKE FROM BULK P/ V N PPP-T-66, TYI, CL2, BLACK	
26	PBOZZ	97403	13228E8286-4	..COUPLING, PIPE GROOVED CLAMP TO NPT	2
27	XDOZZ	97403	13221E8370	..BRACKET, MOUNTING	2
28	PBOZZ	81349	MIL-S-1222TYIVGR 316	..STUD BOLT 5/16-18 UNC-2A X 4.88 IN LONG	2
29	PAOZF	97403	13222E5247-1	..METER, FLOW RATE IND RAW WATER	1
30	PBOZZ	97403	13228E8269	..PIPE, BENT, METALLIC	1
31	PBOZZ	97403	13228E8291	..COUPLING, PIPE GROOVED CLAMP TO NPT	1
32	PAOZZ	97403	13222E5289-2	..CAP, HOSE	1
33	PAOZZ	OBZ82	095X0200COBUNA	...GASKET	1
34	PAOZZ	96906	MS87006-32	...HOOK, CHAIN, S	1
35	MOOZZ	19099	YCH0105X010LYB	...CHAIN MAKE FROM BULK P/N 3603T904	1

(1) ITEM NO	(2) SMR CODE	(3) CAGEC	(4) PART NUMBER	(5) DESCRIPTION AND USABLE ON CODES(UOC)	(6) QTY
36	PAOZZ	97403	13221E8278-2	..COUPLING, PIPE.....	1
37	PBOZZ	97403	13221E8322-4	..STRAP, WEBBING	2
38	PBOZZ	97403	13221E8320-3	..SPACER, RING 2.5 IN DIAMETER	1
39	PBOZZ	97403	13228E8259	..ELBOW, PIPE BACKWASH INLET TO ..... FLOWMETER	1
40	PBOZZ	81349	MIL-S-1222TYIVGR 316	..STUD BOLT 5/16-18 UNC-2A X 6.12 L.....	2
41	PAOZF	97403	13222E5247-3	..METER, FLOW RATE IND BACKWASH.....	1
42	PAOZZ	81349	M103872D05	..COUPLING, CLAMP 2 IN	3
43	XDOZZ	81349	M103873D05	...GASKET.....	3
44	PBOZZ	97403	13228E8267	..ELBOW, PIPE BACKWASH FROM ..... FLOWMETER	1
45	PBOZZ	97403	13228E8268	..ELBOW, PIPE BACKWASH TO 3-WAY..... VALVE.....	1
46	PAOZZ	97403	13228E8301	..VALVE, CHECK	1
47	PBOZZ	97403	13228E8286-5	..COUPLING, PIPE GROOVED CLAMP TO..... NPT.....	1
48	PBOZZ	97403	13228E8283	..PIPE, BENT, METALLIC 3-WAY VALVE..... TO FILTER.....	1

END OF FIGURE

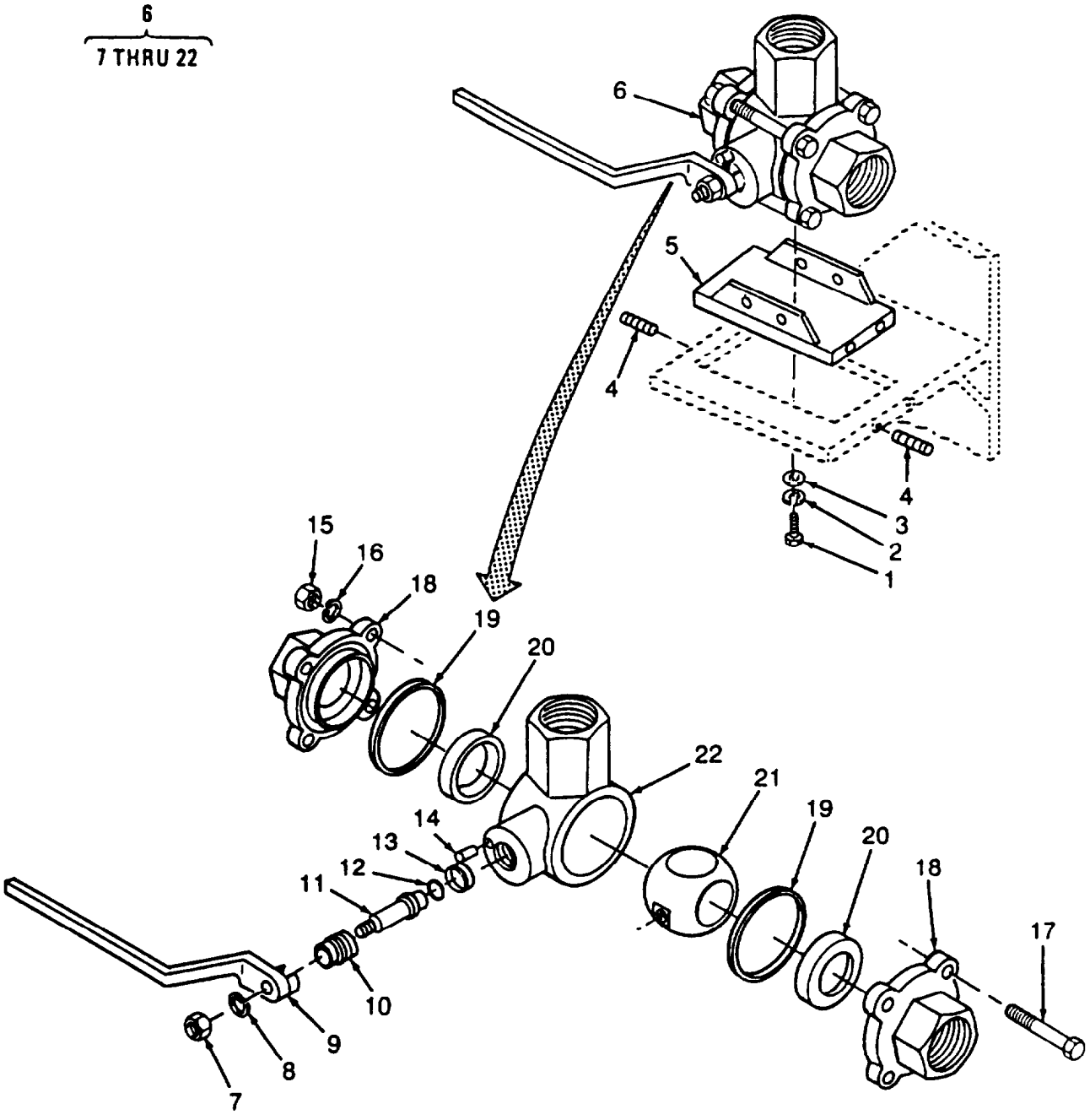

Figure 35. Backwash Three-Way Valve Assembly (Sheet 1 of 2)
Models WPES-10, WPES-20 AND WPES-30 only

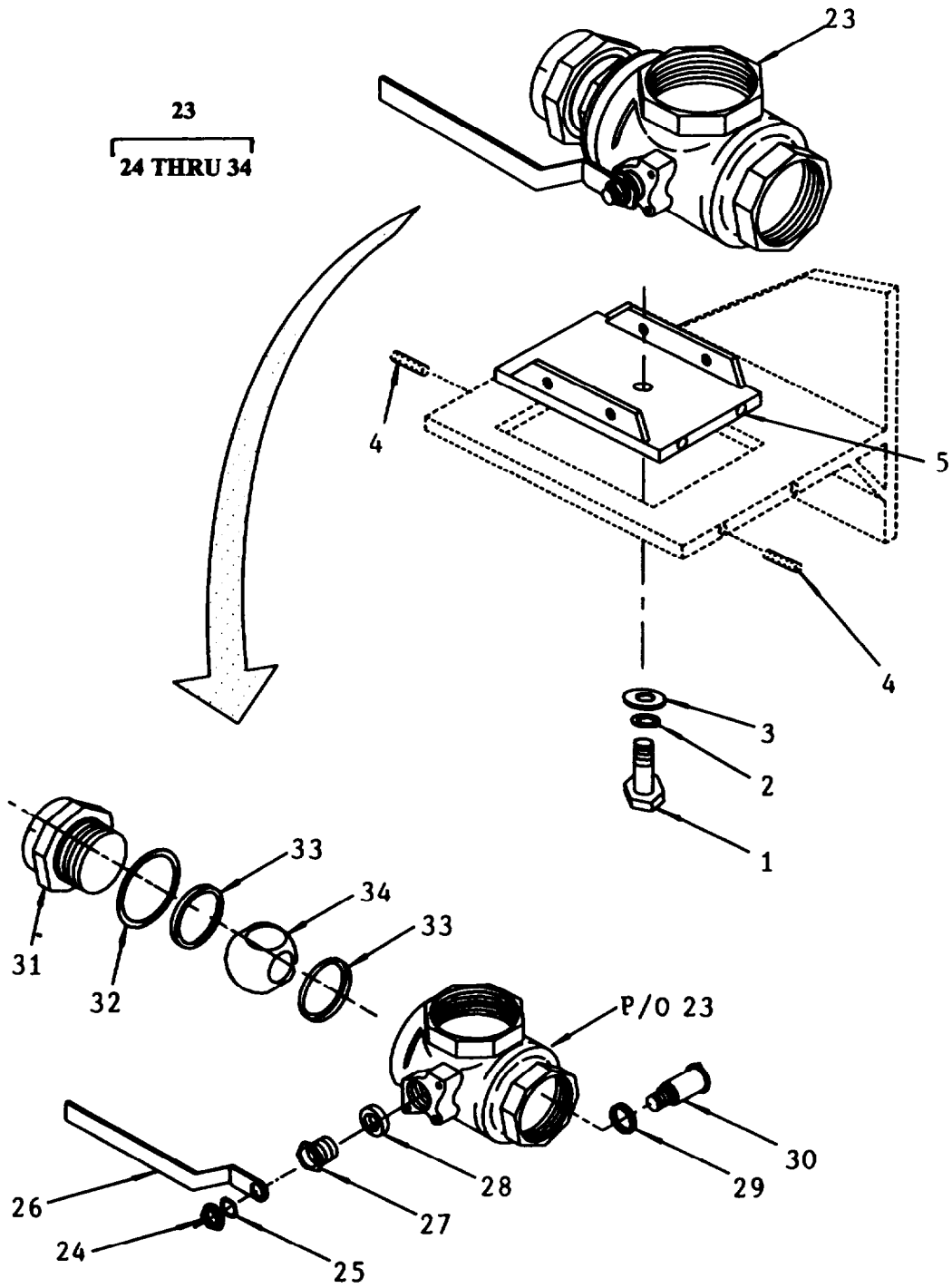

Figure 35. Backwash Three-Way Valve Assembly (Sheet 2 of 2)
Models H-9518-1, H-9518-2, and H-9518-3 only

(1) ITEM NO	(2) SMR CODE	(3) CAGEC	(4) PART NUMBER	(5) DESCRIPTION AND USABLE ON CODES(UOC)	(6) QTY
				GROUP 12 REVERSE OSMOSIS WATER PURIFICATION UNIT 600 GPH	
				FIG. 35 BACKWASH THREE-WAY VALVE ASSEMBLY	
1	PAOZZ	96906	MS35307-308	..SCREW,CAP,HEXAGON H	1
2	PAOZZ	96906	MS35338-139	..WASHER,LOCK	1
3	PAOZZ	96906	MS15795-810	..WASHER,FLAT	1
4	PAOZZ	96906	MS51021-85	..SETSCREW	4
5	XDOZZ	97403	13228E3323	..ADAPTER,VALVE	1
6	PBOOO	92021	DPB-17-S2 DPI7-9 1164A	..VALVE,BALL,3 WAY UOC:FAV,FAW,FAX	1
7	XDOZZ	92021	AXXHXN	...NUT,HEX 7/16 IN.-14 UNC-2B UOC:FAV,FAW,FAX	1
8	XDOZZ	92021	CXXHXL	...WASHER,LOCK 7/16 IN UOC:FAV,FAW,FAX	1
9	XDOZZ	92021	SP-17-91164-4	...HANDLE UOC:FAV,FAW,FAX	1
10	XDOZZ	92021	SP-17-6	...GLAND UOC:FAV,FAW,FAX	1
11	XDOZZ	92021	SP-17-91164-5	...STEM UOC:FAV,FAW,FAX	1
12	PAOZZ	92021	SP-17-9	...PACKING,PREFORMED UOC:FAV,FAW,FAX	1
13	XDOZZ	92021	SP-17-10	...RETAINER,PACKING UOC:FAV,FAW,FAX	1
14	XDOZZ	92021	SP-17-91164-30	...PIN,STOP UOC:FAV,FAW,FAX	1
15	XDOZZ	92021	AXXIXN	...NUT,HEX 1/2 IN.-13 UNC-2B UOC:FAV,FAW,FAX	4
16	XDOZZ	92021	AXXIXL	...WASHER,LOCK 1/2 IN UOC:FAV,FAW,FAX	4
17	XDOZZ	92021	AXXT44	...BOLT 1/2 IN.-13 UNC-2A X 4 1/2 IN. LONG UOC:FAV,FAW,FAX	4
18	XDOZZ	92021	SP-17-91164-3	...END FITTING UOC:FAV,FAW,FAX	2
19	PAOZZ	92021	SP-17-13	...PACKING,PREFORMED UOC:FAV,FAW,FAX	2
20	PAOZZ	92021	SP-17-88	...SEAT,BALL UOC:FAV,FAW,FAX	2
21	XDOZZ	92021	DP-17-2A	...BALL UOC:FAV,FAW,FAX	1
22	XDOZZ	92021	DR-17-91164-1SA	...BODY-VALVE UOC:FAV,FAW,FAX	1
23	PBOOO	OAK83	9518182209	..VALVE, BALL, 3-WAY UOC:FMQ,FMR,FMS	1
24	PAOZZ	96906	MS51972-3	...NUT,PLAIN,HEXAGON UOC:FMQ,FMR,FMS	1
25	PAOZZ	96906	MS35338-14	...WASHER,LOCK UOC:FMQ,FMR,FMS	1
26	XDOZZ	OAK83	9518182210	...HANDLE UOC:FMQ,FMR,FMS	1
27	XDOZZ	79227	B-6780-M1-VT-2-C	...NUT,PACKING UOC:FMQ,FMR,FMS	1
28	KFOZZ	79227	B-6780-M1-VT-2-D	...PACKING,STEM PART OF KIT P/N 24-SSK-01-RK. UOC:FMQ,FMR,FMS	1
29	KFOZZ	79227	B-6780-M1-VT-2-E	...WASHER,THRUST PART OF KIT P/N 24-SSK-01-RK UOC:FMQ,FMR,FMS	1

(1) ITEM NO	(2) SMR CODE	(3) CAGEC	(4) PART NUMBER	(5) DESCRIPTION AND USABLE ON CODES(UOC)	(6) QTY
30	KFOZZ	79227	B-6780-M1-VT-2-F	...STEM PART OF KIT P/N 31-BSK-B-RK UOC:FMQ,FMR,FMS	1
31	XAOZZ	OAK83	9518182211	...ADAPTER UOC:FMQ,FMR,FMS	1
32	KFOZZ	79227	B-6780-M1-VT-2-K	...SEAL,BODY PART OF KIT 24-SSK-01-RK UOC:FMQ,FMR,FMS	1
33	KFOZZ	79227	B-6780-M1-VT-2-H	...SEAT PART OF KIT 24-SSK-01-RK UOC:FMQ,FMR,FMS	2
34	KFOZZ	79227	B-6780-M1-VT-2-I	...BALL PART OF KIT 31-BSK-B-RK UOC:FMQ,FMR,FMS	1
	PAOZZ	79227	24-SSK-01-RK	...PARTS KIT,BALL VALV PACKING, STEM (1) 35-28 SEAL,BODY (1) 35-32 SEAT (2) 35-33 WASHER,THRUST (1) 35-29 UOC:FMQ,FMR,FMS	1
	PAOZZ	79227	31-BSK-B-RK	... PARTS KIT,BALL VALV BALL (1) 35-34 STEM (1) 35-30 UOC:FMQ,FMR,FMS	1

END OF FIGURE

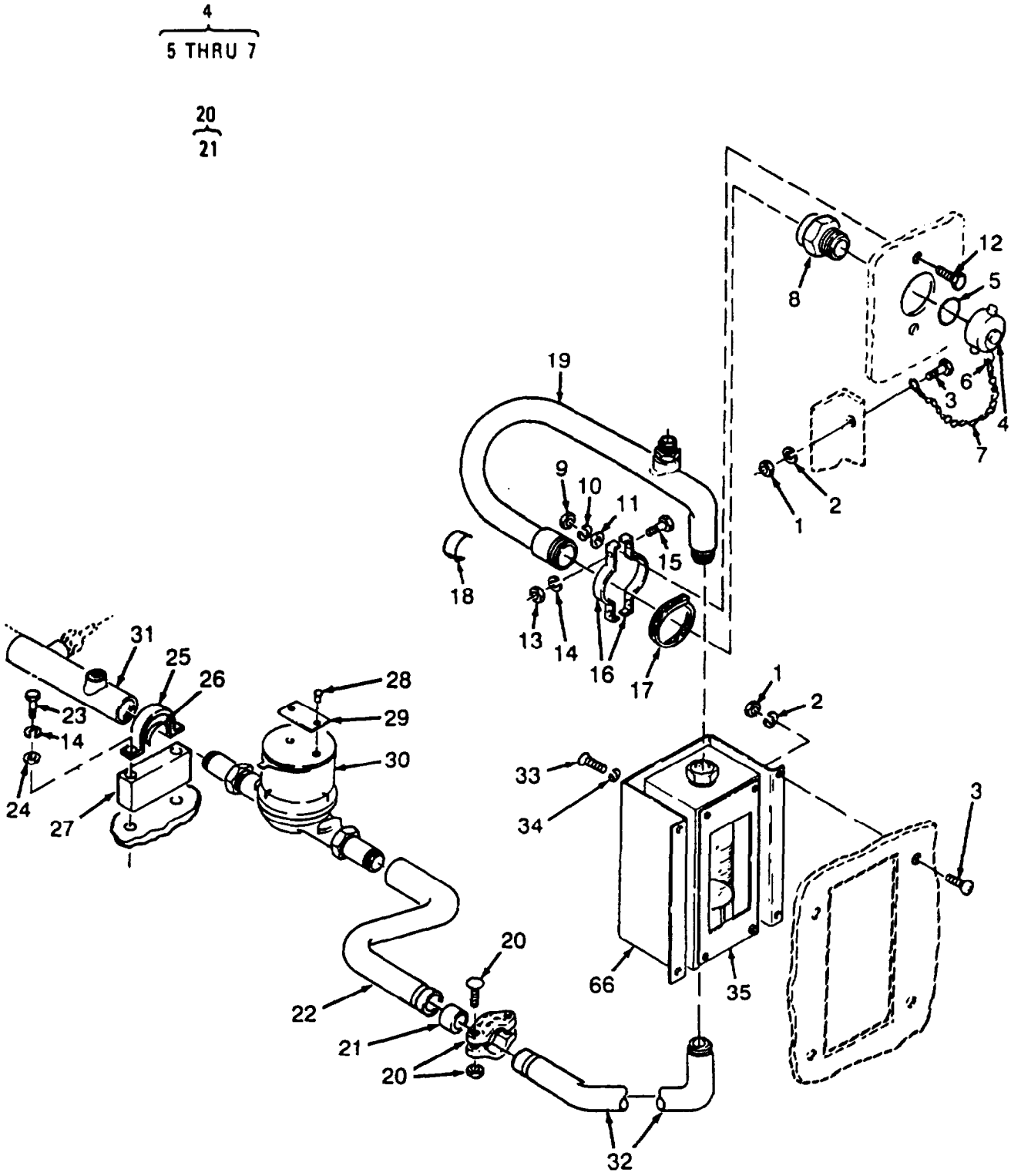

Figure 36. Product Water (Light Blue Tape) Piping (Sheet 1 of 3)

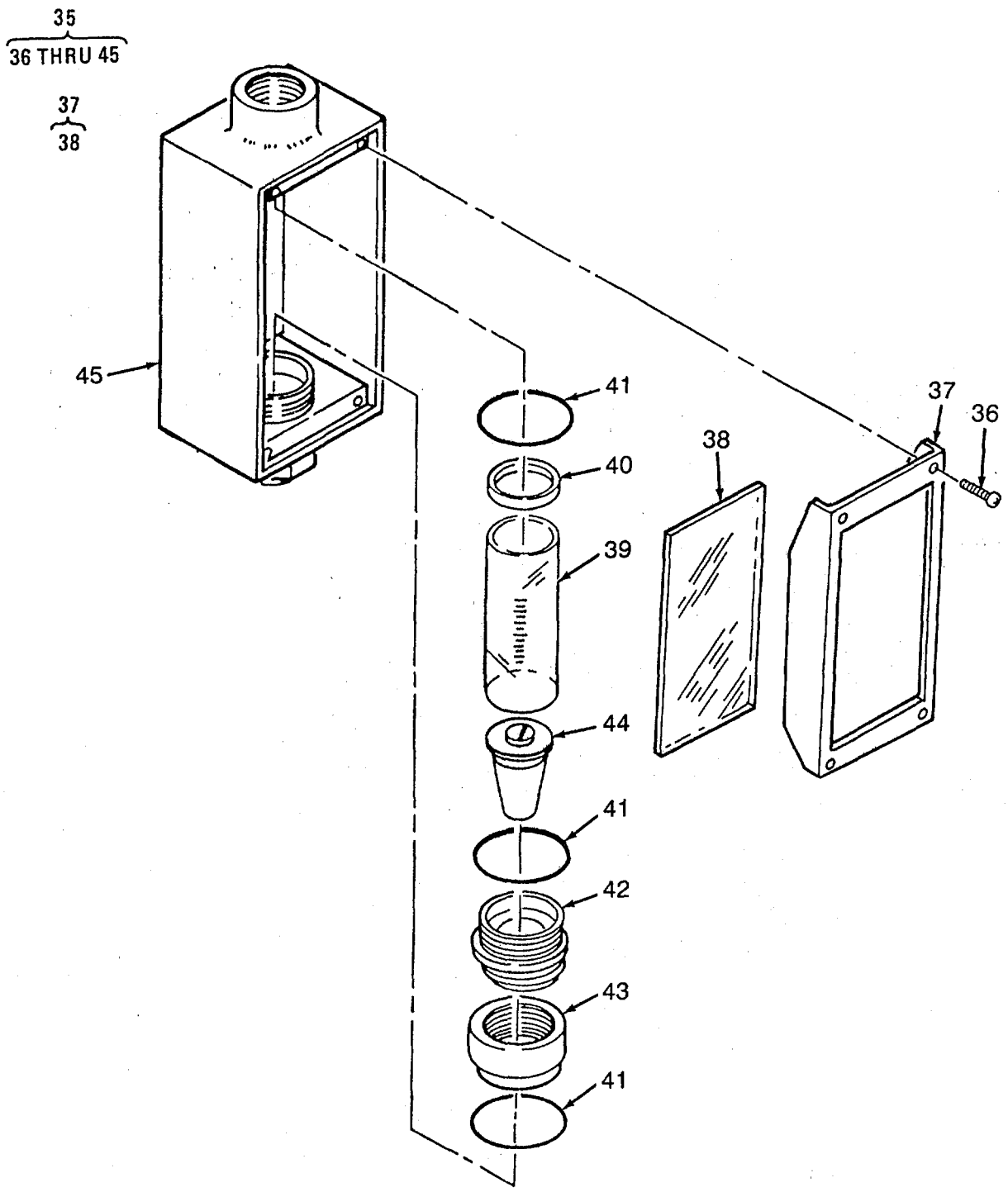

Figure 36. Product Water (Light Blue Tape) Piping (Sheet 2 of 3)

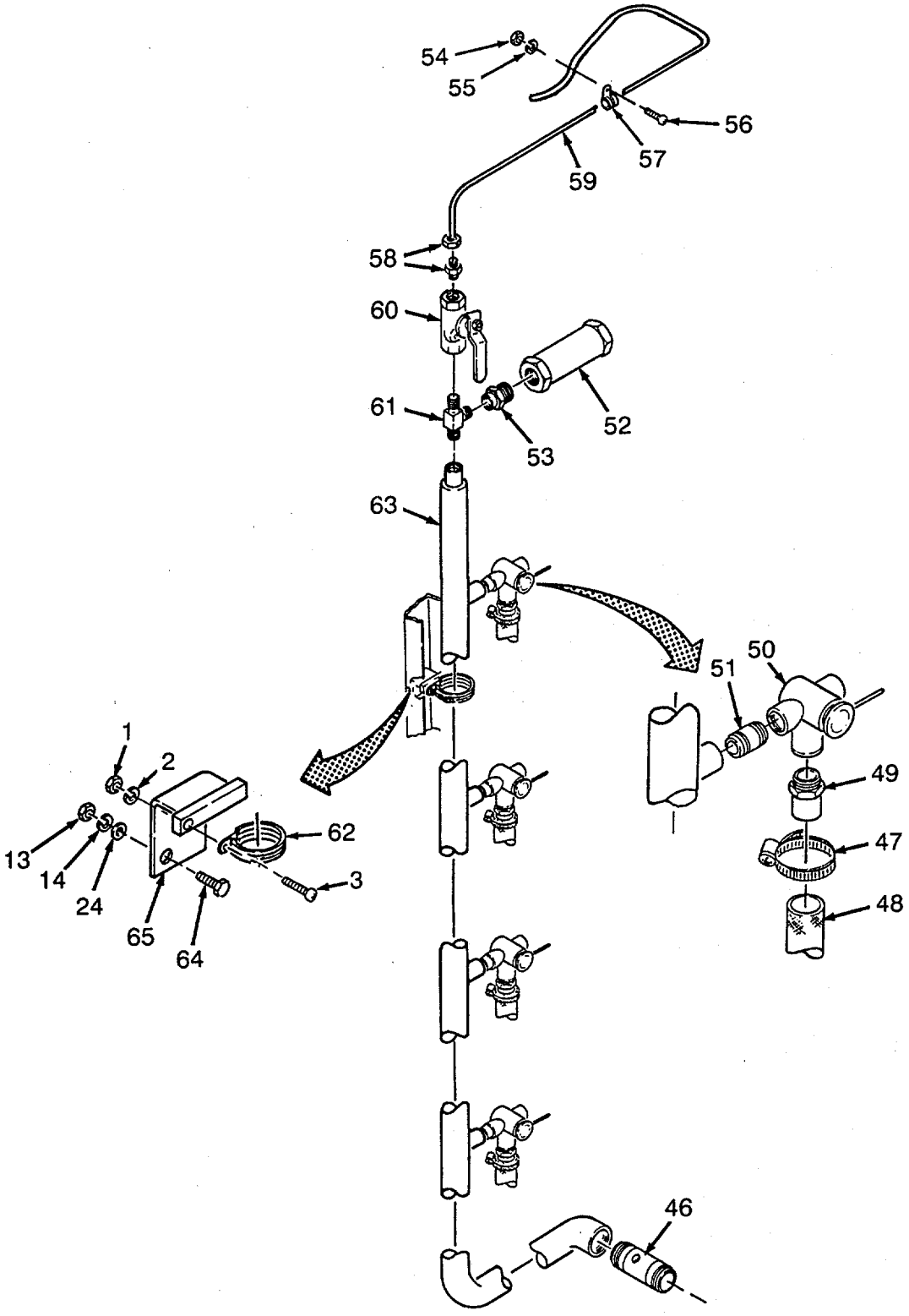

Figure 36. Product Water (Light Blue Tape) Piping (Sheet 3 of 3)

(1) ITEM NO	(2) SMR CODE	(3) CAGEC	(4) PART NUMBER	(5) DESCRIPTION AND USABLE ON CODES(UOC)	(6) QTY
				GROUP 12 REVERSE OSMOSIS WATER PURIFICATION UNIT 600 GPH	
				FIG. 36 PRODUCT WATER (LIGHT BLUE TAPE) PIPING	
1	PAOZZ	96906	MS35649-204	..NUT,PLAIN, HEXAGON	6
2	PAOZZ	96906	MS35338-138	..WASHER,LOCK	6
3	PAOZZ	96906	MS51957-65	..SCREW,MACHINE	6
4	PAOZZ	97403	13222E5289-1	..CAP,HOSE	1
5	PAOZZ	OBZ82	095X0150C0BUNA	...GASKET	1
6	PAOZZ	96906	MS87006-32	..HOOK, CHAIN,S	1
7	MOOZZ	19099	YCH0105X010LYB	...CHAIN MAKE FROM BULK P/N 3603T904	1
8	PAOZZ	97403	13221E8278-1	..ADAPTER,STRAIGHT,PI	1
9	PAOZZ	96906	MS51971-2	..NUT,PLAIN,HEXAGON	2
10	PAOZZ	96906	MS35338-140	..WASHER,LOCK	2
11	PAOZZ	96906	MS15795-813	..WASHER,FLAT	2
12	PAOZZ	96906	MS35307-339	..BOLT,MACHINE	2
13	PAOZZ	96906	MS51971-1	..NUT,PLAIN,HEXAGON	4
14	PAOZZ	96906	MS35338-139	..WASHER,LOCK	8
15	PAOZZ	96906	MS35307-312	..SCREW,CAP,HEXAGON H	2
16	PBOZZ	97403	13221E8322-3	..STRAP,WEBBING	2
17	PBOZZ	97403	13221E8320-4	..RING,RETAINING	1
18	MOOZZ	19099	PPP-T-66TYICL2-3 38	..TAPE,PACKAGING MAKE FROM PPP-T-66TYICL2LIGHTBLUE.	V
19	PBOZZ	97403	13228E8284	..PIPE,BENT,METALLIC PRODUCT FLOWMETER TO OUTLET	1
20	PAOZZ	81349	M103872D02	..COUPLING,CLAMP 1 IN	1
21	PAOZZ	81349	M103873D02	...GASKET	1
22	PBOZZ	97403	13228E8263	..PIPE,BENT,METALLIC PRODUCT WATER METER OUTLET	1
23	PAOZZ	96906	MS35307-314	..SCREW,CAP,HEXAGON H	4
24	PAOZZ	96906	MS15795-810	..WASHER,FLAT	6
25	XDOZZ	97403	13221E8336-7	..STRAP,RETAINING	2
26	MOOZZ	19099	13221E8336-7-7	..TAPE,INSULATION MAKE FROM BULK P/ V N 13228E8296 6	
27	XDOZZ	97403	13221E8292-4	..SUPPORT,PIPE	2
28	PAOZZ	96906	MS20604-AD4W2	..DRIVET,BLIND	2
29	XDOZZ	97403	13222E5279-58	..PLATE,INFORMATION WATER METER	1
30	PBOZO	97403	13227E7586	..METER,VOLUMETRIC PO TOTALIZER	1
31	PBOZZ	97403	13228E8264	..REDUCER,PIPE PRODUCT WATER FROM CHECK VALVE.	1
32	PBOZZ	97403	13228E8282	..ELBOW,PIPE PRODUCT WATER TO FLOWMETER	1
33	PAOZZ	96906	MS51957-65	..SCREW,MACHINE	4
34	PAOZZ	96906	MS35335-60	..WASHER,LOCK	4
35	PBOOO	79172	5510A02114XXL	..FLOWMETER PRODUCT WATER GPM	1
36	PAOZZ	79172	P54257	...SCREW,MACHINE	4
37	XDOOO	79172	NU1240	...TUBE SHIELD UNIT	1
38	PAOZZ	79172	NP2678	....WINDOW	1
39	PAOZZ	79172	NPXC2111	...TUBE,METERING	1

(1) ITEM NO	(2) SMR CODE	(3) CAGEC	(4) PART NUMBER	(5) DESCRIPTION AND USABLE ON CODES(UOC)	(6) QTY
40	PAOZZ	79172	NP2116	...GASKET	1
41	PAOZZ	79172	PXA48080	...PACKING PREFORMED	3
42	XDOZZ	79172	NP2226	...ORIFICE	1
43	XDOZZ	79172	NP2067	..NUT	1
44	XDOZZ	79172	NUXL1044	...FLOAT,METER,FLOW RA	1
45	XDOZZ	79172	NU1250	...FRAME	1
46	PAOZZ	97403	13228E8300	..VALVE,CHECK	1
47	PAOZZ	96906	MS35842-11	..CLAMP,HOSE	4
48	MOOZZ	19099	13228E8260-12	..TUBING,FLEXIBLE MAKE FROM BULK P/ N 13221E8367-1	4
49	PAOZZ	97403	13228E3312-13	..ADAPTER,STRAIGHT 1/2 IN NPT X 1/ 2 IN. HOSE.	4
50	PAOZZ	97403	13226E7982-4	..COCK,PLUG 1/2 NPT ELLIPTIC, 3-WAY	4
51	PAOZZ	96906	MS51846-58	..NIPPLE,PIPE	4
52	PBOZZ	97403	13227E9238	..VALVE,VACUUM, BREAKI	1
53	PAOZZ	96906	MS14315-5X	..BUSHING,PIPE	1
54	PAOZZ	96906	MS35649-204	..NUT,PLAIN,HEXAGON	1
55	PAOZZ	96906	MS35338-138	..WASHER,LOCK	1
56	PAOZZ	96906	MS51957-65	..SCREW,MACHINE	1
57	PAOZZ	96906	MS21919WCG4	..CLAMP,LOOP	1
58	PAOZZ	97403	13228E8294-1	..ADAPTER,STRAIGHT,PI 1/4 IN. TUBE X 1/2 IN. NPT	1
59	MOOZZ	19099	13228E8260-126	..TUBE,VENT MAKE FROM BULK P/N ASTM-B466 1/4 OD X 0.035 WALL, COPPER NICKEL	1
60	PAOZZ	97403	13221E8271-4	..VALVE,BALL VENT PRODUCT WATER	1
61	PBOZZ	97403	13227E9240-5	..TEE,PIPE 1/4 IN. NPT	1
62	PAOZZ	96906	MS21919WCG21	..CLAMP,LOOP	1
63	PBOZZ	97403	13228E8280	..PIPE,METALLIC PRODUCT MANIFOLD	1
64	PAOZZ	96906	MS35307-306	..SCREW,CAP,HEXAGON H	2
65	XDOZZ	97403	13228E8297	..BRACKET	1
66	XDOZZ	97403	13221E8321	..BRACKET	1

END OF FIGURE

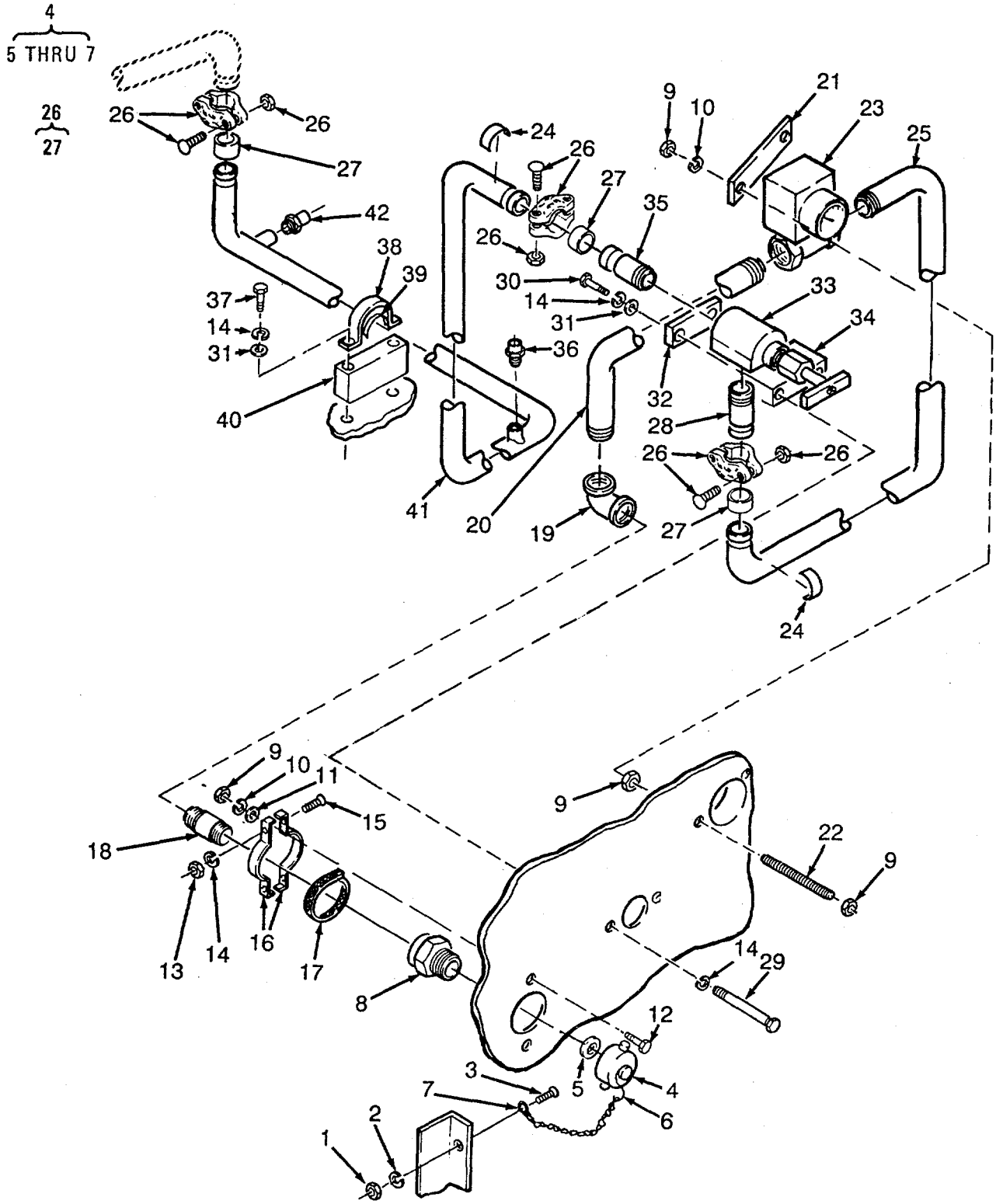

Figure 37. Brine Water (Purple Tape) Piping

(1) ITEM NO	(2) SMR CODE	(3) CAGEC	(4) PART NUMBER	(5) DESCRIPTION AND USABLE ON CODES(UOC)	(6) QTY
				GROUP 12 REVERSE OSMOSIS WATER PURIFICATION UNIT 600 GPH	
				FIG. 37 BRINE WATER (PURPLE TAPE) PIPING	
1	PAOZZ	96906	MS35649-204	..NUT,PLAIN,HEXAGON	1
2	PAOZZ	96906	MS35338-138	..WASHER,LOCK	1
3	PAOZZ	96906	MS51957-65	..SCREW,MACHINE	1
4	PAOZZ	97403	13222E5289-1	..CAP,HOSE	1
5	PAOZZ	OBZ82	095X0150C0BUNA	...GASKET	1
6	PAOZZ	96906	MS87006-32	...HOOK, CHAIN,S	1
7	MOOZZ	19099	YCH0105X010LYB	...CHAIN MAKE FROM BULK P/N 3603T904	1
8	PAOZZ	97403	13221E8278-1	..ADAPTER,STRAIGHT,PI 1-1/2 IN. NPSH MALE X 1-1/2 IN. NPT FEMALE	1
9	PAOZZ	96906	MS51971-2	..NUT,PLAIN,HEXAGON	8
10	PAOZZ	96906	MS35338-140	..WASHER,LOCK	4
11	PAOZZ	96906	MS15795-813	..WASHER,FLAT	2
12	PAOZZ	96906	MS35307-339	..BOLT.MACHINE	2
13	PAOZZ	96906	MS51971-1	..NUT,PLAIN,HEXAGON	2
14	PAOZZ	96906	MS35338-139	..WASHER,LOCK	10
15	PAOZZ	96906	MS35307-312	..SCREW,CAP,HEXAGON H	2
16	PBOZZ	97403	13221E8322-3	..STRAP,WEBBING	2
17	PBOZZ	97403	13221E8320-4	..RING,RETAINING 2.25 IN. DIAMETER	1
18	PAOZZ	96906	MS51846-138	..NIPPLE,PIPE	1
19	PBOZZ	97403	13228E8260-1	..ELBOW,PIPE 90 DEG 1 1/2 IN NPS BRONZE	1
20	PBOZZ	97403	13228E8272	..ELBOW,PIPE FLOW METER TO OUTLET	1
21	XDOZZ	97403	13221E8370	..BRACKET,MOUNTING	1
22	PBOZZ	81349	MIL-S-1222TYIVGR	..STUD BOLT 5/16-18UNCA-2A X 6.12 316 LENGTH.	2
23	PAOZF	97403 1	3222E5247-2	..METER,FLOW RATE IND BRINE WATER FLOW	1
24	MOOZZ	19099	PPP-T-66TYICL2-3 39	..TAPE,PACKAGING MAKE FROM BULK P/ N PPP-T-66, TYI, CL2, PURPLE	V
25	PBOZZ	97403	13228E8271	..PIPE SECTION REGULATED PRODUCT FLOW VALVE TO FLOWMETER	1
26	PAOZZ	81349	M103872D02	..COUPLING,CLAMP 1 IN	3
27	PAOZZ	81349	M103873D02	...GASKET	1
28	PBOZZ	97403	13228E8286-2	..COUPLING,PIPE GROOVED CLAMP TO NPT	1
29	PAOZZ	96906	MS35307-305	..SCREW,CAP,HEXAGON H	2
30	PAOZZ	96906	MS35307-318	..SCREW,CAP,HEXAGON H	2
31	PAOZZ	96906	MS15795-810	..WASHER,FLAT	4
32	XDOZZ	97403	13222E5334	..BAR	1
33	PAOZO	97403	13228E8305	..VALVE,ANGLE REGULATED PRODUCT FLOW	1
34	XDOZZ	97403	13222E5333	..BLOCK,RESTRAINT	1
35	PBOZZ	97403	13228E8287-2	..COUPLING,PIPE GROOVED CLAMP TO NPT	1
36	PAOZZ	97403	13228E8294-1	..ADAPTER,STRAIGHT,PI 1/4 TUBE TO	1

(1) ITEM NO	(2) SMR CODE	(3) CAGEC	(4) PART NUMBER	(5) DESCRIPTION AND USABLE ON CO DES(UOC)	(6) QTY
				1/4 NPT	
37	PAOZZ	96906	MS35307-314	..SCREW,CAP,HEXAGON H.....	4
38	XDOZZ	97403	13221E8336-8	..STRAP,RETAINING	2
39	MOOZZ	19099	13221E8336-8-8	..TAPE,INSULATION MAKE FROM BULK P/ ..... V N 13228E8296.....	
40	XDOZZ	97403	13221E8292-3	..SUPPORT,PIPE.....	2
41	PBOZZ	97403	13228E8278	..PIPE,METALLIC BRINE FLOW TO..... REGULATED PRODUCT FLOW VALVE.....	1
42	PAOZZ	97403	13228E8294-2	..ADAPTER,STRAIGHT,PI 112 TUBE X 1/ ..... 2 NPT	1

END OF FIGURE

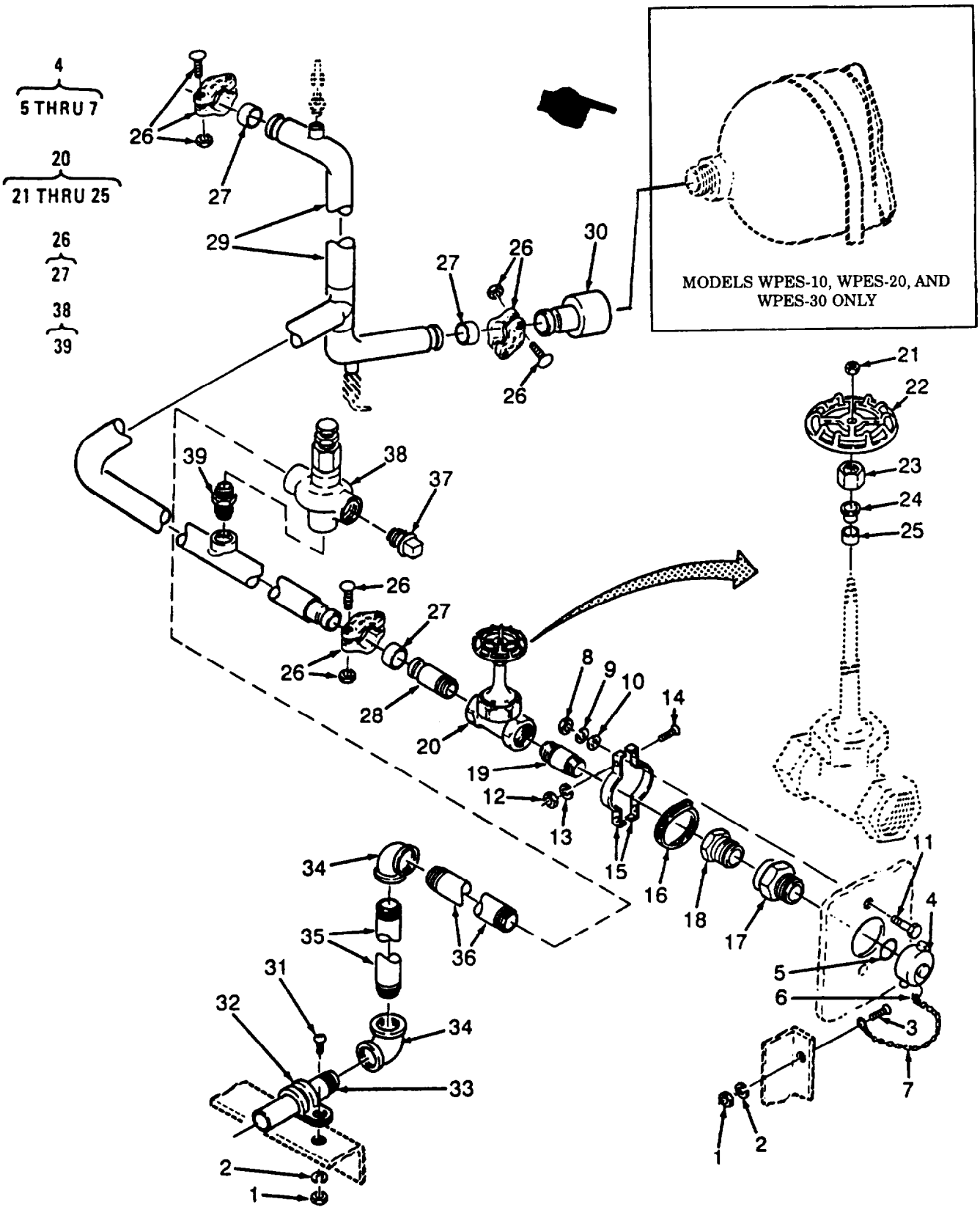

Figure 38. Filtered Water (Yellow Tape) Piping (Sheet 1 of 2)

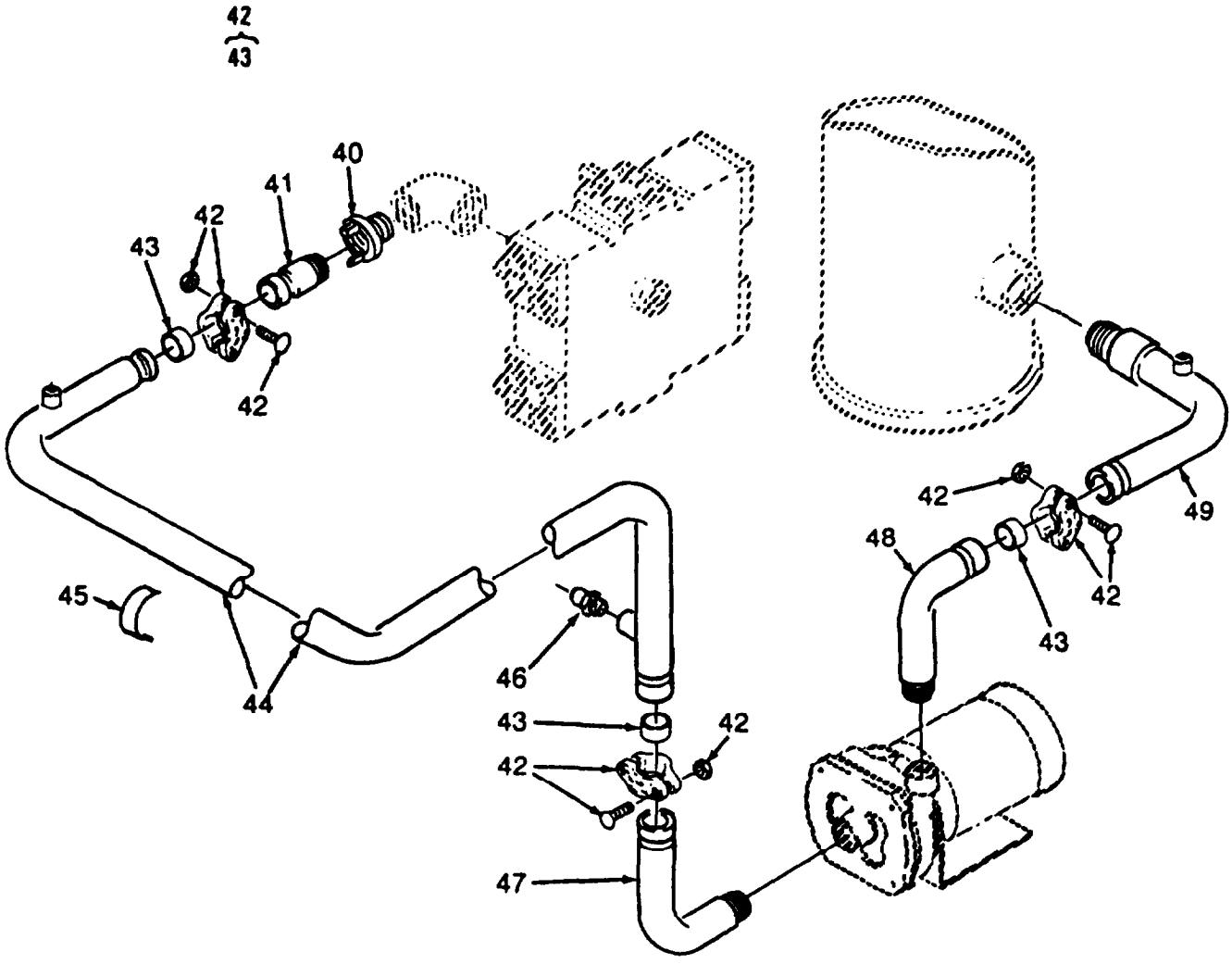

Figure 38. Filtered Water (Yellow Tape) Piping (Sheet 2 of 2)

(1) ITEM NO	(2) SMR CODE	(3) CAGEC	(4) PART NUMBER	(5) DESCRIPTION AND USABLE ON CODES(UOC)	(6) QTY
				GROUP 12 REVERSE OSMOSIS WATER PURIFICATION UNIT 600 GPH	
				FIG. 38 FILTERED WATER (YELLOW TAPE) PIPING	
1	PAOZZ	96906	MS35649-204	..NUT,PLAIN,HEXAGON	2
2	PAOZZ	96906	MS35338-138	..WASHER,LOCK	2
3	PAOZZ	96906	MS51957-65	..SCREW,MACHINE	1
4	PAOZZ	97403	13222E5289-2	..CAP,HOSE	1
5	PAOZZ	OBZ82	095X0200C0BUNA	..GASKET	1
6	PAOZZ	96906	MS87006-32	..HOOK,CHAIN,S	1
7	MOOZZ	19099	YCH0105X010LYB	...CHAIN MAKE FROM BULK P/N3603T904	1
8	PAOZZ	96906	MS51971-2	..NUT,PLAIN,HEXAGON	2
9	PAOZZ	96906	MS35338-140	..WASHER,LOCK	2
10	PAOZZ	96906	MS15795-813	..WASHER,FLAT	2
11	PAOZZ	96906	MS35307-339	..BOLT,MACHINE	2
12	PAOZZ	96906	MS51971-1	..NUT,PLAIN,HEXAGON	2
13	PAOZZ	96906	MS35338-139	..WASHER,LOCK	2
14	PAOZZ	96906	MS35307-312	..SCREW,CAP,HEXAGON H	2
15	XDOZZ	97403	13221E8322-3	..STRAP,WEBBING	2
16	PBOZZ	97403	13221E8320-5	..WASHER,SPLIT 2.25 DIAMETER	1
17	PBOZZ	97403	13221E8278-2	..COUPLING,PIPE	1
18	PBOZZ	97403	13221E8344-2	..ADAPTER,STRAIGHT,PI 1-1/4 IN NPT FEMALE X 2 IN. NPSH MALE	1
19	PAOZZ	96906	MS51846-122	..NIPPLE,PIPE	1
20	PAOOO	76364	GATE 1184-1 1/4IN	..VALVE,GATE UOC:FAV,FAW,FAX	1
20	PAOOO	1CY65	1-1/4 B-144 300#	..VALVE,GATE,300 CLASS UOC:FMQ,FMR,FMS	1
21	XDOZZ	76364	GATE 1184-11-1 1/4IN	..NUT,HANDWHEEL UOC:FAV,FAW,FAX	1
21	XDOZZ	1CY65	B-144-6	..NUT,HANDWHEEL UOC:FMQ,FMR,FMS	1
22	XDOZZ	76364	GATE 1184-9-1 1/4IN	...HANDWHEEL UOC:FAV,FAW,FAX	1
22	XDOZZ	1CY65	B-144-5	..HANDWHEEL UOC:FMQ,FMR,FMS	1
23	XDOZZ	76364	GATE 1184-8-1 1/4IN	..NUT,PACKING UOC:FAV,FAW,FAX	1
23	XDOZZ	1CY65	B-144-10	..NUT,PACKING UOC:FMQ,FMR,FMS	1
24	XDOZZ	76364	GATE 1184-7-1 1/4IN	...GLAND UOC:FAV,FAW,FAX	1
24	XDOZZ	1CY65	B-144-9	...GLAND,PACKING UOC:FMQ,FMR,FMS	1
25	PAOZZ	76364	GATE 1184-12-1 1/4IN	..PACKING UOC:FAV,FAW,FAX	1
25	PAOZZ	1CY65	B-144-8	..PACKING UOC:FMQ,FMR,FMS	1
26	PAOZZ	81349	M103872D03	..COUPLING,CLAMP 1 1/4 IN	3
27	XDOZZ	81349	M103873D03	...GASKET	3
28	PBOZZ	97403	13228E8287-3	..ADAPTER,CLAMP GROOVED CLAMP TO NPT	1
29	PBOZZ	97403	13228E8285	..PIPE,METALLIC FEED AND VENT FROM PULSE DAMPENER	1
30	PBOZZ	97403	13228E8288	..REDUCER,PIPE GROOVED CLAMP TO NPT	1
31	PAOZZ	96906	MS51957-67	..SCREW,MACHINE	1
32	PBOZZ	96906	MS21919WCG21	..CLAMP,LOOP	1

(1) ITEM NO	(2) SMR CODE	(3) CAGEC	(4) PART NUMBER	(5) DESCRIPTION AND USABLE ON CODES(UOC)	(6) QTY
33	MOOZZ	19099	1322838260-131	..PIPE MAKE FROM BULK P/N ASTM-B43, 1 IN RED. BRASS	1
34	PBOZZ	97403	13228E8260-94	..ELBOW,PIPE 90 DEG 1 IN NPS CLASS125 SMLS CAST BRONZE ASME-BL6.15	2
35	MOOZZ	19099	1322838260-108	..PIPE MAKE FROM BULK P/N ASTM-B43, 1 IN. RED BRASS	1
36	MOOZZ	19099	13228E8260-95	..PIPE MAKE FROM BULK P/N ASTM-B43, 1 IN. RED BRASS	1
37	PAOZZ	97403	13228E8260-164	..PLUG,PIPE 1-11 1/2 NPT CAST BRONZE THD FTD. ASME-B16.015	1
38	PAOZZ	63850	7601-1-MP	..VALVE,SAFETY RELIEF	1
39	XAOZZ	63850	7610-1	...SEAT,VALVE	1
40	PAOZZ	96906	MS14315-22Z	..BUSHING,PIPE 2 IN. MALE NPT X 1-1/2 IN. NPT	1
41	PROZZ	97403	13228E8286-4	..COUPLING,PIPE	1
42	PAOZZ	81349	M103872D04	..COUPLING,CLAMP 1 1/2 IN	3
43	PADZZ	81349	M103873D04	.GASKET	1
44	PBOZZ	97403	13228E8279	::PIPE,BENT,METALLIC FILTER TO BOOSTER PUMP	1
45	MOOZZ	19099	PPP-T-66TYICL2-340	..TAPE,PACKAGING MAKE FROM BULK P/N PPP-T 66, TYI, CL2, YELLOW	V
46	PBOZZ	97403	13228E3312-13	..ADAPTER,STRAIGHT 1/2 IN. NPT X 1/2 IN. HOSE	1
47	PBOZZ	97403	13228E8276	..ELBOW,PIPE BOOSTER PUMP SUCTION	1
48	PBOZZ	97403	13228E8275	..PIPE,METALLIC BOOSTER PUMP DISCHARGE	1
49	PBOZZ	97403	13228E8262	..ELBOW,PIPE BOOSTER TO CARTRIDGE FILTER	1

END OF FIGURE

(1) ITEM NO	(2) SMR CODE	(3) CAGEC	(4) PART NUMBER	(5) DESCRIPTION AND USABLE ON CODES(UOC)	(6) QTY
				1 IN. RED BRASS	
36	MOOZZ	19099	13228E8260-95	..PIPE MAKE FROM BULK P/N ASTM-B43,..... 1 IN. RED BRASS	1
37	PAOZZ	97403	13228E8260-164	..PLUG,PIPE 1-11 1/2 NPT CAST ..... BRONZE THD FTD ASME-B16.015	1
38	PAOZZ	63850	7601-1-MP	..VALVE,SAFETY RELIEF.....	1
39	XAOZZ	63850	7610-1	...SEAT,VALVE	1
40	PAOZZ	96906	MS14315-22Z	..BUSHING,PIPE 2 IN. MALE NPT X 1-..... 1/2 IN. NPT	1
41	PBOZZ	97403	13228E8286-4	..COUPLING,PIPE.....	1
42	PAOZZ	81349	M103872D04	..COUPLING,CLAMP 1 1/2 IN	3
43	PAOZZ	81349	M103873D04	...GASKET.....	1
44	PBOZZ	97403	13228E8279	..PIPE,BENT,METALLIC FILTER TO ..... BOOSTER PUMP.....	1
45	MOOZZ	19099	PPP-T-66TYICL2-3 40	..TAPE,PACKAGING MAKE FROM BULK P/ ..... V N PPP-T 66, TYI, CL2, YELLOW.	
46	PBOZZ	97403	13228E3312-13	..ADAPTER,STRAIGHT 1/2 IN. NPT X 1 ..... 2 IN. HOSE	1
47	PBOZZ	97403	13228E8276	..ELBOW,PIPE BOOSTER PUMP SUCTION.....	1
48	PBOZZ	97403	13228E8275	..PIPE,METALLIC BOOSTER PUMP ..... DISCHARGE	1
49	PBOZZ	97403	13228E8262	..ELBOW,PIPE BOOSTER TO CARTRIDGE ..... FILTER.....	1

END OF FIGURE

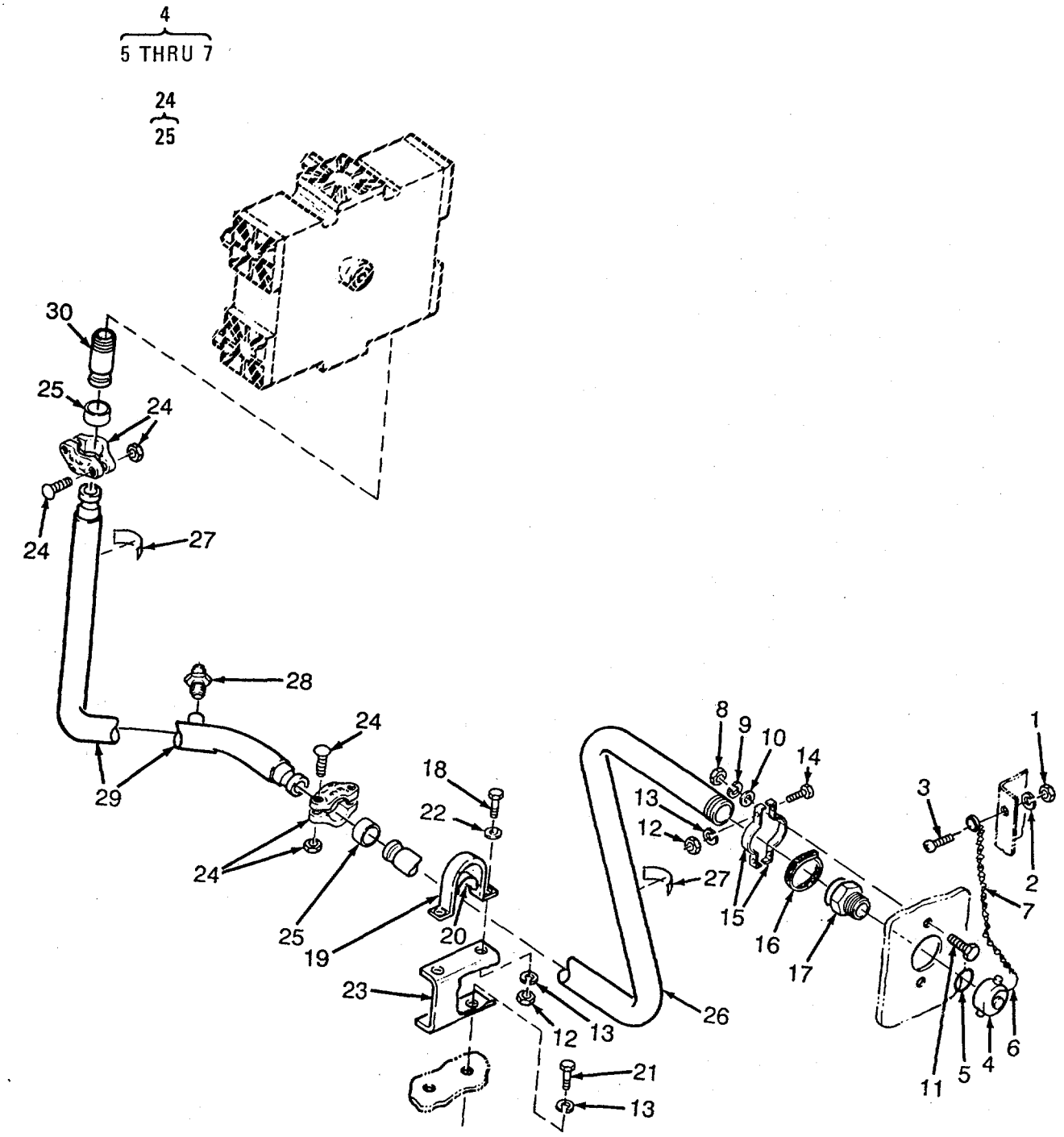

Figure 39. Waste Water (Red Tape) Piping

(1) ITEM NO	(2) SMR CODE	(3) CAGEC	(4) PART NUMBER	(5) DESCRIPTION AND USABLE ON CODES(UOC)	(6) QTY
				GROUP 12 REVERSE OSMOSIS WATER PURIFICATION UNIT 600 GPH	
				FIG. 39 WASTE WATER (RED TAPE) PIPING	
1	PAOZZ	96906	MS35649-204	..NUT,PLAIN,HEXAGON	1
2	PAOZZ	96906	MS35338-138	..WASHER,LOCK	1
3	PAOZZ	96906	MS51957-65	..SCREW,MACHINE	1
4	PAOZZ	97403	13222E5289-2	..CAP,HOSE	1
5	PAOZZ	OBZ82	095X020OCOBUNA	...GASKET	1
6	PAOZZ	96906	MS87006-32	...HOOK,CHAIN,S	1
7	MOOZZ	19099	YCHO105XO1OLYB	..CHAIN MAKE FROM BULK P/N 3603T904 4	1
8	PAOZZ	96906	MS51971-2	..NUT ,PLAIN,HEXAGON	2
9	PAOZZ	96906	MS35338-140	..WASHER,LOCK	2
10	PAOZZ	96906	MS15795-813	..WASHER,FLAT	2
11	PAOZZ	96906	MS35307-339	..BOLT,MACHINE	2
12	PAOZZ	96906	MS51971-1	..NUT,PLAIN,HEXAGON	4
13	PAOZZ	96906	MS35338-139	..WASHER,LOCK	4
14	PAOZZ	96906	MS35307-312	..SCREW,CAP,HEXAGON H	2
15	PBOZZ	97403	13221E8322-4	..STRAP,WEBBING	2
16	PBOZZ	97403	13221E8320-3	..SPACER,RING 2.5 IN. DIAMETER	1
17	PAOZZ	97403	13221E8278-2	..COUPLING,PIPE	1
18	PAOZZ	96906	MS35307-306	..SCREW,CAP,HEXAGON H	2
19	XDOZZ	97403	13221E8336-5	..STRAP,RETAINING	1
20	MOOZZ	19099	13221E8336-5-5	..TAPE,INSULATION MAKE FROM BULK P V N 13228E8296	
21	PAOZZ	96906	MS35307-308	..SCREW.CAP,HEXAGON H	2
22	PAOZZ	96906	MS15795-810	..WASHER.FLAT	2
23	XDOZZ	97403	13221E8283	..SUPPORT,PIPE	1
24	PAOZZ	81349	M103872DOS	..COUPLING,CLAMP 2 IN	2
25	PAOZZ	81349	M103873D05	...GASKET	2
26	PBOZZ	97403	13228E8265	..PIPE,METALLIC BACKWASH WASTE CUT	1
27	MOOZZ	19099	PPP-T-66TYICL2-3 41	..TAPE,PACKAGING MAKE FROM BULK P/ V N PPP-T-66, TYI, CL2, RED	
28	PAOZZ	97403	13228E8294-2	..ADAPTER,STRAIGHT,PI 112 IN. TUBE TO 1/2 IN. NPT	1
29	PBOZZ	97403	13228E8281	..PIPE,METALLIC BACKWASH CONTROL VALVE TO WASTE OUT	1
30	PBOZZ	97403	13228E8286-5	..COUPLING,PIPE GROOVED CLAMP TO NPT	1

END OF FIGURE

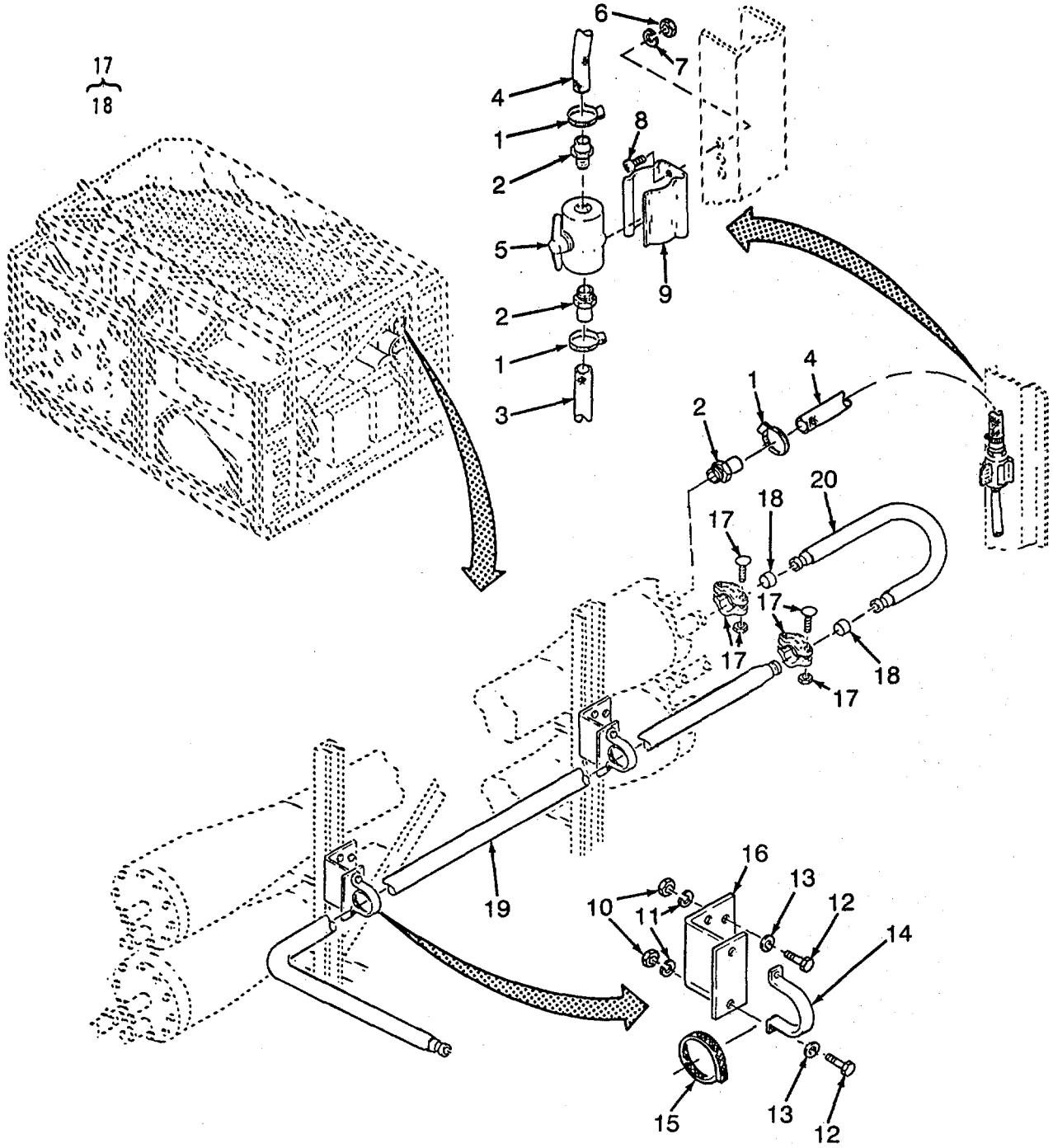

Figure 40. Pressure Tube Piping (Sheet 1 of 6)
ARMY

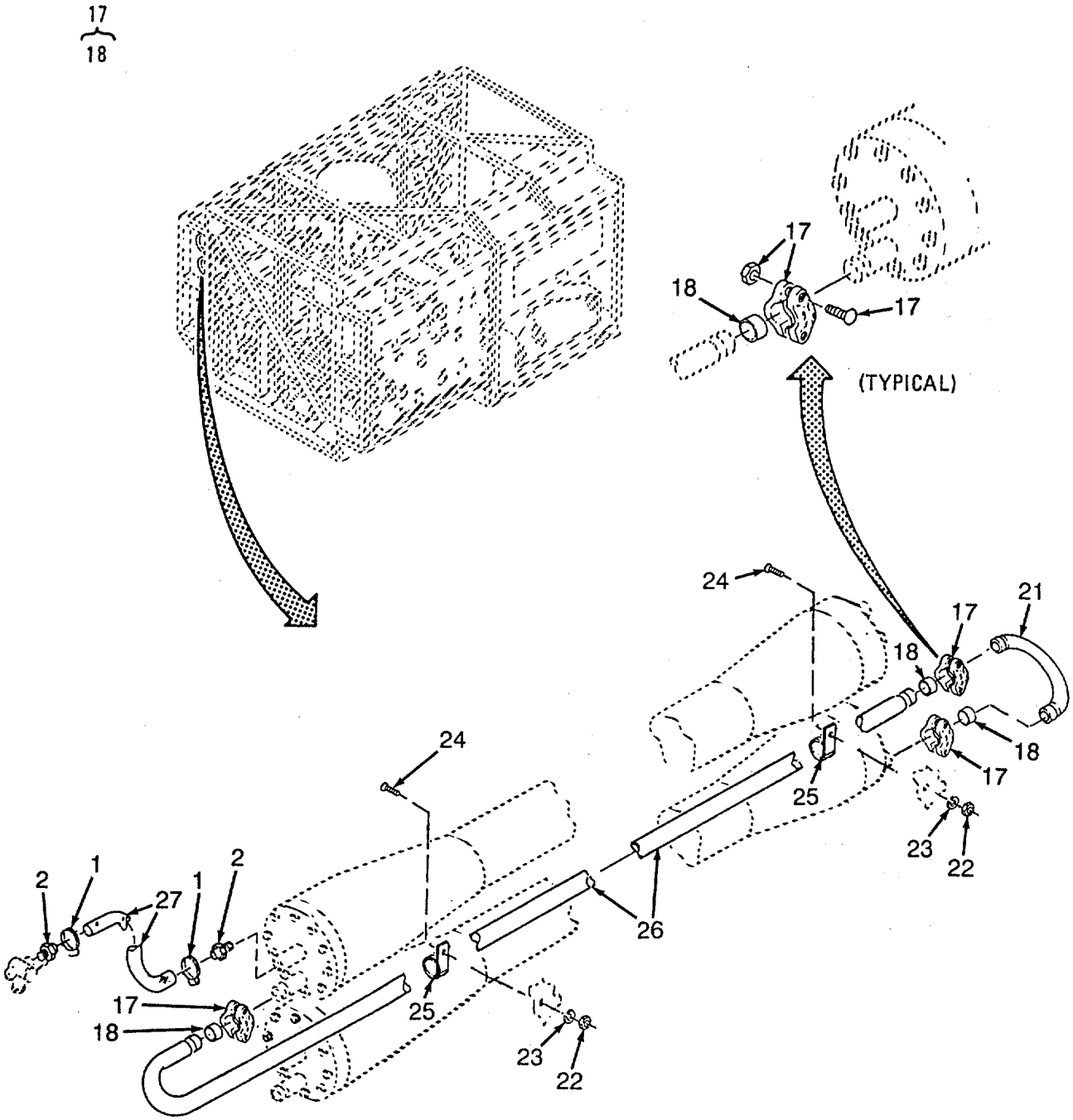

Figure 40. Pressure Tube Piping (Sheet 2 of 6)
ARMY

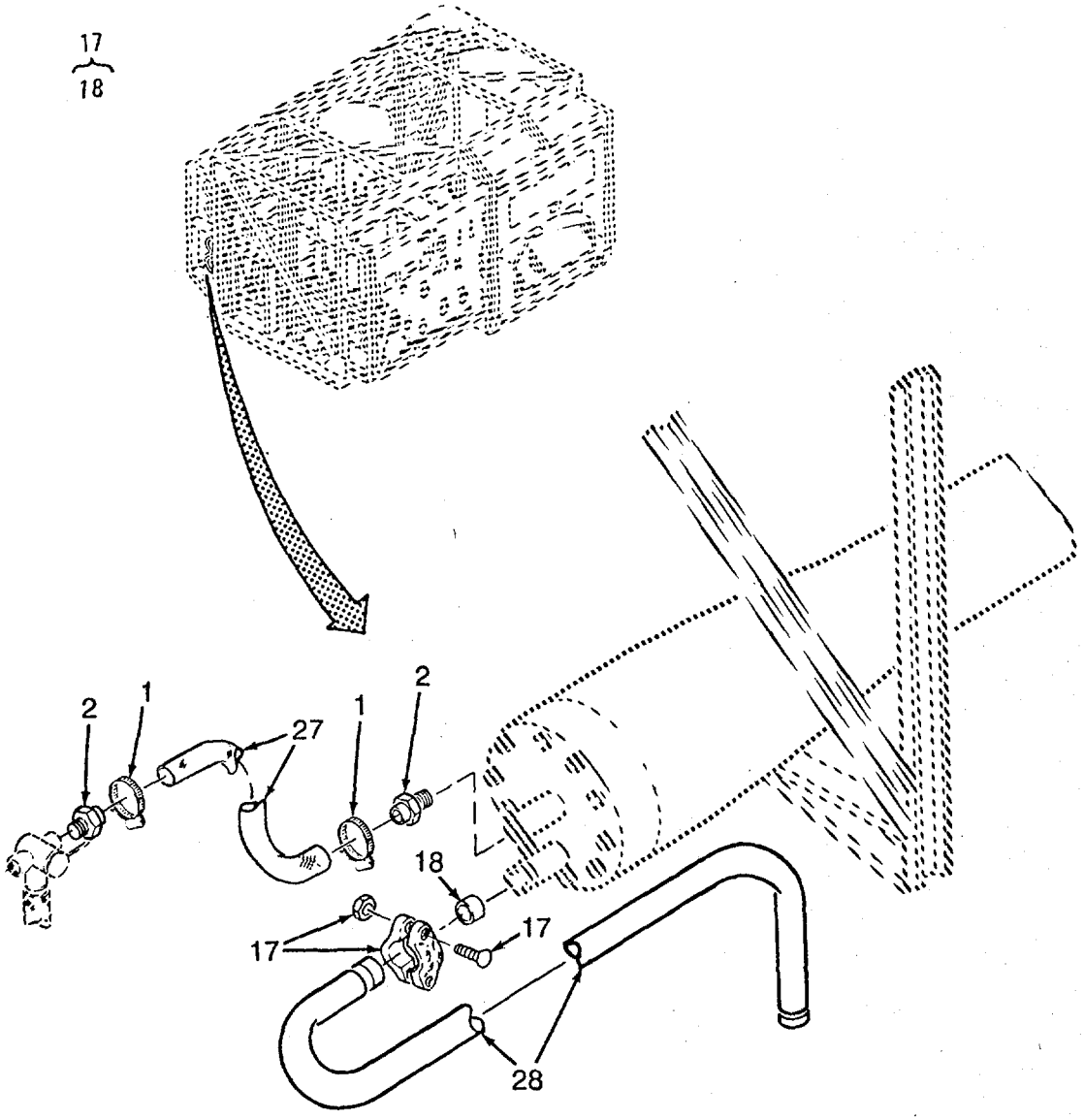

Figure 40. Pressure Tube Piping (Sheet 3 of 6)
ARMY

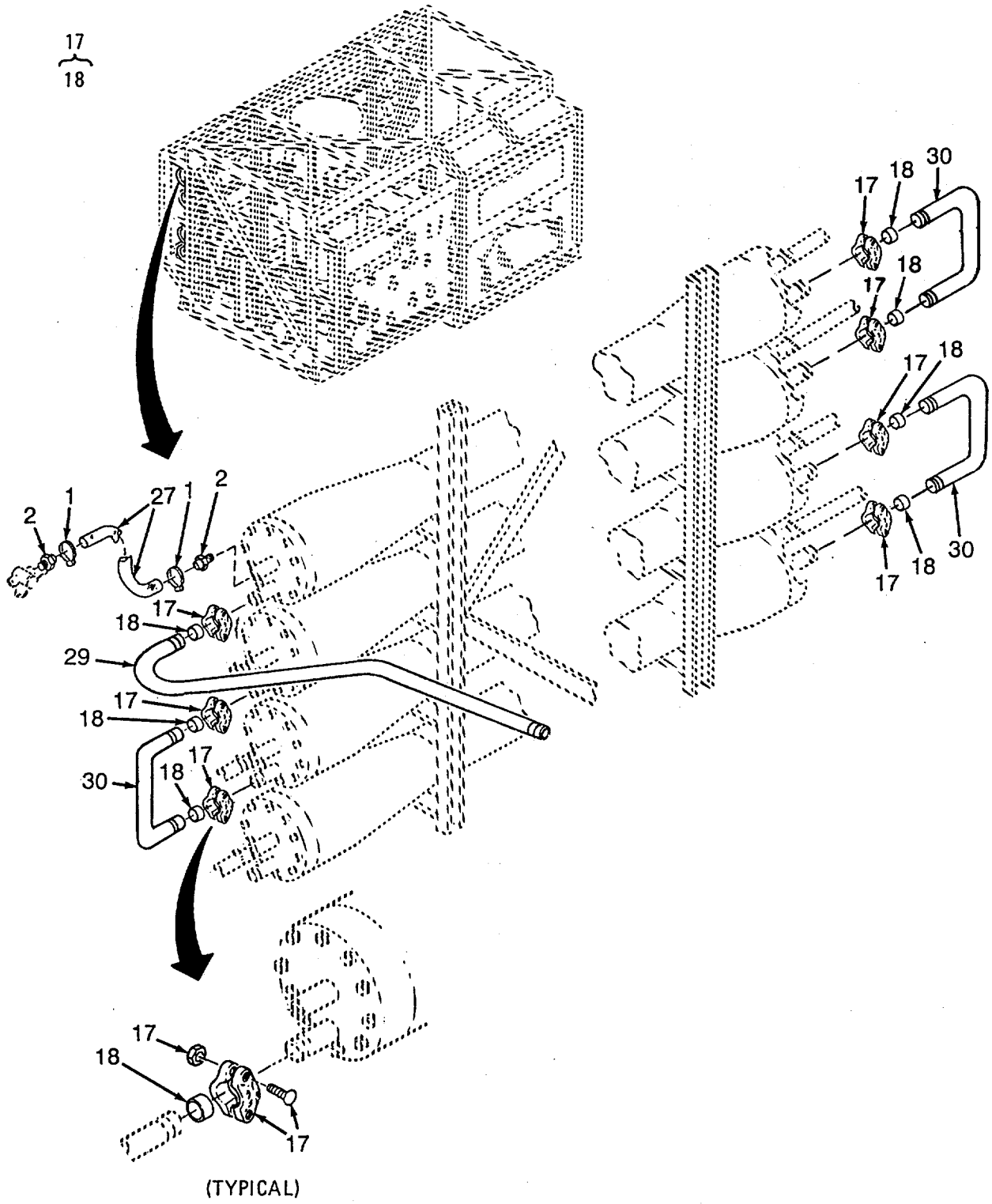

Figure 40. Pressure Tube Piping (Sheet 4 of 6).
(AIR FORCE AND NAVY)

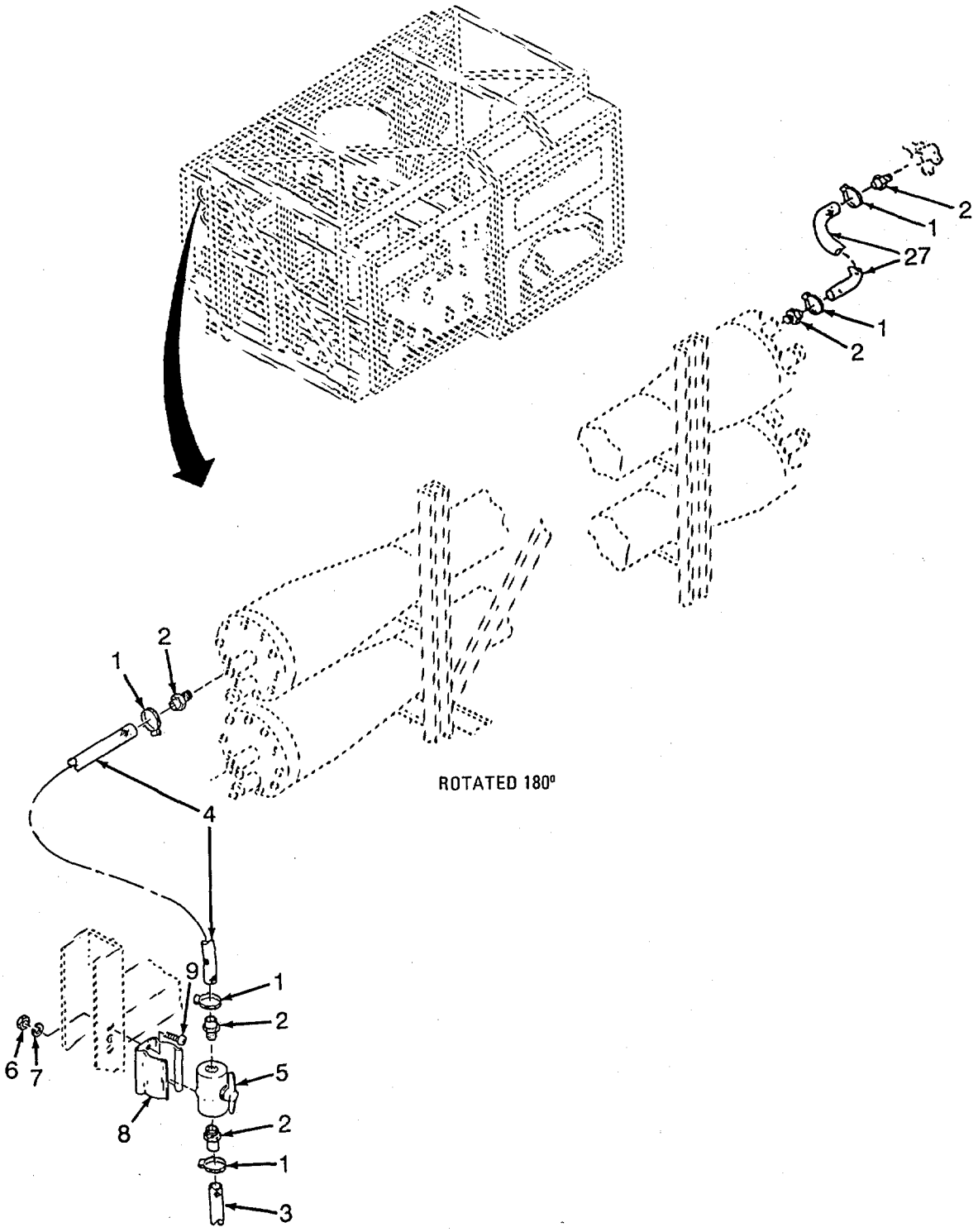

Figure 40. Pressure Tube Piping (Sheet 5 of 6).
(AIR FORCE AND NAVY)

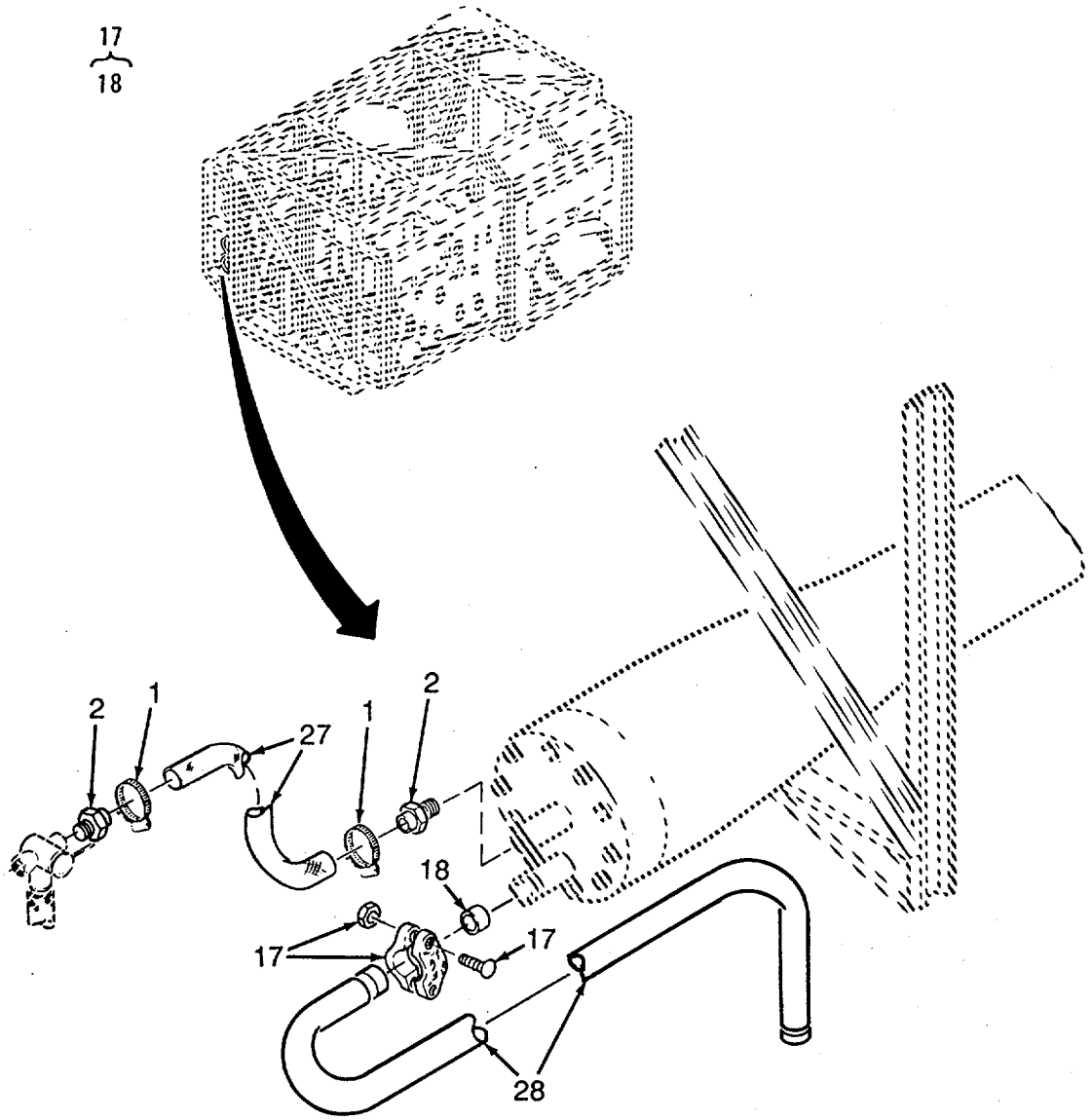

Figure 40. Pressure Tube Piping (Sheet 6 of 6).
(AIR FORCE AND NAVY)

(1) ITEM NO	(2) SMR CODE	(3) CAGEC	(4) PART NUMBER	(5) DESCRIPTION AND USABLE ON CODES(UOC)	(6) QTY
				GROUP 12 REVERSE OSMOSIS WATER PURIFICATION UNIT 600 GPH	
				FIG. 40 PRESSURE TUBE PIPING	
1	PAOZZ	96906	MS35842-11	..CLAMP,HOSE	20
2	PAOZZ	97403	13228E3312-13	..ADAPTER,STRAIGHT 1/2 NPT TO 1/2 HOSE	20
3	MOOZZ	19099	13228E8260-12	..TUBING,FLEXIBLE MAKE FROM BULK P/N 13221E8367-1	4
4	MOOZZ	19099	13228E8260-119	..TUBING,FLEXIBLE MAKE FROM BULK P/N 13221E8367-1	4
5	PAOZZ	97403	13226E7981-1	..VALVE,BALL PRODUCT WATER SAMPLE	4
6	PAOZZ	96906	MS35649-264	..NUT,PLAIN,HEXAGON	12
7	PAOZZ	96906	MS35338-136	..WASHER,LOCK	12
8	PADZZ	96906	MS51957-30	..SCREW,MACHINE	12
9	PAOZZ	81349	MIL-C-24066/2-246	..CLIP,SOLID SPRING	4
10	PAOZZ	96906	MS51971-1	..NUT,PLAIN,HEXAGON UOC:FAV,FMQ	8
11	PAOZZ	96906	MS35338-139	..WASHER,LOCK UOC:FAV,FMQ	8
12	PAOZZ	96906	MS35307-306	..SCREW,CAP,HEXAGON H UOC:FAV,FMQ	8
13	PAOZZ	96906	MS15795-810	..WASHER,FLAT UOC:FAV,FMQ	8
14	XDOZZ	97403	13221E8336-9	..STRAP,RETAINING UOC:FAV,FMQ	2
15	MOOZZ	19099	13221E8336-9-9	..TAPE,INSULATION MAKE FROM BULK P/N 13222E8296 UOC:FAV,FMQ	V
16	XDOZZ	97403	13222E5248	..BRACKET UOC:FAV,FMQ	2
17	PAOZZ	81349	M103872DO2	..COUPLING,CLAMP 1 IN UOC:FAV,FMQ	12
17	PADZZ	81349	M103872DO2	..COUPLING,CLAMP 1 IN UOC:FAW,FAX,FMR,FMS	8
18	PAOZZ	81349	M103873DO2	... GASKET UOC:FAV,FMQ	1
18	PAOZZ	81349	M103873DO2	..GASKET UOC:FAW,FAX,FMR,FMS	5
19	PBOZZ	97403	13228E8258	..PIPE,METALLIC FEED TO R.O. VESSEL UOC:FAV,FMQ	1
20	PBOZZ	97403	13228E8274-2	..PIPE,BENT,METALLIC U-BEND,TOP UOC:FAV,FMQ	1
21	PBOZZ	97403	13228E8274-1	..PIPE,BENT,METALLIC U-BEND,BOTTOM UOC:FAV,FMQ	3
22	PAOZZ	96906	MS35649-204	..NUT,PLAIN,HEXAGON UOC:FAV,FMQ	6
23	PAOZZ	96906	MS35338-138	..WASHER,LOCK UOC:FAV,FMQ	6
24	PAOZZ	96906	MS51957-65	..SCREW,MACHINE UOC:FAV,FMQ	6
25	PAOZZ	96906	MS21919WCG21	..CLAMP,LOOP UOC:FAV,FMQ	6
26	PBOZZ	97403	13228E8273	..PIPE,BENT,METALLIC R.O. VESSEL CONNECTOR UOC:FAV,FMQ	3
27	MOOZZ	19099	13228E5260-121	..TUBING,FLEXIBLE MAKE FROM BULK P/N 13221E8367-1	4
28	PBOZZ	97403	13228E8261	..PIPE,METALLIC R.O. VESSEL BRINE OUT	1

(1) ITEM NO	(2) SMR CODE	(3) CAGEC	(4) PART NUMBER	(5) DESCRIPTION AND USABLE ON CODES(UOC)	(6) QTY
29	PBOZZ	97403	13228E8293	..PIPE,BENT,METALLIC FEED TO R.O. VESSEL UOC:FAW,FAX,FMR,FMS,	1
30	PBOZZ	97403	13228E8292	..PIPE,METALLIC U-BEND UOC:FAW,FAX,FMR,FMS	3

END OF FIGURE

(1) ITEM NO	(2) SMR CODE	(3) CAGEC	(4) PART NUMBER	(5) DESCRIPTION AND USABLE ON CODES(UOC)	(6) QTY
24	PAOZZ	96906	MS51957-65	..SCREW,MACHINE..... UOC: FAV	6
25	PAOZZ	96906	MS21919WCG21	..CLAMP,LOOP ..... UOCIFAV	6
26	PBBOZZ	97403	13228E8273	..PIPE,BENT,METALLIC R.O. VESSEL..... CONNECTOR ..... UOC:FAV	3
27	MOOZZ	19099	13228E8260-121	..TUBING,FLEXIBLE MAKE FROM BULK PB. ..... N 13221E8367-1.....	4
28	PBBOZZ	97403	13228E8261	..PIPE,METALLIC R.O. VESSEL BRINE ..... OUT	1
29	PBBOZZ	97403	13228E8293	..PIPE,BENT,METALLIC FEED TO R.O. ..... VESSEL ..... UOC:FAW,FAX	1
30	PBBOZZ	97403	13228E8292	..PIPE,METALLIC U-BEND ..... UOC:FAW,FAX	3

END OF FIGURE

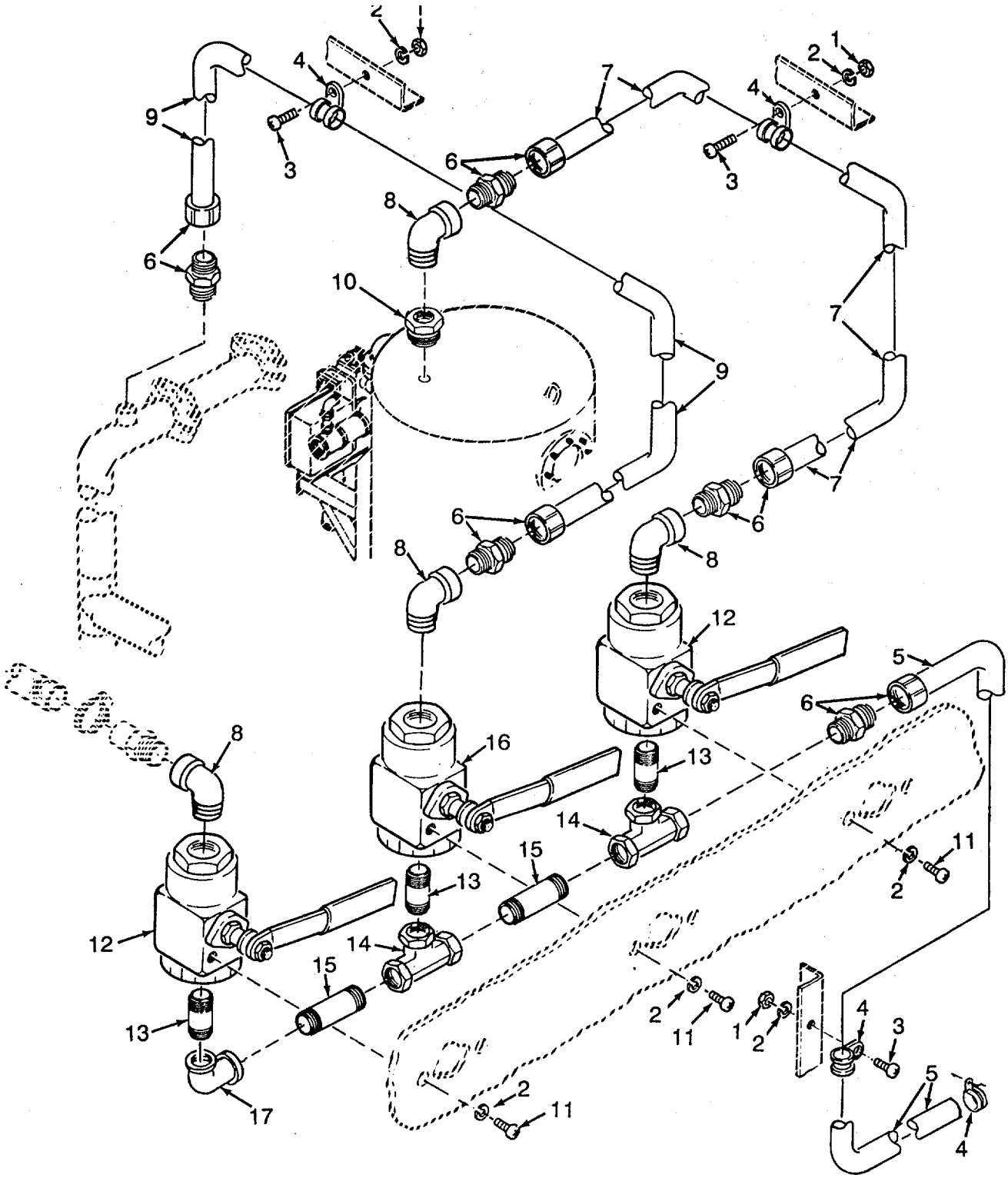

Figure 41. Filter Vent Valve and Tubing (Sheet 1 of 2)

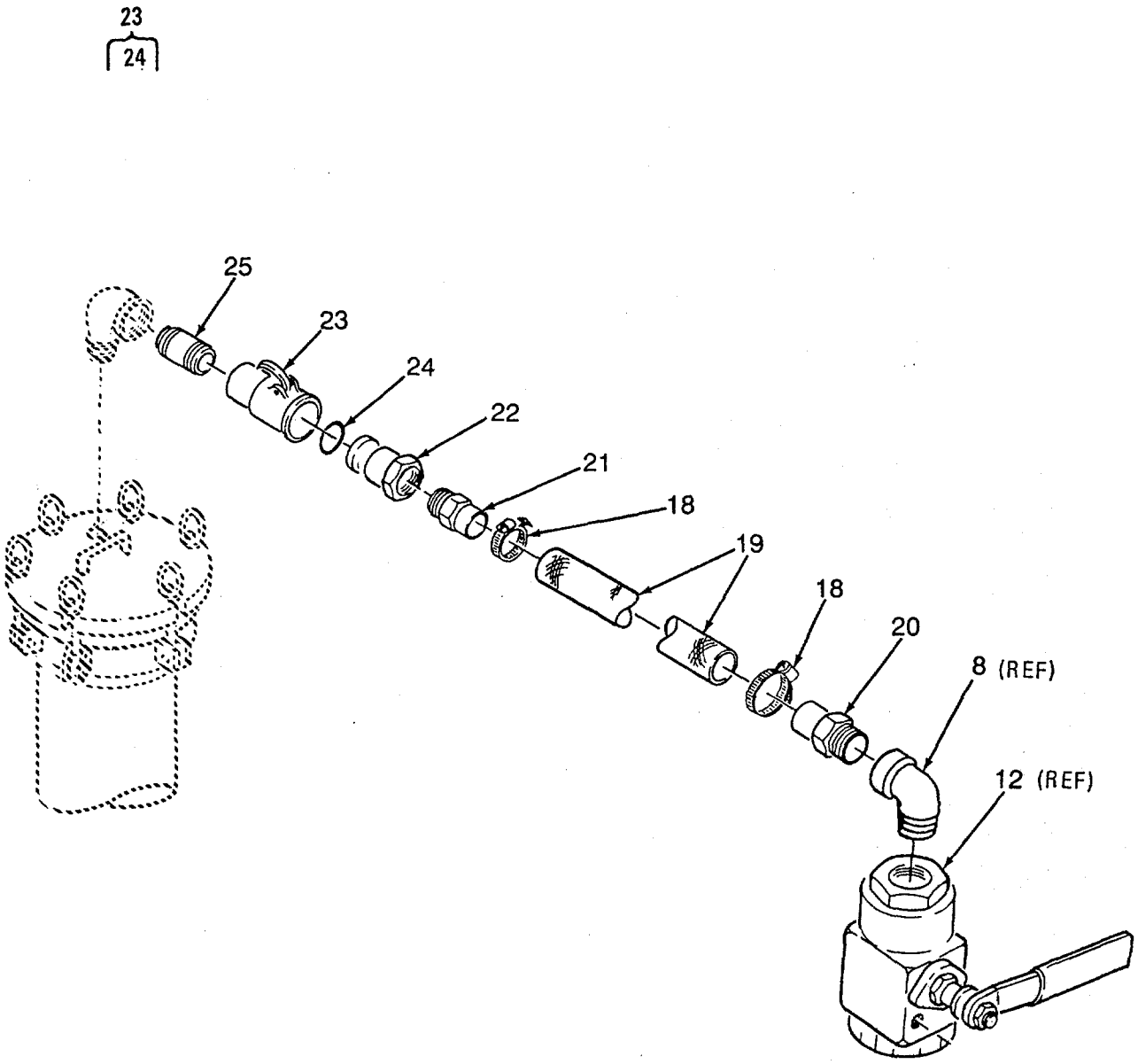

Figure 41. Filter Vent Valve and Tubing (Sheet 2 of 2)

(1) ITEM NO	(2) SMR CODE	(3) CAGEC	(4) PART NUMBER	(5) DESCRIPTION AND USABLE ON CODES(UOC)	(6) QTY
				GROUP 12 REVERSE OSMOSIS WATER PURIFICATION UNIT 600 GPH	
				FIG. 41 FILTER VENT VALVE AND TUBING	
1	PAOZZ	96906	MS35649-204	..NUT,PLAIN,HEXAGON	6
2	PAOZZ	96906	MS35338-138	..WASHER,LOCK	10
3	PAOZZ	96906	MS51957-65	..SCREW,MACHINE	6
4	PAOZZ	96906	MS21919WCG4	..CLAMP,LOOP	6
5	MOOZZ	19099	13228E8260-111	..TUBE VENT VALVE DRAIN LINE, MAKE FROM BULK P/N ASTM-B466 1/4 OD X 0.035 WALL	1
6	PBOZZ	97403	13228E8294-1	..ADAPTER,STRAIGHT,PI 1/4 TUBE X 1/4 NPT	3
7	MOOZZ	19099	13228E8260-112	..TUBE MULTIMEDIA VENT LINE, MAKE FROM BULK P/N ASTM-B466 1/4 OD X 0.035 WALL	1
8	PAOZZ	96906	MS51952-2	..ELBOW,PIPE	4
9	MOOZZ	19099	13228E8260-355	..TUBE PULSE DAMPENER, MAKE FROM BULK P/N ASTM-B466, 1/4 OD X 0.035 WALL	1
10	PAOZZ	96906	MS14315-9X	..BUSHING,PIPE	1
11	PAOZZ	96906	MS51957-61	..SCREW,MACHINE	6
12	PAOZZ	97403	13221E8271-4	..VALVE,BALL VENT CARTRIDGE AND MULTIMEDIA FILTER, LOW PRESSURE	2
13	PAOZZ	96906	MS51846-20	..NIPPLE,PIPE	3
14	PBOZZ	97403	13228E8260-74	TEE,PIPE ASTM-B16.15 1/4 NPT BRONZE	2
15	PAOZZ	96906	MS51846-32	..NIPPLE,PIPE	2
16	PAOZZ	97403	13221E8271-7	..VALVE,BALL VENT PULSE DAMPENER, HIGH PRESSURE	1
17	PAOZZ	97403	13228E8260-101	..ELBOW,PIPE ASME-B16.15 1/4 NPS BRONZE, 90 DEGREE	1
18	PAOZZ	96906	MS35842-11	..CLAMP,HOSE	2
19	MOOZZ	19099	13228E8260-118	..TUBING,FLEXIBLE CARTRIDGE FILTER VENT LINE, MAKE FROM BULK P/N 13221E8367-1.	1
20	PAOZZ	97403	13228E3312-8	..ADAPTER,STRAIGHT 1/4 IN. NPT X 1/2 IN. HOSE	1
21	PAOZZ	97403	13228E3312-13	..ADAPTER,STRAIGHT 1/2 IN. NPT X 1/2 IN. HOSE	1
22	PAOZZ	96906	MS27020-2	..COUPLING HALF,QUICK	1
23	PAOZZ	96906	MS27024-2	..COUPLING HALF,QUICK	1
24	PAOZZ	96906	MS27030-1	...GASKET	1
25	PAOZZ	96906	MS51846-58	..NIPPLE,PIPE	1
				END OF FIGURE	

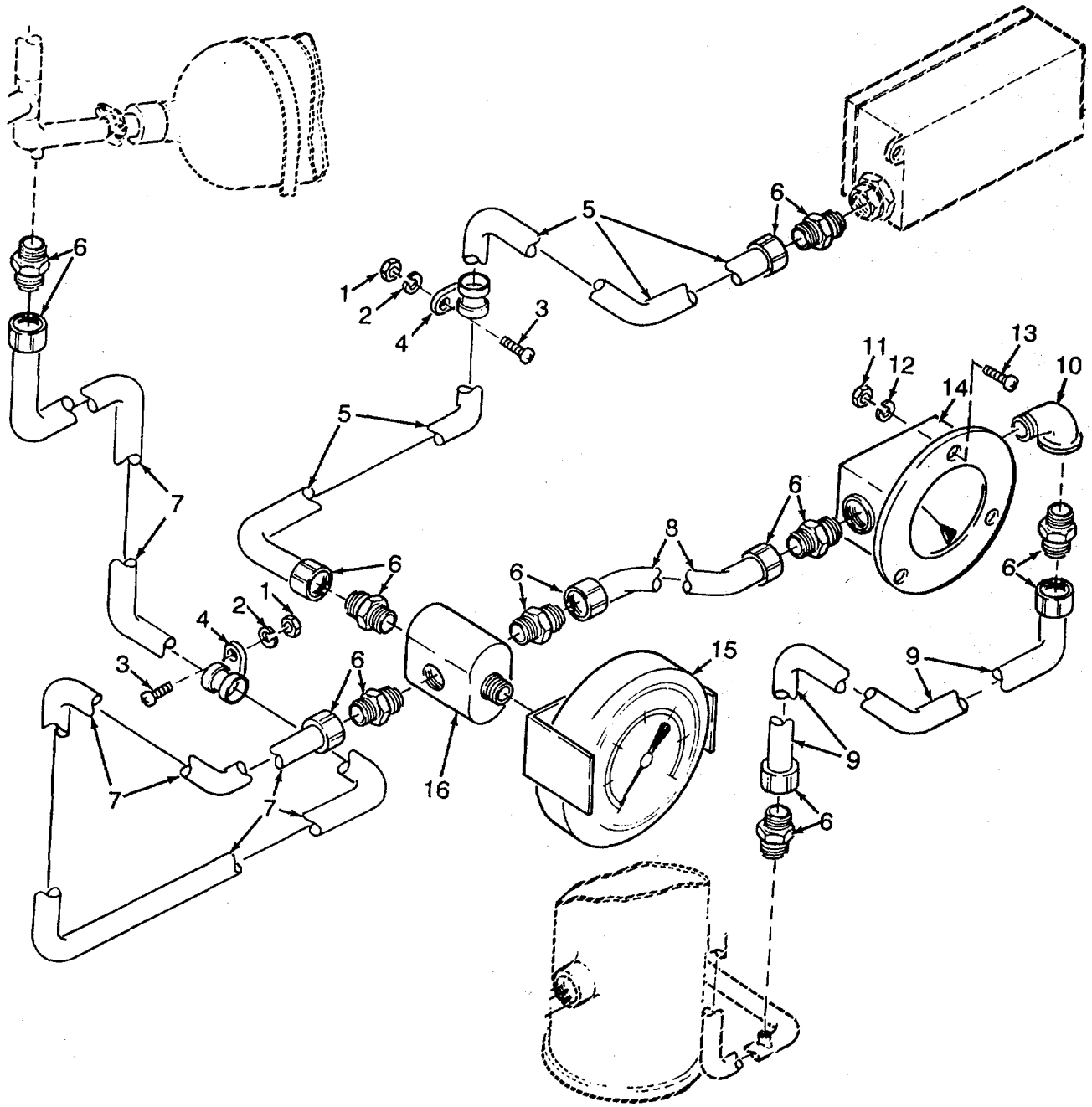

Figure 42. R.O. Pressure Gauges and Tubing

(1) ITEM NO	(2) SMR CODE	(3) CAGEC	(4) PART NUMBER	(5) DESCRIPTION AND USABLE ON CODES(UOC)	(6) QTY
				GROUP 12 REVERSE OSMOSIS WATER PURIFICATION UNIT 600 GPH	
				FIG. 42 R.O. PRESSURE GAUGES AND TUBING	
1	PAOZZ	96906	MS35649-204	..NUT, PLAIN, HEXAGON	4
2	PAOZZ	96906	MS35338-138	..WASHER, LOCK	4
3	PAOZZ	96906	MS51957-65	..SCREW.MACHINE	4
4	PAOZZ	96906	MS21919WCG4	..CLAMP, LOOP	4
5	MFOZZ	19099	13228E8260-106	..TUBE R.O. PRESSURE GAGE TO HIGH PRESSURE SWITCH MAKE FROM BULK P/N ASTM-B466 1/4 OD X 0.035 WALL	1
6	PAOZZ	97403	13228E8294-1	..ADAPTER, STRAIGHT, PI 1/4 IN. TUBE X 1/4 IN. NPT	7
7	MFOZZ	19099	13228E8260-107	..TUBE R.O. PRESSURE GAGE TO PULSE DAMPENER DISCHARGE LINE, MAKE FROM BULK P/N ASTM-B466 1/4 OD X 0.035 WALL	1
8	MFOZZ	19099	13228E8260-128	..TUBE R.O. DIFFERENTIAL TO R.O. PRESSURE GAGE, MAKE FROM BULK P/N ASTM-B466 1/4 OD X 0.035 WALL	1
9	MFOZZ	19099	13228E8260-54	..TUBE R.O. DIFFERENTIAL GAGE TO BRINE LINE, MAKE FROM BULK P/N ASTM-B466 1/4 OD X 0.035 WALL	1
10	PAOZZ	96906	MS51952-2	..ELBOW, PIPE	1
11	PAOZZ	96906	MS35649-284	..NUT, PLAIN, HEXAGON	3
12	PAOZZ	96906	MS35338-137	..WASHER, LOCK	3
13	PAOZZ	96906	MS51957-46	..SCREW, MACHINE	3
14	PAOZZ	97403	13221E8316-2	..GAGE, DIFFERENTIAL, D R.O. VESSELS.	1
15	PAOZZ	97403	13221E8340	..GAGE, PRESSURE, DIAL R.O. VESSELS	1
16	PBOZZ	97403	13228E8289	..CROSS.PIPE	1

END OF FIGURE

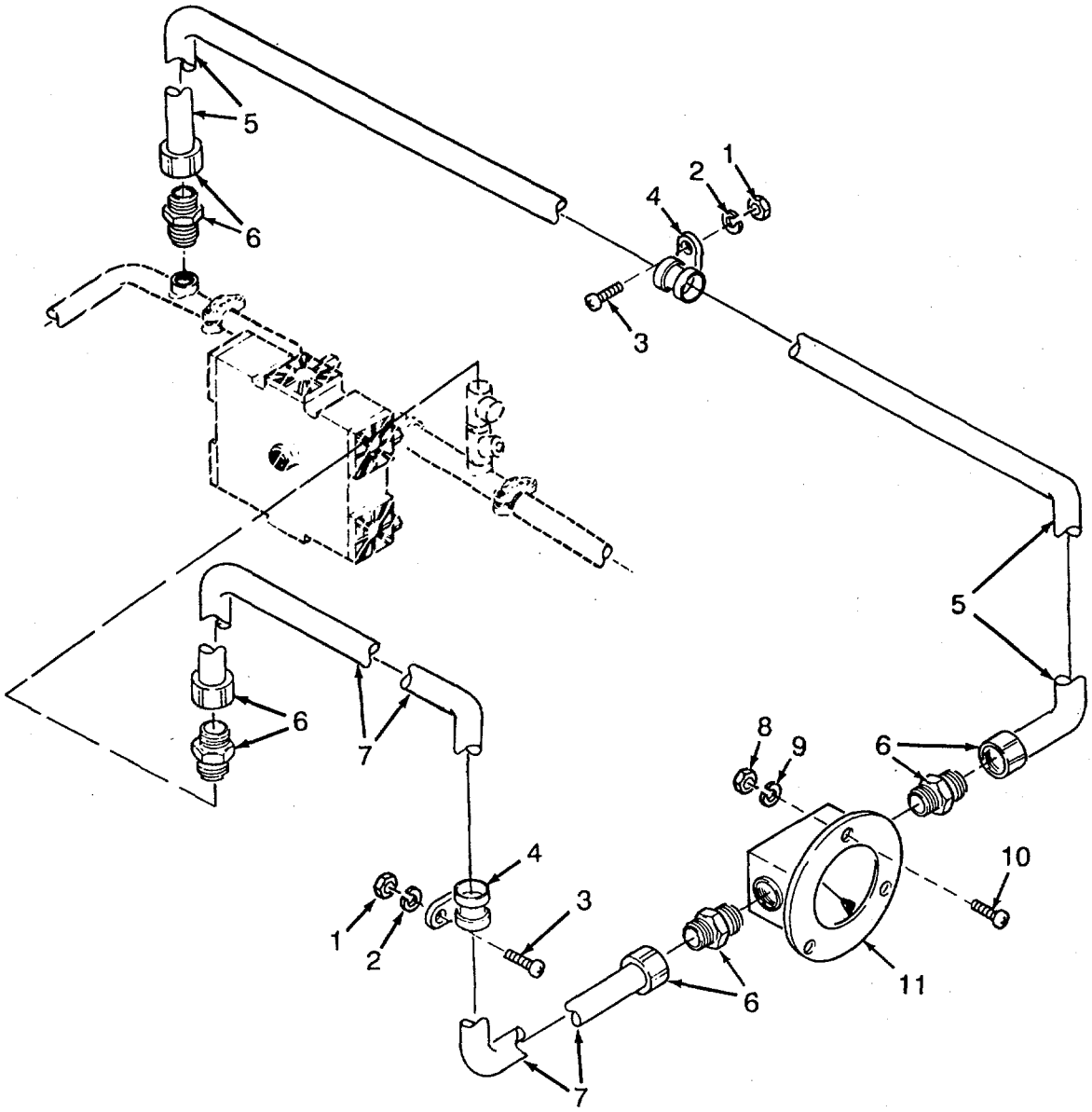

Figure 43. Multimedia Filter Gauge and Tubing

(1) ITEM NO	(2) SMR CODE	(3) CAGEC	(4) PART NUMBER	(5) DESCRIPTION AND USABLE ON CODES(UOC)	(6) QTY
				GROUP 12 REVERSE OSMOSIS WATER PURIFICATION UNIT 600 GPH	
				FIG. 43 MULTIMEDIA FILTER GAUGE AND TUBING	
1	PAOZZ	96906	MS35649-204	..NUT, PLAIN, HEXAGON	4
2	PAOZZ	96906	MS35338-138	..WASHER, LOCK	4
3	PAOZZ	96906	MS51957-65	..SCREW, MACHINE	4
4	PAOZZ	96906	MS21919WCG4	..CLAMP, LOOP	4
5	MFOZZ	19099	13228E8260-125	..TUBE MAKE FROM BULK P/N ASTM- B466 1/4 OD X 0.035 WALL	1
6	PAOZZ	97403	13228E8294-1	..ADAPTER, STRAIGHT.PI 1/4 IN. TUBE X 1/4 IN. NPT	4
7	MFOZZ	19099	13228E8260-122	..TUBE MAKE FROM BULK P/N ASTM- B466 1/4 OD X 0.035 WALL	1
8	PAOZZ	96906	MS35649-284	..NUT, PLAIN, HEXAGON	3
9	PAOZZ	96906	MS35338-137	..WASHER, LOCK	3
10	PAOZZ	96906	MS51957-46	..SCREW, MACHINE	3
11	PAOZZ	97403	13222E5329-3	..GAGE, DIFFERENTIAL, D MULTIMEDIA FILTER	1

END OF FIGURE

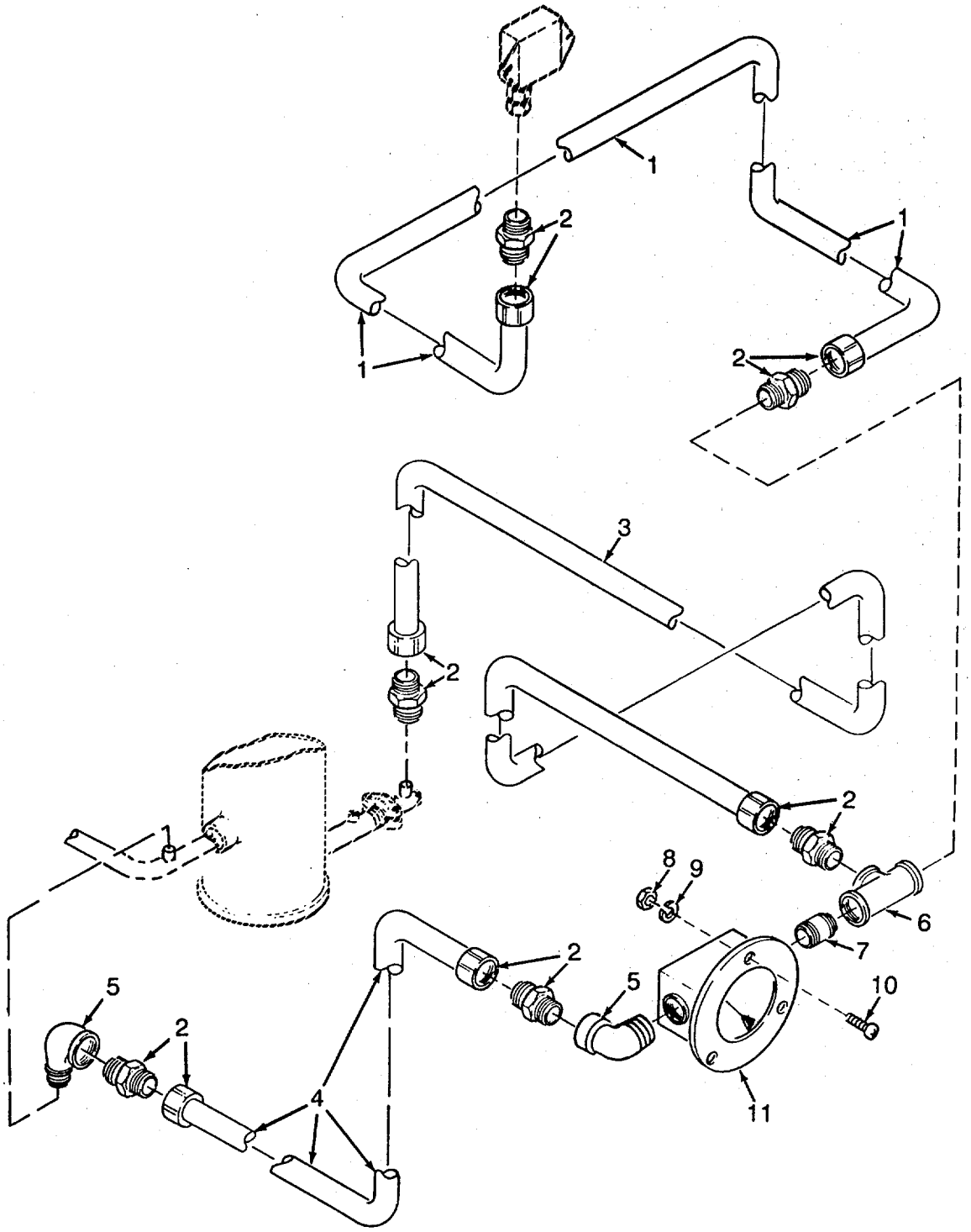

Figure 44. Filter Gauge and Tubing

(1) ITEM NO	(2) SMR CODE	(3) CAGEC	(4) PART NUMBER	(5) DESCRIPTION AND USABLE ON CODES (UOC)	(6) QTY
				GROUP 12 REVERSE OSMOSIS WATER PURIFICATION UNIT 600 GPH	
				FIG. 44 FILTER GAUGE AND TUBING	
1	MFOZZ	19099	13228E8260-114	..TUBE DIFFERENTIAL GAGE TO LOW PRESSURE SWITCH, MAKE FROM BULK P/N ASTM-B4661/4 OD X 0.035 WALL	1
2	PAOZZ	97403	13228E8294-1	..ADAPTER,STRAIGHT,PI 1/4 IN. X 1/4 IN. NPT.	6
3	MFOZZ	19099	13228E8260-109	..TUBE DIFFERENTIAL GAGE TO CARTRIDGE FILTER OUTLET, MAKE FROM BULK P/N ASTM-B466, 1/4 OD X 0.035 WALL	1
4	MFOZZ	19099	13228E8260-110	..TUBE DIFFERENTIAL GAGE TO CARTRIDGE FILTER INLET, MAKE FROM BULK P/N ASTM-B466 1/4 OD X 0.035 WALL	1
5	PAOZZ	96906	MS51952-2	..ELBOW,PIPE	2
6	PBOZZ	97403	13228E8260-74	..TEE,PIPE ASTM-B16.15, 1/4 NPT BRONZE	1
7	PAOZZ	96906	MS51846-20	..NIPPLE,PIPE	1
8	PAOZZ	96906	MS35649-284	..NUT,PLAIN,HEXAGON	3
9	PAOZZ	96906	MS35338-137	..WASHER,LOCK	3
10	PAOZZ	96906	MS51957-46	..SCREW,MACHINE	3
11	PAOZZ	97403	13222E5329-4	..GAGE,DIFFERENTIAL,D CARTRIDGE FILTER	1

END OF FIGURE

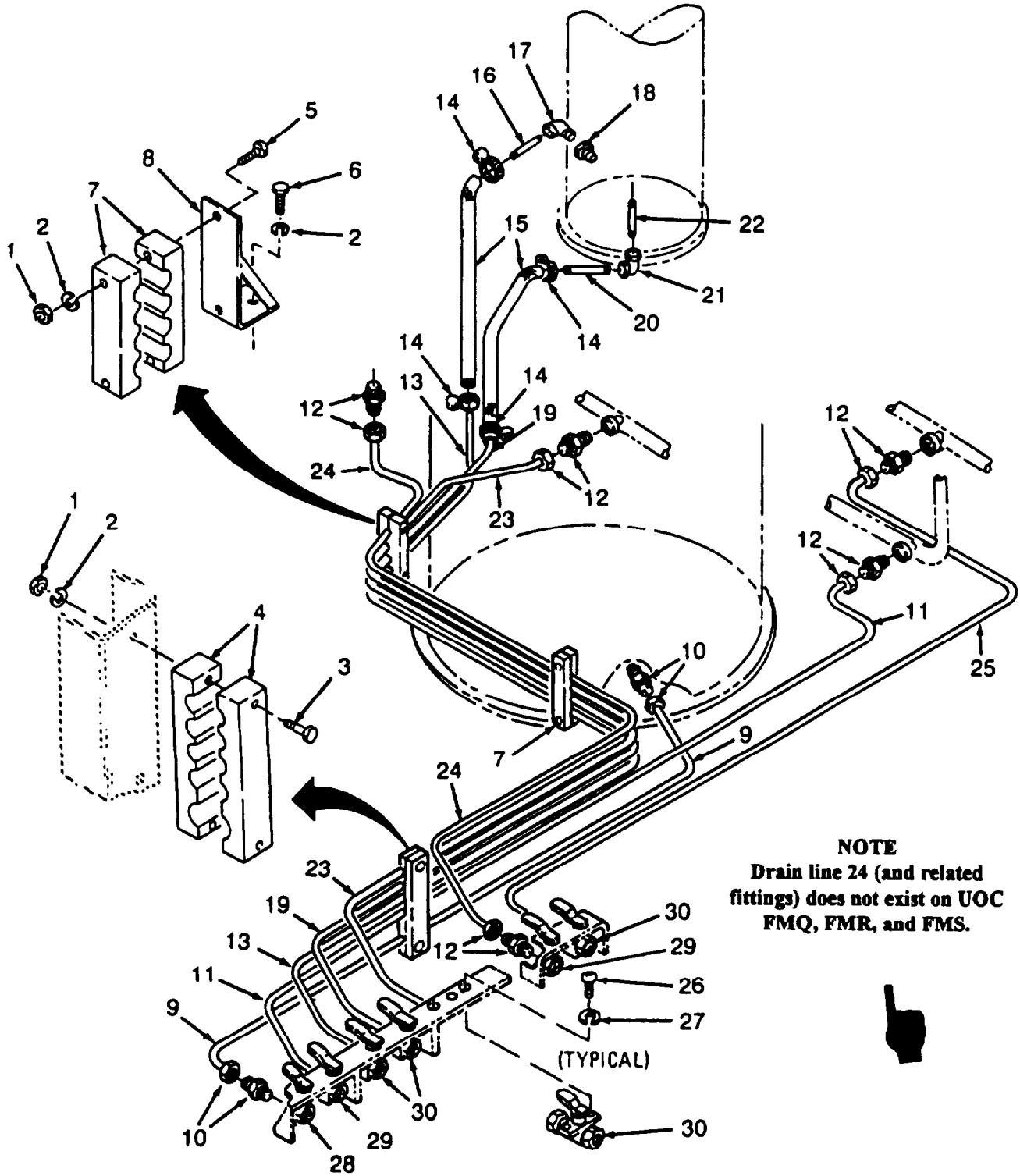

Figure 45. Drain Valves and Tubing

(1) ITEM NO	(2) SMR CODE	(3) CAGEC	(4) PART NUMBER	(5) DESCRIPTION AND USABLE ON CODES(UOC)	(6) QTY
				GROUP 12 REVERSE OSMOSIS WATER PURIFICATION UNIT 600 GPH	
				FIG. 45 DRAIN VALVES AND TUBING	
1	PAOZZ	96906	MS51971-1	..NUT,PLAIN,HEXAGON	6
2	PAOZZ	96906	MS35338-139	..WASHER,LOCK	10
3	PAOZZ	96906	MS35307-314	..SCREW,CAP,HEXAGON H	2
4	XDOZZ	97403	13221E8338	..SUPPORT,5 TUBE	1
5	PAOZZ	96906	MS35307-313	..SCREW,CAP,HEXAGON H	4
6	PAOZZ	96906	MS35307-306	..SCREW,CAP,HEXAGON H	8
7	XDOZZ	97403	13221E8337	..SUPPORT,4 TUBE	2
8	XDOZZ	97403	1322IE8339	..BRACKET,TUBE SUPPT	2
9	MFFZZ	19099	13228E8260-72	..TUBE DRAW VALVE TO BOTTOM OF MULTIMEDIA FILTER, MAKE FROM BULK P/N ASTM-B466, 3/4 OD X 0.035 WALL	1
10	PAFZZ	97403	13228E8294-3	..ADAPTER,STRAIGHT,PI	2
11	MFFZZ	19099	13228E8260-76	..TUBE DRAIN VESSEL VALVE TO BRINE LINE, MAKE FROM BULK P/N ASTM-B466, 1/2 OD X 0.035 WALL	1
12	PAFZZ	97403	13228E8294-2	..ADAPTER, STRAIGHT, PI 1/4 IN. TUBE X 1/2 IN. NPT UOC:FAV,FAW,FAX	9
12	PAFZZ	97403	13228E8294-2	..ADAPTER, STRAIGHT, PI 1/4 IN. TUBE X 1/2 IN. NPT UOC:FMQ,FMR,FMS ..	7
13	MFFZZ	19099	13228E8260-52	TUBE DRAIN VALVE TO SIDE OF CARTRIDGE FILTER, MAKE FROM BULK P/ N ASTM-B466, 1/2 OD X 0.035 WALL ..	1
14	PAOZZ	96906	MS35842-11	CLAMP,HOSE	4
15	MOOZZ	19099	13228E8260-304	..TUBING,FLEXIBLE MAKE FROM P/N 13221E8367-1 ..	2
16	PAOZZ	96906	MS51846-31	NIPPLE,PIPE	1
17	PAOZZ	96906	MS51952-2	..ELBOW,PIPE	1
18	PAOZZ	96906	MS14315-5X	..BUSHING,PIPE	1
19	MFFZZ	19099	13228E8260-96	..TUBE DRAIN VALVE TO BOTTOM OF CARTRIDGE FILTER MAKE FROM BULK P/N ASTM-B4661/2 OD X 0.035 WALL ..	1
20	PBOZZ	97403	13228E8260-102	ADAPTER,STRAIGHT, PI	1
21	PBOZZ	97403	13228E8260-101	..ELBOW,PIPE ASME-B16.15 1/4 NPS CAST BRONZE ..	1
22	PAOZZ	96906	MS51846-20	NIPPLE,PIPE ..	
23	MFFZZ	19099	13228E8260-97	TUBE DRAIN VALVE TO WASTE LINE MAKE FROM BULK P/N ASTM-B466 1/2 OD X 0.035 WALL ..	1
24	MFFZZ	19099	13228E8260-354	TUBE DRAIN TO DISCHARGE LINE, HIGH PRESSURE PUMP MAKE FROM BULK P/N ASTM-B466 1/2 OD X 0.035 WALL UOC:FAV,FAW,FAX ..	1
25	MFFZZ	19099	1322838260-100	TUBE DRAIN VALVE TO PRODUCT WATER LINE	1
26	PAOZZ	96906	MS51957-63	..SCREW,MACHINE UOC:FAV,FAW,FAX ..	14
26	PAOZZ	96906	MS51957-63	SCREW,MACHINE UOC:FMQ,FMR,FMS ..	12
27	PAOZZ	96906	MS35338-138	WASHER,LOCK UOC:FAV,FAW,FAX ..	
27	PAOZZ	96906	MS35338-138	WASHER,LOCK UOC:FMQ,FMR,FMS	12
28	PAOZZ	97403	13221E8271-6	..VALVE,BALL MULTIMEDIA DRAIN, 3/4 IN NPT	1

(1) ITEM NO	(2) SMR CODE	(3) CAGEC	(4) PART NUMBER	(5) DESCRIPTION AND USABLE ON CODES (UOC)	(6) QTY
29	PAOZZ	97403	13221E8271-8	..VALVE, BALL DRAIN R.O. VESSELS PULSE DAMPENER, AND HIGH PRESSURE LINES 1/2 NPT UOC:FAV,FAW,FAX	2
29	PAOZZ	97403	13221E8271-8	..VALVE, BALL DRAIN R.O. VESSELS PULSE DAMPENER, AND HIGH PRESSURE LINES 1/2 NPT UOC:FMQ,FMR,FMS	1
30	PAOZZ	97403	13221E8271-5	..VALVE, BALL DRAIN NO. 1 AND 2 CARTRIDGE FILTER, WASTE WATER AND PRODUCT WATER LINE, 1/2 IN. NPT	4

END OF FIGURE

(1) ITEM NO	(2) SMR CODE	(3) CAGEC	(4) PART NUMBER	(5) DESCRIPTION AND USABLE ON CODES(UOC)	(6) QTY
				IN. NPT	
29	PAOZZ	97403	13221E8271-8	..VALVE, BALL DRAIN R.O. VESSELS, ...	2
				PULSE DAMPENER, AND HIGH PRESSURE LINES 1/2 NPT	
30	PAOZZ	97403	13221E8271-5	..VALVE, BALL DRAIN NO. 1 AND 2.....	4
				CARTRIDGE FILTER, WASTE WATER AND PRODUCT WATER, LINE, 1/2 IN. NPT.....	

END OF FIGURE

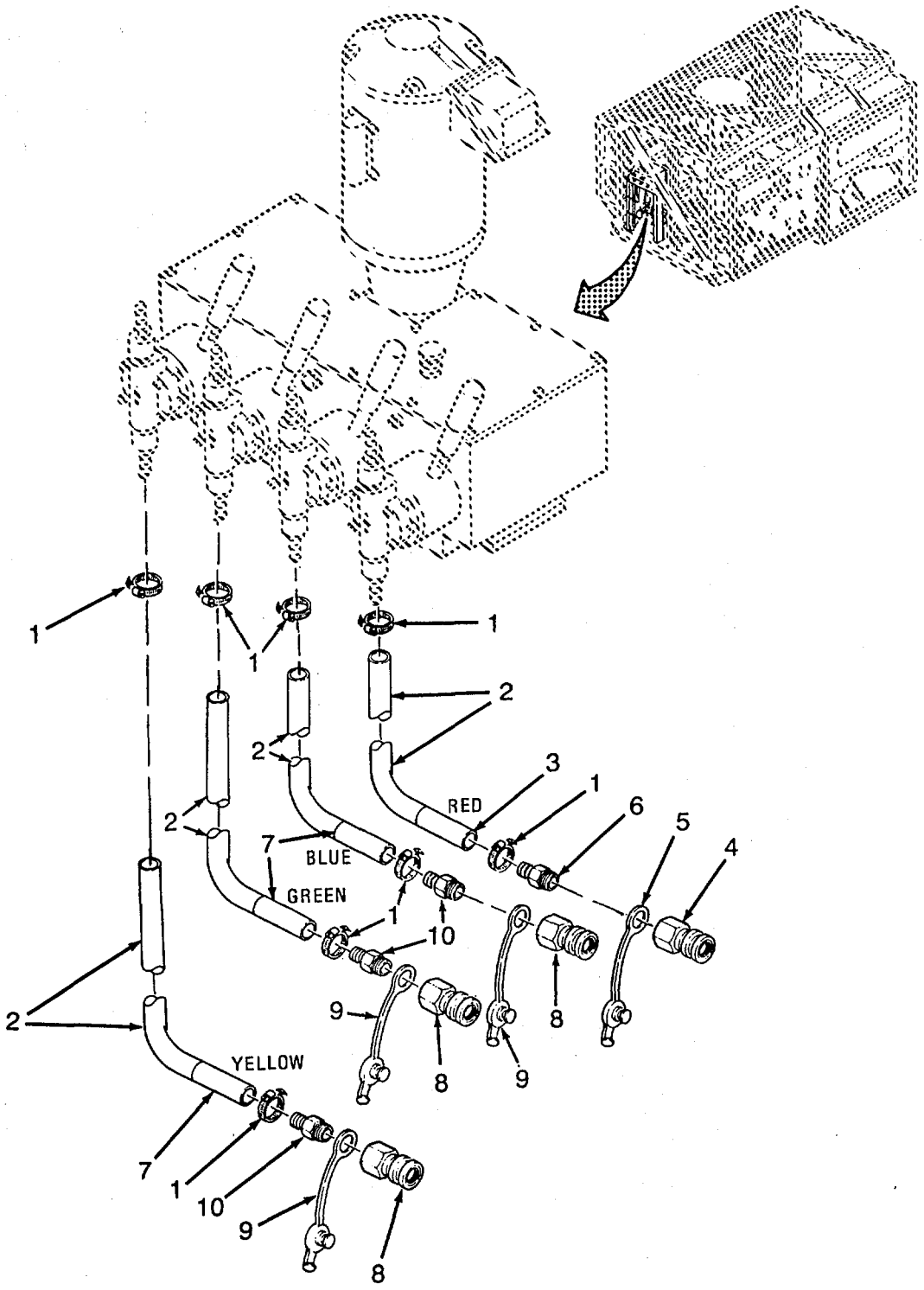

Figure 46. Chemical Pump Feed and Discharge (Sheet 1 of 2)

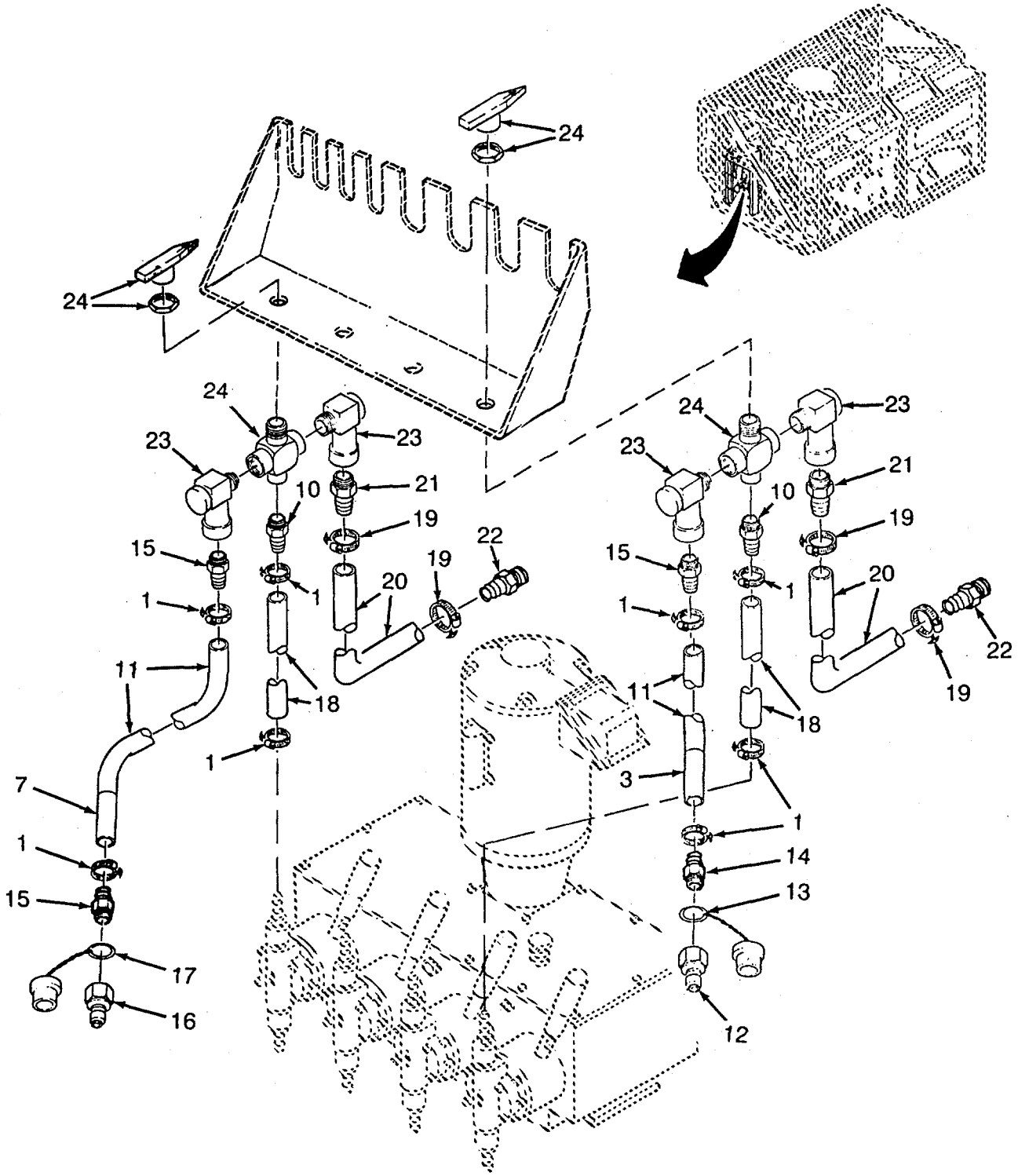

Figure 46. Chemical Pump Feed and Discharge (Sheet 2 of 2)

(1) ITEM NO	(2) SMR CODE	(3) CAGEC	(4) PART NUMBER	(5) DESCRIPTION AND USABLE ON CODES(UOC)	(6) QTY
				GROUP 12 REVERSE OSMOSIS WATER PURIFICATION UNIT 600 GPH	
				FIG. 46 CHEMICAL PUMP FEED AND DISCHARGE	
1	PAOZO	96906	MS35842-10	..CLAMP, HOSE	24
2	MOOZZ	97403	13228E8260-357	..TUBING, FLEXIBLE MAKE FROM BULK P/N 13221E8367-3	4
3	MOOZZ	19099	M23053/5-109-2-4	..INSULATION SLEEVING RED USED ON CHLORINE LINES, MAKE FROM BULK P/N M23053/5-109-2, 4 IN	2
4	PAOZZ	97403	13226E8324-3	..COUPLING HALF. QUICK	1
5	PAOZZ	97403	13226E8327-2	..PLUG, PROTECTIVE, DUS	1
6	PAOZZ	97403	13228E3312-10	..ADAPTER, STRAIGHT 3/8 IN. HOSE X 3/8 IN. NPT	1
7	MOOZZ	19099	M23053/5-109-6-4	..INSULATION SLEEVING BLUE USED ON POLYMER LINES, MAKE FROM BULK P/N M23053/5-109-6, 4 IN	2
7	MOOZZ	19099	M23053/5-109-5-4	..INSULATION SLEEVING GREEN USED ON SODIUM HEX LINES, MAKE FROM BULK P/N M2353/5-109-5, 4 IN	2
7	MOOZZ	19099	M23053/5-109-4-4	..INSULATION SLEEVING YELLOW USED ON CITRIC ACID LINES, MAKE FROM BULK P/N M23053/5-109-4, 4 IN	2
8	PAOZZ	97403	13226E8324-1	..COUPLING HALF, QUICK	3
9	PAOZZ	97403	13226E8327-1	..PLUG, PROTECTIVE, DUS	3
10	PAOZZ	97403	13228E3312-7	..ADAPTER, STRAIGHT 3/8 IN. X 3/8 IN. NPT	7
11	MOOZZ	97403	13228E8260-326	..TUBING, FLEX REINF MAKE FROM BULK P/N 13221E8367-4, 2 FT	4
12	PAOZZ	97403	13226E8323-2	..COUPLING HALF, QUICK	1
13	PAOZZ	97403	13226E7995-2	..PLUG, PROTECTIVE, DUS	1
14	PAOZZ	97403	13228E3312-9	..ADAPTER, STRAIGHT, PI 1/4 IN. HOSE X 3/8 IN . NPT	1
15	PAOZZ	97403	13228E3312-6	..ADAPTER, STRAIGHT 1/4 IN. HOSE X 1/4 IN. NPT	7
16	PAOZA	97403	13226E8323-1	..COUPLING HALF, QUICK	3
17	PAOZZ	97403	13226E7995-1	..PLUG, PROTECTIVE, DUS	3
18	MOOZZ	97403	13228E8260-356	..TUBING, FLEXIBLE MAKE FROM BULK P/N 13221E8367-3	4
19	PAOZZ	96906	MS35842-11	..CLAMP, HOSE	4
20	MOOZZ	19099	13228E8260-129	..TUBING, FLEXIBLE MAKE FROM BULK P/N 13221E8367-1	4
21	PAOZZ	97403	13228E3312-8	..ADAPTER, STRAIGHT 1/4 IN. NPT X 1/2 IN. HOSE	4
22	PAOZZ	97403	13228E3312-13	..ADAPTER, STRAIGHT 1/2 IN. HOSE X 1/2 IN. NPT	4
23	PAOZZ	96906	MS51952-2	..ELBOW, PIPE	8
24	PAOZZ	12623	4F-86XJ2-SS	..VALVE.BALL,3 WAY	4

END OF FIGURE

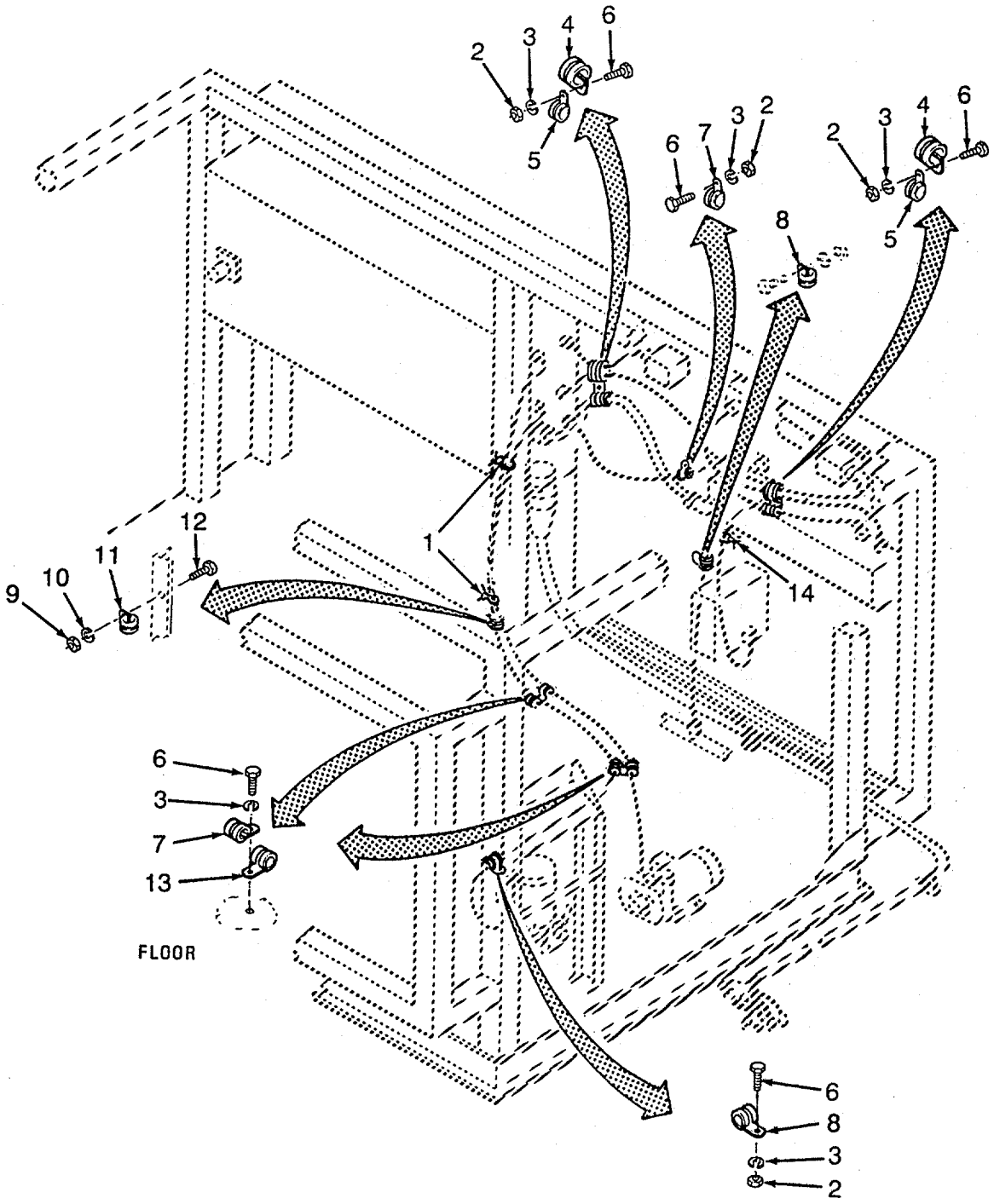

Figure 47. Cable Clamps and Mounting Hardware

(1) ITEM NO	(2) SMR CODE	(3) CAGEC	(4) PART NUMBER	(5) DESCRIPTION AND USABLE ON CODES(UOC)	(6) QTY
				GROUP 12 REVERSE OSMOSIS WATER PURIFICATION UNIT 600 GPH	
				FIG. 47 CABLE CLAMPS AND MOUNTING HARDWARE	
1	PAFZZ	96906	MS3367-1-9	..STRAP,TIEDOWN,ELECT	2
2	PAFZZ	96906	MS35649-204	..NUT,PLAIN,HEXAGON	6
3	PAFZZ	96906	MS35338-138	..WASHER,LOCK	5
4	PAFZZ	96906	MS21334-28	..CLAMP,LOOP	2
5	PAFZZ	96906	MS21333-77	..CLAMP,LOOP (SEE FIGURE 47 FOR MOUNTING HARDWARE)	2
6	PAFZZ	96906	MS51957-64	..SCREW,MACHINE	6
7	PAFZZ	96906	MS21333-72	..CLAMP,LOOP	2
8	PAFZZ	96906	MS21333-66	..CLAMP,LOOP	2
9	PAOZZ	96906	MS35649-2254	..NUT,PLAIN,HEXAGON UOC:FAV,FAX,FMQ,FMS	1
10	PAOZZ	96906	MS35338-139	..WASHER,LOCK UOC:FAV,FAX,FMQ,FMS	1
11	PAOZZ	96906	MS9350-21	..CLAMP,LOOP UOC:FAV,FAX,FMQ,FMS	1
12	PAOZZ	96906	MS35307-308	..SCREW,CAP,HEXAGON H UOC:FAV,FAX,FMQ,FMS	1
13	PAFZZ	96906	MS21333-73	..CLAMP,LOOP	1
14	PAFZZ	96906	MS3367-3-9	..STRAP,TIEDOWN,ELEC	1

END OF FIGURE

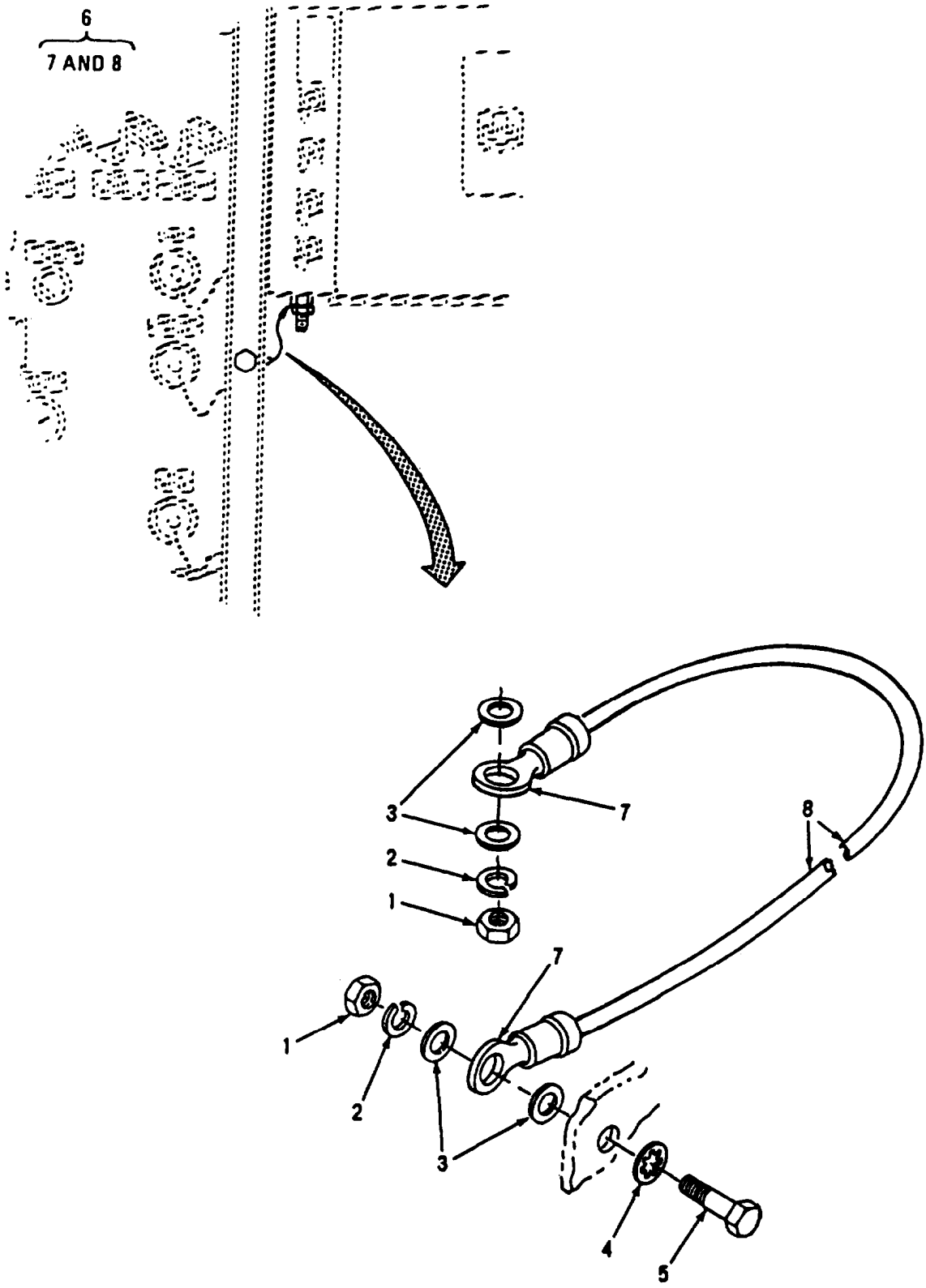

Figure 48. Junction Box Ground Cable W38

(1) ITEM NO	(2) SMR CODE	(3) CAGEC	(4) PART NUMBER	(5) DESCRIPTION AND USABLE ON CODES(UOC)	(6) QTY
				GROUP 12 REVERSE OSMOSIS WATER PURIFICATION UNIT 600 GPH	
				FIG. 48 JUNCTION BOX GROUND CABLE W38	
1	PAOZZ	96906	MS35649-2384	..NUT,PLAIN,HEXAGON	1
2	PAOZZ	96906	MS35338-141	..WASHER,LOCK	1
3	PAOZZ	88044	AN961-616T	..WASHER,FLAT	4
4	PAOZZ	96906	MS35333-110	..WASHER,LOCK	1
5	PAOZZ	96906	MS35307-359	..SCREW,CAP,HEXAGON H	1
6	AOOOO	97403	13222E5297-28	..LEAD, ELECTRICAL W38	1
7	PAOZZ	96906	MS25036-118	...TERMINAL,LUG UOC:FAV,FAX,FMQ,FMS	2
8	MOOZZ	19099	QQW343-3-10IN	...WIRE,ELECTRICAL MAKE FROM BULK P/N QQW343B08I1T, 10 IN	1

END OF FIGURE

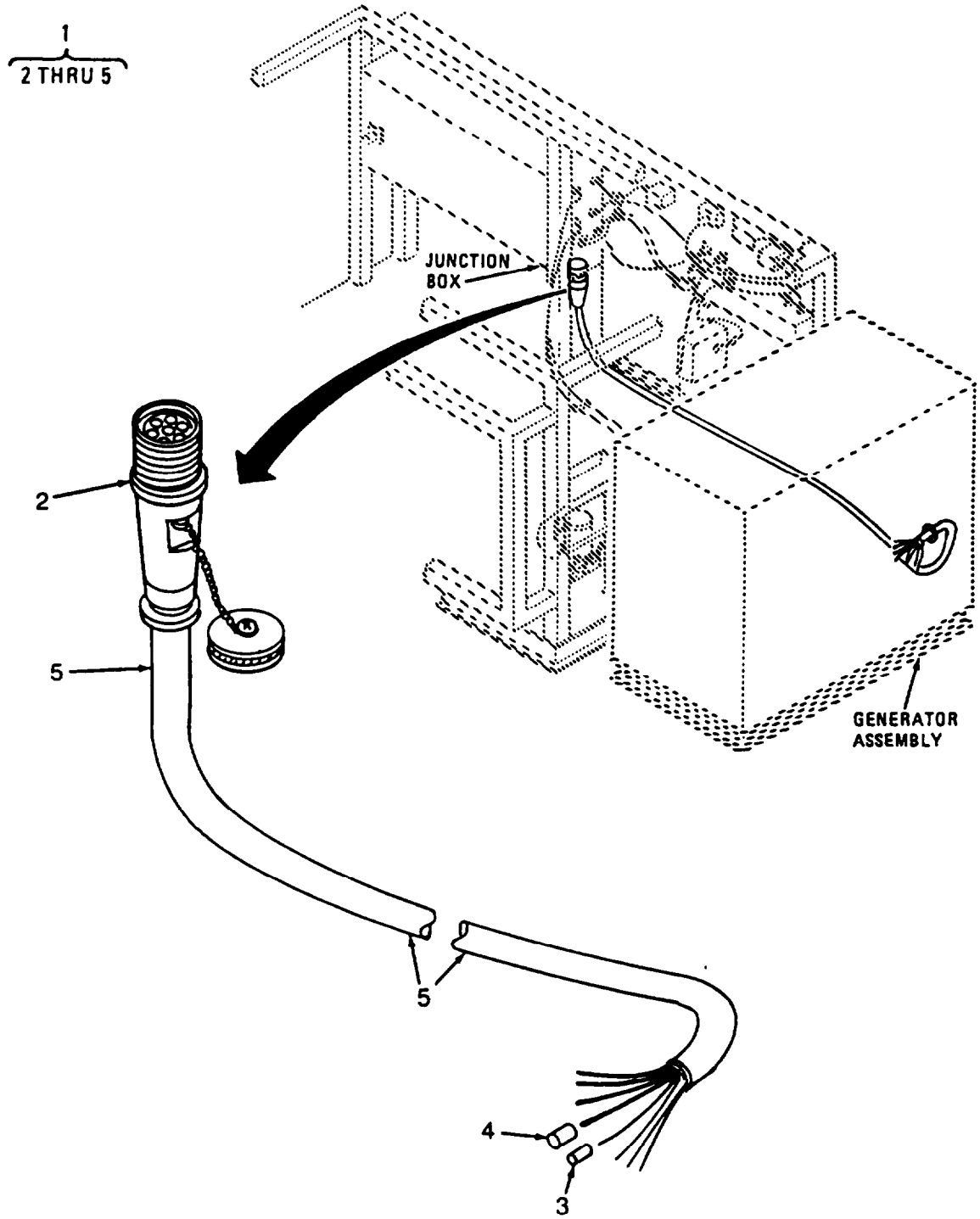

Figure 49. Generator Cable W40.
(ARMY/NAVY MODELS ONLY)

(1) ITEM NO	(2) SMR CODE	(3) CAGEC	(4) PART NUMBER	(5) DESCRIPTION AND USABLE ON CODES(UOC)	(6) QTY
				GROUP 12 REVERSE OSMOSIS WATER PURIFICATION UNIT 600 GPH	
				FIG. 49 GENERATOR CABLE W40	
1	PBOFF	97403	13227E9244	..CABLE ASSEMBLY,SPEC W40 UOC:FAV,FAX,FMQ,FMS	1
2	PAFZZ	96906	MS90557C44413S	...CONNECTOR,PLUG,ELEC P1 UOC:FAV,FAX,FMQ,FMS	1
3	MFFZZ	19099	13227E9244-5-108-9	...SLEEVING,INSULATION POWER LEADS, MAKE FROM BULK P/N M23053/5-108-9 UOC:FAV,FAX,FMQ,FMS	4
4	MFFZZ	19099	13227E9244-5-106-9	...SLEEVING,INSULATION GROUND LEADS,MAKE FROM BULK P/N M23053/5-106-9 UOC:FAV,FAX,FMQ,FMS	4
5	MFFZZ	19099	CO-04HDF-2-228	...CABLE,FLEXIBLE MAKE FROM BULK P/N CO-04HDF(4/2-4/9R)1480, 228.0 IN UOC:FAV,FAX,FMQ,FMS	1

END OF FIGURE

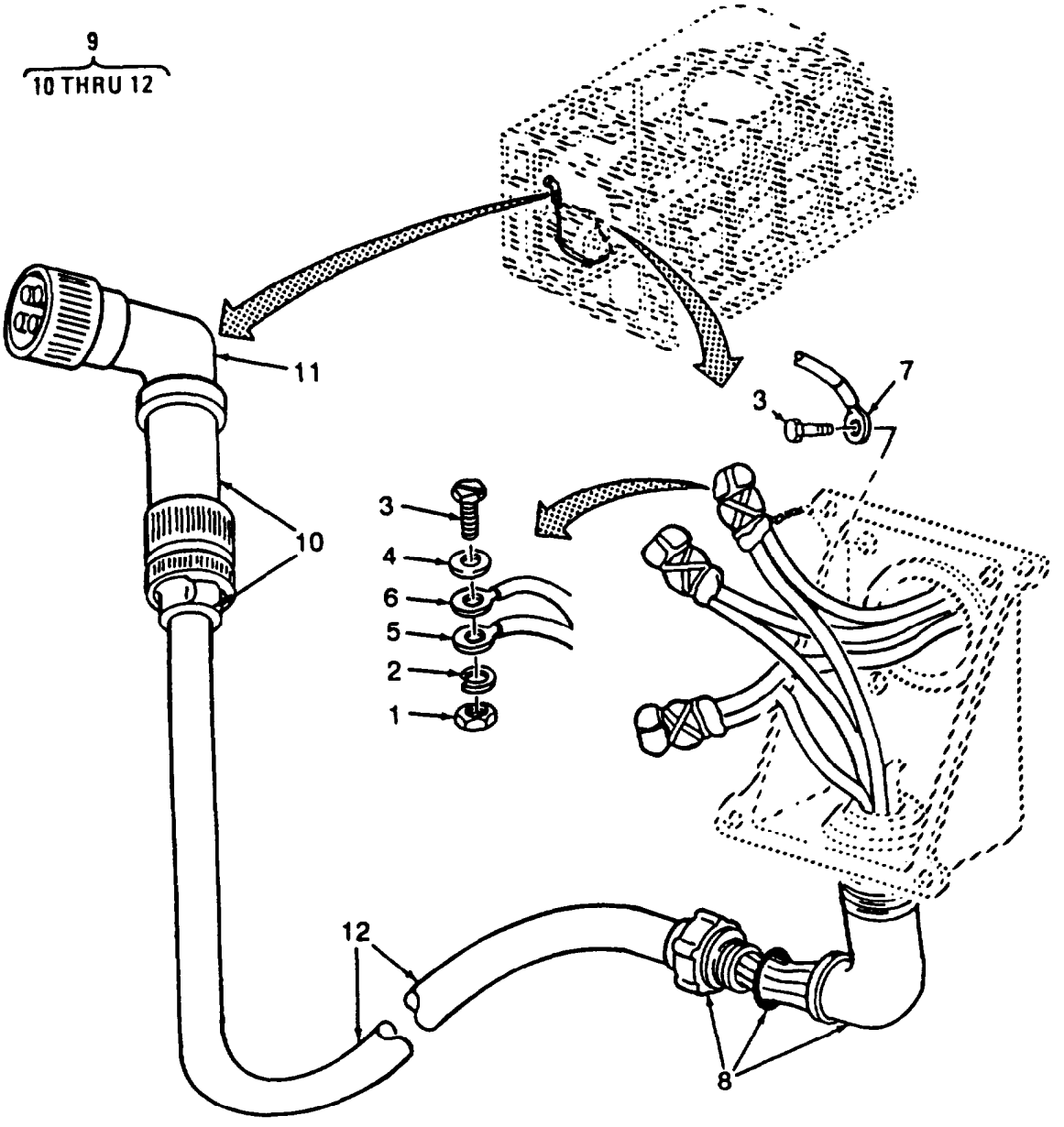

Figure 50. R.O. Pump Motor Cable Assembly W41

(1) ITEM NO	(2) SMR CODE	(3) CAGEC	(4) PART NUMBER	(5) DESCRIPTION AND USABLE ON CODES(UOC)	(6) QTY
				GROUP 12 REVERSE OSMOSIS WATER PURIFICATION UNIT 600 GPH	
				FIG. 50 R.O. PUMP MOTOR CABLE ASSEMBLY W41	
1	PAOZZ	96906	MS35650-3255	..NUT, PLAIN, HEXAGON	3
2	PAOZZ	96906	MS35333-108	..WASHER, LOCK.....	3
3	PAOZZ	96906	MS35310-303	..SCREW, CAP, HEXAGON H.....	3
4	PAOZZ	88044	AN961-416T	..WASHER, FLAT.....	3
5	PAOZZ	96906	MS25036-116	..TERMINAL, LUG USED ON MOTOR LEADS.....	3
6	PAOZZ	96906	MS25036-126	..TERMINAL, LUG USED ON CABLE POWER ..... LEADS	4
7	PAOZZ	96906	MS25036-154	..TERMINAL, LUG USED ON CABLE..... GROUND LEAD	1
8	PBOZZ	97403	13221E8308-3	..BOX CONNECTOR, ELECT 90 DEGREE	1
9	PBOFF	97403	13222E5311-4	..CABLE ASSEMBLY, POWE W41	1
10	PAFZZ	81349	M85049/10-70W	...ADAPTER, CABLE CLAMP	1
11	PAFZA	96906	MS3108R36-5P	...CONNECTOR, PLUG, ELEC P6	1
12	MFFZZ	19099	CO-04HOF-1-86	...CABLE, FLEXIBLE CUT 86.0 IN FROM ..... BULK P/N CO-04HOF(4/2)1400	1

END OF FIGURE

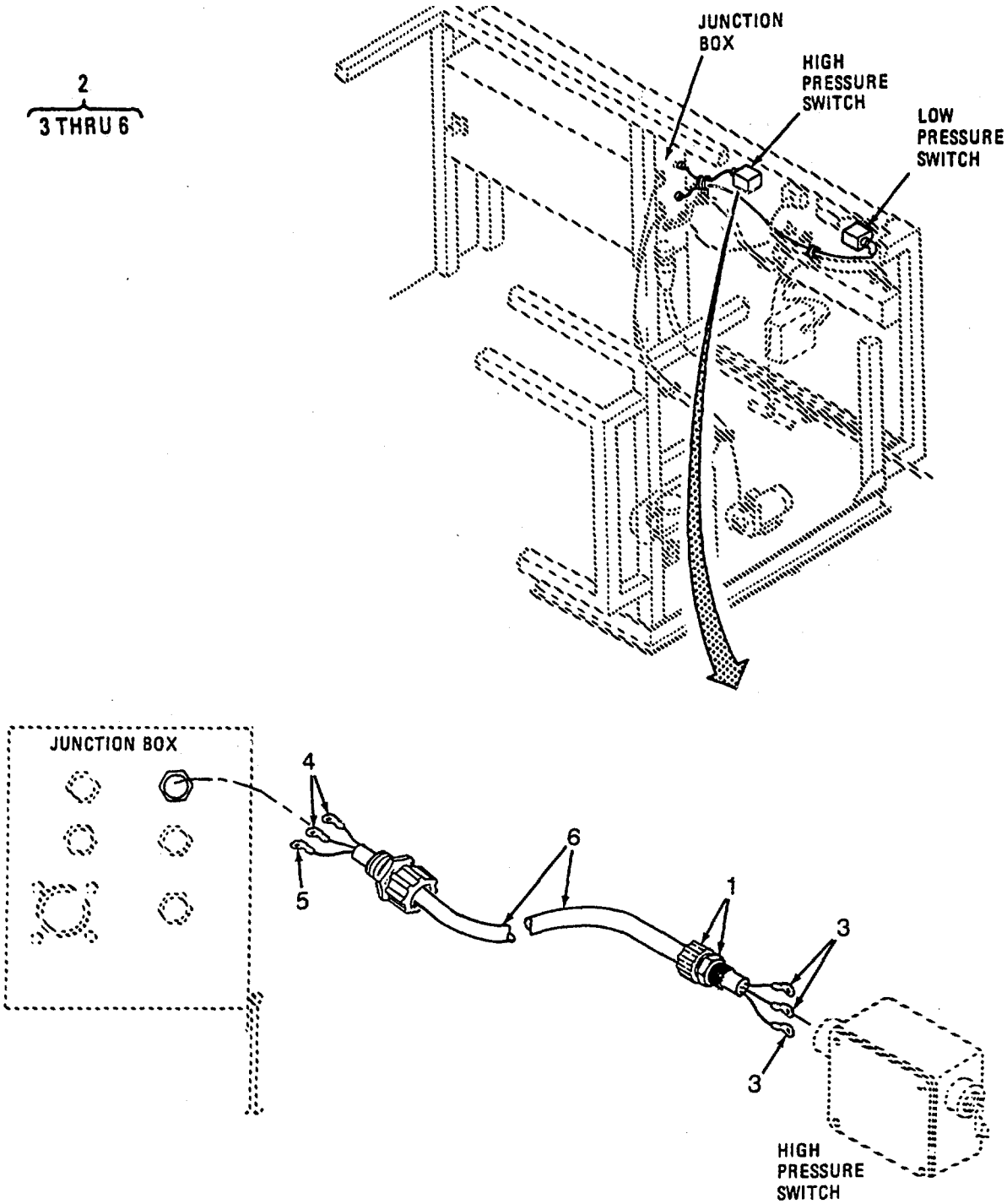

Figure 51. Pressure Switch Cables (High Pressure W46) (Sheet 1 of 2)

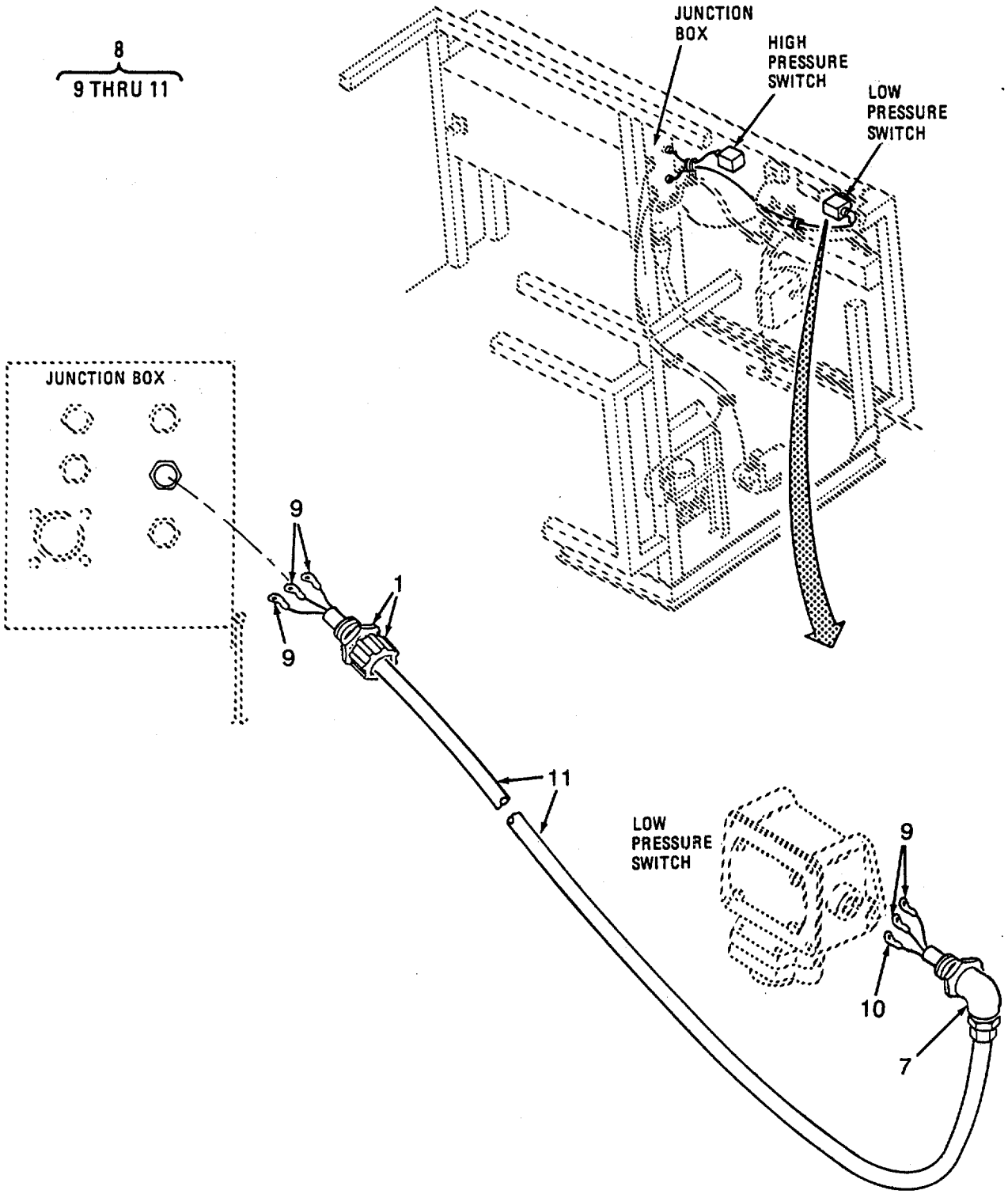

Figure 51. Pressure Swith Cables (Low Pressure W47) (Sheet 2 of 2)

(1) ITEM NO	(2) SMR CODE	(3) CAGEC	(4) PART NUMBER	(5) DESCRIPTION AND USABLE ON CODES(UOC)	(6) QTY
				GROUP 12 REVERSE OSMOSIS WATER PURIFICATION UNIT 600 GPH	
				FIG. 51 PRESSURE SWITCH CABLES	
1	PAFZZ	97403	13226E2204-4	..CONNECTOR	1
2	AFFFF	97403	13222E5312-2	..CABLE ASSEMBLY, W46	1
3	PAFZZ	96906	MS25036-106	...TERMINAL, LUG	3
4	PAFZZ	96906	MS25036-153	...TERMINAL, LUG USED ON BLACK AND WHITE WIRE	2
5	PAFZZ	96906	MS25036-108	...TERMINAL, LUG USED ON GREEN WIRE.	1
6	MFFZZ	19099	CO-02HOF-1-62	...CABLE, ELECTRICAL CUT 62.0 IN FROM BULK P/N CO-02HOF(3/14)0565	1
7	PAFZZ	97403	13226E2204-4	..SEALING GRIP	1
8	AFFFF	97403	13222E5312-1	..CABLE ASSEMBLY, SPEC W47	1
9	PAFZZ	96906	MS25036-106	...TERMINAL, LUG	5
10	PAFZZ	96906	MS25036-153	...TERMINAL, LUG USED ON GREEN WIRE.	1
11	MFFZZ	19099	CO-02HOF-2-24	...CABLE, ELECTRICAL CUT 24.0 IN FROM BULK P/N CO-02HOF(3/14)0565	1

END OF FIGURE

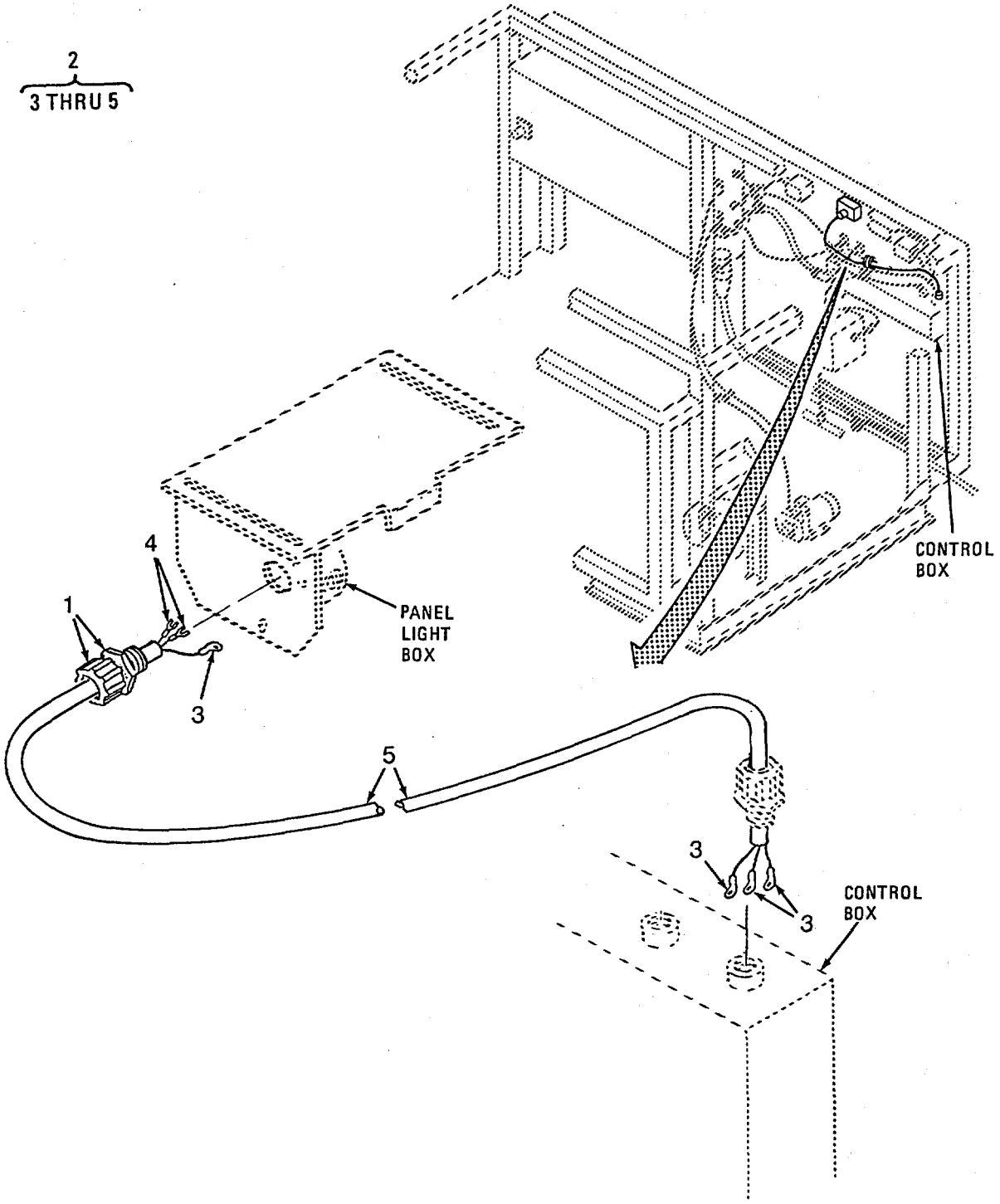

Figure 52. Panel Light Cable W48

(1) ITEM NO	(2) SMR CODE	(3) CAGEC	(4) PART NUMBER	(5) DESCRIPTION AND USABLE ON CODES(UOC)	(6) QTY
				GROUP 12 REVERSE OSMOSIS WATER PURIFICATION UNIT 600 GPH	
				FIG. 52 PANEL LIGHT CABLE W48	
1	PAFZZ	97403	13226E2205-5	..SEALING GRIP	1
2	AFFFF	97403	13222E5312-3	..CABLE ASSEMBLY, W48	1
3	PAFZZ	96906	MS25036-106	...TERMINAL, LUG	4
4	PAFZZ	97403	13220E3830-2	...TERMINAL, LUG	2
5	MFFZZ	19099	CO-02HOF-2-66	...CABLE, ELECTRICAL CUT 66.0 IN ..... FROM BULK P/N CO-02HOF(3/14)0565	1

END OF FIGURE

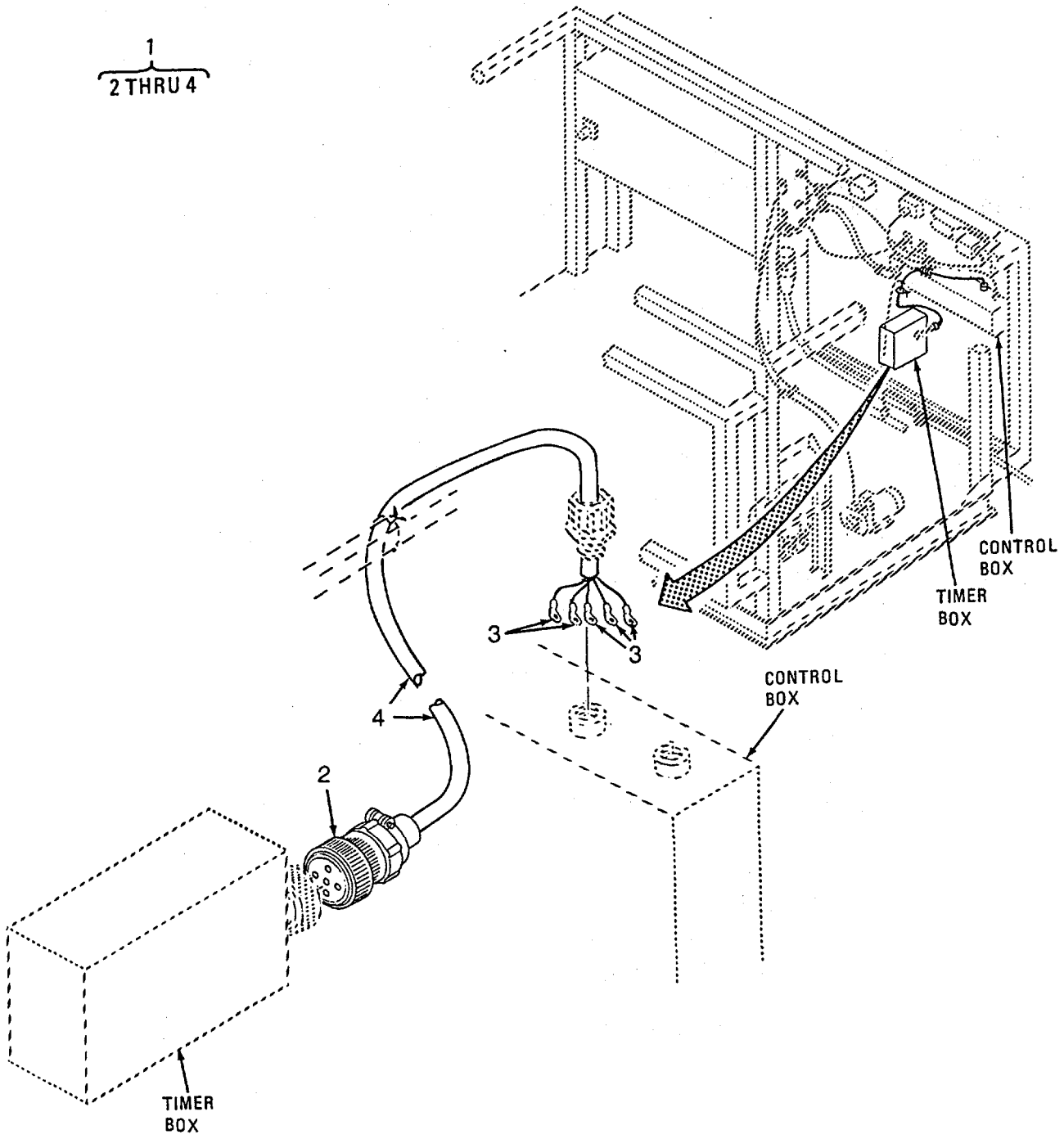

Figure 53. Timer/Control Box Cable Assembly W49

(1) ITEM NO	(2) SMR CODE	(3) CAGEC	(4) PART NUMBER	(5) DESCRIPTION AND USABLE ON CODES(UOC)	(6) QTY
				GROUP 12 REVERSE OSMOSIS WATER PURIFICATION UNIT 600 GPH	
				FIG. 53 TIMER/CONTROL BOX CABLE ASSEMBLY W49	
1	PBFFF	97403	13221E8326-1	..CABLE ASSEMBLY, POWE W49	1
2	PAFZZ	96906	MS3456W18-11S	...CONNECTOR, PLUG, ELEC P1OA	1
3	PAFZZ	96906	MS25036-106	...TERMINAL, LUG.	5
4	MFFZZ	19099	CO-05HOF-1-70	...CABLE, FLEXIBLE CUT 70.0 IN FROM ..... BULK P/N CO-O5HOF(5/16)0525.....	1

END OF FIGURE

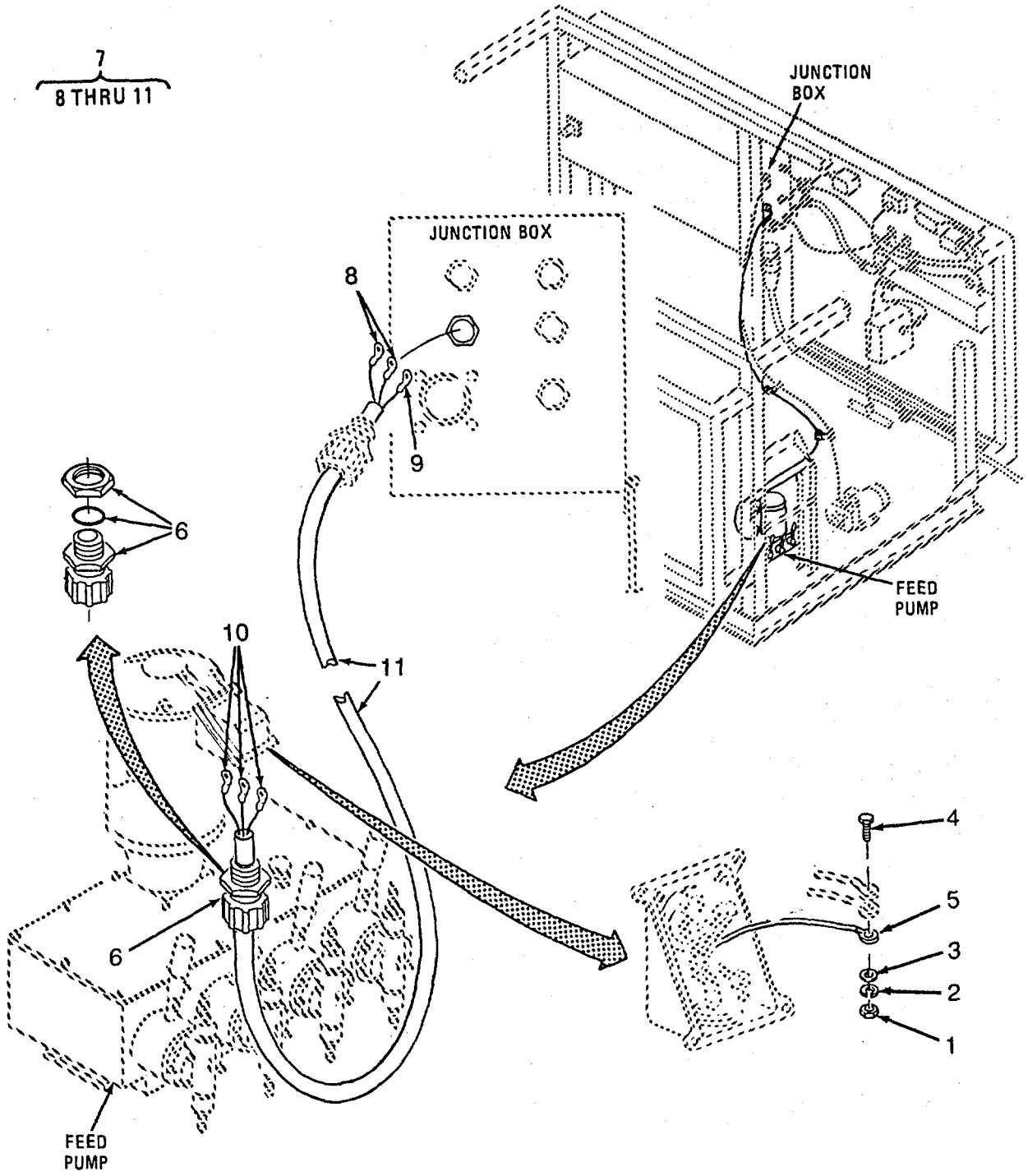

Figure 54. Chemical Feed Pump Cable Assembly W50

(1) ITEM NO	(2) SMR CODE	(3) CAGEC	(4) PART NUMBER	(5) DESCRIPTION AND USABLE ON CODES(UOC)	(6) QTY
				GROUP 12 REVERSE OSMOSIS WATER PURIFICATION UNIT 600 GPH	
				FIG. 54 CHEMICAL FEED PUMP CABLE ASSEMBLY W50	
1	PAOZZ	96906	MS35650-3255	..NUT, PLAIN, HEXAGON	2
2	PAOZZ	96906	MS35333-108	..WASHER, LOCK	2
3	PAOZZ	88044	AN961-416T	..WASHER, FLAT.....	2
4	PAOZZ	96906	MS35310-303	..SCREW, CAP.HEXAGON H	2
5	PAOZZ	96906	MS25036-150	..TERMINAL, LUG USED ON MOTOR LEADS.....	6
6	PAOZZ	97403	13226E2205-5	..GRIP, SEALING, CABLE	1
7	AFFFF	97403	13222E5312-5	..CABLE ASSEMBLY, W50	1
8	PAFZZ	96906	MS25036-106	...TERMINAL, LUG USED ON WHITE AND ..... GREEN WIRE	2
9	PAFZZ	96906	MS25036-108	...TERMINAL, LUG USED ON BLACK WIRE.	1
10	PAFZZ	96906	MS25036-154	...TERMINAL, LUG	3
11	MFFZZ	19099	CO-02HOF-2-185	...CABLE, FLEXIBLE CUT 185.0 IN..... FROM BULK P/N CO-02HOF(3/14)0565	1

END OF FIGURE

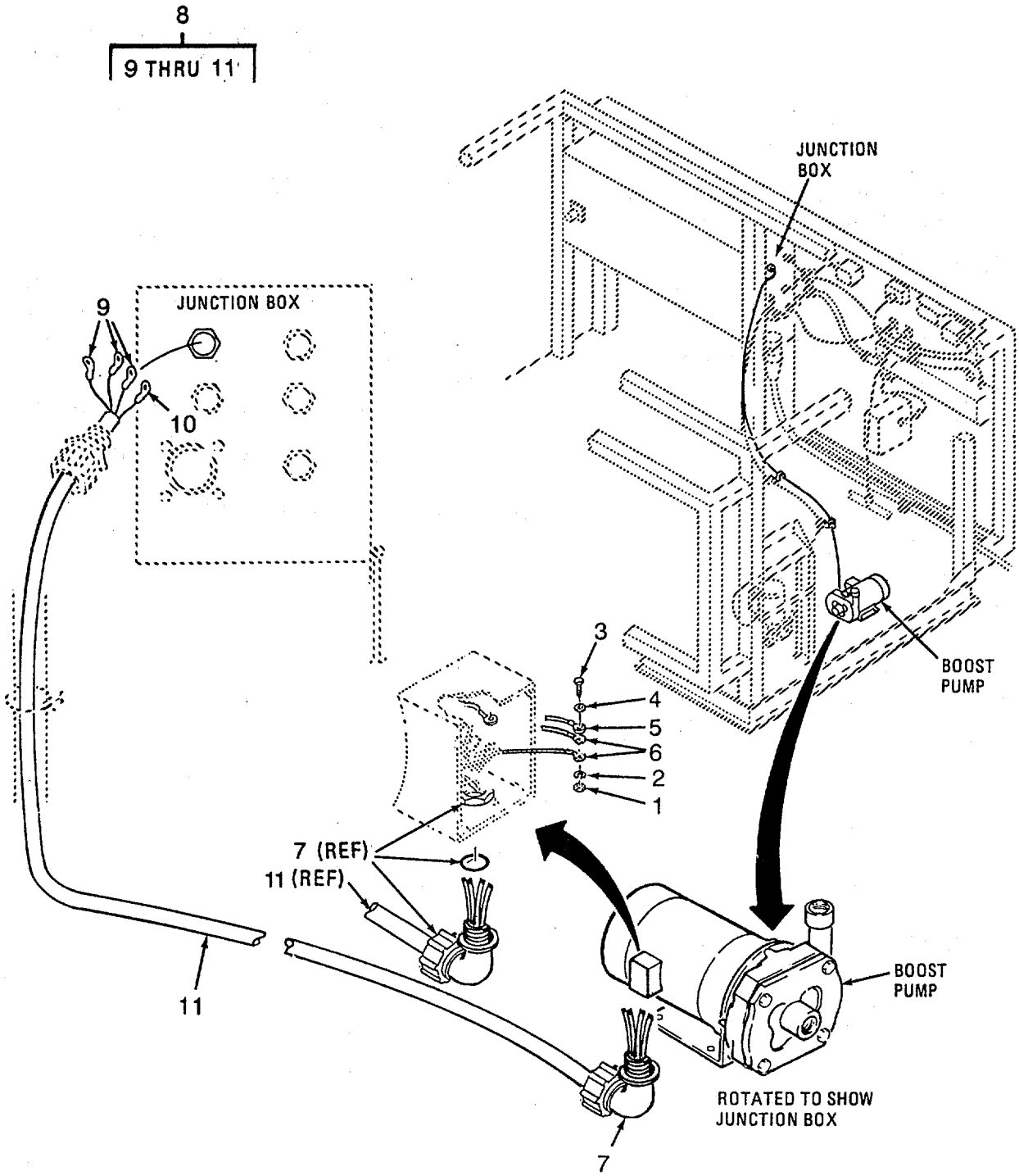

Figure 55. Booster Pump Cable Assembly W51

(1) ITEM NO	(2) SMR CODE	(3) CAGEC	(4) PART NUMBER	(5) DESCRIPTION AND USABLE ON CODES(UOC)	(6) QTY
				GROUP 12 REVERSE OSMOSIS WATER PURIFICATION UNIT 600 GPH	
				FIG. 55 BOOSTER PUMP CABLE ASSEMBLY W51	
1	PAOZZ	96906	MS35650-3255	..NUT, PLAIN, HEXAGON	4
2	PAOZZ	96906	MS35333-108	..WASHER, LOCK	4
3	PAOZZ	96906	MS35310-303	..SCREW, CAP, HEXAGON H	4
4	PAOZZ	88044	AN961-416T	..WASHER, FLAT	4
5	PAOZZ	96906	MS25036-154	..TERMINAL, LUG USED ON CABLE LEADS.	4
6	PAOZZ	96906	MS25036-150	..TERMINAL, LUG USED ON MOTOR LEADS.....	9
7	PAOZZ	97403	13226E2204-5	..GRIP, SEALING, CABLE	1
8	AFFFF	97403	13222E5312-6	..CABLE ASSEMBLY, W51	1
9	PAFZZ	96906	MS25036-108	...TERMINAL, LUG	3
10	PAFZZ	96906	MS25036-106	...TERMINAL, LUG USED ON GREEN WIRE.	1
11	MFFZZ	19099	CO-04HOF-3-146	...CABLE, FLEXIBLE CUT 146.0 IN.....	1
				FROM BULK P/N CO-04HOF(4/14)0605	

END OF FIGURE

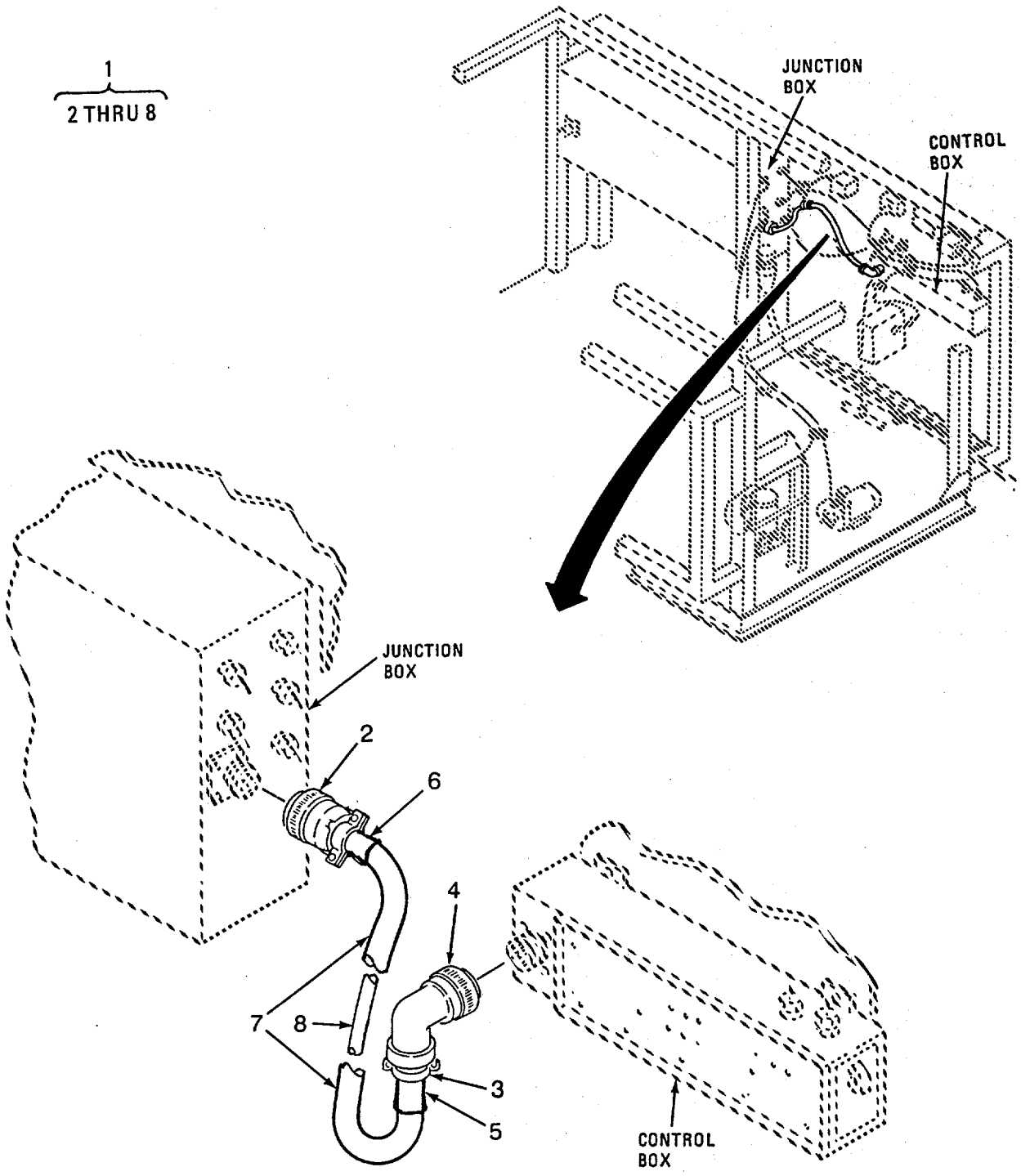

Figure 56. Control/Junction Box Cable Assembly W52

(1) ITEM NO	(2) SMR CODE	(3) CAGEC	(4) PART NUMBER	(5) DESCRIPTION AND USABLE ON CODES(UOC)	(6) QTY
				GROUP 12 REVERSE OSMOSIS WATER PURIFICATION UNIT 600 GPH	
				FIG. 56 CONTROL/JUNCTION BOX CABLE ASSEMBLY W52	
1	PBFFF	97403	13222ES288	..CABLE ASSEMBLY,POWE W 5 2	1
2	PAFZZ	96906	MS3456W32-7P	...CONNECTOR,PLUG,ELEC P8	1
3	PAFZZ	81349	M85049/2-20C	...CLAMP.CABLE ELETTRI	1
4	PAFZA	96906	MS3108R32-7S	...CONNECTOR,PLUG,ELEC P9	1
5	PAFZZ	96906	MS3420-20A	...BUSHING,NONMETALLIC	1
6	PAFZZ	96906	MS3420-16A	...BUSHING, NONMETALLIC	1
7	MFFZZ	19099	M23053-HS	...INSULATION SLEEVING CUT 44.5 ..... IN. FROM BULK P/N M23053/1-108-0.....	1
8	MFFZZ	19099	CO-30MOF-3-36	...WIRE,ELECTRICAL CUT 36.0 IN..... FROM BULK P/N M5085/1-18-9.....	1
				END OF FIGURE	

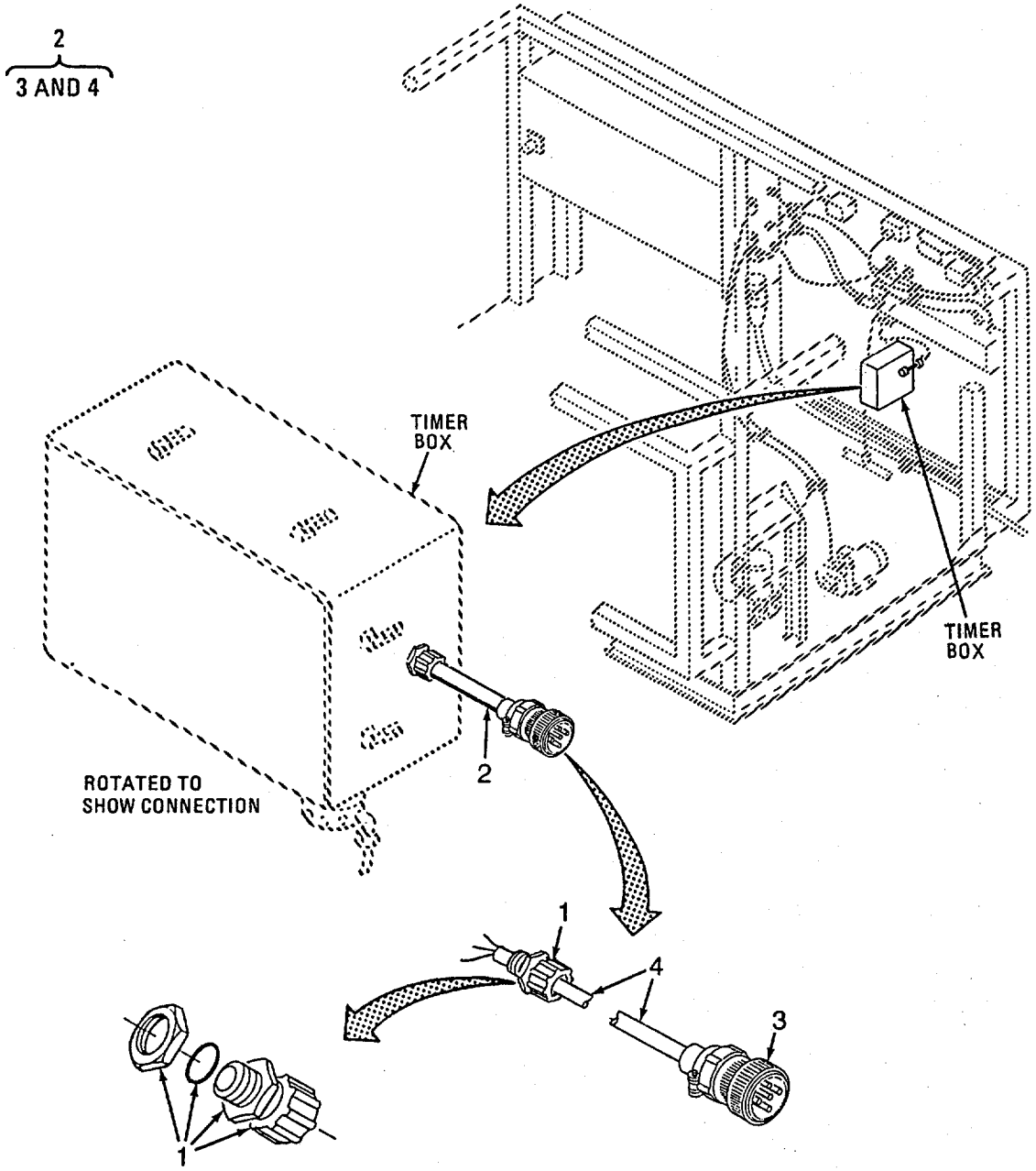

Figure 57. Backwash Timer Cable Assembly W53

(1) ITEM NO	(2) SMR CODE	(3) CAGEC	(4) PART NUMBER	(5) DESCRIPTION AND USABLE ON CODES(UOC)	(6) QTY
				GROUP 12 REVERSE OSMOSIS WATER PURIFICATION UNIT 600 GPH	
				FIG. 57 BACKWASH TIMER CABLE ASSEMBLY W53	
1	PAFZZ	15235	CGB195-SG	..BOX CONNECTOR, ELECT.....	1
2	PBFFF	97403	13221E8326-2	..CABLE ASSEMBLY, POWE W53	1
3	PAFZA	96906	MS3456W18-11P	...CONNECTOR, PLUG, ELECP1OB	1
4	MFFZZ	19099	CO-05HOF-1-16	...CABLE, FLEXIBLECUT 16.0 IN FROM ..... BULK P/N CO-05HOF(5/16)0525	1

END OF FIGURE

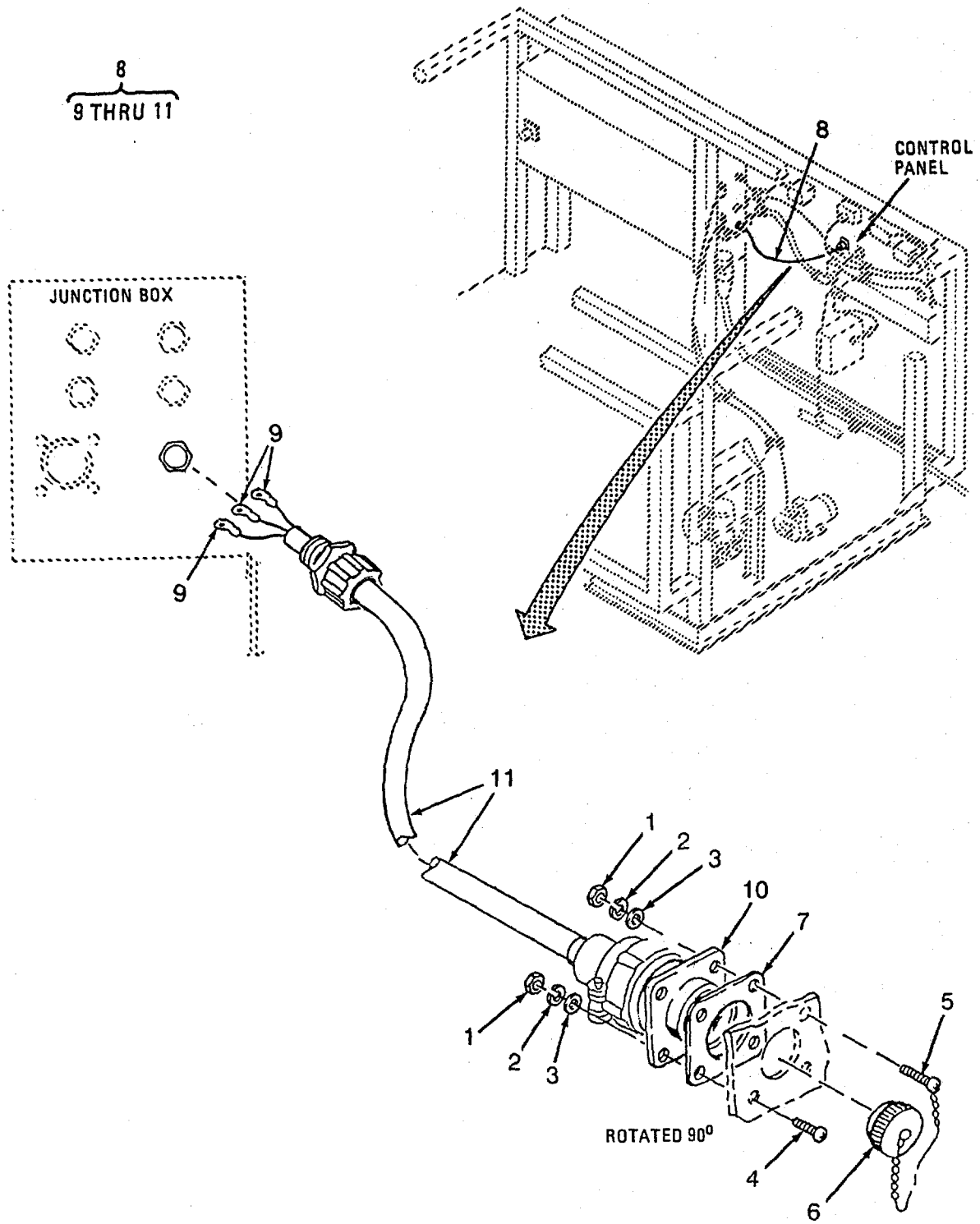

Figure 58. Control Box/TDS Monitor Cable Assembly W56

(1) ITEM NO	(2) SMR CODE	(3) CAGEC	(4) PART NUMBER	(5) DESCRIPTION AND USABLE ON CODES(UOC)	(6) QTY
				GROUP 12 REVERSE OSMOSIS WATER PURIFICATION UNIT 600 GPN	
				FIG. 58 CONTROL BOX/TDS MONITOR CABLE ASSEMBLY W56	
1	PAFZZ	96906	MS35649-244	..NUT,PLAIN,HEXAGON	4
2	PAFZZ	96906	MS35338-135	..WASHER,LOCK	4
3	PAFZZ	96906	MS15795-803	..WASHER,FLAT	4
4	PAFZZ	96906	MS51957-17	.. SCREW,MACHINE UOC:FAV,FAX,FMQ,FMS	3
4	PAFZZ	96906	MS51957-16	..SCREW,MACHINE UOC:FAW,FMR	3
5	PAFZZ	96906	MS51957-19	..SCREW,MACHINE	1
6	PAOZZ	96906	MS25043-16DA	..COVER,ELECTRICAL CO	1
7	PAFZZ	96906	MS51007-5	..GASKET	1
8	PBFFF	97403	1322138326-5	..CABLE ASSEMBLY,POWE W56	1
9	PAFZZ	96906	MS25036-106	..TERMINAL,LUG	3
10	PAFZZ	96906	MS3450W16-10S	... CONNECTOR,RECEPTACL J12	1
11	MFFZZ	19099	CO-03HOF-12-48	... CABLE,FLEXIBLE CUT 48.0 IN FROM BULK P/N CO-03HOF(3/14)0565	1

END OF FIGURE

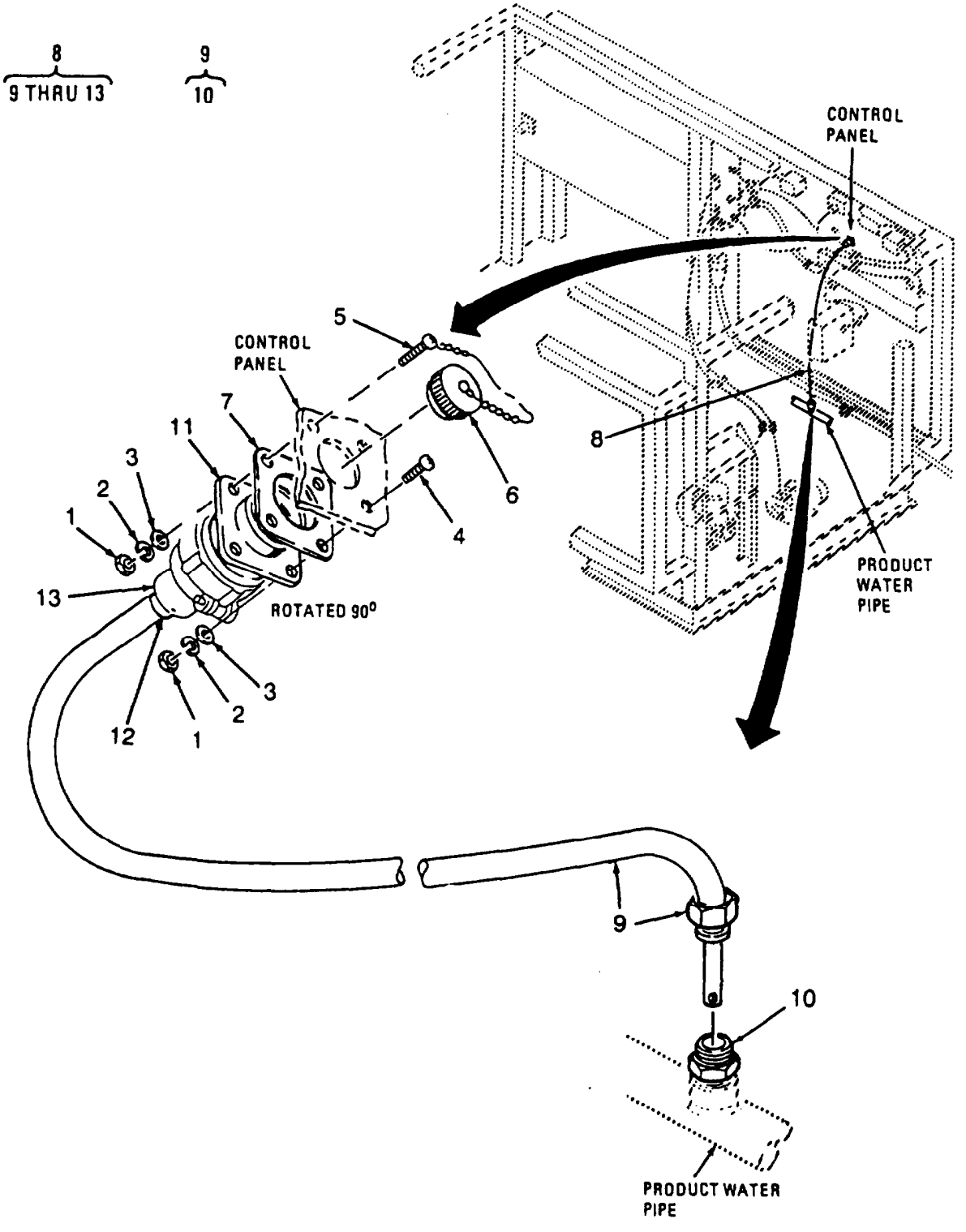

Figure 59. Dissolved Solid Sensor Cable Assembly W57

(1) ITEM NO	(2) SMR CODE	(3) CAGEC	(4) PART NUMBER	(5) DESCRIPTION AND USABLE ON CODES(UOC,	(6) QTY
				GROUP 12 REVERSE OSMOSIS WATER PURIFICATION UNIT 600 GPH	
				FIG. 59 DISSOLVED SOLID SENSOR CABLE ASSEMBLY W57	
1	PAFZZ	96906	MS35649-244	..NUT,PLAIN,HEXAGON	4
2	PAFZZ	96906	MS35338-135	..WASHER,LOCK	4
3	PAFZZ	96906	MS15795-803	..WASHER,FLAT	4
4	PAFZZ	96906	MS51957-17	..SCREW,MACHINE UOC:FAV,FAX,FMQ,FMS	3
4	PAFZZ	96906	MS51957-16	..SCREW,MACHINE UOC:FAW,FMR	3
5	PAFZZ	96906	MS51957-19	..SCREW,MACHINE	1
6	PAOZZ	96906	MS25043-14DA	..COVER,ELECTRICAL CO	1
7	PAFZZ	96906	MS51007-4	..GASKET	1
8	PBFFF	97403	13227E7584	..CABLE ASSEMBLY,SPEC W57	1
9	PAFZZ	97403	13227E7583	...SENSOR,OPAQUE PARTI INCLUDES CABLE	1
10	PAOZZ	30053	PPF	....NIPPLE,PIPE	1
11	PAFZA	96906	MS3450W14S-5S	...CONNECTOR,RECEPTACL Jll	1
12	PAFZZ	96906	MS3420-4A	...BUSHING.NONMETALLIC	1
13	PAFZZ	96906	MS3420-6A	..BUSHING,NONMETALLIC	1

END OF FIGURE

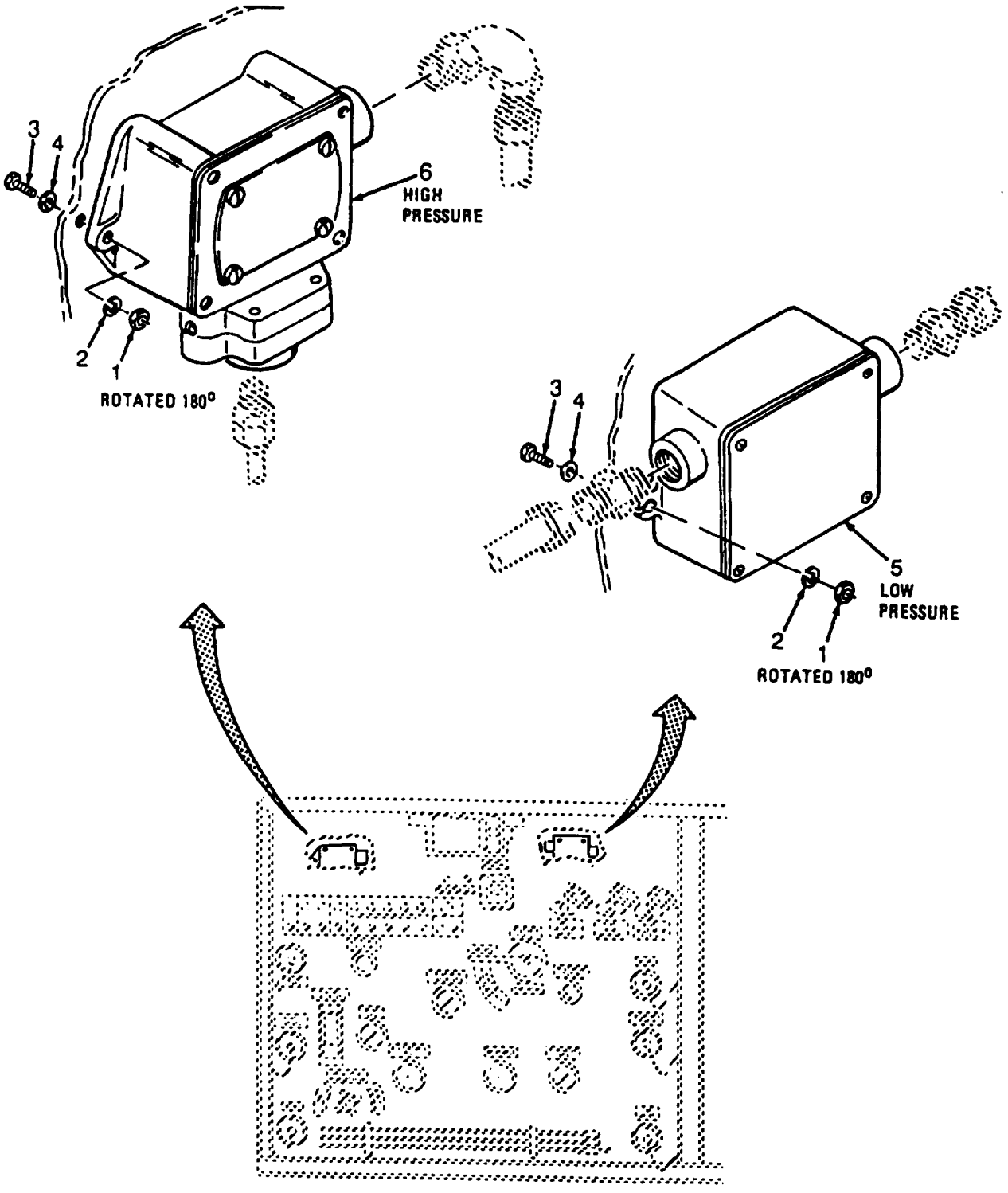

Figure 60. High and Low Pressure Switches

(1) ITEM NO	(2) SMR CODE	(3) CAGEC	(4) PART NUMBER	(5) DESCRIPTION AND USABLE ON CODES(UOC)	(6) QTY
				GROUP 12 REVERSE OSMOSIS WATER PURIFICATION UNIT 600 GPH	
				FIG. 60 HIGH AND LOW PRESSURE SWITCHES	
1	PAOZZ	96906	M551971-1	.NUT,PLAIN,HEXAGON	4
2	PAOZZ	96906	MS35338-139	.WASHER,LOCK.....	4
3	PAOZZ	96906	MS35367-306	.SCREW,CAP,HEXAGON H.....	4
4	PAOZZ	96906	MS15795-809	.WASHER,FLAT	4
5	PAOZZ	97403	13228E8302	.SWITCH,PRESSURE LOW,10 PSI	1
6	PAOZZ	97403	13228E8303	.SWITCH,PRESSURE HIGH,1250 PSI	1
				END OF FIGURE	

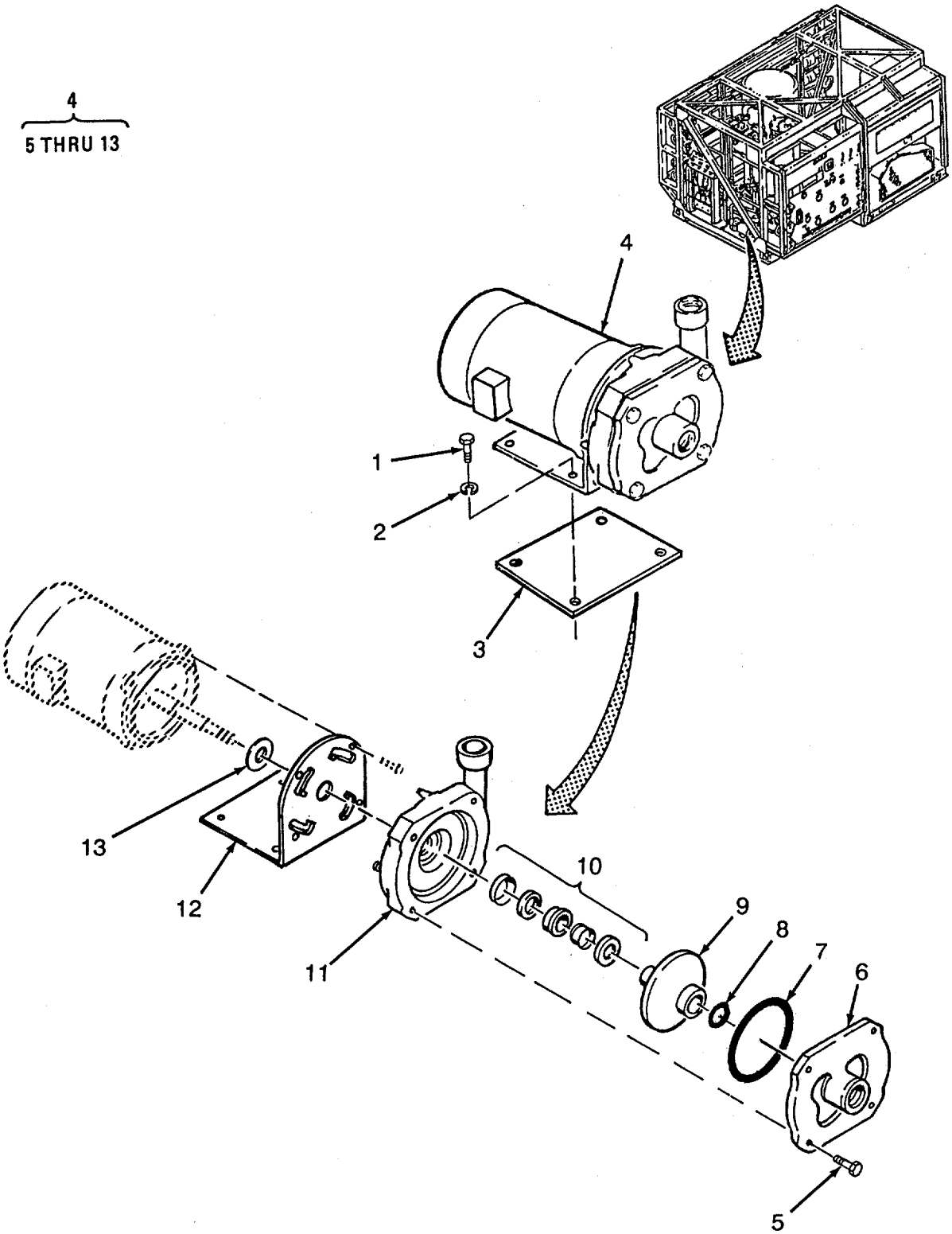

Figure 61. Centrifugal Booster Pump

(1) ITEM NO	(2) SMR CODE	(3) CAGEC	(4) PART NUMBER	(5) DESCRIPTION AND USABLE ON CODES(UO C)	(6) QTY
				GROUP 12 REVERSE OSMOSIS WATER PURIFICATION UNIT 600 GPH	
				FIG. 61 CENTRIFUGAL BOOSTER PUMP	
1	PAOZZ	96906	MS35307-362	.SCREW,CAP,HEXAGON H	4
2	PAOZZ	96906	MS35338-141	.WASHER, LOCK	4
3	XDOZZ	97403	13222E5266	.SPACER,PLATE	1
4	PBOFF	03306	1-1/4XIKC2BRZ	.PUMP,CENTRIFUGAL	1
5	XDFZZ	03306	500-771	..SCREW,CAP	4
6	XDFZZ	03306	48-3-0167-01	..COVER	1
7	PAFZZ	03306	500-398	..GASKET PART OF KIT P/N 48-1-0697	1
8	KFFZZ	03306	511-004	..O-RING,BUNA PART OF KIT P/N 48-1 0697	1
9	XDFZZ	03306	48-2-0299-10	..IMPELLER	1
10	KFFZZ	03306	500-976	..SEAL,MECHANICAL PART OF KIT P/N 48 -1-0697	1
11	XAFZZ	03306	48-4-0120-01	..CASING	1
12	XDFZZ	03306	48-3-0159-01	..BRACKET	1
13	PBFZZ	03306	500-422	..DEFLECTOR,DIRT AND 9/32 ID	1
	PAFZZ	03306	48-1-0697	..KIT,SEAL.	1
				GASKET (1) 61-7	
				O-RING,BUNA (1) 61-8	
				SEAL,MECHANICAL (1) 61-10	

END OF FIGURE

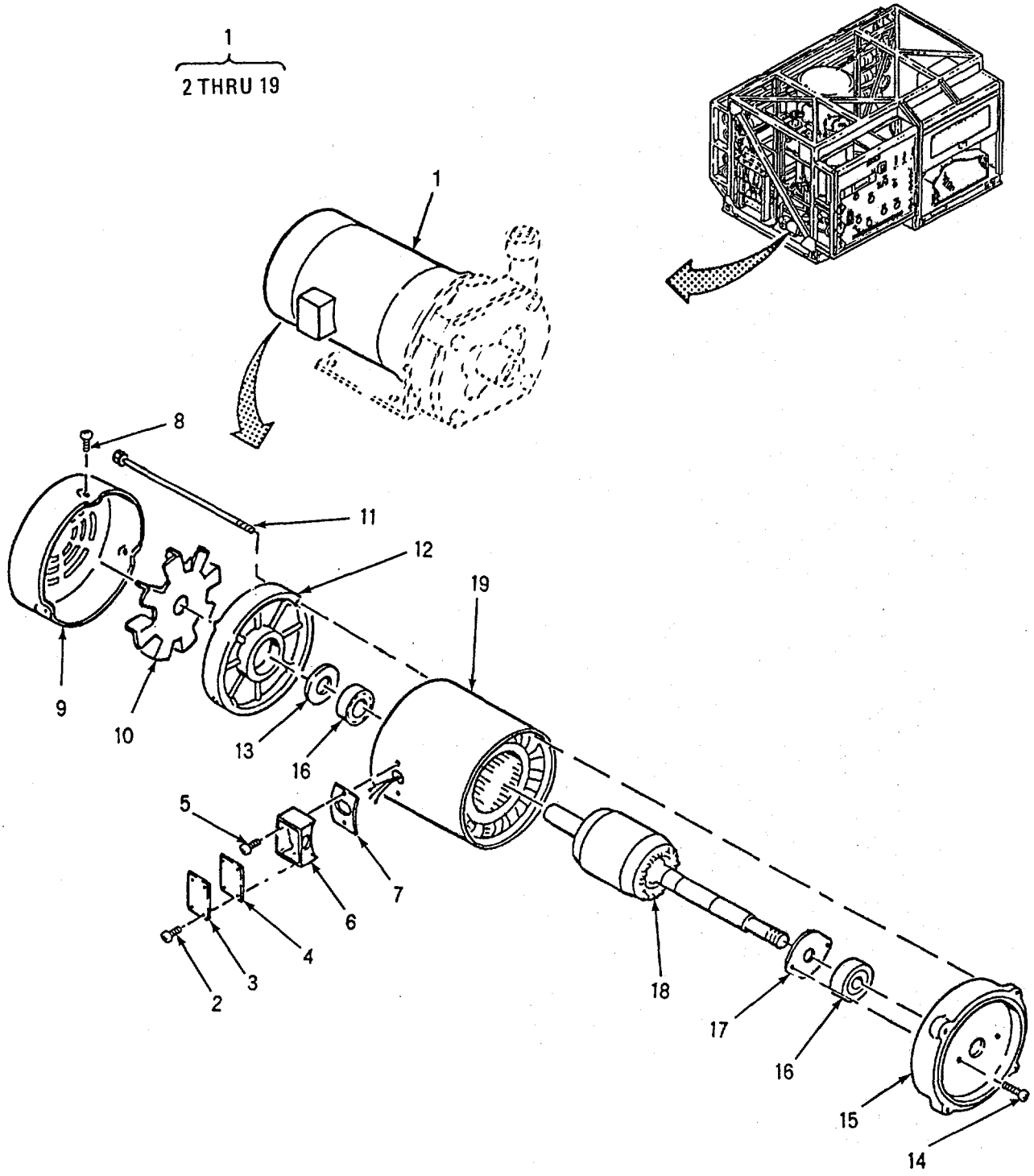

Figure 62. Electric Motor Booster Pump

(1) ITEM NO	(2) SMR CODE	(3) CAGEC	(4) PART NUMBER	(5) DESCRIPTION AND USABLE ON CODES(UOC)	(6) QTY
				GROUP 12 REVERSE OSMOSIS WATER PURIFICATION UNIT 600 GPH	
				FIG. 62 ELECTRIC MOTOR BOOSTER PUMP	
1	PAFFF	05472	34-5104-3226	..MOTOR,ELECTRIC	1
2	X DOZZ	05472	51XT083.2A07	...SCREW 8-32X7/16	4
3	X DOZZ	05472	34CB4500	...COVER,CONDUIT BOX	1
4	PBOZZ	05472	34GS1001	...GASKET	1
5	X AFZZ	05472	51XB1016A07	...SCREW 10-16X7/16	2
6	X AFZZ	05472	34CB100OA01	...BOX,CONDUIT	1
7	X DFZZ	05472	34GS1000	...GASKET,CONDUIT BOX	1
8	X DFZZ	05472	11XF1032A06	...SCREW.HEX 10-32X3/8	3
9	X AFZZ	05472	34FH4001A05	...COVER,FAN	1
10	X DFZZ	05472	34FN5002AO1	...FAN ASSY.EXT	1
11	X DFZZ	05472	HA310OA15	...BOLT,MACHINE 10-32X8.375 9	4
12	X DFZZ	05472	34EP3102AO1	...END PLATE	1
13	X DFZZ	05472	HW51OOAO3	...BEARING,WASHER,THRU	1
14	X DFZZ	05472	51XN1032A20	...SCREW10- 32X1.25	2
15	X AFZZ	05472	34EP3300A24	...ENDPLATE	1
16	PAFZZ	05472	BG6203C03	...BEARING.BALL,ANNULA	2
17	X DFZZ	05472	RB4003AO1	...RETAINER,BEARING	1
18	X AFZZ	05472	34RA10032020A01	...ROTOR ASSY	1
19	X AFZZ	05472	34SA00053226AO1	...STATOR ASSY	1

END OF FIGURE

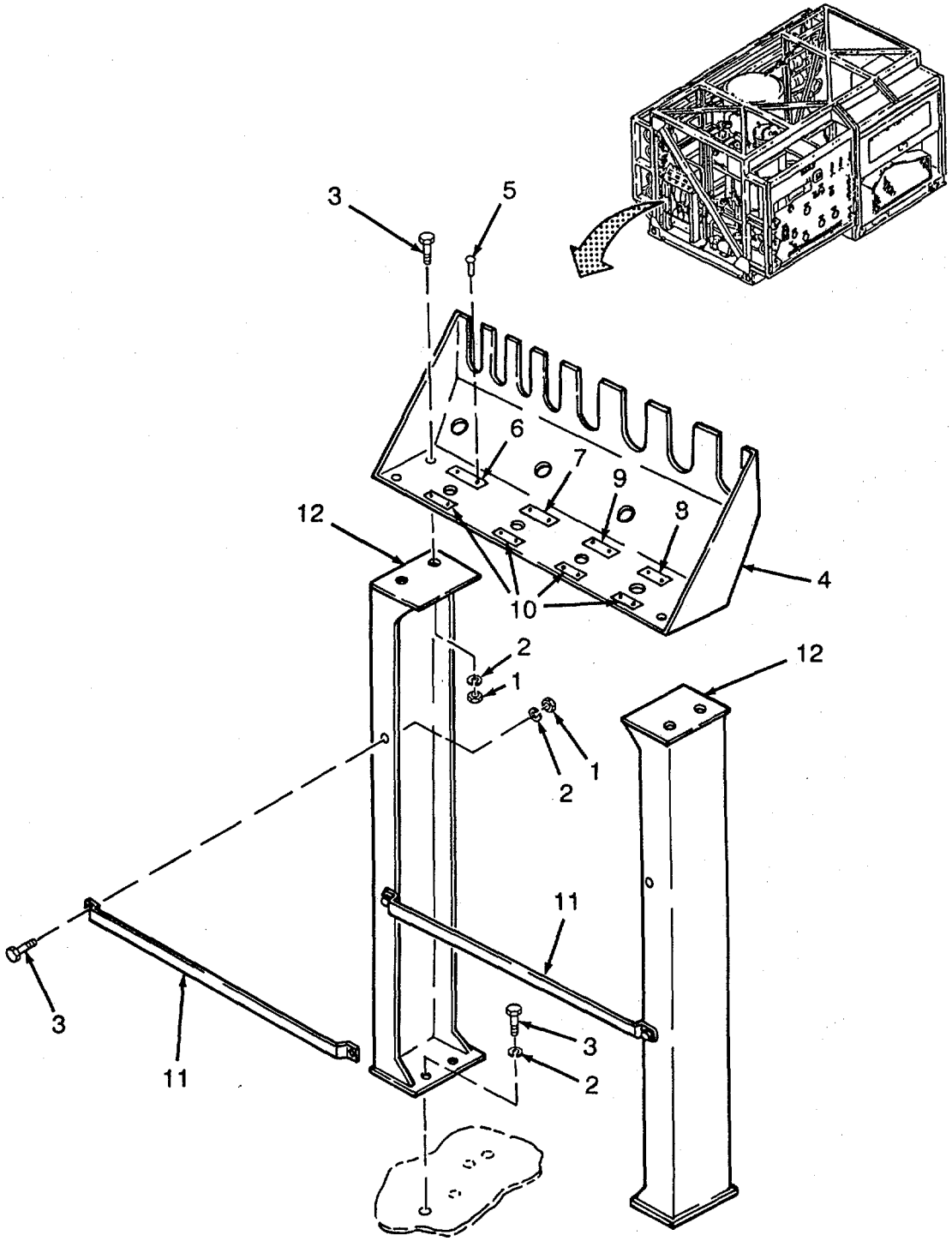

Figure 63. Chemical Feed Pump/ Valve Control Stand

(1) ITEM NO	(2) SMR CODE	(3) CAGEC	(4) PART NUMBER	(5) DESCRIPTION AND USABLE ON CODES(UOC)	(6) QTY
				GROUP 12 REVERSE OSMOSIS WATER PURIFICATION UNIT 600 GPH	
				FIG. 63 CHEMICAL FEED PUMP/VALVE CONTROL STAND	
1	PAOZZ	96906	MS51971-3	.NUT,PLAIN,HEXAGON	8
2	PAOZZ	96906	MS35338-141	.WASHER,LOCK	12
3	PAOZZ	96906	MS35307-360	.SCREWPCAP,HEXAGON H	12
4	X DOZZ	97403	13222E5256	.PLATE,MOUNTING	1
5	PAOZZ	96906	MS21318-21	.SCREW,DRIVE	16
6	X DOZZ	97403	13222E5279-22	.PLATE,INFORMATION RUN CITRIC ACID	1
7	X DOZZ	97403	13222E5279-21	.PLATE,INFORMATION RUN SODIUM HEX	1
8	X DOZZ	97403	13222E5279-24	.PLATE,INFORMATION RUN CHLORINE	1
9	X DOZZ	97403	13222E5279-23	.PLATE,INFORMATION RUNPOLYMER	1
10	X DOZZ	97403	13222E5279-37	.PLATE,INFORMATION PRIME	4
11	X DOZZ	97403	13226E8332	.BRACKET	2
12	X DOZZ	97403	13222E5257	.BRACKET.	2

END OF FIGURE

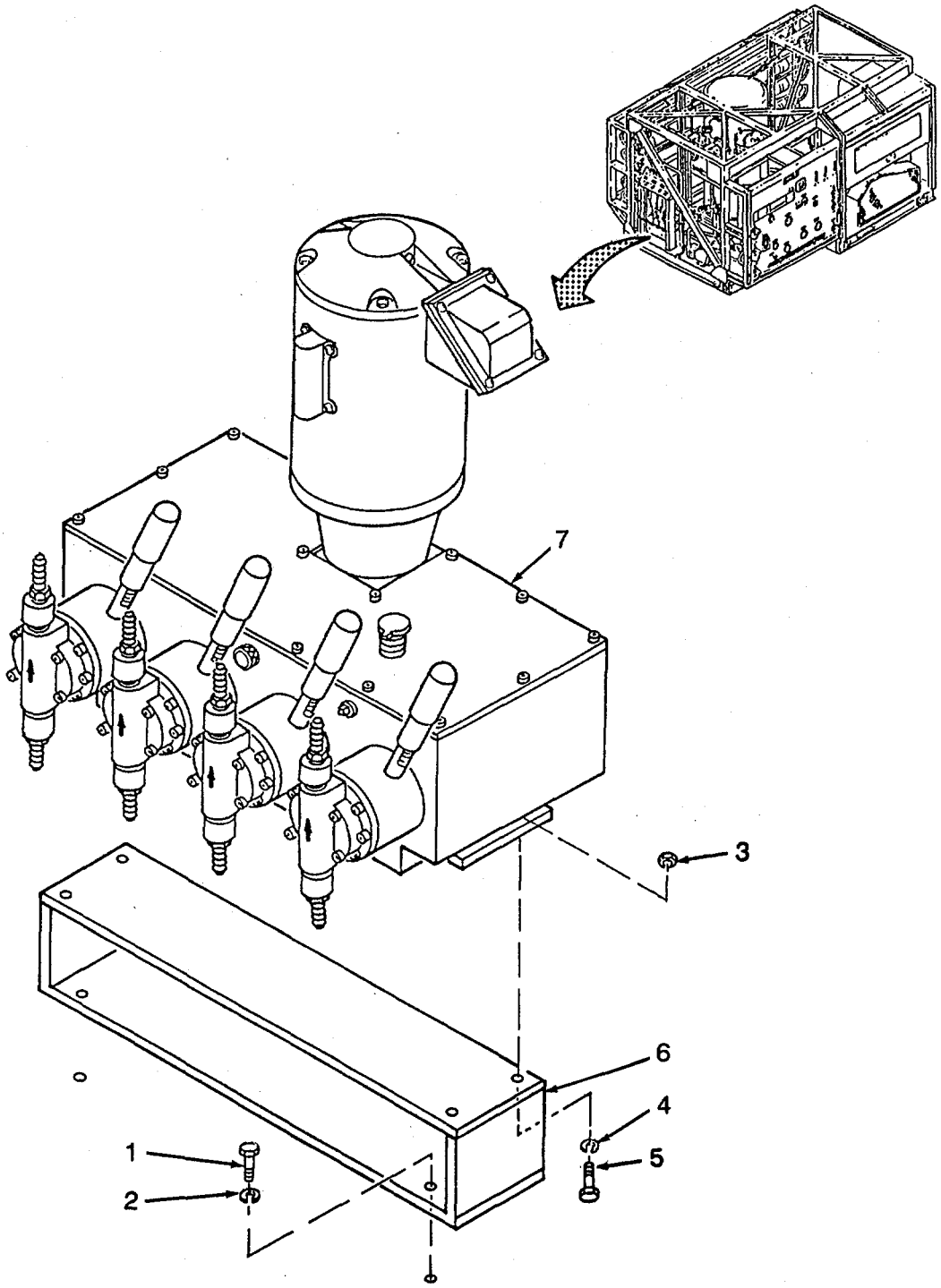

Figure 64. Chemical Feed Pump and Stand

(1) ITEM NO	(2) SMR CODE	(3) CAGEC	(4) PART NUMBER	(5) DESCRIPTION AND USABLE ON CODES(U OC)	(6) QTY
				GROUP 12 REVERSE OSMOSIS WATER PURIFICATION UNIT 600 GPH	
				FIG. 64 CHEMICAL FEED PUMP AND STAND	
1	PAOZZ	96906	MS35307-360	.SCREW,CAP,HEXAGON H	4
2	PAOZZ	96906	MS35338-141	.WASHER,LOCK	4
3	PAOZZ	96906	MS51971-2	.NUT,PLAIN,HEXAGON	4
4	PAOZZ	96906	MS35338-140	.WASHER,LOCK	4
5	PAOZZ	96906	MS35307-338	.BOLT,MACHINE	4
6	XDOZZ	97403	13222E5282	.STAND,CHEM FEED PU.....	1
7	PBOFF	41083	MODEL 1274-14-93 23	.PUMP ASSY,CHEM FD (SEE FIGURES 65 THRU 68 FOR DETAILED BREAKDOWN).....	1
				END OF FIGURE	

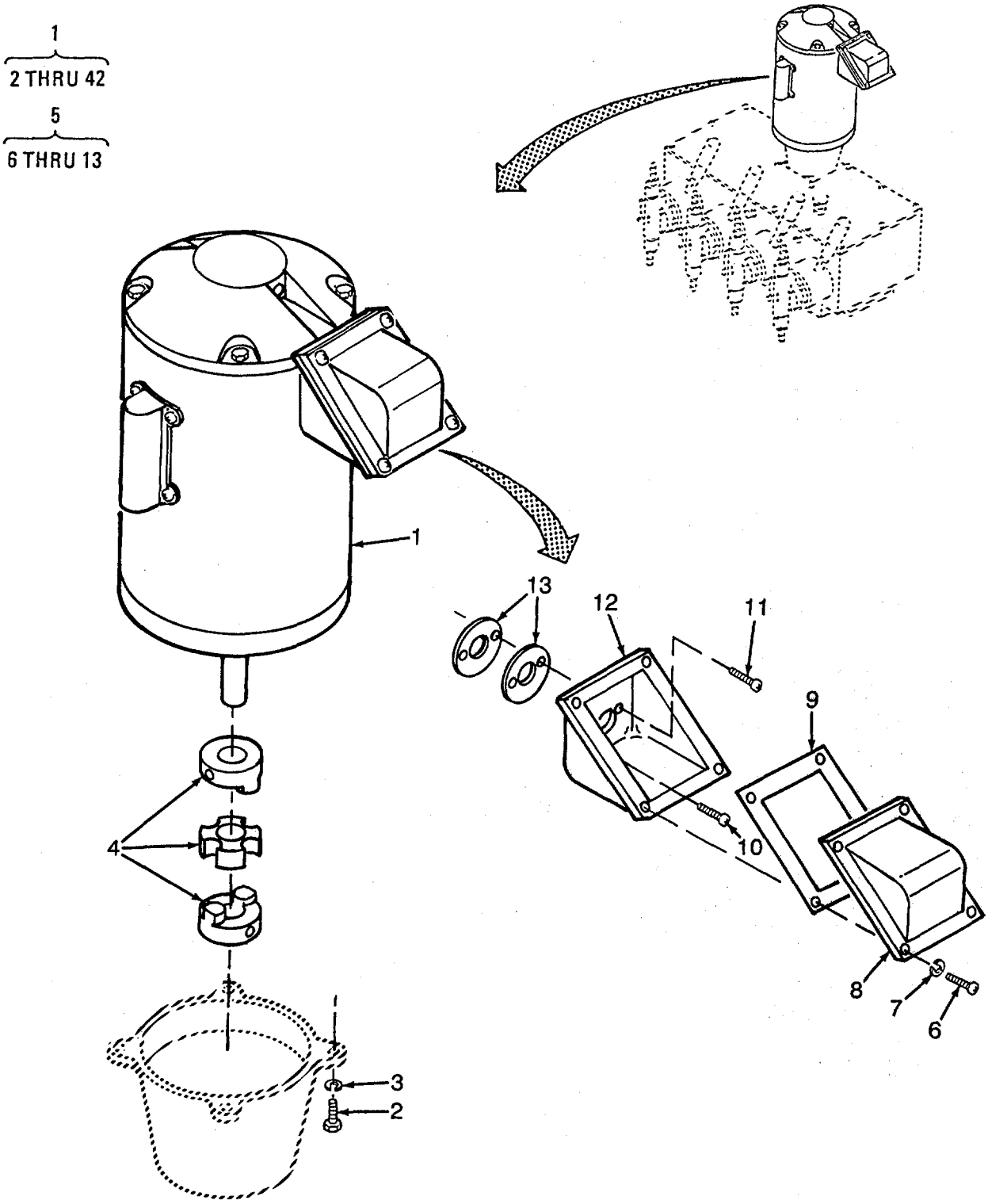

Figure 65. Chemical Feed Pump Electric Motor (Sheet 1 of 2)

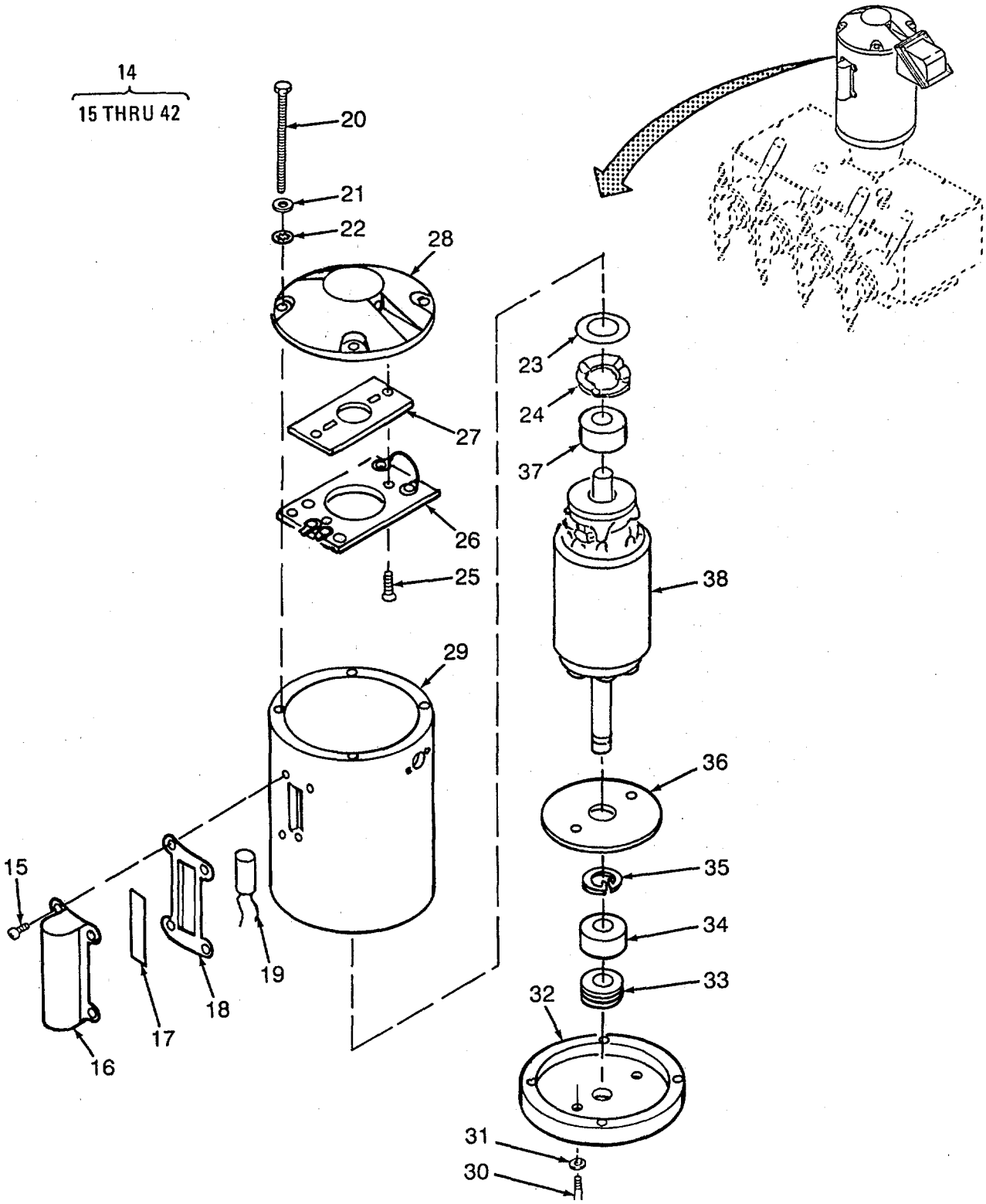

Figure 65. Chemical Feed Pump Electric Motor (Sheet 2 of 2)

(1) ITEM NO	(2) SMR CODE	(3) CAGEC	(4) PART NUMBER	(5) DESCRIPTION AND USABLE ON CODES(UOC)	(6) QTY
				GROUP 12 REVERSE OSMOSIS WATER PURIFICATION UNIT 600 GPH	
				FIG. 65 CHEMICAL FEED PUMP ELECTRIC MOTOR	
1	XAOOO	41083	260234	..MOTOR ASSEMBLY	1
2	PAOZZ	41083	4170052139	...SCREW	4
3	PAOZZ	41083	4170036025	...WASHER.LOCK	4
4	PAOZZ	75665	LOSO	...COUPLING, ASSEMBLY	1
5	PBOFF	50380	K56H3012M	...CONDUIT BOX ASSBLY	1
6	PAOZZ	50380	33519-003-HC	....SCREW	4
7	PAOZZ	96906	MS35338-41	....WASHER,LOCK	4
8	X DOZZ	50380	079329-15-A	....COVER,CONDUIT	1
9	PAOZZ	50380	602018-31-A	....GASKET,COVER	I
10	PAOZZ	50380	33520-003-JE	....SCREW,GROUND	1
11	PAOZZ	50380	33520-005-JC	....SCREW	2
12	PAOZZ	50380	079097-20-A	....CONDUIT,BOX	1
13	PAOZZ	50380	411881-15-A	....GASKET	2
14	PAFFF	50380	C56H3686R	..MOTOR	1
15	X DFZZ	50380	33502-002-HB	....SCREW	4
16	X DFZZ	50380	39A012	....SHIELD,CAPACITOR	1
17	X DFZZ	50380	169POO1	....TAPE	1
18	X DFZZ	50380	91P012	....GASKET	1
19	PBFZZ	50380	160333	....CAPACITOR	1
20	X DFZZ	50380	32003-132-BB	....STUD,THRU BOLT	4
21	X DFZZ	50380	51351	....WASHER,FLAT COPPER	4
22	X DFZZ	50380	34036-008-AB	....WASHER,STAR	4
23	X DFZZ	50380	173POO1	....LOAD SPRING	1
24	X DFZZ	50380	34001-009-AD	....WASHERWAVERLY	1
25	X DFZZ	50380	33504-005-GB	....SCREW	2
26	X DFZZ	50380	602453-49-MN	....SWITCHPLATE	1
27	X DFZZ	50380	39POOO	....INSULATOR	1
28	X AFZZ	50380	079339-05-H	....SHIELD	1
29	X AFZZ	50380	613302-35-G	....FRAME AND STATOR	1
30	X DFZZ	50380	32426-008-JB	....SCREW	2
31	X DFZZ	50380	57516	....WASHER .	2
32	X AFZZ	50380	079342-36-B	....SHIELD	1
33	PBFZZ	50380	411864-96-B	....SEAL,PLAIN ENCASED	1
34	PBFZZ	52676	6205Z	....BEARING,BALL,ANNULA	1
35	X DFZZ	50380	411878-10-A	....LOCKRING	1
36	X DFZZ	50380	411625-11-A	....BEARING,CLAMP	1
37	PBFZZ	52676	6203Z	....BEARING,BALL,ANNULA	1
38	X AFZZ	50380	602006-74-X	....ROTOR	1

END OF FIGURE

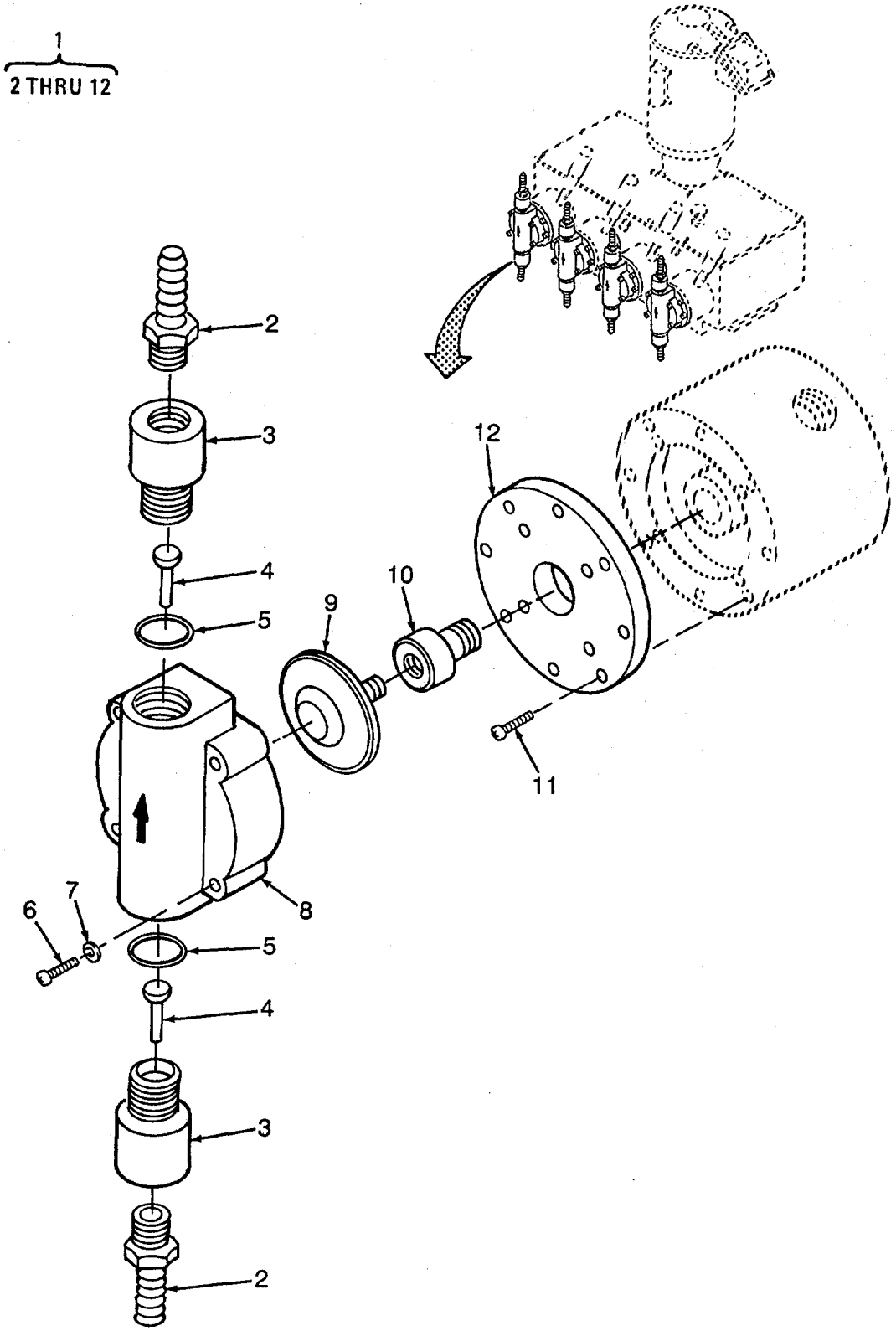

Figure 66. Chemical Feed Pump Liquid Head Assembly

(1) ITEM NO	(2) SMR CODE	(3) CAGEC	(4) PART NUMBER	(5) DESCRIPTION AND USABLE ON CODES(UOC)	(6) QTY
				GROUP 12 REVERSE OSMOSIS WATER PURIFICATION UNIT 600 GPH	
				FIG. 66 CHEMICAL FEED PUMP LIQUID HEAD ASSEMBLY	
1	PBOFF	41083	260237	..LIQUID HEAD ASSY	4
2	PAOZZ	41083	260233	...FITTING,BARBED	2
3	PAOZZ	41083	806343-3	...CHECK VALVE BODY	2
4	PAOZZ	41083	805172-4	...POPPET	2
5	PAOZZ	41083	260244	...PACKING,PREFORMED	2
6	PAOZZ	41083	4170061723	...SCREW	4
7	PAOZZ	31922	FI	...WASHER,SPECIAL	4
8	XDOZZ	41083	805829-5	...LIQUID HEAD	1
9	PAOZZ	41083	805803-2	...DIAPHGRAM	1
10	XDOZZ	41083	811946	...ADAPTER.DIAPHGRAM	1
11	PAOZZ	41083	4170061718	...SCREW	8
12	XDOZZ	41083	807547	...ADAPTER PLATE	1

END OF FIGURE

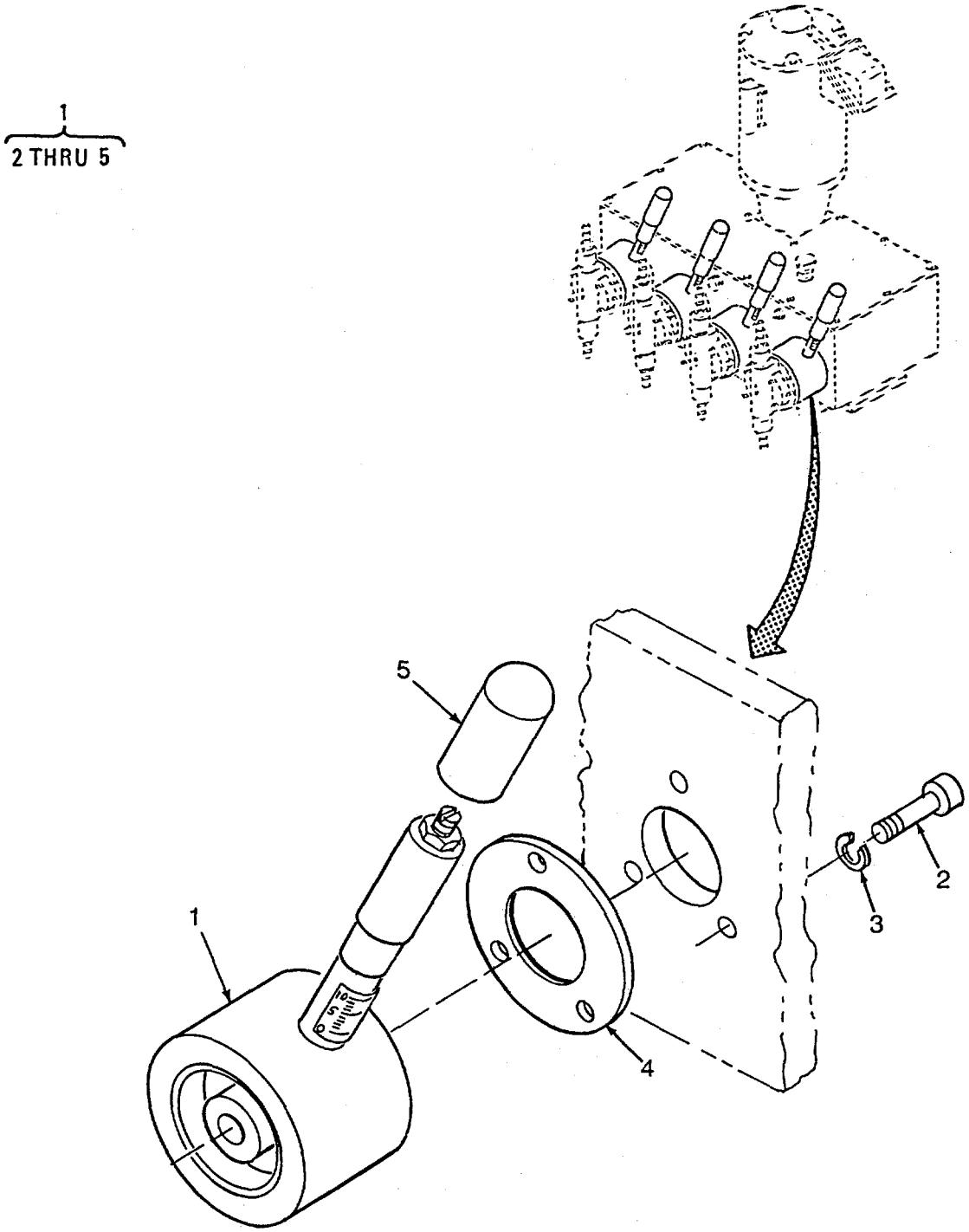

Figure 67. Chemical Feed Pump Stroke Adjustment Assembly

(1) ITEM NO	(2) SMR CODE	(3) CAGEC	(4) PART NUMBER	(5) DESCRIPTION AND USABLE ON CODES(UOC)	(6) QTY
				GROUP 12 REVERSE OSMOSIS WATER PURIFICATION UNIT 600 GPH	
				FIG. 67 CHEMICAL FEED PUMP STROKE ADJUSTMENT ASSEMBLY	
1	PAFZZ	41083	260236	..STROKE ADJ ASSY	4
2	X DFZZ	41083	4170053044	...SCREW.....	3
3	X DFZZ	41083	4170036023	...WASHER.LOCK.....	3
4	PAFZZ	41083	260047	...GASKET.....	1
5	PAOZZ	41083	815523	...CAP.....	1

END OF FIGURE

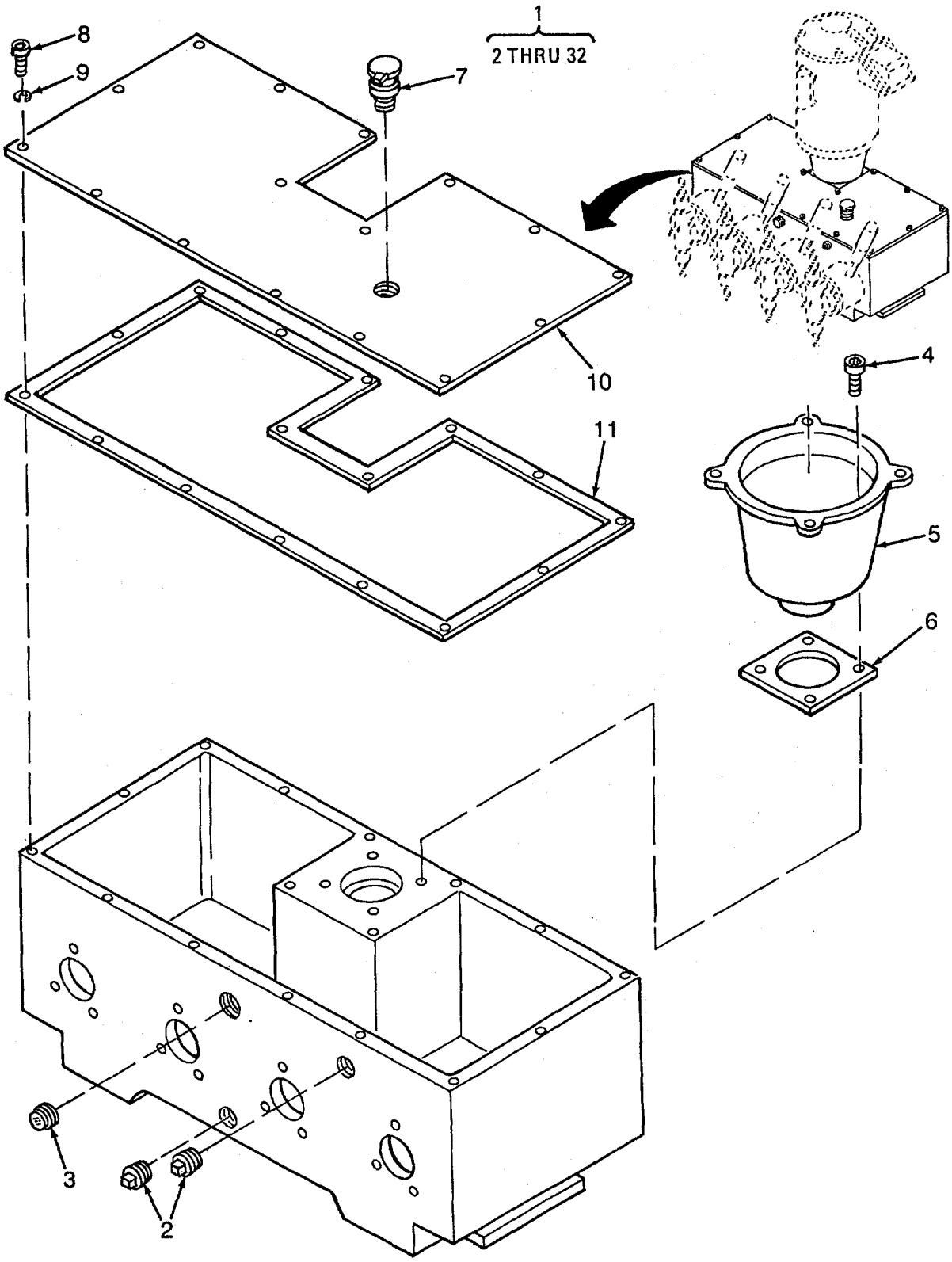

Figure 68. Chemical Feed Pump Housing and Drive Assembly (Sheet 1 of 3).

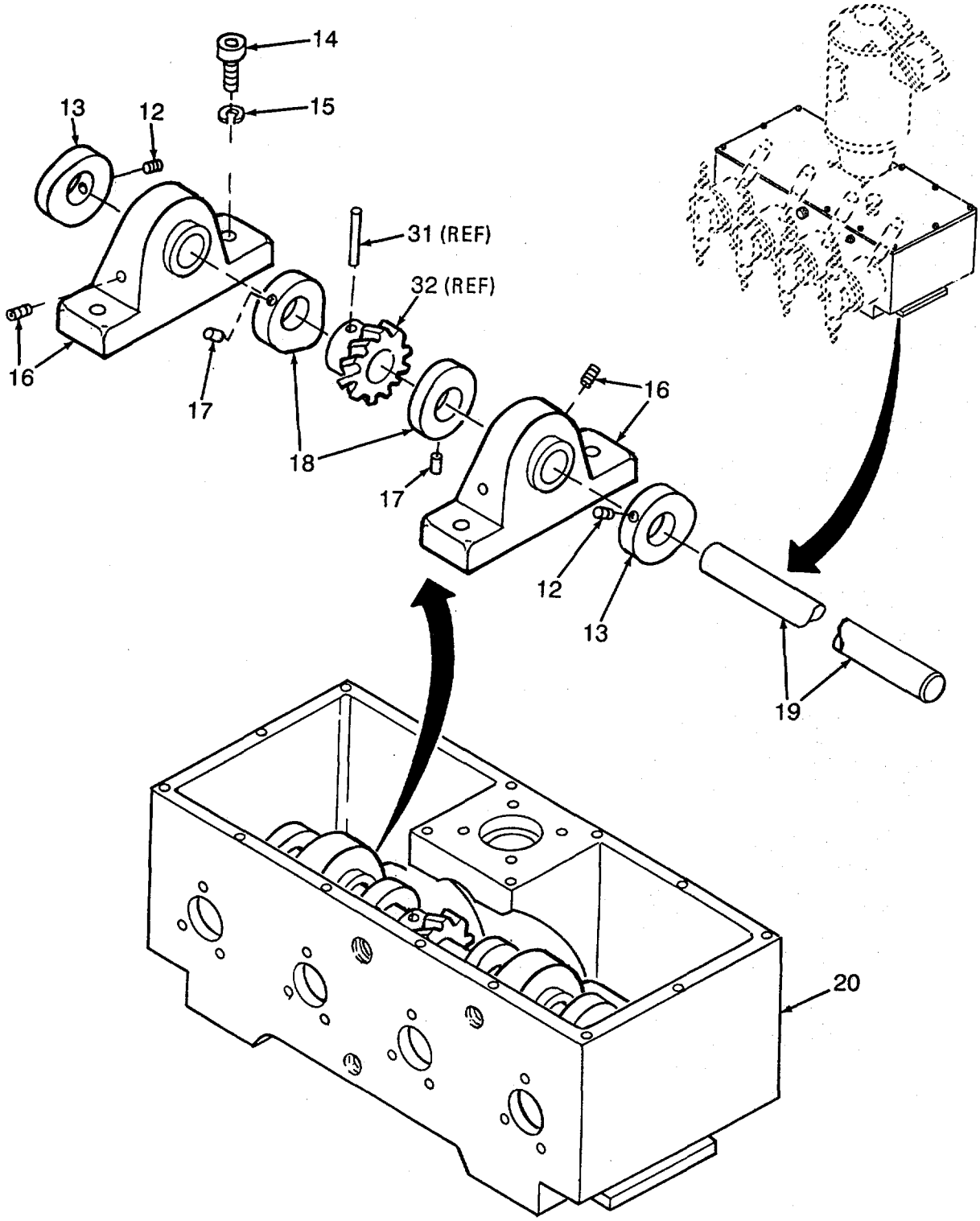

Figure 68. Chemical Feed Pump Housing and Drive Assembly (Sheet 2 of 3).

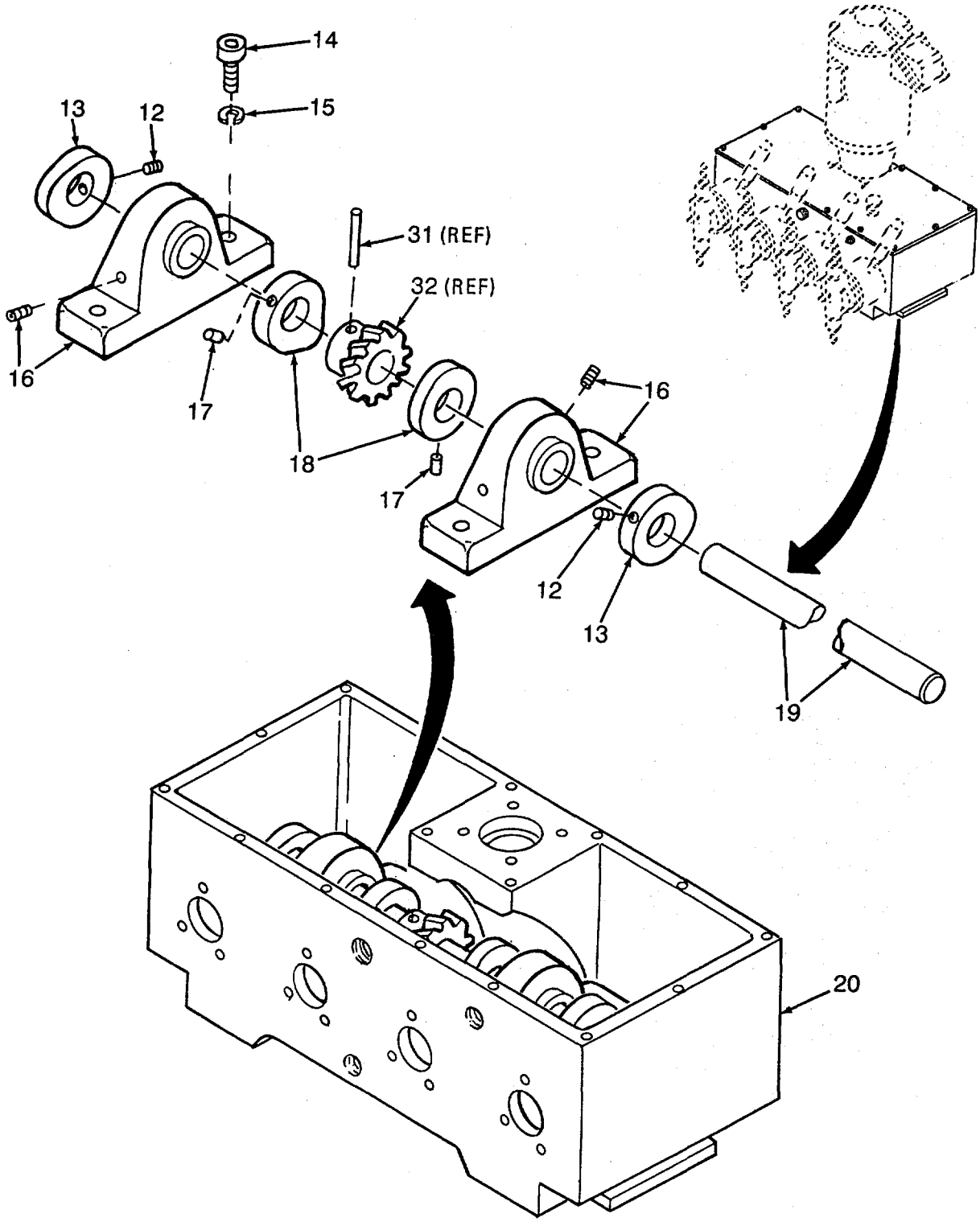

Figure 68. Chemical Feed Pump, Housing and Drive Assembly (Sheet 3 of 3).

(1) ITEM NO	(2) SMR CODE	(3) CAGEC	(4) PART NUMBER	(5) DESCRIPTION AND USABLE ON CODES(UOC)	(6) QTY
				GROUP 12 REVERSE OSMOSIS WATER PURIFICATION UNIT 600 GPH	
				FIG. 68 CHEMICAL FEED PUMP HOUSING AND DRIVE ASSEMBLY	
1	XAFFF	41083	260235	..HOUSING ASSY	1
2	PAOZZ	41083	4163310002	...PLUG,PIPE	2
3	PAOZZ	41083	260232	...SIGHTGLASS ASSY	1
4	PAFZZ	41083	4170053219	...SCREW	4
5	XDFZZ	41083	Y041833	...ADAPTER, MOTOR	1
6	PAFZZ	41083	Y933976-10	...GASKET	1
7	PAOZZ	41083	212101	...OIL FILL	1
8	PAFZZ	41083	4170053031	...SCREW	16
9	PAFZZ	41083	4170036321	...WASHER.LOCK	16
10	XDFZZ	41083	260048	...COVER	1
11	PAFZZ	41083	260049	...GASKET	1
12	XDFZZ	41083	815497-1	...SCREW,SET	4
13	XDFZZ	41083	260040	...CAM. OUTSIDE	2
14	XDFZZ	41083	4170053093	...SCREW	4
15	XDFZZ	41083	4170036026	...WASHER,LOCK	4
16	XDFZZ	41083	260231	...BEARING	2
17	XDFZZ	41083	260241	...PI	2
18	XDFZZ	41083	260039	...CAM,INSIDE	2
19	XDFZZ	41083	260041	...CAM SHAFT	1
20	XAFFF	41083	260043	...HOUSING	1
21	AFFFF	41083	260239	...DRIVE ASSEMBLY	1
Z2	PAFZZ	41083	Y302716	....SEAL,OIL	1
23	PBFZZ	41083	Y302646	....CUP,ROLLER BEARING	1
24	PBFZZ	41083	Y302647	....CONE. BEARING	1
25	XDFZZ	41083	Y302657	....PIN	1
26	XDFZZ	41083	Y933987-03	....GEAR,WORM	1
27	XDFZZ	41083	Y102641	....INPUT SHAFT	1
28	PBFZZ	41083	Y304746	....RACE, THRUST	2
29	XDFZZ	41083	Y304745	....BEARING,THRUST	1
30	XDFZZ	41083	Y304747	....BEARING,NEEDLE	1
31	XDFZZ	41083	260240	....PIN,WORM	1
32	XDFZZ	41083	260057	....GEAR,WORM	1

END OF FIGURE

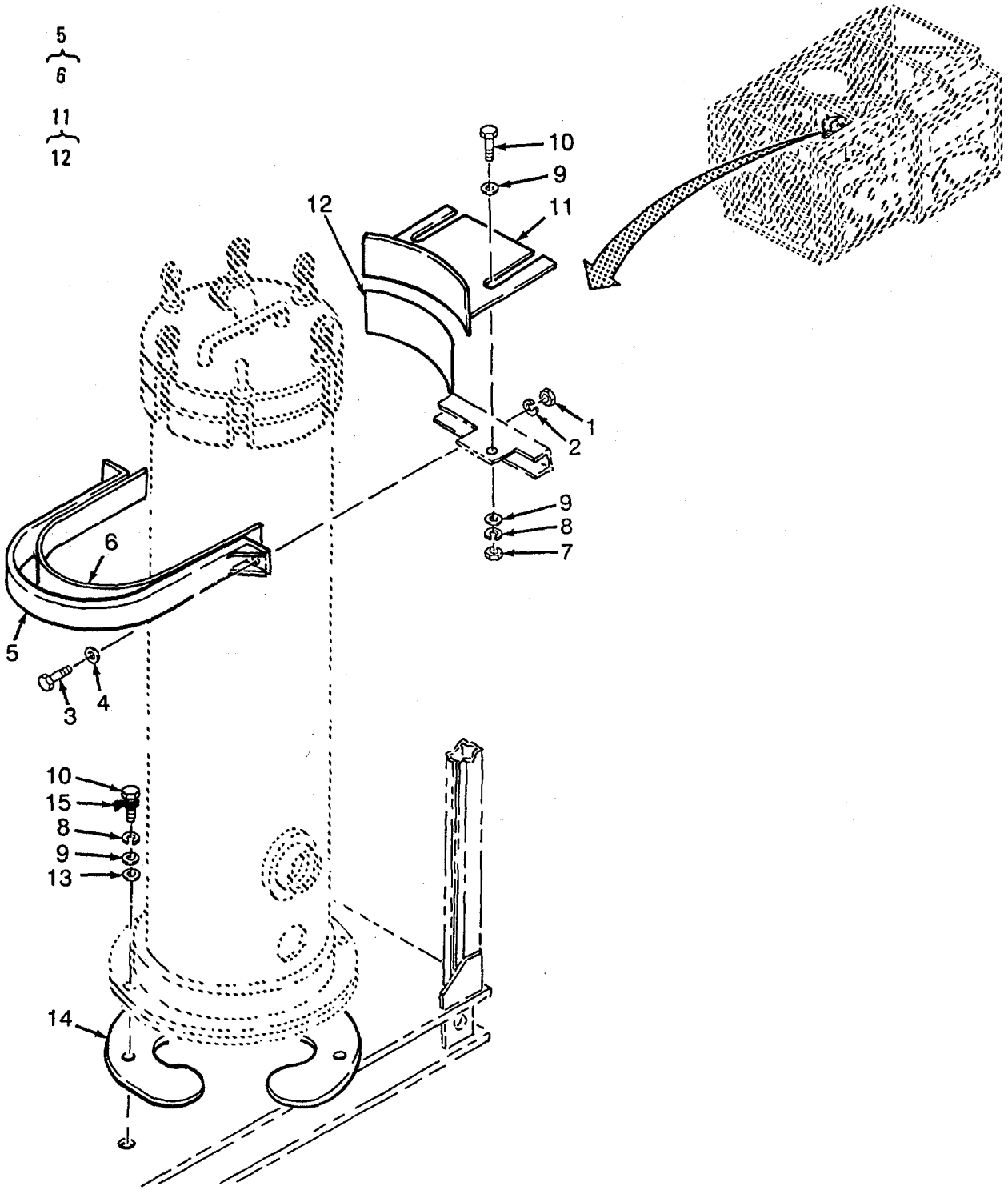

Figure 69. Cartridge Filter Mounting Hardware

(1) ITEM NO	(2) SMR CODE	(3) CAGEC	(4) PART NUMBER	(5) DESCRIPTION AND USABLE ON CODES(UOC)	(6) QTY
				GROUP 12 REVERSE OSMOSIS WATER PURIFICATION UNIT 600 GPH	
				FIG. 69 CARTRIDGE FILTER MOUNTING HARDWARE	
1	PAOZZ	96906	MS51971-1	.NUT,PLAIN,HEXAGON	2
2	PAOZZ	96906	MS35338-139	.WASHER,LOCK	2
3	PAOZZ	96906	MS35307-312	.SCREW,CAP,HEXAGON H	2
4	PAOZZ	96906	MS15795-809	.WASHER.FLAT	2
5	XDOOO	97403	13222E5283	.BRACKET,CRTG FILTER	1
6	MOOZZ	97403	13222E5283-3	.GASKET,RUBBER,SYNTH MAKE FROM ..... V BULK P/N MIL-R-6855, CL2. TYA, GRSO, 0.250 STOCK	
7	PAOZZ	96906	MS51971-3	.NUT,PLAIN. HEXAGON	2
8	PAOZZ	96906	MS35338-141	.WASHER,LOCK	6
9	PAOZZ	96906	MS15795-813	.WASHER,FLAT	8
10	PAOZZ	96906	MS35307-362	.SCREW,CAP,HEXAGON H	6
11	XDOOO	97403	13222E5284	.BRACE,CRTG FILTER	1
12	MOOZZ	97403	13222E5284-3	.GASKET,RUBBER,SYNTH MAKE FROM ..... V BULK P/N MIL-R-6855, CL2, TYA, GR50, 0.250 STOCK	
13	PAFZZ	96906	MS51859-8	.WASHER,FLAT.....	4
14	XDFZZ	97403	13226E8000	.PLATE,ISOLATOR POLYVINYL CHLORIDE.....	2
15	MFFZZ	19099	13222E5330-147	.TAPE,INSULATION MAKE FROM BULK ..... V NMIL-I-24391	
				END OF FIGURE	

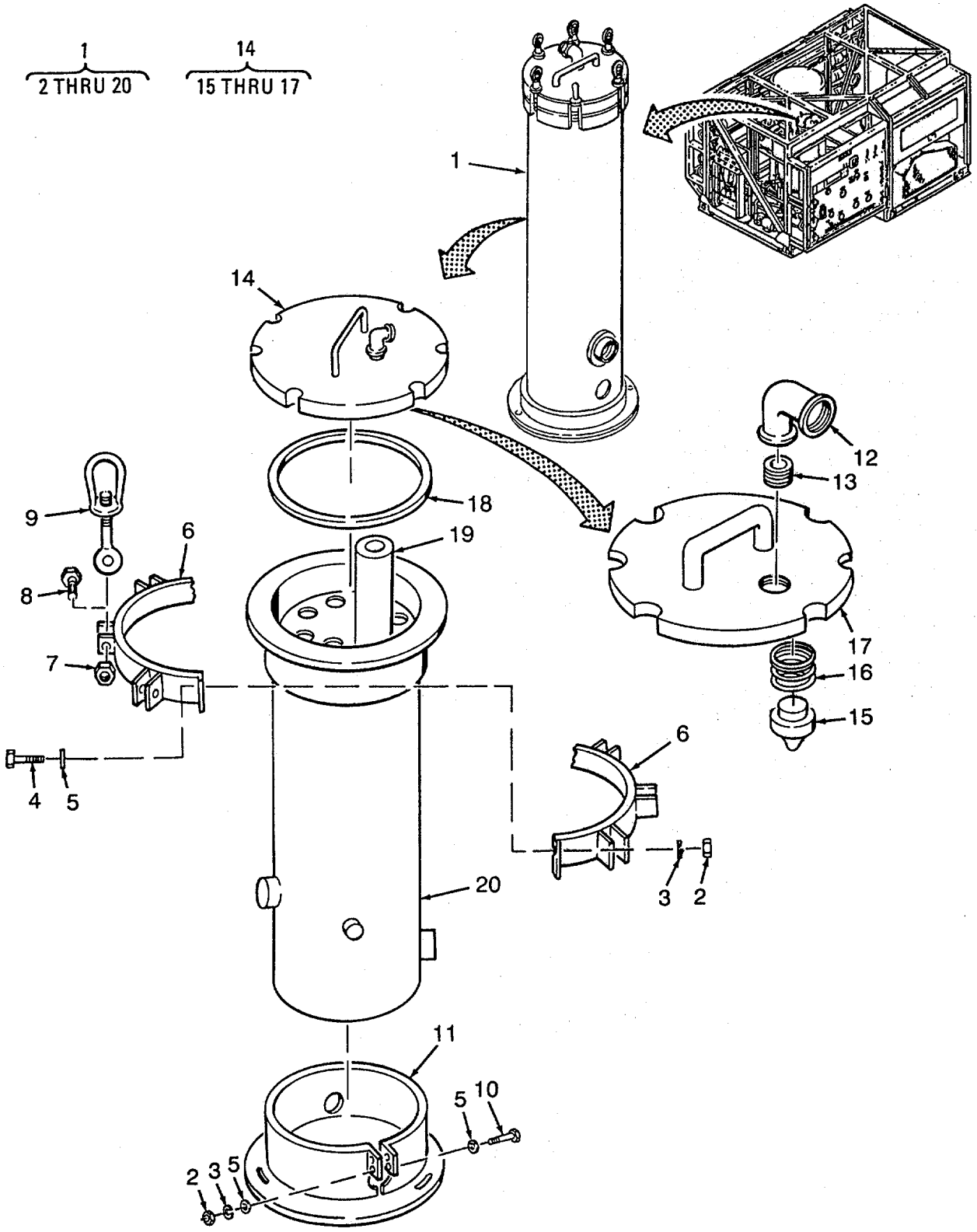

Figure 70. Cartridge Filter Assembly

(1) ITEM NO	(2) SMR CODE	(3) CAGEC	(4) PART NUMBER	(5) DESCRIPTION AND USABLE ON CODES(UOC)	(6) QTY
				GROUP 12 REVERSE OSMOSIS WATER PURIFICATION UNIT 600 GPH	
				FIG. 70 CARTRIDGE FILTER ASSEMBLY	
1	PDFFF	31738	PS-77-9964	.FILTER, FLUID	1
2	XDOZZ	31738	11-0354	..NUT 5/16 STAINLESS STEEL	4
3	XDOZZ	31738	11-0355	..WASHER,LOCK 5/16 STAINLESS STEEL	4
4	XDOZZ	31738	11-0317	..BOLT, HEX HEAD 5/16-18 X 1 3/4 STAINLESS STEEL	2
5	XDOZZ	31738	11-0122	..WASHER,FLAT 5/16 X 7/8 STAINLESS STEEL	8
6	XDOZZ	31738	77-0788-1	..BRACKET,SWING BOLT	1
7	XDOZZ	31738	11-0519	..NUT,SELF-LOCKING, HE 3/8-16 STAINLESS STEEL	6
8	XDDZZ	31738	11-0444-l	..SCREW,CAP,HEXAGON H 3/8-16 X l-5/8 STAINLESS STEEL	6
9	XDOZZ	31738	11-2124	..SWING BOLT ASSY	6
10	XDOZZ	31738	11-0113	..BOLT,HEX HEAD 5/16-18 X 1 l/2 STAINLESS STEEL	2
11	XDOZZ	31738	99-1357-1	..SKIRT	1
12	XDOZZ	31738	33-1725	..ELBOW 90 DEG l/2 NPT STAINLESS STEEL	1
13	XDOZZ	31738	33-0411	..NIPPLE CLOSE, l/2 NPT STAINLESS STEEL	1
14	XDOOO	31738	88-2862A	..COVER ASSY	1
15	PBOZZ	31738	77-0701-C	..SEAT,CARTRIDGE	8
16	PBOZZ	31738	77-0301-1	... SPRING,HOLD DOWN	8
11	XAOZZ	31738	88-2862	..COVER	1
18	PAOZZ	31738	22-0816	..PACKING,PREFORMED	1
19	PAOZZ	97403	13226E2210	..TUBE,FILTER	8
20	XAFZZ	31738	77-9966A	..SHELL	1

END OF FIGURE

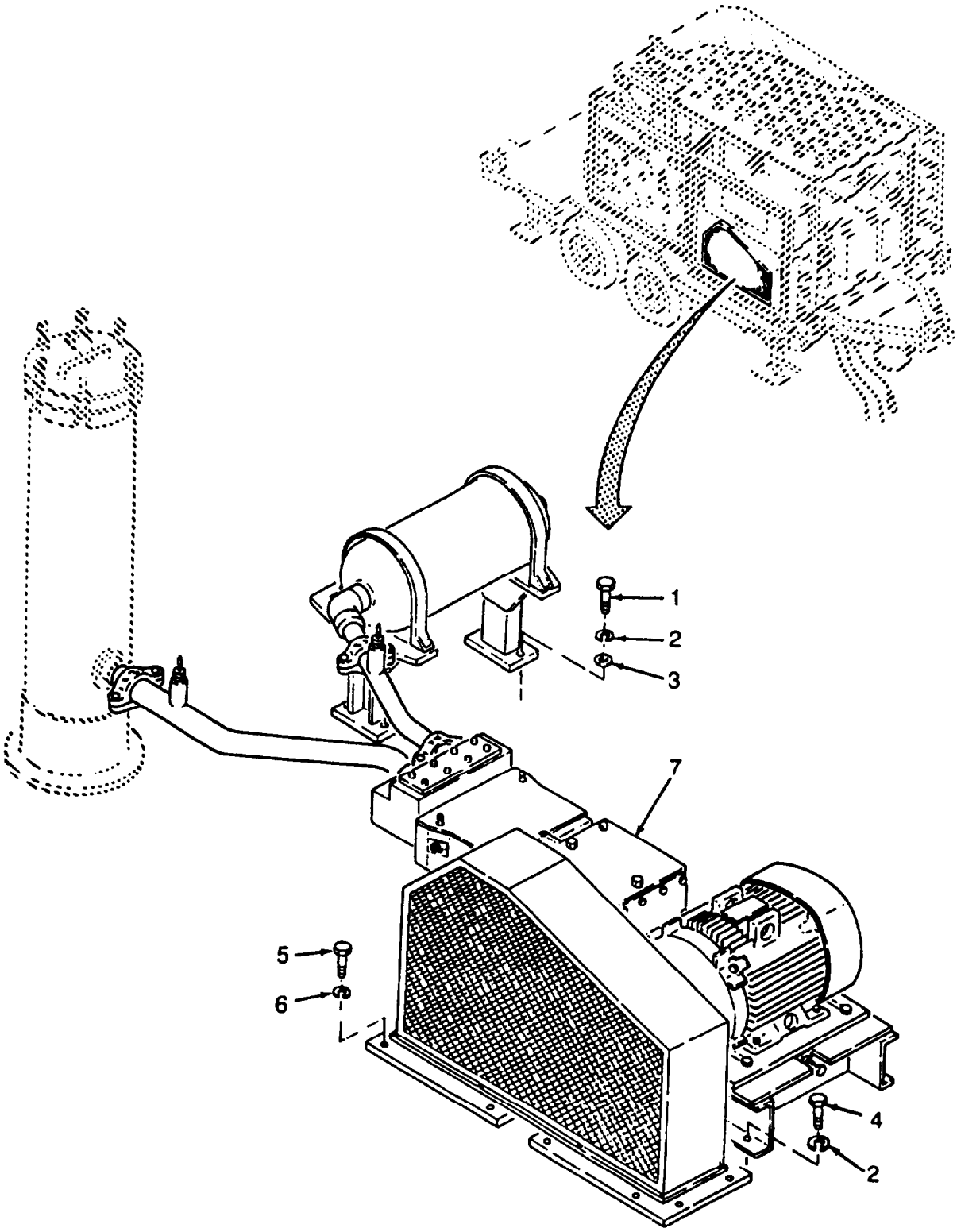

Figure 71. High Pressure Pump Assembly
(WPES-10, WPES-20 AND WPES-30)

(1) ITEM NO	(2) SMR CODE	(3) CAGEC	(4) PART NUMBER	(5) DESCRIPTION AND USABLE ON CODES(UOC)	(6) QTY
				GROUP 12 REVERSE OSMOSIS WATER PURIFICATION UNIT 600 GPH	
				FIG. 71 HIGH PRESSURE PUMP ASSEMBLY	
1	PAOZZ	96906	MS35307-412	.SCREW,CAP,HEXAGON H UOC:FAV,FAW,FAX	4
2	PAOZZ	96906	MS35338-143	.WASHER,LOCK UOC:FAV,FAW,FAX	14
3	PAOZZ	96906	MS15795-817	.WASHER,FLAT UOC:FAV,FAW,FAX	4
4	PAOZZ	96906	MS35307-414	.SCREW,CAP,HEXAGON H UOC:FAV,FAW,FAX	10
5	PAOZZ	96906	MS35307-306	.SCREW,CAP,HEXAGON H UOC:FAV,FAW,FAX	6
6	PAOZZ	96906	MS35338-139	.WASHER,LOCK UOC:FAV,FAW,FAX	6
7	XCFHH	97403	1322965635-2	.PUMP ASSY,R O UOC:FAV,FAW,FAX	1

END OF FIGURE

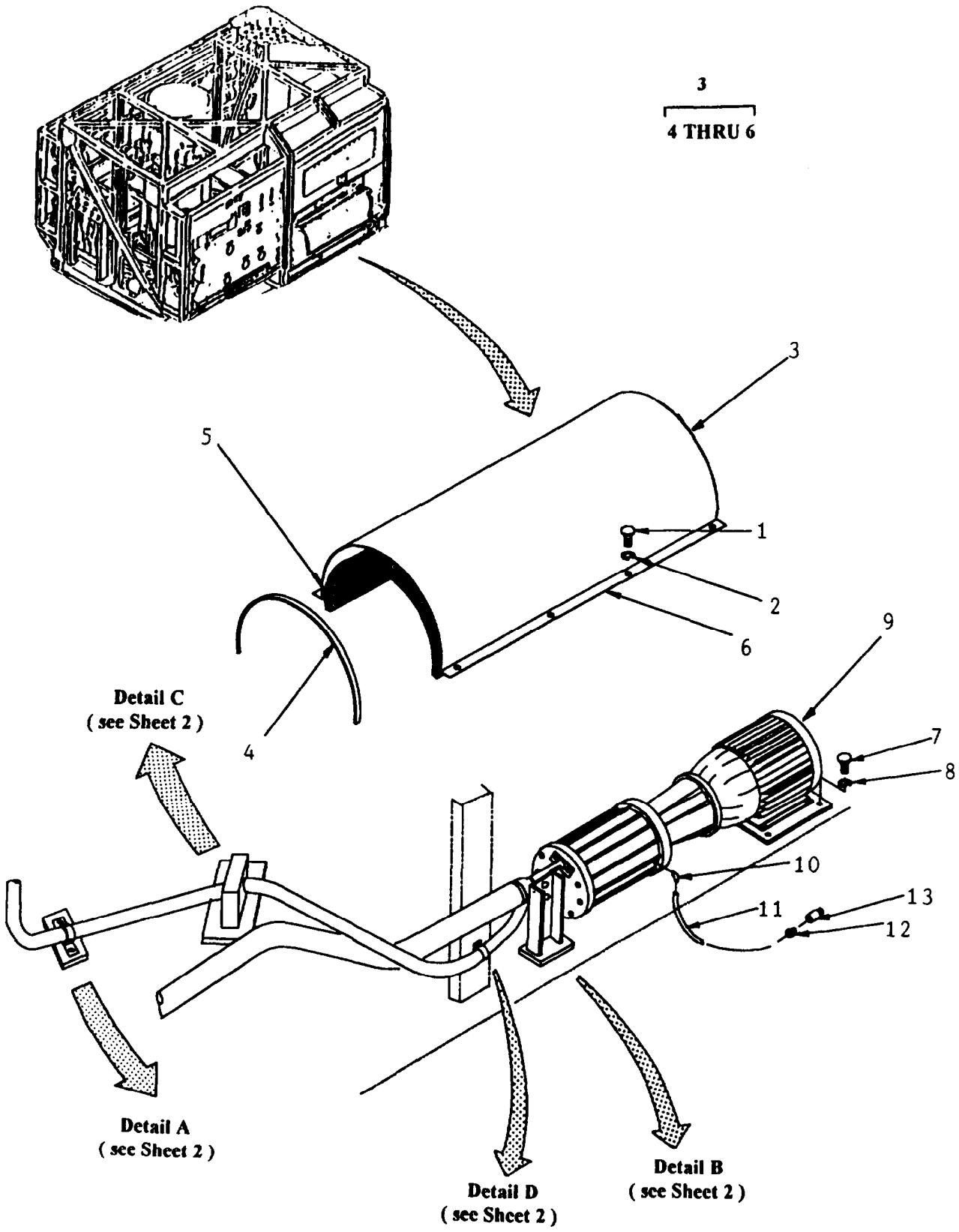

Figure 7lA. High Pressure Pump Assembly (Sheet 1 of 2)
Models H-9518-1,11-9518-2,AND 11-9518-3 only

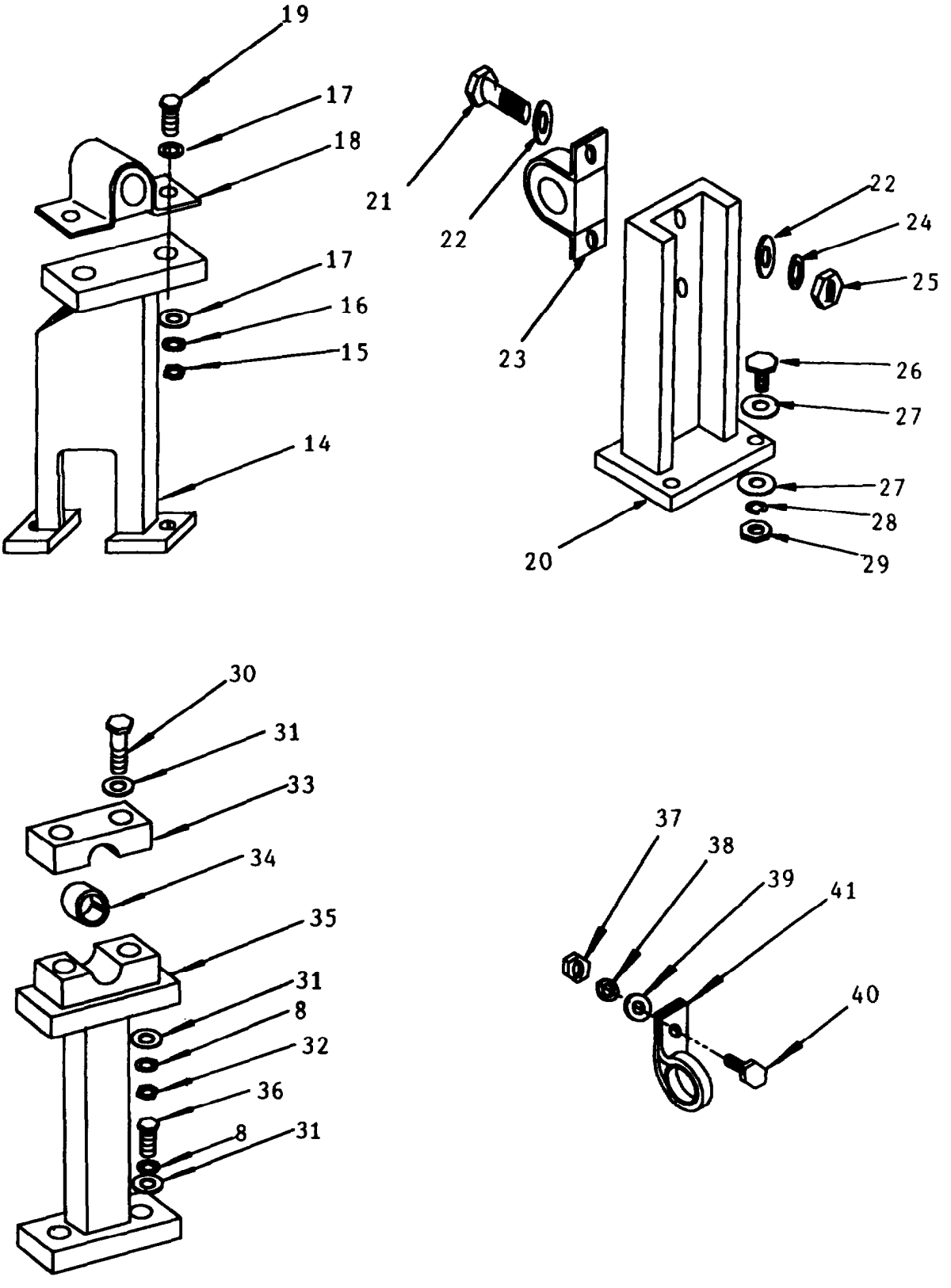

Figure 71A. High Pressure Pump Assembly (Sheet 2 of 2)
Models H-9518-1, H-9518-2, and H-95183 only

(1) ITEM NO	(2) SMR CODE	(3) CAGEC	(4) PART NUMBER	(5) DESCRIPTION AND USABLE ON CODES(UOC)	(6) QTY
				GROUP 12 REVERSE OSMOSIS WATER PURIFICATION UNIT 600 GPH	
				FIG. 71A HIGH PRESSURE PUMP ASSEMBLY	
1	PA0ZZ	96906	MS35218-51	.SCREW,MACHINE UOC:FMQ,FMR,FMS	8
2	PAOZZ	96906	MS35338-138	.WASHER,LOCK UOC:FMQ,FMR,FMS	8
3	XDOFF	97403	13229E1406	.COVER,PUMP ASSY UOC:FMQ,FMR,FMS	1
4	MFOZZ	97403	13229E1406-3	..EDGE PROTECTOR MAKE FROM BULK P/N 13229E1407,32.50 L UOC:FMQ,FMR,FMS	2
5	MFOZZ	97403	1322931406-2	..INSULATION, ACCOUSTICAL MAKE FROM BULK P/N 13229E1408 UOC:FMQ,FMR,FMS	1
6	XAOZZ	97403	13229E1409	..COVER,PUMP UOC:FMQ,FMR,FMS	1
7	PAOZZ	96906	MS35307-414	.SCREW,CAP,HEXAGON H UOC:FMQ,FMR,FMS	4
8	PAOZZ	96906	MS35338-143	.WASHER,LOCK UOC:FMQ,FMR,FMS	8
9	XDFZZ	97403	13229E0001	.PUMP ASSY, R.O UOC:FMQ,FMR,FMS	1
10	PAOZZ	93061	169PL-8-6	.ELBOW,3/8 NPTF X l/2 TUBE UOC:FMQ,FMR,FMS	1
11	MOOZZ	OAK83	95180001-l	.TUBING,MAKE FROM BULK P/N PV86-1 CUT TO LENGTH AS REQUIRED UOC:FMQ,FMR,FMS	V
12	PAOZZ	39428	51875K58	.CONNECTOR, FEMALE, 1/2 IN. NPT UOC:FMQ,FMR,FMS	1
13	XDOZZ	97403	13229E0137	.VALVE,CHECK UOC:FMQ,FMR,FMS	1
14	XDOZZ	97403	13229E0372	.BRACKET,HIGH PRESSURE HOSE UOC :FMQ,FMR,FMS	1
15	PAOZZ	96906	MS51971-2	..NUT,PLAIN,HEXAGON UOC:FMQ,FMR,FMS	2
16	PAOZZ	96906	MS35338-140	..WASHER,LOCK UOC:FMQ,FMR,FMS	2
17	PAOZZ	96906	MS15795-812	..WASHER,FLAT UOC:FMQ,FMR,FMS	4
18	PBOZZ	97403	13229E0376-6	..CLAMP,HOSE,SIZE 1 3/4 IN., SST UOC:FMQ,FMR,FMS	1
19	PAOZZ	96906	MS35307-334	..BOLT,MACHINE UOC:FMQ,FMR,FMS	2
20	XDFZZ	97403	13229E0353	.BRACKET ASSY, LOW PRESSURE HOSE UOC:FMQ,FMR,FMS	1
21	PAOZZ	96906	MS35307-334	..BOLT,MACHINE UOC:FMQ,FMR,FMS	2
22	PAOZZ	96906	MS15795-812	..WASHER,FLAT UOC:FMQ,FMR,FMS	4
23	PAOZZ	97403	13229E0376-6	..CLAMP,HOSE UOC:FMQ,FMR,FMS	1
24	PAOZZ	96906	MS35338-140	..WASHER,LOCK UOC:FMQ,FMR,FMS	2
25	PAOZZ	96906	MS51971-2	..NUT,PLAIN,HEXAGON UOC:FMQ,FMR,FMS	2

(1) ITEM NO	(2) SMR CODE	(3) CAGEC	(4) PART NUMBER	(5) DESCRIPTION AND USABLE ON CODES(UOC)	(6) QTY
26	PAOZZ	96906	MS35307-360	..SCREW,CAP,HEXAGON H UOC:FMQ,FMR,FMS	2
27	PAOZZ	96906	MS15795-814	..WASHER,FLAT UOC:FMQ,FMR,FMS	4
28	PAOZZ	96906	MS35338-141	..WASHER,LOCK UOC:FMQ,FMR,FMS	2
29	PAOZZ	96906	MS51971-3	..NUT,PLAIN,HEXAGON UOC:FMQ,FMR,FMS	2
30	PAOZZ	96906	MS35307-427	.SCREW,CAP,HEXAGON UOC:FMQ,FMR,FMS	2
31	PAOZZ	96906	MS15795-817	.WASHER,FLAT UOC:FMQ,FMR,FMS	6
32	PAOZZ	96906	MS51971-5	.NUT,PLAIN,HEXAGON UOC:FMQ,FMR,FMS	2
33	XDOZZ	97403	13222E5286	.CLAMP UOC:FMQ,FMR,FMS	2
34	PAOZZ	97403	13229EO352	.CUSHION,RUBBER NEOPRENE ASTM D-2000 55-65 SHORE A UOC:FMQ,FMR,FMS	1
35	XDOZZ	97403	13222E5281	.SUPPORT UOC:FMQ,FMR,FMS	1
36	PAOZZ	96906	MS35307-412	.SCREW,CAP,HEXAGON H UOC:FMQ,FMR,FMS	2
37	PAOZZ	96906	MS51971-1	.NUT,PLAIN,HEXAGON UOC:FMQ,FMR,FMS	1
38	PAOZZ	96906	MS35338-139	.WASHER,LOCK UOC:FMQ,FMR,FMS	1
39	PAOZZ	96906	MS15795-810	.WASHER,FLAT UOC:FMQ,FMR,FMS	1
40	PAOZZ	96906	MS35307-306	.SCREW,CAP,HEXAGON H UOC:FMQ,FMR,FMS	1
41	PAOZZ	96906	MS21919WCG18	.CLAMP,HOSE UOC:FMQ,FMR,FMS	1

END OF FIGURE

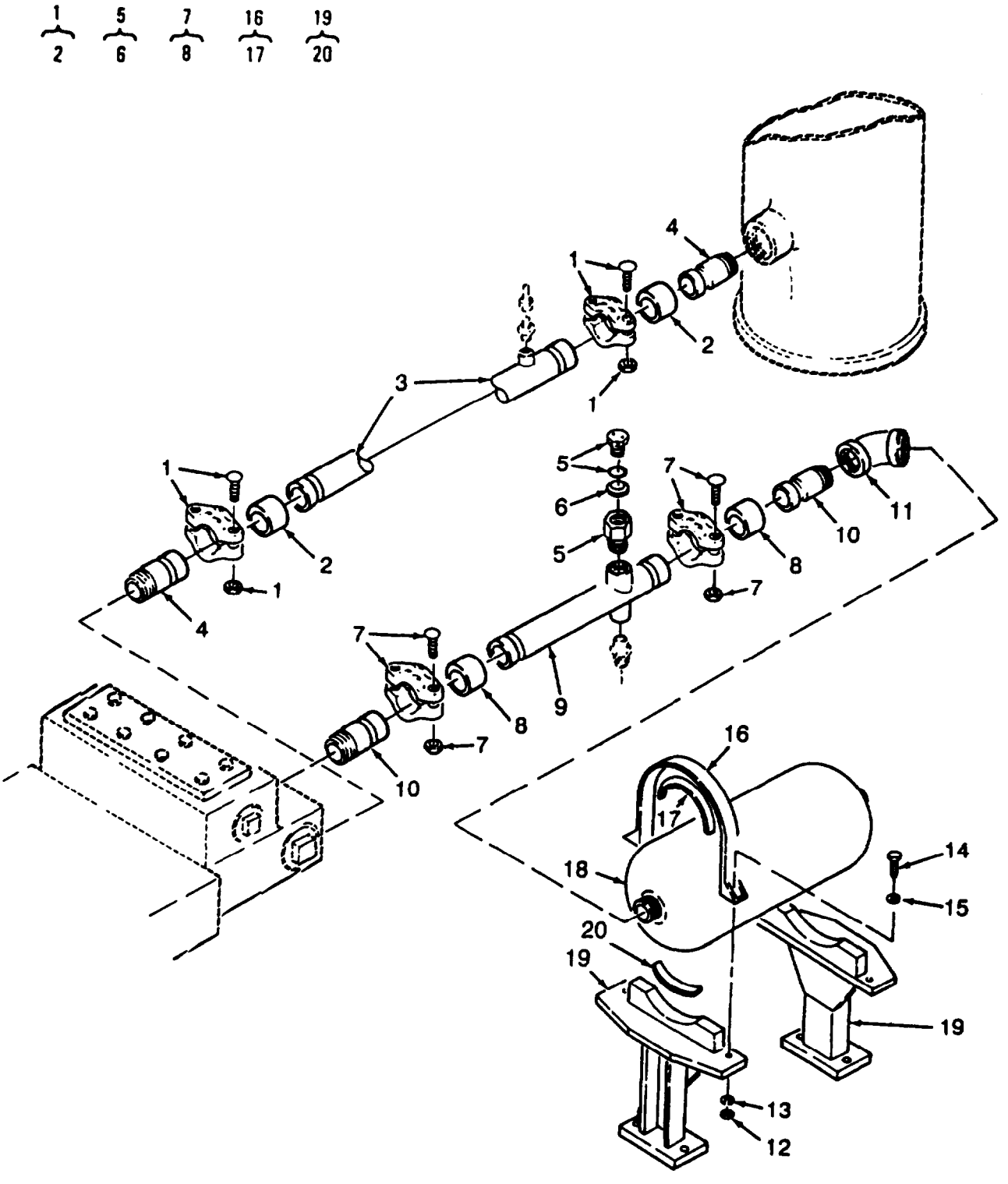

Figure 72. Fluid Pressure Dampener and Support Assembly
(WPES-10, WPES-20 AND WPES-30 ONLY)

(1) ITEM NO	(2) SMR CODE	(3) CAGEC	(4) PART NUMBER	(5) DESCRIPTION AND USABLE ON CODES(UOC)	(6) QTY
				GROUP 12 REVERSE OSMOSIS WATER PURIFICATION UNIT 600 GPH	
				FIG. 72 FLUID PRESSURE DAMPENER AND SUPPORT ASSEMBLY	
1	PA0ZZ	81349	M103872D05	..COUPLING,CLAMP 2 IN UOC:FAV,FAW,FAX	2
2	PA0ZZ	81349	M103873D05	. ..GASKET UOC:FAV,FAW,FAX	1
3	PBOZZ	97403	13229E5628	..PIPE SECTION CARTRIDGE FILTER TO HIGH PRESSURE PUMP UOC:FAV,FAW,FAX	1
4	PBOZZ	97403	13228E8286-5	..COUPLING,PIPE GROOVED CLAMP TO NPT UOC:FAV,FAW,FAX	2
5	PBOFZ	06370	A5967-2	..HEAD,SAFETY, PRESSUR UOC:FAV,FAW,FAX	1
6	PAOZZ	06370	D2210-1	...RUPTURE DISC UOC:FAV,FAW,FAX	1
7	PAOZZ	81349	M103872D03	..COUPLING,CLAMP 1 l/4 IN UOC:FAV,FAW,FAX	2
8	PAOZZ	81349	M103873D03	. ..GASKET UOC:FAV,FAW,FAX	2
9	PBOZZ	97403	13229E5629	..PIPE SECTION HIGH PRESSURE PUMP TO DAMPENER UOC:FAV,FAW,FAX	1
10	PBOZZ	97403	13228E8287-3	..ADAPTER, CLAMP GROOVED CLAMP TO NPT UOC:FAV,FAW,FAX	2
11	PBOZZ	97403	13228E8295	..ELBOW UOC:FAV,FAW,FAX	1
12	PAOZZ	96906	MS51971-1	..NUT,PLAIN,HEXAGON UOC:FAV,FAW,FAX	4
13	PAOZZ	96906	MS35338-139	..WASHER,LOCK UOC:FAV,FAW,FAX	4
14	PAOZZ	96906	MS35307-312	..SCREW,CAP,HEXAGON H UOC:FAV,FAW,FAX	4
15	PAOZZ	96906	MS15795-809	..WASHER,FLAT UOC:FAV,FAW,FAX	4
16	XDOZZ	97403	13229E5627	..BRACKET,DAMPENER UOC:FAV,FAW,FAX	2
17	MOOZZ	97403	13229E5627-3	...RUBBER SYNTHETIC MAKE FROM BULK P/N MIL-R-6855, CL2, TYA, GR50 0.250 STOCK UOC:FAV,FAW,FAX	1
18	XDOZZ	97403	13229E5631	..DAMPENER,FL PRESS UOC:FAV,FAW,FAX	1
19	XDOZZ	97403	13229E5626	..SUPPORT ASSEMBLY UOC:FAV,FAW,FAX	2
20	MOOZZ	97403	13229E5626-7	. ..RUBBER,SYNTHETIC MAKE FROM BULK P/N MIL-R-6855, CL2, TYA, GR50, 0.250 STOCK UOC:FAV,FAW,FAX	2

END OF FIGURE

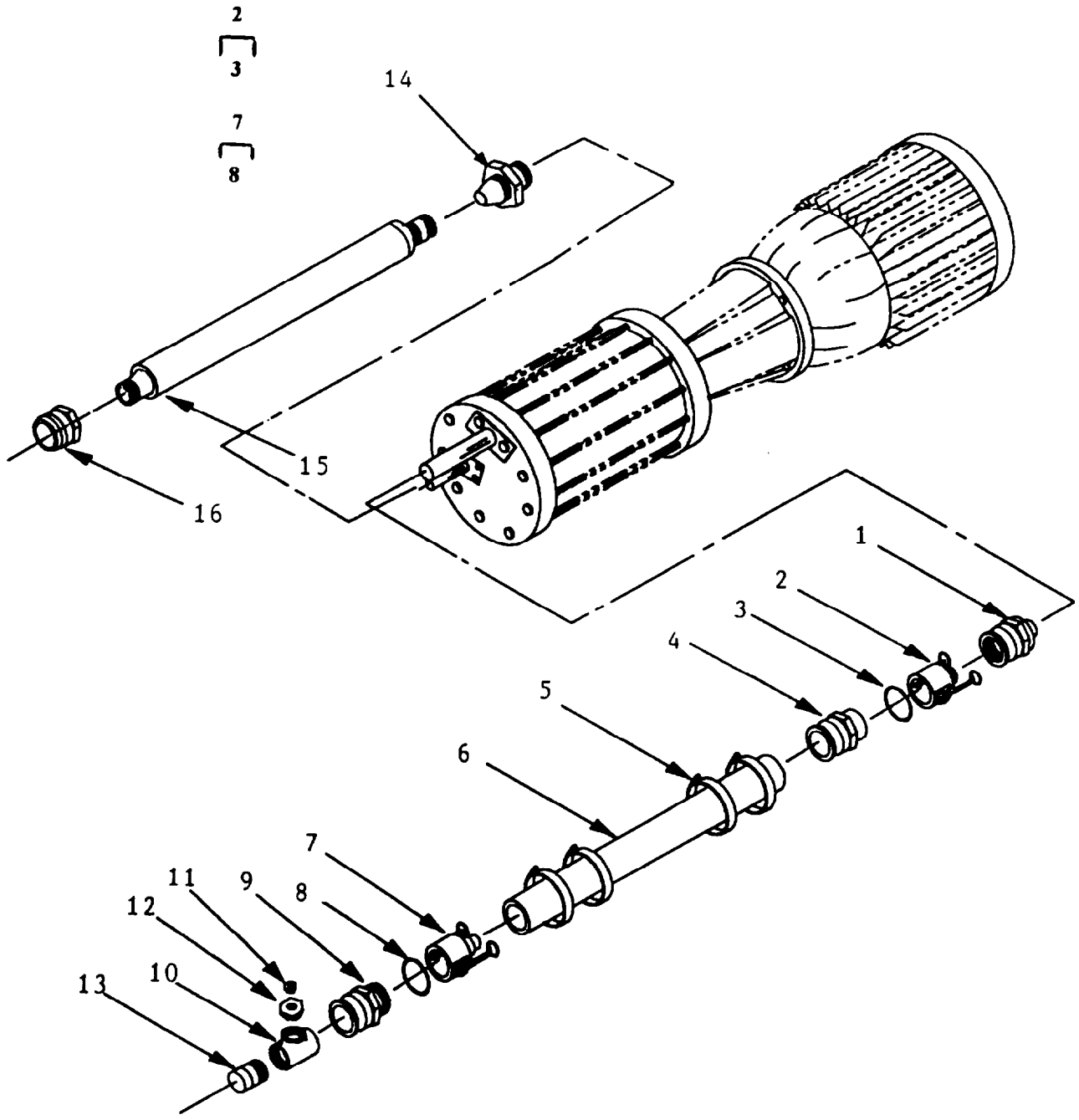

Figure 72A. High and Low Pressure Hose Assemblies
Models H-9519-1, H-9518-2, and H-9618-3 only

(1) ITEM NO	(2) SMR CODE	(3) CAGEC	(4) PART NUMBER	(5) DESCRIPTION AND USABLE ON CODES(UOC)	(6) QTY
				GROUP 12 REVERSE OSMOSIS WATER PURIFICATION UNIT 600 GPH	
				FIG. 72A HIGH PRESSURE AND LOW PRESSURE HOSES	
1	XDOZZ	96906	MS14306-8W	..REDUCER, CAST BRZ FTG 2 TO 1 NPT CLASS 125 UOC:FMQ,FMR,FMS	1
2	PAOZZ	96906	MS27026-12	..COUPLING,HALF,QUICK,CAM-LOCK,MALE,HOSE SHANK TYPE 11,CL 2,2 IN UOC:FMQ,FMR,FMS	1
3	PAOZZ	96906	MS27030-6	...GASKET UOC:FMQ,FMR,FMS	1
4	PAOZZ	96906	MS27021-12	..COUPLING HALF,QD,CAM-LOCK,MALE,HOSE SHANK TYPE 11,CL 2,2 IN UOC:FMQ,FMR,FMS	1
5	PAOZZ	01276	FF9311-36	..CLAMP,HOSE,SIZE 1.75 NOM UOC:FMQ,FMR,FMS	4
6	MOOZZ	97403	13229E000l-14	..HOSE,MAKE FROM BULK P/N ZZ-H-561(2.0 IN ID) UOC:FMQ,FMR,FMS	V
7	PAOZZ	96906	MS27025-12	..COUPLING HALF, QUICK 2 IN. HOSE, FEMALE, CAM-LOCK UOC:FMQ,FMR,FMS	1
8	PAOZZ	96906	MS27030-6	...GASKET UOC:FMQ,FMR,FMS	1
9	PAOZZ	96906	MS27022-12	..COUPLING HALF,QUICK 2 IN. PIPE THD,MALE, CAM-LOCK UOC:FMQ,FMR,FMS	1
10	PBOZZ	96906	MS14305-9U	..TEE,PIPE,2 IN. X 2 IN. X 2 IN. NPT UOC:FMQ,FMR,FMS	1
11	PAOZZ	96906	MS14315-5X	..BUSHING,PIPE,BRS, l/2 X l/4 NPT UOC:FMQ,FMR,FMS	1
12	PAOZZ	96906	MS14315-26X	..BUSHING,PIPE,BRS, 2 X 1/2 NPT UOC:FMQ,FMR,FMS	1
13	PAOZZ	96906	MS51846-158	..NIPPLE, PIPE, 2 IN X 4 IN L BRS UOC:FMQ,FMR,FMS	1
14	XDOZZ	81343	16-070102	.CONNECTOR,MALE, 1 IN. NPT,SAE J514 UOC:FMQ,FMR,FMS	1
15	PAOZZ	97403	13229E0126	..ASSEMBLY, HIGH PRESSURE HOSE UOC:FMQ,FMR,FMS	1
16	PAOZZ	81343	20-16140140	..BUSHING,PIPE,SAE-J514,BRASS HYDR TUBE FITTING l-1/4 X 1 NPT UOC:FMQ,FMR,FMS	1

END OF FIGURE

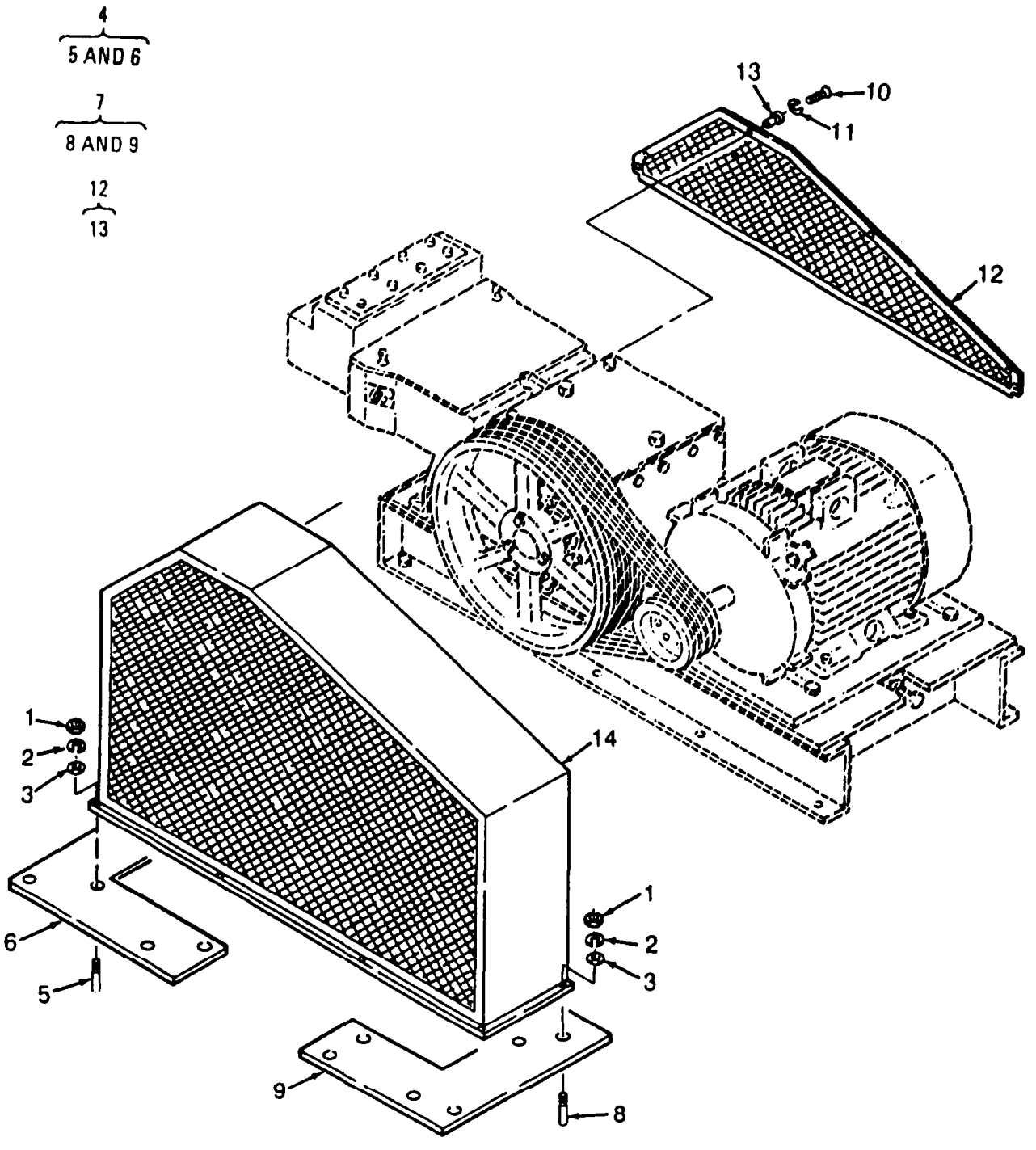

Figure 73. R.O. Pump Belt Gaurd Assembly
(WPES-10, WPES-20, AND WPES-30 ONLY)

(1) ITEM NO	(2) SMR CODE	(3) CAGEC	(4) PART NUMBER	(5) DESCRIPTION AND USABLE ON CODES(UOC)	(6) QTY
				GROUP 12 REVERSE OSMOSIS WATER PURIFICATION UNIT 600 GPH	
				FIG. 73 R.O. PUMP BELT GUARD ASSEMBLY	
1	PA0ZZ	96906	MS51971-1	..NUT,PLAIN,HEXAGON UOC:FAV,FAW,FAX	6
2	PAOZZ	96906	MS35338-139	..WASHER,LOCK UOC:FAV,FAW,FAX	6
3	PA0ZZ	96906	MS15795-809	..WASHER,FLAT UOC:FAV,FAW,FAX	6
4	XDOOO	97403	13229E6047	..PLATE,ADAPTER SHRD UOC:FAV,FAW,FAX	1
5	PA0ZZ	81349	M63540/1-48C	...STUD,SELF-LOCKING UOC:FAV,FAW,FAX	3
6	XAOZZ	97403	13279E6047-1	. ..PLATE ASTM B209 .250 STOCK UOC:FAV,FAW,FAX	1
7	XDOOO	97403	1322936046	..PLATE,ADAPTER SHROD UOC:FAV,FAW,FAX	1
8	PAOZZ	81349	M63540/1-48C	...STUD,SELF-LOCKING UOC:FAV,FAW,FAX	3
9	XAOZZ	97403	13229E6046-1	...PLATE ASTM B209 .250 STK UOC:FAV,FAW,FAX	1
10	PAOZZ	96906	MS51958-64	..SCREW MACHINE UOC:FAV,FAW,FAX	4
11	PAOZZ	96906	MS35338-138	..WASHER,LOCK UOC:FAV,FAW,FAX	4
12	XDOOO	97403	13221E8291	..GUARD,BELT.. UOC:FAV,FAW,FAX	1
13	PAOZZ	96906	MS27130-A99	...NUT,PLAIN,BLIND.RIV UOC:FAV,FAW,FAX	4
14	XDOZZ	97403	13222E5285	..SHROUD,BELT UOC:FAV,FAW,FAX	1

END OF FIGURE

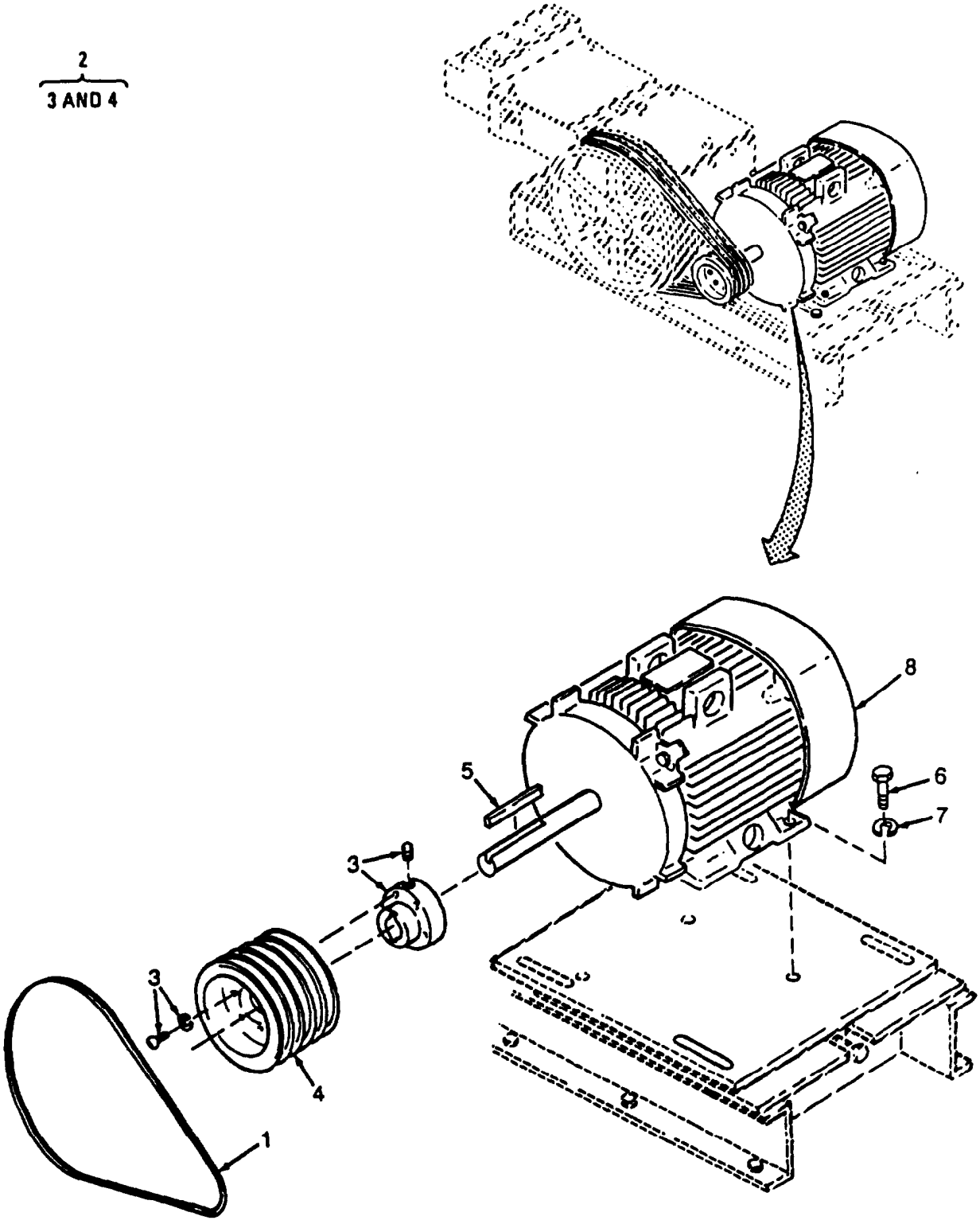

Figure 74. R.O. Motor and Belts (Sheet 1 of 2)
(WPES-10, WPES-20 AND WPES-30 ONLY)

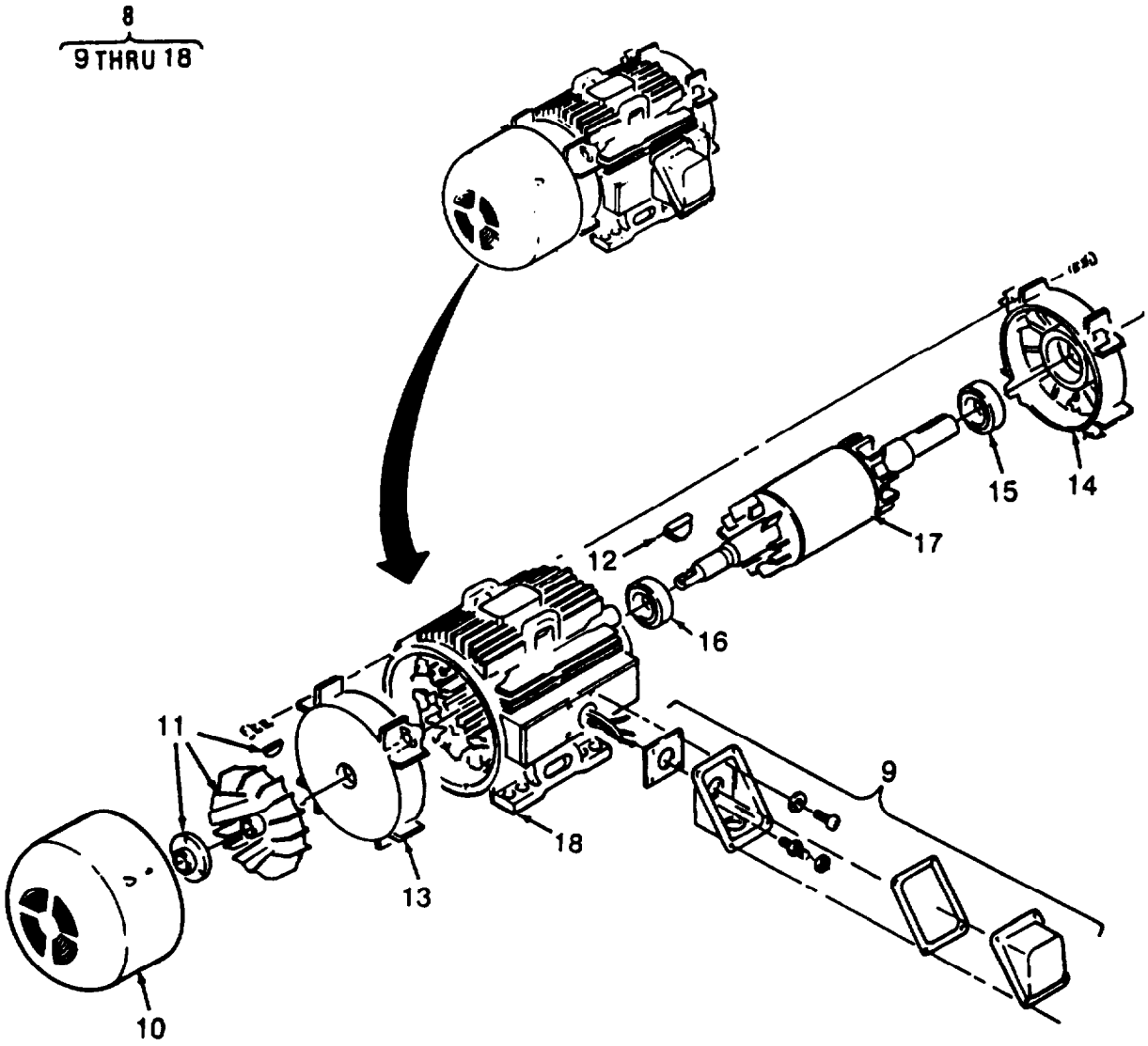

Figure 74. R.O. Motor and Belts (Sheet 2 of 2)
(WPES-10, WPES-20 AND WFES-30 ONLY)

(1) ITEM NO	(2) SMR CODE	(3) CAGEC	(4) PART NUMBER	(5) DESCRIPTION AND USABLE ON CODES (UOC)	(6) QTY
				GROUP 12 REVERSE OSMOSIS WATER PURIFICATION UNIT 600 GPH	
				FIG. 74 R.O. PUMP MOTOR AND BELTS	
1	PAOZA	96906	MS39256-5B85	..BELTS, V,MATCHED SET REPLACE BELTS AS A SET UOC:FAV,FAW,FAX	1
2	XDOOO	97403	13221E8286	..SHEAVE,ASSY 6.8 PITCH UOC:FAV,FAW,FAX	1
3	XAOZZ	97403	13221E8286-1	. ..HUB WITH ATTACHING HARDWARE UOC:FAV,FAW,FAX	1
4	XAOZZ	97403	13221E8286-2	. ..SHEAVE 6.8 PITCH UOC:FAV,FAW,FAX	1
5	PAOZZ	96906	MS20066-512	..KEY,MACHINE UOC:FAV,FAW,FAX	1
6	PAFZZ	96906	MS35307-389	..SCREW,CAP,HEXAGON H UOC:FAV,FAW,FAX	4
7	PAFZZ	96906	MS35338-142	..WASHER LOCK UOC:FAV,FAW,FAX	4
8	PBFFF	50706	5K28QPA6003A	..MOTOR,ELECTRIC UOC:FAV,FAW,FAX	1
9	XDFZZ	50706	153B1026G19	. ..BOX.CONDUIT UOC:FAV,FAW,FAX	1
10	XDFZZ	50706	159C6200-1	...COVER,FAN PARTS UOC:FAV,FAW,FAX	1
11	XDFZZ	50706	159C6900GOl	. ..FAN ASSEMBLY UOC :FAV,FAW,FAX	1
12	XDFZZ	50706	N3400P606	. ..KEY,WOODRUFF UOC:FAV,FAW,FAX	1
13	XDFZZ	50706	28ES06203GAABOO	. ..SHIELD UOC :FAV,FAW,FAX	1
14	XDFZZ	50706	28ESD6202GAABOO	. ..SHIELD,DRIVE END UOC:FAV,FAW,FAX	1
15	PBFZZ	50706	5OBCO3JP3	. ..BEARING,DRIVE END UOC:FAV,FAW,FAX	1
16	PBFZZ	50706	35BC02XP3	. ..BEARING,OPPOSITED UOC:FAV,FAW,FAX	1
17	XAFZZ	50706	28RA301290AAADCA02	. ..ROTOR ASSEMBLY UOC:FAV,FAW,FAX	1
18	XAFZZ	50706	28SA30129007G00l	. ..STATOR ASSEMBLY UOC:FAV,FAW,FAX	1

END OF FIGURE

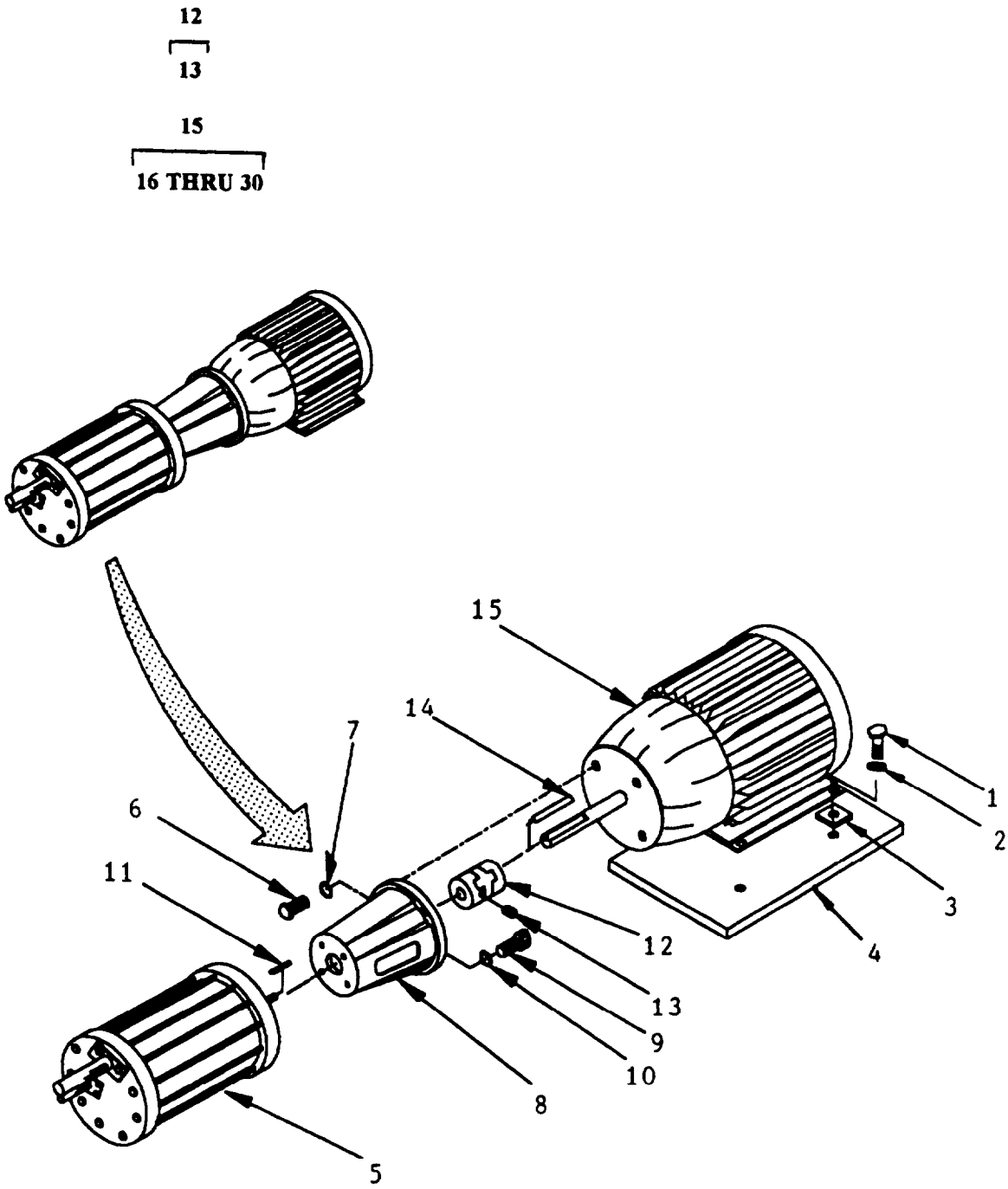

Figure 74A. High Pressure Pump and Motor Assembly (Sheet 1 of 2)
Models H-9618-1, H-9518-2, and H-9618-3 only

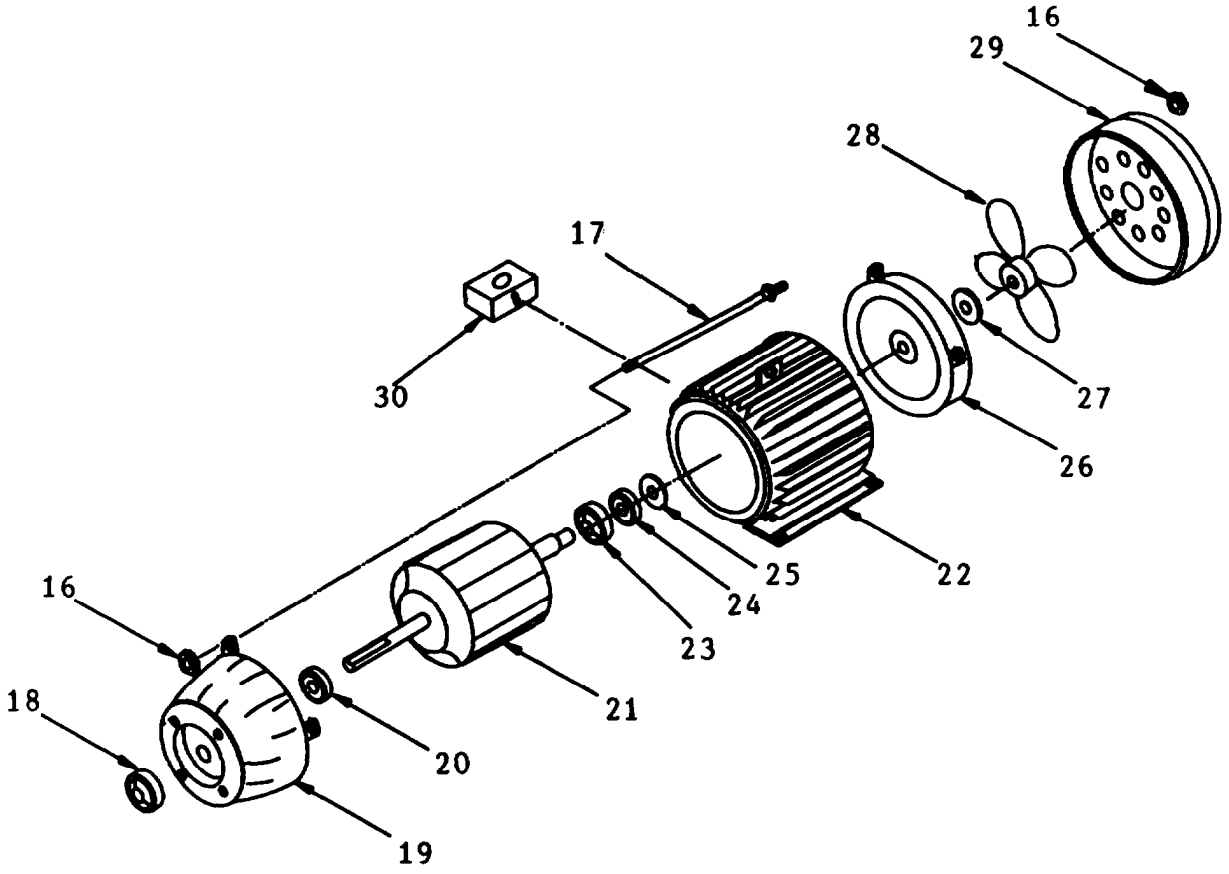

Figure 74A. High Pressure Pump and Motor Assembly (Sheet 2 of 2)
Models H-9519-1, H-9618-2, and H-9618-3 only

(1) ITEM NO	(2) SMR CODE	(3) PART CAGEC	(4) NUMBER	(5) DESCRIPTION AND USABLE ON CODES(UOC)	QTY
				GROUP 12 REVERSE OSMOSIS WATER PURIFICATION UNIT 600 GPH	
				FIG. 74A R.O. PUMP MOTOR	
1	PAOZZ	96906	MS35307-385	..SCREW,CAP,HEXAGON H 7/16-14 X 1.000 L CRES. UOC:FMQ,FMR,FMS	4
2	PAOZZ	96906	MS35338-142	..WASHER,LOCK 7/16 NOM SIZE CRES UOC:FMQ,FMR,FMS	4
3	MOOZZ	97403	13229E0001-8	..GASKET,RUBBER MAKE FROM BULK, P/N ASTM-D2000 M1BC614, .250 THK 1.50 X 1.50 IN UOC:FMQ,FMR,FMS	4
4	XDOZZ	97403	13229E0125	..PLATE,MOUNTING UOC:FMQ,FMR,FMS	1
5	PBOZZ	71454	C320966	..PUMP ASSY,AQUA,SST,2 IN. MALE NPT INLET X 1 IN. MALE NPT OUTLET UOC:FMQ,FMR,FMS	
6	PAOZZ	96906	MS35307-413	..SCREW,CAP,HEXAGON H, l/2-13 X 1.5L UOC:FMQ,FMR,FMS	4
7	PAOZZ	96906	MS15795-817	..WASHER,FLAT UOC:FMQ,FMR,FMS	4
8	XDOZZ	97403	13229E0028	..ADAPTER MOTOR TO PU UOC:FMQ,FMR,FMS	1
9	PAOZZ	96906	MS16995-81	..SCREW,CAP,SOCKET HE UOC:FMQ,FMR,FMS	4
10	PAOZZ	96906	MS35338-141	..WASHER,LOCK UOC:FMQ,FMR,FMS	4
11	PAOZZ	96906	MS20066-208	..KEY,MACHINE,1/4 IN UOC:FMQ,FMR,FMS	1
12	PBOZZ	75665	L-150	..COUPLING UOC:FMQ,FMR,FMS	1
13	PAOZZ	96906	MS51021-81	...SETSCREW UOC:FMQ,FMR,FMS	4
14	PAOZZ	96906	MS20066-355	..KEY,MACHINE, 3/8 IN UOC:FMQ,FMR,FMS	1
15	PBOFF	36232	LM01634	..MOTOR,ELECTRIC UOC:FMQ,FMR,FMS	1
16	PAFZZ	96906	MS51967-9	...NUT,PLAIN,HEXAGON UOC:FMQ,FMR,FMS	8
17	XDFZZ	36232	T9781-76	. ..THROUGH BOLT UOC:FMQ,FMR,FMS	4
18	PAFZZ	36232	S-11044-14	...SLINGER,RING UOC:FMQ,FMR,FMS	1
19	XDFZZ	36232	L-4673	...SUPPORT BRACKET UOC:FMQ,FMR,FMS	1
20	PAFZZ	36232	M-9300-21	...BEARING,BALL,ANNULA UOC:FMQ,FMR,FMS	1
21	XAFZZ	36232	L8500-E47	...ROTOR UOC:FMQ,FMR,FMS	1
22	XAFZZ	36232	LS893-4E/4370	. ..STATOR UOC:FMQ,FMR,FMS	1
23	XDFZZ	36232	M11315-4	. ..SLINGER.STEEL,BLOWER END UOC:FMQ,FMR,FMS	1
24	PAFZZ	36232	M9300-38	...BEARING,BALL,ANNULA UOC:FMQ,FMR,FMS	1
25	XDFZZ	36232	T12806-5	...SPRING WASHER,BLOWER END UOC:FMQ,FMR,FMS	2
26	XDFZZ	36232	L-6037-2	...BRACKET,END	1

(1) ITEM NO	(2) SMR CODE	(3) CAGEC	(4) PART NUMBER	(5) DESCRIPTION AND USABLE ON CODES (UOC)	(6) QTY
				UOC:FMQ,FMR,FMS	
27	PAFZZ	36232	S-11044-15	...DEFLECTOR,DIRT AND	1
				UOC:FMQ,FMR,FMS	
28	XDFZZ	36323	L-7302-1	...FAN	1
				UOC:FMQ,FMR,FMS	
29	XDFZZ	36232	L-7302-1	...SHROUD,FAN	1
				UOC:FMQ,FMR,FMS	
30	PAFZZ	36232	T-13364-3	...BOX,COUNDUIT	1
				UOC:FMQ,FMR,FMS	

END OF FIGURE

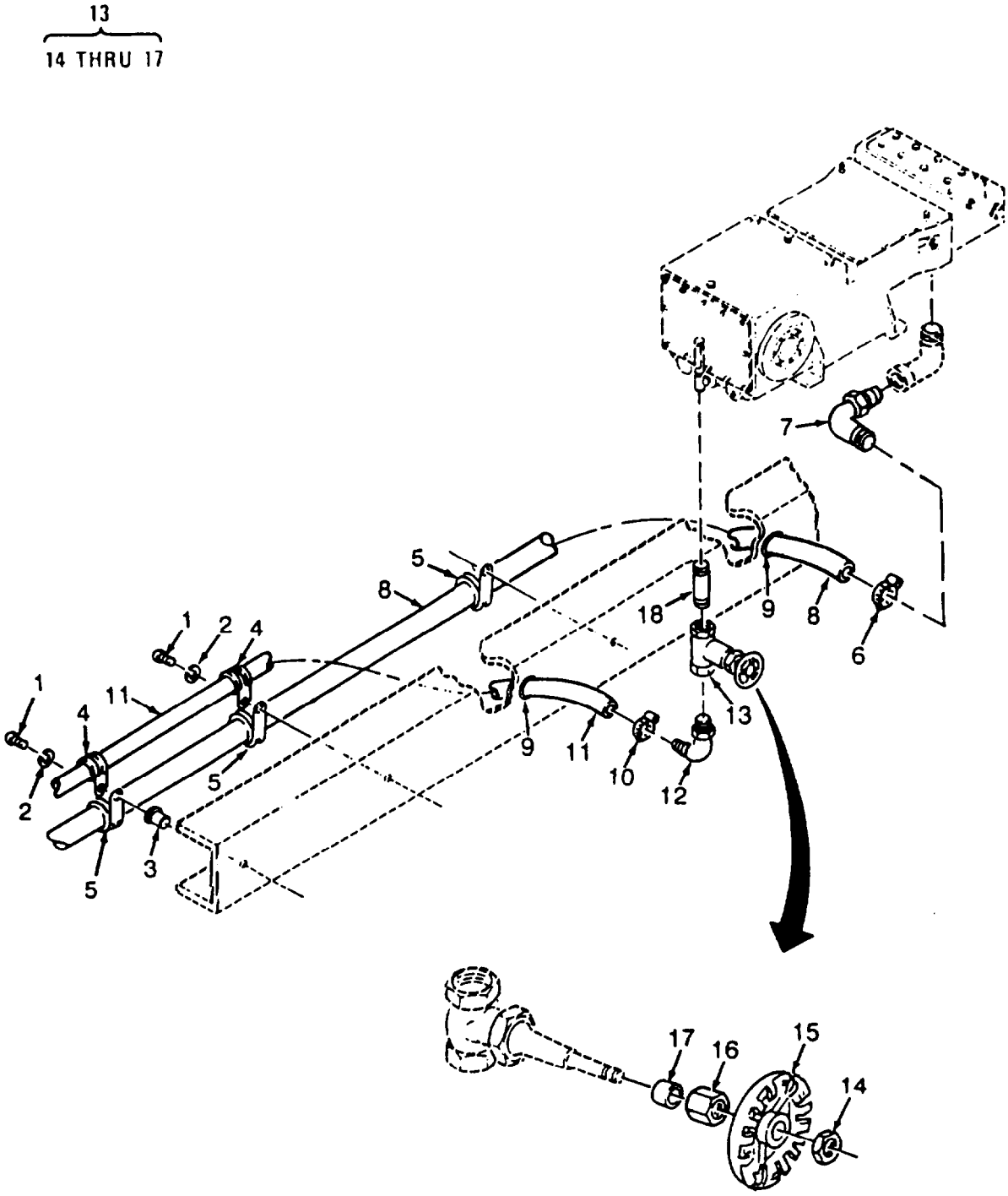

Figure 75. High Pressure Pump Drain System
(WPES-10, WPES-20 AND WPES-30 ONLY)

(1) ITEM NO	(2) SMR CODE	(3) CAGEC	(4) PART NUMBER	(5) DESCRIPTION AND USABLE ON CODES(UOC)	(6) QTY
				GROUP 12 REVERSE OSMOSIS WATER PURIFICATION UNIT 600 GPH	
				FIG. 75 HIGH PRESSURE PUMP DRAIN SYSTEM	
1	PAOZZ	96906	MS51958-67	..SCREW,MACHINE UOC:FAV,FAW,FAX	3
2	PAOZZ	96906	MS35338-138	..WASHER,LOCK UOC:FAV,FAW,FAX	3
3	PAOZZ	96906	MS27130-A28	..NUT,PLAIN,BLIND UOC:FAV,FAW,FAX	3
4	PAOZZ	96906	MS21333-75	..CLAMP,LOOP UOC:FAV,FAW,FAX	2
5	PAOZZ	96906	MS21333-81	..CLAMP,LOOP UOC :FAV,FAW,FAX	3
6	PAOZZ	96906	MS35842-12	..CLAMP,HOSE UOC:FAV,FAW,FAX	1
7	PAOZZ	97403	13225E8715-1	..ELBOW,PIPE TO HOSE l/2 IN. NPT X 1 IN. HOSE UOC:FAV,FAW,FAX	1
8	MOOZZ	97403	13229E5635-18	..HOSE,HYDRAULIC MAKE FROM BULK P/N 100R4-16, 1 1 IN. ID, 5-1/2 FT UOC: FAV,FAW,FAX	1
9	PAOZZ	96906	MS35489-85	..GROMMET,NONMETALLIC UOC :FAV,FAW,FAX	2
10	PAOZZ	96906	MS35842-11	..CLAMP,HOSE UOC:FAV,FAW,FAX	1
11	MOOZZ	97403	13229E5635-19	..HOSE,NONMETALLIC MAKE FROM BULK P/N MIL-H-13444 TYI .5 IDX48 IN UOC:FAV,FAW,FAX	1
12	PAOZZ	72661	TLS43	..ELBOW,PIPE TO HOSE 3/8 IN. NPT X l/2 IN. HOSE UOC: FAV,FAW,FAX	1
13	PA000	76364	GATE 105-3/8IN.	..VALVE,GATE UOC:FAV,FAW,FAX	1
14	XAOZZ	76364	GATE 105-8-3/8IN	. ..NUT.WHEEL UOC :FAV,FAW,FAX	1
15	XAOZZ	76364	GATE 105-9-3/8IN	. ..HANDWHEEL UOC:FAV,FAW,FAX	1
16	XAOZZ	76364	GATE 105-5-3/8IN	. ..NUT.STUFF UOC:FAV,FAW,FAX	1
17	PAOZZ	76364	GATE 105-10-3/81 N.	. ..PACKING UOC :FAV,FAW,FAX	1
18	PAOZZ	96906	MS51846-42	..NIPPLE, PIPE UOC :FAV,FAW,FAX	1

END OF FIGURE

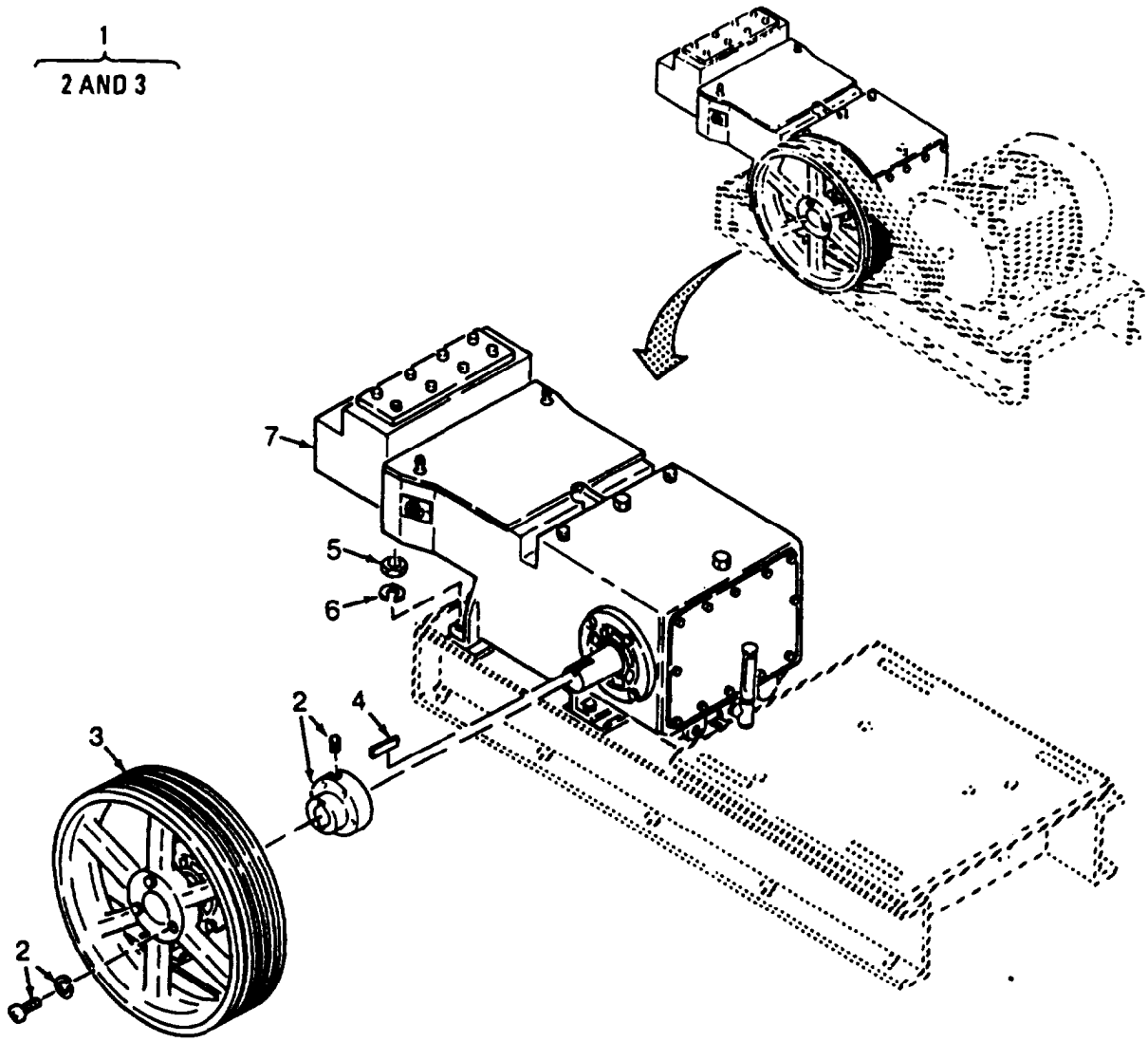

Figure 76. High Pressure Pump and Sheave Assembly
(WPES-10, WPES-20 AND WPES-30 ONLY)

(1) ITEM NO	(2) SMR CODE	(3) CAGEC	(4) PART NUMBER	(5) DESCRIPTION AND USABLE ON CODES(UOC)	(6) QTY
				GROUP 12 REVERSE OSMOSIS WATER PURIFICATION UNIT 600 GPH	
				FIG. 76 HIGH PRESSURE PUMP AND SHEAVE ASSEMBLY	
1	XDOOO	97403	13229E5632	..SHEAVE,ASSY 20.0 PITCH UOC:FAV,FAW,FAX	1
2	XAOZZ	97403	13229E5632-l	...HUB WITH ATTACHING HARDWARE UOC:FAV,FAW,FAX	1
3	XAOZZ	97403	13229E5632-2	...SHEAVE 20.0 PITCH UOC:FAV,FAW,FAX	1
4	PAOZZ	96906	MS20066-510	..KEY,MACHINE-SQUARE UOC:FAV,FAW,FAX	1
5	PAFZZ	96906	MS51971-5	..NUT,PLAIN,HEXAGON UOC:FAV,FAW,FAX	4
6	PAFZZ	96906	MS35338-143	..WASHER,LOCK UOC:FAV,FAW,FAX	4
7	PBFHH	61748	Cl173500	..PUMP (SEE FIGURE 77 FOR DETAIL BREAKDOWN) UOC:FAV,FAW,FAX	1

END OF FIGURE

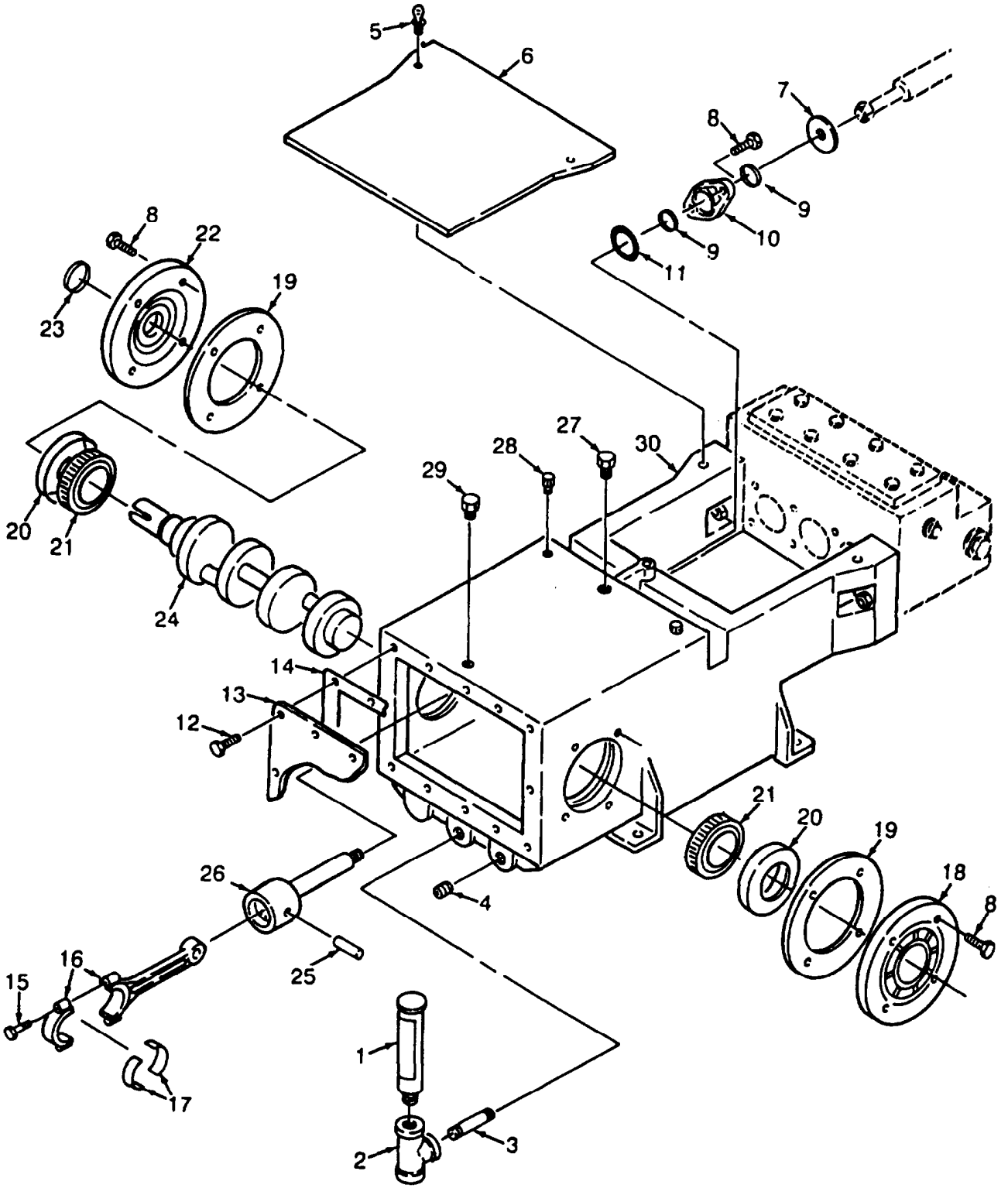

Figure 77. High Pressure Pump Power Section
(WPES-10, WPES-20 AND WPES-30 ONLY)

(1) ITEM NO	(2) SMR CODE	(3) CAGEC	(4) PART NUMBER	(5) DESCRIPTION AND USABLE ON CODES(UOC)	(6) QTY
				GROUP 12 REVERSE OSMOSIS WATER PURIFICATION UNIT 600 GPH	
				FIG. 77 HIGH PRESSURE PUMP POWER SECTION	
1	PBOZZ	61748	9513ECABOBB	...INDICATOR,SIGHT,LIQ UOC:FAV,FAW,FAX	1
2	XDOZZ	61748	9205BAA4ED8	...TEE,REDUCING l/2 X 3/8 NPT UOC:FAV,FAW,FAX	1
3	XDOZZ	61748	920104AOOD5	...NIPPLE,PIPE l/2 NPT CLOSE UOC:FAV,FAW,FAX	1
4	PBOZZ	61748	9200W000245	...PLUG,PIPE MAGNETIC UOC:FAV,FAW,FAX	1
5	PAOZZ	61748	9135A0404Al	...THUMBSCREW l/4-20 X l/2 UOC:FAV,FAW,FAX	2
6	XDOZZ	61748	152B1016000B29100	...COVER, PLUNGER UOC:FAV,FAW,FAX	1
7	XDFZZ	61748	123A0789000T41500	...DEFLECTOR,CROSSHEAD UOC:FAV,FAW,FAX	3
8	XDFZZ	61748	9101A610Al	...SCREW,CAP 3/8-16 UNC X 1 IN UOC:FAV,FAW,FAX	14
9	KFFZZ	61748	94111000103	...SEAL,CROSSHEAD STUB PART OF KIT P/N 111327 UOC:FAV,FAW,FAX	6
10	XDFZZ	61748	141C1015700K15700	...SEAL CAP,CROSS HEAD UOC:FAV,FAW,FAX	3
11	PAFZZ	61748	623A0619501U51100	...GASKET CROSSHEAD STUB SEAL CAP UOC:FAV,FAW,FAX	6
12	XDHZZ	61748	9101A0605Al	...SCREW, CAP, HEX HEAD 3/8-16 X 5/8 IN. LG.. UOC:FAV,FAW,FAX	10
13	XDHZZ	61748	154B0823600B29100	...COVER, CRANKCASE UOC:FAV,FAW,FAX	1
14	PBHZZ	61748	624B0823400U61000	...GASKET UOC:FAV,FAW,FAX	1
15	XDHZZ	61748	9102F0514L4	...BOLT,CONNECTING ROD UOC:FAV,FAW,FAX	6
16	XDHZZ	61748	112C10355200A22200	...CONNECTING ROD UOC:FAV,FAW,FAX	3
17	PBHZZ	61748	116B1107300R15300	...BEARING HALF, SLEEVE UOC:FAV,FAW,FAX	6
18	XDHZZ	61748	132D0702100K15700	...END CAP, CSHAFT OUTB UOC :FAV,FAW,FAX	1
19	XDHZZ	61748	96111000112	...SHIM CSHAFT END CAP (0.005) INBOARD/OUTBOARD UOC:FAV,FAW,FAX	V
19	XDHZZ	61748	96111000145	...SHIM CSHAFT END CAP (0.007) INBOARD/OUTBOARD UOC :FAV,FAW,FAX	V
19	XDHZZ	61748	96111000178	. ..SHIM CSHAFT END CAP (0.030) INBOARD/OUTBOARD..	V
20	PBHZZ	61748	9610CECAOOl	...CUP, TAPERED ROLLER REPLACE CUP AND CONE AS A SET UOC:FAV,FAW,FAX	2
21	PBHZZ	61748	9610BECA041	...BEARING, ROLLER, TAPE REPLACE CONE AND CUP AS A SET UOC:FAV,FAW,FAX	2
22	XDHZZ	61748	132D07021B0K15700	...END CAP, CSHAFT INB UOC:FAV,FAW,FAX	1

(1) ITEM NO	(2) SMR CODE	(3) CAGEC	(4) PART NUMBER	(5) DESCRIPTION AND USABLE ON CODES(UOC)	(6) QTY
23	PBHZZ	61748	94111000127	...SEAL,PLAIN ENCASED CRANKSHAFT UOC:FAV,FAW,FAX	1
24	XDHZZ	61748	103D0754500C26003	...CRANKSHAFT UOC:FAV,FAW,FAX	1
25	XDHZZ	61748	119A0863400C221701	...PIN,CROSSHEAD UOC:FAV,FAW,FAX	3
26	XDHZZ	61748	110032	...CROSSHEAD ASSY.. UOC:FAV,FAW,FAX	3
27	PAOZZ	61748	9514BlD0000	...BREATHER UOC:FAV,FAW,FAX	1
28	PAOZZ	61748	9214DA03JD5	...PLUG 3/8 NPT UOC:FAV,FAW,FAX	1
29	PAOZZ	61748	9214DA06JD5	...PLUG, PIPE 3/4 NPT UOC:FAV,FAW,FAX	1
30	XAHZZ	61748	100E0629815A11100	...POWER FRAME UOC:FAV,FAW,FAX	1
	PAFZZ	61748	111327	. ..PARTS KIT,SEAL REPL SEAL,CROSSHEAD STUB(6) 77-9 UOC:FAV,FAW,FAX	

END OF FIGURE

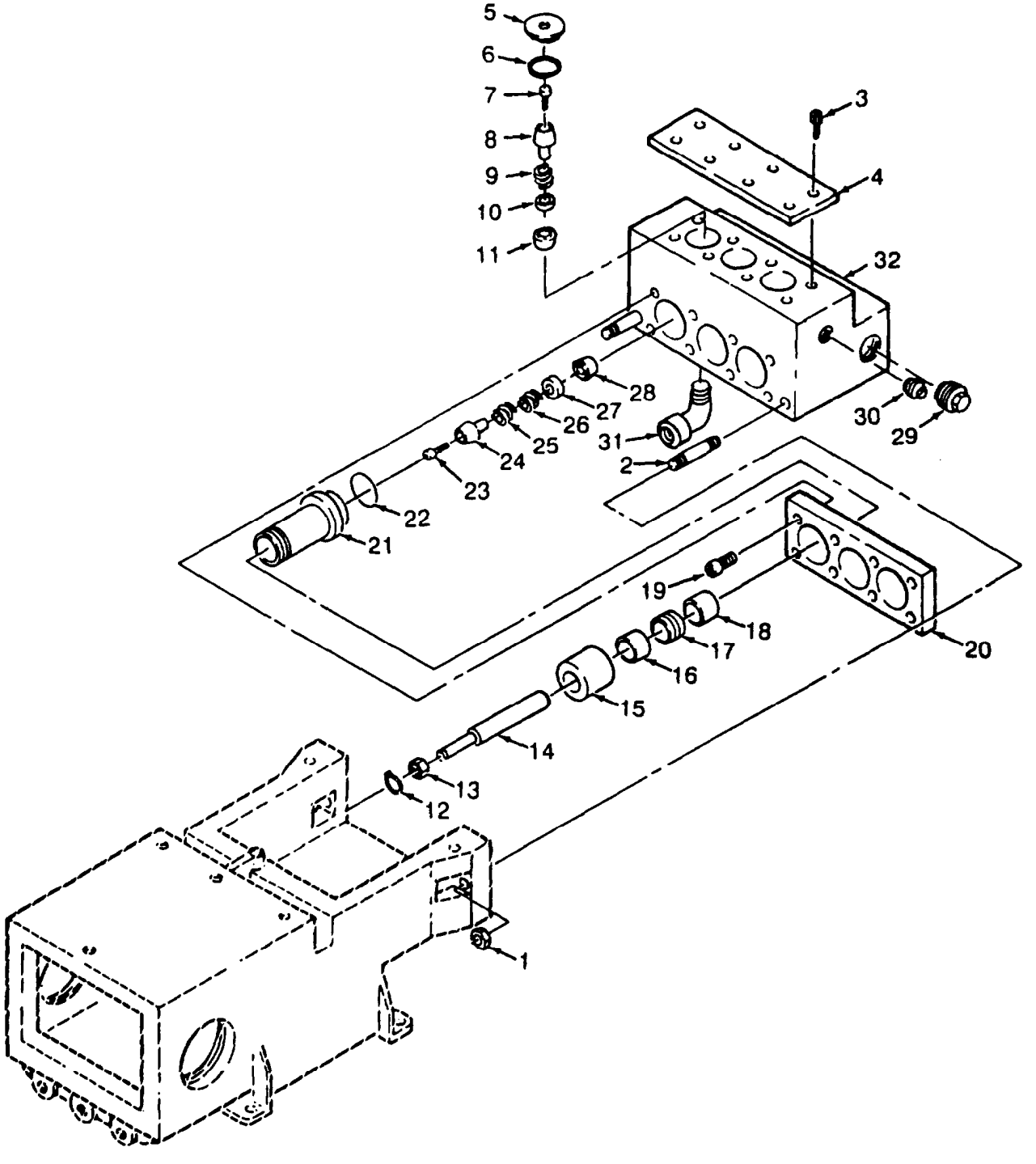

Figure 78. High Pressure Pump Fluid Section
(WPES-10, WPES-20 AND WPES-30 ONLY)

(1) ITEM NO	(2) SMR CODE	(3) CAGEC	(4) PART NUMBER	(5) DESCRIPTION AND USABLE ON CODES(UOC)	(6) QTY
				GROUP 12 REVERSE OSMOSIS WATER PURIFICATION UNIT 600 GPH	
				FIG. 78 HIGH PRESSURE PUMP FLUID SECTION	
1	XDFZZ	61748	9108El0lAW9	...NUT,REG HEX 5/8-18 UNF..... UOC:FAV,FAW,FAX	2
2	XDFZZ	61748	824A0156914C42404	...STUD,TIE..... UOC:FAV,FAW,FAX	2
3	PBFZZ	61748	9102F1016P4	. ..SCREW. CAP,HEXAGON H 5/8-18 UNF X 1 3/4... UOC:FAV,FAW,FAX	8
4	XDFZZ	61748	317B0823500J13600	...COVER,VALVE DISCH..... UOC:FAV,FAW,FAX	1
5	XDFZZ	61748	370B1151001J12500	. ..STOP.VALVE DISCH..... UOC:FAV,FAW,FAX	3
6	KFFZZ	61748	9410A14600M	. ..PACKING.PREFORMED PART OF KIT P/N 111329.. UOC:FAV,FAW,FAX	3
7	KFFZZ	61748	9243FOOOlA4	. ..BOLT.VALVE DISCH PART OF KIT P/N 111330... UOC:FAV,FAW,FAX	3
8	KFFZZ	61748	9243ROOOOA7	. ..SPRING RETAINER PART OF KIT P/N 111330.... UOC:FAV,FAW,FAX	3
9	KFFZZ	61748	9243S0002A3	...SPRING,VALVE DISCH PART OF KIT P/N 111330. UOC:FAV,FAW,FAX	3
10	KFFZZ	61748	9243VA20OA2	. ..VALVE.DISCHARGE PART OF KIT P/N 111330.... UOC:FAV,FAW,FAX	3
11	PAFZZ	61748	9243BA231A7	...SEAT, VALVE..... UOC:FAV,FAW,FAX	3
12	PAFZZ	61748	912016175A2	...RING,RETAINING..... UOC:FAV,FAW,FAX	3
13	XDFZZ	61748	125A0788600E22100	. ..NUT. COUPLING PLUNG..... UOC:FAV,FAW,FAX	3
14	PAFZZ	61748	353B0766004R52900	...PISTON,PUMP.....,..,..... UOC:FAV,FAW,FAX	3
15	XDFZZ	61748	338B0765400J12500	...GLAND,STUFFING BOX..... UOC:FAV,FAW,FAX	3
16	XDFZZ	61748	601A1008900J12500	. ..PACKING.BUSHING FEMALE..... UOC:FAV,FAW,FAX	3
17	KFFZZ	61748	9300W000119	...PACKING,UTEX PART OF KIT P/N 9300W000170.. UOC:FAV,FAW,FAX	3
18	XDFZZ	61748	601A1008800J12500	. ..PACKING.BUSHING MALE..... UOC:FAV,FAW,FAX	3
19	PBFZZ	61748	9102F0820P4	. ..SCREW.CAP,HEXAGON H l/2-20 UNF X 2 IN..... UOC:FAV,FAW,FAX	8
20	XDFZZ	61748	366B0765700512500	. ..FLANGE.STUFFING BOX..... UOC:FAV,FAW,FAX	1
21	XDFZZ	61748	337B0765300J12500	...BOX,STUFFING..... UOC:FAV,FAW,FAX	3
22	KFFZZ	61748	9410A23100M	. ..PACKING.PREFORMED PART OF KIT P/N 111329.. UOC:FAV,FAW,FAX	3
23	KFFZZ	61748	9243F000lA4	. ..BOLT.SUCTION VALVE PART OF KIT P/N 111328. PART OF KIT P/N 111330..... UOC:FAV,FAW,FAX	3
24	KFFZZ	61748	9243R000lA7	. ..CAGE. SUCTION VALVE PART OF KIT P/N 111328..... UOC:FAV,FAW,FAX	3
25	KFFZZ	61748	9243S000lA3	. ..SPRING. SUCTION VAL PART OF KIT P/N 111328.....,.....,...	3

(1) ITEM NO	(2) SMR CODE	(3) CAGEC	(4) PART NUMBER	(5) DESCRIPTION AND USABLE ON CODES(UOC)	QTY
				UOC:FAV,FAW,FAX	
26	KFFZZ	61748	924380002A3	. ..SPRING. SUCTION VAL PART OF KIT P/N 111328 PART OF KIT P/N 111330	3
				UOC:FAV,FAW,FAX	
27	KFFZZ	61748	9243VA300A2	.VALVE, SUCTION PART OF KIT P/N 111328	3
				UOC:FAV,FAW,FAX	
28	PAFZZ	61748	9243BA328A7	. ..SEAT.VALVE	3
				UOC:FAV,FAW,FAX	
29	PBOZZ	61748	649A0559900J13700	. ..PLUG.PROTECTIVE, DUS	1
				UOC:FAV,FAW,FAX	
30	PBOZZ	61748	649A0559800J13700	. ..PLUG.PROTECTIVE, DUS	1
				UOC:FAV,FAW,FAX	
31	PAOZZ	61748	653-2	...ELBOW	1
				UOC:FAV,FAW,FAX	
32	XAFZZ	61748	300E0223100J13700	...CASTING,FLUID END	1
				UOC:FAV,FAW,FAX	
	PAFZZ	61748	111328	...PARTS KIT,VALVE	1
				BOLT,SUCTION VALVE (3) 78-23	
				CAGE, SUCTION VALVE (3) 78-24	
				SPRING,SUCTION VAL (3) 78-25	
				SPRING,SUCTION VAL (3) 78-26	
				VALVE,SUCTION (3) 78-27	
				UOC:FAV,FAW,FAX	
	PAFZZ	61748	111329	. ..PACKING ASSORTMENT	1
				PACKING,PREFORMED (3) 78-6	
				PACKING,PREFORMED (3) 78-22	
				UOC:FAV,FAW,FAX	
	PAFZZ	61748	111330	. ..STAGE PIECE,STEAM P	1
				BOLT,SUCTION VALVE (3) 78-23	
				BOLT,VALVE DISCH (3) 78-7	
				SPRING RETAINER (3) 78-8	
				SPRING,SUCTION VAL (3) 78-26	
				SPRING,VALVE DISCH (3) 78-9	
				VALVE,DISCHARGE (3) 78-10	
				UOC:FAV,FAW,FAX	
	PAFZZ	61748	9300W000170	. ..PARTS KIT,SEAL REPL	1
				PACKING,UTEX (3) 78-17	
				UOC:FAV,FAW,FAX	

END OF FIGURE

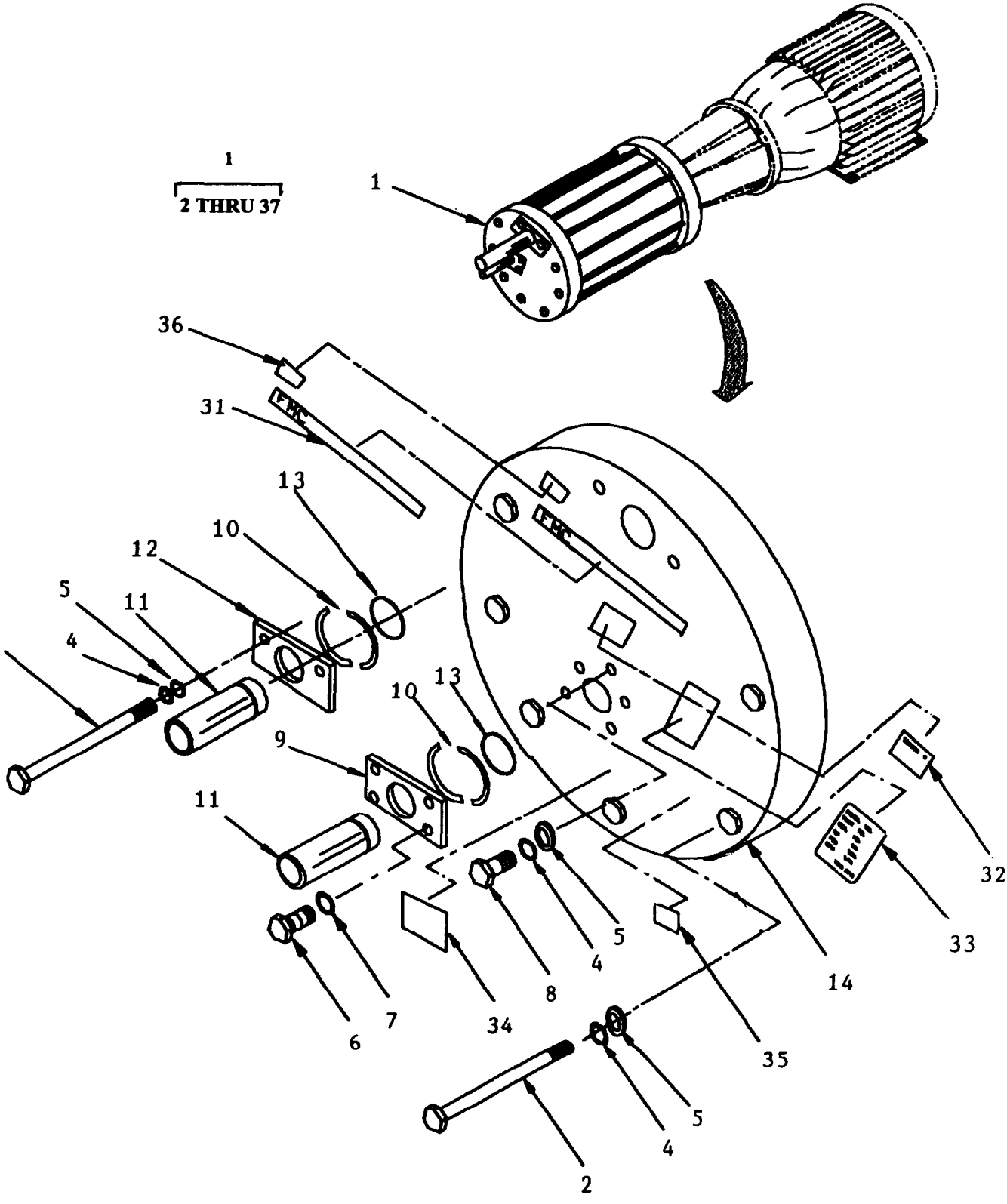

Figure 78A. High Pressure Pump (Sheet 1 of 2)
Models H-9618-1, H-9618-2, and H-9518-3 only

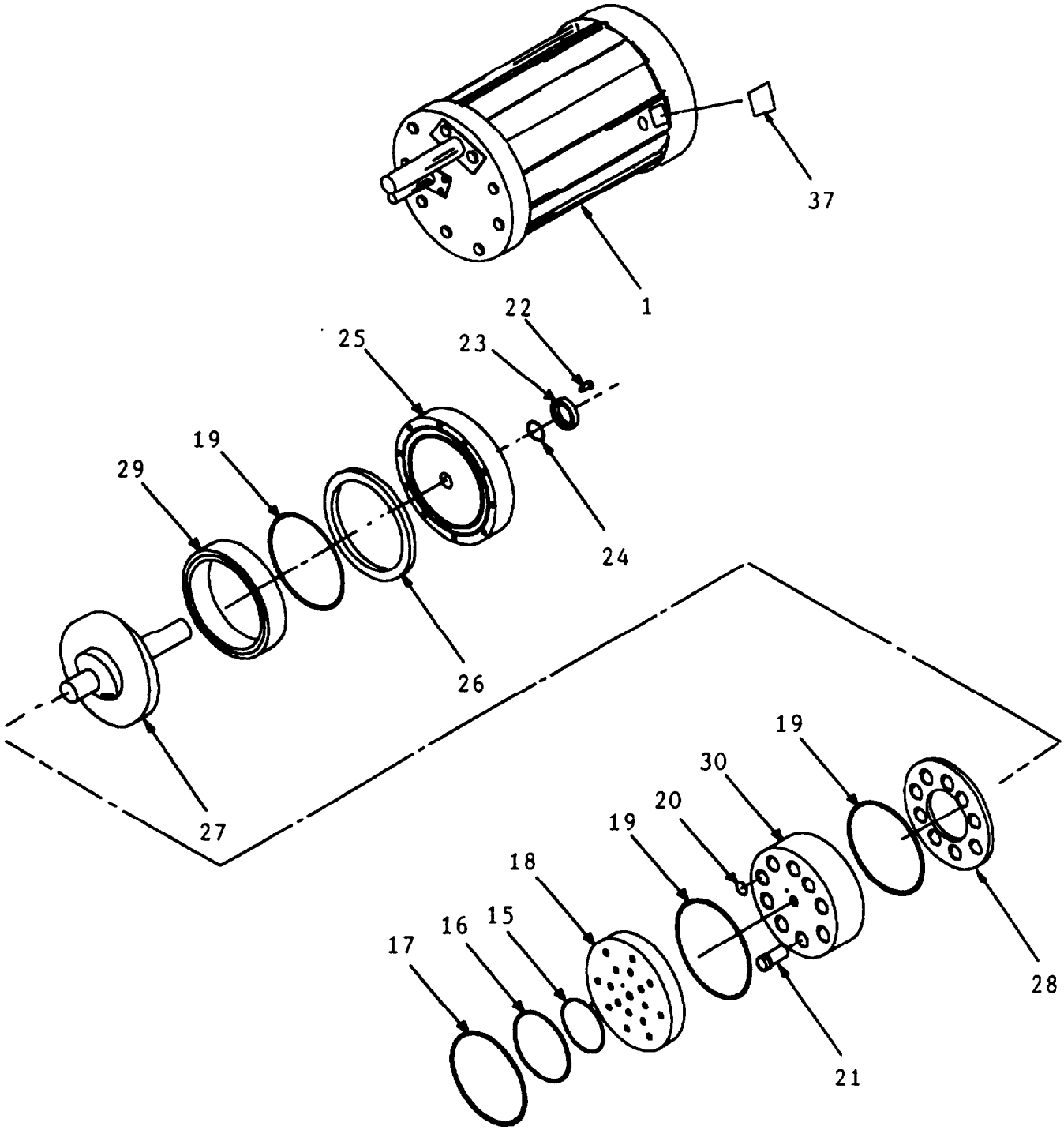

Figure 78A High Pressure Pump (Sheet 2 of 2)
Models H-9618-1, H-9518-2, and H-9518-3 only

(1) ITEM NO	(2) SMR CODE	(3) PART CAGEC	(4) NUMBER	(5) DESCRIPTION AND USABLE ON CODES(UOC)	QTY
				GROUP 12 REVERSE OSMOSIS WATER PURIFICATION UNIT 600 GPH	
				FIG. 78A HIGH PRESSURE PUMP	
1	PAFZZ	71454	C320966	..PUMP ASSY,AQUA,SST,2 IN. SHAFT, 1 IN. MALE NPT INLET X 1 IN. MALE NPT OUTLET UOC:FMQ,FMR,FMS	1
2	KFFZZ	71454	3266349	.SCREW,HEX CAP,3/8-16 UNC X 9 IN. LG SST PART OF KIT P/N 3269200 UOC:FMQ,FMR,FMS	7
3	KFFZZ	71454	3266350	...SCREW,HEX CAP,3/8-16 UNC X 10 IN. LG, SST PART OF KIT P/N 3269200 UOC:FMQ,FMR,FMS	2
4	KFFZZ	71454	3266258	...WASHER,LOCK,3/8 IN. NOM,SST PART OF KIT P/N 3269200 UOC:FMQ,FMR,FMS	10
5	KFFZZ	71454	3266257	...WASHER,FLAT 3/8 IN. NOM,SST PART OF KIT P/N 3269200 UOC:FMQ,FMR,FMS	10
6	KFFZZ	71454	3266354	...SCREW,HEX CAP,5/16-18 X 1 IN. LG SST PART OF KIT P/N 3269211 UOC:FMQ,FMR,FMS	4
7	KFFZZ	71454	3266359	.WASHER,LOCK 5/16 IN. NOM SST PART KIT P/N 3269211 UOC:FMQ,FMR,FMS	4
8	KFFZZ	71454	3269861	...SCREW,HEX CAP, 3/8-16 X 2-3/4 LG,SST PART OF KIT P/N 3269200 UOC:FMQ,FMR,FMS	1
9	KFFZZ	71454	3266393	.RETAINER,OUTLET NIPPLE SST PART OF KIT P/N 3269211 UOC:FMQ,FMR,FMS	1
10	KFFZZ	71454	3266395	.RING,SPLIT,NIPPLE SST PART OF KIT P/N 3269211 UOC:FMQ,FMR,FMS	2
11	KFFZZ	71454	3266386	.NIPPLE,SST,l IN. NPT PART OF KIT P/N 3269211 UOC:FMQ,FMR,FMS	2
12	KFFZZ	71454	3266399	.RETAINER,INLET NIPPLE SST PART OF KIT P/N 3269211 UOC:FMQ,FMR,FMS	1
13	KFFZZ	71454	3266341	. ..O-RING l-1/4 IN. OD X 3/32 IN. NOM, 90 BUNA-N PART OF KIT P/N 3269200 UOC:FMQ,FMR,FMS	2
14	XDFZZ	71454	3269198	...MANIFOLD ASSY.. UOC:FMQ,FMR,FMS	1
15	KFFZZ	71454	3266345	...O-RING 3-7/16 IN. OD X 3/32 IN. NOM, 90 BUNA-N PART OF KIT P/N 3269200 UOC:FMQ,FMR,FMS	1
16	KFFZZ	71454	3266346	...O-RING,5-3/16 IN. OD X 3/32 IN. NOM, 90 BUNA-N PART OF KIT P/N 3269200 UOC:FMQ,FMR,FMS	1
17	KFFZZ	71454	3266347	. ..O-RING.7-3/16 IN. OD X 3/32 IN. NOM, 90 BUNA-N PART OF KIT P/N 3269200 UOC:FMQ,FMR,FMS	1
18	PAFZZ	71454	3269201	...VALVE HOUSING ASSY UOC:FMQ,FMR,FMS	1
19	KFFZZ	71454	3266348	...O-RING,7-7/16 IN. OD X 3/32 IN. NOM, 90	3

(1) ITEM NO	(2) SMR CODE	(3) PART CAGEC	(4) NUMBER	(5) DESCRIPTION AND USABLE ON CODES(UOC)	QTY
				BUNA-N PART OF KIT P/N 3269200 ..... UOC:FMQ,FMR,FMS	
20	KFFZZ	71454	3266344	...O-RING l-1/2 IN. OD X 3/32 IN. NOM, 90 BUNA-N PART OF KIT P/N 3269200 ..... UOC:FMQ,FMR,FMS	9
21	PAFZZ	71454	3269204	...PISTON ASSEMBLY ..... UOC:FMQ,FMR,FMS	9
22	KFFZZ	71454	3266306	...SCREW,SOCKET,FLAT HEAD,1/4-20 x 7/8 IN. PART OF KIT P/N 3269209 ..... UOC:FMQ,FMR,FMS	4
23	KFFZZ	71454	3269088	.SHAFT SEAL ASSEMBLY PART OF KIT P/N 3269209 .. .. UOC:FMQ,FMR,FMS	1
24	KFFZZ	71454	3269210	.O-RING,2-7/8 IN. OD X 3/32 IN. NOM, 90 BUNA-N PART OF KIT P/N 3269209 .... UOC:FMQ,FMR,FMS	1
25	XDFZZ	71454	3269207	..BEARING PLATE ASSY ..... UOC:FMQ,FMR,FMS	1
26	PBFZZ	71454	3269821	...THRUST CLUSTER ..... UOC:FMQ,FMR,FMS	1
27	XDFZZ	71454	3268846	...CAM, 6.6 IN ..... UOC:FMQ,FMR,FMS	1
28	PAFZZ	71454	3269262	...PISTON CLUSTER ..... UOC:FMQ,FMR,FMS	1
29	XDFZZ	71454	3266335	...CAM SPACER ..... UOC:FMQ,FMR,FMS	1
30	XDFZZ	71454	3269205	...BODY ASSEMBLY,C3209 ..... UOC:FMQ,FMR,FMS	1
31	KFOZZ	71454	3266555	...DECAL,FMC LOGO PART OF KIT P/N 3269862 .... UOC:FMQ,FMR,FMS	1
32	KFOZZ	71454	3266556	...DECAL,AQUA PUMP PART OF KIT P/N 3269862 ... UOC:FMQ,FMR,FMS	1
33	KFOZZ	71454	3266260	...DECAL,NAMEPLATE PART OF KIT P/N 3269862 ... UOC:FMQ,FMR,FMS	1
34	KFOZZ	71454	3266560	...DECAL,ROTATION PART OF KIT P/N 3269862 .... UOC:FMQ,FMR,FMS	1
35	KFOZZ	71454	3266558	...DECAL,OUTLET PART OF KIT P/N 3269862 ..... UOC:FMQ,FMR,FMS	1
36	KFOZZ	71454	3266557	...DECAL,INLET PART OF KIT P/N 3269862 ..... UOC:FMQ,FMR,FMS	1
37	KFOZZ	71454	3266324	.DECAL,COOLING OUTLET PART OF KIT P/N 3269862 .... UOC:FMQ,FMR,FMS	1
	PAFZZ	71454	3269200	...ACCESSORIES GROUP,C3209 ..... UOC:FMQ,FMR,FMS	1
				O-RING ....(2) 78A-13	
				O-RING ....(1) 18A-15	
				O-RING ....(1) 78A-16	
				O-RING ....(1) 78A-17	
				O-RING ....(3) 78A-19	
				O-RING ....(9) 78A-20	
				SCREW,HEX CAP ....(7) 78A-2	
				SCREW,HEX CAP ....(2) 78A-3	
				SCREW,HEX CAP ....(1) 78A-8	
				WASHER,LOCK ....(10) 78A-4	
				WASHER,FLAT ... .(10) 78A-5	
	PAFZZ	71454	3269209	....SHAFT SEAL GROUP	1

(1) ITEM NO	(2) SMR CODE	(3) PART CAGEC	(4) NUMBER	(5) DESCRIPTION AND USABLE ON CODES(UOC)			QTY
				UOC:FMQ,FMR,FMS			
				O-RING	(1)	78A-24	
				SCREW,FLAT SOCKE	(4)	78A-22	
				SHAFT SEAL ASSEM	(1)	78A-23	
	PBFZZ	71454	3269211	....NIPPLE CONNECTION GROUP			1
				UOC:FMQ,FMR,FMS			
				NIPPLE,SST	(2)	78A-11	
				RETAINER INLET N	(1)	78A-12	
				RETAINER, OUTLET	(1)	78A-9	
				RING,SPLIT NIPPL	(2)	78A-10	
				SCREW, HEX CAP	(4)	78A-6	
				WASHER, LOCK	(4)	78A-7	
	XDOZZ	71454	3269862	....NAMEPLATE GROUP			1
				UOC:FMQ,FMR,FMS			
				DECAL,AQUA	1)	78A-32	
				DECAL,COOLING OU	(1)	78A-37	
				DECAL,FMC LOGO	(1)	78A-31	
				DECAL,INLET	(1)	78A-36	
				DECAL,NAMEPLATE	(1)	78A-33	
				DECAL,OUTLET	(1)	78A-35	
				DECAL,ROTATION	(1)	78A-34	

END OF FIGURE

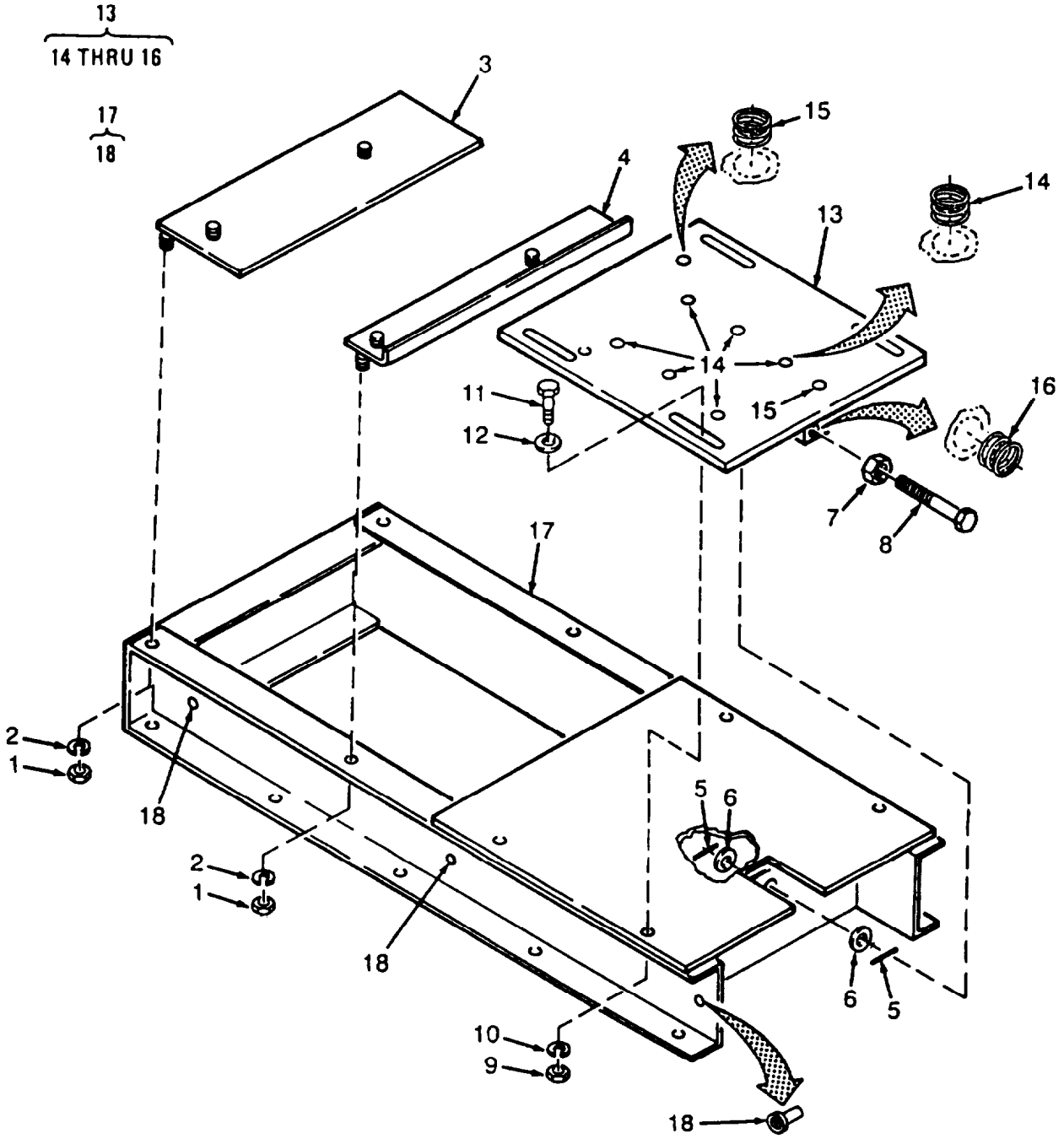

Figure 79. High Pressure Pump and Motor Stand
(WPES-10, WPES-20 ANTI WPES-30 ONLY)

(1) ITEM NO	(2) SMR CODE	(3) CAGEC	(4) PART NUMBER	(5) DESCRIPTION AND USABLE ON CODES(UOC)	(6) QTY
				GROUP 12 REVERSE OSMOSIS WATER PURIFICATION UNIT 600 GPH	
				FIG. 79 HIGH PRESSURE PUMP AND MOTOR STAND	
1	PAFZZ	96906	MS51971-5	..NUT,PLAIN,HEXAGON UOC:FAV,FAW,FAX	4
2	PAFZZ	96906	MS35338-143	..WASHER, LOCK UOC:FAV,FAW,FAX	4
3	XDFZZ	97403	13229E5633	..PLATE,FOOT ADAPTER UOC:FAV,FAW,FAX	1
4	XDFZZ	97403	13229E5634	..PLATE,FOOT ADAPTER UOC:FAV,FAW,FAX	1
5	PAFZZ	96906	MS35677-47	..PIN,GROOVED,HEADLES UOC:FAV,FAW,FAX	2
6	PAFZZ	96906	MS27183-23	..WASHER,FLAT UOC:FAV,FAW,FAX	2
7	PAFZZ	96906	MS35691-59	..NUT,PLAIN,NEXAGON JAM UOC:FAV,FAW,FAX	1
8	PBFZZ	97403	13222E5293	..SCREW,CAP,HEXAGON H UOC:FAV,FAW,FAX	1
9	PAFZZ	96906	MS51971-7	..NUT,PLAIN,HEXAGON UOC:FAV,FAW,FAX	4
10	PAFZZ	96906	MS35338-145	..WASHER,LOCK UOC:FAV,FAW,FAX	4
11	PAFZZ	96906	MS35307-466	..SCREW,CAP,HEXACON H UOC:FAV,FAW,FAX	4
12	PAFZZ	96906	MS15795-820	..WASHER,FLAT UOC:FAV,FAW,FAX	4
13	XDFFF	97403	13222E5291	..PLATE,MOUNTING UOC:FAV,FAW,FAX	1
14	PAFZZ	96906	MS21209C7-15	...INSERT,SCREW THREAD UOC:FAV,FAW,FAX	6
15	PAFZZ	96906	MS21209C4-20	...INSERT,SCREW THREAD UOC:FAV,FAW,FAX	2
16	PAFZZ	96906	MS21209Cl2l0	...INSERT,SCREW THREAD UOC:FAV,FAW,FAX	1
17	XDFFF	97403	13222E5292	..STAND,PUMP AND MOTR UOC:FAV,FAW,FAX	1
18	PAFZZ	46384	CLSS-032-3	...NUT,PLAIN,CLINCH .190-32 UNF-28 UOC:FAV,FAW,FAX	3

END OF FIGURE

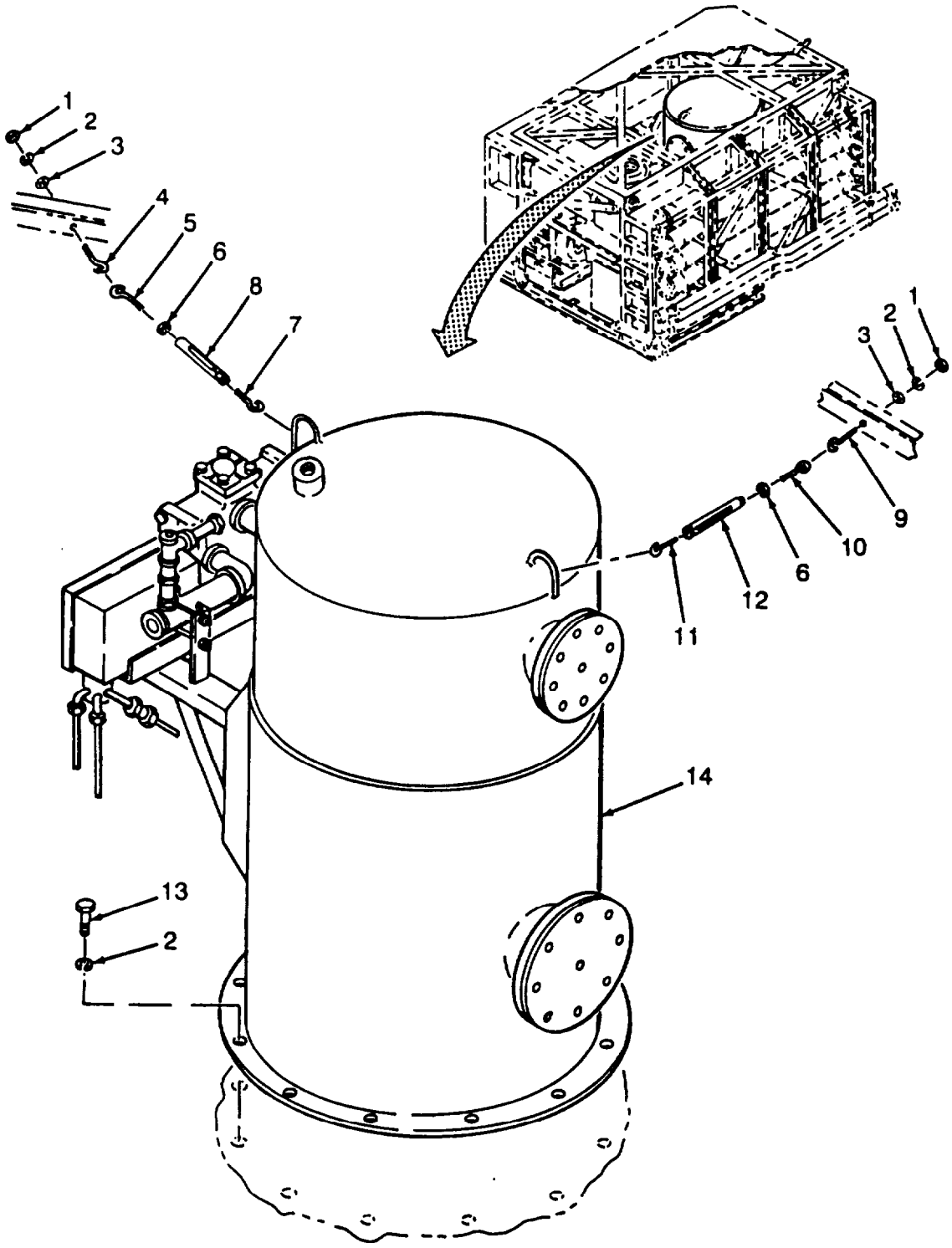

Figure 80. Multimedia Filter (Sheet 1 of 2)
(WPES-10, WPES-20 AND WPES-30 ONLY)

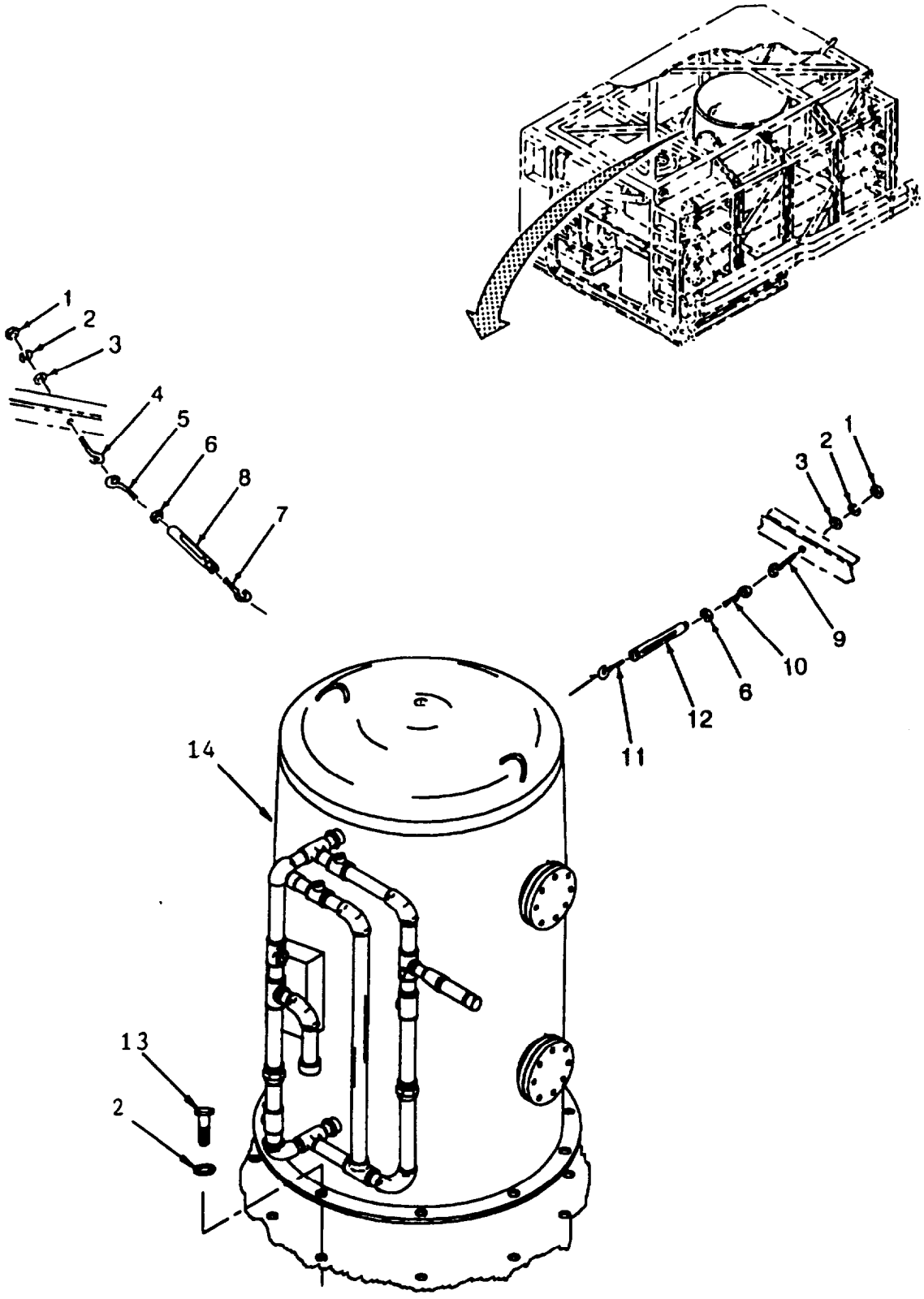

Figure 80. Multimedia filter (Sheet 2 of 2)
Models H-9518-1, H-9518-2, and H-9518-3 only

(1) ITEM NO	(2) SMR CODE	(3) CAGEC	(4) PART NUMBER	(5) DESCRIPTION AND USABLE ON CODES(UOC)	(6) QTY
				GROUP 12 REVERSE OSMOSIS WATER PURIFICATION UNIT 600 GPH	
				FIG. 80 MULTIMEDIA FILTER ASSEMBLY	
1	PAFZZ	96906	MS51971-5	.NUT,PLAIN,HEXAGON	2
2	PAFZZ	96906	MS35338-143	.WASHER,LOCK	14
3	PAFZZ	96906	MS15795-817	.WASHER,FLAT	2
4	PAFZZ	96906	MS27950-12	.BOLT,EYE	1
5	PAFZZ	96906	MS27953-11	.BOLT,HOOK	1
6	PAFZZ	96906	MS27952-7	.NUT,PLAIN,HEXAGON	2
7	PAFZZ	96906	MS27953-12	.BOLT,HOOK	1
8	PAFZZ	96906	MS27954-6	.TURNBUCKLE BODY	1
9	PAFZZ	96906	MS27950-8	.BOLT,EYE	1
10	PAFZZ	96906	MS27953-7	.BOLT,HOOK	1
11	PAFZZ	96906	MS27953-8	.BOLT,HOOK	1
12	PAFZZ	96906	MS27954-5	.TURNBUCKLE BODY	1
13	PAFZZ	96906	MS35307-414	.SCREW,CAP,HEXAGON H	12
14	XDFFF	76371	5500584000	.FILTER, FLUID MULTIMEDIA UOC:FAV,FAW,FAX	1
14	XDFFF	OAK83	9518	.FILTER, FLUID MULTIMEDIA UOC:FMQ,FMR,FMS	1

END OF FIGURE

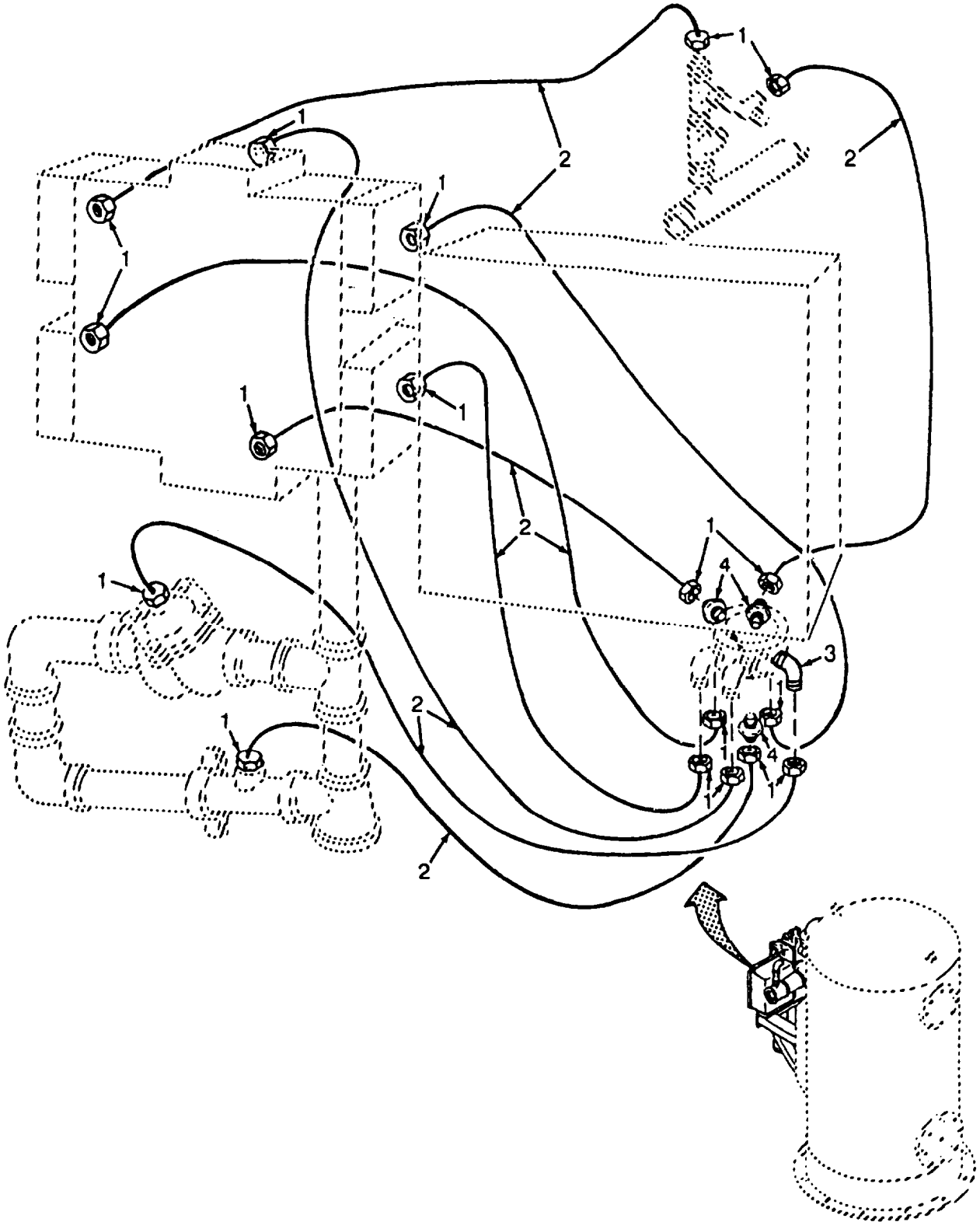

Figure 81. Multimedia Filter Timer Control Lines (Sheet 1 of 2)
(WPES-10, WPES-20 AND WPES-30 ONLY)

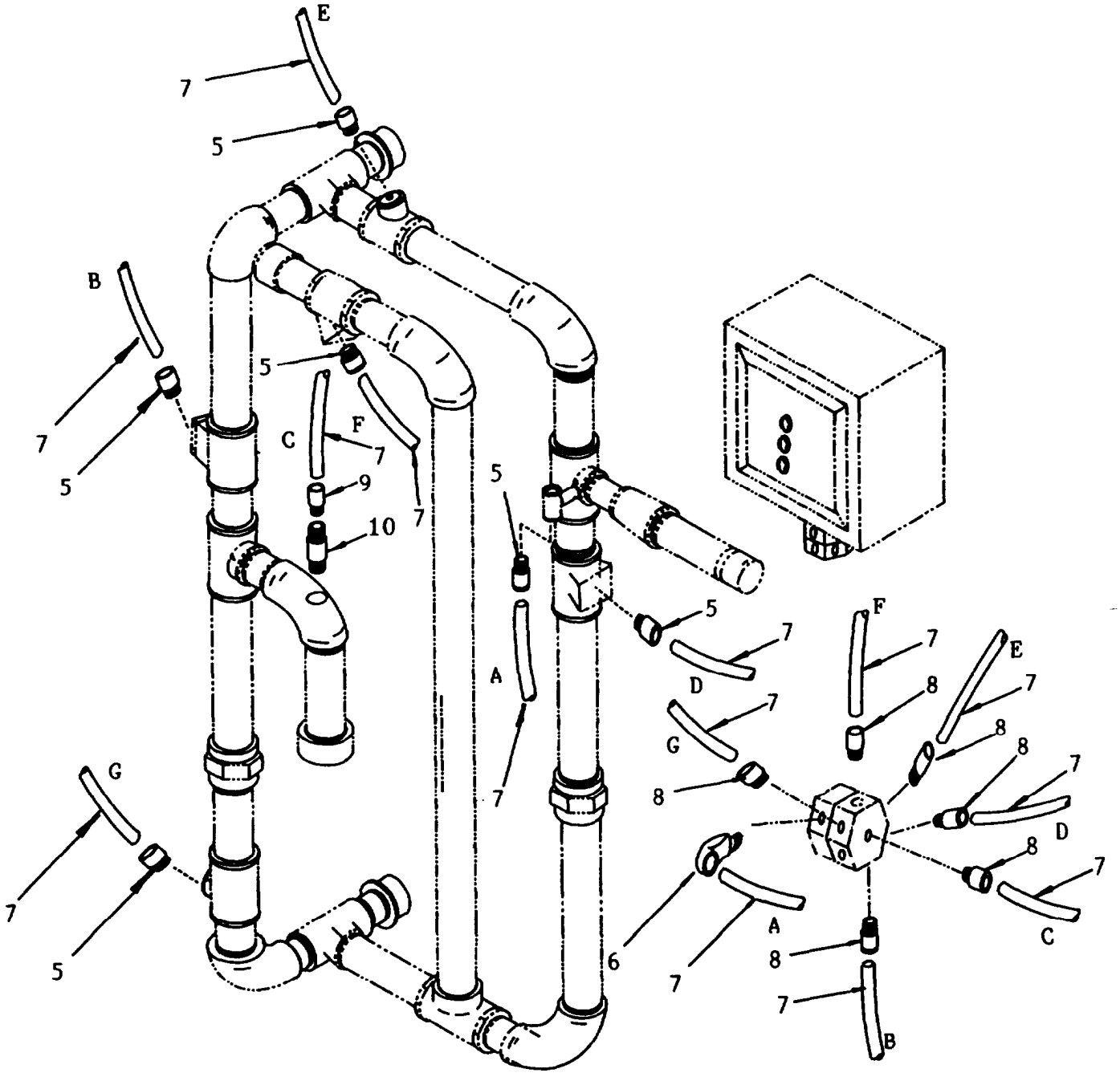

Figure 81. Multimedia Filter Timer Control Lines (Sheet 2 of 2)
Models H-9518-1, H-9518-2, and H-9518-3 only

(1) ITEM NO	(2) SMR CODE	(3) CAGEC	(4) PART NUMBER	(5) DESCRIPTION AND USABLE ON CODES(UOC)	(6) QTY
				GROUP 12 REVERSE OSMOSIS WATER PURIFICATION UNIT 600 GPH	
				FIG. 81 MULTIMEDIA FILTER TIMER CONTROL LINES	
1	PAOZZ	76371	5400851000	..NUT,FERRULE UOC:FAV,FAW,FAX	18
2	MOOZZ	19099	MM904	..TUBE MAKE FROM BULK P/N 5100328000 UOC:FAV,FAW,FAX	8
3	PAOZZ	76371	5400829000	..ELBOW,PIPE TO TUBE 90 DEGREE UOC:FAV,FAW,FAX	5
4	PAOZZ	76371	5400821000	..ADAPTER,STRAIGHT, PI UOC:FAV,FAW,FAX	3
5	PAOZZ	93061	68PL-4-4	..CONNECTOR, MALE, BRASS, 1/4 IN. TUBE X 1/4 IN. NPTF UOC:FMQ,FMR,FMS	6
6	PAOZZ	93061	169PL-4-2	..ELBOW,PIPE TO TUBE MALE,SWIVEL,90 DEG, 1/4 IN. TUBE X 1/8 IN. NPTF UOC:FMQ,FMR,FMS	1
7	MOOZZ	OAK83	9518182201-11	..TUBE MAKE FROM BULK P/N E-43-0100 (61424) UOC:FMQ,FMR,FMS	7
8	PAOZZ	93061	68PL-4-2	..ADAPTER,STRAIGHT,PIN,MALE,BRASS,1/4 IN. TUBE X 1/8 IN. NPTF UOC:FMQ,FMR,FMS	6
9	PAOZZ	93061	66PL-4-4	..CONNECTOR,FEMALE,BRASS,1/4 IN. TUBE X 1/4 IN. NPTF UOC:FMQ,FMR,FMS	1
10	PAOZZ	39428	46505K31	..VALVE,CHECK,1/4 IN. NPT UOC:FMQ,FMR,FMS	

END OF FIGURE

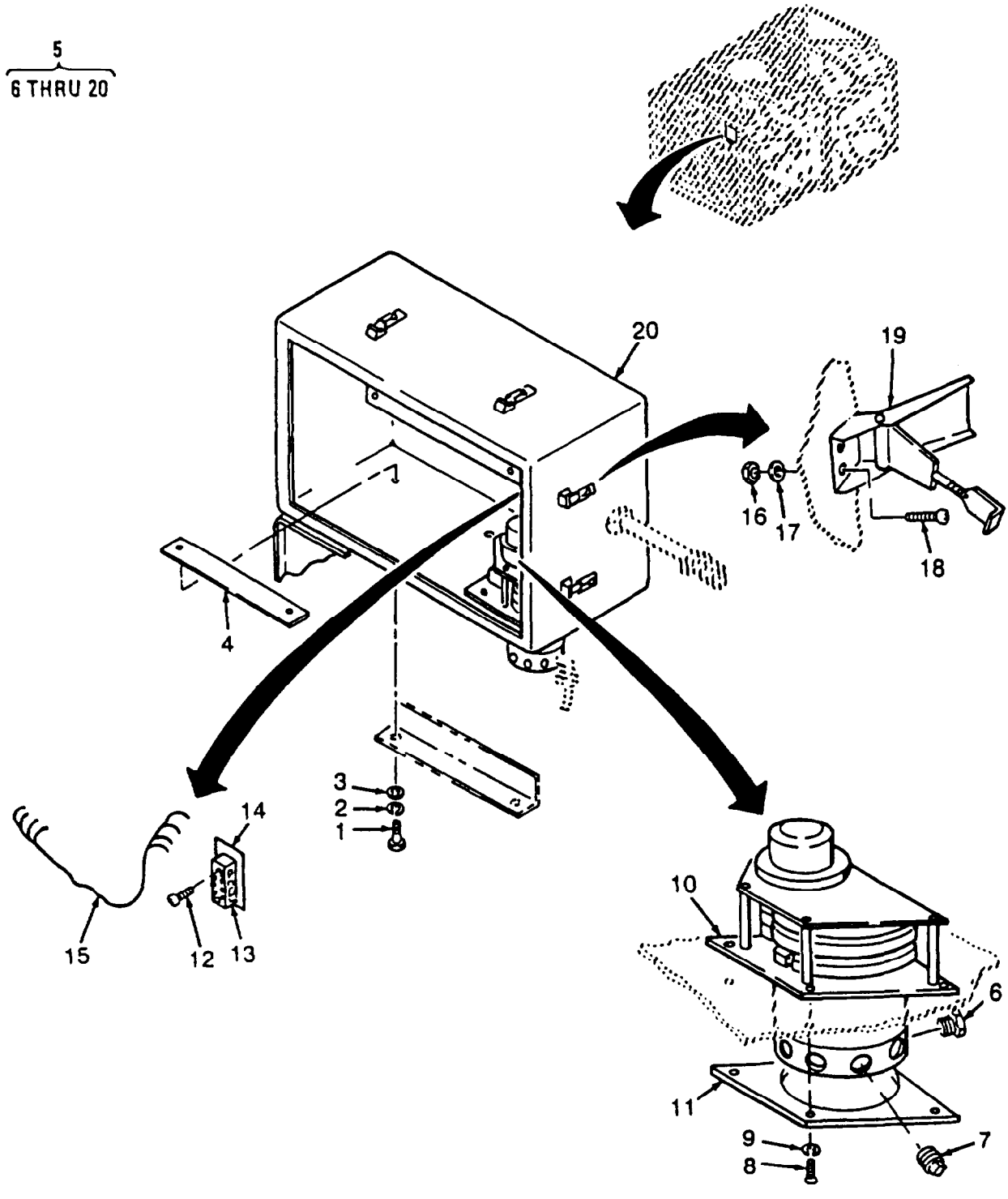

Figure 82. Multimedia Filter Timer Assembly (Sheet 1 of 3)
Models WPES-10, WPES-20 AND WPES-30 only

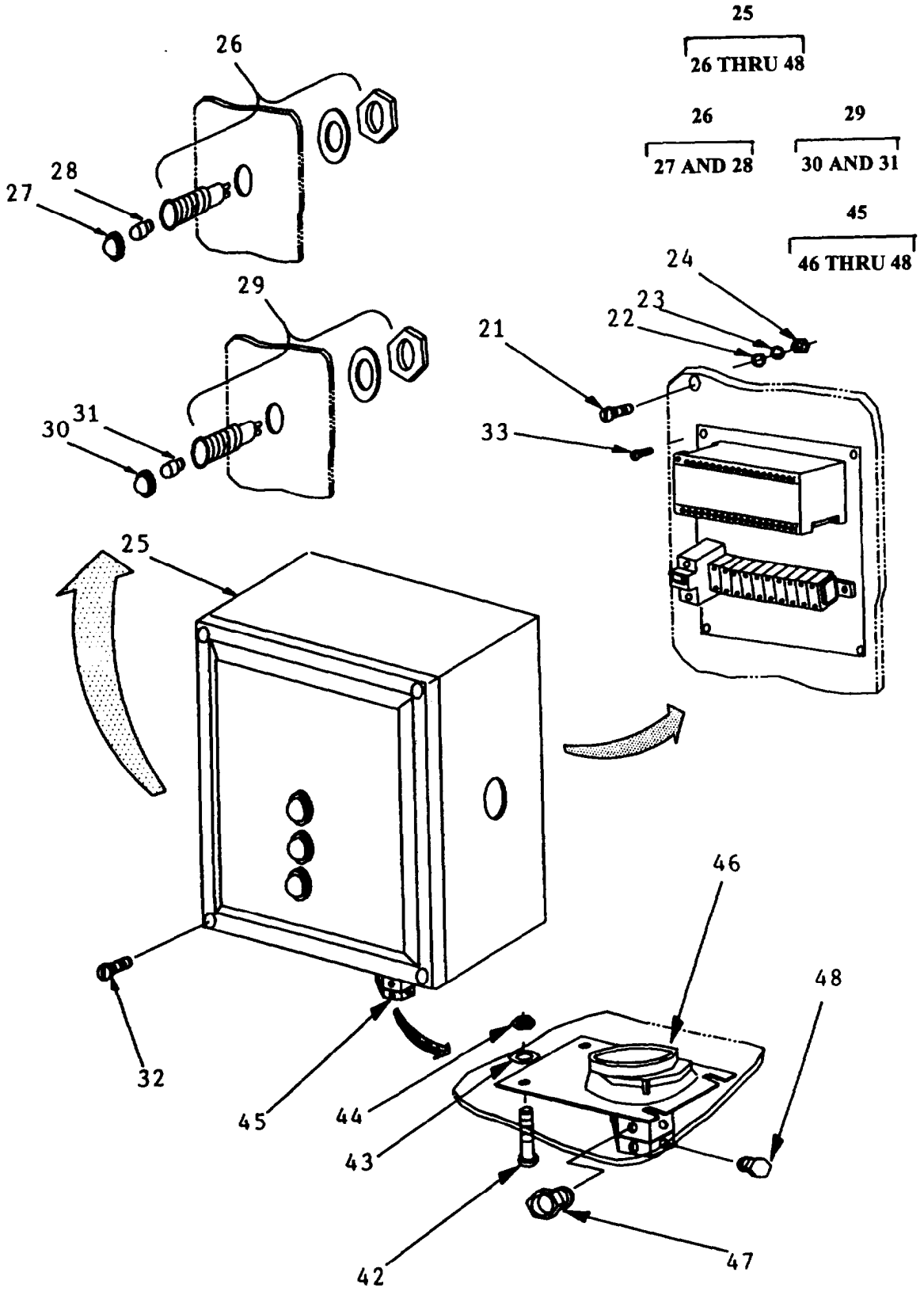

Figure 82. Multimedia Filter Timer Assembly (Sheet 2 of 3)
Models H-9518-1, H-9518-2, and H-9518-3 only

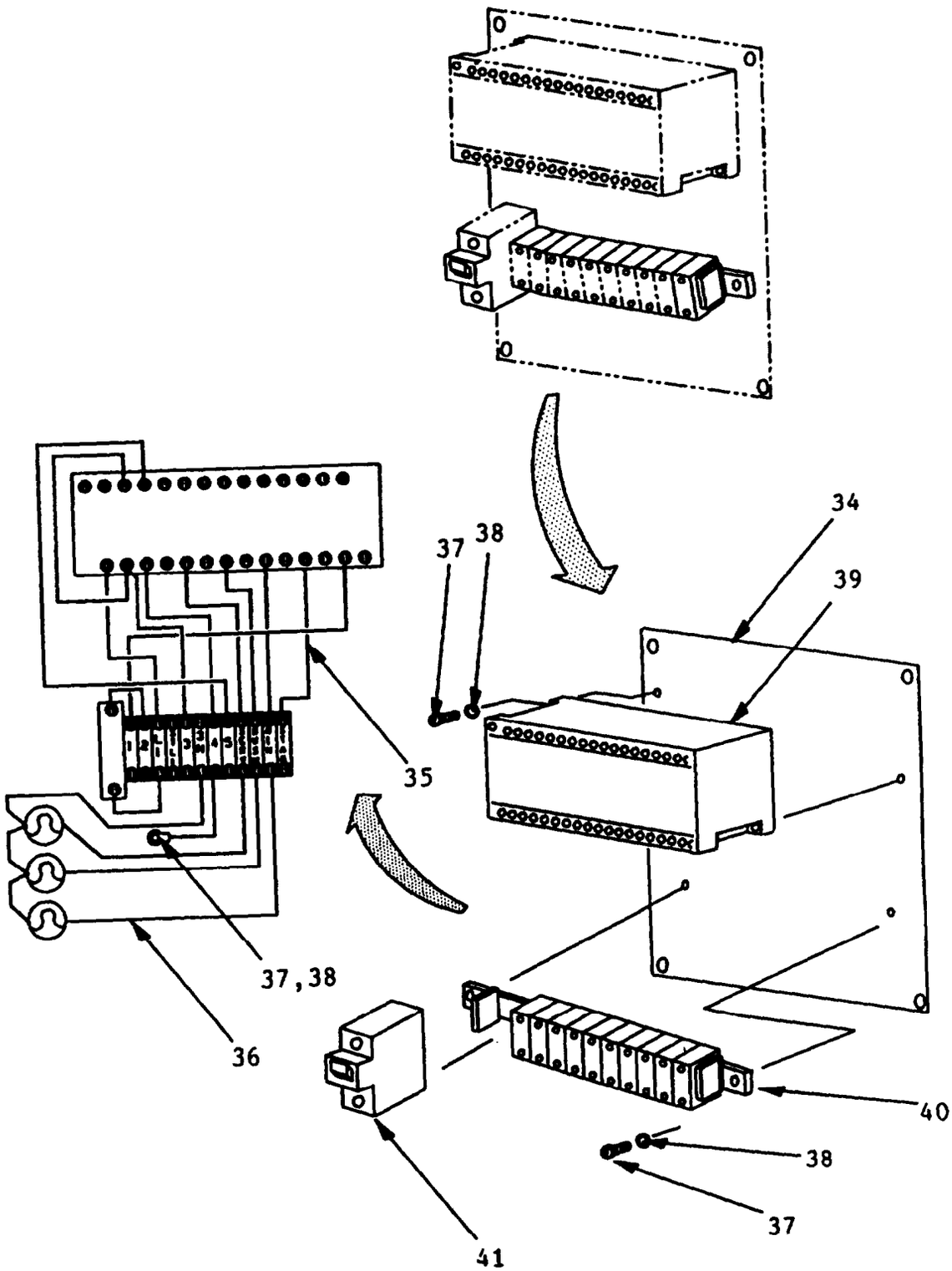

Figure 82. Multimedia Filter Timer Assembly (Sheet 3 of 3)
Models H-9518-1, H-9516-2, and H-9519-3 only

(1) ITEM NO	(2) SMR CODE	(3) CAGEC	(4) PART NUMBER	(5) DESCRIPTION AND USABLE ON CODES(UOC)	(6) QTY
				GROUP 12 REVERSE OSMOSIS WATER PURIFICATION UNIT 600 GPH	
				FIG. 82 MULTIMEDIA FILTER TIMER ASSEMBLY	
1	PADZZ	96906	MS35307-308	..SCREW,CAP,HEXAGON H UOC:FAV,FAW,FAX	2
2	PAOZZ	96906	MS35338-139	..WASHER,LOCK UOC:FAV,FAW,FAX	2
3	PAOZZ	96906	MS15795-809	..WASHER,FLAT UOC:FAV,FAW,FAX	2
4	XDOZZ	76371	5500675000	..PLATE,MOUNTING UOC:FAV,FAW,FAX	1
5	PBOFF	76371	5500585000	..TIMER ASSY UOC:FAV,FAW,FAX	1
6	PAOZZ	76371	48Q	... STRAINER,INLET UOC:FAV,FAW,FAX	1
7	XDOZZ	76371	PLB-0007	..PLUG,PIPE 1/4 NPT UOC:FAV,FAW,FAX	2
8	PBFZZ	76371	SCS-0121	..SCREW UOC:FAV,FAW,FAX	4
9	PAOZZ	96906	MS35338-139	..WASHER, LOCK UOC:FAV,FAW,FAX	4
10	PAFZZ	76371	51-SP	... STAGER UOC:FAV,FAW,FAX	1
11	PAFZZ	76371	51-NG	... GASKET UOC:FAV,FAW,FAX	1
12	XDFZZ	76371	SCS-0074	..SCREW UOC:FAV,FAW,FAX	2
13	XDFZZ	76371	514148	..BOARD,TERMINAL UOC:FAV,FAW,FAX	1
14	XDFZZ	76371	3809026	..INSULATOR,TERMINAL UOC:FAV,FAW,FAX	1
15	XDFZZ	76371	3809042	..WIRING HARNESS UOC:FAV,FAW,FAX	1
16	XDOZZ	00843	99401-408	..NUT,LOCK UOC:FAV,FAW,FAX	12
17	XDOZZ	00843	26132-019	..WASHER,FLAT UOC:FAV,FAW,FAX	12
18	XDOZZ	00843	99401-072	... SCREW UOC:FAV,FAW,FAX	12
19	XDOZZ	00843	A-L23SS	..LATCH UOC:FAV,FAW,FAX	6
20	XAFZZ	76371	3809011	..ENCLOSURE UOC:FAV,FAW,FAX	1
21	PAOZZ	96906	MS51957-84	..SCREW,MACHINE UOC:FMQ,FMR,FMS	4
22	PAOZZ	96906	MS15795-810	..WASHER,FLAT UOC:FMQ,FMR,FMS	4
23	PAOZZ	96906	MS35338-139	..WASHER,LOCK UOC:FMQ,FMR,FMS	4
24	PAOZZ	96906	MS51971-1	..NUT,PLAIN,HEXAGON UOC:FMQ,FMR,FMS	4
25	PAOFF	OAK83	9518182202	..TIMER ASSY UOC:FMQ,FMR,FMS	1
26	PAOZZ	5H081	OG120	..SOCKET,LIGHT,GREEN UOC:FMQ,FMR,FMS	1
27	PAOZZ	5H081	25504-20040	.... LENS,GREEN	1

(1) ITEM NO	(2) SMR CODE	(3) CAGEC	(4) PART NUMBER	(5) DESCRIPTION AND USABLE ON CODES(UOC)	(6) QTY
				UOC:FMQ,FMR,FMS	
28	PAOZZ	5H081	25501-05005	....BULB	1
				UOC:FMQ,FMR,FMS	
29	PAOZZ	5H081	OR120	...SOCKET,LIGHT,RED	2
				UOC:FMQ,FMR,FMS	
30	PAOZZ	5H081	25504-20020	....LENS,RED	1
				UOC:FMQ,FMR,FMS	
31	PAOZZ	5H081	25501-05005	....BULB	1
				UOC:FMQ,FMR,FMS	
32	PAOZZ	96906	MS51493-2	...SCREW,MACHINE	4
				UOC:FMQ,FMR,FMS	
33	PAOZZ	96906	MS51493-1	...SCREW,MACHINE	4
				UOC:FMQ,FMR,FMS	
34	XDFFF	0AK83	9518182203	...BACKPANEL ASSEMBLY	1
				UOC:FMQ,FMR,FMS	
35	XDFFF	0AK83	9518182204	....HARNESS,WIRING,CONTROL TO TERMINAL	1
				UOC:FMQ,FMR,FMS	
36	MFFZZ	0AK83	9518182204-A	.WIRE,ELECTRICAL,MAKE FROM BULK P/N M5086/1-16-9	V
				UOC:FMQ,FMR,FMS	
37	PAOZZ	96906	MS51492-07	....SCREW,MACHINE	5
				UOC:FMQ,FMR,FMS	
38	PAOZZ	96906	MS51413-3	. . ..WASHER,LOCK	5
				UOC:FMQ,FMR,FMS	
39	PAFZZ	0AK83	9518182205	....TIMER,CONTROL	1
				UOC:FMQ,FMR,FMS	
40	XDFZZ	0AK83	9518182206	....TERMINAL ASSY	1
				UOC:FMQ,FMR,FMS	
41	PAOZZ	01121	1492-CB1G030	.....CIRCUIT BREAKER	1
				UOC:FMQ,FMR,FMS	
42	PAOZZ	96906	MS51957-46	...SCREW,MACHINE	2
				UOC:FMQ,FMR,FMS	
43	PAOZZ	96906	MS27183-41	...WASHER,FLAT	4
				UOC:FMQ,FMR,FMS	
44	PAOZZ	96906	MS21044-N08	...NUT,NYLON INSERT	4
				UOC:FMQ,FMR,FMS	
45	XDFFF	0AK83	9518182207	...STAGER ASSY	1
				UOC:FMQ,FMR,FMS	
46	PAFZZ	0GF31	48-01-115	....STAGER	1
				UOC:FMQ,FMR,FMS	
47	PA0ZZ	0GF31	48-0	....STRAINER ASSY	
				UOC:FMQ,FMR,FMS	
48	PAOZZ	96906	MS20913-1	....PLUG, PIPE 1/8 NPT	1
				UOC:FMQ,FMR,FMS	

END OF FIGURE

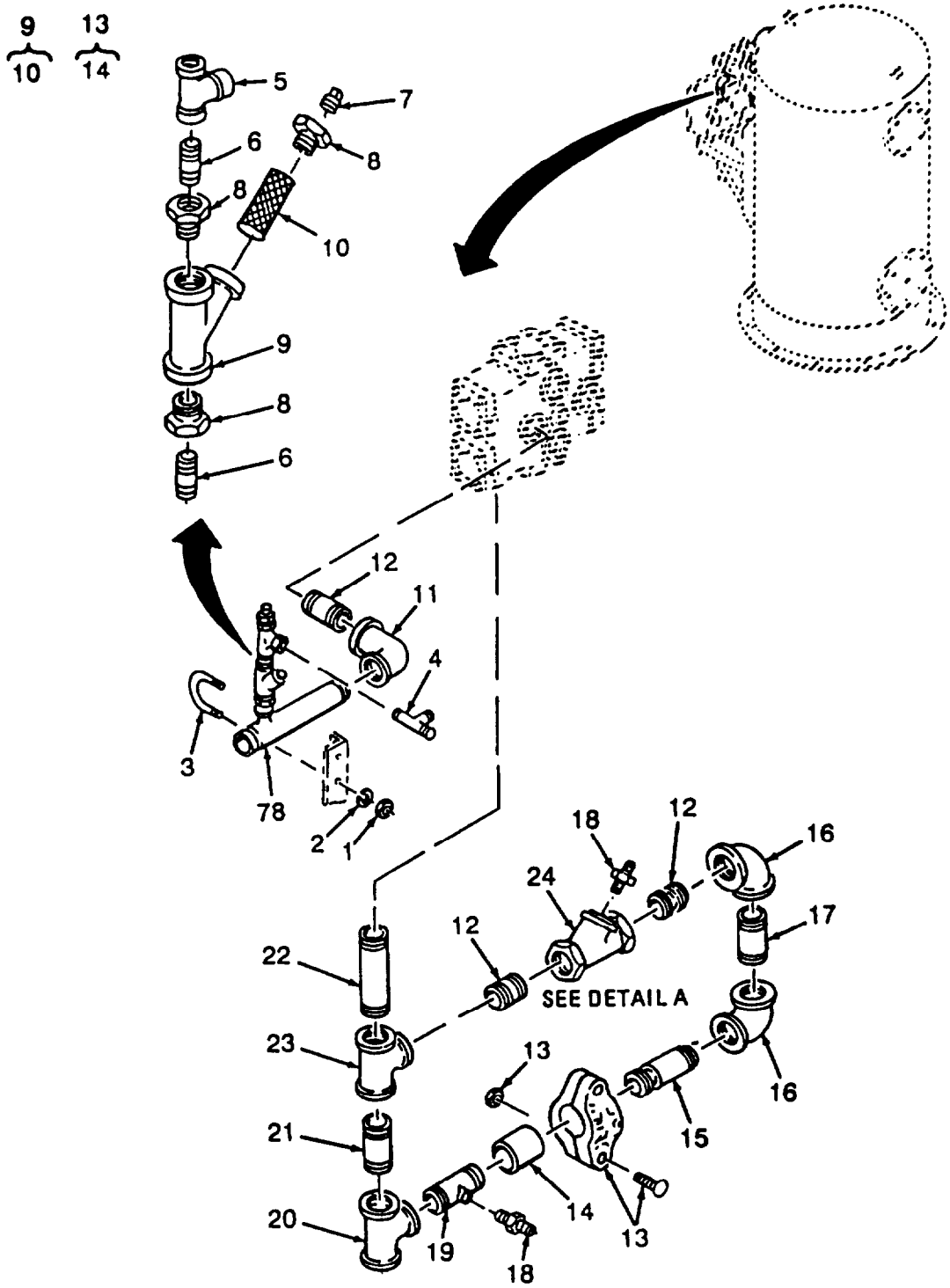

Figure 83. Multimedia Control Valves and Piping (Sheet 1 of 6)
(WPES-10, WPES-20 AND WPES-30)

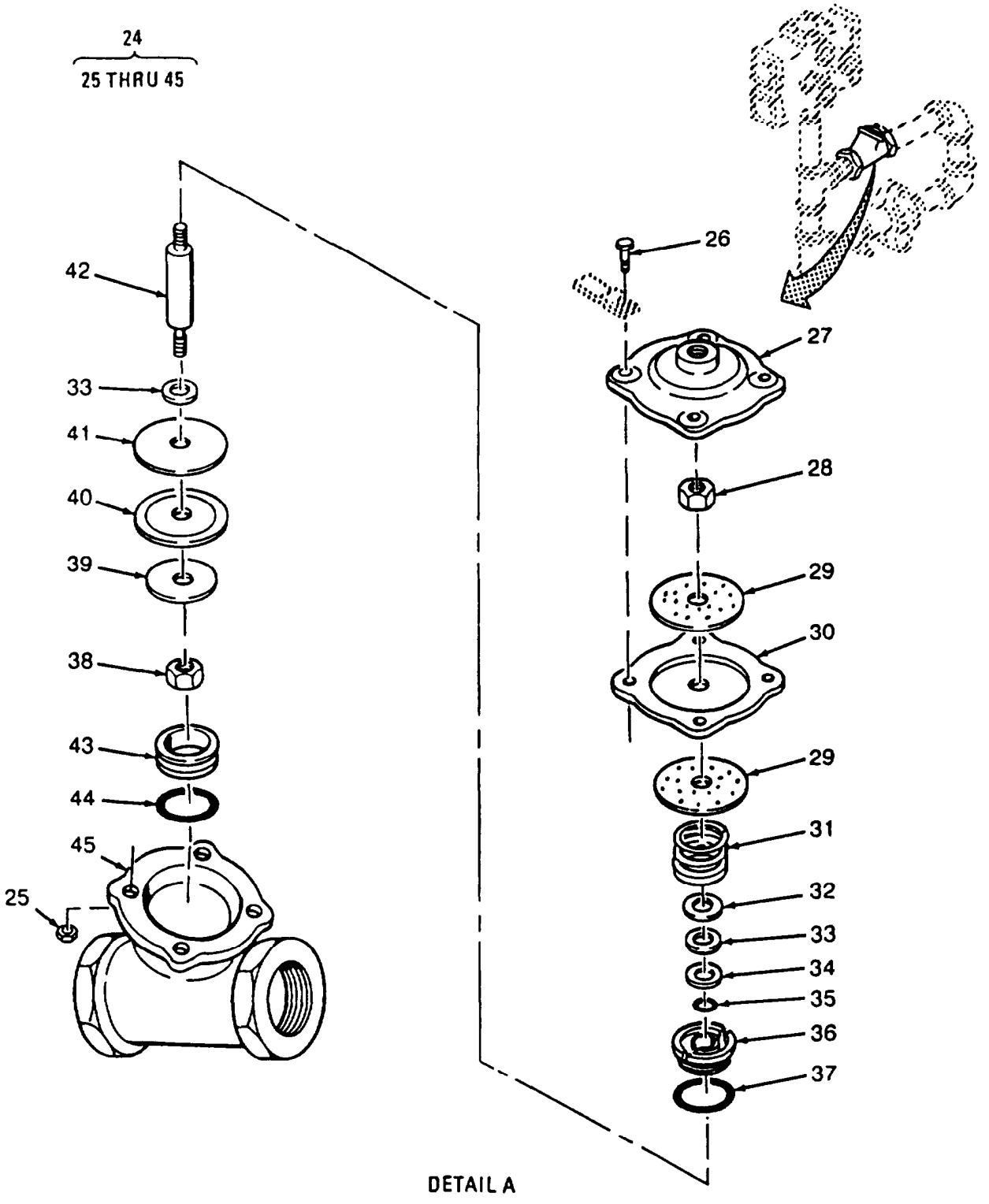

Figure 83. Multimedia Control Valves and Piping (Sheet 2 of 6)
(WPES-10, WPES-20 AND WPES-30)

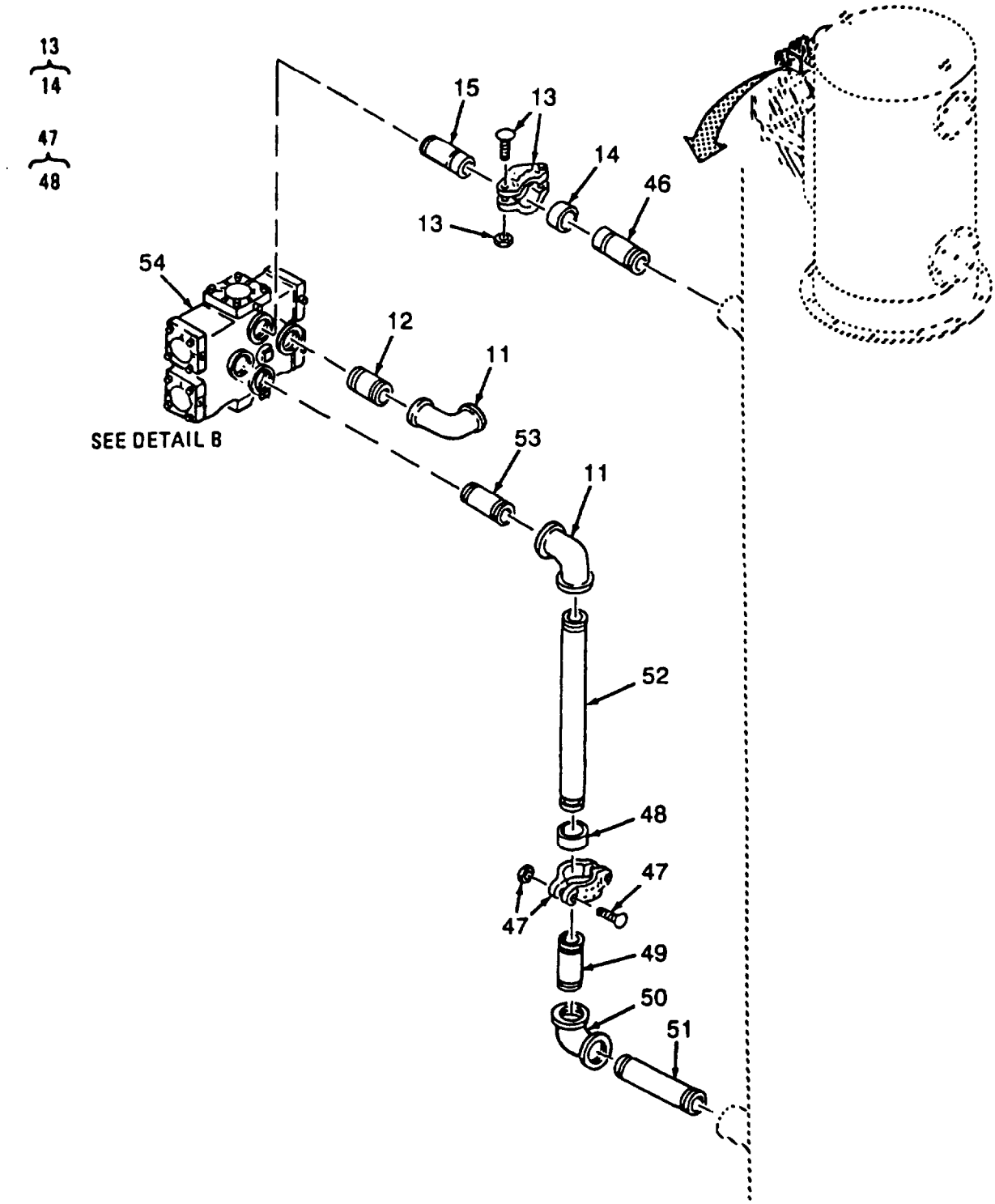

Figure 63. Multimedia Control Valves and Piping (Sheet 3 of 6)
(WPES-10,WPES-20 AND WPES-30)

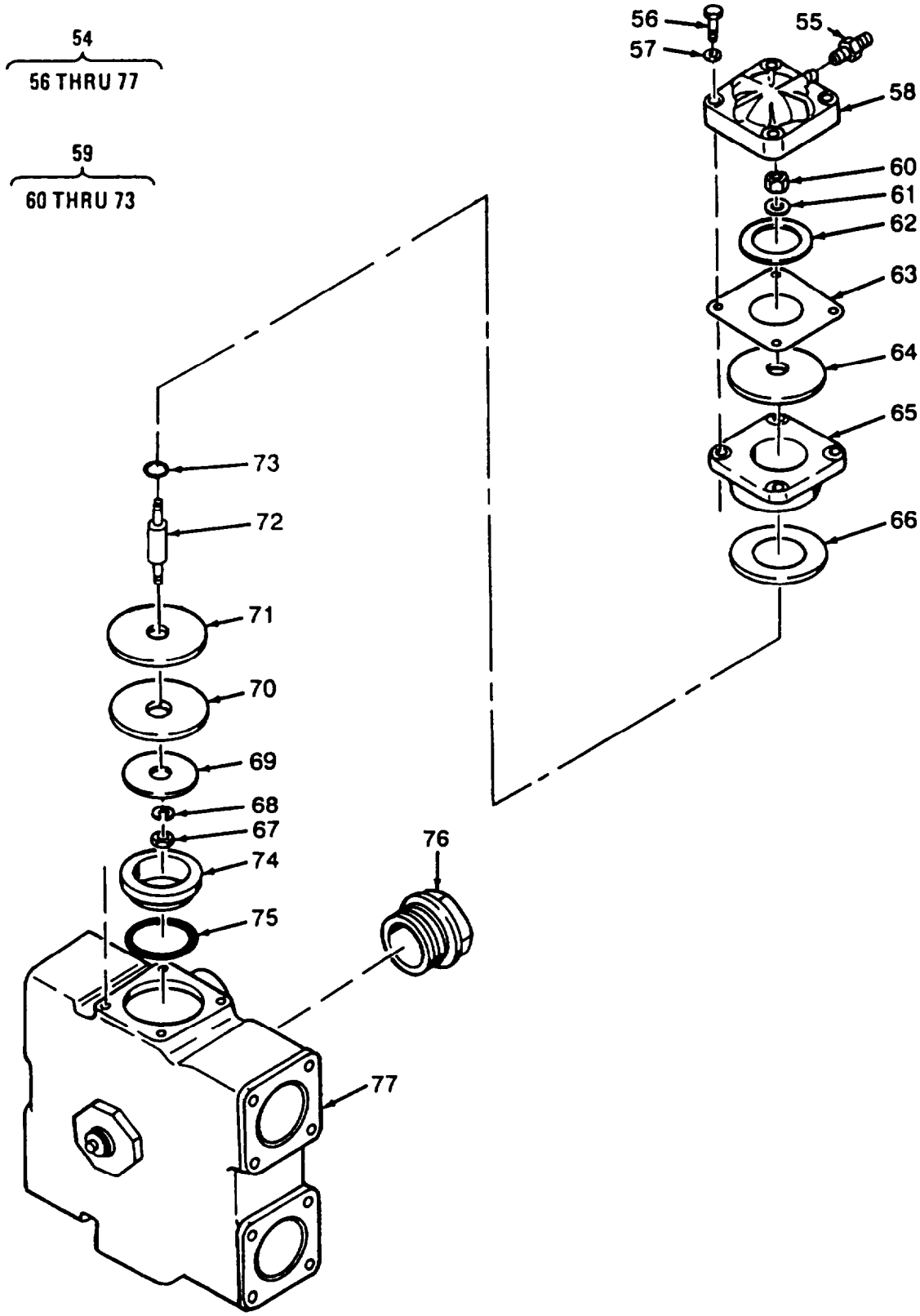

Figure 63. Multimedia Control Valves and Piping (Sheet 4 of 6)
(WPES-10, WPES-20 AND WPES-30)

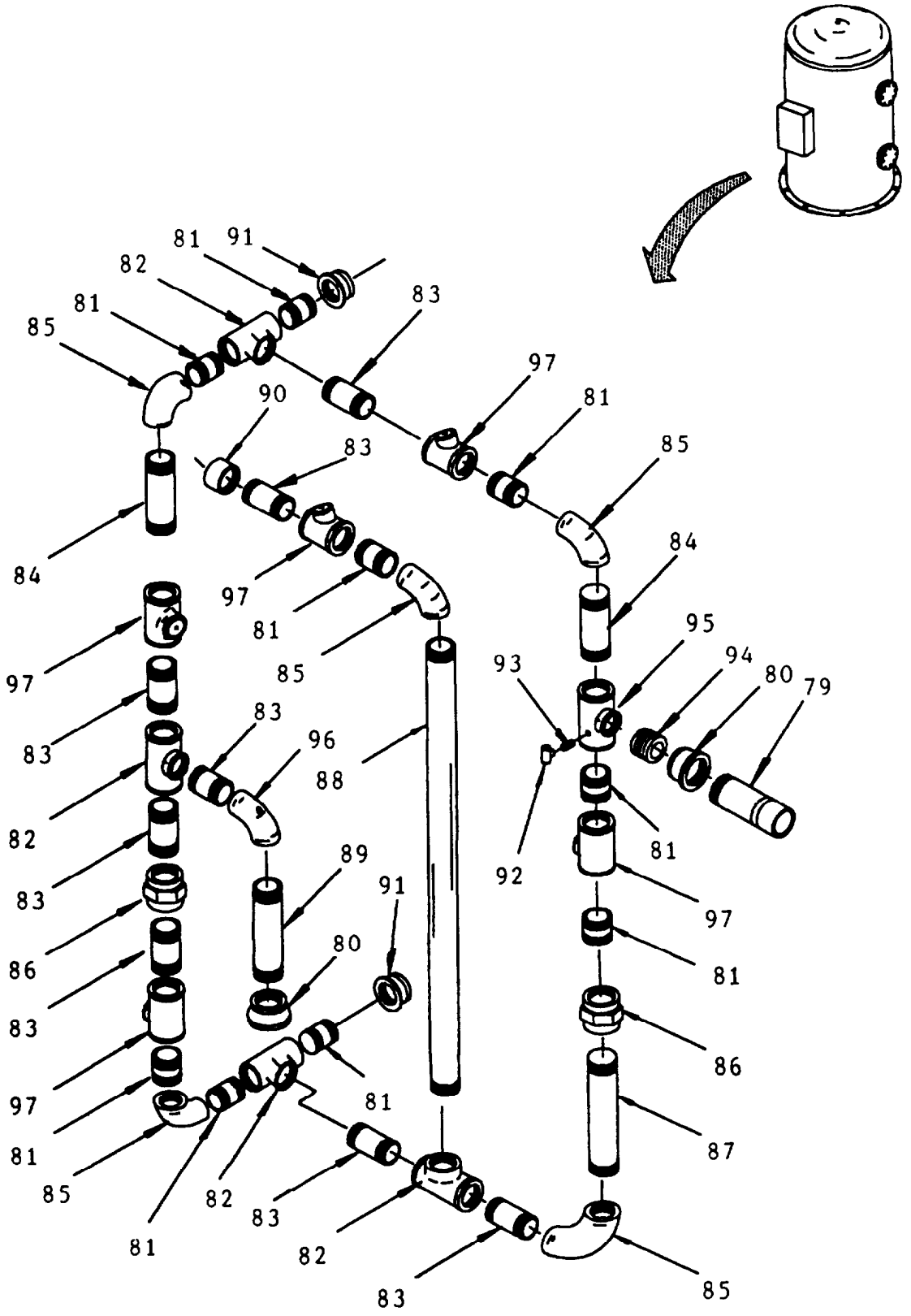

Figure 83. Multimedia Control Valves and Piping (Sheet 5 of 6)
Models H-9518-1, H-9516-2, and H-9516-3 only

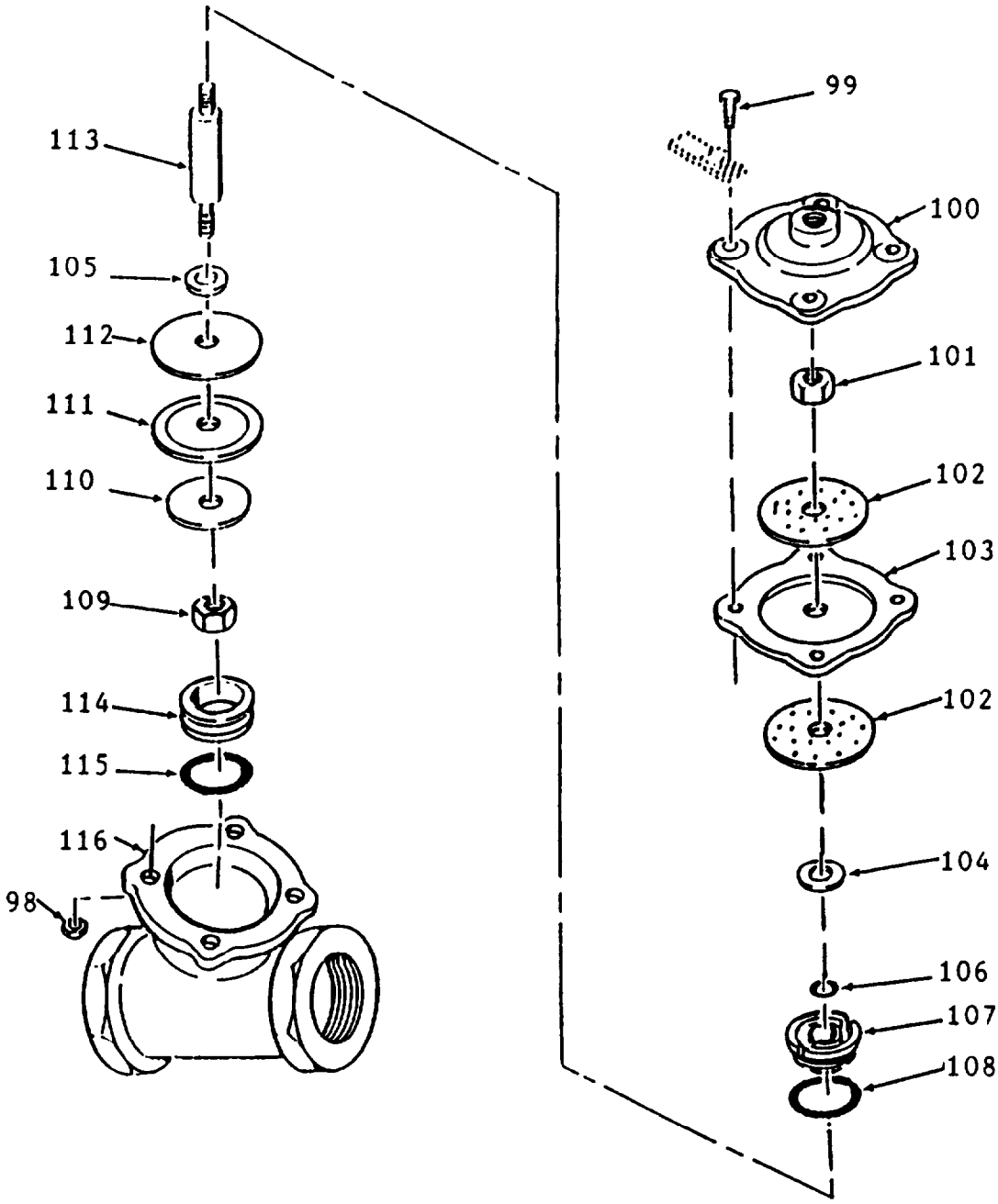

Figure 83. Multimedia Control Valves and piping (Sheet 6 of 6)
Models H-9518-1, H-9518-2, and H-9518-3 only

(1) ITEM NO	(2) SMR CODE	(3) CAGEC	(4) PART NUMBER	(5) DESCRIPTION AND USABLE ON CODES(UOC)	(6) QTY
				GROUP 12 REVERSE OSMOSIS WATER PURIFICATION UNIT 600 GPH	
				FIG. 83 MULTIMEDIA CONTROL VALVES AND PIPING	
1	PAOZZ	96906	MS35649-2384	..NUT,PLAIN,HEXAGON UOC:FAV,FAW,FAX	2
2	XDOZZ	76371	5400880000	..WASHER, LOCK UOC:FAV,FAW,FAX	2
3	XDOZZ	76371	5400881000	..U-BOLT UOC:FAV,FAW,FAX	1
4	XDOZZ	76371	5400789000	..TEE UOC:FAV,FAW,FAX	1
5	XDOZZ	76371	5400775000	..TEE UOC:FAV,FAW,FAX	1
6	XDOZZ	76371	5400776000	..NIPPLE UOC:FAV,FAW,FAX	2
7	XDOZZ	76371	5400879000	..PLUG,PIPE UOC:FAV,FAW,FAX	1
8	XDOZZ	76371	2506701000	..REDUCER UOC:FAV,FAW,FAX	3
9	PBOZZ	53059	BT 3/8	..STRAINER UOC:FAV,FAW,FAX	1
10	PAOZZ	53059	53822	...SCREEN,WIRE MESH UOC:FAV,FAW,FAX	1
11	XDOZZ	76371	5400779000	..ELBOW UOC:FAV,FAW,FAX	3
12	XDOZZ	76371	5400780000	..NIPPLE UOC:FAV,FAW,FAX	4
13	PAOZZ	81349	M103872D04	..COUPLING 1 1/2 IN UOC:FAV,FAW,FAX	2
14	PAOZZ	81349	M103873D04	...GASKET UOC:FAV,FAW,FAX	1
15	XDOZZ	76371	5400704004	..ADAPTER UOC:FAV,FAW,FAX	2
16	XDOZZ	76371	5400782000	..ELBOW UOC:FAV,FAW,FAX	2
17	XDOZZ	76371	5500648001	..ORIFICE UOC:FAV,FAW,FAX	1
18	XDOZZ	76371	5400852000	CONNECTOR, UNION UOC:FAV,FAW,FAX	2
19	XDOZZ	76371	5400877000	..ADAPTER UOC:FAV,FAW,FAX	1
20	XDOZZ	76371	5400783000	..TEE UOC:FAV,FAW,FAX	1
21	XDOZZ	76371	5500648002	..ORIFICE UOC:FAV,FAW,FAX	1
22	XDOZZ	76371	5400778000	..NIPPLE UOC:FAV,FAW,FAX	1
23	XDOZZ	76371	5400781000	..TEE UOC:FAV,FAW,FAX	1
24	PBOOF	04816	424-1 1/2	..VALVE ASSY UOC:FAV,FAW,FAX	1
25	XDOZZ	04816	NUZ-0008	...NUT,HEXAGON UOC:FAV,FAW,FAX	4
26	XDOZZ	04816	SCZ-0007	...SCREW,CAP,HEXAGON	4

(1) ITEM NO	(2) SMR CODE	(3) CAGEC	(4) PART NUMBER	(5) DESCRIPTION AND USABLE ON CODES(UOC)	(6) QTY
	XDOZZ	04816	424-C	UOC:FAV,FAW,FAX ...CAP	1
28	XDOZZ	04816	NUS-0013	UOC:FAV,FAW,FAX ...NUT,LOCK	1
29	XDDZZ	04816	424-D	UOC:FAV,FAW,FAX ...PLATE, DIAPHRAGM	2
30	PAOZZ	04816	424-FB	UOC:FAV,FAW,FAX ...DIAPHRAGM	1
31	PBOZZ	04816	424-S	UOC:FAV,FAW,FAX ...SPRING	1
32	XDOZZ	04816	424-R	UOC:FAV,FAW,FAX ...GASKET,STATIC	1
33	XDOZZ	04816	200-GG	UOC:FAV,FAW,FAX ...GASKET,STATIC	2
34	XDOZZ	04816	421-AH	UOC:FAV,FAW,FAX ...WASHER,CENTERING	1
35	PAOZZ	04816	ORB-110	UOC:FAV,FAW,FAX ...PACKING,PREFORMED	1
36	XDOZZ	04816	424-G	UOC:FAV,FAW,FAX ...RETAINER	1
37	PAOZZ	04816	ORB-132	UOC:FAV,FAW,FAX ...RETAINER,GASKET	1
38	XDOZZ	04816	NUS-0010	UOC:FAV,FAW,FAX ...NUT,HEXAGON	1
39	XDOZZ	04816	424-K	UOC:FAV,FAW,FAX ...PLATE,DISC	1
40	XDOZZ	04816	424-J	UOC:FAV,FAW,FAX ...DISC	1
41	XDOZZ	04816	424-H	UOC:FAV,FAW,FAX ...RETAINER, DISC	1
42	XDOZZ	04816	424-L	UOC:FAV,FAW,FAX ...SHAFT	1
43	XDOZZ	04816	424-M	UOC:FAV,FAW,FAX ...SEAT,VALVE	1
44	PAOZZ	04816	ORB-029	UOC:FAV,FAW,FAX ...SEAT,GASKET	1
45	XAOZZ	04816	424-A	UOC:FAV,FAW,FAX ...BODY l-1/2 IPS	1
46	XDOZZ	76371	5400679000	UOC:FAV,FAW,FAX ..ADAPTER	1
47	PADZZ	81349	M103872D05	UOC:FAV,FAW,FAX ..COUPLING 2 IN	2
48	XDOZZ	81349	M103873D05	UOC:FAV,FAW,FAX ...GASKET	1
49	XDOZZ	76371	5400704005	UOC:FAV,FAW,FAX ..ADAPTER	1
50	XDOZZ	76371	5400784000	UOC:FAV,FAW,FAX ..ELBOW	1
51	XDOZZ	76371	5400878000	UOC:FAV,FAW,FAX ..NIPPLE	1
52	XDOZZ	76371	5500678000	UOC:FAV,FAW,FAX ..ADAPTER	1
53	XDOZZ	76371	5400882000	UOC:FAV,FAW,FAX ..NIPPLE	1
54	XDOFF	76371	5500654000	UOC:FAV,FAW,FAX ..DIAPHRAGM ASSY 6 WAY	1
55	PAOZZ	76371	5400821000	UOC:FAV,FAW,FAX ...ADAPTER, STRAIGHT, PI	6

(1) ITEM NO	(2) SMR CODE	(3) CAGEC	(4) PART NUMBER	(5) DESCRIPTION AND USABLE ON CODES(UOC)	(6) QTY
				UOC:FAV,FAW,FAX	
56	XDOZZ	76371	5400751000	...BOLT, HEXAGON HEAD 5/16-18UNC X 1 3/4 IN. L, SS	24
				UOC:FAV,FAW,FAX	
57	XDFZZ	76371	5400750000	. ..WASHER NO. 20	24
				UOC:FAV,FAW,FAX	
58	XDFZZ	76371	5500602000	. ..LID.DIAPHRAGM	6
				UOC:FAV,FAW,FAX	
59	PAFFZ	76371	5500654002	...DIAPHRAGM ASSEMBLY	6
				UOC:FAV,FAW,FAX	
60	XDFZZ	76371	5400757000	...NUT, HEXAGON 1/4-20UNC, BRONZE	1
				UOC:FAV,FAW,FAX	
61	XDFZZ	76371	5400756000	....WASHER NO. 14, BRONZE	1
				UOC:FAV,FAW,FAX	
62	XDFZZ	76371	5500653006	....WASHER,FLAT	1
				UOC:FAV,FAW,FAX	
63	PAFZZ	76371	5500653003	....DIAPHRAGM	1
				UOC:FAV,FAW,FAX	
64	XDFZZ	76371	5500653004	....KEEPER,DIAPHRAGM	1
				UOC:FAV,FAW,FAX	
65	PBFZZ	76371	5500604000	....BODY,VALVE	1
				UOC:FAV,FAW,FAX	
66	PAFZZ	76371	5500653008	....GASKET	1
				UOC:FAV,FAW,FAX	
67	XDFZZ	76371	5400749000	. . ..NUT.HEXAGON 1/4-20 UNC	1
				UOC:FAV,FAW,FAX	
68	XDFZZ	76371	5400754000	....WASHER NO. 14	1
				UOC:FAV,FAW,FAX	
69	XDFZZ	76371	5500653005	....WASHER,FLAT	1
				UOC:FAV,FAW,FAX	
70	PAFZZ	76371	5500653002	....GASKET	1
				UOC:FAV,FAW,FAX	
71	XDFZZ	76371	5500653007	....KEEPER,WASHER	1
				UOC:FAV,FAW,FAX	
72	XDFZZ	76371	5500653001	....SHAFT,VALVE	1
				UOC:FAV,FAW,FAX	
73	PAFZZ	76371	5400753000	....PACKING,PREFORMED	1
				UOC:FAV,FAW,FAX	
74	XDFZZ	76371	5500603000	...VALVE,SEAT	6
				UOC:FAV,FAW,FAX	
75	PAFZZ	76371	5400755000	...PACKING, PREFORMED	6
				UOC:FAV,FAW,FAX	
76	XDFZZ	76371	5400752000	...PLUG,SOCKET 1 1/2 NPT, BRONZE	2
				UOC:FAV,FAW,FAX	
77	XAFZZ	76371	5500605000	...BODY,VALVE	1
				UOC:FAV,FAW,FAX	
78	XDFZZ	76371	5500677000	..ADAPTER	1
				UOC: FAV,FAW,FAX	
79	PAFZZ	97403	13228E8286-5	..COUPLING,PIPE	1
				UOC:FMQ,FMR,FMS	
80	PAFZZ	96906	MS14306-8	..REDUCER,BRASS,2 IN. X 1 1/2 IN	2
				UOC:FMQ,FMR,FMS	
81	XDFZZ	0AK83	9518182201-1	..PIPE SECTION,BRASS,1 1/2 IN NPT X 2.00 IN LG	9
				UOC: FMQ, FMR, FMS	
82	PAFZZ	96906	MS14305-8U	..TEE,PIPE 1 1/2 IN. BRS OR BRZ	4
				UOC:FMQ, FMR, FMS	
83	XDFZZ	0AK83	9518182201-2	..PIPE SECTION,BRASS,1 1/2 IN NPT X 3.00 IN	8

(1) ITEM NO	(2) SMR CODE	(3) CAGEC	(4) PART NUMBER	(5) DESCRIPTION AND USABLE ON CODES(UOC)	(6) QTY
				LG UOC : FMQ, FMR, FMS	
84	XDFZZ	0AK83	9518182201-3	..PIPE SECTION,BRASS,1 1/2 IN NPT X 7.5 IN LG UOC:FMQ,FMR,FMS	2
85	PAFZZ	96906	MS51845-8	..ELBOW,PIPE UOC:FMQ,FMR,FMS	5
86	PAFZZ	39428	4429K218	..UNION,PIPE UOC:FMQ,FMR,FMS	2
87	XDFZZ	0AK83	9518182201-4	..PIPE SECTION,BRASS 1 1/2 IN NPT X 10.00 IN LG UOC:FMQ,FMR,FMS	1
88	XDFZZ	0AK83	9518182201-6	..PIPE SECTION,BRASS,1 1/2 IN NPT X 20.00 IN LG UOC:FMQ,FMR,FMS	1
89	XDFZZ	0AK83	9518182201-5	..PIPE SECTION,BRASS,1 1/2 IN NPT X 11.00 IN LG.. UOC:FMQ,FMR,FMS	1
90	PAFZZ	96906	MS14305-8YC	..COUPLING,PIPE UOC:FMQ,FMR,FMS	
91	PAFZZ	96906	MS14315-22	..BUSHING,PIPE UOC:FMQ,FMR,FMS	2
92	PAFZZ	96906	MS14305-2U	..TEE,PIPE, 1/4 IN. BRS OR BRZ UOC:FMQ,FMR,FMS	1
93	PAFZZ	96906	MS51846-20	..NIPPLE,PIPE,1/4 IN. 7/8 IN. LONG UOC:FMQ,FMR,FMS	1
94	XDFZZ	0AK83	9518182201-7	..PIPE SECTION,BRASS,1 1/2 IN NPT X 1.75 IN LG UOC:FMQ,FMR,FMS	1
95	XDFZZ	0AK83	9518182201-8	..TEE,1 1/2 X 1 1/2 X 1 1/2 IN. NPT WITH HOLE 1/4 NPT UOC:FMQ,FMR,FMS	1
96	XDFZZ	0AK83	9518182201-9	..ELBOW,1 1/2 IN. NPT WITH HOLE 1/4 NPT UOC:FMQ,FMR,FMS	1
97	PBFFF	04816	V42E-0000-00000	..VALVE ASSY UOC:FMQ,FMR,FMS	5
98	PAFZZ	96906	MS51971-1	...NUT,PLAIN,HEXAGON,1/4-20 UOC:FMQ,FMR,FMS	4
99	PAFZZ	96906	MS35307-309	...SCREW,CAP,HEXAGON H,1/4-20 X 1 1/8 UOC:FMQ,FMR,FMS	4
100	XDFZZ	04816	424-C	...CAP,CAST IRON UOC:FMQ,FMR,FMS	1
101	KFFZZ	04816	NUS-0013	.NUT,HEX LOCK,5/16-24 PART OF KIT P/N 424-RA PART OF KIT P/N 424-RB UOC:FMQ,FMR,FMS	1
102	KFFZZ	04816	424-D	...PLATE,DIAPHRAGM,BRASS PART OF KIT P/N 424-RB UOC:FMQ,FMR,FMS	2
103	KFFZZ	04816	424-FB	.DIAPHRAGM, BUNA N/ NYLON PART OF KIT P/N 424-RA PART OF KIT P/N 424-RB UOC:FMQ,FMR,FMS	1
104	KFFZZ	04816	424-R	.GASKET,COPPER PART OF KIT P/N 424-RA PART OF KIT P/N 424-RB UOC:FMQ,FMR,FMS	1
105	KFFZZ	04816	200-GG	...GASKET,COPPER PART OF KIT P/N 424-RA PART OF KIT P/N 424-RB UOC:FMQ,FMR,FMS	1
106	KFFZZ	04816	ORB-110TC	...O-RING, BUNA N PART OF KIT P/N 424-RA PART OF KIT P/N 424-RB	1

(1) ITEM NO	(2) SMR CODE	(3) CAGEC	(4) PART NUMBER	(5) DESCRIPTION AND USABLE ON CODES(UOC)	(6) QTY
				UOC:FMQ,FMR,FMS	
107	KFFZZ	04816	424-GO	. . . O-RING RETAINER, BRASS PART OF KIT P/N 424-RB	1
				UOC:FMQ,FMR,FMS	
108	KFFZZ	04816	ORB-132	...RETAINER, PACKING PART OF KIT P/N 424-RA PART OF KIT P/N 424-RB	1
				UOC:FMQ,FMR,FMS	
109	KFFZZ	04816	NUS-0010	...NUT,PLAIN HEXAGON,1/4-28 PART OF KIT P/N 424-RA PART OF KIT P/N 424-RB	1
				UOC:FMQ,FMR,FMS	
110	KFFZZ	04816	424-K	...PLATE,DISC,FORGED BRASS PART OF KIT P/N 424-RB	1
				UOC:FMQ,FMR,FMS	
111	KFFZZ	04816	424-J	...DISC, BUNA N PART OF KIT P/N 424-RA PART OF KIT 424-RB	1
				UOC:FMQ,FMR,FMS	
112	KFFZZ	04816	424-H	...DISC HOLDER, BRASS PART OF KIT P/N 424-RB	1
				UOC:FMQ,FMR,FMS	
113	KFFZZ	04816	424-L	...SHAFT PART OF KIT P/N 424-RB	1
				UOC:FMQ,FMR,FMS	
114	XDFZZ	04816	424-MO	...SEAT,CAST BRASS	1
				UOC:FMQ,FMR,FMS	
115	KFFZZ	04816	ORB-029	...O-RING, BUNA N PART OF KIT P/N 424-RA PART OF KIT P/N 424-RB	1
				UOC:FMQ,FMR,FMS	
116	XDFZZ	04816	424-AB6	...BODY, CAST BRASS, 1 1/2 IN. NPT	1
				UOC:FMQ,FMR,FMS	
	PAFZZ	04816	424-RA	..KIT,DIAPHRAGM & SEALS	1
				UOC:FMQ,FMR,FMS	
				DIAPHRAGM (1) 83-103	
				DISC, BUNA N (1) 83-111	
				GASKET,COPPER (1) 83-104	
				GASKET,COPPER (1) 83-105	
				NUT,HEX LOCK (4) 83-101	
				NUT,HEX LOCK (1) 83-109	
				O-RING, BUNA N (1) 83-106	
				O-RING, BUNA N (1) 83-108	
				O-RING, BUNA N (1) 83-115	
				PLATE,DIAPHRAGM (1) 83-102	
	PAFZZ	04816	424-RB	..PARTS KIT,INTERNAL	1
				UOC:FMQ,FMR,FMS	
				DIAPHRAGM (1) 83-103	
				DISC, BUNA N (1) 83-111	
				DISC HOLDER,BRASS (1) 83-112	
				GASKET,COPPER (1) 83-104	
				GASKET,COPPER (1) 83-105	
				NUT,HEX LOCK (4) 83-101	
				NUT,HEX LOCK (1) 83-109	
				O-RING, BUNA N (1) 83-106	
				O-RING, BUNA N (1) 83-108	
				O-RING, BUNA N (1) 83-115	
				O-RING RETAINER,BRASS (1) 83-107	
				PLATE,DIAPHRAGM (1) 83-102	
				PLATE,DISC,FORGED BRASS (1) 83-110	
				SHAFT (1) 83-113	

END OF FIGURE

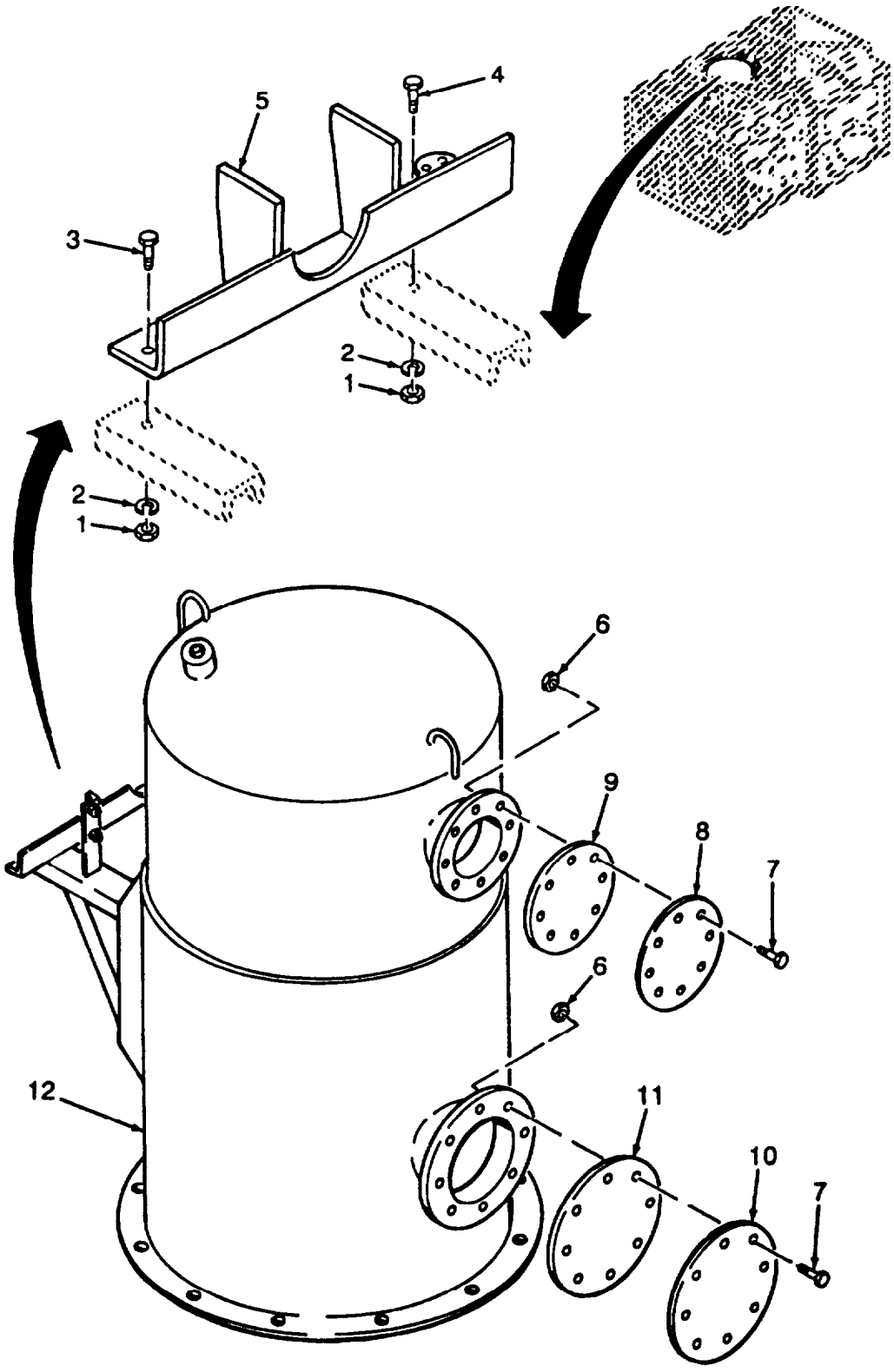

Figure 84. Multimedia Filter Tank Assembly (Sheet 1 of 2)
(Models WPES-10, WPES-20 and WPES-30)

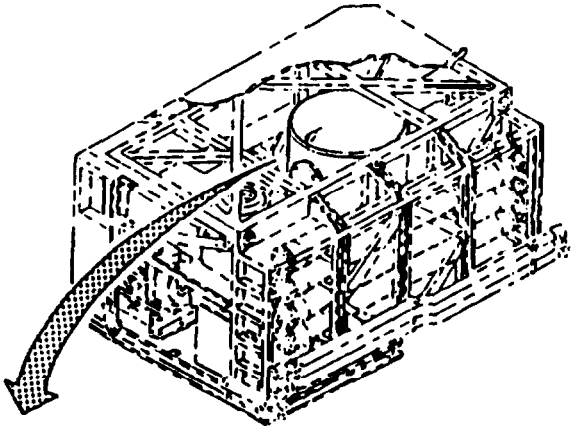

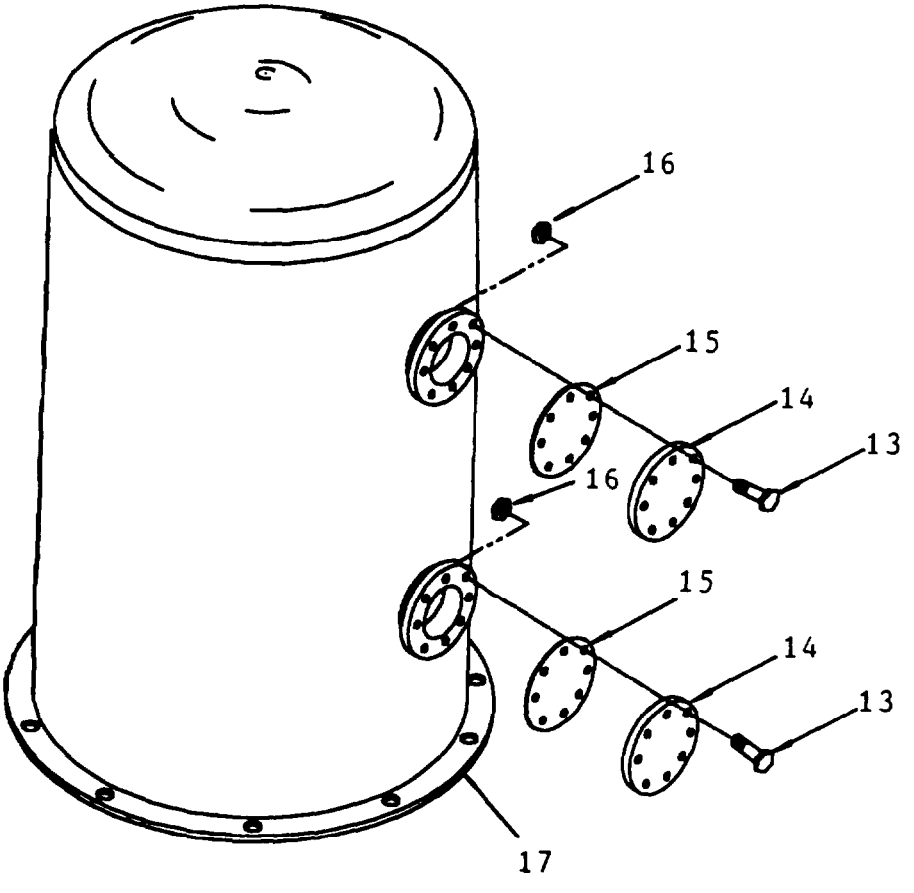

Figure 84. Multimedia Filter Tank Assembly (Sheet 2 of 2)
Models H-9518-1, H-9518-2, and H-9518-3 only

(1) ITEM NO	(2) SMR CODE	(3) CAGEC	(4) PART NUMBER	(5) DESCRIPTION AND USABLE ON CODES(UOC)	(6) QTY
				GROUP 12 REVERSE OSMOSIS WATER PURIFICATION UNIT 600 GPH	
				FIG. 84 MULTIMEDIA FILTER TANK ASSEMBLY	
1	XDFZZ	76371	5400648000	..NUT UOC:FAV,FAW,FAX	2
2	XDFZZ	76371	5400649000	..WASHER,LOCK UOC:FAV,FAW,FAX	2
3	XDFZZ	76371	5400885000	..SCREW UOC:FAV,FAW,FAX	1
4	XDFZZ	76371	5400647000	..SCREW UOC:FAV,FAW,FAX	1
5	XDFZZ	76371	5500675000	..BRACKET UOC:FAV,FAW,FAX	1
6	XDOZZ	76371	5400788000	..NUT, PLAIN, HEXAGON UOC:FAV,FAW,FAX	16
7	XDOZZ	76371	5400785000	..SCREW,CAP,HEXAGON H UOC:FAV,FAW,FAX	16
8	XDOZZ	76371	5500619000	..COVER,TOP UOC:FAV,FAW,FAX	1
9	PAOZZ	76371	5400690000	..GASKET UOC:FAV,FAW,FAX	1
10	XDFZZ	76371	5500620000	..COVER,BOTTOM UOC:FAV,FAW,FAX	1
11	PAFZZ	76371	5400691000	..GASKET UOC:FAV,FAW,FAX	1
12	XAFZZ	76371	5500601000	..TANK,FILTER UOC:FAV,FAW,FAX	1
13	PAOZZ	96906	MS90725-193	..SCREW,CAP,HEXAGON H 3/4 UNC X 1.5 IN LG UOC:FMQ,FMR,FMS	16
14	XDOZZ	0AK83	9518182201-10	..COVER,FLANGE 6 IN. NPT NOMINAL SIZE 150 LB. UOC:FMQ,FMR,FMS	2
15	XDOZZ	0AK83	9518182208	..GASKET,FLANGE 6 IN. POLY-PRO FULL FACE UOC:FMQ,FMR,FMS	2
16	PAOZZ	96906	MS51967-23	..NUT,PLAIN HEX H UOC:FMQ,FMR,FMS	16
17	XAFZZ	0AK83	95181822	..TANK,FILTER UOC:FMQ,FMR,FMS	1

END OF FIGURE

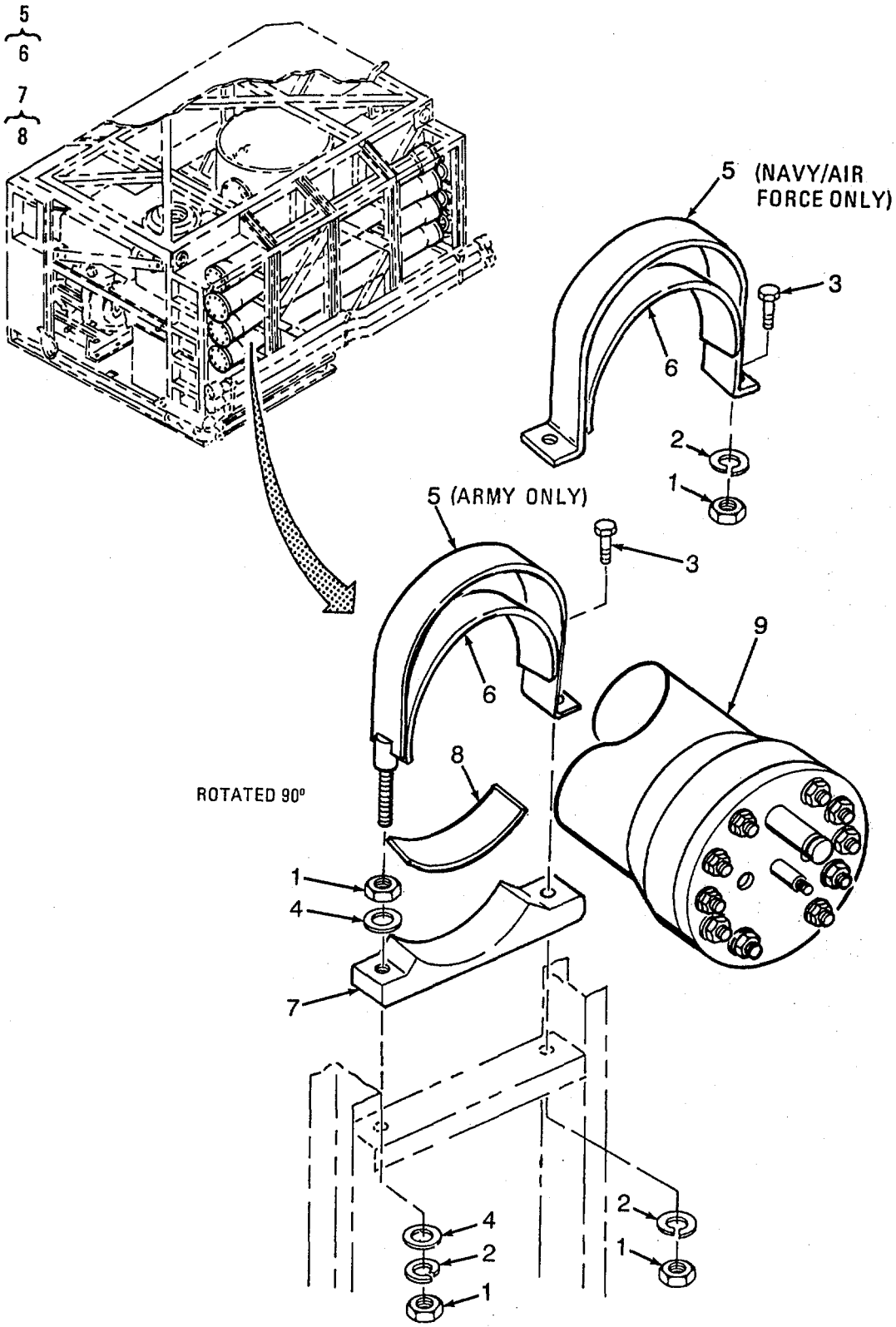

Figure 85. R.O. Pressure Tubes (Sheet 1 of 2)

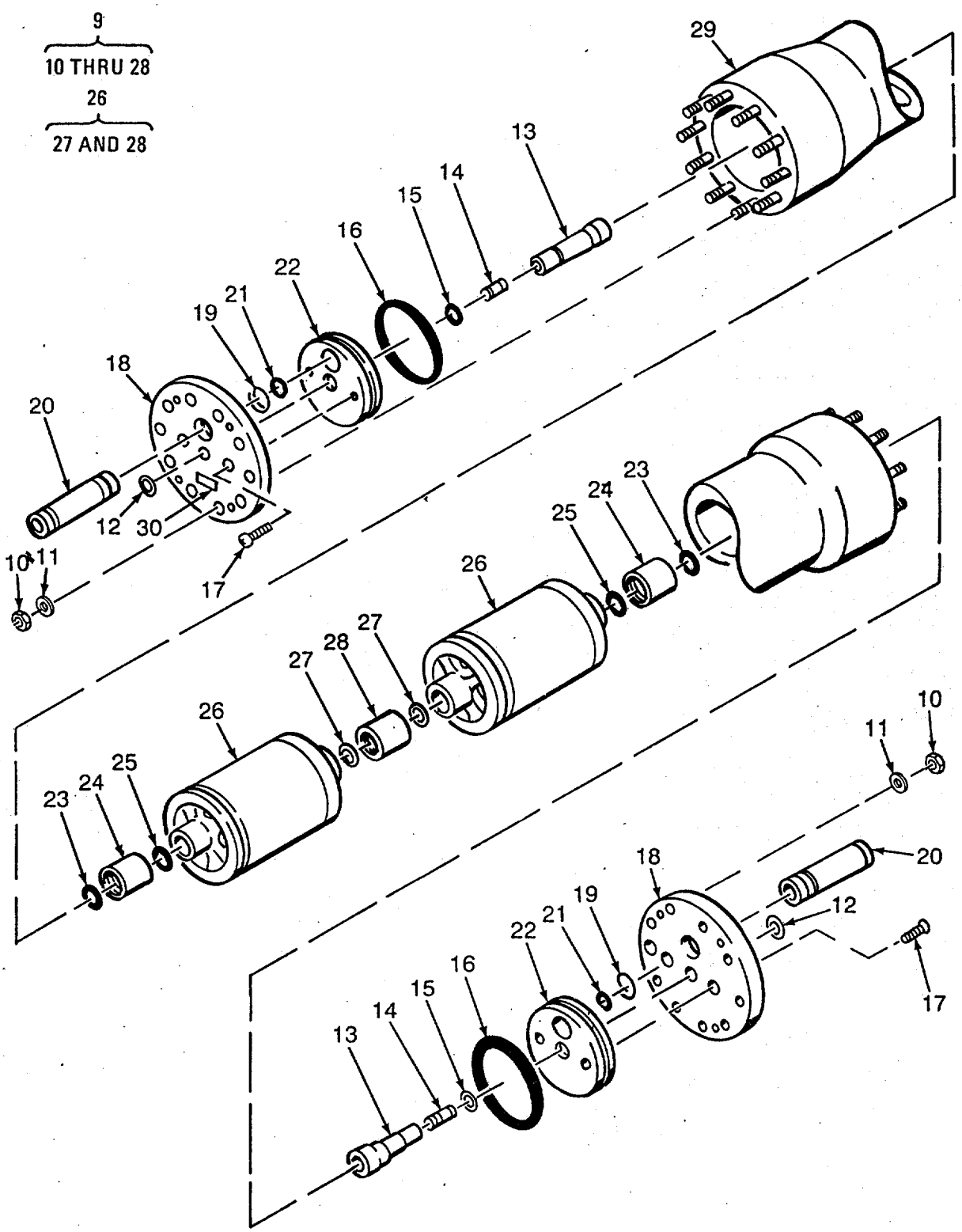

Figure 85. R.O. Pressure Tubes (Sheet 2 of 2)

(1) ITEM NO	(2) SMR CODE	(3) CAGEC	(4) PART NUMBER	(5) DESCRIPTION AND USABLE ON CODES(UOC)	(6) QTY
				GROUP 12 REVERSE OSMOSIS WATER PURIFICATION UNIT 600 GPH	
				FIG. 85 R.O. PRESSURE TUBES	
1	PAOZZ	96906	MS51971-3	.NUT, PLAIN, HEXAGON UOC:FAV	24
1	PAOZZ	96906	MS51971-3	.NUT, PLAIN, HEXAGON UOC,FAW, FAX	16
2	PAOZZ	96906	MS35338-141	.WASHER, LOCK	16
3	PAOZZ	96906	MS35307-365	.SCREW, CAP, HEXAGON H. UOC,FAV	8
3	PAOZZ	96906	MS35307-365	.SCREW, CAP, HEXAGON H. UOC,FAW, FAX	16
4	PAOZZ	96906	MS15795-813	.WASHER, FLAT UOC,FAV	16
5	XDOOZ	97403	13221E8377	.CLAMP, PRESSURE TUBE UOC,FAV	8
5	XDOOO	97403	13222E5323	.CLAMP, R.O. VESSEL UOC,FAW, FAX	8
6	MOOZZ	97403	13221E8377-3	..GASKET.RUBBER, SYNTH MAKE FROM BULK P/N MIL-R-6855, CL2, TYA, GR5O, 0.125 STOCK UOC:FAV	1
6	MOOZZ	97403	13222E5323-2	..GASKET, RUBBER, SYNTH MAKE FROM BULK P/N MIL-R-6855, CL2, TYA, GRSO, 0.125 STOCK UOC,FAW, FAX	1
7	XDOZZ	97403	13222E5321	.BASE, RO VESSEL	8
8	MOOZZ	97403	13222E5321-2	..GASKET, RUBBER, SYNTH MAKE FROM BULK P/N MIL-R-6855, CL2, TYA, , GRSO, 0.250 STOCK	1
9	PDOOO	64382	006004-1	.FILTER ASSEMBLY, FLU	4
10	PAOZZ	64382	6CN002-1	..NUT	20
11	PAOZZ	64382	6CN003-1	..WASHER	20
12	PAOZZ	80756	RSN-87SP	..RING, RETAINING	2
13	XDOZZ	64382	406004-1	..PORT	2
14	PAOZZ	97403	13228E3312-13	..ADAPTER 112 NPT TO 112 IN. HOSE	2
15	PAOZA	02697	2-217E540-80	..PACKING, PREFORMED PERMEATE PORT SEAL	2
16	PAOZZ	02697	2-358-E540-80	..PACKING, PREFORMED HEAD SEAL	2
17	PAOZZ	64382	6CFOOS-1	..SCREW, CAP, SOCKET HE	4
18	PBOZZ	64382	406001-1	..PLATE, END	2
19	PAOZZ	80756	RSN-131SP	..RING, RETAINING	2
20	XDOZZ	64382	406003-1	..PORT, FEED/CONC	2
21	PAOZA	02697	2-219-E540-80	..PACKING, PREFORMED FEED/ CONCENTRATE PORT SEAL	2
22	PBOZZ	64382	406002-2	..PLATE, SEALING	2
23	PAOZZ	64382	406012-1	..PACKING, PREFORMED HUB SEAL, RED	2
24	PAOZZ	64382	406006-2	..CONNECTOR, END	2
25	PAOZA	02697	2-222-E540-80	..PACKING, PREFORMED PWT SEAL	2
26	PAOZZ	97403	13226E2212	..FILTER UNIT, WATER P	2

(1) ITEM NO	(2) SMR CODE	(3) CAGEC	(4) PART NUMBER	(5) DESCRIPTION AND USABLE ON CODES(UOC)	(6) QTY
27	PAOZA	02697	2-222-E540-80	...PACKING,PREFORMED.....	2
28	PAOZZ	59112	22-178-2 AND 10-0504(2EA)	...INTERCONNECTOR.....	1
29	XDOZZ	64382	106001-2	..VESSEL,HP	1
30	XDOZZ	64382	406008-1	..DECAL	2

END OF FIGURE

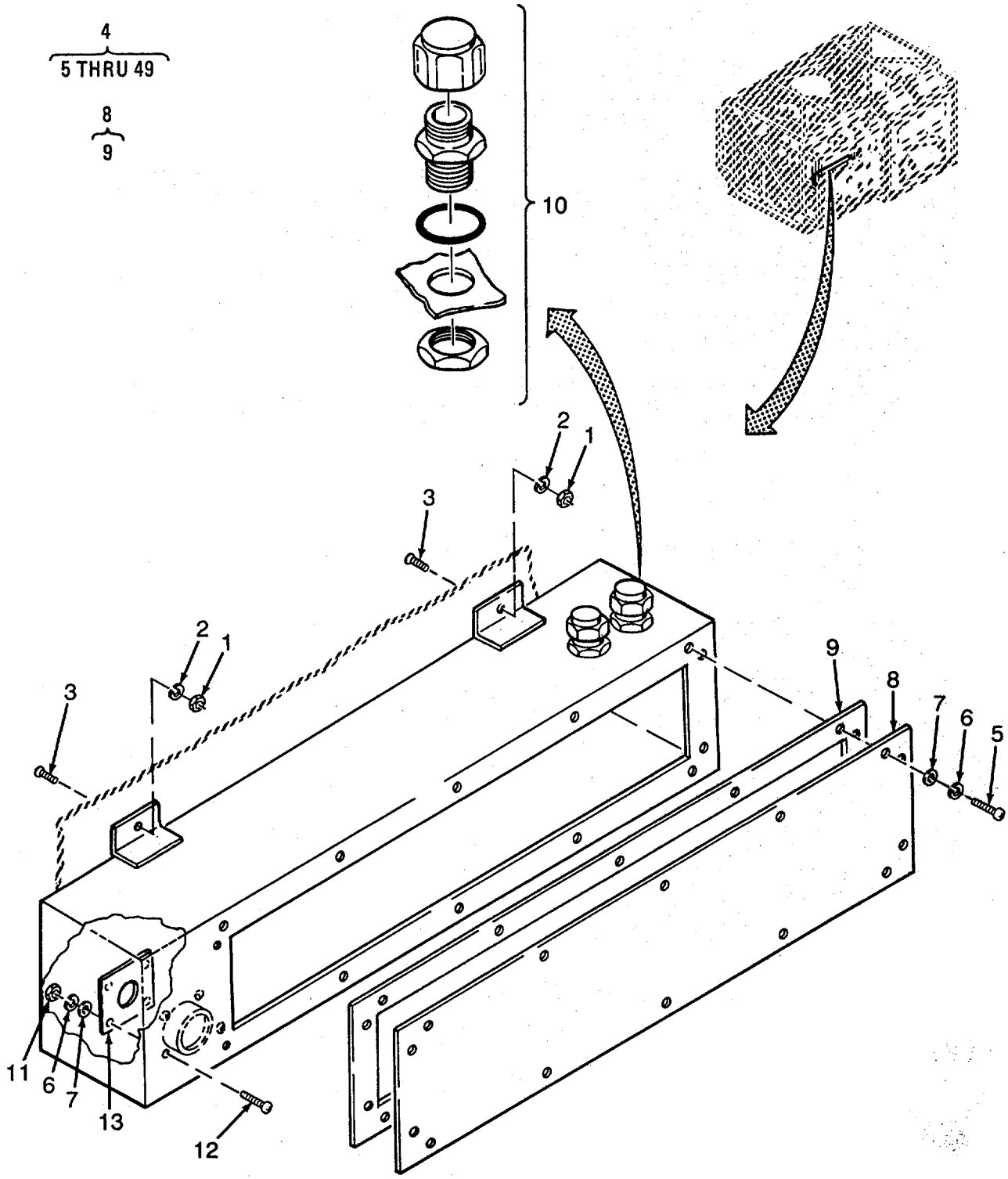

Figure 86. Control Box Assembly (Sheet 1 of 4)

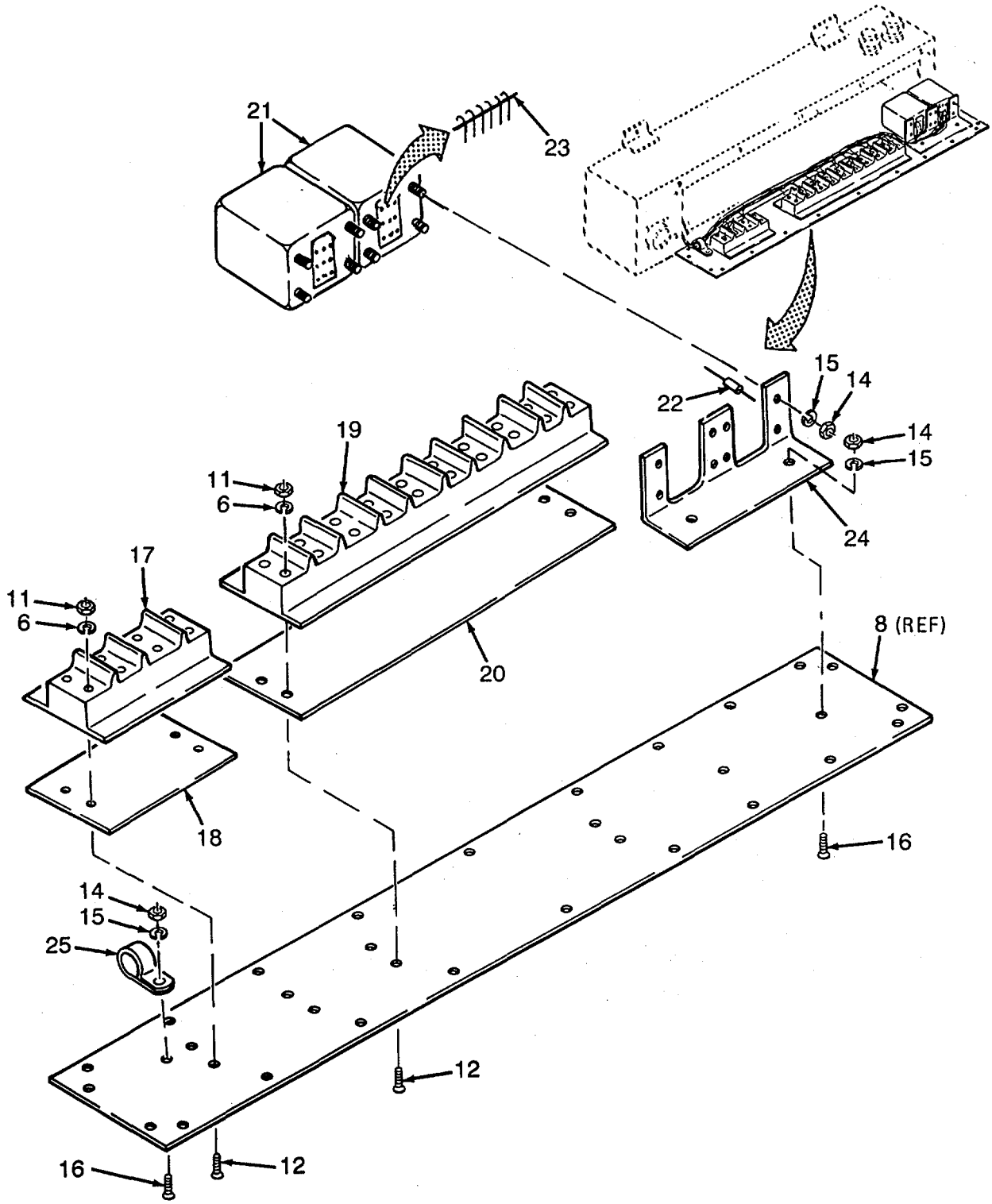

Figure 86. Control Box Assembly (Sheet 2 of 4)

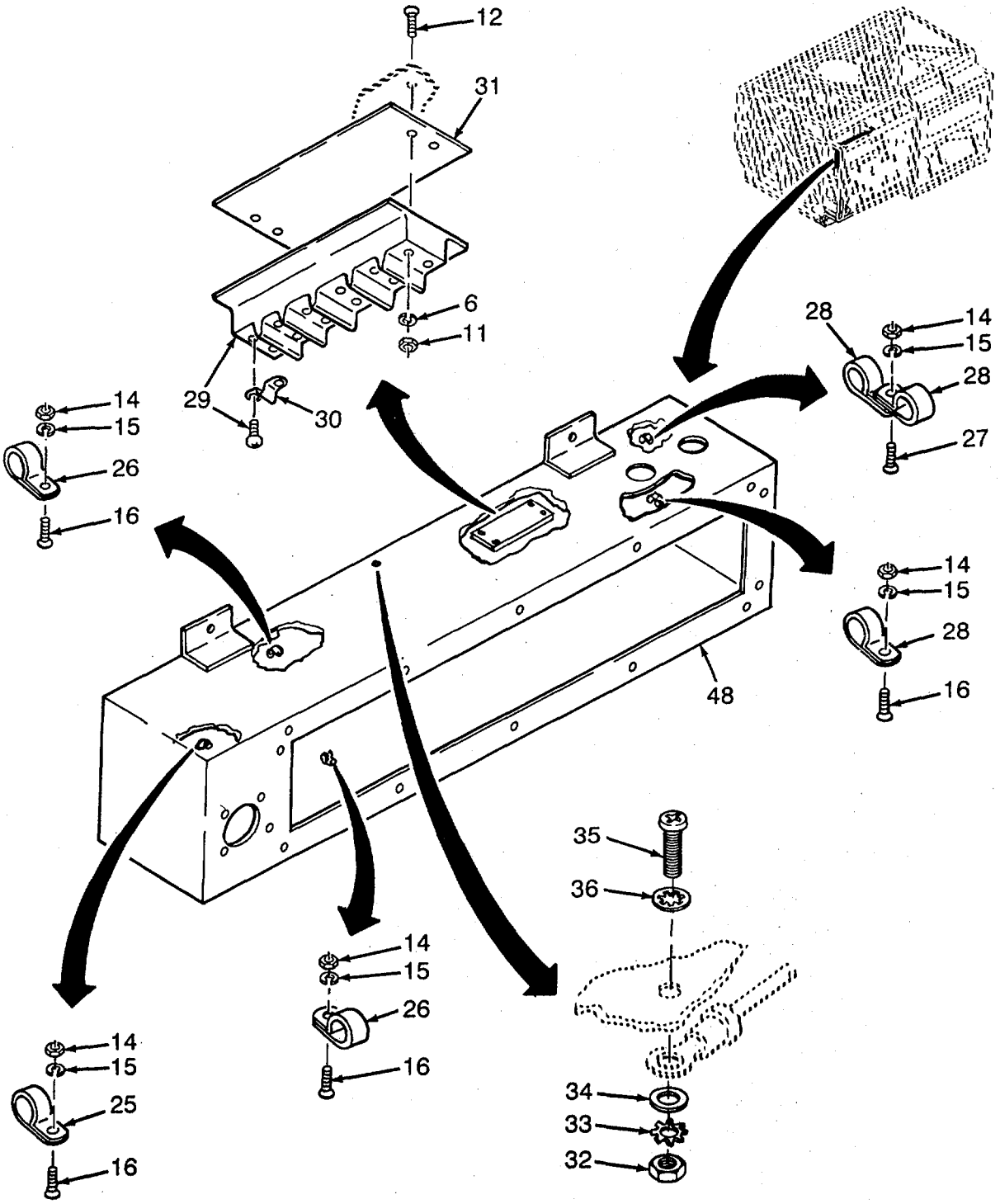

Figure 86. Control Box Assembly (Sheet 3 of 4)

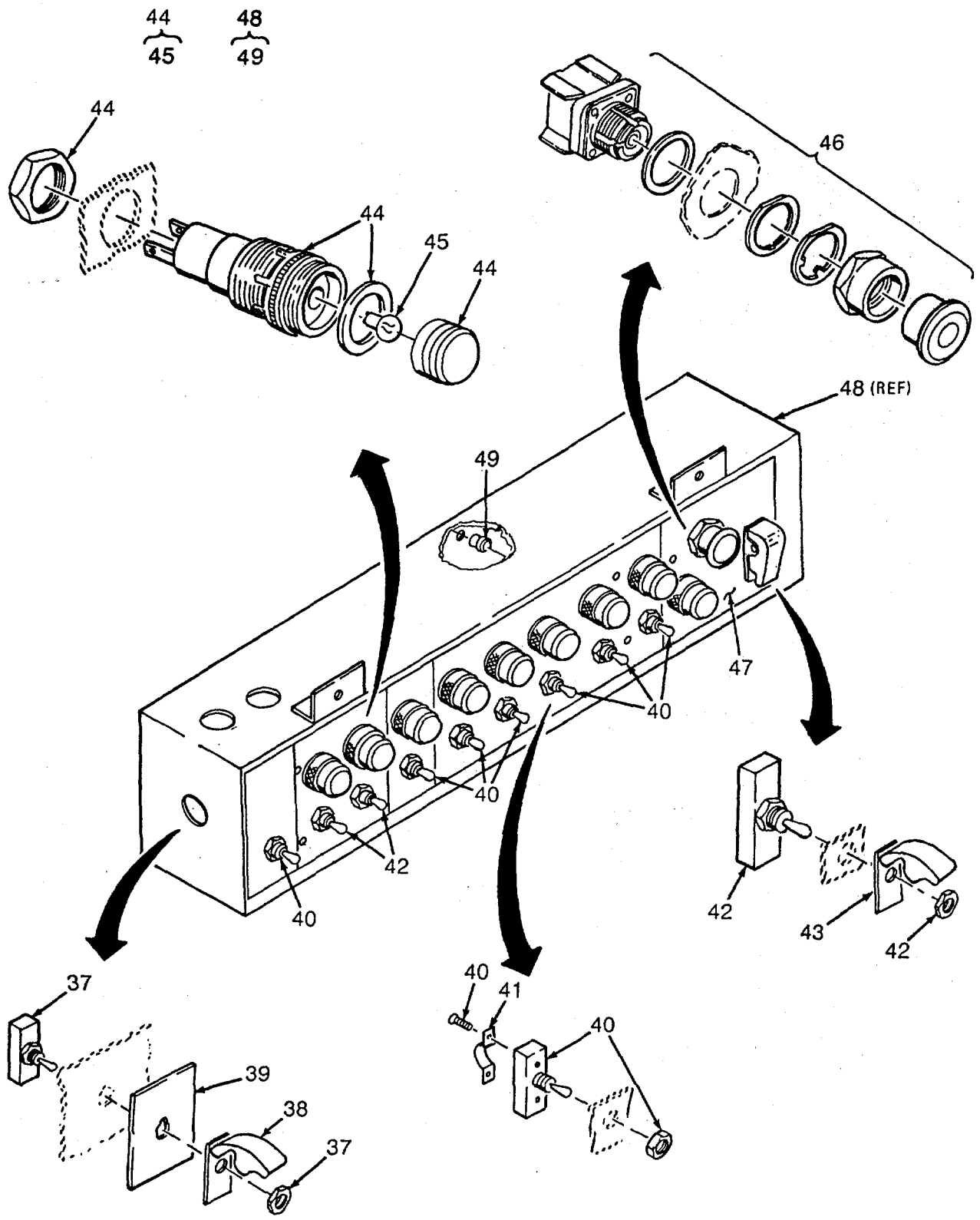

Figure 86. Control Box Assembly (Sheet 4 of 4)

(1) ITEM NO	(2) SMR CODE	(3) CAGEC	(4) PART NUMBER	(5) DESCRIPTION AND USABLE ON CODES(UOC)	(6) QTY
				GROUP 12 REVERSE OSMOSIS WATER PURIFICATION UNIT 600 GPH	
				FIG. 86 CONTROL BOX ASSEMBLY	
1	PAFZZ	96906	MS35649-204	.NUT, PLAIN, HEXAGON	4
2	PAFZZ	96906	MS35338-138	.WASHER, LOCK	4
3	PAFZZ	96906	MS51957-64	.SCREW, MACHINE	4
4	XDFFF	97403	13222E5340	.BOX ASSY, CONTROL	1
5	PAFZZ	96906	MS51957-46	.SCREW, MACHINE	14
6	PAFZZ	96906	MS35338-137	.WASHER, LOCK	30
7	PAFZZ	96906	MS15795-807	.WASHER, FLAT	18
8	XDFFF	97403	13222E5342	.COVER	1
9	MFFZZ	19099	13222E5342-2	...GASKET, RUBBER, SYNTH MAKE FROM BULK P/N MIL-R-6855, CL2, TYA, GRSO, 0.062 STOCK	1
10	PAFZZ	97403	13226E2205-5	..GRIP, SEALING, CABLE	2
11	PAFZZ	96906	MS35649-284	..NUT, PLAIN, HEXAGON	16
12	PAFZZ	96906	MS3212-29	..SCREW, MACHINE	16
13	PAFZZ	96906	MS51007-12	..GASKET	1
14	PAFZZ	96906	MS35649-204	..NUT, PLAIN, HEXAGON	9
15	PAFZZ	96906	MS35338-138	..WASHER, LOCK	9
16	PAFZZ	96906	MS3212-43	..SCREW, MACHINE	8
17	XDFZZ	81349	38TB2	..TERMINAL BOARD	1
18	XDFZZ	97403	13222E5315-7	..STRIP, MARKER	1
21	PAFZZ	96906	MS25269-A1	..RELAY, ELECTROMAGNET K10 AND K11	2
22	MFFZZ	97403	13222E5340-51	..SLEEVING, INSULATION MAKE FROM BULK P/N M23053/5-105-0, BLACK	1
23	MFFZZ	97403	13222E5340-48	..WIRE, ELECTRICAL MAKE FROM BULK P/N QQW343S20SIT	2
24	XDFZZ	97403	13226E8341	..BRACKET, RELAY	1
25	PAFZZ	96906	MS21333-73	..CLAMP, LOOP	3
26	PAFZZ	96906	MS21333-71	..CLAMP, LOOP	2
27	PAFZZ	96906	MS3212-44	..SCREW, MACHINE	1
28	PAFZZ	96906	MS21333-68	..CLAMP, LOOP	3
29	XDFZZ	81349	38TB12	..TERMINAL BOARD	1
30	XDFZZ	97403	13220E3966-1	..LINK, TERMINAL	6
31	XDFZZ	97403	13222ES315-1	..STRIP, MARKER	1
32	PAFZZ	96906	MS35649-264	..NUT, PLAIN, HEXAGON	1
33	PAFZZ	96906	MS35338-136	..SCREW, MACHINE	1
36	PAFZZ	96906	MS35333-105	..WASHER, LOCK	1
37	PAFZZ	96906	MS27406-2	..SWITCH, TOGGLE	1
38	PAFZZ	96906	MS25225-3	..GUARD, SWITCH	1
39	XDFZZ	97403	13221E8293	..PLATE, INFORMATION ELEMENT CLEANING SWITCH	1
40	PAFZZ	96906	MS27407-5	..SWITCH, TOGGLE.	7
41	PBFZZ	97403	13229E6048	..LINK, TERMINAL	7
42	PAFZZ	96906	MS24523-32	..SWITCH, TOGGLE	1

(1) ITEM NO	(2) SMR CODE	(3) CAGEC	(4) PART NUMBER	(5) DESCRIPTION AND USABLE ON CODES(UOC)	(6) QTY
43	PAFZZ	96906	MS25225-1	..GUARD, SWITCH	1
44	PAFZZ	22973	830-701-IE	..LIGHT, INDICATOR I.R SECURE	9
45	PAOZZ	96906	MS15567-2	...LAMP, INCANDESCENT	1
46	PAFZZ	97403	13222E5313	..SWITCH, PUSH-PULL EMERGENCY STOP	1
47	XDFZZ	97403	13222E5339	..PLATE, INFORMATION	1
48	XDFFF	97403	13222E5341	..CONTROL BOX	1
49	PAFZZ	80205	NAS1330C08B106	..NUT, PLAIN, BLIND RIV	14

END OF FIGURE

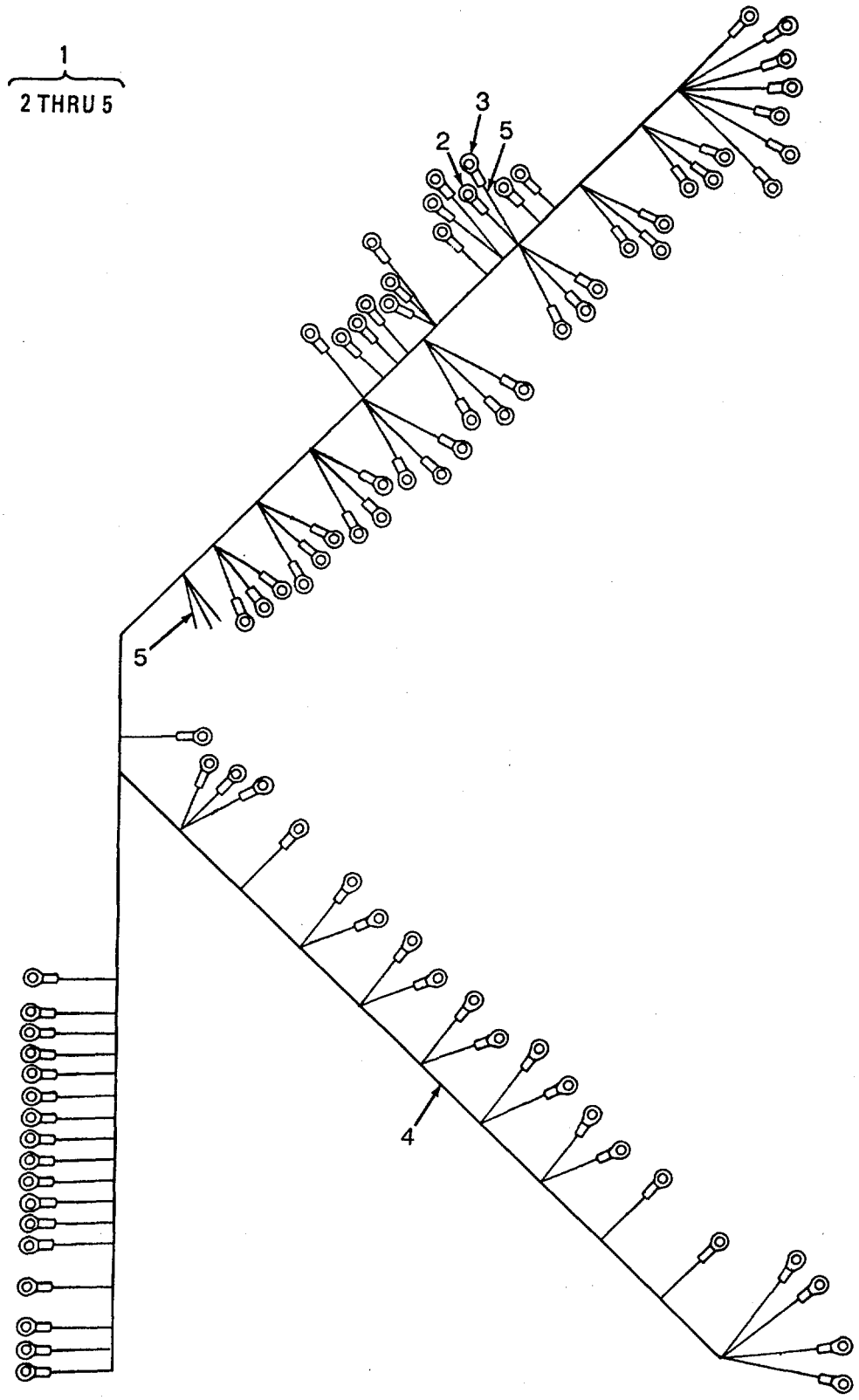

Figure 87. Control Box Wiring Harness W1

(1) ITEM NO	(2) SMR CODE	(3) CAGEC	(4) PART NUMBER	(5) DESCRIPTION AND USABLE ON CODES(UOC)	(6) QTY
				GROUP 12 REVERSE OSMOSIS WATER PURIFICATION UNIT 600 GPH	
				FIG. 87 CONTROL BOX WIRING HARNESS W1	
1	AFFFF	97403	13222E5344	..WIRING HARNESS W1	1
2	PAFZZ	96906	MS25036-106	...TERMINAL, LUG ALL TERMINATION..... POINTS EXCEPT S13-1, -2, AND TBS-7	84
3	PAFZZ	81349	M7928/2-39	...TERMINAL, LUG AT TERMINATION TB5-..... 7 ONLY	1
4	MFFZZ	97403	13222E5344-2	...WIRE, ELECTRICAL ALL WIRE RUNS..... EXCEPT S13-1 TO TB5-7, MAKE FROM BULK P/N M5086/1-16-9	V
5	MFFZZ	97403	13222E5344-1	...WIRE, ELECTRICAL S13-1 TO TB5-7 ..... ONLY, MAKE FROM BULK P/N M5086/1-12-9.....	V

END OF FIGURE

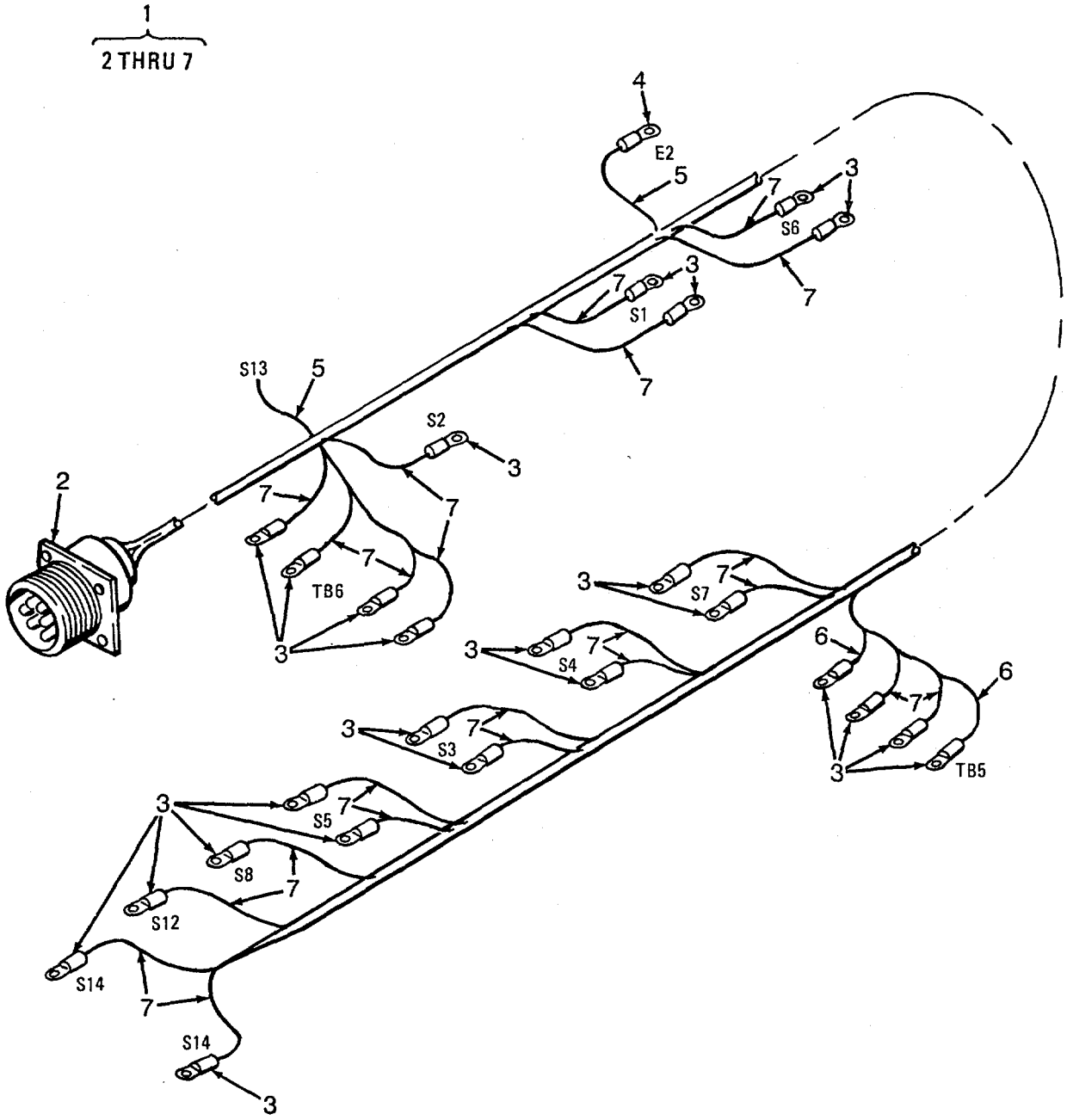

Figure 88. Control Box Wiring Harness W2

(1) ITEM NO	(2) SMR CODE	(3) CAGEC	(4) PART NUMBER	(5) DESCRIPTION AND USABLE ON CODES(UOC)	(6) QTY
				GROUP 12 REVERSE OSMOSIS WATER PURIFICATION UNIT 600 GPH	
				FIG. 88 CONTROL BOX WIRING HARNESS W2	
1	XDFFF	97403	13222E5287	..WIRING HARNESS W2	1
2	PAFZZ	96906	MS3102R32-7P	...CONNECTOR, RECEPTACL J9.....	1
3	PAFZZ	96906	MS25036-106	...TERMINAL, LUG	25
4	PAFZZ	96906	MS25036-111	...TERMINAL, LUG	1
	5MFFZZ	97403	13222E5287-2	...WIRE, ELECTRICAL MAKE FROM BULK..... P/N M5086/1-12-9	V
6	MFFZZ	97403	13222E5287-3	...WIRE, ELECTRICAL MAKE FROM BULK..... P/N M5086/1-14-9	V
7	MFFZZ	97403	13222E5287-4	...WIRE, ELECTRICAL MAKE FROM BULK..... P/N M5086/1-16-9	V

END OF FIGURE

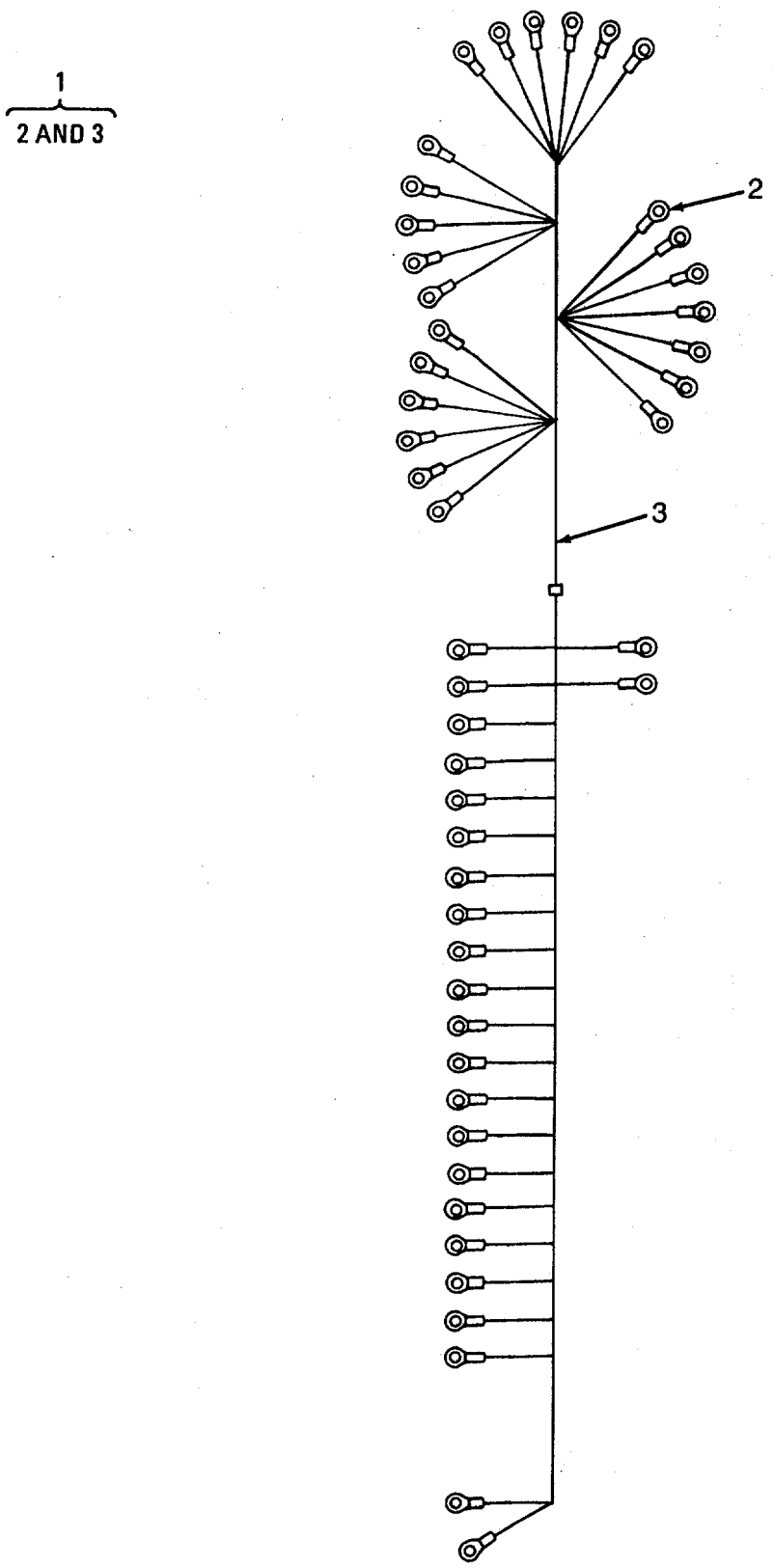

Figure 89. Control Box Wiring Harness W58

(1) ITEM NO	(2) SMR CODE	(3) CAGEC	(4) PART NUMBER	(5) DESCRIPTION AND USABLE ON CODES(UOC)	(6) QTY
				GROUP 12 REVERSE OSMOSIS WATER PURIFICATION UNIT 600 GPH	
				FIG. 89 CONTROL BOX WIRING HARNESS W58	
1	AFFFF	97403	13226E8340	..WIRING HARNESS W58	1
2	PAFZZ	96906	MS25036-101	...TERMINAL,LUG	48
3	MFFZZ	97403	13226E8340-1	...WIRE,ELECTRICAL MAKE FROM BULK..... V P/N M5086/1-20-9	

END OF FIGURE

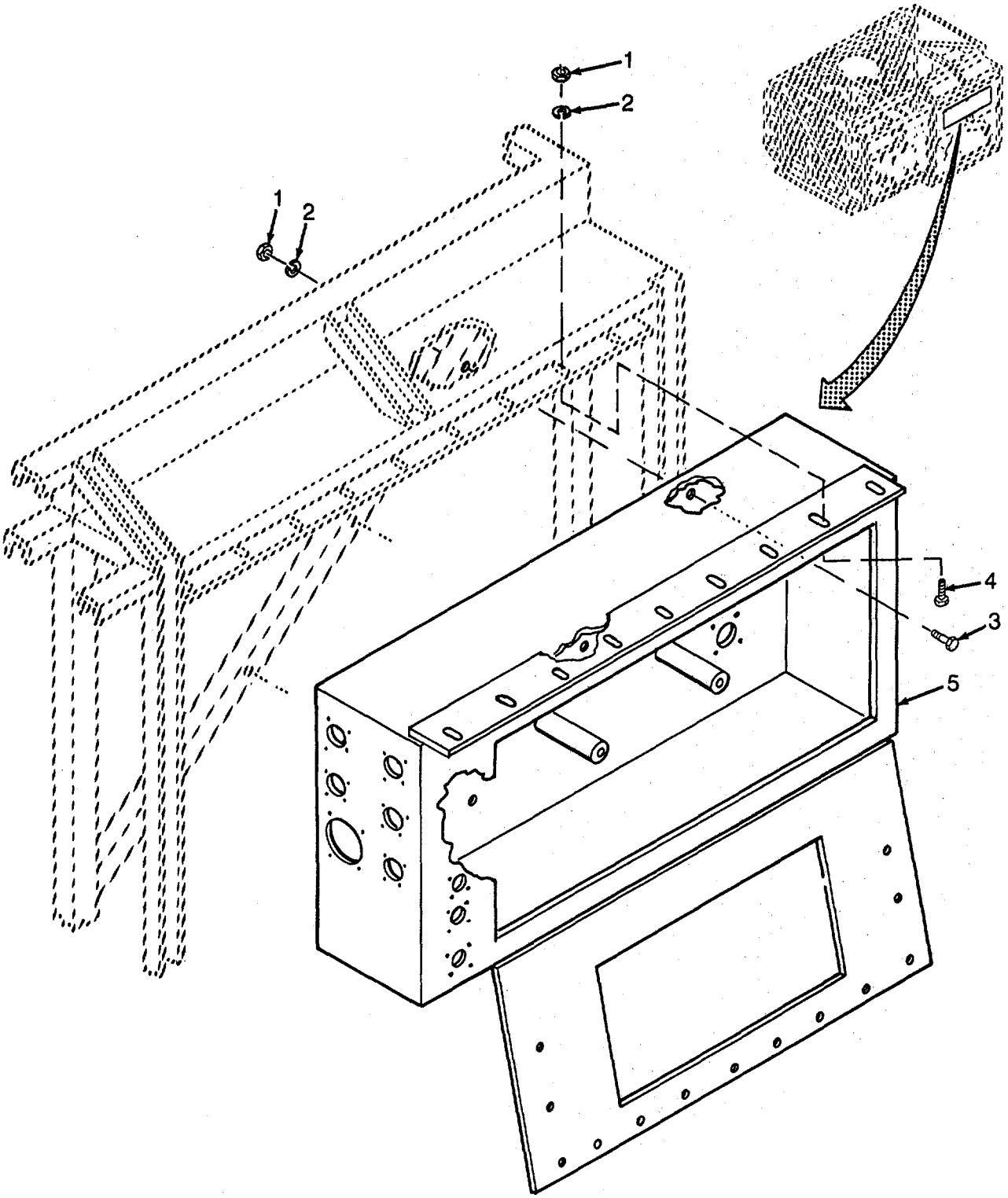

Figure 90. Junction Box

(1) ITEM NO	(2) SMR CODE	(3) CAGEC	(4) PART NUMBER	(5) DESCRIPTION AND USABLE ON CODES(UOC)	(6) QTY
				GROUP 12 REVERSE OSMOSIS WATER PURIFICATION UNIT 600 GPH	
				FIG. 90 JUNCTION BOX	
1	PAFZZ	96906	MS51971-1	.NUT,PLAIN,HEXAGON	12
2	PAFZZ	96906	MS35338-139	.WASHER,LOCK	12
3	PAFZZ	96906	MS35307-308	.SCREW,CAP,HEXAGON H UOC:FAV,FAX,FMQ,FMS	3
4	PAFZZ	96906	MS35307-306	.SCREW, CAP, HEXAGON H UOC:FAV,FAX,FMQ,FMS	9
4	PAFZZ	96906	MS35307-306	.SCREW,CAP, HEXAGON H UOC:FAW,FMR	12
5	XDFFF	97403	1322235300	.BOX ASSY,JUNCTION UOC:FAV,FAX,FMQ,FMS	1
5	XDFFF	97403	1322739230	.BOX ASSY,JUNCTION UOC:FAW,FMR	1

END OF FIGURE

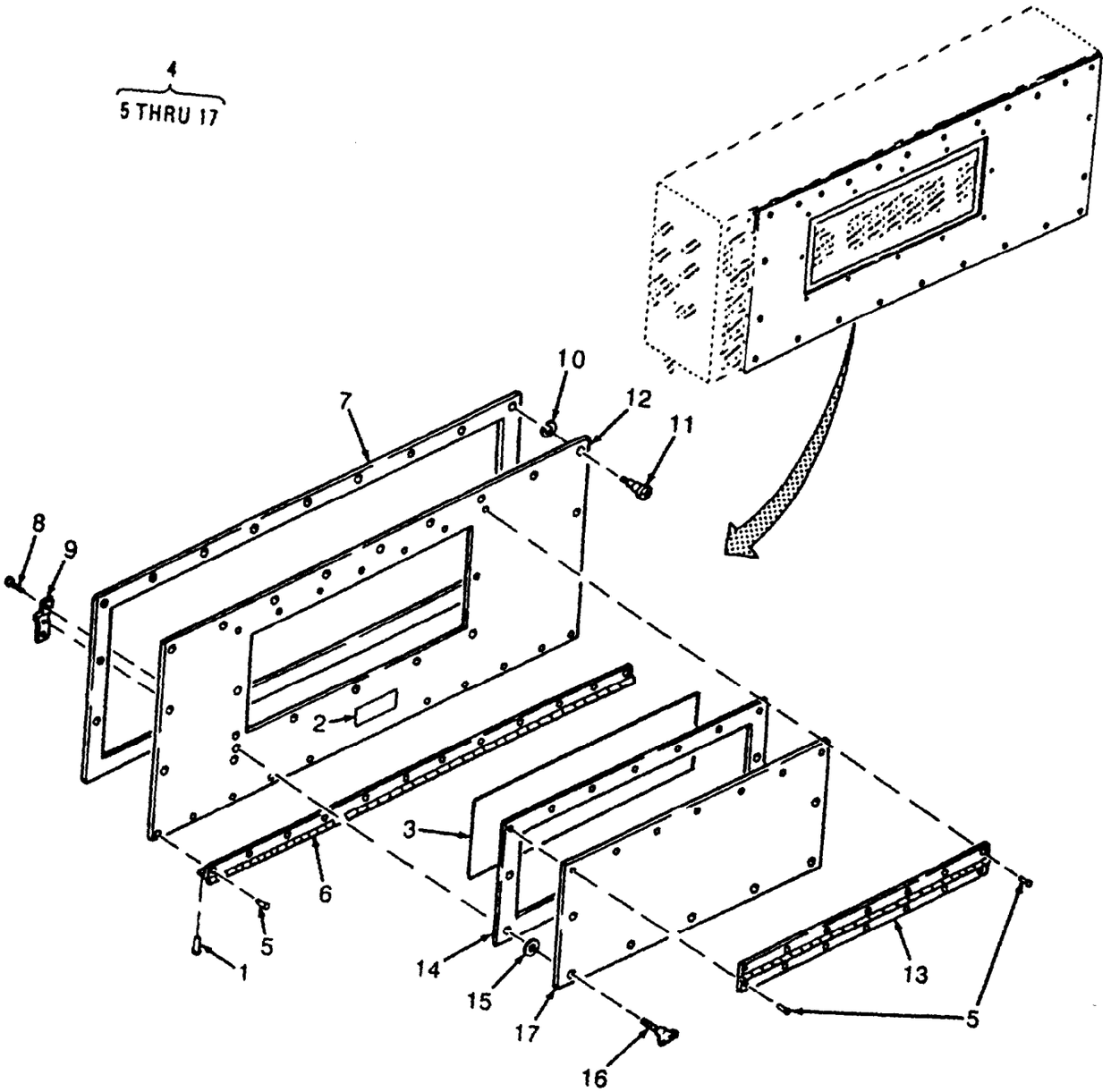

Figure 91. Junction Box Cover Assembly

(1) ITEM NO	(2) SMR CODE	(3) CAGEC	(4) PART NUMBER	(5) DESCRIPTION AND USABLE ON CODES(UOC)	(6) QTY
				GROUP 12 REVERSE OSMOSIS WATER PURIFICATION UNIT 600 GPH	
				FIG. 91 JUNCTION BOX COVER ASSEMBLY	
1	PAOZZ	96906	MS20470B3-5	..RIVET,SOLID	12
2	XDOZZ	97403	13221E8305	..PLATE,INFORMATION WARNING	1
3	XDOZZ	97403	13221E8273	..PLATE,INFORMATION INTERCONNECTION DIAGRAM UOC: FAV,FAX,FMQ,FMS	1
3	XDOZZ	97403	1322739236	..PLATE,INFORMATION INTERCONNECTION DIAGRAM UOC: FAW,FMR	1
4	XDOOO	97403	1322235306	..COVER,JUNCTION BOX	1
5	PAOZZ	96906	MS20426B3-5	..RIVET,SOLID	26
6	MOOZZ	19099	1322235306-5	...HINGE MAKE FROM BULK P/N MS35826-12A	1
7	MOOZZ	19099	1322235306-3	.GASKET,RUBBER,SYNTH MAKE FROM BULK P/N MIL-R-6855, CL2, TYA, GR30, 0.062 STOCK	1
8	PAOZZ	96906	MS20426B4-5	...RIVET,SOLID	14
9	PAOZZ	97403	13217EU518-2	...NUT,SHEET SPRING	7
10	PAOZZ	96906	MS16624-4037	..RING,RETAINING	13
11	PAOZZ	97403	13226E2211-1	...STUD,TURNLOCK FASTE	13
12	XDOZZ	97403	13222E5306-1	...SHEET,COVER	1
13	MOOZZ	19099	1322235306-7	..HINGE MAKE FROM BULK P/N MS35822-12A	1
14	MOOZZ	19099	1322235306-12	...GASKET, RUBBER, SYNTH MAKE FROM BULK P/N MIL-R-6855 CL2 TYA, GR30, 0.062 STOCK	1
15	PAOZZ	97403	13217E0506-2	..WASHER, PANEL FASTEN	7
16	PAOZZ	97403	1321730604-4	...SCREW,PANEL FASTENE	7
17	XDOZZ	97403	13222E5306-8	...SHEET,COVER	1

END OF FIGURE

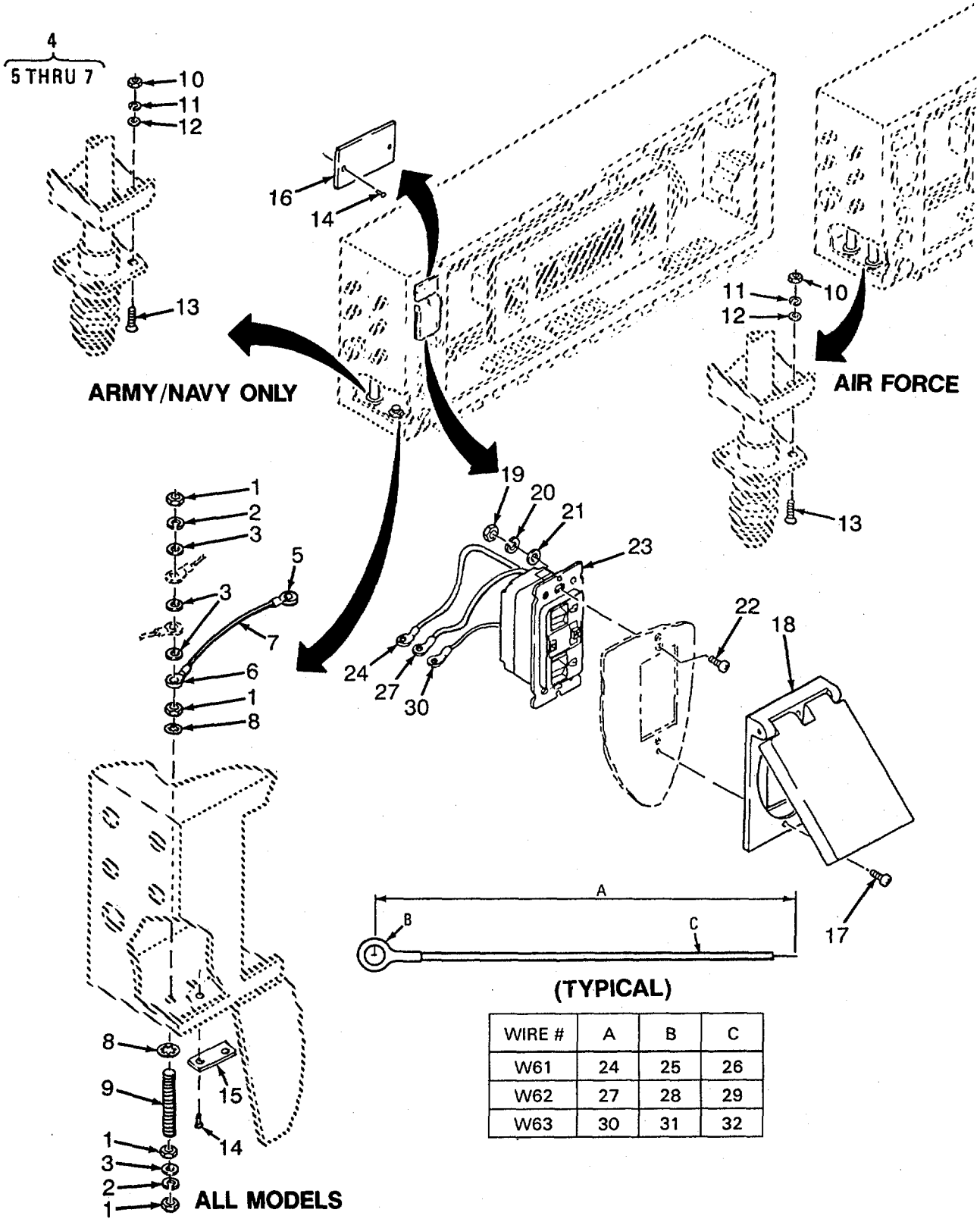

WIRE #	A	B	C
W61	24	25	26
W62	27	28	29
W63	30	31	32

Figure 92. Junction Box Electrical Connectors (Sheet 1 of 2)

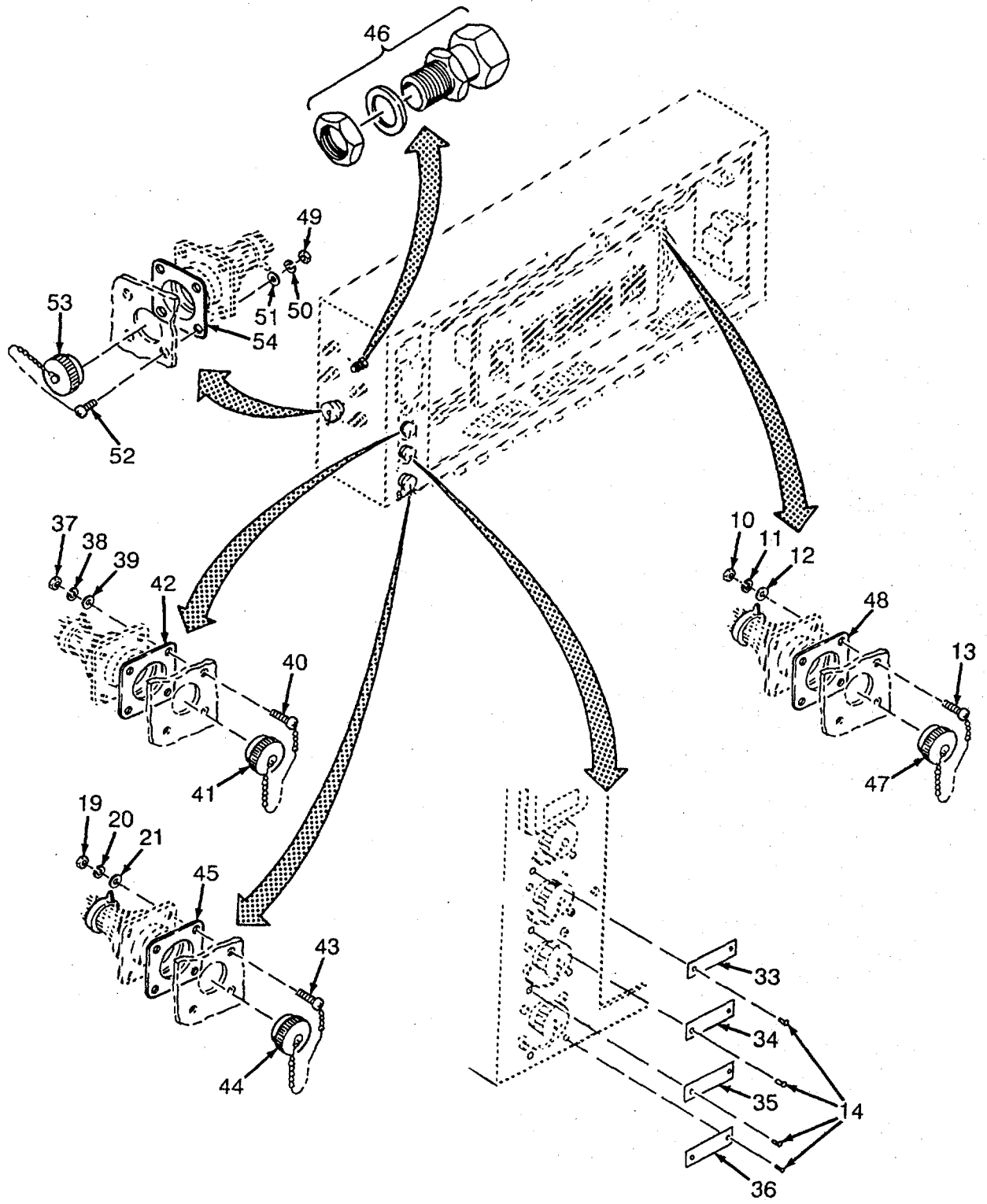

Figure 92. Junction Box Electrical Connectors (Sheet 2 of 2)

(1) ITEM NO	(2) SMR CODE	(3) CAGEC	(4) PART NUMBER	(5) DESCRIPTION AND USABLE ON CODES(UOC)	(6) QTY
				GROUP 12 REVERSE OSMOSIS WATER PURIFICATION UNIT 600 GPH	
				FIG. 92 JUNCTION BOX ELECTRICAL CONNECTORS	
1	PAFZZ	96906	MS35649-2385B	..NUT,PLAIN,HEXAGON	4
2	PAFZZ	96906	MS35338-141	..WASHER,LOCK	2
3	PAFZZ	88044	AN961-616T	..WASHER,FLAT UOC:FAV,FAX,FMQ,FMS	4
3	PAFZZ	88044	AN961-616T	..WASHER,FLAT UOC:FAW,FMR	5
4	AFFFF	97403	13222E5297-29	..LEAD,ELECTRICAL W59 UOC:FAV,FAX,FMQ,FMS	1
5	PAFZZ	96906	MS25636-115	..TERMINAL,LUG UOC:FAV,FAX,FMQ,FMS	1
6	PAFZZ	96906	MS25086-118	... TERMINAL,LUG UOC:FAV,FAX,FMQ,FMS	1
7	MFFZZ	19099	13222E5297W59-2-8-9	WIRE,ELECTRICAL MAKE FROM BULK P/N M5086/2-8-9, 25.0 IN UOC:FAV,FAX,FMQ,FMS	1
8	PAFZZ	96906	MS35333-110	..WASHER,LOCK	2
9	PAFZZ	81349	MIL-S-1222 TY I GR4	..STUD BOLT 0.375-16X2.50 IN LENGTH	1
10	PAFZZ	96906	MS35649-2254	..NUT,PLAIN,HEXAGON UOC:FAV,FAX,FMQ,FMS	4
10	PAFZZ	96906	MS35649-284	..NUT,PLAIN,HEXAGON UOC:FAW,FMR	8
11	PAFZZ	96906	MS35338-139	..WASHER,LOCK UOC:FAV,FAX,FMQ,FMS	4
11	PAFZZ	96906	MS35338-137	..WASHER,LOCK UOC:FAW,FMR	8
12	PAFZZ	96906	MS15795-810	..WASHER.FLAT UOC:FAV,FAX,FMQ,FMS	4
12	PAFZZ	96906	MS15795-807	..WASHER,FLAT UOC:FAW,FMR	8
13	PAFZZ	96906	MS3212-54	..SCREW,MACHINE UOC:FAV,FAX,FMQ,FMS	4
13	PAFZZ	96906	MS3212-29	..SCREW,MACHINE UOC:FAW	8
14	PAFZZ	81349	M24243/1-A403	..RIVET,BLIND	12
15	XDFZZ	97403	13222E5279-47	.. PLATE,GROUND	1
16	XDFZZ	97403	13222E5279-43	.. PLATE,UTILITY OUTL	1
17	PAOZZ	96906	MS51959-35	..SCREW,MACHINE	2
18	XDOZZ	97403	13221E8319	..COVER	1
19	PAOZZ	96906	MS35649-264	..NUT,PLAIN,HEXAGON	2
20	PAOZZ	96906	MS35338-136	..WASHER,LOCK	2
21	PAOZZ	96906	MS15795-805	..WASHER,FLAT	2
22	PAOZZ	96906	MS51959-29	..SCREW,MACHINE	2
23	PAFZZ	97403	13221E8318	..CIRCUIT INTERRUPTER	2
24	AFFFF	97403	13222E5297-31	..LEAD,ELECTRICAL W61	1
25	PAFZZ	96906	MS17143-6	... TERMINAL,LUG	1
26	MFFZZ	19099	13222E5297W61-1-12-9	... WIRE,ELECTRICAL MAKE FROM BULK P/N M5086/1-12-9, 8.0 IN	1
27	AFFFF	97403	13222E5297-32	..LEAD,ELECTRICAL W62	1
28	PAFZZ	96906	MS17143-6	..TERMINAL,LUG	1
29	MFFZZ	19099	13222E5297W62-1-12-9	... WIRE,ELECTRICAL MAKE FROM BULK P/N M5086/1-12-9, 8.0 IN	1
30	AFFFF	97403	13222E5297-33	..LEAD,ELECTRICAL W63	1
31	PAFZZ	96906	MS17143-6	... TERMINAL,LUG	1

(1) ITEM NO	(2) SMR CODE	(3) CAGEC	(4) PART NUMBER	(5) DESCRIPTION AND USABLE ON CODES(UOC)	(6) QTY
32	MFFZZ	19099	13222E5297W63-1-12-9	...WIRE,ELECTRICAL MAKE FROM BULK P/N M5086/1 1-12-9, 8.0 IN	
33	XDFZZ	97403	1322235279-41	..PLATE,I.D. DISTRIBUTION PUMP	1
34	XDFZZ	97403	13222E5279-40	..PLATE,I.D. RAW WATER PUMP 2	1
35	XDFZZ	97403	13222E5279-39	..PLATE,I.D. RAW WATER PUMP 1	1
36	XDFZZ	97403	13222E5279-30	..PLATE,I.D. BACKWASH PUMP	1
37	PAFZZ	96906	MS35649-244	..NUT,PLAIN,HEXAGON	12
38	PAFZZ	96906	MS35338-135	..WASHER,LOCK	12
39	PAFZZ	96906	MS15795-803	..WASHER,FLAT	12
40	PAFZZ	96906	MS3212-8	..SCREW,MACHINE	12
41	PAFZZ	96906	MS25043-18DA	..COVER,ELECTRICAL CO	3
42	PAFZZ	96906	MS51007-6	..GASKET	3
43	PAFZZ	96906	MS3212-18	..SCREW,MACHINE	4
44	PAFZZ	96906	MS25043-24DA	..COVER,ELECTRICAL CO	1
45	PAFZZ	96906	MS51007-9	..GASKET	1
46	PAFZZ	96906	13226E2205-5	..GRIP,SEALING,CABLE	5
47	PAFZZ	96906	MS25043-36DA	..COVER,ELECTRICAL CO	1
48	PAFZZ	96906	MS51007-13	..GASKET	1
49	PAFZZ	96906	MS35649-284	..NUT,PLAIN,HEXAGON	4
50	PAFZZ	96906	MS35338-137	..WASHER,LOCK	4
51	PAFZZ	96906	MS15795-807	..WASHER,FLAT	4
52	PAFZZ	96906	MS3212-29	..SCREW,MACHINE	4
53	PAFZZ	96906	MS25043-32DA	..COVER,ELECTRICAL CO	1
54	PAFZZ	96906	MS51007-12	..GASKET	1

END OF FIGURE

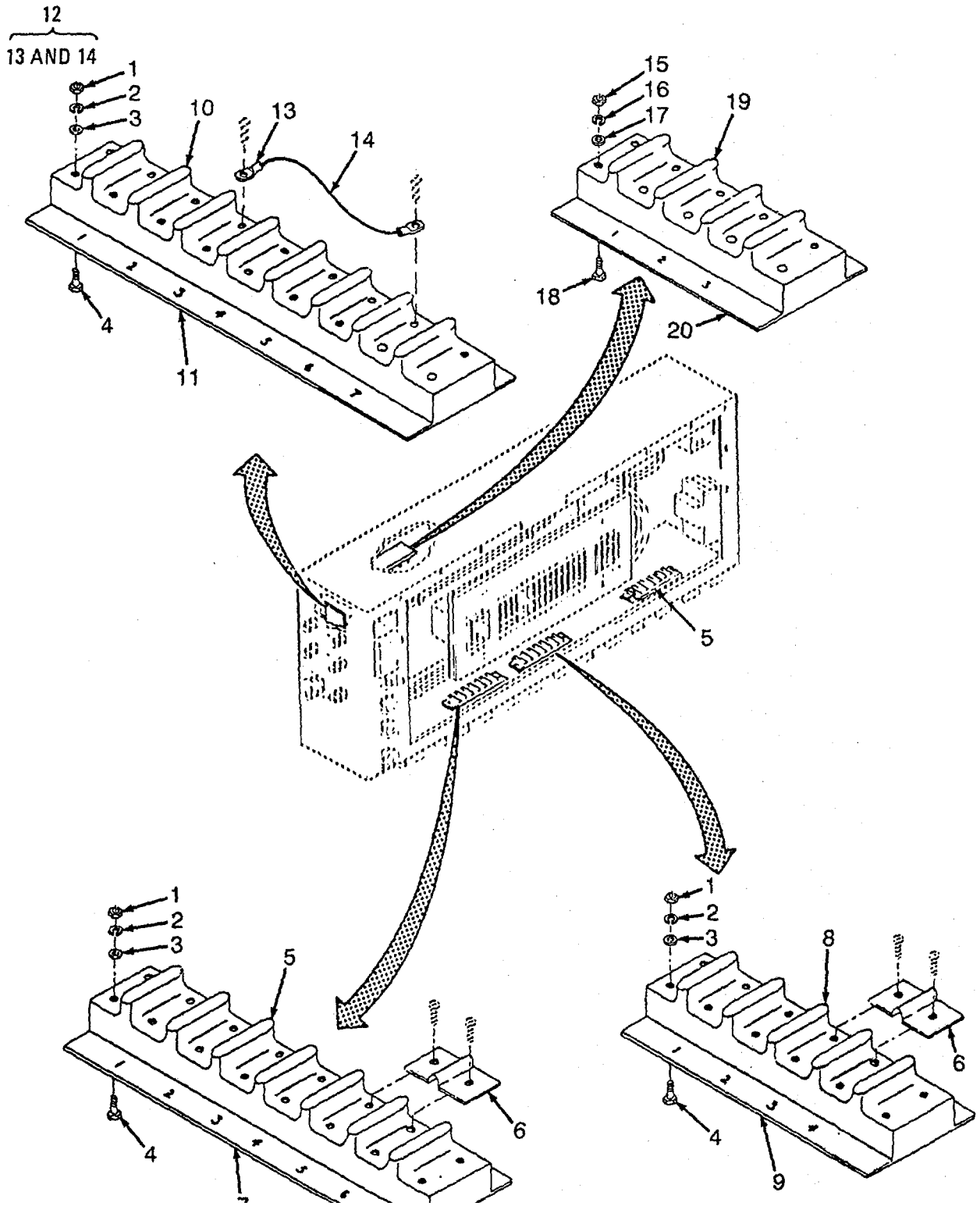

Figure 93. Junction Box Terminal Boards and Clamps (Sheet 1 of 3)
Army and Marine Corps

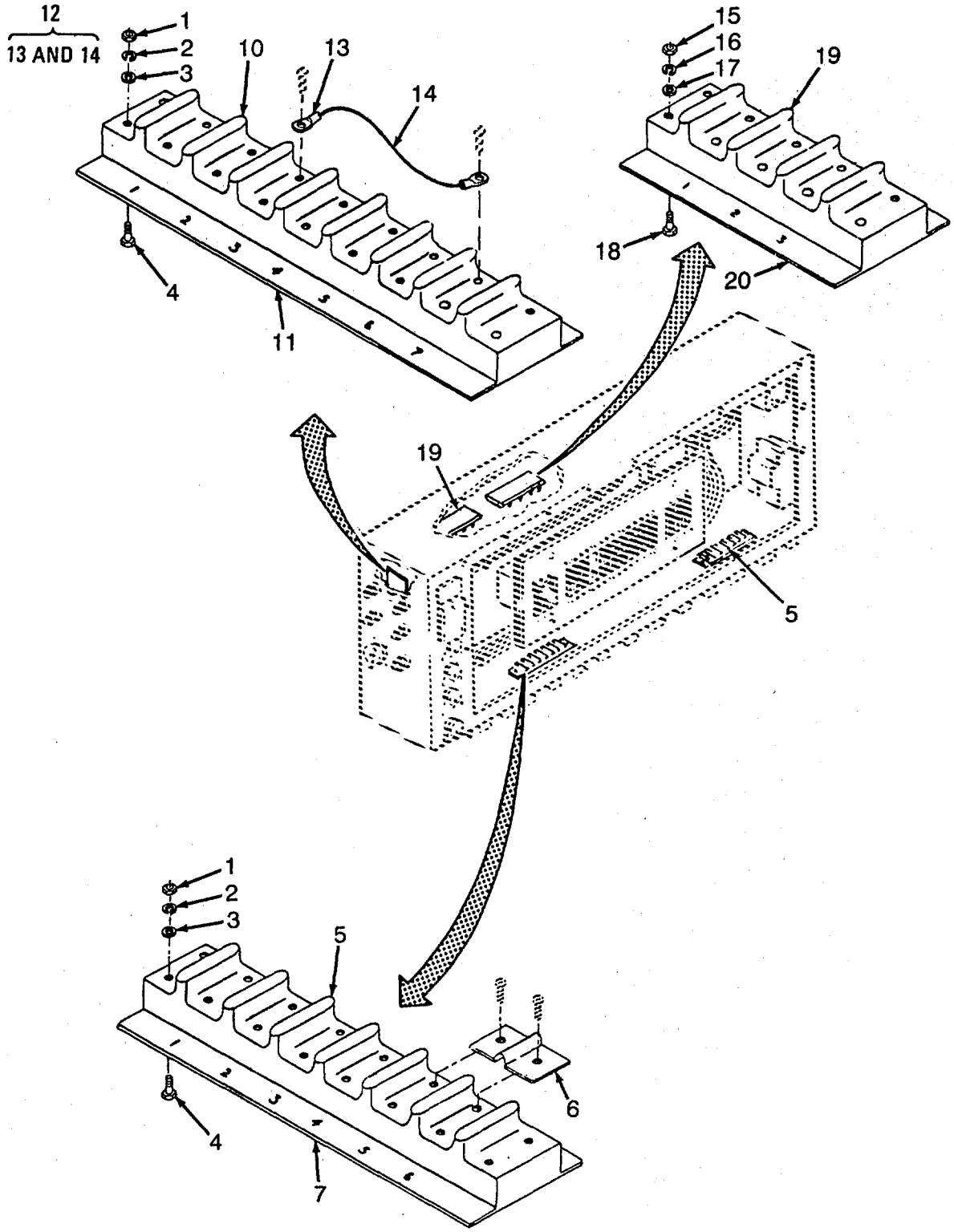

Figure 93. Junction Box Terminal Boards and Clamps (Sheet 2 of 3)
Air Force

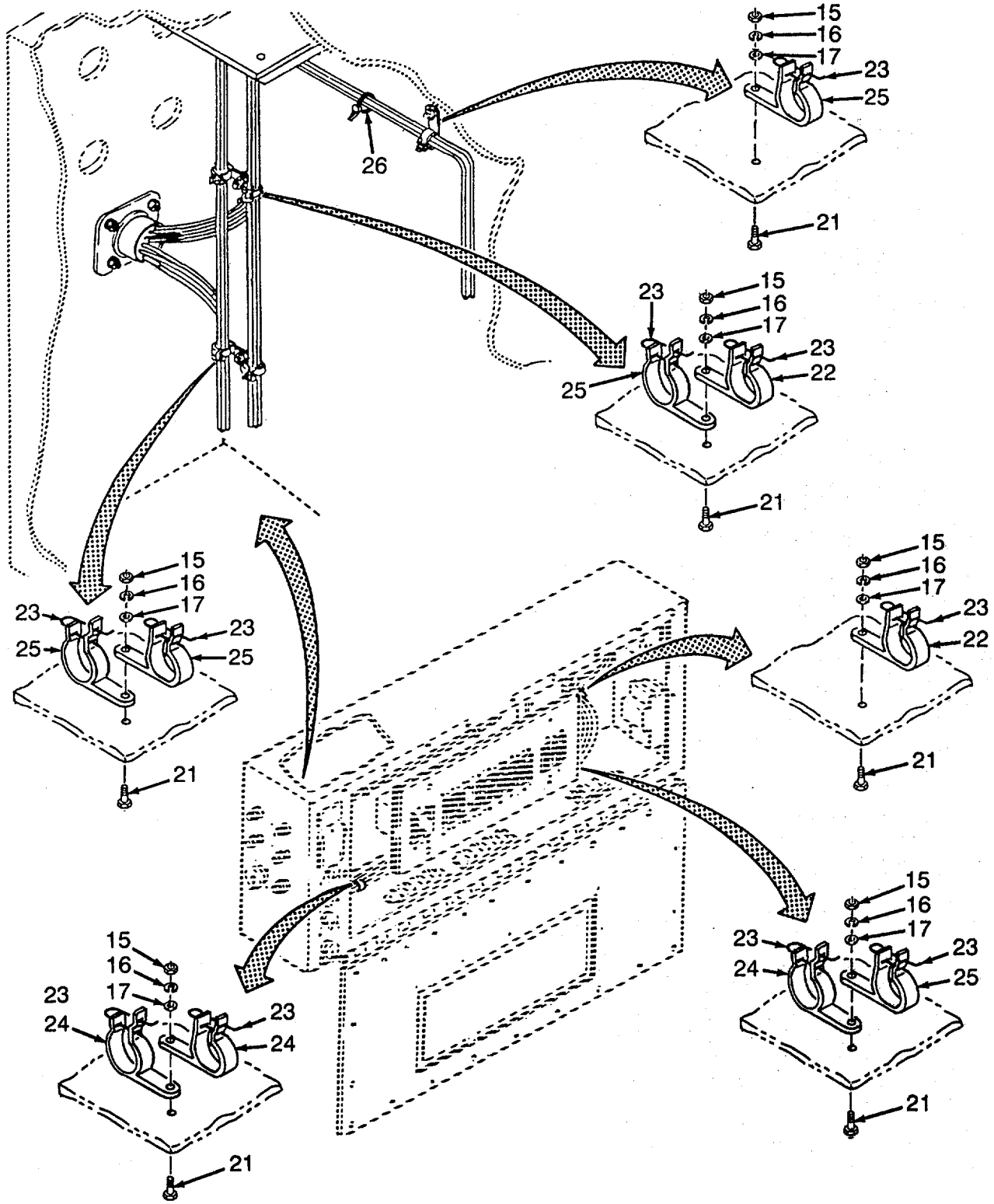

Figure 93. Junction Box Terminal Boards and Clamps (Sheet 3 of 3)

(1) ITEM NO	(2) SMR CODE	(3) CAGEC	(4) PART NUMBER	(5) DESCRIPTION AND USABLE ON CODES(UOC)	QTY
				GROUP 12 REVERSE OSMOSIS WATER PURIFICATION UNIT 600 GPH	
				FIG. 93 JUNCTION BOX TERMINAL BOARDS AND CLAMPS	
1	PAFZZ	96906	MS35649-284	..NUT,PLAIN,HEXAGON UOC:FAV,FAX,FMQ,FMS	16
1	PAFZZ	96906	MS35649-284	..NUT,PLAIN,HEXAGON UOC:FAW,FMR	12
2	PAFZZ	96906	MS35338-137	..WASHER,LOCK UOC:FAV,FAX,FMQ,FMS	16
2	PAFZZ	96906	MS35338-137	..WASHER,LOCK UOC:FAW,FMR	12
3	PAFZZ	96906	MS15795-807	..WASHER,FLAT UOC:FAV,FAX,FMQ,FMS	16
3	PAFZZ	96906	MS15795-807	..WASHER,FLAT UOC:FAW,FMR	12
4	PAFZZ	96906	MS3212-28	..SCREW,MACHINE UOC:FAV,FAX,FMQ,FMS	16
4	PAFZZ	96906	MS3212-28	..SCREW,MACHINE UOC:FAW,FMR	12
5	XDFZZ	81349	38TB6	..BOARD,TERMINAL	2
6	XDFZZ	97403	13220E3966-1	..LINK,TERMINAL UOC:FAV,FAX,FMQ,FMS	12
6	XDFZZ	97403	13220E3966-1	..LINK,TERMINAL UOC:FAW,FMR	9
7	XDFZZ	97403	1322235315-3	..STRIP,MARKER	2
8	XDFZZ	81349	38TB4	..TERMINAL BOARD UOC:FAV,FAX,FMQ,FMS	1
9	XDFZZ	97403	13222E5315-5	..STRIP,MARKER UOC:FAV,FAX,FMQ,FMS	1
10	XDFZZ	81349	38TB7	..BOARD,TERMINAL	1
11	XDFZZ	97403	13222E5315-6	..STRIP,MARKER	1
12	AFFFF	97403	13222E5297-30	..LEAD,ELECTRICAL W60 UOC:FAV,FAX,FMQ,FMS	1
12	AFFFF	97403	13227E9228-29	..LEAD,ELECTRICAL W59 UOC:FAW,FMR	1
13	PAFZZ	96906	MS25036-511	...TERMINAL,LUG UOC:FAV,FAX,FMQ,FMS	2
13	PAFZZ	96906	MS25036-111	...TERMINAL,LUG UOC:FAW,FMR	2
14	MFFZZ	19099	13222E5297W60-1-10-9	...WIRE, ELECTRICAL MAKE FROM BULK P/N M5086/1-10-9, 4.0 IN. UOC:FAV,FAX,FMQ,FMS	1
14	MFFZZ	19099	1322739228859-1-10-9	...WIRE, ELECTRICAL MAKE FROM BULK P/N M5086/1-10-9, 4.0 IN. UOC:FAW,FMR	1
15	PAFZZ	96906	MS35649-204	..NUT,PLAIN,HEXAGON UOC:FAV,FAX,FMQ,FMS	10
15	PAFZZ	96906	MS35649-204	..NUT,PLAIN,HEXAGON UOC:FAW,FMR	14
16	PAFZZ	96906	MS35338-138	..WASHER,LOCK UOC:FAV,FAX,FMQ,FMS	10
16	PAFZZ	96906	MS35338-138	..WASHER,LOCK UOC:FAW,FMR	14
17	PAFZZ	96906	MS15795-842	..WASHER,FLAT UOC:FAV,FAX,FMQ,FMS	10

(1) ITEM NO	(2) SMR CODE	(3) CAGEC	(4) PART NUMBER	(5) DESCRIPTION AND USABLE ON CODES(UOC)	QTY
17	PAFZZ	96906	MS15795-842	..WASHER,FLAT UOC:FAW,FMR	14
18	PAFZZ	96906	MS3212-46	..SCREW,MACHINE UOC:FAV,FAX,FMQ,FMS	4
18	PAFZZ	96906	MS3212-46	..SCREW,MACHINE UOC:FAW,FMR	8
19	XDFZZ	97403	13222E5316-1	..BOARD,TERMINAL UOC:FAV,FAX,FMQ,FMS	1
19	XDFZZ	97403	13222E5316-1	..BOARD,TERMINAL UOC:FAW,FMR	2
20	XDFZZ	97403	13222E5315-2	..PLATE,DESIGNATION UOC:FAV,FAX,FMQ,FMS	1
20	XDFZZ	97403	13222E5315-2	..PLATE,DESIGNATION UOC:FAW,FMR	2
21	PAFZZ	96906	MS3212-44	..SCREW,MACHINE	6
22	PBFZZ	81349	M23190/1-3	..CLAMP,LOOP UOC:FAV,FAX,FMQ,FMS	2
22	PBFZZ	81349	M23190/1-3	..CLAMP,LOOP UOC:FAW,FMR	1
23	PAFZZ	96906	MS3367-2-9	..STRAP,TIEDOWN,ELECT UOC:FAV,FAX,FMQ,FMS	12
23	PAFZZ	96906	MS3367-2-9	..STRAP,TIEDOWN,ELECT UOC:FAW,FMR	13
24	PBFZZ	81349	M23190/1-5	..CLAMP,LOOP UOC:FAV,FAX,FMQ,FMS	3
24	PBFZZ	81349	M23190/1-5	..CLAMP,LOOP UOC:FAW,FMR	8
25	PBFZZ	81349	M23190/1-4	..CLAMP UOC:FAV,FAX,FMQ,FMS	5
25	PBFZZ	81349	M23190/1-4	..CLAMP UOC:FAW,FMR	1
26	PAFZZ	96906	MS3367-1-9	..STRAP,TIEDOWN	1

END OF FIGURE

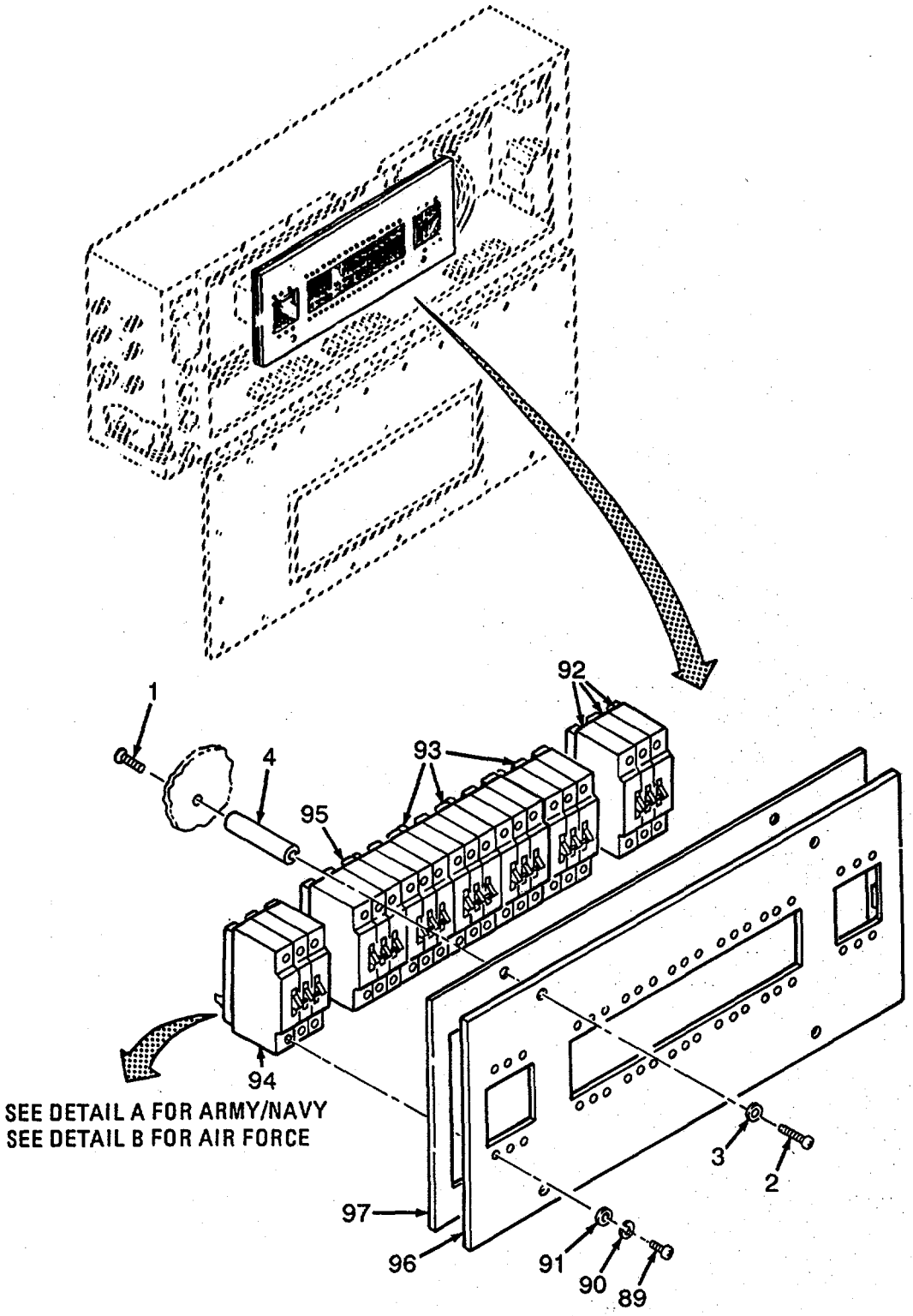

Figure 94. Junction Box Circuit Breaker Assembly (Sheet 1 of 3)

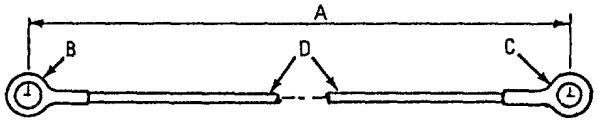

(TYPICAL)

WIRE #	A	B	C	D
W11	5	6	6	7
W12	8	9	9	10
W13	11	12	12	13
W14	14	15	16	17
W15	18	19	20	21
W16	22	23	24	25
W17	26	27	27	28
W18	29	30	30	31
W19	32	33	33	34
W20	35	36	36	37
W21	38	39	39	40
W22	41	42	42	43
W23	44	45	45	46
W24	47	48	48	49

WIRE #	A	B	C	D
W25	50	51	51	52
W26	53	54	54	55
W27	56	57	57	58
W28	59	60	60	61
W29	62	63	63	64
W30	65	66	66	67
W31	68	69	69	70
W32	71	72	—	73
W33	74	75	—	76
W34	77	78	—	79
W35	80	81	81	82
W36	83	84	84	85
W37	86	87	87	88

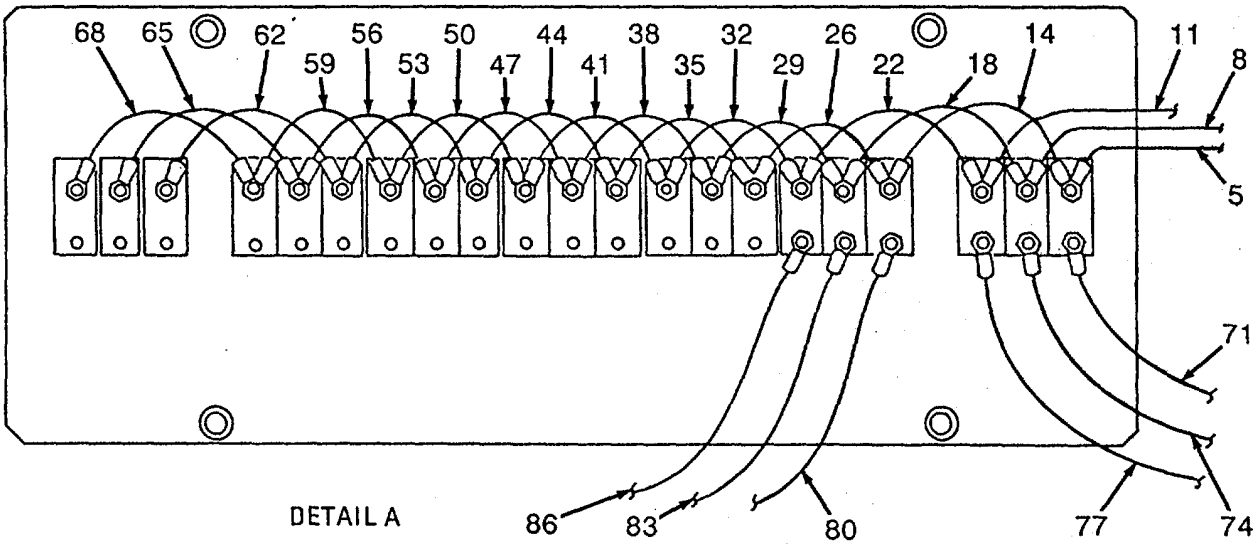

Figure 94. Junction Box Circuit Breaker Assembly (Sheet 2 of 3)
Army and Marine Corps

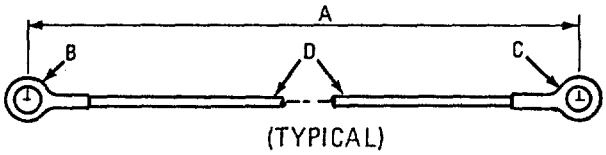

WIRE #	A	B	C	D
W11	98	99	99	100
W12	101	102	102	103
W13	104	105	105	106
W14	107	108	109	110
W15	111	112	113	114
W16	115	116	117	118
W17	119	120	120	121
W18	122	123	123	124
W19	125	126	126	127
W20	128	129	129	130
W21	131	132	132	133
W22	134	135	135	136
W23	137	138	138	139
W24	140	141	141	142

WIRE #	A	B	C	D
W25	143	144	144	145
W26	146	147	147	148
W27	149	150	150	151
W28	152	153	153	154
W29	155	156	156	157
W30	158	159	159	160
W31	161	162	162	163
W32	164	165	—	166
W33	167	168	—	169
W34	170	171	—	172
W35	173	174	174	175
W36	176	177	177	178
W37	179	180	180	181

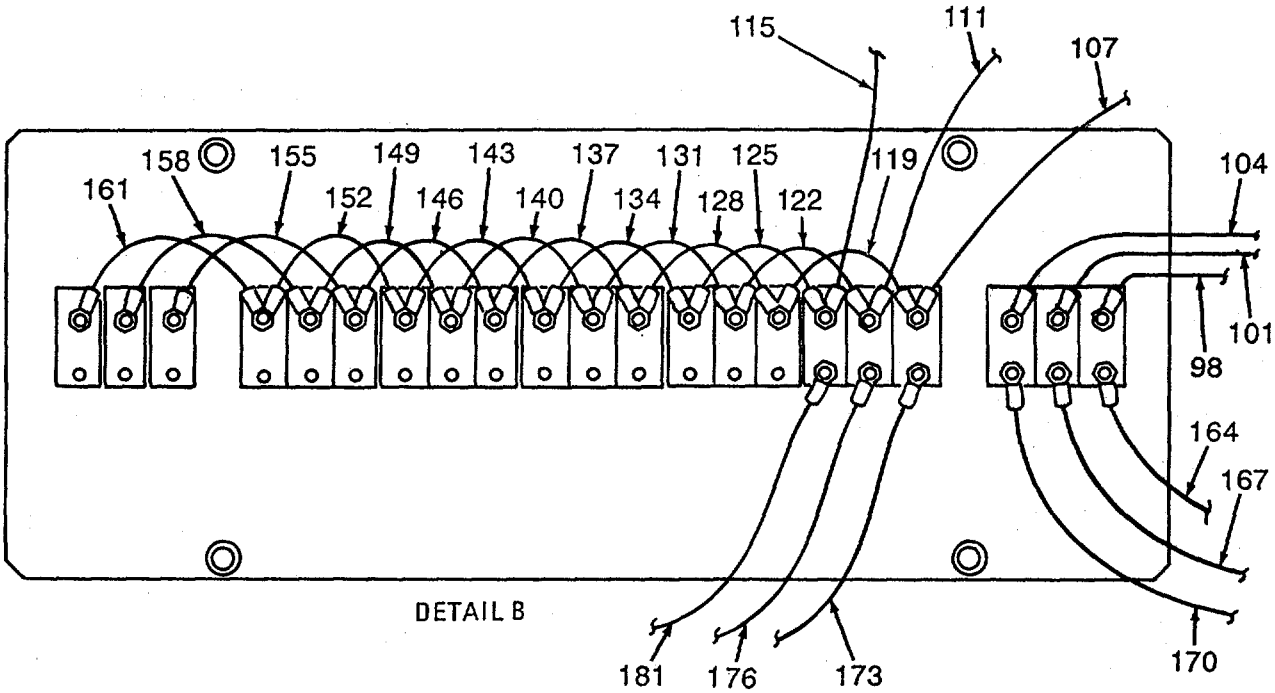

Figure 94. Junction Box Circuit Breaker Assembly (Sheet 3 of 3)
Air Force

(1) ITEM NO	(2) SMR CODE	(3) CAGEC	(4) PART NUMBER	(5) DESCRIPTION AND USABLE ON CODES(UOC)	(6) QTY
				GROUP 12 REVERSE OSMOSIS WATER PURIFICATION UNIT 600 GPH	
				FIG. 94 JUNCTION BOX CIRCUIT BREAKER ASSEMBLY	
1	PAFZZ	96906	MS3212-49	..SCREW, MACHINE	4
2	PAFZZ	96906	MS35307-305	..SCREW,CAP,HEXAGON H	4
3	PAFZZ	96906	MS15795-810	..WASHER,FLAT	4
4	XDFZZ	97403	13222E5301	..STANDOFF	4
5	AFFFF	97403	13222E5297-1	..LEAD,ELECTRICAL W11 UOC :FAV,FAX,FMQ,FMS	1
6	PAFZZ	96906	MS25036-123	...TERMINAL,LUG UOC:FAV,FAX,FMQ,FMS	2
7	MFFZZ	19099	13222E5297W11-2-4-9	...WIRE, ELECTRICAL MAKE FROM BULK P/N M5086/2-4-9, 47.0 IN. UOC:FAV,FAX,FMQ,FMS	1
8	AFFFF	97403	13222E5297-2	..LEAD,ELECTRICAL W12 UOC:FAV,FAX,FMQ,FMS	1
9	PAFZZ	96906	MS25036-123	...TERMINAL, LUG UOC:FAV,FAX,FMQ,FMS	2
10	MFFZZ	19099	13222E5297W12-2-4-9	...WIRE, ELECTRICAL MAKE FROM BULK P/N M5086/2-4-9, 47.0 IN. UOC :FAV,FAX,FMQ,FMS	1
11	AFFFF	97403	13222E5297-3	..LEAD,ELECTRICAL W13 UOC:FAV,FAX,FMQ,FMS	1
12	PAFZZ	96906	MS25036-123	...TERMINAL, LUG UOC:FAW,FMR,FAX	2
13	MFFZZ	19099	13222E5297W13-2-4-9	...WIRE, ELECTRICAL MAKE FROM BULK P/N M5086/2-4-9, 47.0 IN. UOC:FAV,FAX,FMQ,FMS	1
14	AFFFF	97403	13222E5297-4	..LEAD,ELECTRICAL W14 UOC: FAV,FAX,FMQ,FMS	1
15	PAFZZ	96906	MS25036-120	...TERMINAL, LUG UOC :FAV,FAX,FMQ,FMS	1
16	PAFZZ	96906	MS25036-119	...TERMINAL,LUG UOC :FAV,FAX,FMQ,FMS	2
17	MFFZZ	19099	13222E5297W14-2-6-9	.WIRE,ELECTRICAL MAKE FROM BULK P/N M5086/2-6-9, 9.0 IN. UOC:FAV,FAX,FMQ,FMS	1
18	AFFFF	97403	13222E5297-5	..LEAD,ELECTRICAL W15 UOC:FAV,FAX,FMQ,FMS	1
19	PAFZZ	96906	MS25036-120	...TERMINAL, LUG UOC:FAV,FAX,FMQ,FMS	1
20	PAFZZ	96906	MS25036-119	...TERMINAL,LUG UOC :FAV,FAX,FMQ,FMS	2
21	MFFZZ	19099	13222E5297W15-2-6-9	...WIRE, ELECTRICAL MAKE FROM BULK P/N M5086/2-6-9, 9.0 IN. UOC:FAV,FAX,FMQ,FMS	1
22	AFFFF	97403	1322235297-6	..LEAD,ELECTRICAL W16 UOC:FAV,FAX,FMQ,FMS	1
23	PAFZZ	96906	MS25036-120	...TERMINAL, LUG UOC:FAV,FAX,FMQ,FMS	1
24	PAFZZ	96906	MS25036-119	...TERMINAL, LUG UOC:FAV,FAX,FMQ,FMS	2
25	MFFZZ	19099	13222E5297W16-2-6-9	...WIRE, ELECTRICAL MAKE FROM BULK P/N M5086/2-6-9, 9.0 IN. UOC :FAV,FAX,FMQ,FMS	1

(1) ITEM NO	(2) SMR CODE	(3) CAGEC	(4) PART NUMBER	(5) DESCRIPTION AND USABLE ON CODES(UOC)	(6) QTY
26	AFFFF	97403	13222E5297-7	..LEAD,ELECTRICAL W17 UOC:FAV,FAX,FMQ,FMS	1
27	PAFZZ	96906	MS25036-115	...TERMINAL,LUG UOC:FAW,FAX,FMQ,FMS	2
28	MFFZZ	19099	13222E5297W17-2-8-9	...WIRE,ELECTRICAL MAKE FROM BULK P/N M5086/2-8-9, 9.0 IN. UOC:FAV,FAX,FMQ,FMS	1
29	AFFFF	97403	13222E5297-8	..LEAD,ELECTRICAL W18 UOC:FAV,FAX,FMQ,FMS	1
30	PAFZZ	96906	MS25036-115	...TERMINAL,LUG UOC:FAV,FAX,FMQ,FMS	2
31	MFFZZ	19099	13222E5297W18-2-8-9	.WIRE,ELECTRICAL MAKE FROM BULK P/N M5086/2-8-9, 9.0 IN. UOC:FAV,FAX,FMQ,FMS	1
32	AFFFF	97403	13222E5297-9	..LEAD,ELECTRICAL W19 UOC:FAV,FAX,FMQ,FMS	1
33	PAFZZ	96906	MS25036-115	...TERMINAL,LUG UOC:FAV,FAX,FMQ,FMS	2
34	MFFZZ	19099	13222E5297W19-2-8-9	...WIRE,ELECTRICAL MAKE FROM BULK P/N M5086/2-8-9, 9.0 IN. UOC:FAV,FAX,FMQ,FMS	1
35	AFFFF	97403	13222E5297-10	..LEAD,ELECTRICAL W20 UOC:FAV,FAX,FMQ,FMS	1
36	PAFZZ	96906	MS25036-115	.TERMINAL,LUG UOC:FAV,FAX,FMQ,FMS	2
37	MFFZZ	19099	13222E5297W20-2-8-9	...WIRE,ELECTRICAL MAKE FROM BULK P/N M5086/2-8-9, 9.0 IN. UOC:FAV,FAX,FMQ,FMS	1
38	AFFFF	97403	13222E5297-11	..LEAD,ELECTRICAL W21 UOC:FAV,FAX,FMQ,FMS	1
39	PAFOZ	96906	MS25036-115	... TERMINAL,LUG UOC:FAV,FAX,FMQ,FMS	2
40	MFFZZ	19099	13222E5297W21-2-8-9	...WIRE,ELECTRICAL MAKE FROM BULK P/N M5086/2-8-9, 9.0 IN. UOC:FAV,FAX,FMQ,FMS	1
41	AFFFF	97403	13222E5297-12	..LEAD,ELECTRICAL W22 UOC:FAV,FAX,FMQ,FMS	1
42	PAFZZ	96906	MS25036-115	...TERMINAL,LUG UOC:FAV,FAX,FMQ,FMS	2
43	MFFZZ	19099	13222E5297W22-2-8-9	...WIRE,ELECTRICAL MAKE FROM BULK P/N M5086/2-8-9, 9.0 IN. UOC:FAV,FAX,FMQ,FMS	1
44	AFFFF	97403	13222E5297-13	..LEAD,ELECTRICAL W23 UOC:FAV,FAX,FMQ,FMS	1
45	PAFZZ	96906	MS25036-112	TERMINAL,LUG UOC:FAV,FAX,FMQ,FMS	2
46	MFFZZ	19099	13222E5297W23-1-10-9	...WIRE,ELECTRICAL MAKE FROM BULK P/N M5086/1-10-9, 9.0 IN. UOC:FAV,FAX,FMQ,FMS	1
47	AFFFF	97403	13222E5297-14	..LEAD,ELECTRICAL W24 UOC:FAV,FAX,FMQ,FMS	1
48	PAFZZ	96906	MS25036-112	.TERMINAL,LUG UOC:FAV,FAX,FMQ,FMS	2
49	MFFZZ	19099	13222E5297W24-1-10-9	.WIRE,ELECTRICAL MAKE FROM BULK P/N M5086/1-10-9, 9.0 IN. UOC:FAV,FAX,FMQ,FMS	1
50	AFFFF	97403	1322235297-15	..LEAD,ELECTRICAL W25 UOC:FAV,FAX,FMQ,FMS	1

(1) ITEM NO	(2) SMR CODE	(3) CAGEC	(4) PART NUMBER	(5) DESCRIPTION AND USABLE ON CODES(UOC)	(6) QTY
51	PAFZZ	96906	MS25036-112	...TERMINAL,LUG UOC:FAV,FAX,FMQ,FMS	2
52	MFFZZ	19099	13222E5297W25-1-10-9	...WIRE,ELECTRICAL MAKE FROM BULK P/N M5086/1-10-9, 9.0 IN. UOC:FAV,FAX,FMQ,FMS	1
53	AFFFF	97403	13222E5297-16	..LEAD,ELECTRICAL W26 UOC:FAV,FAX,FMQ,FMS	1
54	PAFZZ	96906	MS25036-112	...TERMINAL, LUG UOC:FAV,FAX,FMQ,FMS	2
55	MFFZZ	19099	13222E5297W26-1-10-9	...WIRE, ELECTRICAL MAKE FROM BULK P/N M5086/1-10-9, 9.0 IN. UOC:FAV,FAX,FMQ,FMS	1
56	AFFFF	97403	13222E5297-17	..LEAD,ELECTRICAL W27 UOC:FAV,FAX,FMQ,FMS,FMQ,FMS	1
57	PAFZZ	96906	MS25036-112	...TERMINAL,LUG UOC:FAV,FAX,FMQ,FMS	2
58	MFFZZ	19099	13222E5297W27-1-10-9	...WIRE,ELECTRICAL MAKE FROM BULK P/N M5086/1-10-9, 9.0 IN. UOC:FAV,FAX,FMQ,FMS	1
59	AFFFF	97403	13222E5297-18	..LEAD,ELECTRICAL W28 UOC:FAV,FAX,FMQ,FMS	1
60	PAFZZ	96906	MS25036-112	...TERMINAL,LUG UOC:FAV,FAX,FMQ,FMS	2
61	MFFZZ	19099	13222E5297W28-1-10-9	...WIRE,ELECTRICAL MAKE FROM BULK P/N M5086/1-10-9, 9.0 IN. UOC:FAV,FAX,FMQ,FMS	1
62	AFFFF	97403	13222E5297-19	..LEAD,ELECTRICAL W29 UOC:FAV,FAX,FMQ,FMS	1
63	PAFZZ	96906	MS25036-112	...TERMINAL, LUG UOC:FAV,FAX,FMQ,FMS	2
64	MFFZZ	19099	13222E5297W29-1-10-9	...WIRE,ELECTRICAL MAKE FROM BULK P/N M5086/1-10-9, 9.0 IN. UOC:FAV,FAX,FMQ,FMS	1
65	AFFFF	97403	13222E5297-20	..LEAD,ELECTRICAL W30 UOC:FAV,FAX,FMQ,FMS	1
66	PAFZZ	96906	MS25036-112	...TERMINAL, LUG UOC:FAV,FAX,FMQ,FMS	2
67	MFFZZ	19099	13222E5297W30-1-10-9	...WIRE,ELECTRICAL MAKE FROM BULK P/N M5086/1-10-9, 9.0 IN. UOC:FAV,FAX,FMQ,FMS	1
68	AFFFF	97403	13222E5297-21	..LEAD,ELECTRICAL W31 UOC:FAV,FAX,FMQ,FMS	1
69	PAFZZ	96906	MS25036-112	...TERMINAL, LUG UOC:FAV,FAX,FMQ,FMS	2
70	MFFZZ	19099	1322235297W31-1-10-9	...WIRE, ELECTRICAL MAKE FROM BULK P/N M5086/1-10-9, 9.0 IN. UOC:FAV,FAX,FMQ,FMS	1
71	AFFFF	97403	13222E5297-22	..LEAD,ELECTRICAL W32 UOC:FAV,FAX,FMQ,FMS	1
72	PAFZZ	96906	MS25036-123	...TERMINAL,LUG UOC:FAV,FAX,FMQ,FMS	1
73	MFFZZ	19099	13222E5297W32-2-4-9	...WIRE, ELECTRICAL MAKE FROM BULK P/N M5086/2-4-9, 21.0 IN. UOC:FAV,FAX,FMQ,FMS,FMQ,FMS	1
74	AFFFF	97403	13222E5297-23	..LEAD,ELECTRICAL W33 UOC:FAV,FAX,FMQ,FMS	1
75	PAFZZ	96906	MS25036-123	...TERMINAL,LUG UOC:FAV,FAX,FMQ,FMS,FMQ,mS	1

(1) ITEM NO	(2) SMR CODE	(3) CAGEC	(4) PART NUMBER	(5) DESCRIPTION AND USABLE ON CODES(UOC)	(6) QTY
76	MFFZZ	19099	13222E5297W33-2-4-9	.WIRE,ELECTRICAL MAKE FROM BULK P/N M5086/2-4-9, 21.0 IN UOC:FAV,FAX,FMQ,FMS	1
77	AFFFF	97403	13222E5297-24	..LEAD,ELECTRICAL W34 UOC:FAV,FAX,FMQ,FMS	1
78	PAFZZ	96906	MS25036-123	...TERMINAL,LUG UOC:FAV,FAX,FMQ,FMS	1
79	MFFZZ	19099	13222E5297W34-2-4-9	...WIRE,ELECTRICAL MAKE FROM BULK P/N M5086/2-4-9, 21.0 IN. UOC:FAV,FAX,FMQ,FMS	1
80	AFFFF	97403	13222E5297-25	..LEAD,ELECTRICAL W35 UOC:FAV,FAX,FMQ,FMS	1
81	PAFZZ	96906	MS25036-112	...TERMINAL,LUG UOC:FAV,FAX,FMQ,FMS	2
82	MFFZZ	19099	13222E5297W35-1-10-9	.WIRE,ELECTRICAL MAKE FROM BULK P/N M5086/1-10-9, 62.0 IN UOC:FAV,FAX,FMQ,FMS	1
83	AFFFF	97403	13222E5297-26	..LEAD,ELECTRICAL W36 UOC:FAV,FAX,FMQ,FMS	1
84	PAFZZ	96906	MS25036-112	.TERMINAL,LUG UOC:FAV,FAX,FMQ,FMS	2
85	MFFZZ	19099	13222E5297W36-1-10-9	.WIRE,ELECTRICAL MAKE FROM BULK P/N M5086/1-10-9, 62.0 IN UOC:FAV,FAX,FMQ,FMS,FMQ,FMS	1
86	AFFFF	97403	13222E5297-27	..LEAD,ELECTRICAL W37 UOC:FAV,FAX,FMQ,FMS	1
87	PAFZZ	96906	MS25036-112	...TERMINAL,LUG UOC:FAV,FAX,FMQ,FMS	2
88	MFFZZ	19099	13222E5297W37-1-10-9	.WIRE,ELECTRICAL MAKE FROM BULK P/N M086/1-10-9, 62.0 IN UOC:FAV,FAX,FMQ,FMS	1
89	PAFZZ	96906	MS51957-123	..SCREW,MACHINE	42
90	PAFZZ	96906	MS35338-136	..WASHER,LOCK	42
91	PAFZZ	96906	MS15795-805	..WASHER,FLAT	42
92	PAFZZ	97403	13221E8303-1	..CIRCUIT BREAKER	3
93	PAFZZ	97403	13221E8302-1	..CIRCUIT BREAKER	4
94	PAFZZ	97403	13221E8301-1	..CIRCUIT BREAKER	1
95	PAFZZ	97403	13221E8301-2	..CIRCUIT BREAKER	1
96	XDFZZ	97403	13222E5303	..PLATE,CIRCUIT BRK	1
97	XDFZZ	97403	13222E5302	..PLATE,INSULATION	1
98	AFFFF	97403	13227E9228-1	..LEAD,ELECTRICAL W11 UOC:FAW,FMR	1
99	PAFZZ	96906	MS25036-123	...TERMINAL,LUG UOC:FAW,FMR	2
100	MFFZZ	19099	13227E9228W11-3-4-9	...WIRE,ELECTRICAL MAKE FROM BULK P/N M5086/3-4-9, 47.0 IN UOC:FAW,FMR	1
101	AFFFF	97403	13227E9228-2	..LEAD,ELECTRICAL W12 UOC:FAW,FMR	1
102	PAFZZ	96906	MS25036-123	...TERMINAL,LUG UDC:FAW,FMR	2
103	MFFZZ	19099	13227E9228W12-3-4-9	...WIRE,ELECTRICAL MAKE FROM BULK P/N M5086/3-4-9, 47.0 IN UOC:FAW,FMR	1
104	AFFFF	97403	13227E9228-3	..LEAD,ELECTRICAL W13 UOC:FAW,FMR	1
105	PAFZZ	96906	MS25036-123	...TERMINAL,LUG UDC:FAW,FMR	2

(1) ITEM NO	(2) SMR CODE	(3) CAGEC	(4) PART NUMBER	(5) DESCRIPTION AND USABLE ON CODES(UOC)	(6) QTY
106	MFFZZ	19099	13227E9228W13-3-4-9	...WIRE,ELECTRICAL MAKE FROM BULK P/N M5086/3-4-9, 22.0 IN. UOC:FAW,FMR	1
107	AFFFF	97403	13227E9228-4	..LEAD,ELECTRICAL W14 UOC:FAW,FMR	1
108	PAFZZ	97403	13227E0127-5	...TERMINAL,LUG UOC:FAW,FMR	1
109	PAFZZ	97403	13227E0127-4	...TERMINAL,LUG UOC:FAW,FMR	1
110	MFFZZ	19099	13227E9228W14-3-6-9	...WIRE,ELECTRICAL MAKE FROM BULK P/N M5086/3-6-9, 19.0 IN. UOC:FAW,FMR	1
111	AFFFF	97403	13227E9228-5	..LEAD,ELECTRICAL W15 UOC:FAW,FMR	1
112	PAFZZ	97403	13227E0127-5	...TERMINAL,LUG UOC:FAW,FMR	1
113	PAFZZ	97403	13227E0127-4	...TERMINAL, LUG UOC:FAW,FMR	1
114	MFFZZ	19099	13227E9228W15-3-6-9	...WIRE, ELECTRICAL MAKE FROM BULK P/N M5086/3-6-9, 19.0 IN. UOC:FAW,FMR	1
115	AFFFF	97403	13227E9228-6	..LEAD,ELECTRICAL W16 UOC:FAW,FMR	1
116	PAFZZ	97403	13227E0127-5	...TERMINAL,LUG UOC:FAW,FMR	1
117	PAFZZ	97403	13227E0127-4	...TERMINAL,LUG UOC:FAW,FMR	1
118	MFFZZ	19099	13227E9228W16-3-6-9	...WIRE,ELECTRICAL MAKE FROM BULK P/N M5086/3-6-9, 19.0 IN. UOC:FAW,FMR	1
119	AFFFF	97403	13227E9228-7	..LEAD,ELECTRICAL W17 UOC:FAW,FMR	1
120	PAFZZ	96906	MS25036-115	...TERMINAL, LUG UOC:FAW,FMR	2
121	MFFZZ	19099	13227E9228W17-3-8-9	...WIRE,ELECTRICAL MAKE FROM BULK P/N M5086/3-8-9, 6.0 IN. UOC:FAW,FMR	1
122	AFFFF	97403	13227E9228-8	..LEAD,ELECTRICAL W18 UOC:FAW,FMR	1
123	PAFZZ	96906	MS25036-115	...TERMINAL, LUG UOC:FAW,FMR	2
124	MFFZZ	19099	13227E9228W18-3-8-9	...WIRE,ELECTRICAL MAKE FROM BULK P/N M5086/3-8-9, 6.0 IN.	1
125	AFFFF	97403	13227E9228-9	..LEAD,ELECTRICAL W19 UOC:FAW,FMR	1
126	PAFZZ	96906	MS25036-115	...TERMINAL, LUG UOC:FAW,FMR	2
127	MFFZZ	19099	13227E9228W19-3-8-9	...WIRE, ELECTRICAL MAKE FROM BULK P/N M5086/3-8-9, 6.0 IN. UOC:FAW,FMR	1
128	AFFFF	97403	13227E9228-10	..LEAD,ELECTRICAL W20 UOC:FAW,FMR	1
129	PAFZZ	96906	MS25036-115	...TERMINAL, LUG UOC:FAW,FMR	2
130	MFFZZ	19099	13227E9228W20-3-8-9	...WIRE, ELECTRICAL MAKE FROM BULK P/N M5086/3-8-9, 6.0 IN. UOC:FAW,FMR	1
131	AFFFF	97403	13227E9228-11	..LEAD,ELECTRICAL W21	1

(1) ITEM NO	(2) SMR CODE	(3) CAGEC	(4) PART NUMBER	(5) DESCRIPTION AND USABLE ON CODES(UOC)	(6) QTY
				UOC:FAW,FMR	
132	PAFZZ	96906	MS25036-115	. . . TERMINAL,LUG	2
				UOC:FAW,FMR	
133	MFFZZ	19099	13227E9228W21-3-8-9	. . . WIRE,ELECTRICAL MAKE FROM BULK P/N M5086/3-8-9, 6.0 IN.	1
				UOC:FAW,FMR	
134	AFFFF	97403	13227E9228-12	..LEAD,ELECTRICAL W22	1
				UOC:FAW,FMR	
135	PAFZZ	96906	MS25036-115	...TERMINAL,LUG	2
				UOC:FAW,FMR	
136	MFFZZ	19099	13227E9228W22-3-8-9	...WIRE, ELECTRICAL MAKE FROM BULK P/N M5086/3-8-9, 6.0 IN.	1
				UOC:FAW,FMR	
137	AFFFF	97403	13227E9228-13	..LEAD,ELECTRICAL W23	1
				UOC:FAW,FMR	
138	PAFZZ	96906	MS25036-112	...TERMINAL,LUG	2
				UOC:FAW,FMR	
139	MFFZZ	19099	13227E9228W23-1-10-9	...WIRE,ELECTRICAL MAKE FROM BULK P/N M5086/1-10-9, 6.0 IN.	1
				UOC:FAW,FMR	
140	AFFFF	97403	1322739228-14	..LEAD,ELECTRICAL W24	1
				UOC:FAW,FMR	
141	PAFZZ	96906	MS25036-112	...TERMINAL,LUG	2
				UOC:FAW,FMR	
142	MFFZZ	19099	13227E9228W24-1-10-9	...WIRE,ELECTRICAL MAKE FROM BULK P/N M5086/1-10-9, 6.0 IN.	1
				UOC:FAW,FMR	
143	AFFFF	97403	13227E9228-15	..LEAD,ELECTRICAL W25	1
				UOC:FAW,FMR	
144	PAFZZ	96906	MS25036-112	...TERMINAL,LUG	2
				UOC:FAW,FMR	
145	MFFZZ	19099	13227E9228W25-1-10-9	...WIRE,ELECTRICAL MAKE FROM BULK P/N M5086/1-10-9, 6.0 IN.	1
				UOC:FAW,FMR	
146	AFFFF	97403	13227E9228-16	..LEAD,ELECTRICAL W26	1
				UOC:FAW,FMR	
147	PAFZZ	96906	MS25036-112	.TERMINAL,LUG	2
				UOC:FAW,FMR	
148	MFFZZ	19099	13227E9228W26-1-10-9	...WIRE,ELECTRICAL MAKE FROM BULK P/N M5086/1-10-9, 6.0 IN.	1
				UOC:FAW,FMR	
149	AFFFF	97403	13227E9228-17	..LEAD,ELECTRICAL W27	1
				UOC:FAW,FMR	
150	PAFZZ	96906	MS25036-112	...TERMINAL,LUG	2
				UOC:FAW,FMR	
151	MFFZZ	19099	13227E9228W27-1-10-9	...WIRE,ELECTRICAL MAKE FROM BULK P/N M5086/1-10-9, 6.0 IN.	1
				UOC:FAW,FMR	
152	AFFFF	97403	13227E9228-18	..LEAD,ELECTRICAL W28	1
153	PAFZZ	96906	MS25036-112	...TERMINAL, LUG	2
				UOC:FAW,FMR	
154	MFFZZ	19099	13227E9228W28-1-10-9	. . . WIRE,ELECTRICAL MAKE FROM BULK P/N M5086/1-10-9, 6.0 IN.	1
				UOC:FAW,FMR	
155	AFFFF	97403	13227E9228-19	..LEAD,ELECTRICAL W29	1
				UOC:FAW,FMR	
156	PAFZZ	96906	MS25036-112	.TERMINAL,LUG	2
				UOC:FAW,FMR	

(1) ITEM NO	(2) SMR CODE	(3) CAGEC	(4) PART NUMBER	(5) DESCRIPTION AND USABLE ON CODES(UOC)	(6) QTY
157	MFFZZ	19099	13227E9228W29-1-10-9	.WIRE,ELECTRICAL MAKE FROM BULK P/N M5086/1-10-9, 7.0 IN. UOC:FAW,FMR	1
158	AFFFF	97403	13227E9228-20	..LEAD,ELECTRICAL W30 UOC:FAW,FMR	1
159	PAFZZ	96906	MS25036-112	...TERMINAL, LUG UOC:FAW,FMR	2
160	MFFZZ	19099	13227E9228W30-1-10-9	...WIRE, ELECTRICAL MAKE FROM BULK P/N M5086/1-10-9, 7.0 IN. UOC:FAW,FMR	1
161	AFFFF	97403	13227E9228-21	..LEAD,ELECTRICAL W31 UOC:FAW,FMR	1
162	PAFZZ	96906	MS25036-112	...TERMINAL,LUG UOC:FAW,FMR	2
163	MFFZZ	19099	13227E9228W31-1-10-9	...WIRE,ELECTRICAL MAKE FROM BULK P/N M5086/1-10-9, 7.0 IN. UOC:FAW,FMR	1
164	AFFFF	97403	1322739228-22	..LEAD,ELECTRICAL W32 UOC:FAW,FMR	1
165	PAFZZ	96906	MS25036-123	...TERMINAL, LUG UOC:FAW,FMR	1
166	MFFZZ	19099	13227E9228W32-3-4-9	...WIRE,ELECTRICAL MAKE FROM BULK P/N M5086/3-4-9, 22.0 IN. UOC:FAW,FMR	1
167	AFFFF	97403	13227E9228-23	..LEAD,ELECTRICAL W33 UOC:FAW,FMR	1
168	PAFZZ	96906	MS25036-123	...TERMINAL,LUG UOC:FAW,FMR	1
169	MFFZZ	19099	13227E9228W33-3-4-9	...WIRE, ELECTRICAL MAKE FROM BULK P/N M5086/3-4-9, 22.0 IN. UOC:FAW,FMR	1
170	AFFFF	97403	13227&9228-24	..LEAD,ELECTRICAL W34 UOC:FAW,FMR	1
171	PAFZZ	96906	MS25036-123	...TERMINAL, LUG UOC:FAW,FMR	1
172	MFFZZ	19099	13227E9228W34-3-4-9	...WIRE,ELECTRICAL MAKE FROM BULK P/N M5086/3-4-9, 22.0 IN. UOC:FAW,FMR	1
173	AFFFF	97403	13227E9228-25	..LEAD,ELECTRICAL W35 UOC:FAW,FMR	1
174	PAFZZ	96906	MS25036-112	...TERMINAL,LUG UOC:FAW,FMR	2
175	MFFZZ	19099	13227E9228W35-1-10-9	...WIRE, ELECTRICAL MAKE FROM BULK P/N M5086/1-10-9, 51.0 IN. UOC:FAW,FMR	1
176	AFFFF	97403	13227E9228-26	..LEAD,ELECTRICAL W36 UOC:FAW,FMR	1
177	PAFZZ	96906	MS25036-112	...TERMINAL,LUG UOC:FAW,FMR	2
178	MFFZZ	19099	13227E9228W36-1-10-9	...WIRE, ELECTRICAL MAKE FROM BULK P/N M5086/1-10-9, 51.0 IN. UOC:FAW,FMR	1
179	AFFFF	97403	13227E9228-27	..LEAD,ELECTRICAL W37 UOC:FAW,FMR	1
180	PAFZZ	96906	MS25036-112	...TERMINAL,LUG UOC:FAW,FMR	2
181	MFFZZ	19099	13227E9228W37-1-10-9	...WIRE,ELECTRICAL MAKE FROM BULK P/N M5086/1-10-9, 51.0 IN.	1

(1) ITEM NO	(2) SMR CODE	(3) CAGEC	(4) PART NUMBER	(5) DESCRIPTION AND USABLE ON CODES(UOC)	(6) QTY
				UOC:FAW,FMR	

END OF FIGURE

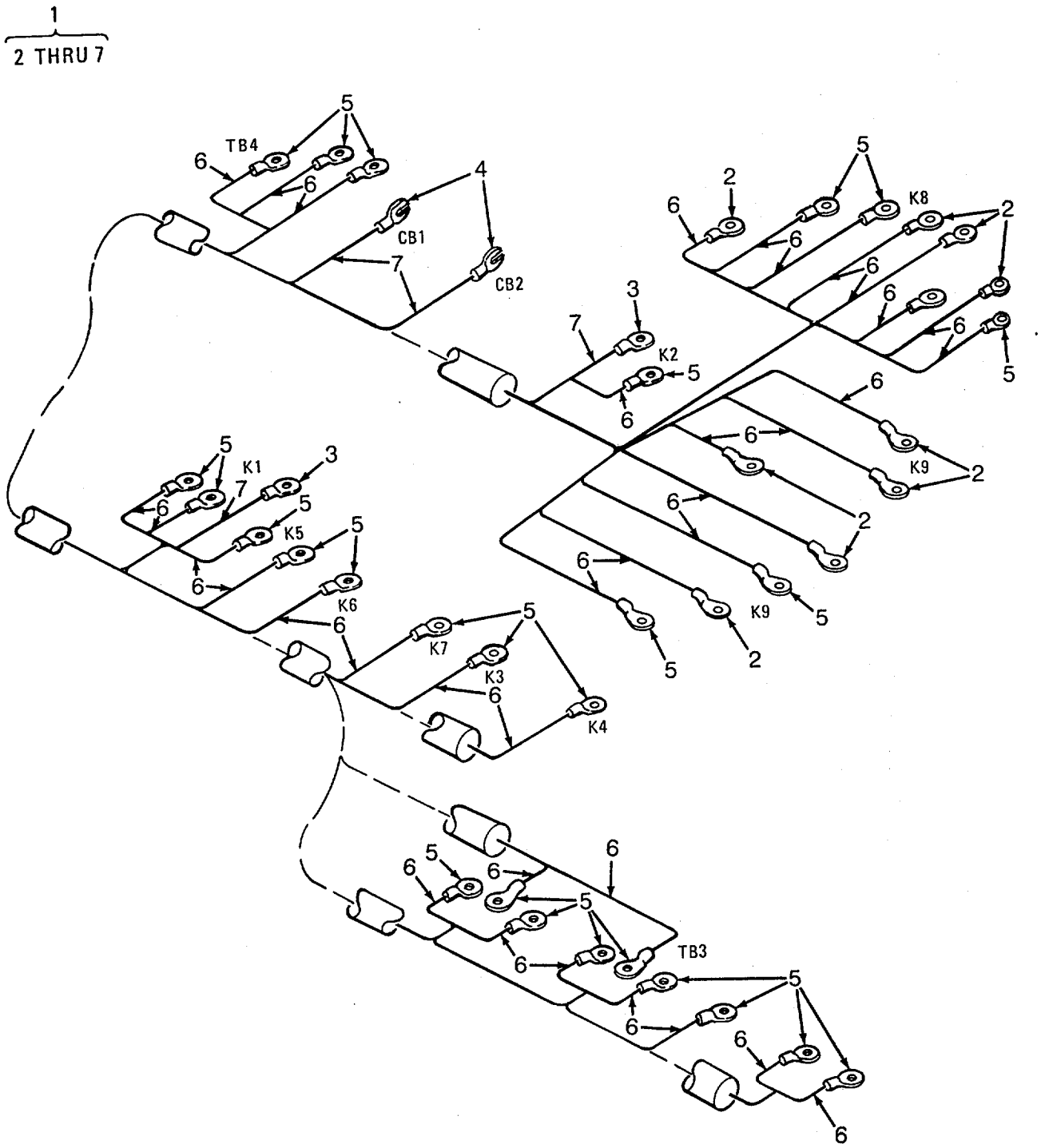

Figure 95. Junction Box Wiring Harness W3

(1) ITEM NO	(2) SMR CODE	(3) CAGEC	(4) PART NUMBER	(5) DESCRIPTION AND USABLE ON CODES(UOC)	(6) QTY
				GROUP 12 REVERSE OSMOSIS WATER PURIFICATION UNIT 600 GPH	
				FIG. 95 JUNCTION BOX WIRING HARNESS W3	
1	AFFFF	97403	13222E5308	..WIRING HARNESS W3	1
2	PAFZZ	96906	MS25036-153	...TERMINAL, LUG	9
3	PAFZZ	96906	MS25036-102	...TERMINAL, LUG	2
4	PAFZZ	00779	60432-1	...TERMINAL, QUICK DISC.....	2
5	PAFZZ	96906	MS25036-106	...TERMINAL, LUG	27
6	MFFZZ	19099	13222E5308W3-1-16-9	...WIRE, ELECTRICAL MAKE FROM BULK..... V P/N M5086/1-16-9	
7	MFFZZ	19099	13222E5308W3-1-18-9	...WIRE, ELECTRICAL MAKE FROM BULK..... V P/N M5086/1-18-9	

END OF FIGURE

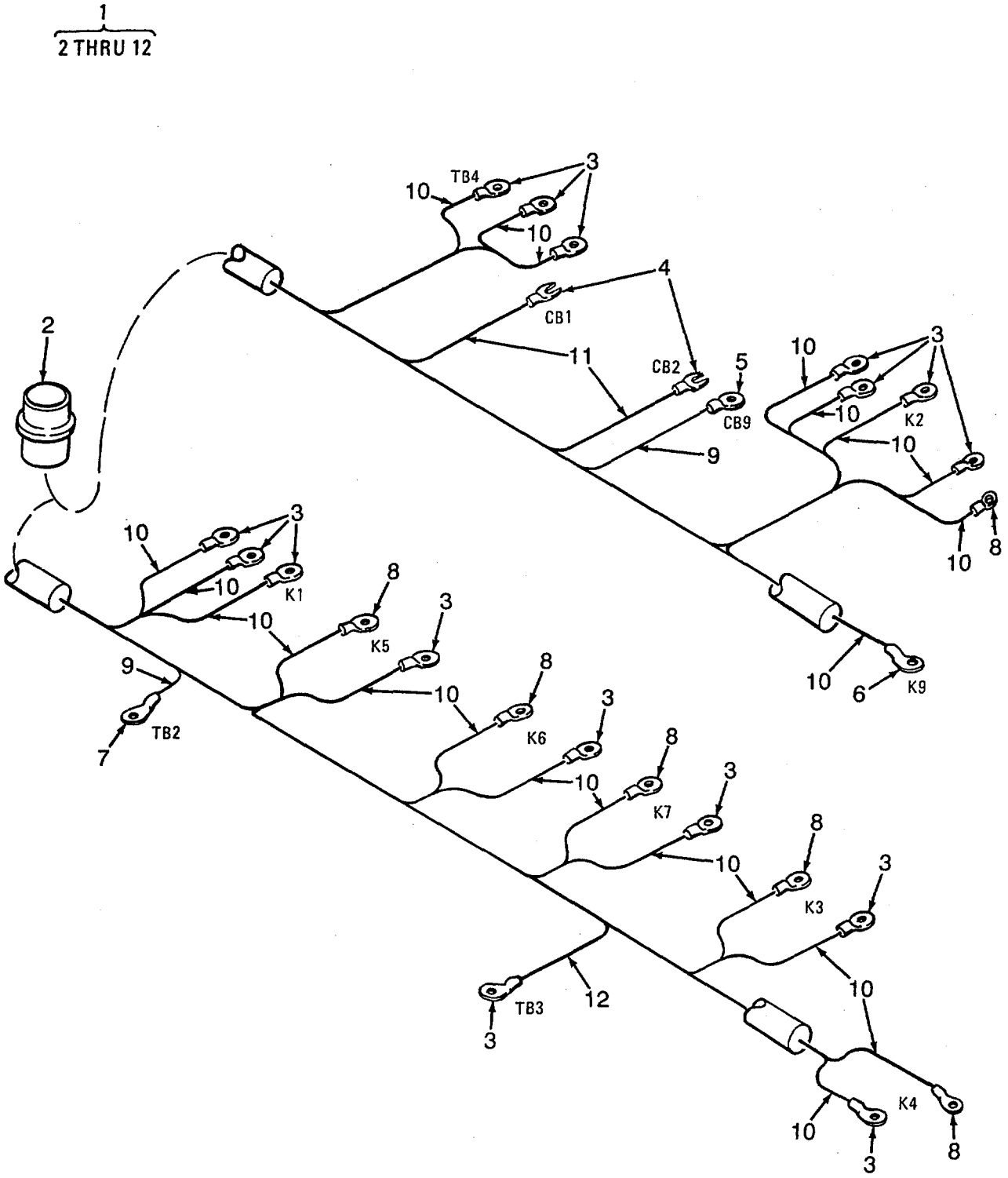

Figure 96. Junction Box Wiring Harness W4

(1) ITEM NO	(2) SMR CODE	(3) CAGEC	(4) PART NUMBER	(5) DESCRIPTION AND USABLE ON CODES(UOC)	(6) QTY
				GROUP 12 REVERSE OSMOSIS WATER PURIFICATION UNIT 600 GPH	
				FIG. 96 JUNCTION BOX WIRING HARNESS W4	
1	XDFFF	97403	13222E5299	..WIRING HARNESS W4	1
2	PAFZA	96906	MS3452W32-7S	...CONNECTOR, RECEPTACL J8.....	1
3	PAFZZ	96906	MS25036-106	...TERMINAL, LUG.	16
4	PAFZZ	97403	13216E6192	...TERMINAL, LUG	2
5	PAFZZ	96906	MS25036-112	...TERMINAL, LUG	1
6	PAFZZ	96906	MS25036-153	...TERMINAL, LUG	1
7	PAFZZ	96906	MS17143-6	...TERMINAL, LUG	1
8	PAFZZ	96906	MS25036-108	...TERMINAL, LUG	6
9	MFFZZ	19099	13222E5299W4-1-12-9	...WIRE, ELECTRICAL MAKE FROM BULK..... V P/N M5086/1-12-9	
10	MFFZZ	19099	13222E5299W4-1-16-9	...WIRE, ELECTRICAL MAKE FROM BULK..... V P/N M5086/1-16-9	
11	MFFZZ	19099	13222E5299W4-1-18-9	...WIRE, ELECTRICAL MAKE FROM BULK..... V P/N M5086/1-18-9	
12	MFFZZ	19099	13222E5299W4-1-14-9	...WIRE, ELECTRICAL MAKE FROM BULK..... V P/N M5086/1-14-9	

END OF FIGURE

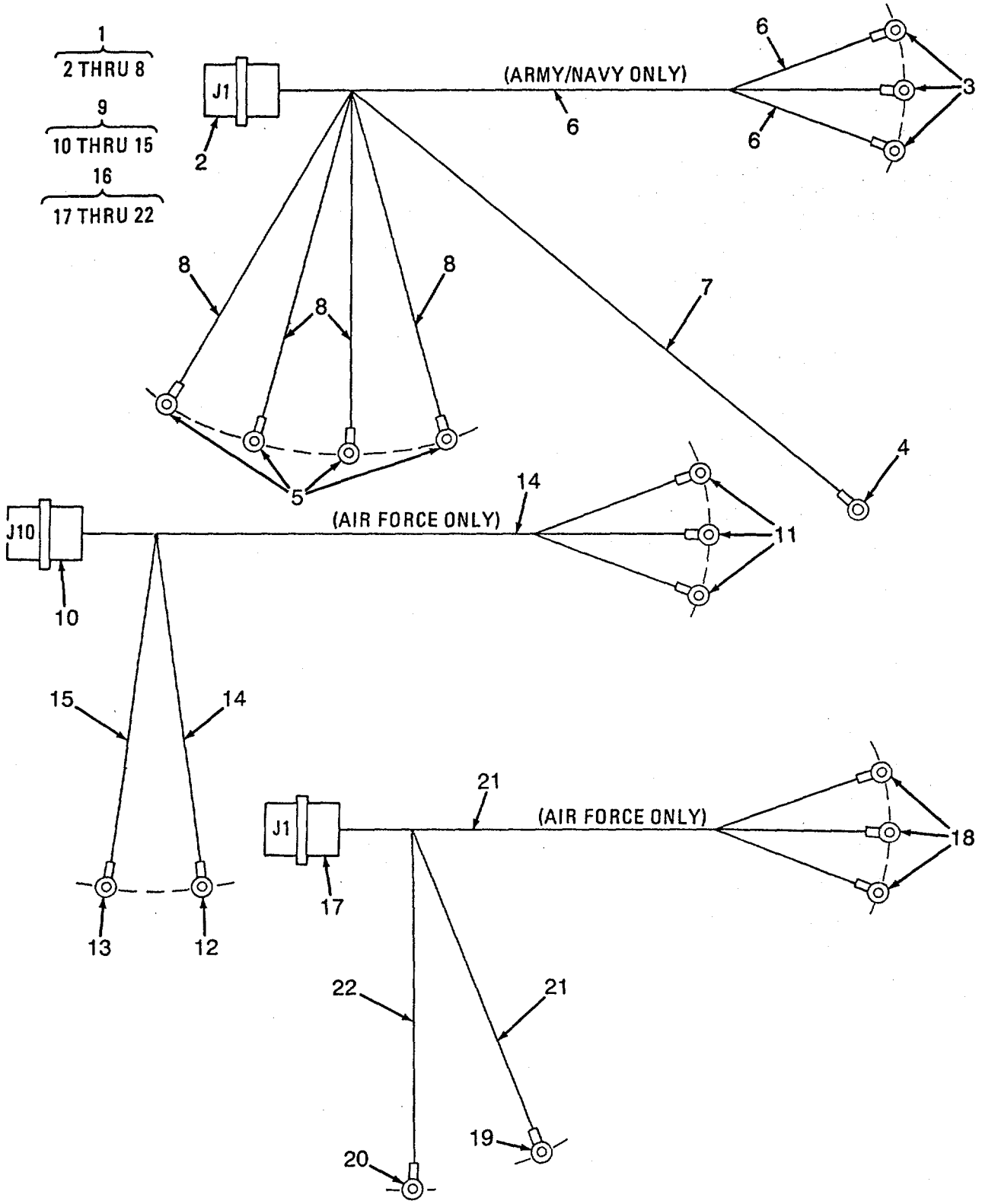

Figure 97. Junction Box Wiring Harness W5 and W40

(1) ITEM NO	(2) SMR CODE	(3) CAGEC	(4) PART NUMBER	(5) DESCRIPTION AND USABLE ON CODES(UOC)	(6) QTY
				GROUP 12 REVERSE OSMOSIS WATER PURIFICATION UNIT 600 GPH	
				FIG. 97 JUNCTION BOX WIRING HARNESS W5 AND W40	
1	PBFFF	97403	13227E9243	..WIRING HARNESS W5 UOC:FAV,FAX,FMQ,FMS	1
2	PAFZZ	96906	MS90558C44413P	...CONNECTOR,RECEPTACL J1 UOC:FAV,FAX,FMQ,FMS	1
3	PAFZZ	96906	MS25036-123	...TERMINAL,LUG UOC:FAV,FAX,FMQ,FMS	3
4	PAFZZ	97403	13227E0127-2	... TERMINAL,LUG UOC:FAV,FAX,FMQ,FMS	1
5	PAFZZ	96906	MS17143-6	...TERMINAL,LUG UOC:FAV,FAX,FMQ,FMS	4
6	MFFZZ	19099	13227E9243-3	...WIRE, ELECTRICAL MAKE FROM BULK P/N M5086/2-4-9 UOC:FAV,FAX,FMQ,FMS	V
7	MFFZZ	19099	13227E9243-5	...WIRE, ELECTRICAL MAKE FROM BULK P/N M5086/2-6-9 UOC:FAV,FAX,FMQ,FMS	V
8	MFFZZ	19099	13227E9243-7	.WIRE,ELECTRICAL MAKE FROM BULK P/N M5086/2-10-9 UOC:FAV,FAX,FMQ,FMS	V
9	AFFFF	97403	13227E9222-1	..WIRING HARNESS W5 UOC:FAW,FMR	1
10	PAFZA	96906	MS90558C32412P	...CONNECTOR,RECEPTACL J10 UOC:FAW,FMR	1
11	PAFZZ	96906	MS25036-123	...TERMINAL,LUG UOC:FAW,FMR	3
12	PAFZZ	97403	13227E0127-3	...TERMINAL,LUG UOC:FAW,FMR	1
13	PAFZZ	96906	MS25036-122	...TERMINAL,LUG UOC:FAW,FMR	1
14	MFFZZ	19099	13227E9222W5-2-4-9	...WIRE, ELECTRICAL MAKE FROM BULK P/N M5086/2-4-9 UOC:FAW,FMR	V
15	MFFZZ	19099	13227E9222W5-2-6-9	...WIRE, ELECTRICAL MAKE FROM BULK P/N M5086/2-6-9 UOC:FAW,FMR	V
16	AFFFF	97403	1322739222-2	..WIRING HARNESS W40 UOC:FAW,FMR	1
17	PAFZA	96906	MS90558C32412P	...CONNECTOR,RECEPTACL J1 UOC:FAW,FMR	1
18	PAFZZ	96906	MS25036-123	...TERMINAL, LUG UOC:FAW,FMR	3
19	PAFZZ	97403	1322730127-3	...TERMINAL,LUG UOC:FAW,FMR	1
20	PAFZZ	96906	MS25036-122	...TERMINAL,LUG UOC:FAW,FMR	1
21	MFFZZ	19099	13227E9222W4-2-4-9	...WIRE,ELECTRICAL MAKE FROM BULK P/N M5086/2-4-9 UOC:FAW,FMR	V
22	MFFZZ	19099	13227E9222W4-2-6-9	...WIRE,ELECTRICAL MAKE FROM BULK P/N M5086/2-6-9 UOC:FAW,FMR	V

END OF FIGURE

(1) ITEM NO	(2) SMR CODE	(3) CAGEC	(4) PART NUMBER	(5) DESCRIPTION AND USABLE ON CODES(UOC)	(6) QTY
			-9	P/N M5086/2-4-9 ..... UOC:FAW	
22	MFFZZ	19099	13227E9222W4-2-6 -9	...WIRE, ELECTRICAL MAKE FROM BULK..... V P/N M5086/2-6-9 ..... UOC:FAW	

END OF FIGURE

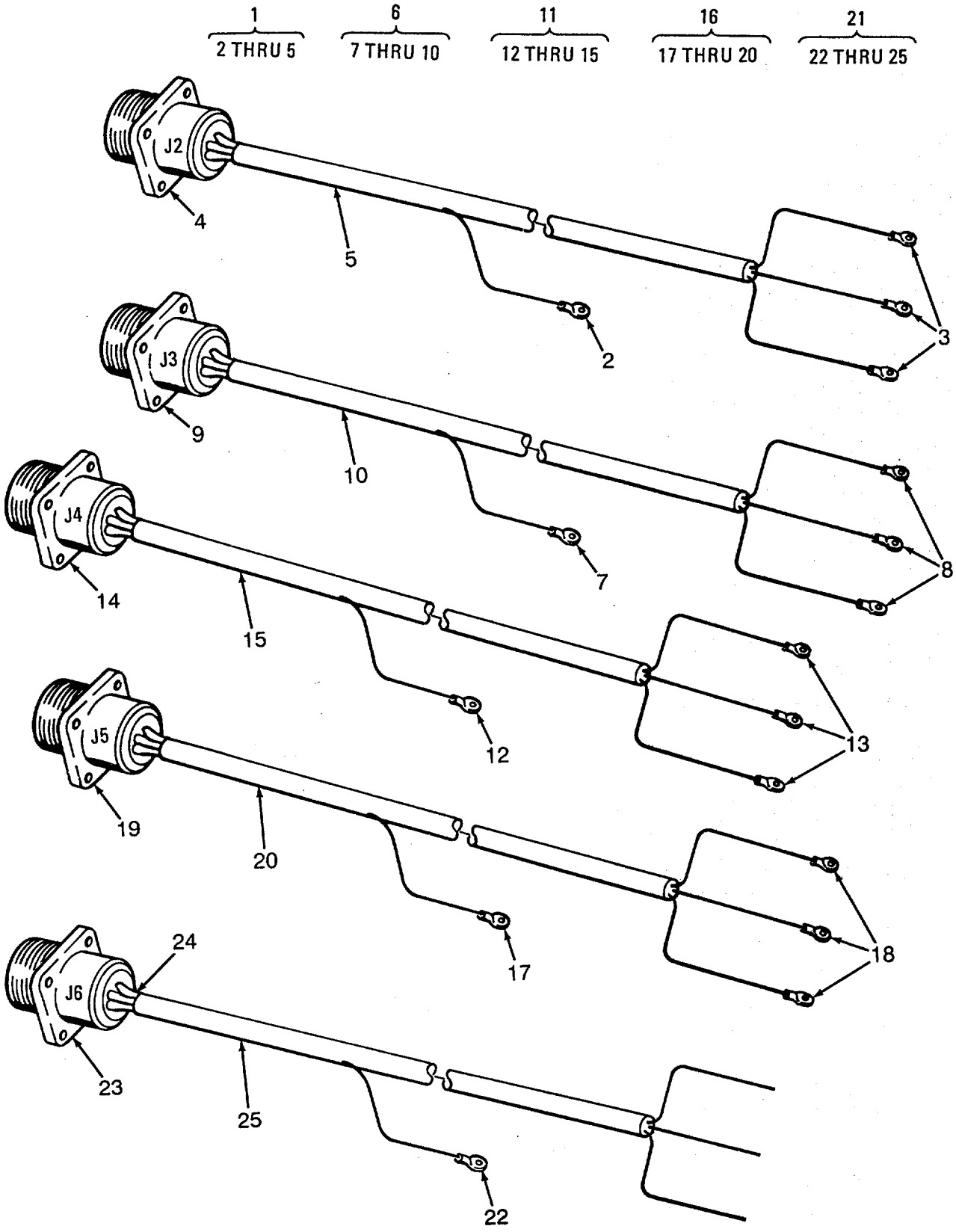

Figure 98. Junction Box Wiring Harness W6, W7, W8, W9, W10

(1) ITEM NO	(2) SMR CODE	(3) CAGEC	(4) PART NUMBER	(5) DESCRIPTION AND USABLE ON CODES(UOC)	(6) QTY
				GROUP 12 REVERSE OSMOSIS WATER PURIFICATION UNIT 600 GPH	
				FIG. 98 JUNCTION BOX WIRING HARNESS W6, W7, W8, W9, W10	
1	XDFFF	97403	13222E5298-2	..WIRING HARNESS W6	1
2	PAFZZ	96906	MS17143-6	...TERMINAL, LUG	1
3	PAFZZ	96906	MS25036-112	...TERMINAL,LUG	3
4	PAFZZ	96906	MS3452W24-22S	...CONNECTOR, RECEPTACL J2	1
5	MFFZZ	19099	13222E5298W36-1-10-9	...WIRE, ELECTRICAL MAKE FROM BULK P/N M5086/1-10-9, 71.0 IN.	1
6	XDFFF	97403	13222E5298-3	..WIRING HARNESS W7	1
7	PAFZZ	96906	MS25036-106	...TERMINAL, LUG	1
8	PAFZZ	96906	MS25036-108	...TERMINAL, LUG	3
9	PAFZZ	96906	MS3452W18-11S	...CONNECTOR, RECEPTACL J3	1
10	MFFZZ	19099	13222E5298W7-1-14-9	...WIRE, ELECTRICAL MAKE FROM BULK P/N M5086/1-14-9, 65.0 IN	1
11	XDFFF	97403	13222E5298-4	..WIRING HARNESS W8	1
12	PAFZZ	96906	MS25036-106	...TERMINAL, LUG	1
13	PAFZZ	96906	MS25036-108	...TERMINAL, LUG	3
14	PAFZZ	96906	MS3452W18-11S	...CONNECTOR, RECEPTACL J4	1
15	MFFZZ	19099	13222E5298W8-1-14-9	...WIRE, ELECTRICAL MAKE FROM BULK P/N M5086/1-14-9, 75.0 IN	1
16	XDFFF	97403	13222E5298-5	..WIRING HARNESS W9	1
17	PAFZZ	96906	MS25036-106	...TERMINAL, LUG	1
18	PAFZZ	96906	MS25036-108	...TERMINAL, LUG	3
19	PAFZZ	96906	MS3452W18-11S	...CONNECTOR, RECEPTACL J5	1
20	MFFZZ	19099	13222E5298W9-1-14-9	...WIRE, ELECTRICA MAKE FROM BULK P/N M5086/1-14-9, 43.0 IN	1
21	XDFFF	97403	13222E5298-6	..WIRING HARNESS W10.	1
22	PAFZZ	96906	MS25036-125	...TERMINAL, LUG	1
23	PAFZA	96906	MS3102R36-5S	...CONNECTOR, RECEPTACL J6	1
24	MFFZZ	19099	13222E5298-5-108-9	...SLEEVING, INSULATION MAKE FROM BULK P/N M23053/5-108-9	4
25	MFFZZ	19099	13222E5298W10-2-4-9	...WIRE, ELECTRICAL MAKE FROM BULK P/N MS086/2-4-9-9	1

END OF FIGURE

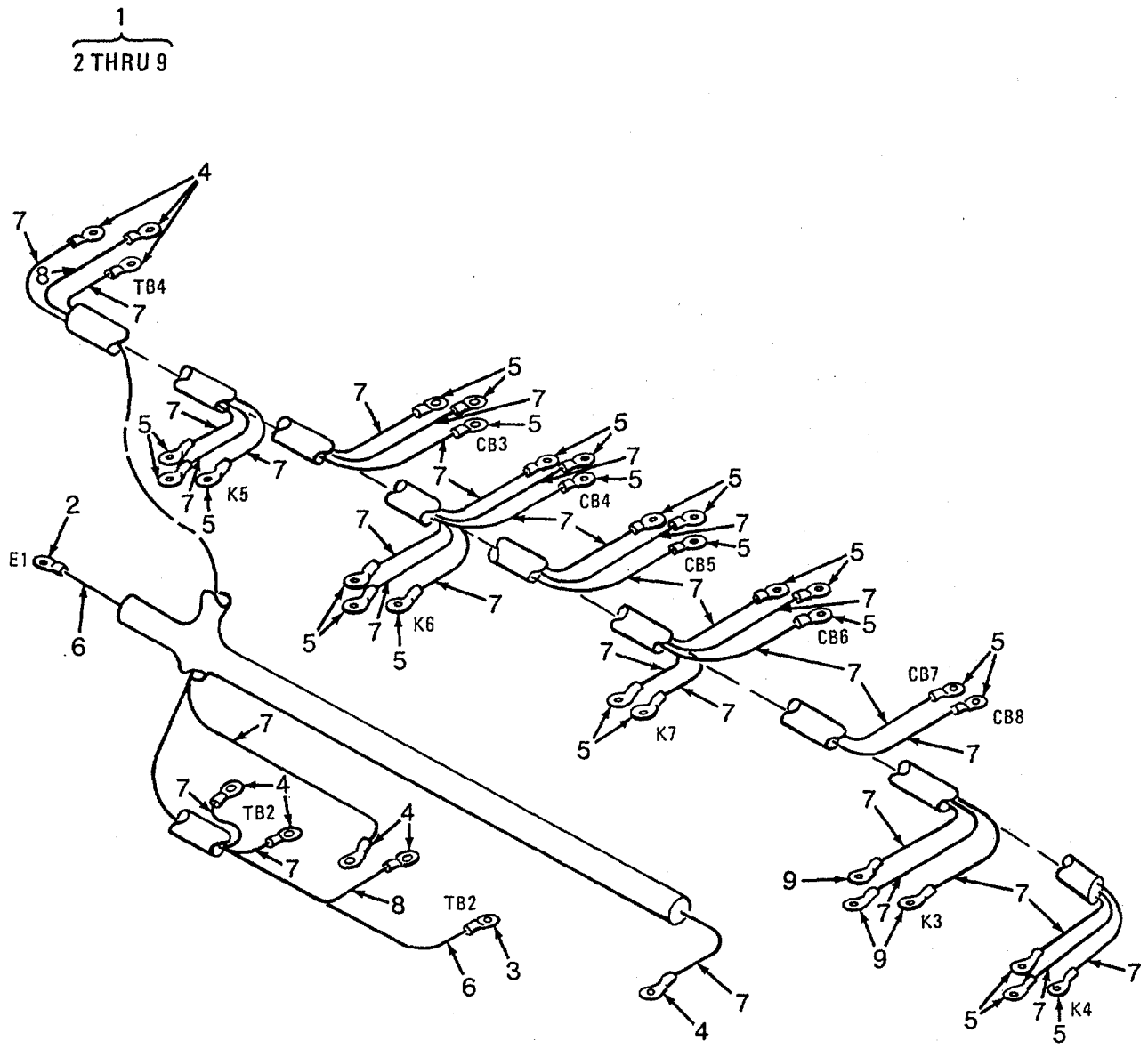

Figure 99. Junction Box Wiring Harness W39

(1) ITEM NO	(2) SMR CODE	(3) CAGEC	(4) PART NUMBER	(5) DESCRIPTION AND USABLE ON CODES(UOC)	(6) QTY
				GROUP 12 REVERSE OSMOSIS WATER PURIFICATION UNIT 600 GPH	
				FIG. 99 JUNCTION BOX WIRING HARNESS W39	
1	AFFFF	97403	13222E5309	..WIRING HARNESS W39	1
2	PAFZZ	96906	MS25036-114	...TERMINAL, LUG	1
3	PAFZZ	96906	MS17143-6	...TERMINAL, LUG	1
4	PAFZZ	96906	MS25036-106	...TERMINAL, LUG	8
5	PAFZZ	96906	MS25036-108	...TERMINAL, LUG	28
6	MFFZZ	19099	13222E5309W39-1-10-9	...WIRE, ELECTRICAL MAKE FROM BULK..... V P/N M5086/1-10-9	
7	MFFZZ	19099	13222E5309W39-1-14-9	...WIRE, ELECTRICAL MAKE FROM BULK..... V P/N M5086/1-14-9	
8	MFFZZ	19099	13222E5309W39-1-16-9	...WIRE, ELECTRICAL MAKE FROM BULK..... V P/N M5086/1-16-9	
9	PAFZZ	96906	MS25036-153	...TERMINAL, LUG	3

END OF FIGURE

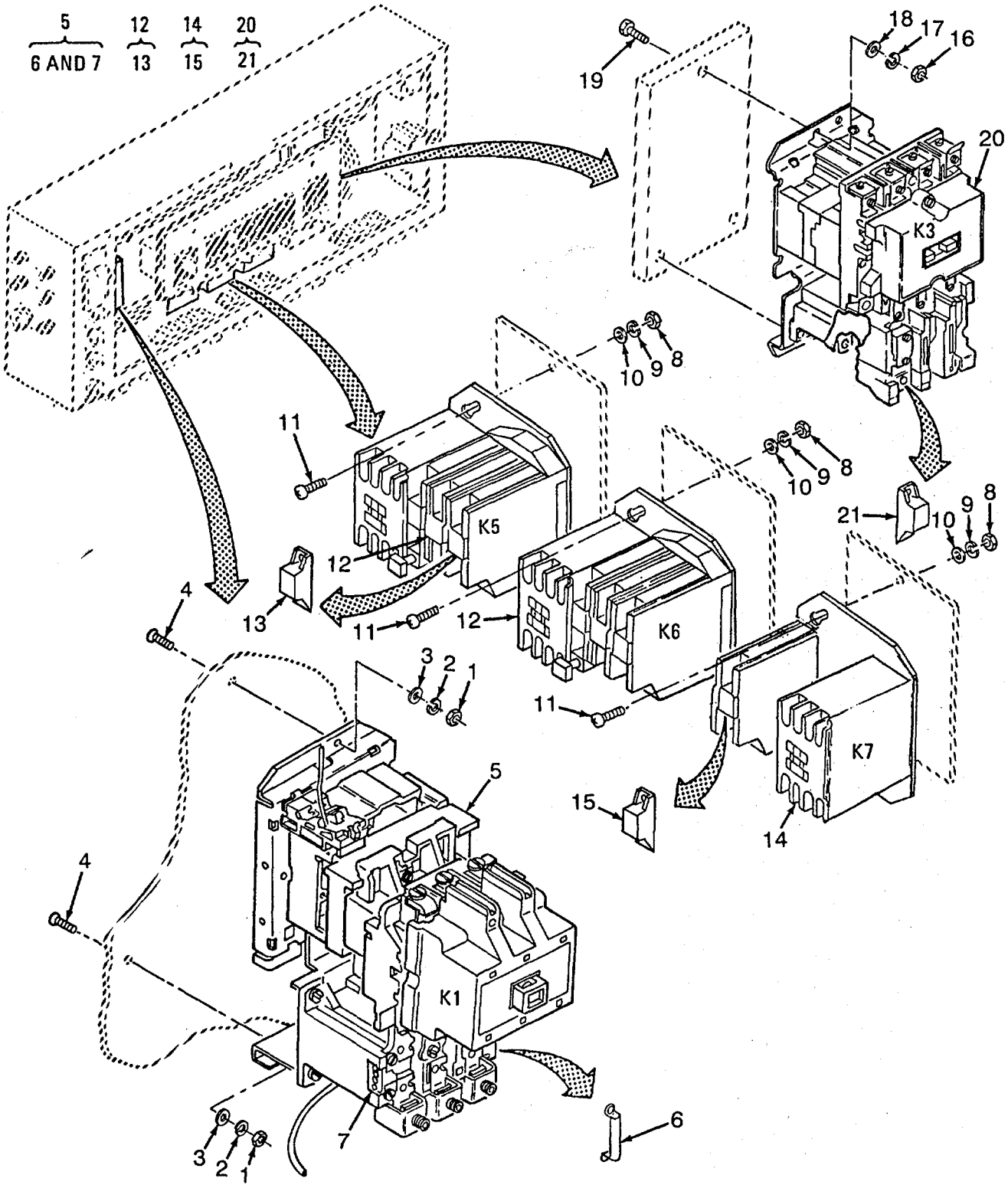

Figure 100. Junction Box Starter Motors (Sheet 1 of 2)

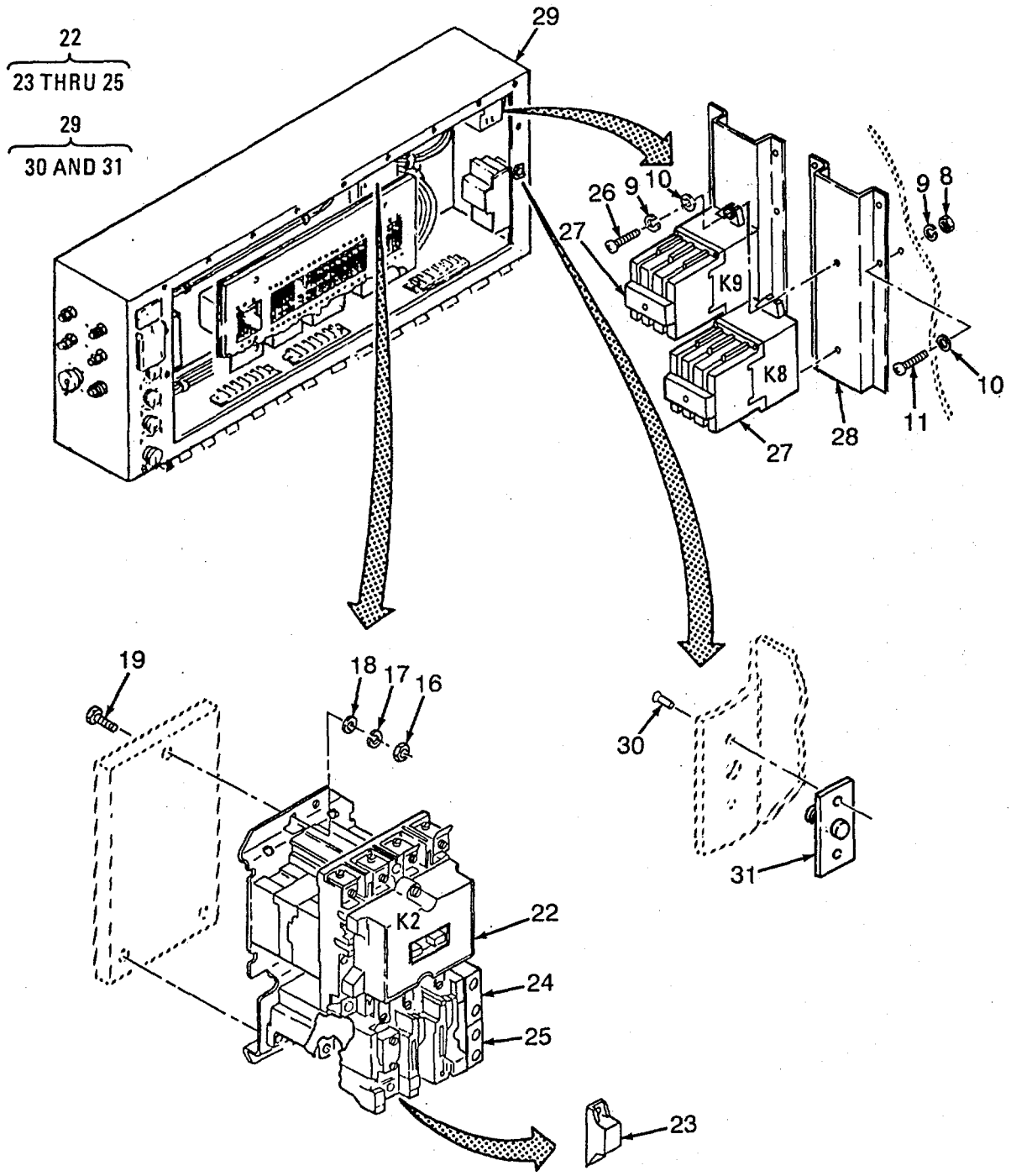

Figure 100. Junction Box Starter Motors (Sheet 2 of 2)

(1) ITEM NO	(2) SMR CODE	(3) CAGEC	(4) PART NUMBER	(5) DESCRIPTION AND USABLE ON CODES(UOC)	(6) QTY
				GROUP 12 REVERSE OSMOSIS WATER PURIFICATION UNIT 600 GPH	
				FIG. 100 JUNCTION BOX STARTER MOTORS	
1	PAFZZ	96906	MS35649-2254	..NUT,PLAIN,HEXAGON	3
2	PAFZZ	96906	MS35338-139	..WASHER,LOCK	3
3	PAFZZ	96906	MS15795-810	..WASHER,FLAT	3
4	PAFZZ	96906	MS35307-305	..SCREW,CAP,HEXAGO N H	3
5	PAFFZ	01121	509-DOD	..STARTER,MOTOR K1	1
6	PAFZZ	01121	W-71	..HEATER,STARTER	3
7	PBFZZ	01121	595-A	...CONTACT ASSEMBLY,EL	1
8	PAFZZ	96906	MS35649-284	..NUT,PLAIN,HEXAGON	15
9	PAFZZ	96906	MS35338-137	..WASHER,LOCK	19
10	PAFZZ	96906	MS15795-807	..WASHER,FLAT	19
11	PAFZZ	96906	MS3212-25	..SCREW,MACHINE	15
12	PAFFF	01121	509-TOD/W-39	..STARTER,MOTOR K5 AND K6	2
13	PAFZZ	01121	W-39	...ELEMENT,HEATER	3
14	PAFFF	01121	509-TOXD	..STARTER,MOTOR K7	1
15	PAFZZ	01121	W-46	..HEATER,THERMAL RELE	1
16	PAFZZ	96906	MS35649-204	..NUT,PLAIN,HEXAGON	9
17	PAFZZ	96906	MS35338-138	..WASHER,LOCK	9
18	PAFZZ	96906	MS15795-842	..WASHER,FLAT	9
19	PAFZZ	96906	MS3212-41	..SCREW,MACHINE	9
20	PAFFZ	01121	509-AOD	..STARTER,MOTOR K3	2
21	PAFZZ	01121	W-47	..HEATER,THERMA L RELE	3
22	PAFFF	01121	509-BOD	..STARTER,MOTOR K2	1
23	PAFZZ	01121	W-63	...HEATER,THERMAL RELE	3
24	PBFZZ	01121	595-A	..CONTACT ASSEMBLY,EL	1
25	PBFZZ	01121	595-B	..CONTACT SET,MOTOR S	1
26	PAFZZ	96906	MS51957-46	..SCREW,MACHINE	4
27	PAFZZ	97403	13227E5591	..RELAY,ELECTROMAGNET K8 AND K9	2
28	XDFZZ	97403	13227E5590	..PLATE,MOUNTING	2
29	XDFFF	97403	13222E5304	..JUNCTION BOX,ELEC UOC:FAV,FAX,FMQ,FMS	1
29	XDFFF	97403	13227E9232	..JUNCTION BOX,ELEC UOC:FAW,FMR	1
30	PAFZZ	96906	MS20426B3-5	..RIVET,SOLID	26
31	PAFZZ	97403	13226E2211-2	..FASTENER,ROTARY	13

END OF FIGURE

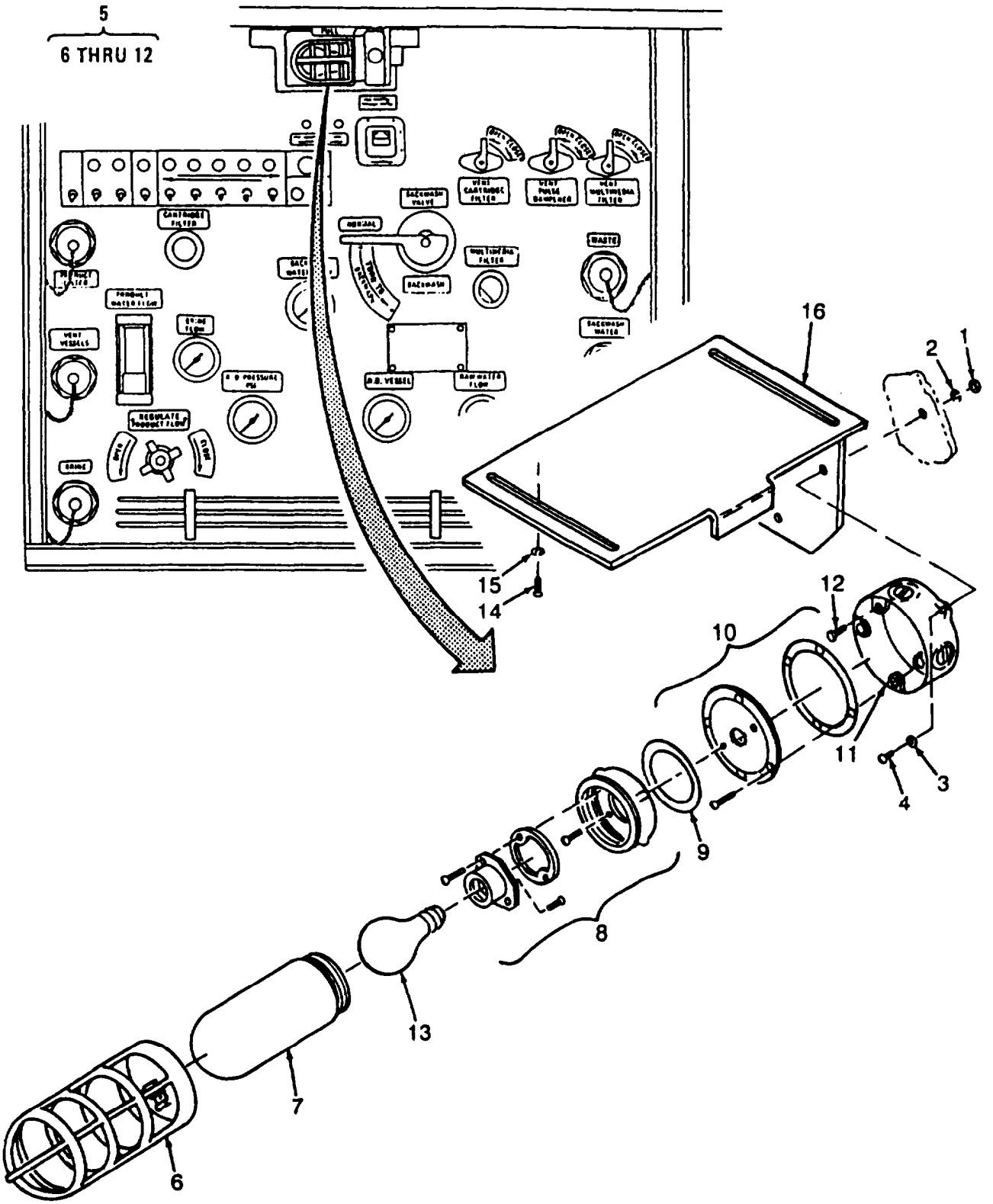

Figure 101. Control Panel Light

(1) ITEM NO	(2) SMR CODE	(3) CAGEC	(4) PART NUMBER	(5) DESCRIPTION AND USABLE ON CODES(UOC)	(6) QTY
				GROUP 12 REVERSE OSMOSIS WATER PURIFICATION UNIT 600 GPH	
				FIG. 101 CONTROL PANEL LIGHT	
1	PAOZZ	96906	MS51971-1	.NUT, PLAIN, HEXAGON	2
2	PAOZZ	96906	MS35338-139	.WASHER, LOCK	2
3	PAOZZ	96906	MS15795-809	.WASHER, FLAT	2
4	PAOZZ	96906	MS35307-308	.SCREW, CAP, HEXAGON H	2
5	PBOOO	97403	13222E5271	.LIGHT, PANEL	1
6	XDOZZ	75282	VAG-100	..GUARD	1
7	PAOZZ	75282	VGG-100	..GLOBE, BLUE-GREEN	1
8	XDOZZ	75282	VFC-100	..BODY, FIXTURE	1
9	PAOZZ	75282	VTG-100	..GASKET	1
10	XDOZZ	75282	VBA	..PLATE, ADAPTER	1
11	XDOZZ	75282	VLJSX-1	..BOX, SPLICE	1
12	XDOZZ	75282	0722787B	..SCREW, MACHINE 10-24X318	1
13	PAOZZ	81348	WL101-77T	.LAMP, INCANDESCENT	1
14	XDOZZ	97403	13222E5252	.BOLT, EXTERNALLY REL	4
15	PAOZZ	96906	MS9321-12	.WASHER, FLAT	4
16	XDOZZ	97403	13222E5270	.PLATE	1

END OF FIGURE

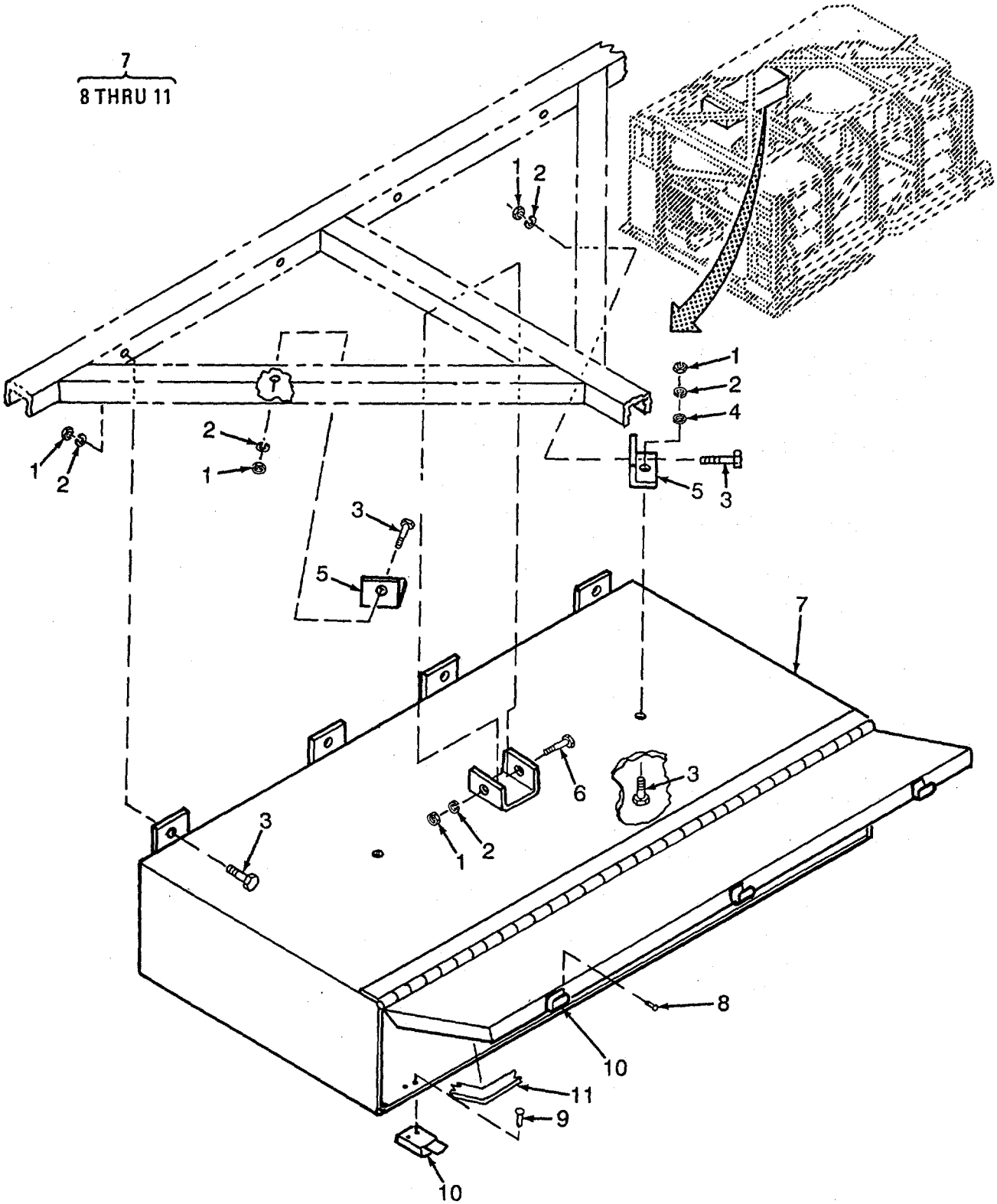

Figure 102. Storage Box

(1) ITEM NO	(2) SMR CODE	(3) CAGEC	(4) PART NUMBER	(5) DESCRIPTION AND USABLE ON CODES(UOC)	(6) QTY
				GROUP 12 REVERSE OSMOSIS WATER PURIFICATION UNIT 600 GPH	
				FIG. 102 STORAGE BOX	
1	PAOZZ	96906	MS51971-1	.NUT, PLAIN, HEXAGON	9
2	PAOZZ	96906	MS35338-139	.WASHER, LOCK	9
3	PAOZZ	96906	MS35307-308	.SCREW, CAP, HEXAGON H	8
4	PAOZZ	96906	MS15795-809	.WASHER, FLAT	2
5	XDOZZ	97403	13221E8347	.HANGER	2
6	PAOZZ	96906	MS35307-322	.SCREW, CAP, HEXAGON H	1
7	XDOOO	97403	13221E8348	.BOX, STORAGE	1
8	PAOZZ	96906	MS20426B4-6	..RIVET, SOLID	6
9	PAOZZ	96906	MS20470B4-9	..RIVET, SOLID	6
10	PAOZZ	96906	MS18015-1	..CATCH, CLAMPING	3
11	MOOZZ	19099	13221E8348-8	..GASKET, RUBBER, SYNTH MAKE FROM MIL-R-6855, CL2, TYA, GR30, 0.125 STOCK	1

END OF FIGURE

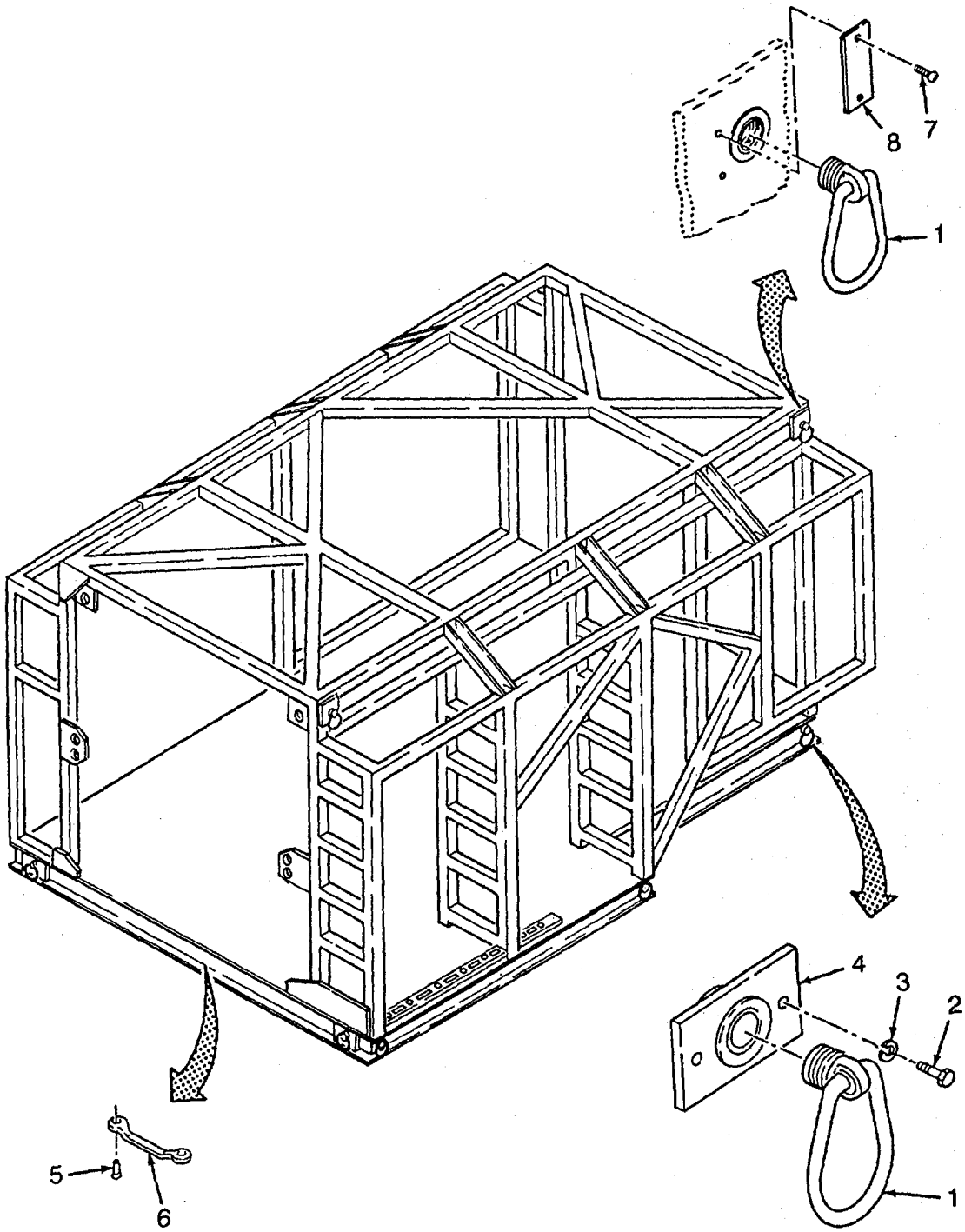

Figure 103. Control Panel Frame (Sheet 1 of 2)

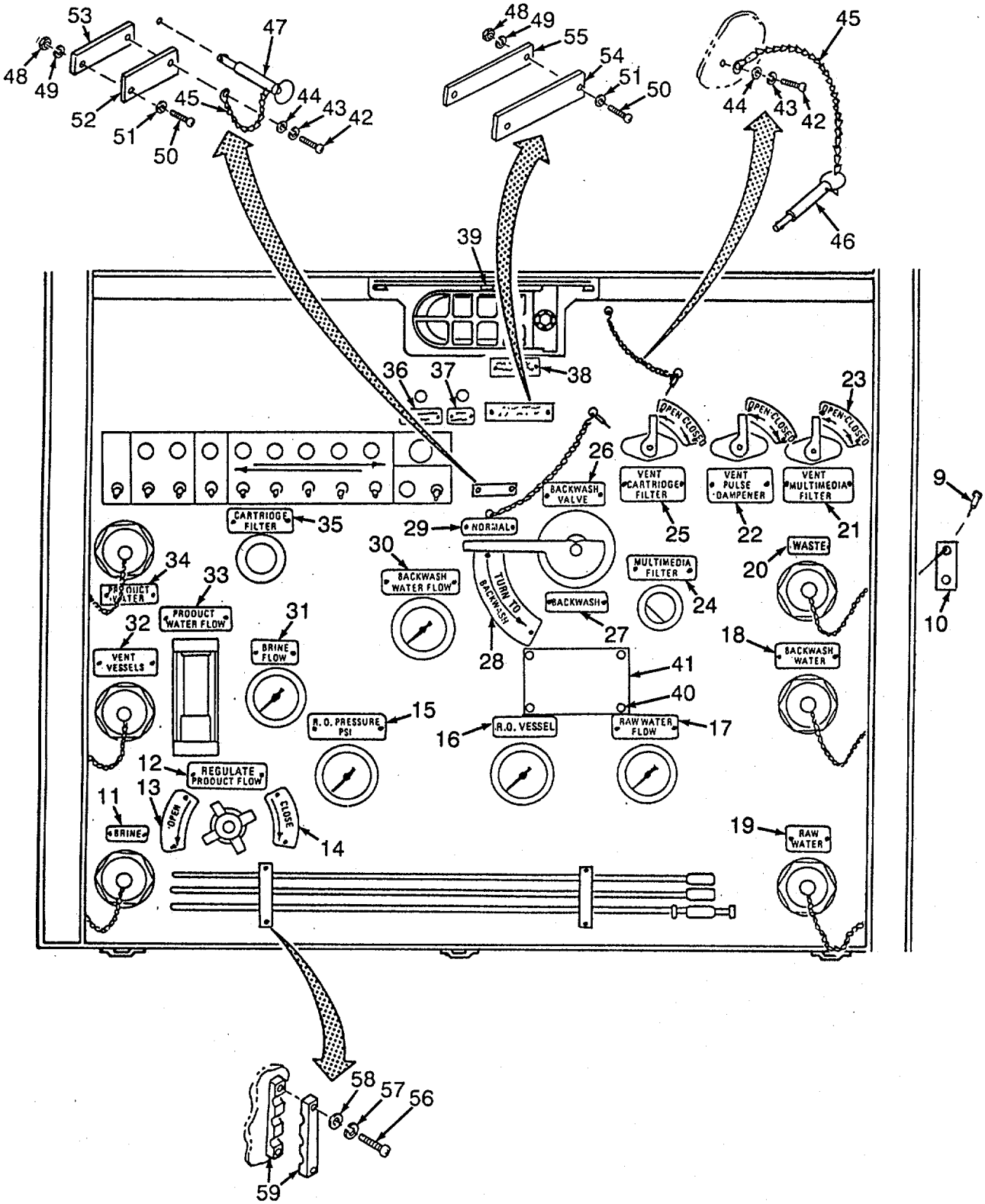

Figure 103. Control Panel Frame (Sheet 2 of 2)

(1) ITEM NO	(2) SMR CODE	(3) CAGEC	(4) PART NUMBER	(5) DESCRIPTION AND USABLE ON CODES(UOC)	(6) QTY
				GROUP 12 REVERSE OSMOSIS WATER PURIFICATION UNIT 600 GPH	
				FIG. 103 CONTROL PANEL FRAME	
1	PAOZZ	96906	MS21236-2	.RING ASSY,CARGO TIE	6
2	PAOZZ	96906	MS90725-60	.SCREW,CAP,HEXAGON H	8
3	PAOZZ	96906	MS35338-141	.WASHER,LOCK	8
4	PBOZZ	97403	13220E5346	.NUT,PLATE	4
5	PAOZZ	96906	MS51959-43	.SCREW,MACHINE UOC:FAV,FAW,FMQ,FMR	10
6	PBOZZ	97403	13219E0469	.LOOP,STRAP FASTENER UOC:FAV,FAW,FMQ,FMR	5
7	PAOZZ	96906	MS51959-63	.SCREW,MACHINE	8
8	XDOZZ	97403	13221E8297	.PLATE	4
9	PAOZZ	96906	MS21318-21	.SCREW,DRIVE SECURES ALL INFORMATION PLATES	64
10	XDOZZ	97403	13222E5279-47	.PLATE,INFORMATION GROUND	1
11	XDOZZ	97403	13222E5279-36	.PLATE,INFORMATION BRINE	1
12	XDOZZ	97403	13222E5279-29	.PLATE,INFORMATION REGULATE PRODUCT FLOW	1
13	XDOZZ	97403	13222E5279-46	.PLATE,INFORMATION OPEN	1
14	XDOZZ	97403	13222E5279-45	.PLATE,INFORMATION CLOSE	1
15	XDOZZ	97403	13222E5279-13	.PLATE,INFORMATION R O PRESSURE P.S.I	1
16	XDOZZ	97403	13222E5279-48	.PLATE,INFORMATION R O VESSELS	1
17	XDOZZ	97403	13222E5279-16	.PLATE,INFORMATION RAW WATER FLOW	1
18	XDOZZ	97403	13222E5279-18	.PLATE,INFORMATION BACKWASH WATER	1
19	XDOZZ	97403	13222E5279-34	.PLATE,INFORMATION RAW WATER	1
20	XDOZZ	97403	13222E5279-35	.PLATE,INFORMATION WASTE	1
21	XDOZZ	97403	13222E5279-7	.PLATE,INFORMATION VENT MULTIMEDIA FILTER	1
22	XDOZZ	97403	13222E5279-12	.PLATE,INFORMATION VENT PULSE DAMPENER UOC:FAV,FAW,FAX	1
23	XDOZZ	97403	13222E5279-50	.PLATE,INFORMATION OPEN CLOSE	3
24	XDOZZ	97403	13222E5279-25	.PLATE,INFORMATION MULTIMEDIA FILTER	1
25	XDOZZ	97403	13222E5279-10	.PLATE,INFORMATION VENT CARTRIDGE FILTER	1
26	XDOZZ	97403	13222E5279-20	.PLATE,INFORMATION BACKWASH VALVE	1
27	XDOZZ	97403	13222E5279-49	.PLATE,INFORMATION BACKWASH	1
28	XDOZZ	97403	13222E5279-44	.PLATE,INFORMATION TURN TO BACKWASH	1
29	XDOZZ	97403	13222E5279-32	.PLATE,INFORMATION NORMAL	1
30	XDOZZ	97403	13222E5279-14	.PLATE,INFORMATION BACKWASH WATER FLOW	1
31	XDOZZ	97403	13222E5279-33	.PLATE,INFORMATION BRINE FLOW	1
32	XDOZZ	97403	13222E5279-11	.PLATE,INFORMATION VENT VESSELS	1
33	XDOZZ	97403	13222E5279-15	.PLATE,INFORMATION PRODUCT WATER FLOW	1
34	XDOZZ	97403	13222E5279-31	.PLATE,INFORMATION PRODUCT WATER	1
35	XDOZZ	97403	13222E5279-17	.PLATE,INFORMATION CARTRIDGE FILTER	1
36	XDOZZ	97403	13222E5279-55	.PLATE,INFORMATION TDS MONITOR SENSOR	1
37	XDOZZ	97403	13222E5279-56	.PLATE,INFORMATION TDS MONITOR POWER	1
38	XDOZZ	97403	13222E5279-57	.PLATE,INFORMATION TDS MONITOR PRODUCT WATER	1
39	XDOZZ	97403	13222E5279-38	.PLATE,INFORMATION PULL	1
40	PAOZZ	81349	M24243/1-B604	.RIVET,BLIND	4
41	XDOZZ	90598	30629	.PLATE,INFORMATION NOISE,CAUTION	1
42	PAOZZ	96906	MS51957-14	.SCREW,MACHINE	2
43	PAOZZ	96906	MS35338-135	.WASHER,LOCK	2
44	PAOZZ	96906	MS9321-5	.WASHER,FLAT	2
45	MOOZZ	19099	RR-C-271TY2CL6-9	.CHAIN MAKE FROM BULK P/N RR-C-271, TYII, CL6, 9 LINKS	2
46	PAOZZ	96906	MS17990C308	.PIN,QUICK RELEASE	1
47	PAOZZ	96906	MS17990C404	.PIN,QUICK RELEASE	1
48	PAOZZ	96906	MS35649-204	.NUT,PLAIN,HEXAGON	4
49	PAOZZ	96906	MS35338-138	.WASHER,LOCK	4

(1) ITEM NO	(2) SMR CODE	(3) CAGEC	(4) PART NUMBER	(5) DESCRIPTION AND USABLE ON CODES(UOC)	(6) QTY
50	PAOZZ	96906	MS51957-67	.SCREW,MACHINE	4
51	PAOZZ	96906	MS15795-808	.WASHER,FLAT	4
52	XDOZZ	97403	13227E7589-1	.BRACKET	1
53	XDOZZ	97403	13227E7589-2	.BRACKET	1
54	XDOZZ	97403	13227E7589-3	.BRACKET	1
55	XDOZZ	97403	13227E7589-4	.BRACKET	1
56	PAOZZ	96906	MS35307-306	.SCREW,CAP,HEXAGON,H	4
57	PAOZZ	96906	MS35338-139	.WASHER,LOCK	4
58	PAOZZ	96906	MS15795-809	.WASHER,FLAT	4
59	XDOZZ	97403	13222E5343	.STRAP,RETAINING	2

END OF FIGURE

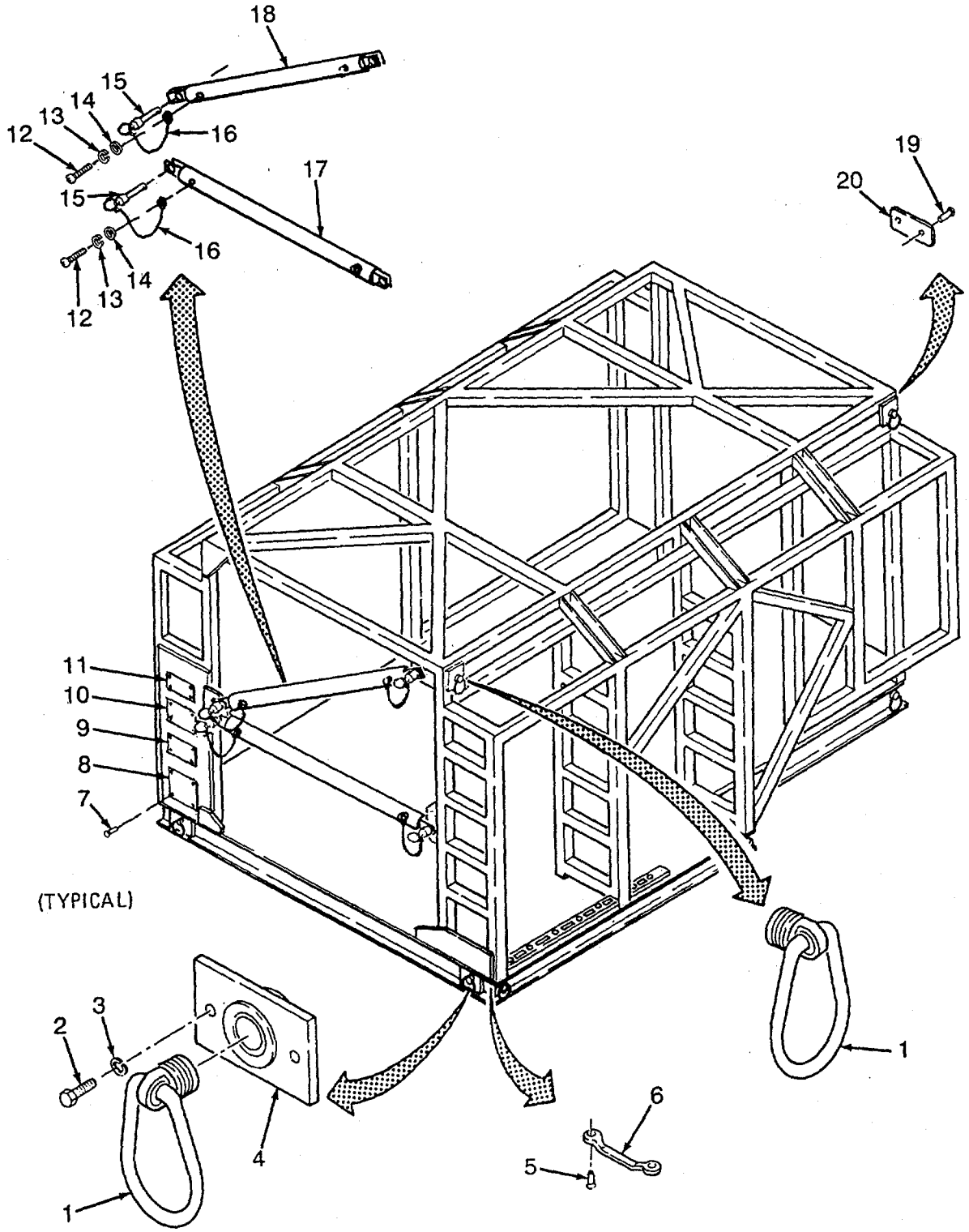

Figure 104. Front Side Frame

(1) ITEM NO	(2) SMR CODE	(3) CAGEC	(4) PART NUMBER	(5) DESCRIPTION AND USABLE ON CODES(UOC)	(6) QTY
				GROUP 12 REVERSE OSMOSIS WATER PURIFICATION UNIT 600 GPH	
				FIG. 104 FRONT SIDE FRAME	
1	PAOZZ	96906	MS21236-2	.RING ASSY,CARGO TIE	8
2	PAOZZ	96906	MS90725-60	.SCREW,CAP,HEXAGON H	8
3	PAOZZ	96906	MS35338-141	.WASHER,LOCK	8
4	PBOZZ	97403	1322035346	.NUT,PLATE	4
5	PAOZZ	96906	MS51959-43	.SCREW,MACHINE	8
6	XDOZZ	97403	13219E0469	.LOOP,STRAP FASTENER	4
7	PAOZZ	81349	M24243/1-B604	.RIVET,BLIND UOC:FAV,FMQ	16
7	PAOZZ	81349	M24243/1-B604	.RIVET,BLIND UOC:FAW,FAX,FMR,FMS	8
8	XDOZZ	97403	13221E8299	.PLATE,INFORMATION CENTER OF GRAVITY UOC:FAV,FMQ	1
9	XDOZZ	97403	13221E8306	.PLATE,INFORMATION UOC:FAV,FMQ	1
10	XDOZZ	97403	13221E8304	.PLATE,INFORMATION	1
11	XDOZZ	97403	13221E8298	.PLATE,INFORMATION	1
12	PAOZZ	96906	MS51957-14	.SCREW,MACHINE	4
13	PAOZZ	96906	MS35338-135	.WASHER,LOCK	4
14	PAOZZ	96906	MS9321-5	.WASHER,FLAT	4
15	PAOZZ	96906	MS17990C821	.PIN,QUICK RELEASE	4
16	MOOZZ	19099	RR-C-271TY2CL6-9	.CHAIN MAKE FROM BULK P/N RR-C-271, TYII, CL6, 9 LINKS	4
17	XDOZZ	97403	13221E8371-1	.BRACE	1
18	XDOZZ	97403	1322138371-2	.BRACE	2
19	PAOZZ	96906	MS21318-21	.SCREW,DRIVE	
20	XDOZZ	97403	13222E5279-9	.PLATE,INFORMATION VENT PRODUCT WATER	1

END OF FIGURE

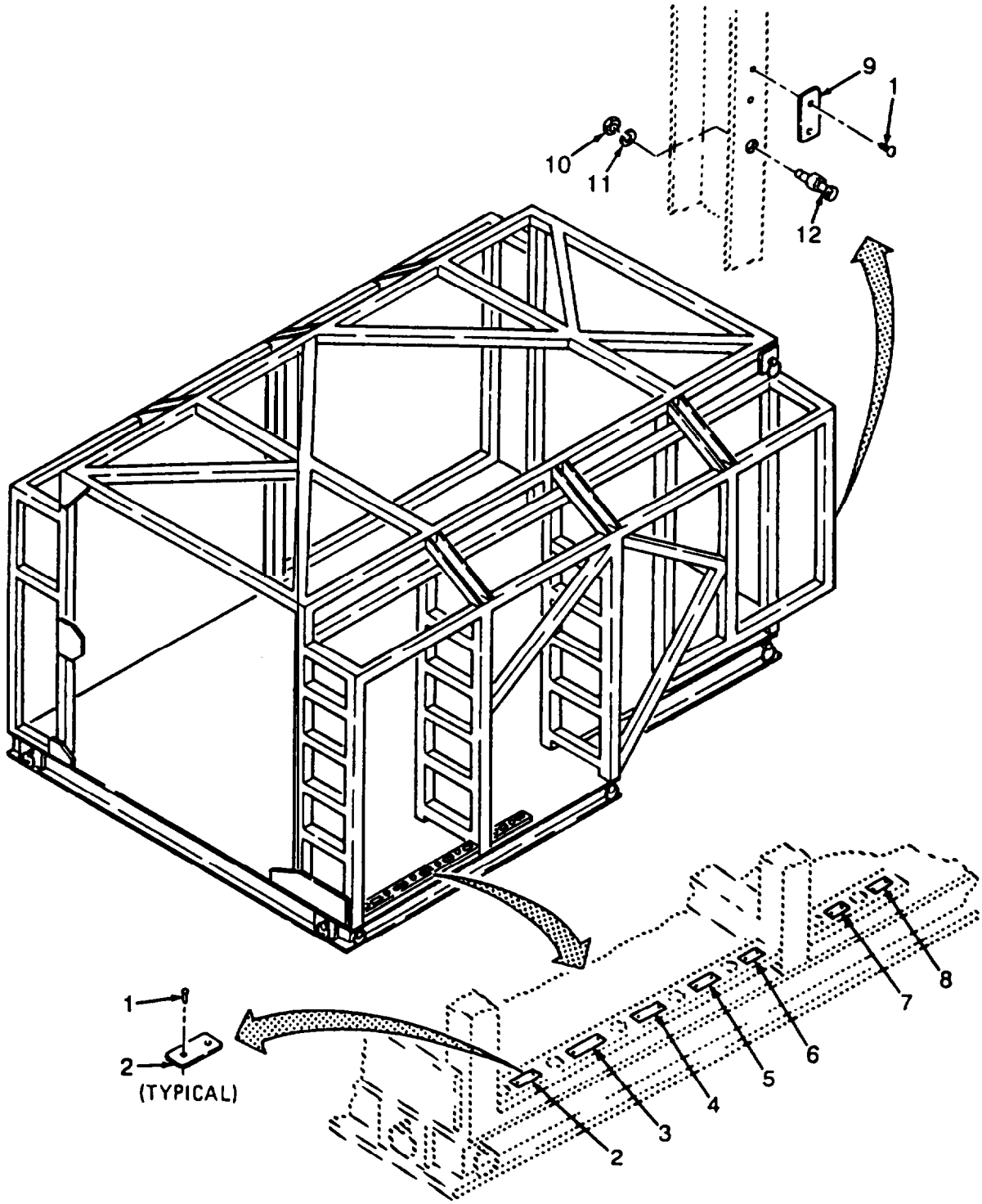

Figure 105. Right Side Frame

(1) ITEM NO	(2) SMR CODE	(3) CAGEC	(4) PART NUMBER	(5) DESCRIPTION AND USABLE ON CODES(UOC)	(6) QTY
				GROUP 12 REVERSE OSMOSIS WATER PURIFICATION UNIT 600 GPH	
				FIG. 105 RIGHT SIDE FRAME	
1	PAOZZ	96906	MS21318-21	.SCREW, DRIVE SECURES ALL INFORMATION PLATES	16
2	XDOZZ	97403	13222E5279-42	.PLATE, INFORMATION DRAIN MULTIMEDIA FILTER	1
3	XDOZZ	97403	13222E5279-4	.PLATE, INFORMATION DRAIN VESSELS	1
4	XDOZZ	97403	13222E5279-5	.PLATE, INFORMATION DRAIN NO.1 CARTRIDGE FILTER	1
5	XDOZZ	97403	13222E5279-8	.PLATE, INFORMATION DRAIN NO 2 CARTRIDGE FILTER	1
6	XDOZZ	97403	13222E5279-1	.PLATE, INFORMATION DRAIN WASTE WATER	1
7	XDOZZ	97403	13222E5279-6	.PLATE, INFORMATION DRAIN PULSE DAMPENER	1
8	XDOZZ	97403	13222E5279-2	.PLATE, INFORMATION DRAIN PRODUCT WATER.	1
9	XDOZZ	97403	13222ES279-47	.PLATE, INFORMATION GROUND	1
10	PAOZZ	96906	MS16203-37	.NUT, PLAIN, HEXAGON	1
11	PAOZZ	96906	MS35335-89	.WASHER, LOCK	1
12	PAOZZ	96906	MS39347-2	.TERMINAL, STUD	1

END OF FIGURE

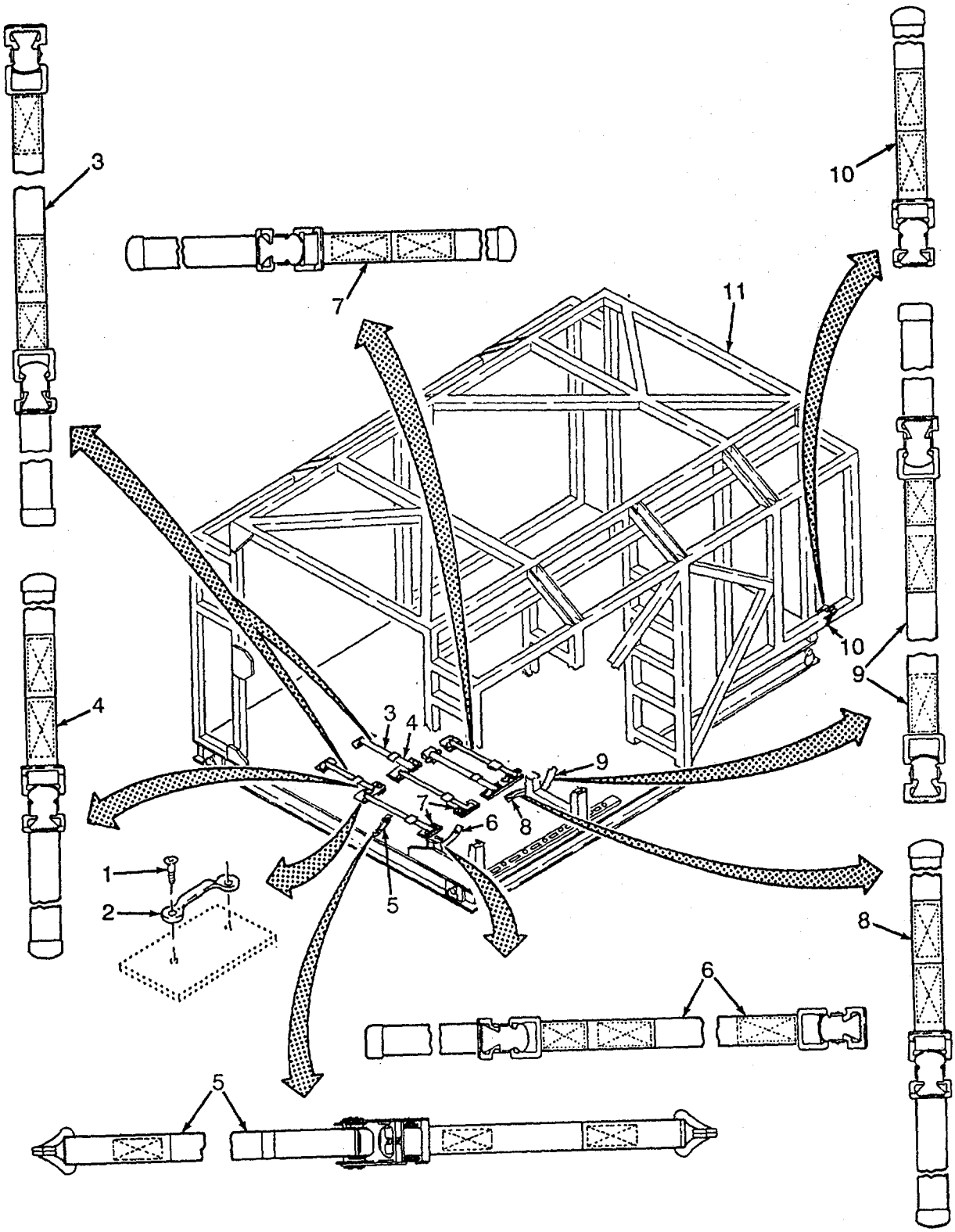

Figure 106. Frame and Strap (Sheet 1 of 3)

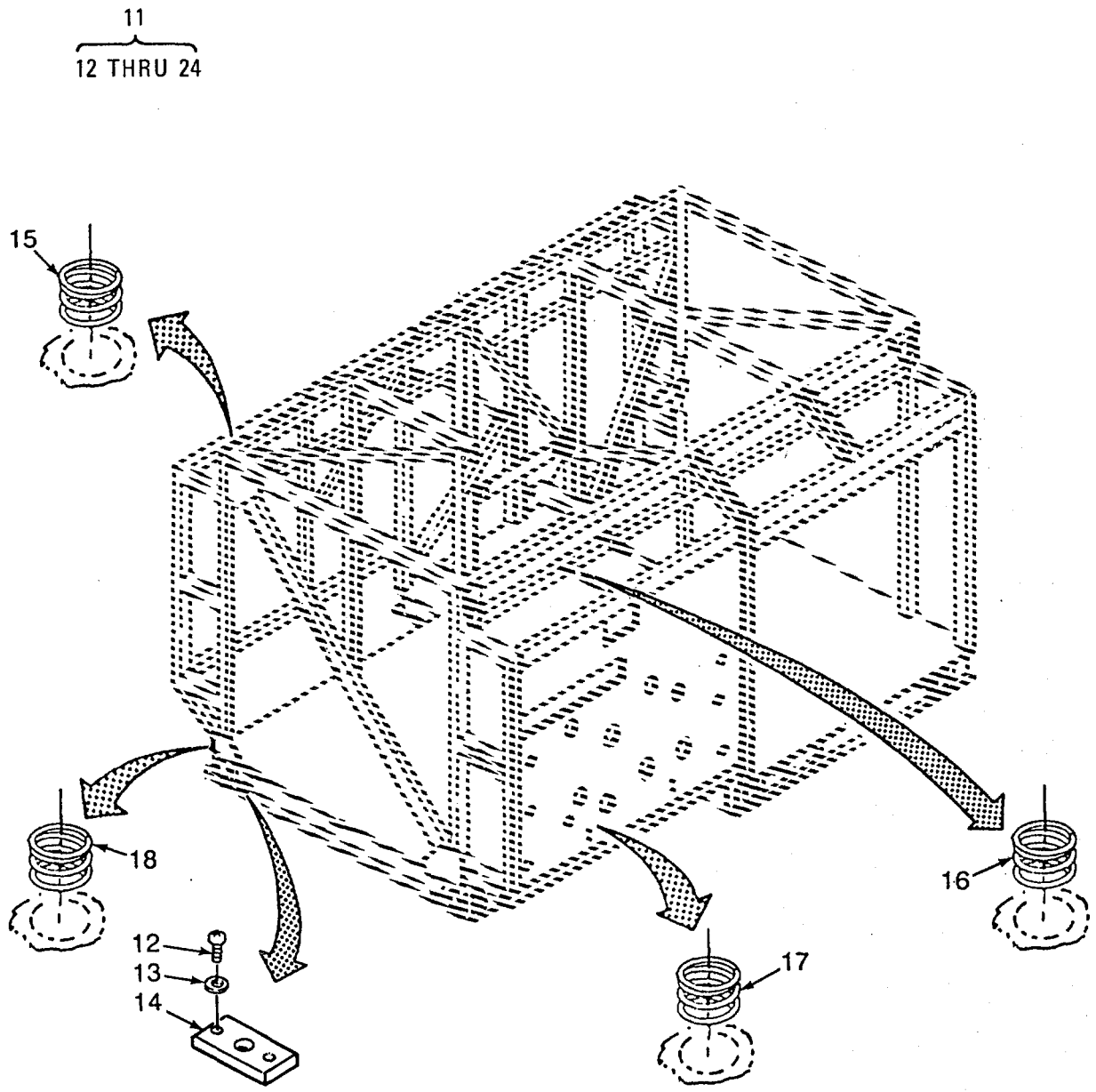

Figure 106. Frame and Strap (Sheet 2 of 3)

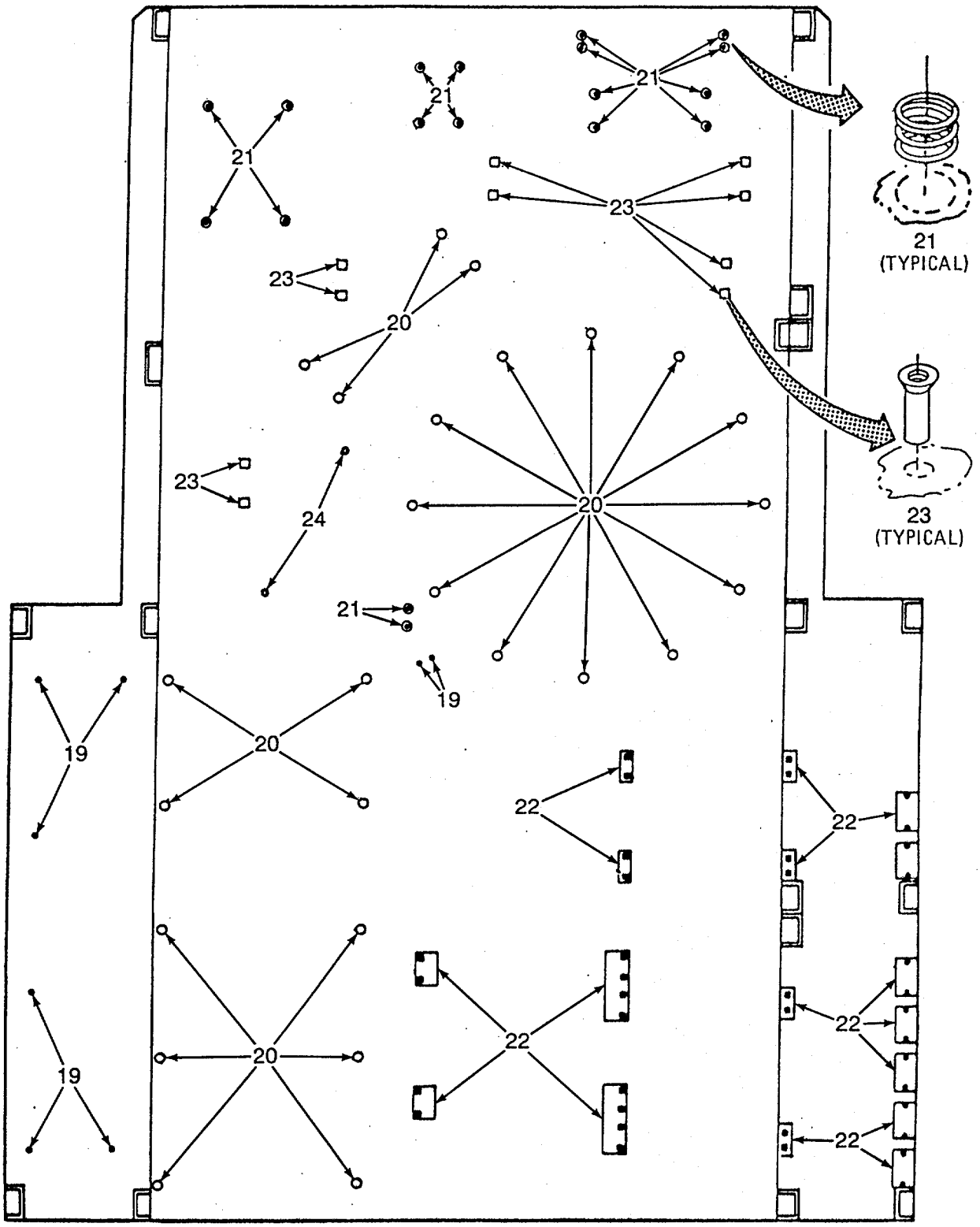

Figure 106. Frame and Strap (Sheet 3 of 3)

(1) ITEM NO	(2) SMR CODE	(3) CAGEC	(4) PART NUMBER	(5) DESCRIPTION AND USABLE ON CODES (UOC)	(6) QTY
				GROUP 12 REVERSE OSMOSIS WATER PURIFICATION UNIT 600 GPH	
				FIG. 106 FRAME AND STRAP	
1	PAOZZ	96906	MS51959-43	.SCREW,MACHINE	46
2	XDOZZ	97403	13219E0469	.LOOP,STRAP FASTENER	23
3	PBOZZ	97403	13226E2208-11	.STRAP,WEBBING	6
4	PBOZZ	97403	13226E2207-15	.STRAP,WEBBING	2
5	PBOZZ	97403	13220E5373-1	.STRAP,WEBBING	3
6	PBOZZ	97403	13226E2208-3	.STRAP,WEBBING	1
7	PBOZZ	97403	13226E2207-13	.STRAP,WEBBING	4
8	PBOZZ	97403	13226B2207-21	.STRAP,WEBBING	2
9	PBOZZ	97403	13226E2208-10	.STRAP,WEBBING	1
10	PBOZZ	97403	13220E5288-2	.STRAP,WEBBING	3
11	XAFFH	97403	13222E5280	.FRAME ASSY	1
				UOC:FAV,FAW,FMQ,FMR	
11	XAFFH	97403	13225E8938	.FRAME ASSY	1
				UOC:FAX,FMS	
12	PAFZZ	96906	MS16995-53	..SCREW,CAP,SOCKET HE	32
13	PAFZZ	96906	MS15795-810	..WASHER,FLAT	32
14	PBFZZ	97403	13221E8369	..NUT,PLAIN,PLATE	16
15	PAFZZ	96906	MS124666	..INSERT,SCREW THREAD	4
16	PAFZZ	96906	MS21209C4-10L	..INSERT,SCREW THREAD	4
17	PAFZZ	96906	MS122161	..INSERT,SCREW THREAD	4
18	PAFZZ	96906	MS122163	..INSERT,SCREW THREAD	16
19	PAFZZ	96906	MS122081	..INSERT,SCREW THREAD	8
20	PAFZZ	96906	MS122085	..INSERT,SCREW THREAD	26
21	PAFZZ	96906	MS122083	..INSERT,SCREW THREAD	18
22	PAFZZ	96906	MS122079	..INSERT,SCREW THREAD	32
23	PAFZZ	96906	MS27130-CR32	..NUT,PLAIN,BLIND RIV	12
24	PAFZZ	96906	MS27130-CR20	..NUT,PLAIN,BLIND RIV	2

END OF FIGURE

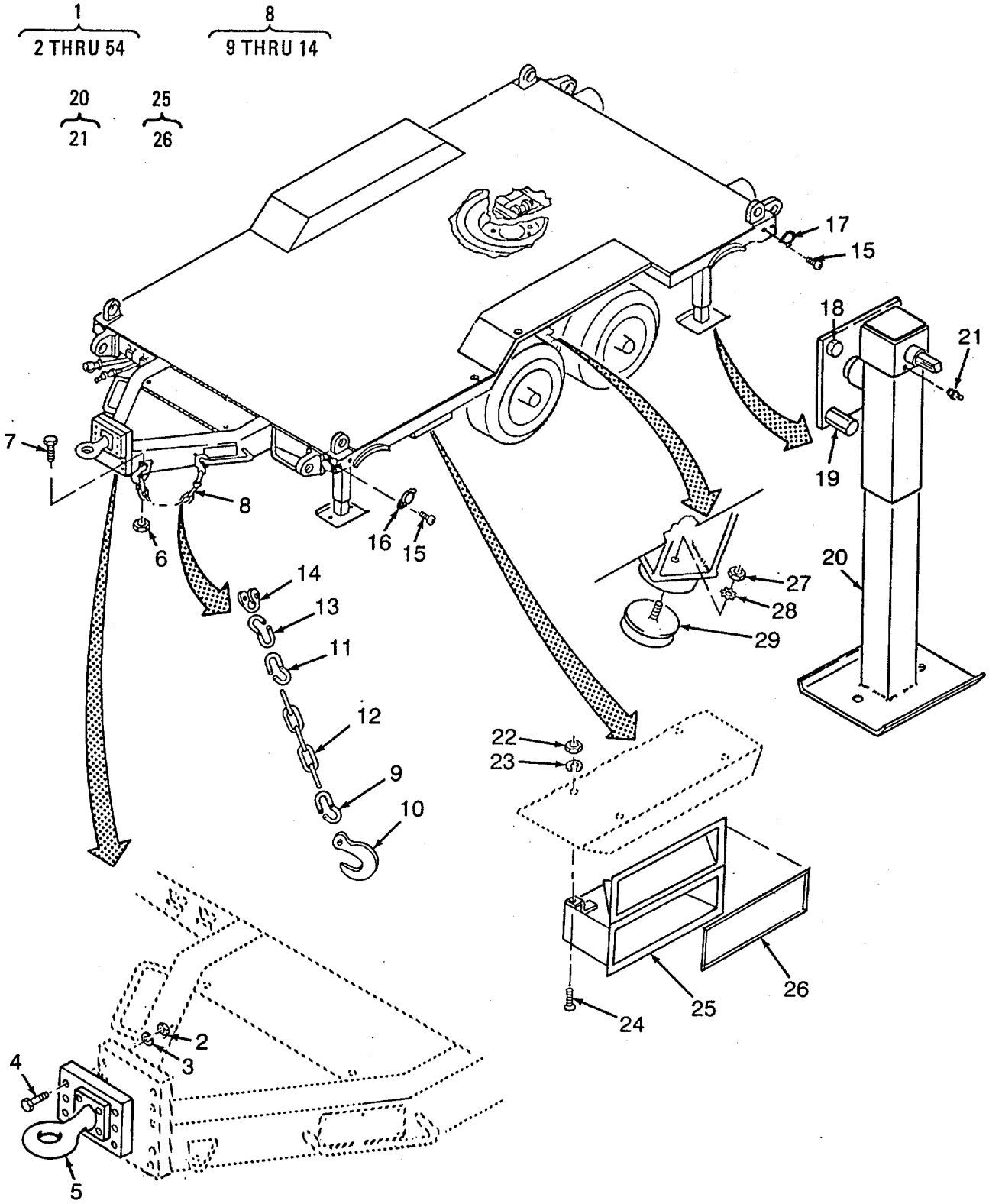

Figure 107. Flatbed Cargo Trailer (Sheet 1 of 2)

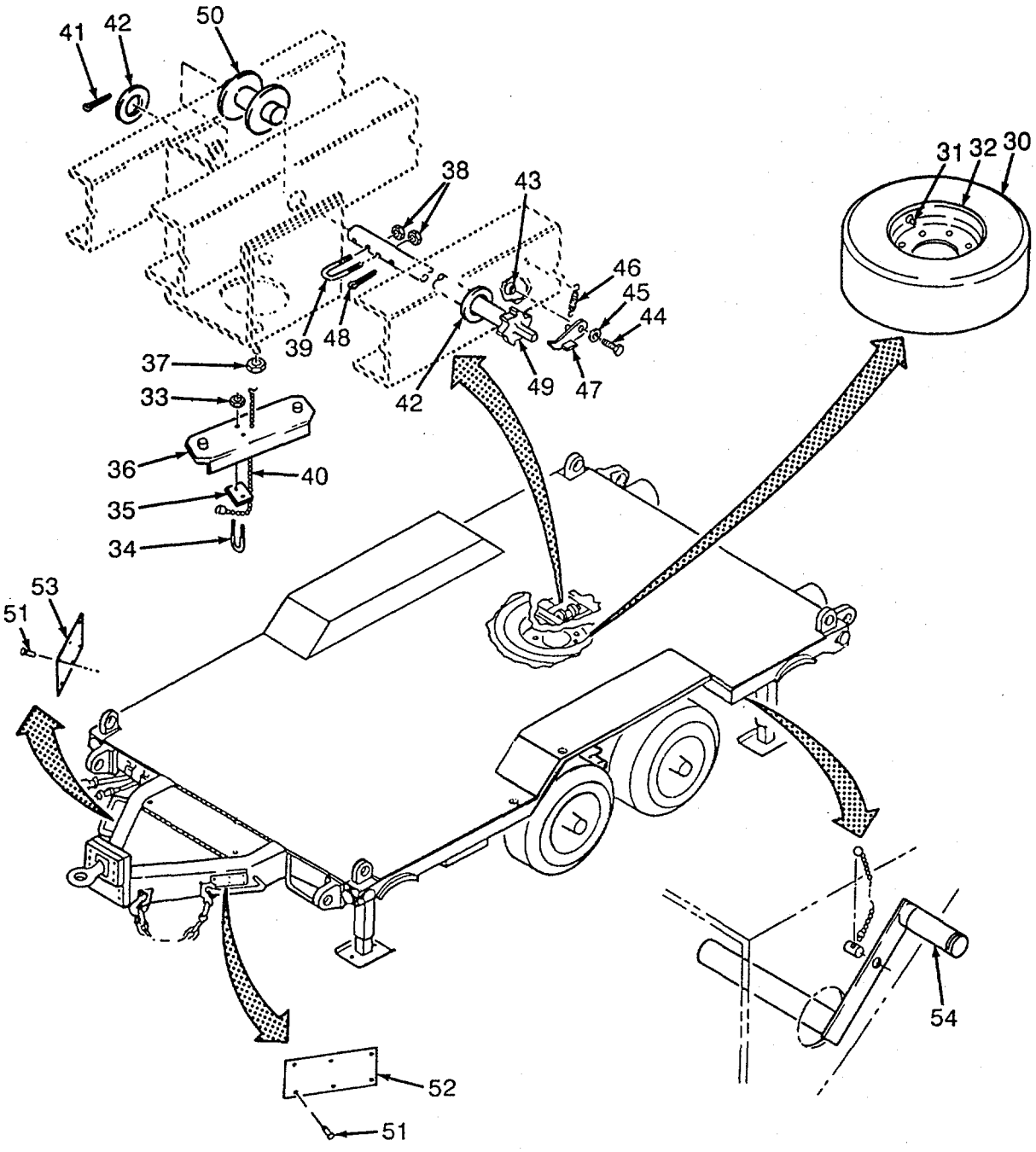

Figure 107. Flatbed Cargo Trailer (Sheet 2 of 2)

(1) ITEM NO	(2) SMR CODE	(3) CAGEC	(4) PART NUMBER	(5) DESCRIPTION AND USABLE ON CODES(UOC)	(6) QTY
				GROUP 13 FLATBED CARGO TRAILER	
				FIG. 107 FLATBED CARGO TRAILER	
1	PDFHD	97403	13222E7100	TRAILER,FLAT BED UOC:FAV,FMQ	1
2	PAOZZ	96906	MS51968-23	. NUT, PLAIN, HEXAGON UOC:FAV,FMQ	6
3	PAOZZ	96906	MS35338-51	. WASHER, LOCK UOC:FAV,FMQ	6
4	PAOZZ	96906	MS90727-199	. SCREW, CAP, HEXAGON H UOC:FAV,FMQ	6
5	XDOZZ	97403	13222E7099	. LUNETTE, UOC:FAV,FMQ	1
6	PAOZZ	96906	MS51922-57	. NUT, SELF-LOCKING, HE UOC:FAV,FMQ	2
7	PAOZZ	80204	B1821BH075C350N	. SCREW, CAP, HEXAGON H UOC:FAV,FMQ	2
8	AOOOO	97403	13222E7098	. CHAIN ASSEMBLY, SING UOC:FAV,FMQ	2
9	PAOZZ	96906	MS87008-3	.. LINK, CHAIN, CONNECTI 3/8 SIZE UOC:FAV,FMQ	1
10	PAOZZ	81348	RR-C-271	.. CHAIN, WELDLESS TY5, CL3, 3/8 IN, STEEL UOC:FAV,FMQ	1
11	PAOZZ	96906	MS87008-5	.. LINK, CHAIN, CONNECTI 1/2 SIZE UOC:FAV,EMQ	1
12	MOOZZ	19099	RRC271TYIGRCCL4-3/8IN	.. CHAIN ASSY, WELDED MAKE FROM BULK P/N RR-C-271, TYI, GRC, CL4, 3/8 IN. STEEL 30.50 IN UOC:FAV,FMQ	1
13	PAOZZ	96906	MS87008-7	.. LINK, CHAIN, CONNECTI 5/8 SIZE UOC:FAV,FMQ	1
14	PAOZZ	81348	RR-C-271	.. CHAIN, WELDLESS TY4, CL4, 5/8 IN STEEL UOC:FAV,FMQ	1
15	PAOZZ	96906	MS35206-263	. SCREW, MACHINE UOC:FAV,FMQ	16
16	PAOZZ	96906	MS35387-2	. REFLECTOR, INDICATIN AMBER UOC:FAV,FMQ	4
17	PAOZZ	96906	MS35387-1	. REFLECTOR, INDICATIN RED UOC:FAV,FMQ	4
18	PAOZZ	96906	MS90727-187	. SCREW, CAP, HEXAGON H UOC:FAV,FMQ	12
19	XDOZZ	97403	13222E7177	. STUD, JACK STOP UOC:FAV,FMQ	4
20	PBOZZ	97403	13227E9242	. JACK ASSEMBLY UOC:FAV,FMQ	4
21	PAOZZ	96906	MS15003-1	.. FITTING, LUBRICATION UOC:FAV,FMQ	1
22	PAOZZ	96906	MS51968-2	. NUT, PLAIN, HEXAGON UOC:FAV,FMQ	4
23	PAOZZ	96906	MS35335-33	. WASHER, LOCK UOC:FAV,FMQ	4
24	PAOZZ	96906	MS90727-6	. BOLT, MACHINE UOC:FAV,FMQ	4
25	XDOOO	97403	13222E7132	. CONTAINER, MANUAL UOC:FAV,FMQ	1
26	MOOZZ	19099	1322237132-10	.. RUBBER SHEET, SOLID MAKE FROM BULK P/N ASTM-D-20001AA310, 0.188 STOCK UOC:FAV,FMQ	V
27	PAOZZ	96906	MSS1968-8	. NUT, PLAIN, HEXAGON	4

(1) ITEM NO	(2) SMR CODE	(3) CAGEC	(4) PART NUMBER	(5) DESCRIPTION AND USABLE ON CODES(UOC)	(6) QTY
				UOC:FAV,FMQ	
28	PAOZZ	96906	MS35335-35	. WASHER, LOCK	4
				UOC:FAV,FMQ	
29	PAOZZ	97403	13222E7095	. MOUNT, RESILIENT	4
				UOC:FAV,FMQ	
30	PAOZZ	81348	ZZ-T-381/GP3A/12 -16.5/F/TBHR	. TIRE, PNEU, TUBELESS	1
				UOC:FAV,FMQ	
31	PAOZZ	81348	ZZ-V-25TYIICL2	. VALVE & VALVE SPUD	1
				UOC:FAV,FMQ	
32	PBOZZ	97403	13222E7093	. WHEEL	1
				UOC:FAV,FMQ	
33	PAOZZ	96906	MS51922-9	. NUT, SELF-LOCKING, HE	2
				UOC:FAV,FMQ	
34	PAOZZ	97403	13222E7138-1	. BOLT, U	1
				UOC:FAV,FMQ	
35	XDOZZ	97403	13222E7160	. PLATE, U-BOLT	1
				UOC:FAV,FMQ	
36	XDOZZ	97403	13222E7139	. SUPPORT, TIRE CARR	1
				UOC:FAV,FMQ	
37	PAOZZ	96906	MS51983-2	. NUT, PLAIN, SINGLE BA	2
				UOC:FAV,FMQ	
38	PAOZZ	96906	MS51922-1	. NUT, SELF-LOCKING, HE	2
				UOC:FAV,FMQ	
39	PAOZZ	97403	13222E7138-2	. BOLT, U	1
				UOC:FAV,FMQ	
40	PAOZZ	97403	13222E7137	. STRAND, WIRE	1
				UOC:FAV,FMQ	
41	PAOZZ	96906	MS24665-498	. PIN, COTTER	1
				UOC:FAV,FMQ	
42	PAOZZ	96906	MS27183-30	. WASHER, FLAT	2
				UOC:FAV,FMQ	
43	PAOZZ	96906	MS35691-33	. NUT, PLAIN, HEXAGON	1
				UOC:FAV,FMQ	
44	PAOZZ	24446	N22P29028C11	. SCREW, CAP, HEXAGON H	1
				UOC:FAV,FMQ	
45	PAOZZ	96906	MS27183-18	. WASHER, FLAT	1
				UOC:FAV,FMQ	
46	PAOZZ	97403	13222E7141	. SPRING, HELICAL, EXTE	1
				UOC:FAV,FMQ	
47	XDOZZ	97403	13222E7136	. PAWL	1
				UOC:FAV,FMQ	
48	PAOZZ	96906	MS24665-625	. PIN, COTTER	1
				UOC:FAV,FMQ	
49	XDOZZ	97403	13222E7135	. SHAFT, RATCHET	1
				UOC:FAV,FMQ	
50	XDOZZ	97403	13222E7140	. SPOOL	1
				UOC:FAV,FMQ	
51	PAOZZ	96906	MS21318-57	SCREW, DRIVE	12
				UOC:FAV,FMQ	
52	XDOZZ	97403	13222E7097	. PLATE, DATA	1
				UOC:FAV,FMQ	
53	XDOZZ	97403	1322237096	. PLATE, I.D. LUBRICATION	1
				UOC:FAV,FMQ	
54	PBOZZ	97403	13222E7145	. HANDLE, MECHANICAL J	4
				UOC:FAV,FMQ	

END OF FIGURE

(1) ITEM NO	(2) SMR CODE	(3) CAGEC	(4) PART NUMBER	(5) DESCRIPTION AND USABLE ON CODES(UOC)	(6) QTY
48	PAOZZ	96906	MS24665-625	.PIN, COTTER..... UOC:FAV	1
49	XDOZZ	97403	13222E7135	.SHAFT, RATCHET..... UOC:FAV	1
50	XDOZZ	97403	13222E7140	.SPOOL..... UOC:FAV	1
51	PAOZZ	96906	MS21318-57	.SCREW, DRIVE..... UOC:FAV	12
52	XDOZZ	97403	13222E7097	.PLATE, DATA ..... UOC:FAV	1
53	XDOZZ	97403	13222E7096	.PLATE, I.D. LUBRICATION..... UOC:FAV	1
54	PBOZZ	97403	13222E7145	.HANDLE, MECHANICAL J ..... UOC:FAV	4

END OF FIGURE

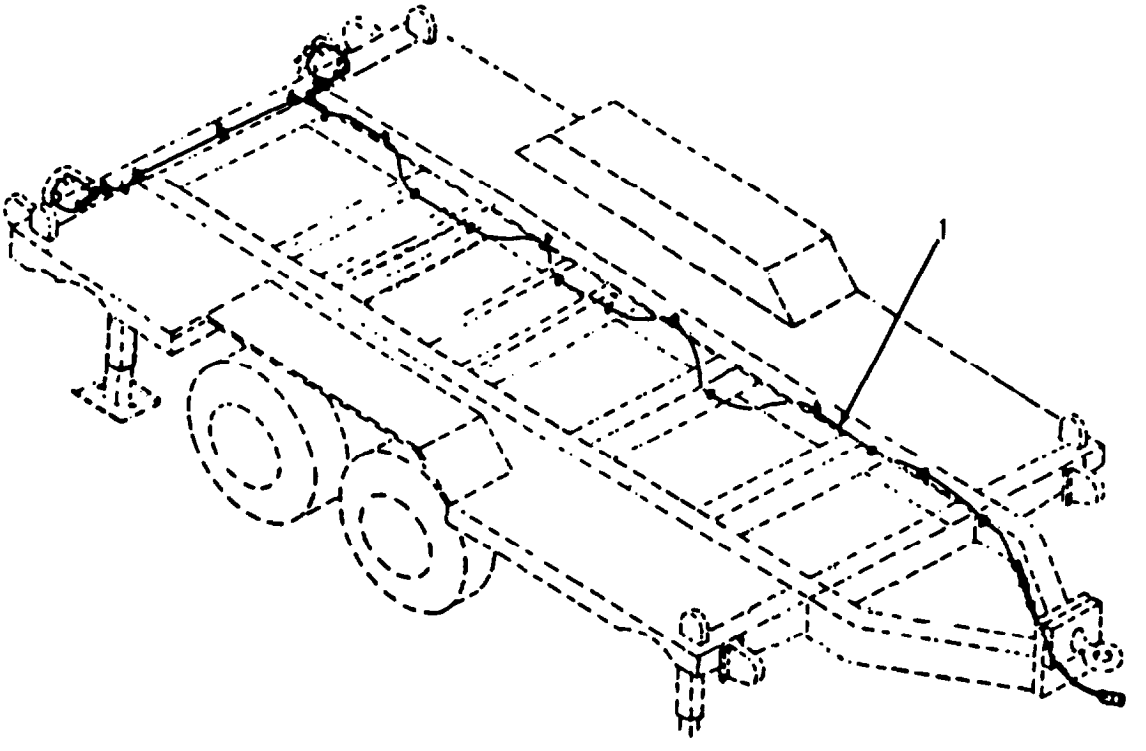

Figure 108. Trailer Electrical Installation

(1) ITEM NO	(2) SMR CODE	(3) CAGGC	(4) PART NUMBER	(5) DESCRIPTION AND USABLE ON CODES(UOC)	(6) QTY
				GROUP 13 FLATBED CARGO TRAILER	
				FIG. 108 TRAILER ELECTRICAL INSTALLATION	
1	XCOFF	97403	13222E7120	. INSTALLATION, ELEC UOC:FAV,FMQ	1

END OF FIGURE

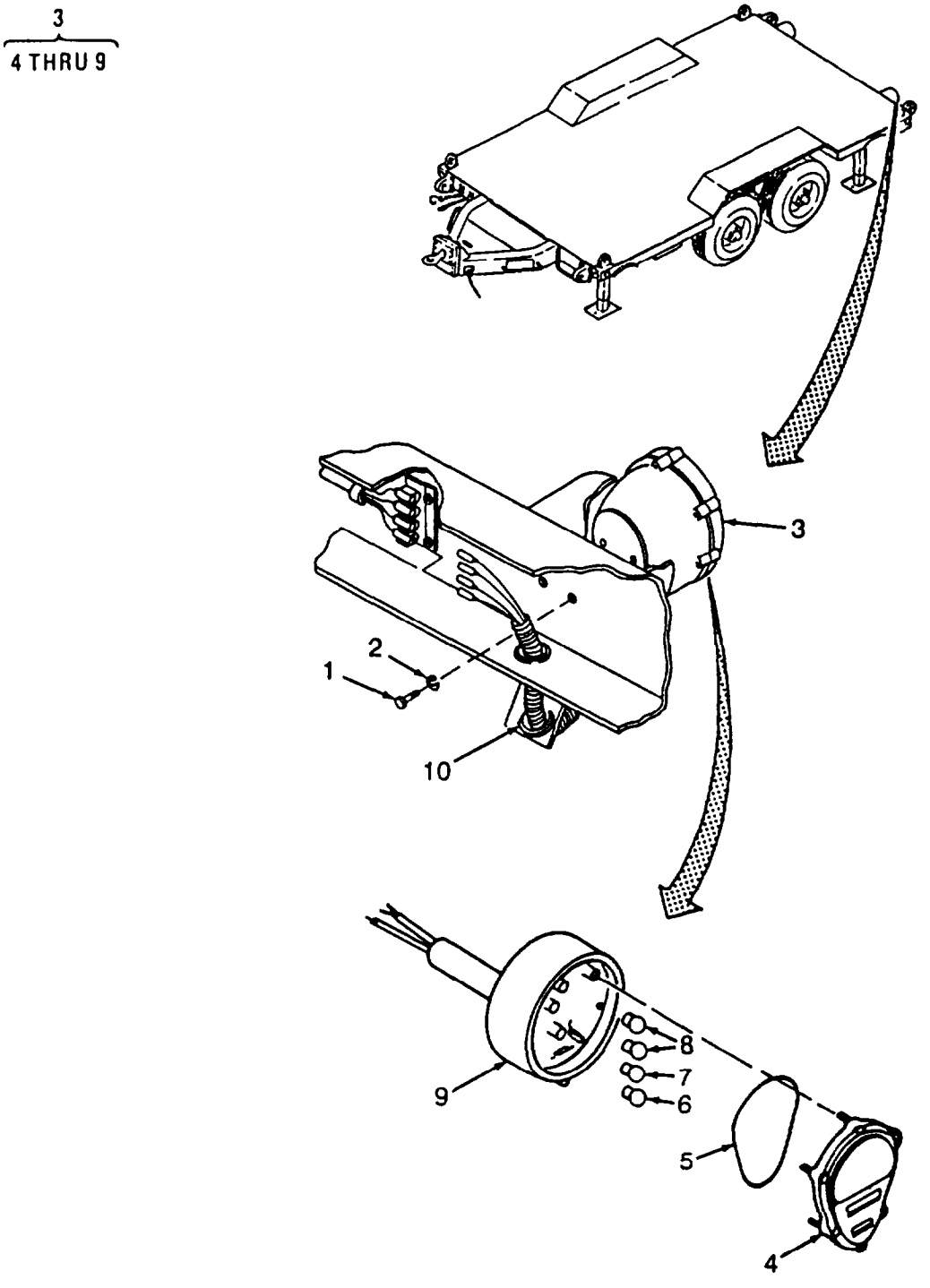

Figure 109. Composite Light Trailer

(1) ITEM NO	(2) SMR CODE	(3) CAGEC	(4) PART NUMBER	(5) DESCRIPTION AND USABLE ON CODES (UOC)	(6) QTY
				GROUP 13 FLATBED CARGO TRAILER	
				FIG. 109 COMPOSITE LIGHT TRAILER	
1	PAOZZ	96906	MS90725-58	.. SCREW, CAP, HEXAGON H UOC:FAV,FMQ	4
2	PAOZZ	96906	MS35338-46	.. WASHER, LOCK UOC:FAV,FMQ	4
3	PAOOZ	96906	MS52125-2	.. STOP LIGHT-TAILLIGH UOC:FAV,FMQ	2
4	XAOZZ	19207	11639535	... LENS, LIGHT UOC:FAV,FMQ	1
5	PAOZZ	19207	11639519-2	...PACKING, PREFORMED UOC:FAV,FMQ	1
6	PAOZZ	96906	MS15570-623	... LAMP, INCANDESCENT UOC:FAV,FMQ	1
7	PAOZZ	96906	MS35478-1683	...LAMP, INCANDESCENT UOC:FAV,FMQ	1
8	PAOZZ	96906	MS15570-1251	... LAMP, INCANDESCENT UOC:FAV,FMQ	2
9	XAOZZ	19207	11639520	...BODY ASSY, LIGHT UOC:FAV,FMQ	1
10	PAOZZ	96906	MS35489-104	.. GROMMET, RUBBER UOC:FAV,FMQ	4

END OF FIGURE

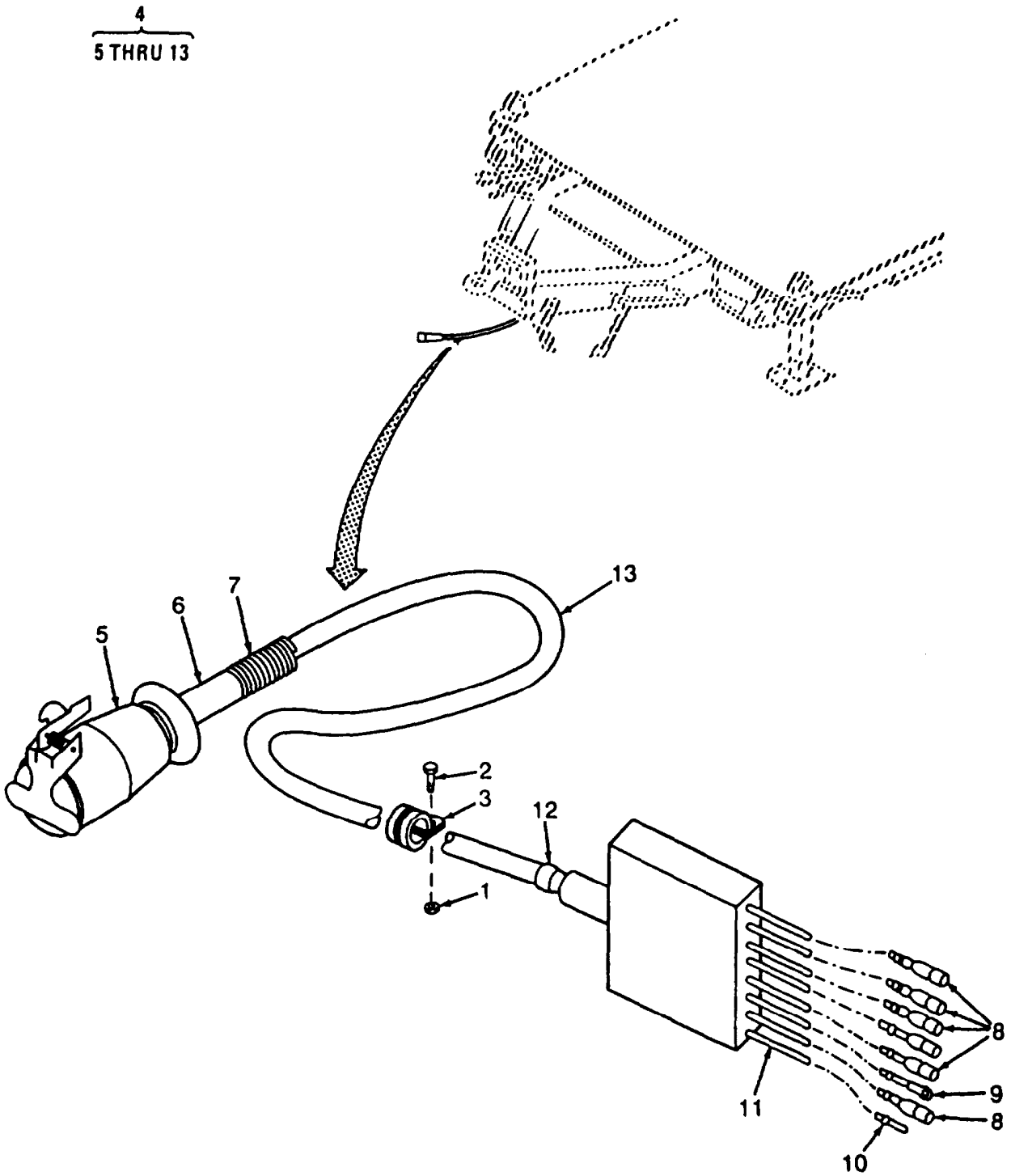

Figure 110. Trailer Cable Assembly

(1) ITEM NO	(2) SMR CODE	(3) CAGEC	(4) PART NUMBER	(5) DESCRIPTION AND USABLE ON CODES(UOC)	(6) QTY
				GROUP 13 FLATBED CARGO TRAILER	
				FIG. 110 TRAILER CABLE ASSEMBLY	
1	PAOZZ	96906	MS51922-1	.. NUT, SELF-LOCKING, HE UOC:FAV,FMQ	1
2	PAOZZ	96906	MS3S206-281	.. SCREW, MACHINE UOC:FAV,FMQ	1
3	PAOZZ	96906	MS21333-101	.. CLAMP, LOOP UOC:FAV,FMQ	1
4	PBOFF	97403	13222E7122	.. CABLE ASSEMBLY, POWE UOC:FAV,FMQ	1
5	PAFZA	96906	MS75020-1	...CONNECTOR, PLUG, ELEC UOC:FAV,FMQ	1
6	PAFZZ	96906	MS3420-16	...BUSHING, NONMETALLIC UOC:FAV,FMQ	1
7	PAFZZ	96906	MS39134-1	... SPRING, HELICAL, COMP UOC:FAV,FMQ	1
8	PAFZZ	96906	MS27144-1	...CONNECTOR, PLUG, ELEC UOC:FAV,FMQ	6
9	PAFZZ	96906	MS25036-154	... TERMINAL, LUG UOC:FAV,FMQ	1
10	PAFZZ	81349	M43436/1-1	...BAND,MARKER UOC:FAV,FMQ	8
11	XAFZZ	19099	13222E7122-7	... CABLE, ELECTRICAL MAKE FROM BULK P/N M13486/1-5, 14 AWG UOC:FAV,FMQ	1
12	PAFZZ	81349	M43436/1-3	... BAND, MARKER UOC:FAV,FMQ	1
13	XAFZZ	19099	13222E7122-9	... CABLE, ELECTRICAL MAKE FROM BULK P/N M13486/10-1, 75.50 IN UOC:FAV,FMQ	1

END OF FIGURE

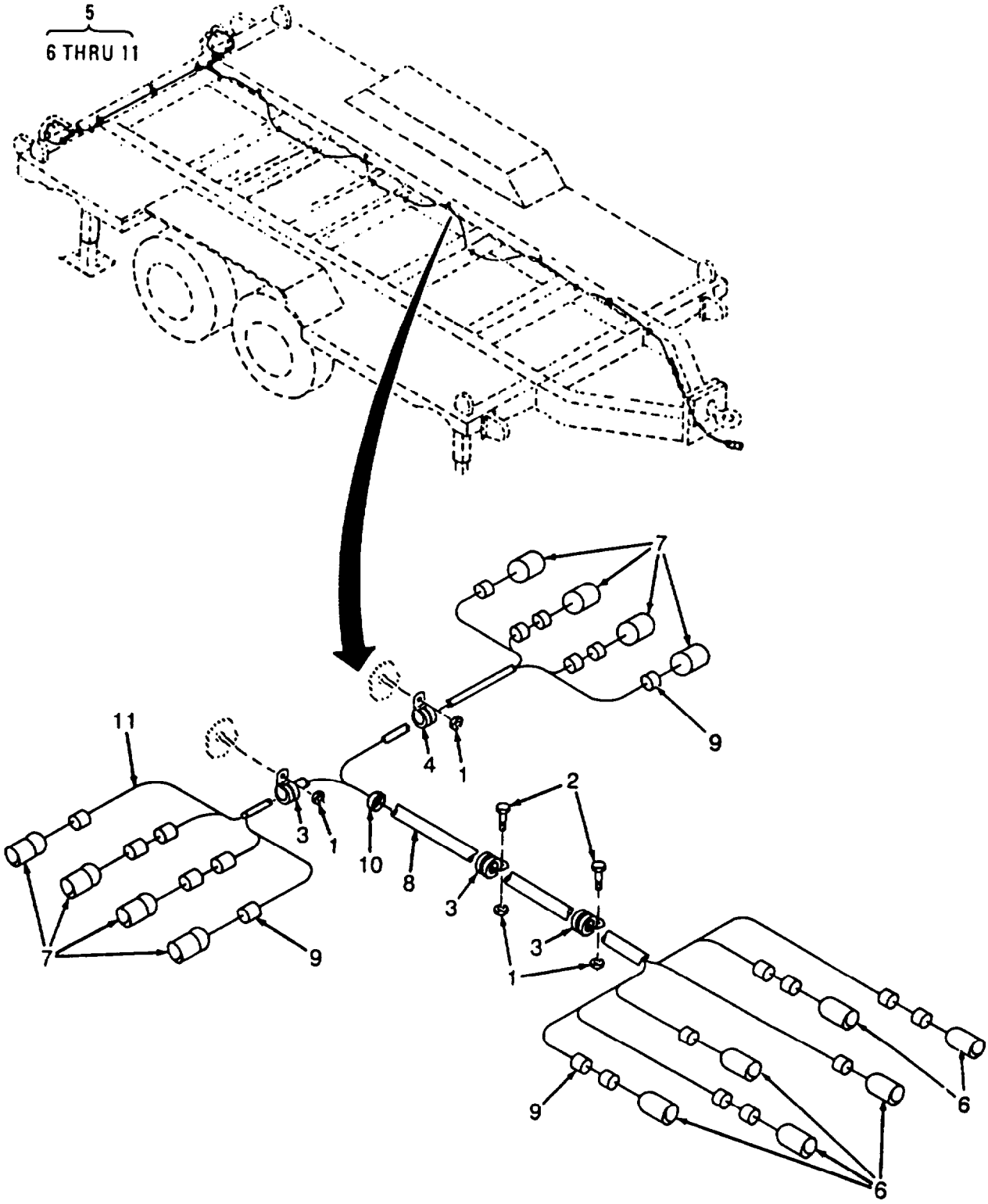

Figure 111. Trailer Wiring Harness

(1) ITEM NO	(2) SMR CODE	(3) CAGEC	(4) PART NUMBER	(5) DESCRIPTION AND USABLE ON CODES(UOC)	(6) QTY
				GROUP 13 FLATBED CARGO TRAILER	
				FIG. 111 TRAILER WIRING HARNESS	
1	PAOZZ	96906	MS51922-1	.. NUT, SELF-LOCKING, HE UOC:FAV,FMQ	11
2	PAOZZ	96906	MS35206-281	.. SCREW, MACHINE UOC:FAV,FMQ	2
3	PAOZZ	96906	MS21333-101	.. CLAMP, LOOP UOC:FAV,FMQ	6
4	PAOZZ	96906	MS21333-100	.. CLAMP, LOOP UOC:FAV,FMQ	5
5	PBOFF	97403	13222E7126	.. WIRING HARNESS UOC:FAV,FMQ	1
6	PAFZZ	96906	MS27142-2	... CONNECTOR, PLUG, ELEC UOC:FAV,FMQ	6
7	PAFZZ	96906	MS27144-1	... CONNECTOR, PLUG, ELEC UOC:FAV,FMQ	8
8	MFFZZ	19099	13222E7126-6	... INSULATION, ELEC MAKE FROM BULK P/N MIL-I-631, TYF, FORMTS GRA, CL1 UOC:FAV,FMQ	1
9	PAFZZ	81349	M43436/1-1	... BAND, MARKER UOC:FAV,FMQ	22
10	PAFZZ	81349	M43436/1-2	... BAND, MARKER UOC:FAV,FMQ	1
11	MFFZZ	19099	13222E7126-5	... CABLE, ELECTRICAL MAKE FROM BULK P/N M13486/1-5, 14 AWG UOC:FAV,FMQ	V

END OF FIGURE

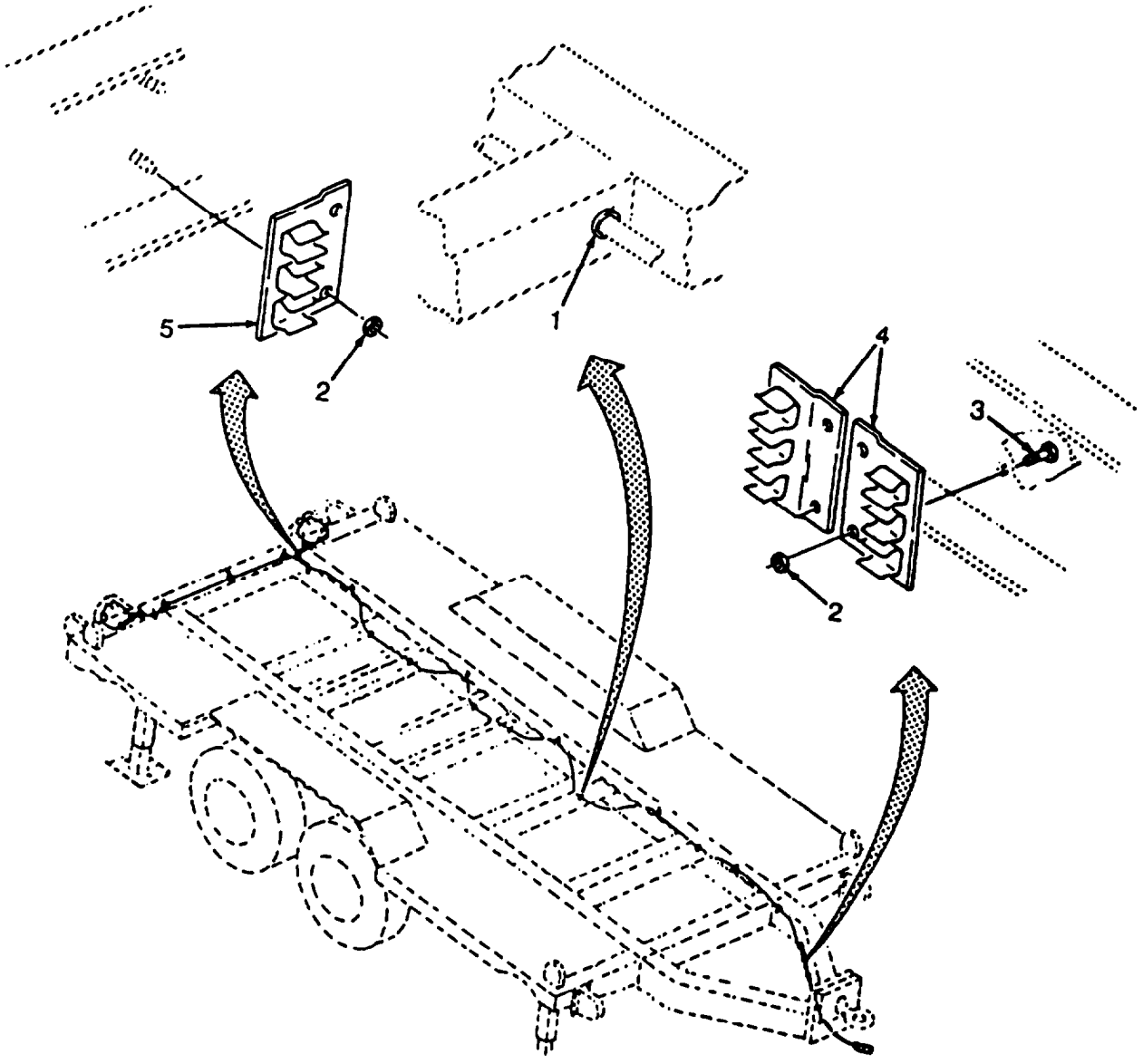

Figure 112. Trailer Electrical Clips and Grommets

(1) ITEM NO	(2) SMR CODE	(3) CAGEC	(4) PART NUMBER	(5) DESCRIPTION AND USABLE ON CODES(UOC)	(6) QTY
				GROUP 13 FLATBED CARGO TRAILER	
				FIG. 112 TRAILER ELECTRICAL CLIPS AND GROMMETS	
1	PAOZZ	96906	MS35489-104	.. GROMMET, RUBBER UOC:FAV,FMQ	7
2	PAOZZ	96906	MS51922-1	.. NUT, SELF-LOCKING, HE UOC:FAV,FMQ	8
3	PAOZZ	96906	MS35206-281	.. SCREW, MACHINE UOC:FAV,FMQ	4
4	XDOZZ	97403	13222E7125	.. CLIP, CONNECTOR UOC:FAV,FMQ	2
5	XDOZZ	97403	13222E7127	.. CLIP, CONNECTOR UOC:FAV,FMQ	2

END OF FIGURE

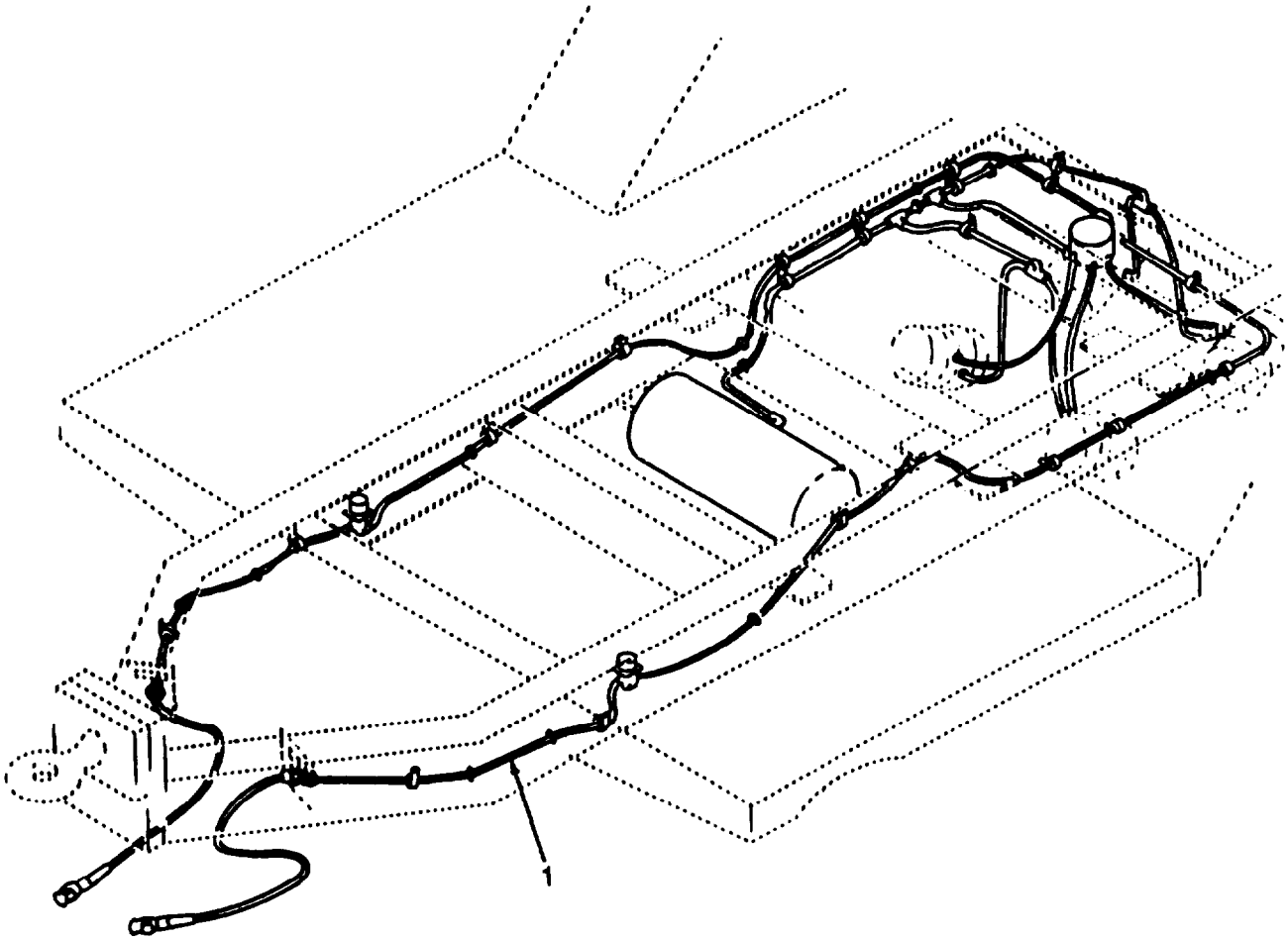

Figure 113. Trailer Airbrake Installation

(1) ITEM NO	(2) SMR CODE	(3) CAGEC	(4) PART NUMBER	(5) DESCRIPTION AND USABLE ON CODES(UOC)	(6) QTY
				GROUP 13 FLATRED CARGO TRAILER	
				FIG. 113 TRAILER AIRBRAKE INSTALLATION	
	XCFFF	97403	13222E7110	. AIRBRAKE, INSTAL UOC:FAV,FMQ	1

END OF FIGURE

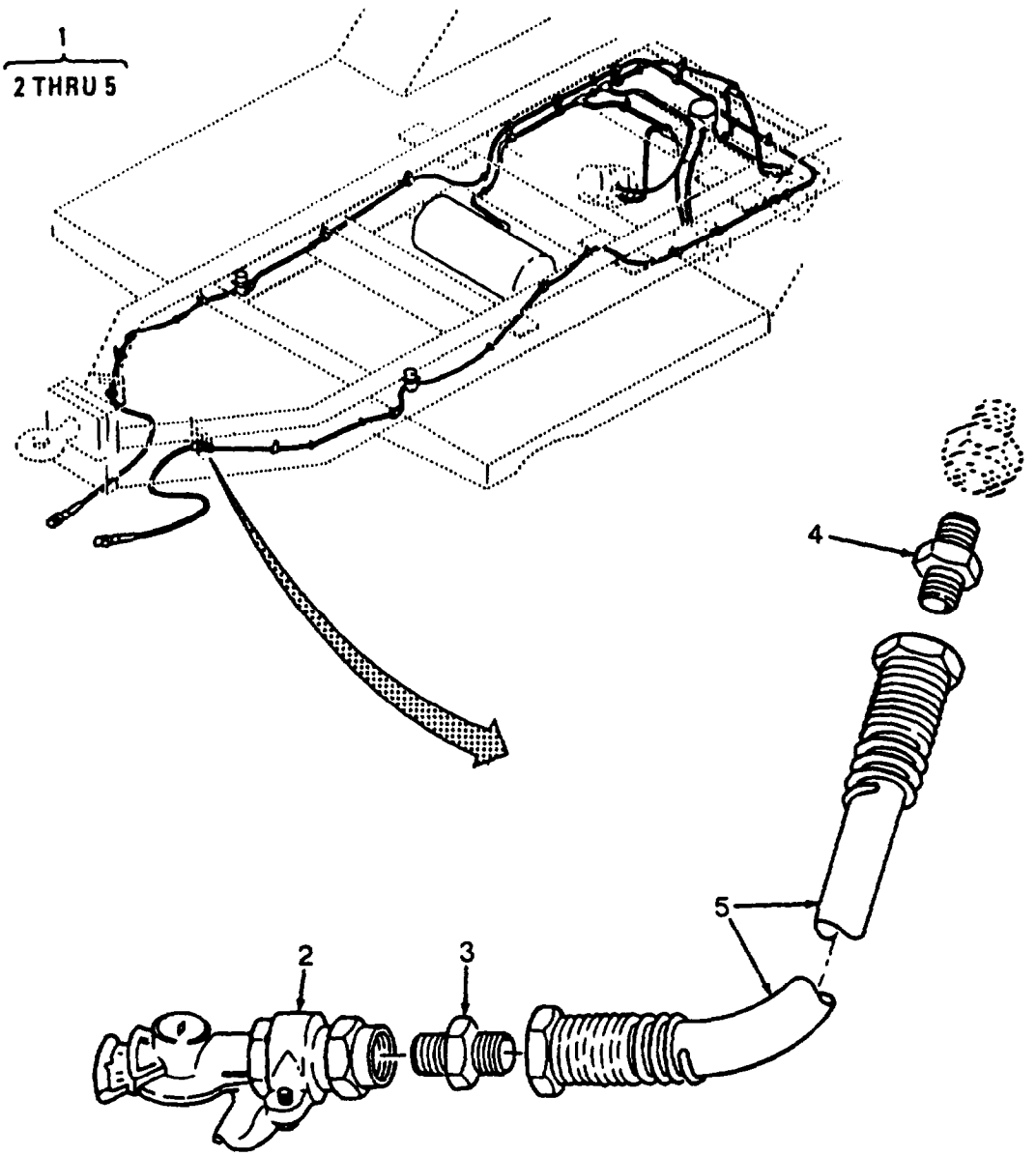

Figure 114. Trailer Airbrake Hose Assembly

(1) ITEM NO	(2) SMR CODE	(3) CAGEC	(4) PART NUMBER	(5) DESCRIPTION AND USABLE ON CODES(UOC)	(6) QTY
				GROUP 13 FLATBED CARGO TRAILER	
				FIG. 114 TRAILER AIRBRAKE HOSE ASSEMBLY	
1	AOOOO	97403	13222E7111	.. HOSE ASSY UOC:FAV,FMQ	2
2	PAOZZ	96906	MS35746-1	... COUPLING HALF, QUICK UOC:FAV,FMQ	1
3	PAOZZ	96906	MS39133-2-B	... ADAPTER, STRAIGHT, PI UOC:FAV,FMQ	1
4	PAOZZ	96906	MS39133-1-B	... ADAPTER, STRAIGHT, PI UOC:FAV,FMQ	1
5	PAOZZ	97403	13222E7111-3	... HOSE, AIRBRAKE UOC:FAV,FMQ	1

END OF FIGURE

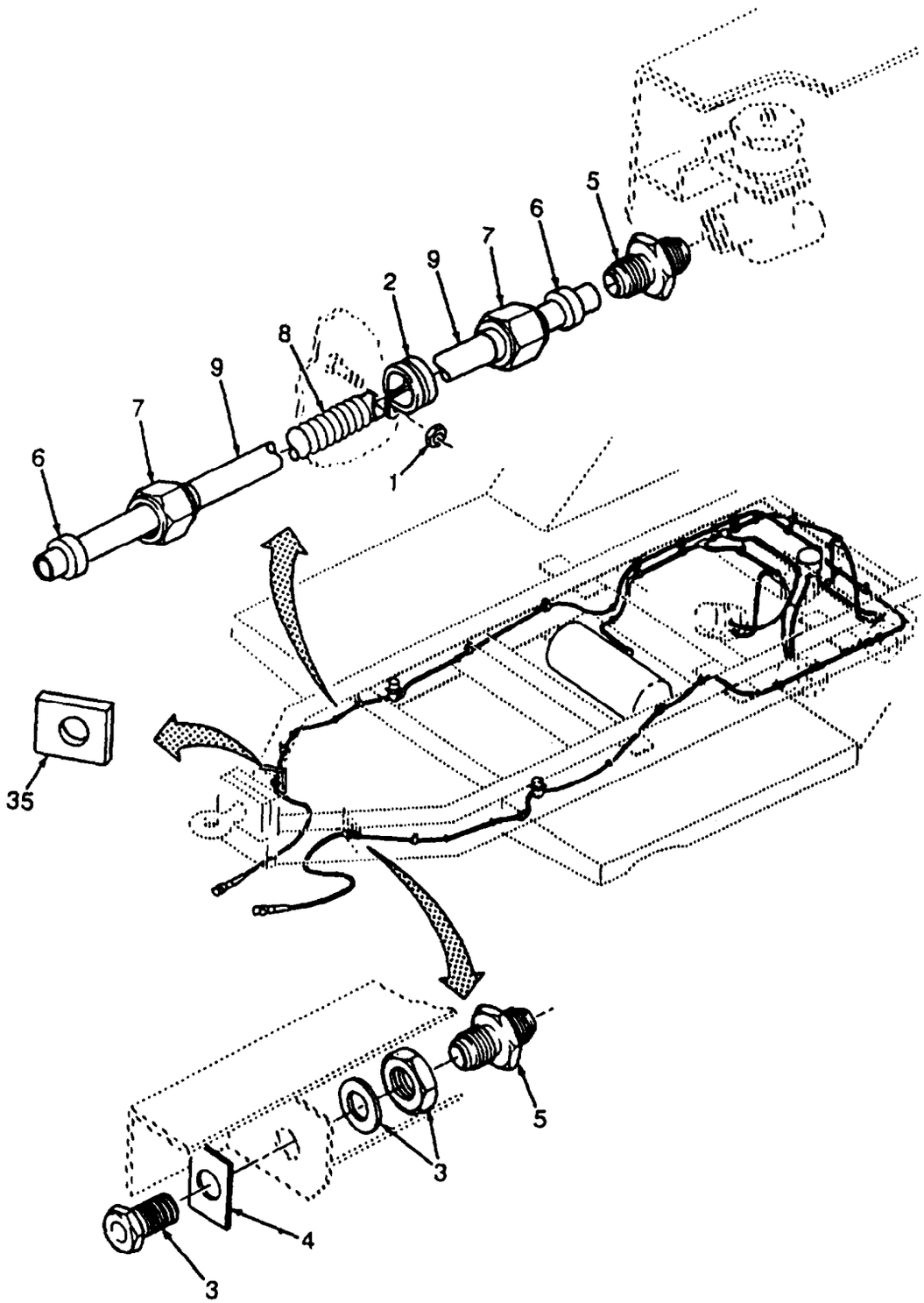

Figure 115. Trailer Airbrake Lines (Sheet 1 of 5)

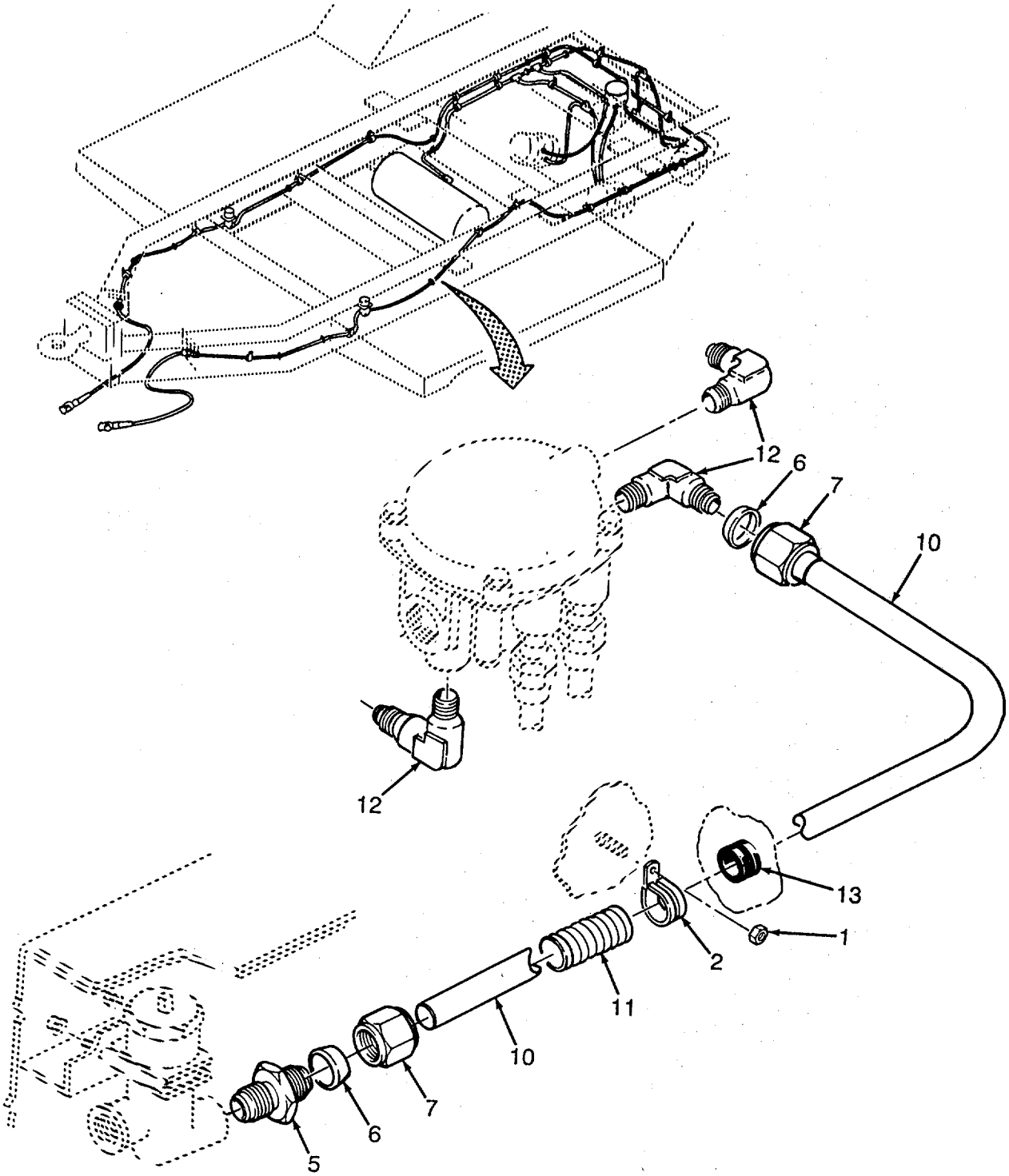

Figure 115. Trailer Airbrake Lines (Sheet 2 of 5)

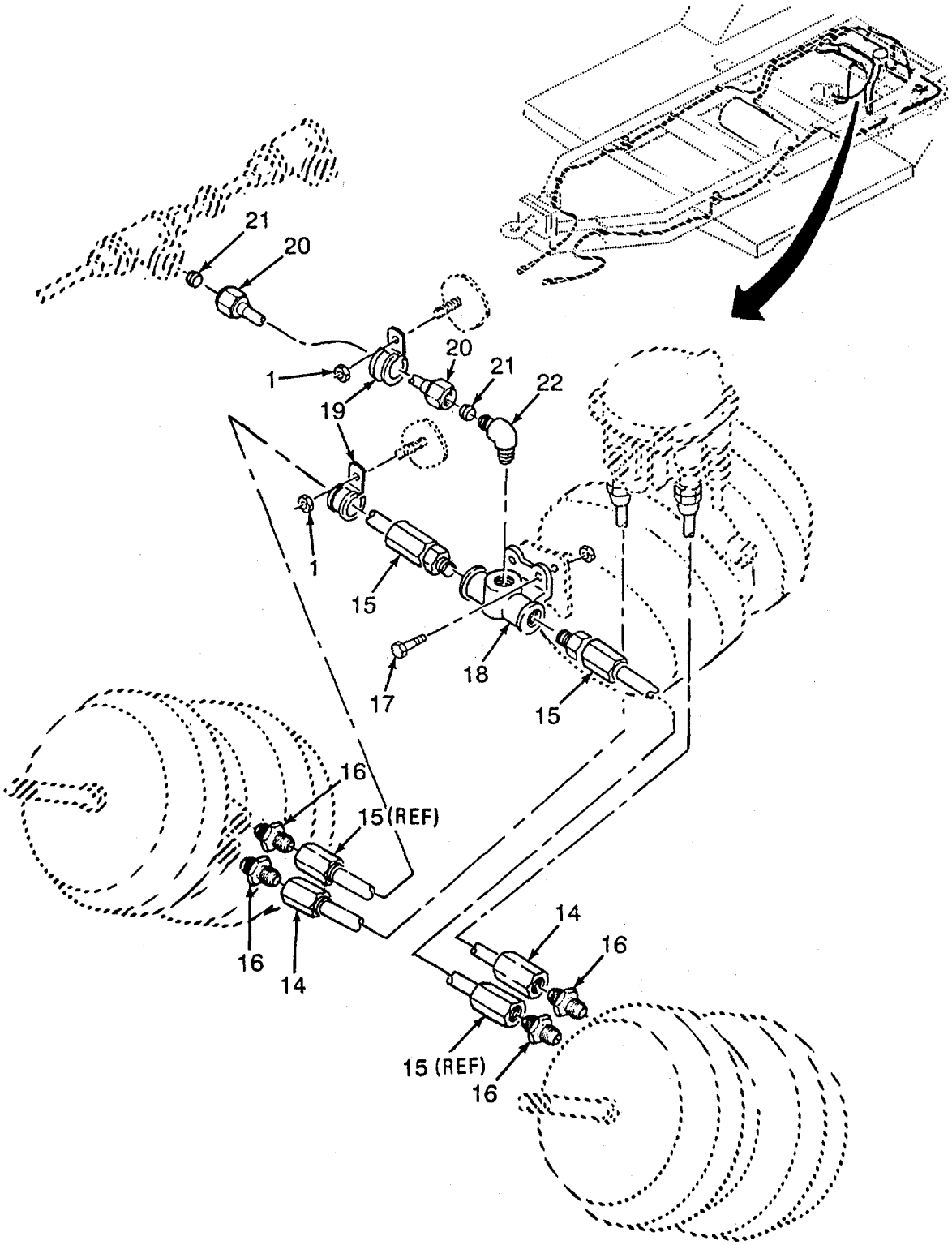

Figure 115. Trailer Airbrake Lines (Sheet 3 of 5)

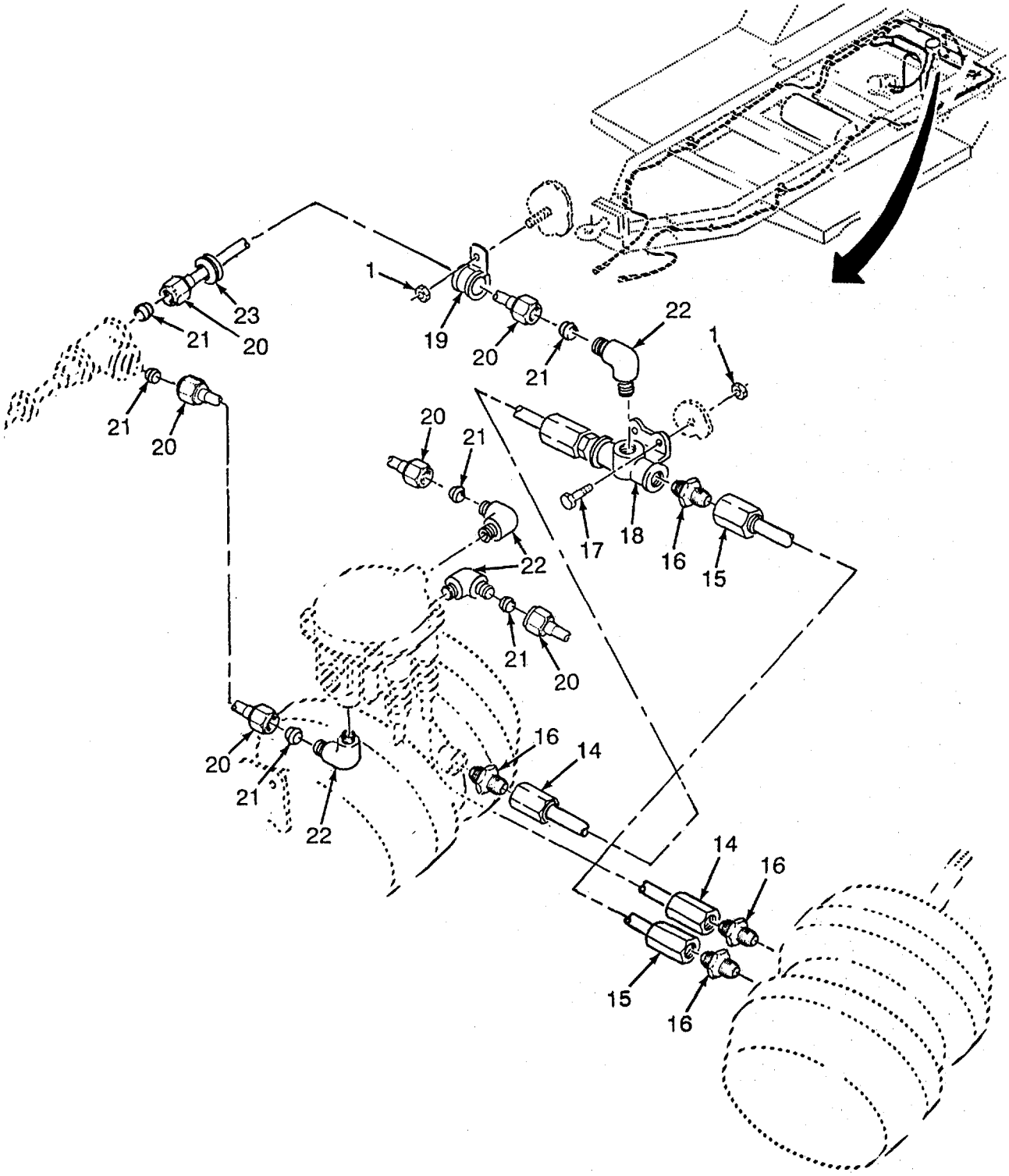

Figure 115. Trailer Airbrake Lines (Sheet 4 of 5)

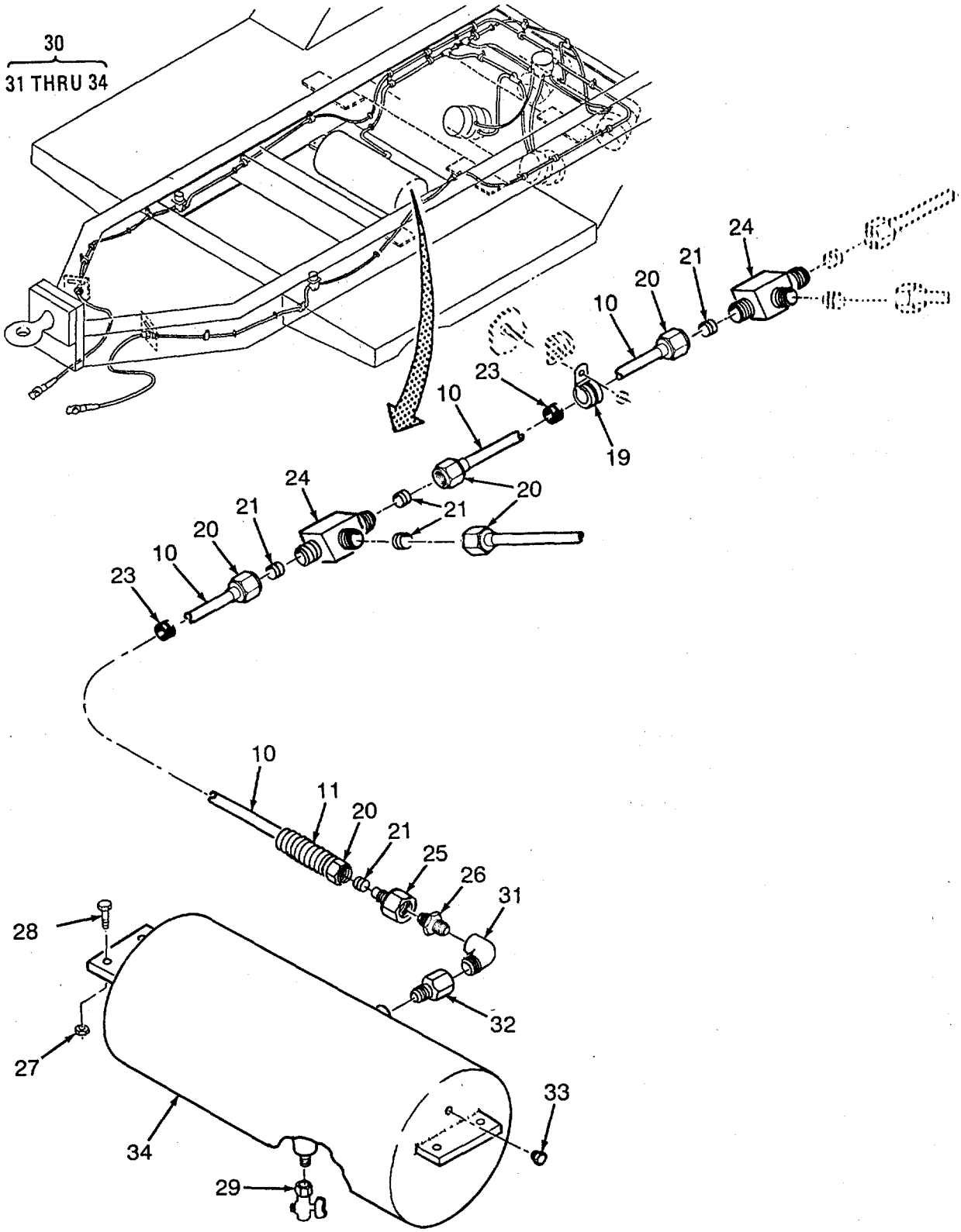

Figure 115. Trailer Airbrake Lines (Sheet 5 of 5)

(1) ITEM NO	(2) SMR CODE	(3) CAGEC	(4) PART NUMBER	(5) DESCRIPTION AND USABLE ON CODES(UOC)	(6) QTY
				GROUP 13 FLATBED CARGO TRAILER	
				FIG. 115 TRAILER AIRBRAKE LINES	
1	PAOZZ	96906	MS51922-1	.. NUT, SELF-LOCKING, HE UOC:FAV,FMQ	20
2	PAOZZ	96906	MS21333-104	.. CLAMP, LOOP UOC:FAV,FMQ	17
3	XDOZZ	97403	13222E7112	.. COUPLING, ANCHOR UOC:FAV,FMQ	2
4	XDOZZ	96906	MS53007-2	.. PLATE, IDENTIFICATION UOC:FAV,FMQ	1
5	PAOZZ	81343	6-4-100102B	.. ADAPTER, STRAIGHT 3/8 TUBE OD X 1/4-18 DRYSEAL NPTF UOC:FAV,FMQ	6
6	PAOZZ	81343	6-100115B	.. SLEEVE, COMPRESSION 3/8 TUBE OD UOC:FAV,FMQ	8
7	PAOZZ	81343	6-100110B	.. NUT, FITTING, TUBE SLEEVE, 3/8 TUBE OD UOC:FAV,FMQ	8
8	MOOZZ	19099	13222E7110-36	.. CONDUIT, FLEXIBLE MAKE FROM BULK P/N 13222E7113-1 UOC:FAV,FMQ	V
9	MOOZZ	19099	13222E37110-7	.. TUBE, NYLON MAKE FROM BULK P/N SAE-J844 3/8 OD TYPE B UOC:FAV,FMQ	2
10	MOOZZ	19099	13222E7110-31	.. TUBE, NYLON MAKE FROM BULK P/N SAE-J844 1/2 OD TYPE B UOC:FAV,FMQ	2
11	MOOZZ	19099	13222E7110-37	.. CONDUIT, FLEXIBLE MAKE FROM BULK P/N 13222E7113-2 UOC:FAV,FMQ	2
12	PAOZZ	81343	6-6-100202B	.. ELBOW, PIPE 1/2 TUBE OD X 3/8-18 DRYSEAL NPTF UOC:FAV,FMQ	3
13	PAOZZ	96906	MS35489-104	.. GROMMET, RUBBER UOC:FAV,FMQ	10
14	PAOZZ	97403	13222E7117-1	.. HOSE ASSEMBLY, NONME UOC:FAV,FMQ	4
15	PAOZZ	97403	13222E7117-2	.. HOSE ASSEMBLY, NONME UOC:FAV,FMQ	4
16	PAOZZ	81343	6-4-140130C	.. REDUCER, PIPE 3/8-18 DRY SEAL EXT PIPE X 1/4-18 NPT SWIVEL NUT UOC:FAV,FMQ	8
17	PAOZZ	77260	X1655	.. SCREW, CAP, HEXAGON H UOC:FAV,FMQ	4
18	PAOZZ	97403	13222E7124	.. TEE, ANCHOR UOC:FAV,FMQ	2
19	PAOZZ	96906	MS21333-105	.. CLAMP, LOOP UOC:FAV,FMQ	5
20	PAOZZ	81343	8-100110B	.. NUT, TUBE COUPLING 1/2 TUBE OD UOC:FAV,FMQ	10
21	PAOZZ	81343	8-100115B	.. SLEEVE, COMPRESSION 1/2 TUBE OD UOC:FAV,FMQ	10
22	PAOZZ	81343	8-6-100202B	.. ELBOW, FITTING, TUBE 1/2 TUBE OD X 3/8-18 DRYSEAL NPTF UOC:FAV,FMQ	5
23	PAOZZ	96906	MS35489-131	.. GROMMET, NONMETALLIC UOC:FAV,FMQ	3

(1) ITEM NO	(2) SMR CODE	(3) CAGEC	(4) PART NUMBER	(5) DESCRIPTION AND USABLE ON CODES (UOC)	(6) QTY
24	PAOZZ	81343	8-8-8-100401B	.. TEE, FITTING, TUBE 1/2 TUBE OD UOC:FAV,FMQ	2
25	PAOZZ	81343	8-8-100103B	.. ADAPTER, STRAIGHT 1/2 TUBE OD X 1/2-14 DRYSEAL NPTF UOC:FAV,FMQ	1
26	PAOZZ	81343	8-140137B	.. NIPPLE, PIPE 1/2-14 DRYSEAL NPTF UOC:FAV,FMQ	1
27	PAOZZ	96906	MS51922-17	.. NUT, SELF-LOCKING, HE UOC:FAV,FMQ	7
28	PAOZZ	80204	B1821BH038C125N	.. SCREW, CAP, HEXAGON H UOC:FAV,FMQ	4
29	PAOZZ	96906	MS35785-6	.. COCK, DRAIN UOC:FAV,FMQ	1
30	XDOZZ	97403	13222E7115-2	.. RESERVOIR ASSY UOC:FAV	1
30	XDOZZ	97403	13222E7115-1	.. RESERVOIR ASSY UOC:FMQ	1
31	PAOZZ	81343	12-140239	... ELBOW UOC:FAV	1
31	PAOZZ	81343	12-8-140238	... ELBOW, 3/4-14 X 1/2-14 NPTF DRYSEAL UOC:FMQ	1
32	PAOZZ	81343	12-8-140140	... BUSHING, REDUCER 3/4 X 1/2 NPTF UOC:FAV	1
33	PAOZZ	93061	211P-6	...PLUG, PIPE 3/8-18, BRASS UOC:FAV	2
33	PAOZZ	06853	233057	...PLUG, PIPE 3/8-18, STEEL UOC:FMQ	2
34	XDOZZ	62173	9569-1	...RESERVOIR UOC:FAV	1
34	XAOZZ	06853	228746	...TANK, PRESSURE UOC:FMQ	1
35	XDOZZ	96906	MS53007-1	.. PLATE, IDENTIFICATION UOC:FAV,FMQ	1

END OF FIGURE

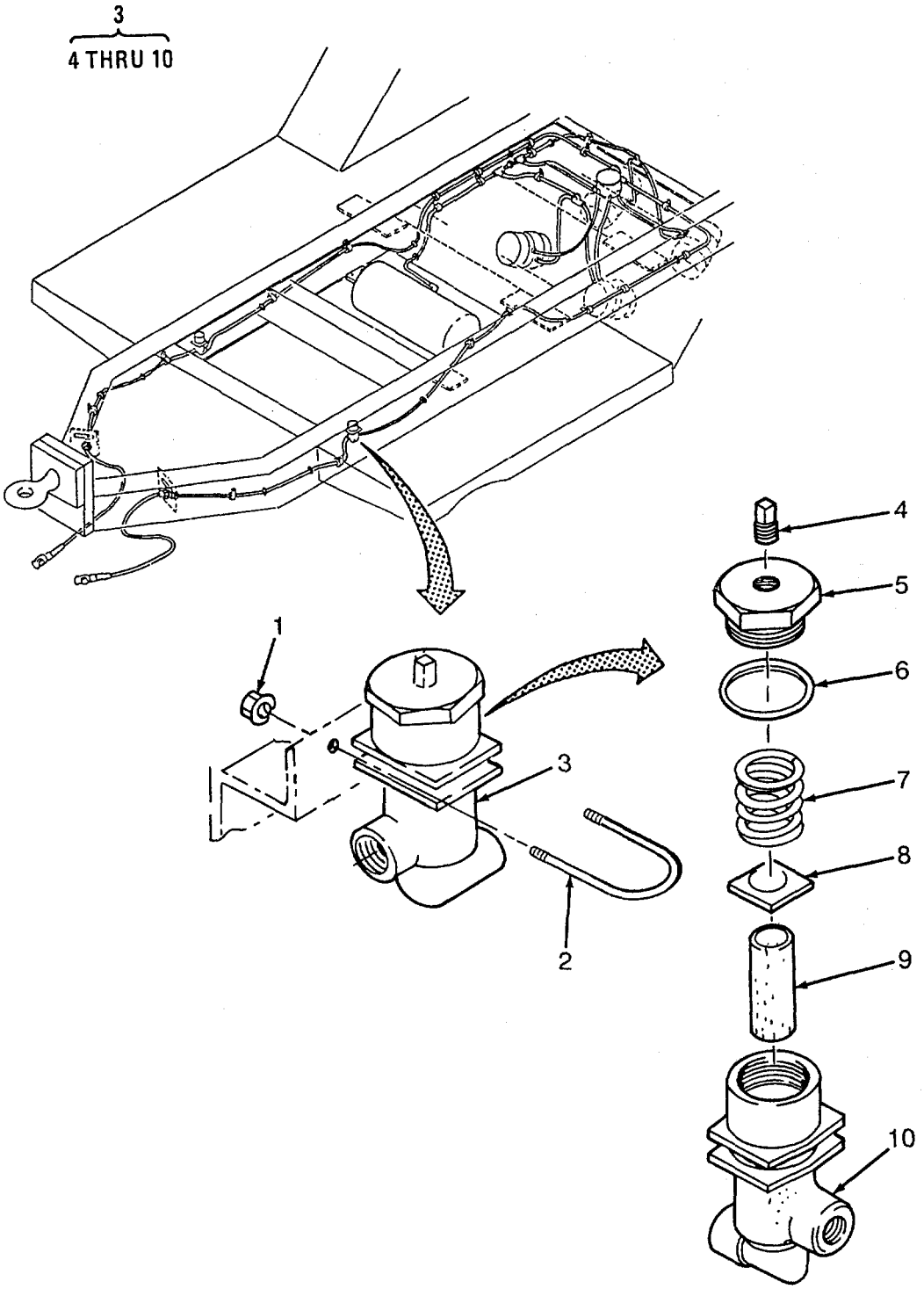

Figure 116. Trailer Air Cleaner Assembly

(1) ITEM NO	(2) SMR CODE	(3) CAGEC	(4) PART NUMBER	(5) DESCRIPTION AND USABLE ON CODES(UOC)	(6) QTY
				GROUP 13 FLATBED CARGO TRAILER	
				FIG. 116 TRAILER AIR CLEANER ASSEMBLY	
1	PAOZZ	96906	MS51922-1	.. NUT, SELF-LOCKING, HE UOC:FAV,FMQ	4
2	PAOZZ	97403	13222E7138-3	.. BOLT, U UOC:FAV,FMQ	2
3	PAOZZ	06853	225357	.. AIR FILTER, BRAKE LI UOC:FAV,FMQ	2
4	PAOZZ	06853	203680	... PLUG, PIPE UOC:FAV,FMQ	1
5	PAOZZ	06853	235091	... ADAPTER BUSHING UOC:FAV,FMQ	1
6	PAOZZ	06853	235092	... GASKET UOC:FAV,FMQ	1
7	PAOZZ	06853	235093	... SPRING, HELICAL, COMP UOC:FAV,FMQ	1
8	PAOZZ	06853	235094	... WASHER, SPRING TENSI UOC:FAV,FMQ	1
9	PAOZZ	06853	235095	. FILTER ELEMENT, FLUI UOC:FAV,FMQ	1
10	XAOZZ	06853	235096	... HOUSING UOC:FAV,FMQ	1

END OF FIGURE

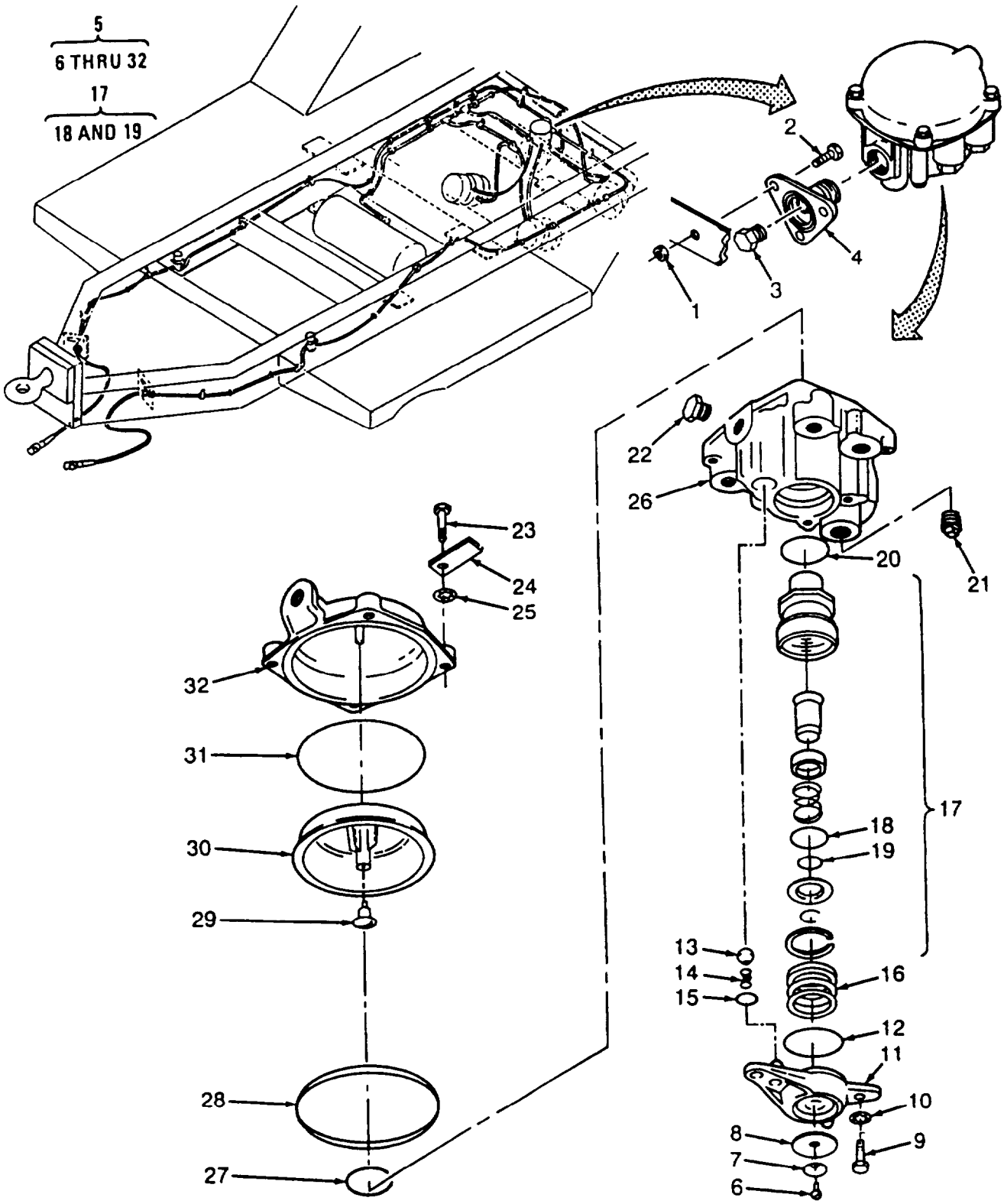

Figure 117. Trailer Airbrake Relay Valve

(1) ITEM MO	(2) SMR CODE	(3) CAGEC	(4) PART NUMBER	(5) DESCRIPTION AND USABLE ON CODES(UOC)	(6) QTY
				GROUP 13 FLATBED CARGO TRAILER	
				FIG. 117 TRAILER AIRBRAKE RELAY VALVE	
1	PAOZZ	96906	MS51922-17	.. NUT, SELF-LOCKING, HE UOC:FAV,FMQ	3
2	PAOZZ	80204	B1821BH038C125N	.. SCREW, CAP, HEXAGON H UOC:FAV,FMQ	3
3	PAOZZ	97403	13222E7144	.. PLUG, PIPE SHORT, SKT UOC:FAV,FMQ	1
4	PAOZZ	97403	13222E7143	.. ADAPTER, BRAKE VALVE UOC:FAV,FMQ	1
5	PAOZZ	06853	281860	.. VALVE, RELAY, AIR PRE UOC:FAV,FMQ	1
6	PAOZZ	06853	242228	... SCREW, TAPPING UOC:FAV,FMQ	1
7	PBOZZ	06853	239943	... WASHER, SPRING TENSI UOC:FAV,FMQ	1
8	PBOZZ	06853	246086	... DIAPHRAGM, VALVE, FLA UOC:FAV,FMQ	1
9	XDOZZ	06853	291933	... SCREW, MACHINE UOC:FAV,FMQ	3
10	PBOZZ	06853	230872	... SHIM SHIM (.010) UOC:FAV,FMQ	V
10	PBOZZ	06853	230873	... SHIM SHIM (.0031) UOC:FAV,FMQ	V
11	XDOZZ	06853	246085	... COVER, EXHAUST UOC:FAV,FMQ	1
12	PAOZZ	06853	246083	... PACKING, PREFORMED UOC:FAV,FMQ	1
13	PBOZZ	06853	238837	... BALL, CHECK VALVE UOC:FAV,FMQ	1
14	XDOZZ	06853	296789	. SPRING, VALVE, CHECK UOC:FAV,FMQ	1
15	PBOZZ	06853	236728	... PACKING, PREFORMED UOC:FAV,FMQ	
16	XDOZZ	06853	246084	... SPRING, PISTON UOC:FAV,FMQ	1
17	XDOZF	06853	281674	... PISTON AND VALVE AS UOC:FAV,FMQ	1
18	XDOZZ	06853	240337	.... PACKING, PREFORMED UOC:FAV,FMQ	1
19	XDOZZ	06853	235063	.... PACKING, PREFORMED UOC:FAV,FMQ	1
20	XDOZZ	06853	238327	... PACKING, PREFORMED UOC:FAV,FMQ	1
21	PBOZZ	01276	2082-6B	... PLUG, PIPE 3/8 IN UOC:FAV,FMQ	4
22	PBOZZ	06853	246895	... FILTER EMERGENCY VA UOC:FAV,FMQ	1
23	PBOZZ	06853	291928	... BOLT, ASSEMBLED WASH UOC:FAV,FMQ	4
24	XDOZZ	06853	246209	... TAG, IDENTIFICATION UOC:FAV,FMQ	1
25	PBOZZ	06853	232850	... WASHER, LOCK UOC:FAV,FMQ	1
26	XAOZZ	06853	281673	... BODY, COMPLETE	1

(1) ITEM MO	(2) SMR CODE	(3) CAGEC	(4) PART NUMBER	(5) DESCRIPTION AND USABLE ON CODES(UOC)	(6) QTY
				UOC:FAV,FMQ	
27	XDOZZ	06853	236649	...PACKING, PREFORMED	1
				UOC:FAV,FMQ	
28	XDOZZ	06853	245290	...GASKET	1
				UOC:FAV,FMQ	
29	XDOZZ	06853	246087	...SEAT, VALVE, EXHAUST	1
				UOC:FAV,FMQ	
30	XDOZZ	06853	281676	...PISTON, RELAY	1
				UOC:FAV,FMQ	
31	PBOZZ	06853	243973	... PACKING, PREFORMED	1
				UOC:FAV,FMQ	
32	XAOZZ	06853	243972	. COVER	1
				UOC:FAV,FMQ	

END OF FIGURE

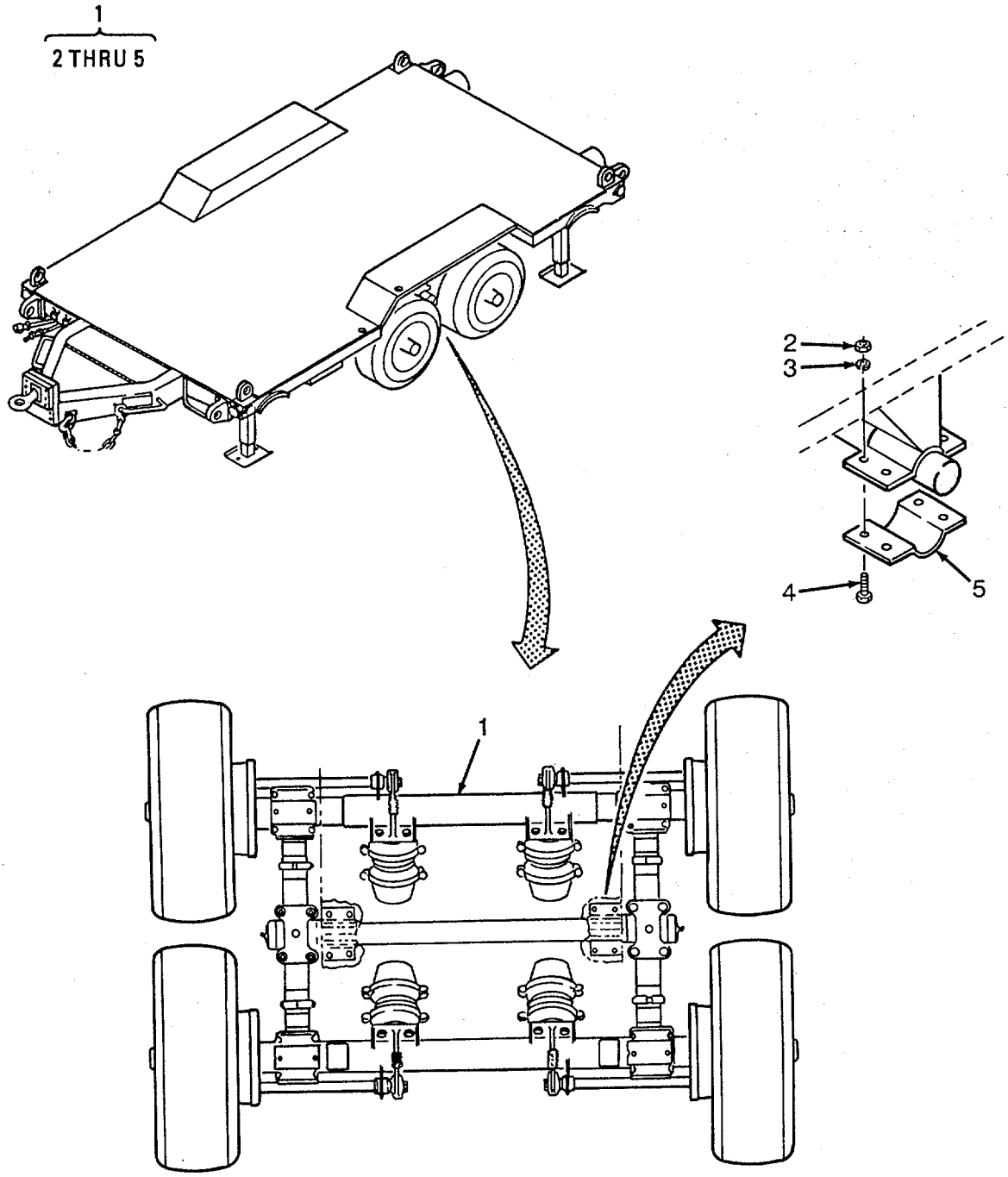

Figure 118. Trailer Suspension Assembly

(1) ITEM NO	(2) SMR CODE	(3) CAGEC	(4) PART NUMBER	(5) DESCRIPTION AND USABLE ON CODES(UOC)	(6) QTY
				GROUP 13 FLATBED CARGO TRAILER	
				FIG. 118 TRAILER SUSPENSION ASSEMBLY	
1	XAFFF	97403	13222E7090	. SUSPENSION ASSY UOC:FAV	1
1	XAFFF	97403	13229E0400	. SUSPENSION ASSY UOC:FMQ	1
2	PAFZZ	96906	MS51968-20	.. NUT, PLAIN, HEXAGON UOC:FAV,FMQ	8
3	PAFZZ	96906	MS35338-50	.. WASHER, LOCK-SPRING UOC:FAV,FMQ	8
4	PAFZZ	96906	MS90727-164	.. SCREW, CAP, HEXAGON H UOC:FAV,FMQ	8
5	XDFZZ	97403	13222E7107	.. CLAMP, TRUNNION UOC:FAV,FMQ	2

END OF FIGURE

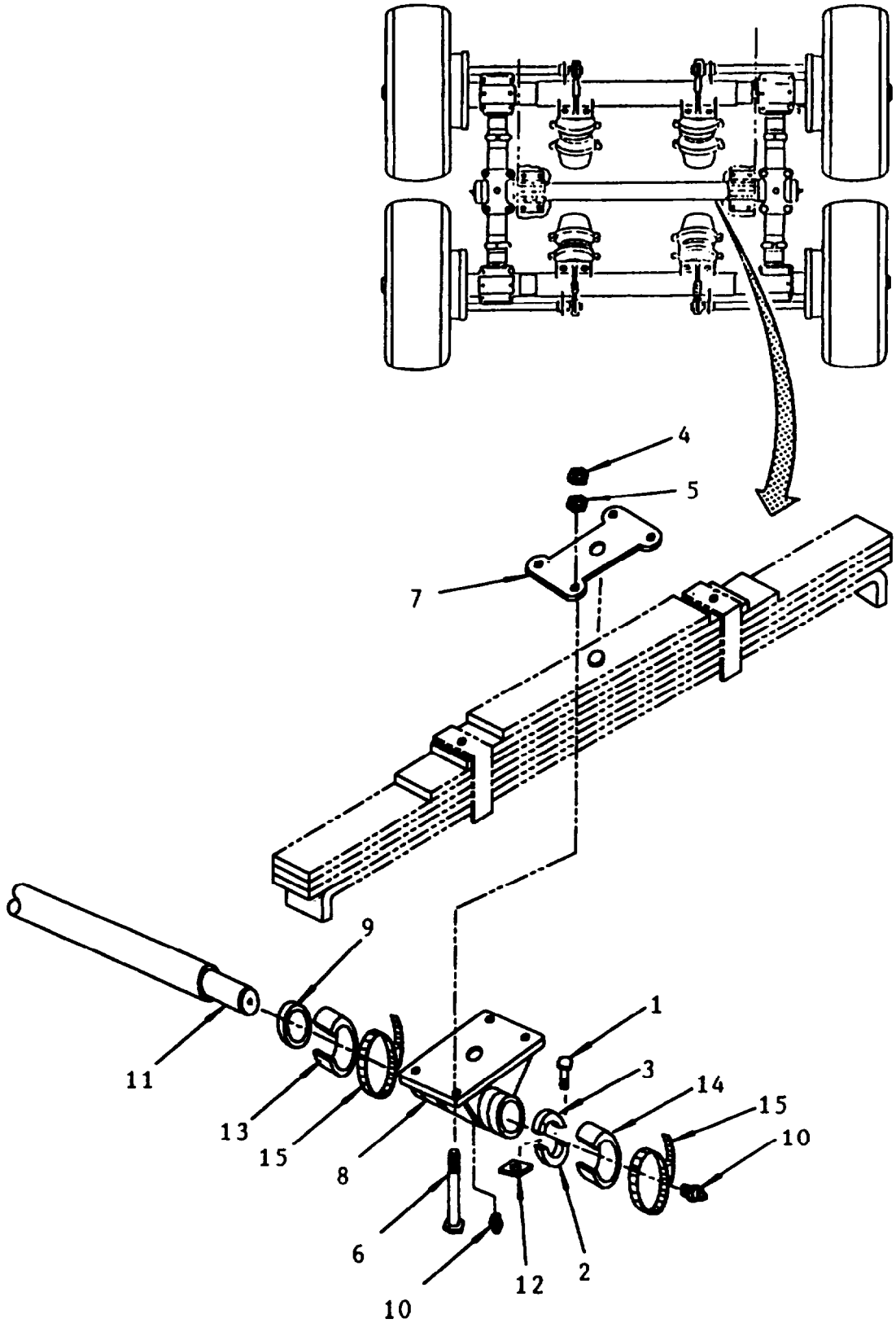

Figure 119. Trailer Trunnion Axle

(1) ITEM NO	(2) SMR CODE	(3) CAGEC	(4) PART NUNBER	(5) DESCRIPTION AND USABLE ON CODES(UOC)	(6) QTY
				GROUP 12 FLATBED CARGO TRAILER	
				FIG. 119 TRAILER TRUNNION AXLE	
1	PAFZZ	96906	MS16998-75	.. SCREW, CAP, SOCKET HE UOC:FAV,FMQ	4
2	XDFZZ	97403	13222E7105	.. CLAMP, RING, LOWER UOC:FAV,FMQ	2
3	XDFZZ	97403	13222E7104	.. CLAMP, RING, UPPER UOC:FAV,FMQ	2
4	PAFZZ	96906	MS51968-26	.. NUT, PLAIN, HEXAGON UOC:FAV,FMQ	8
5	PAFZZ	96906	MS35691-69	.. NUT, PLAIN, HEXAGON UOC:FAV,FMQ	8
6	PBFZZ	97403	13222E7092	.. BOLT, MACHINE UOC:FAV,FMQ	8
7	XDFZZ	97403	13222E7109	.. PLATE, TRUNNION BRKT UOC:FAV,FMQ	2
8	XDFZZ	97403	13222E7106	.. BRACKET, TRUNNION UOC:FAV,FMQ	2
9	XDFZZ	97403	13222E7108	.. RING, SPACER UOC:FAV,FMQ	2
10	PAOZZ	96906	MS15003-1	.. FITTING, LUBRICATION UOC:FAV,FMQ	4
11	XDFZZ	97403	13222E7087	.. TRUNNION, AXLE UOC:FAV,FMQ	1
12	PAOZZ	97403	13229E0164	.. SEAL, GREASE CLAMP RING UOC:FAV,FMQ	2
13	PAOZZ	97403	13229E0163-2	.. SEAL, GREASE UOC:FAV,FMQ	2
14	PAOZZ	97403	13229E0163-1	.. SEAL, GREASE UOC:FAV,FMQ	2
15	PAOZZ	96906	MS35842-16	.. CLAMP, HOSE, 4-1/8 TO 7 ID CRES UOC:FAV,FMQ	4

END OF FIGURE

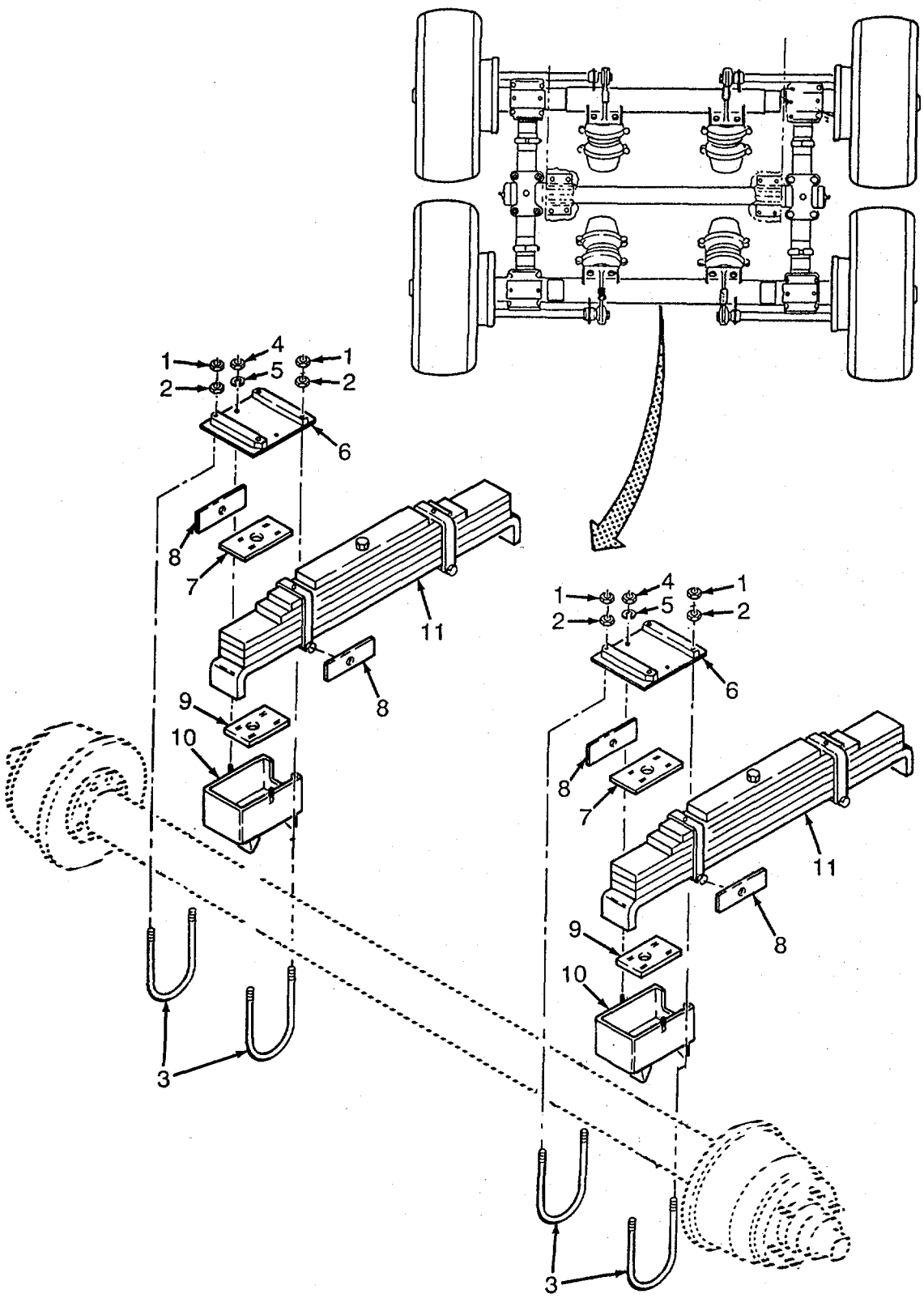

Figure 120. Trailer Spring Assembly (Sheet 1 of 2)

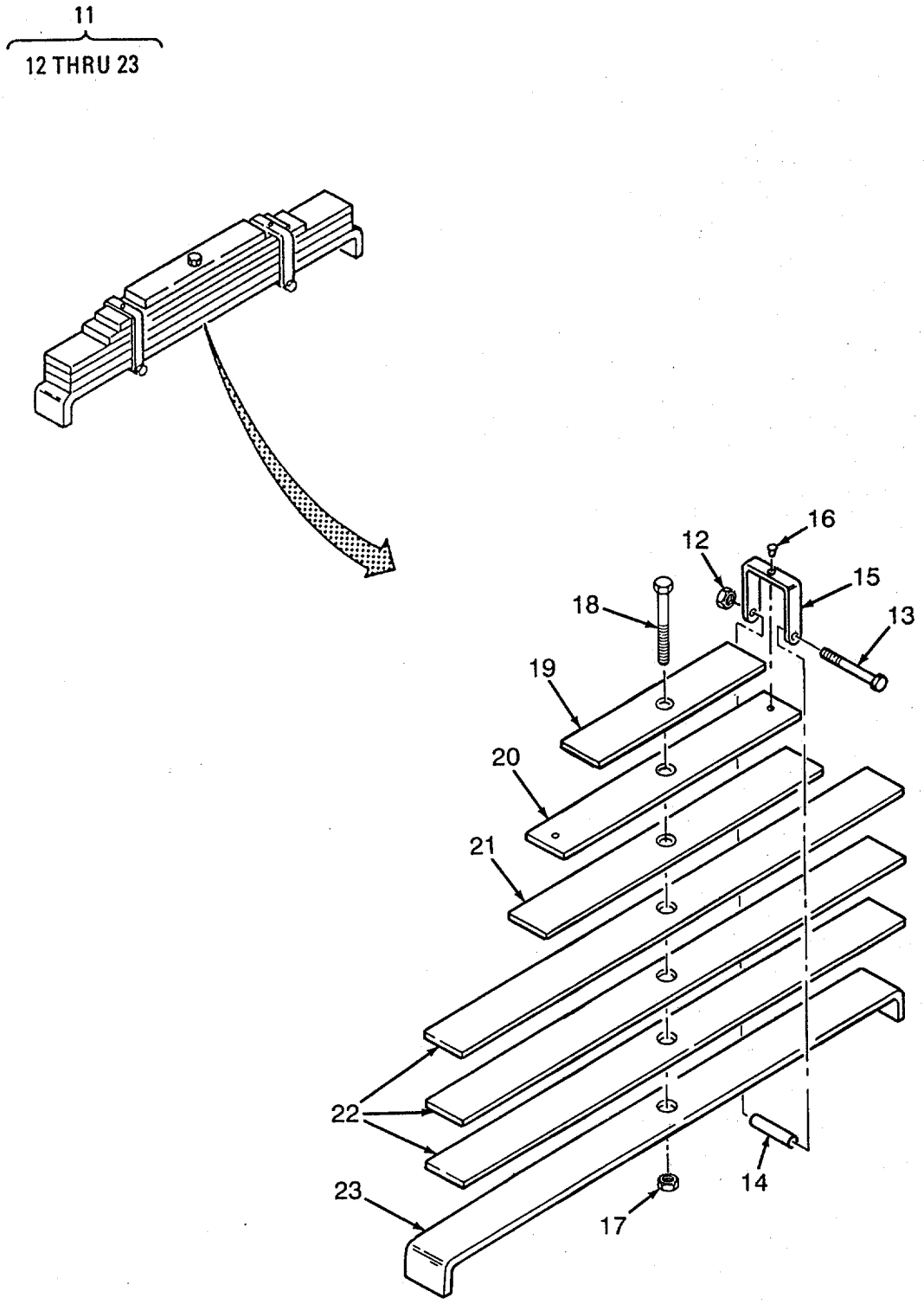

Figure 120. Trailer Spring Assembly (Sheet 2 of 2)

(1) ITEM NO	(2) SMR CODE	(3) CAGEC	(4) PART NUMBER	(5) DESCRIPTION AND USABLE ON CODES(UOC)	(6) QTY
				GROUP 13 FLATBED CARGO TRAILER	
				FIG. 120 TRAILER SPRING ASSEMBLY	
1	PAFZZ	96906	MS51968-20	.. NUT, PLAIN, HEXAGON UOC:FAV,FMQ	16
2	PAFZZ	96906	MS35691-53	.. NUT, PLAIN, HEXAGON UOC:FAV,FMQ	16
3	PAFZZ	97403	13222E7085	.. BOLT, U UOC:FAV	8
3	XDFZZ	97403	13229E0401	.. BOLT, U UOC:FMQ	8
4	PAFZZ	96906	MS51968-14	.. NUT, PLAIN, HEXAGON UOC:FAV,FMQ	8
5	PAFZZ	96906	MS35338-48	.. WASHER, LOCK UOC:FAV,FMQ	8
6	XDFZZ	97403	13222E7084	.. COVER, BOX, SHACKLE UOC:FAV	4
6	XDFZZ	97403	13229E0399	.. COVER, BOX, SHACKLE UOC:FMQ	4
7	XDFZZ	97403	13222E7083	.. SPACER, TOP UOC:FAV,FMQ	4
8	XDFZZ	97403	13222E7182	.. SPACER, SIDE UOC:FAV,FMQ	8
9	XDFZZ	97403	13222E7091	.. SPACER, BOTTOM UOC:FAV,FMQ	4
10	XAFZZ	97403	13222E7086	.. BOX, SHACKLE WELDED TO AXLE ASSY UOC:FAV	4
10	XAFZZ	97403	13229E0402	.. BOX, SHACKLE WELDED TO AXLE ASSY UOC:FMQ	4
11	XDFZZ	97403	13222E7088	.. SPRING ASSY UOC:FAV,FMQ	2
12	PAFZZ	96906	MS51967-11	.. NUT, PLAIN, HEXAGON UOC:FAV,FMQ	2
13	PAFZZ	96906	MS90725-102	.. SCREW, CAP, HEXAGON H UOC:FAV,FMQ	2
14	XDFZZ	97403	13222E7088-10	... TUBING 0.625 OD 0.058 WALL STOCK TYPE 5, 3.56 IN UOC:FAV,FMQ	2
15	XDFZZ	97403	13222E7088-6	... BAR 0.250 X 1.00 STOCK, 3.50 IN UOC:FAV,FMQ	2
16	PAFZZ	96906	MS20613-14P16	... RIVET, SOLID UOC:FAV,FMQ	2
17	PAFZZ	96906	MS51968-14	... NUT, PLAIN, HEXAGON UOC:FAV,FMQ	1
18	PAFZZ	96906	MS90727-125	...SCREW, CAP, HEXAGON H UOC:FAV,FMQ	1
19	XDFZZ	97403	13222E7088-5	... BAR 0.499 STOCK, 16.25 IN UOC:FAV,FMQ	1
20	XDFZZ	97403	13222E7088-4	...BAR 0.499 STOCK, 23 IN UOC:FAV,FMQ	1
21	XDFZZ	97403	13222E7088-3	... BAR 0.499 STOCK, 27 IN UOC:FAV,FMQ	1
22	XDFZZ	97403	13222E7088-2	... BAR 0.499 STOCK, 42.75 IN UOC:FAV,FMQ	3
23	XDFZZ	97403	13222E7088-1	... BAR 0.499 STOCK, 42.75 IN UOC:FAV,FMQ	1

END OF FIGURE

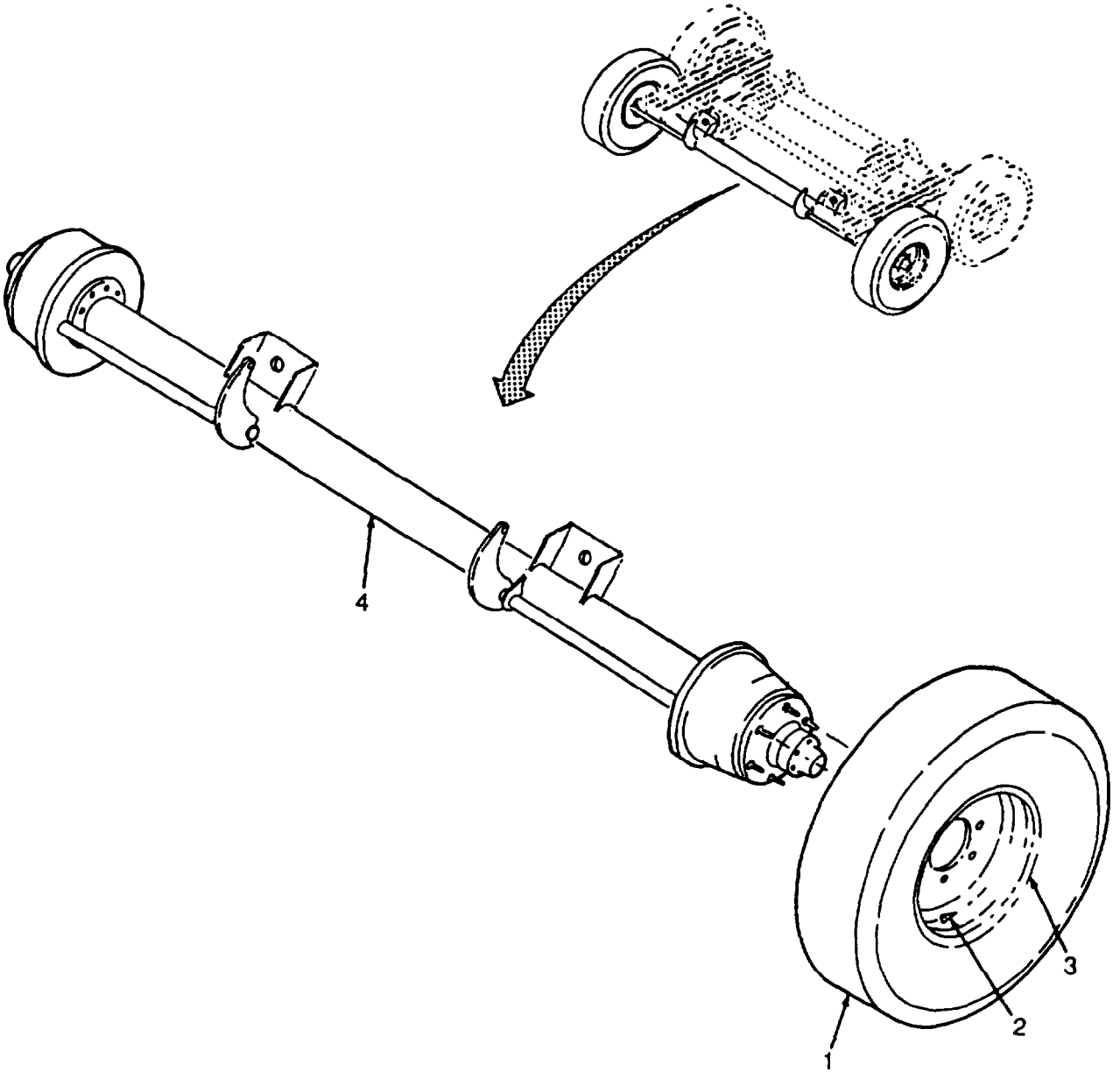

Figure 121. Trailer Axle Assembly

(1) ITEM NO	(2) SMR CODE	(3) CAGEC	(4) PART NUMBER	(5) DESCRIPTION AND USABLE ON CODES(UOC)	(6) QTY
				GROUP 13 FLATBED CARGO TRAILER	
				FIG. 121 TRAILER AXLE ASSEMBLY	
1	PAOZZ	81348	ZZ-T-381/GP3A/12 -16.5/F/TBHR	.. TIRE, PNEU, TUBELESS UOC:FAV,FMQ	4
2	PAOZZ	81348	ZZ-V-25TYIICL2	.. VALVE & VALVE SPUD UOC:FAV,FMQ	4
3	PBOZZ	97403	13222E7093	.. WHEEL ASSY UOC:FAV,FMQ	4
4	XDFZZ	97403	13222E7089	.. AXLE ASSY UOC:FAV	2
4	XDFZZ	97403	13229E0398	.. AXLE ASSY UOC:FMQ	2

END OF FIGURE

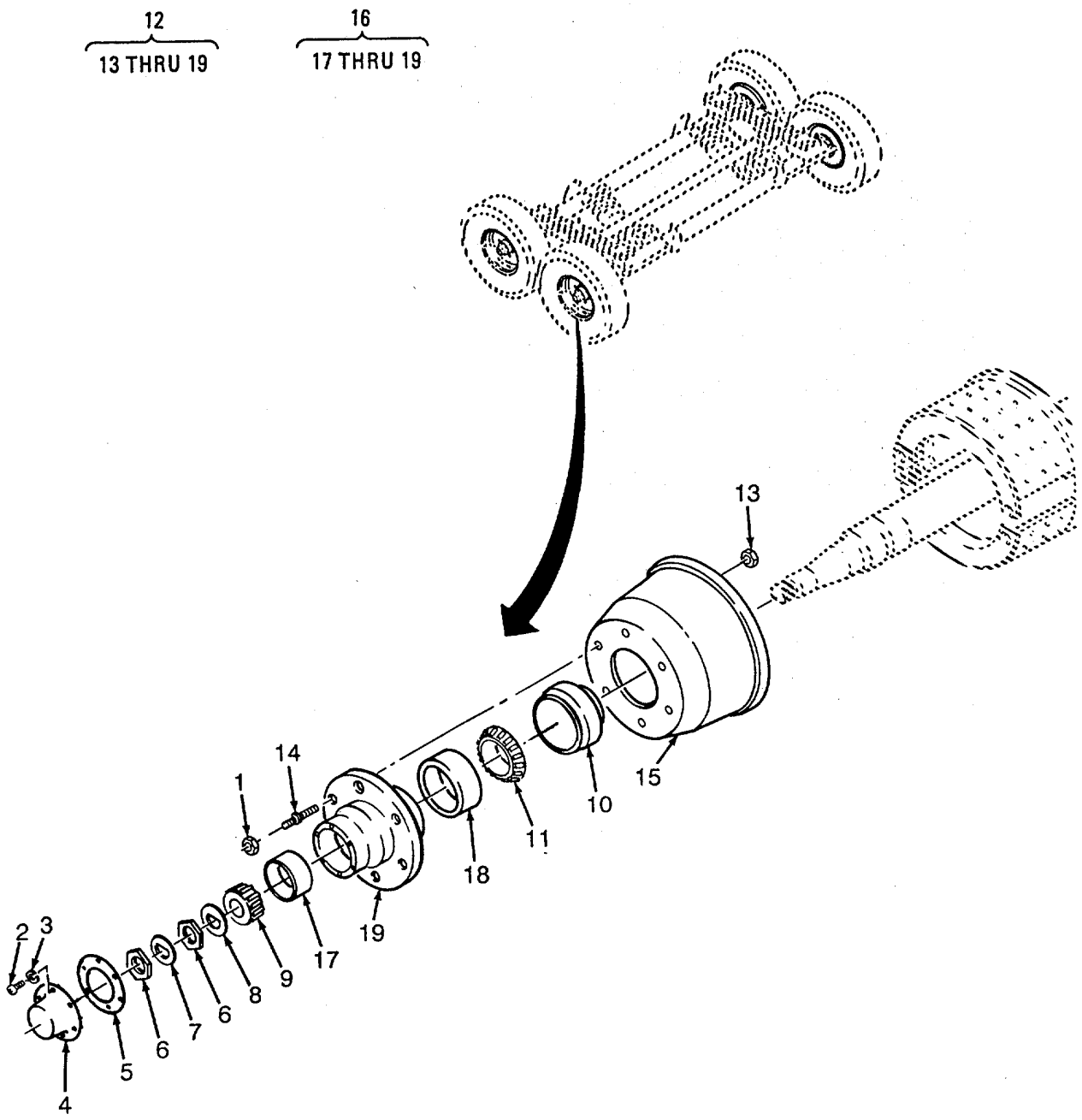

Figure 122. Trailer Hub and Drum Assembly (Sheet 1 of 2).

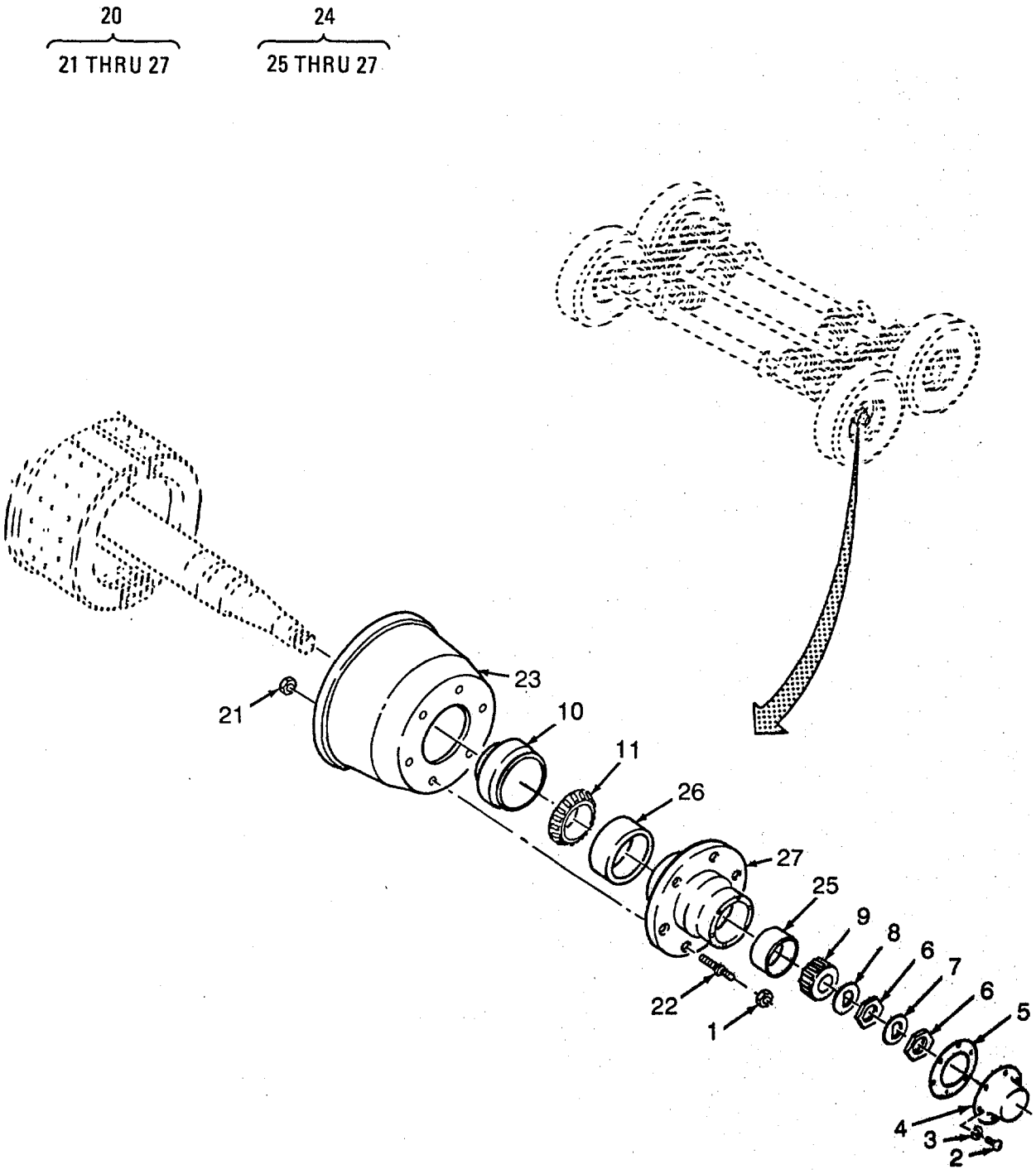

Figure 122. Trailer Hub and Drum Assembly (Sheet 2 of 2)

(1) ITEM NO	(2) SMR CODE	(3) CAGEC	(4) PART NUMBER	(5) DESCRIPTION AND USABLE ON CODES(UOC)	(6) QTY
				GROUP 13 FLATBED CARGO TRAILER	
				FIG. 122 TRAILER HUB AND DRUM ASSEMBLY	
1	PAOZZ	96906	MS51983-2	... NUT, PLAIN, SINGLE BA RIGHT HAND UOC:FAV,FMQ	6
1	PAOZZ	96906	MS51983-1	. NUT, PLAIN, SINGLE BA LEFT HAND UOc:FAV,FMQ	6
2	PAOZZ	95019	500397-8	. SCREW UOC:FAV,FMQ	12
3	PAOZZ	95019	500357-10	... WASHER, LOCK UOC:FAV,FMQ	12
4	XDOZZ	62707	M10HK101	...CAP, HUB UOC:FAV,FMQ	2
5	PAOZZ	62707	M10HG124	... GASKET UOC:FAV,FMQ	2
6	PBOZZ	62707	M10HN107	... NUT, PLAIN, HEXAGON UOC:FAV,FMQ	4
7	PBOZZ	62707	M10HN105	... WASHER, FLAT UOC:FAV,FMQ	2
8	PBOZZ	62707	M10HN104	... WASHER, FLAT UOC:FAV,FMQ	2
9	PAOZZ	62707	M10HB102	...CONE AND ROLLERS, TA UOC:FAV,FMQ	2
10	PAOZZ	62707	M10HH104	... PACKING ASSEMBLY UOC:FAV,FMQ	2
11	PAOZZ	62707	M10HB103	... CONE AND ROLLERS, TA UOC:FAV,FMQ	2
12	XDOOO	62707	K14HU105-1X	...HUB & DRUM ASSY RIGHT HAND UOC:FAV,FMQ	1
13	PAOZZ	62707	500371-8	.... ANCHOR PIN NUT UOC:FAV,FMQ	6
14	PAOZZ	62707	M10HM116-4	.... BOLT, FINNED NECK RIGHT HAND UOC:FAV,FMQ	6
15	PBOZZ	62707	M12WA103	.....BRAKE DRUM UOC:FAV,FMQ	1
16	PBOZZ	62707	K14HU110X	.... HUB, SUBASSY UOC:FAV,FMQ	1
17	PBOZZ	62707	M10HA100	..... CUP, TAPERED ROLLER REPLACE AS A SET UOC:FAV,FMQ	1
18	PBOZZ	62707	M10HA101	..... CUP, TAPERED ROLLER REPLACE AS A SET UOC:FAV,FMQ	1
19	PBOZZ	62707	K14HU104	..... HUB, WHEEL FIN UOC:FAV,FMQ	
20	XDOOO	62707	K14HU105-2X	...HUB & DRUM ASSY LEFT HAND UOC:FAV,FMQ	1
21	PAOZZ	62707	500371-8	.... ANCHOR PIN NUT UOC:FAV,FMQ	6
22	PAOZZ	62707	M10HM117-4	.... BOLT, FINNED NECK LEFT HAND UOC:FAV,FMQ	6
23	PBOZZ	62707	M12WA103	.... BRAKE DRUM UOC:FAV,FMQ	1
24	XDOOO	62707	K14HU110X	.... HUB, SUBASSY UOC:FAV,FMQ	1
25	PAOZZ	62707	M10HA100	..... CUP, TAPERED ROLLER UOC:FAV,FMQ	1
26	PAOZZ	62707	M10HA101	..... CUP, TAPERED ROLLER	1

(1) ITEM NO	(2) SMR CODE	(3) CAGEC	(4) PART NUMBER	(5) DESCRIPTION AND USABLE ON CODES(UOC)	(6) QTY
				UOC:FAV,FMQ	
27	XDOZZ	62707	K14HU104	. HUB, WHEEL FIN	1
				UOC:FAV,FMQ	

END OF FIGURE

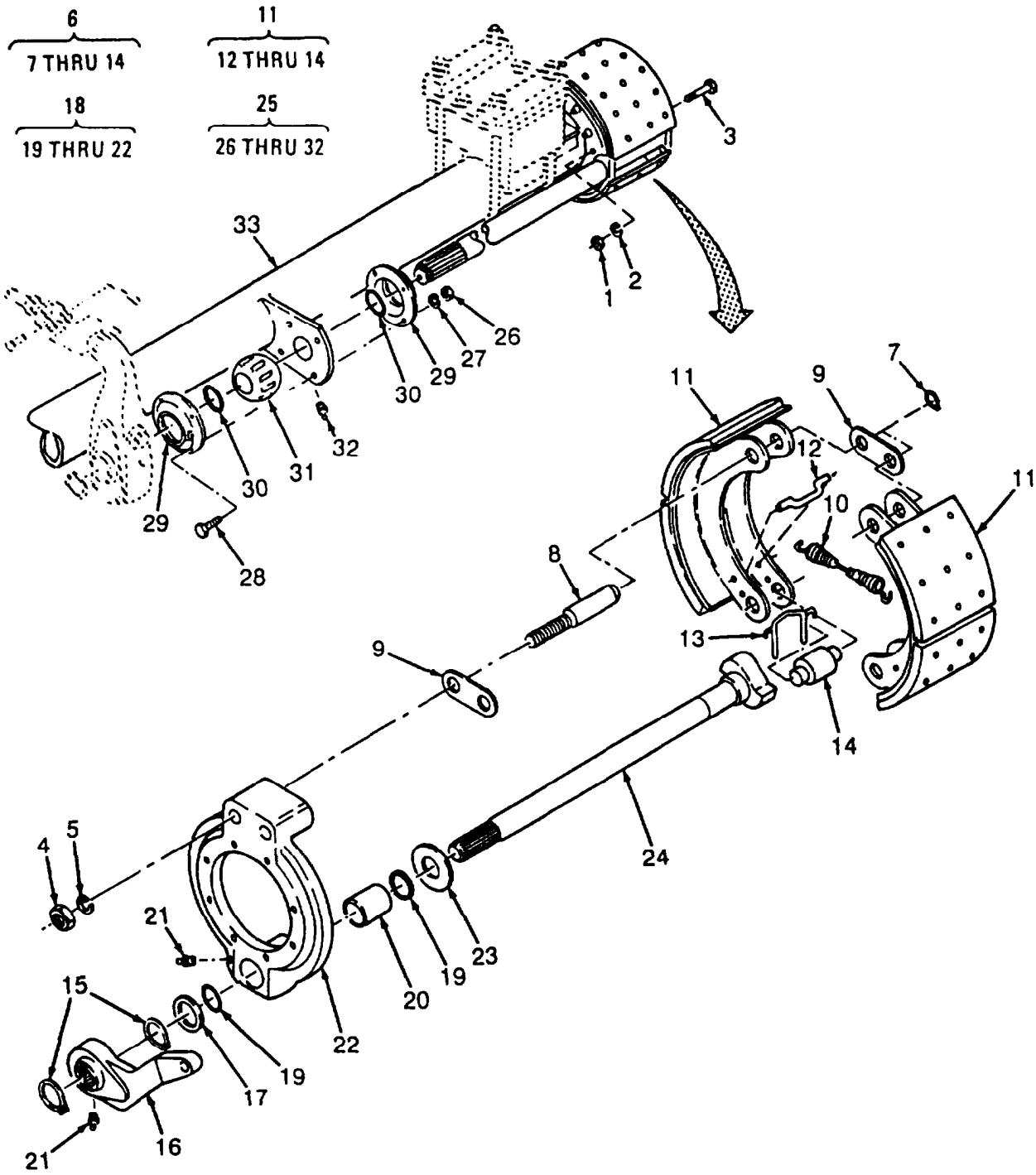

Figure 123. Trailer Brake Assembly (Sheet 1 of 2)
(WPES-10, WPES-20 AND WPES-30)

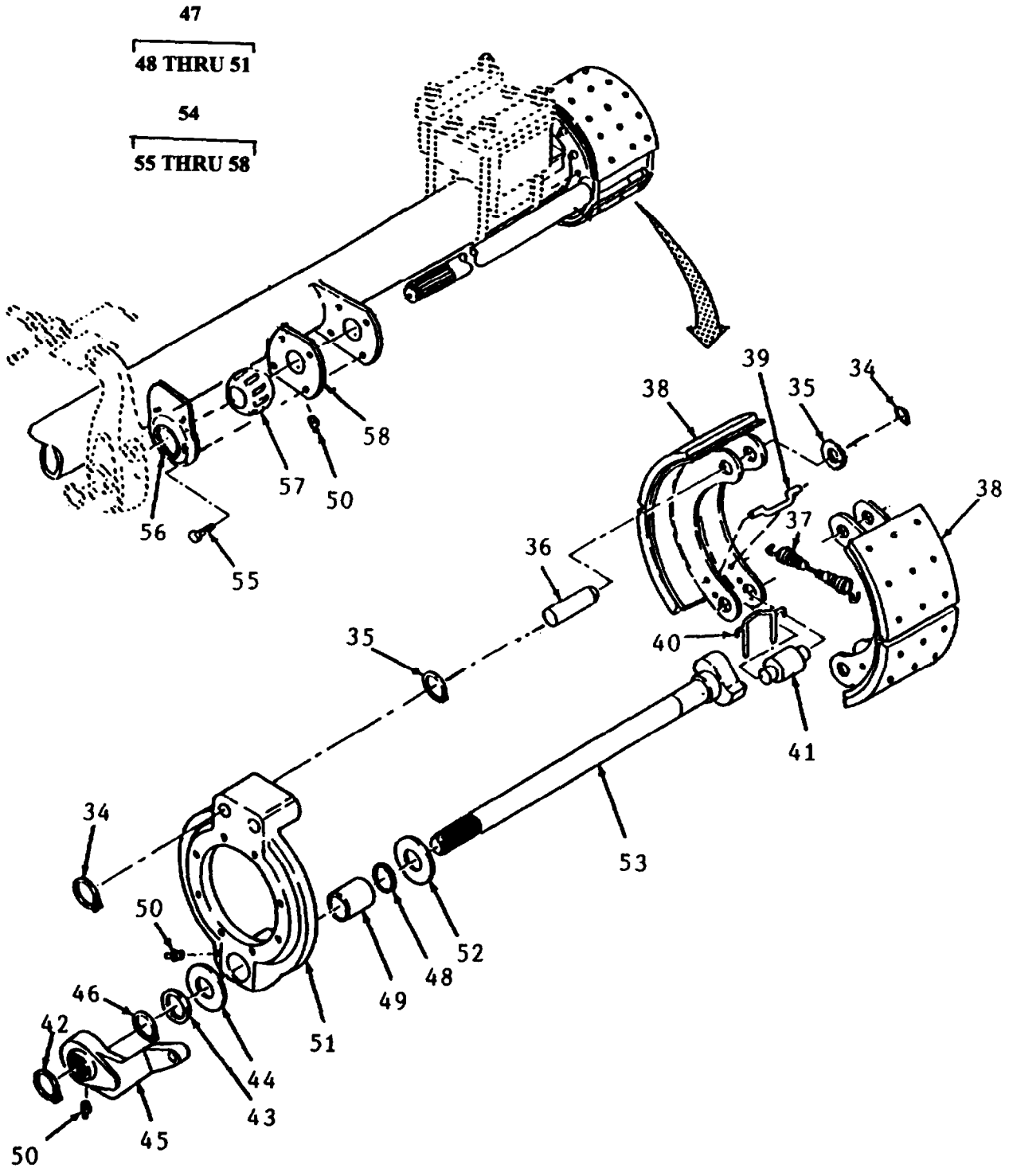

Figure 123. Trailer Brake Assembly (Sheet 2 of 2)
Models H-9518-1 only

(1) ITEM NO	(2) SMR CODE	(3) CAGEC	(4) PART NUMBER	(5) DESCRIPTION AND USABLE ON CODES(UOC)	(6) QTY
				GROUP 13 FLATBED CARGO TRAILER	
				FIG. 123 TRAILER BRAKE ASSEMBLY	
1	PAFZZ	97271	500371-5	... NUT, BRAKE MOUNT UOC:FAV	16
2	PAFZZ	95019	500357-13	... WASHER, LOCK UOC:FAV	16
3	PAFZZ	62707	500412-15	...BOLT, MACHINE UOC:FAV	16
4	KFFZZ	62707	500371-8	... ANCHOR PIN NUT PART OF KIT P/N M12KBH04 UOC:FAV	4
5	KFFZZ	62707	500358-17	...WASHER, LOCK PART OF KIT P/N M12KBH04 UOC:FAV	4
6	XDOOO	62707	M12WD117X	...BRAKE ASSY UOC:FAV	2
7	KFOZZ	62707	M10HR104	....RING, RETAINING PART OF KIT P/N M12KBH04 UOC:FAV	2
8	KFOZZ	62707	M10WJ117	.... PIN, ANCHOR PART OF KIT P/N M12KBH04 UOC:FAV	2
9	KFOZZ	62707	M10HR105	....LINK, ANCHOR PIN PART OF KIT P/N M12KBH04 UOC:FAV	2
10	KFOZZ	62707	M10WJ118	....SPRING PART OF KIT P/N M12KBH04 UOC:FAV	1
11	XDOZO	62707	M12WN112X	....LINING, BRAKE SHOE UOC:FAV	2
12	KFOZZ	62707	M16WJ102	.... PIN, SPRING, RETURN PART OF KIT P/N M12KBH04 UOC:FAV	1
13	KFOZZ	62707	M16WJ103	.....RETAINER, ROLLER PART OF KIT P/N M12KBH04 UOC:FAV	1
14	KFOZZ	62707	M16WJ104	.....ROLLER, CAM PART OF KIT P/N M12KBH04 UOC:FAV	1
15	KFFZZ	62707	38038	... RING, RETAINING PART OF KIT P/N M12KY203 UOC:FAV	4
16	XDFZZ	62707	M12WR101	... ADJUSTER, SLACK UOC:FAV	2
17	KFFZZ	62707	M10HS100	...SPACER, STEEL PART OF KIT P/N M12KY203 UOC:FAV	2
18	XDFZZ	62707	M12WS131X	... BRAKE ASSY, SPIDER UOC:FAV	2
19	KFFZZ	62707	M16HH100	....PACKING, PREFORMED PART OF KIT P/N M12KY203 UOC:FAV	
20	KFFZZ	62707	M12HD100	....BUSHING, BRONZE PART OF KIT P/N M12KY203 UOC:FAV	1
21	PAFZZ	95019	500168-2	....FITTING, LUBRICATION UOC:FAV	1
22	XDFZZ	62707	M12WS122	....BRAKE, FIN, SPIDER UOC:FAV	1
23	KFFZZ	62707	M10HN108	... WASHER, CAM, ADJUST PART OF KIT P/N M12KY203 UOC:FAV	2
24	XDFZZ	62707	M12WKL10-233	... CAM, BRAKE, FIN LEFT HAND UOC:FAV	1
24	XDFZZ	62707	M12WKR10-233	... CAM, BRAKE, FIN RIGHT HAND UOC:FAV	1
25	XAFZZ	62707	M12WH118X	... BRACKET ASSY, CAM WELDED ON AXLE	2

(1) ITEM NO	(2) SMR CODE	(3) CAGEC	(4) PART NUMBER	(5) DESCRIPTION AND USABLE ON CODES(UOC)	(6) QTY
				UOC:FAV	
26	PBFZA	95019	500370-1	....NUT, PLAIN, HEXAGON	4
				UOC:FAV	
27	PAFZZ	62707	500356-9	....WASHER, LOCK	4
				UOC:FAV	
28	PAFZZ	62707	500396-10	....SCREW, CAP	4
				UOC:FAV	
29	PBFZZ	62707	M10WH101	....HOUSING, BUSHING	2
				UOC:FAV	
30	KFFZZ	62707	M10HH131	....PACKING, PREFORMED PART OF KIT P/N M10WJ212X	2
				UOC:FAV	
31	KFFZZ	62707	M10WJ107	....BUSHING, SYNTHETIC PART OF KIT P/N M10WJ212X	1
				UOC:FAV	
32	KFOZZ	62707	500174-2	....FITTING, LUBE PART OF KIT P/N M10WJ212X	1
				UOC:FAV	
33	XAFZZ	62707	A13TA105-3X	...TUBE ASSY, AXLE	1
				UOC:FAV	
34	PAFZZ	62707	M10HR104	...RING, RETAINING	8
				UOC:FMQ	
35	PAFZZ	62707	M10HN136	...WASHER, FLAT	8
				UOC:FMQ	
36	XDFZZ	62707	M10WJ108	...PIN, GROOVED HEADLES	4
				UOC:FMQ	
37	PAFZZ	62707	M10WJ118	...SPRING	2
				UOC:FMQ	
38	PAFZZ	62707	M12WN112X	...BRAKE SHOE	4
				UOC:FMQ	
39	XDFZZ	62707	M16WJ102	...CLIP, RETAINING	4
				UOC:FMQ	
40	XDFZZ	62707	M16WJ103	...SPRING, HELICAL, TORS	4
				UOC:FMQ	
41	XDFZZ	62707	M16WJ114	...ROLLER, CAM	4
				UOC:FMQ	
42	XDFZZ	62707	38038	....RING, RETAINING	2
				UOC:FMQ	
43	XDFZZ	62707	M10HS146	...WASHER	2
				UOC:FMQ	
44	XDFZZ	62707	M10HR155	...WASHER	2
				UOC:FMQ	
45	XDFZZ	62707	A10SJCOO 606	...ADJUSTER, SLACK	2
				UOC:FMQ	
46	XDFZZ	62707	M10HS143	... WASHER	2
				UOC:FMQ	
47	XDFZZ	62707	M12WS160X	...BRAKE ASSY, SPIDER	2
				UOC:FMQ	
48	XDFZZ	62707	M16HH102	....SEAL	2
				UOC:FMQ	
49	XDFZZ	62707	M16HD106	.... BUSHING, CENTERED BRONZE	1
				UOC:FMQ	
50	XDFZZ	62707	500169-5	....FITTING, LUBRICATION	2
				UOC:FMQ	
51	XAFZZ	62707	M12W5159	.... BRAKE, FIN, SPIDER	1
				UOC:FMQ	
52	XDFZZ	62707	M10HS147	... WASHER	2
				UOC:FMQ	
53	XDFZZ	62707	M12WKL15-233	... CAM, BRAKE, FIN LEFT HAND	1

(1) ITEM NO	(2) SMR CODE	(3) CAGEC	(4) PART NUMBER	(5) DESCRIPTION AND USABLE ON CODES(UOC)			(6) QTY
				UOC:FMQ			
53	XDFZZ	62707	M12WKR15-233	...CAM, BRAKE, FIN RIGHT HAND			1
				UOC:FMQ			
54	XCFZZ	62707	M12WH50G-L	... BRACKET ASSY, CAM LEFT HAND			1
				UOC:FMQ			
54	XCFZZ	62707	M12WH50G-R	... BRACKET ASSY, CAM RIGHT HAND			1
				UOC:FMQ			
55	KFFZZ	62707	M10HM195	.... SCREW, SELF TAPPING PART OF KIT P/N M10KY102			4
				UOC:FMQ			
56	KFFZZ	62707	M10WH146	.... PLATE, COVER PART OF KIT P/N M10KY102			1
				UOC:FMQ			
57	KFFZZ	62707	M10WH260X	.... BUSHING ASSEMBLY PART OF KIT P/N M10KY102			1
				UOC:FMQ			
58	KFFZZ	62707	M10HG143	.... GASKET PART OF KIT P/N M10KY102			1
				UOC:FMQ			
	PAFZZ	62707	M10WJ212X	.... BUSHING W/GREASE FITTING AND O RING PART OF KIT P/N M12KY203			2
				UOC:FAV			
				BUSHING, SYNTHETIC	(1)	123-31	
				FITTING, LUBE	(1)	123-32	
				PACKING, PREFORMED	(2)	123-30	
	PAOZZ	62707	M12KBH04	.... PARTS KIT, BRAKE SHO			2
				UOC:FAV			
				ANCHOR PIN NUT	(4)	123-4	
				LINK, ANCHOR PIN	(2)	123-9	
				PIN, ANCHOR	(2)	123-8	
				PIN, SPRING, RETURN	(1)	123-12	
				RETAINER, ROLLER	(1)	123-13	
				RING, RETAINING	(2)	123-7	
				ROLLER, CAM	(1)	123-14	
				SPRING	(1)	123-10	
				WASHER, LOCK	(4)	123-5	
	PAFZZ	62707	M12KY203	.... KIT, CAM, BRAKES			2
				UOC:FAV			
				BUSHING W/GREASE	(2)	123-	
				BUSHING, BRONZE	(1)	123-20	
				PACKING, PREFORMED	(2)	123-19	
				RING, RETAINING	(4)	123-15	
				SPACER, STEEL	(2)	123-17	
				WASHER, CAM, ADJUST	(2)	123-23	
	PAFZZ	62707	M10KY102	.... PARTS KIT, CAM, BUSHING			1
				UOC:FMQ			
				BUSHING ASSEMBLY	(2)	123-57	
				GASKET	(2)	123-58	
				PLATE, COVER	(2)	123-56	
				SCREW, SELF TAPPING	(8)	123-55	

END OF FIGURE

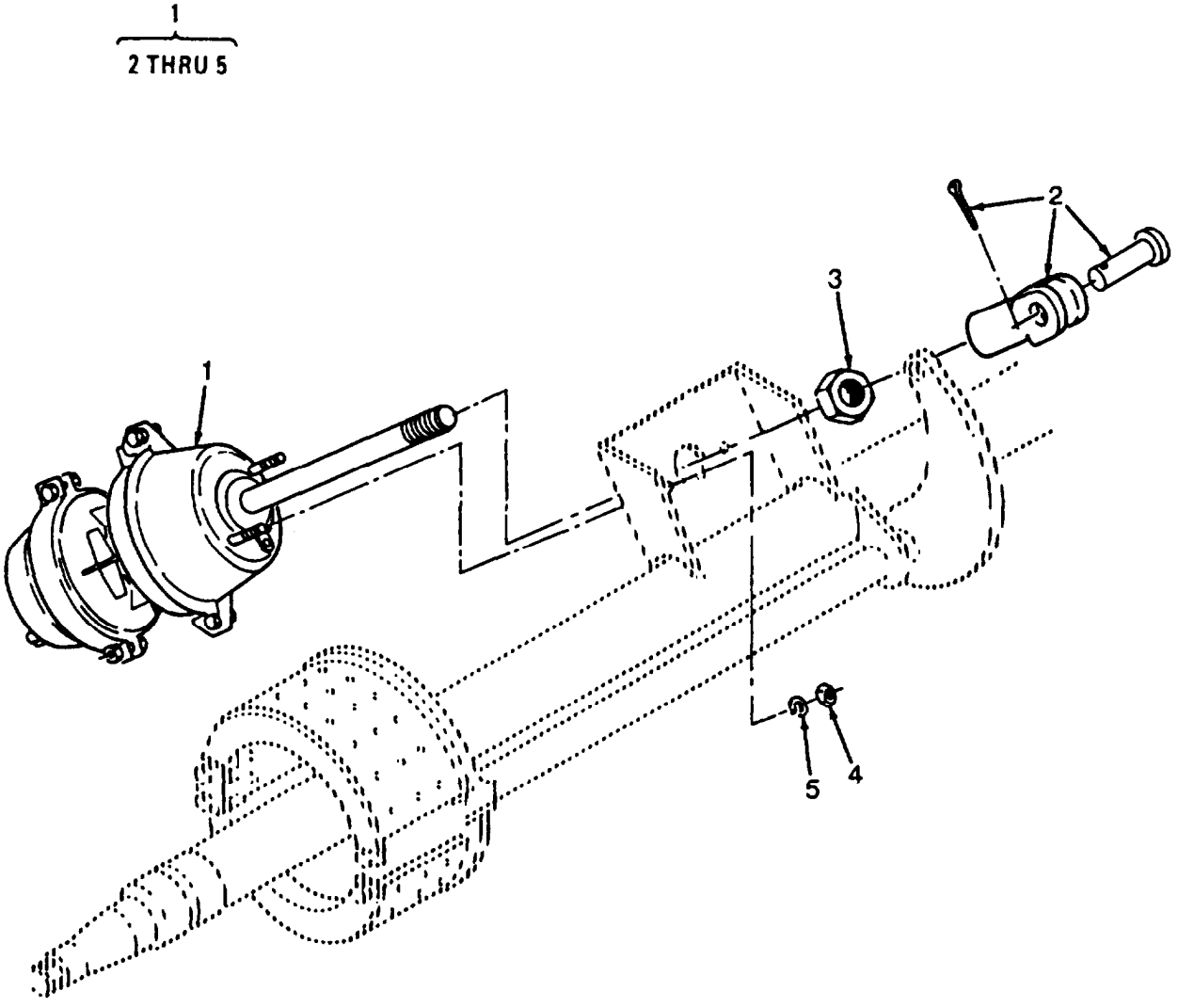

Figure 124. Trailer Air Chamber Assembly

(1) ITEM NO	(2) SMR CODE	(3) CAGEC	(4) PART NUMBER	(5) DESCRIPTION AND USABLE ON CODES(UOC)	(6) QTY
				GROUP 13 FLATBED CARGO TRAILER	
				FIG. 124 TRAILER AIR CHAMBER ASSEMBLY	
1	PBOOO	50153	3030 GC	...CHAMBER ASSY, AIR UOC:FAV,FMQ	2
2	PBOZZ	50153	11M018-5/8	....CLEVIS AND U-BOLT UOC:FAV,FMQ	1
3	PBOZZ	50153	11M050	....NUT, JAM UOC:FAV,FMQ	1
4	PBOZZ	50153	11M067	.... NUT, MOUNTING UOC:FAV,FMQ	2
5	PBOZZ	50153	11M046	....WASHER, LOCK UOC:FAV,FMQ	2
				END OF FIGURE	

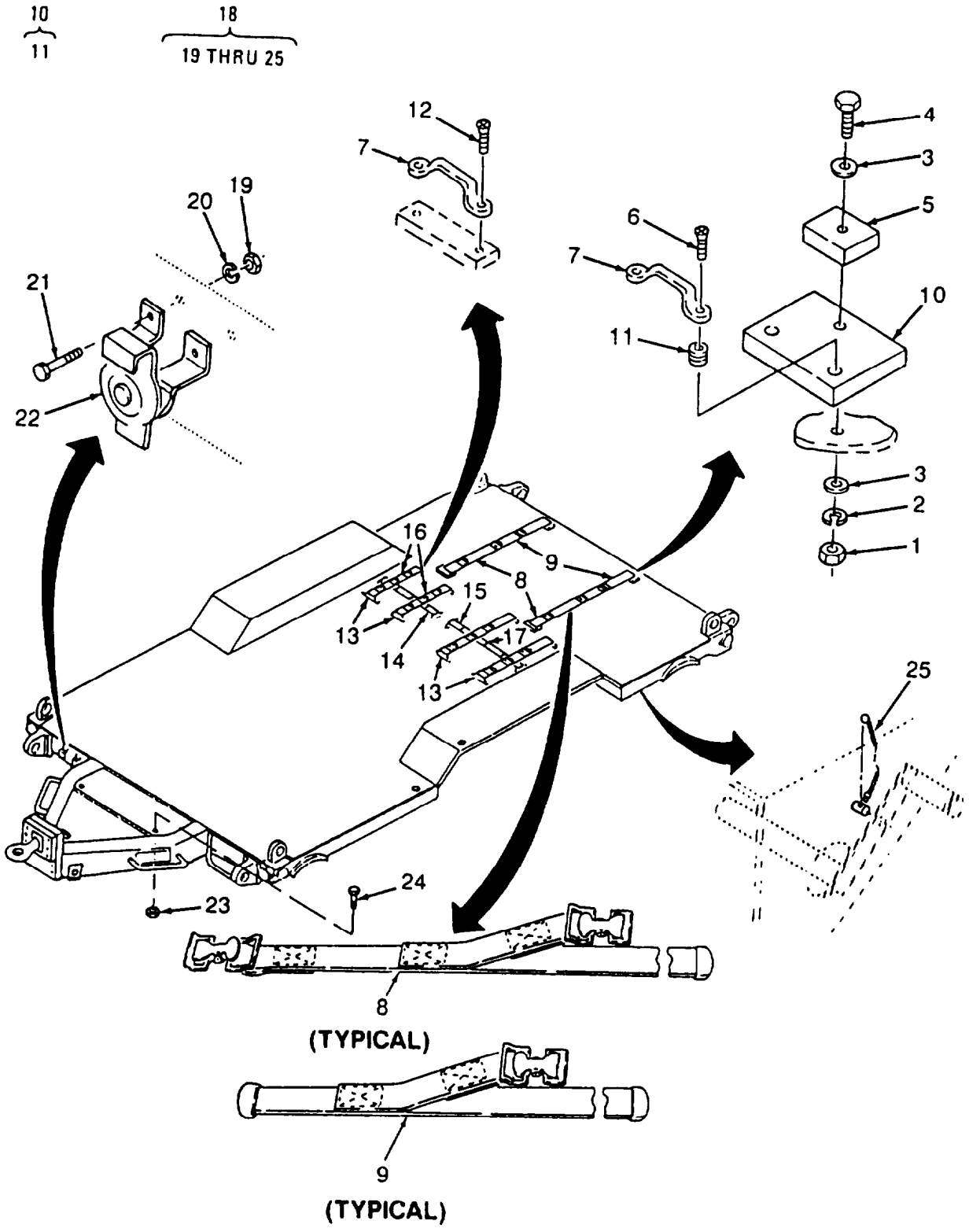

Figure 125. Trailer Frame Assembly

(1) ITEM NO	(2) SMR CODE	(3) CAGEC	(4) PART NUMBER	(5) DESCRIPTION AND USABLE ON CODES(UOC)	(6) QTY
				GROUP 13 FLATBED CARGO TRAILER	
				FIG. 125 TRAILER FRAME ASSEMBLY	
1	PBOZZ	96906	MS51967-20	NUT, PLAIN, HEXAGON UOC:FAV,FMQ	4
2	PAOZZ	96906	MS35338-50	WASHER, LOCK UOC:FAV,FMQ	4
3	PAOZZ	96906	MS27183-21	WASHER, FLAT UOC:FAV,FMQ	8
4	PAOZZ	80204	B1821BH063C250N	SCREW, CAP, HEXAGON H UOC:FAV,FMQ	4
5	PAOZZ	97403	13206E4482-3	WASHER, BEVEL UOC:FAV,FMQ	4
6	PAOZZ	96906	MS35190-251	SCREW, MACHINE UOC:FAV,FMQ	8
7	PAOZZ	97403	13219E0469	LOOP, STRAP FASTENER UOC:FAV,FMQ	16
8	PAOZZ	97403	13226E2208-13	STRAP, WEBBING UOC:FAV,FMQ	4
9	PAOZZ	97403	13226E2207-13	STRAP, WEBBING UOC:FAV,FMQ	2
10	XDOZZ	97403	13221E8325	PLATE, TIE DOWN UOC:FAV,FMQ	4
11	PBOZZ	96906	MS122119	. INSERT, SCREW THREAD UOC:FAV,FMQ	2
12	PAOZZ	96906	MS35190-252	SCREW, MACHINE UOC:FAV,FMQ	24
13	PAOZZ	97403	13226E2207-15	STRAP, WEBBING UOC:FAV,FMQ	2
14	PAOZZ	97403	13226E2207-16	STRAP, WEBBING UOC:FAV,FMQ	3
15	PAOZZ	97403	13226E2208-14	STRAP, WEBBING UOC:FAV,FMQ	2
16	PAOZZ	97403	13226E2208-11	STRAP, WEBBING UOC:FAV,FMQ	2
17	PAOZZ	97403	13226E2207-20	STRAP, WEBBING UOC:FAV,FMQ	1
18	XAFHH	97403	13222E7101	. FRAME, TRAILER UOC:FAV,FMQ	1
19	PAOZZ	96906	MS51967-5	.. NUT, PLAIN, HEXAGON UOC:FAV,FMQ	4
20	PAOZZ	96906	MS35338-45	.. WASHER, LOCK UOC:FAV,FMQ	4
21	PAOZZ	96906	MS90725-34	.. BOLT, MACHINE UOC:FAV,FMQ	4
22	XDOZZ	97403	13217E3043	.. COUPLER, DUMMY UOC:FAV,FMQ	2
23	PBOZZ	96906	MS51922-17	.. NUT, SELF-LOCKING, HE UOC:FAV,FMQ	2
24	PBOZZ	96906	MS90725-64	.. SCREW, CAP, HEXAGON H UOC:FAV,FMQ	2
25	MOOZZ	19099	13222E7101-95	.. CHAIN, DOUBLE LOOP MAKE FROM BULK P/N RR-C-271, TYII, CL2. 6 IN UOC:FAV,FMQ	4

END OF FIGURE

(1) ITEM NO	(2) SMR CODE	(3) CAGEC	(4) PART NUMBER	(5) DESCRIPTION AND USABLE ON CODES(UOC)	(6) QTY
25	MOOZZ	19099	13222E7101-95	..CHAIN, DOUBLE LOOP MAKE FROM BULK..... P/N RR-C-271, TYII, CL2, 6 IN ..... UOC:FAV	4

END OF FIGURE

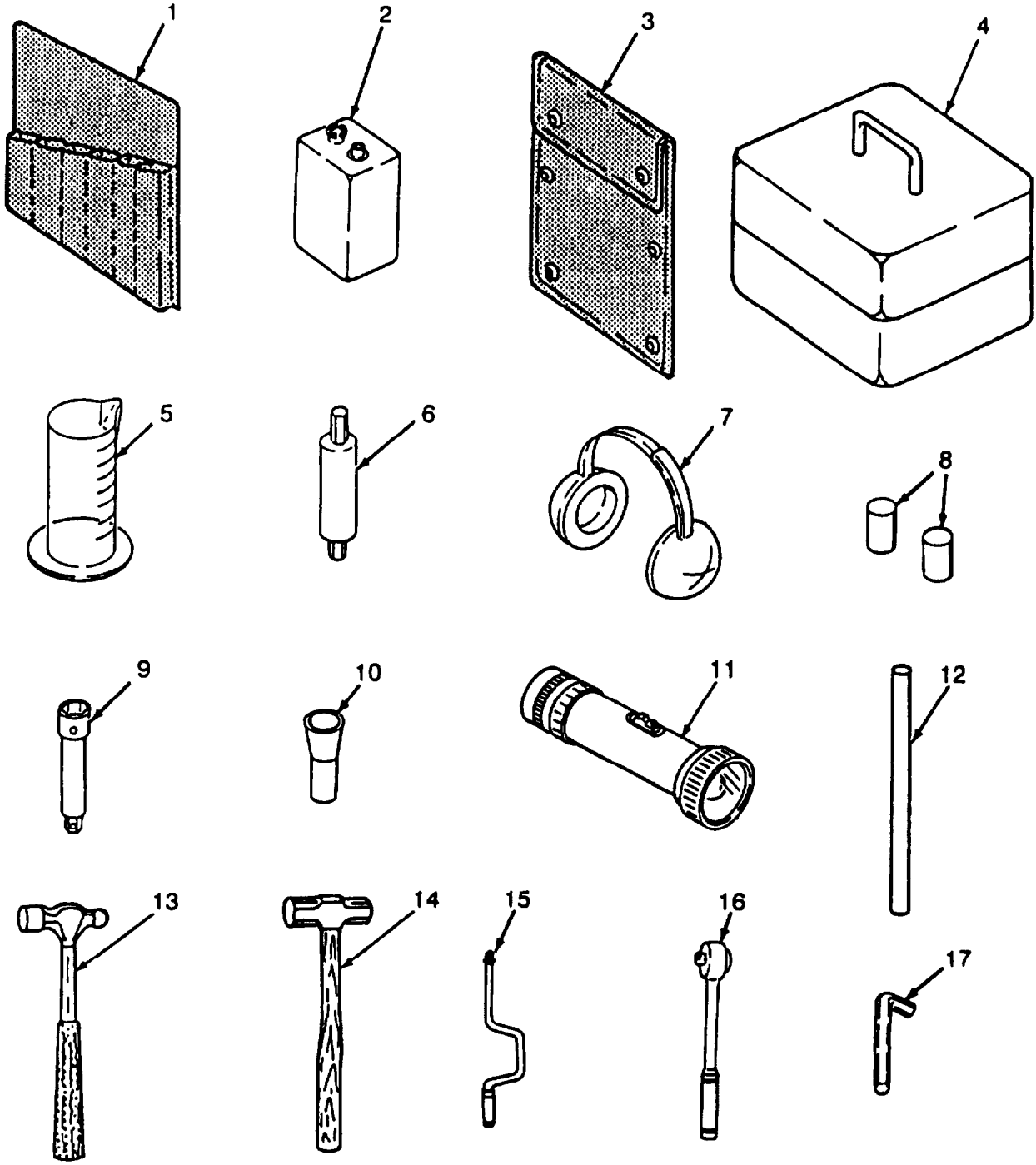

Figure 126. Accessory Items (Sheet 1 of 4)

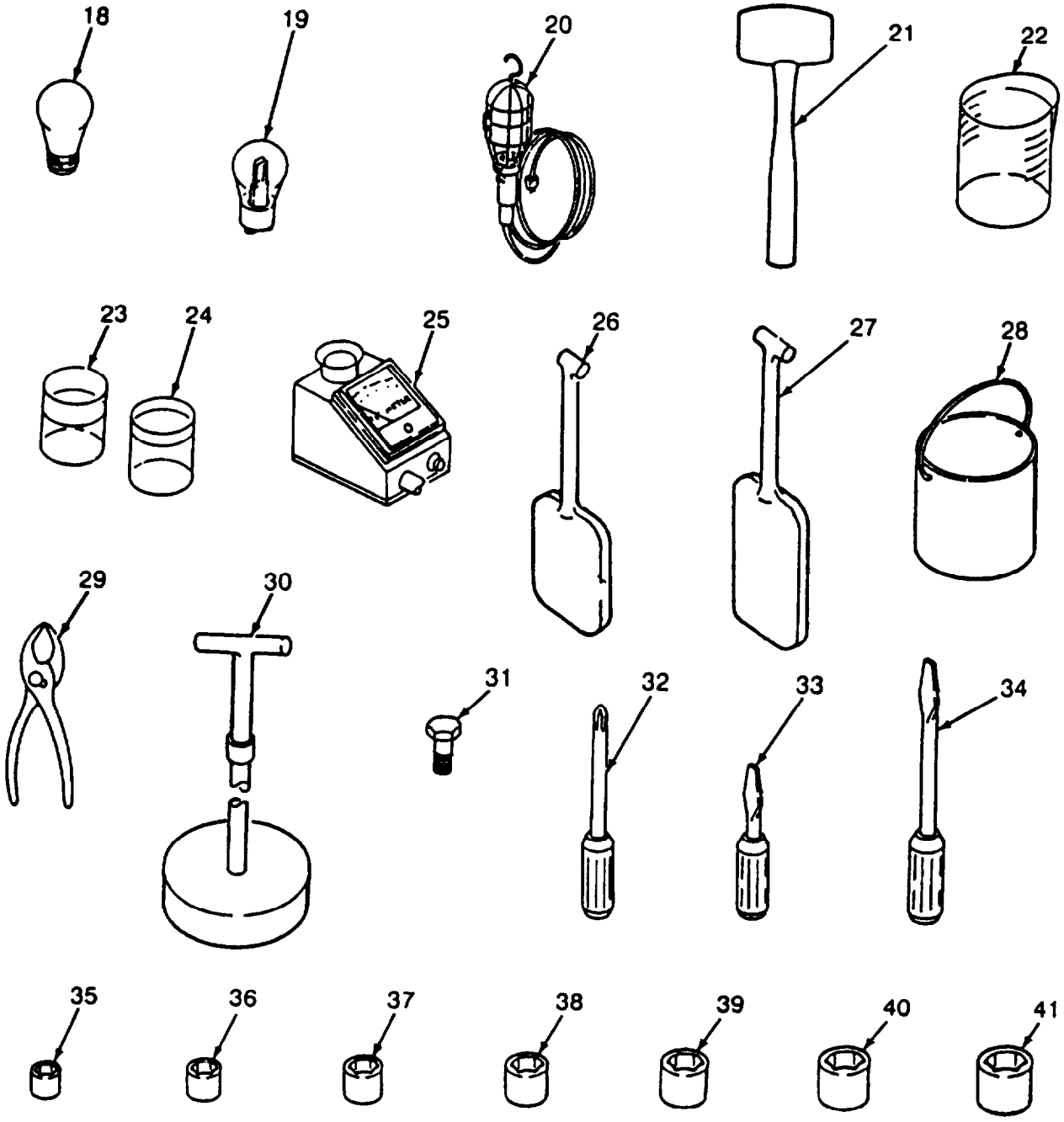

Figure 126. Accessory Items (Sheet 2 of 4)

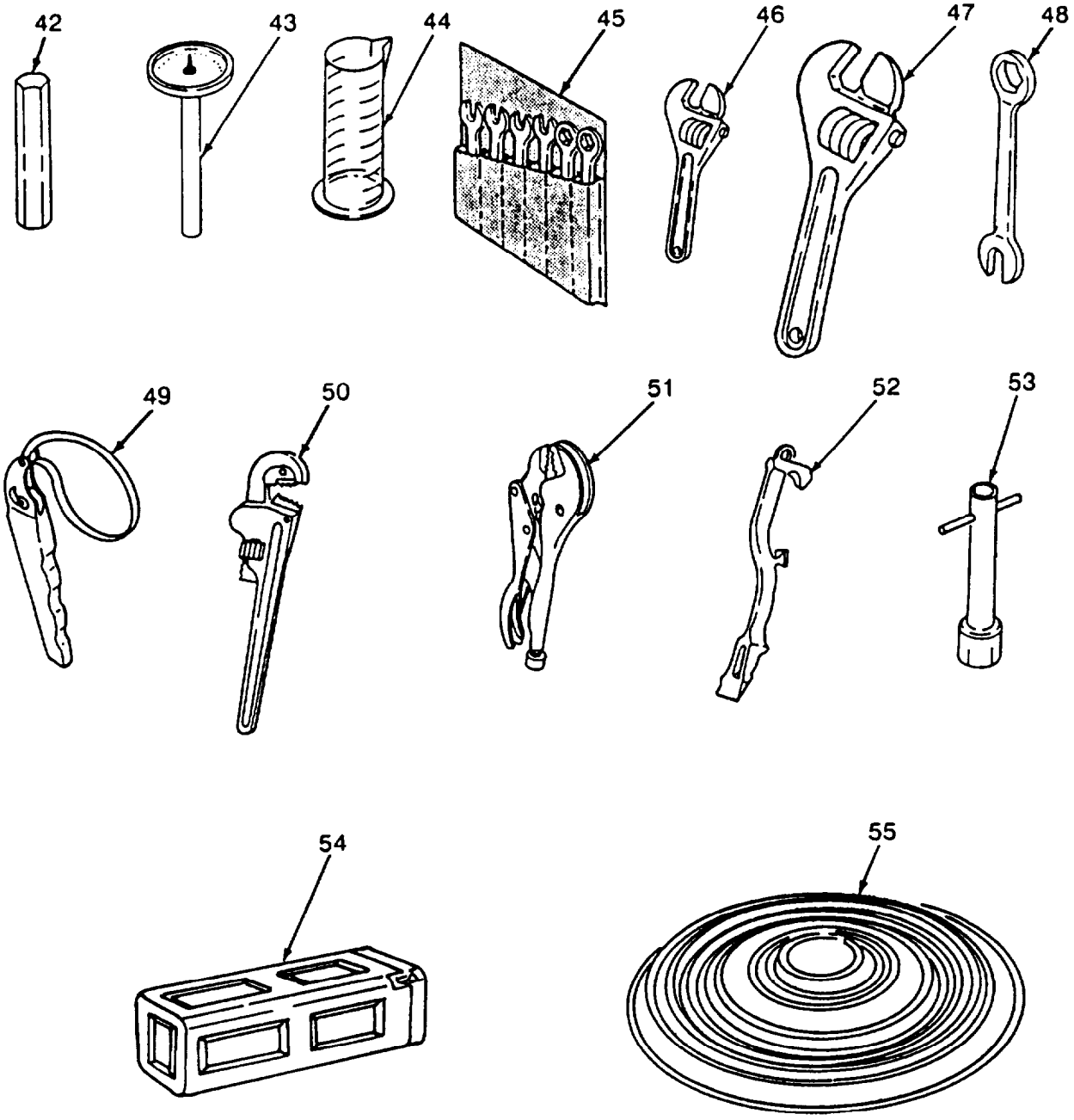

Figure 126. Accessory Items (Sheet 3 of 4)

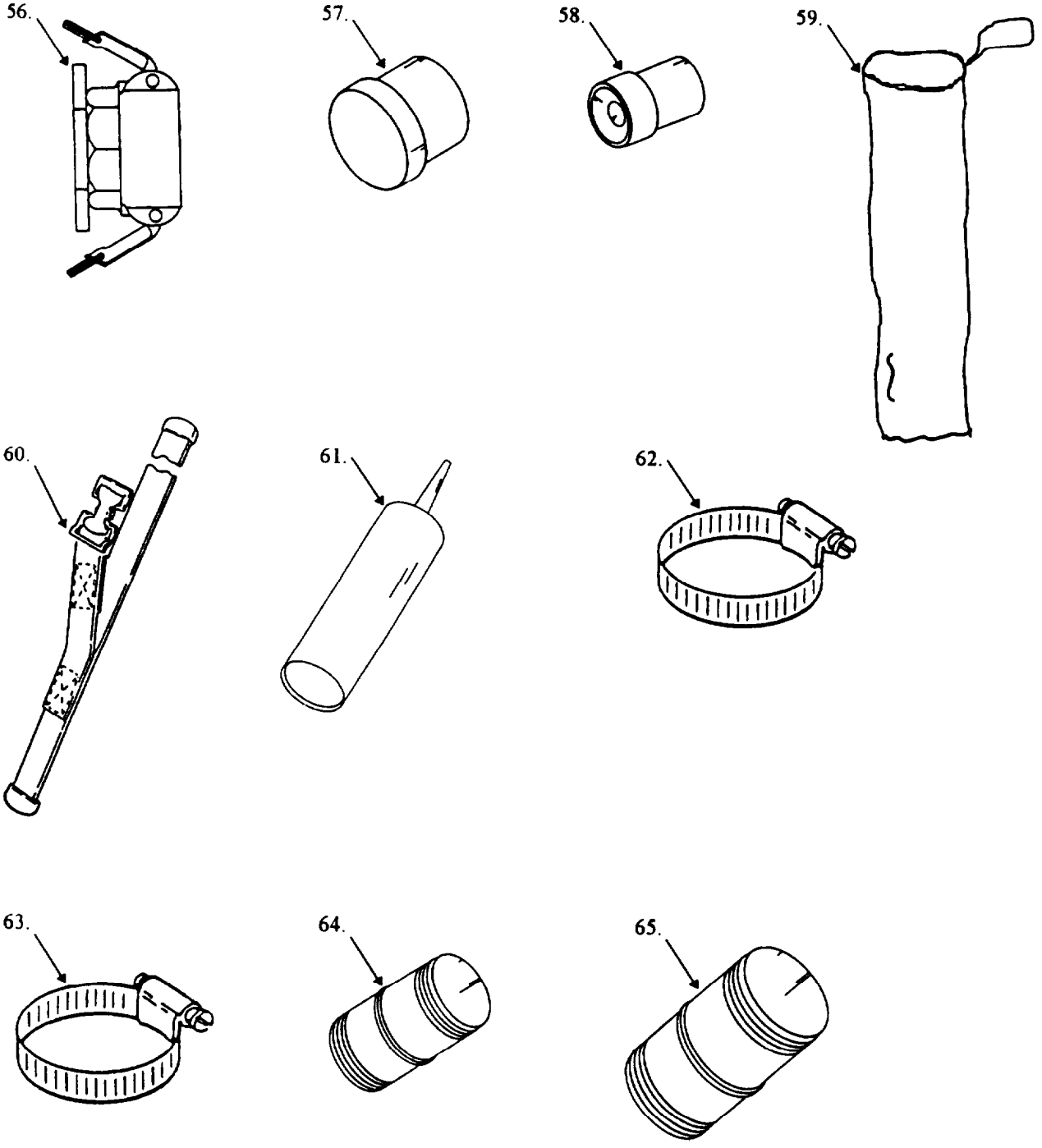

Figure 126. Accessory Items (Sheet 4 of 4)

(1) ITEM NO	(2) SMR CODE	(3) CAGEC	(4) PART NUMBER	(5) DESCRIPTION AND USABLE ON CODES(UOC)	(6) QTY
				GROUP 14 ACCESSORY ITEMS	
				FIG. 126 ACCESSORY ITEMS	
1	PA0ZZ	81349	MIL-B-43648	..BAG,TOOL ENVELOPE TYPE, COTTON DUCK, SIZE 4, 10-1/8 X 20-1/4 IN	2
2	PAOZZ	81348	W-B-101	..BATTERY (1) NONRECH 9 VOLT, 2 TERMINALS, RECTANGULAR SHAPE	1
3	PA0ZZ	81349	MIL-C-11743	..CASE,MAINTENANCE AN COTTON DUCK, MILDEW RESISTANT,WATER REPELLANT 22X12-3/4	1
4	PAOZZ	12308	U25337	..COMPARATOR,COLOR ACCESSORY COMPONENTS: 4-RECTANGULAR CELLS,OPTICALLY CLEAR, 15 ML CAP; EMPTY 0.5 OZ PH REAGENT BOTTLE; 1-DPD CHLORINE DISK; 1-PH COLOR DISK; l-CARRYING CASE	1
5	PAOZZ	22527	8-572D	..CYLINDER,GRADUATED, PLASTIC 100 ML	1
6	PAOZZ	61748	9100W000096	..ADAPTER,COVER DISCHARGE VALVE 1/2 HEX BAR,. 2 INCH LONG UOC:FAV,FAW,FAX	1
7	PAOZZ	81349	M38268-2	..AURAL PROTECTOR,SOU EAR MUFF TYPE	1
8	PAOZZ	89875	4-375	..EAR PLUG,DISPOSABLE PLASTIC, UNIVERSAL SIZE, FOAM YELLOW	2
9	PAOZZ	81348	GGG-W-641	..EXTENSION,SOCKET WR 5 INCH LONG	1
10	PAOZZ	83330	L73	..EXTRACTOR,LAMP MINIATURE	1
11	PAOZZ	81349	MIL-F-3747,TYI,STY2	..FLASHLIGHT	1
12	PAOZZ	61748	9100W000095	..ADJUSTING TOOL GLAND ADJUSTING, 3/16 IN DIA ROD, 8 IN LONG UOC:FAV,FAW,FAX	1
13	PAOZZ	81348	GGG-H-86, TY2, S TY B CL1	..HAMMER, HAND 1-1/2 HEAD WEIGHT	1
14	PAOZZ	81348	GGG-H-86, DOUBLE FACE, TYX, CL1	..HAMMER, HAND 8-LB, DOUBLE FACE	1
15	PAOZZ	81348	GGG-W-461	..HANDLE, SOCKET WRENCH, BRACE SPEEDER 16 IN TO 20 IN CG	1
16	PAOZZ	81348	GGG-W-641	HANDLE,SOCKET WRENC RATCHET TYPE, REVERSIBLE, 9 INCH	1
17	PAOZZ	57719	AWM-5C	..KEY SOCKET HEAD SCREW, 5MM, HEX, STEEL, CHROMIUM	1
18	PAOZZ	81348	W-L-101/77A	..LAMP,INCANDESCENT 120 VOLTS, 100 WATTS, BASE A2E, TRANSLUCENT, FROSTED	1
19	PAOZZ	96906	MS15567-1	..LAMP,INCANDESCENT BULB SZ S-6, 6 WATTS	9
20	PAOZZ	81348	W-L-661-1-1-2	..LIGHT,EXTENSION CLOSED END GUARD WITH HOOK, PLASTIC BODY, 50 FT LONG	1
21	PAOZZ	81348	GGG-H-33 TY3CL3	..MALLET, RUBBER BARREL-SHAPED, 20 OZ, TYIII, CLASS 3	1
22	PAOZZ	81349	MIL-M-52372, FIGURE 6	..MEASURE, DRY CHEMICAL, PLASTIC, CALCIUM HYPOCHLORITE, 0.05 GRAD	1
23	PAOZZ	97403	13221E8334	..MEASURE, DRY CHEMICA SODIUM HEXAMETAPHOSPHATE, 0.1 LB GRADUATION	1
24	PAOZZ	97403	13221E8329	..MEASURE,LIQUID CHEM POLYELECTROLYTE, 107 ML	1
25	PAOZO	97403	13222E5258-1	..CONDUCTIVITY METER DISSOLVED SOLIDS	1
26	PAOZZ	81349	MIL-W-52027	..PADDLE,FOOD STIRRIN REDWOOD, 18 IN, O-A LG. = PADDLE, 11 IN. LG.,3.625 IN. W, HANDLE 7 IN. LG, 1.625 IN. W, 0.050 IN THK O-A, CORNERS AND EDGES ROUNDED	4
27	PAOZZ	97403	13221E8328	..PADDLE,ALUMINUM	1
28	PAOZZ	81348	L-P-65 SIZE 4	..PAIL, UTILITY PLASTIC OR RUBBER, POURING	4

(1) ITEM NO	(2) SMR CODE	(3) CAGEC	(4) PART NUMBER	(5) DESCRIPTION AND USABLE ON CODES(UOC)	(6) QTY
				LIP, WITH BAIL	
29	PAOZZ	81348	GGG-P-471 TY2CL2 STA	..PLIERS, SKIP JOINT 6 IN LONG, TYPE 2, STYLE A, CLASS 2	1
30	PAOZZ	97403	13221E8330	..PULLER,REVERSE OSMO	1
31	PAOZZ	96906	MS51849-102	..SCREW,MACHINE STEEL, HEX HD, SLOTTED, CAD PLATED 1/4-20 UNC-2A, 2 IN	8
32	PAOZZ	81348	GGG-S-121 TY6CL1	..SCREWDRIVER CROSS TIP, PLASTIC HANDLE, NUMBER 2 TIP, 4-IN. BLADE, TYPE VI, CLASS 1, STYLE l	1
33	PA022	81348	GGG-S-121	..SCREWDRIVER,FLAT TI FLAT TIP, FLARED TIP, PLASTIC HANDLE, 1/4 WIDTH TIP, 1-1/2 INCH BLADE	1
34	PAOZZ	81348	GGG-S-121	..SCREWDRIVER,FLAT TI FLAT TIP, FLARED, PLASTIC HANDLE, 5/16 IN. WIDTH TIP, 6-IN. LONG BLADE	1
35	PAOZZ	81348	GGG-W-641	..SOCKET,SOCKET WRENC 1/2 INCH	1
36	PAOZZ	81348	GGG-W-641	..SOCKET 9/16 INCH	1
37	PAOZZ	81348	GGG-W-641	..SOCKET,SOCKET WRENC 5/8 INCH	1
38	PAOZZ	81348	GGG-W-641	..SOCKET,SOCKET WRENC 11/16 INCH	1
39	PAOZZ	81348	GGG-W-641	..SOCKET,SOCKET WRENC 3/4 INCH	1
40	PAOZZ	81348	GGG-W-641	..SOCKETPSOCKET WRENC 7/8 INCH	1
41	PAOZZ	81348	GGG-W-641	..SOCKET 15/16 INCH	1
42	PAOZZ	61748	002	..ADAPTER, FLANGE STUFF BOX FLANGE CAPSCREW 3/8 HEX BAR, 4 IN. LONG UOC:FAV,FAW,FAX	1
I 43	PAOZZ	65092	MODEL 2296	..THERMOMETER SELF INDICATING, 0-220 DEGREES F, 5 INCH STEM	1
44	PAOZZ	97403	13221E8335	..TUBE,TURBIDITY POLYPROPYLENE, SIZE 7, 1000 ML, NOMINAL CAPACITY	1
45	PAOZZ	81348	GGG-W-636	..WRENCH SET,COMBINAT COMBINATION BOX AND OPEN, 15 DEG OFFSET BOX, OPENING, 5/16 TO 1 INCH OPENINGS, W/ROLL	1
46	PAOZZ	81348	GGG-W-631, TY1CL 1526	..WRENCH STEEL, CHROMIUM PLATED, OPEN END, SINGLE HEAD	1
47	PAOZZ	81348	GGG-W-631, TY1CL 15212	..WRENCH, ADJUSTABLE CHROMIUM PLATED OPEN END, SINGLE HEAD	1
48	PAOZZ	81348	GGG-W-636	..WRENCH,BOX AND OPEN 1-1/2 INCH	1
49	PAOZZ	81348	GGG-W-651	..WRENCH,PIPE 1/8 - 2 INCH PIPE SIZE	1
50	PAOZZ	81348	GGG-W-651, TYIIC LC	..WRENCH, PIPE ADJUSTABLE JAW, STILLSON PATTERN, ALUMINUM ALLOY, 1 TO 2 INCH IPS, 18 INCH LONG	2
51	PAOZZ	81348	GGG-W-00649, TY1 CL1STA	..WRENCH, PLIER STRAIGHT JAW STYLE, 10 INCH NOM LONG	1
52	PAOZZ	81348	GGG-W-665	..WRENCH,SPANNER UNIVERSAL HOSE COUPLINGS, 1-3 INCH HOSE COUPLING, 11 IN. LONG	2
53	PAOZZ	81348	151	..WRENCH, WHEEL STUD 1-1/2 HEX OPENING ONE END AND 0.812 INCH SQ OPENING OTHER END W/REMOVABLE HANDLE	1
54	PAOZZ	97403	PD4610-0077	..R 0 SHIPPING CONTAI DESERT SAND-COLOR CONTAINER, REUSABLE, WATER-TIGHT, PLASTIC, LIGHTWEIGHT, STACK FOUR HIGH AND BANDED, NSN ISSUES 8 CONTAINERS	1
55	PAOZZ	97403	13221E8367-2	..TUBING,NONMETALLIC 100 FT PER ROLL, ID 0.750, OD 1.125, WALL O.188,,PRESSRATING 145, FLEXIBLE POLYVINYL CHLORIDE CLEAR WITH NYLON BRAID REINFORCEMENT	1
56	PAOZZ	97403	13227E8836	COUPLING,HALF,QUICK UOC:FMQ,FMR,FMS	1

(1) ITEM NO	(2) SMR CODE	(3) CAGEC	(4) PART NUMBER	(5) DESCRIPTION AND USABLE ON CODES(UOC)	(6) QTY
57	PAOZZ	97403	13229E0159	PLUG,SIMULATOR,PRES USED FOR TRAINING TO SIMULATE RO ELEMENTS UOC:FMQ,FMR,FMS	4
58	PAOZZ	97403	13229E0160	PLUG,SIMULATOR,PRES USED FOR TRAINING TO SIMULATE RO ELEMENTS UOC:FMQ,FMR,FMS	4
59	XDOZZ	97403	13229E0519	BAG,WELLPOINT UOC:FMQ,FMR,FMS	2
60	XDOZZ	97403	1322932207-7	STRAP UOC:FMQ,FMR,FMS	12
61	PAOZZ	39428	7587A33	ADHESIVE-SEALANTS,SILICONE,RTV,ONE-COMPONENT (CLEAR) UOC:FMQ,FMR,FMS	1
62	PAOZZ	01276	FF9311-36	CLAMP,HOSE,1-13/16 TO 2-3/4 ID CRES UOC:FMQ,FMR,FMS	25
63	PAOZZ	96906	MS35842-14	CLAMP,HOSE,2-9/16 TO 3-1/2 ID CRES UOC:FMQ,FMR,FMS	15
64	PAOZZ	62531	1429-020	COUPLING UOC:FMQ,FMR,FMS	3
65	PAOZZ	62531	1429-030	COUPLING UOC:FMQ,FMR,FMS	5

END OF FIGURE

(1) ITEM NO	(2) SMR CODE	(3) CAGEC	(4) PART NUMBER	(5) DESCRIPTION AND USABLE ON CODES(UOC)	(6) QTY
				GROUP 15 BULK MATERIALS	
				FIG. BULK	
1	PAFZZ	81349	CO-02HOF(3/14)0565	CABLE,ELECTRICAL	V
2	PAFZZ	97403	13227E7502	CABLE,FLEX	V
3	PAFZZ	81349	CO-04HDF(4/2-4/9R) 1480	CABLE,POWER,ELECTRI UOC:FAV,FAX,FMQ,FMS	V
4	PAFZZ	81349	CO-04HOF(4/14)0605	CABLE,POWER,ELECTRI	V
5	PAFZZ	81349	CO-04HOF(4/2)1400	CABLE,POWER,ELECTRI	V
6	PAFZZ	81349	CO-04HLF(4/8)1000	CABLE,POWER,ELECTRI	V
7	PAFZZ	81349	CO-O5HOF(5/16)0525	CABLE,POWER,ELECTRI	V
8	PAFZZ	81349	CO-30MOF(2/12-3/ 14-25/18)1000	CABLE,POWER,ELECTRI	V
9	PAFZZ	81349	CO-03HOF(3/14)0565	CABLE,SPECIAL PURPO	V
10	PAFZZ	81349	M13486/10-1	CABLE,SPECIAL PURPO UOC:FAV,FMQ	V
11	PAOZZ	81348	RR-C-271, TYII, CL6	CHAIN	V
12	PAOZZ	39428	3603T904	CHAIN	V
13	PAOZZ	16003	C43974	CHAIN,WELDLESS DOUBLE LOOP, STEEL, TYPE 2, CLASS 2, TRADE NO. 4 UOC:FAV,FMQ	V
14	PAOZZ	01348	RR-C-271	CHAIN,WELDLESS TY I, GR 1, CL4, 3/8 IN UOC:FAV,FMQ	V
15	PAOZZ	39428	3607T57	CHAIN,WELDLESS	V
16	PAFZZ	01349	MIL-C-43006, TYI, CL1,FORM1	CLOTH,VINLY-NYLON	V
17	PAOZZ	97403	13222E7113-1	CONDUIT,NONMETALLIC UOC:FAV,FMQ	V
18	PAOZZ	97403	13222E7113-2	CONDUIT,NONMETALLIC UOC:FAV,FMQ	V
19	PAFZZ	97403	1322931407	EDGE PROTECTOR UOC:FMQ,FMR,FMS	V
20	PAOZZ	81349	MIL-R-6855, CL2, TYA, GR30,0.062	GASKET,RUBBER, SYNTH STOCK	V
21	PAOZZ	01349	MIL-R-6855, CL2, TYA, GR30,0.125	GASKET,RUBBER SYNTH STOCK	V
22	PAOZZ	81349	MIL-R-6855, CL2, TYA, GR50	GASKET,RUBBER,SYNTH	V
23	PAFZZ	81349	MIL-R-6855, CL2, TYA,GR50, 0.062	GASKET,RUBBER,SYNTH STOCK	V
24	PAOZZ	81349	MIL-R-6855, CL2, TYA, GR50,0.125	GASKET,RUBBER,SYNTH STOCK	V
25	PAOZZ	81349	MIL-R-6855, CL2, TYA, GR50,0.250	GASKET,RUBBER,SYNTH STOCK	V
26	PAOZZ	96906	MS35822-12A	HINGE,BUTT	V
27	PAOZZ	96906	MS35826-12A	HINGE,BUTT	V
28	PAOZZ	81349	MIL-H-13444, TYI	HOSE,NONMETALLIC UOC:FAV,FAW,FAX	V
29	PAOZZ	81343	100R4-16	HOSE,NONMETALLIC	V
30	PAOZZ	81348	ZZ-H-561 GRA,STA, CL2	HOSE,RUBBER SMOOTH FOR WATER SUCTION AND DISCHARGE 2 IN ID UOC:FMQ,FMR,FMS	V
31	PAOZZ	08132	43-0364-42	HOSE,SUCTION 2 IN ID UOC:FMQ,FMR,FMS	V
32	PAFZZ	97403	13229E1408	INSULATION.ACCOUSTICAL UOC:FMQ,FMR,FMS	V

(1) ITEM NO	(2) SMR CODE	(3) CAGEC	(4) PART NUMBER	(5) DESCRIPTION AND USABLE ON CODES(UOC)	(6) QTY
33	PAFZZ	81349	M23053/5-105-0	INSULATION SLEEVING	V
34	PAFZZ	81349	M23053/5-106-9	INSULATION SLEEVING UOC:FAV,FAX,FMQ,FMS	V
35	PAFZZ	81349	M23053/5-108-9	INSULATION SLEEVING UOC:FAV,FAX,FMQ,FMS	V
36	PAOZZ	81349	M23053/5-109-2	INSULATION SLEEVING	V
37	PAFZZ	81349	M23053/5-109-4	INSULATION SLEEVING	V
38	PAFZZ	81349	M23053/5-109-5	INSULATION SLEEVING	V
39	PAFZZ	81349	M23053/5-109-6	INSULATION SLEEVING	V
40	PAFZZ	81349	MIL-I-46058, TYP EUR·	INSULATING COMPOUND	V
41	PAFZZ	81349	MIL-I-631, TYF, FORMTS GRA, CL1	INSULATION,ELEC UOC:FAV,FMQ	V
42	PAOZZ	81349	M23053/1-108-0	INSULATION SLEEVING	V
43	PAOZZ	81346	ASTM-B43 1IN RED BRASS	PIPE	V
44	PAOZZ	81348	T-R-571, CL2, 3/4 IN	ROPE,COTTON	V
45	PAOZZ	81348	T-R-605, TYM, CL1	ROPE,FIBROUS	V
46	PAOZZ	81343	ASTM-D2000 MlBC614	RUBBER UOC:FMQ,FMR,FMS	V
47	PAOZZ	81346	ASTM-D-20001AA310	RUBBER SHEET, SOLID	V
48	PAOZZ	97403	1322838296	TAPE,INSULATION UOC:FAV,FMQ	V
49	PAOZZ	81349	MIL-I-24391	TAPE,INSULATION,ELEC	V
50	PAOZZ	81348	PPP-T-66, TYI, CL2, PURPLE	TAPE,PACKING	V
51	PAOZZ	81348	PPP-T-66, TYI, CL2, BLACK	TAPE,PACKAGING	V
52	PAOZZ	81348	PPP-T-66, TYI, CL2, LIGHTBLUE	TAPE,PACKAGING	V
53	PAOZZ	81348	PPP-T-66, TYI, CL2, YELLOW	TAPE,PACKAGING	V
54	PAOZZ	81348	PPP-T-66, TYI, CL2, RED	TAPE,PACKAGING	V
55	PAFZZ	81348	V-T-285, TYI, CL1, SCB, SIZEE	THREAD	V
56	PAFZZ	81348	V-T-285, TYI, CL1, SCB, SIZEE	THREAD	V
57	PAFZZ	81346	ASTM-B466 1/2 OD X 0.035 WALL	TUBE	V
58	PAOZZ	81346	ASTM-B466 1/4 OD X 0.035 WALL	TUBE	V
59	PAFZZ	81346	ASTM-B466 3/4 OD X 0.035 WALL	TUBE	V
60	PAFZZ	76371	5100328000	TUBE	V
61	PAOZZ	81343	SAE-J844 3/8 OD TYPE B	TUBE NYLON UOC:FAV,FMQ	V
62	PAOZZ	81343	SAE-J844 1/2 OD TYPE B	TUBE,NYLON UOC:FAV,FMQ	V
63	PAOZZ	61424	E-43-0100	TUBING UOC:FMQ,FMR,FMS	V
64	PAOZZ	61424	PV86-1	TUBING UOC:FMQ,FMR,FMS	V
65	PAOZZ	97403	13221E8367-1	TUBING,NONMETALLIC	V
66	PAOZZ	97403	13221E8367-2	TUBING,NONMETALLIC	V
67	PAOZZ	97403	1322138367-3	TUBING,NONMETALLIC	V
68	PAOZZ	97403	13221E8367-4	TUBING,NONMETALLIC	

(1) ITEM NO	(2) SMR CODE	(3) CAGEC	(4) PART NUMBER	(5) DESCRIPTION AND USABLE ON CODES(UOC)	(6) QTY
69	PAFZZ	81349	MIL-W-5665, TYII, CL2B	WEBBING,TEXTILE	V
70	PAOZZ	81346	ASTM-B134-072DIA 240ALLOY	WIRE,BRASS	V
71	PAFZZ	81349	M13486/1-5	WIRE,ELECTRICAL UOC:FAV,FMQ	V
72	PAFZZ	81349	M5086/1-10-9	WIRE,ELECTRICAL	V
73	PAFZZ	81349	M5086/1-12-9	WIRE,ELECTRICAL	V
74	PAFZZ	81349	M5086/1-14-9	WIRE,ELECTRICAL	V
75	PAFZZ	81349	M5086/1-16-9	WIRE,ELECTRICAL	V
76	PAFZZ	81349	M5086/1-18-9	WIRE,ELECTRICAL	V
77	PAFZZ	81349	M5086/1-20-9	WIRE,ELECTRICAL	V
78	PAFZZ	81349	M5086/2-4-9	WIRE,ELECTRICAL UOC:FAV,FAX,FMQ,FMS	V
79	PAFZZ	81349	M5086/2-6-9	WIRE,ELECTRICAL UOC:FAV,FAX,FMQ,FMS	V
80	PAFZZ	81349	M5086/2-10-9	WIRE,ELECTRICAL UOC:FAV,FAX	V
81	PAFZZ	81349	M5086/2-8-9	WIRE,ELECTRICAL UOC:FAV,FAX,FMQ,FMS	V
82	PAFZZ	81349	M5086/3-4-9	WIRE,ELECTRICAL UOC:FAW,FMR	V
83	PAFZZ	81349	M5086/3-6-9	WIRE,ELECTRICAL UOC:FAW,FMR	V
84	PAFZZ	81349	M5086/3-8-9	WIRE,ELECTRICAL UOC:FAW,FMR	
85	PAOZZ	81348	QQW343B08I1T	WIRE,ELECTRICAL	V
86	PAOZZ	81348	QQW343C06B1B	WIRE,ELECTRICAL	V
87	PAFZZ	81348	QQW343S20SIT	WIRE,ELECTRICAL	V

END OF FIGURE

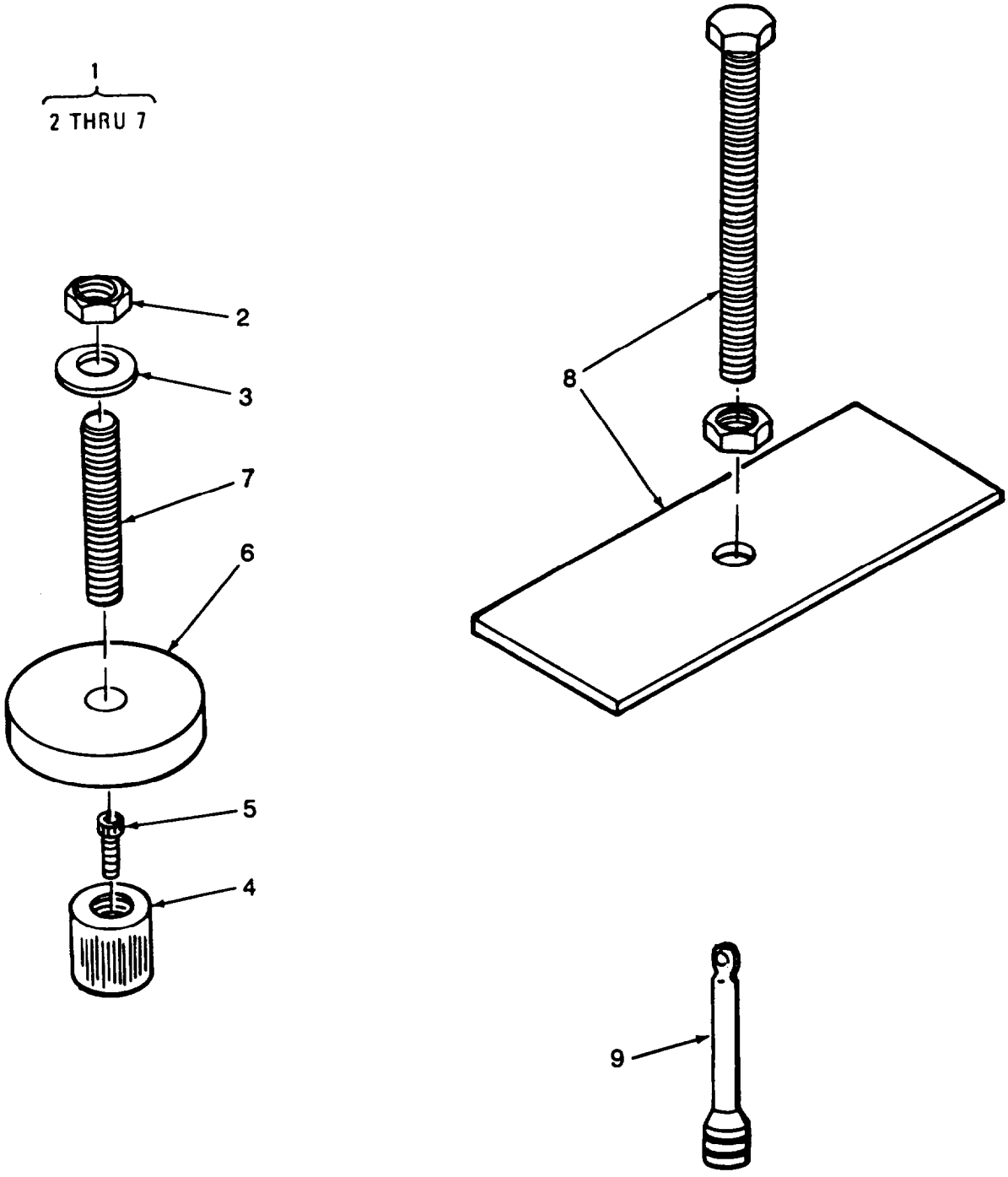

Figure 127. Special Tools List

(1) ITEM NO	(2) SMR CODE	(3) CAGEC	(4) PART NUMBER	(5) DESCRIPTION AND USABLE ON CODES(UOC)	(6) QTY
				GROUP 16 SPECIAL TOOLS LIST	
				FIG. 127 SPECIAL TOOLS LIST	
1	PFFFF	61748	111428	PULLER ASSY VALVE SEAT UOC:FAV,FAW,FAX	
2	PAFZZ	61748	9108A161DF1	.NUT,HEX 1 IN.-8 UOC:FAV,FAW,FAX	
3	PAFZZ	61748	911016200A1	.WASHER,FLAT 1 I N UOC:FAV,FAW,FAX	
4	XAFZZ	61748	9243WOOOO41	.PULLER HEAD UOC:FAV,FAW,FAX	
5	XAFZZ	61748	9102B0614A1	.SCREW,SOCKETHD 3/8-16 X 1 1/2 IN LG UOC:FAV,FAW,FAX	
6	XAFZZ	61748	9243W000042	.STRONGBACK 4 IN. DIA UOC:FAV,FAW,FAX	
7	PAFZZ	61748	9G16CB25500	.ROD 1-8X 5 IN. LG UOC:FAV,FAW,FAX	
8	PFFFF	41083	260246	.FEED PMP TOOL KIT REMOVE/INSTALL STROKE ADJUSTMENT ASSEMBLY	
9	PAOZZ	55719	SXW5	EXTENSION,WOBBLE DR	

END OF FIGURE

CROSS-REFERENCE INDEXES

NATIONAL STOCK NUMBER INDEX

STOCK NUMBER	FIG.	ITEM
5330-00-003-1686	85	15
6145-00-003-9527	BULK	72
5310-00-010-3327	35	25
5930-00-011-7872	86	40
5310-00-019-0669	86	36
6240-00-019-0877	109	8
6240-00-019-3093	109	6
5940-00-021-3321	105	12
5305-00-021-3616	37	29
	94	2
	100	4
5305-00-021-3806	74A	6
4240-00-022-2946	126	7
5310-00-022-8834	3	6
	9	5
	14	5
	50	2
	54	2
	55	2
5310-00-022-8847	48	4
	92	8
6240-00-044-6914	109	7
5310-00-045-4007	65	7
5340-00-050-2740	75	4
4730-00-050-4208	107	21
	119	10
5305-00-050-9227	41	11
5305-00-050-9229	45	26
5305-00-050-9230	47	6
	86	3
5305-00-050-9231	34	3
	36	3
	36	33
	36	56
	37	3
	38	3
	39	3
	40	24
	41	3
	42	3
	43	3
5305-00-050-9233	38	31
	103	50
5305-00-050-9236	5	5
	10	5
	15	5
5305-00-054-5648	103	42
	104	12
5305-00-054-5650	58	4
	59	4
5305-00-054-5651	58	4
	59	4
5305-00-054-5653	58	5
	59	5
5305-00-054-6654	40	8
5305-00-054-6671	42	13

STOCK NUMBER	FIG.	ITEM
	43	10
5305-00-054-6671	44	10
	86	5
	100	26
4820-00-057-0694	115	29
5340-00-057-2904	86	26
5340-00-057-2906	47	13
	86	25
5970-00-057-3545	BULK	37
5340-00-057-6956	31	6
4820-00-057-9056	22A	25
5935-00-059-2841	110	5
5305-00-059-3660	73	10
5305-00-059-3663	75	1
5330-00-063-7889	92	45
5310-00-067-6356	107	6
5305-00-068-0511	115	28
	117	2
5306-00-068-0513	107	24
5305-00-068-1798	71A	1
5305-00-069-5586	120	13
5305-00-071-2070	107	44
5305-00-071-2087	82	21
5975-00-074-2072	47	1
5340-00-078-7029	31	5
5330-00-079-7839	59	7
5330-00-079-7840	92	42
5325-00-081-7611	115	23
5970-00-082-3948	BULK	35
5305-00-082-8439	92	43
5320-00-083-5009	92	14
4730-00-083-7196	22A	3
	22A	19
	72A	7
5310-00-087-4652	115	27
	117	1
	125	23
5310-00-088-1251	107	38
	110	1
	111	1
	112	2
	115	1
	116	1
5340-00-088-1254	115	2
5340-00-088-6655	110	3
	111	3
5310-00-088-8513	80	6
5340-00-091-3790	47	7
4730-00-096-8872	23	7
3110-00-100-0268	122	9
3110-00-100-0269	122	11
3110-00-100-0570	77	20
5310-00-110-2739	86	49
5330-00-111-7407	85	25
	85	27
5940-00-113-8184	14	8

CROSS-REFERENCE INDEXES

NATIONAL STOCK NUMBER INDEX

STOCK NUMBER	FIG.	ITEM
	54	5
	55	6
5940-00-113-8190	97	13
	97	20
5940-00-113-9826	99	2
5940-00-114-1305	3	9
	50	5
5940-00-114-1310	94	16
	94	20
	94	24
5935-00-114-8708	97	10
	97	17
4730-00-115-3740	22	6
	22A	30
	72A	9
6115-00-118-1240	29	6
5330-00-126-5191	35	12
5330-00-126-5277	35	19
6630-00-127-4774	126	25
5310-00-136-1472	86	34
5306-00-140-4782	80	10
5365-00-141-6943	110	6
5306-00-141-7179	80	9
6240-00-143-3060	126	19
5940-00-143-4774	51	4
	51	10
	95	2
	96	6
	99	9
5940-00-143-4780	51	5
	54	9
	55	9
	96	8
	98	8
	98	13
	98	18
	99	5
5940-00-143-4794	94	45
	94	48
	94	51
	94	54
	94	57
	94	60
	94	63
	94	66
	94	69
	94	81
	94	84
	94	87
	94	138
	94	141
	94	144
	94	147
	94	150
	94	153
	94	156

STOCK NUMBER	FIG.	ITEM
	94	159
	94	162
	94	174
5940-00-143-4794	94	177
	94	180
	96	5
	98	3
5940-00-143-5284	92	5
	94	27
	94	30
	94	33
	94	36
	94	39
	94	42
	94	120
	94	123
	94	126
	94	129
	94	132
	94	135
3110-00-144-8671	74A	24
5305-00-145-8406	102	6
5120-00-148-7917	126	45
5940-00-150-4682	95	4
	96	4
5340-00-150-4777	80	12
4730-00-150-8858	83	105
6145-00-152-6499	BULK	71
3110-00-155-6190	74A	20
5975-00-156-3253	93	23
	93	23
5315-00-159-3739	104	15
6145-00-160-6187	BULK	7
5935-00-161-3096	9	10
	14	11
4010-00-165-5606	107	13
4010-00-165-5607	107	11
5320-00-165-8768	91	5
	100	30
5320-00-165-8771	91	8
5320-00-165-8772	102	8
5935-00-167-7775	110	8
	111	7
5310-00-177-1156	3	8
	9	7
	14	7
	50	4
	54	3
	55	4
5310-00-177-7749	122	3
5305-00-182-9483	94	1
5999-00-186-3912	28	5
5310-00-187-2413	48	3
	92	3
	92	3
4730-00-188-3509	82	48

CROSS-REFERENCE INDEXES

NATIONAL STOCK NUMBER INDEX

STOCK NUMBER	FIG.	ITEM
4730-00-189-3041	15	12
5120-00-189-7934	126	40
5120-00-189-7946	126	37
5120-00-189-7985	126	39
5310-00-191-4132	91	15
4730-00-193-2711	75	18
4730-00-193-2716	15	13
4730-00-196-1975	45	16
4730-00-196-1976	41	15
4730-00-196-2017	38	19
4730-00-196-2022	37	18
4730-00-196-2028	22A	26
4730-00-196-2031	72A	13
5340-00-200-7224	106	19
9905-00-202-3639	107	16
4730-00-202-9170	116	4
5940-00-204-8966	95	3
5940-00-204-8990	88	4
	93	13
9905-00-205-2795	107	17
5305-00-207-2297	34	15
	36	15
	37	15
	38	14
	39	14
	69	3
	72	14
5305-00-207-8253	4	5
	35	1
	39	21
	47	12
	82	1
	90	3
	101	4
	102	3
5305-00-208-1429	15	16
5340-00-209-0675	18	29
	18	62
5310-00-209-0786	107	23
5310-00-209-1239	36	34
5315-00-209-7273	107	48
4730-00-222-1837	41	13
	44	7
	45	22
	83	93
4730-00-222-1839	36	51
	41	25
4730-00-222-1842	15	10
5305-00-225-3842	115	17
5306-00-225-8499	125	21
5120-00-228-9517	126	48
5940-00-230-0515	3	10
	9	8
	14	9
	50	7
	54	10
	55	5
	110	9
5120-00-230-6385	126	16
5120-00-234-8910	126	34
5120-00-235-5870	126	38
5320-00-236-3883	91	1
5120-00-237-0984	126	35
5310-00-241-6606	5	25
5970-00-242-0505	BULK	40
5120-00-242-3249	126	49
5120-00-243-7326	126	9
5320-00-245-4323	102	9
5305-00-245-8837	35	4
5315-00-246-0030	74	5
6240-00-246-5052	101	13
5310-00-247-7186	105	10
5310-00-250-9477	47	9
	92	10
	100	1
5305-00-253-5614	5	1
	10	1
	15	1
5305-00-253-5615	63	5
	103	9
	104	19
	105	1
5305-00-253-5631	107	51
4730-00-254-6243	83	92
4730-00-268-7479	83	91
5305-00-269-3211	103	2
	104	2
5325-00-270-8888	75	9
4820-00-276-9041	5	24
4730-00-277-1873	22	21
4730-00-277-1896	36	53
	45	18
	72A	11
4730-00-277-5546	10	9
	15	11
4730-00-277-5553	41	8
	42	10
	44	5
	45	17
	46	23
4730-00-278-8257	114	4
5365-00-282-7120	91	10
3820-00-283-2149	117.	22
5940-00-283-5280	51	3
	51	9
	52	3
	53	3
	54	8
	55	10
	58	9
	87	2
	88	3

CROSS-REFERENCE INDEXES

NATIONAL STOCK NUMBER INDEX

STOCK NUMBER	FIG.	ITEM
	95	5
	96	3
	98	7
	98	12
	98	17
	99	4
6145-00-284-0656	BULK	83
6145-00-284-0657	BULK	81
5330-00-285-5123	116	6
5120-00-288-7679	126	10
5340-00-290-4505	106	20
5330-00-291-5138	85	21
5120-00-293-1602	126	52
3110-00-293-9163	65	34
1670-00-294-2954	103	1
	104	1
5920-00-296-0451	25	16
5340-00-331-4774	106	21
5305-00-340-4464	86	12
	92	13
	92	52
5330-00-360-0595	18	3
5330-00-360-3595	18	10
	18	14
	18	21
	18	36
	18	43
	18	47
	18	54
	22	2
	22	8
	22	15
5340-00-368-4708	106	22
4820-00-368-8293	117	8
5365-00-378-9965	117	10
5365-00-378-9966	117	10
5305-00-390-0551	117	6
5310-00-407-9566	125	20
4730-00-410-9530	22	10
	22A	9
	72A	2
5305-00-411-0683	94	89
5365-00-417-8925	11	9
5970-00-419-4291	BULK	50
5305-00-419-6520	122	2
5330-00-425-2828	117	12
4730-00-427-5121	117	21
5310-00-436-3290	5	3
	10	3
	15	3
5975-00-451-5001	47	14
5306-00-457-1394	80	11
5330-00-462-0907	109	5
5935-00-462-6603	111	6
5310-00-477-6768	48	1
	83	1

STOCK NUMBER	FIG.	ITEM
5340-00-479-9197	125	11
5305-00-492-1759	1	2
	1	5
	1	8
	1	11
5320-00-493-4101	103	40
	104	7
	104	7
5330-00-494-2497	117	31
5320-00-510-7823	25	13
5310-00-518-5566	122	1
5315-00-519-7150	103	46
6145-00-538-8760	BULK	4
3030-00-541-4984	74	1
5306-00-543-4405	32	3
	71A	19
	71A	21
5305-00-550-1864	74A	13
5310-00-550-5054	60	4
	69	4
	72	15
5310-00-550-5054	73	3
	82	3
	101	3
	102	4
	103	58
3110-00-555-5339	65	37
5940-00-557-4338	98	22
5940-00-557-4339	50	6
5940-00-557-4341	94	6
	94	9
	94	12
	94	72
	94	75
	94	78
	94	99
	94	102
	94	105
	94	165
	94	168
	94	171
	97	3
	97	11
	97	18
5940-00-557-4344	94	15
	94	19
	94	23
5940-00-557-4345	48	7
7520-00-559-9618	126	3
5310-00-567-4992	79	18
3010-00-572-2090	65	4
5305-00-576-5417	63	3
	64	1
	71A	26
6145-00-578-6072	BULK	75
6145-00-578-6594	BULK	79

CROSS-REFERENCE INDEXES

NATIONAL STOCK NUMBER INDEX

STOCK NUMBER	FIG.	ITEM
6145-00-578-6595	BULK	78
6145-00-578-7513	BULK	80
6145-00-578-7516	BULK	74
6145-00-578-7518	BULK	76
6145-00-578-7519	BULK	77
6145-00-578-7521	BULK	73
5305-00-579-5238	83	99
4730-00-580-8457	116	5
5310-00-582-5677	4	4
	35	3
	36	24
	37	31
	39	22
	40	13
	71A	39
	82	22
	92	12
	94	3
	100	3
	106	13
5930-00-583-8613	86	38
5310-00-584-5272	120	5
5310-00-584-7888	107	3
5340-00-594-7230	106	17
5310-00-594-8038	107	37
	122	1
4730-00-595-0083	114	2
5310-00-595-6211	58	3
	59	3
	92	39
5120-00-596-8502	126	33
5340-00-598-5599	106	15
5330-00-612-2414	18	25
	18	32
	18	58
	18	65
	22	4
	22	11
	22	18
	22A	4
	22A	10
	22A	20
	22A	28
	22A	32
5330-00-612-2414	72A	3
	72A	8
5310-00-614-3505	5	14
	79	12
5310-00-614-3506	71	3
	71A	31
	74A	
	80	3
5305-00-616-6370	45	5
6145-00-617-1382	BULK	6
5310-00-619-1148	103	51
2530-00-622-6803	117	5

STOCK NUMBER	FIG.	ITEM
5310-00-625-5756	5	26
	32	4
	71A	22
5310-00-627-6128	107	28
5310-00-637-9541	109	2
5306-00-637-9674	32	6
5325-00-641-2800	109	10
	112	1
	115	13
5365-00-644-0392	56	5
5306-00-655-6170	5	27
	64	5
5305-00-660-2832	74	6
5975-00-661-0598	3	11
5310-00-671-4109	123	2
5310-00-679-3606	116	8
5365-00-682-1427	25	8
	59	12
5930-00-683-1624	86	42
6145-00-686-5188	BULK	5
6145-00-690-9320	BULK	84
5340-00-701-3811	79	14
5305-00-701-5074	103	7
5305-00-702-4523	36	64
	39	18
	40	12
	45	6
5305-00-702-4523	60	3
	71	5
5305-00-702-4523	71A	40
	90	4
	90	4
	103	56
5305-00-702-9070	37	30
6145-00-705-6684	BULK	10
5360-00-706-9054	116	7
	117	13
5305-00-717-5460	48	5
5305-00-717-5467	10	14
	61	1
	69	10
5305-00-719-3853	91	16
5305-00-719-5274	120	18
4820-00-720-4488	10	10
5305-00-721-5298	74A	1
5305-00-721-8010	4	3
	36	23
	37	37
	45	3
5340-00-721-8352	79	15
5310-00-722-5998	92	21
	94	91
5305-00-724-7224	29	4
	125	4
5305-00-726-2551	30	1
	118	4

CROSS-REFERENCE INDEXES

NATIONAL STOCK NUMBER INDEX

STOCK NUMBER	FIG.	ITEM	STOCK NUMBER	FIG.	ITEM
5935-00-726-8317	88	2		69	9
5930-00-726-9508	86	37		85	4
5306-00-727-4578	34	12	5340-00-809-1492	111	4
	36	12	5340-00-809-1494	115	19
	37	12	5310-00-809-5998	107	45
	38	11	5310-00-809-8533	79	6
	39	11	5940-00-813-0698	89	2
5305-00-727-6804	71	4	5970-00-814-2878	BULK	34
	71A	7	5310-00-820-6653	30	2
	80	13	5330-00-823-7106	6	9
5305-00-727-8832	92	22	5310-00-823-8803	29	3
5315-00-728-2045	74A	11		30	3
5310-00-732-0559	107	27		125	3
5310-00-732-0560	120	4	5940-00-825-5041	92	25
	120	17		92	28
5330-00-733-4599	117	15		92	31
4330-00-739-6379	116	9		96	7
9905-00-752-4649	110	10		97	5
	111	9		98	2
5340-00-753-3497	79	16		99	3
5310-00-761-0654	74A	16	5365-00-828-8526	59	13
5310-00-763-8901	107	2	5310-00-834-8732	107	43
5310-00-763-8905	118	2	5310-00-835-2037	120	2
	120	1	5330-00-838-6935	92	48
5310-00-763-8912	119	4	5305-00-839-3220	86	16
5310-00-763-8920	29	1	9905-00-841-4445	111	10
	125	1	5340-00-843-7825	86	28
5310-00-764-6609	5	12	5305-00-847-1159	85	3
	79	9		85	3
	85	10	5935-00-848-9559	56	4
5310-00-765-3197	82	43	5315-00-849-9854	107	41
5305-00-765-4257	103	5	6135-00-850-3177	126	2
	104	5	5945-00-852-7301	86	21
	106	1	5310-00-869-1018	3	5
5305-00-765-4346	92	17		9	4
5310-00-767-0445	34	9		14	4
	36	9		50	1
	37	9		54	1
	38	8		55	1
	71A	25	5935-00-878-8174	98	23
	39	8	5310-00-880-5978	86	7
	64	3		92	12
	71A	25		92	51
5310-00-768-0319	107	22		93	3
5310-00-768-0321	71A	32		93	3
	76	5		100	10
	79	1	5310-00-880-7744	125	19
	80	1	5310-00-880-8189	120	12
5310-00-773-7618	10	13	4720-00-882-1379	BULK	29
	71A	27	5310-00-883-9384	5	4
2530-00-797-9295	116	3		10	4
5310-00-802-4701	34	11		15	4
	36	11		93	17
	37	11		93	17
	38	10		100	18
5310-00-802-4701	39	10	5310-00-888-2878	91	9

CROSS-REFERENCE INDEXES

NATIONAL STOCK NUMBER INDEX

STOCK NUMBER	FIG.	ITEM
9905-00-893-3570	110	12
6230-00-901-9755	126	20
5310-00-903-1524	35	24
5310-00-903-2612	101	15
5310-00-903-5966	4	1
	34	13
	36	13
	37	13
	38	12
	39	12
	40	10
	45	1
	60	1
	69	1
	71A	37
	72	12
	73	1
	82	24
	83	98
	90	1
	101	1
	102	1
4730-00-906-0982	123	21
5360-00-906-7923	110	7
5305-00-907-0045	71	1
	71A	36
4730-00-908-3193	75	6
4730-00-908-3194	22	25
	34	18
	36	47
	40	1
	41	18
	45	14
	46	19
	75	10
4730-00-908-3195	46	1
4730-00-908-6292	22A	17
	126	63
4730-00-909-8627	22A	6
	22A	22
	72A	5
	126	62
5310-00-913-8881	10	11
	15	14
	63	1
	69	7
	71A	29
	85	1
	85	1
5970-00-914-3117	BULK	36
5330-00-914-7651	86	13
	92	54
5305-00-916-2345	107	18
5340-00-922-6300	47	5
5340-00-922-6302	75	5
5305-00-923-8268	79	11
5340-00-926-5449	47	4
5365-00-927-2972	56	6
5305-00-928-0322	100	19
5970-00-928-8812	BULK	42
5305-00-928-9636	107	4
5310-00-929-6395	40	7
	86	33
	92	20
	94	90
5310-00-933-8118	58	2
	59	2
	92	38
	103	43
	104	13
5310-00-933-8119	42	12
	43	9
	44	9
	86	6
	92	11
	92	50
	93	2
	93	2
	100	9
5310-00-933-8120	34	2
	36	2
	36	55
	37	2
	38	2
	39	2
	40	23
	41	2
	42	2
	43	2
	45	27
	47	3
	71A	2
	73	11
	75	2
	86	2
5310-00-933-8120	86	15
	93	16
	93	16
	100	17
	103	49
5310-00-933-8121	4	2
	34	14
	35	2
	36	14
	37	14
	38	13
	39	13
	40	11
	45	2
	47	10
	60	2
	69	2

CROSS-REFERENCE INDEXES

NATIONAL STOCK NUMBER INDEX

STOCK NUMBER	FIG.	ITEM
	71	6
	71A	38
	72	13
	73	2
	82	2
	82	9
	82	23
	90	2
	92	11
	100	2
	101	2
	102	2
	103	57
5310-00-933-8778	71	2
	71A	8
	76	6
	79	2
	80	2
5310-00-934-9727	79	7
5310-00-934-9748	58	1
	59	1
	92	37
5310-00-934-9757	82	38
5310-00-934-9759	42	11
	43	8
	44	8
	86	11
	92	10
	92	49
	93	1
	93	1
	100	8
5310-00-934-9760	34	1
	36	1
	36	54
	37	1
	38	1
	39	1
	40	22
	41	1
	42	1
	43	1
	47	2
	86	1
	86	14
	93	15
	93	15
	100	16
	103	48
5310-00-934-9761	40	6
	86	32
	92	19
4730-00-936-4584	18	2
	18	13
	18	35
	18	46

STOCK NUMBER	FIG.	ITEM
5310-00-937-0453	5	13
	79	10
5305-00-939-0493	86	35
5305-00-939-9206	84	13
5310-00-942-5109	105	11
5305-00-943-2092	5	21
5305-00-943-8127	5	15
5970-00-944-1380	BULK	39
5930-00-945-3356	86	43
5310-00-945-4478	123	26
5305-00-947-4356	107	7
5330-00-951-8268	58	7
5970-00-954-1622	BULK	33
5305-00-956-4470	100	11
5320-00-957-2515	36	28
5305-00-957-6266	125	12
5305-00-958-5473	125	6
4730-00-958-7117	22	5
5305-00-964-0643	71A	30
5310-00-971-7990	119	5
7330-00-972-5211	126	26
5310-00-973-8786	74	7
	74A	2
5310-00-974-6623	32	2
	34	10
	36	10
	37	10
	38	9
	39	9
	64	4
	71A	16
5340-00-975-2126	102	10
5305-00-983-7449	119	1
5970-00-983-7997	BULK	38
5310-00-983-8485	107	42
5310-00-984-3806	107	33
5305-00-984-6210	107	15
5310-00-984-7042	10	12
	15	15
	48	2
	61	2
	63	2
	64	2
	69	8
	71A	28
5310-00-984-7042	74A	10
	85	2
	92	2
	103	3
	104	3
4730-00-987-9073	114	3
5305-00-988-1725	110	2
	111	2
	112	3
5305-00-988-7834	106	12
4730-00-989-3550	41	10

CROSS-REFERENCE INDEXES

NATIONAL STOCK NUMBER INDEX

STOCK NUMBER	FIG.	ITEM
5310-00-989-5953	32	1
5305-00-990-0668	74A	9
5340-00-990-7157	106	18
5340-00-990-7610	47	8
5305-00-992-6147	85	17
5305-00-993-9268	92	40
5340-01-003-7718	1	6
	1	12
	103	6
	125	7
5935-01-005-9258	3	14
5340-01-006-5645	47	11
6110-01-013-6482	100	12
5360-01-019-3541	123	37
5935-01-026-2217	25	5
5935-01-026-8549	58	10
5935-01-035-5139	53	2
6110-01-035-9228	100	14
4720-01-037-6268	BULK	
5310-01-041-9642	106	23
5310-01-042-1006	122	13
	122	21
6630-01-044-0334	126	4
5340-01-046-3702	106	16
4730-01-048-7874	115	20
6105-01-052-5376	74A	18
6105-01-052-7032	74A	19
5306-01-054-0813	80	4
5340-01-054-4937	BULK	26
5975-01-055-4727	74A	30
8040-01-057-1895	126	61
5305-01-058-8414	3	7
	9	6
	14	6
	50	3
	54	4
	55	3
5315-01-058-8539	103	47
5365-01-061-0710	123	42
5305-01-067-8514	92	13
5935-01-071-0331	98	9
	98	14
	98	19
5310-01-073-7031	69	13
4730-01-080-1899	18	7
	18	18
	18	40
	18	51
5315-01-081-0249	74A	14
5340-01-083-7084	124	2
4320-01-083-9859	13	1
4320-01-083-9863	2	1
4320-01-084-2235	8	1
4730-01-086-6157	18	24
	22A	31
6640-01-086-7603	126	5

STOCK NUMBER	FIG.	ITEM
4610-01-088-3233	126	27
5305-01-088-7419	126	31
4730-01-089-9245	46	16
5935-01-091-9166	49	2
5935-01-092-1612	25	11
5935-01-092-4269	97	2
6220-01-093-4439	109	3
5315-01-096-2536	79	5
5975-01-098-8573	57	1
5935-01-101-1535	59	11
4320-01-101-7456	74A	27
6630-01-105-2058	126	44
4610-01-105-2075	85	26
4730-01-107-7630	5	9
5306-01-108-8371	117	23
5999-01-110-4623	100	7
	100	24
5935-01-111-7591	56	2
5120-01-112-3339	107	54
4010-01-112-8082	107	9
2540-01-115-1513	27	1
4730-01-115-5175	22	7
4610-01-115-7521	126	23
4610-01-116-0501	24	2
5310-01-118-1489	106	24
4720-01-118-9326	115	14
4720-01-118-9327	115	15
5330-01-119-5827	122	5
5310-01-121-1694	106	14
5306-01-122-2440	119	6
4730-01-125-4456	22	22
5935-01-127-2089	9	12
	14	13
	57	3
3110-01-127-7379	74	15
3110-01-127-7380	74	16
4730-01-127-7451	15	6
4610-01-128-1844	24	3
6680-01-128-4273	34	29
6680-01-128-6274	34	41
6680-01-128-6275	37	23
4710-01-128-6277	70	19
5925-01-128-6284	92	23
5925-01-128-6403	94	92
5925-01-128-6404	94	95
5925-01-128-6405	94	94
2530-01-129-7552	123	38
5330-01-130-1443	11	15
3110-01-130-1444	7	20
4720-01-132-0800	126	55
	BULK	66
4730-01-132-0904	4	8
	34	32
	38	4
	39	4
4730-01-132-0905	5	6

CROSS-REFERENCE INDEXES

NATIONAL STOCK NUMBER INDEX

STOCK NUMBER	FIG.	ITEM
4720-01-133-2736	BULK	65
6105-01-133-8082	17	1
	62	1
5330-01-133-8656	5	23
4730-01-133-9203	34	4
	36	4
	37	4
6145-01-134-2847	BULK	8
6145-01-134-2855	BULK	9
5330-01-134-8688	11	16
5120-01-135-0062	126	30
4730-01-135-2988	41	23
4730-01-135-5587	41	22
5305-01-136-4480	93	18
	93	18
5305-01-136-4481	86	27
	93	21
5330-01-137-3060	5	17
5330-01-137-3071	36	40
6110-01-137-4721	100	5
5306-01-137-8929	80	7
5306-01-137-9711	80	5
5330-01-138-2108	41	24
6150-01-138-7084	110	4
5925-01-139-6337	94	93
5935-01-140-0742	56	3
5340-01-143-7518	80	8
6685-01-144-2622	42	15
5330-01-145-0718	83	105
6105-01-145-7849	7	1
5935-01-146-7330	50	11
5340-01-146-7422	36	57
	41	4
	42	4
	43	4
4730-01-150-8858	83	85
6110-01-153-2242	100	22
4610-01-154-6887	85	28
4320-01-155-2646	10	16
6145-01-157-2046	BULK	85
5310-01-161-7306	73	13
5310-01-162-3808	117	25
5340-01-162-4325	106	10
5340-01-165-3721	3	4
5310-01-166-0760	124	5
4320-01-167-7961	11	2
6640-01-168-0312	126	24
5340-01-169-8331	71A	41
5935-01-171-1858	96	2
5935-01-175-8417	92	44
5935-01-175-8418	92	47
5935-01-175-8419	92	41
5935-01-175-8420	25	9
5935-01-179-1572	3	12
5935-01-181-6651	59	6
2530-01-182-8983	115	34

STOCK NUMBER	FIG.	ITEM
5306-01-183-2697	123	3
5310-01-183-6830	122	6
5310-01-183-6843	122	7
5310-01-183-6844	122	8
5935-01-184-7188	58	6
4820-01-184-9376	38	38
5310-01-185-0586	29	5
	125	5
5307-01-186-6875	73	5
	73	8
6110-01-187-7259	100	20
5935-01-189-3220	25	3
4730-01-197-1989	5	11
4820-01-205-8278	35	
4410-01-208-2125	83	
5340-01-208-6233	93	22
	93	22
5940-01-210-3173	87	3
4610-01-212-2704	126	54
5360-01-220-9373	123	40
7240-01-223-3437	23	4
7240-01-223-3438	23	3
7240-01-223-3439	23	6
5140-01-223-3440	1	7
5140-01-223-3441	1	1
5935-01-223-9420	92	53
7240-01-224-2852	23	5
2330-01-226-0709	107	1
6145-01-226-0164	BULK	86
5935-01-232-5284	98	4
7125-01-232-7686	23	1
4520-01-237-8038	100	13
4030-01-238-8943	4	9
	4	16
	5	7
	5	19
	10	7
	15	7
	34	6
	34	34
	36	6
	37	6
	38	6
4030-01-238-8943	39	6
5340-01-239-0883	123	39
6680-01-239-5557	36	39
5340-01-242-4554	36	62
	38	32
	40	25
4820-01-243-9951	45	30
5310-01-244-6894	123	35
4730-01-245-9148	22	1
5365-01-246-4429	23	16
4730-01-254-0330	72A	16
4730-01-254-9853	81	6
5340-01-266-9498	93	24

CROSS-REFERENCE INDEXES

NATIONAL STOCK NUMBER INDEX

STOCK NUMBER	FIG.	ITEM
	93	24
4730-01-267-0001	126	56
5305-01-269-9226	93	4
	93	4
5310-01-273-2210	66	7
6110-01-273-7849	100	25
4730-01-275-0211	38	40
4010-01-280-0069	BULK	15
5315-01-280-6184	123	36
5310-01-285-9229	82	38
5999-01-286-2883	100	23
5310-01-288-5668	123	1
4730-01-297-0188	83	82
5340-01-299-2964	106	5
5340-01-299-2965	106	9
4730-01-299-9465	75	7
4730-01-301-4269	15	9
4730-01-301-4298	6	2
4730-01-301-4299	6	1
5330-01-301-5994	85	16
5330-01-302-7671	6	6
5340-01-302-8321	106	3
	125	16
4820-01-302-8980	36	50
4820-01-302-8981	40	5
4730-01-303-1228	34	8
	36	8
	37	8
4730-01-303-1229	38	18
4730-01-303-1244	4	12
	34	36
	38	17
	39	17
4720-01-303-6396	BULK	68
5365-01-304-4607	34	17
	36	17
	37	17
4730-01-304-5549	46	12
4730-01-304-5550	46	4
4730-01-304-5551	46	8
5310-01-304-9209	83	109
5365-01-305-0554	34	38
	39	16
5340-01-305-2787	106	7
	125	9
5340-01-305-2788	106	4
	125	13
5310-01-306-2808	38	16
4730-01-306-3092	23	9
5340-01-307-2679	23	13
	46	5
5340-01-307-2683	23	2
	24	1
5340-01-307-3898	106	8
5340-01-307-4394	23	8
	46	17
5340-01-307-4395	23	8
	46	13
5340-01-307-5989	23	13
	46	9
4320-01-313-2841	16	9
	61	13
5330-01-313-5632	65	33
4730-01-316-9215	75	12
6680-01-322-0310	36	30
5305-01-325-8387	125	24
5330-01-326-0778	70	18
5330-01-326-0791	84	9
5365-01-326-0910	85	12
5340-01-326-2620	70	15
5360-01-326-2621	70	16
5330-01-326-6740	83	75
5330-01-326-6749	122	10
4820-01-326-6800	45	29
4820-01-326-6801	45	28
4730-01-326-6979	38	37
6110-01-326-7311	65	19
4820-01-326-7313	83	24
6645-01-326-7316	82	5
4730-01-326-7318	82	6
5310-01-326-7320	85	10
5310-01-326-7321	85	11
5330-01-326-7322	85	23
5310-01-326-7371	81	1
4710-01-326-7843	40	30
4710-01-326-7844	36	63
4710-01-326-7845	40	28
4710-01-326-7846	37	41
4710-01-326-7847	38	29
4710-01-326-7848	40	19
4710-01-326-7849	39	29
4710-01-326-7850	39	26
4710-01-326-7852	38	48
4820-01-326-7879	34	46
4820-01-326-7880	36	60
	41	12
5940-01-327-3962	52	4
4320-01-327-4582	6	18
5340-01-327-4611	125	14
5340-01-327-4612	125	15
5365-01-328-4742	18	4
	18	8
	18	15
	18	19
	18	26
	18	30
	18	37
	18	41
	18	48
	18	52
5365-01-328-4742	18	59
	18	63

CROSS-REFERENCE INDEXES

NATIONAL STOCK NUMBER INDEX

STOCK NUMBER	FIG.	ITEM
6150-01-328-4886	97	1
6150-01-328-5754	53	1
6150-01-328-5755	57	2
6150-01-328-5756	25	10
6150-01-328-5757	25	4
6150-01-328-5758	58	8
6150-01-328-5759	56	1
4730-01-328-8103	38	28
	72	10
2590-01-329-4757	107	20
4820-01-329-9105	36	46
3110-01-330-1969	12	17
5999-01-330-3451	100	15
3110-01-330-8303	17	16
	62	16
4730-01-331-3258	36	58
	37	36
	41	6
	42	6
	43	6
	44	2
4730-01-331-3259	37	42
	39	28
	45	12
6145-01-331-3287	BULK	2
5340-01-331-4009	125	8
5340-01-331-4010	125	17
5340-01-332-2466	34	37
	39	15
5340-01-332-2467	34	16
	36	16
	37	16
5305-01-332-9263	85	17
5995-01-333-8450	49	1
5995-01-333-8451	59	8
5305-01-335-7409	82	33
4820-01-337-4523	41	16
5340-61-337-4577	107	29
5306-01-337-5439	107	34
5306-01-337-5440	120	3
5306-01-337-6972	122	14
5306-01-337-6973	122	22
4820-01-337-7130	37	33
5945-01-338-5368	100	27
4010-01-338-8370	107	40
5360-01-338-8529	107	46
5935-01-339-1563	50	10
5306-01-339-9552	107	39
5306-01-339-9553	116	2
6150-01-339-9668	111	5
6150-01-339-9669	9	11
2530-01-340-0443	122	15
	122	23
4330-01-341-8622	85	9
5340-01-343-5833	18	6
	18	11
	18	17
	18	22
	18	28
	18	33
	18	39
	18	44
	18	50
	18	55
	18	61
	18	66
5340-01-343-5833	22	9
	22	12
	22	16
	22	19
5999-01-343-8889	100	21
5340-01-346-7461	106	6
5930-01-347-6843	60	6
4730-01-347-6844	34	44
4730-01-347-6845	34	39
4730-01-347-6846	45	10
4730-01-347-8544	22A	27
6685-01-347-8658	44	11
4330-01-347-9671	70	1
6630-01-349-5253	25	15
4710-01-350-0146	36	22
4710-01-350-0147	34	30
4730-01-350-0191	36	31
4730-01-350-0210	23	12
4710-01-350-1342	40	26
4730-01-350-1396	38	49
4710-01-350-3628	40	21
4710-01-350-3629	40	20
4710-01-350-3630	34	48
4710-01-350-3631	34	24
4730-01-350-6469	23	9
4710-01-351-0576	38	44
4730-01-351-0587	34	45
4730-01-351-0588	45	20
6240-01-351-3889	126	18
5320-01-352-3401	120	16
4730-01-353-2984	22	3
4730-01-354-8985	41	14
	44	6
6240-01-355-4422	86	45
5325-01-355-7125	91	11
5305-01-355-8655	77	5
5340-01-355-8670	78	30
5340-01-355-8671	78	29
5305-01-355-8685	78	3
5305-01-355-8686	78	19
5330-01-356-1524	77	11
5330-01-356-2436	77	23
5330-01-356-2451	77	14
5330-01-356-2511	78	
4730-01-356-4768	23	14
3120-01-356-5076	77	17

CROSS-REFERENCE INDEXES

NATIONAL STOCK NUMBER INDEX

STOCK NUMBER	FIG.	ITEM	STOCK NUMBER	FIG.	ITEM
5330-01-356-5081	78		4730-01-363-4101	23	11
5330-01-356-5089	77		4730-01-363-6810	23	7
4730-01-356-5400	23	10	4710-01-363-7931	40	29
4730-01-357-1920	42	16	6150-01-363-8006	50	9
4820-01-357-3467	78		4730-01-363-8016	37	35
4320-01-357-4167	78	14	4730-01-363-8017	34	47
3040-01-357-6569	77	27		39	30
4320-01-357-6870	78			72	4
4820-01-357-9660	78	28		83	79
6210-01-358-6040	101	5	4730-01-363-8018	34	31
4820-01-358-6124	78	11	4730-01-363-8019	38	30
4730-01-359-0617	77	29	6150-01-364-1537	3	13
4130-01-359-2929	37	19	5940-01-364-4960	97	4
4730-01-359-2930	41	17	4730-01-364-8406	34	26
	45	21		38	41
4730-01-359-2931	38	47	4730-01-365-5554	38	34
4730-01-359-2932	37	20	4730-01-365-6690	81	8
4730-01-359-2933	36	32	5975-01-366-0326	50	8
6680-01-359-4979	77	1	5340-01-367-8147	BULK	27
4710-01-361-6616	36	19	5330-01-383-3194	83	108
6150-01-361-6682	14	12	4610-01-408-0690	126	58
4730-01-361-6686	37	28	4610-01-408-2390	126	57
6685-01-361-6801	43	11	4730-01-432-9468	22A	24
5365-01-361-8376	123	34			

CROSS-REFERENCE INDEXES

PART NUMBER INDEX

CAGEC	PART NUMBER	STOCK NUMBER	FIG.	ITEM
38151	A-A102077A-A		12	13
00843	A-L23SS		82	19
38151	A-S102116A-1		12	16
38151	A-102021-A		12	18
38151	A-102045		12	5
38151	A-102047		12	7
38151	A-102131-MM		12	4
38151	A-102176A-N		12	11
38151	A-102196A-1A		12	10
38151	A-76724-100CC		12	15
38151	A-77531-7		12	8
38151	A-7823R-17		12	19
38151	A-7823R-25	3110-01-330-1969	12	17
38151	A-90109-712NN		12	12
38151	A-9757-17A		12	14
38151	A-9775-31CC		12	3
38151	A-9775-38CC		12	9
61054	AN-2.0-125SS-E ITEM 8		4	19
88044	AN961-416T	5310-00-177-1156	3	8
			9	7
			14	7
			50	4
			54	3
			55	4
88044	AN961-6T	5310-00-136-1472	86	34
88044	AN961-616T	5310-00-187-2413	48	3
			92	3
			92	3
81346	ASTM-B134-072DIA 240ALLOY		BULK	70
81346	ASTM-B43 1IN RED BRASS		BULK	43
81346	ASTM-B466 1/2 OD X 0.035 WALL		BULK	57
81346	ASTM-B466 1/4 OD X 0.035 WALL		BULK	58
81346	ASTM-B466 3/4 OD X 0.035 WALL		BULK	59
81346	ASTM-D-20001AA310		BULK	47
81348	ASTM-D2000 M1BC614		BULK	46
57719	AWM-5C		126	17
92021	AXXHXN		35	7
92021	AXX144		35	17
92021	AXXIXL		35	16
92021	AXXIXN		35	15
62707	A1OSJC00606		123	45
62707	A13TA105-3X		123	33
06370	A5967-2		72	5
38151	B-102373-A90		12	6
1CY65	B-144-10		38	23
1CY65	B-144-5		38	22
1CY65	B-144-6		38	21
1CY65	B-144-8		38	25
1CY65	B-144-9		38	24

CROSS-REFERENCE INDEXES

PART NUMBER INDEX

CAGEC	PART NUMBER	STOCK NUMBER	FIG.	ITEM
61054	B-2.0-125-01 150-SC-18-O		4	26
79227	B-6780-M1-VT-2-C		35	27
79227	B-6780-M1-VT-2-D		35	28
79227	B-6780-M1-VT-2-E		35	29
79227	B-6780-M1-VT-2-F		35	30
79227	B-6780-M1-VT-2-H		35	33
79227	B-6780-M1-VT-2-I		35	34
79227	B-6780-M1-VT-2-K		35	32
61054	BG-2.0-125-01 Y-O		4	25
05472	BG6203C03	3110-01-330-8303	17	16
			62	16
05472	BG6206B03		7	22
05472	BG6309B03	3110-01-130-1444	7	20
61054	BK-2.0-125-01 4-J-20-O		4	24
53059	BT 3/8		83	9
80204	B1821BH038C125N	5305-00-068-0511	115	28
			117	2
80204	B1821BH063C250N	5305-00-724-7224	125	4
			29	4
80204	B1821BH075C350N	5305-00-947-4356	107	7
61054	C-2.0-125-02 150-18-0		4	21
01667	CBA-70		28	7
15235	CGB195-SG	5975-01-098-8573	57	1
46384	CLSS-032-3	5310-00-567-4992	79	18
19099	CO-02HOF-1-62		51	6
19099	CO-02HOF-2-185		54	11
19099	CO-02HOF-2-24		51	11
19099	CO-02HOF-2-66		52	5
81349	CO-02HOF(3/14)0565		BULK	1
19099	CO-03HOF-12-48		58	11
19099	CO-03HOF-1-34		25	6
81349	CO-03HOF(3/14)0565	6145-01-134-2855	BULK	9
19099	CO-04HOF-1-86		50	12
19099	CO-04HOF-3-146		55	11
81349	CO-04HDF(4/2-4/9R) 1480		BULK	3
19099	CO-04HDF-2-228		49	5
81349	CO-04HLF(4/8)1000	6145-00-617-1382	BULK	6
81349	CO-04HOF(4/14)0605	6145-00-538-8760	BULK	4
81349	CO-04HOF(4/2)1400	6145-00-686-5188	BULK	5
19099	CO-05HOF-1-16		57	4
19099	CO-OSHOF-1-70		53	4
81349	CO-05HOF(5/16)0525	6145-00-160-6187	BULK	7
19099	CO-30MOF-3-36		56	8
81349	CO-30MOF(2/12-3/14-25/18)1000	6145-01-134-2847	BULK	8
92021	CXXHXL		35	8
61748	C1173500		76	7
71454	C320966		74A	5
71454	C320966		78A	1
16003	C43974		BULK	13
50380	C56H3686R		65	14
92021	DP-17-2A		35	21

CROSS-REFERENCE INDEXES

PART NUMBER INDEX

CAGEC	PART NUMBER	STOCK NUMBER	FIG.	ITEM
92021	DPB-17-S2 DP17-91164A		35	6
92021	DR-17-91164-1SA		35	22
61882	DS58		28	2
06370	D2210-1		72	6
61424	E-43-0100		BULK	63
01276	FF9311-36	4730-00-909-8627	22A	6
			22A	22
			72A	5
			126	62
61054	FS-2.0-125-01 150-3-0		4	23
81349	FO2A250V1/8A	5920-00-296-0451	25	16
31922	F11	5310-01-273-2210	66	7
61054	F25-SS		4	18
76364	GATE 105-8-3/8IN		75	14
76364	GATE 105-9-3/8IN		75	15
76564	GATE 148-1-1/2 IN.		19	1
76364	GATE 148-2 IN		20	1
76364	GATE 148-5 1-1/2IN		19	4
76364	GATE 148-5 2IN		20	4
76364	GATE 148-6 1-1/2IN		19	5
76364	GATE 148-6 2IN		20	5
76364	GATE 148-7 1-1/2IN		19	2
76364	GATE 148-72 IN		20	2
76364	GATE 148-8 1-1/2IN		19	3
76364	GATE 148-8 21N		20	3
76364	GATE 148-9 1-1/2IN		19	6
76364	GATE 148-9 2IN		20	6
76364	GATE 105-10-3/8IN.		75	17
76364	GATE 105-3/8IN.		75	13
76364	GATE 105-5-3/8IN		75	16
76364	GATE 1184-1 1/4IN		38	20
76364	GATE 1184-11-1 1/4IN		38	21
76364	GATE 1184-12-1 1/4IN		38	25
76364	GATE 1184-7-1 1/4IN		38	24
76364	GATE 1184-8-1 1/4IN		38	23
76364	GATE 1184-9-1 1/4IN		38	22
81348	GGG-H-33-TY3CL3		126	21
81348	GGG-H-86, DOUBLE FACE,TYX, CL1		126	14
81348	GGG-H-86, TY2, S TYB, CL1		126	13
81348	GGG-P-471 TY2CL2 STA		126	29
81348	GGG-S-121	5120-00-596-8502	126	33
81348	GGG-S-121	5120-00-234-8910	126	34
81348	GGG-S-121 TY6CL1		126	32
81348	GGG-W-00649, TY1 CL1STA		126	51
81348	GGG-W-461		126	15

CROSS-REFERENCE INDEXES

PART NUMBER INDEX

CAGEC	PART NUMBER	STOCK NUMBER	FIG.	ITEM
81348	GGG-W-631, TY1CL 1526		126	46
81348	GGG-W-631, TY1CL 15212		126	47
81348	GGG-W-636	5120-00-148-7917	126	45
81348	GGG-W-636	5120-00-228-9517	126	48
81348	GGG-W-641	5120-00-243-7326	126	9
81348	GGG-W-641	9120-00-230-6385	126	16
81348	GGG-W-641	5120-00-237-0984	126	35
81348	GGG-W-641		126	36
81348	GGG-W-641	5120-00-189-7946	126	37
81348	GGG-W-641	5120-00-235-5870	126	38
81348	GGG-W-641	5120-00-189-7985	126	39
81348	GGG-W-641	5120-00-189-7934	126	40
81348	GGG-W-641		126	41
81348	GGG-W-651	5120-00-242-3249	126	49
81348	GGG-W-651, TYIIC LC		126	50
81348	GGG-W-665	5120-00-293-1602	126	52
05472	HA2006A10		7	19
05472	HA3100A15		17	11
05472	HA3100A15		62	11
05472	HA3104A14		7	14
61882	HDC58	5999-00-186-3912	28	5
05472	HW1001A25		7	6
05472	HW3200A01		7	24
05472	HW4600A73		7	12
05472	HW5100A03		17	13
05472	HW5100A03		62	13
05472	HW5100A06		7	16
62707	K14HU104		122	19
62707	K14HU104		122	27
62707	K14HU105-2X		122	20
62707	K14HU105-1X		122	12
62707	K14HU110X		122	16
62707	K14HU110X		122	24
50380	K56H3012M		65	5
61054	KN-3.0-125-03 15 0-3-0		4	20
81348	L-P-65, SIZE 4		126	28
75665	L-150		74A	12
36232	L-4673	6150-01-052-7032	74A	19
36232	L-6037-2		74A	26
36232	L-6112		74A	29
36232	L-7302-1		74A	28
76371	LL1-101		23	15
36232	LM01634		74A	15
36232	LS893-4E/4370		74A	22
75665	L050	3010-00-572-2090	65	4
83330	L73	5120-00-288-7619	126	10
36232	L8500-E47		74A	21
36232	M-9300-21	3110-00-155-6190	74A	20
81349	MIL-B-43648		126	1
81349	MIL-C-11743	7520-00-559-9618	126	3
81349	MIL-C-24066/2-246		40	9
81349	MIL-C-43006, TYI,CL1,FORM1		BULK	16

CROSS-REFERENCE INDEXES

PART NUMBER INDEX

CAGEC	PART NUMBER	STOCK NUMBER	FIG.	ITEM
81349	MIL-F-3747, TYI,STY2		126	11
81349	MIL-H-13444, TYI		BULK	28
81349	MIL-I-24391	5970-00-419-4291	BULK	49
81349	MIL-I-46058, TYPEUR	5970-00-242-0505	BULK	40
81349	MIL-I-631, TYF, FORMTS, GRA,CL1		BULK	41
81349	MIL-M-52372, FIGURE 6		126	22
81349	MIL-N-52110TYPEI SIZE 2		21	1
81349	MIL-R-6855, CL2, TYA, GR30, 0.125		BULK	21
81349	MIL-R-6855, CL2, TYA, GR50, 0.062		BULK	23
81349	MIL-R-6855, CL2, TYA, GR30, 0.062		BULK	20
81349	MIL-R-6855, CL2, TYA, GR50		BULK	22
81349	MIL-R-6855, CL2, TYA, GR50, 0.125		BULK	24
81349	MIL-R-6855, CL2, TYA, GR50, 0.250		BULK	25
81349	MIL-S-1222 TY I GR4		92	9
81349	MIL-S-1222TYIVGR316		34	28
81349	MIL-S-1222TYIVGR316		34	40
81349	MIL-S-1222TYIVGR316		37	22
81349	MIL-T-53048		26	1
81349	MIL-W-52027	7330-00-972-5211	126	26
81348	MIL-W-52482FIG4		22	26
81349	MIL-W-5665, TYII, CL2B		BULK	69
19099	MM904		81	2
41083	MODEL 1274-14-9323		64	7
65092	MODEL 2296		126	43
59646	MSS-SP-80	4820-00-057-9056	22A	25
96906	MS122079	5340-00-368-4708	106	22
96906	MS122081	5340-00-200-7224	106	19
96906	MS122083	5340-00-331-4774	106	21
96906	MS122085	5340-00-290-4505	106	20
96906	MS122119	5340-00-479-9197	125	11
96906	MS122161	5340-00-594-7230	106	17
96906	MS122163	5340-00-990-7157	106	18
96906	MS124666	5340-00-598-5599	106	15
96906	MS14305-2U	4730-00-254-6243	83	92
96906	MS14305-8U	4730-01-297-0188	83	82
96906	MS14305-8YC		83	90
96906	MS14305-9U		22A	33
96906	MS14305-9U		72A	10
96906	MS14306-7U	4730-01-301-4269	15	9
96906	MS14306-7V	4730-00-189-3041	15	12
96906	MS14306-8		83	80
96906	MS14306-8W		72A	1
96906	MS14315-20Y	4730-00-277-1873	22	21
96906	MS14315-22	4730-00-268-7479	83	91
96906	MS14315-22X		22A	12
96906	MS14315-22Z	4730-01-275-0211	38	40

CROSS-REFERENCE INDEXES

PART NUMBER INDEX

CAGEC	PART NUMBER	STOCK NUMBER	FIG.	ITEM
96906	MS14315-26X		72A	12
96906	MS14315-5X	4730-00-277-1896	36	53
			45	18
			72A	11
96906	MS14315-9X	4730-00-989-3550	41	10
96906	MS15003-1	4730-00-050-4208	107	21
96906	MS15003-1	4730-00-050-4208	119	10
96906	MS15567-1	6240-00-143-3060	126	19
96906	MS15567-2	6240-01-355-4422	86	45
96906	MS15570-1251	6240-00-019-0877	109	8
96906	MS15570-623	6240-00-019-3093	109	6
96906	MS15795-803	5310-00-595-6211	58	3
96906	MS15795-803	5310-00-595-6211	59	3
			92	39
96906	MS15795-805	5310-00-722-5998	92	21
			94	91
96906	MS15795-807	5310-00-880-5978	100	10
			86	7
			92	12
			92	51
			93	3
			93	3
96906	MS15795-808	5310-00-619-1148	103	51
96906	MS15795-809	5310-00-550-5054	101	3
			102	4
			103	58
			60	4
			69	4
			72	15
			73	3
			82	3
96906	MS15795-810	5310-00-582-5677	100	3
			106	13
			35	3
			36	24
			37	31
			39	22
			4	4
			40	13
96906	MS15795-810		71A	42
96906	MS15795-810	5310-00-582-5677	82	22
			92	12
			94	3
96906	MS15795-812	5310-00-625-5756	32	4
96906	MS15795-812	5310-01-389-6965	38	53
96906	MS15795-812	5310-00-625-5756	5	26
			71A	17
			71A	22
96906	MS15795-813	5310-00-802-4701	34	11
			36	11
			37	11
			38	10
			39	10
			69	9
			85	4
96906	MS15795-814	5310-00-773-7418	10	13
96906	MS15795-814	5310-00-773-7618	71.A	27

CROSS-REFERENCE INDEXES

PART NUMBER INDEX

CAGEC	PART NUMBER	STOCK NUMBER	FIG.	ITEM
96906	MS15795-817	5310-00-614-3506	71	3
			71A	31
96906	MS15795-817	5310-00-582-5677	71A	39
96906	MS15795-817	5310-00-614-3506	74A	7
			80	3
96906	MS15795-820	5310-00-614-3505	5	14
			79	12
96906	MS15795-842	5310-00-883-9384	10	4
			100	18
			15	4
			5	4
			93	17
			93	17
96906	MS16203-37	5310-00-247-7186	105	10
96906	MS16624-4037	5365-00-282-7120	91	10
96906	MS16995-53	5305-00-988-7834	106	12
96906	MS16995-81	5305-00-990-0668	74A	9
96906	MS16995-81	5305-00-992-6147	85	17
96906	MS16998-75	5305-00-983-7449	119	1
96906	MS17143-6	5940-00-825-5041	92	25
			92	28
			92	31
			96	7
			97	5
			98	2
			99	3
96906	MS17188-11		85	11
96906	MS17830-3C	5310-00-436-3290	10	3
			15	3
			5	3
96906	MS17830-5C	5310-00-241-6606	5	25
96906	MS17990C308	5315-00-519-7150	103	46
96906	MS17990C404	5315-01-058-8539	103	47
96906	MS17990C821	5315-00-159-3739	104	15
96906	MS18015-1	5340-00-975-2126	102	10
96906	MS20066-208	5315-00-728-2045	74A	11
96906	MS20066-355	5315-01-081-0249	74A	14
96906	MS20066-510		76	4
96906	MS20066-512	5315-00-246-0030	74	5
96906	MS20426B3-5	5320-00-165-8768	100	30
			91	5
96906	MS20426B4-5	5320-00-165-8771	91	8
96906	MS20426B4-6	5320-00-165-8772	102	8
96906	MS20470B3-5	5320-00-236-3883	91	1
96906	MS20470B4-9	5320-00-245-4323	102	9
96906	MS20604-AD4W2	5320-00-957-2515	36	28
96906	MS20613-14P16	5320-01-352-3401	120	16
96906	MS20913-1	4730-00-188-3509	82	48
96906	MS21044-NO8		82	44
96906	MS21209C1210	5340-00-753-3497	79	16
96906	MS21209C4-10L	5340-01-046-3702	106	16
96906	MS21209C4-20	5340-00-721-8352	79	15
96906	MS21209C7-15	5340-00-701-3811	79	14
96906	MS21236-2	1670-00-294-2954	103	1
			104	1
96906	MS21318-20	5305-00-253-5614	10	1
			15	1

CROSS-REFERENCE INDEXES

PART NUMBER INDEX

CAGEC	PART NUMBER	STOCK NUMBER	FIG.	ITEM
			5	1
96906	MS21318-21	5305-00-253-5615	103	9
			104	19
			105	1
			63	5
96906	MS21318-57	5305-00-253-5631	107	51
96906	MS21333-100	5340-00-809-1492	111	4
96906	MS21333-101	5340-00-088-6655	110	3
96906	MS21333-101	5340-00-088-6655	111	3
96906	MS21333-104	5340-00-088-1254	115	2
96906	MS21333-105	5340-00-809-1494	115	19
96906	MS21333-66	5340-00-990-7610	47	8
96906	MS21333-68	5340-00-843-7825	86	28
96906	MS21333-71	5340-00-057-2904	86	26
96906	MS21333-72	5340-00-091-3790	47	7
96906	MS21333-73	5340-00-057-2906	47	13
			86	25
96906	MS21333-75	5340-00-050-2740	75	4
96906	MS21333-77	5340-00-922-6300	47	5
96906	MS21333-81	5340-00-922-6302	75	5
96906	MS21334-28	5340-00-926-5449	47	4
96906	MS21919WCG18	5340-01-169-8331	71A	41
96906	MS21919WCG21	5340-01-242-4554	36	62
			38	32
			40	25
96906	MS21919WCG4	5340-01-146-7422	36	57
			41	4
			42	4
			43	4
96906	MS24523-32	5930-00-683-1624	86	42
96906	MS24665-498	5315-00-849-9854	107	41
96906	MS24665-625	5315-00-209-7273	107	48
96906	MS25036-101	5940-00-813-0698	89	2
96906	MS25036-102	5940-00-204-8966	95	3
96906	MS25036-106	5940-00-283-5280	51	3
			51	9
			52	3
			53	3
			54	8
			55	10
			58	9
			87	2
			88	3
			95	5
			96	3
			98	7
			98	12
			98	17
			99	4
96906	MS25036-108	5940-00-143-4780	51	5
			54	9
			55	9
			96	8
			98	8
			98	13
			98	18
			99	5

CROSS-REFERENCE INDEXES

PART NUMBER INDEX

CAGEC	PART NUMBER	STOCK NUMBER	FIG.	ITEM
96906	MS25036-111	5940-00-204-8990	88	4
			93	13
96906	MS25036-112	5940-00-143-4794	94	45
			94	48
			94	51
			94	54
			94	57
			94	60
			94	63
96906	MS25036-112	5940-00-143-4794	94	66
			94	69
			94	81
			94	84
			94	87
			94	138
			94	141
			94	144
			94	147
			94	150
			94	153
			94	156
			94	159
			94	162
			94	174
			94	177
			94	180
			96	5
			98	3
96906	MS25036-114	5940-00-113-9826	99	2
96906	MS25036-115	5940-00-143-5284	92	5
			94	27
			94	30
			94	33
			94	36
			94	39
			94	42
			94	120
			94	123
			94	126
			94	129
			94	132
			94	135
96906	MS25036-116	5940-00-114-1305	3	9
			50	5
96906	MS25036-118	5940-00-557-4345	48	7
96906	MS25036-119	5940-00-114-1310	94	16
			94	20
			94	24
96906	MS25036-120	5940-00-557-4344	94	15
			94	19
			94	23
96906	MS25036-122	5940-00-113-8190	97	13
			97	20
96906	MS25036-123	5940-00-557-4341	94	6
			94	9
			94	12
			94	72

CROSS-REFERENCE INDEXES

PART NUMBER INDEX

CAGEC	PART NUMBER	STOCK NUMBER	FIG.	ITEM
			94	75
			94	78
			94	99
			94	102
			94	105
			94	165
			94	168
			94	171
			97	3
			97	11
96906	MS25036-123	5940-00-557-4341	97	18
96906	MS25036-125	5940-00-557-4338	98	22
96906	MS25036-126	5940-00-557-4339	50	6
96906	MS25036-150	5940-00-113-8184	14	8
			54	5
			55	6
96906	MS25036-153	5940-00-143-4774	51	4
			51	10
			95	2
			96	6
			99	9
96906	MS25036-154	5940-00-230-0515	110	9
			14	9
			3	10
			50	7
			54	10
			55	5
			9	8
96906	MS25036-511		93	13
96906	MS25042-14DA	5935-01-175-8420	25	9
96906	MS25042-16DA	5935-01-189-3220	25	3
96906	MS25042-18DA	5935-00-161-3096	14	11
			9	10
96906	MS25042-24DA	5935-01-179-1572	3	12
96906	MS25043-14DA	5935-01-181-6651	59	6
96906	MS25043-16DA	5935-01-184-7188	58	6
96906	MS25043-18DA	5935-01-175-8419	92	41
96906	MS25043-24DA	5935-01-175-8417	92	44
96906	MS25043-32DA	5935-01-223-9420	92	53
96906	MS25043-36DA	5935-01-175-8418	92	47
96906	MS25086-118		92	6
96906	MS25225-1	5930-00-945-3356	86	43
96906	MS25225-3	5930-00-583-8613	86	38
96906	MS25269-Al	5945-00-852-7301	86	21
96906	MS27020-2	4730-01-135-5587	41	22
96906	MS27021-12		22A	7
96906	MS27021-12		22A	23
96906	MS27021-12		72A	4
96906	MS27022-10	4730-00-958-7117	22	5
96906	MS27022-12	4730-00-115-3740	22	6
			22A	30
			72A	9
96906	MS27024-12	4730-01-347-8544	22A	27
96906	MS27024-2	4730-01-135-2988	41	23
96906	MS27025-12	4730-00-083-7196	22A	3
			22A	19
			72A	7

CROSS-REFERENCE INDEXES

PART NUMBER INDEX

CAGEC	PART NUMBER	STOCK NUMBER	FIG.	ITEM
96906	MS27026-10	4730-01-115-5175	22	7
96906	MS27026-12	4730-00-410-9530	22	10
			22A	9
			72A	2
96906	MS27028-10	4730-00-936-4584	18	2
			18	13
			18	35
			18	46
96906	MS27028-12	4730-01-086-6157	18	24
			22A	31
96906	MS27029-10	4730-01-080-1899	18	7
96906	MS27029-10	4730-01-080-1899	18	18
			18	40
			18	51
96906	MS27029-12	5340-00-209-0675	18	29
			18	62
96906	MS27030-1	5330-01-138-2108	41	24
96906	MS27030-5	5330-00-360-0595	18	3
			18	10
			18	14
			18	21
			18	36
			18	43
			18	47
			18	54
			22	2
			22	8
			22	15
96906	MS27030-6	5330-00-612-2414	18	25
			18	32
			18	58
			18	65
			22	4
			22	11
			22	18
			22A	4
			22A	10
			22A	20
			22A	28
			22A	32
			72A	3
			72A	8
96906	MS27082-12		18	57
96906	MS27130-A28		75	3
96906	MS27130-A99	5310-01-161-7306	73	13
96906	MS27130-CR20	5310-01-118-1489	106	24
96906	MS27130-CR32	5310-01-041-9642	106	23
96906	MS27142-2	5935-00-462-6603	111	6
96906	MS27144-1	5935-00-167-7775	110	8
			111	7
96906	MS27183-18	5310-00-809-5998	107	45
96906	MS27183-21	5310-00-823-8803	125	3
			29	3
			30	3
96906	MS27183-23	5310-00-809-8533	79	6
96906	MS27183-30	5310-00-983-8485	107	42
96906	MS27183-41	5310-00-765-3197	82	43

CROSS-REFERENCE INDEXES

PART NUMBER INDEX

CAGEC	PART NUMBER	STOCK NUMBER	FIG.	ITEM
96906	MS27406-2	5930-00-726-9508	86	37
96906	MS27407-5	5930-00-011-7872	86	40
96906	MS27950-12	5306-01-054-0813	80	4
96906	MS27950-8	5306-00-141-7179	80	9
96906	MS27952-7	5310-00-088-8513	80	6
96906	MS27953-11	5306-01-137-9711	80	5
96906	MS27953-12	5306-01-137-8929	80	7
96906	MS27953-7	5306-00-140-4782	80	10
96906	MS27953-8	5306-00-457-1394	80	11
96906	MS27954-5	5340-00-150-4777	80	12
96906	MS27954-6	5340-01-143-7518	80	8
96906	MS3102R32-7P	5935-00-726-8317	88	2
96906	MS3102R36-5S	5935-00-878-8174	98	23
96906	MS3106F24-22P	5935-01-005-9258	3	14
96906	MS3108R32-7S	5935-00-848-9559	56	4
96906	MS3108R36-5P	5935-01-146-7330	50	11
96906	MS3212-17	5305-00-939-0493	86	35
96906	MS3212-18	5305-00-082-8439	92	43
96906	MS3212-25	5305-00-956-4470	100	11
96906	MS3212-28	5305-01-269-9226	93	4
			93	4
96906	MS3212-29	5305-00-340-4464	86	12
			92	13
			92	52
96906	MS3212-41	5305-00-928-0322	100	19
96906	MS3212-43	5305-00-839-3220	86	16
96906	MS3212-44	5305-01-136-4481	86	27
			93	21
96906	MS3212-46	5305-01-136-4480	93	18
			93	18
96906	MS3212-49	5305-00-182-9483	94	1
96906	MS3212-54	5305-01-067-8514	92	13
96906	MS3212-8	5305-00-993-9268	92	40
96906	MS3367-1-9	5975-00-074-2072	47	1
			93	26
96906	MS3367-2-9	5975-00-156-3253	93	23
			93	23
96906	MS3367-3-9	5975-00-451-5001	47	14
96906	MS3420-16	5365-00-141-6943	110	6
96906	MS3420-16A	5365-00-927-2972	56	6
96906	MS3420-20A	5365-00-644-0392	56	5
96906	MS3420-4A	5365-00-682-1427	25	8
			59	12
96906	MS3420-6A	5365-00-828-8526	59	13
96906	MS3450W14S-5S	5935-01-101-1535	59	11
96906	MS345OW16-10s	5935-01-026-8549	58	10
96906	MS3452W18-11s	5935-01-071-0331	98	14
			98	19
96906	MS3452W24-22s	5935-01-232-5284	98	4
96906	MS3452W32-7s	5935-01-171-1858	96	2
96906	MS3452W18-11s	5935-01-071-0331	98	9
96906	MS3456W16-10P	5935-01-026-2217	25	5
96906	MS3456WlB-1lP	5935-01-127-2089	14	13
			57	3
96906	MS3456W32-7P	5935-01-111-7591	56	2
96906	MS3456W14S-5P	5935-01-092-1612	25	11
96906	MS3456W18-11P	5935-01-127-2089	9	12

CROSS-REFERENCE INDEXES

PART NUMBER INDEX

CAGEC	PART NUMBER	STOCK NUMBER	FIG.	ITEM
96906	MS3456W18-11S	5935-01-035-5139	53	2
96906	MS35190-251	5305-00-958-5473	125	6
96906	MS35190-252	5305-00-957-6266	125	12
96906	MS35206-263	5305-00-984-6210	107	15
96906	MS35206-281	5305-00-988-1725	110	2
			111	2
			112	3
96906	MS35218-51	5305-00-068-1798	71A	1
96906	MS35307-305	5305-00-021-3616	100	4
			37	29
			94	2
96906	MS35307-306	5305-00-702-4523	103	56
			36	64
96906	MS35307-306	5305-00-702-4523	39	18
			40	12
			45	6
			60	3
			71	5
			71A	40
			90	4
			90	4
96906	MS35307-308	5305-00-207-8253	101	4
			102	3
			35	1
			39	21
			4	5
			47	12
			82	1
			90	3
96906	MS35307-309	5305-00-579-5238	83	99
96906	MS35307-312	5305-00-207-2297	34	15
			36	15
			37	15
			38	14
			39	14
			69	3
			72	14
96906	MS35307-313	5305-00-616-6370	45	5
96906	MS35307-314	5305-00-721-8010	36	23
			37	37
			4	3
			45	3
96906	MS35307-318	5305-00-702-9070	37	30
96906	MS35307-322	5305-00-145-8406	102	6
96906	MS35307-334	5306-00-543-4405	32	3
			38	55
96906	MS35307-334		71A	19
96906	MS35307-334	5306-00-543-4405	71A	21
96906	MS35307-336	5306-00-637-9674	32	6
96906	MS35307-338	5306-00-655-6170	5	27
			64	5
96906	MS35307-339	5306-00-727-4578	34	12
			36	12
			37	12
			38	11
			39	11
96906	MS35307-359	5305-00-717-5460	48	5

CROSS-REFERENCE INDEXES

PART NUMBER INDEX

CAGEC	PART NUMBER	STOCK NUMBER	FIG.	ITEM
96906	MS35307-360	5305-00-576-5417	63	3
			64	1
			71A	26
96906	MS35307-362	5305-00-717-5467	10	14
			61	1
			69	10
96906	MS35307-365	5305-00-847-1159	85	3
			85	3
96906	MS35307-385	5305-00-721-5298	74A	1
96906	MS35307-389	5305-00-660-2832	74	6
96906	MS35307-412	5305-00-907-0045	71	1
96906	MS35307-413	5305-00-021-3806	74A	6
96906	MS35307-414	5305-00-727-6804	71	4
			71A	7
96906	MS35307-414	5305-00-727-6804	80	13
96906	MS35307-427	5305-00-964-0643	71A	30
96906	MS35307-466	5305-00-923-8268	79	11
96906	MS35307-467	5305-00-943-8127	5	15
96906	MS35307-468	5305-00-943-2092	5	21
96906	MS35310-303	5305-01-058-8414	14	6
			3	7
			50	3
			54	4
			55	3
			9	6
96906	MS35333-105	5310-00-019-0669	86	36
96906	MS35333-108	5310-00-022-8834	14	5
			3	6
			50	2
			54	2
			55	2
			9	5
96906	MS35333-110	5310-00-022-8847	48	4
			92	8
96906	MS35335-33	5310-00-209-0786	107	23
96906	MS35335-35	5310-00-627-6128	107	28
96906	MS35335-60	5310-00-209-1239	36	34
96906	MS35335-a9	5310-00-942-5109	105	11
96906	MS35338-135	5310-00-933-8118	103	43
			104	13
			58	2
			59	2
			92	38
96906	MS35338-136	5310-00-929-6395	40	7
			86	33
			92	20
			94	90
96906	MS35338-137	5310-00-933-8119	100	9
			42	12
			43	9
			44	9
			86	6
			92	11
			92	50
			93	2
			93	2
96906	MS35338-138	5310-00-933-8120	100	17

CROSS-REFERENCE INDEXES

PART NUMBER INDEX

CAGEC	PART NUMBER	STOCK NUMBER	FIG.	ITEM
			103	49
			34	2
			36	2
			36	55
			37	2
			38	2
			39	2
			40	23
			41	2
			42	2
			43	2
			45	27
			47	3
			71A	2
			73	11
96906	MS35338-138	5310-00-933-8120	75	2
			86	2
			86	15
			93	16
			93	16
96906	MS35338-139	5310-00-933-8121	100	2
			101	2
			102	2
			103	57
			34	14
			35	2
			36	14
			37	14
			38	13
			39	13
			4	2
			40	11
			45	2
			47	10
			60	2
			69	2
			71	6
96906	MS35338-139		71A	43
96906	MS35338-139	5310-00-933-8121	72	13
			73	2
			82	2
			82	9
			82	23
			90	2
			92	11
96906	MS35338-14	5310-00-010-3327	35	25
96906	MS35338-140	5310-00-974-6623	32	2
			34	10
			36	10
			37	10
			38	9
			38	52
			39	9
			64	4
			71A	16
96906	MS35338-140		71A	24
96906	MS35338-141	5310-00-984-7042	10	12

CROSS-REFERENCE INDEXES

PART NUMBER INDEX

CAGEC	PART NUMBER	STOCK NUMBER	FIG.	ITEM
			103	3
			104	3
			15	15
			48	2
			61	2
			63	2
			64	2
			69	8
			71A	28
			74A	10
			85	2
			92	2
96906	MS35338-142	5310-00-973-8786	74	7
			74A	2
96906	MS35338-143	5310-00-933-8778	71	2
			71A	8
96906	MS35338-143	5310-00-933-8121	71A	38
96906	MS35338-143	5310-00-933-8778	76	6
			79	2
			80	2
96906	MS35338-145	5310-00-937-0453	5	13
			79	10
96906	MS35338-41	5310-00-045-4007	65	7
96906	MS35338-45	5310-00-407-9566	125	20
96906	MS35338-46	5310-00-637-9541	109	2
96906	MS35338-48	5310-00-584-5272	120	5
96906	MS35338-50	5310-00-820-6653	118	3
			125	2
			29	2
			30	2
96906	MS35338-51	5310-00-584-7888	107	3
96906	MS35387-1	9905-00-205-2795	107	17
96906	MS35387-2	9905-00-202-3639	107	16
96906	MS35478-1683	6240-00-044-6914	109	7
96906	MS35489-104	5325-00-641-2800	109	10
			112	1
			115	13
96906	MS35489-131	5325-00-081-7611	115	23
96906	MS35489-85	5325-00-270-8888	75	9
96906	MS35495-34	5305-00-492-1759	1	2
			1	5
			1	8
			1	11
96906	MS35649-204	5310-00-934-9760	100	16
			103	48
			34	1
			36	1
			36	54
			37	1
			38	1
			39	1
			40	22
			41	1
			42	1
			43	1
			47	2
			86	1

CROSS-REFERENCE INDEXES

PART NUMBER INDEX

CAGEC	PART NUMBER	STOCK NUMBER	FIG.	ITEM
			86	14
			93	15
			93	15
96906	MS35649-2254	5310-00-250-9477	100	1
			47	9
			92	10
96906	MS35649-2384	5310-00-477-6768	48	1
			83	1
96906	MS35649-2385B		92	1
96906	MS35649-244	5310-00-934-9748	58	1
			59	1
			92	37
96906	MS35649-264	5310-00-934-9761	40	6
			86	32
			92	19
96906	MS35649-284	5310-00-934-9759	100	8
			42	11
96906	MS35649-284	5310-00-934-9759	43	8
			44	8
			86	11
			92	10
			92	49
			93	1
			93	1
96906	MS35650-3255	5310-00-869-1018	14	4
			3	5
			50	1
			54	1
			55	1
			9	4
96906	MS35677-47	5315-01-096-2536	79	5
96906	MS35691-11	5310-00-989-5953	32	1
96906	MS35691-33	5310-00-834-8732	107	43
96906	MS35691-53	5310-00-835-2037	120	2
96906	MS35691-59	5310-00-934-9727	79	7
96906	MS35691-69	5310-00-971-7990	119	5
96906	MS35746-1	4730-00-595-0083	114	2
96906	MS35782-2	4820-00-720-4488	10	10
96906	MS35782-6	4820-00-276-9041	5	24
96906	MS35785-6	4820-00-057-0694	115	29
96906	MS35822-12A	5340-01-054-4937	BULK	26
96906	MS35826-12A	5340-01-367-8147	BULK	27
96906	MS35842-10	4730-00-908-3195	46	1
96906	MS35842-11	4730-00-908-3194	22	25
			34	18
			36	47
			40	1
			41	18
			45	14
			46	19
			75	10
96906	MS35842-12	4730-00-908-3193	75	6
96906	MS35842-14	4730-00-908-6292	126	63
			22A	17
96906	MS35842-16		119	15
96906	MS39133-1-B	4730-00-278-8257	114	4
96906	MS39133-2-B	4730-00-987-9073	114	3

CROSS-REFERENCE INDEXES

PART NUMBER INDEX

CAGEC	PART NUMBER	STOCK NUMBER	FIG.	ITEM
96906	MS39134-1	5360-00-906-7923	110	7
96906	MS39256-5B85	3030-00-541-4984	74	1
96906	MS39347-2	5940-00-021-3321	105	12
96906	MS39352-10		22	13
96906	MS49000-14		22	14
96906	MS49000-6		22	17
96906	MS49001-10	4730-01-432-9468	22	20
			22A	24
96906	MS51007-12	5330-00-914-7651	86	13
			92	54
96906	MS51007-13	5330-00-838-6935	92	48
96906	MS51007-4	5330-00-079-7839	59	7
96906	MS51007-5	5330-00-951-8268	58	7
96906	MS51007-6	5330-00-079-7840	92	42
96906	MS51007-9	5330-00-063-7889	92	45
96906	MS51021-81	5305-00-550-1864	74A	13
96906	MS51021-85	5305-00-245-8837	35	4
96906	MS51413-3	5310-01-285-9229	82	38
96906	MS51492-07		82	37
96906	MS51493-1	5305-01-335-7409	82	33
96906	MS51493-2		82	32
96906	MS51845-8	4730-00-150-8858	83	85
96906	MS51845-9		22A	11
96906	MS51846-115	4730-00-222-1842	15	10
96906	MS51846-122	4730-00-196-2017	38	19
96906	MS51846-138	4730-00-196-2022	37	18
96906	MS51846-144	4730-00-196-2028	22A	26
96906	MS51846-158	4730-00-196-2031	72A	13
96906	MS51846-20	4730-00-222-1837	41	13
			44	7
			45	22
			83	93
96906	MS51846-31	4730-00-196-1975	45	16
96906	MS51846-32	4730-00-196-1976	41	15
96906	MS51846-42	4730-00-193-2711	75	18
96906	MS51846-58	4730-00-222-1839	36	51
			41	25
96906	MS51849-102	5305-01-088-7419	126	31
96906	MS51859-8	5310-01-073-7031	69	13
96906	MS51922-1	5310-00-088-1251	107	38
			110	1
			111	1
			112	2
			115	1
			116	1
96906	MS51922-17	5310-00-087-4652	115	27
			117	1
			125	23
96906	MS51922-57	5310-00-067-6356	107	6
96906	MS51922-9	5310-00-984-3806	107	33
96906	MS51926-3	5340-00-078-7029	31	5
96906	MS51929-2	5340-00-057-6956	31	6
96906	MS51952-2	4730-00-277-5553	41	8
			42	10
			44	5
			45	17
			46	23

CROSS-REFERENCE INDEXES

PART NUMBER INDEX

CAGEC	PART NUMBER	STOCK NUMBER	FIG.	ITEM
96906	MS51952-8	4730-00-277-5546	10	9
			15	11
96906	MS51952-9	4730-01-197-1989	5	11
96906	MS51957-123	5305-00-411-0683	94	89
96906	MS51957-14	5305-00-054-5648	103	42
			104	12
96906	MS51957-16	5305-00-054-5650	58	4
			59	4
96906	MS51957-17	5305-00-054-5651	58	4
			59	4
96906	MS51957-19	5305-00-054-5653	58	5
			59	5
96906	MS51957-30	5305-00-054-6654	40	8
96906	MS51957-46	5305-00-054-6671	100	26
			42	13
			43	10
			44	10
96906	MS51957-46		82	42
96906	MS51957-46	5305-00-054-6671	86	5
96906	MS51957-61	5305-00-050-9227	41	11
96906	MS51957-63	5305-00-050-9229	45	26
96906	MS51957-64	5305-00-050-9230	47	6
			86	3
96906	MS51957-65	5305-00-050-9231	34	3
			36	3
			36	33
			36	56
			37	3
			38	3
			39	3
			40	24
			41	3
			42	3
			43	3
96906	MS51957-67	5305-00-050-9233	103	50
			38	31
96906	MS51957-70	5305-00-050-9236	10	5
			15	5
			5	5
96906	MS51957-84	5305-00-071-2087	82	21
96906	MS51958-64	5305-00-059-3660	73	10
96906	MS51958-67	5305-00-059-3663	75	1
96906	MS51959-29	5305-00-727-8832	92	22
96906	MS51959-35	5305-00-765-4346	92	17
96906	MS51959-43	5305-00-765-4257	103	5
			104	5
			106	1
96906	MS51959-63	5305-00-701-5074	103	7
96906	MS51967-11	5310-00-880-8189	120	12
96906	MS51967-20	5310-00-763-8920	125	1
			29	1
96906	MS51967-23		84	16
96906	MS51967-5	5310-00-880-7744	125	19
96906	MS51967-9	5310-00-761-0654	74A	16
96906	MS51968-14	5310-00-732-0560	120	4
			120	17
96906	MS51968-20	5310-00-763-8905	118	2

CROSS-REFERENCE INDEXES

PART NUMBER INDEX

CAGEC	PART NUMBER	STOCK NUMBER	FIG.	ITEM
			120	1
96906	MS51968-23	5310-00-763-8901	107	2
96906	MS51968-26	5310-00-763-8912	119	4
96906	MS51968-8	5310-00-732-0559	107	27
96906	MS51971-1	5310-00-903-5966	101	1
			102	1
			34	13
			36	13
			37	13
			38	12
			39	12
			4	1
			40	10
			45	1
			60	1
			69	1
			71A	37
96906	MS51971-1		71A	44
96906	MS51971-1	5310-00-903-5966	72	12
			73	1
96906	MS51971-1	5310-00-903-5966	82	24
			83	98
			90	1
96906	MS51971-2	5310-00-767-0445	34	9
			36	9
			37	9
			38	8
			38	51
			39	8
			64	3
			71A	15
			71A	25
96906	MS51971-3	5310-00-913-8881	10	11
			15	14
			63	1
			69	7
			71A	29
			85	1
			85	1
96906	MS51971-5	5310-00-768-0321	71A	32
			76	5
			79	1
			80	1
96906	MS51971-7	5310-00-764-6609	5	12
			79	9
			85	10
96906	MS51972-3	5310-00-903-1524	35	24
96906	MS51983-1	5310-00-518-5566	122	1
96906	MS51983-2	5310-00-594-8038	107	37
			122	1
96906	MS52125-2	6220-01-093-4439	109	3
96906	MS53007-1		115	35
96906	MS53007-2		115	4
96906	MS70095-3	4730-01-245-9148	22	1
96906	MS70095-4	4730-01-353-2984	22	3
96906	MS75020-1	5935-00-059-2841	110	5
96906	MS87006-32	4030-01-238-8943	10	7

CROSS-REFERENCE INDEXES

PART NUMBER INDEX

CAGEC	PART NUMBER	STOCK NUMBER	FIG.	ITEM
			15	7
			34	6
			34	34
			36	6
			37	6
			38	6
			39	6
			4	9
			4	16
			5	7
			5	19
96906	MS87008-3	4010-01-112-8082	107	9
96906	MS87008-5	4010-00-165-5607	107	11
96906	MS87008-7	4010-00-165-5606	107	13
96906	MS90557C44413S	5935-01-091-9166	49	2
96906	MS90558C32412P	5935-00-114-8708	97	10
			97	17
96906	MS90558C44413P	5935-01-092-4269	97	2
96906	MS90725-102	5305-00-069-5586	120	13
96906	MS90725-193	5305-00-939-9206	84	13
96906	MS90725-34	5306-00-225-8499	125	21
96906	MS90725-58		109	1
96906	MS90725-60	5305-00-269-3211	103	2
			104	2
96906	MS90725-64	5305-01-325-8387	125	24
96906	MS90727-125	5305-00-719-5274	120	18
96906	MS90727-164	5305-00-726-2551	118	4
			30	1
96906	MS90727-187	5305-00-916-2345	107	18
96906	MS90727-199	5305-00-928-9636	107	4
96906	MS90727-6	5306-00-068-0513	107	24
96906	MS9321-12	5310-00-903-2612	101	15
96906	MS9321-5		103	44
96906	MS9321-5		104	14
96906	MS9350-21	5340-01-006-5645	47	11
62707	M1OHA100		122	17
62707	M1OHA100		122	25
62707	M10HA101		122	18
62707	M10HA101		122	26
62707	M10HB102	3110-00-100-0268	122	9
62707	M10HB103	3110-00-100-0269	122	11
62707	M10HG124	5330-01-119-5827	122	5
62707	M10HG143		123	59
62707	M10HH104	5330-01-326-6749	122	10
62707	M10HH131		123	30
62707	M10HK101		122	4
62707	M10HM116-4	5306-01-337-6972	122	14
62707	M10HM117-4	5306-01-337-6973	122	22
62707	M10HM195		123	56
62707	M10HN104	5310-01-183-6844	122	8
62707	M10HN105	5310-01-183-6843	122	7
62707	M10HN107	5310-01-183-6830	122	6
62707	M10HN108		123	23
62707	M10HN136	5310-01-244-6894	123	35
62707	M10HR104	5325-01-361-8376	123	7
			123	34
62707	M1OHR105		123	9

CROSS-REFERENCE INDEXES

PART NUMBER INDEX

CAGEC	PART NUMBER	STOCK NUMBER	FIG.	ITEM
62707	M10HR155		123	44
62707	M10HS100		123	17
62707	M10HS143		123	46
62707	M10HS146		123	43
62707	M10HS147		123	52
62707	M10KY102		123	
62707	M10WG260X		123	58
62707	M10WH101		123	29
62707	M10WH146		123	57
62707	M10WJ107		123	31
62707	M10WJ108	5315-01-280-6184	123	36
62707	M10WJ117		123	8
62707	M10WJ118	5360-01-019-3541	123	10
			123	37
62707	M10WJ212X		123	
62707	M10WR303-520		124	6
81349	M103872D02		36	20
81349	M103872D02		37	26
81349	M103872D02		37	27
81349	M103872D02		40	17
81349	M103872D02		40	17
81349	M103872D02		40	18
81349	M103872D02		40	18
81349	M103872D03		38	26
81349	M103872D03		72	7
81349	M103872D03		72	8
81349	M103872D04		34	22
81349	M103872D04		38	42
81349	M103872D04		83	13
81349	M103872D04		83	14
81349	M103872D05		34	42
81349	M103872D05		39	24
81349	M103872D05		72	1
81349	M103872D05		83	47
81349	M103873D02		36	21
81349	M103873D03		38	27
81349	M103873D04		34	23
81349	M103873D04		38	43
81349	M103873D05		34	43
81349	M103873D05		39	25
81349	M103873D05		72	2
81349	M103873D05		83	48
36232	M11315-4		74A	23
62707	M12HD100		123	20
62707	M12KBH04		123	
62707	M12KY203		123	
62707	M12WA103	2530-01-340-0443	122	15
62707	M12WA103		122	23
62707	M12WD117X		123	6
62707	M12WH118X		123	25
62707	M12WH50G-L		123	54
62707	M12WH50G-R		123	55
62707	M12WKL10-233		123	24
62707	M12WKL15-233		123	53
62707	M12WKR10-233		123	24
62707	M12WKR15-233		123	53
62707	M12WN112X		123	11

CROSS-REFERENCE INDEXES

PART NUMBER INDEX

CAGEC	PART NUMBER	STOCK NUMBER	FIG.	ITEM
62707	M12WN112X	2530-01-129-7552	123	38
62707	M12WR101	2530-01-129-7552	123	16
62707	M12WS122		123	22
62707	M12WS131X		123	18
62707	M12WS159		123	51
62707	M12WS160X		123	47
81349	M13486/10-1	6145-00-705-6684	BULK	10
81349	M13486/1-5	6145-00-152-6499	BULK	71
62707	M16HD106		123	49
62707	M16HH100		123	19
62707	M16HH102		123	48
62707	M16WJ102	5340-01-239-0883	123	12
			123	39
62707	M16WJ103	5360-01-220-9373	123	13
			123	40
62707	M16WJ104		123	14
62707	M16WJ114		123	41
81349	M23053/1-108-0	5970-00-928-8812	BULK	42
81349	M23053/5-105-0	5970-00-954-1622	BULK	33
81349	M23053/5-106-9	5970-00-814-2878	BULK	34
81349	M23053/5-108-9	5970-00-082-3948	BULK	35
81349	M23053/5-109-2	5970-00-914-3117	BULK	36
19099	M23053/5-109-2-4		46	3
81349	M23053/5-109-4	5970-00-057-3545	BULK	37
19099	M23053/5-109-4-4		46	7
81349	M23053/5-109-5	5970-00-983-7997	BULK	38
19099	M23053/5-109-5-4		46	7
81349	M23053/5-109-6	5970-00-944-1380	BULK	39
19099	M23053/5-109-6-4		46	7
19099	M23053-HS		56	7
81349	M23190/1-3	5340-01-208-6233	93	22
			93	22
81349	M23190/1-4		93	25
81349	M23190/1-4		93	25
81349	M23190/1-5	5340-01-266-9498	93	24
			93	24
81349	M24243/1-A403	5320-00-083-5009	92	14
81349	M24243/1-B402	5320-00-510-7823	25	13
81349	M24243/1-B604	5320-00-493-4101	103	40
			104	7
			104	7
81349	M38268-2	4240-00-022-2946	126	7
81349	M43436/1-1	9905-00-752-4649	110	10
			111	9
81349	M43436/1-2	9905-00-841-4445	111	10
81349	M43436/1-3	9905-00-893-3570	110	12
81349	M5086/1-10-9	6145-00-003-9527	BULK	72
81349	M5086/1-12-9	6145-00-578-7521	BULK	73
81349	M5086/1-14-9	6145-00-578-7516	BULK	74
81349	M5086/1-16-9	6145-00-578-6072	BULK	75
81349	M5086/1-18-9	6145-00-578-7518	BULK	76
81349	M5086/1-20-9	6145-00-578-7519	BULK	77
81349	M5086/2-10-9	6145-00-578-7513	BULK	80
81349	M5086/2-4-9	6145-00-578-6595	BULK	78
81349	M5086/2-6-9	6145-00-578-6594	BULK	79
81349	M5086/2-8-9	6145-00-284-0657	BULK	81
81349	M5086/3-4-9		BULK	82

CROSS-REFERENCE INDEXES

PART NUMBER INDEX

CAGEC	PART NUMBER	STOCK NUMBER	FIG.	ITEM
81349	M5086/3-6-9	6145-00-284-0656	BULK	83
81349	M5086/3-8-9	6145-00-690-9320	BULK	84
81349	M63540/1-48C	5307-01-186-6875	73	5
			73	8
81349	M7928/2-39	5940-01-210-3173	87	3
81349	M85049/10-70W	5935-01-339-1563	50	10
81349	M85049/2-20C	5935-01-140-0742	56	3
36232	M9300-38	3110-00-144-8671	74A	24
96906	M935307-363	5305-00-208-1429	15	16
96906	M951968-2	5310-00-768-0319	107	22
80205	NAS1330C08B106	5310-00-110-2739	86	49
19099	NO6STRANDED		28	6
79172	NP2067		36	43
79172	NP2116	5330-01-137-3071	36	40
79172	NP2226		36	42
79172	NP2678		36	38
79172	NPXC2111	6680-01-239-5557	36	39
04816	NUS-0010	5310-01-304-9209	83	38
			83	109
04816	NUS-0013		83	28
04816	NUS-0013		83	101
79172	NUXL1044		36	44
04816	NUZ-0008		83	25
79172	NU1240		36	37
79172	NU1250		36	45
24446	N22P29028C11	5305-00-071-2070	107	44
50706	N3400P606		74	12
5H081	OG120		82	26
5H081	OR120		82	29
04816	ORB-029		83	44
04816	ORB-029		83	115
04816	ORB-110		83	35
04816	ORB-110TC		83	106
04816	ORB-132	5330-01-383-3194	83	37
			83	108
97403	PD4610-0077	4610-01-212-2704	126	54
76371	PLB-0007		82	7
30053	PPF		59	10
81348	PPP-T-66, TYI, CL2, BLACK		BULK	51
81348	PPP-T-66, TYI, CL2, LIGHTBLUE		BULK	52
81348	PPP-T-66, TYI, CL2, RED		BULK	54
81348	PPP-T-66, TYI, CL2, YELLOW		BULK	53
81348	PPP-T-66,TYI, CL2, PURPLE		BULK	50
19099	PPP-T-66TYICL2-337		34	25
19099	PPP-T-66TYICL2-338		36	18
19099	PPP-T-66TYICL2-339		37	24
19099	PPP-T-66TYICL2-340		38	45
19099	PPP-T-66TYICL2-341		39	27
31738	PS-77-9964	4330-01-347-9671	70	1
61424	PV86-1	4720-01-037-6268	BULK	64
79172	PXA48080		36	41
79172	P54257		36	36

CROSS-REFERENCE INDEXES

PART NUMBER INDEX

CAGEC	PART NUMBER	STOCK NUMBER	FIG.	ITEM
61424	P6BU6		23	17
19099	QQW343-3-10IN		48	8
81348	QQW343B08I1T	6145-01-157-2046	BULK	85
81348	QQW343C06B1B	6145-01-226-9164	BULK	86
81348	QQW343S20SIT		BULK	87
05472	RB3001A01		7	21
05472	RB4003A01		17	17
05472	RB4003A01		62	17
45327	RN-0530		22A	15
81348	RR-C-271		107	10
81348	RR-C-271		107	14
81348	RR-C-271		BULK	14
81348	RR-C-271, TYII,CL6		BULK	11
19099	RR-C-271TY2CL6-9		103	45
19099	RR-C-271TY2CL6-9		104	16
19099	RRC271TY1GRCCL4-3/8IN		107	12
80756	RSN-131SP		85	19
80756	RSN-87SP	5365-01-326-0910	85	12
36232	S-11044-14	6105-01-052-5376	74A	18
36232	S-11044-15	4320-01-101-7456	74A	27
81343	SAE-J844 1/2 OD TYPE B		BULK	62
81343	SAE-J844 3/8 OD TYPE B		BULK	61
19099	SC-4610-97-CL-E1 6-73		22	29
19099	SC-4610-97-CL-E1 6-92		22	28
61882	SC58		28	3
76371	SCS-0074		82	12
76371	SCS-0121		82	8
04816	SCZ-0007		83	26
81349	SE1-701		23	19
92021	SP-17-10		35	13
92021	SP-17-13	5330-00-126-5277	35	19
92021	SP-17-6		35	10
92021	SP-17-88		35	20
92021	SP-17-9	5330-00-126-5191	35	12
92021	SP-17-91164-3		35	18
92021	SP-17-91164-30		35	14
92021	SP-17-91164-4		35	9
92021	SP-17-91164-5		35	11
55719	SXW5		127	9
61882	S358		28	4
36232	T-13364-3	5975-01-055-4727	74A	30
81348	T-R-571, CL2, 3/4 IN		BULK	44
81348	T-R-605, TYM,CL1		BULK	45
61054	TG-2.0-125-01 Y-0		4	22
72661	TLS43	4730-01-316-9215	75	12
36232	T12806-5		74A	25
62321	T320WA6ABSP	4320-01-155-2646	10	16
36232	T9781-76		74A	17
12308	U25337	6630-01-044-0334	126	4

CROSS-REFERENCE INDEXES

PART NUMBER INDEX

CAGEC	PART NUMBER	STOCK NUMBER	FIG.	ITEM
81348	V-T-285, TYI, CL1, SCB, SIZEE		BULK	55
81348	V-T-285, TYI, CL1, SCB, SIZEE		BULK	56
75282	VAG-100		101	6
75282	VBA		101	10
81348	VF106CTY3ST1ASIZEHX 20IN D SAND		31	7
81348	VF106CTY3STlASIZEHX 201N 0 D GRN		31	7
75282	VFC-100		101	8
75282	VGG-100		101	7
75282	VLJSX-1		101	11
75282	VTG-100		101	9
04816	V42E-0000-00000		83	97
38151	V56T34FS525B		12	2
81348	W-B-101	6135-00-850-3177	126	2
81348	W-L-101/77A	6240-01-351-3889	126	18
81348	W-L-661-1-1-2	6230-00-901-9755	126	20
81348	W-R-55O,TYIII,CLB		28	1
81348	WL101-77T	6240-00-246-5052	101	13
01121	W-39	4520-01-237-8038	100	13
01121	W-46	5999-01-330-3451	100	15
01121	W-47	5999-01-343-8889	100	21
01121	W-63	5999-01-286-2883	100	23
01121	W-71		100	6
05472	XY3118A12		7	13
77260	X1655	5305-00-225-3842	115	17
19099	YCH0105X010LYB		34	7
19099	YCH0105X010LYB		34	35
19099	YCH0105X010LYB		36	7
19099	YCH0105X010LYB		37	7
19099	YCH0105X010LYB		38	7
19099	YCH0105X010LYB		39	7
19099	YCH0105X010LYB		4	10
19099	YCH0105X0105LYB		10	8
19099	YCH0105X01015LYB		15	8
19099	YCH0105X015LYB		4	17
19099	YCH0105X015LYB		5	8
19099	YCH0105X015LYB		5	20
41083	Y041833		68	5
41083	Y102641		68	27
41083	Y302646		68	23
41083	Y302647		68	24
41083	Y302657		68	25
41083	Y302716		68	22
41083	Y304745		68	29
41083	Y304746		68	28
41083	Y304747		68	30
41083	Y933976-10		68	6
41083	Y933987-03		68	26
81348	ZZ-H-561 GRA,STA,CL2		BULK.	30
81348	ZZ-T-381/GP3A/12-16.5/F/TBHR		107	30
81348	ZZ-T-381/GP3A/12-16.5/F/TBHR		121	1

CROSS-REFERENCE INDEXES

PART NUMBER INDEX

CAGEC	PART NUMBER	STOCK NUMBER	FIG.	ITEM
81348	ZZ-V-25TYIICL2		107	31
81348	ZZ-V-25TYIICL2		121	2
61748	001		126	6
61748	002		126	42
61748	003		126	12
64382	006004-1	4330-01-341-8622	85	9
75282	0722787B		101	12
50380	079097-20-A		65	12
50380	079329-15-A		65	8
50380	079339-05-H		65	28
50380	079342-36-B		65	32
0BZ82	095X0150C0BUNA		34	5
0BZ82	095X0150C0BUNA		36	5
0BZ82	095X0150C0BUNA		37	5
0BZ82	095X0200C0BUNA		34	33
0BZ82	095X0200C0BUNA		38	5
0BZ82	095X0200C0BUNA		39	5
0BZ82	095X0200C0BUNA		4	11
0BZ82	095X0200C0BUNA		5	10
1CY65	1-1/4 B-144 300#		38	20
03306	1-1/4X1KC2BRZ		61	4
03306	1-1/4X1KC2BRZ		15	19
81343	100R4-16	4720-00-882-1379	BULK	29
61748	103D0754500C26003		77	24
64382	106001-2		85	29
05472	10XN2520A10		7	5
05472	10XN2520A36		7	17
31738	11-0113		70	10
31738	11-0122		70	5
31738	11-0317		70	4
31738	11-0354		70	2
31738	11-0355		70	3
31738	11-0444-1		70	8
31738	11-0519		70	7
31738	11-2124		70	9
50153	11M018-5/8	5340-01-083-7084	124	2
50153	11M046	5310-01-166-0760	124	5
50153	11M050		124	3
50153	11M067		124	4
05472	11XF1032A06		17	8
05472	11XF1032A06		62	8
05472	11XF1032A06		7	9
61748	110032		77	26
61748	111327	5330-01-356-5089	77	
61748	111328	4820-01-357-3467	78	
61748	111329	5330-01-356-5081	78	
61748	111330	4320-01-357-6870	78	
61748	111428		127	1
61748	112C10355200A22200		77	16
19207	11639519-2	5330-00-462-0907	109	5
19207	11639520		109	9
19207	11639535		109	4
61748	116B1107300R15300	3120-01-356-5076	77	17
61748	119A0863400C221701		77	25
81343	12-140239		115	31
81343	12-E-140140		115	32
81343	12-E-140238		115	31

CROSS-REFERENCE INDEXES

PART NUMBER INDEX

CAGEC	PART NUMBER	STOCK NUMBER	FIG.	ITEM
93061	12HBL-8-4		85	14
61748	123A0789000T41500		77	7
61748	125A0788600E22100		78	13
61748	132D0702100K15700		77	18
61748	132D07021B0K15700		77	22
97403	13206E4482-3	5310-01-185-0586	125	5
			29	5
97403	13216E6192	5940-00-150-4682	96	4
97403	13217E0506-2	5310-00-191-4132	91	15
97403	13217E0518-2	5310-00-888-2878	91	9
97403	13217E0604-4	5305-00-719-3853	91	16
97403	13217E3043		125	22
97403	13218E0439-8	4730-01-125-4456	22	22
97403	13219E0469	5340-01-003-7718	1	6
			1	12
			103	6
			104	6
			106	2
			125	7
97403	13220E3830-2	5940-01-327-3962	52	4
97403	13220E3966-1		86	30
97403	13220E3966-1		93	6
97403	13220E3966-1		93	6
97403	13220E5288-2	5340-01-162-4325	106	10
97403	13220E5288-4	5340-01-165-3721	3	4
97403	13220E5288-5	5340-01-307-2683	23	2
97403	13220E5288-5		24	1
97403	13220E5346		103	4
97403	13220E5346		104	4
97403	13220E5373-1	5340-01-299-2964	106	5
97403	13221E8271-4	4820-01-326-7880	36	60
97403	13221E8271-4		41	12
97403	13221E8271-5	4820-01-243-9951	45	30
97403	13221E8271-6	4820-01-326-6801	45	28
97403	13221E8271-7	4820-01-337-4523	41	16
97403	13221E8271-8	4820-01-326-6800	45	29
97403	13221E8273		91	3
97403	13221E8274		1	9
97403	13221E8275		1	3
97403	13221E8278-1	4730-01-303-1228	34	8
			36	8
			37	8
97403	13221E8278-2	4730-01-303-1244	34	36
			38	17
			39	17
			4	12
97403	13221E8279-1	4730-01-127-7451	15	6
97403	13221E8279-2	4730-01-132-0905	5	6
97403	13221E8279-3		10	6
97403	13221E8279-4		4	15
97403	13221E8279-4		5	18
97403	13221E8283		39	23
97403	13221E8286		74	2
97403	13221E8286-1		74	3
97403	13221E8286-2		74	4
97403	13221E8287-1	5330-01-137-3060	5	17
97403	13221E8287-2	5330-01-133-8656	5	23

CROSS-REFERENCE INDEXES

PART NUMBER INDEX

CAGEC	PART NUMBER	STOCK NUMBER	FIG.	ITEM
97403	13221E8290-2	4730-01-107-7630	5	9
97403	13221E8291		73	12
97403	13221E8292-3		37	40
97403	13221E8292-4		36	27
97403	13221E8293		86	39
97403	13221E8297		103	8
97403	13221E8298		104	11
97403	13221E8299		104	8
97403	13221E8301-1	5925-01-128-6405	94	94
97403	13221E8301-2	5925-01-128-6404	94	95
97403	13221E8302-1	5925-01-139-6337	94	93
97403	13221E8303-1	5925-01-128-6403	94	92
97403	13221E8304		104	10
97403	13221E8305		91	2
97403	13221E8306		104	9
97403	13221E8308-3	5975-01-366-0326	50	8
97403	13221E8316-2		42	14
97403	13221E8318	5925-01-128-6284	92	23
97403	13221E8319		92	18
97403	13221E8320-3	5365-01-305-0554	34	38
			39	16
97403	13221E8320-4	5365-01-304-4607	34	17
			36	17
			37	17
97403	13221E8320-5	5310-01-306-2808	38	16
97403	13221E8321		36	66
97403	13221E8322-3	5340-01-332-2467	34	16
			36	16
			37	16
			38	15
97403	13221E8322-4	5340-01-332-2466	34	37
			39	15
97403	13221E8325		125	10
97403	13221E8326-1	6150-01-328-5754	53	1
19099	13221E8326-10		25	12
97403	13221E8326-2	6150-01-328-5755	57	2
97403	13221E8326-3	6150-01-328-5756	25	10
97403	13221E8326-4	6150-01-328-5757	25	4
97403	13221E8326-5	6150-01-328-5758	58	8
97403	13221E8328	4610-01-088-3233	126	27
97403	13221E8329	6640-01-168-0312	126	24
97403	13221E8330	5120-01-135-0062	126	30
97403	13221E8334	4610-01-115-7521	126	23
97403	13221E8335	6630-01-105-2058	126	44
97403	13221E8336-1		4	6
97403	13221E8336-5		39	19
19099	13221E8336-5-5		39	20
97403	13221E8336-7		36	25
19099	13221E8336-7-7		36	26
97403	13221E8336-8		37	38
19099	13221E8336-8-8		37	39
97403	13221E8336-9		40	14
19099	13221E8336-9-9		40	15
97403	13221E8337		45	7
97403	13221E8338		45	4
97403	13221E8339		45	8
97403	13221E8340	6685-01-144-2622	42	15

CROSS-REFERENCE INDEXES

PART NUMBER INDEX

CAGEC	PART NUMBER	STOCK NUMBER	FIG.	ITEM
97403	13221E8341-1	4610-01-116-0501	24	2
97403	13221E8341-2	4610-01-128-1844	24	3
97403	13221E8342	2540-01-115-1513	27	1
97403	13221E8344-2	4730-01-303-1229	38	18
97403	13221E8347		102	5
97403	13221E8348		102	7
19099	13221E8348-8		102	11
97403	13221E8367-1	4720-01-133-2736	BULK	65
97403	13221E8367-2	4720-01-132-0800	126	55
			BULK	66
97403	13221E8367-3		BULK	67
97403	13221E8367-4	4720-01-303-6396	BULK	68
97403	13221E8369	5310-01-121-1694	106	14
97403	13221E8370		34	27
97403	13221E8370		37	21
97403	13221E8371-1		104	17
97403	13221E8371-2		104	18
97403	13221E8377		85	5
97403	13221E8377-3		85	6
97403	13221E8380-1	5140-01-223-3440	1	7
97403	13221E8380-2	5140-01-223-3441	1	1
97403	13221E8381		1	10
97403	13221E8382		1	4
97403	13222E5239 DESERT SAND		31	1
97403	13222E5239 OLIVE DRAB GREEN		31	1
19099	13222E5239-1 OLIVE DRAB GREEN		31	4
19099	13222E5239-17 DESERT SAND		31	4
19099	13222E5239-1-8 DESERT SAND		31	2
19099	13222E5239-l-8 OLIVE DRAB GREEN		31	2
19099	13222E5239-9-15 DESERT SAND		31	3
19099	13222E5239-9-15 OLIVE DRAB GREEN		31	3
97403	13222E5247-l	6680-01-128-6273	34	29
97403	13222E5247-2	6680-01-128-6275	37	23
97403	13222E5247-3	6680-01-128-6274	34	41
97403	13222E5248		40	16
97403	13222E5250	4320-01-084-2235	8	1
97403	13222E5251-1		10	15
97403	13222E5251-2		15	17
97403	13222E5252		101	14
97403	13222E5255 DESERT SAND		9	1
97403	13222E5255 OLIVE DRAB GREEN		9	1
19099	13222E5255-11 DESERT SAND		9	2
19099	13222E5255-11 OLIVE DRAB GREEN		9	2
19099	13222E5255-4 DESERT SAND		9	3

CROSS-REFERENCE INDEXES

PART NUMBER INDEX

CAGEC	PART NUMBER	STOCK NUMBER	FIG.	ITEM
19099	1322235255-4 OLIVE DRAB GREEN		9	3
97403	13222E5256		63	4
97403	13222E5257		63	12
97403	13222E5258-1	6630-00-127-4774	126	25
97403	13222E5260	4320-01-083-9863	2	1
97403	13222E5260-10		5	22
97403	13222E5260-31		4	13
97403	13222E5260-32		4	14
97403	13222E5260-44		5	16
97403	13222E5261		5	28
97403	13222E5263		4	7
97403	13222E5265	4320-01-083-9859	13	1
97403	13222E5266		15	18
97403	13222E5266		61	3
97403	13222E5268 DESERT SAND		14	1
97403	13222E5268 OLIVE DRAB GREEN		14	1
19099	13222E5268-11 DESERT SAND		14	2
19099	13222E5268-11 OLIVE DRAB GREEN		14	2
19099	13222E5268-4 DESERT SAND		14	3
19099	13222E5268-4 OLIVE DRAB GREEN		14	3
97403	13222E5269 DESERT SAND		3	1
97403	13222E5269 OLIVE DRAB GREEN		3	1
19099	13222E5269-11 DESERT SAND		3	2
19099	13222E5269-11 OLIVE DRAB GREEN		3	2
19099	13222E5269-4 DESERT SAND		3	3
19099	13222E5269-4 OLIVE DRAB GREEN		3	3
97403	13222E5270		101	16
97403	13222E5271	6210-01-358-6040	101	5
97403	13222E5279-1		105	6
97403	13222E5279-10		103	25
97403	13222E5279-11		103	32
97403	13222E5279-12		103	22
97403	13222E5279-13		103	15
97403	13222E5279-14		103	30
97403	13222E5279-15		103	33
97403	13222E5279-16		103	17
97403	13222E5279-17		103	35
97403	13222E5279-18		103	18
97403	13222E5279-2		105	8
97403	13222E5279-20		103	26
97403	13222E5279-21		63	7
97403	13222E5279-22		63	6
97403	13222E5279-23		63	9
97403	13222E5279-24		63	8

CROSS-REFERENCE INDEXES

PART NUMBER INDEX

CAGEC	PART NUMBER	STOCK NUMBER	FIG.	ITEM
97403	13222E5279-25		103	24
97403	13222E5279-26		5	2
97403	13222E5279-27		10	2
97403	13222E5279-28		15	2
97403	13222E5279-29		103	12
97403	13222E5279-30		92	36
97403	13222E5279-31		103	34
97403	13222E5279-32		103	29
97403	13222E5279-33		103	31
97403	13222E5279-34		103	19
97403	13222E5279-35		103	20
97403	13222E5279-36		103	11
97403	13222E5279-37		63	10
97403	13222E5279-38		103	39
97403	13222E5279-39		92	35
97403	13222E5279-4		105	3
97403	13222E5279-40		92	34
97403	13222E5279-41		92	33
97403	13222E5279-42		105	2
97403	13222E5279-43		92	16
97403	13222E5279-44		103	28
97403	13222E5279-45		103	14
97403	13222E5279-46		103	13
97403	13222E5279-47		92	15
97403	13222E5279-48		103	16
97403	13222E5279-49		103	27
97403	13222E5279-5		105	4
97403	13222E5279-50		103	23
97403	13222E5279-55		103	36
97403	13222E5279-56		103	37
97403	13222E5279-57		103	38
97403	13222E5279-57		25	14
97403	13222E5279-58		36	29
97403	13222E5279-6		105	7
97403	13222E5279-7		103	21
97403	13222E5279-8		105	5
97403	13222E5279-9		104	20
97403	13222E5280		106	11
97403	13222E5281		71A	35
96906	13222E5281		71A	36
97403	13222E5282		64	6
97403	13222E5283		69	5
97403	13222E5283-3		69	6
97403	13222E5284		69	11
97403	13222E5284-3		69	12
97403	13222E5285		73	14
97403	13222E5286		71A	33
97403	13222E5287		88	1
97403	13222E5287-2		88	5
97403	13222E5287-3		88	6
97403	13222E5287-4		88	7
97403	13222E5288	6150-01-328-5759	56	1
97403	13222E5289-1	4730-01-133-9203	34	4
97403	13222E5289-1		36	4
97403	13222E5289-l		37	4
97403	13222E5289-2	4730-01-132-0904	34	32
			38	4

CROSS-REFERENCE INDEXES

PART NUMBER INDEX

CAGEC	PART NUMBER	STOCK NUMBER	FIG.	ITEM
			39	4
			4	8
97403	13222E5291		79	13
97403	13222E5292		79	17
97403	13222E5293		79	8
97403	13222E5297-1		94	5
97403	13222E5297-10		94	35
97403	13222E5297-11		94	38
97403	13222E5297-12		94	41
97403	13222E5297-13		94	44
97403	13222E5297-14		94	47
97403	13222E5297-15		94	50
97403	13222E5297-16		94	53
97403	13222E5297-17		94	56
97403	13222E5297-18		94	59
97403	13222E5297-19		94	62
97403	13222E5297-2		94	8
97403	13222E5297-20		94	65
97403	13222E5297-21		94	68
97403	13222E5297-22		94	71
97403	13222E5297-23		94	74
97403	13222E5297-24		94	77
97403	13222E5297-25		94	80
97403	13222E5297-26		94	83
97403	13222E5297-27		94	86
97403	13222E5297-28		48	6
97403	13222E5297-29		92	4
97403	13222E5297-3		94	11
97403	13222E5297-30		93	12
97403	13222E5297-31		92	24
97403	13222E5297-32		92	27
97403	13222E5297-33		92	30
97403	13222E5297-4		94	14
97403	13222E5297-5		94	18
97403	13222E5297-6		94	22
97403	13222E5297-7		94	26
97403	13222E5297-8		94	29
97403	13222E5297-9		94	32
19099	13222E5297W15-2-6-9		94	21
19099	13222E5297W16-2-6-9		94	25
19099	13222E5297W17-2-8-9		94	28
19099	13222E5297W19-2-8-9		94	34
19099	13222E5297W20-2-8-9		94	37
19099	13222E5297W21-2-8-9		94	40
19099	13222E5297W22-2-8-9		94	43
19099	13222E5297W23-l-10-9		94	46
19099	13222E5297W24-1-10-9		94	49
19099	13222E5297W25-1-10-9		94	52
19099	13222E5297W26-1-10-9		94	55
19099	13222E5297W27-1-10-9		94	58
19099	13222E5297W28-1-10-9		94	61

CROSS-REFERENCE INDEXES

PART NUMBER INDEX

CAGEC	PART NUMBER	STOCK NUMBER	FIG.	ITEM
19099	13222E5297W29-1-10-9		94	64
19099	13222E5297W30-1-10-9		94	67
19099	13222E5297W31-1-10-9		94	70
19099	13222E5297W32-2-4-9		94	73
19099	13222E5297W33-2-4-9		94	76
19099	13222E5297W34-2-4-9		94	79
19099	13222E5297W35-1-10-9		94	82
19099	13222E5297W36-1-10-9		94	85
19099	13222E5297W37-1-10-9		94	88
19099	13222E5297W59-2-8-9		92	7
19099	13222E5297W60-1-10-9		93	14
19099	13222E5297W61-1-12-9		92	26
19099	13222E5297W62-1-12-9		92	29
19099	13222E5297W63-1-12-9		92	32
19099	13222E5297W12-2-4-9		94	10
19099	13222E5297W13-2-4-9		94	13
19099	13222E5297W14-2-6-9		94	17
19099	13222E5297W18-2-8-9		94	31
19099	13222E5297W11-2-4-9		94	7
97403	13222E5298-2		98	1
97403	13222E5298-3		98	6
97403	13222E5298-4		98	11
97403	13222E5298-5		98	16
19099	13222E5298-5-108-9		98	24
97403	13222E5298-6		98	21
19099	13222E5298Wl0-2-4-9		98	25
19099	13222E5298W36-l-10-9		98	5
19099	13222E5298W7-1-14-9		98	10
19099	13222E5298W8-1-14-9		98	15
19099	13222E5298W9-1-14-9		98	20
97403	13222E5299		96	1
19099	13222E5299W4-1-12-9		96	9
19099	13222E5299W4-l-14-9		96	12
19099	13222E5299W4-1-16-9		96	10
19099	13222E5299W4-l-18-9		96	11
97403	13222E5300		90	5
97403	13222E5301		94	4
97403	13222E5302		94	97
97403	13222E5303		94	96
97403	13222E5304		100	29
97403	13222E5306		91	4
97403	13222E5306-1		91	12
19099	13222E5306-12		91	14
19099	13222E5306-3		91	7
19099	13222E5306-5		91	6
19099	13222E5306-7		91	13

CROSS-REFERENCE INDEXES

PART NUMBER INDEX

CAGEC	PART NUMBER	STOCK NUMBER	FIG.	ITEM
97403	13222E5306-8		91	17
97403	13222E5308		95	1
19099	13222E5308W3-1-16-9		95	6
19099	13222E5308W3-1-18-9		95	7
97403	13222E5309		99	1
19099	13222E5309W39-1-10-9		99	6
19099	13222E5309W39-1-14-9		99	7
19099	13222E5309W39-1-16-9		99	8
19099	13222E5311-0605		9	13
97403	13222E5311-1	6150-01-339-9669	9	11
97403	13222E5311-2	6150-01-361-6682	14	12
19099	13222E5311-2-0605		14	14
97403	13222E5311-5	6150-01-364-1537	3	13
19099	13222E5311-5-424		3	15
97403	13222E5312-1		51	8
97403	13222E5312-2		51	2
97403	13222E5312-3		52	2
97403	13222E5312-5		54	7
97403	13222E5312-6		55	8
97403	13222E5313		86	46
97403	13222E5315-1		86	31
97403	13222E5315-2		93	20
97403	13222E5315-2		93	20
97403	13222E5315-3		93	7
97403	13222E5315-4		86	20
97403	13222E5315-5		93	9
97404	13222E5315-6		93	11
97403	13222E5315-7		86	18
97403	13222E5316-1		93	19
97403	13222E5316-1		93	19
97403	13222E5321		85	7
97403	13222E5321-2		85	8
97403	1322235323		85	5
97403	13222E5323-2		85	6
97403	13222E5329-3	6685-01-361-6801	43	11
97403	13222E5329-4	6685-01-347-8658	44	11
97403	13222E5330		30	4
19099	13222E5330-147		69	15
97403	13222E5333		37	34
97403	13222E5334		37	32
97403	13222E5339		86	47
97403	13222E5340		86	4
97403	13222E5340-48		86	23
97403	13222E5340-51		86	22
97403	13222E5341		86	48
97403	13222E5342		86	8
19099	13222E5342-2		86	9
97403	13222E5343		103	59
97403	13222E5344		87	1
97403	13222E5344-1		87	5
97403	13222E5344-2		87	4
97403	13222E5379-47		103	10
97403	13222E5379-47		105	9
97403	13222E5311-4	6150-01-363-8006	50	9

CROSS-REFERENCE INDEXES

PART NUMBER INDEX

CAGEC	PART NUMBER	STOCK NUMBER	FIG.	ITEM
97403	13222E7083		120	7
97403	13222E7084		120	6
97403	13222E7085	5306-01-337-5440	120	3
97403	13222E7086		120	10
97403	13222E7087		119	11
97403	13222E7088		120	11
97403	13222E7088-1		120	23
97403	13222E7088-10		120	14
97403	13222E7088-2		120	22
97403	13222E7088-3		120	21
97403	13222E7088-4		120	20
97403	13222E7088-5		120	19
97403	13222E7088-6		120	15
97403	13222E7089		121	4
97403	13222E7090		118	1
97403	13222E7091		120	9
97403	13222E7092	5306-01-122-2440	119	6
97403	13222E7093		107	32
97403	13222E7093		121	3
97403	13222E7095	5340-01-337-4577	107	29
97403	13222E7096		107	53
97403	13222E7097		107	52
97403	13222E7098		107	8
97403	13222E7099		107	5
97403	13222E7100	2330-01-226-0709	107	1
97403	13222E7101		125	18
19099	13222E7101-95		125	25
97403	13222E7104		119	3
97403	13222E7105		119	2
97403	13222E7106		119	8
97403	13222E7107		118	5
97403	13222E7108		119	9
97403	13222E7109		119	7
97403	13222E7110		113	1
19099	13222E7110-31		115	10
19099	13222E7110-36		115	8
19099	13222E7110-37		115	11
19099	13222E7110-7		115	9
97403	13222E7111		114	1
97403	13222E7111-3		114	5
97403	13222E7112		115	3
97403	13222E7113-1		BULK	17
97403	13222E7113-2		BULK	18
97403	13222E7115-1		115	30
97403	13222E7117-1	4720-01-118-9326	115	14
97403	13222E7117-2	4720-01-118-9327	115	15
97403	13222E7120		108	1
97403	13222E7122	6150-01-138-7084	110	4
19099	13222E7122-7		110	11
19099	13222E7122-9		110	13
97403	13222E7124		115	18
97403	13222E7125		112	4
97403	13222E7126	6150-01-339-9668	111	5
19099	13222E7126-5		111	11
19099	13222E7126-6		111	8
97403	13222E7127		112	5
97403	13222E7132		107	25

CROSS-REFERENCE INDEXES

PART NUMBER INDEX

CAGEC	PART NUMBER	STOCK NUMBER	FIG.	ITEM
19099	13222E7132-10		107	26
97403	13222E7135		107	49
97403	13222E7136		107	47
97403	13222E7137	4010-01-338-8370	107	40
97403	13222E7138-l	5306-01-337-5439	107	34
97403	13222E7138-2	5306-01-339-9552	107	39
97403	13222E7138-3	5306-01-339-9553	116	2
97403	13222E7139		107	36
97403	13222E7140		107	50
97403	13222E7141	5360-01-338-8529	107	46
97403	13222E7143		117	4
97403	13222E7144		117	3
97403	13222E7145	5120-01-112-3339	107	54
97403	13222E7160		107	35
97403	13222E7177		107	19
97403	13222E7182		120	8
97403	13222E7115-2		115	30
97403	13225E8715-1	4730-01-299-9465	75	7
97403	13225E8938		106	11
97403	13225E8940		30	4
97403	13226E0121		30	4
97403	13226E2204-4		51	1
97403	13226E2204-4		51	7
97403	13226E2204-5		55	7
97403	13226E2205-l		25	7
97403	13226E2205-5		14	10
97403	13226E2205-5		25	2
97403	13226E2205-5		52	1
97403	13226E2205-5		54	6
97403	13226E2205-5		86	10
97403	13226E2205-5		9	9
97403	13226E2205-5		92	46
97403	13226E2206-6	5975-00-661-0598	3	11
97403	13226E2207-13	5340-01-305-2787	106	7
97403	13226E2207-13	5340-01-305-2787	125	9
97403	13226E2207-15	5340-01-305-2788	106	4
97403	13226E2207-15	5340-01-305-2788	125	13
97403	13226E2207-16	5340-01-327-4611	125	14
97403	13226E2207-20	5340-01-331-4010	125	17
97403	13226E2207-21	5340-01-307-3898	106	8
97403	13226E2207-7		126	60
97403	13226E2208-10	5340-01-299-2965	106	9
97403	13226E2208-11	5340-01-302-8321	106	3
			125	16
97403	13226E2208-13	5340-01-331-4009	125	8
97403	13226E2208-14	5340-01-327-4612	125	15
97403	13226E2208-3	5340-01-346-7461	106	6
97403	13226E2210	4710-01-128-6277	70	19
97403	13226E2211-1	5325-01-355-7125	91	11
97403	13226E2211-2		100	31
97403	13226E2212	4610-01-105-2075	85	26
97403	13226E7981-l	4820-01-302-8981	40	5
97403	13226E7982-4	4820-01-302-8980	36	50
97403	13226E7989-l		23	20
97403	13226E7989-2		23	20
97403	13226E7989-3		23	20
97403	13226E7989-4		23	20

CROSS-REFERENCE INDEXES

PART NUMBER INDEX

CAGEC	PART NUMBER	STOCK NUMBER	FIG.	ITEM
97403	13226E7990-1	7240-01-223-3438	23	3
97403	13226E7990-2	7240-01-223-3437	23	4
97403	13226E7990-3	7240-01-224-2852	23	5
97403	13226E7990-4	7240-01-223-3439	23	6
97403	13226E7991	4730-01-356-4768	23	14
97403	13226E7992-1	4730-01-350-6469	23	9
97403	13226E7992-2	4730-01-306-3092	23	9
97403	13226E7993-1	4730-01-363-6810	23	7
97403	13226E7993-2	4730-00-096-8872	23	7
97403	13226E7994-1	4730-01-350-0210	23	12
97403	13226E7994-3		23	12
97403	13226E7995-1	5340-01-307-4394	23	8
			46	17
97403	13226E7995-2	5340-01-307-4395	23	8
			46	13
97403	13226E8000		69	14
97403	13226E8323-1	4730-01-089-9245	46	16
97403	13226E8323-2	4730-01-304-5549	46	12
97403	13226E8324-1	4730-01-304-5551	46	8
97403	13226E8324-3	4730-01-304-5550	46	4
97403	13226E8327-1	5340-01-307-5989	23	13
			46	9
97403	13226E8327-2	5340-01-307-2679	23	13
			46	5
97403	13226E8328	4730-01-363-4101	23	11
97403	13226E8330	4730-01-356-5400	23	10
97403	13226E8331	7125-01-232-7686	23	1
97403	13226E8332		63	11
97403	13226E8340		89	1
97403	13226E8340-1		89	3
97403	13226E8341		86	24
97403	13227E0127-2	5940-01-364-4960	97	4
97403	13227E0127-3		97	12
97403	13227E0127-3		97	19
97403	13227E0127-4		94	109
97403	13227E0127-4		94	113
97403	13227E0127-4		94	117
97403	13227E0127-5		94	108
97403	13227E0127-5		94	112
97403	13227E0127-5		94	116
97403	13227E5590		100	28
97403	13227E5591	5945-01-338-5368	100	27
97403	13227E7581	6630-01-349-5253	25	15
97403	13227E7582	6145-01-331-3287	BULK	2
97403	13227E7583		59	9
97403	13227E7584	5995-01-333-8451	59	8
97403	13227E7585		25	1
97403	13227E7586	6680-01-322-0310	36	30
97403	13227E7589-1		103	52
97403	13227E7589-2		103	53
97403	13227E7589-3		103	54
97403	13227E7589-4		103	55
97403	13227E8836	4730-01-267-0001	126	56
97403	13227E9222-1		97	9
97403	13227E9222-2		97	16
19099	13227E922214-2-4-9		97	21
19099	13227E9222W4-2-6-9		97	22

CROSS-REFERENCE INDEXES

PART NUMBER INDEX

CAGEC	PART NUMBER	STOCK NUMBER	FIG.	ITEM
19099	13227E9222W5-2-4-9		97	14
19099	13227E9222W5-2-6-9		97	15
97403	13227E9228-1		94	98
97403	13227E9228-10		94	128
97403	13227E9228-11		94	131
97403	13227E9228-12		94	134
97403	13227E9228-13		94	137
97403	13227E9228-14		94	140
97403	13227E9228-15		94	143
97403	13227E9228-16		94	146
97403	13227E9228-17		94	149
97403	13227E9228-18		94	152
97403	13227E9228-19		94	155
97403	13227E9228-2		94	101
97403	13227E9228-20		94	158
97403	13227E9228-21		94	161
97403	13227E9228-22		94	164
97403	13227E9228-23		94	167
97403	13227E9228-24		94	170
97403	13227E9228-25		94	173
97403	13227E9228-26		94	176
97403	13227E9228-27		94	179
97403	13227E9228-29		93	12
97403	13227E9228-3		94	104
97403	13227E9228-4		94	107
97403	13227E9228-5		94	111
97403	13227E9228-6		94	115
97403	13227E9228-7		94	119
97403	13227E9228-8		94	122
97403	13227E9228-9		94	125
19099	13227E9228W11-3-4-9		94	100
19099	13227E9228W12-3-4-9		94	103
19099	13227E9228W14-3-6-9		94	110
19099	13227E9228W16-3-6-9		94	118
19099	13227E9228W19-3-8-9		94	127
19099	13227E9228W20-3-8-9		94	130
19099	13227E9228W21-3-8-9		94	133
19099	13227E9228W22-3-8-9		94	136
19099	13227E9228W23-1-l0-9		94	139
19099	13227E9228W24-1-10-9		94	142
19099	13227E9228W25-1-l0-9		94	145
19099	13227E9228W26-1-10-9		94	148
19099	13227E9228W27-1-l0-9		94	151
19099	13227E9228W28-1-l0-9		94	154
19099	13227E9228W29-1-10-9		94	157
19099	13227E9228W30-1-10-9		94	160
19099	13227E9228W31-1-10-9		94	163
19099	13227E9228W32-3-4-9		94	166

CROSS-REFERENCE INDEXES

PART NUMBER INDEX

CAGEC	PART NUMBER	STOCK NUMBER	FIG.	ITEM
19099	13227E9228W33-3-4-9		94	169
19099	13227E9228W34-3-4-9		94	172
19099	13227E9228W35-1-10-9		94	175
19099	13227E9228W36-1-10-9		94	178
19099	13227E9228W37-1-10-9		94	181
19099	13227E9228W59-l-10-9		93	14
19099	13227E9228W13-3-4-9		94	106
19099	13227E9228W15-3-6-9		94	114
19099	13227E9228W17-3-8-9		94	121
19099	13227E9228W18-3-8-9		94	124
97403	13227E9230		90	5
97403	13227E9232		100	29
97403	13227E9236		91	3
97403	13227E9238		36	52
97403	13227E9240-5		36	61
97403	13227E9242	2590-01-329-4757	107	20
97403	13227E9243	6150-01-328-4886	97	1
19099	13227E9243-3		97	6
19099	13227E9243-5		97	7
19099	13227E9243-7		97	8
97403	13227E9244	5995-01-333-8450	49	1
19099	13227E9244-5-106-9		49	4
19099	13227E9244-5-108-9		49	3
97403	13228E3312-10		46	6
97403	13228E3312-13		34	20
97403	13228E3312-13		36	49
97403	13228E3312-13		38	46
97403	13228E3312-13		40	2
97403	13228E3312-13		41	21
97403	13228E3312-13		46	22
97403	13228E3312-13		85	14
97403	13228E3312-14		22	23
97403	13228E3312-16		22	24
97403	13228E3312-6		46	15
97403	13228E3312-7		46	10
97403	13228E3312-8		41	20
97403	13228E3312-8		46	21
97403	13228E3312-g		46	14
97403	13228E3321-2		23	18
97403	13228E3323		35	5
97403	13228E8258	4710-01-326-7848	40	19
97403	13228E8259	4730-01-347-6845	34	39
97403	13228E8260		33	1
97403	13228E8260-l	4730-01-359-2929	37	19
19099	13228E8260-100		45	25
97403	13228E8260-101	4730-01-359-2930	41	17
			45	21
97403	13228E8260-102	4730-01-351-0588	45	20
19099	13228E8260-106		42	5
19099	13228E8260-107		42	7
19099	13228E8260-108		38	35
19099	13228E8260-109		44	3
19099	13228E8260-110		44	4

CROSS-REFERENCE INDEXES

PART NUMBER INDEX

CAGEC	PART NUMBER	STOCK NUMBER	FIG.	ITEM
19099	13228E8260-111		41	5
19099	13228E8260-112		41	7
19099	13228E8260-114		44	1
19099	13228E8260-118		41	19
19099	13228E8260-119		40	4
19099	13228E8260-12		36	48
19099	13228E8260-12		40	3
19099	13228E8260-121		40	27
19099	13228E8260-122		43	7
19099	13228E8260-123		34	19
19099	13228E8260-124		34	21
19099	13228E8260-125		43	5
19099	13228E8260-126		36	59
19099	13228E8260-128		42	8
19099	13228E8260-129		46	20
19099	13228E8260-131		38	33
97403	13228E8260-164	4730-01-326-6979	38	37
19099	13228E8260-304		45	15
97403	13228E8260-326		46	11
19099	13228E8260-354		45	24
19099	13228E8260-355		41	9
97403	13228E8260-356		46	18
97403	13228E8260-357		46	2
19099	13228E8260-52		45	13
19099	13228E8260-54		42	9
19099	13228E8260-72		45	9
97403	13228E8260-74	4730-01-354-8985	41	14
97403	13228E8260-74		44	6
19099	13228E8260-76		45	11
97403	13228E8260-94	4730-01-365-5554	38	34
19099	13228E8260-95		38	36
19099	13228E8260-96		45	19
19099	13228E8260-97		45	23
97403	13228E8261	4710-01-326-7845	40	28
97403	13228E8262	4730-01-350-1396	38	49
97403	13228E8263	4710-01-350-0146	36	22
97403	13228E8264	4730-01-350-0191	36	31
97403	13228E8265	4710-01-326-7850	39	26
97403	13228E8267	4730-01-347-6844	34	44
97403	13228E8268	4730-01-351-0587	34	45
97403	13228E8269	4710-01-350-0147	34	30
97403	13228E8270		33	1
97403	13228E8271		37	25
97403	13228E8272	4730-01-359-2932	37	20
97403	13228E8273	4710-01-350-1342	40	26
97403	13228E8274-l	4710-01-350-3628	40	21
97403	13228E8274-2	4710-01-350-3629	40	20
97403	13228E8275	4710-01-326-7852	38	48
97403	13228E8276	4730-01-359-2931	38	47
97403	13228E8277	4710-01-350-3631	34	24
97403	13228E8278	4710-01-326-7846	37	41
97403	13228E8279	4710-01-351-0576	38	44
97403	13228E8280	4710-01-326-7844	36	63
97403	13228E8281	4710-01-326-7849	39	29
97403	13228E8282	4730-01-359-2933	36	32
97403	13228E8283	4710-01-350-3630	34	48
97403	13228E8284	4710-01-361-6616	36	19

CROSS-REFERENCE INDEXES

PART NUMBER INDEX

CAGEC	PART NUMBER	STOCK NUMBER	FIG.	ITEM
97403	13228E8285	4710-01-326-7847	38	29
97403	13228E8286-2	4730-01-361-6686	37	28
97403	13228E8286-4	4730-01-364-8406	34	26
			38	41
97403	13228E8286-5	4730-01-363-8017	34	47
			39	30
			72	4
			83	79
97403	13228E8287-2	4730-01-363-8016	37	35
97403	13228E8287-3	4730-01-328-8103	38	28
			72	10
97403	13228E8288	4730-01-363-8019	38	30
97403	13228E8289	4730-01-357-1920	42	16
97403	13228E8291	4730-01-363-8018	34	31
97403	13228E8292	4710-01-326-7843	40	30
97403	13228E8293	4710-01-363-7931	40	29
97403	13228E8294-1	4730-01-331-3258	36	58
			37	36
			41	6
			42	6
			43	6
			44	2
97403	13228E8294-2	4730-01-331-3259	37	42
			39	28
			45	12
97403	13228E8294-3	4730-01-347-6846	45	10
97403	13228E8295		72	11
97403	13228E8296		BULK	48
97403	13228E8297		36	65
97403	13228E8300	4820-01-329-9105	36	46
97403	13228E8301	4820-01-326-7879	34	46
97403	13228E8302		60	5
97403	13228E8303	5930-01-347-6843	60	6
97403	13228E8305	4820-01-337-7130	37	33
97403	13228E8306		32	5
97403	13228E8307		22	27
97403	13229E0001		71A	9
97403	13229E000l-14		72A	6
97403	13229E000l-8		74A	3
71454	13229E0028		74A	8
97403	13229E0125		74A	4
97403	13229E0126		72A	15
97403	13229E0137		71A	13
97403	13229E0159	4610-01-408-2390	126	57
97403	13229E0160	4610-01-408-0690	126	58
97403	13229E0163-1		119	14
97403	13229E0163-2		119	13
97403	13229E0164		119	12
97403	13229E0352		71A	34
97403	13229E0353		71A	20
97403	13229E0372		38	50
97403	13229E0372		71A	14
97403	13229E0376-6		38	54
97403	13229E0376-6		71A	18
97403	13229E0376-6		71A	23
97403	13229EO385		1	3
97403	13229E0386		1	9

CROSS-REFERENCE INDEXES

PART NUMBER INDEX

CAGEC	PART NUMBER	STOCK NUMBER	FIG.	ITEM
97403	13229E0398		121	4
97403	13229E0399		120	6
97403	13229E0400		118	1
97403	13229E0401		120	3
97403	13229E0402		120	10
97403	13229E0509-1		22A	2
97403	13229E0509-2		22A	18
97403	13229E0510		22A	1
97403	13229E0512		22A	8
97403	13229E0513		22A	34
97403	13229E0519		126	59
97403	13229E0523-1		22A	21
97403	13229E0523-2		22A	5
97403	13229E0528		22A	14
97403	13229E0532		22A	16
97403	13229E1406		71A	3
97403	13229E1406-2		71A	5
97403	13229E1406-3		71A	4
97403	13229E1407		BULK	19
97403	13229E1408		BULK	32
97403	13229E1409		71A	6
97403	13229E3794-l		18	34
97403	13229E3794-2		18	45
97403	13229E3794-3		18	56
97403	13229E3795-1		18	1
97403	13229E3795-2		18	12
97403	13229E3795-3		18	23
97403	13229E3798		32	7
97403	13229E5626		72	19
97403	13229E5626-7		72	20
97403	13229E5627		72	16
97403	13229E5627-3		72	17
97403	13229E5628		72	3
97403	13229E5629		72	9
97403	13229E5631		72	18
97403	13229E5632		76	1
97403	13229E5632-l		76	2
97403	13229E5632-2		76	3
97403	13229E5633		79	3
97403	13229E5634		79	4
97403	13229E5635-18		75	8
97403	13229E5635-19		75	11
97403	13229E5635-2		71	7
97403	13229E6046		73	7
97403	13229E6046-1		73	9
97403	13229E6047		73	4
97403	13229E6047-1		73	6
97403	13229E6048		86	41
62531	1429-020		126	64
62531	1429-030		126	65
01121	1492-CBlG030		82	41
81348	151		126	53
61748	152B1016000B29100		77	6
50706	153B1026G19		74	9
61748	154B0823600B29100		77	13
50706	159C6200-1		74	10
50706	159C6900GOl		74	11

CROSS-REFERENCE INDEXES

PART NUMBER INDEX

CAGEC	PART NUMBER	STOCK NUMBER	FIG.	ITEM
81343	16-070102		72A	14
50380	160333	6110-01-326-7311	65	19
93061	169PL-4-2	4730-01-254-9853	81	6
93061	169PL-8-6		71A	10
50380	169P00l		65	17
50380	173P00l		65	23
03306	2-1/2X2ZC2BRONZE		5	29
04816	200-GG	5330-01-145-0718	83	33
71762	200-GG	5330-01-145-0718	83	105
81343	20-16140140	4730-01-254-0330	72A	16
62321	20101		11	17
62321	2029		11	14
06853	203680	4730-00-202-9170	116	4
01276	2082-6B	4730-00-427-5121	117	21
62321	20888	5330-01-130-1443	11	15
62321	21123-A		11	8
62321	21124-A		11	10
62321	21181		11	12
93061	211P-6		115	33
41083	212101		68	7
62321	21236		11	3
62321	21285		11	11
02697	2-217E540-80	5330-00-003-1686	85	15
02697	2-219-E540-80	5330-00-291-5138	85	21
02697	2-221-E540-80		85	23
02697	2-222-E540-80	5330-00-111-7407	85	25
			85	27
02697	2-358-E540-80	5330-01-301-5994	85	16
31738	22-0816	5330-01-326-0778	70	8
59112	22-178-2 AND 10-0504(2EA)	4610-01-154-6887	85	28
06853	225357	2530-00-797-9295	116	3
06853	228746	2530-01-182-8983	115	34
06853	230872	5365-00-378-9965	117	10
06853	230873	5365-00-378-9966	117	10
06853	232850	5310-01-162-3808	117	25
06853	233057		115	33
06853	235063		117	19
06853	235091	4730-00-580-8457	116	5
06853	235092	5330-00-285-5123	116	6
06853	235093	5360-00-706-9054	116	7
06853	235094	5310-00-679-3606	116	8
06853	235095	4330-00-739-6379	116	9
06853	235096		116	10
06853	236649		117	27
06853	236728	5330-00-733-4599	117	15
06353	238327		117	20
06853	238837	2530-00-708-9504	117	13
06853	239943		117	7
79227	24-SSK-0l-RK	4820-01-205-8278	35	
06853	240337		117	18
06853	242228	5305-00-390-0551	117	6
06853	243972		117	32
06853	243973	5330-00-494-2497	117	31
06853	245290		117	28
06853	246083	5330-00-425-2828	117	12
06853	246084		117	16

CROSS-REFERENCE INDEXES

PART NUMBER INDEX

CAGEC	PART NUMBER	STOCK NUMBER	FIG.	ITEM
06853	246085		117	11
06853	246086	4820-00-368-8293	117	8
06853	246087		117	29
06853	246209		117	24
06853	246895	3820-00-283-2149	117	22
76371	2506701000		83	8
5H081	25501-05005		82	28
5H081	25501-05005		82	31
5H081	25504-20020		82	30
5H081	25504-20040		82	27
41083	260039		68	18
41083	260040		68	13
41083	260041		68	19
41083	260043		68	20
41083	260047		67	4
41083	260048		68	10
41083	260049		68	11
41083	260057		68	32
41083	260231		68	16
41083	260232		68	3
41083	260233		66	2
41083	260234		65	1
41083	260235		68	1
41083	260236		67	1
41083	260237		66	1
41083	260239		68	21
41083	260240		68	31
41083	260241		68	17
41083	260244		66	5
41083	260246		127	8
41083	26132-019		82	17
50706	28ES06203GAABOO		74	13
50706	28ESD6202GAABOO		74	14
50706	28RA301290AAADCA02		74	17
50706	28SA30129007G00l		74	18
06853	281673		117	26
06853	281674		117	17
06853	281676		117	30
06853	281860	2530-00-622-6803	117	5
06853	291928	5306-01-108-8371	117	23
06853	291933		117	9
06853	296789		117	14
61748	300E0223100J13700		78	32
62321	3027-A		11	6
50153	3030 GC		124	1
90598	30629		103	41
79227	31-BSK-B-RK		35	
62321	3122-A		11	1
61748	317B0823500J13600		78	4
50380	32003-132-BB		65	20
50380	32426-008-JB		65	30
71454	3266257		78A	5
71454	3266258		78A	4
71454	3266260		78A	33
71454	3266306		78A	22
71454	3266324		78A	37
71454	3266335		78A	29

CROSS-REFERENCE INDEXES

PART NUMBER INDEX

CAGEC	PART NUMBER	STOCK NUMBER	FIG.	ITEM
71454	3266341		78A	13
71454	3266344		78A	20
71454	3266345		78A	15
71454	3266346		78A	16
71454	3266347		78A	17
71454	3266348		78A	19
71454	3266349		78A	2
71454	3266350		78A	3
71454	3266354		78A	6
71454	3266359		78A	7
71454	3266386		78A	11
71454	3266393		78A	9
71454	3266395		78A	10
71454	3266399		78A	12
71454	3266555		78A	31
71454	3266556		78A	32
71454	3266557		78A	36
71454	3266558		78A	35
71454	3266560		78A	34
71454	3268846		78A	27
71454	3269088		78A	23
71454	3269198		78A	14
71454	3269200		78A	
71454	3269201		78A	18
71454	3269204		78A	21
71454	3269205		78A	30
71454	3269207		78A	25
71454	3269209		78A	
71454	3269210		78A	24
71454	3269211		78A	
71454	3269262		78A	28
71454	3269821		78A	26
71454	3269861		78A	8
71454	3269862		78A	
62321	3288		11	5
31738	33-0411		70	13
31738	33-1725		70	12
50380	33502-002-HB		65	15
50380	33504-005-GB		65	25
50380	33519-003-HC		65	6
50380	33520-003-JE		65	10
50380	33520-005-JC		65	11
61748	337B0765300J12500		78	21
61748	338B0765400J12500		78	15
05472	34-5104-3226	6105-01-133-8082	17	1
05472	34-5104-3226	6105-01-133-8082	62	1
05472	34CB1000A01		17	6
05472	34CB1000A01		62	6
05472	34CB4500		17	3
05472	34CB4500		62	3
05472	34EP3102A01		17	12
05472	34EP3102A01		62	12
05472	34EP3300A24		17	15
05472	34EP3300A24		62	15
05472	34FH4001A05		17	9
05472	34FH4001A05		62	9
05472	34FN5002A01		17	10

CROSS-REFERENCE INDEXES

PART NUMBER INDEX

CAGEC	PART NUMBER	STOCK NUMBER	FIG.	ITEM
05472	34FN5002A0l		62	10
05472	34GSlOOO		17	7
05472	34GSlOOO		62	7
05472	34GSlOOl		17	4
05472	34GSlOOl		62	4
05472	34RA10032020A0l		62	18
05472	34RA10032020A0l		17	18
05472	34SA00053226A0l		62	19
05472	34SA00053226A0l		17	19
50380	34001-009-AD		65	24
50380	34036-008-AB		65	22
50706	35BC02XP3	3110-01-127-7380	74	16
38151	3514-1400-391		12	21
61748	353B0766004R52900	4320-01-357-4167	78	14
39428	3603T904		BULK	12
39428	3607T57	4010-01-280-0069	BULK	15
61748	366B0765700J12500		78	20
05472	37CBl00lA05		7	7
05412	37CB4500		7	3
05472	37E450X56	6105-01-145-7849	7	1
05472	37FE3101A0l		7	15
05472	37FH4000A0l		7	10
05472	37FN3000A03		7	11
05472	37GSl000		7	8
05472	37GSl00l		7	4
05472	37PE1302A0l		7	18
05472	37RA10072035A0l		7	23
05472	37SAE450X056		7	25
61748	370B1151001J12500		78	5
81349	38TB12		86	29
81349	38TB2		86	17
81349	38TB20		86	19
81349	38TB4		93	8
81349	38TB6		93	5
81349	38TB7		93	10
62707	38038	5325-01-061-0710	123	15
			123	42
76371	3809011		82	20
76371	3809026		82	14
76371	3809042		82	15
50380	39A012		65	16
50380	39POOO		65	27
19099	394283607T57		18	5
19099	394283607T57		18	9
19099	394283607T57		18	16
19099	394283607T57		18	20
19099	394283607T57		18	27
19099	394283607T57		18	31
19099	394283607T57		18	38
19099	394283607T57		18	42
19099	394283607T57		18	49
19099	394283607T57		18	53
19099	394283607T57		18	60
19099	394283607T57		18	64
89875	4-375		126	8
12623	4F-86XJ2-SS		46	24
61424	4GR	5365-01-246-4429	23	16

CROSS-REFERENCE INDEXES

PART NUMBER INDEX

CAGEC	PART NUMBER	STOCK NUMBER	FIG.	ITEM
64382	406001-l		85	18
64382	406002-2		85	22
64382	406003-l		85	20
64382	406004-l		85	13
64382	406006-2		85	24
64382	406008-l		85	30
64382	406012-l	5330-01-326-7322	85	23
50380	411625-11-A		65	36
50380	411864-96-B	5330-01-313-5632	65	33
50380	411878-10-A		65	35
50380	411881-15-A		65	13
41083	4163310002		68	2
41083	4170036023		67	3
41083	4170036025		65	3
41083	4170036026		68	15
41083	4170036321		68	9
41083	4170052139		65	2
41083	4170053031		68	8
41083	4170053044		67	2
41083	4170053093		68	14
41083	4170053219		68	4
41083	4170061718		66	11
41083	4170061723		66	6
04816	421-AH		83	34
62321	4231	5365-00-417-8925	11	9
04816	424-l l/2	4820-01-326-7313	83	24
04816	424-A		83	45
04816	424-AB6		83	116
04816	424-C		83	27
04816	424-C		83	100
04816	424-D		83	29
04816	424-D		83	102
04816	424-FB		83	30
04816	424-FB		83	103
04816	424-G		83	36
04816	424-GO		83	107
04816	424-H		83	41
04816	424-H		83	112
04816	424-J		83	40
04816	424-J		83	111
04816	424-K		83	39
04816	424-K		83	110
04816	424-L		83	42
04816	424-L		83	113
04816	424-M		83	43
04816	424-MO		83	114
04816	424-R		83	32
04816	424-R		83	104
04816	424-RA		83	
04816	424-RB	4410-01-208-2125	83	
04816	424-S		83	31
08132	43-0364-42		BULK	31
39428	4429K218		83	86
39428	4512K73		22A	13
39428	4568K222	4730-00-193-2716	15	13
39428	46505K31		81	10
OGF31	48-O		82	47

CROSS-REFERENCE INDEXES

PART NUMBER INDEX

CAGEC	PART NUMBER	STOCK NUMBER	FIG.	ITEM
OGF31	48-01-115		82	46
03306	48-l-0003-02		6	7
03306	48-l-0127-01		6	8
03306	48-l-0341		6	13
03306	48-l-0372-01		6	14
03306	48-l-0696		6	
03306	48-l-0697		16	
03306	48-l-0697		61	
03306	48-2-0001-04		6	10
03306	48-2-0299-10		16	5
03306	48-2-0299-10		61	9
03306	48-3-0133-01		6	15
03306	48-3-0139-01		6	17
03306	48-3-0159-01		16	8
03306	48-3-0159-01		61	12
03306	48-3-0167-01		16	2
03306	48-3-0167-01		61	6
03306	48-4-0076-01		6	5
03306	48-4-0120-01		16	7
03306	48-4-0120-01		61	11
76371	48Q	4730-01-326-7318	82	6
50706	5K28QPA6003A		74	8
50706	5OBCO3JP3	3110-01-127-7379	74	15
95019	500168-2	4730-00-906-0982	123	21
62707	500169-5		123	50
62707	500174-2		123	32
17330	5002-316/2		22A	29
62707	500356-9		123	27
95019	500357-10	5310-00-177-7749	122	3
95019	500357-13	5310-00-671-4109	123	2
62707	500358-17		123	5
95019	500370-l	5310-00-945-4478	123	26
97271	500371-5	5310-01-288-5668	123	1
62707	500371-8	5310-01-042-1006	122	13
			122	21
			123	4
62707	500396-10		123	28
95019	500397-8	5305-00-419-6520	122	2
03306	500-398		16	3
03306	500-398		61	7
03306	500-410	5330-01-302-7671	6	6
62707	500412-15	5306-01-183-2697	123	3
03306	500-422	4320-01-313-2841	16	9
			61	13
03306	500-423-l	4320-01-327-4582	6	18
03306	500-513		6	11
03306	500-750	4730-01-301-4298	6	2
03306	500-755	4730-01-301-4299	6	1
03306	500-771		16	1
03306	500-771		6	4
03306	500-771		61	5
03306	500-772		6	3
03306	500-774		6	16
03306	500-914		6	19
03306	500-976		16	6
03306	500-976		61	10
03306	500-983		6	12

CROSS-REFERENCE INDEXES

PART NUMBER INDEX

CAGEC	PART NUMBER	STOCK NUMBER	FIG.	ITEM
38151	5014-2201-0782		12	20
01121	509-AOD	6110-01-187-7259	100	20
01121	509-BOD	6110-01-153-2242	100	22
01121	509-DOD	6110-01-137-4721	100	5
01121	509-TOD/W-39	6110-01-013-6482	100	12
01121	509-TOXD	6110-01-035-9228	100	14
76371	51-NG		82	11
76371	51-SP		82	10
05472	51XB1016A07		17	5
05472	51XB1016A07		62	5
05472	51XN1032A20		17	14
05472	51XN1032A20		62	14
05472	51XT0832AO7		17	2
05472	51XT0832AO7		62	2
05472	51XT0832A07		7	2
76371	5100328000		BULK	60
03306	511-004		16	4
03306	511-004		61	8
50380	51351		65	21
76371	514148		82	13
39428	51875K58		71A	12
53059	53822		83	10
76371	5400647000		84	4
76371	5400648000		84	1
76371	5400649000		84	2
76371	5400679000		83	46
76371	5400690000	5330-01-326-0791	84	9
76371	5400691000		84	11
76371	5400704004		83	15
76371	5400704005		83	49
76371	5400749000		83	67
76371	5400750000		83	57
76371	5400751000		83	56
76371	5400752000		83	76
76371	5400753000		83	73
76371	5400754000		83	68
76371	5400755000	5330-01-326-6740	83	75
76371	5400756000		83	61
76371	5400757000		83	60
76371	5400775000		83	5
76371	5400776000		83	6
76371	5400778000		83	22
76371	5400779000		83	11
76371	5400780000		83	12
76371	5400781000		83	23
76371	5400782000		83	16
76371	5400783000		83	20
76371	5400784000		83	50
76371	5400785000		84	7
76371	5400788000		84	6
76371	5400789000		83	4
76371	5400821000		81	4
76371	5400821000		83	55
76371	5400829000		81	3
76371	5400851000	5310-01-326-7371	81	1
76371	5400852000		83	18
76371	5400877000		83	19

CROSS-REFERENCE INDEXES

PART NUMBER INDEX

CAGEC	PART NUMBER	STOCK NUMBER	FIG.	ITEM
76371	5400878000		83	51
76371	5400879000		83	7
76371	5400880000		83	2
76371	5400881000		83	3
76371	5400882000		83	53
76371	5400885000		84	3
76371	5500584000		80	14
76371	5500585000	6645-01-326-7316	82	5
76371	5500601000		84	12
76371	5500602000		83	58
76371	5500603000		83	74
76371	5500604000		83	65
76371	5500605000		83	77
76371	5500619000		84	8
76371	5500620000		84	10
76371	5500648001		83	17
76371	5500648002		83	21
76371	5500653001		83	72
76371	5500653002		83	70
76371	5500653003		83	63
76371	5500653004		83	64
76371	5500653005		83	69
76371	5500653006		83	62
76371	5500653007		83	71
76371	5500653008		83	66
76371	5500654000		83	54
76371	5500654002		83	59
76371	5500675000		82	4
76371	5500675000		84	5
76371	5500677000		83	78
76371	5500678000		83	52
79172	5510A02114XXL		36	35
38151	56T34F4MO		12	1
50380	57516		65	31
01121	595-A	5999-01-110-4623	100	7
			100	24
01121	595-B	6110-01-273-7849	100	25
81343	6-100110B		115	7
81343	6-100115B		115	6
81343	6-4-100102B		115	5
81343	6-4-14013OC		115	16
81343	6-6-100202B		115	12
64382	6CF005-1	5305-01-332-9263	85	17
64382	6CN002-1	5310-01-326-7320	85	10
64382	6CN003-1	5310-01-326-7321	85	11
50380	602006-74-X		65	38
50380	602018-31-A		65	9
50380	602453-49-MN		65	26
63624	60268		85	28
00779	60432-l	5940-00-150-4682	95	4
61748	601A1008800J12500		78	18
61748	601A1008900J12500		78	16
03306	61000504500	5330-00-823-7106	6	9
50380	613302-35-G		65	29
52676	6203Z	3110-00-555-5339	65	37
52676	6205Z	3110-00-293-9163	65	34
61748	623A0619501U51100	5330-01-356-1524	77	11

CROSS-REFERENCE INDEXES

PART NUMBER INDEX

CAGEC	PART NUMBER	STOCK NUMBER	FIG.	ITEM
61748	624B0823400U61000	5330-01-356-2451	77	14
61748	649A0559800J13700	5340-01-355-8670	78	30
61748	649A0559900J13700	5340-01-355-8671	78	29
61748	653-2		78	31
93061	66PL-4-4		81	9
93061	68PL-4-2	4730-01-365-6690	81	6
			81	8
93061	68PL-4-4		81	5
30554	70-005	6115-00-118-1240	29	6
39428	7587A33		126	61
63850	7601-l-MP	4820-01-184-9376	38	38
63850	7610-l		38	39
31738	77-0301-l	5360-01-326-2621	70	16
31738	77-0701-c	5340-01-326-2620	70	15
31738	77-0788-l		70	6
31738	77-9966A		70	20
81343	8-100110B	4730-01-048-7874	115	20
81343	8-100115B		115	21
81343	8-140137B		115	26
22527	8-572D	6640-01-086-7603	126	5
81343	8-6-100202B		115	22
81343	8-8-100103B		115	25
81343	8-8-8-100401B		115	24
63624	805-66		85	27
41083	805172-4		66	4
41083	805803-2		66	9
41083	805829-5		66	8
41083	806343-3		66	3
41083	807547		66	12
62321	8105	4320-01-167-7961	11	2
41083	811946		66	10
41083	815497-1		68	12
41083	815523		67	5
61748	824A0156914C42404		78	2
22973	830-701-1E		86	44
31738	88-2862		70	17
31738	88-2862A		70	14
62321	8988	5330-01-134-8688	11	16
61748	9G16CB25500		127	7
39428	90177A221	5365-01-328-4742	18	4
			18	8
			18	15
			18	19
			18	26
			18	30
			18	37
			18	41
			18	48
			18	52
			18	59
			18	63
39428	90177A224	5340-01-343-5833	18	6
			18	11
			18	17
			18	22
			18	28
			18	33

CROSS-REFERENCE INDEXES

PART NUMBER INDEX

CAGEC	PART NUMBER	STOCK NUMBER	FIG.	ITEM
			18	39
			18	44
			18	50
			18	55
			18	61
			18	66
			22	9
			22	12
			22	16
			22	19
61748	9101A0605A1		77	12
61748	9l01A610Al		77	8
61748	9102B0614A1		127	5
61748	9102F0514L4		77	15
61748	9102F0820P4	5305-01-355-8686	78	19
61748	9102F1016P4	5305-01-355-8685	78	3
61748	9108A161DF1		127	2
61748	9108El0lAW9		78	1
61748	911016200Al		127	3
61748	912016175A2		78	12
61748	9135A0404Al	5305-01-355-8655	77	5
39428	91650A450		85	12
39428	91650A490		85	19
50380	91P012		65	18
61748	9200W000245		77	4
61748	920104A00D5		77	3
61748	9205BAA4ED8		77	2
61748	9214DA03JD5		77	28
61748	9214DA06JD5	4730-01-359-0617	77	29
61748	9243BA23lA7	4820-01-358-6124	78	11
61748	9243BA328A7	4820-01-357-9660	78	28
61748	9243F000lA4		78	7
61748	9243F000lA4		78	23
61748	9243R0000A7		78	8
61748	9243R000lA7		78	24
61748	9243S000lA3		78	25
61748	9243S0002A3		78	9
61748	9243S0002A3		78	26
61748	9243VA200A2		78	10
61748	9243VA300A2		78	27
61748	9243W000041		127	4
61748	9243W000042		127	6
61748	9300W000119		78	17
61748	9300W000170	5330-01-356-2511	78	
61748	9410A14600M		78	6
61748	9410A23100M		78	22
61748	94111000103		77	9
61748	94111000127	5330-01-356-2436	77	23
62321	947-A		11	7
61748	9513ECABOBB	6680-01-359-4979	77	1
61748	9514BlD0000	3040-01-357-6569	77	27
OAK83	9518		80	14
OAK83	95180001-l		71A	11
OAK83	95181822		84	17
OAK83	9518182201-l		83	81
OAK83	9518182201-10		84	14
OAK83	9518182201-11		81	7

CROSS-REFERENCE INDEXES

PART NUMBER INDEX

CAGEC	PART NUMBER	STOCK NUMBER	FIG.	ITEM
OAK83	9518182201-2		83	83
OAK83	9518182201-3		83	84
OAK83	9518182201-4		83	87
OAK83	9518182201-5		83	89
OAK83	9518182201-6		83	88
OAK83	9518182201-7		83	94
OAK83	9518182201-8		83	95
OAK83	9518182201-9		83	96
OAK83	9518182202		82	25
OAK83	9518182203		82	34
OAK83	9518182204		82	35
OAK83	9518182204-A		82	36
OAK83	9518182205		82	39
OAK83	9518182206		82	40
OAK83	9518182207		82	45
OAK83	9518182208		84	15
OAK83	9518182209		35	23
OAK83	9518182210		35	26
OAK83	9518182211		35	31
OAK83	9518-5320		85	9
OAK83	9518-5320-l		85	18
OAK83	9518-5320-10		85	29
OAK83	9518-5320-11		85	20
OAK83	9518-5320-14		85	13
OAK83	9518-5320-16		85	22
OAK83	9518-5320-18		85	30
OAK83	9518-5320-2		85	24
62173	9569-l		115	34
61748	9610BECA041		77	21
61748	9610CECA00l	3110-00-100-0570	77	20
61748	96111000112		77	19
61748	96111000145		77	19
61748	96111000178		77	19
62321	9731-5.66		11	13
62321	9740-A-1		11	18
62321	9744		11	4
31738	99-1357-1		70	11
00843	99401-072		82	18
00843	99401-408		82	16

CROSS-REFERENCE INDEXES

FIGURE AND ITEM NUMBER INDEX

FIG.	ITEM	STOCK NUMBER	CAGEC	PART NUMBER
BULK	1		81349	CO-02HOF(3/14)0565
BULK	2	6145-01-331-3287	97403	13227E7582
BULK	3		81349	CO-04HDF(4/2-4/9R) 1480
BULK	4	6145-00-538-8760	81349	CO-04HOF(4/14)0605
BULK	5	6145-00-686-5188	81349	CO-04HOF(4/2)1400
BULK	6	6145-00-617-1382	81349	CO-04HLF(4/8)1000
BULK	7	6145-00-160-6187	81349	CO-05HOF(5/16)0525
BULK	8	6145-01-134-2847	81349	CO-30MOF(2/12-3/14-25/18)1000
BULK	9	6145-01-134-2855	81349	CO-03HOF(3/14)0565
BULK	10	6145-00-705-6684	81349	M13486/10-1
BULK	11		81348	RR-C-271, TYII,CL6
BULK	12		39428	3603T904
BULK	13		16003	C43974
BULK	14		81348	RR-C-271
BULK	15	4010-01-280-0069	39428	3607T57
BULK	16		81349	MIL-C-43006, TYI,CLl,FORMl
BULK	17		97403	13222E7113-l
BULK	18		97403	13222E7113-2
BULK	19		97403	13229E1407
BULK	20		81349	MIL-R-6855, CL2, TYA, GR30, 0.062
BULK	21		81349	MIL-R-6855, CL2, TYA, GR30, 0.125
BULK	22		81349	MIL-R-6855, CL2, TYA, GR50
BULK	23		81349	MIL-R-6855, CL2, TYA, GRSO, 0.062
BULK	24		81349	MIL-R-6855, CL2, TYA, GR50, 0.125
BULK	25		81349	MIL-R-6855, CL2, TYA, GR50, 0.250
BULK	26	5340-01-054-4937	96906	MS35822-12A
BULK	27	5340-01-367-8147	96906	MS35826-12A
BULK	28		81349	MIL-H-13444, TYI
BULK	29	4720-00-882-1379	81343	lOOR4-16
BULK	30		81348	ZZ-H-561 GRA,STA,CL2
BULK	31		08132	43-0364-42
BULK	32		97403	13229El408
BULK	33	5970-00-954-1622	81349	M23053/5-105-0
BULK	34	5970-00-814-2878	81349	M23053/5-106-9
BULK	35	5970-00-082-3948	81349	M23053/5-108-9
BULK	36	5970-00-914-3117	81349	M23053/5-109-2
BULK	37	5970-00-057-3545	81349	M23053/5-109-4
BULK	38	5970-00-983-7997	81349	M23053/5-109-5
BULK	39	5970-00-944-1380	81349	M23053/5-109-6
BULK	40	5970-00-242-0505	81349	MIL-I-46058, TYPEUR
BULK	41		81349	MIL-I-631, TYF, FORMTS, GRA,CLl
BULK	42	5970-00-928-8812	81349	M23053/1-108-0
BULK	43		81346	ASTM-B43 1IN RED BRASS
BULK	44		81348	T-R-571, CL2, 3/4 IN
BULK	45		81348	T-R-605, TYM,CLl
BULK	46		81348	ASTM-D2000 MlBC614

CROSS-REFERENCE INDEXES

FIGURE AND ITEM NUMBER INDEX

FIG.	ITEM	STOCK NUMBER	CAGEC	PART NUMBER
BULK	47		81346	ASTM-D-2000lAA310
BULK	48		97403	13228E8296
BULK	49	5970-00-419-4291	81349	MIL-I-24391
BULK	50		81348	PPP-T-66,TYI, CL2, PURPLE
BULK	51		81348	PPP-T-66, TYI, CL2, BLACK
BULK	52		81348	PPP-T-66, TYI, CL2, LIGHTBLUE
BULK	53		81348	PPP-T-66, TYI, CL2, YELLOW
BULK	54		81348	PPP-T-66, TYI, CL2, RED
BULK	55		81348	V-T-285, TYI, CLl, SCB, SIZEE
BULK	56		81348	V-T-285, TYI, CLl, SCB, SIZEE
BULK	57		81346	ASTM-B466 l/2 OD X 0.035 WALL
BULK	58		81346	ASTM-B466 l/4 OD X 0.035 WALL
BULK	59		81346	ASTM-B466 3/4 OD X 0.035 WALL
BULK	60		76371	5100328000
BULK	61		81343	SAE-J844 3/8 OD TYPE B
BULK	62		81343	SAE-J844 l/2 OD TYPE B
BULK	63		61424	E-43-0100
BULK	64	4720-01-037-6268	61424	PV86-1
BULK	65	4720-01-133-2736	97403	13221E8367-l
BULK	66	4720-01-132-0800	97403	13221E8367-2
BULK	67		97403	13221E8367-3
BULK	68	4720-01-303-6396	97403	13221E8367-4
BULK	69		81349	MIL-W-5665, TYII, CL2B
BULK	70		81346	ASTM-B134-072DIA 240ALLOY
BULK	71	6145-00-152-6499	81349	M13486/1-5
BULK	72	6145-00-003-9527	81349	M5086/1-10-9
BULK	73	6145-00-578-7521	81349	M5086/1-12-9
BULK	74	6145-00-578-7516	81349	M5086/1-14-9
BULK	75	6145-00-578-6072	81349	M5086/1-16-9
BULK	76	6145-00-578-7518	81349	M5086/1-18-9
BULK	77	6145-00-578-7519	81349	M5086/1-20-9
BULK	78	6145-00-578-6595	81349	M5086/2-4-9
BULK	79	6145-00-578-6594	81349	M5086/2-6-9
BULK	80	6145-00-578-7513	81349	M5086/2-10-9
BULK	81	6145-00-284-0657	81349	M5086/2-8-9
BULK	82		81349	M5086/3-4-9
BULK	83	6145-00-284-0656	81349	M5086/3-6-9
BULK	84	6145-00-690-9320	81349	M5086/3-8-9
BULK	85	6145-01-157-2046	81348	QQW343B08IlT
BULK	86	6145-01-226-9164	81348	QQW343C06BlB
BULK	87		81348	QQW343S20SIT
1	1	5140-01-223-3441	97403	1322138380-2
1	2	5305-00-492-1759	96906	MS35495-34
1	3		97403	13221E8275
1	3		97403	13229E0385
1	4		97403	13221E8382
1	5	5305-00-492-1759	96906	MS35495-34
1	6	5340-01-003-7718	97403	13219E0469
1	7	5140-01-223-3440	97403	13221E8380-l
1	8	5305-00-492-1759	96906	MS35495-34

CROSS-REFERENCE INDEXES

FIGURE AND ITEM NUMBER INDEX

FIG.	ITEM	STOCK NUMBER	CAGEC	PART NUMBER
1	9		97403	13221E8274
1	9		97403	13229E0386
1	10		97403	13221E8381
1	11	5305-00-492-1759	96906	MS35495-34
1	12	5340-01-003-7718	97403	13219E0469
2	1	4320-01-083-9863	97403	13222E5260
3	1		97403	13222E5269 DESERT SAND
3	1		97403	13222E5269 OLIVE DRAB GREEN
3	2		19099	13222E5269-11 DESERT SAND
3	2		19099	13222E5269-11 OLIVE DRAB GREEN
3	3		19099	13222E5269-4 DESERT SAND
3	3		19099	13222E5269-4 OLIVE DRAB GREEN
3	4	5340-01-165-3721	97403	1322035288-4
3	5	5310-00-869-1018	96906	MS35650-3255
3	6	5310-00-022-8834	96906	MS35333-108
3	7	5305-01-058-8414	96906	MS35310-303
3	8	5310-00-177-1156	88044	AN961-416T
3	9	5940-00-114-1305	96906	MS25036-116
3	10	5940-00-230-0515	96906	MS25036-154
3	11	5975-00-661-0598	97403	1322632206-6
3	12	5935-01-179-1572	96906	MS25042-24DA
3	13	6150-01-364-1537	97403	1322235311-5
3	14	5935-01-005-9258	96906	MS3106F24-22P
3	15		19099	13222E5311-5-424
4	1	5310-00-903-5966	96906	MS51971-1
4	2	5310-00-933-8121	96906	MS35338-139
4	3	5305-00-721-8010	96906	MS35307-314
4	4	5310-00-582-5677	96906	MS15795-810
4	5	5305-00-207-8253	96906	MS35307-308
4	6		97403	13221E8336-1
4	7		97403	13222E5263
4	8	4730-01-132-0904	97403	1322235289-2
4	9	4030-01-238-8943	96906	MS87006-32
4	10		19099	YCH0105X0l0LYB
4	11		OBZ82	095X0200COBUNA
4	12	4730-01-303-1244	97403	13221E8278-2
4	13		97403	13222E5260-31
4	14		97403	13222E5260-32
4	15		97403	13221E8279-4
4	16	4030-01-238-8943	96906	MS87006-32
4	17		19099	YCHOlOSX015LYB
4	18		61054	F25-SS
4	19		61054	AN-2.0-125SS-E ITEM 8
4	20		61054	KN-3.0-125-03 15 0-3-0
4	21		61054	C-2.0-125-02 150-18-0
4	22		61054	TG-2.0-125-01 Y-0
4	23		61054	FS-2.0-125-01 150-3-0
4	24		61054	BK-2.0-125-01 4-J-20-0
4	25		61054	BG-2.0-125-01 Y-0
4	26		61054	B-2.0-125-01 150-SC-18-0
5	1	5305-00-253-5614	96906	MS21318-20
5	2		97403	1322235279-26
5	3	5310-00-436-3290	96906	MS17830-3C
5	4	5310-00-883-9384	96906	MS15795-842

CROSS-REFERENCE INDEXES

FIGURE AND ITEM NUMBER INDEX

FIG.	ITEM	STOCK NUMBER	CAGEC	PART NUMBER
5	5	5305-00-050-9236	96906	MS51957-70
5	6	4730-01-132-0905	97403	1322138279-2
5	7	4030-01-238-8943	96906	MS87006-32
5	8		19099	YCH0105X015LYB
5	9	4730-01-107-7630	97403	13221E8290-2
5	10		OBZ82	095X0200COBUNA
5	11	4730-01-197-1989	96906	MS51952-9
5	12	5310-00-764-6609	96906	MS51971-7
5	13	5310-00-937-0453	96906	MS35338-145
5	14	5310-00-614-3505	96906	MS15795-820
5	15	5305-00-943-8127	96906	M835307-467
5	16		97403	13222E5260-44
5	17	5330-01-137-3060	97403	13221E8287-1
5	18		97403	1322138279-4
5	19	4030-01-238-8943	96906	MS87006-32
5	20		19099	YCH0105X015LYB
5	21	5305-00-943-2092	96906	MS35307-468
5	22		97403	1322235260-10
5	23	5330-01-133-8656	97403	1322138287-2
5	24	4820-00-276-9041	96906	MS35782-6
5	25	5310-00-241-6606	96906	Ms17830-5C
5	26	5310-00-625-5756	96906	MS15795-812
5	27	5306-00-655-6170	96906	MS35307-338
5	28		97403	13222E5261
5	29		03306	2-1/2X2ZC2BRONZE
6			03306	48-l-0696
6	1	4730-01-301-4299	03306	500-755
6	2	4730-01-301-4298	03306	500-750
6	3		03306	500-772
6	4		03306	500-771
6	5		03306	48-4-0076-01
6	6	5330-01-302-7671	03306	500-410
6	7		03306	48-l-0003-02
6	8		03306	48-l-0127-01
6	9	5330-00-823-7106	03306	61000504500
6	10		03306	48-2-0001-04
6	11		03306	500-513
6	12		03306	500-983
6	13		03306	48-l-0341
6	14		03306	48-l-0372-01
6	15		03306	48-3-0133-01
6	16		03306	500-774
6	17		03306	48-3-0139-01
6	18	4320-01-327-4582	03306	500-423-l
6	19		03306	500-914
7	1	6105-01-145-7849	05472	37E450X56
7	2		05472	51XT0832A07
7	3		05472	37CB4500
7	4		05472	37GS1001
7	5		05472	lOXN2520Al0
7	6		05472	HWl00lA25
7	7		05472	37CBl00lA05
7	8		05472	37GS1000
7	9		05472	llXF1032A06
7	10		05472	37FH4000A01
7	11		05472	37FN3000A03
7	12		05472	HW460OA73

CROSS-REFERENCE INDEXES

FIGURE AND ITEM NUMBER INDEX

FIG.	ITEM	STOCK NUMBER	CAGEC	PART NUMBER
7	13		05472	XY3118A12
7	14		05472	HA3104A14
7	15		05472	37FE3101A0l
7	16		05472	HW5100A06
7	17		05472	l0XN2520A36
7	18		05472	37PE1302A0l
7	19		05472	HA2006Al0
7	20	3110-01-130-1444	05472	BG6309B03
7	21		05472	RB300lA0l
7	22		05472	BG6206B03
7	23		05472	37RA10072035A0l
7	24		05472	HW3200A0l
7	25		05472	37SAE450X056
8	1	4320-01-084-2235	97403	13222E5250
9	1		97403	1322235255 DESERT SAND
9	1		97403	13222E5255 OLIVE DRAB GREEN
9	2		19099	13222E5255-11 DESERT SAND
9	2		19099	13222E5255-11 OLIVE DRAB GREEN
9	3		19099	13222E5255-4 DESERT SAND
9	3		19099	1322235255-4 OLIVE DRAB GREEN
9	4	5310-00-869-1018	96906	MS35650-3255
9	5	5310-00-022-8834	96906	MS35333-108
9	6	5305-01-058-8414	96906	MS35310-303
9	7	5310-00-177-1156	88044	AN961-416T
9	8	5940-00-230-0515	96906	MS25036-154
9	9		97403	13226E2205-5
9	10	5935-00-161-3096	96906	MS25042-18DA
9	11	6150-01-339-9669	97403	13222E5311-1
9	12	5935-01-127-2089	96906	MS3456W18-1lP
9	13		19099	13222E5311-0605
10	1	5305-00-253-5614	96906	MS21318-20
10	2		97403	13222E5279-27
10	3	5310-00-436-3290	96906	MS17830-3C
10	4	5310-00-883-9384	96906	MS15795-842
10	5	5305-00-050-9236	96906	MS51957-70
10	6		97403	1322138279-3
10	7	4030-01-238-8943	96906	MS87006-32
10	8		19099	YCH0105X015LYB
10	9	4730-00-277-5546	96906	MS51952-8
10	10	4820-00-720-4488	96906	MS35782-2
10	11	5310-00-913-8881	96906	MS51971-3
10	12	5310-00-984-7042	96906	MS35338-141
10	13	5310-00-773-7418	96906	MS15795-814
10	14	5305-00-717-5467	96906	MS35307-362
10	15		97403	13222E5251-l
10	16	4320-01-155-2646	62321	T320WA6ABSP
11	1		62321	3122-A
11	2	4320-01-167-7961	62321	8105
11	3		62321	21236
11	4		62321	9744
11	5		62321	3288
11	6		62321	3027-A
11	7		62321	947-A
11	8		62321	21123-A

CROSS-REFERENCE INDEXES

FIGURE AND ITEM NUMBER INDEX

FIG.	ITEM	STOCK NUMBER	CAGEC	PART NUMBER
11	9	5365-00-417-8925	62321	4231
11	10		62321	21124-A
11	11		62321	21285
11	12		62321	21181
11	13		62321	9731-5.66
11	14		62321	2029
11	15	5330-01-130-1443	62321	20888
11	16	5330-01-134-8688	62321	8988
11	17		62321	20101
11	18		62321	9740-A-1
12	1		38151	56T34F4MO
12	2		38151	V56T34FS525B
12	3		38151	A-9775-31CC
12	4		38151	A-102131-MM
12	5		38151	A-102045
12	6		38151	B-102373-A90
12	7		38151	A-102047
12	8		38151	A-77531-7
12	9		38151	A-9775-38CC
12	10		38151	A-102196A-1A
12	11		38151	A-102176A-N
12	12		38151	A-90109-712NN
12	13		38151	A-A102077A-A
12	14		38151	A-9757-17A
12	15		38151	A-76724-100CC
12	16		38151	A-S102116A-1
12	17	3110-01-330-1969	38151	A-7823R-25
12	18		38151	A-102021-A
12	19		38151	A-7823R-17
12	20		38151	5014-2201-0782
12	21		38151	3514-1400-391
13	1	4320-01-083-9859	97403	1322235265
14	1		97403	13222E5268 DESERT SAND
14	1		97403	13222E5268 OLIVE DRAB GREEN
14	2		19099	13222E5268-11 DESERT SAND
14	2		19099	13222E5268-11 OLIVE DRAB GREEN
14	3		19099	13222E5268-4 DESERT SAND
14	3		19099	13222E5268-4 OLIVE DRAB GREEN
14	4	5310-00-869-1018	96906	MS35650-3255
14	5	5310-00-022-8834	96906	MS35333-108
14	6	5305-01-058-8414	96906	MS35310-303
14	7	5310-00-177-1156	88044	AN961-416T
14	8	5940-00-113-8184	96906	MS25036-150
14	9	5940-00-230-0515	96906	MS25036-154
14	10		97403	13226E2205-5
14	11	5935-00-161-3096	96906	MS25042-18DA
14	12	6150-01-361-6682	97403	1322235311-2
14	13	5935-01-127-2089	96906	Ms3456W18-1lP
14	14		19099	13222E5311-2-0605
15	1	5305-00-253-5614	96906	Ms21318-20
15	2		97403	13222E5279-28
15	3	5310-00-436-3290	96906	Ms17830-3C
15	4	5310-00-883-9384	96906	MS15795-842
15	5	5305-00-050-9236	96906	MS51957-70

CROSS-REFERENCE INDEXES

FIGURE AND ITEM NUMBER INDEX

FIG.	ITEM	STOCK NUMBER	CAGEC	PART NUMBER
15	6	4730-01-127-7451	97403	13221E8279-l
15	7	4030-01-238-8943	96906	MS87006-32
15	8		19099	YCH0105X0l5LYB
15	9	4730-01-301-4269	96906	MS14306-7U
15	10	4730-00-222-1842	96906	MS51846-115
15	11	4730-00-277-5546	96906	MS51952-8
15	12	4730-00-189-3041	96906	MS14306-7V
15	13	4730-00-193-2716	39428	4568K222
15	14	5310-00-913-8881	96906	MS51971-3
15	15	5310-00-984-7042	96906	MS35338-141
15	16	5305-00-208-1429	96906	M935307-363
15	17		97403	13222E5251-2
15	18		97403	13222E5266
15	19		03306	l-1/4XlKC2BRZ
16			03306	48-l-0697
16	1		03306	500-771
16	2		03306	48-3-0167-01
16	3		03306	500-398
16	4		03306	511-004
16	5		03306	48-2-0299-10
16	6		03306	500-976
16	7		03306	48-4-0120-01
16	8		03306	48-3-0159-01
16	9	4320-01-313-2841	03306	500-422
17	1	6105-01-133-8082	05472	34-5104-3226
17	2		05472	51XT0832A07
17	3		05472	34CB4500
17	4		05472	34GSl00l
17	5		05472	51XB1016A07
17	6		05472	34CBl000A0l
17	7		05472	34GSl000
17	8		05472	llXF1032A06
17	9		05472	34FH400lA05
17	10		05472	34FN5002A0l
17	11		05472	HA3100A15
17	12		05472	34EP3102A0l
17	13		05472	HWSl00A03
17	14		05472	51XN1032A20
17	15		05472	34EP3300A24
17	16	3110-01-330-8303	05472	BG6203C03
17	17		05472	RB4003A0l
17	18		05472	34RA10032020A0l
17	19		05472	34SA00053226A0l
18	1		97403	13229E3795-1
18	2	4730-00-936-4584	96906	MS27028-10
18	3	5330-00-360-0595	96906	MS27030-5
18	4	5365-01-328-4742	39428	90177A221
18	5		19099	394283607T57
18	6	5340-01-343-5833	39428	90177A224
18	7	4730-01-080-1899	96906	MS27029-10
18	8	5365-01-328-4742	39428	90177A221
18	9		19099	394283607T57
18	10	5330-00-360-0595	96906	MS27030-5
18	11	5340-01-343-5833	39428	90177A224
18	12		97403	13229E3795-2
18	13	4730-00-936-4584	96906	MS27028-10
18	14	5330-00-360-0595	96906	MS27030-5

CROSS-REFERENCE INDEXES

FIGURE AND ITEM NUMBER INDEX

FIG.	ITEM	STOCK NUMBER	CAGEC	PART NUMBER
18	15	5365-01-328-4742	39428	90177A221
18	16		19099	394283607T57
18	17	5340-01-343-5833	39428	90177A224
18	18	4730-01-080-1899	96906	MS27029-10
18	19	5365-01-328-4742	39428	90177A221
18	20		19099	394283607T57
18	21	5330-00-360-0595	96906	MS27030-5
18	22	5340-01-343-5833	39428	90177A224
18	23		97403	13229E3795-3
18	24	4730-01-086-6157	96906	MS27028-12
18	25	5330-00-612-2414	96906	MS27030-6
18	26	5365-01-328-4742	39428	90177A221
18	27		19099	394283607T57
18	28	5340-01-343-5833	39428	90177A224
18	29	5340-00-209-0675	96906	MS27029-12
18	30	5365-01-328-4742	39428	90177A221
18	31		19099	394283607T57
18	32	5330-00-612-2414	96906	MS27030-6
18	33	5340-01-343-5833	39428	90177A224
18	34		97403	13229E3794-1
18	35	4730-00-936-4584	96906	MS27028-10
18	36	5330-00-360-0595	96906	MS27030-5
18	37	5365-01-328-4742	39428	90177A221
18	38		19099	394283607T57
18	39	5340-01-343-5833	39428	90177A224
18	40	4730-01-080-1899	96906	MS27029-10
18	41	5365-01-328-4742	39428	90177A221
18	42		19099	394283607T57
18	43	5330-00-360-0595	96906	MS27030-5
18	44	5340-01-343-5833	39428	90177A224
18	45		97403	1322933794-2
18	46	4730-00-936-4584	96906	MS27028-10
18	47	5330-00-360-0595	96906	MS27030-5
18	48	5365-01-328-4742	39428	90177A221
18	49		19099	394283607T57
18	50	5340-01-343-5833	39428	90177A224
18	51	4730-01-080-1899	96906	MS27029-10
18	52	5365-01-328-4742	39428	90177A221
18	53		19099	394283607T57
18	54	5330-00-360-0595	96906	MS27030-5
18	55	5340-01-343-5833	39428	90177A224
18	56		97403	13229E3794-3
18	57		96906	MS27082-12
18	58	5330-00-612-2414	96906	MS27030-6
18	59	5365-01-328-4742	39428	90177A221
18	60		19099	394283607T57
18	61	5340-01-343-5833	39428	90177A224
18	62	5340-00-209-0675	96906	MS27029-12
18	63	5365-01-328-4742	39428	90177A221
18	64		19099	394283607T57
18	65	5330-00-612-2414	96906	MS27030-6
18	66	5340-01-343-5833	39428	90177A224
19	1		76564	GATE 148-1-l/2 IN.
19	2		76364	GATE 148-7 l-1/2IN
19	3		76364	GATE 148-8 l-1/2IN
19	4		76364	GATE 148-5 l-1/2IN
19	5		76364	GATE 148-6 1-1/2IN

CROSS-REFERENCE INDEXES

FIGURE AND ITEM NUMBER INDEX

FIG.	ITEM	STOCK NUMBER	CAGEC	PART NUMBER
19	6		76364	GATE 148-9 l-1/2IN
20	1		76364	GATE 148-2 IN
20	2		76364	GATE 148-72 IN
20	3		76364	GATE 148-8 21N
20	4		76364	GATE 148-5 21N
20	5		76364	GATE 148-6 21N
20	6		76364	GATE 148-9 21N
21	1		81349	MIL-N-52110TYPEI SIZE 2
22	1	4730-01-245-9148	96906	MS70095-3
22	2	5330-00-360-0595	96906	MS27030-5
22	3	4730-01-353-2984	96906	MS70095-4
22	4	5330-00-612-2414	96906	MS27030-6
22	5	4730-00-958-7117	96906	MS27022-10
22	6	4730-00-115-3740	96906	MS27022-12
22	7	4730-01-115-5175	96906	MS27026-10
22	8	5330-00-360-0595	96906	MS27030-5
22	9	5340-01-343-5833	39428	90177A224
22	10	4730-00-410-9530	96906	MS27026-12
22	11	5330-00-612-2414	96906	MS27030-6
22	12	5340-01-343-5833	39428	90177A224
22	13		96906	MS39352-10
22	14		96906	MS49000-14
22	15	5330-00-360-0595	96906	MS27030-5
22	16	5340-01-343-5833	39428	90177A224
22	17		96906	MS49000-6
22	18	5330-00-612-2414	96906	MS27030-6
22	19	5340-01-343-5833	39428	90177A224
22	20	4730-01-432-9468	96906	MS49001-10
22	21	4730-00-277-1873	96906	MS14315-20Y
22	22	4730-01-125-4456	97403	13218E0439-8
22	23		97403	13228E3312-14
22	24		97403	13228E3312-16
22	25	4730-00-908-3194	96906	MS35842-11
22	26		81348	MIL-W-52482FIG4
22	27		97403	13228E8307
22	28		19099	SC-4610-97-CL-E1 6-92
22	29		19099	SC-4610-97-CL-E1 6-73
22A	1		97403	13229E0510
22A	2		97403	13229E0509-1
22A	3	4730-00-083-7196	96906	MS27025-12
22A	4	5330-00-612-2414	96906	MS27030-6
22A	5		97403	13229E0523-2
22A	6	4730-00-909-8627	01276	FF9311-36
22A	7		96906	MS27021-12
22A	8		97403	13229E0512
22A	9	4730-00-410-9530	96906	MS27026-12
22A	10	5330-00-612-2414	96906	MS27030-6
22A	11		96906	MS51845-9
22A	12		96906	MS14315-22X
22A	13		39428	4512K73
22A	14		97403	13229E0528
22A	15		45327	RN-0530
22A	16		97403	13229E0532
22A	17	4730-00-908-6292	96906	MS35842-14
22A	18		97403	13229E0509-2
22A	19	4730-00-083-7196	96906	MS27025-12
22A	20	5330-00-612-2414	96906	MS27030-6

CROSS-REFERENCE INDEXES

FIGURE AND ITEM NUMBER INDEX

FIG.	ITEM	STOCK NUMBER	CAGEC	PART NUMBER
22A	21		97403	13229E0523-1
22A	22	4730-00-909-8627	01276	FF9311-36
22A	23		96906	MS27021-12
22A	24	4730-01-432-9468	96906	MS49001-10
22A	25	4820-00-057-9056	59646	MSS-SP-80
22A	26	4730-00-196-2028	96906	MS51846-144
22A	27	4730-01-347-8544	96906	MS27024-12
22A	28	5330-00-612-2414	96906	MS27030-6
22A	29		17330	5002-316/2
22A	30	4730-00-115-3740	96906	MS27022-12
22A	31	4730-01-086-6157	96906	MS27028-12
22A	32	5330-00-612-2414	96906	MS27030-6
22A	33		96906	MS14305-9U
22A	34		97403	13229E0513
23	1	7125-01-232-7686	97403	13226E8331
23	2	5340-01-307-2683	97403	13220E5288-5
23	3	7240-01-223-3438	97403	13226E7990-1
23	4	7240-01-223-3437	97403	13226E7990-2
23	5	7240-01-224-2852	97403	13226E7990-3
23	6	7240-01-223-3439	97403	13226E7990-4
23	7	4730-01-363-6810	97403	13226E7993-1
23	7	4730-00-096-8872	97403	13226E7993-2
23	8	5340-01-307-4394	97403	13226E7995-1
23	8	5340-01-307-4395	97403	13226E7995-2
23	9	4730-01-350-6469	97403	13226E7992-1
23	9	4730-01-306-3092	97403	13226E7992-2
23	10	4730-01-356-5400	97403	13226E8330
23	11	4730-01-363-4101	97403	13226E8328
23	12	4730-01-350-0210	97403	13226E7994-l
23	12		97403	13226E7994-3
23	13	5340-01-307-5989	97403	13226E8327-l
23	13	5340-01-307-2679	97403	13226E8327-2
23	14	4730-01-356-4768	97403	13226E7991
23	15		76371	LLl-101
23	16	5365-01-246-4429	61424	4GR
23	17		61424	P6BU6
23	18		97403	13228E3321-2
23	19		81349	SEl-701
23	20		97403	13226E7989-1
23	20		97403	13226E7989-2
23	20		97403	13226E7989-3
23	20		97403	13226E7989-4
24	1		97403	13220E5288-5
24	2	4610-01-116-0501	97403	13221E8341-1
24	3	4610-01-128-1844	97403	13221E8341-2
25	1		97403	13227E7585
25	2		97403	13226E2205-5
25	3	5935-01-189-3220	96906	MS25042-16DA
25	4	6150-01-328-5757	97403	13221E8326-4
25	5	5935-01-026-2217	96906	MS3456W16-10P
25	6		19099	CO-03H0F-1-34
25	7		97403	13226E2205-l
25	8	5365-00-682-1427	96906	MS3420-4A
25	9	5935-01-175-8420	96906	MS25042-14DA
25	10	6150-01-328-5756	97403	1322138326-3
25	11	5935-01-092-1612	96906	MS3456W14S-5P
25	12		19099	13221E8326-10

CROSS-REFERENCE INDEXES

FIGURE AND ITEM NUMBER INDEX

FIG.	ITEM	STOCK NUMBER	CAGEC	PART NUMBER
25	13	5320-00-510-7823	81349	M24243/1-B402
25	14		97403	1322235279-57
25	15	6630-01-349-5253	97403	13227E7581
25	16	5920-00-296-0451	81349	FO2A250V1/8A
26	1		81349	MIL-T-53048
27	1	2540-01-115-1513	97403	13221E8342
28	1		81348	W-R-550,TYIII,CLB
28	2		61882	DS58
28	3		61882	SC58
28	4		61882	S358
28	5	5999-00-186-3912	61882	HDC58
28	6		19099	N06STRANDED
28	7		01667	CBA-70
29	1	5310-00-763-8920	96906	MS51967-20
29	2	5310-00-820-6653	96906	MS35338-50
29	3	5310-00-823-8803	96906	MS27183-21
29	4	5305-00-724-7224	80204	B1821BH063C250N
29	5	5310-01-185-0586	97403	1320634482-3
29	6	6115-00-118-1240	30554	70-005
30	1	5305-00-726-2551	96906	MS90727-164
30	2	5310-00-820-6653	96906	MS35338-50
30	3	5310-00-823-8803	96906	MS27183-21
30	4		97403	13222E5330
30	4		97403	13225E8940
30	4		97403	13226E0121
31	1		97403	13222E5239 DESERT SAND
31	1		97403	13222E5239 OLIVE DRAB GREEN
31	2		19099	13222E5239-1-8 DESERT SAND
31	2		19099	1322235239-l-8 OLIVE DRAB GREEN
31	3		19099	1322235239-9-15 DESERT SAND
31	3		19099	13222E5239-9-15 OLIVE DRAB GREEN
31	4		19099	13222E5239-1 OLIVE DRAB GREEN
31	4		19099	13222E5239-17 DESERT SAND
31	5	5340-00-078-7029	96906	MS51926-3
31	6	5340-00-057-6956	96906	MS51929-2
31	7		81348	VF106CTY3STlASIZEHX20IN D SAND
31	7		81348	VF106CTY3STlASIZEHX20IN 0 D GRN
32	1	5310-00-989-5953	96906	MS35691-11
32	2	5310-00-974-6623	96906	MS35338-140
32	3	5306-00-543-4405	96906	MS35307-334
32	4	5310-00-625-5756	96906	MS15795-812
32	5		97403	13228E8306
32	6	5306-00-637-9674	96906	MS35307-336
32	7		97403	13229E3798
33	1		97403	13228E8260
33	1		97403	13228E8270
34	1	5310-00-934-9760	96906	MS35649-204
34	2	5310-00-933-8120	96906	MS35338-138
34	3	5305-00-050-9231	96906	MS51957-65

CROSS-REFERENCE INDEXES

FIGURE AND ITEM NUMBER INDEX

FIG	ITEM	STOCK NUMBER	CAGEC	PART NUMBER
34	4	4730-01-133-9203	97403	13222E5289-l
34	5		OBZ82	095X0lS0C0BUNA
34	6	4030-01-238-8943	96906	MS87006-32
34	7		19099	YCH010SX0l0LYB
34	8	4730-01-303-1228	97403	13221E8278-1
34	9	5310-00-767-0445	96906	MS51971-2
34	10	5310-00-974-6623	96906	MS35338-140
34	11	5310-00-802-4701	96906	MS15795-813
34	12	5306-00-727-4578	96906	MS35307-339
34	13	5310-00-903-5966	96906	MS51971-1
34	14	5310-00-933-8121	96906	MS35338-139
34	15	5305-00-207-2297	96906	MS35307-312
34	16	5340-01-332-2467	97403	13221E8322-3
34	17	5365-01-304-4607	97403	13221E8320-4
34	18	4730-00-908-3194	96906	MS35842-11
34	19		19099	13228E8260-123
34	20		97403	13228E3312-13
34	21		19099	13228E8260-124
34	22		81349	M103872D04
34	23		81349	M103873D04
34	24	4710-01-350-3631	97403	13228E8277
34	25		19099	PPP-T-66TYICL2-337
34	26	4730-01-364-8406	97403	13228E8286-4
34	27		97403	13221E8370
34	28		81349	MIL-S-1222TYIVGR316
34	29	6680-01-128-6273	97403	13222E5247-1
34	30	4710-01-350-0147	97403	13228E8269
34	31	4730-01-363-8018	97403	13228E8291
34	32	4730-01-132-0904	97403	13222E5289-2
34	33		OBZ82	095X0200C0BUNA
34	34	4030-01-238-8943	96906	MS87006-32
34	35		19099	YCH0105X0l0LYB
34	36	4730-01-303-1244	97403	13221E8278-2
34	37	5340-01-332-2466	97403	13221E8322-4
34	38	5365-01-305-0554	97403	13221E8320-3
34	39	4730-01-347-6845	97403	13228E8259
34	40		81349	MIL-S-1222TYIVGR316
34	41	6680-01-128-6274	97403	13222E5247-3
34	42		81349	M103872D05
34	43		81349	M103873D05
34	44	4730-01-347-6844	97403	13228E8267
34	45	4730-01-351-0587	97403	13228E8268
34	46	4820-01-326-7879	97403	13228E8301
34	47	4730-01-363-8017	97403	13228E8286-5
34	48	4710-01-350-3630	97403	13228E8283
35		4820-01-205-8278	79227	24-SSK-Ol-RK
35			79227	31-BSK-B-RK
35	1	5305-00-207-8253	96906	MS35307-308
35	2	5310-00-933-8121	96906	MS35338-139
35	3	5310-00-582-5677	96906	MS15795-810
35	4	5305-00-245-8837	96906	MS51021-85
35	5		97403	13228E3323
35	6		92021	DPB-17-S2 DP17-91164A
35	7		92021	AXXHXN
35	8		92021	CXXHXL
35	9		92021	SP-17-91164-4
35	10		92021	SP-17-6

CROSS-REFERENCE INDEXES

FIGURE AND ITEM NUMBER INDEX

FIG.	ITEM	STOCK NUMBER	CAGEC	PART NUMBER
35	11		92021	SP-17-91164-5
35	12	5330-00-126-5191	92021	SP-17-9
35	13		92021	SP-17-10
35	14		92021	SP-17-91164-30
35	15		92021	AXXIXN
35	16		92021	AXXIXL
35	17		92021	AXX144
35	18		92021	SP-17-91164-3
35	19	5330-00-126-5277	92021	SP-17-13
35	20		92021	SP-17-88
35	21		92021	DP-17-2A
35	22		92021	DR-17-91164-1SA
35	23		OAK83	9518182209
35	24	5310-00-903-1524	96906	MS51972-3
35	25	5310-00-010-3327	96906	MS35338-14
35	26		OAK83	9518182210
35	27		79227	B-6780-Ml-VT-2-C
35	28		79227	B-6780-Ml-VT-2-D
35	29		79227	B-6780-Ml-VT-2-E
35	30		79227	B-6780-Ml-VT-2-F
35	31		OAK83	9518182211
35	32		79227	B-6780-Ml-VT-Z-K
35	33		79227	B-6780-Ml-VT-2-H
35	34		79227	B-6780-Ml-VT-2-I
36	1	5310-00-934-9760	96906	MS35649-204
36	2	5310-00-933-8120	96906	MS35338-138
36	3	5305-00-050-9231	96906	MS51957-65
36	4		97403	13222E5289-l
36	5		OBZ82	095X0150C0BUNA
36	6	4030-01-238-8943	96906	MS87006-32
36	7		19099	YCH0l05X0l0LYB
36	8	4730-01-303-1228	97403	13221E8278-l
36	9	5310-00-767-0445	96906	MS51971-2
36	10	5310-00-974-6623	96906	MS35338-140
36	11	5310-00-802-4701	96906	MS15795-813
36	12	5306-00-727-4578	96906	MS35307-339
36	13	5310-00-903-5966	96906	MS51971-1
36	14	5310-00-933-8121	96906	MS35338-139
36	15	5305-00-207-2297	96906	MS35307-312
36	16	5340-01-322-2467	97403	13221E8322-3
36	17	5365-01-304-4607	97403	1322138320-4
36	18		19099	PPP-T-66TYICL2-338
36	19	4710-01-361-6616	97403	13228E8284
36	20		8l349	M103872D02
36	21		81349	M103873D02
36	22	4710-01-350-0146	97403	13228E8263
36	23	5305-00-721-8010	96906	MS35307-314
36	24	5310-00-582-5677	96906	MS15795-810
36	25		97403	13221E8336-7
36	26		19099	13221E8336-7-7
36	27		97403	13221E8292-4
36	28	5320-00-957-2515	96906	MS20604-AD4W2
36	29		97403	13222E5279-58
36	30	6680-01-322-0310	97403	13227E7586
36	31	4730-01-350-0191	97403	13228E8264
36	32	4730-01-359-2933	97403	13228E8282
36	33	5305-00-050-9231	96906	MS51957-65

CROSS-REFERENCE INDEXES

FIGURE AND ITEM NUMBER INDEX

FIG.	ITEM	STOCK NUMBER	CAGEC	PART NUMBER
36	34	5310-00-209-1239	96906	MS35335-60
36	35		79172	5510A02114XXL
36	36		79172	P54257
36	37		79172	NU1240
36	38		79172	NP2678
36	39	6680-01-239-5557	79172	NPXC2111
36	40	5330-01-137-3071	79172	NP2116
36	41		79172	PXA48080
36	42		79172	NP2226
36	43		79172	NP2067
36	44		79172	NUXL1044
36	45		79172	NU1250
36	46	4820-01-329-9105	97403	13228E8300
36	47	4730-00-908-3194	96906	MS35842-11
36	48		19099	13228E8260-12
36	49		97403	13228E3312-13
36	50	4820-01-302-8980	97403	13226E7982-4
36	51	4730-00-222-1839	96906	MS51846-58
36	52		97403	13227E9238
36	53	4730-00-277-1896	96906	MS14315-5X
36	54	5310-00-934-9760	96906	MS35649-204
36	55	5310-00-933-8120	96906	MS35338-138
36	56	5305-00-050-9231	96906	MS51957-65
36	57	5340-01-146-7422	96906	MS21919WCG4
36	58	4730-01-331-3258	97403	13228E8294-l
36	59		19099	13228E8260-126
36	60	4820-01-326-7880	97403	13221E8271-4
36	61		97403	13227E9240-5
36	62	5340-01-242-4554	96906	MS21919WCG21
36	63	4710-01-326-7844	97403	13228E8280
36	64	5305-00-702-4523	96906	MS35307-306
36	65		97403	13228E8297
36	66		97403	13221E8321
37	1	5310-00-934-9760	96906	MS35649-204
37	2	5310-00-933-8120	96906	MS35338-138
37	3	5305-00-050-9231	96906	MS51957-65
37	4		97403	13222E5289-l
37	5		OBZ82	095X0150C0BUNA
37	6	4030-01-238-8943	96906	MS87006-32
37	7		19099	YCH0105X0l0LYB
37	8	4730-01-303-1228	97403	13221E8278-1
37	9	5310-00-767-0445	96906	MS51971-2
37	10	5310-00-974-6623	96906	MS35338-140
37	11	5310-00-802-4701	96906	MS15795-813
37	12	5306-00-727-4578	96906	MS35307-339
37	13	5310-00-903-5966	96906	MS51971-1
37	14	5310-00-933-8121	96906	MS35338-139
37	15	5305-00-207-2297	96906	MS35307-312
37	16	5340-01-332-2467	97403	13221E8322-3
37	17	5365-01-304-4607	97403	13221E8320-4
37	18	4730-00-196-2022	96906	MS51846-138
37	19	4730-01-359-2929	97403	13228E8260-l
37	20	4730-01-359-2932	97403	13228E8272
37	21		97403	13221E8370
37	22		81349	MIL-S-1222TYIVGR316
37	23	6680-01-128-6275	97403	13222E5247-2
37	24		19099	PPP-T-66TYICL2-339

CROSS-REFERENCE INDEXES

FIGURE AND ITEM NUMBER INDEX

FIG.	ITEM	STOCK NUMBER	CAGEC	PART NUMBER
37	25		97403	13228E8271
37	26		81349	M103872D02
37	27		81349	M103872D02
37	28	4730-01-361-6686	97403	13228E8286-2
37	29	5305-00-021-3616	96906	MS35307-305
37	30	5305-00-702-9070	96906	MS35307-318
37	31	5310-00-582-5677	96906	MS15795-810
37	32		97403	13222E5334
37	33	4820-01-337-7130	97403	13228E8305
37	34		97403	13222E5333
37	35	4730-01-363-8016	97403	13228E8287-2
37	36	4730-01-331-3258	97403	13228E8294-l
37	37	5305-00-721-8010	96906	MS35307-314
37	38		97403	13221E8336-8
37	39		19099	13221E8336-8-8
37	40		97403	13221E8292-3
37	41	4710-01-326-7846	97403	13228E8278
37	42	4730-01-331-3259	97403	13228E8294-2
38	1	5310-00-934-9760	96906	MS35649-204
38	2	5310-00-933-8120	96906	MS35338-138
38	3	5305-00-050-9231	96906	MS51957-65
38	4	4730-01-132-0904	97403	13222E5289-2
38	5		OBZ82	095X0200C0BUNA
38	6	4030-01-238-8943	96906	MS87006-32
38	7		19099	YCH0105X0l0LYB
38	8	5310-00-767-0445	96906	MS51971-2
38	9	5310-00-974-6623	96906	MS35338-140
38	10	5310-00-802-4701	96906	MS15795-813
38	11	5306-00-727-4578	96906	MS35307-339
38	12	5310-00-903-5966	96906	MS51971-1
38	13	5310-00-933-8121	96906	MS35338-139
38	14	5305-00-207-2297	96906	MS35307-312
38	15	5340-01-322-2467	97403	1322138322-3
38	16	5310-01-306-2808	97403	13221E8320-5
38	17	4730-01-303-1244	97403	13221E8278-2
38	18	4730-01-303-1229	97403	13221E8344-2
38	19	4730-00-196-2017	96906	MS51846-122
38	20		76364	GATE 1184-l 1/4IN
38	20		lCY65	l-1/4 B-144 300#
38	21		76364	GATE 1184-11-l 1/4IN
38	21		lCY65	B-144-6
38	22		76364	GATE 1184-9-1 1/4IN
38	22		lCY65	B-144-5
38	23		76364	GATE 1184-8-1 1/4IN
38	23		lCY65	B-144-10
38	24		76364	GATE 1184-7-1 1/4IN
38	24		lCY65	B-144-9
38	25		76364	GATE 1184-12-l 1/4IN
38	25		lCY65	B-144-8
38	26		81349	M103872D03
38	27		81349	M103873D03
38	28	4730-01-328-8103	97403	13228E8287-3
38	29	4710-01-326-7847	97403	13228E8285
38	30	4730-01-363-8019	97403	13228E8288
38	31	5305-00-050-9233	96906	MS51957-67
38	32	5340-01-242-4554	96906	MS21919WCG21
38	33		19099	13228E8260-131

CROSS-REFERENCE INDEXES

FIGURE AND ITEM NUMBER INDEX

FIG.	ITEM	STOCK NUMBER	CAGEC	PART NUMBER
38	34	4730-01-365-5554	97403	13228E8260-94
38	35		19099	13228E8260-108
38	36		19099	13228E8260-95
38	37	4730-01-326-6979	97403	13228E8260-164
38	38	4820-01-184-9376	63850	7601-l-MP
38	39		63850	7610-l
38	40	4730-01-275-0211	96906	MS14315-22Z
38	41	4730-01-364-8406	97403	13228E8286-4
38	42		81349	M103872D04
38	43		81349	M103873D04
38	44	4710-01-351-0576	97403	13228E8279
38	45		19099	PPP-T-66TYICL2-340
38	46		97403	13228E3312-13
38	47	4730-01-359-2931	97403	13228E8276
38	48	4710-01-326-7852	97403	13228E8275
38	49	4730-01-350-1396	97403	13228E8262
38	50		97403	13229E0372
38	51	5310-00-767-0445	96906	MS51971-2
38	52	5310-00-974-6623	96906	MS35338-140
38	53	5310-01-389-6965	96906	MS15795-812
38	54		97403	13229E0376-6
38	55	5306-00-543-4405	96906	MS35307-334
39	1	5310-00-934-9760	96906	MS35649-204
39	2	5310-00-933-8120	96906	MS35338-138
39	3	5305-00-050-9231	96906	MS51957-65
39	4	4730-01-132-0904	97403	13222E5289-2
39	5		OBZ82	095X0200C0BUNA
39	6	4030-01-238-8943	96906	MS87006-32
39	7		19099	YCH0105X0l0LYB
39	8	5310-00-767-0445	96906	MSS1971-2
39	9	5310-00-974-6623	96906	MS35338-140
39	10	5310-00-802-4701	96906	MS15795-813
39	11	5306-00-727-4578	96906	MS35307-339
39	12	5310-00-903-5966	96906	MS51971-1
39	13	5310-00-933-8121	96906	MS35338-139
39	14	5305-00-207-2297	96906	MS35307-312
39	15	5340-01-332-2466	97403	13221E8322-4
39	16	5365-01-305-0554	97403	13221E8320-3
39	17	4730-01-303-1244	97403	13221E8278-2
39	18	5305-00-702-4523	96906	MS35307-306
39	19		97403	13221E8336-5
39	20		19099	13221E8336-5-5
39	21	5305-00-207-8253	96906	MS35307-308
39	22	5310-00-582-5677	96906	MS15795-810
39	23		97403	13221E8283
39	24		81349	M103872DO5
39	25		81349	M103873D05
39	26	4710-01-326-7850	97403	13228E8265
39	27		19099	PPP-T-66TYICL2-341
39	28	4730-01-331-3259	97403	13228E8294-2
39	29	4710-01-326-7849	97403	13228E8281
39	30	4730-01-363-8017	97403	13228E8286-5
40	1	4730-00-908-3194	96906	MS35842-11
40	2		97403	13228E3312-13
40	3		19099	13228E8260-12
40	4		19099	13228E8260-119
40	5	4820-01-302-8981	97403	13226E7981-l

CROSS-REFERENCE INDEXES

FIGURE AND ITEM NUMBER INDEX

FIG.	ITEM	STOCK NUMBER	CAGEC	PART NUMBER
38	34	4730-01-365-5554	97403	13228E8260-94
38	35		19099	13228E8260-108
38	36		19099	13228E8260-95
38	37	4730-01-326-6979	97403	13228E8260-164
38	38	4820-01-184-9376	63850	7601-l-MP
38	39		63850	7610-l
38	40	4730-01-275-0211	96906	MS14315-22Z
38	41	4730-01-364-8406	97403	13228E8286-4
38	42		81349	M103872D04
38	43		81349	M103873D04
38	44	4710-01-351-0576	97403	13228E8279
38	45		19099	PPP-T-66TYICL2-340
38	46		97403	13228E3312-13
38	47	4730-01-359-2931	97403	13228E8276
38	48	4710-01-326-7852	97403	13228E8275
38	49	4730-01-350-1396	97403	13228E8262
38	50		97403	13229E0372
38	51	5310-00-767-0445	96906	MS51971-2
38	52	5310-00-974-6623	96906	MS35338-140
38	53	5310-01-389-6965	96906	MS15795-812
38	54		97403	13229E0376-6
38	55	5306-00-543-4405	96906	MS35307-334
39	1	5310-00-934-9760	96906	MS35649-204
39	2	5310-00-933-8120	96906	MS35338-138
39	3	5305-00-050-9231	96906	MS51957-65
39	4	4730-01-132-0904	97403	13222E5289-2
39	5		OBZ82	095X0200C0BUNA
39	6	4030-01-238-8943	96906	MS87006-32
39	7		19099	YCH0105X0l0LYB
39	8	5310-00-767-0445	96906	MSS1971-2
39	9	5310-00-974-6623	96906	MS35338-140
39	10	5310-00-802-4701	96906	MS15795-813
39	11	5306-00-727-4578	96906	MS35307-339
39	12	5310-00-903-5966	96906	MS51971-1
39	13	5310-00-933-8121	96906	MS35338-139
39	14	5305-00-207-2297	96906	MS35307-312
39	15	5340-01-332-2466	97403	13221E8322-4
39	16	5365-01-305-0554	97403	13221E8320-3
39	17	4730-01-303-1244	97403	13221E8278-2
39	18	5305-00-702-4523	96906	MS35307-306
39	19		97403	13221E8336-5
39	20		19099	13221E8336-5-5
39	21	5305-00-207-8253	96906	MS35307-308
39	22	5310-00-582-5677	96906	MS15795-810
39	23		97403	13221E8283
39	24		81349	M103872DO5
39	25		81349	M103873D05
39	26	4710-01-326-7850	97403	13228E8265
39	27		19099	PPP-T-66TYICL2-341
39	28	4730-01-331-3259	97403	13228E8294-2
39	29	4710-01-326-7849	97403	13228E8281
39	30	4730-01-363-8017	97403	13228E8286-5
40	1	4730-00-908-3194	96906	MS35842-11
40	2		97403	13228E3312-13
40	3		19099	13228E8260-12
40	4		19099	13228E8260-119
40	5	4820-01-302-8981	97403	13226E7981-l

CROSS-REFERENCE INDEXES

FIGURE AND ITEM NUMBER INDEX

FIG.	ITEM	STOCK NUMBER	CAGEC	PART NUMBER
40	6	5310-00-934-9761	96906	MS35649-264
40	7	5310-00-929-6395	96906	MS35338-136
40	8	5305-00-054-6654	96906	MS51957-30
40	9		81349	MIL-C-24066/2-246
40	10	5310-00-903-5966	96906	MS51971-1
40	11	5310-00-933-8121	96906	MS35338-139
40	12	5305-00-702-4523	96906	MS35307-306
40	13	5310-00-582-5677	96906	MS15795-810
40	14		97403	13221E8336-9
40	15		19099	13221E8336-9-9
40	16		97403	13222E5248
40	17		81349	M103872D02
40	17		81349	M103872D02
40	18		81349	M103872D02
40	18		81349	M103872D02
40	19	4710-01-326-7848	97403	13228E8258
40	20	4710-01-350-3629	97403	13228E8274-2
40	21	4710-01-350-3628	97403	13228E8274-1
40	22	5310-00-934-9760	96906	MS35649-204
40	23	5310-00-933-8120	96906	MS35338-138
40	24	5305-00-050-9231	96906	MS51957-65
40	25	5340-01-242-4554	96906	MS21919WCG21
40	26	4710-01-350-1342	97403	13228E8273
40	27		19099	13228E8260-121
40	28	4710-01-326-7845	97403	13228E8261
40	29	4710-01-363-7931	97403	13228E8293
40	30	4710-01-326-7843	97403	13228E8292
41	1	5310-00-934-9760	96906	MS35649-204
41	2	5310-00-933-8120	96906	MS35338-138
41	3	5305-00-050-9231	96906	MS51957-65
41	4	5340-01-146-7422	96906	MS21919WCG4
41	5		19099	13228E8260-111
41	6	4730-01-331-3258	97403	13228E8294-1
41	7		19099	13228E8260-112
41	8	4730-00-277-5553	96906	MS51952-2
41	9		19099	13228E8260-355
41	10	4730-00-989-3550	96906	MS14315-9X
41	11	5305-00-050-9227	96906	MS51957-61
41	12		97403	13221E8271-4
41	13	4730-00-222-1837	96906	MS51846-20
41	14	4730-01-354-8985	97403	13228E8260-74
41	15	4730-00-196-1976	96906	MS51846-32
41	16	4820-01-337-4523	97403	13221E8271-7
41	17	4730-01-359-2930	97403	13228E8260-101
41	18	4730-00-908-3194	96906	MS35842-11
41	19		19099	13228E8260-118
41	20		97403	13228E3312-B
41	21		97403	13228E3312-13
41	22	4730-01-135-5587	96906	MS27020-2
41	23	4730-01-135-2988	96906	MS27024-2
41	24	5330-01-138-2108	96906	MS27030-1
41	25	4730-00-222-1839	96906	MS51846-58
42	1	5310-00-934-9760	96906	MS35649-204
42	2	5310-00-933-8120	96906	MS35338-138
42	3	5305-00-050-9231	96906	MS51957-65
42	4	5340-01-146-7422	96906	MS21919WCG4
42	5		19099	13228E8260-106

CROSS-REFERENCE INDEXES

FIGURE AND ITEM NUMBER INDEX

FIG.	ITEM	STOCK NUMBER	CAGEC	PART NUMBER
42	6	4730-01-331-3258	97403	13228E8294-1
42	7		19099	13228E8260-107
42	8		19099	13228E8260-128
42	9		19099	13228E8260-54
42	10	4730-00-277-5553	96906	MS51952-2
42	11	5310-00-934-9759	96906	MS35649-284
42	12	5310-00-933-8119	96906	MS35338-137
42	13	5305-00-054-6671	96906	MS51957-46
42	14		97403	13221E8316-2
42	15	6685-01-144-2622	97403	13221E8340
42	16	4730-01-357-1920	97403	13228E8289
43	1	5310-00-934-9760	96906	MS35649-204
43	2	5310-00-933-8120	96906	MS35338-138
43	3	5305-00-050-9231	96906	MS51957-65
43	4	5340-01-146-7422	96906	MS21919WCG4
43	5		19099	13228E8260-125
43	6	4730-01-331-3258	97403	13228E8294-1
43	7		19099	13228E8260-122
43	8	5310-00-934-9759	96906	MS35649-284
43	9	5310-00-933-8119	96906	MS35338-137
43	10	5305-00-054-6671	96906	MS51957-46
43	11	6685-01-361-6801	97403	13222E5329-3
44	1		19099	13228E8260-114
44	2	4730-01-331-3258	97403	13228E8294-1
44	3		19099	13228E8260-109
44	4		19099	13228E8260-110
44	5	4730-00-277-5553	96906	MS51952-2
44	6		97403	13228E8260-74
44	7	4730-00-222-1837	96906	MS51846-20
44	8	5310-00-934-9759	96906	MS35649-284
44	9	5310-00-933-8119	96906	MS35338-137
44	10	5305-00-054-6671	96906	MS51957-46
44	11	6685-01-347-8658	97403	13222E5329-4
45	1	5310-00-903-5966	96906	MS51971-1
45	2	5310-00-933-8121	96906	MS35338-139
45	3	5305-00-721-8010	96906	MS35307-314
45	4		97403	13221E8338
45	5	5305-00-616-6370	96906	MS35307-313
45	6	5305-00-702-4523	96906	MS35307-306
45	7		97403	13221E8337
45	8		97403	13221E8339
45	9		19099	13228E8260-72
45	10	4730-01-347-6846	97403	13228E8294-3
45	11		19099	13228E8260-76
45	12	4730-01-331-3259	97403	13228E8294-2
45	13		19099	13228E8260-52
45	14	4730-00-908-3194	96906	MS35842-11
45	15		19099	13228E8260-304
45	16	4730-00-196-1975	96906	MS51846-31
45	17	4730-00-277-5553	96906	MS51952-2
45	18	4730-00-277-1896	96906	MS14315-5X
45	19		19099	13228E8260-96
45	20	4730-01-351-0588	97403	13228E8260-102
45	21	4730-01-359-2930	97403	13228E8260-101
45	22	4730-00-222-1837	96906	MS51846-20
45	23		19099	13228E8260-97
45	24		19099	13228E8260-354

CROSS-REFERENCE INDEXES

FIGURE AND ITEM NUMBER INDEX

FIG.	ITEM	STOCK NUMBER	CAGEC	PART NUMBER
45	25		19099	13228E8260-100
45	26	5305-00-050-9229	96906	MS51957-63
45	27	5310-00-933-8120	96906	MS35338-138
45	28	4820-01-326-6801	97403	13221E8271-6
45	29	4820-01-326-6800	97403	13221E8271-8
45	30	4820-01-243-9951	97403	13221E8271-5
46	1	4730-00-908-3195	96906	MS35842-10
46	2		97403	13228E8260-357
46	3		19099	M23053/5-109-2-4
46	4	4730-01-304-5550	97403	13226E8324-3
46	5	5340-01-307-2679	97403	13226E8327-2
46	6		97403	13228E3312-10
46	7		19099	M23053/5-109-4-4
46	7		19099	M23053/5-109-5-4
46	7		19099	M23053/5-109-6-4
46	8	4730-01-304-5551	97403	13226E8324-l
46	9	5340-01-307-5989	97403	13226E8327-l
46	10		97403	13228E3312-7
46	11		97403	13228E8260-326
46	12	4730-01-304-5549	97403	13226E8323-2
46	13	5340-01-307-4395	97403	13226E7995-2
46	14		97403	13228E3312-9
46	15		97403	13228E3312-6
46	16	4730-01-089-9245	97403	13226E8323-1
46	17	5340-01-307-4394	97403	13226E7995-l
46	18		97403	13228E8260-356
46	19	4730-00-908-3194	96906	MS35842-11
46	20		19099	13228E8260-129
46	21		97403	13228E3312-8
46	22		97403	13228E3312-13
46	23	4730-00-277-5553	96906	MS51952-2
46	24		12623	4F-86XJ2-SS
47	1	5975-00-074-2072	96906	MS3367-1-9
47	2	5310-00-934-9760	96906	MS35649-204
47	3	5310-00-933-8120	96906	MS35338-138
47	4	5340-00-926-5449	96906	MS21334-28
47	5	5340-00-922-6300	96906	MS21333-77
47	6	5305-00-050-9230	96906	MS51957-64
47	7	5340-00-091-3790	96906	MS21333-72
47	8	5340-00-990-7610	96906	MS21333-66
47	9	5310-00-250-9477	96906	MS35649-2254
47	10	5310-00-933-8121	96906	MS35338-139
47	11	5340-01-006-5645	96906	MS9350-21
47	12	5305-00-207-8253	96906	MS35307-308
47	13	5340-00-057-2906	96906	MS21333-73
47	14	5975-00-451-5001	96906	MS3367-3-9
48	1	5310-00-477-6768	96906	MS35649-2384
48	2	5310-00-984-7042	96906	MS35338-141
48	3	5310-00-187-2413	88044	AN961-616T
48	4	5310-00-022-8847	96906	MS35333-110
48	5	5305-00-717-5460	96906	MS35307-359
48	6		97403	13222E5297-28
48	7	5940-00-557-4345	96906	MS25036-118
48	8		19099	QQW343-3-10IN
49	1	5995-01-333-8450	97403	13227E9244
49	2	5935-01-091-9166	96906	MS90557C44413S
49	3		19099	13227E9244-5-108-9

CROSS-REFERENCE INDEXES

FIGURE AND ITEM NUMBER INDEX

FIG.	ITEM	STOCK NUMBER	CAGEC	PART NUMBER
49	4		19099	13227E9244-5-106-9
49	5		19099	CO-04HDF-2-228
50	1	5310-00-869-1018	96906	MS35650-3255
50	2	5310-00-022-8834	96906	MS35333-108
50	3	5305-01-058-8414	96906	MS35310-303
50	4	5310-00-177-1156	88044	AN961-416T
50	5	5940-00-114-1305	96906	MS25036-116
50	6	5940-00-557-4339	96906	MS25036-126
50	7	5940-00-230-0515	96906	MS25036-154
50	8	5975-01-366-0326	97403	13221E8308-3
50	9	6150-01-363-8006	97403	13222E5311-4
50	10	5935-01-339-1563	81349	M85049/10-70W
50	11	5935-01-146-7330	96906	MS3108R36-5P
50	12		19099	CO-04HOF-1-86
51	1		97403	13226E2204-4
51	2		97403	13222E5312-2
51	3	5940-00-283-5280	96906	MS25036-106
51	4	5940-00-143-4774	96906	MS25036-153
51	5	5940-00-143-4780	96906	MS25036-108
51	6		19099	CO-02HOF-1-62
51	7		97403	1322632204-4
51	8		97403	13222E5312-1
51	9	5940-00-283-5280	96906	MS25036-106
51	10	5940-00-143-4774	96906	MS25036-153
51	11		19099	CO-02HOF-2-24
52	1		97403	13226E2205-5
52	2		97403	13222E5312-3
52	3	5940-00-283-5280	96906	MS25036-106
52	4	5940-01-327-3962	97403	13220E3830-2
52	5		19099	CO-02HOF-2-66
53	1	6150-01-328-5754	97403	13221E8326-l
53	2	5935-01-035-5139	96906	MS3456W18-11s
53	3	5940-00-283-5280	96906	MS25036-106
53	4		19099	CO-05HOF-l-70
54	1	5310-00-869-1018	96906	MS35650-3255
54	2	5310-00-022-8834	96906	MS35333-108
54	3	5310-00-177-1156	88044	AN961-416T
54	4	5305-01-058-8414	96906	MS35310-303
54	5	5940-00-113-8184	96906	MS25036-150
54	6		97403	13226E2205-5
54	7		97403	13222E5312-5
54	8	5940-00-283-5280	96906	MS25036-106
54	9	5940-00-143-4780	96906	MS25036-108
54	10	5940-00-230-0515	96906	MS25036-154
54	11		19099	CO-02HOF-2-185
55	1	5310-00-869-1018	96906	MS35650-3255
55	2	5310-00-022-8834	96906	MS35333-108
55	3	5305-01-058-8414	96906	MS35310-303
55	4	5310-00-177-1156	88044	AN961-416T
55	5	5940-00-230-0515	96906	MS25036-154
55	6	5940-00-113-8184	96906	MS25036-150
55	7		97403	13226E2204-5
55	8		97403	13222E5312-6
55	9	5940-00-143-4780	96906	MS25036-108
55	10	5940-00-283-5280	96906	MS25036-106
55	11		19099	CO-04HOF-3-146
56	1	6150-01-328-5759	97403	13222E5288

CROSS-REFERENCE INDEXES

FIGURE AND ITEM NUMBER INDEX

FIG.	ITEM	STOCK NUMBER	CAGEC	PART NUMBER
56	2	5935-01-111-7591	96906	MS3456W32-7P
56	3	5935-01-140-0742	81349	M85049/2-20C
56	4	5935-00-848-9559	96906	MS3108R32-7S
56	5	5365-00-644-0392	96906	MS3420-20A
56	6	5365-00-927-2972	96906	MS3420-16A
56	7		19099	M23053-HS
56	8		19099	CO-30M0F-3-36
57	1	5975-01-098-8573	15235	CGB195-SG
57	2	6150-01-328-5755	97403	13221E8326-2
57	3	5935-01-127-2089	96906	MS3456W18-1lP
57	4		19099	CO-05H0F-1-16
58	1	5310-00-934-9748	96906	MS35649-244
58	2	5310-00-933-8118	96906	MS35338-135
58	3	5310-00-595-6211	96906	MS15795-803
58	4	5305-00-054-5650	96906	MS51957-16
58	4	5305-00-054-5651	96906	MS51957-17
58	5	5305-00-054-5653	96906	MS51957-19
58	6	5935-01-184-7188	96906	MS25043-16DA
58	7	5330-00-951-8268	96906	MS51007-5
58	8	6150-01-328-5758	97403	13221E8326-5
58	9	5940-00-283-5280	96906	MS25036-106
58	10	5935-01-026-8549	96906	MS3450W16-10S
58	11		19099	CO-03H0F-12-48
59	1	5310-00-934-9748	96906	MS35649-244
59	2	5310-00-933-8118	96906	MS35338-135
59	3	5310-00-595-6211	96906	MS15795-803
59	4	5305-00-054-5650	96906	MS51957-16
59	4	5305-00-054-5651	96906	MS51957-17
59	5	5305-00-054-5653	96906	MS51957-19
59	6	5935-01-181-6651	96906	MS25043-14DA
59	7	5330-00-079-7839	96906	MS51007-4
59	8	5995-01-333-8451	97403	13227E7584
59	9		97403	13227E7583
59	10		30053	PPF
59	11	5935-01-101-1535	96906	MS3450W14S-5S
59	12	5365-00-682-1427	96906	MS3420-4A
59	13	5365-00-828-8526	96906	MS3420-6A
60	1	5310-00-903-5966	96906	MS51971-1
60	2	5310-00-933-8121	96906	MS35338-139
60	3	5305-00-702-4523	96906	MS35307-306
60	4	5310-00-550-5054	96906	MS15795-809
60	5		97403	13228E8302
60	6	5930-01-347-6843	97403	13228E8303
61			03306	48-l-0697
61	1	5305-00-717-5467	96906	MS35307-362
61	2	5310-00-984-7042	96906	MS35338-141
61	3		97403	13222E5266
61	4		03306	l-1/4XlKC2BRZ
61	5		03306	500-771
61	6		03306	48-3-0167-01
61	7		03306	500-398
61	8		03306	511-004
61	9		03306	48-2-0299-10
61	10		03306	500-976
61	11		03306	48-4-0120-01
61	12		03306	48-3-0159-01
61	13	4320-01-313-2841	03306	500-422

CROSS-REFERENCE INDEXES

FIGURE AND ITEM NUMBER INDEX

FIG.	ITEM	STOCK NUMBER	CAGEC	PART NUMBER
62	1	6105-01-133-8082	05472	34-5104-3226
62	2		05472	51XT0832A07
62	3		05472	34CB4500
62	4		05472	34GSl00l
62	5		05472	51XB1016A07
62	6		05472	34CBl000A0l
62	7		05472	34GS1000
62	8		05472	llXF1032A06
62	9		05472	34FH4001A05
62	10		05472	34FN5002A01
62	11		05472	HA3100A15
62	12		05472	34EP3102A01
62	13		05472	HW5100A03
62	14		05472	51XN1032A20
62	15		05472	34EP3300A24
62	16	3110-01-330-8303	05472	BG6203C03
62	17		05472	RB4003A01
62	18		05472	34RA10032020A01
62	19		05472	34SA00053226A01
63	1	5310-00-913-8881	96906	MS51971-3
63	2	5310-00-984-7042	96906	MS35338-141
63	3	5305-00-576-5417	96906	MS35307-360
63	4		97403	13222E5256
63	5	5305-00-253-5615	96906	MS21318-21
63	6		97403	13222E5279-22
63	7		97403	13222E5279-21
63	8		97403	13222E5279-24
63	9		97403	13222E5279-23
63	10		97403	13222E5279-37
63	11		97403	13226E8332
63	12		97403	13222E5257
64	1	5305-00-576-5417	96906	MS35307-360
64	2	5310-00-984-7042	96906	MS35338-141
64	3	5310-00-767-0445	96906	MS51971-2
64	4	5310-00-974-6623	96906	MS35338-140
64	5	5306-00-655-6170	96906	MS35307-338
64	6		97403	13222E5282
64	7		41083	MODEL 1274-14-9323
65	1		41083	260234
65	2		41083	4170052139
65	3		41083	4170036025
65	4	3010-00-572-2090	75665	L050
65	5		50380	K56H3012M
65	6		50380	33519-003-HC
65	7	5310-00-045-4007	96906	MS35338-41
65	8		50380	079329-15-A
65	9		50380	602018-31-A
65	10		50380	33520-003-JE
65	11		50380	33520-005-JC
65	12		50380	079097-20-A
65	13		50380	411881-15-A
65	14		50380	C56H3686R
65	15		50380	33502-002-HB
65	16		50380	39A012
65	17		50380	169P00l
65	18		50380	91P012
65	19	6110-01-326-7311	50380	160333

CROSS-REFERENCE INDEXES

FIGURE AND ITEM NUMBER INDEX

FIG.	ITEM	STOCK NUMBER	CAGEC	PART NUMBER
65	20		50380	32003-132-BB
65	21		50380	51351
65	22		50380	34036-008-AB
65	23		50380	173P001
65	24		50380	34001-009-AD
65	25		50380	33504-005-GB
65	26		50380	602453-49-MN
65	27		50380	39P000
65	28		50380	079339-05-H
65	29		50380	613302-35-G
65	30		50380	32426-008-JB
65	31		50380	57516
65	32		50380	079342-36-B
65	33	5330-01-313-5632	50380	411864-96-B
65	34	3110-00-293-9163	52676	62052
65	35		50380	411878-10-A
65	36		50380	411625-11-A
65	37	3110-00-555-5339	52676	6203Z
65	38		50380	602006-74-X
66	1		41083	260237
66	2		41083	260233
66	3		41083	806343-3
66	4		41083	805172-4
66	5		41083	260244
66	6		41083	4170061723
66	7	5310-01-273-2210	31922	F11
66	8		41083	805829-5
66	9		41083	805803-2
66	10		41083	811946
66	11		41083	4170061718
66	12		41083	807547
67	1		41083	260236
67	2		41083	4170053044
67	3		41083	4170036023
67	4		41083	260047
67	5		41083	815523
68	1		41083	260235
68	2		41083	4163310002
68	3		41083	260232
68	4		41083	4170053219
68	5		41083	Y041833
68	6		41083	Y933976-10
68	7		41083	212101
68	8		41083	4170053031
68	9		41083	4170036321
68	10		41083	260048
68	11		41083	260049
68	12		41083	815497-1
68	13		41083	260040
68	14		41083	4170053093
68	15		41083	4170036026
68	16		41083	260231
68	17		41083	260241
68	18		41083	260039
68	19		41083	260041
68	20		41083	260043
68	21		41083	260239

CROSS-REFERENCE INDEXES

FIGURE AND ITEM NUMBER INDEX

FIG.	ITEM	STOCK NUMBER	CAGEC	PART NUMBER
68	22		41083	Y302716
68	23		41083	Y302646
68	24		41083	Y302647
68	25		41083	Y302657
68	26		41083	Y933987-03
68	27		41083	Y102641
68	28		41083	Y304746
68	29		41083	Y304745
68	30		41083	Y304747
68	31		41083	260240
68	32		41083	260057
69	1	5310-00-903-5966	96906	MS51971-1
69	2	5310-00-933-8121	96906	MS35338-139
69	3	5305-00-207-2297	96906	MS35307-312
69	4	5310-00-550-5054	96906	MS15795-809
69	5		97403	13222E5283
69	6		97403	13222E5283-3
69	7	5310-00-913-8881	96906	MS51971-3
69	8	5310-00-984-7042	96906	MS35338-141
69	9	5310-00-802-4701	96906	MS15795-813
69	10	5305-00-717-5467	96906	MS35307-362
69	11		97403	13222E5284
69	12		97403	13222E5284-3
69	13	5310-01-073-7031	96906	MS51859-8
69	14		97403	13226E8000
69	15		19099	13222E5330-147
70	1	4330-01-347-9671	31738	PS-77-9964
70	2		31738	11-0354
70	3		31738	11-0355
70	4		31738	11-0317
70	5		31738	11-0122
70	6		31738	77-0788-1
70	7		31738	11-0519
70	8		31738	11-0444-1
70	8	5330-01-326-0778	31738	22-0816
70	9		31738	11-2124
70	10		31738	11-0113
70	11		31738	99-1357-1
70	12		31738	33-1725
70	13		31738	33-0411
70	14		31738	88-2862A
70	15	5340-01-326-2620	31738	77-0701-C
70	16	5360-01-326-2621	31738	77-0301-1
70	17		31738	88-2862
70	19	4710-01-128-6277	97403	13226E2210
70	20		31738	77-9966A
71	1	5305-00-907-0045	96906	MS35307-412
71	2	5310-00-933-8778	96906	MS35338-143
71	3	5310-00-614-3506	96906	MS15795-817
71	4	5305-00-727-6804	96906	MS35307-414
71	5	5305-00-702-4523	96906	MS35307-306
71	6	5310-00-933-8121	96906	MS35338-139
71	7		97403	13229E5635-2
71A	1	5305-00-068-1798	96906	MS35218-51
71A	2	5310-00-933-8120	96906	MS35338-138
71A	3		97403	13229E1406
71A	4		97403	13229E1406-3

CROSS-REFERENCE INDEXES

FIGURE AND ITEM NUMBER INDEX

FIG.	ITEM	STOCK NUMBER	CAGEC	PART NUMBER
71A	5		97403	13229E1406-2
71A	6		97403	13229El409
71A	7	5305-00-727-6804	96906	MS35307-414
71A	8	5310-00-933-8778	96906	MS35338-143
71A	9		97403	13229E001
71A	10		93061	169PL-8-6
71A	11		0AK83	95180001-1
71A	12		39428	51875K58
71A	13		97403	13229E0137
71A	14		97403	13229E0372
71A	15	5310-00-767-0445	96906	MS51971-2
71A	16	5310-00-974-6623	96906	MS35338-140
71A	17	5310-00-625-5756	96906	MS15795-812
71A	18		97403	13229E0376-6
71A	19		96906	MS35307-334
71A	20		97403	13229E0353
71A	21	5306-00-543-4405	96906	MS35307-334
71A	22	5310-00-625-5756	96906	MS15795-812
71A	23		97403	13229E0376-6
71A	24		96906	MS35338-140
71A	25	5310-00-767-0445	96906	MS51971-2
71A	26	5305-00-576-5417	96906	MS35307-360
71A	27	5310-00-773-7618	96906	MS15795-814
71A	28	5310-00-984-7042	96906	MS35338-141
71A	29	5310-00-913-8881	96906	MS51971-3
71A	30	5305-00-964-0643	96906	MS35307-427
71A	31	5310-00-614-3506	96906	MS15795-817
71A	32	5310-00-768-0321	96906	MS51971-5
71A	33		97403	13222E5286
71A	34		97403	13229E0352
71A	35		97403	13222E5281
71A	36		96906	13222E5281
71A	37	5310-00-903-5966	96906	MS51971-1
71A	38	5310-00-933-8121	96906	MS35338-143
71A	39	5310-00-582-5677	96906	MS15795-817
71A	40	5305-00-702-4523	96906	MS35307-306
71A	41	5340-01-169-8331	96906	MS21919WCG18
71A	42		96906	MS15795-810
71A	43		96906	MS35338-139
71A	44		96906	MS51971-1
72	1		81349	M103872D05
72	2		81349	M103873D05
72	3		97403	13229E5628
72	4	4730-01-363-8017	97403	13228E8286-5
72	5		06370	A5967-2
72	6		06370	D2210-1
72	7		81349	M103872D03
72	8		81349	M103872D03
72	9		97403	13229E5629
72	10	4730-01-328-8103	97403	13228E8287-3
72	11		97403	13228E8295
72	12	5310-00-903-5966	96906	MS51971-1
72	13	5310-00-933-8121	96906	MS35338-139
72	14	5305-00-207-2297	96906	MS35307-312
72	15	5310-00-550-5054	96906	MS15795-809
72	16		97403	13229E5627
72	17		97403	13229E5627-3

CROSS-REFERENCE INDEXES

FIGURE AND ITEM NUMBER INDEX

FIG.	ITEM	STOCK NUMBER	CAGEC	PART NUMBER
72	18		97403	13229E5631
72	19		97403	13229E5626
72	20		97403	13229E5626-7
72A	1		96906	MS14306-8W
72A	2	4730-00-410-9530	96906	MS27026-12
72A	3	5330-00-612-2414	96906	MS27030-6
72A	4		96906	MS27021-12
72A	5	4730-00-909-8627	01276	FF9311-36
72A	6		97403	13229E0001-14
72A	7	4730-00-083-7196	96906	MS27025-12
72A	8	5330-00-612-2414	96906	MS27030-6
72A	9	4730-00-115-3740	96906	MS27022-12
72A	10		96906	MS14305-9U
72A	11	4730-00-277-1896	96906	MS14315-5X
72A	12		96906	MS14315-26X
72A	13	4730-00-196-2031	96906	MS51846-158
72A	14		81343	16-070102
72A	15		97403	13229E0126
72A	16	4730-01-254-0330	81343	20-16140140
73	1	5310-00-903-5966	96906	MS51971-1
73	2	5310-00-933-8121	96906	MS35338-139
73	3	5310-00-550-5054	96906	MS15795-809
73	4		97403	13229E6047
73	5	5307-01-186-6875	81349	M63540/1-48C
73	6		97403	13229E6047-1
73	7		97403	13229E6046
73	8	5307-01-186-6875	81349	M63540/1-48C
73	9		97403	13229E6046-1
73	10	5305-00-059-3660	96906	MS51958-64
73	11	5310-00-933-8120	96906	MS35338-138
73	12		97403	13221E8291
73	13	5310-01-161-7306	96906	MS27130-A99
73	14		97403	13222E5285
74	1	3030-00-541-4984	96906	MS39256-5B85
74	2		97403	13221E8286
74	3		97403	13221E8286-1
74	4		97403	13221E8286-2
74	5	5315-00-246-0030	96906	MS20066-512
74	6	5305-00-660-2832	96906	MS35307-389
74	7	5310-00-973-8786	96906	MS35338-142
74	8		50706	5K28QPA6003A
74	9		50706	153B1026G19
74	10		50706	159C6200-1
74	11		50706	159C6900G01
74	12		50706	N3400P606
74	13		50706	28ES06203GAAB00
74	14		50706	28ESD6202GAAB00
74	15	3110-01-127-7379	50706	50BC03JP3
74	16	3110-01-127-7380	50706	35BC02XP3
74	17		50706	28RA301290AAADCA02
74	18		50706	28SA30129007G001
74A	1	5305-00-721-5298	96906	MS35307-385
74A	2	5310-00-973-8786	96906	MS35338-142
74A	3		97403	13229E0001-8
74A	4		97403	13229E0125
74A	5		71454	C320966
74A	6	5305-00-021-3806	96906	MS35307-413

CROSS-REFERENCE INDEXES

FIGURE AND ITEM NUMBER INDEX

FIG.	ITEM	STOCK NUMBER	CAGEC	PART NUMBER
74A	7	5310-00-614-3506	96906	MS15795-817
74A	8		71454	13229E0028
74A	9	5305-00-990-0668	96906	MS16995-81
74A	10	5310-00-984-7042	96906	MS35338-141
74A	11	5315-00-728-2045	96906	MS20066-208
74A	12		75665	L-150
74A	13	5305-00-550-1864	96906	MS51021-81
74A	14	5315-01-081-0249	96906	MS20066-355
74A	15		36232	LM01634
74A	16	5310-00-761-0654	96906	MS51967-9
74A	17		36232	T9781-76
74A	18	6105-01-052-5376	36232	S-11044-14
74A	19	6150-01-052-7032	36232	L-4673
74A	20	3110-00-155-6190	36232	M-9300-21
74A	21		36232	L8500-E47
74A	22		36232	LS893-4E/4370
74A	23		36232	M11315-4
74A	24	3110-00-144-8671	36232	M9300-38
74A	25		36232	T12806-5
74A	26		36232	L-6037-2
74A	27	4320-01-101-7456	36232	S-11044-15
74A	28		36232	L-7302-1
74A	29		36232	L-6112
74A	30	5975-01-055-4727	36232	T-13364-3
75	1	5305-00-059-3663	96906	MS51958-67
75	2	5310-00-933-8120	96906	MS35338-138
75	3		96906	MS27130-A28
75	4	5340-00-050-2740	96906	MS21333-75
75	5	5340-00-922-6302	96906	MS21333-81
75	6	4730-00-908-3193	96906	MS35842-12
75	7	4730-01-299-9465	97403	13225E8715-1
75	8		97403	13229E5635-18
75	9	5325-00-270-8888	96906	MS35489-85
75	10	4730-00-908-3194	96906	MS35842-11
75	11		97403	13229E35635-19
75	12	4730-01-316-9215	72661	TLS43
75	13		76364	GATE 105-3/8IN.
75	14		76364	GATE 105-8-3/8IN
75	15		76364	GATE 105-9-3/8IN
75	16		76364	GATE 105-5-3/8IN
75	17		76364	GATE 105-10-3/8IN.
75	18	4730-00-193-2711	96906	MS51846-42
76	1		97403	13229E5632
76	2		97403	13229E5632-1
76	3		97403	13229E5632-2
76	4		96906	MS20066-510
76	5	5310-00-768-0321	96906	MS51971-5
76	6	5310-00-933-8778	96906	MS35338-143
76	7		61748	C1173500
77		5330-01-356-5089	61748	111327
77	1	6680-01-359-4979	61748	9513ECAB0BB
77	2		61748	9205BAA4ED8
77	3		61748	920104A00D5
77	4		61748	9200W000245
77	5	5305-01-355-8655	61748	9135A0404A1
77	6		61748	152B1016000B29100
77	7		61748	123A0789000T41500

CROSS-REFERENCE INDEXES

FIGURE AND ITEM NUMBER INDEX

FIG.	ITEM	STOCK NUMBER	CAGEC	PART NUMBER
77	8		61748	9101A610A1
77	9		61748	94111000103
77	11	5330-01-356-1524	61748	623A0619501U51100
77	12		61748	9101A0605A1
77	13		61748	154B0823600B29100
77	14	5330-01-356-2451	61748	624B0823400U61000
77	15		61748	9102F0514L4
77	16		61748	112C10355200A22200
77	17	3120-01-356-5076	61748	116B1107300R15300
77	18		61748	132D0702100K15700
77	19		61748	96111000112
77	19		61748	96111000145
77	19		61748	96111000178
77	20	3110-00-100-0570	61748	9610CECA001
77	21		61748	9610BECA041
77	22		61748	132D07021B0K15700
77	23	5330-01-356-2436	61748	94111000127
77	24		61748	103D0754500C26003
77	25		61748	119A0863400C221701
77	26		61748	110032
77	27	3040-01-357-6569	61748	9514B1D0000
77	28		61748	9214DA03JD5
77	29	4730-01-359-0617	61748	9214DA06JD5
78		4820-01-357-3467	61748	111328
78		5330-01-356-5081	61748	111329
78		4320-01-357-6870	61748	111330
78		5330-01-356-2511	61748	9300W000170
78	1		61748	9108E101AW9
78	2		61748	824A0156914C42404
78	3	5305-01-355-8685	61748	9102F1016P4
78	4		61748	317B0823500J13600
78	5		61748	370B1151001J12500
78	6		61748	9410A14600M
78	7		61748	9243F0001A4
78	8		61748	9243R0000A7
78	9		61748	9243S80002A3
78	10		61748	9243VA200A2
78	11	4820-01-358-6124	61748	9243BA231A7
78	12		61748	912016175A2
78	13		61748	125A0788600E22100
78	14	4320-01-357-4167	61748	353B0766004R52900
78	15		61748	338B0765400J12500
78	16		61748	601A1008900J12500
78	17		61748	9300W000119
78	18		61748	601A1008800J12500
78	19	5305-01-355-8686	61748	9102F0820P4
78	20		61748	366B0765700J12500
78	21		61748	337B0765300J12500
78	22		61748	9410A23100M
78	23		61748	9243F0001A4
78	24		61748	9243R0001A7
78	25		61748	9243S0001A3
78	26		61748	9243S0002A3
78	27		61748	9243VA300A2
78	28	4820-01-357-9660	61748	9243BA328A7
78	29	5340-01-355-8671	61748	649A0559900J13700
78	30	5340-01-355-8670	61748	649A0559800J13700

CROSS-REFERENCE INDEXES

FIGURE AND ITEM NUMBER INDEX

FIG.	ITEM	STOCK NUMBER	CAGEC	PART NUMBER
78	31		61748	653-2
78	32		61748	300E0223100J13700
78A			71454	3269200
78A			71454	3269209
78A			71454	3269211
78A			71454	3269862
78A	1		71454	C320966
78A	2		71454	3266349
78A	3		71454	3266350
78A	4		71454	3266258
78A	5		71454	3266257
78A	6		71454	3266354
78A	7		71454	3266359
78A	8		71454	3269861
78A	9		71454	3266393
78A	10		71454	3266395
78A	11		71454	3266386
78A	12		71454	3266399
78A	13		71454	3266341
78A	14		71454	3269198
78A	15		71454	3266345
78A	16		71454	3266346
78A	17		71454	3266347
78A	18		71454	3269201
78A	19		71454	3266348
78A	20		71454	3266344
78A	21		71454	3269204
78A	22		71454	3266306
78A	23		71454	3269088
78A	24		71454	3269210
78A	25		71454	3269207
78A	26		71454	3269821
78A	27		71454	3268846
78A	28		71454	3269262
78A	29		71454	3266335
78A	30		71454	3269205
78A	31		71454	3266555
78A	32		71454	3266556
78A	33		71454	3266260
78A	34		71454	3266560
78A	35		71454	3266558
78A	36		71454	3266557
78A	37		71454	3266324
79	1	5310-00-768-0321	96906	MS51971-5
79	2	5310-00-933-8778	96906	MS35338-143
79	3		97403	13229E5633
79	4		97403	13229E5634
79	5	5315-01-096-2536	96906	MS35677-47
79	6	5310-00-809-8533	96906	MS27183-23
79	7	5310-00-934-9727	96906	MS35691-59
79	8		97403	13222E5293
79	9	5310-00-764-6609	96906	MS51971-7
79	10	5310-00-937-0453	96906	MS35338-145
79	11	5305-00-923-8268	96906	MS35307-466
79	12	5310-00-614-3505	96906	MS15795-820
79	13		97403	13222E5291
79	14	5340-00-701-3811	96906	MS21209C7-15

CROSS-REFERENCE INDEXES

FIGURE AND ITEM NUMBER INDEX

FIG.	ITEM	STOCK NUMBER	CAGEC	PART NUMBER
79	15	5340-00-721-8352	96906	MS21209C4-20
79	16	5340-00-753-3497	96906	MS21209C1210
79	17		97403	13222E5292
79	18	5310-00-567-4992	46384	CLSS-032-3
80	1	5310-00-768-0321	96906	MS51971-5
80	2	5310-00-933-8778	96906	MS35338-143
80	3	5310-00-614-3506	96906	MS15795-817
80	4	5306-01-054-0813	96906	MS27950-12
80	5	5306-01-137-9711	96906	MS27953-11
80	6	5310-00-088-8513	96906	MS27952-7
80	7	5306-01-137-8929	96906	MS27953-12
80	8	5340-01-143-7518	96906	MS27954-6
80	9	5306-00-141-7179	96906	MS27950-8
80	10	5306-00-140-4782	96906	MS27953-7
80	11	5306-00-457-1394	96906	MS27953-8
80	12	5340-00-150-4777	96906	MS27954-5
80	13	5305-00-727-6804	96906	MS35307-414
80	14		76371	5500584000
80	14		0AK83	9518
81	1	5310-01-326-7371	76371	5400851000
81	2		19099	MM904
81	3		76371	5400829000
81	4		76371	5400821000
81	5		93061	68PL-4-4
81	6	4730-01-254-9853	93061	169PL-4-2
81	6	4730-01-365-6690	93061	68PL-4-2
81	7		0AK83	9518182201-11
81	8	4730-01-365-6690	93061	68PL-4-2
81	9		93061	66PL-4-4
81	10		39428	46505K31
82	1	5305-00-207-8253	96906	MS35307-308
82	2	5310-00-933-8121	96906	MS35338-139
82	3	5310-00-550-5054	96906	MS15795-809
82	4		76371	5500675000
82	5	6645-01-326-7316	76371	5500585000
82	6	4730-01-326-7318	76371	48Q
82	7		76371	PLB-0007
82	8		76371	SCS-0121
82	9	5310-00-933-8121	96906	MS35338-139
82	10		76371	51-SP
82	11		76371	51-NG
82	12		76371	SCS-0074
82	13		76371	514148
82	14		76371	3809026
82	15		76371	3809042
82	16		00843	99401-408
82	17		41083	26132-019
82	18		00843	99401-072
82	19		00843	A-L23SS
82	20		76371	3809011
82	21	5305-00-071-2087	96906	MS51957-84
82	22	5310-00-582-5677	96906	MS15795-810
82	23	5310-01-933-8121	96906	MS35338-139
82	24	5310-00-903-5966	96906	MS51971-1
82	25		0AK83	9518182202
82	26		5H081	OG120
82	27		5H081	25504-20040

CROSS-REFERENCE INDEXES

FIGURE AND ITEM NUMBER INDEX

FIG.	ITEM	STOCK NUMBER	CAGEC	PART NUMBER
82	28		5H081	25501-05005
82	29		5H081	OR120
82	30		5H081	25504-20020
82	31		5H081	25501-05005
82	32		96906	MS51493-2
82	33	5305-01-335-7409	96906	MS51493-1
82	34		0AK83	9518182203
82	35		0AK83	9518182204
82	36		0AK83	9518182204-A
82	37		96906	MS51492-07
82	38	5310-01-285-9229	96906	MS51413-3
82	39		0AK83	9518182205
82	40		0AK83	9518182206
82	41		01121	1492-CB1G030
82	42		96906	MS51957-46
82	43	5310-00-765-3197	96906	MS27183-41
82	44		96906	MS21044-N08
82	45		0AK83	9518182207
82	46		0GF31	48-01-115
82	47		0GF31	48-0
82	48	4730-00-188-3509	96906	MS20913-1
83			04816	424-RA
83		4410-01-208-2125	04816	424-RB
83	1	5310-00-477-6768	96906	MS35649-2384
83	2		76371	5400880000
83	3		76371	5400881000
83	4		76371	5400789000
83	5		76371	5400775000
83	6		76371	5400776000
83	7		76371	5400879000
83	8		76371	2506701000
83	9		53059	BT 3/8
83	10		53059	53822
83	11		76371	5400779000
83	12		76371	5400780000
83	13		81349	M103872D04
83	14		81349	M103872D04
83	15		76371	5400704004
83	16		76371	5400782000
83	17		76371	5500648001
83	18		76371	5400852000
83	19		76371	5400877000
83	20		76371	5400783000
83	21		76371	5500648002
83	22		76371	5400778000
83	23		76371	5400781000
83	24	4820-01-326-7313	04816	424-1 1/2
83	25		04816	NUZ-0008
83	26		04816	SCZ-0007
83	27		04816	424-C
83	28		04816	NUS-0013
83	29		04816	424-D
83	30		04816	424-FB
83	31		04816	424-S
83	32		04816	424-R
83	33	5330-01-145-0718	04816	200-GG
83	34		04816	421-AH

CROSS-REFERENCE INDEXES

FIGURE AND ITEM NUMBER INDEX

FIG.	ITEM	STOCK NUMBER	CAGEC	PART NUMBER
83	35		04816	ORB-110
83	36		04816	424-G
83	37	5330-01-383-3194	04816	ORB-132
83	38	5310-01-304-9209	04816	NUS-0010
83	39		04816	424-K
83	40		04816	424-J
83	41		04816	424-H
83	42		04816	424-L
83	43		04816	424-M
83	44		04816	ORB-029
83	45		04816	424-A
83	46		76371	5400679000
83	47		81349	M103872D05
83	48		81349	M103873D05
83	49		76371	5400704005
83	50		76371	5400784000
83	51		76371	5400878000
83	52		76371	5500678000
83	53		76371	5400882000
83	54		76371	5500654000
83	55		76371	5400821000
83	56		76371	5400751000
83	57		76371	5400750000
83	58		76371	5500602000
83	59		76371	5500654002
83	60		76371	5400757000
83	61		76371	5400756000
83	62		76371	5500653006
83	63		76371	5500653003
83	64		76371	5500653004
83	65		76371	5500604000
83	66		76371	5500653008
83	67		76371	5400749000
83	68		76371	5400754000
83	69		76371	5500653005
83	70		76371	5500653002
83	71		76371	5500653007
83	72		76371	5500653001
83	73		76371	5400753000
83	74		76371	5500603000
83	75	5330-01-326-6740	76371	5400755000
83	76		76371	5400752000
83	77		76371	5500605000
83	78		76371	5500677000
83	79	4730-01-363-8017	97403	13228E8286-5
83	80		96906	MS14306-8
83	81		0AK83	9518182201-1
83	82	4730-01-297-0188	96906	MS14305-8U
83	83		0AK83	9518182201-2
83	84		0AK83	9518182201-3
83	85	4730-00-150-8858	96906	MS51845-8
83	86		39428	4429K218
83	87		0AK83	9518182201-4
83	88		0AK83	9518182201-6
83	89		0AK83	9518182201-5
83	90		96906	MS14305-8YC
83	91	4730-00-268-7479	96906	MS14315-22

CROSS-REFERENCE INDEXES

FIGURE AND ITEM NUMBER INDEX

FIG.	ITEM	STOCK NUMBER	CAGEC	PART NUMBER
83	92	4730-00-254-6243	96906	MS14305-2U
83	93	4730-00-222-1837	96906	MS51846-20
83	94		0AK83	9518182201-7
83	95		0AK83	9518182201-8
83	96		0AK83	9518182201-9
83	97		04816	V42E-0000-00000
83	98	5310-00-903-5966	96906	MS51971-1
83	99	5305-00-579-5238	96906	MS35307-309
83	100		04816	424-C
83	101		04816	NUS-0013
83	102		04816	424-D
83	103		04816	424-FB
83	104		04816	424-R
83	105	5330-01-145-0718	71762	200-GG
83	106		04816	ORB-110TC
83	107		04816	424-GO
83	108	5330-01-383-3194	04816	ORB-132
83	109	5310-01-304-9209	04816	NUS-0010
83	110		04816	424-K
83	111		04816	424-J
83	112		04816	424-H
83	113		04816	424-L
83	114		04816	424-MO
83	115		04816	ORB-029
83	116		04816	424-AB6
84	1		76371	5400648000
84	2		76371	5400649000
84	3		76371	5400885000
84	4		76371	5400647000
84	5		76371	5500675000
84	6		76371	5400788000
84	7		76371	5400785000
84	8		76371	5500619000
84	9	5330-01-326-0791	76371	5400690000
84	10		76371	5500620000
84	11		76371	5400691000
84	12		76371	5500601000
84	13	5305-00-939-9206	96906	MS90725-193
84	14		0AK83	9518182201-10
84	15		0AK83	9518182208
84	16		96906	MS51967-23
84	17		0AK83	95181822
85	1	5310-00-913-8881	96906	MS51971-3
85	1	5310-00-913-8881	96906	MS51971-3
85	2	5310-00-984-7042	96906	MS35338-141
85	3	5305-00-847-1159	96906	MS35307-365
85	3	5305-00-847-1159	96906	MS35307-365
85	4	5310-00-802-4701	96906	MS15795-813
85	5		97403	13221E8377
85	5		97403	13222E5323
85	6		97403	13221E8377-3
85	6		97403	13222E5323-2
85	7		97403	13222E5321
85	8		97403	13222E5321-2
85	9	4330-01-341-8622	64382	006004-1
85	9		0AK83	9518-5320
85	10	5310-01-326-7320	64382	6CN002-1

CROSS-REFERENCE INDEXES

FIGURE AND ITEM NUMBER INDEX

FIG.	ITEM	STOCK NUMBER	CAGEC	PART NUMBER
85	10	5310-00-764-6609	96906	MS51971-7
85	11	5310-01-326-7321	64382	6CN003-1
85	11		96906	MS17188-11
85	12		39428	91650A450
85	12	5365-01-326-0910	80756	RSN-87SP
85	13		64382	406004-1
85	13		0AK83	9518-5320-14
85	14		93061	12HBL-8-4
85	14		97403	13228E3312-13
85	15	5330-00-003-1686	02697	2-217E540-80
85	16	5330-01-301-5994	02697	2-358-E540-80
85	17	5305-01-332-9263	64382	6CF005-1
85	17	5305-00-992-6147	96906	MS16995-81
85	18		64382	406001-1
85	18		0AK83	9518-5320-1
85	19		39428	91650A490
85	19		80756	RSN-131SP
85	20		64382	406003-1
85	20		0AK83	9518-5320-11
85	21	5330-00-291-5138	02697	2-219-E540-80
85	22		64382	406002-2
85	22		0AK83	9518-5320-16
85	23		02697	2-221-E540-80
85	23	5330-01-326-7322	64382	406012-1
85	24		64382	406006-2
85	24		0AK83	9518-5320-2
85	25	5330-00-111-7407	02697	2-222-E540-80
85	26	4610-01-105-2075	97403	13226E2212
85	27	5330-00-111-7407	02697	2-222-E540-80
85	27		63624	805-66
85	28	4610-01-154-6887	59112	22-178-2 AND 10-0504(2EA)
85	28		63624	60268
85	29		64382	106001-2
85	29		0AK83	9518-5320-10
85	30		64382	406008-1
85	30		0AK83	9518-5320-18
86	1	5310-00-934-9760	96906	MS35649-204
86	2	5310-00-933-8120	96906	MS35338-138
86	3	5305-00-050-9230	96906	MS51957-64
86	4		97403	13222E5340
86	5	5305-00-054-6671	96906	MS51957-46
86	6	5310-00-933-8119	96906	MS35338-137
86	7	5310-00-880-5978	96906	MS15795-807
86	8		97403	13222E5342
86	9		19099	13222E5342-2
86	10		97403	13226E2205-5
86	11	5310-00-934-9759	96906	MS35649-284
86	12	5305-00-340-4464	96906	MS3212-29
86	13	5330-00-914-7651	96906	MS51007-12
86	14	5310-00-934-9760	96906	MS35649-204
86	15	5310-00-933-8120	96906	MS35338-138
86	16	5305-00-839-3220	96906	MS3212-43
86	17		81349	38TB2
86	18		97403	13222E5315-7
86	19		81349	38TB20
86	20		97403	13222E5315-4
86	21	5945-00-852-7301	96906	MS25269-A1

CROSS-REFERENCE INDEXES

FIGURE AND ITEM NUMBER INDEX

FIG.	ITEM	STOCK NUMBER	CAGEC	PART NUMBER
86	22		97403	13222E5340-51
86	23		97403	13222E5340-48
86	24		97403	13226E8341
86	25	5340-00-057-2906	96906	MS21333-73
86	26	5340-00-057-2904	96906	MS21333-71
86	27	5305-01-136-4481	96906	MS3212-44
86	28	5340-00-843-7825	96906	MS21333-68
86	29		81349	38TB12
86	30		97403	13220E3966-1
86	31		97403	13222E5315-1
86	32	5310-00-934-9761	96906	MS35649-264
86	33	5310-00-929-6395	96906	MS35338-136
86	34	5310-00-136-1472	88044	AN961-6T
86	35	5305-00-939-0493	96906	MS3212-17
86	36	5310-00-019-0669	96906	MS35333-105
86	37	5930-00-726-9508	96906	MS27406-2
86	38	5930-00-583-8613	96906	MS25225-3
86	39		97403	13221E8293
86	40	5930-00-011-7872	96906	MS27407-5
86	41		97403	13229E6048
86	42	5930-00-683-1624	96906	MS24523-32
86	43	5930-00-945-3356	96906	MS25225-1
86	44		22973	830-701-1E
86	45	6240-01-355-4422	96906	MS15567-2
86	46		97403	13222E5313
86	47		97403	13222E5339
86	48		97403	13222E5341
86	49	5310-00-110-2739	80205	NAS1330C08B106
87	1		97403	13222E5344
87	2	5940-00-283-5280	96906	MS25036-106
87	3	5940-01-210-3173	81349	M7928/2-39
87	4		97403	13222E5344-2
87	5		97403	13222E5344-1
88	1		97403	13222E5287
88	2	5935-00-726-8317	96906	MS3102R32-7P
88	3	5940-00-283-5280	96906	MS25036-106
88	4	5940-00-204-8990	96906	MS25036-111
88	5		97403	13222E5287-2
88	6		97403	13222E5287-3
88	7		97403	13222E5287-4
89	1		97403	13226E8340
89	2	5940-00-813-0698	96906	MS25036-101
89	3		97403	13226E8340-1
90	1	5310-00-903-5966	96906	MS51971-1
90	2	5310-00-933-8121	96906	MS35338-139
90	3	5305-00-207-8253	96906	MS35307-308
90	4	5305-00-702-4523	96906	MS35307-306
90	4	5305-00-702-4523	96906	MS35307-306
90	5		97403	13222E5300
90	5		97403	13227E9230
91	1	5320-00-236-3883	96906	MS20470B3-5
91	2		97403	13221E8305
91	3		97403	13221E8273
91	3		97403	13227E9236
91	4		97403	13222E5306
91	5	5320-00-165-8768	96906	MS20426B3-5
91	6		19099	13222E5306-5

CROSS-REFERENCE INDEXES

FIGURE AND ITEM NUMBER INDEX

FIG.	ITEM	STOCK NUMBER	CAGEC	PART NUMBER
91	7		19099	1322235306-3
91	8	5320-00-165-8771	96906	MS20426B4-5
91	9	5310-00-888-2878	97403	1321730518-2
91	10	5365-00-282-7120	96906	MS16624-4037
91	11	5325-01-355-7125	97403	13226E2211-1
91	12		97403	13222E5306-1
91	13		19099	13222E5306-7
91	14		19099	13222E5306-12
91	15	5310-00-191-4132	97403	13217E0506-2
91	16	5305-00-719-3853	97403	13217E0604-4
91	17		97403	13222E5306-8
92	1		96906	MS35649-2385B
92	2	5310-00-984-7042	96906	MS35338-141
92	3	5310-00-187-2413	88044	AN961-616T
92	3	5310-00-187-2413	88044	AN961-616T
92	4		97403	13222E5297-29
92	5	5940-00-143-5284	96906	MS25036-115
92	6		96906	MS25086-118
92	7		19099	13222E5297W59-2-8-9
92	8	5310-00-022-8847	96906	MS35333-110
92	9		81349	MIL-S-1222 TY I GR4
92	10	5310-00-250-9477	96906	MS35649-2254
92	10	5310-00-934-9759	96906	MS35649-284
92	11	5310-00-933-8119	96906	MS35338-137
92	11	5310-00-933-8121	96096	MS35338-139
92	12	5310-00-880-5978	96906	MS15795-807
92	12	5310-00-582-5677	96906	MS15795-810
92	13	5305-00-340-4464	96906	MS3212-29
92	13	5305-01-067-8514	96906	MS3212-54
92	14	5320-00-083-5009	81349	M24243/1-A403
92	15		97403	13222E5279-47
92	16		97403	13222E5279-43
92	17	5305-00-765-4346	96906	MS51959-35
92	18		97403	13221E8319
92	19	5310-00-934-9761	96906	MS35649-264
92	20	5310-00-929-6395	96906	MS35338-136
92	21	5310-00-722-5998	96906	MS15795-805
92	22	5305-00-727-8832	96906	MS51959-29
92	23	5925-01-128-6284	97403	13221E8318
92	24		97403	13222E5297-31
92	25	5940-00-825-5041	96906	MS17143-6
92	26		19099	13222E5297W61-1-12-9
92	27		97403	13222E5297-32
92	28	5940-00-825-5041	96906	MS17143-6
92	29		19099	13222E5297W62-1-12-9
92	30		97403	13222E5297-33
92	31	5940-00-825-5041	96906	MS17143-6
92	32		19099	13222E5297W63-1-12-9
92	33		97403	13222E5279-41
92	34		97403	13222E5279-40
92	35		97403	13222E5279-39
92	36		97403	13222E5279-30
92	37	5310-00-934-9748	96906	MS35649-244
92	38	5310-00-933-8118	96906	MS35338-135
92	39	5310-00-595-6211	96906	MS15795-803
92	40	5305-00-993-9268	96906	MS3212-8
92	41	5935-01-175-8419	96906	MS25043-18DA

CROSS-REFERENCE INDEXES

FIGURE AND ITEM NUMBER INDEX

FIG.	ITEM	STOCK NUMBER	CAGEC	PART NUMBER
92	42	5330-00-079-7840	96906	MS51007-6
92	43	5305-00-082-8439	96906	MS3212-18
92	44	5935-01-175-8417	96906	MS25043-24DA
92	45	5330-00-063-7889	96906	MS51007-9
92	46		97403	13226E2205-5
92	47	5935-01-175-8418	96906	MS25043-36DA
92	48	5330-00-838-6935	96906	MS51007-13
92	49	5310-00-934-9759	96906	MS35649-284
92	50	5310-00-933-8119	96906	MS35338-137
92	51	5310-00-880-5978	96906	MS15795-807
92	52	5305-00-340-4464	96906	MS3212-29
92	53	5935-01-223-9420	96906	MS25043-32DA
92	54	5330-00-914-7651	96906	MS51007-12
93	1	5310-00-934-9759	96906	MS35649-284
93	1	5310-00-934-9759	96906	MS35649-284
93	2	5310-00-933-8119	96906	MS35338-137
93	2	5310-00-933-8119	96906	MS35338-137
93	3	5310-00-880-5978	96906	MS15795-807
93	3	5310-00-880-5978	96906	MS15795-807
93	4	5305-01-269-9226	96906	MS3212-28
93	4	5305-01-269-9226	96906	MS3212-28
93	5		81349	38TB6
93	6		97403	13220E3966-1
93	6		97403	13220E3966-1
93	7		97403	13222E5315-3
93	8		81349	38TB4
93	9		97403	13222E5315-5
93	10		81349	38TB7
93	11		97404	13222E5315-6
93	12		97403	13222E5297-30
93	12		97403	13227E9228-29
93	13	5940-00-204-8990	96906	MS25036-111
93	13		96906	MS25036-511
93	14		19099	13222E5297W60-1-10-9
93	14		19099	13227E9228W59-1-10-9
93	15	5310-00-934-9760	96906	MS35649-204
93	15	5310-00-934-9760	96906	MS35649-204
93	16	5310-00-933-8120	96906	MS35338-138
93	16	5310-00-933-8120	96906	MS35338-138
93	17	5310-00-883-9384	96906	MS15795-842
93	17	5310-00-883-9384	96906	MS15795-842
93	18	5305-01-136-4480	96906	MS3212-46
93	18	5305-01-136-4480	96906	MS3212-46
93	19		97403	13222E5316-1
93	19		97403	13222E5316-1
93	20		97403	13222E5315-2
93	20		97403	13222E5315-2
93	21	5305-01-136-4481	96906	MS3212-44
93	22	5340-01-208-6233	81349	M23190/1-3
93	22	5340-01-208-6233	81349	M23190/1-3
93	23	5975-00-156-3253	96906	MS3367-2-9
93	23	5975-00-156-3253	96906	MS3367-2-9
93	24	5340-01-266-9498	81349	M23190/1-5
93	24	5340-01-266-9498	81349	M23190/1-5
93	25		81349	M23190/1-4
93	25		81349	M23190/1-4
93	26	5975-00-074-2072	96906	MS3367-1-9

CROSS-REFERENCE INDEXES

FIGURE AND ITEM NUMBER INDEX

FIG.	ITEM	STOCK NUMBER	CAGEC	PART NUMBER
94	1	5305-00-182-9483	96906	MS3212-49
94	2	5305-00-021-3616	96906	MS35307-305
94	3	5310-00-582-5677	96906	MS15795-810
94	4		97403	13222E5301
94	5		97403	13222E5297-1
94	6	5940-00-557-4341	96906	MS25036-123
94	7		19099	13222E5297W11-2-4-9
94	8		97403	13222E5297-2
94	9	5940-00-557-4341	96906	MS25036-123
94	10		19099	13222E5297W12-2-4-9
94	11		97403	13222E5297-3
94	12	5940-00-557-4341	96906	MS25036-123
94	13		19099	13222E5297W13-2-4-9
94	14		97403	13222E5297-4
94	15	5940-00-557-4344	96906	MS25036-120
94	16	5940-00-114-1310	96906	MS25036-119
94	17		19099	13222E5297W14-2-6-9
94	18		97403	13222E5297-5
94	19	5940-00-557-4344	96906	MS25036-120
94	20	5940-00-114-1310	96906	MS25036-119
94	21		19099	13222E5297W15-2-6-9
94	22		97403	13222E5297-6
94	23	5940-00-557-4344	96906	MS25036-120
94	24	5940-00-114-1310	96906	MS25036-119
94	25		19099	13222E5297W16-2-6-9
94	26		97403	13222E5297-7
94	27	5940-00-143-5284	96906	MS25036-115
94	28		19099	13222E5297W17-2-8-9
94	29		97403	13222E5297-8
94	30	5940-00-143-5284	96906	MS25036-115
94	31		19099	13222E5297118-2-8-9
94	32		97403	13222E5297-9
94	33	5940-00-143-5284	96906	MS25036-115
94	34		19099	13222E5297W19-2-8-9
94	35		97403	13222E5297-10
94	36	5940-00-143-5284	96906	MS25036-115
94	37		19099	13222E5297W20-2-8-9
94	38		97403	13222E5297-11
94	39	5940-00-143-5284	96906	MS25036-115
94	40		19099	13222E5297121-2-8-9
94	41		97403	13222E5297-12
94	42	5940-00-143-5284	96906	MS25036-115
94	43		19099	13222E5297W22-2-8-9
94	44		97403	13222E5297-13
94	45	5940-00-143-4794	96906	MS25036-112
94	46		19099	13222E5297W23-1-10-9
94	47		97403	13222E5297-14
94	48	5940-00-143-4794	96906	MS25036-112
94	49		19099	13222E5297W24-1-10-9
94	50		97403	13222E5297-15
94	51	5940-00-143-4794	96906	MS25036-112
94	52		19099	13222E5297W25-1-10-9
94	53		97403	13222E5297-16
94	54	5940-00-143-4794	96906	MS25036-112
94	55		19099	13222E5297W26-1-10-9
94	56		97403	13222E5297-17
94	57	5940-00-143-4794	96906	MS25036-112

CROSS-REFERENCE INDEXES

FIGURE AND ITEM NUMBER INDEX

FIG.	ITEM	STOCK NUMBER	CAGEC	PART NUMBER
94	58		19099	13222E5297W27-1-10-9
94	59		97403	13222E5297-18
94	60	5940-00-143-4794	96906	MS25036-112
94	61		19099	13222E5297W28-1-10-9
94	62		97403	13222E5297-19
94	63	5940-00-143-4794	96906	MS25036-112
94	64		19099	13222E5297W29-1-10-9
94	65		97403	13222E5297-20
94	66	5940-00-143-4794	96906	MS25036-112
94	67		19099	13222E5297W30-1-10-9
94	68		97403	13222E5297-21
94	69	5940-00-143-4794	96906	MS25036-112
94	70		19099	13222E5297W31-1-10-9
94	71		97403	13222E5297-22
94	72	5940-00-557-4341	96906	MS25036-123
94	73		19099	13222E5297132-2-4-9
94	74		97403	13222E35297-23
94	75	5940-00-557-4341	96906	MS25036-123
94	76		19099	13222E5297W33-2-4-9
94	77		97403	13222E5297-24
94	78	5940-00-557-4341	96906	MS25036-123
94	79		19099	13222E5297134-2-4-9
94	80		97403	13222E5297-25
94	81	5940-00-143-4794	96906	MS25036-112
94	82		19099	13222E5297W35-1-10-9
94	83		97403	13222E5297-26
94	84	5940-00-143-4794	96906	MS25036-112
94	85		19099	13222E5297W36-1-10-9
94	86		97403	13222E5297-27
94	87	5940-00-143-4794	96906	MS25036-112
94	88		19099	13222E5297W37-1-10-9
94	89	5305-00-411-0683	96906	MS51957-123
94	90	5310-00-929-6395	96906	MS35338-136
94	91	5310-00-722-5998	96906	MS15795-805
94	92	5925-01-128-6403	97403	13221E8303-1
94	93	5925-01-139-6337	97403	13221E8302-1
94	94	5925-01-128-6405	97403	13221E8301-1
94	95	5925-01-128-6404	97403	13221E8301-2
94	96		97403	13222E5303
94	97		97403	13222E5302
94	98		97403	13227E9228-1
94	99	5940-00-557-4341	96906	MS25036-123
94	100		19099	13227E9228W11-3-4-9
94	101		97403	13227E9228-2
94	102	5940-00-557-4341	96906	MS25036-123
94	103		19099	13227E9228W12-3-4-9
94	104		97403	13227E9228-3
94	105	5940-00-557-4341	96906	MS25036-123
94	106		19099	13227E9228W13-3-4-9
94	107		97403	13227E9228-4
94	108		97403	13227E0127-5
94	109		97403	13227E0127-4
94	110		19099	13227E9228W14-3-6-9
94	111		97403	13227E9228-5
94	112		97403	13227E0127-5
94	113		97403	13227E0127-4
94	114		19099	13227E9228W15-3-6-9

CROSS-REFERENCE INDEXES

FIGURE AND ITEM NUMBER INDEX

FIG.	ITEM	STOCK NUMBER	CAGEC	PART NUMBER
94	115		97403	13227E9228-6
94	116		97403	13227E0127-5
94	117		97403	13227E127-4
94	118		19099	13227E9228W16-3-6-9
94	119		97403	13227E9228-7
94	120	5940-00-143-5284	96906	MS25036-115
94	121		19099	13227E9228W17-3-8-9
94	122		97403	13227E9228-8
94	123	5940-00-143-5284	96906	MS25036-115
94	124		19099	13227E9228W18-3-8-9
94	125		97403	13227E9228-9
94	126	5940-00-143-5284	96906	MS25036-115
94	127		19099	13227E9228W19-3-8-9
94	128		97403	13227E9228-10
94	129	5940-00-143-5284	96906	MS25036-115
94	130		19099	13227E9228W20-3-8-9
94	131		97403	13227E9228-11
94	132	5940-00-143-5284	96906	MS25036-115
94	133		19099	13227E9228W21-3-8-9
94	134		97403	13227E9228-12
94	135	5940-00-143-5284	96906	MS25036-115
94	136		19099	13227E9228W22-3-8-9
94	137		97403	13227E9228-13
94	138	5940-00-143-4794	96906	MS25036-112
94	139		19099	13227E9228W23-1-10-9
94	140		97403	13227E9228-14
94	141	5940-00-143-4794	96906	MS25036-112
94	142		19099	13227E9228824-1-10-9
94	143		97403	13227E9228-15
94	144	5940-00-143-4794	96906	MS25036-112
94	145		19099	13227E9228W25-1-10-9
94	146		97403	13227E9228-16
94	147	5940-00-143-4794	96906	MS25036-112
94	148		19099	13227E9228W26-1-10-9
94	149		97403	13227E9228-17
94	150	5940-00-143-4794	96906	MS25036-112
94	151		19099	13227E9228827-1-10-9
94	152		97403	13227E9228-18
94	153	5940-00-143-4794	96906	MS25036-112
94	154		19099	13227E9228W28-1-10-9
94	155		97403	13227E9228-19
94	156	5940-00-143-4794	96906	MS25036-112
94	157		19099	13227E9228W29-1-10-9
94	158		97403	13227E9228-20
94	159	5940-00-143-4794	96906	MS25036-112
94	160		19099	13227E9228W30-1-10-9
94	161		97403	13227E39228-21
94	162	5940-00-143-4794	96906	MS25036-112
94	163		19099	13227E9228W31-1-10-9
94	164		97403	13227E9228-22
94	165	5940-00-557-4341	96906	MS25036-123
94	166		19099	13227E9228W32-3-4-9
94	167		97403	13227E9228-23
94	168	5940-00-557-4341	96906	MS25036-123
94	169		19099	13227E9228W33-3-4-9
94	170		97403	13227E9228-24
94	171	5940-00-557-4341	96906	MS25036-123

CROSS-REFERENCE INDEXES

FIGURE AND ITEM NUMBER INDEX

FIG.	ITEM	STOCK NUMBER	CAGEC	PART NUMBER
94	172		19099	13227E9228W34-3-4-9
94	173		97403	13227E9228-25
94	174	5940-00-143-4794	96906	MS25036-112
94	175		19099	13227E9228W35-1-10-9
94	176		97403	13227E9228-26
94	177	5940-00-143-4794	96906	MS25036-112
94	178		19099	13227E9228W36-1-10-9
94	179		97403	13227E9228-27
94	180	5940-00-143-4794	96906	MS25036-112
94	181		19099	13227E9228W37-1-10-9
95	1		97403	13222E5308
95	2	5940-00-143-4774	96906	MS25036-153
95	3	5940-00-204-8966	96906	MS25036-102
95	4	5940-00-150-4682	00779	60432-1
95	5	5940-00-283-5280	96906	MS25036-106
95	6		19099	13222E5308W3-1-16-9
95	7		19099	13222E530883-1-18-9
96	1		97403	13222E5299
96	2	5935-01-171-1858	96906	MS3452W32-7S
96	3	5940-00-283-5280	96906	MS25036-106
96	4	5940-00-150-4682	97403	13216E6192
96	5	5940-00-143-4794	96906	MS25036-112
96	6	5940-00-143-4774	96906	MS25036-153
96	7	5940-00-825-5041	96906	MS17143-6
96	8	5940-00-143-4780	96906	MS25036-108
96	9		19099	13222E5299W4-1-12-9
96	10		19099	13222E529914-1-16-9
96	11		19099	13222E5299W4-1-18-9
96	12		19099	13222E5299W4-1-14-9
97	1	6150-01-328-4886	97403	13227E9243
97	2	5935-01-092-4269	96906	MS90558C44413P
97	3	5940-00-557-4341	96906	MS25036-123
97	4	5940-01-364-4960	97403	13227E0127-2
97	5	5940-00-825-5041	96906	MS17143-6
97	6		19099	13227E9243-3
97	7		19099	13227E9243-5
97	8		19099	13227E9243-7
97	9		97403	13227E9222-1
97	10	5935-00-114-8708	96906	MS90558C32412P
97	11	5940-00-557-4341	96906	MS25036-123
97	12		97403	13227E0127-3
97	13	5940-00-113-8190	96906	MS25036-122
97	14		19099	13227E9222W5-2-4-9
97	15		19099	13227E9222W5-2-6-9
97	16		97403	13227E9222-2
97	17	5935-00-114-8708	96906	MS90558C32412P
97	18	5940-00-557-4341	96906	MS25036-123
97	19		97403	13227E0127-3
97	20	5940-00-113-8190	96906	MS25036-122
97	21		19099	13227E9222W4-2-4-9
97	22		19099	13227E9222W4-2-6-9
98	1		97403	13222E5298-2
98	2	5940-00-825-5041	96906	MS17143-6
98	3	5940-00-143-4794	96906	MS25036-112
98	4	5935-01-232-5284	96906	MS3452W24-22S
98	5		19099	13222E5298W36-1-10-9
98	6		97403	13222E5298-3

CROSS-REFERENCE INDEXES

FIGURE AND ITEM NUMBER INDEX

FIG.	ITEM	STOCK NUMBER	CAGEC	PART NUMBER
98	7	5940-00-283-5280	96906	MS25036-106
98	8	5940-00-143-4780	96906	MS25036-108
98	9	5935-01-071-0331	96906	MS3452W18-11S
98	10		19099	13222E5298W7-1-14-9
98	11		97403	13222E5298-4
98	12	5940-00-283-5280	96906	MS25036-106
98	13	5940-00-143-4780	96906	MS25036-108
98	14	5935-01-071-0331	96906	MS3452W18-11S
98	15		19099	13222E5298W8-1-14-9
98	16		97403	13222E5298-5
98	17	5940-00-283-5280	96906	MS25036-106
98	18	5940-00-143-4780	96906	MS25036-108
98	19	5935-01-071-0331	96906	MS3452W18-11S
98	20		19099	13222E5298W9-1-14-9
98	21		97403	13222E5298-6
98	22	5940-00-557-4338	96906	MS25036-125
98	23	5935-00-878-8174	96906	MS3102R36-5S
98	24		19099	13222E5298-5-108-9
98	25		19099	13222E5298W10-2-4-9
99	1		97403	13222E5309
99	2	5940-00-113-9826	96906	MS25036-114
99	3	5940-00-825-5041	96906	MS17143-6
99	4	5940-00-283-5280	96906	MS25036-106
99	5	5940-00-143-4780	96906	MS25036-108
99	6		19099	13222E5309W39-1-10-9
99	7		19099	13222E5309W39-1-14-9
99	8		19099	13222E5309W39-1-16-9
99	9	5940-00-143-4774	96906	MS25036-153
100	1	5310-00-250-9477	96906	MS35649-2254
100	2	5310-00-933-8121	96906	MS35338-139
100	3	5310-00-582-5677	96906	MS15795-810
100	4	5305-00-021-3616	96906	MS35307-305
100	5	6110-01-137-4721	01121	509-DOD
100	6		01121	W-71
100	7	5999-01-110-4623	01121	595-A
100	8	5310-00-934-9759	96906	MS35649-284
100	9	5310-00-933-8119	96906	MS35338-137
100	10	5310-00-880-5978	96906	MS15795-807
100	11	5305-00-956-4470	96906	MS3212-25
100	12	6110-01-013-6482	01121	509-TOD/W-39
100	13	4520-01-237-8038	01121	W-39
100	14	6110-01-035-9228	01121	509-TOXD
100	15	5999-01-330-3451	01121	W-46
100	16	5310-00-934-9760	96906	MS35649-204
100	17	5310-00-933-8120	96906	MS35338-138
100	18	5310-00-883-9384	96906	MS15795-842
100	19	5305-00-928-0322	96906	MS3212-41
100	20	6110-01-187-7259	01121	509-AOD
100	21	5999-01-343-8889	01121	W-47
100	22	6110-01-153-2242	01121	509-BOD
100	23	5999-01-286-2883	01121	W-63
100	24	5999-01-110-4623	01121	595-A
100	25	6110-01-273-7849	01121	595-B
100	26	5305-00-054-6671	96906	MS51957-46
100	27	5945-01-338-5368	97403	13227E5591
100	28		97403	13227E5590
100	29		97403	13222E5304

CROSS-REFERENCE INDEXES

FIGURE AND ITEM NUMBER INDEX

FIG	ITEM	STOCK NUMBER	CAGEC	PART NUMBER
100	29		97403	13227E9232
100	30	5320-00-165-8768	96906	MS20426B3-5
100	31		97403	13226E2211-2
101	1	5310-00-903-5966	96906	MS51971-1
101	2	5310-00-933-8121	96906	MS35338-139
101	3	5310-00-550-5054	96906	MS15795-809
101	4	5305-00-207-8253	96906	MS35307-308
101	5	6210-01-358-6040	97403	13222E5271
101	6		75282	VAG-100
101	7		75282	VGG-100
101	8		75282	VFC-100
101	9		75282	VTG-100
101	10		75282	VBA
101	11		75282	VLJSX-1
101	12		75282	0722787B
101	13	6240-00-246-5052	81348	WL101-77T
101	14		97403	13222E5252
101	15	5310-00-903-2612	96906	MS9321-12
101	16		97403	13222E5270
102	1	5310-00-903-5966	96906	MS51971-1
102	2	5310-00-933-8121	96906	MS35338-139
102	3	5305-00-207-8253	96906	MS35307-308
102	4	5310-00-550-5054	96906	MS15795-809
102	5		97403	13221E8347
102	6	5305-00-145-8406	96906	MS35307-322
102	7		97403	13221E8348
102	8	5320-00-165-8772	96906	MS20426B4-6
102	9	5320-00-245-4323	96906	MS20470B4-9
102	10	5340-00-975-2126	96906	MS18015-1
102	11		19099	13221E8348-8
103	1	1670-00-294-2954	96906	MS21236-2
103	2	5305-00-269-3211	96906	MS90725-60
103	3	5310-00-984-7042	96906	MS35338-141
103	4		97403	13220E5346
103	5	5305-00-765-4257	96906	MS51959-43
103	6	5340-01-003-7718	97403	13219E0469
103	7	5305-00-701-5074	96906	MS51959-63
103	8		97403	13221E8297
103	9	5305-00-253-5615	96906	MS21318-21
103	10		97403	13222E5379-47
103	11		97403	13222E5279-36
103	12		97403	13222E5279-29
103	13		97403	13222E5279-46
103	14		97403	13222E5279-45
103	15		97403	13222E5279-13
103	16		97403	13222E5279-48
103	17		97403	13222E5279-16
103	18		97403	13222E5279-18
103	19		97403	13222E5279-34
103	20		97403	13222E5279-35
103	21		97403	13222E5279-7
103	22		97403	13222E5279-12
103	23		97403	13222E5279-50
103	24		97403	13222E5279-25
103	25		97403	13222E5279-10
103	26		97403	13222E5279-20
103	27		97403	13222E5279-49

CROSS-REFERENCE INDEXES

FIGURE AND ITEM NUMBER INDEX

FIG.	ITEM	STOCK NUMBER	CAGEC	PART NUMBER
103	28		97403	13222E5279-44
103	29		97403	13222E5279-32
103	30		97403	13222E5279-14
103	31		97403	13222E5279-33
103	32		97403	13222E5279-11
103	33		97403	13222E5279-15
103	34		97403	13222E5279-31
103	35		97403	13222E5279-17
103	36		97403	13222E5279-55
103	37		97403	13222E5279-56
103	38		97403	13222E5279-57
103	39		97403	13222E5279-38
103	40	5320-00-493-4101	81349	M24243/1-B604
103	41		90598	30629
103	42	5305-00-054-5648	96906	MS51957-14
103	43	5310-00-933-8118	96906	MS35338-135
103	44		96906	MS9321-5
103	45		19099	RR-C-271TY2CL6-9
103	46	5315-00-519-7150	96906	MS17990C308
103	47	5315-01-058-8539	96906	MS17990C404
103	48	5310-00-934-9760	96906	MS35649-204
103	49	5310-00-933-8120	96906	MS35338-138
103	50	5305-00-050-9233	96906	MS51957-67
103	51	5310-00-619-1148	96906	MS15795-808
103	52		97403	13227E7589-1
103	53		97403	13227E7589-2
103	54		97403	13227E7589-3
103	55		97403	13227E7589-4
103	56	5305-00-702-4523	96906	MS35307-306
103	57	5310-00-933-8121	96906	MS35338-139
103	58	5310-00-550-5054	96906	MS15795-809
103	59		97403	13222E5343
104	1	1670-00-294-2954	96906	MS21236-2
104	2	5305-00-269-3211	96906	MS90725-60
104	3	5310-00-984-7042	96906	MS35338-141
104	4		97403	13220E5346
104	5	5305-00-765-4257	96906	MS51959-43
104	6	5340-01-003-7718	97403	13219E0469
104	7	5320-00-493-4101	81349	M24243/1-B604
104	7	5320-00-493-4101	81349	M24243/1-B604
104	8		97403	13221E8299
104	9		97403	13221E8306
104	10		97403	13221E8304
104	11		97403	13221E8298
104	12	5305-00-054-5648	96906	MS51957-14
104	13	5310-00-933-8118	96906	MS35338-135
104	14		96906	MS9321-5
104	15	5315-00-159-3739	96906	MS17990C821
104	16		19099	RR-C-271TY2CL6-9
104	17		97403	13221E8371-1
104	18		97403	13221E8371-2
104	19	5305-00-253-5615	96906	MS21318-21
104	20		97403	13222E5279-9
105	1	5305-00-253-5615	96906	MS21318-21
105	2		97403	13222E5279-42
105	3		97403	13222E5279-4
105	4		97403	13222E5279-5

CROSS-REFERENCE INDEXES

FIGURE AND ITEM NUMBER INDEX

FIG.	ITEM	STOCK NUMBER	CAGEC	PART NUMBER
105	5		97403	13222E5279-8
105	6		97403	13222E5279-1
105	7		97403	13222E5279-6
105	8		97403	13222E5279-2
105	9		97403	13222E5379-47
105	10	5310-00-247-7186	96906	MS16203-37
105	11	5310-00-942-5109	96906	MS35335-89
105	12	5940-00-021-3321	96906	MS39347-2
106	1	5305-00-765-4257	96906	MS51959-43
106	2	5340-01-003-7718	97403	13219E0469
106	3	5340-01-302-8321	97403	13226E2208-11
106	4	5340-01-305-2788	97403	13226E2207-15
106	5	5340-01-299-2964	97403	13220E5373-1
106	6	5340-01-346-7461	97403	13226E2208-3
106	7	5340-01-305-2787	97403	13226E2207-13
106	8	5340-01-307-3898	97403	13226E2207-21
106	9	5340-01-299-2965	97403	13226E2208-10
106	10	5340-01-162-4325	97403	13220E5288-2
106	11		97403	13222E5280
106	11		97403	13225E8938
106	12	5305-00-988-7834	96906	MS316995-53
106	13	5310-00-582-5677	96906	MS15795-810
106	14	5310-01-121-1694	97403	13221E8369
106	15	5340-00-598-5599	96906	MS124666
106	16	5340-01-046-3702	96906	MS21209C4-10L
106	17	5340-00-594-7230	96906	MS122161
106	18	5340-00-990-7157	96906	MS122163
106	19	5340-00-200-7224	96906	MS122081
106	20	5340-00-290-4505	96906	MS122085
106	21	5340-00-331-4774	96906	MS122083
106	22	5340-00-368-4708	96906	MS122079
106	23	5310-01-041-9642	96906	MS27130-CR32
106	24	5310-01-118-1489	96906	MS27130-CR20
107	1	2330-01-226-0709	97403	13222E7100
107	2	5310-00-763-8901	96906	MS51968-23
107	3	5310-00-584-7888	96906	MS35338-51
107	4	5305-00-928-9636	96906	MS90727-199
107	5		97403	13222E7099
107	6	5310-00-067-6356	96906	MS51922-57
107	7	5305-00-947-4356	80204	B1821BH075C350N
107	8		97403	13222E7098
107	9	4010-01-112-8082	96906	MS87008-3
107	10		81348	RR-C-271
107	11	4010-00-165-5607	96906	MS87008-5
107	12		19099	RRC271TY1GRCCL4-3/8IN
107	13	4010-00-165-5606	96906	MS87008-7
107	14		81348	RR-C-271
107	15	5305-00-984-6210	96906	MS35206-263
107	16	9905-00-202-3639	96906	MS35387-2
107	17	9905-00-205-2795	96906	MS35387-1
107	18	5305-00-916-2345	96906	MS90727-187
107	19		97403	13222E7177
107	20	2590-01-329-4757	97403	13227E9242
107	21	4730-00-050-4208	96906	MS15003-1
107	22	5310-00-768-0319	96906	M951968-2
107	23	5310-00-209-0786	96906	MS35335-33
107	24	5306-00-068-0513	96906	MS90727-6

CROSS-REFERENCE INDEXES

FIGURE AND ITEM NUMBER INDEX

FIG.	ITEM	STOCK NUMBER	CAGEC	PART NUMBER
107	25		97403	13222E7132
107	26		19099	13222E7132-10
107	27	5310-00-732-0559	96906	MS51968-8
107	28	5310-00-627-6128	96906	MS35335-35
107	29	5340-01-337-4577	97403	13222E7095
107	30		81348	ZZ-T-381/GP3A/12-16.5/F/TBHR
107	31		81348	ZZ-V-25TYIICL2
107	32		97403	13222E7093
107	33	5310-00-984-3806	96906	MS51922-9
107	34	5306-01-337-5439	97403	13222E7138-1
107	35		97403	13222E7160
107	36		97403	13222E7139
107	37	5310-00-594-8038	96906	MS51983-2
107	38	5310-00-088-1251	96906	MS51922-1
107	39	5306-01-339-9552	97403	13222E7138-2
107	40	4010-01-338-8370	97403	13222E7137
107	41	5315-00-849-9854	96906	MS24665-498
107	42	5310-00-983-8485	96906	MS27183-30
107	43	5310-00-834-8732	96906	MS35691-33
107	44	5305-00-071-2070	24446	N22P29028C11
107	45	5310-00-809-5998	96906	MS27183-18
107	46	5360-01-338-8529	97403	13222E7141
107	47		97403	13222E7136
107	48	5315-00-209-7273	96906	MS24665-625
107	49		97403	13222E7135
107	50		97403	13222E7140
107	51	5305-00-253-5631	96906	MS21318-57
107	52		97403	13222E7097
107	53		97403	13222E7096
107	54	5120-01-112-3339	97403	13222E7145
108	1		97403	13222E7120
109	1		96906	MS90725-58
109	2	5310-00-637-9541	96906	MS35338-46
109	3	6220-01-093-4439	96906	MS52125-2
109	4		19207	11639535
109	5	5330-00-462-0907	19207	11639519-2
109	6	6240-00-019-3093	96906	MS15570-623
109	7	6240-00-044-6914	96906	MS35478-1683
109	8	6240-00-019-0877	96906	MS15570-1251
109	9		19207	11639520
109	10	5325-00-641-2800	96906	MS35489-104
110	1	5310-00-088-1251	96906	MS51922-1
110	2	5305-00-988-1725	96906	MS35206-281
110	3	5340-00-088-6655	96906	MS21333-101
110	4	6150-01-138-7084	97403	13222E7122
110	5	5935-00-059-2841	96906	MS75020-1
110	6	5365-00-141-6943	96906	MS3420-16
110	7	5360-00-906-7923	96906	MS39134-1
110	8	5935-00-167-7775	96906	MS27144-1
110	9	5940-00-230-0515	96906	MS25036-154
110	10	9905-00-752-4649	81349	M43436/1-1
110	11		19099	13222E7122-7
110	12	9905-00-893-3570	81349	M43436/1-3
110	13		19099	13222E7122-9
111	1	5310-00-088-1251	96906	MS51922-1
111	2	5305-00-988-1725	96906	MS35206-281

CROSS-REFERENCE INDEXES

FIGURE AND ITEM NUMBER INDEX

FIG.	ITEM	STOCK NUMBER	CAGEC	PART NUMBER
111	3	5340-00-088-6655	96906	MS21333-101
111	4	5340-00-809-1492	96906	MS21333-100
111	5	6150-01-339-9668	97403	13222E7126
111	6	5935-00-462-6603	96906	MS27142-2
111	7	5935-00-167-7775	96906	MS27144-1
111	8		19099	13222E7126-6
111	9	9905-00-752-4649	81349	M43436/1-1
111	10	9905-00-841-4445	81349	M43436/1-2
111	11		19099	13222E7126-5
112	1	5325-00-641-2800	96906	MS35489-104
112	2	5310-00-088-1251	96906	MS51922-1
112	3	5305-00-988-1725	96906	MS35206-281
112	4		97403	13222E7125
112	5		97403	13222E7127
113	1		97403	13222E7110
114	1		97403	13222E7111
114	2	4730-00-595-0083	96906	MS35746-1
114	3	4730-00-987-9073	96906	MS39133-2-B
114	4	4730-00-278-8257	96906	MS39133-1-B
114	5		97403	13222E7111-3
115	1	5310-00-088-1251	96906	MS51922-1
115	2	5340-00-088-1254	96906	MS21333-104
115	3		97403	13222E7112
115	4		96906	MS53007-2
115	5		81343	6-4-100102B
115	6		81343	6-100115B
115	7		81343	6-100110B
115	8		19099	13222E7110-36
115	9		19099	13222E7110-7
115	10		19099	13222E7110-31
115	11		19099	13222E7110-37
115	12		81343	6-6-100202B
115	13	5325-00-641-2800	96906	MS35489-104
115	14	4720-01-118-9326	97403	13222E7117-1
115	15	4720-01-118-9327	97403	13222E7117-2
115	16		81343	6-4-140130C
115	17	5305-00-225-3842	77260	X1655
115	18		97403	13222E7124
115	19	5340-00-809-1494	96906	MS21333-105
115	20	4730-01-048-7874	81343	8-100110B
115	21		81343	8-100115B
115	22		81343	8-6-100202B
115	23	5325-00-081-7611	96906	MS35489-131
115	24		81343	8-8-8-100401B
115	25		81343	8-8-100103B
115	26		81343	8-140137B
115	27	5310-00-087-4652	96906	MS51922-17
115	28	5305-00-068-0511	80204	B1821BH038C125N
115	29	4820-00-057-0694	96906	MS35785-6
115	30		97403	13222E7115-1
115	30		97403	13222E7115-2
115	31		81343	12-140239
115	31		81343	12-8-140238
115	32		81343	12-8-140140
115	33		93061	211P-6
115	33		06853	233057
115	34	2530-01-182-8983	06853	228746

CROSS-REFERENCE INDEXES

FIGURE AND ITEM NUMBER INDEX

FIG.	ITEM	STOCK NUMBER	CAGEC	PART NUMBER
115	34		62173	9569-1
115	35		96906	MS53007-1
116	1	5310-00-088-1251	96906	MS51922-1
116	2	5306-01-339-9553	97403	13222E7138-3
116	3	2530-00-797-9295	06853	225357
116	4	4730-00-202-9170	06853	203680
116	5	4730-00-580-8457	06853	235091
116	6	5330-00-285-5123	06853	235092
116	7	5360-00-706-9054	06853	235093
116	8	5310-00-679-3606	06853	235094
116	9	4330-00-739-6379	06853	235095
116	10		06853	235096
117	1	5310-00-087-4652	96906	MS51922-17
117	2	5305-00-068-0511	80204	B1821BH038C125N
117	3		97403	13222E7144
117	4		97403	13222E7143
117	5	2530-00-622-6803	06853	281860
117	6	5305-00-390-0551	06853	242228
117	7		06853	239943
117	8	4820-00-368-8293	06853	246086
117	9		06853	291933
117	10	5365-00-378-9965	06853	230872
117	10	5365-00-378-9966	06853	230873
117	11		06853	246085
117	12	5330-00-425-2828	06853	246083
117	13	2530-00-708-9504	06853	238837
117	14		06853	296789
117	15	5330-00-733-4599	06853	236728
117	16		06853	246084
117	17		06853	281674
117	18		06853	240337
117	19		06853	235063
117	20		06353	238327
117	21	4730-00-427-5121	01276	2082-6B
117	22	3820-00-283-2149	06853	246895
117	23	5306-01-108-8371	06853	291928
117	24		06853	246209
117	25	5310-01-162-3808	06853	232850
117	26		06853	281673
117	27		06853	236649
117	28		06853	245290
117	29		06853	246087
117	30		06853	281676
117	31	5330-00-494-2497	06853	243973
117	32		06853	243972
118	1		97403	13222E7090
118	1		97403	13229E0400
118	2	5310-00-763-8905	96906	MS51968-20
118	3	5310-00-820-6653	96906	MS35338-50
118	4	5305-00-726-2551	96906	MS90727-164
118	5		97403	13222E7107
119	1	5305-00-983-7449	96906	MS16998-75
119	2		97403	13222E7105
119	3		97403	13222E7104
119	4	5310-00-763-8912	96906	MS51968-26
119	5	5310-00-971-7990	96906	MS35691-69
119	6	5306-01-122-2440	97403	13222E7092

CROSS-REFERENCE INDEXES

FIGURE AND ITEM NUMBER INDEX

FIG.	ITEM	STOCK NUMBER	CAGEC	PART NUMBER
119	7		97403	13222E7109
119	8		97403	13222E7106
119	9		97403	13222E7108
119	10	4730-00-050-4208	96906	MS15003-1
119	11		97403	13222E7087
119	12		97403	13229E0164
119	13		97403	13229E0163-2
119	14		97403	13229E0163-1
119	15		96906	MS35842-16
120	1	5310-00-763-8905	96906	MS51968-20
120	2	5310-00-835-2037	96906	MS35691-53
120	3	5306-01-337-5440	97403	13222E7085
120	3		97403	13229E0401
120	4	5310-00-732-0560	96906	MS51968-14
120	5	5310-00-584-5272	96906	MS35338-48
120	6		97403	13222E7084
120	6		97403	13229E0399
120	7		97403	13222E7083
120	8		97403	13222E7182
120	9		97403	13222E7091
120	10		97403	13222E7086
120	10		97403	13229E0402
120	11		97403	13222E7088
120	12	5310-00-880-8189	96906	MS51967-11
120	13	5305-00-069-5586	96906	MS90725-102
120	14		97403	13222E7088-10
120	15		97403	13222E7088-6
120	16	5320-01-352-3401	96906	MS20613-14P16
120	17	5310-00-732-0560	96906	MS51968-14
120	18	5305-00-719-5274	96906	MS90727-125
120	19		97403	13222E7088-5
120	20		97403	13222E7088-4
120	21		97403	13222E7088-3
120	22		97403	13222E7088-2
120	23		97403	13222E7088-1
121	1		81348	ZZ-T-381/GP3A/12-16.5/F/TBHR
121	2		81348	ZZ-V-25TYIICL2
121	3		97403	13222E7093
121	4		97403	13222E7089
121	4		97403	13229E0398
122	1	5310-00-518-5566	96906	MS51983-1
122	1	5310-00-594-8038	96906	MS51983-2
122	2	5305-00-419-6520	95019	500397-8
122	3	5310-00-177-7749	95019	500357-10
122	4		62707	M10HK101
122	5	5330-01-119-5827	62707	M10HG124
122	6	5310-01-183-6830	62707	M10HN107
122	7	5310-01-183-6843	62707	M10HN105
122	8	5310-01-183-6844	62707	M10HN104
122	9	3110-00-100-0268	62707	M10HB102
122	10	5330-01-326-6749	62707	M10HH1O4
122	11	3110-00-100-0269	62707	M10HB103
122	12		62707	K14HU105-1X
122	13	5310-01-042-1006	62707	500371-8
122	14	5306-01-337-6972	62707	M10HM116-4
122	15	2530-01-340-0443	62707	M12WA103

CROSS-REFERENCE INDEXES

FIGURE AND ITEM NUMBER INDEX

FIG.	ITEM	STOCK NUMBER	CAGEC	PART NUMBER
122	16		62707	K14HU110X
122	17		62707	M10HA100
122	18		62707	M10HA101
122	19		62707	K14HU104
122	20		62707	K14HU105-2X
122	21	5310-01-042-1006	62707	500371-8
122	22	5306-01-337-6973	62707	M10HM117-4
122	23		62707	M12WA103
122	24		62707	K14HU110X
122	25		62707	M10HA100
122	26		62707	M10HA101
122	27		62707	K14HU104
123			62707	M10KY102
123			62707	M10WJ212X
123			62707	M12KBH04
123			62707	M12KY203
123	1	5310-01-288-5668	97271	500371-5
123	2	5310-00-671-4109	95019	500357-13
123	3	5306-01-183-2697	62707	500412-15
123	4	5310-01-042-1006	62707	500371-8
123	5		62707	500358-17
123	6		62707	M12WD117X
123	7	5365-01-361-8376	62707	M10HR104
123	8		62707	M10WJ117
123	9		62707	M10HR105
123	10	5360-01-019-3541	62707	M10WJ118
123	11		62707	M12WN112X
123	12	5340-01-239-0883	62707	M16WJ102
123	13	5360-01-220-9373	62707	M16WJ103
123	14		62707	M16WJ104
123	15	5325-01-061-0710	62707	38038
123	16	2530-01-129-7552	62707	M12WR101
123	17		62707	M10HS100
123	18		62707	M12WS131X
123	19		62707	M16HH100
123	20		62707	M12HD100
123	21	4730-00-906-0982	95019	500168-2
123	22		62707	M12WS122
123	23		62707	M10HN108
123	24		62707	M12WKL10-233
123	24		62707	M12WKR10-233
123	25		62707	M12WH118X
123	26	5310-00-945-4478	95019	500370-1
123	27		62707	500356-9
123	28		62707	500396-10
123	29		62707	M10WH101
123	30		62707	M10HH131
123	31		62707	M10WJ107
123	32		62707	500174-2
123	33		62707	A13TA105-3X
123	34	5325-01-361-8376	62707	M10HR104
123	35	5310-01-244-6894	62707	M10HN136
123	36	5315-01-280-6184	62707	M10WJ108
123	37	5360-01-019-3541	62707	M10WJll8
123	38	2530-01-129-7552	62707	M12WN112X
123	39	5340-01-239-0883	62707	M16WJ102
123	40	5360-01-220-9373	62707	M16WJ103

CROSS-REFERENCE INDEXES

FIGURE AND ITEM NUMBER INDEX

FIG.	ITEM	STOCK NUMBER	CAGEC	PART NUMBER
123	41		62707	M16WJ114
123	42	5325-01-061-0710	62707	38038
123	43		62707	M10HS146
123	44		62707	M10HR155
123	45		62707	A10SJC00606
123	46		62707	M10HS143
123	47		62707	M12WS160X
123	48		62707	M16HH102
123	49		62707	M16HD106
123	50		62707	500169-5
123	51		62707	M12WS159
123	52		62707	M10HS147
123	53		62707	M12WKL15-233
123	53		62707	M12WKR15-233
123	54		62707	M12WH50G-L
123	55		62707	M12WH50G-R
123	56		62707	M10HM195
123	57		62707	M10WH146
123	58		62707	M10WG260X
123	59		62707	M10HG143
124	1		50153	3030 GC
124	2	5340-01-083-7084	50153	11M018-5/8
124	3		50153	11M050
124	4		50153	11M067
124	5	5310-01-166-0760	50153	11M046
124	6		62707	M10WR303-520
125	1	5310-00-763-8920	96906	MS51967-20
125	2	5310-00-820-6653	96906	MS35338-50
125	3	5310-00-823-8803	96906	MS27183-21
125	4	5305-00-724-7224	80204	B1821BH063C250N
125	5	5310-01-185-0586	97403	13206E4482-3
125	6	5305-00-958-5473	96906	MS35190-251
125	7	5340-01-003-7718	97403	13219E0469
125	8	5340-01-331-4009	97403	13226E2208-13
125	9	5340-01-305-2787	97403	13226E2207-13
125	10		97403	13221E8325
125	11	5340-00-479-9197	96906	MS122119
125	12	5305-00-957-6266	96906	MS35190-252
125	13	5340-01-305-2788	97403	13226E2207-15
125	14	5340-01-327-4611	97403	13226E2207-16
125	15	5340-01-327-4612	97403	13226E2208-14
125	16	5340-01-302-8321	97403	13226E2208-11
125	17	5340-01-331-4010	97403	13226E2207-20
125	18		97403	13222E7101
125	19	5310-00-880-7744	96906	MS51967-5
125	20	5310-00-407-9566	96906	MS35338-45
125	21	5306-00-225-8499	96906	MS90725-34
125	22		97403	13217E3043
125	23	5310-00-087-4652	96906	MS51922-17
125	24	5305-01-325-8387	96906	MS90725-64
125	25		19099	13222E7101-95
126	1		81349	MIL-B-43648
126	2	6135-00-850-3177	81348	W-B-101
126	3	7520-00-559-9618	81349	MIL-C-11743
126	4	6630-01-044-0334	12308	U25337
126	5	6640-01-086-7603	22527	8-572D
126	6		61748	001

CROSS-REFERENCE INDEXES

FIGURE AND ITEM NUMBER INDEX

FIG.	ITEM	STOCK NUMBER	CAGEC	PART NUMBER
126	7	4240-00-022-2946	81349	M38268-2
126	8		89875	4-375
126	9	5120-00-243-7326	81348	GGG-W-641
126	10	5120-00-288-7679	83330	L73
126	11		81349	MIL-F-3747, TYI,STY2
126	12		61748	003
126	13		81348	GGG-H-86, TY2, S TYB, CL1
126	14		81348	GGG-H-86, DOUBLE FACE, TYX, CL1
126	15		81348	GGG-W-461
126	16	9120-00-230-6385	81348	GGG-W-641
126	17		57719	AWM-5C
126	18	6240-01-351-3889	81348	W-L-101/77A
126	19	6240-00-143-3060	96906	MS15567-1
126	20	6230-00-901-9755	81348	w-L-661-1-1-2
126	21		81348	GGG-H-33-TY3CL3
126	22		81349	MIL-M-52372, FIGURE 6
126	23	4610-01-115-7521	97403	13221E8334
126	24	6640-01-168-0312	97403	13221E8329
126	25	6630-00-127-4774	97403	13222E5258-1
126	26	7330-00-972-5211	81349	MIL-W-52027
126	27	4610-01-088-3233	97403	13221E8328
126	28		81348	L-P-65, SIZE 4
126	29		81348	GGG-P-471 TY2CL2 STA
126	30	5120-01-135-0062	97403	13221E8330
126	31	5305-01-088-7419	96906	MS51849-102
126	32		81348	GGG-S-121 TY6CL1
126	33	5120-00-596-8502	81348	GGG-S-121
126	34	5120-00-234-8910	81348	GGG-S-121
126	35	5120-00-237-0984	81348	GGG-W-641
126	36		81348	GGG-W-641
126	37	5120-00-189-7946	81348	GGG-W-641
126	38	5120-00-235-5870	81348	GGG-W-641
126	39	5120-00-189-7985	81348	GGG-W-641
126	40	5120-00-189-7934	81348	GGG-W-641
126	41		81348	GGG-W-641
126	42		61748	002
126	43		65092	MODEL 2296
126	44	6630-01-105-2058	97403	13221E8335
126	45	5120-00-148-7917	81348	GGG-W-636
126	46		81348	GGG-W-631, TY1CL 1526
126	47		81348	GGG-W-631, TY1CL 15Z12
126	48	5120-00-228-9517	81348	GGG-W-636
126	49	5120-00-242-3249	81348	GGG-W-651
126	50		81348	GGG-W-651, TYIIC LC
126	51		81348	GGG-W-00649, TY1 CL1STA
126	52	5120-00-293-1602	81348	GGG-W-665
126	53		81348	151
126	54	4610-01-212-2704	97403	PD4610-0077
126	55	4720-01-132-0800	97403	13221E8367-2
126	56	4730-01-267-0001	97403	13227E8836
126	57	4610-01-408-2390	97403	13229E0159
126	58	4610-01-408-0690	97403	13229E0160
126	59		97403	13229E0519
126	60		97403	13226E2207-7
126	61		39428	7587A33

CROSS-REFERENCE INDEXES

FIGURE AND ITEM NUMBER INDEX

FIG.	ITEM	STOCK NUMBER	CAGEC	PART NUMBER
126	62	4730-00-909-8627	01276	FF9311-36
126	63	4730-00-908-6292	96906	MS35842-14
126	64		62531	1429-020
126	65		62531	1429-030
127	1		61748	111428
127	2		61748	9108A161DF1
127	3		61748	911016200A1
127	4		61748	9243W000041
127	5		61748	9102B0614A1
127	6		61748	92431000042
127	7		61748	9G16CB25500
127	8		41083	260246
127	9		55719	SXW5

☆U.S GOVERNMENT PRINTING OFFICE: 1998 646-013/60591