*TM 10-4610-232-24P

TECHNICAL MANUAL

UNIT, DIRECT SUPPORT AND GENERAL SUPPORT MAINTENANCE REPAIR PARTS AND SPECIAL TOOLS LIST

FOR

WATER PURIFICATION UNIT, REVERSE OSMOSIS, 3,000 GPH TRAILER MOUNTED, FLATBED CARGO 22-1/2 TON, 8 WHEEL TANDEM MODEL NO. WTA-060 (UOC: ETN) NSN 4610-01-219-8707 AND MODEL ROWPU-1 (UOC: FKD) NSN 4610-01-371-1790

DISTRIBUTION STATEMENT A. Approved for public release; distribution is limited.

***This manual supersedes TM 10-4610-232-24P, dated 30 Jun 1993 and all related changes.**

HEADQUARTERS, DEPARTMENT OF THE ARMY

31 January 2000

HEADQUARTERS
DEPARTMENT THE ARMY
WASHINGTON, D.C., 31 January 2000

Unit, Direct Support and General Support Maintenance
Repair Parts and Special Tools List
for

WATER PURIFICATION UNIT, REVERSE OSMOSIS, 3,000 GPH TRAILER MOUNTED, FLATBED CARGO 22-1/2 TON, 8 WHEEL TANDEM MODEL NO. WTA-060 (UOC: ETN) NSN 4610-01-219-8707 AND MODEL ROWPU-1 (UOC: FKD) NSN 4610-01-371-1790

Current as of 13 January 2000

REPORTING ERRORS AND RECOMMENDING IMPROVEMENTS You can help improve this publication. If you find any mistakes or if you know of a way to improve the procedures, please let us know. Submit your DA Form 2028-2 (Recommended Changes to Equipment Technical Publications), through the Internet, on the Army Electronic Product Support (AEPS) website. The Internet address is http://aeps.ria.army.mil. If you need a password, scroll down and click on "ACCESS REQUEST FORM". The DA Form 2028 is located in the ONLINE FORMS PROCESSING section of the AEPS. Fill out the form and click on SUBMIT. Using this form on the AEPS will enable us to respond quicker to your comments and better manage the DA Form 2028 program. You may also mail, fax or email your letter, DA Form 2028, or DA Form 2028-2 direct to: Commander, U.S. Army Tank-automotive and Armaments Command, ATTN: AMSTA-AC-NML, Rock Island, IL 61299-7630. The email address is amsta-ac-nml@ria.army.mil. The fax number is DSN 793-0726 or Commercial (309) 782-0726.

DISTRIBUTION STATEMENT A: Approved for public release; distribution is unlimited

TABLE OF CONTENTS

		PAGE	ILLUS/ FIGURE
Section I	Introduction	1	
Section II	Repair Parts	1-1	
Group 01	Raw Water System		
	Raw Water System	1-1	1
	Raw Water Pump Cables	2-1	2
	Raw Water Pump and Motor Assembly	3-1	3
	Raw Water Pump	4-1	4
	Raw Water Pump Motor	5-1	5
	Priming Assist Pump	6-1	6
	Cyclone Separators	7-1	7
Group 02	Water Purification System		
	Eyewash Station	8-1	8
	Fire Extinguisher	9-1	9
	Low Pressure Air Tubing	10-1	10
	High Pressure Air Tubing	11-1	11
	Low Pressure Water Tubing	12-1	12

* This manual supersedes TM 10-4610-232-24P, dated 3 June 1993 and all related changes.

TABLE OF CONTENTS (cont.)

	Page	Illus. Figure
High Pressure Piping, Hoses and Tubing	13-1	13
Hose Connections Container to HP Pump	14-1	14
Chemical Tubing	15-1	15
Main Harness - Raw Water Side	16-1	16
440V Harness - Front Wall	17-1	17
Auxiliary Wiring - Front Wall	18-1	18
Main Harness - Back Wall	19-1	19
440V Harness - Back Wall	20-1	20
DC Wiring - Back Wall	21-1	21
Auxiliary Wiring - Back Wall	22-1	22
Wiring for Ceiling Lights	23-1	23
Ceiling Light Assembly	24-1	24
Pressure Gages and Mounting Hardware	25-1	25
Control Panel Mounting	26-1	26
Main Control Panel Cable Assembly and Connectors	27-1	27
Main Control Panel Wiring List	28-1	28
Main Control Panel Light	29-1	29
Upper Exterior Panel	30-1	30
Upper Interior Panel - Relays	31-1	31
Circuit Breaker Panel	32-1	32
Lower Exterior Panel	33-1	33
Main Circuit Breaker and Transformer	34-1	34
Lower Interior Panels, Circuit Breakers and Motor Starter	35-1	35
Motor Starter MS8-15, MS8-2M	36-1	36
Motor Starter MS7	37-1	37
Motor Starter MS8-1M	38-1	38
Motor Starter MS2	39-1	39
Motor Starter MS1	40-1	40
Motor Starter MS3	41-1	41
Motor Starter MS8-25	42-1	42
Main Control Panel	43-1	43
Pressure Switches Panel Assembly	44-1	44
Pressure Switches Panel Wiring	45-1	45
Switch Panel No.1	46-1	46
Switch Panel No.2	47-1	47
Switch Panel No.2 Wiring	48-1	48
Junction Box Assembly No. 3	49-1	49
Junction Box No. 3 Wiring	50-1	50
Utility Cable Junction Box	51-1	51
Raw Water Pump Junction Box	52-1	52
Raw Water Pump Junction Box-Wiring	53-1	53
Distribution Pump Junction Box	54-1	54
Distribution Pump Junction Box-Wiring	55-1	55
Chemical Injection Pump Mounting and Connections	56-1	56
Chemical Injection Pump	57-1	57
Hypochlorite Backwash Pump	58-1	58
Hypochlorite Tank Assembly	59-1	59
Mixer Assembly	60-1	60
Hypochlorite Tank Assembly Mounting Bracket	61-1	61
Booster Pump Installation	62-1	62
Booster Pump	63-1	63

TABLE OF CONTENTS (cont.)

	Page	Illus. Figure
Booster Pump Motor	64-1	64
Cartridge Filter Assembly	65-1	65
Booster Pump Suction Feed	66-1	66
Booster Pump Discharge	67-1	67
High Pressure Pump Suction	68-1	68
Product Water Out	69-1	69
Sound Controlling Blankets (Piping)	70-1	70
Pressure Control Valve and Waste Out Piping	71-1	71
Basket Strainer	72-1	72
Butterfly Valve and Actuator	73-1	73
Butterfly Valve and Actuator (Model ETN Only)	74-1	74
Butterfly Valve and Actuator (Model ETN Only)	75-1	75
Manual Butterfly Valve	76-1	76
Turbidity Fow Panel Assembly (Model ETN Only)	77-1	77
Turbidity Meter Panel Assembly (Model ETN Only)	78-1	78
Turbidity Meter (Model ETN Only)	79-1	79
Low Pressure Solenoid Valve Air Blanket	80-1	80
Low Pressure Solenoid Valve Backwash Air	81-1	81
Low Pressure Solenoid Valve	82-1	82
Media Filter Level Indicator Assembly	83-1	83
Media Filter Assembly	84-1	84
Clean Flush Tank Assembly	85-1	85
Polyelectrolyte Tank Assembly	86-1	86
Sequestrant Tank Assembly	87-1	87
Chemical Tank Mounting	88-1	88
Sample Trough Assembly	89-1	89
High Pressure Solenoid Valve Assembly	90-1	90
Turbidity Meter Air Dryer (Model ETN Only)	91-1	91
TDS Meter Assembly (Model ETN Only)	92-1	92
24V DC Power Supply	93-1	93
24V DC Power Supply Wiring	94-1	94
Diesel Heater Control Box 1 and Wiring	95-1	95
Diesel Heater Control Box 2 and Wiring	96-1	96
Diesel Heater and Mounting Brackets	97-1	97
Diesel Heater	98-1	98
Heater Fuel Pump	99-1	99
Fuel Lines	100-1	100
Thermostat Assembly (Heater 2)	101-1	101
CO Monitor	102-1	102
RO Vessels and Elements	103-1	103
RO Element Mounting	104-1	104
Storage Rack and Box	105-1	105
NBC Filter Assembly	106-1	106
NBC Filter Hoses	107-1	107
Air Dryer	108-1	108
Outlet Air Filter	109-1	109
Air Manifolds	110-1	110
Air Tank	111-1	111
Air Regulator	112-1	112
Fan Assembly (Serial No.16461 Thru 16556)	113-1	113
Fan Assembly (Serial No.16557 Thru 17099)	114-1	114

TABLE OF CONTENTS (cont.)

		PAGE	ILLUS/ FIGURE
	Sump Drain Heater	115-1	115
	Waste Water Hoses	116-1	116
	Ladder	117-1	117
	Accessory Tables	118-1	118
	ID Plate and Cable Mounts	119-1	119
	ISO Container	120-1	120
	Rear Door - Distribution Side	121-1	121
	Front Door - Raw Water Side	122-1	122
	ISO Container - Exterior Skin	123-1	123
	High Pressure Pump Assembly and Cover	124-1	124
	Metal Oxide Varistor (MOV) Assembly	125-1	125
	Electric Heater	126-1	126
	Air Compressor Relief Valve	127-1	127
	Air Compressor Mounting, Belt Guard and Motor	128-1	128
	Air Compressor	129-1	129
	High Pressure Pump Guard	130-1	130
	High Pressure Motor Assembly	131-1	131
	Piping for High Pressure Pump	132-1	132
	High Pressure Pump Mounting	133-1	133
	High Pressure Pump (Drive End)	134-1	134
	High Pressure Pump (Fluid End)	135-1	135
	High Pressure Pump/Motor Assembly	136-1	136
Group 03	Water Distribution System		
	Distribution System	137-1	137
	Distribution Pump Assembly	138-1	138
	Distribution Pump	139-1	139
	Distribution Pump Motor	140-1	140
	Storage Tank	141-1	141
Group 04	Winter Kit		
	Winter Kit	142-1	142
Group 05	Accessories		
	Accessories	143-1	143
Group 06	Generator		
	Generator And Brackets	144-1	144
Group 07	Trailer, 30 Foot		
	Trailer	145-1	145
Group 08	Bulk Items		
	Bulk Items	BULK-1	
Section III	Special Tools List		
	Special Tools	146-1	146
Section IV	Cross Reference Index		
	National Stock Number Index	I-1	
	Part Number Index	I-34	

UNIT, DIRECT SUPPORT AND GENERAL SUPPORT MAINTENANCE REPAIR PARTS AND SPECIAL TOOLS LIST

Section I. INTRODUCTION

1. **SCOPE.** This RPSTL lists and authorizes spares and repair parts; special tools; special test, measurement, and diagnostic equipment (TMDE); and other special support equipment required for performance of unit, direct support and general support maintenance of the Water Purification Unit, Reverse Osmosis, 3,000 GPH. It authorizes the requisitioning, issue, and disposition of spares, repair parts and special tools as indicated by the source, maintenance

   and recoverability (SMR) codes.

2. **GENERAL**. In addition to this section, Introduction, this Repair Parts and Special Tools List is divided into the following sections:

   a. Section II. Repair Parts List. A list of spares and repair parts authorized by this RPSTL for use in the performance of maintenance. This list also includes parts which must be removed for replacement of the authorized parts. Parts lists are composed of functional groups in ascending alphanumeric sequence, with the parts in each group listed in ascending figure and item number sequence. Bulk materials are listed in item name sequence. Items are shown in the associated illustration(s)/figure(s).

   b. Section III. Special Tools List. A list of special tools, special TMDE, and other special support equipment authorized by this RPSTL (as indicated by Basis of Issue (BOI) information in DESCRIPTION AND USABLE ON CODE column) for the performance of maintenance.

   c. Section IV, Cross-Reference Index. A list, in National Item Identification Number (NIIN) sequence, of all National stock numbered items appearing in the listing, followed by a list in alphanumeric sequence of all part numbers appearing in the listings. National stock numbers and part numbers are cross referenced to each illustration figure and item number appearance. The figure and item number index lists figure and item numbers in alphanumeric sequence and cross references NSN, CAGEC and part number.

3. **EXPLANATION OF COLUMNS (SECTIONS II AND III).**

   a. ITEM NO. (Column (1)). Indicates the number used to identify items called out in the illustration.

   b. SMR Code (Column (2)). The Source, Maintenance, and Recoverability (SMR) code is a 5-position code containingsupply/requisitioning information, maintenance category authorization criteria, and disposition instruction, as shown in the following breakout:

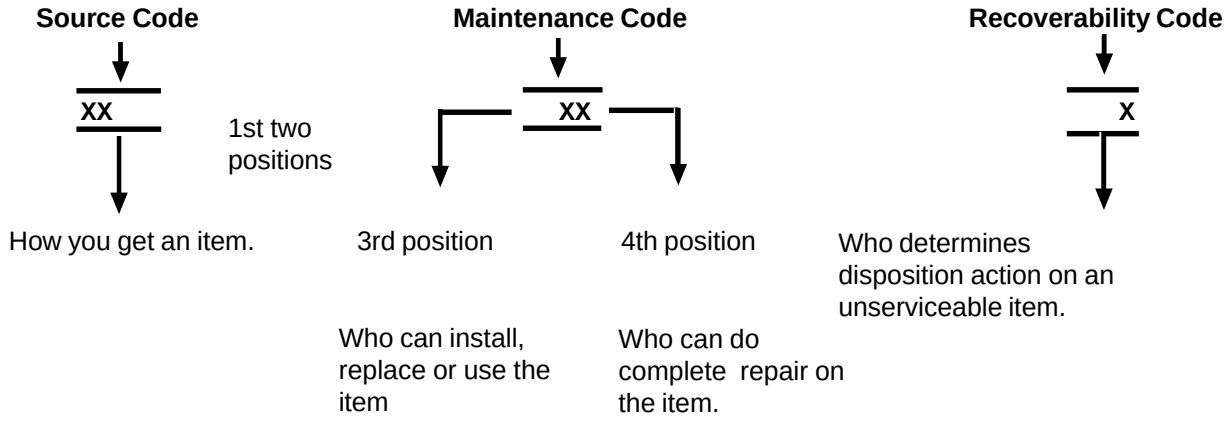

* Complete Repair: Maintenance capacity, capability, and authority to perform all corrective maintenance tasks of the “Repair” function in a use/user environment in order to restore serviceability to a failed item.

(1) Source Code. The source code tells you how to get an item needed for maintenance, repair, or overhaul of an end item/equipment. Explanations of source codes follows:

Source Code	Explanation
PA PB PC** PD PE PF PG	Stocked items; use the applicable NSN to request/requisition items with these source codes. they are authorized to the category indicated by the code entered in the 3rd position of the SMR code. **NOTE: Items coded PC are subject to deterioration.
KD KF KB	Items with these codes are not to be requested/requisitioned individually. They are part of a kit which is authorized to the maintenance category indicated in the 3rd position of the SMR code. The complete kit must be requisitioned and applied.
MO- (Made at Unit/AVUM Level) MF- (Made at DS/AVUM Level) MH- (Made at GS Level) ML- (Made at Specialized Repair Activity (SRA)) MD- (Made at Depot)	Items with these codes are not to be requested/requisitioned individually. They must be made from bulk material which is identified by the part number in the DESCRIPTION and USABLE ON CODE (UOC) column and listed in the Bulk Material group of the repair parts list in this RPSTL. If the item is authorized to you by the 3rd position code of the SMR code but the source code indicates it is made at a higher level, order the item from the higher level of maintenance.
AO- (Assembled by Unit/AVUM Level) AF- (Assembled by DS/AVIM Level) AH- (Assembled by GS Category) AL- (Assembled by SRA) AD- (Assembled by Depot)	Items with these codes are not to be requested/requisitioned individually. The parts that make up the assembled item must be indicated by the source code. If the 3rd position code of the SMR code authorizes you to replace the item but the source code indicates the items are assembled at a higher level, order the item from the higher level of maintenance.

XA- Do not requisition “XA”-coded item. Order its next higher assembly. (Refer to the NOTE below.)
XB- If an “XB” item is not available from salvage, order it using the CAGEC and part number given.
XC- Installation drawing, diagram, instruction sheet, field service drawing, that is identified manufacturer’s part number.
XD- Item is not stocked. Order an “XD”-coded item through normal supply channels using the CAGEC and part number given, if no NSN is available.

NOTE

Cannibalization or controlled exchange, when authorized, may be used as a source of supply for items with the above source codes, except for those source coded "XA" or those aircraft support items restricted by requirements of AR750-1.

(2) Maintenance Code. Maintenance codes tell you the level(s) of maintenance authorized to USE and REPAIR support items. The maintenance codes are entered in the third and fourth positions of the SMR code as follows:

(a) The maintenance code entered in the third position tells you the lowest maintenance level authorized to remove, replace, and use an item. The maintenance code entered in the third position will indicate authorization to the following levels of maintenance.

Maintenance Code	Application/Explanation
C -	Crew or operator maintenance done within unit/AVUM maintenance.
O -	Unit level/AVUM maintenance can remove, replace, and use the item.
F -	Direct support/AVIM maintenance can remove, replace, and use the item.
H -	General support maintenance can remove, replace, and use the item.
L -	Specialized repair activity can remove, replace, and use the item.
D -	Depot can remove, replace, and use the item.

(b) The maintenance code entered in the fourth position tells whether or not the item is to be repaired and identifies the lowest maintenance level with the capability to do completd repair (i.e., perform all authorized repair functions.)

NOTE

Some limited repair may be done on an item at a lower level of maintenance, if authorized by the Maintenance Allocation Chart and SMR codes.

Maintenance Code	Application/Explanation
O -	Unit/AVUM is the lowest level that can do complete repair of the item.
F -	Direct support/AVIM is the lowest level that can do complete repair of the item.
H -	General Support is the lowest level that can do complete repair of the item.
L -	Specialized repair activity is the lowest level that can do complete repair of the item.
D -	Depot is the lowest level that can do complete repair of the item.
Z -	Nonreparable. No repair is authorized.
B -	No repair is authorized. No parts or special tools are authorized for the maintenance of a "B" coded item. However, the item may be reconditioned by adjusting, lubricating, etc., at the user level.

(3) Recoverability Code. Recoverability codes are assigned to items to indicate the disposition action on unserviceable items. The recoverability code is entered in the fifth position of the SMR Code as follows:

Recoverability Codes	Application/Explanation
Z -	Nonreparable item. When unserviceable, condemn and dispose of the item at the level of maintenance shown in 3rd position of SMR Code.
0 -	Reparable item. When not economically reparable, condemn and dispose of the item at unit or AVUM level.
F -	Reparable item. When uneconomically reparable, condemn and dispose of the item at the direct support or AVIM level.
H -	Reparable item. When uneconomically reparable, condemn and dispose of the item at the general support level.
D -	Reparable item. When beyond lower level repair capability, return to depot. Condemnation and disposal of item not authorized below depot level.
L -	Reparable item. Condemnation and disposal not authorized below specialized repair activity (SRA).
A -	Item requires special handling or condemnation procedures because of specific reasons (e.g., precious metal content, high dollar value, critical material, or hazardous material). Refer to appropriate manuals/ directives for specific instructions.

c. CAGEC (Column (3)). The Commercial and Government Entity Code (CAGEC) is a 5-digit numeric code which is used to identify the manufacturer, distributor, or Government agency/activity that supplies the item.

d. PART NUMBER (Column (4)). Indicates the primary number used by the manufacturer, (individual, company, firm, corporation, or Government activity), which controls the design and characteristics of the item by means of its engineering drawings, specifications, standards, and inspection requirements to identify an item or range of items.

NOTE

When you use an NSN to requisition an item, the item you receive may have a different part number from the number listed.

e. DESCRIPTION AND USABLE ON CODE (UOC) (Column (5). This column includes the following information:

(1) The Federal item name and, when required, a minimum description to identify the item.

(2) Part numbers of bulk materials are referenced in this column in the line entry to be manufactured/fabricated.

(3) The statement 'END OF FIGURE" appears just below the last item description in Column (5) for a given figure in both Section II and Section III.

f. QTY (Column (6)). The QTY (quantity per figure) column indicates the quantity of the item used in the breakout shown on the illustration/figure, which is prepared for a functional group, subfunctional group, or an assembly. A "V" appearing in this column instead of a quantity indicates that the quantity is variable and may vary from application to application.

4. EXPLANATION OF INDEX FORMAT AND COLUMNS (SECTION IV).

a. NATIONAL STOCK NUMBER (NSN) INDEX.

(1) STOCK NUMBER Column. This column lists the NSN in national item identification number (NIIN) sequence. The NIIN consists of the last nine digits of the NSN, i.e.

NSN

5305-01-574-1467

NIIN

When using this column to locate an item, ignore the first four digits of the NSN. Use the complete NSN (13 digits) when requisitioning items by stock number.

(2) FIG. Column. This column lists the number of the figure where the item is identified/located. The figures are in numerical order in Section II and Section III.

(3) ITEM Column. The item number identifies the item associated with the figure listed in the adjacent FIG. column. This item is also identified by the NSN listed on the same line.

b. PART NUMBER INDEX. Part numbers in this index are listed by part number in ascending alphanumeric sequence (i e., vertical arrangement of letter and number combination which places the first letter or digit of each group in order A through Z, followed by the numbers 0 through 9, and each following letter or digit in like order).

(1) CAGEC Column. The Commercial and Government Entity Code (CAGEC) is a 5-digit numeric code used to identify the manufacturer, distributor, or Government agency/activity that supplies the item.

(2) PART NUMBER Column. Indicates the primary number used by the manufacturer (individual, firm, corporation, or Government activity), which controls the design and characteristics of the item by means of its engineering drawings, specifications, standards, and inspection requirements to identify an item or range of items.

(3) STOCK NUMBER Column. This column lists the NSN for the associated part number and manufacturer identified in the PART NUMBER and CAGEC columns to the left.

(4) FIG. Column. This column lists the number of the figure where the item is identified/located in Section II and Section III.

(5) ITEM Column. The item number is that number assigned to the item as it appears in the figure referenced in adjacent figure number column.

5. SPECIAL INFORMATION.

a. USABLE ON CODE. The usable on code appears in the lower left corner of the Description Column heading. Usable on codes are shown as “UOC:..” in the Description Column (justified left) on the last line of the applicable item description/nomenclature. Uncoded items are applicable to all models. Identification of the usable on codes used in this RPSTL are:

Code	Used On
ETN	WTA-060
FKD	ROWPU-1

b. FABRICATION INSTRUCTIONS. Bulk materials required to manufacture items are listed in the Bulk Material Functional Group of this RPSTL. Part numbers for bulk materials are also referenced in the description column of the line entry for the item to be manufactured/fabricated. Detailed fabrication instructions for items source coded to be manufactured or fabricated are found in TM 10-4610-232-34.

c. INDEX NUMBFRS. Items which have the word BULK in the figure column will have an index number shown in the item number column. This index number is a cross-reference between the National Stock Number/Part Number Index and the bulk material list in Section II.

d. ASSOCIATED PUBLICATIONS. The publications listed below pertain to the Water Purification Unit, Reverse Osmosis, 3,000 GPH and its components.

Publication	Short Title
TM 10-4610-232-12	Operator and Unit Maintenance Manual
TM 10-4610-232-34	Direct Support and General Support Maintenance Manual

6. HOW TO LOCATE RFPAIR PARTS.

a. When National Stock Numbers or Part Numbers are NOT Known.

(1) First. Using the table of contents, determine the assembly or subassembly group to which the item belongs. This is necessary since figures are prepared for assembly groups and subassembly groups, and listings are divided into the same groups.

(2) Second. Find the figure covering the assembly group or subassembly group to which the item belongs.

(3) Third. Identify the item on the figure and use the Figure and hem Number Index to find the NSN.

b. When National Stock Number or Part Number is Known.

(1) First. Using the of National Stock Number and Part Number Indexes find the pertinent National Stock Number or Part Number. The NSN index is in National Item Identification Number (NIIN) sequence (see paragraph 4.a.). The part numbers in the Part Number index are listed in ascending alphanumeric sequence (see paragraph 4.b.). Both indexes cross-reference you to the illustration/ figure and item number of the item you are looking for.

(2) Second. Turn to the figure and item number, verify that the item is the one you are looking for, then locate the item number in the repair parts list for the figure.

7. **ABBREVIATIONS.** Abbreviations used in this manual are listed in MIL-STD-12.

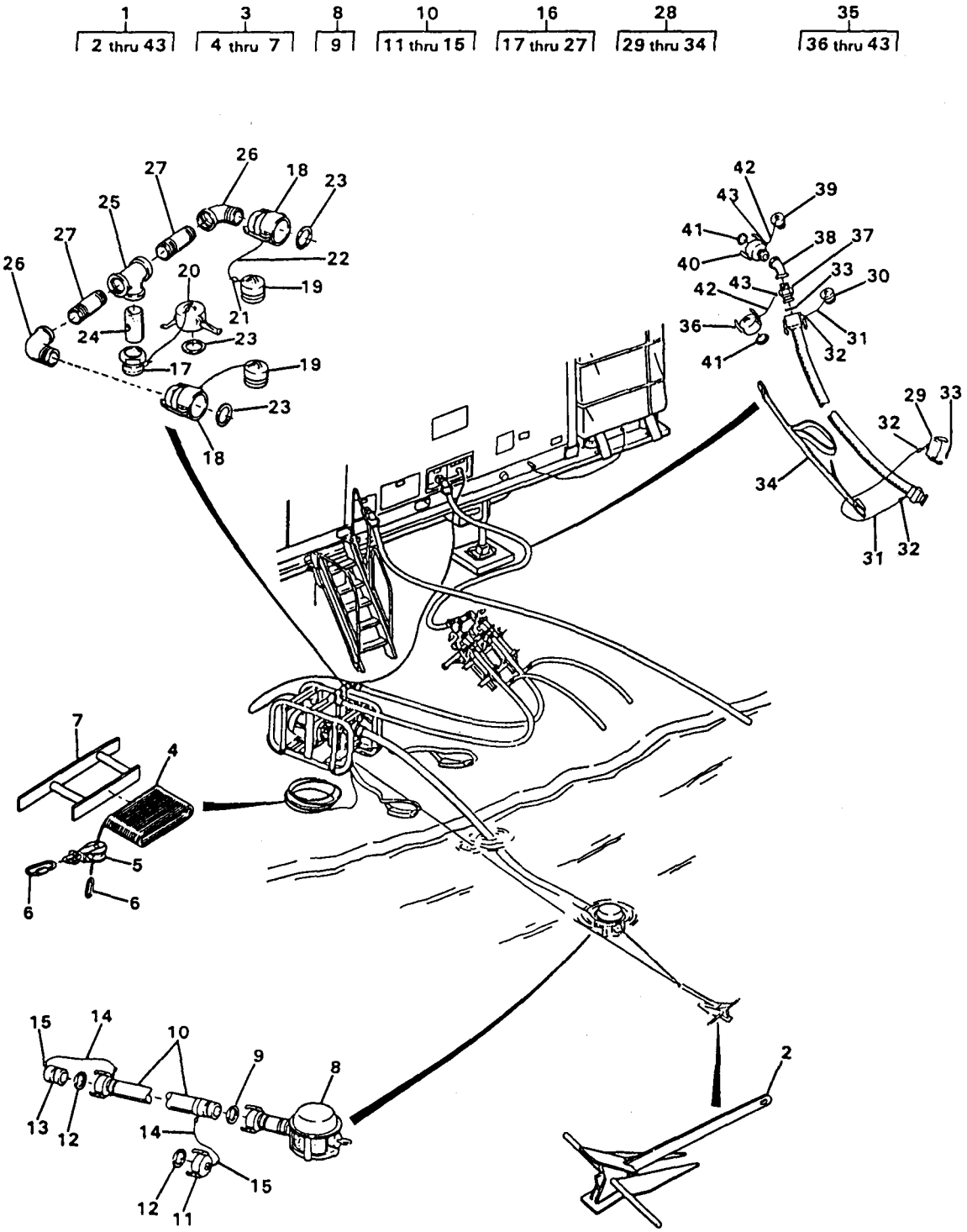

FIGURE 1. RAW WATER SYSTEM (SHEET 1 of 2)
(Model FKD Only)

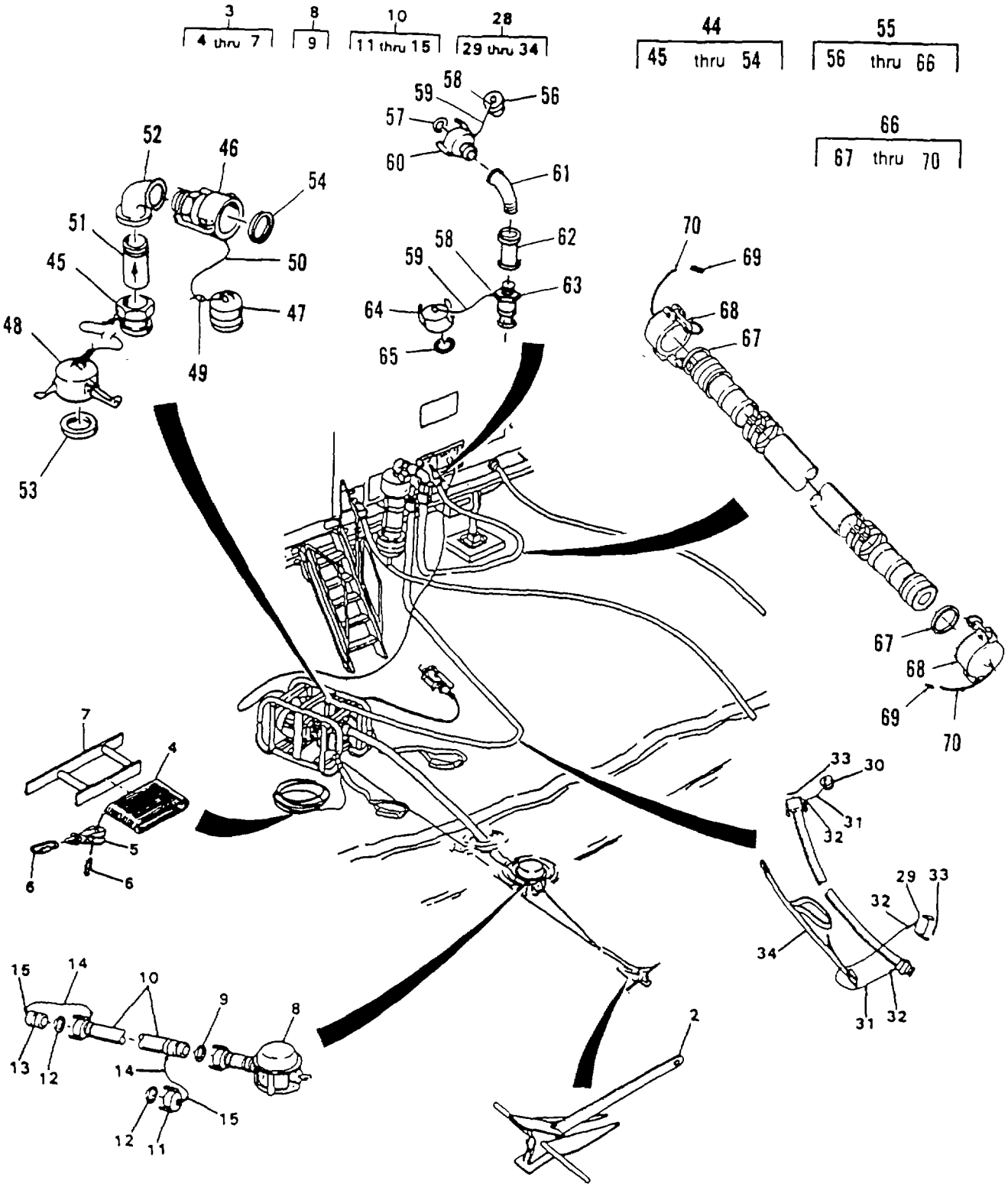

FIGURE 1. RAW WATER SYSTEM (SHEET 2 of 2)
(Model ETN Only)

(1) ITEM NO	(2) SMR CODE	(3) NSN	(4) CAGEC	(5) PART NUMBER	(6) DESCRIPTION AND USABLE ON CODES(UOC)	(7) QTY
					GROUP 01 RAW WATER SYSTEM	
					FIG. 1 RAW WATER SYSTEM	
1	XAOFF		09647	120-02594	RAW WATER SYSTEM.....	1
2	PAOZZ	2040013490496	97403	13229E0167	.ANCHOR,MARINE,FLUKE.....	1
3	XDOOO		97403	13229E1161	..ROPE ASSY,ANCHOR.....	1
4	MOOZZ		09647	120-02215	..ROPE CUT TO LENGTH FROM BULK, P/N 13229E1153.....	1
5	PAOZZ	3940013507919	97403	13229E1152	..BLOCK,TACKLE.....	1
6	PAOZZ	4010013507105	97403	13229E1151	..LINK,CHAIN,DETACHAB.....	2
7	XDOZZ		97403	13229E0858	..REEL,ROPE	1
8	PAOOO	4730013455781	97403	13229E0166	.STRAINER,SUCTION.....	1
9	PAOZZ	5330013496190	97403	13229E0857-3	..GASKET.....	2
10	PAOOO	4720013455641	97403	13229E0168	.HOSE ASSEMBLY,NONME	10
11	PAOZZ	4730013506290	96906	MS27028-16	..CAP,QUICK DISCONNEC.....	1
12	PAOZZ	5330013496190	97403	13229E0857-3	..GASKET.....	2
13	PAOZZ	4730013476073	96906	MS27029-16	..PLUG,QUICK DISCONNE.....	1
14	MOOZZ		09647	120-02598-1	..CABLE CUT TO LENGTH FROM BULK, P/N 13229E1147-1.....	2
15	PAOZZ	4030001455721	96906	MS51844-64	..SWAGING SLEEVE,WIRE.....	4
16	AOOOO		97403	13229E1124	.PIPE SECTION ETN RAW WATER, PUMP.....	1
17	PAOZZ	4730013476070	96906	MS27020-12	..COUPLING,HALF,QUICK.....ETN	1
18	PAOZZ	4730013478544	96906	MS27024-12	..COUPLING,HALF,QUICK.....ETN	2
19	PAOZZ	4730014662790	96906	MS27029-12	..COUPLING,HALF,QUICK.....ETN	2
20	PAOZZ	4730010866157	96906	MS27028-12	..CAP,QUICK DISCONECT.....ETN	1
21	PAOZZ	4030001455721	96906	MS51844-64	..SWAGING SLEEVE,WIRE.....ETN	6
22	MOOZZ		09647	120-02598-2	..CABLE CUT TO LENGTH FROM BULK, ETN P/N 13229E1147-1.....	3
23	PAOZZ	5330013498921	97403	13229E0857-4	..GASKET.....ETN	3
24	PAOZZ	4820013267879	97403	13229E0139-1	..VALVE,CHECK.....ETN	1
25	PBOZZ	4730013501590	97403	13229E1124-3	..TEE,PIPE 2 INCH NPT.....ETN	1
26	PBOZZ	4730013501581	97403	13229E1124-4	..ELBOW,PIPE 90 DEGREE, 2 INCH ETN NPT.....	2
27	PBOZZ	4730001962030	96906	MS51846-157	..NIPPLE,PIPE 2 INCH NPT X 3.5 ETN INCHES LONG.....	2
28	PAOOO	4720013475480	97403	13229E1154	.HOSE ASSEMBLY,NONME.....	1
29	PAOZZ	4730005908083	96906	MS27028-14	..CAP,QUICK DISCONNEC.....	1
30	PAOZZ	4730010789945	96906	MS27029-14	..PLUG,QUICK DISCONNE.....	1
31	MOOZZ		09647	120-02598-3	..CABLE CUT TO LENGTH FROM BULK, P/N 13229E1147-1.....	2
32	PAOZZ	4030001455721	96906	MS51844-64	SWAGING SLEEVE,WIRE.....	4
33	PAOZZ	5330013496191	97403	13229E0857-5	..GASKET.....	2
34	PAOZZ	5340013496290	97403	13229E1000-1	..STRAP,WEBBING.....	1
35	AOOOO		97403	13229E0142	.PIPE SECTION RAW WATER, VAN.....ETN	1
36	PAOZZ	4730005908083	96906	MS27028-14	..CAP,QUICK DISCONNEC.....ETN	1
37	PAOZZ	4730002895368	96906	MS27022-14	..COUPLING HALF,QUICK.....ETN	1
38	PAOZZ	4730002493878	95321	702ELB0W45DEG	..ELBOW,PIPE 45 DEGREE, 1 1/2 ETN NPT.....	1
38	PAOZZ		80204	ANS-B16.15	..ELBOW,PIPE 45 DEGREE, 2 INCH...ETN	1
39	PAOZZ	4730010789945	96906	MS27029-14	..PLUG,QUICK DISCONNE.....ETN	1
40	PAOZZ	4730012312787	96906	MS27026-14	..COUPLING HALF,QUICK.....ETN	1

(1) ITEM NO	(2) SMR CODE	(3) NSN	(4) CAGEC	(5) PART NUMBER	(6) DESCRIPTION AND USABLE ON CODES(UOC)	(7) QTY
41	PAOZZ	5330013496191	97403	13229E0857-5	..GASKET.....ETN	2
42	MOOZZ		09647	120-02598-21	..CABLE CUT TO LENGTH FROM BULK, P/N 13229E1147-..... ETN	2
43	PAOZZ	4030001455721	96906	MS51844-64	..SWAGING SLEEVE,WIRE.....ETN	4
44	AOOOO		97403	13229E0143	.PIPE SECTION,RAW WATER,PUMP.....FKD	1
45	PAOZZ	4730013476070	96906	MS27020-12	..COUPLING,HALF,QUICK.....FKD	1
46	PAOZZ	4730012312787	96906	MS27026-14	..COUPLING,HALF,QUICK.....FKD	1
47	PAOZZ	4730010789945	96906	MS27029-14	..PLUG,QUICK DISCONNE.....FKD	1
48	PAOZZ	4730010866157	96906	MS27028-12	..CAP,QUICK DISCONNEC.....FKD	1
49	PAOZZ	4030001455721	96906	MS51844-64	..SWAGING SLEEVE,WIRE.....FKD	4
50	MOOZZ		09647	120-02598-2	..CABLE CUT TO LENGTH FROM BULK, P/N 13229E1147-1..... FKD	2
51	PAOZZ	4820013267879	97403	13229E0139-1	..VALVE,CHECK.....FKD	1
52	PBOZZ		81348	ANS B16.15	..ELBOW,REDUCER 90 DEGREE, 2 INCH X 2-1/2 INCH..... FKD	1
53	PAOZZ	5330013498921	97403	13229E0857-4	..GASKET.....FKD	1
54	PAOZZ	5330013496191	97403	13229E0857-5	..GASKET.....FKD	1
55	AOOOO		97403	13229E0721	.PIPE SECTION.....FKD	1
56	PAOZZ	4730014662790	96906	MS27029-12	..COUPLING HALF,QUIC.....FKD	1
57	PAOZZ	5330013498921	97403	13229E0857-4	..GASKET.....FKD	1
58	PAOZZ	4030001455721	96906	MS51844-64	..SLEEVE.....FKD	4
59	MOOZZ		97403	13229E0721-8	..CABLE CUT TO LENGTH FROM BULK, P/N 13229E1174-1..... FKD	2
60	PAOZZ	4730004109530	96906	MS27026-12	..COUPLING HALF,PLUG.....FKD	1
61	PAOZZ		97403	13229E0721-2	..ELBOW 90 DEGREE, STREET L, 2 INCH..... FKD	1
62	PAOZZ		97403	13229E0721-4	..REDUCER 2 INCH TO 2-1/2 INCH..... FKD	1
63	PAOZZ	4730002895368	96906	MS27022-14	..COUPLING HALF.....FKD	1
64	PAOZZ	4730005908083	96906	MS27028-14	..CAP,QUICK DISCONNECT.....FKD	1
65	PAOZZ	5330013496191	97403	13229E0857-5	..GASKET.....FKD	1
66	PAOOO	4720013455640	97403	13229E1125	..HOSE ASSEMBLY.....FKD	1
67	PAOZZ	5330013498921	97403	13229E0857-4	...GASKET.....FKD	2
68	PAOZZ	4730010866157	96906	MS27028-12	...CAP,QUICK DISCONNEC.....FKD	2
69	PAOZZ	4030001455721	96906	MS51844-64	...SWAGING SLEEVE,WIRE.....FKD	4
70	MOOZZ		09647	120-02598-2	...CABLE CUT TO LENGTH FROM BULK, P/N 13229E1147-1..... FKD	2

END OF FIGURE

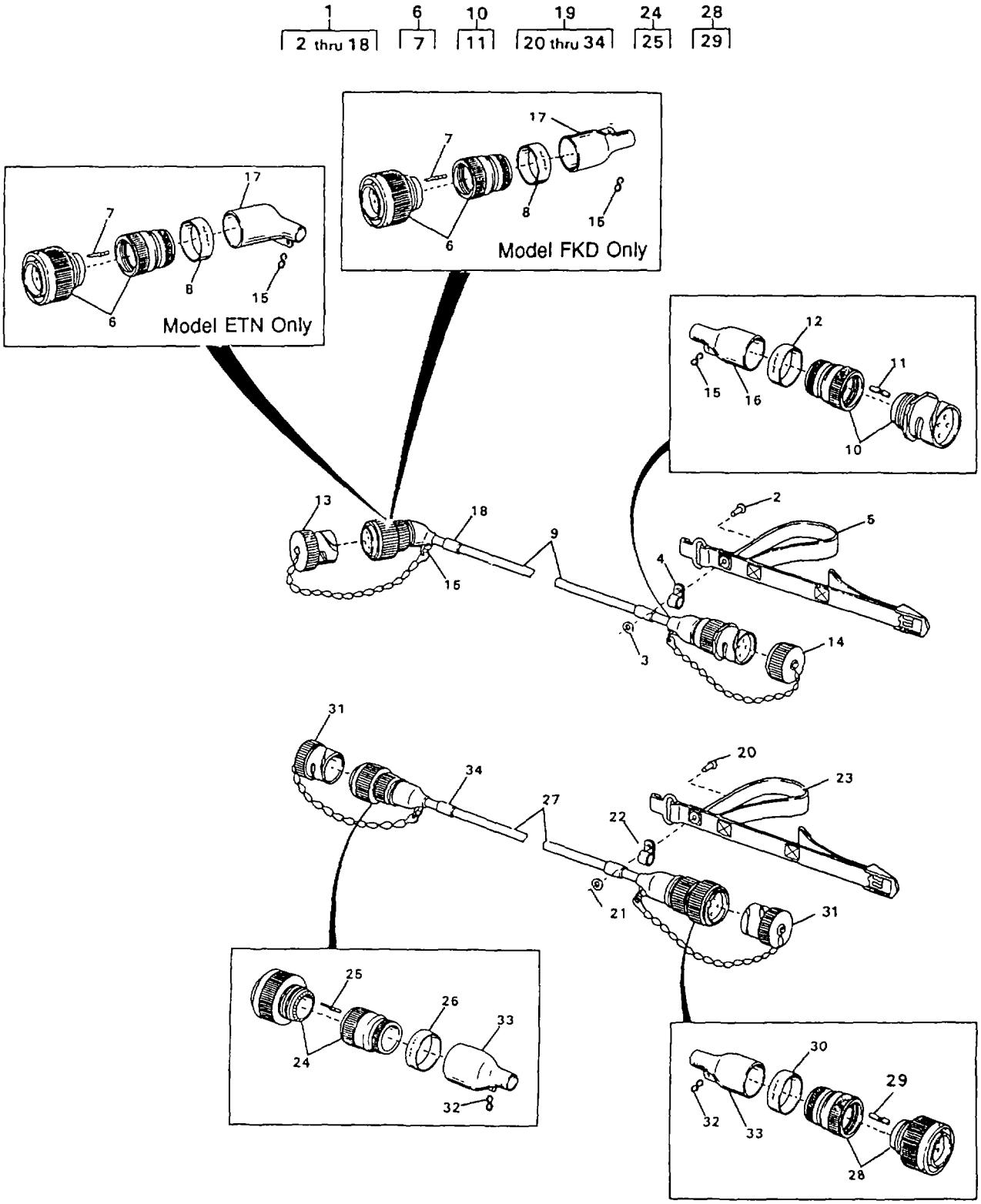

FIGURE 2. RAW WATER PUMP CABLES

(1) ITEM NO	(2) SMR CODE	(3) NSN	(4) CAGEC	(5) PART NUMBER	(6) DESCRIPTION AND USABLE ON CODES(UOC)	(7) QTY
					GROUP 01 RAW WATER SYSTEM	
					FIG. 2 RAW WATER PUMP CABLES	
1	PAFFF	6150013455613	97403	13229E1262-4	.CABLE ASSEMBLY,POWE W57.....	1
2	PAOZZ	5320013490932	97403	13229E0350-2	..RIVET,BLIND.....	1
3	PAOZZ	5310006191148	96906	MS15765-842	..WASHER,FLAT.....	1
3	PAOZZ	5310006191148	96906	MS15795-808	..WASHER,FLAT.....FKD	1
4	PAOZZ	5340011387808	96906	MS21919WCF12	..CLAMP,LOOP.....FKD	1
5	PAOZZ	5340013506801	97403	13229E1000-2	..STRAP,WEBBING.....	1
6	PAFFF	5935013500159	17549	CA3106E20-4P-B-0 2-57	..CONNECTOR,PLUG,ELEC P57.....	1
7	PAFZZ	5999013448759	71468	030-8588-000	...CONTACT,ELECTRICAL PART OF KIT P/N 120-02593-P.....	4
8	XDFZZ		09647	120-02433-132	..MARKER.....	1
9	MFFZZ		09647	120-07639-2	..CABLE,POWER CUT TO LENGTH FROM BULK, P/N 13229E0741-2.....	1
10	PAFFF	5935013500166	17549	CA3101E20-4S-B-0 2-57	..CONNECTOR,RECEPTACL J58.....	1
11	PAFZZ	5999011588887	71468	031-8556-000	...CONTACT,ELECTRICAL PART OF KIT P/N 120-02593-P.....	4
12	XDFZZ		09647	120-02433-182	..MARKER.....	1
13	PAOZZ	5935013571806	97403	13229E1210-2	..COVER,ELECTRICAL CO.....	1
14	PAOZZ	5935013571807	97403	13229E1209-2	..COVER,ELECTRICAL CO.....	1
15	PAOZZ	4030010225666	51489	700016	..HOOK,CHAIN,S.....	2
16	PAFZZ	5970012268102	06090	202K163-3/42	..INSULATION SLEEVING.....	1
17	PAFZZ	5970013487360	97403	13229E1344-2	..INSULATION SLEEVING.....	1
18	XDFZZ		09647	120-02433-64	..MARKER.....	2
19	PAFFF	6150013455614	97403	13229E1262-5	.CABLE ASSEMBLY,POWE W58.....	1
20	PAOZZ	5320013490932	97403	13229E0350-2	..RIVET,BLIND.....	1
21	PAOZZ	5905013924321	96906	MS15765-842	..RESISTOR,FIXED,WIR.....ETN	1
21	PAOZZ	5310006191148	96906	MS15795-808	..WASHER,FLAT.....FKD	1
22	PAOZZ	5340011387808	96906	MS21919WCF12	..CLAMP,LOOP.....	1
23	PAOZZ	5340013506801	97403	13229E1000-2	..STRAP,WEBBING.....	1
24	PAFFF	5935013500159	17549	CA3106E20-4P-B-0 2-57	..CONNECTOR,PLUG,ELEC P58.....	1
25	PAFZZ	5999013448759	71468	030-8588-000	...CONTACT,ELECTRICAL PART OF KIT P/N 120-02593-P	4
26	XDFZZ		09647	120-02433-133	..MARKER	1
27	MFFZZ		09647	120-07639-2	..CABLE,POWER CUT TO LENGTH FROM BULK, P/N 13229E0741-2.....	1
28	PAFFF	5935013500160	17549	CA3106E20-4S-B-0 2-57.....	..CONNECTOR P59	1
29	PAFZZ	5999013438909	71468	031-8557-000	...CONTACT,ELECTRICAL PART OF KIT P/N 120-02593-P.....	4
30	XDFZZ		09647	120-02433-134	..MARKER.....	1
31	PAOZZ	5935013571806	97403	13229E1210-2	..COVER,ELECTRICAL CO.....	2
32	PAOZZ	4030010225666	51489	700016	..HOOK,CHAIN,S.....	2
33	PAFZZ	5970012268102	06090	202K163-3/42	..INSULATION SLEEVING.....	2
34	XDFZZ		09647	120-02433-65	..MARKER.....	2

END OF FIGURE

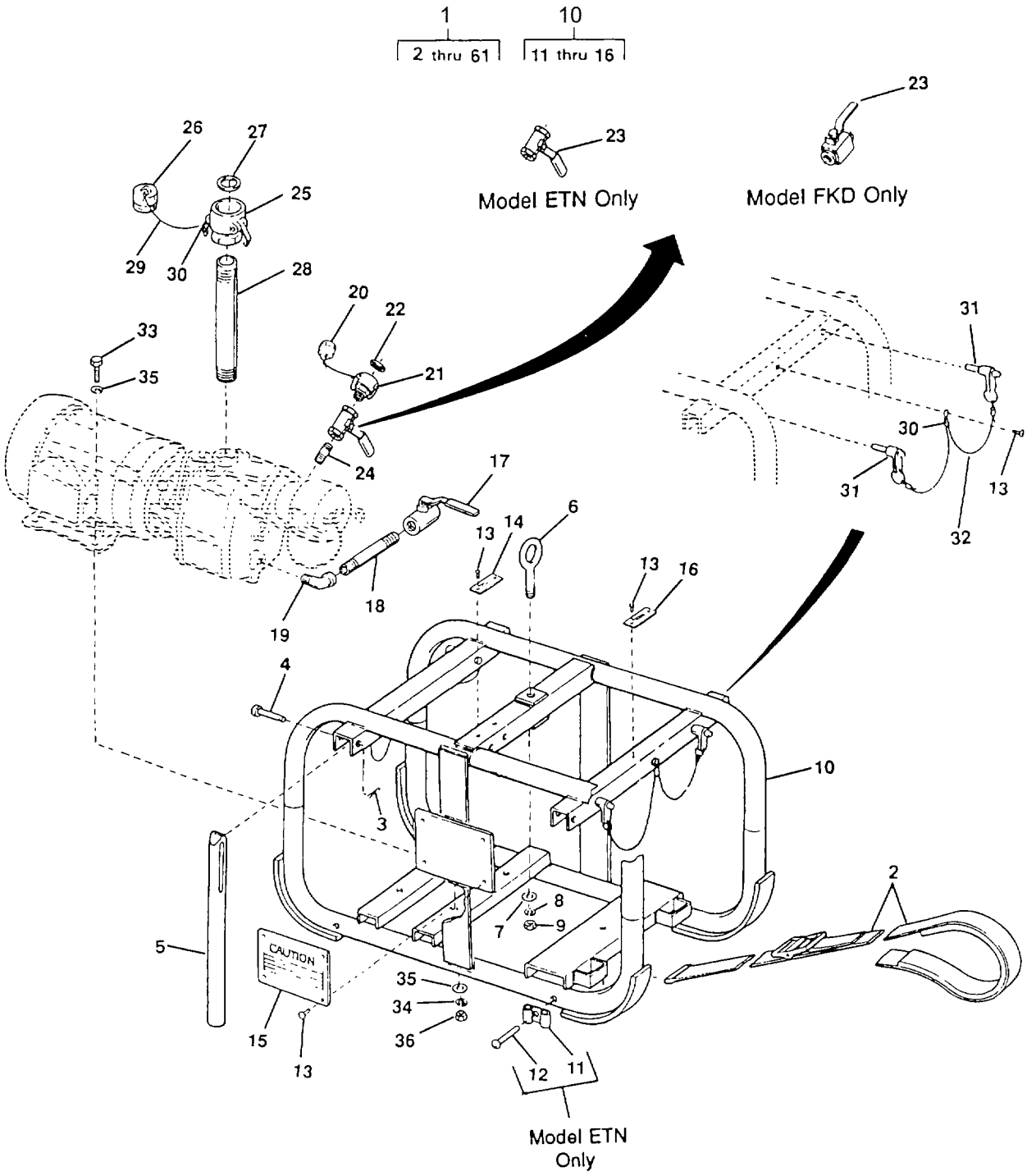

FIGURE 3. RAW WATER PUMP AND MOTOR ASSEMBLY (SHEET 1 OF 2)

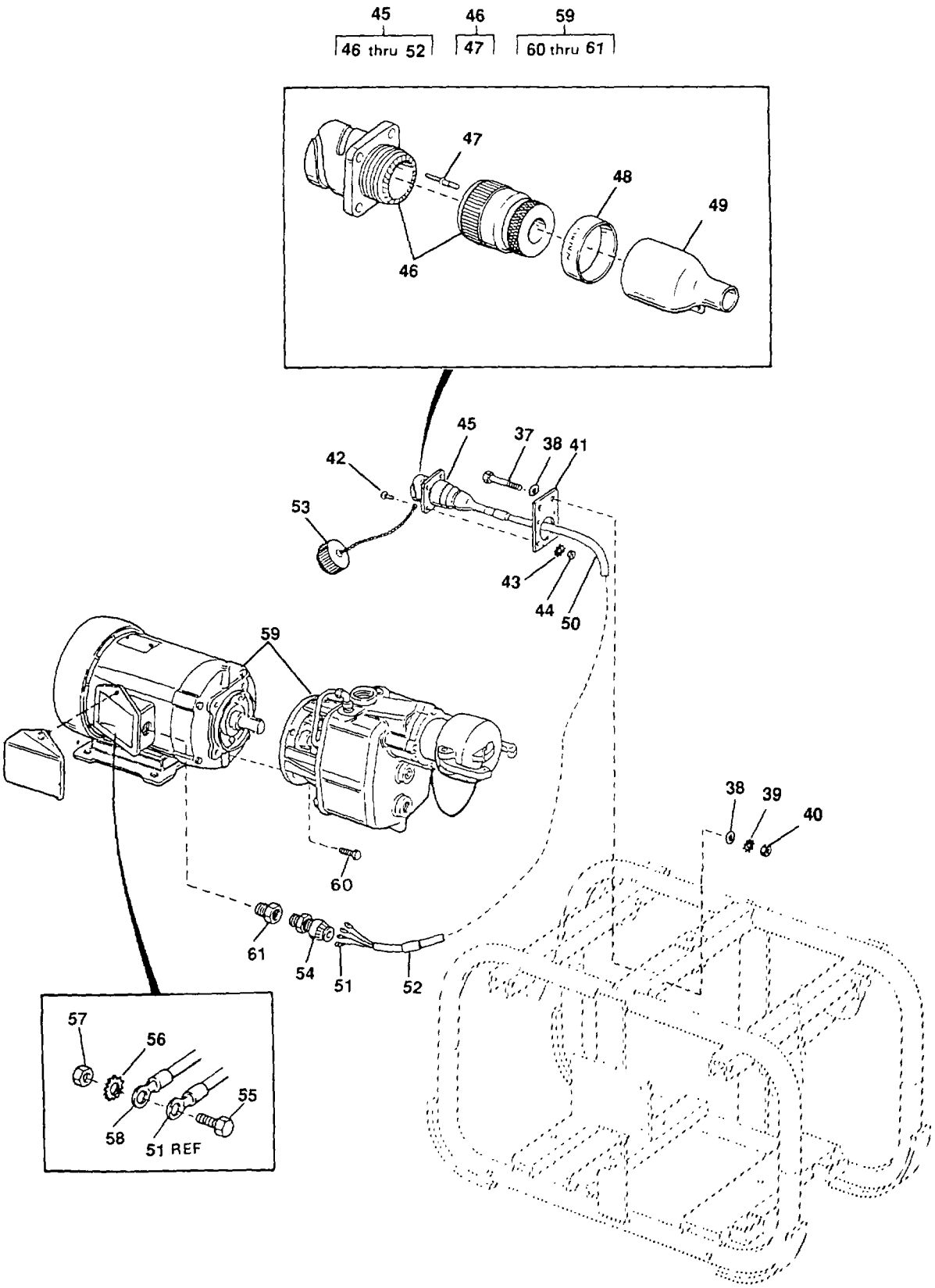

FIGURE 3. RAW WATER PUMP AND MOTOR ASSEMBLY (SHEET 2 OF 2)

(1) ITEM NO	(2) SMR CODE	(3) NSN	(4) CAGEC	(5) PART NUMBER	(6) DESCRIPTION AND USABLE ON CODES(UOC)	(7) QTY
					GROUP 01 RAW WATER SYSTEM FIG. 3 RAW WATER PUMP AND MOTOR ASSEMBLY	
1	PDOFF	4320013538422	97403	13229E0045-GREEN	.PUMP UNIT,CENTRIFI.....	1
2	PAOZZ	5340013514233	97403	13229E0804	..STRAP,WEBBING.....	2
3	PAOZZ	5315013500429	09647	120-01459	..PIN,COTTER SPLIT, 0.156 X 1.25 LG.....	4
4	PAOZZ	5315013500384	97403	13229E0360	..PIN,STRAIGHT,HEADED.....	4
5	XDOZZ		97403	13229E0442	..HANDLE.....	4
6	XDOZZ		97403	13229E0437	..BOLT,EYE.....	1
7	PAOZZ	5310007679425	96906	MS15795-818	..WASHER,FLAT.....	1
8	PAOZZ	5310009338778	96906	MS35338-143	..WASHER, LOCK	1
9	PAOZZ	5310007680321	96906	MS51971-5	..NUT,PLAIN,HEXAGON.....	1
10	XDOFF		97403	13229E0047	..FRAME,RW PUMP.....	1
11	PAOZZ	5340013495921	97084	225XL	...CLIP,SPRING TNSN.....ETN	4
12	PAOZZ		09647	120-01411-2	...RIVET IFI-114 GR 11, 0.19 NOM SZ, NR 64, STYLE 1, ALUM..... ETN	8
13	PAOZZ	5320013490933	97403	13229E0350-1	...RIVET,BLIND.....	10
14	XBOZZ		97403	13229E0782-158	...PLATE,ID.....	1
15	XBOZZ		97403	13229Z0411-3	...PLATE,ID.....	1
16	XBOZZ		97403	13229E0782-153	...PLATE,ID.....	1
17	PBOZZ	4820013493815	97403	13229E0433	..VALVE,BUTTERFLY.....	1
18	PBOZZ	4730013487922	97403	13229E1256-1	..NIPPLE,PIPE.....	1
19	PBOZZ	4730009477474	21450	444046	..ELBOW,PIPE.....	1
20	PAOZZ	4730013930988	96906	MS27029-2	..COUPLING,HALF,QUICK.....	1
21	PAOZZ	4730011400444	96906	MS27026-2	..COUPLING HALF,QUICK.....	1
22	PAOZZ	5330013498922	97403	13229E0857-1	..GASKET.....	1
23	PAOZZ	4820013528944	97403	13229E0433-4	..VALVE,BUTTERFLY.....ETN	1
23	PAOZZ	4820013512948	97403	13229E0123	..VALVE,BALL.....FKD	1
24	PAOZZ	4730013503756	97403	13229E1256-7	..NIPPLE,PIPE.....	1
25	PAOZZ	4730013478544	96906	MS27024-12	..COUPLING,HALF,QUICK.....	1
26	PAOZZ	4730014662790	96906	MS27029-12	..COUPLING,HALF,QUICK.....	1
27	PAOZZ	5330013498921	97403	13229E0857-4	..GASKET.....	1
28	PAOZZ	4730013487923	97403	13229E1256-3	..NIPPLE,PIPE.....	1
29	MOOZZ		09647	120-02598-5	..CABLE CUT TO LENGTH FROM BULK, P/N 13229E1147-1.....	2
30	PAOZZ	4030011420456	96906	MS51844-63	..SWAGING SLEEVE,WIRE.....	10
31	PAOZZ	5315009046874	96906	MS17986C820	..PIN,QUICK RELEASE.....	4
32	MOOZZ		09647	120-02598-4	CABLE CUT TO LENGTH FROM BULK, P/N 13229E1147-1.....	2
33	PAOZZ	5305007175467	96906	MS35307-362	..SCREW,CAP,HEXAGON H.....	4
34	PAOZZ	5310009847042	96906	MS35338-141	..WASHER,LOCK.....	4
35	PAOZZ	5310007737618	96906	MS15795-814	..WASHER,FLAT.....	9
36	PAOZZ	5310009138881	96906	MS51971-3	..NUT,PLAIN,HEXAGON.....	4
37	PAOZZ	5305007218005	96906	MS35307-316	..SCREW,CAP,HEXAGON H.....	2
38	PAOZZ	5310010911248	96906	MS15795-810	..WASHER,FLAT.....	4
39	PAOZZ	5310005273634	96906	MS35335-61	..WASHER,LOCK.....	2
40	PAOZZ	5310009035966	96906	MS51971-1	..NUT,PLAIN,HEXAGON.....	2
41	PAOZZ	5340014684943	97403	13229E0406	..RAW WATER PUMP CANNON PLUG BRACKET.....	1
42	PAOZZ	5305000545653	96906	MS51957-19	..SCREW,MACHINE.....ETN	2
43	PAOZZ	5310009338121	96906	MS35338-139	..WASHER,LOCK.....FKD	2

(1) ITEM NO	(2) SMR CODE	(3) NSN	(4) CAGEC	(5) PART NUMBER	(6) DESCRIPTION AND USABLE ON CODES(UOC)	(7) QTY
44	PAOZZ	5310009349748	96906	MS35649-244	..NUT,PLAIN,HEXAGON.....	4
45	PAOFF	6150013455620	97403	13229E1260-5	..CABLE ASSEMBLY SPEC.....	1
46	PAFFF	5935013470031	09647	120-02313-1	...CONNECTOR,RECEPTACL J59 2-05-57.....	1
47	PAFZZ	5999013448759	71468	030-8588-000	....CONTACT,ELECTRICAL PART OF KIT P/N 120-02593-P.....	4
48	XDFZZ		09647	120-02433-183	...MARKER.....	1
49	PAFZZ	5970012268102	06090	202K163-3/42	...INSULATION SLEEVING.....	1
50	MFFZZ		97403	120-07639	...CABLE CUT TO LENGTH FROM BULK, P/N 13229E0741-2.....	1
51	PAOZZ	5940001434777	96906	MS25036-157	...TERMINAL,LUG.....	4
52	XDFZZ		09647	120-02433-19	...MARKER.....	2
53	PAOZZ	5935013571807	97403	13229E1209-2	..COVER,ELECTRICAL,CO.....	1
54	PAOZZ	5975012109825	15235	CGB296SG	..BOX CONNECTOR,ELECT.....	1
55	PAOZZ	5305005766107	96906	MS35307-301	..SCREW,CAP,HEXAGON H 0.250-20 UNC 2A X 0.38 LG.....	6
56	PAOZZ	5310005273634	96906	MS35335-61	..WASHERLOCK.....	6
57	PAOZZ	5310009349759	96906	MS35649-284	..NUT,PLAIN,HEXAGON.....	6
58	PAOZF	5940002300515	96906	MS25036-154	..TERMINAL,LUG USED ON MOTOR LEADS.....	9
59	PAFFF	4320013456669	97403	13229E0051	..PUMP AND MOTOR ASSE SEE FIGURES 4 AND 5 FOR DETAILED BREAKDOWN.....	1
60	PAFZZ	5305006322777	96906	MS35307-358	...SCREW,CAP,HEXAGON H.....	4
61	PAOZZ	4730001280196	30780	1X3-4PTRSS	..BUSHING,PIPE 1 IN MPT X 3/4 IN FPT.....	1

END OF FIGURE

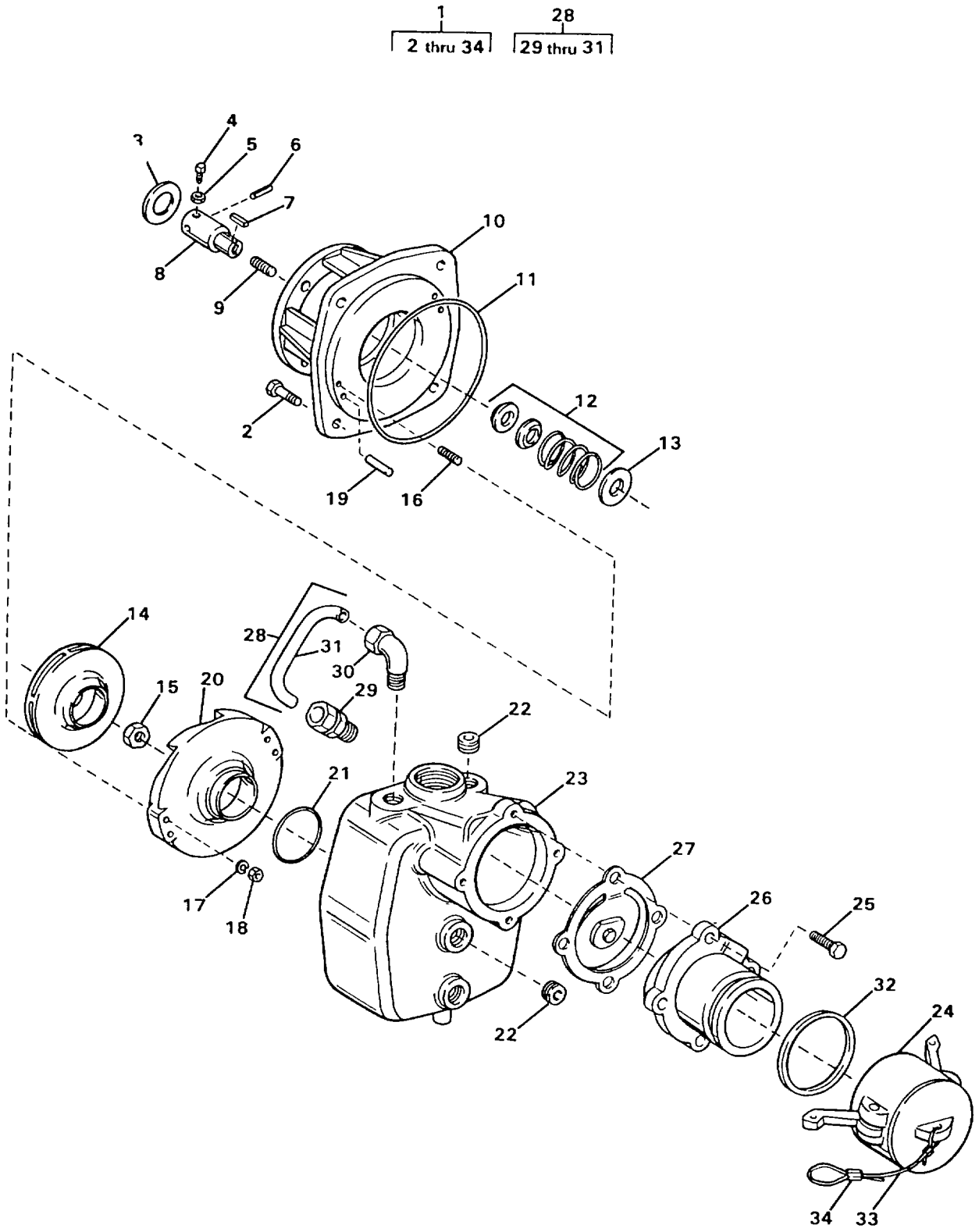

FIGURE 4. RAW WATER PUMP

(1) ITEM NO	(2) SMR CODE	(3) NSN	(4) CAGEC	(5) PART NUMBER	(6) DESCRIPTION AND USABLE ON CODES(UOC)	(7) QTY
					GROUP 01 RAW WATER SYSTEM	
					FIG. 4 RAW WATER PUMP	
1	PAFZZ	4320013455681	13646	87F-17B	...PUMP ASSY,CENTRI.....	1
2	PAFZZ	5305007175460	96906	MS35307-359	....SCREW,CAP,HEXAGON H.....	4
3	PAFZZ	4320013489529	13646	104.000.107	....FLINGER 2 INCH OD X 1-1/4 INCH ID X 1/8 INCH THICK.....	1
4	PAFZZ	5305013490799	13646	105.000.550	....SETSCREW 1/4 INCH-20 X 1/2 INCH LONG.....	2
5	PAFZZ	5310013492800	13646	105.000.569	....NUT,PLAIN,HEXAGON 1/4 INCH-20 UNC 2B.....	2
6	PAFZZ	5315013499055	13646	105.000.353	....PIN,SPRING 0.25 INCH DIA X 1.25 INCHES LONG.....	1
7	PAFZZ	5315013505962	13646	102.000.218	....KEY MACHINE 3/16 SQ X 1 INCH LONG.....	1
8	XDFZZ	3040012525475	13646	135.000.205	....SHAFT,STUB.....	1
9	PBFZZ	5307013488396	13646	105.000.346	....STUD,PLAIN 3/8 INCH-16 UNC-2A X 1.25 INCHES LONG.....	1
10	XDFZZ		13646	132.000.382	....ADAPTER.....	1
11	KFFZZ	5330013260780	13646	116.000.184	....PACKING,PREFORMED PART OF KIT P/N 118.000.393.....	1
12	KFFZZ		13646	101.000.312	....SEAL PART OF KIT P/N 118.000 .393.....	1
13	XDFZZ	5330012010237	13646	104.000.175	....RETAINER,PACKING.....	1
14	PBFZZ	4320013489615	13646	131.000.754	....IMPELLER,PUMP,CENTR.....	1
15	PBFZZ	5310013492801	13646	105.000.347	....NUT,PLAIN,HEXAGON.....	1
16	PBFZZ	5307013488397	13646	105.000.570	....STUD,LOCKED IN NO 10-24 UNC-2A X 1.62 INCHES LONG.....	2
17	PAFZZ	5310009338120	96906	MS35338-138	....WASHER,LOCK.....	2
18	PAFZZ	5310009349760	96906	MS35649-204	....NUT,PLAIN,HEXAGON.....	2
19	PAFZZ	5315015495783	13646	105.000.557	....PIN,STRAIGHT,HEADLE 0.125 INCH DIA X 0.75 INCH LONG.....	2
20	PBFZZ	4320013489616	13646	131.000.755	....IMPELLER,PUMP,CENTR.....	1
21	KFFZZ	5331011869053	13646	116.000.143	....O-RING PART OF KIT P/N 118. 000.393.....	1
22	PAOZZ	4730002736709	10001	12Z6000-5	....PLUG,PIPE 3/4 INCH NPT X 1/2 INCH LONG.....	2
23	XAFZZ		13646	130.000.345	....CASE.....	1
24	PAOZZ	4730013506290	96906	MS27028-16	....CAP,QUICK DISCONNEC.....	1
25	PAOZZ	5305002081429	96906	MS35307-363	....SCREW,CAP,HEXAGON H.....	4
26	XDOZZ		13646	136.000.18	....FLANGE,SUCTION.....	1
27	PAOZZ	4320013486395	13646	118.000.422	....VALVE FLAPPER,PUMP.....	1
28	PBOZZ	4710013492433	13646	18.000.473	....TUBE ASSY,METAL.....	1
29	XDOZZ		13646	160.000.329A	....CONNECTOR,STR 1/4 INCH TUBE X 1/4 INCH NPT.....	1
30	XDOZZ		13646	106.000.327A	....CONNECTOR,ELBOW 90 DEGREE, 1/4 INCH TUBE X 1/4 INCH NPT.....	1
31	XDOZZ		13646	108.000.163	....TUBE 1/4 INCH OD X 0.035 WALL.....	1
32	PAOZZ	5330013496190	97403	13229E0857-3	....GASKET.....	1
33	MOOZZ		09647	120-02598-61	....CABLE CUT TO LENGTH FROM BULK, P/N 13229E1147-1.....	1
34	PAOZZ	4030001455721	96906	MS51844-649	....SWAGING SLEEVE, WIRE.....	2

(1) ITEM NO	(2) SMR CODE	(3) NSN	(4) CAGEC	(5) PART NUMBER	(6) DESCRIPTION AND USABLE ON CODES(UOC)	(7) QTY
	PAFZZ	5330013495567	13646	118.000.393	....PARTS KIT,SEAL REPL.....	1
					GASKET, O-RING (1) 4-21	
					PACKING, PREFORMED (1) 4-11	
					SEAL (1) 4-12	

END OF FIGURE

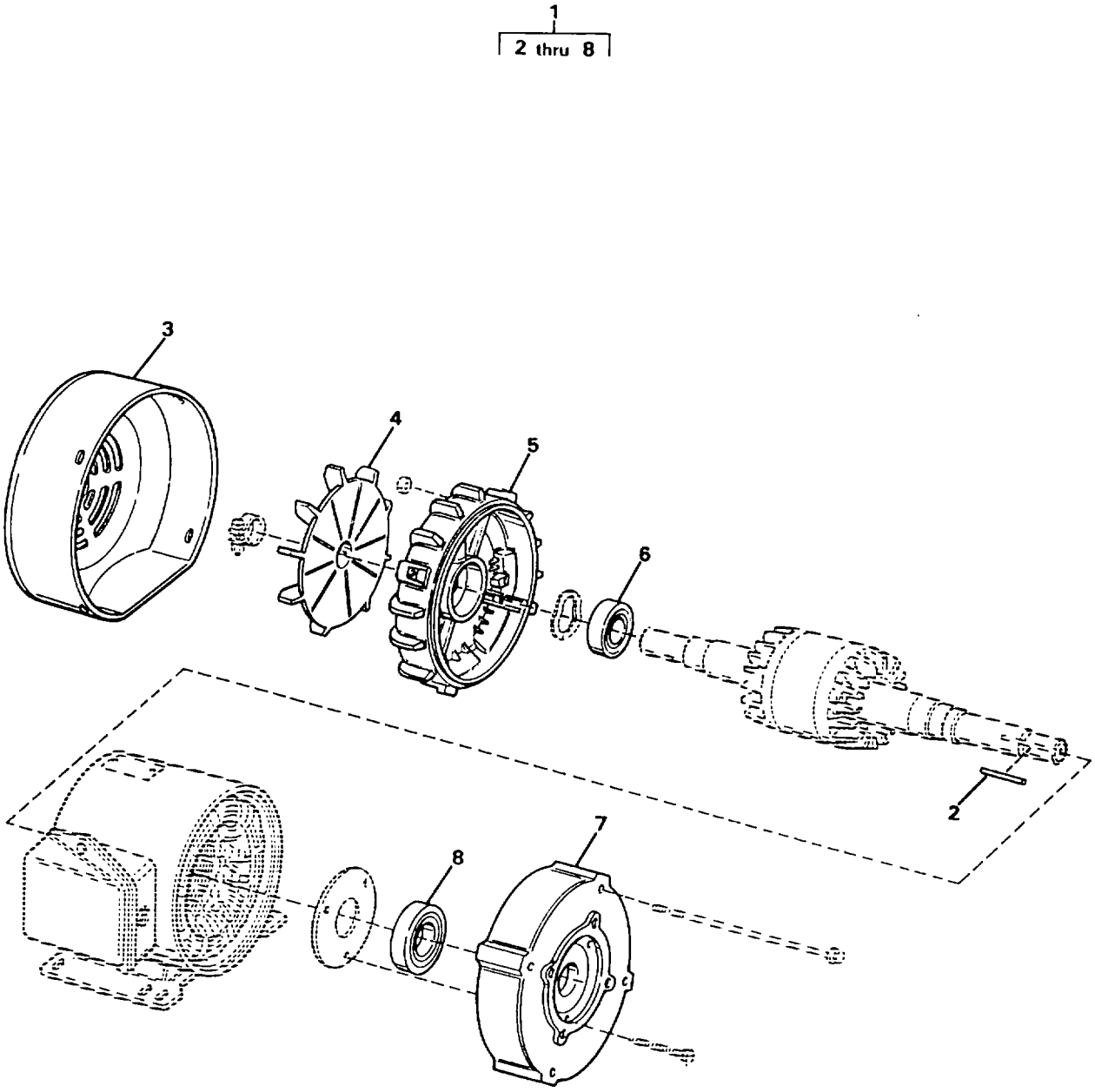

FIGURE 5. RAW WATER PUMP MOTOR

(1) ITEM NO	(2) SMR CODE	(3) NSN	(4) CAGEC	(5) PART NUMBER	(6) DESCRIPTION AND USABLE ON CODES(UOC)	(7) QTY
					GROUP 01 RAW WATER SYSTEM	
					FIG. 5 RAW WATER PUMP MOTOR	
1	PBFFF	6105013456670	44541	360501	...MOTOR,ELECTRIC.....	1
2	PAFZZ	5315012464000	96906	MS20066-279	....KEY,MACHINE.....	1
3	XDFZZ		44541	308446-12	....SHROUD,FAN.....	1
4	XDFZZ		44541	343449-01	....FAN.....	1
5	XAFZZ		44541	351759-01	....HOUSING,FAN END.....	1
6	PAFZZ	3110013217994	44541	100003-51	....BEARING,BALL,ANNULA.....	1
7	XAFZZ		44541	356414-01	....HOUSING,DRIVE END.....	1
8	PAFZZ	3110013211986	44541	100005-12	....BEARING,BALL,ANNULA.....	1

END OF FIGURE

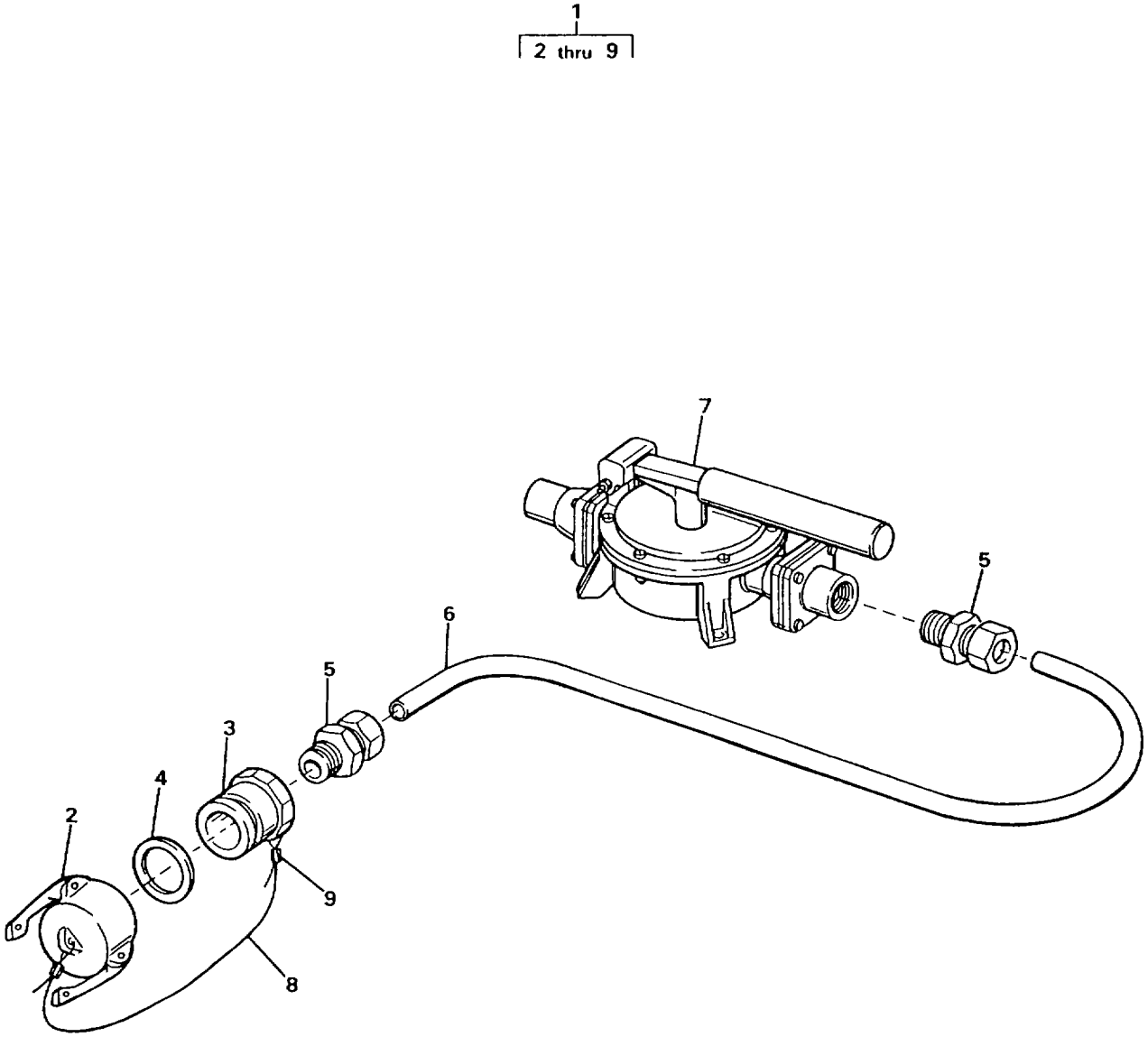

FIGURE 6. PRIMING ASSIST PUMP

(1) ITEM NO	(2) SMR CODE	(3) NSN	(4) CAGEC	(5) PART NUMBER	(6) DESCRIPTION AND USABLE ON CODES(UOC)	(7) QTY
					GROUP 01 RAW WATER SYSTEM FIG. 6 PRIMING ASSIST PUMP	
1	AOOOO		97403	13229E0484	.PRIMING PUMP ASSY.....	1
2	PAOZZ	4730012330796	96906	MS27028-2	..CAP,QUICK DISCONNEC.....	1
3	PAOZZ	4730011355587	96906	MS27020-2	..COUPLING HALF,QUICK.....	1
4	PAOZZ	5330013498922	97403	13229E0857-1	..GASKET.....	1
5	PAOZZ	4730013503744	97403	13229E0684-7	..ADAPTER,STRAIGHT.....	1
6	MOOZZ		09647	120-02599-61	..TUBING CUT TO LENGTH FROM BULK, P/N NB-8-062.....	1
7	PAOZZ	4320013532974	97403	13229E0486	..PUMP,RECIPROCATING.....	1
8	MOOZZ		09647	120-02598-61	..CABLE CUT TO LENGTH FROM BULK, P/N 13229E1147-1.....	1
9	PAOZZ	4030001455721	96906	MS51844-64	..SWAGING SLEEVE,WIRE.....	2

END OF FIGURE

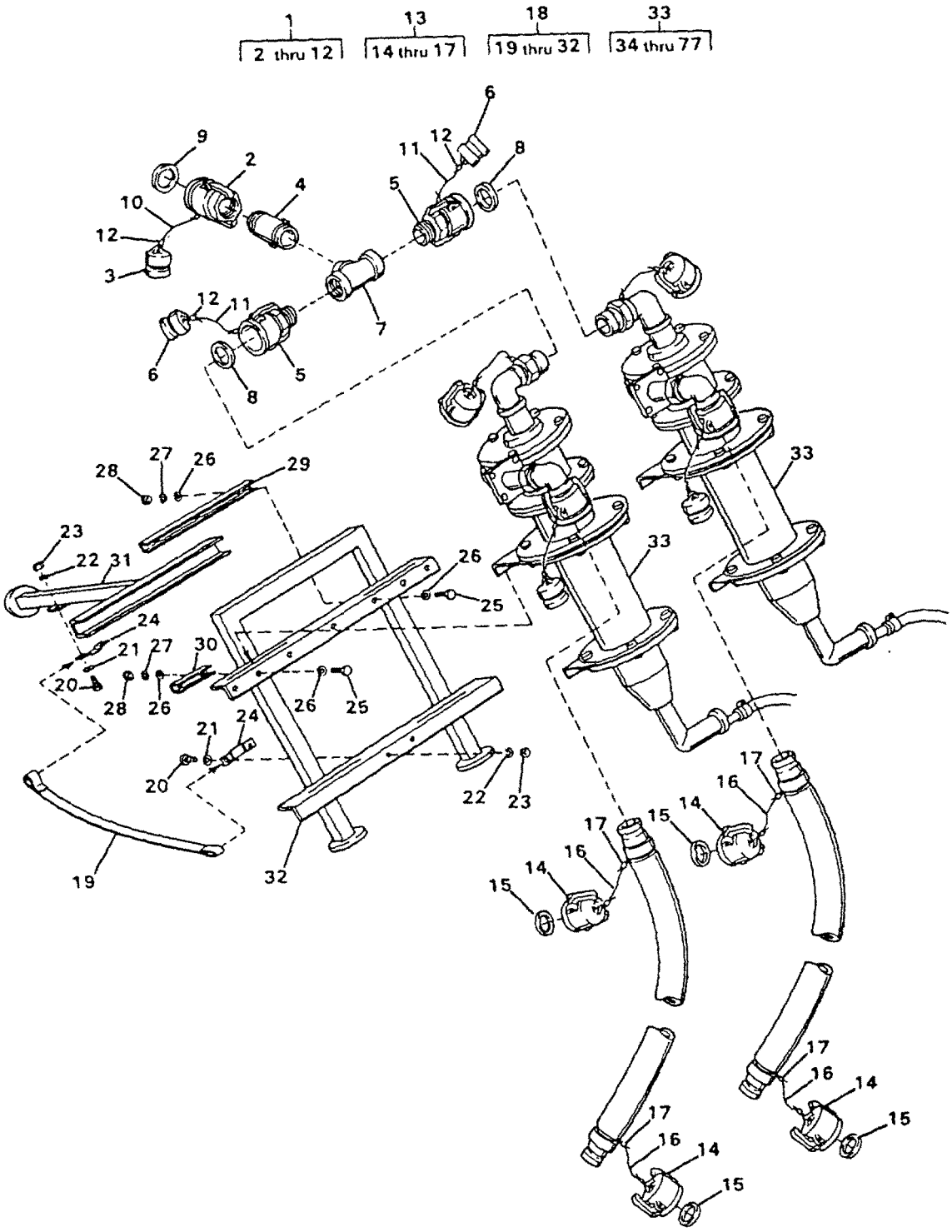

FIGURE 7. CYCLONE SEPARATORS (SHEET 1 of 4)
(Model FKD Only)

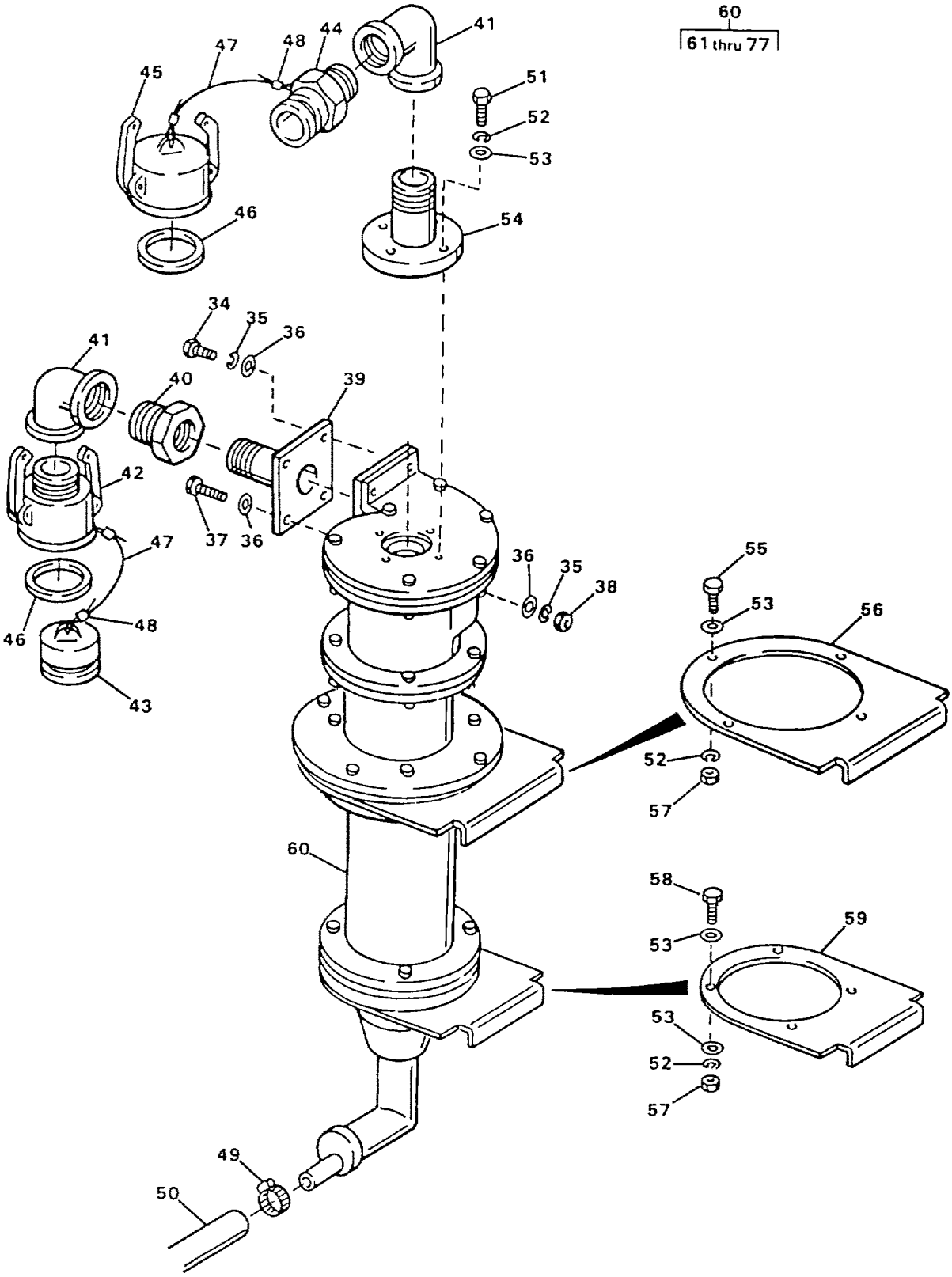

FIGURE 7. CYCLONE SEPARATORS (SHEET 2 of 4)
(Model ETN Only)

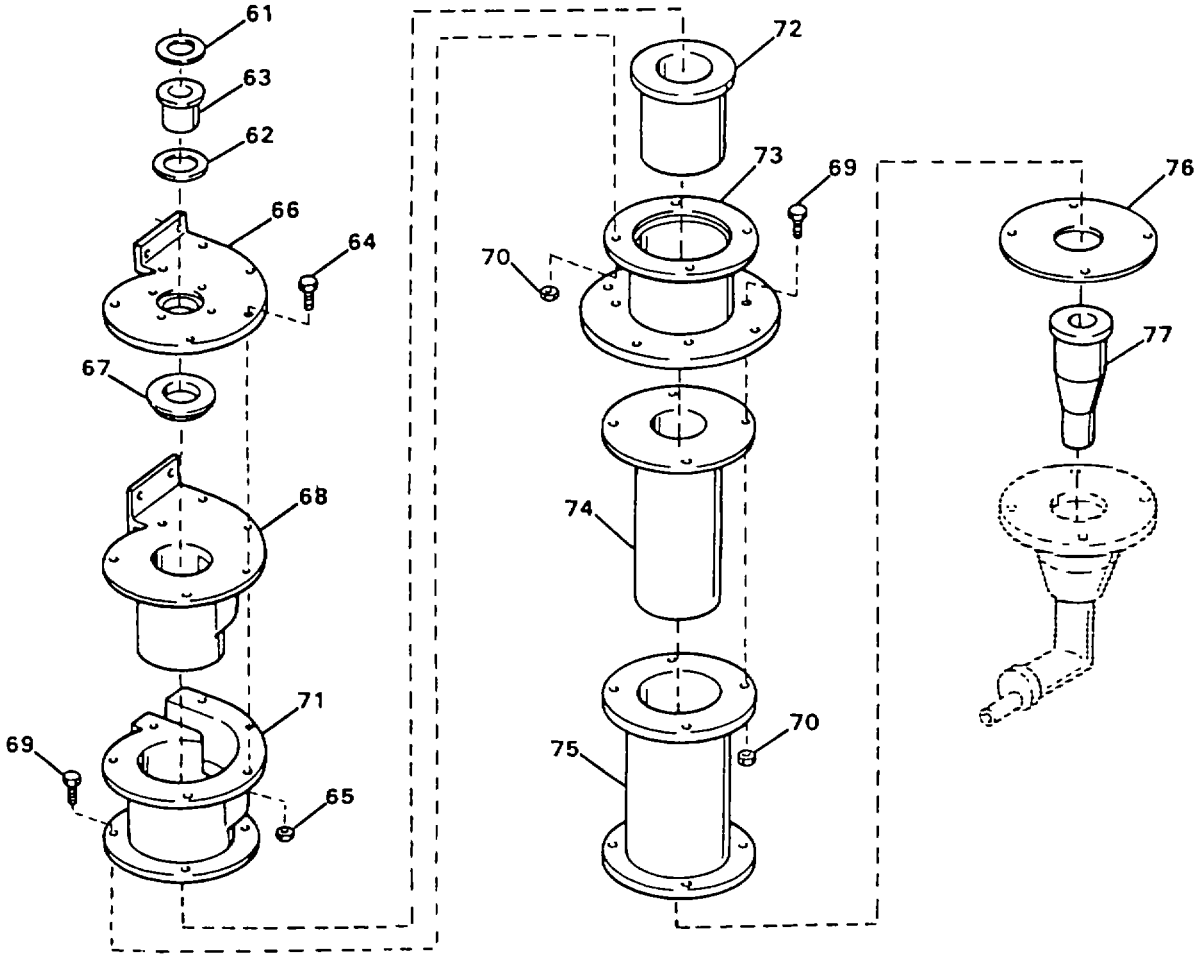

FIGURE 7. CYCLONE SEPARATORS (SHEET 3 of 4)
(Model ETN Only)

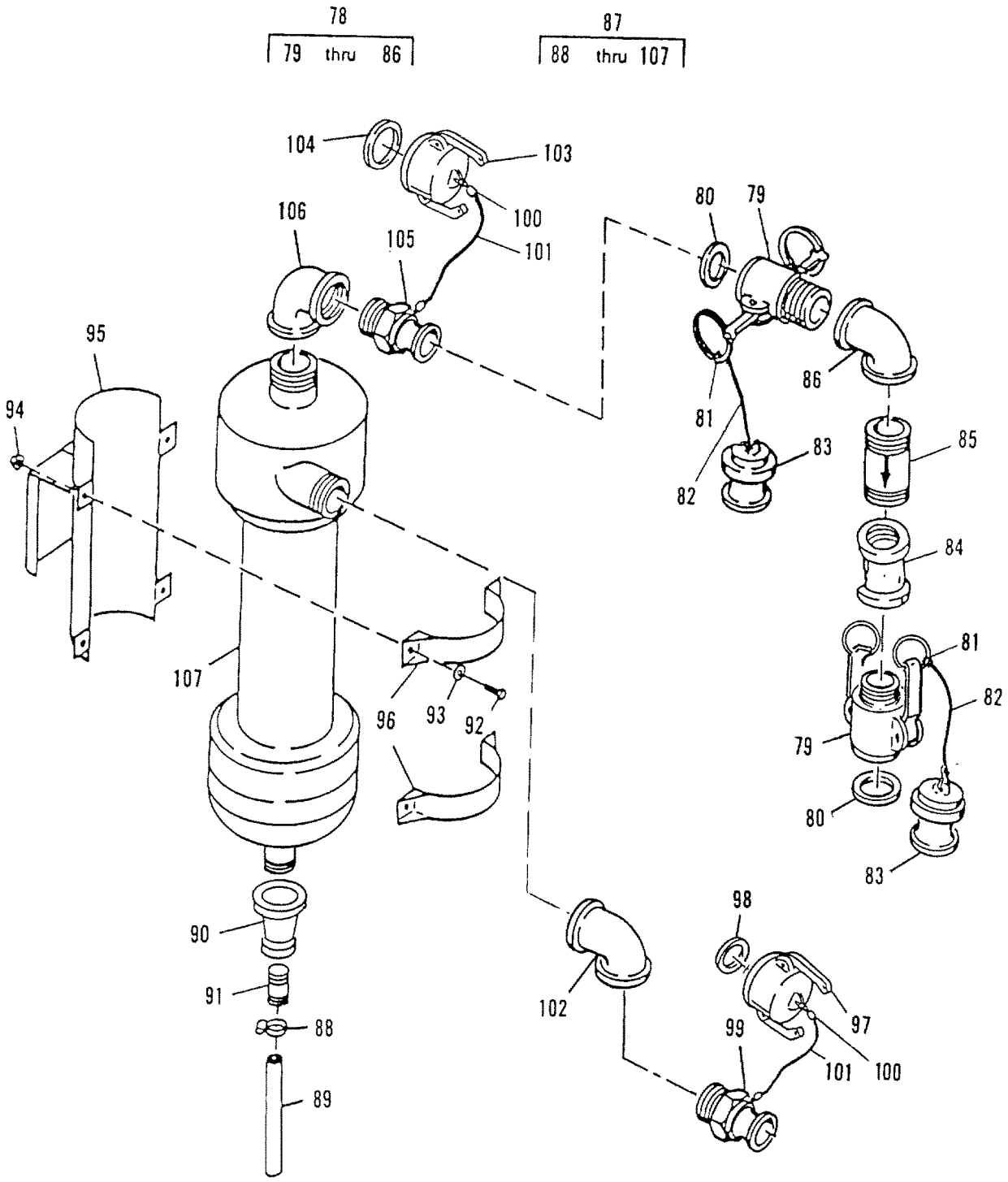

FIGURE 7. CYCLONE SEPARATORS (SHEET 4 of 4)
(Model FKD Only)

(1) ITEM NO	(2) SMR CODE	(3) NSN	(4) CAGEC	(5) PART NUMBER	(6) DESCRIPTION AND USABLE ON CODES(UOC)	(7) QTY
					GROUP 01 RAW WATER SYSTEM FIG. 7 CYCLONE SEPARATORS	
1	AOOOO		97403	13229E0501	.PIPE SECTION.....ETN	1
2	PAOZZ	4730013478543	96906	MS27024-14	..COUPLING HALF,QUICK.....ETN	1
3	PAOZZ	4730010789945	96906	MS27029-14	..PLUG,QUICK DISCONNE.....ETN	1
4	PBOZZ	4820013487869	97403	13229E0139-2	..VALVE,CHECK.....ETN	1
5	PAOZZ	4730004109530	96906	MS27026-12	..COUPLING HALF,QUICK.....ETN	1
6	PAOZZ	4730014662790	96906	MS27029-12	..COUPLING HALF,QUICK.....ETN	2
7	PAOZZ	4730013493866	97403	13229E0501-2	..TEE,PIPE 2 INCHES X 2 INCHES ETN X 2 1/2 INCHES NPT.....	1
8	PAOZZ	5330013498921	97403	13229E0857-4	..GASKET.....ETN	2
9	PAOZZ	5330013496191	97403	13229E0857-5	..GASKET.....ETN	1
10	MOOZZ		09647	120-02598-1	..CABLE CUT TO LENGTH FROM ETN BULK, P/N 13229E1147-1.....	1
11	MOOZZ		09647	120-02598-7	..CABLE CUT TO LENGTH FROM ETN BULK, P/N 13229E1147-1.....	2
12	PAOZZ	4030001455721	96906	MS51844-64	..SWAGING SLEEVE,WIRE.....ETN	6
13	PAOOO	4720013455640	97403	13229E1125	.HOSE ASSEMBLY.....ETN	2
14	PAOZZ	4730010866157	96906	MS27028-12	..CAP,QUICK DISCONNEC.....ETN	4
15	PAOZZ	5330013498921	97403	13229E0857-4	..GASKET.....ETN	4
16	MOOZZ		09647	120-02598-3	..CABLE CUT TO LENGTH FROM ETN BULK, P/N 13229E1147-1.....	2
17	PAOZZ	4030001455721	96906	MS51844-64	..SWAGING SLEEVE,WIRE.....ETN	4
18	XDOOO		97403	13229E0075	.FRAME ASSY,CYCLONE.....ETN	1
19	PAOZZ	5340013495920	97403	13229E0489	..STRAP,WEBBING.....ETN	2
20	PAOZZ	5305000509231	96906	MS51957-65	..SCREW,MACHINE 0.190-24 UNC- ETN 2A X 0.750 INCH LONG.....	4
21	PAOZZ	5905013924321	96906	MS15765-842	..RESISTOR,FIXED,WIR.....ETN	4
22	PAOZZ	5310009338120	96906	MS35338-138	..WASHER,LOCK.....ETN	4
23	PAOZZ	5310009349760	96906	MS35649-204	..NUT,PLAIN,HEXAGON.....ETN	4
24	PAOZZ	5340005220381	19220	6411E	..LOOP,STRAP FASTENER.....ETN	2
25	PAOZZ	5305002078253	96906	MS35307-30B	..SCREW,CAP,HEXAGON H.....ETN	7
26	PAOZZ	5310010911248	96906	MS15795-810	..WASHER,FLAT.....ETN	14
27	PAOZZ	5310009338121	96906	MS35338-139	..WASHER,LOCK.....ETN	7
28	PAOZZ	5310009035966	96906	MS51971-1	..NUT,PLAIN,HEXAGON.....ETN	7
29	XDOZZ		97403	13229E1082	..CHANNEL,BEARING.....ETN	1
30	XDOZZ		97403	13229E1081	..CHANNEL,BEARING.....ETN	2
31	XDOZZ		97403	13229E0465	..FRAME,CYCLONE LEG.....ETN	1
32	XDOZZ		97403	13229E0464	..FRAME,SEPARATOR.....ETN	1
33	PBOFF	4610013456671	97403	13229E0499	.CYCLONE ASSEMBLY LEFT HAND.....ETN	1
33	PBOFF	4610013456672	97403	13229E0497	.CYCLONE ASSEMBLY RIGHT HAND.....ETN	1
34	PAOZZ	5305000213740	96906	MS35307-364	..SCREW,CAP,HEXAGON H.....ETN	4
35	PAOZZ	5310009847042	96906	MS35338-141	..WASHER,LOCK.....ETN	8
36	PAOZZ	5310007737618	96906	MS15795-814	..WASHER,FLAT.....ETN	12
37	PAOZZ	5305004550315	96906	MS35307-367	..SCREW,CAP,HEXAGON H.....ETN	4
38	PAOZZ	5310009138881	96906	MS51971-3	..NUT,PLAIN,HEXAGON.....ETN	4
39	XDOZZ		97403	13229E0494	..FLANGE,INLET.....ETN	2
40	PAOZZ	4730002687479	96906	MS14315-22X	..BUSHING,PIPE 1 1/2 INCHES X 2 ETN INCHES MPT.....	2
41	PAOZZ	4730002493890	96906	MS51845-9	..ELBOW,PIPE.....ETN	4

(1) ITEM NO	(2) SMR CODE	(3) NSN	(4) CAGEC	(5) PART NUMBER	(6) DESCRIPTION AND USABLE ON CODES(UOC)	(7) QTY
42	PAOZZ	4730004109530	96906	MS27026-12	..COUPLING HALF,QUICK.....ETN	2
43	PAOZZ	4730014662790	96906	MS27029-12	..COUPLING HALF,QUICK.....ETN	2
44	PAOZZ	4730001153740	96906	MS27022-12	..CAP,QUICK DISCONNEC.....ETN	2
45	PAOZZ	4730010866157	96906	MS27028-12	..LOCKING CAP,HOSE.....ETN	2
46	PAOZZ	5330013498921	97403	13229E0857-4	..GASKET.....ETN	4
47	MOOZZ		09647	120-02598-5	..CABLE CUT TO LENGTH FROM BULK, P/N 13229E1147-1..... ETN	4
48	PAOZZ	4030001455721	96906	MS51844-64	..SWAGING SLEEVE,WIRE.....ETN	8
49	PAOZZ	4730011465901	76599	4812SS	..CLAMP,HOSE TYPE F, 1 1/4 INCHES NOM SIZE, 316 CRES..... ETN	2
50	MOOZZ		09647	120-02599-62	..HOSE CUT TO LENGTH FROM BULK, P/N SAE 30R2..... ETN	2
51	PAFZZ	5305000213806	96906	MS35307-413	..SCREW,CAP,HEXAGON H.....ETN	4
52	PAFZZ	5310009338778	96906	MS35338-143	..WASHER,LOCK.....ETN	24
53	PAFZZ	5310007679425	96906	MS15795-818	..WASHER,FLAT.....ETN	32
54	XDFZZ		97403	13229E0495	..FLANGE,OUTLET.....ETN	2
55	PAFZZ	5305007276804	96906	MS35307-414	..SCREW,CAP,HEXAGON H.....ETN	8
56	XDFZZ		97403	13229E0492	..PLATE,MOUNTING.....ETN	2
57	PAFZZ	5310007680321	96906	MS51971-5	..NUT,PLAIN,HEXAGON.....ETN	16
58	PAFZZ	5305006858156	96906	MS35307-416	...SCREW,CAP,HEXAGON H.....ETN	8
59	XDFZZ		97403	13229E0493	..PLATE,MOUNTING.....ETN	2
60	XAFFF		97403	13229E0496	..SEPARATOR,CYCLONE.....ETN	2
61	PAFZZ	5330013517681	56735	C6095G-RN	...GASKET.....ETN	2
62	PAFZZ	5330013517682	56735	45G-RN	...GASKET.....ETN	2
63	PAFZZ	4730013494435	56735	45C-CR-1 1/4	...VORTEX FINDER.....ETN	2
64	PAFZZ	5306006556170	96906	MS35307-338	...BOLT,MACHINE.....ETN	12
65	PAFZZ	5310009138881	96906	MS51971-3	...NUT,PLAIN,HEXAGON.....ETN	12
66	XDFZZ		56735	43 ST	...COVER PLATE,TOP.....ETN	2
67	PBFZZ	4610013497641	56735	43R-RG	...LINER,TOP COVER.....ETN	2
68	PBFZZ	4610013497642	56735	42R-RG-1.2	...RUBBER,SHEET,SOLID.....ETN	2
69	PAFZZ	5305007276804	96906	MS35307-414	...SCREW,CAP,HEXAGON H.....ETN	16
70	PAFZZ	5310007680321	96906	MS51971-5	...NUT,PLAIN,HEXAGON.....ETN	16
71	XDFZZ		56735	42AL	...HEAD,INLET.....ETN	2
72	PBFZZ	4610013497643	56735	44RB-RG	...LINER,UPPER CYL.....ETN	2
73	XDFZZ		56735	44MF	...CYLINDER,MTG PLATE.....ETN	2
74	PBFZZ	4610013497644	56735	44R-12-RG	...LINER,CYL,LONG.....ETN	2
75	XDFZZ		56735	44-2-AL	...CYLINDER,LONG.....ETN	2
76	PBFZZ	5330013495541	56735	C60486	...GASKET.....ETN	2
77	PBFZZ	4610013497645	56735	48R-RG-3/8	...LINER,APEX VALVE.....ETN	2
78	AOOOO		97403	13229E0141	.PIPE SECTION CYCLONE OUT.....FKD	1
79	PAOZZ	4730004109530	96906	MS27026-12	..COUPLING HALF,QUICK.....FKD	2
80	PAOZZ	5330013498921	97403	13229E0857-4	...GASKET.....FKD	2
81	PAOZZ	4030001455721	96906	MS51844-64	..SLEEVE,SWAGE.....FKD	4
82	MOOZZ		09647	120-02598-1	..CABLE CUT TO LENGTH FROM BULK, P/N 13229E1147-1..... FKD	2
83	PAOZZ	4730014662790	96906	MS27029-12	..COUPLING HALF,QUICK.....FKD	2
84	XDOZZ		97403	13229E0141-13	..REDUCER 2 INCHES X 2 1/2 INCHES..... FKD	2
85	PBOZZ	4820013487869	97403	13229E0139-2	..VALVE,CHECK.....FKD	1
86	XDOZZ		97403	13229E0041-3	..ELBOW 90 DEGREE, 2 INCHES X 2 1/2 INCHES..... FKD	1
87	PBOOO		97403	13229E0176	.CYCLONE ASSEMBLY.....FKD	1

(1) ITEM NO	(2) SMR CODE	(3) NSN	(4) CAGEC	(5) PART NUMBER	(6) DESCRIPTION AND USABLE ON CODES(UOC)	(7) QTY
88	PAOZZ	5120002782423	97403	13229E0511-4	..CLAMP,HOSE TYPE F, SIZE 1-l/4 INCHES..... FKD	1
89	MOOZZ		09647	120-02599-62	..HOSE CUT TO LENGTH FROM BULK, P/N SAE-J30,.75 ID..... FKD	1
90	PAOZZ	4730002315650	96906	MS39232-7	..REDUCER,PIPE 3/4 INCH X 1/2 INCH NPT..... FKD	1
91	PAOZZ	4730001961493	96906	MS51953-78	..NIPPLE,PIPE 1/2 INCH NPT X 2 INCHES LONG..... FKD	1
92	PAOZZ	5305000213740	96906	MS35307-364	..SCREW UNC 2A-3/8 X 1.5 INCHES LONG..... FKD	4
93	PAOZZ	5310009847042	96906	MS35338-141	..WASHER,LOCK 3/8 INCH ID.....FKD	4
94	PAOZZ	5310009138881	96906	MS51971-3	..NUT,PLAIN,HEXAGON.....FKD	4
95	XDOZZ		97403	13229E0092	..BRACKET,MOUNTING.....FKD	1
96	XDOZZ		97403	13229E0492	..STRAP,MOUNTING.....FKD	2
97	PAOZZ	4730005908083	96906	MS27028-14	..CAP,QUICK DISCONNECT.....FKD	1
98	PAOZZ	5330013496191	97403	13229E0857-5	..GASKET.....FKD	1
99	PAOZZ	4730002895368	96906	MS27022-14	..COUPLING HALF,QUICK.....FKD	1
100	PAOZZ	4030001455721	96906	MS51844-64	..SWAGING SLEEVE,WIRE.....FKD	4
101	MOOZZ		09647	120-02598-1	..CABLE CUT TO LENGTH FROM BULK, P/N 13229E1147-1..... FKD	2
102	PBOZZ		97403	13229E0176-36	..ELBOW,PIPE 90 DEGREE, 2 INCHES X 2 1/2 INCHES..... FKD	1
103	PAOZZ	4730010866157	96906	MS27028-12	..CAP,QUICK DISCONNEC.....FKD	1
104	PAOZZ	5330013498921	97403	13229E0857-4	..GASKET.....FKD	1
105	PAOZZ	4730001153740	96906	MS27022-12	..COUPLING HALF,QUICK.....FKD	1
106	PBOZZ		97403	13229E0176-12	..ELBOW 90 DEGREE, 2 INCHES NPT..FKD	1
107	PAOZZ		97403	13229E0133	..SEPARATOR,CYCLONE.....FKD	2

END OF FIGURE

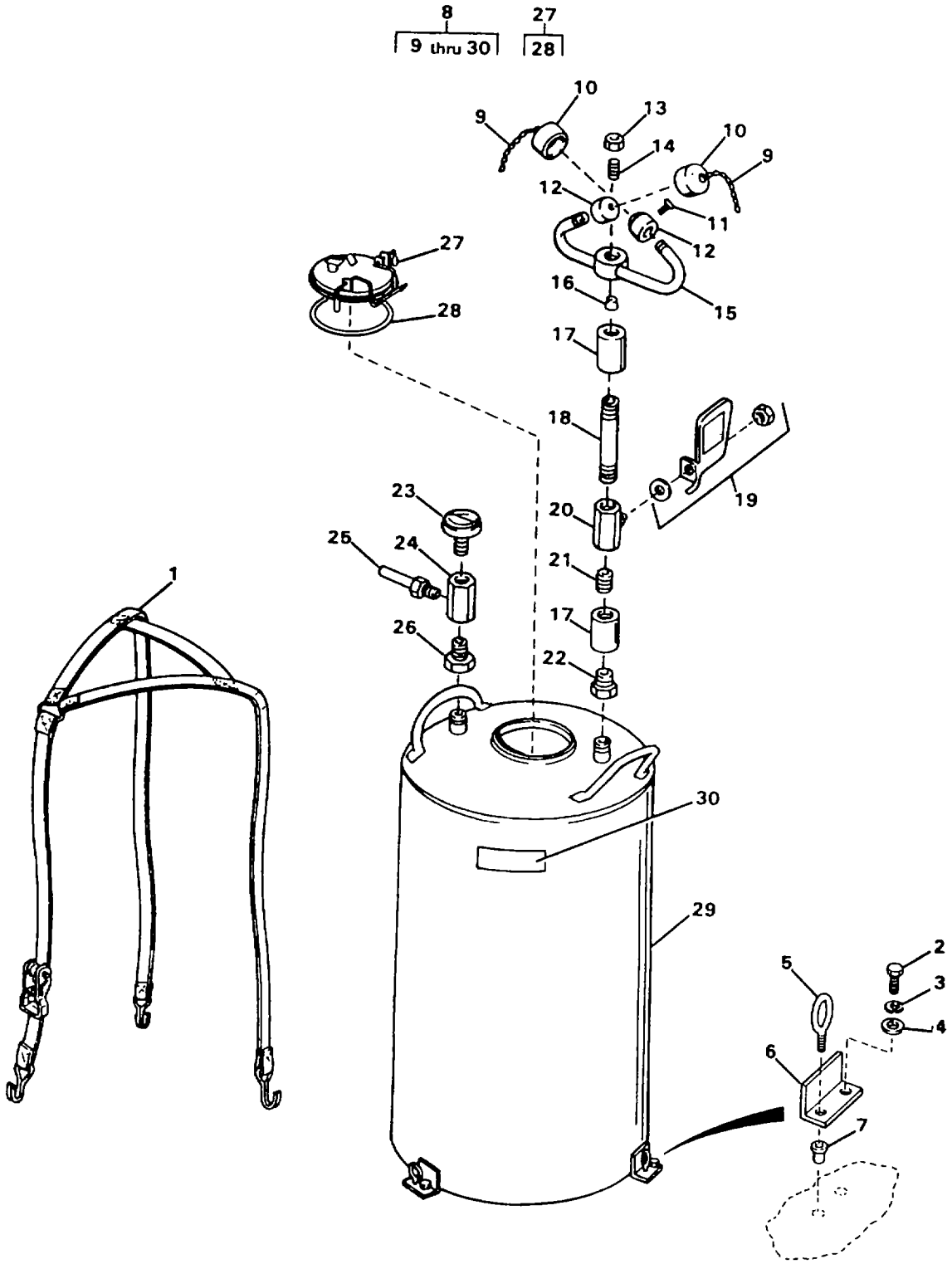

FIGURE 8. EYEWASH STATION

(1) ITEM NO	(2) SMR CODE	(3) NSN	(4) CAGEC	(5) PART NUMBER	(6) DESCRIPTION AND USABLE ON CODES(UOC)	(7) QTY
					GROUP 02 WATER PURIFICATION SYSTEM	
					FIG. 8 EYEWASH STATION	
1	PBOZZ	5340013528190	97403	13229E1139	.STRAP,WEBBING.....	1
2	PAOZZ	5305000213620	96906	MS35307-307	.SCREW,CAP,HEXAGON H.....	3
3	PAOZZ	5310009338121	96906	MS35338-139	.WASHER,LOCK.....	3
4	PAOZZ	5310010911248	96906	MS15795-810	.WASHER,FLAT.....	3
5	PAOZZ	5306013522735	97403	13229E0161-180	.EYEBOLT 0.25 INCH -20 UNC-2A X 0.75 INCH.....	3
6	XDOZZ		97403	13229E1130	.BRACKET.....	3
7	PAFZZ	5310011190460	97403	13229E0114-4	.NUT,PLAIN,BLIND RIV.....	6
8	PBOOO	4240013574912	87327	SE-591	.FOUNTAIN,EYE AND FA.....	1
9	XDOZZ		87327	G05-0461	..CHAIN ASSY,DUST COV.....	1
10	XDOZZ		87327	07-0065	..COVER,DUST COVE,DUS.....	2
11	XDOZZ		87327	48-0116	..SCREW SCR.....	2
12	XDOZZ		87327	38-0234	..NOZZLE,SPRAY.....	2
13	XDOZZ		87327	01-0632	..NUT.....	1
14	PAOZZ	5305013500505	87327	48-0275	..SCREW,MACHINE.....	1
15	XDOZZ		87327	G24-0075	..TEE AND TUBE ASSY.....	1
16	XDOZZ		87327	20-0830	..CONTROL,FLOW.....	1
17	XDOZZ		87327	05-0478	..SOCKET.....	2
18	XDOZZ		87327	31-0292	..PIPE.....	1
19	XDOZZ		87327	RPGO4-0438	..HANDLE NUT ASSY.....	1
20	XDOZZ		87327	20-0756	..VALVE,BALL.....	1
21	XDOZZ		87327	31-0356	..PIPE.....	1
22	XDOZZ		87327	05-1668	..ADAPTER,OUTLET.....	1
23	PBOZZ		87327	05-1671	..INDICATOR,LIQUID QU.....	1
24	XDOZZ		87327	24-0246	..TEE.....	1
25	PBOZZ	4820013493814	87327	20-0783	..VALVE,SAFETY RELIEF.....	1
26	XDOZZ		87327	05-1669	..ADAPTER.....	1
27	PAOZZ	5330013495542	87327	RPGO7-0008	..GASKET.....	1
28	PAOZZ	5330013495542	87327	45-0626	...GASKET.....	1
29	XAOZZ		87327	05-1670	..TANK 10 GALLON.....	1
30	XBOZZ		97403	13229E1335-5	..PLATE,ID.....	1

END OF FIGURE

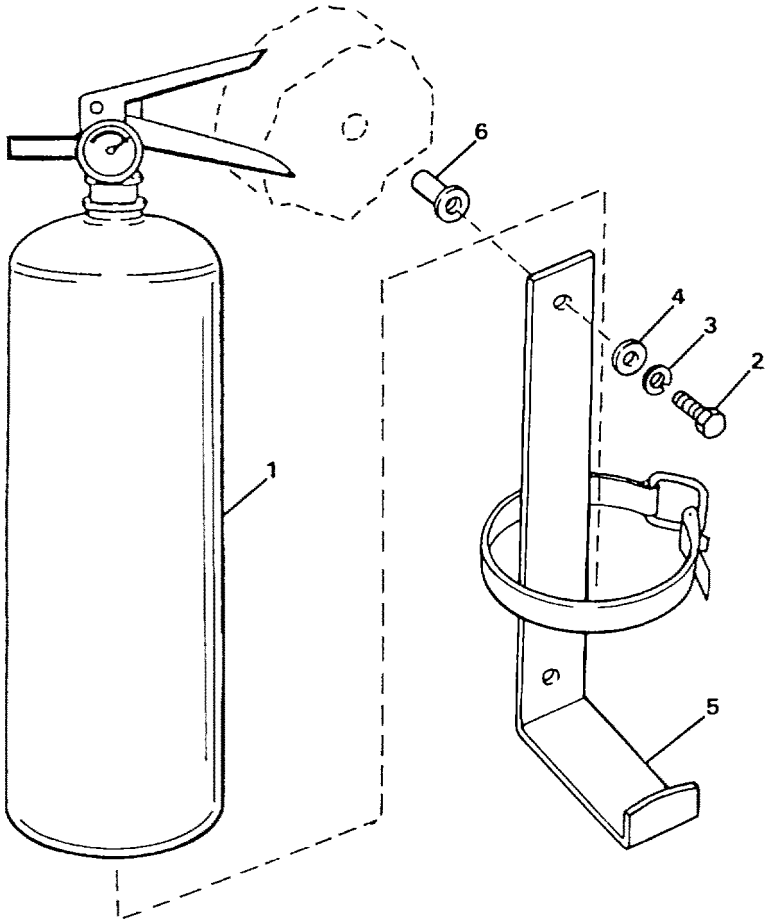

FIGURE 9. FIRE EXTINGUISHER

(1) ITEM NO	(2) SMR CODE	(3) NSN	(4) CAGEC	(5) PART NUMBER	(6) DESCRIPTION AND USABLE ON CODES(UOC)	(7) QTY
					GROUP 02 WATER PURIFICATION SYSTEM	
					FIG. 9 FIRE EXTINGUISHER	
1	PAOZZ	6830013513112	02413	5-1211 W/M-B-4	BROMOCHLORODIFLUORO.....ETN	2
1	PAOZZ		97403	13229E0325	EXTINGUISHER,FIRE,C.....FKD	2
2	PAOZZ	5306005434405	96906	MS35307-334	BOLT,MACHINE.....	4
3	PAOZZ	5310009746623	96906	MS35338-140	WASHER,LOCK.....	4
4	PAOZZ	5310006255756	96906	MS15795-812	WASHER,FLAT.....	4
5	PAOZZ	4210014217949	97403	13229E0174-2	BRACKET,MOUNTING.....ETN	2
5	XDOZZ		97403	13229E0325-2	BRACKET,MOUNTING.....FKD	2
6	PAFZZ	5310011976252	97403	13229E0114-8	NUT,PLAIN,BLIND RIV.....	4

END OF FIGURE

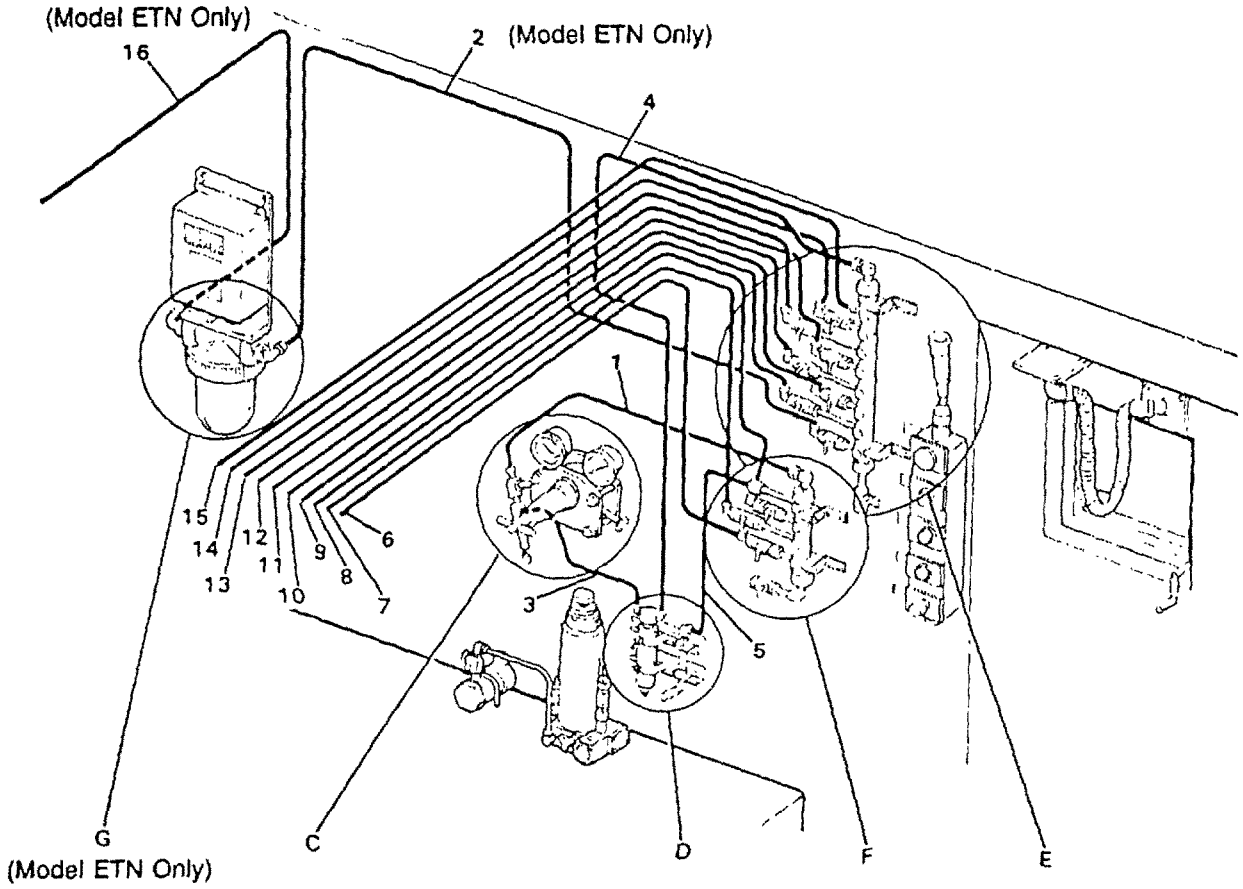

FIGURE 10. LOW PRESSURE AIR TUBING (SHEET 1 OF 7)

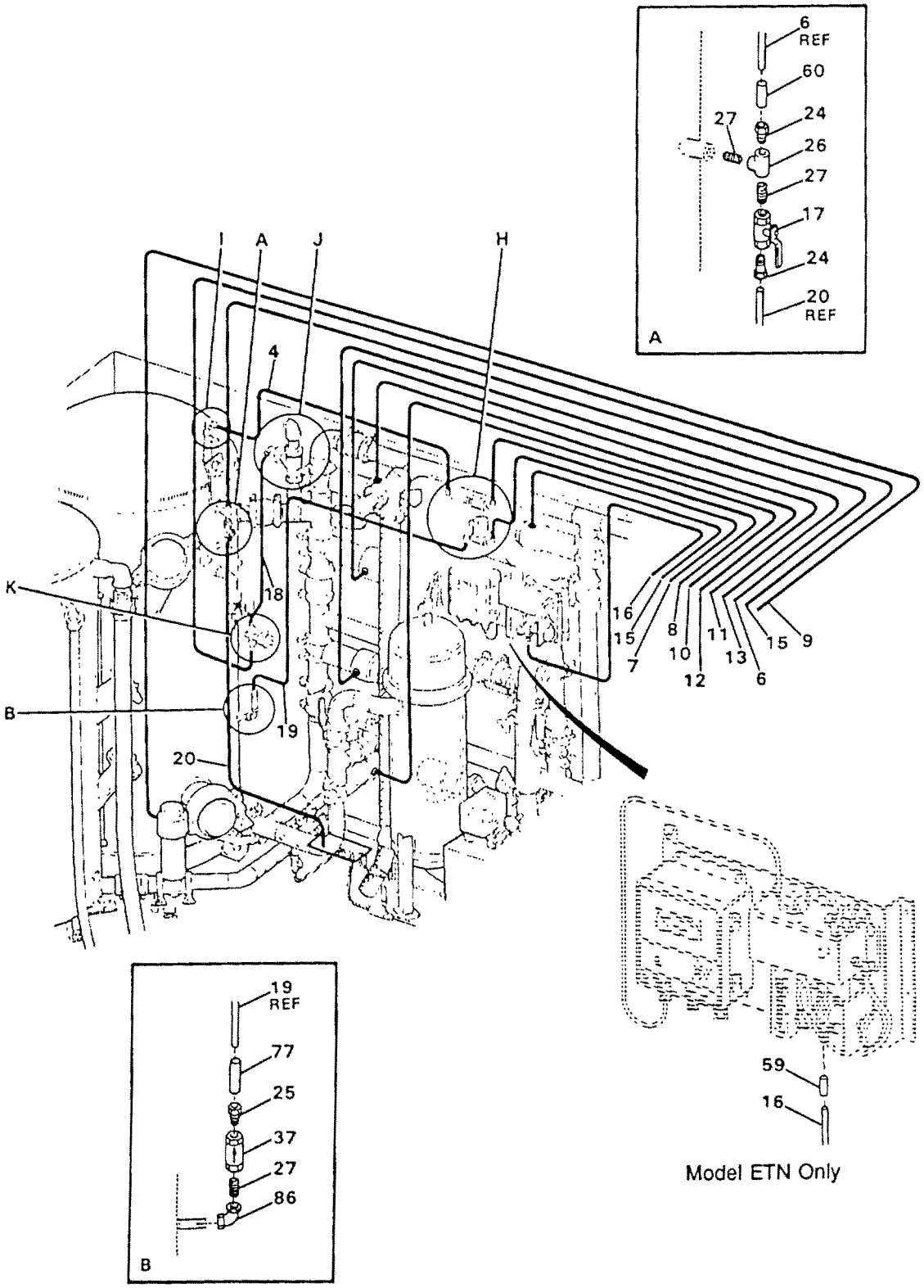

FIGURE 10. LOW PRESSURE AIR TUBING (SHEET 2 OF 7)

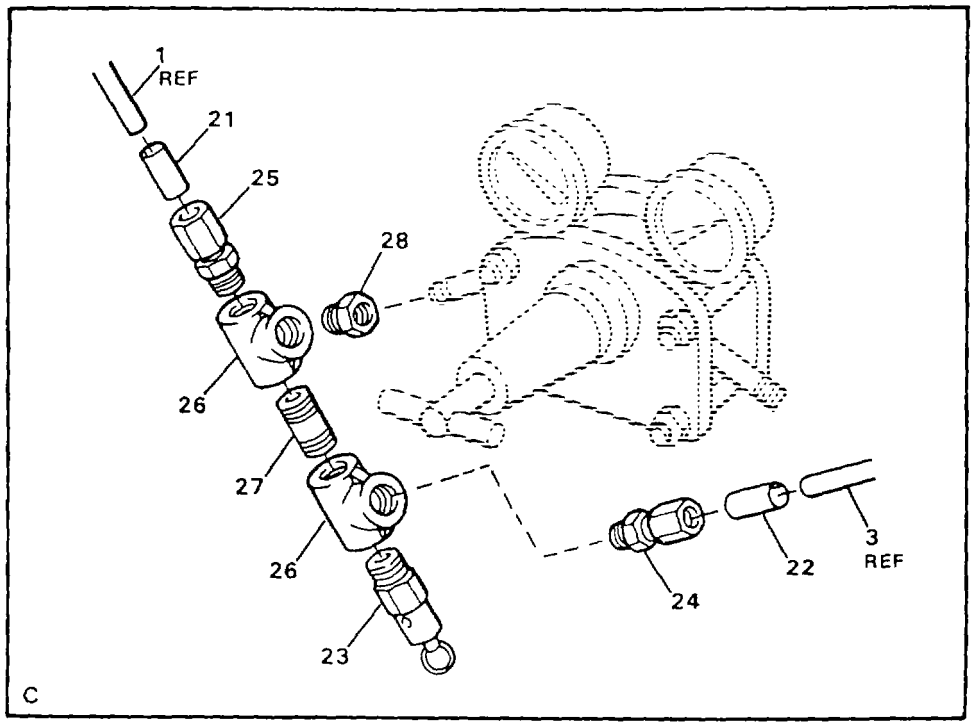

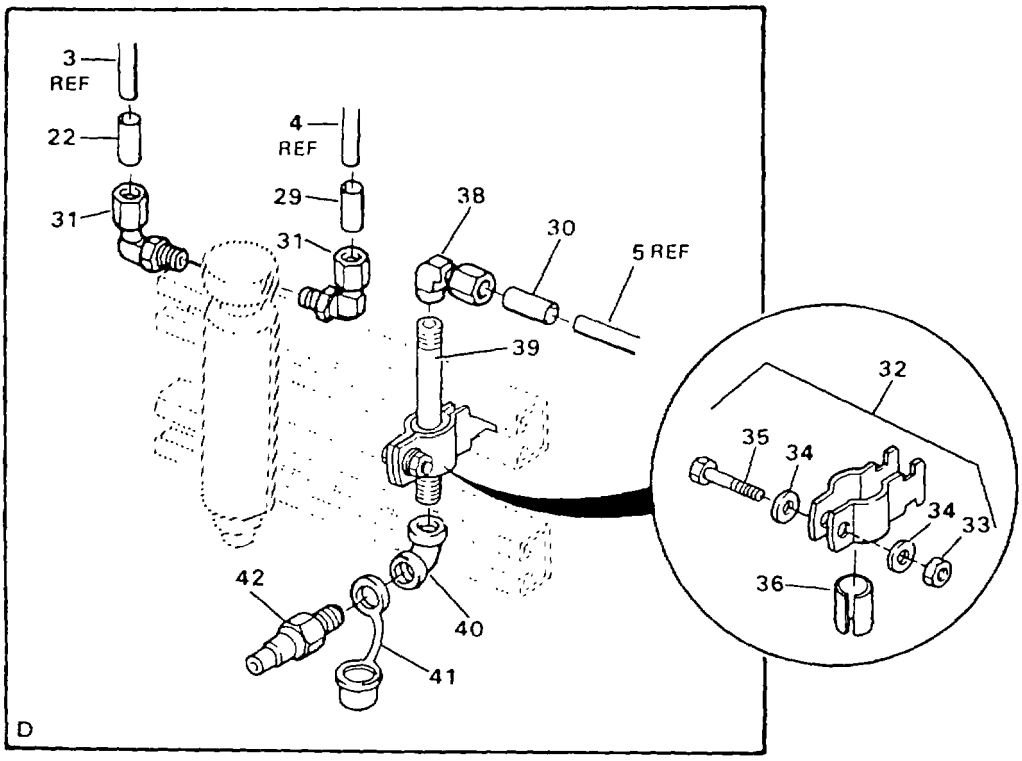

FIGURE 10. LOW PRESSURE AIR TUBING (SHEET 3 OF 7)

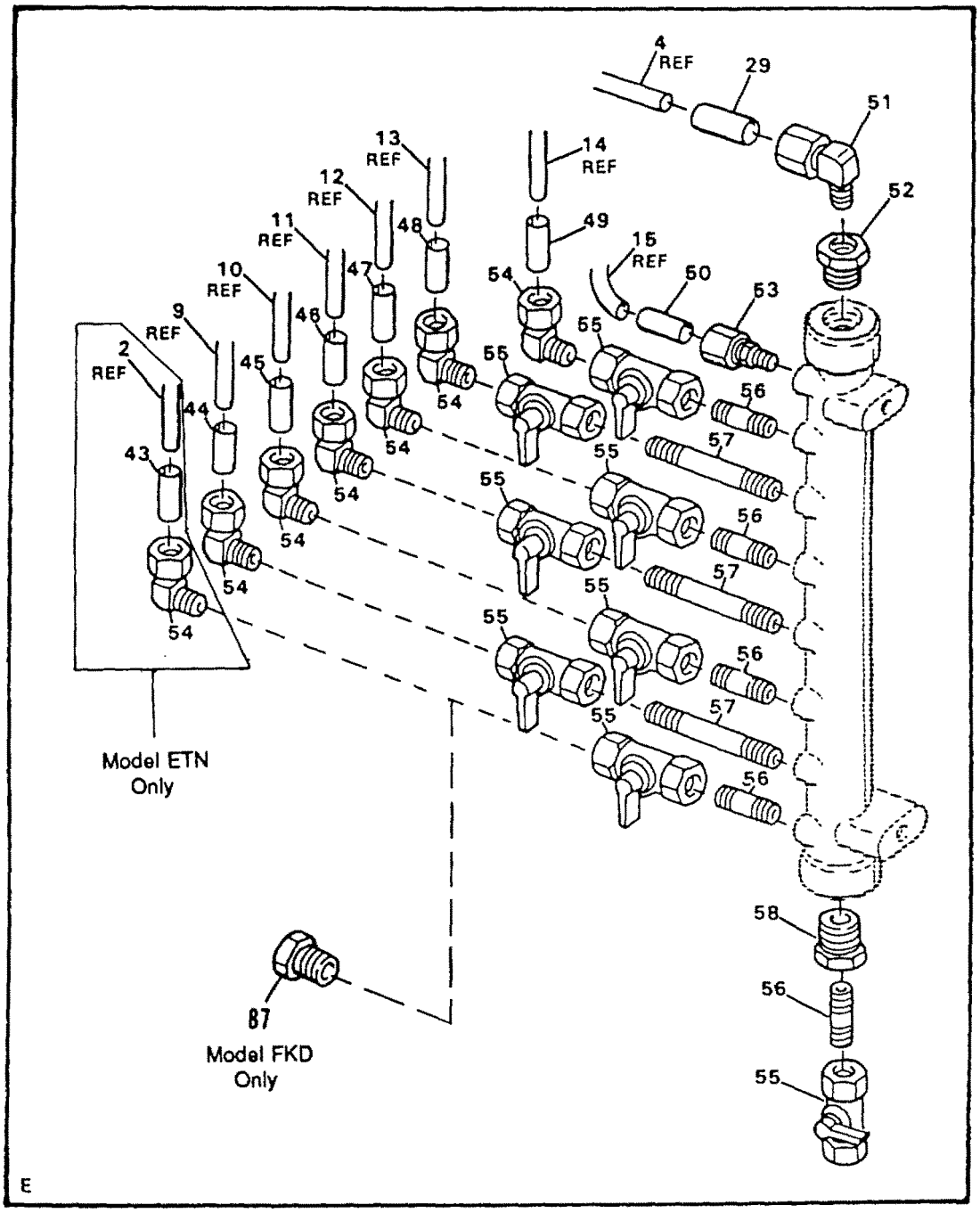

FIGURE 10. LOW PRESSURE AIR TUBING (SHEET 4 OF 7)

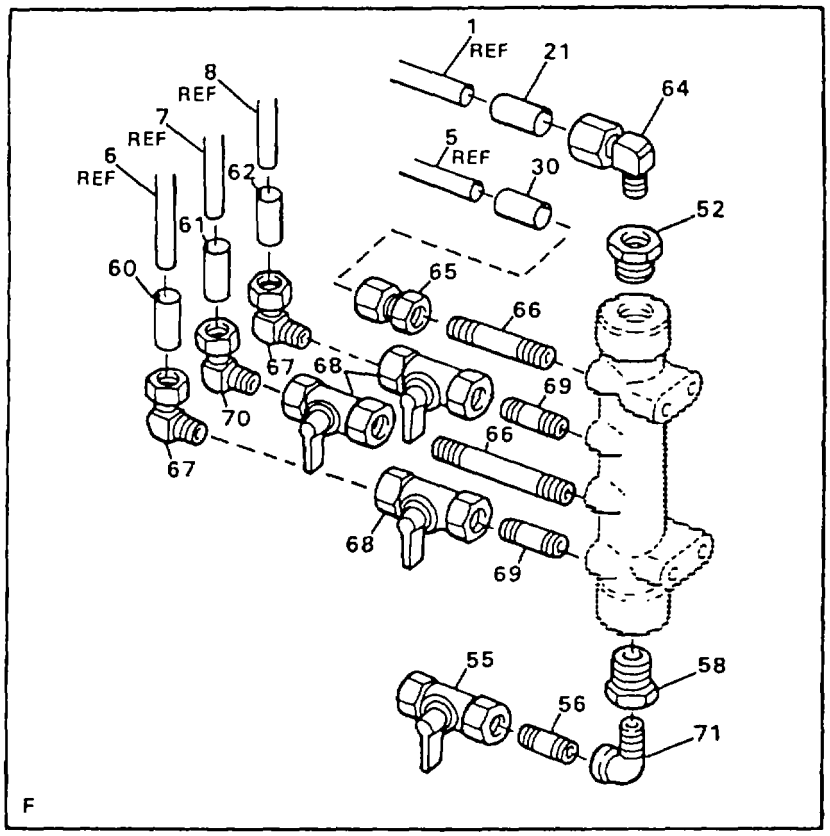

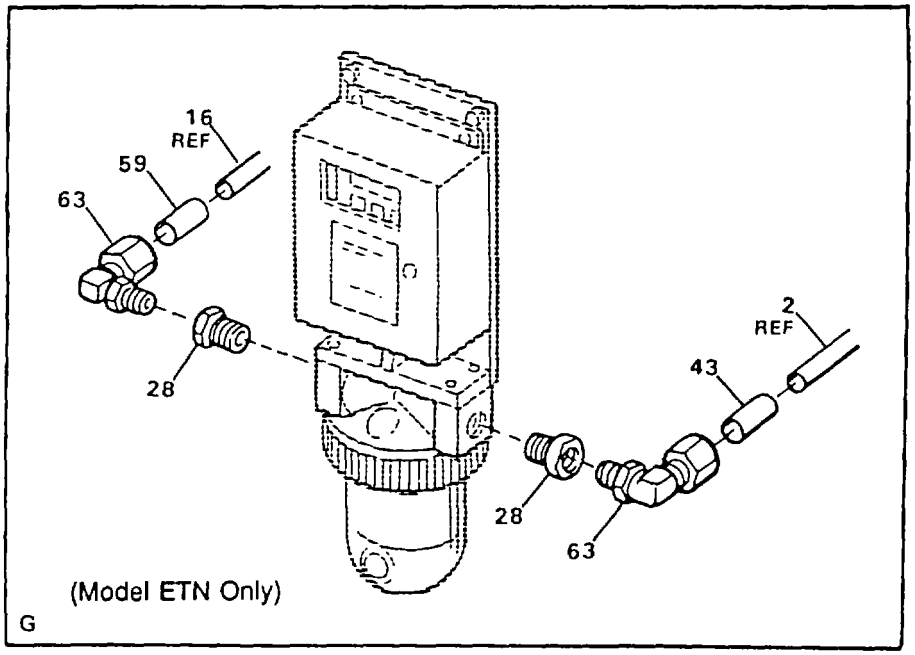

FIGURE 10. LOW PRESSURE AIR TUBING (SHEET 5 OF 7)

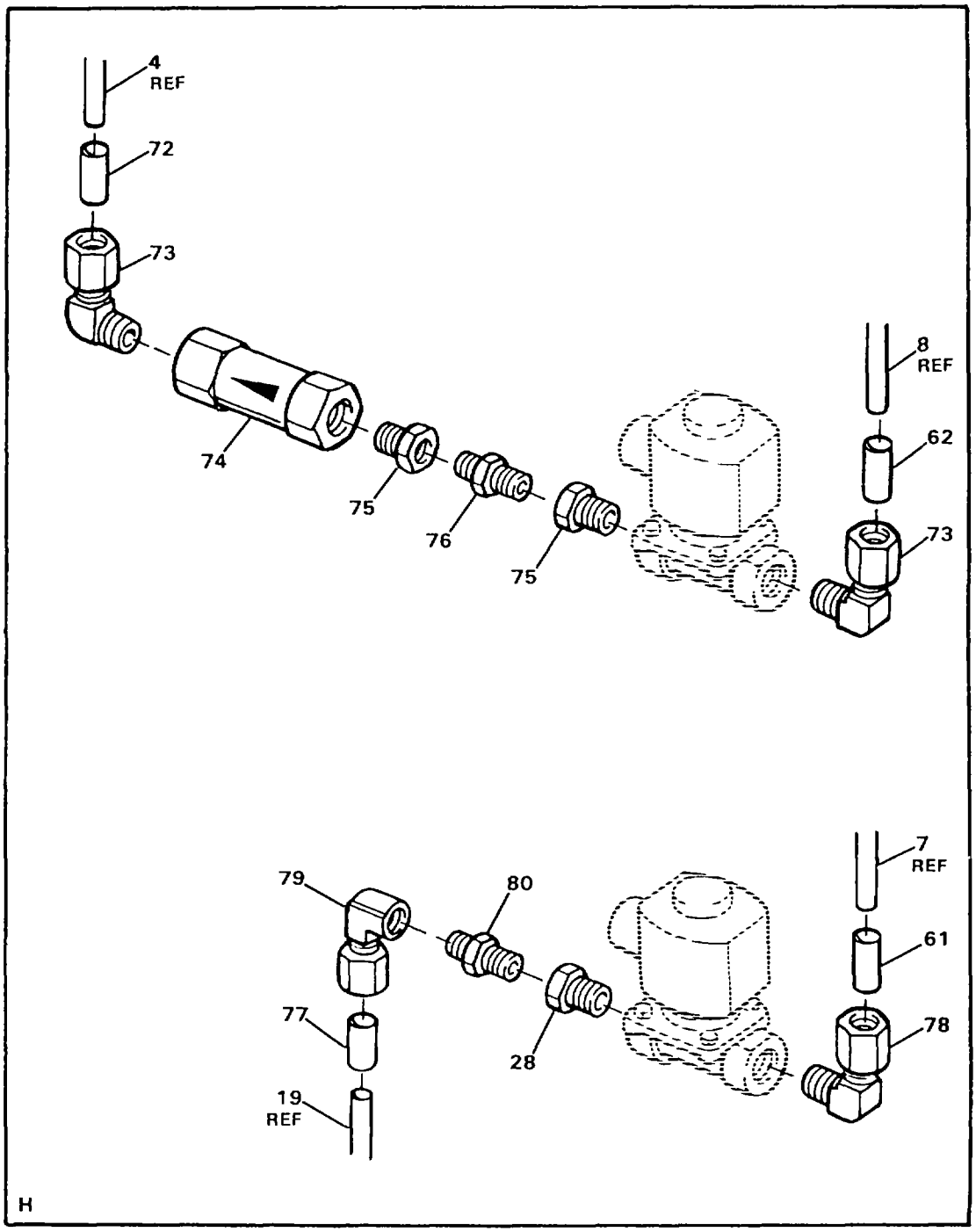

FIGURE 10. LOW PRESSURE AIR TUBING (SHEET 6 OF 7)

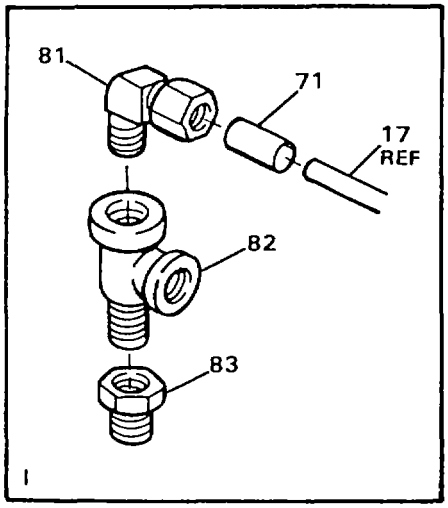

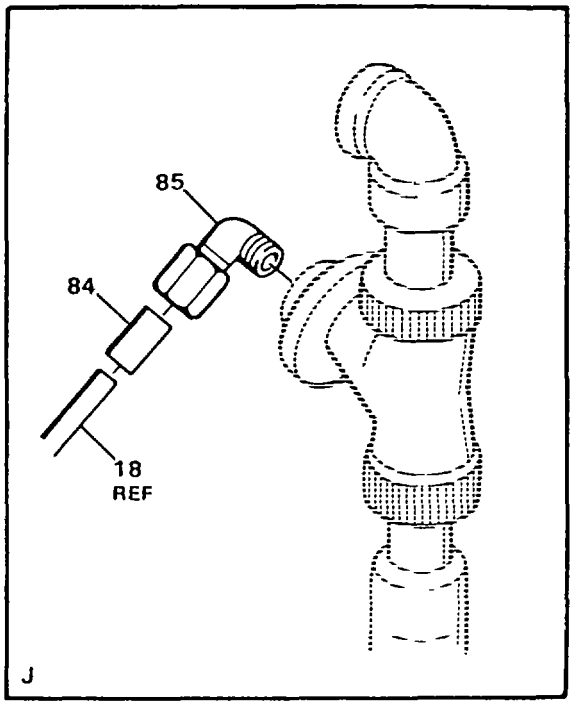

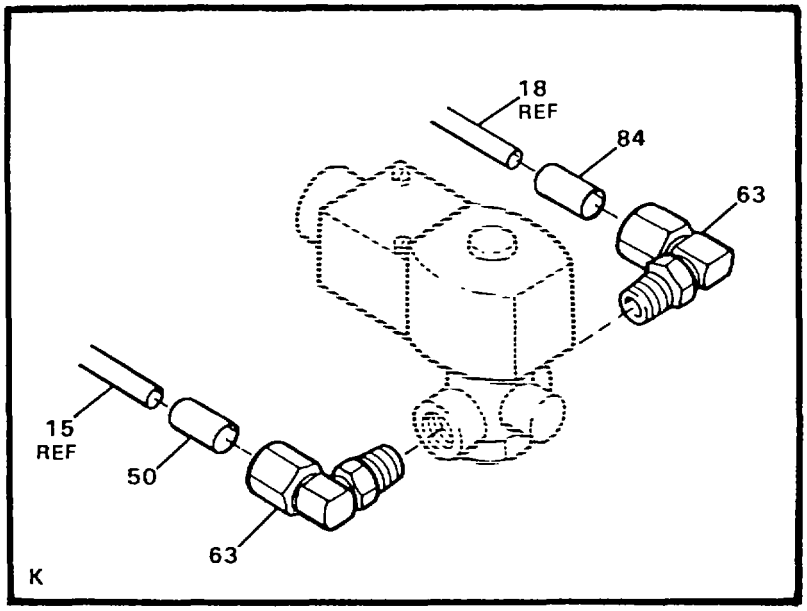

FIGURE 10. LOW PRESSURE AIR TUBING (SHEET 7 OF 7)

(1) ITEM NO	(2) SMR CODE	(3) NSN	(4) CAGEC	(5) PART NUMBER	(6) DESCRIPTION AND USABLE ON CODES(UOC)	(7) QTY
					GROUP 02 WATER PURIFICATION SYSTEM FIG. 10 LOW PRESSURE AIR TUBING	
1	MOOZZ		09647	120-02599-55	..TUBING CUT TO LENGTH FROM BULK, P/N NB-8-062.....	1
2	MOOZZ		09647	120-02599-7	..TUBING CUT TO LENGTH FROM ETN BULK, P/N 77C714976P006.....	1
3	MOOZZ		09647	120-02599-34	..TUBING CUT TO LENGTH FROM BULK, P/N 13229E0691-2.....	1
4	MOOZZ		09647	120-02599-38	..TUBING CUT TO LENGTH FROM BULK, P/N 13229E0691-2.....	1
5	MOOZZ		09647	120-02599-37	..TUBING CUT TO LENGTH FROM BULK, P/N 13229E0691-2.....	1
6	MOOZZ		09647	120-02599-51	..TUBING CUT TO LENGTH FROM BULK, P/N 13229E0691-2.....	1
7	MOOZZ		09647	120-02599-57	..TUBING CUT TO LENGTH FROM BULK, P/N NB-8-062.....	1
8	MOOZZ		09647	120-02599-50	..TUBING CUT TO LENGHT FROM BULK, P/N 13229E0691-2.....	1
9	MOOZZ		09647	120-02599-25	..TUBING CUT TO LENGTH FROM BULK, P/N 77C714976P006.....	1
10	MOOZZ		09647	120-02599-22	..TUBING CUT TO LENGTH FROM BULK, P/N 77C714976P006.....	1
11	MOOZZ		09647	120-02599-15	..TUBING CUT TP LENGTH FROM BULK, P/N 77C714976P006.....	1
12	MOOZZ		09647	120-02599-12	..TUBING CUT TO LENGTH FROM BULK, P/N 77C714976P006.....	1
13	MOOZZ		09647	120-02599-16	..TUBING CUT TO LENGTH FROM BULK, P/N 77C714976P006.....	1
14	MOOZZ		09647	120-02599-11	..TUBING CUT TO LENGTH FROM BULK, P/N 77C714976P006.....	1
15	MOOZZ		09647	120-02599-17	..TUBING CUT TO LENGTH FROM BULK, P/N 77C714976P006.....	1
16	MOOZZ		09647	120-02599-23	..TUBING CUT TO LENGTH FROM ETN BULK, P/N 77C714976P006.....	1
17	PAOZZ	4820010876419	98437	22M3-131M1	..VALVE,BALL.....	1
18	MOOZZ		09647	120-02599-3	..TUBING CUT TO LENGTH FROM BULK, P/N 77C714976P006.....	1
19	MOOZZ		09647	120-02599-56	..TUBING CUT TO LENGTH FROM BULK, P/N NB-8-062.....	1
20	MOOZZ		09647	120-02599-46	..TUBING CUT TO LENGTH FROM BULK, P/N 13229E0691-2.....	1
21	XDOZZ		09647	120-02456-4	..MAKER.....	2
22	XDOZZ		09647	120-02456-10	..MARKER.....	2
23	PBOZZ	4820013487874	97403	13229E0227	..VALVE,SAFETY RELIEF.....	1
24	PAOZZ	4730006915461	09647	120-07511-8	..ADAPTER,STRAIGHT,PI.....	3
25	PBOZZ	4730006915464	97403	13229E0682-11	..ADAPTER,STRAIGHT,PI.....	2
26	PBOZZ	4730013493785	97403	13229E0375-34	..TEE,PIPE 1/2 INCH NPS.....	3
27	PBOZZ	4730012404263	97403	13229E1255-10	..NIPPLE,PIPE.....	4
28	PBOZZ	4730007294930	98441	1-2X1-8PTRS	..BUSHING,PIPE 1/2 INCH X 1/8 ETN INCH FPT.....	4

(1) ITEM NO	(2) SMR CODE	(3) NSN	(4) CAGEC	(5) PART NUMBER	(6) DESCRIPTION AND USABLE ON CODES(UOC)	(7) QTY
28	PBOZZ	4730007294930	98441	1-2X1-8PTRS	..BUSHING,PIPE 1/2 INCH X 1/8 FKD INCH FPT.....	2
29	XDOZZ		09647	120-02456-11	..MARKER.....	2
30	XDOZZ		09647	120-02456-25	..MARXER.....	2
31	PBOZZ	4730007932660	97403	13229E0683-6	..ELBOW,PIPE TO TUBE.....	2
32	XDOZZ		97403	13229E0685-5	..CLAMP,TUBE.....	2
33	PAOZZ	5310009138881	96906	MS51971-3	..NUT,PLAIN,HEXAGON.....	2
34	PAOZZ	5310010911248	96906	MS15795-810	..WASHER,FLAT.....	4
35	PAOZZ	5305000213668	96906	MS35307-310	..SCREW,CAP,HEXAGON H.....	2
36	MOOZZ		09647	120-52328-1	..CUSHION CUT TO LENGTH FROM BULK, P/N 13229E0686.....	2
37	PBFZZ	4820013487870	97403	13229E0418-2	..VALVE,CHECK.....	1
38	PBOZZ	4730013470056	97403	13229E0772-7	..ELBOW,PIPE TO TUBE.....	1
39	PBOZZ	4730013506214	97403	13229E1256-5	..NIPPLE,PIPE.....	1
40	PBOZZ		97403	13229E0375-158	..ELBOW,STREET 90 DEGREE, 3/8 INCH NPS, BRZ.....	1
41	PBOZZ	5340013074395	97403	13229E0887-2	..PLUG,PROTECTIVE,DUST.....	1
42	PBOZZ	4730013488004	97403	13229E0771-2	..COUPLING HALF,QUICK.....	1
43	XDOZZ		09647	120-02456-81	..MARKER.....ETN	2
44	XDOZZ		09647	120-02456-18	..MARKER.....	2
45	XDOZZ		09647	120-02456-17	..MARKER.....	2
46	XDOZZ		09647	120-02456-16	..MARKER.....	2
47	XDOZZ		09647	120-02456-15	..MARKER.....	2
48	XDOZZ		09647	120-02456-14	..MARKER.....	2
49	XDOZZ		09647	120-02456-13	..MARKER.....	2
50	XDOZZ		09647	120-02456-55	..MARKER.....	2
51	PBOZZ	4730010570545	97403	13229E1059-4	..ELBOW,PIPE TO TUBE.....	1
52	PBOZZ	4730013504062	97403	13229E0688-5	..BUSHING,PIPE.....	2
53	PBOZZ	4730011169214	61424	N4MC4	..ADAPTER,STRAIGHT,PI.....	1
54	PBOZZ		97403	13229E1059-6	..ELBOW,PIPE TO TUBE.....ETN	7
54	PBOZZ	4730005863847	97403	13229E1J059-6	..ELBOW,PIPE TO TUBE.....FKD	6
55	PBOZZ	4820013493819	97403	13229E1058	..VALVE,BALL.....	9
56	PAOZZ	4730001932709	96906	MS51846-24	..NIPPLE,PIPE.....	6
57	PBOZZ	4730001961974	96906	MS51846-30	..NIPPLE,PIPE.....	3
58	PBOZZ	4730013501787	97403	13229E0688-3	..BUSHING,PIPE.....	2
59	XDOZZ		09647	120-02456-19	..MARKER.....ETN	2
60	XDOZZ		09647	120-02456-7	..MARKER.....	2
61	XDOZZ		09647	120-02456-6	..MARKER.....	2
62	XDOZZ		09647	120-02456-5	..MARXER.....	2
63	PBOZZ	4730011605762	97403	13229E0689	..ELBOW,PIPE TO TUBE.....ETN	2
64	PBOZZ	4730007932810	97403	13229E1059-5	..ELBOW,PIPE TO TUBE.....	1
65	PBOZZ	4730013486244	97403	13229E1286	..ADAPTER,STRAIGHT.....	1
66	PAOZZ	4730001961985	96906	MS51846-50	..NIPPLE,PIPE.....	2
67	PBOZZ	4730007932806	97403	13229E1059-2	..ELBOW,PIPE TO TUBE.....	2
68	PBOZZ	4820013509016	97403	13229E1058-2	..VALVE BALL.....	3
69	PBOZZ	4730001961981	96906	MS51846-45	..NIPPLE,PIPE.....	2
70	PBOZZ	4730007932809	97403	13229E1059-3	..ELBOW,PIPE TO TUBE.....	1
71	PBOZZ	4730013493781	97403	13229E0375-62	..ELBOW,PIPE 90 DEGREE, 1/4 INCH NPS.....	1
72	XDOZZ		09647	120-02456-8	..MARKER.....	2
73	PBOZA	4730005280223	97403	13229E0683-8	..ELBOW,PIPE TO TUBE.....	2
74	PBOZZ	4820013487871	97403	13229E0418-1	..VALVE,CHECK.....	1

(1) ITEM NO	(2) SMR CODE	(3) NSN	(4) CAGEC	(5) PART NUMBER	(6) DESCRIPTION AND USABLE ON CODES(UOC)	(7) QTY
75	PBOZZ	4730007294930	98441	1-2X1-8PTRS	..BUSHING,PIPE 1/2 INCH MPT X 1/4 INCH FPT.....	2
76	PBOZZ	4730013497958	97403	13229E0776-1	..RESTRICTOR,FLUID FL.....	1
77	XDOZZ		09647	120-02456-9	..MARKER.....	2
78	PBOZZ	4730007932665	97403	13229E0683-11	..ELBOW,PIPE TO TUBE.....	1
79	PBOZZ	4730013486232	97403	13229E0772-6	..ELBOW,PIPE TO TUBE.....	1
80	PBOZZ	4730013487754	97403	13229E0776-2	..RESTRICTOR,FLOW.....	1
81	PBOZZ	4730012899537	97403	13229E0689-3	..ELBOW,PIPE TO TUBE.....	1
82	PBOZZ	4730011054065	81343	4-4-4 140424S	..TEE,PIPE.....	1
83	PAOZZ	4730009351528	81343	6-4 140140S	..BUSHING,PIPE 3/8 INCH MPT X 1/4 INCH FPT.....	1
84	XDOZZ		09647	120-02456-74	..MARKER.....	2
85	PBOZZ	4730010768903	97403	13229E0689-1	..ELBOW,MALE.....	1
86	PBOZZ	4730007932708	02570	SS-1210-8-8	..ELBOW,PIPE TO TUBE.....	1
87	PBOZZ	4730014472084	94833	5001K1843-2	..PLUG,PIPE SCH 80, PVC 1/4 FKD INCH NOM. PIPE SIZE.....	1

END OF FIGURE

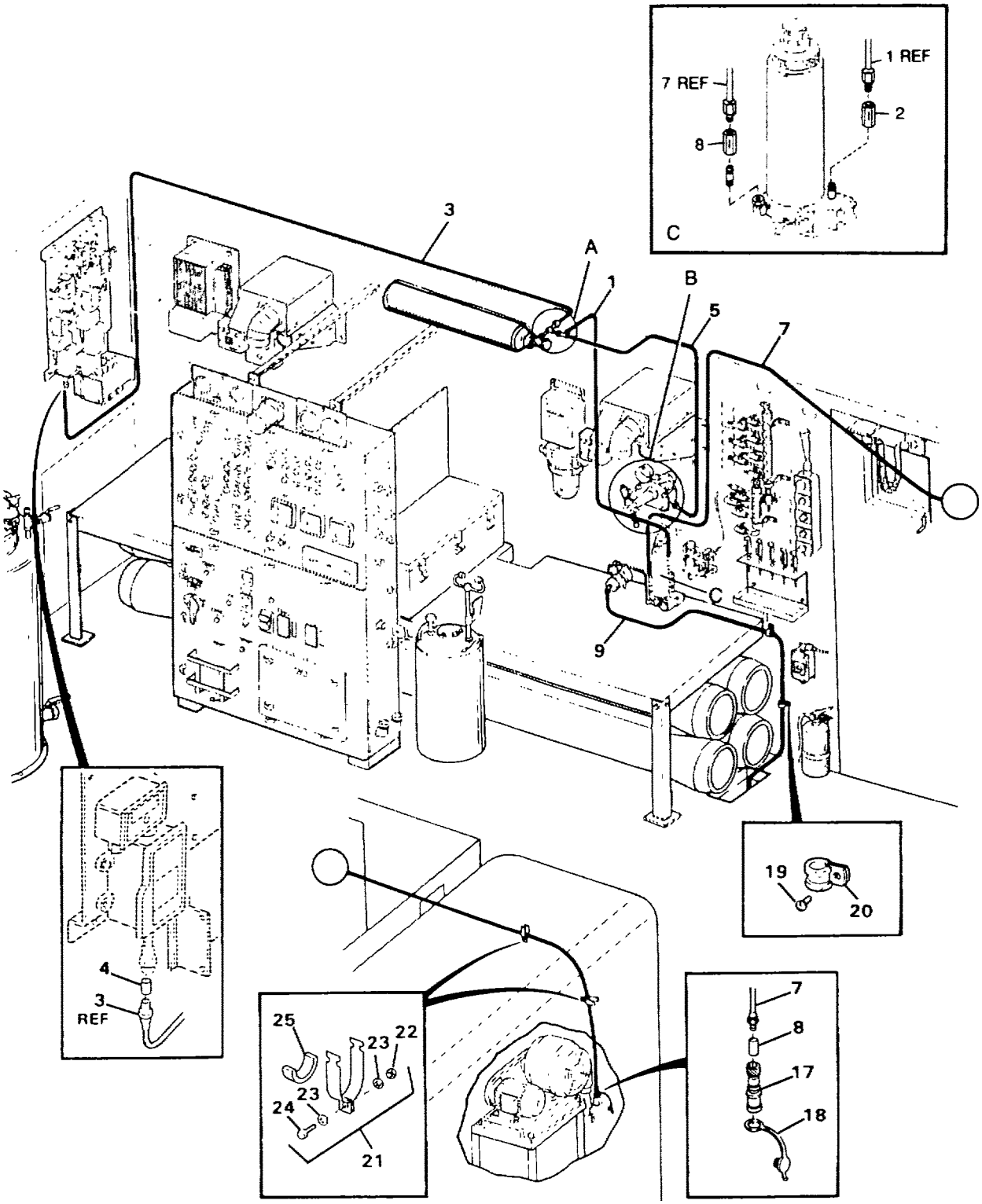

FIGURE 11. HIGH PRESSURE AIR TUBING (SHEET 1 OF 2)

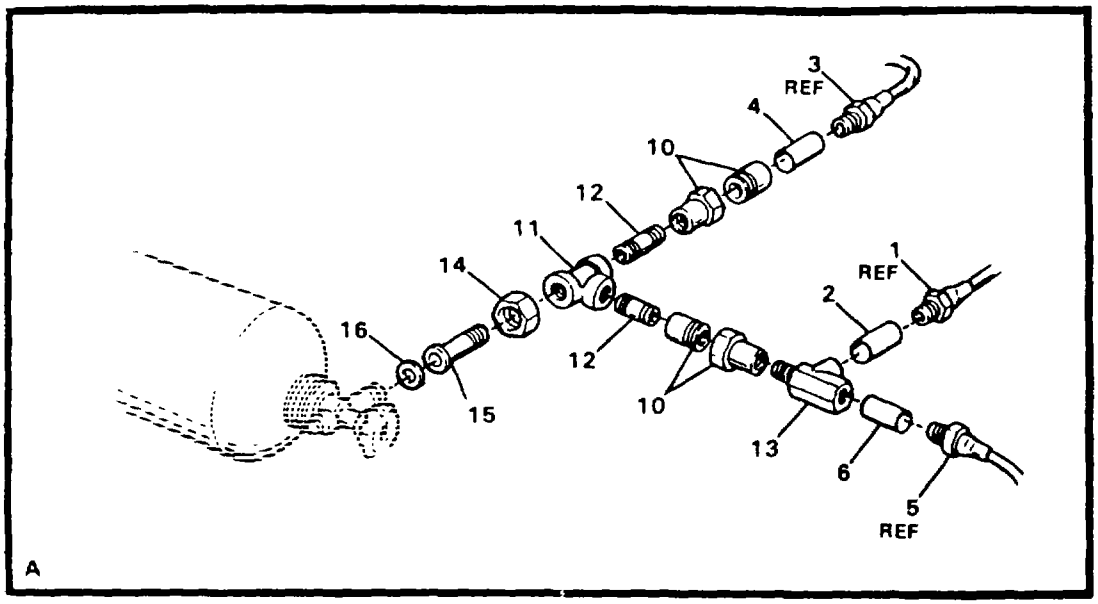

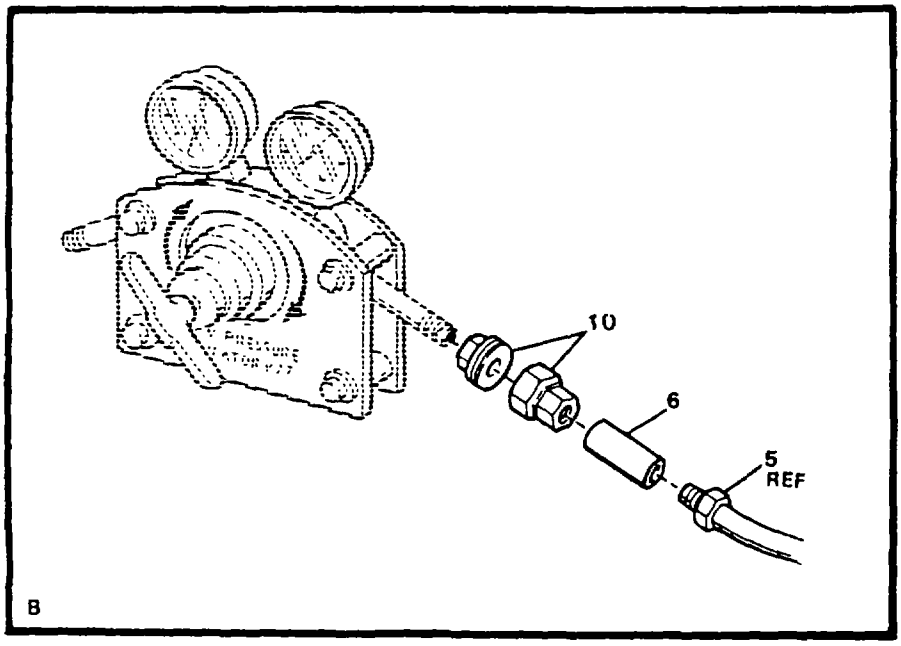

FIGURE 11. HIGH PRESSURE AIR TUBING (SHEET 2 OF 2)

(1) ITEM NO	(2) SMR CODE	(3) NSN	(4) CAGEC	(5) PART NUMBER	(6) DESCRIPTION AND USABLE ON CODES(UOC)	(7) QTY
					GROUP 02 WATER PURIFICATION SYSTEM	
					FIG. 11 HIGH PRESSURE AIR TUBING	
1	PBFZZ	4720013493898	97403	13229E0759-1	..HOSE ASSEMBLY,NONME.....	1
2	XDFZZ		09647	120-02456-1	..MARKER.....	2
3	PBFZZ	4720013493899	97403	13229E0759-2	..HOSE ASSEMBLY,NONME.....	1
4	XDFZZ		09647	120-02456-2	..MARKER.....	2
5	PBFZZ	4720013493900	97403	13229E0759-3	..HOSE ASSEMBLY,NONME.....	1
6	XDFZZ		09647	120-02456-3	..MARKER.....	2
7	PBFZZ	4720013493901	97403	13229E0759-4	..HOSE ASSEMBLY,NONME.....	1
8	PAFZZ	5340013072679	09647	120-02456-70	..MARKER.....	2
9	XDFZZ		09647	120-51258	..TUBING,BENT.....	1
10	PBFZZ	4730013509033	97403	13229E0189	..UNION,PIPE.....	2
11	PBFZZ	4730012444673	81343	4-4-4 140438S	..TEE,PIPE.....	1
12	PBFZZ	4730013486246	97403	13229E1255-2	..NIPPLE,PIPE.....	2
13	PBFZZ	4730011054065	81343	4-4-4 140424S	..TEE,PIPE.....	1
14	PBFZZ	5310013496175	97403	13220E0844	..NUT,PLAIN,HEXAGON.....	1
15	PBFZZ	4730013486247	16166	SS-CO-3S	..RESTRICTOR UNIT.....	1
16	PAFZZ	5310013496177	16166	CO-1TW	..WASHER,SHOULDERED.....	1
17	PAFZZ	4730013497814	97403	13229E1146-1	..COUPLING HALF,QUICK.....	1
18	PAFZZ		97111	H2-65M	..PLUG,PROTECTIVE,DUS.....	1
19	PAFZZ	5305013490816	97403	13229E0375-177	..SCREW,TAPPING,THREA 0.164 INCH -32 UNC 2A X 0.5 INCH LONG.....	2
20	PBFZZ	5340011429988	96906	MS21919WCF6	..CLAMP,LOOP.....	1
21	PAFZZ	5340008747964	97403	13229E0685-9	..BRACKET,PIPE.....	2
22	PAFZZ	5310009291807	96906	MS51922-2	..NUT,SELF-LOCKING,HE.....	2
23	PAFZZ	5310010911248	96906	MS15795-810	..WASHER,FLAT.....	4
24	PAFZZ	5305002078253	96906	MS35307-308	..SCREW,CAP,HEXAGON H.....	2
25	MFFZZ		09647	120-52328-1	..CUSHION MAKE FROM BULK, P/N P-2600.....	2
	PAFZZ	5975007275153	96906	MS3367-4-9	..STRAP,TIEDOWN,ELECT.....	V
	PAFZZ	5975001113208	96906	MS3367-5-9	..STRAP,TIEDOWN,ELECT.....	V

END OF FIGURE

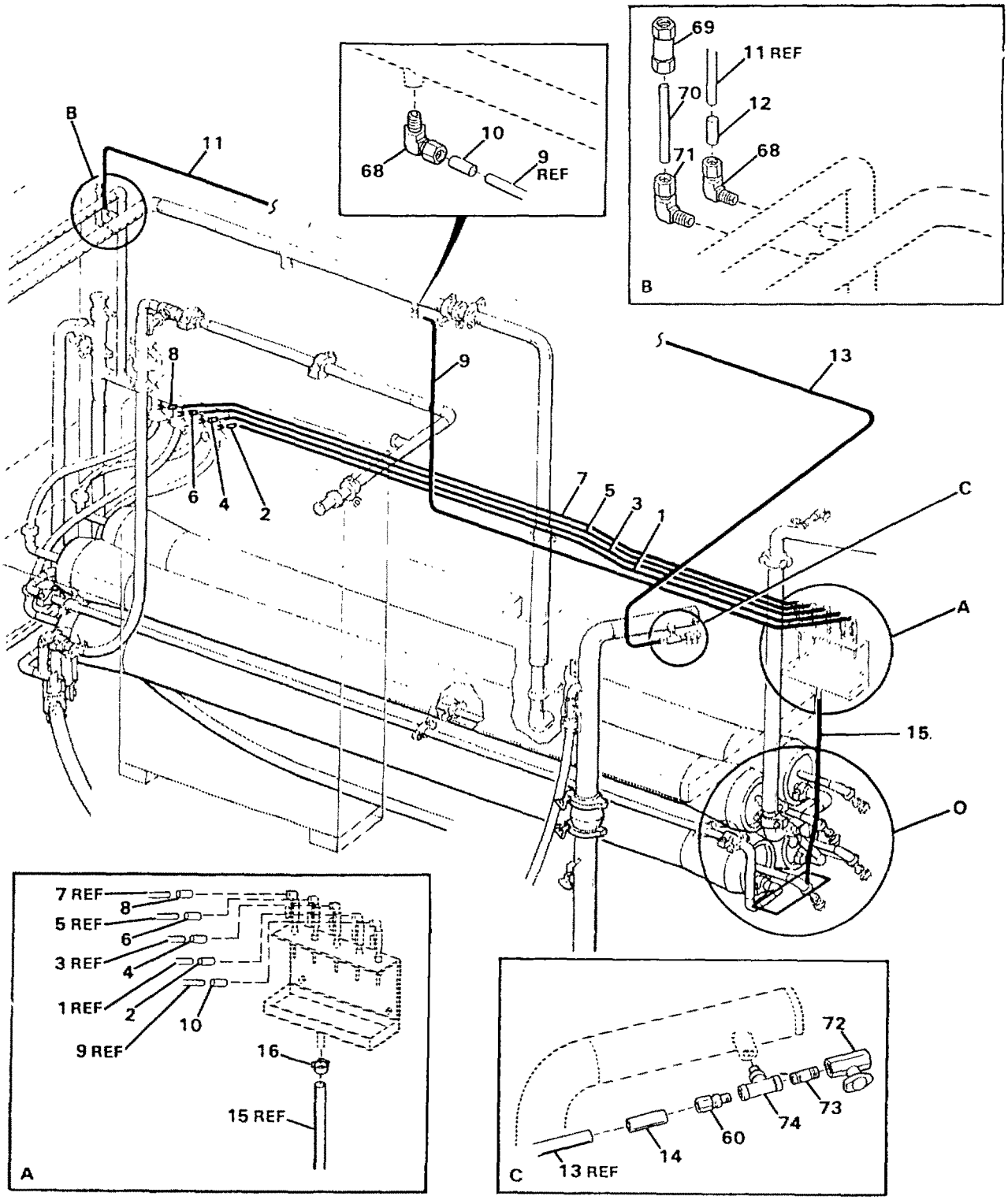

FIGURE 12. LOW PRESSURE WATER TUBING (SHEET 1 OF 8)

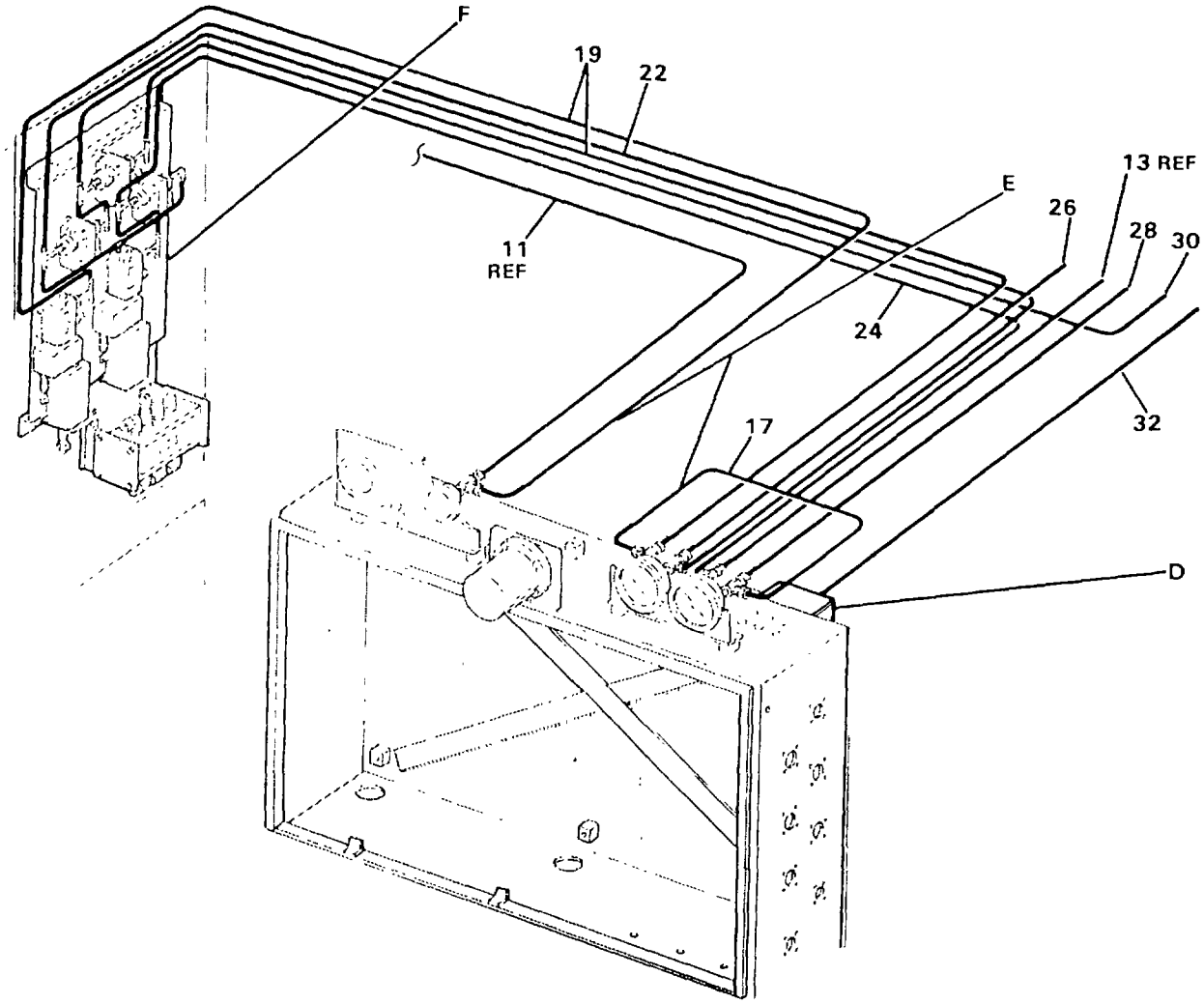

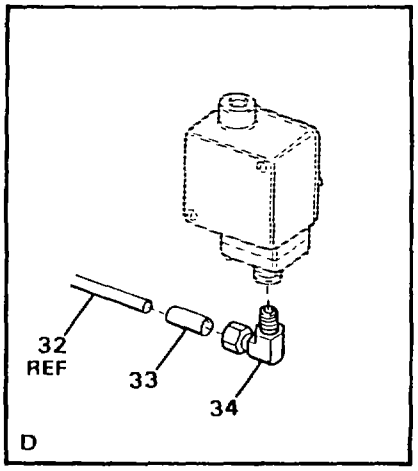

FIGURE 12. LOW PRESSURE WATER TUBING (SHEET 2 OF 8)

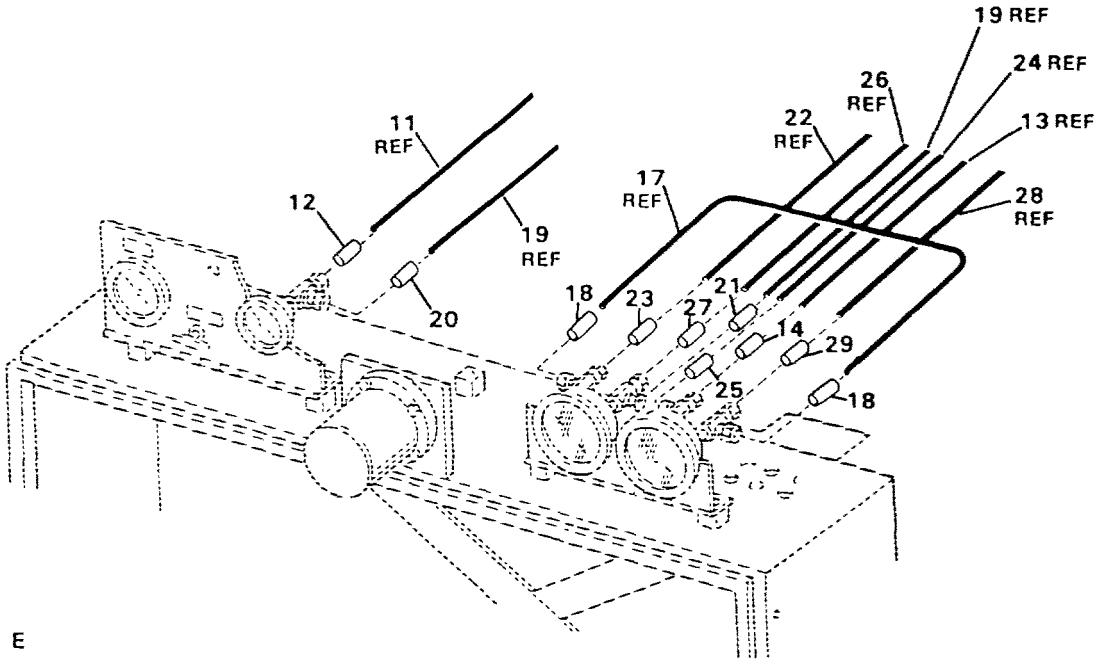

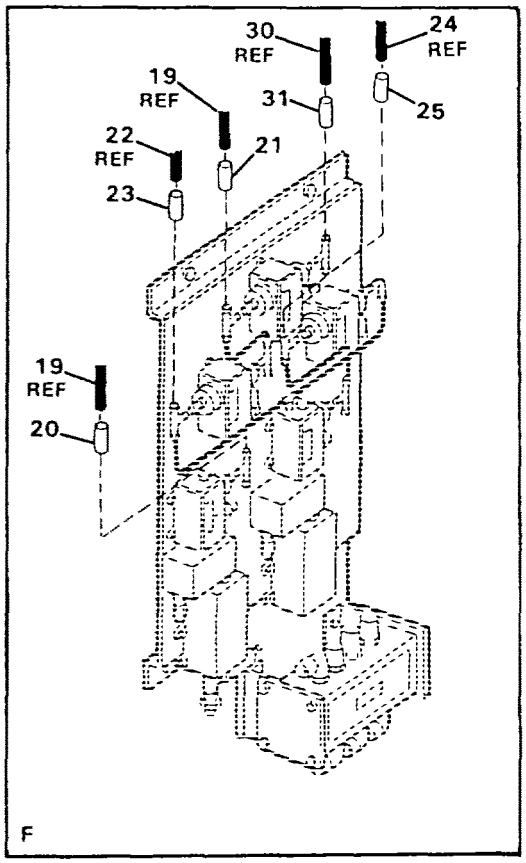

FIGURE 12. LOW PRESSURE WATER TUBING (SHEET 3 OF 8)

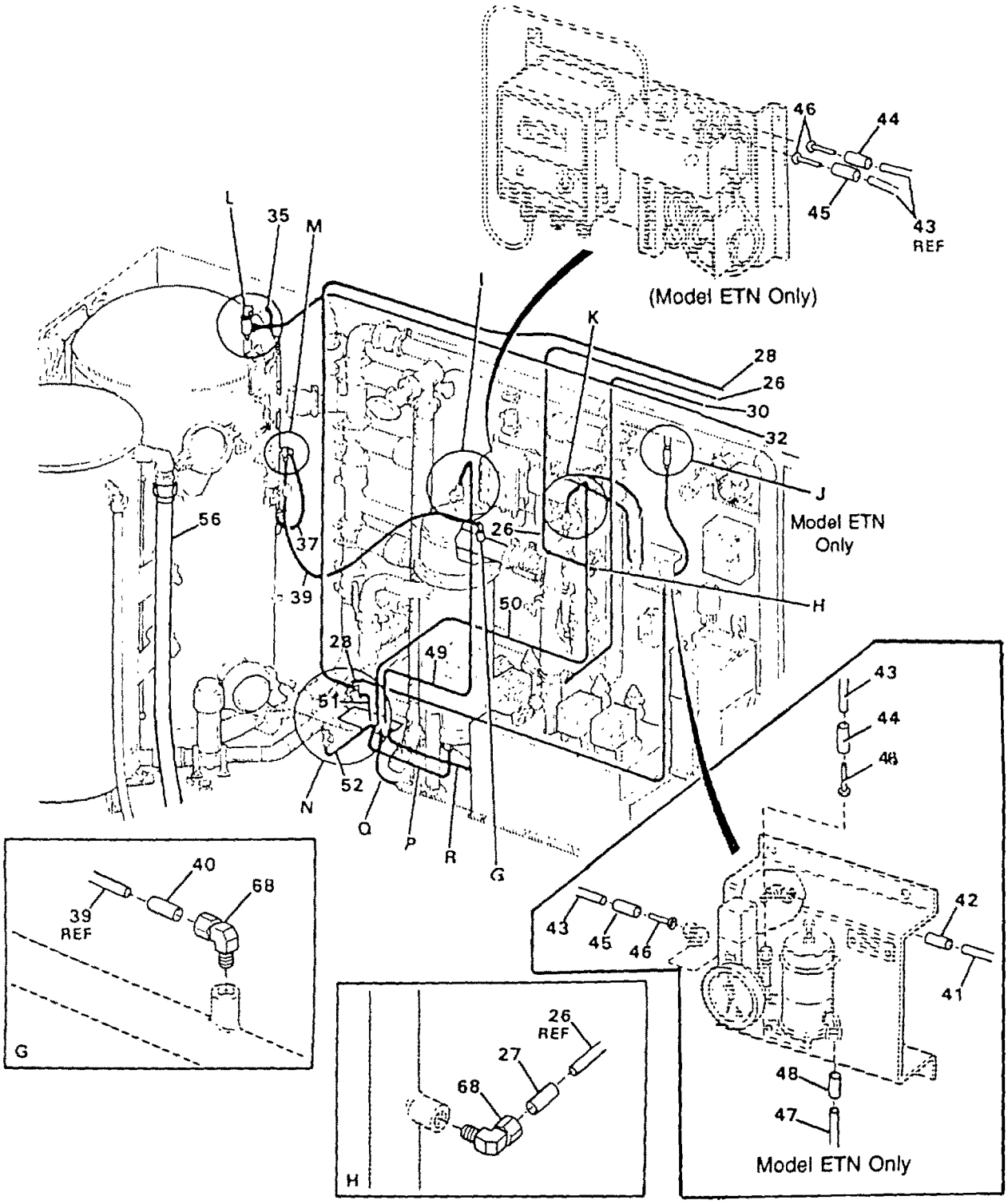

FIGURE 12. LOW PRESSURE WATER TUBING (SHEET 4 OF 8)

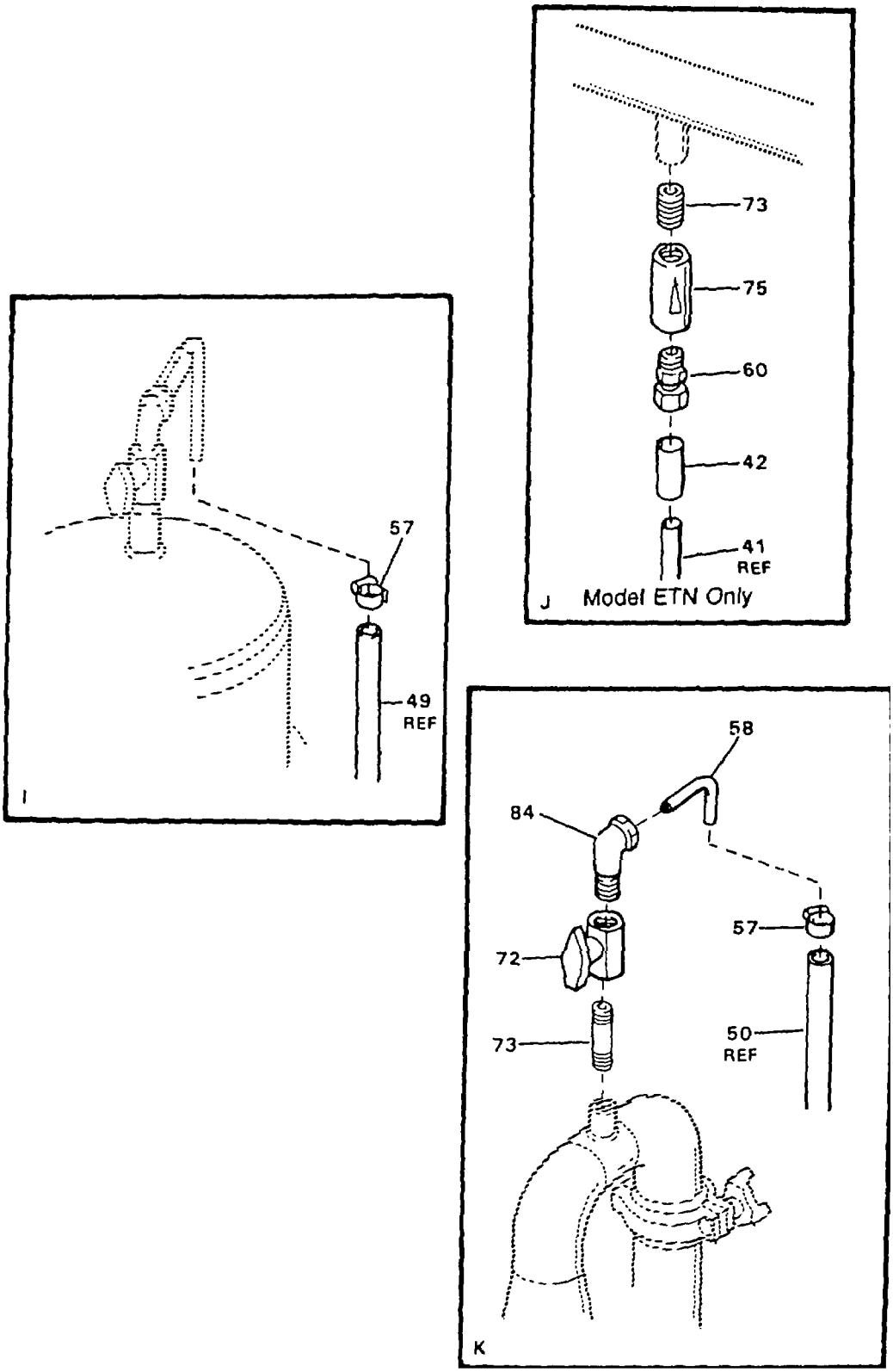

FIGURE 12. LOW PRESSURE WATER TUBING (SHEET 5 OF 8)

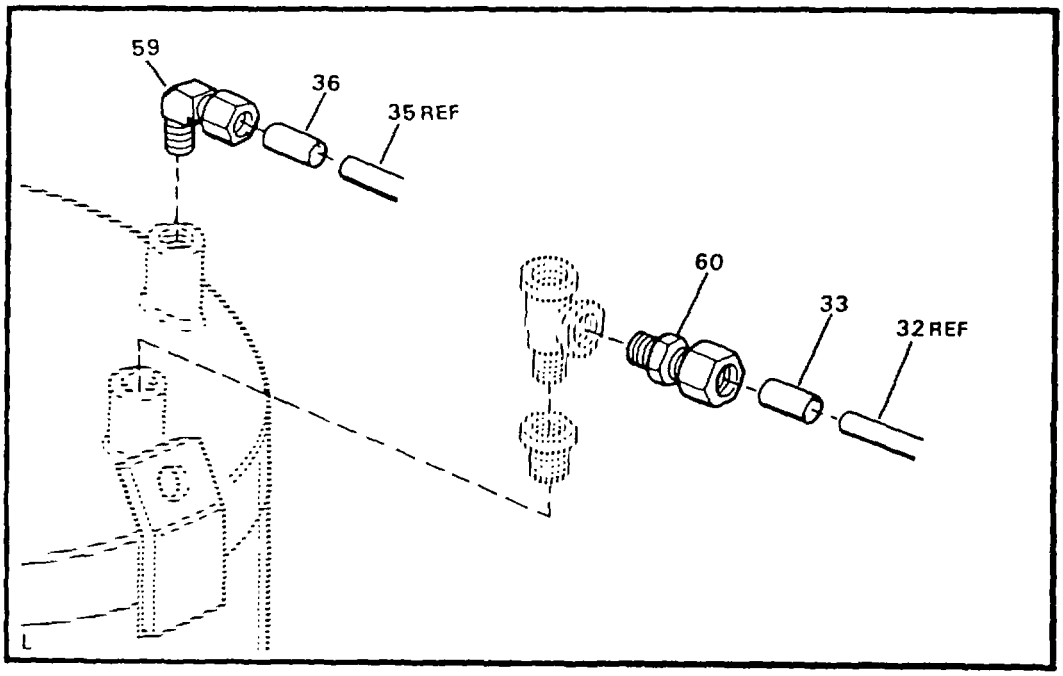

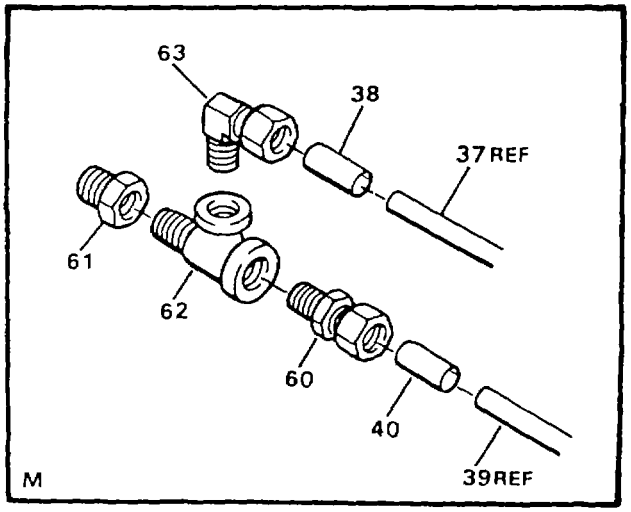

FIGURE 12. LOW PRESSURE WATER TUBING (SHEET 6 OF 8)

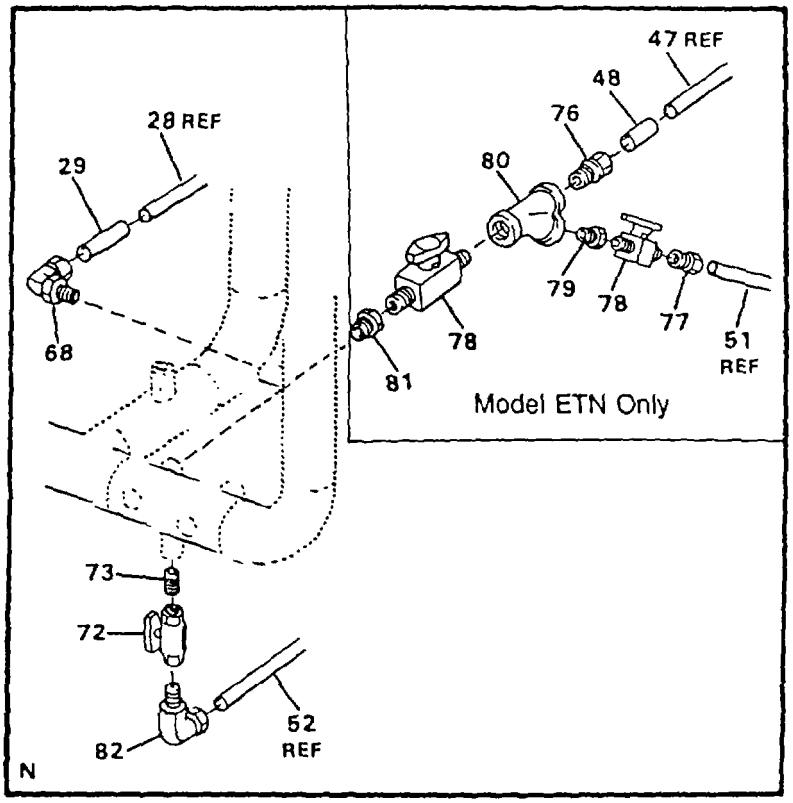

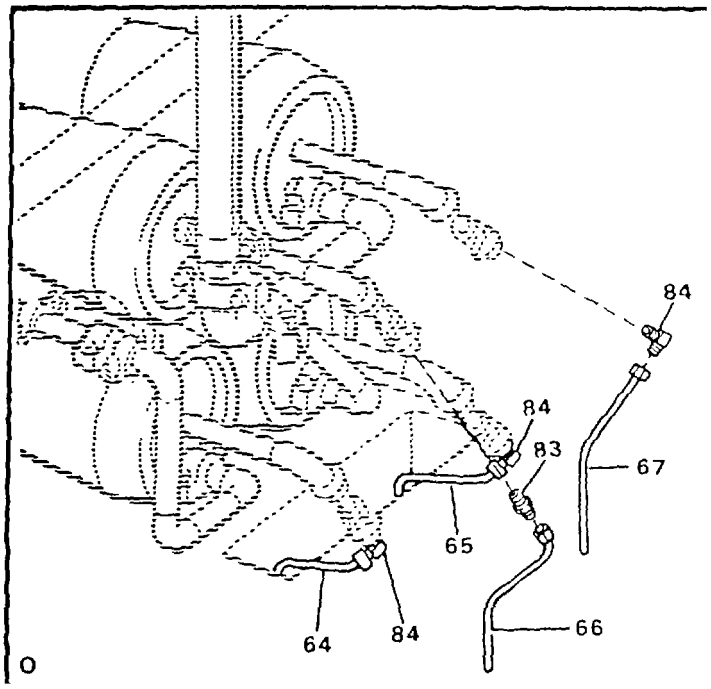

FIGURE 12. LOW PRESSURE WATER TUBING (SHEET 7 OF 8)

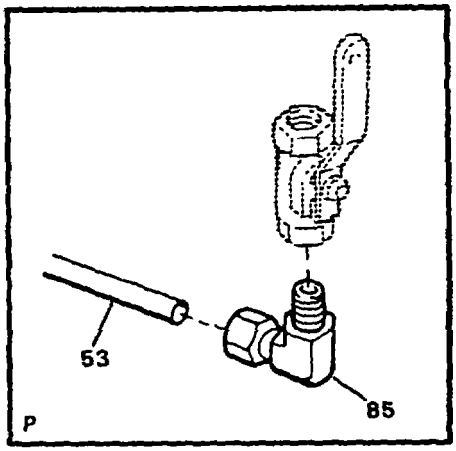

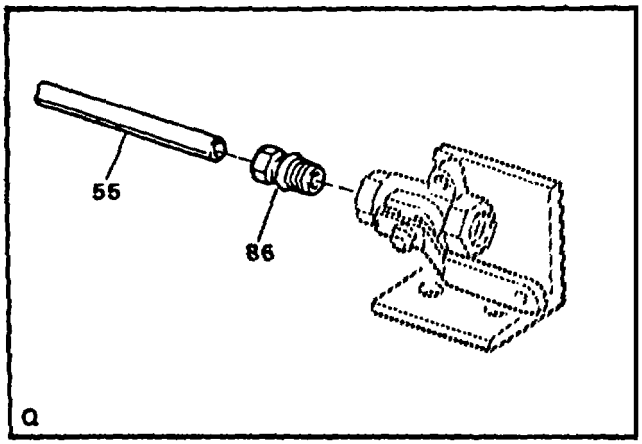

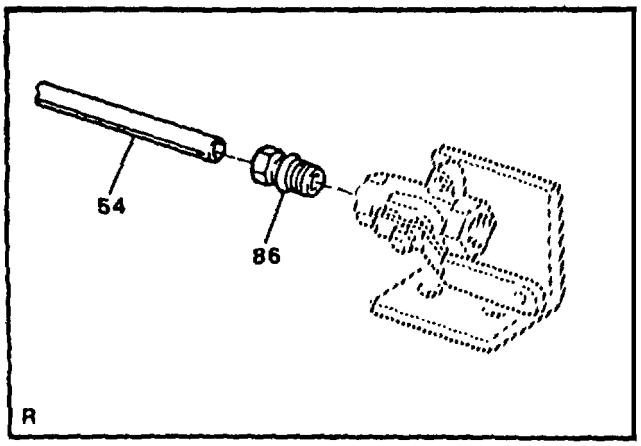

FIGURE 12. LOW PRESSURE WATER TUBING (SHEET 8 OF 8)

(1) ITEM NO	(2) SMR CODE	(3) NSN	(4) CAGEC	(5) PART NUMBER	(6) DESCRIPTION AND USABLE ON CODES(UOC)	(7) QTY
					GROUP 02 WATER PURIFICATION SYSTEM FIG. 12 LOW PRESSURE WATER TUBING	
1	MOOZZ		09647	120-02599-18	..TUBING CUT TO LENGTH FROM BULK, P/N 77C714976P006	1
2	XDOZZ		09647	120-02456-68	..MARKER.....	2
3	MOOZZ		09647	120-02599-19	..TUBING CUT TO LENGTH FROM BULK, P/N 77C714976P006	1
4	XDOZZ		09647	120-02456-67	..MARKER.....	2
5	MOOZZ		09647	120-02599-20	..TUBING CUT TO LENGTH FROM BULK, P/N 77C714976P006	1
6	XDOZZ		09647	120-02456-66	..MARKER.....	2
7	MOOZZ		09647	120-02599-21	..TUBING CUT TO LENGTH FROM BULK, P/N 77C714976P006	1
8	XDOZZ		09647	120-02456-65	..MARKER.....	2
9	MOOZZ		09647	120-02599-10	..TUBING CUT TO LENGTH FROM BULK, P/N 77C714976P006	1
10	XDOZZ		09647	120-02456-69	..MARKER.....	2
11	MOOZZ		09647	120-02599-9	..TUBING CUT TO LENGTH FROM BULK, P/N 77C714976P006	1
12	XDOZZ		09647	120-02456-51	..MARKER.....	2
13	MOOZZ		09647	120-02599-24	..TUBING CUT TO LENGTH FROM BULK, P/N 77C714976P006	1
14	XDOZZ		09647	120-02456-49	..MARKER.....	2
15	MOOZZ		09647	120-02599-58	..HOSE CUT TO LENGTH FROM BULK, P/N 028870.....	1
16	PAOZZ	5120002782423	97403	13229E0511-4	..CLAMP,HOSE TYPE F,SIZE 1-3/4 INCHES.....	1
17	MOOZZ		09647	120-02599-2	..TUBING CUT TO LENGTH FROM BULK, P/N 77C714976P006	1
18	XDOZZ		09647	120-02456-43	..MARKER.....	2
19	MOOZZ		09647	120-02599-13	..TUBING CUT TO LENGTH FROM BULK, P/N 77C714976P006	2
20	XDOZZ		09647	120-02456-52	..MARKER.....	2
21	XDOZZ		09647	120-02456-47	..MARKER.....	2
22	MOOZZ		09647	120-02599-14	..TUBING CUT TO LENGTH FROM BULK, P/N 77C714976P006	1
23	XDOZZ		09647	120-02456-44	..MARKER.....	2
24	MOOZZ		09647	120-02599-12	..TUBING CUT TO LENGTH FROM BULK, P/N 77C714976P006	1
25	XDOZZ		09647	120-02456-48	..MARKER.....	2
26	MOOZZ		09647	120-02599-26	..TUBING CUT TO LENGTH FROM BULK, P/N 77C714976P006	1
27	XDOZZ		09647	120-02456-45	..MARKER.....	2
28	MOOZZ		09647	120-02599-28	..TUBING CUT TO LENGTH FROM BULK, P/N 77C714976P006	1
29	XDOZZ		09647	120-02456-50	..MARKER.....	2
30	MOOZZ		09647	120-02599-29	..TUBING CUT TO LENGTH FROM BULK, P/N 77C714976P006	1
31	XDOZZ		09647	120-02456-46	..MARKER.....	1
32	MOOZZ		09647	120-02599-27	..TUBING CUT TO LENGTH FROM BULK, P/N 77C714976P006.....	1

(1) ITEM NO	(2) SMR CODE	(3) NSN	(4) CAGEC	(5) PART NUMBER	(6) DESCRIPTION AND USABLE ON CODES(UOC)	(7) QTY
33	XDOZZ		09647	120-02456-12	..MARKER.....	2
34	PAOZZ	4730010768903	97403	13229E0689-1	..ELBOW,MALE.....	1
35	MOOZZ		09647	120-02599-32	..TUBING CUT TO LENGTH FROM BULK, P/N 13229E0691-2.....	1
36	XDOZZ		09647	120-02456-64	..MARKER.....	1
37	MOOZZ		09647	120-02599-36	..TUBING CUT TO LENGTH FROM BULK P/N 13229E0691-2.....	1
38	XDOZZ		09647	120-02456-60	..MARKER.....	2
39	MOOZZ		09647	120-02599-4	..TUBING CUT TO LENGTH FROM BULK, P/N 77C714976P006.....	1
40	XDOZZ		09647	120-02456-53	..MARKER.....	2
41	MOOZZ		09647	120-02599-40	..TUBING CUT TO LENGTH FROM ETN BULK, P/N 13229E0691-2.....	1
42	XDOZZ		09647	120-02456-61	..ARER.....ETN	2
43	MOOZZ		09647	120-02599-1	..TUBING CUT TP LENGTH FROM ETN BULK, P/N PV53-1.....	2
44	XDOZZ		09647	120-02456-62	..ARKER.....ETN	2
45	XDOZZ		09647	120-02456-42	..ARKER.....ETN	2
46	PBOZZ	4730013514083	97403	13229E0055-1	..INSERT,TUBE FITTING.....ETN	4
47	MOOZZ		09647	120-02599-47	..TUBING CUT TO LENGTH FROM ETN BULK, P/N 13229E0691-2.....	1
48	XDOZZ		09647	120-02456-41	..MARKER.....ETN	2
49	MOOZZ		09647	120-02599-59	..HOSE CUT TO LENGTH FROM BULK, P/N 028810.....	1
50	MOOZZ		09647	120-02599-60	..HOSE CUT TO LENGTH FROM BULK, P/N 028981.....	1
51	MOOZZ		09647	120-02599-35	..TUBING CUT TO LENGTHG FROM BULK, P/N 13229E0691-2.....	1
52	PBOZZ	4710013495150	09647	120-50089-2	..TUBE,BENT,METALLIC.....	1
53	PBOZZ	4710013495151	09647	120-50089-1	..TUBE,BENT,METALLIC.....	1
54	PBOZZ	4710013495152	09647	120-51150	..TUBE,BENT,METALLIC.....	1
55	PBOZZ	4710013495153	09647	120-51149	..TUBE,BENT,METALLIC.....	1
56	PAOZZ	4720013491945	97403	13229E0048	..HOSE ASSEMBLY,NONME.....	1
57	PAOZZ	4730012948140	24161	32201	..CLAMP,HOSE TYPE P, SIZE 4.....	2
58	PAOZZ	4710013495155	09647	120-50495-6	..TUBE,BENT,METALLIC.....	1
59	PAOZZ	4730006290530	97403	13229E0683-7	..ELBOW,PIPE TO TUBE.....	1
60	PAOZZ	4730011169214	61424	N4MC4	..ADAPTER,STRAIGHT,PI.....ETN	2
60	PAOZZ	4730011169214	61424	N4MC4	..ADAPTER,STRAIGHT,PI.....FKD	1
61	PAOZZ	4730009351528	81343	6-4 140140S	..BUSHING,PIPE 3/8 INCH MPT X 1/4 INCH.....	1
62	PAOZZ	4730011054065	81343	4-4-4 140424S	..TEE,PIPE.....	1
63	PAOZZ	4730012899537	97403	13229E0689-3	..ELBOW,PIPE TO TUBE.....	1
64	PBOZZ	4710013495156	09647	120-50495-2	..TUBE,BENT,METALLIC.....	1
65	PBOZZ	4710013495157	09647	120-50495-3	..TUBE,BENT,METALLIC.....	1
66	PBOZZ	4710013495154	09647	120-50497	..TUBE,BENT,METALLIC.....	1
67	PBOZZ	4710013495158	09647	120-50495-5	..TUBE,BENT,METALLIC.....	1
68	PAOZZ	4730011605762	97403	13229E0689-2	..ELBOW,PIPE TO TUBE.....	5
69	PAOZZ	4820013493813	97403	13229E0699	..VALVE,CHECK.....	1
70	MOOZZ		97403	13229E0086-203	..TUBE CUT TO LENGTH FROM BULK, P/N ASTMA269.....	1

(1) ITEM NO	(2) SMR CODE	(3) NSN	(4) CAGEC	(5) PART NUMBER	(6) DESCRIPTION AND USABLE ON CODES(UOC)	(7) QTY
71	PAOZZ	4730007932665	97403	13229E0683-11	..ELBOW,PIPE TO TUBE.....	1
72	PAOZZ	4820013493816	97403	13229E0678	..VALVE,PLUG.....	2
73	PAOZZ	4730013486246	97403	13229E1255-2	..NIPPLE,PIPE.....ETN	4
73	PAOZZ	4730013486246	97403	13229E1255-2	..NIPPLE,PIPE.....FKD	3
74	PAOZZ	4730011172791	81343	4-4-4 140425S	..TEE,PIPE.....	1
75	PAOZZ	4820012517616	97403	13229E0226	..VALVE,CHECK.....ETN	1
76	PAOZZ	4730013503745	97403	13229E0684-3	..ADAPTER,STRAIGHT,TU.....ETN	1
77	PAOZZ	4730013499893	97403	13229E1120	..ADAPTER,STRAIGHT,PI.....ETN	1
78	PAOZZ	4820011210846	97403	13229E0073	..VALVE,BLEEDER,HYDRA.....ETN	2
79	PAOZZ	4730009351528	81343	6-4 140140S	..BUSHING,PIPE 3/8 INCH MPT X ETN 1/4 INCH.....	1
80	PAOZZ	4730012211471	97403	13229E0550	..STRAINER ELEMENT,SE.....ETN	1
81	PAOZZ	4730008939547	96906	MS14304-7T0804	..BUSHING,PIPE 0.5 INCH MPT X ETN 0.25 INCH FPT, CLS 150, 316 SS.....	1
82	PAOZZ	4730007932660	97403	13229E0683-6	..ELBOW,PIPE TO TUBE.....	1
83	PAOZZ	4730001759387	97403	13229E0682-2	..ADAPTER,STRAIGHT,PI.....	1
84	PAOZZ	4730004906257	81343	4-4 090202SA	..ELBOW,PIPE TO TUBE.....	3
85	PAOZA	4730005280223	97403	13229E0683-8	..ELBOW,PIPE TO TUBE.....	1
86	PAOZZ	4730006915460	97403	13229E0682-7	..ADAPTER,STRAIGHT,PI.....	2

END OF FIGURE

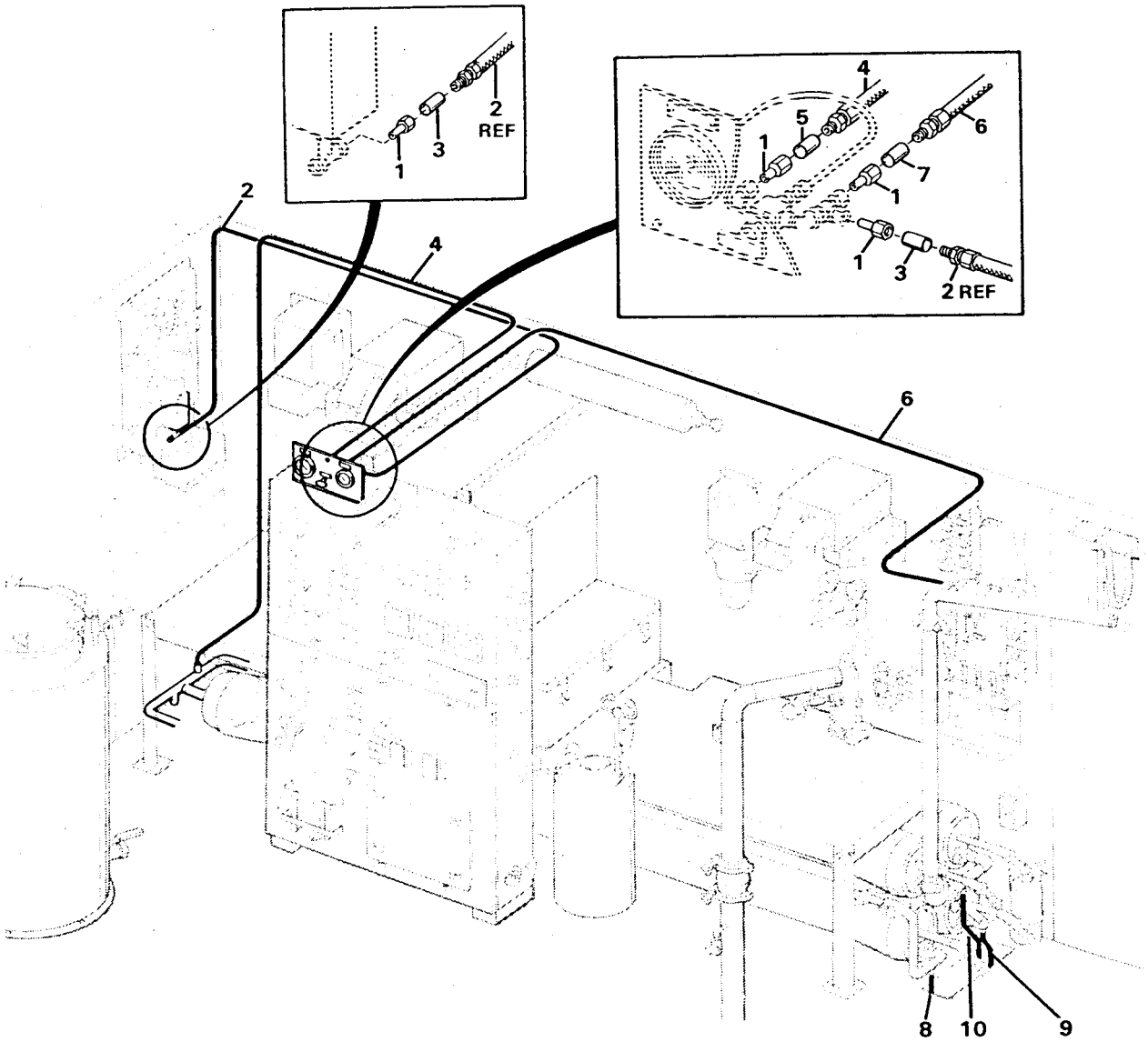

FIGURE 13. HIGH PRESSURE PIPING, HOSES AND TUBING (SHEET 1 OF 4)

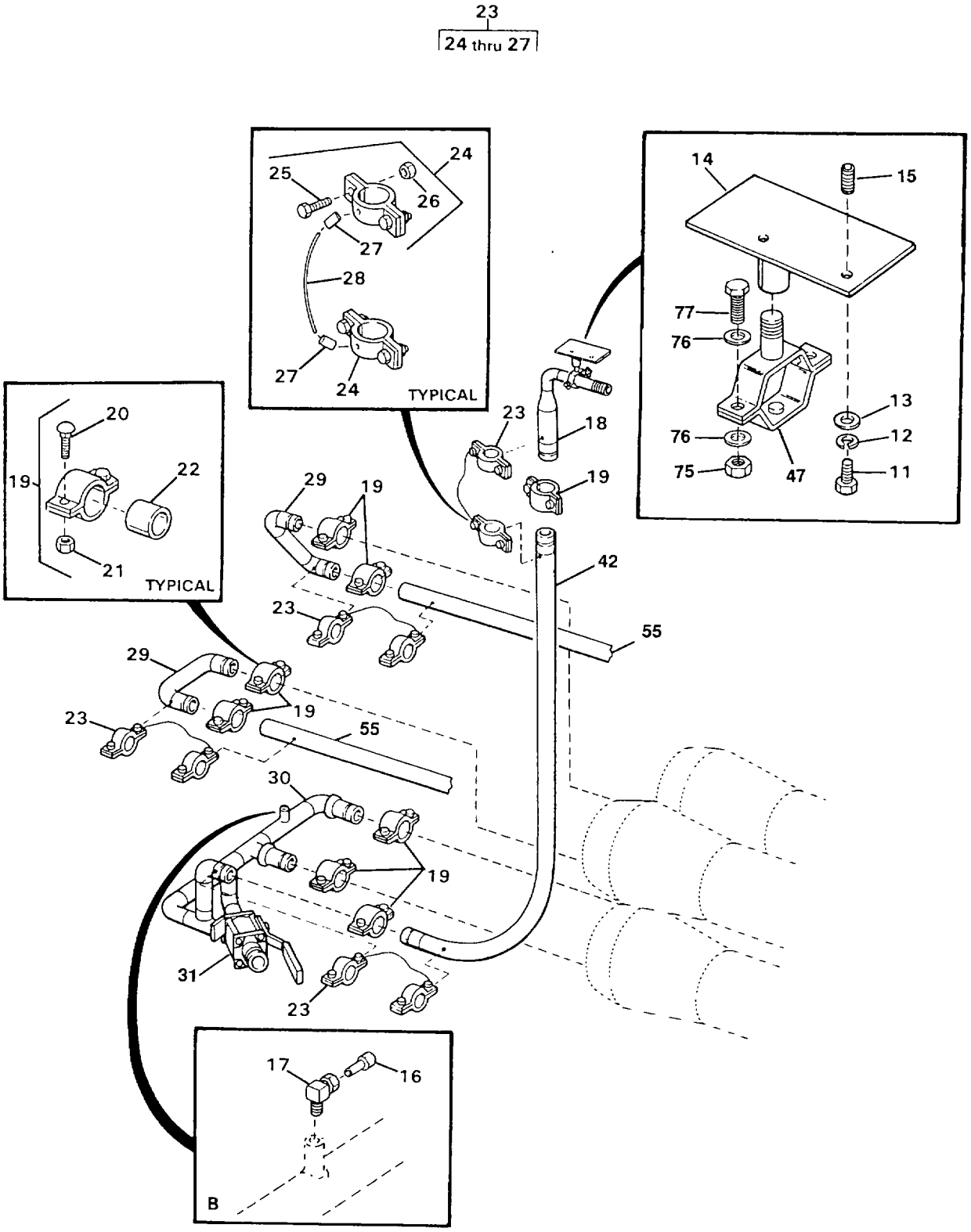

FIGURE 13. HIGH PRESSURE PIPING, HOSES AND TUBING (SHEET 2 OF 4)

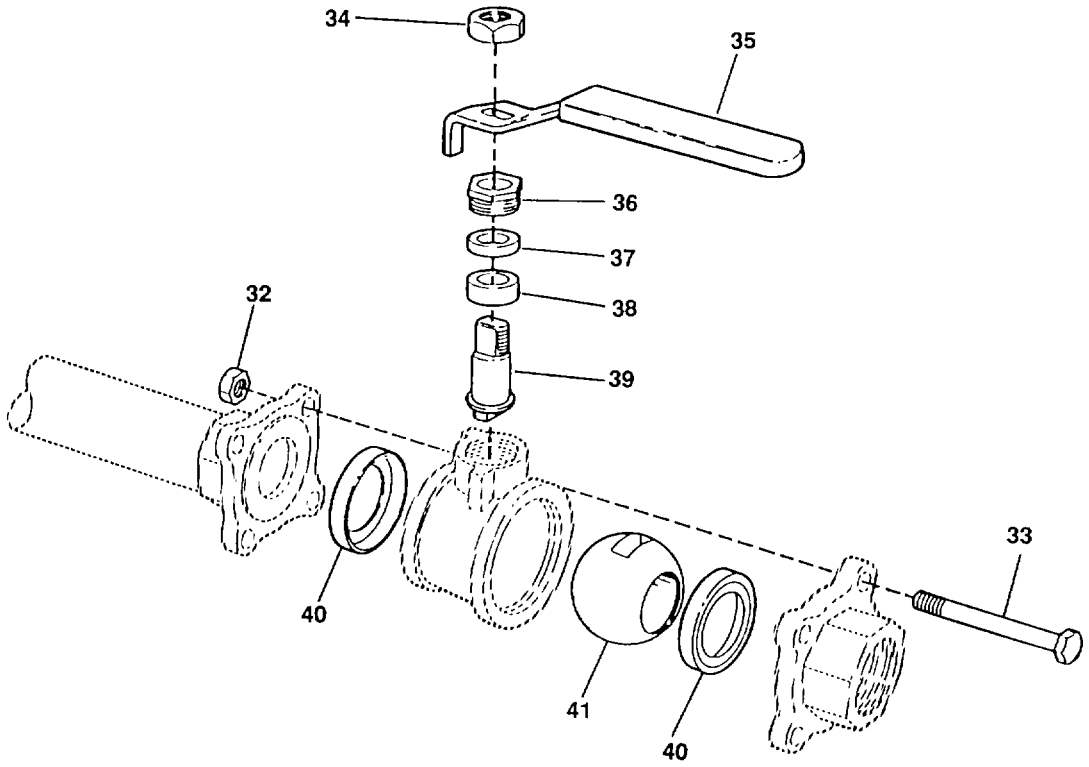

FIGURE 13. HIGH PRESSURE PIPING, HOSES AND TUBING (SHEET 3 OF 4)

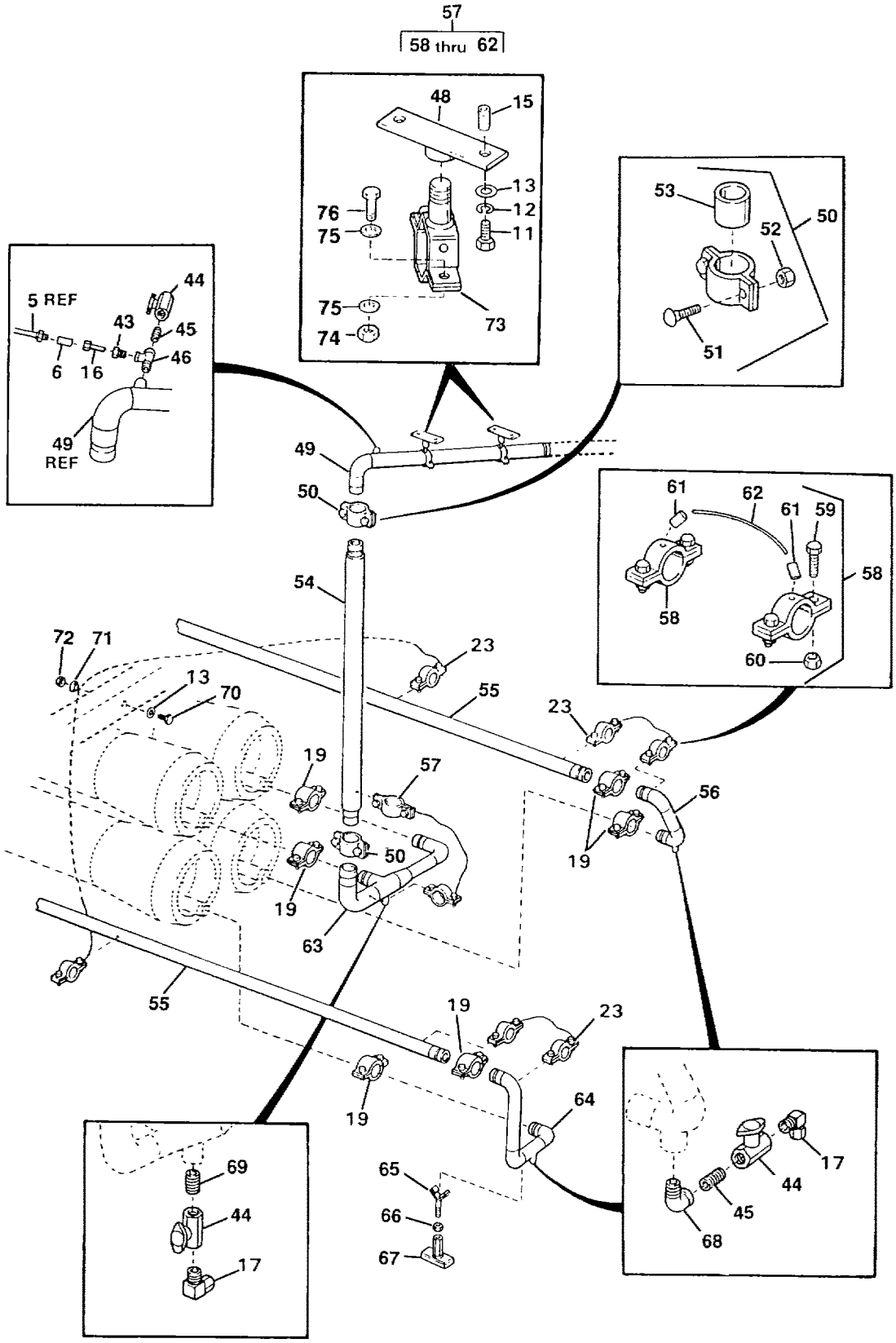

FIGURE 13. HIGH PRESSURE PIPING, HOSES AND TUBING (SHEET 4 OF 4)

(1) ITEM NO	(2) SMR CODE	(3) NSN	(4) CAGEC	(5) PART NUMBER	(6) DESCRIPTION AND USABLE ON CODES(UOC)	(7) QTY
					GROUP 02 WATER PURIFICATION SYSTEM FIG. 13 HIGH PRESSURE PIPING, HOSES AND TUBING	
1	PAFZZ	4730009757569	54938	4-4 T2HG-SS	..ADAPTER,STRAIGHT,PI.....	4
2	PAFZZ	4720013497312	97403	13229E0703-3	..HOSE ASSEMBLY,NONME.....	1
3	XDFZZ		09647	120-02456-38	..MARKER.....	2
4	PAFZZ	4720013497313	97403	13229E0703-2	..HOSE ASSEMBLY,NONME.....	1
5	XDFZZ		09647	120-02456-39	..MARKER.....	2
6	PAFZZ	4720013493902	97403	13229E0703-1	..HOSE ASSEMBLY,NONME.....	1
7	XDFZZ		09647	120-02456-40	..MARKER.....	2
8	MFFZZ		97403	13229E0375-169	..TUBING,STRAIGHT CUT TO LENGTH FROM BULK, P/N ASTMA269.....	1
9	PBFZZ	4710013495159	09647	120-50495-1	..TUBE,BENT,METALLIC.....	1
10	PBFZZ	4710013495160	09647	120-50495-4	..TUBE,BENT,METALLIC.....	1
11	PAFZZ	5305000213740	96906	MS35307-364	..SCREW,CAP,HEXAGON H.....	6
12	PAFZZ	5310009847042	96906	MS35338-141	..WASHER,LOCK.....	6
13	PAFZZ	5310007737618	96906	MS15795-814	..WASHER,FLAT.....	7
14	XDFZZ		97403	13229E1077	..SUPPORT BRACKET.....	1
15	PAFZZ	5325002904492	96906	MS122203	..INSERT,SCREW THREAD.....	6
16	PBFZZ	4730009757569	54938	4-4 T2HG-SS	..ADAPTER,STRAIGHT,PI.....	2
17	PBFZZ	4730004906257	81343	4-4 080202SA	..ELBOW,PIPE TO TUBE.....	4
18	PBFZZ	4710013488926	97403	13229E0586	..PIPE BENT,METALLIC.....	1
19	PBFFF	5342013467265	97403	13229E0156-2	..COUPLING,CLAMP,GROO 1/2 INCH.....	14
20	PAFZZ	5306013514304	09647	120-02079-3	...BOLT,SQUARE NECK 0.5-13 UNC-2A X 2.50 INCHES LONG, SS.....	2
21	XAFZZ		09647	120-07593-1	...NUT,HEAVY,HEX 0.50-13 UNC-2B, SS	2
22	PAFZZ	5330013498928	97403	13229E0855-2	...PACKING,PREFORMED 1 1/2 INCHES...	1
23	XDFFF		97403	13229E0786-1	..CLAMP ASSEMBLY.....	7
24	PBFFF	5340013461996	97403	13229E0864-2	...HANGER,PIPE 2 INCHES.....	2
25	PAFZZ	5306006379674	96906	MS35307-336	....BOLT,MACHINE.....	2
26	PAFZZ	5310009843806	96906	MS51922-9	....NUT,SELF-LOCKING,HE.....	2
27	PAFZZ	4030011420456	96906	MS51844-63	...SWAGING SLEEVE,WIRE.....	2
28	MFFZZ		09647	120-02598-8	...CABLE CUT TO LENGTH FROM BULK, P/N 13229E1147-2.....	1
29	PBFZZ	4710013488927	97403	13229E0068	..PIPE,BENT,METALLIC.....	2
30	PBFZZ	4710013500923	97403	13229E0571	..PIPE,BENT,METALLIC.....	1
31	XAOOO		57661	86-507-01	...VALVE.....	1
32	XBOZZ		57661	C-1686-00	....NUT.....	4
33	XBOZZ		57661	B-1583-00	....BOLT.....	4
34	XDOZZ		57661	C-1706-00	....NUT,JAM.....	1
35	XBOZZ		57661	W-5659-00	....LEVER.....	1
36	XBOZZ		57661	B-1307-06	....SCREW,GLAND.....	1
37	PAOZZ		57661	D-2241-00	....SEAL.....	2
38	PAOZZ	5330012641093	57661	D-1782-00	....PACKING,ASSEMBLY.....	1
39	XBOZZ		57661	G-3465-06	....STEM.....	1
40	PAOZZ	4820014623094	57661	D229800	....SEAL,VALVE.....	2
41	XBOZZ		57661	K-3192-00	....BALL.....	1
42	PAFZZ	4720013493903	97403	13229E0199-2	..HOSE ASSEMBLY,NONME.....	1
43	PBFZZ	4730001759387	97403	13229E0682-2	..ADAPTER,STRAIGHT,PI.....	1
44	PAFZZ	4820013493816	97403	13229E0678	..VALVE,PLUG.....	4

(1) ITEM NO	(2) SMR CODE	(3) NSN	(4) CAGEC	(5) PART NUMBER	(6) DESCRIPTION AND USABLE ON CODES(UOC)	(7) QTY
45	PBFZZ	4730013486248	97403	13229E1255-1	..NIPPLE,PIPE.....	3
46	PBFZZ	4730011054065	81343	4-4-4 140424S	..TEE,PIPE 1/4 INCH NPT.....	1
47	PAFZZ	5340013495910	97403	13229E0618-2	..HANGER,PIPE.....	2
48	XDFZZ		97403	13229E0619-3	..BRACKET,SUPPORT.....	2
49	PBFZZ	4710013488928	97403	13229E0572	..PIPE,BENT,METALLIC.....	1
50	PBFFF	5340013455783	97403	13229E0156-3	..COUPLING,CLAMP,GROO.....	2
51	PAFZZ	5306013514304	09647	120-02079-3	...BOLT SQUARE NECK 0.5-13 UNC -2A X 2.5 INCHES LONG, SS.....	2
52	XAFZZ		09647	120-07593-1	...NUT.....	2
53	PAFZZ	5330013498928	97403	13229E0855-2	...PACKING,PREFORMED.....	1
54	PAFZZ	4720013493904	97403	13229E0198-1	..HOSE ASSEMBLY,NONME.....	1
55	PAFZZ	4720013497314	97403	13229E0199-1	..HOSE ASSEMBLY.....	2
56	PBFZZ	4710013487107	97403	13229E0395	..PIPE,BENT,METALLIC.....	1
57	XDFFF		97403	13229E0786-2	..PIPE CLAMP ASSY.....	1
58	PBFZZ	5340013495911	97403	13229E0864	...HANGER,PIPE.....	2
59	PAFZZ	5306006379674	96906	MS35307-336	....BOLT,MACHINE.....	2
60	PAFZZ	5310009843806	96906	MS51922-9	....NUT,SELF-LOCKING,HE.....	2
61	PAFZZ	4030011420456	96906	MS51844-63	...SWAGING SLEEVE,WIRE.....	2
62	MFFZZ		09647	120-02598-8	...CABLE CUT TO LENGTH FROM BULK P/N 13229E1147-2.....	1
63	PBFZZ	4710013488929	97403	13229E0135	..PIPE,BENT,METALLIC.....	1
64	PBFZZ	4710013491784	97403	13229E0067	..PIPE,BENT,METALLIC.....	1
65	XDFZZ		97403	13229E1021	..SUPPORT,PIPE.....	1
66	PAFZZ	5310007646609	96906	MS51971-7	..NUT,PLAIN,HEXAGON.....	1
67	XDFZZ		97403	13229E1020	..SUPPORT,PIPE.....	1
68	PBFZZ	4730013507441	97403	13229E0086-191	..ELBOW,PIPE .0.25 INCH NPS, 90 DEGREE, CLS 150, 316 SS.....	2
69	PBFZZ	4730013486246	97403	13229E1255-2	..NIPPLE,PIPE.....	1
70	PAFZZ	5305005765417	96906	MS35307-360	..SCREW,CAP,HEXAGON H.....	1
71	PBFZZ	5310013500540	97403	13229E0086-105	..WASHER,FLAT.....	1
72	PAFZZ	5310009146028	96906	MS51922-18	..NUT,SELF-LOCKING,HE.....	1
73	XDFZZ		97403	13229E0618-1	..PIPE HANGER.....	1
74	PAFZZ	5310002453615	96906	MS35649-2314	..NUT,PLAIN,HEXAGON.....	6
75	PAFZZ	5310006255756	96906	MS15795-812	..WASHER,FLAT.....	12
76	XDFZZ		96906	MS35307-32	..SCREW,CAP.....	65

END OF FIGURE

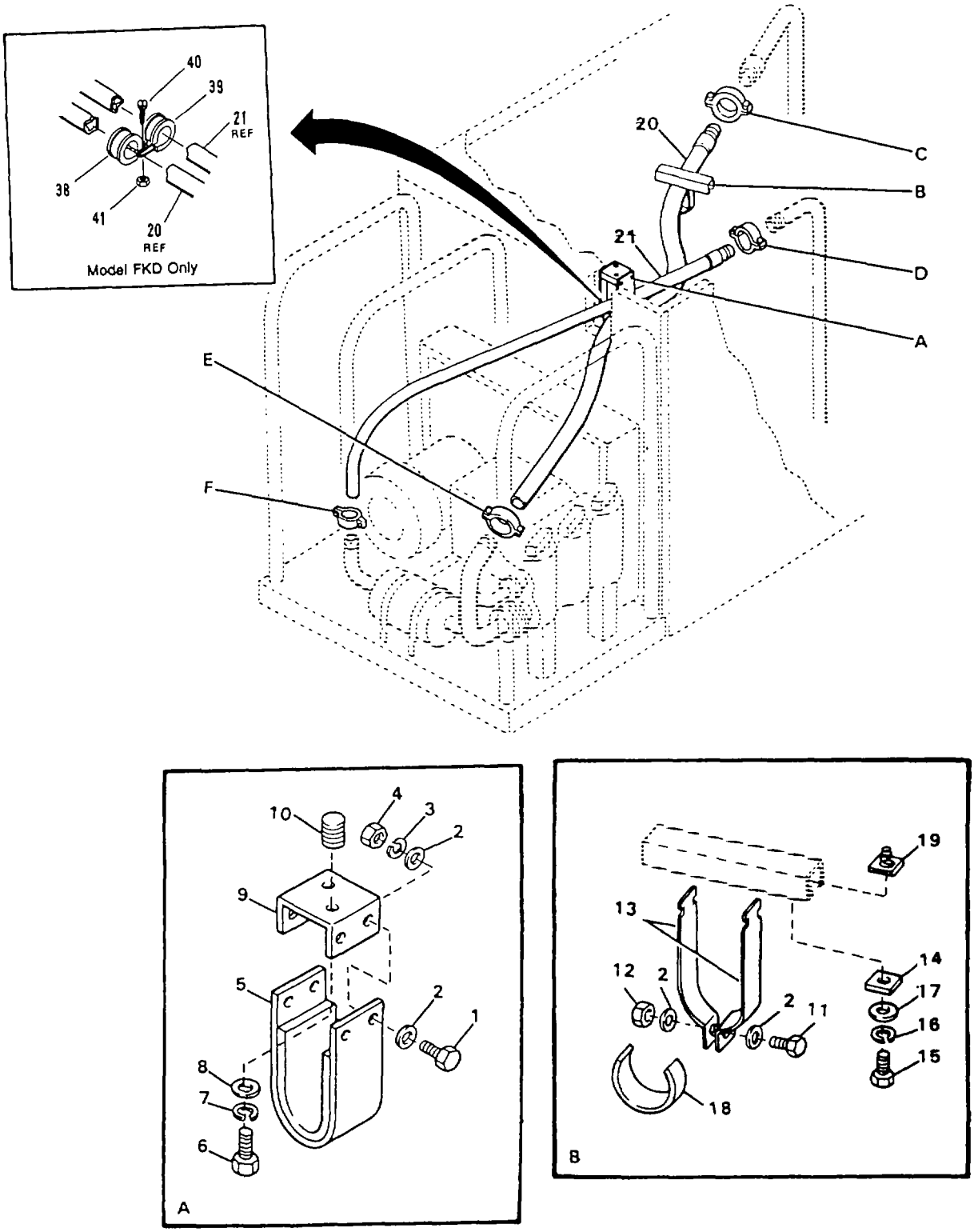

FIGURE 14. HOSE CONNECTIONS CONTAINER TO HP PUMP (SHEET 1 OF 2)

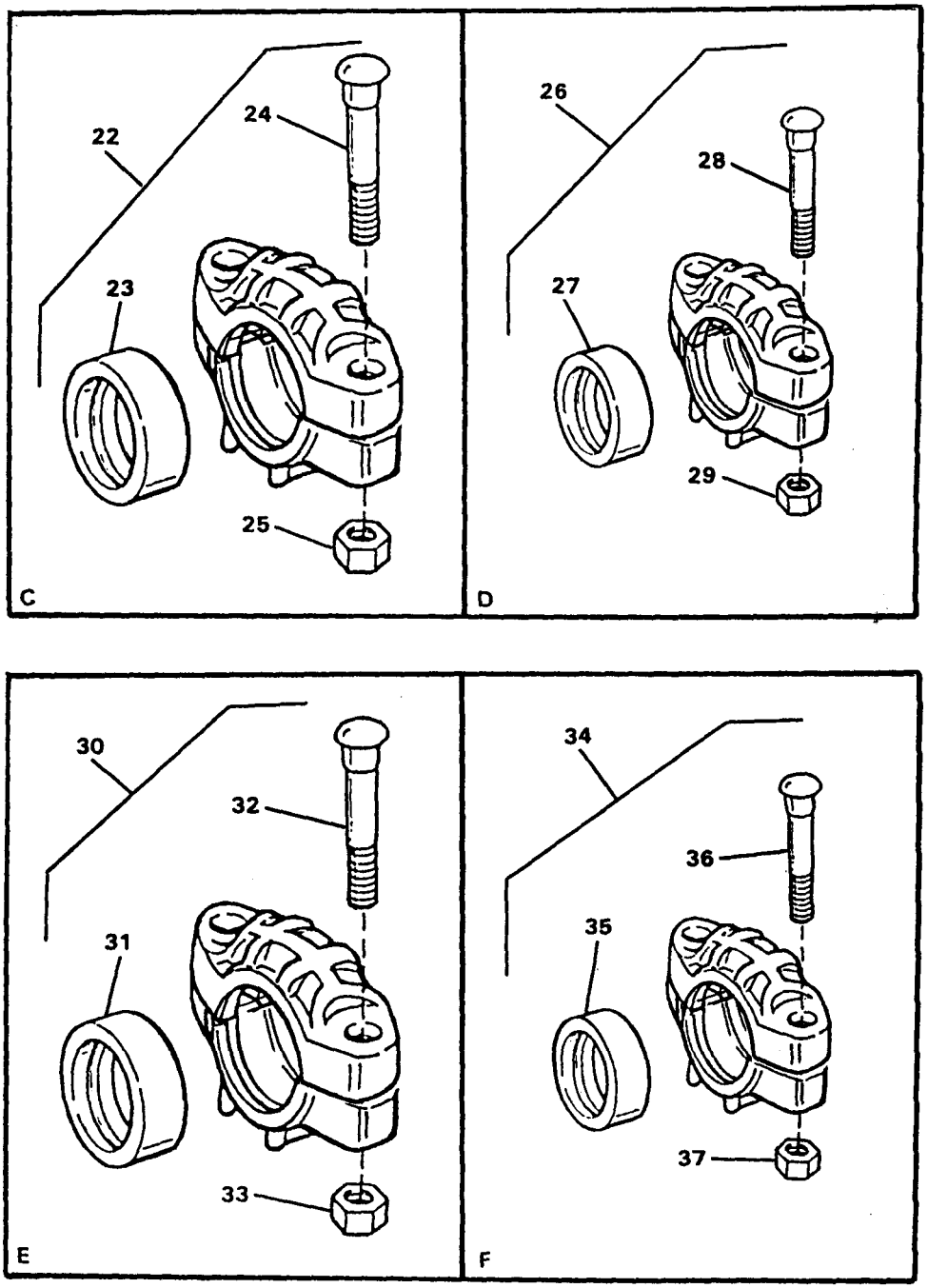

FIGURE 14. HOSE CONNECTIONS CONTAINER TO HP PUMP (SHEET 2 OF 2)

(1) ITEM NO	(2) SMR CODE	(3) NSN	(4) CAGEC	(5) PART NUMBER	(6) DESCRIPTION AND USABLE ON CODES(UOC)	(7) QTY
					GROUP 02 WATER PURIFICATION SYSTEM FIG. 14 HOSE CONNECTIONS CONTAINER TO HP PUMP	
1	PAFZZ	5305007175467	96906	MS35307-362	..SCREW,CAP,HEXAGON H.....	4
2	PAFZZ	5310007737618	96906	MS15795-814	..WASHER,FLAT.....	10
3	PAFZZ	5310009847042	96906	MS35338-141	..WASHER,LOCK.....	4
4	PAFZZ	5310009138881	96906	MS51971-3	..NUT,PLAIN,HEXAGON.....	4
5	XDFZZ		97403	13229E0613	..SUPPORT,HOSE.....	1
6	PAFZZ	5305000213801	96906	MS35307-411	..SCREW,CAP,HEXAGON H.....	2
7	PAFZZ	5310009338778	96906	MS35338-143	..WASHER,LOCK.....	2
8	PAFZZ	5310007679425	96906	MS15795-818	..WASHER,FLAT.....	2
9	PAFZZ		97403	13229E1227	..BRACKET,PIPE.....	1
10	PAFZZ	5340009907158	96906	MS122165	..INSERT,SCREW THREAD.....	2
11	PAFZZ	5305007175467	96906	MS35307-362	..SCREW,CAP,HEXAGON H.....	1
12	PAFZZ	5310009138881	96906	MS51971-3	..NUT,PLAIN,HEXAGON.....	1
13	PAFZZ		97403	13229E0685-8	..BAND,RETAINING.....	1
14	MFFZZ		09647	120-52328-4	..CUSHION CUT FROM BULK, P/N P-2600.....	1
15	PAFZZ	5305007024523	96906	MS35307-306	..SCREW,CAP,HEXAGON H.....	1
16	PAFZZ	5310009338121	96906	MS35338-139	..WASHER,LOCK.....	1
17	PAFZZ	5310010911248	96906	MS15795-810	..WASHER,FLAT.....	1
18	PAFZZ	5340013515442	97403	13229E1143-1	..PLATE,MOUNTING.....	2
19	PAFZZ	5310013522195	97403	13229E1142-1	..NUT,SPRING.....	1
20	PAFZZ	4720013497777	97403	13229E0952	.HOSE ASSEMBLY,NONME.....	1
21	PAFZZ	4720013564562	97403	13229E0196-2	.HOSE ASSEMBLY,NONME.....	1
22	PBFFF	5342013461845	97403	13229E0056-4	.COUPLING,CLAMP,GROO.....	1
23	PAFZZ	5330013498929	97403	13229E0855-4	.GASKET.....	1
24	XDFZZ	5305010625594	97403	13211E3106-2	.SCREW,MACHINE 0.5-13 UNC-2A X 2.75 INCHES LONG.....	2
25	PAFZZ	5310012658957	80204	ANSI B18.2.2	.NUT,PLAIN,HEXAGON 0.5-13 UNC-2B....	2
26	PBFFF	5340013455783	97403	13229E0156-3	.COUPLING,CLAMP,GROO.....	1
27	PAFZZ	5330013498930	97403	13229E0955-3	.PACKING,PREFORMED.....	1
28	XDFZZ	5305010625594	97403	13211E3106-2	.SCREW,MACHINE 0.5-13 UNC-2A X 2.5 INCHES LONG.....	2
29	PAFZZ	5310012658957	80204	ANSI B18.2.2	.NUT,PLAIN,HEXAGON 0.5-13 UNC-2B....	2
30	PBFFF	5342013461846	97403	13229E0156-6	.COUPLING,CLAMP,GROO.....	1
31	PAFZZ	5330013498929	97403	13229E0855-4	.GASKET.....	1
32	XDFZZ	5305010625594	97403	13211E3106-2	.SCREW,MACHINE 0.5-13 UNC-2A X 2.75 INCHES LONG.....	2
33	PAFZZ	5310012658957	80204	ANSI B18.2.2	.NUT,PLAIN,HEXAGON 0.5-13 UNC-2B....	2
34	PBFFF	5342013461847	97403	13229E0156-5	.COUPLING,CLAMP,GROO.....	1
35	PAFZZ	5330013498930	97403	13229E0655-3	.PACKING,PREFORMED.....	1
36	XDFZZ	5305010625594	97403	13211E3106-2	.SCREW,MACHINE 0.5-13 UNC-2A X 2.5 INCHES LONG.....	2
37	PAFZZ	5310012658957	80204	ANSI B18.2.2	.NUT,PLAIN,HEXAGON 0.5-13 UNC-2B....	2
38	PAFZZ	5340014454508	96906	MS21919WCG43	.CLAMP,LOOP.....FKD	1
39	PAFZZ		96906	MS21919WCG48	.CLAMP,LOOP.....FKD	1
40	PAFZZ	5305000593663	96906	MS51958-67	.SCREW 0.190-32 UNF-2A X 1 INCH LONG..... FKD	1
41	PAFZZ		96906	MS21044	.LOCK NUT 0.190-32 UNF.....FKD	1

END OF FIGURE

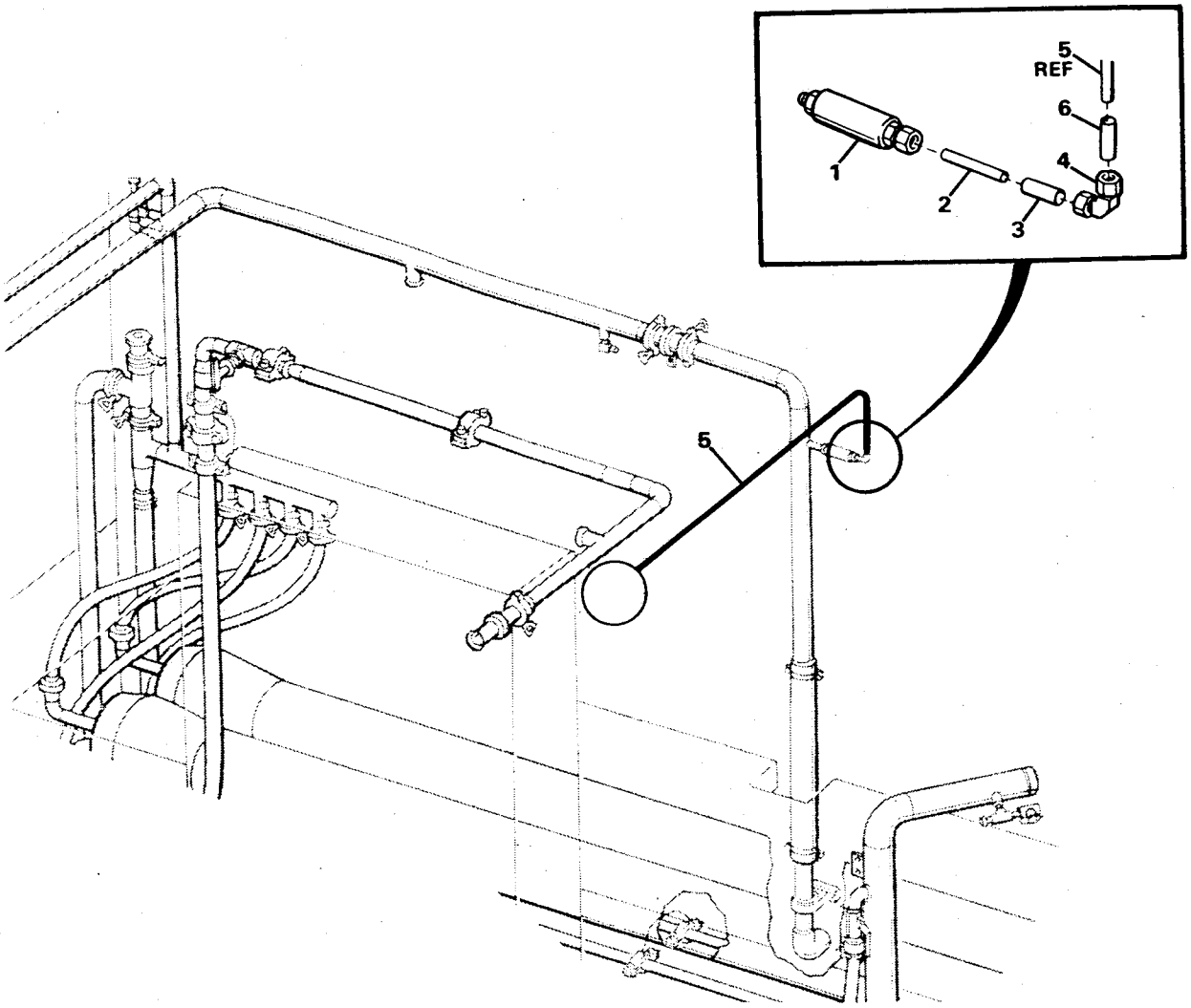

FIGURE15. CHEMICAL TUBING (SHEET 1 OF 5)

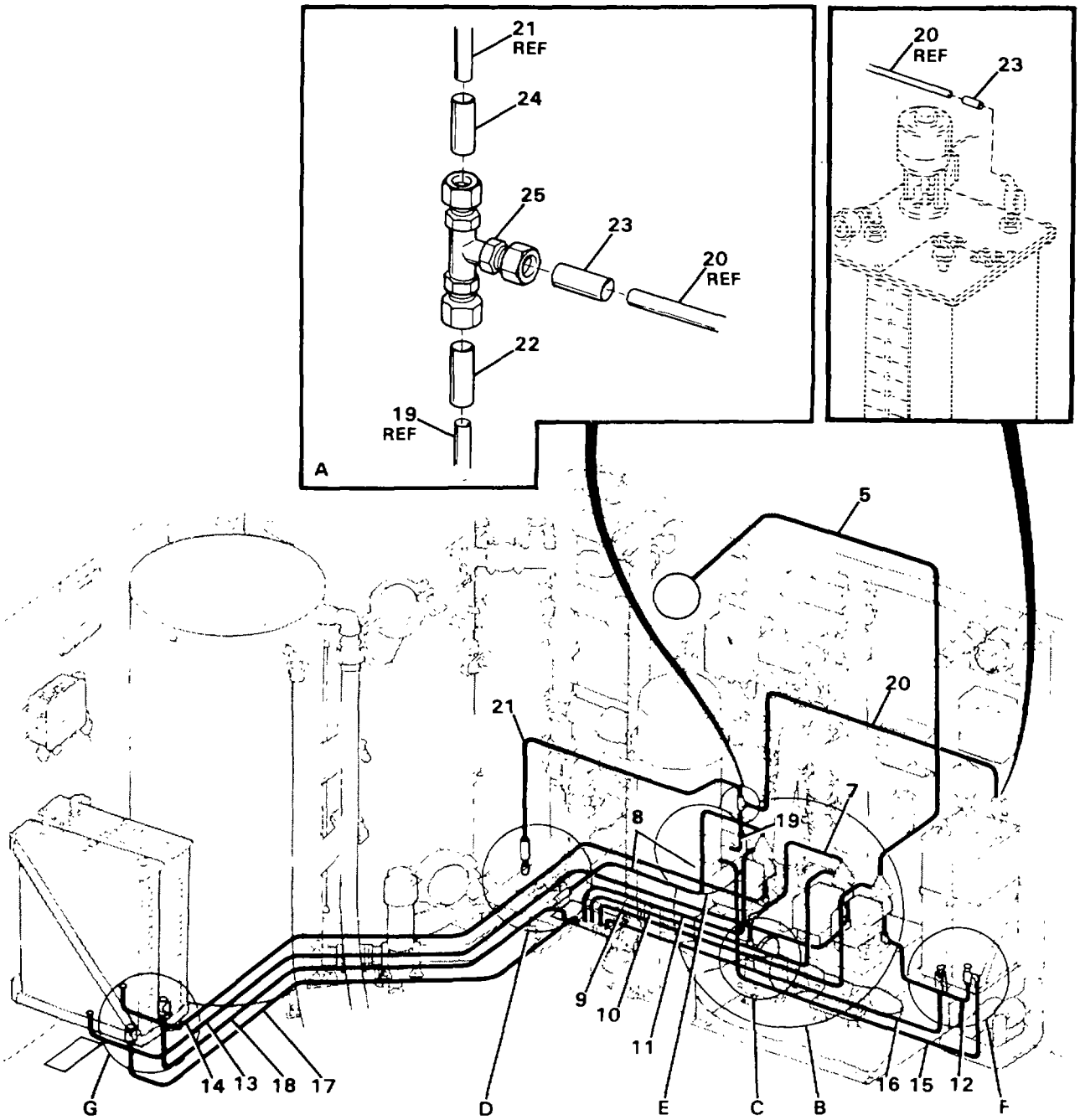

FIGURE15. CHEMICAL TUBING (SHEET 2 OF 5)

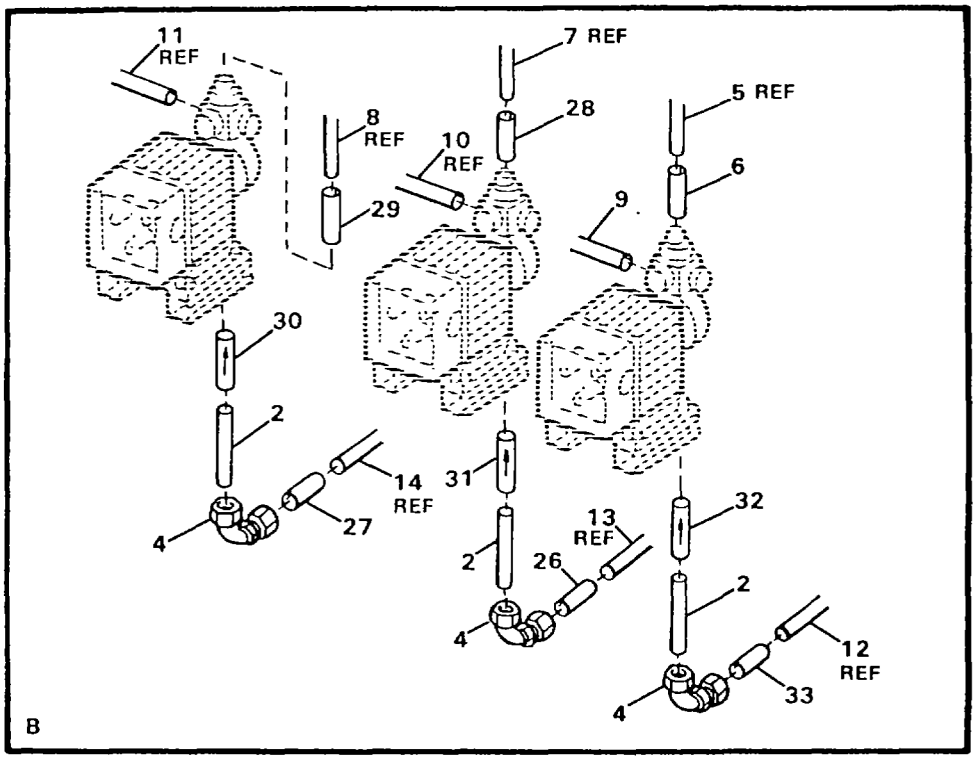

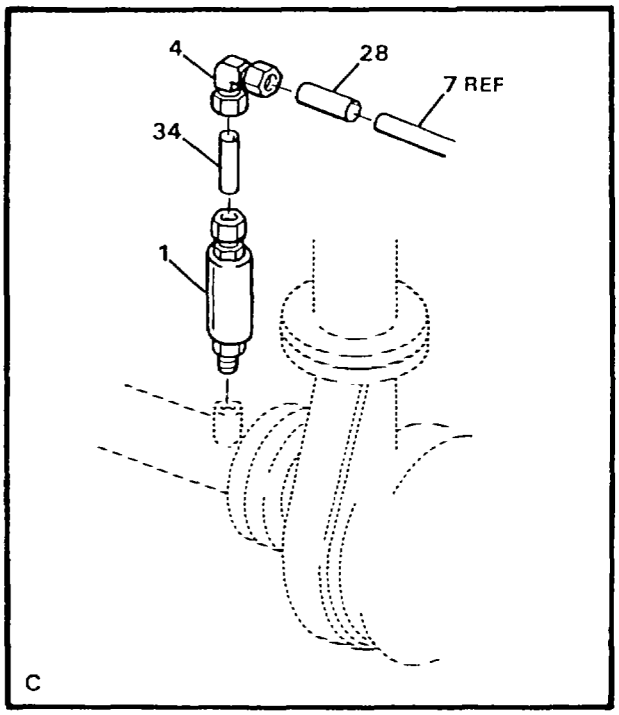

FIGURE15. CHEMICAL TUBING (SHEET 3 OF 5)

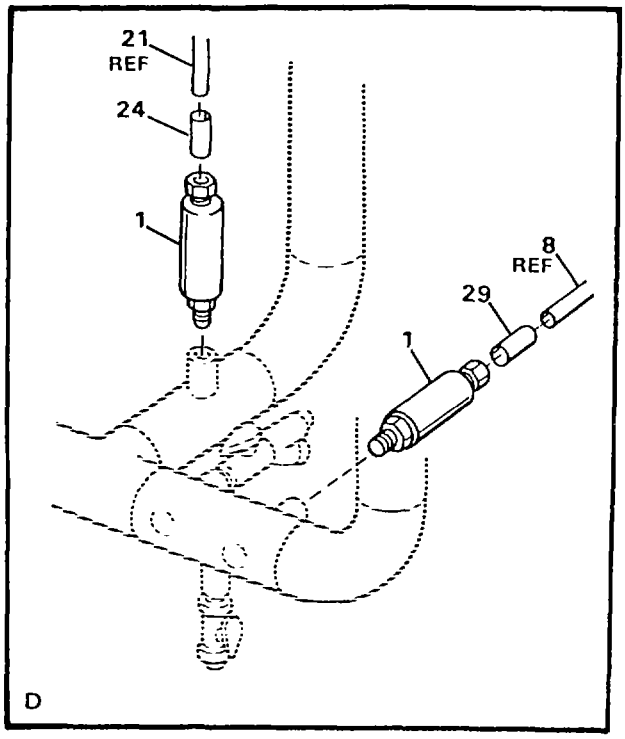

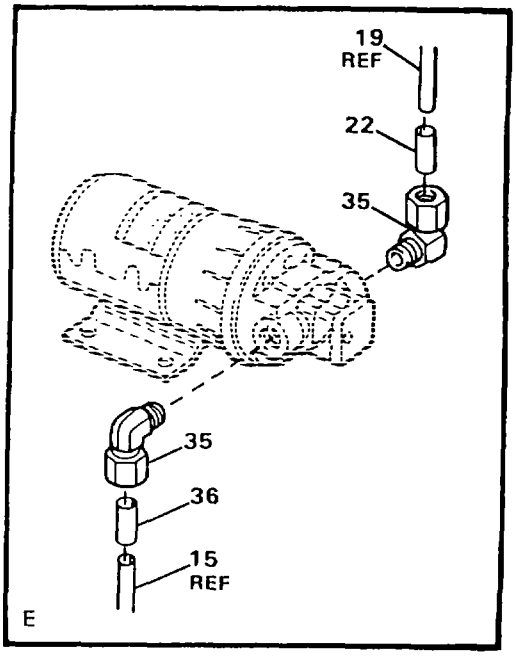

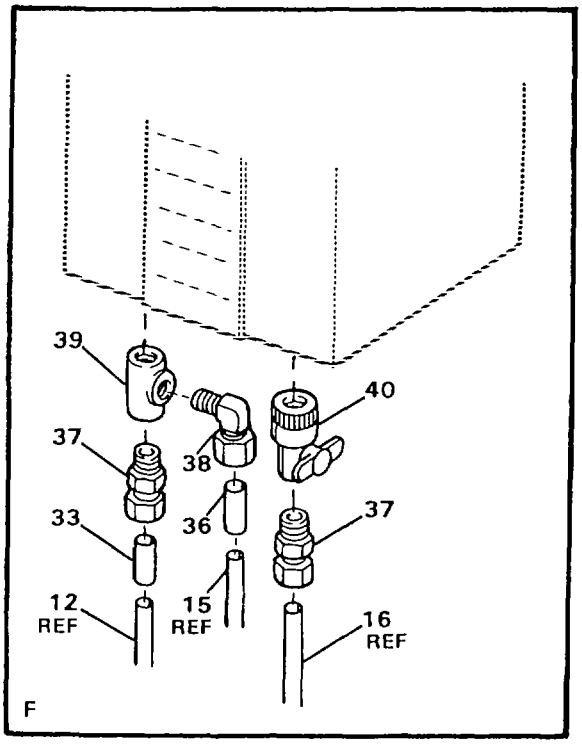

FIGURE15. CHEMICAL TUBING (SHEET 4 OF 5)

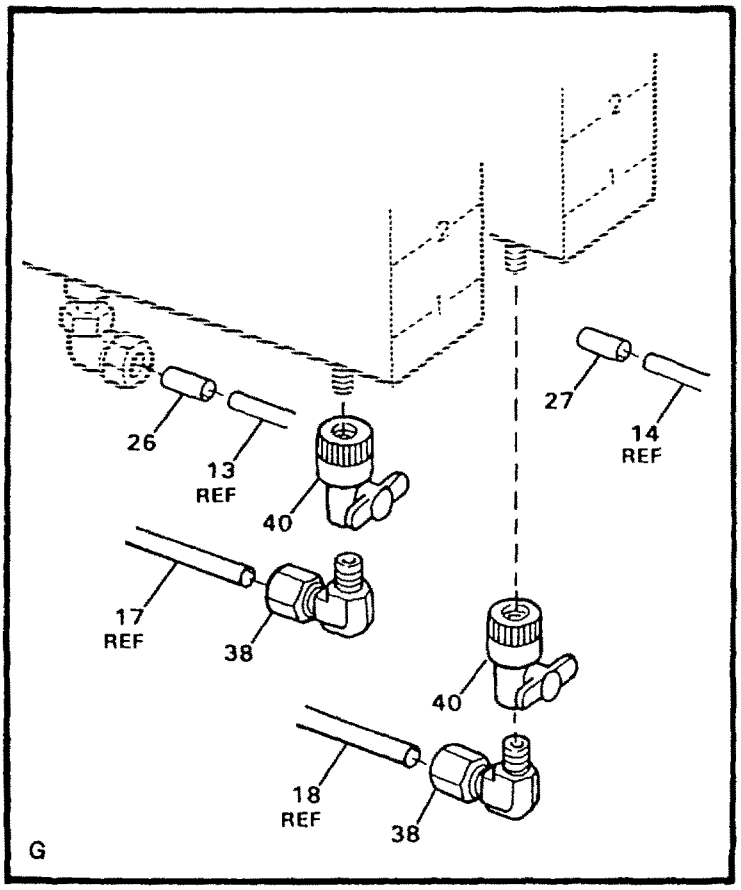

FIGURE15. CHEMICAL TUBING (SHEET 5 OF 5)

(1) ITEM NO	(2) SMR CODE	(3) NSN	(4) CAGEC	(5) PART NUMBER	(6) DESCRIPTION AND USABLE ON CODES(UOC)	(7) QTY
					GROUP 02 WATER PURIFICATION SYSTEM FIG. 15 CHEMICAL TUBING	
1	PAOZZ	4820013506175	62866	10501	..VALVE, SOLENOID.....	4
2	MOOZZ		09647	120-02599-30	..TUBING CUT TO LENGTH FROM BULK, P/N 13229E0691-2.....	5
3	XDOZZ		09647	120-02456-76	..MARKER.....	1
4	PBOZZ	4730013493884	61424	N6EU6	..ELBOW,TUBE.....	5
5	MOOZZ		09647	120-02599-54	..TUBING CUT TO LENGTH FROM BULK, P/N 13229E0691-2.....	1
6	XDOZZ		09647	120-02456-30	..MARKER.....	2
7	MOOZZ		09647	120-02599-45	..TUBING CUT TO LENGTH FROM BULK, P/N 13229E0691-2.....	1
8	MOOZZ		09647	120-02599-41	..TUBING CUT TO LENGTH FROM BULK, P/N 13229E0691-2.....	1
9	MOOZZ		09647	120-02599-8	..TUBING CUT TO LENGTH FROM BULK, P/N 77C714976P006.....	1
10	MOOZZ		09647	120-02599-6	..TUBING CUT TO LENGTH FROM BULK, P/N 77C714976P006.....	1
11	MOOZZ		09647	120-02599-5	..TUBING CUT TO LENGTH FROM BULK, P/N 77C714976P006.....	1
12	MOOZZ		09647	120-02599-42	..TUBING CUT TO LENGTH FROM BULK, P/N 13229E0691-2.....	1
13	MOOZZ		09647	120-02599-53	..TUBING CUT TO LENGTH FROM BULK, P/N 13229E0691-2.....	1
14	MOOZZ		09647	120-02599-52	..TUBING CUT TO LENGTH FROM BULK, P/N 13229E0691-2.....	
15	MOOZZ		09647	120-02599-43	..TUBING CUT TO LENGTH FROM BULK, P/N 13229E0691-2.....	1
16	MOOZZ		09647	120-02599-44	..TUBING CUT TO LENGTH FROM BULK, P/N 13229E0691-2.....	1
17	MOOZZ		09647	120-02599-49	..TUBING CUT TO LENGTH FROM BULK, P/N 13229E0691-2.....	1
18	MOOZZ		09647	120-02599-48	..TUBING CUT TO LENGTH FROM BULK, P/N 13229E0691-2.....	1
19	MOOZZ		09647	120-02599-33	..TUBING CUT TO LENGTH FROM BULK, P/N 13229E0691-2.....	1
20	MOOZZ		09647	120-02599-40	..TUBING CUT TO LENGTH FROM BULK, P/N 13229E0691-2.....	1
21	MOOZZ		09647	120-02599-39	..TUBING CUT TO LENGTH FROM BULK, P/N 13229E0691-2.....	1
22	XDOZZ		09647	120-02456-75	..MARKER.....	2
23	XDOZZ		09647	120-02456-32	..MARKER.....	2
24	XDOZZ		09647	120-02456-34	..MARKER.....	2
25	PBOZZ	4730013506219	98441	N6TU6-V	..TEE,TUBE.....	1
26	XDOZZ		09647	120-02456-29	..MARKER.....	2
27	XDOZZ		09647	120-02456-28	..MARKER.....	2
28	XDOZZ		09647	120-02456-31	..MARKER.....	2
29	XDOZZ		09647	120-02456-33	..MARKER.....	2
30	XDOZZ		09647	120-02456-22	..MARKER.....	1
31	XDOZZ		09647	120-02456-23	..MARKER.....	1
32	XDOZZ		09647	120-02456-24	..MARKER.....	1

(1) ITEM NO	(2) SMR CODE	(3) NSN	(4) CAGEC	(5) PART NUMBER	(6) DESCRIPTION AND USABLE ON CODES(UOC)	(7) QTY
33	XDOZZ		09647	120-02456-27	..MARKER.....	2
34	XDOZZ		09647	120-02456-20	..MARKER.....	1
35	PBOZZ	4730013506203	97403	13229E0689-4	..ELBOW,PIPE TO TUBE.....	2
36	XDOZZ		09647	120-02456-26	..MARKER.....	2
37	PBOZZ	4730012970172	98441	N6MC8	..ADAPTER,STRAIGHT,PI.....	2
38	PBOZZ	4730013487920	97403	13229E0689-5	..ELBOW,PIPE TO TUBE.....	3
39	PBOZZ	4730013465551	97403	13229E0375-66	..TEE,PIPE SCH 80, PVC, 0.5 INCH NPT.....	1
40	PAOZZ	4820013513432	97403	13229E0170-2	..VALVE,BALL 112 IN NPT.....	3

END OF FIGURE

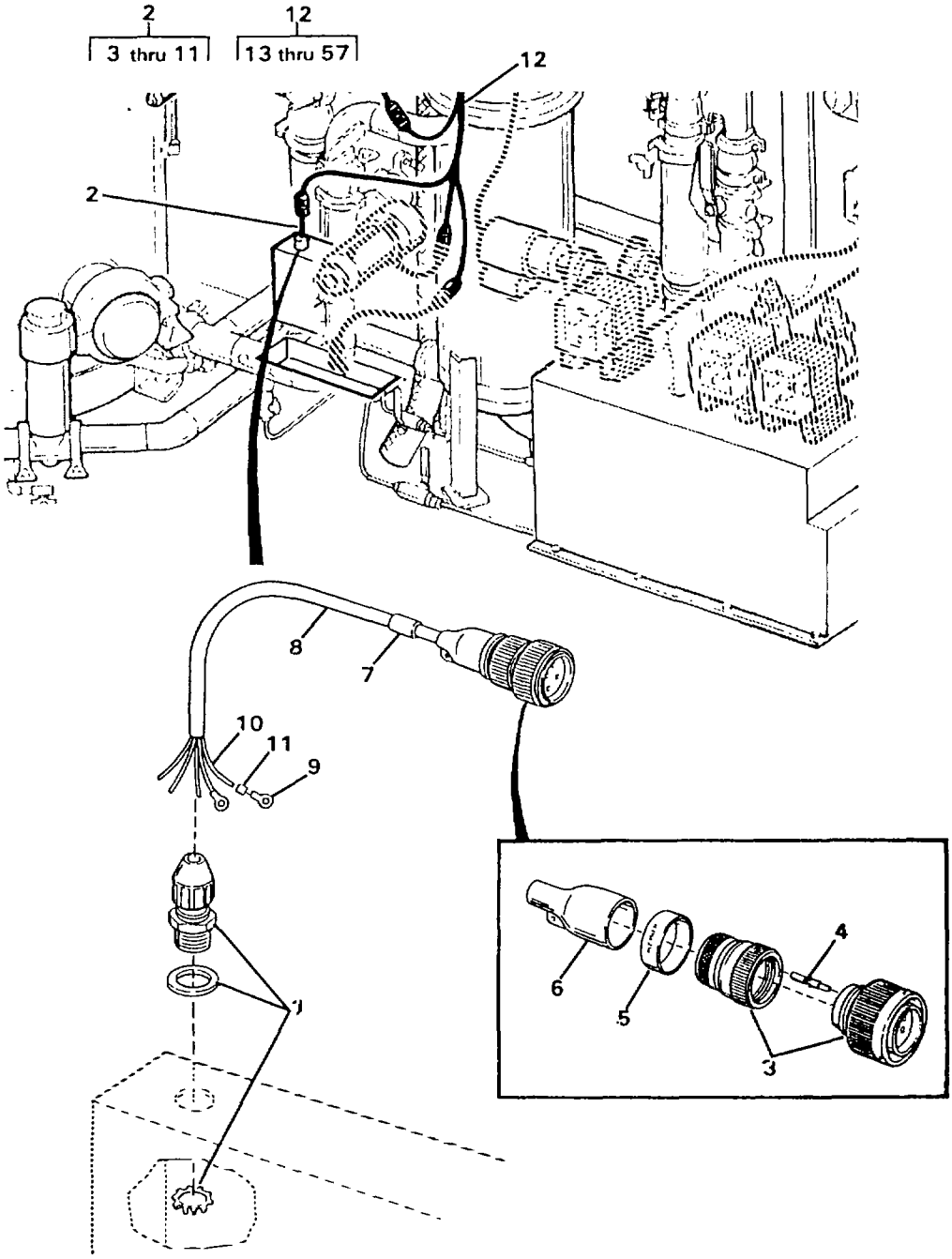

HARNESS ASSY	CONNECTOR	PIN	WIRE RUN		TERMINAL RING	WIRE	LENGTH
			FROM	TO			
2	3	4	P43A	SR6-H	—	10	28.00
		4	P43B	SR6-N	—	10	28.00
		4	P43C	GND	—	10	28.00
		4	P43D	MOV 14	9	10	28.00
		4	P43E	MOV 15	9	10	28.00

FIGURE 16. MAIN HARNESS - RAW WATER SIDE (SHEET 1 OF 13)

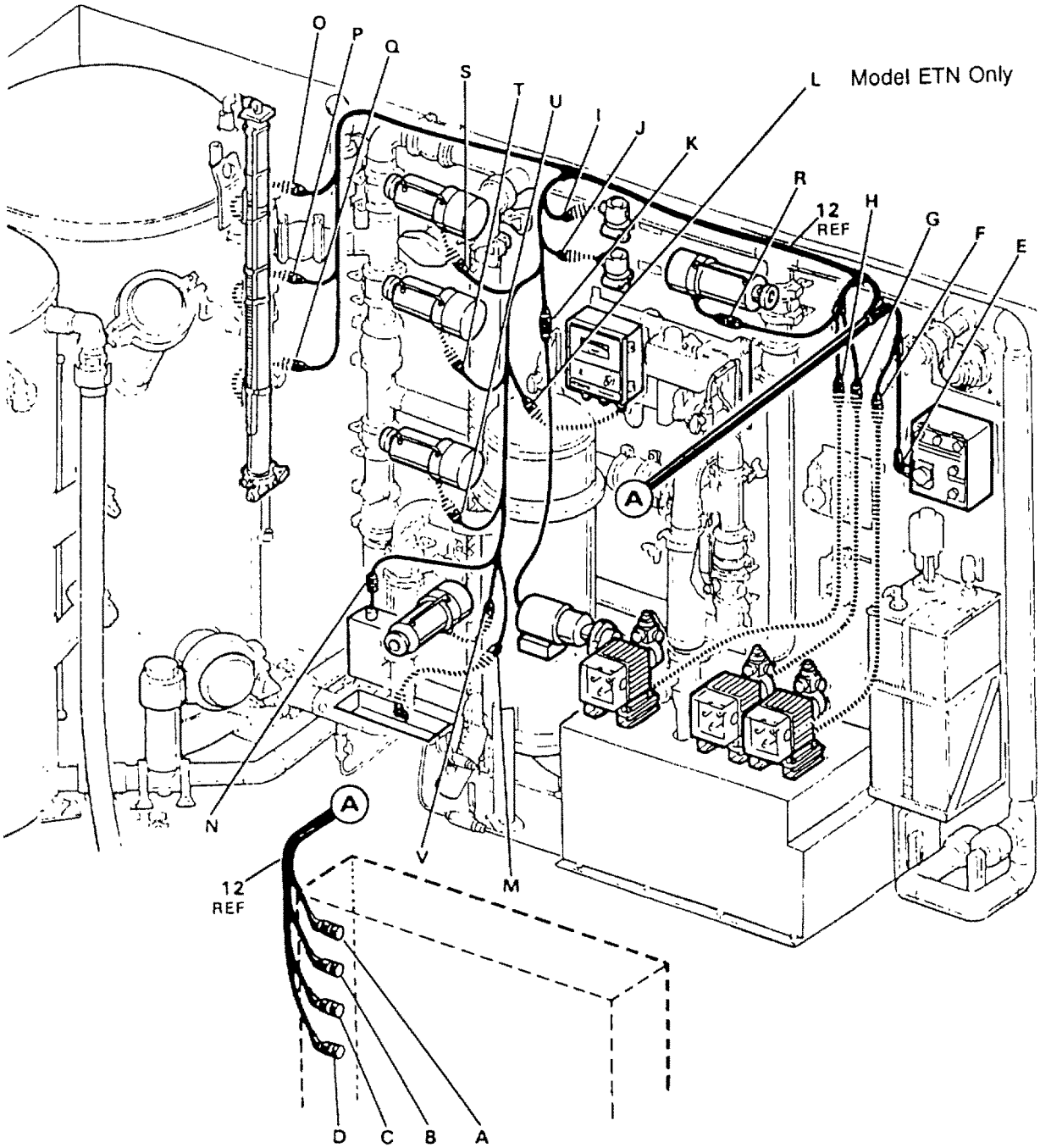

FIGURE 16. MAIN HARNESS - RAW WATER SIDE (SHEET 2 OF 13)

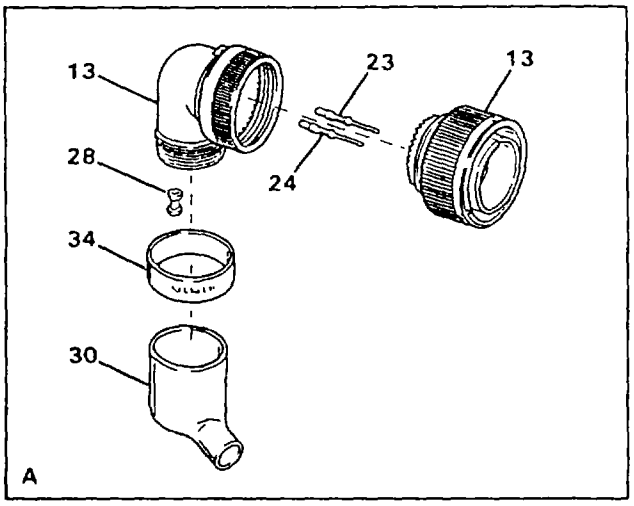

CONNECTOR P12 DETAIL	CONTACT	PLUG	WIRE RUN		WIRE SIZE
			FROM	TO	
13	23	—	P12A	P52A	1-16-9
	23	—	P12B	P52B	1-16-9
	23	—	P12C	P52C	1-16-9
	23	—	P12D	P52D	1-16-9
	23	—	P12E	P52E	1-16-9
	23	—	P12F	P52N	1-16-9
	23	—	P12G	P52R	1-16-9
	23	—	P12H	P52W	1-16-9
	23	—	P12I	J51A	1-16-9
	24	—	P12J	P52J	1-12-9
	24	—	P12K	P52K	1-12-9
	24	—	P12L	P52L	1-12-9
	24	—	P12M	P52M	1-12-9
	23	—	P12N	J51B	1-16-9
	23	—	P12P	J51C	1-16-9
	23	—	P12R	J50A	1-16-9
	23	—	P12S	J50B	1-16-9
	23	—	P12T	J50C	1-16-9
	23	28	P12U	—	—
	23	28	P12V	—	—
	23	28	P12W	—	—
	23	28	P12X	—	—

FIGURE 16. MAIN HARNESS - RAW WATER SIDE (SHEET 3 OF 13)

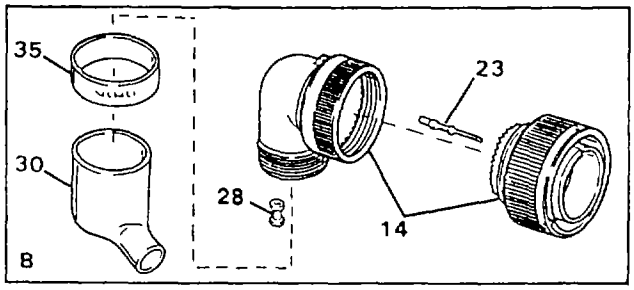

CONNECTOR P14 DETAIL	CONTACT	PLUG	WIRE RUN FROM	WIRE RUN TO	WIRE SIZE
14	23	—	P14A	J41D	1-18-9
	23	—	P14B	J41E	1-18-9
	23	—	P14C	J41A	1-18-9
	23	—	P14D	J41C	1-18-9
	23	—	P14E	J40D	1-18-9
	23	—	P14F	J40E	1-18-9
	23	—	P14G	J40A	1-18-9
	23	—	P14H	J40C	1-18-9
	23	—	P14J	J38D	1-18-9
	23	—	P14K	J38E	1-18-9
	23	—	P14L	J38A	1-18-9
	23	—	P14M	J38C	1-18-9
	23	—	P14N	J42A	1-16-9
	23	—	P14P	J42B	1-16-9
	23	—	P14R	J39D	1-18-9
	23	—	P14S	J39E	1-18-9
	23	—	P14T	J39A	1-18-9
	23	—	P14U	J39C	1-18-9
	23	—	P14V	J36A	1-16-9
	23	—	P14W	J36B	1-16-9
	23	—	P14X	J37A	1-16-9
	23	—	P14Z	J36B	1-16-9
	23	28	P14a	—	—
	23	—	P14b	J48D	1-18-9
	23	28	P14c	—	—
	23	—	P14d	J48E	1-18-9
	23	28	P14e	—	—
	23	—	P14f	J48A	1-18-9
	23	28	P14g	—	—
	23	—	P14h	J48C	1-18-9
	23	28	P14j	—	—
	23	28	P14k	—	—
	23	28	P14m	—	—
	23	28	P14n	—	—
	23	28	P14p	—	—
	23	28	P14r	—	—
	23	28	P14s	—	—

FIGURE 16. MAIN HARNESS - RAW WATER SIDE (SHEET 4 OF 13)

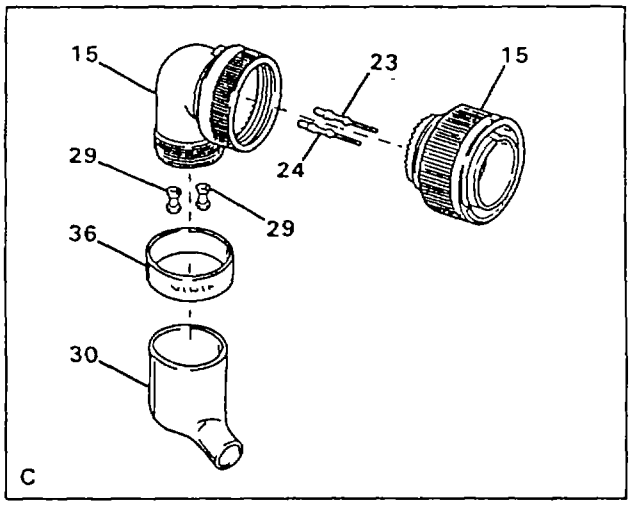

Model ETN Only

CONNECTOR P16 DETAIL	CONTACT	PLUG	WIRE RUN FROM	WIRE RUN TO	WIRE SIZE
15	23	—	P16A	J49A	1-16-9
	23	—	P16B	J49B	1-16-9
	23	—	P16C	J49C	1-16-9
	23	—	P16D	J45A	1-16-9
	23	—	P16E	J45B	1-16-9
	23	—	P16F	J45C	1-16-9
	23	—	P16G	J44A	1-16-9
	23	—	P16H	J44B	1-16-9
	23	—	P16I	J44C	1-16-9
	24	29	P16J	—	—
	24	29	P16K	—	—
	24	29	P16L	—	—
	24	29	P16M	—	—
	23	—	P16N	J46A	1-16-9
	23	—	P16P	J46B	1-16-9
	23	—	P16R	J47A	1-16-9
	23	—	P16S	J47B	1-16-9
	23	—	P16T	J35A	1-16-9
	23	—	P16U	J35B	1-16-9
	23	28	P16V	—	—
	23	28	P16W	—	—
	23	28	P16X	—	—

FIGURE 16. MAIN HARNESS - RAW WATER SIDE (SHEET 5 OF 13)

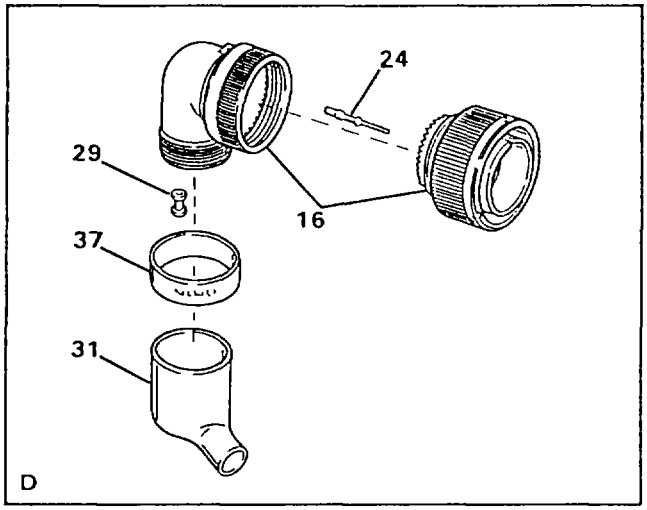

CONNECTOR P18 DETAIL	CONTACT	PLUG	WIRE RUN		WIRE SIZE
			FROM	TO	
16	24	—	P18A	J43A	1-12-9
	24	—	P18B	J43B	1-12-9
	24	—	P18C	J43C	1-12-9
	24	—	P18D	J43D	1-12-9
	24	—	P18E	J43E	1-12-9
	24	29	P18F	—	—
	24	29	P18G	—	—
	24	29	P18H	—	—

FIGURE 16. MAIN HARNESS - RAW WATER SIDE (SHEET 6 OF 13)

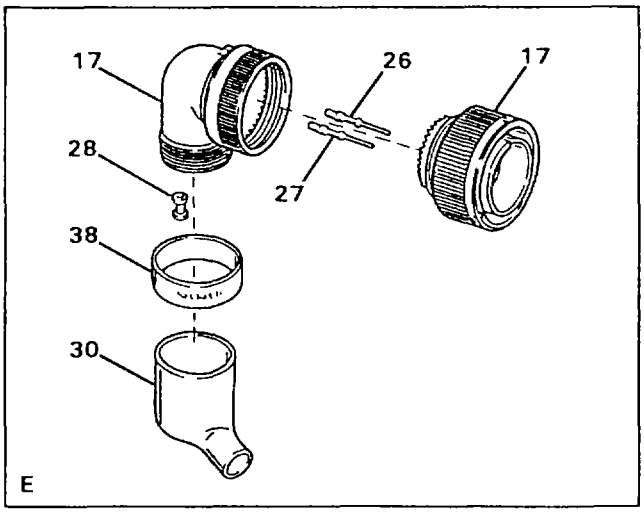

CONNECTOR P52 DETAIL	CONTACT	PLUG	WIRE RUN FROM	WIRE RUN TO	WIRE SIZE
17	26	—	P52A	P12A	1-16-9
	26	—	P52B	P12B	1-16-9
	26	—	P52C	P12C	1-16-9
	26	—	P52D	P12D	1-16-9
	26	—	P52E	P12E	1-16-9
	26	28	P52F	—	—
	26	28	P52G	—	—
	26	28	P52H	—	—
	26	28	P52I	—	—
	27	—	P52J	P12J	1-12-9
	27	—	P52K	P12K	1-12-9
	27	—	P52L	P12L	1-12-9
	27	—	P52M	P12M	1-12-9
	26	—	P52N	P12F	1-16-9
	26	28	P52P	—	—
	26	—	P52R	P12G	1-16-9
	26	28	P52S	—	—
	26	28	P52T	—	—
	26	28	P52U	—	—
	26	28	P52V	—	—
	26	—	P52W	P12H	1-16-9
	26	28	P52X	—	—

FIGURE 16. MAIN HARNESS - RAW WATER SIDE (SHEET 7 OF 13)

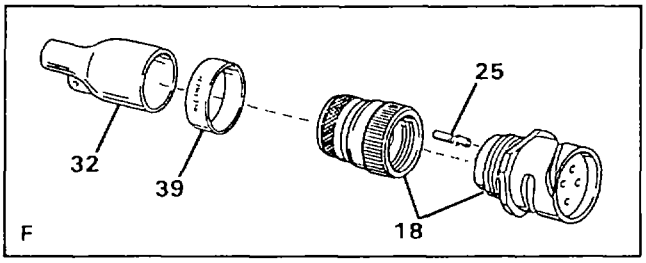

CONNECTOR J51 DETAIL	CONTACT	PLUG	WIRE RUN		WIRE SIZE
			FROM	TO	
18	25	—	J51A	P12I	1-16-9
	25	—	J51B	P12N	1-16-9
	25	—	J51C	P12P	1-16-9

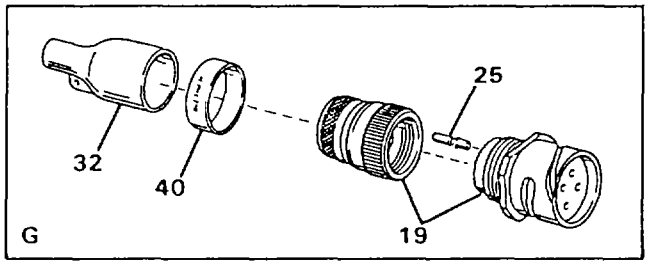

CONNECTOR J50 DETAIL	CONTACT	PLUG	WIRE RUN		WIRE SIZE
			FROM	TO	
19	25	—	J50A	P12R	1-16-9
	25	—	J50B	P12S	1-16-9
	25	—	J50C	P12T	1-16-9

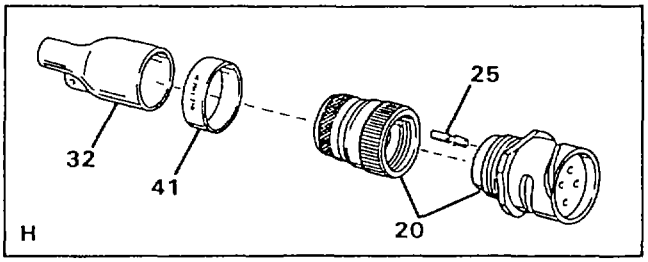

CONNECTOR J49 DETAIL	CONTACT	PLUG	WIRE RUN		WIRE SIZE
			FROM	TO	
20	25	—	J49A	P16A	1-16-9
	25	—	J49B	P16B	1-16-9
	25	—	J49C	P16C	1-16-9

FIGURE 16. MAIN HARNESS - RAW WATER SIDE (SHEET 8 OF 13)

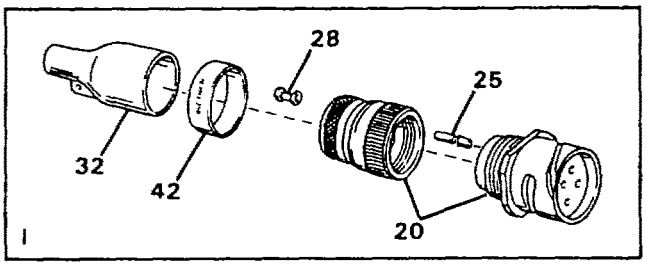

CONNECTOR J47 DETAIL	CONTACT	PLUG	WIRE RUN		WIRE SIZE
			FROM	TO	
20	25	—	J47A	P16R	1-16-9
	25	—	J47B	P16S	1-16-9
	25	28	J47C	—	—

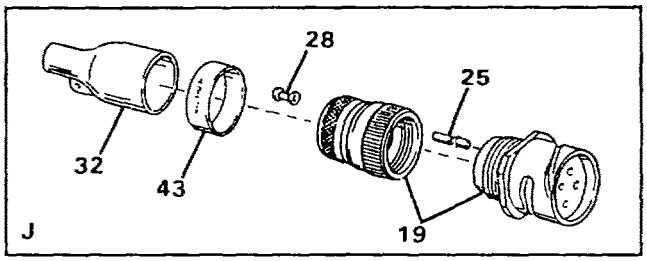

CONNECTOR J46 DETAIL	CONTACT	PLUG	WIRE RUN		WIRE SIZE
			FROM	TO	
19	25	—	J46A	P16N	1-16-9
	25	—	J46B	P16P	1-16-9
	25	28	J46C	—	—

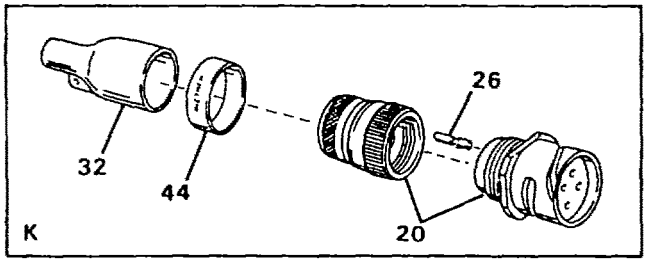

CONNECTOR J45 DETAIL	CONTACT	PLUG	WIRE RUN		WIRE SIZE
			FROM	TO	
20	25	—	J45A	P16D	1-16-9
	25	—	J45B	P16E	1-16-9
	25	—	J45C	P16F	1-16-9

FIGURE 16. MAIN HARNESS - RAW WATER SIDE (SHEET 9 OF 13)

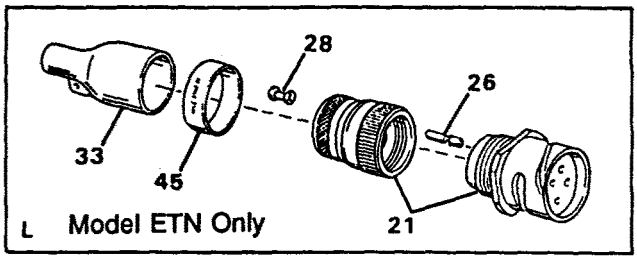

CONNECTOR J44 DETAIL	CONTACT	PLUG	WIRE RUN FROM	WIRE RUN TO	WIRE SIZE
21 Model ETN Only	26	—	J44A	P16G	1-16-9
	26	—	J44B	P16I	1-16-9
	26	—	J44C	P16H	1-16-9
	26	28	J44D	—	—

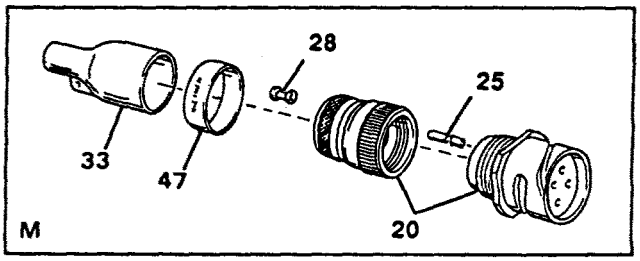

CONNECTOR J42 DETAIL	CONTACT	PLUG	WIRE RUN FROM	WIRE RUN TO	WIRE SIZE
20	25	—	J42A	P14N	1-16-9
	25	—	J42B	P14P	1-16-9
	25	28	J42C	—	—

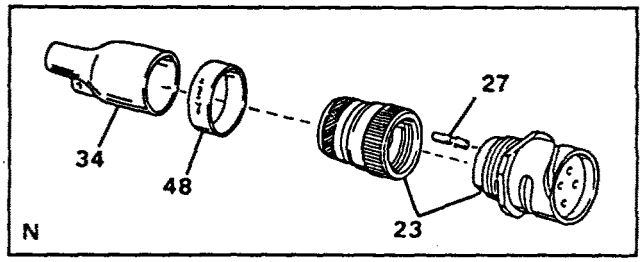

CONNECTOR J43 DETAIL	CONTACT	PLUG	WIRE RUN FROM	WIRE RUN TO	WIRE SIZE
22	27	—	J43A	P18A	1-12-9
	27	—	J43B	P18B	1-12-9
	27	—	J43C	P18C	1-12-9
	27	—	J43D	P18D	1-12-9
	27	—	J43E	P18E	1-12-9

FIGURE 16. MAIN HARNESS - RAW WATER SIDE (SHEET 10 OF 13)

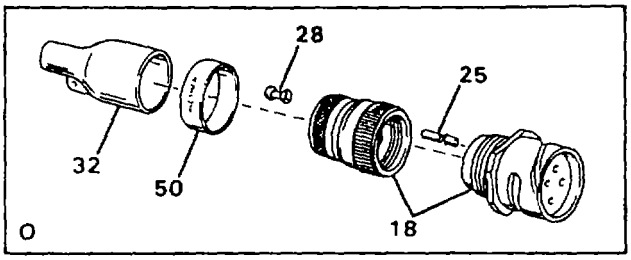

CONNECTOR J37 DETAIL	CONTACT	PLUG	WIRE RUN		WIRE SIZE
			FROM	TO	
18	25	—	J35A	P16T	1-16-9
	25	—	J35B	P16U	1-16-9
	25	28	J35C	—	—

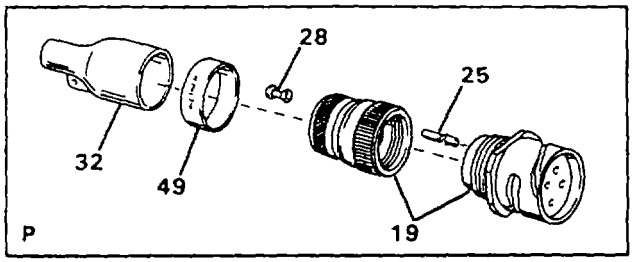

CONNECTOR J36 DETAIL	CONTACT	PLUG	WIRE RUN		WIRE SIZE
			FROM	TO	
19	25	—	J36A	P14V	1-16-9
	25	—	J36B	P14W	1-16-9
	25	28	J36C	—	—

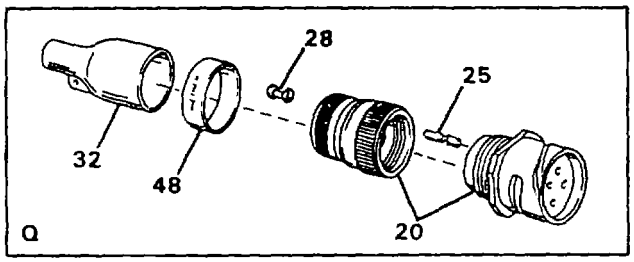

CONNECTOR J35 DETAIL	CONTACT	PLUG	WIRE RUN		WIRE SIZE
			FROM	TO	
20	25	—	J37A	P14X	1-16-9
	25	—	J37B	P14Z	1-16-9
	25	28	J37C	—	—

FIGURE 16. MAIN HARNESS - RAW WATER SIDE (SHEET 11 OF 13)

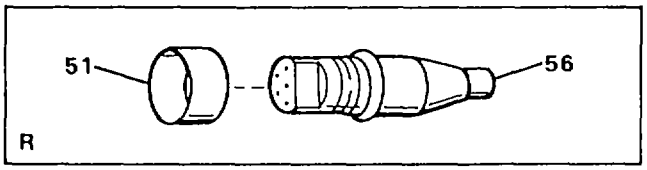

CONNECTOR J48 DETAIL	CONTACT	PLUG	WIRE RUN		WIRE SIZE
			FROM	TO	
57	—	—	J48A	P14f	1-18-9
	—	—	J48B	—	—
	—	—	J48C	P14h	1-18-9
	—	—	J48D	P14b	1-18-9
	—	—	J48E	P14d	1-18-9

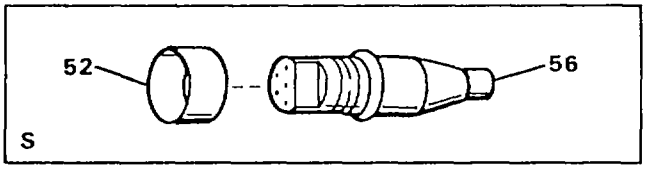

CONNECTOR J38 DETAIL	CONTACT	PLUG	WIRE RUN		WIRE SIZE
			FROM	TO	
57	—	—	J38A	P14L	1-18-9
	—	—	J38B	—	—
	—	—	J38C	P14M	1-18-9
	—	—	J38D	P14J	1-18-9
	—	—	J38E	P14K	1-18-9

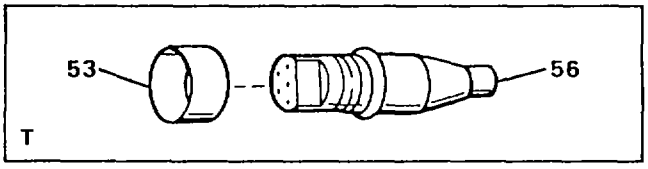

CONNECTOR J39 DETAIL	CONTACT	PLUG	WIRE RUN		WIRE SIZE
			FROM	TO	
57	—	—	J39A	P14T	1-18-9
	—	—	J39B	—	—
	—	—	J39C	P14U	1-18-9
	—	—	J39D	P14R	1-18-9
	—	—	J39E	P14S	1-18-9

FIGURE 16. MAIN HARNESS - RAW WATER SIDE (SHEET 12 OF 13)

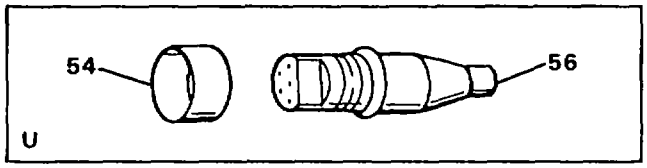

CONNECTOR J40 DETAIL	CONTACT	PLUG	WIRE RUN		WIRE SIZE
			FROM	TO	
57	—	—	J40A	P14G	1-18-9
	—	—	J40B	—	—
	—	—	J40C	P14H	1-18-9
	—	—	J40D	P14E	1-18-9
	—	—	J40E	P14F	1-18-9

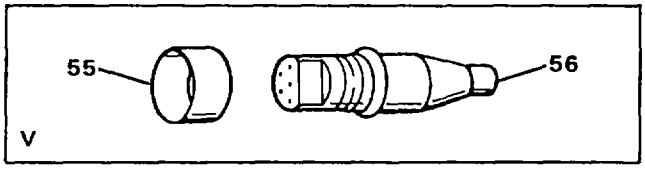

CONNECTOR J41 DETAIL	CONTACT	PLUG	WIRE RUN		WIRE SIZE
			FROM	TO	
57	—	—	J41A	P14C	1-18-9
	—	—	J41B	—	—
	—	—	J41C	P14D	1-18-9
	—	—	J41D	P14A	1-18-9
	—	—	J41E	P14B	1-18-9

FIGURE 16. MAIN HARNESS - RAW WATER SIDE (SHEET 13 OF 13)

(1) ITEM NO	(2) SMR CODE	(3) NSN	(4) CAGEC	(5) PART NUMBER	(6) DESCRIPTION AND USABLE ON CODES(UOC)	(7) QTY
					GROUP 02 WATER PURIFICATION SYSTEM FIG. 16 MAIN HARNESS - RAW WATER SIDE	
1	PAOZZ	5975013520285	97403	13229E0738-3	..STUFFING TUBE.....	2
2	PBOFF	6150013455619	97403	13229E1259-5	..CABLE ASSEMBLY,POWE W49.....	1
3	PBFFF	5935013467132	17549	CA3106E18-11P-B-02-57	...CONNECTOR,PLUG,ELEC P43.....	1
4	PAFZZ	5999012793055	71468	030-8587-000	....CONTACT,ELECTRICAL.....	5
5	XDFZZ		09647	120-02433-118	...MARKER.....	1
6	PBFZZ	5970013498562	97403	13229E1213-2	...INSULATION SLEEVING.....	1
7	XDFZZ		09647	120-02433-56	...MARKER.....	1
8	MFFZZ		09647	120-02602-6	...TUBING CUT TO LENGTH FROM BULK, P/N 13229E1282-2.....	1
9	PBOZZ	5940001434777	96906	MS25036-157	...TERMINAL,LUG.....	2
10	MFFZZ		09647	1-12-9-W49	...WIRE,PVC,WHITE CUT TO LENGTH FROM BULK, P/N M5086/1-12-9.....	5
11	XDFZZ		01121	B-321HCPS.9-3336W	...MARKER.....	10
12	PBOFF	6150013461702	97403	13229E1265	..CABLE ASSEMBLY,SPEC W37.....ETN	1
12	PBOFF		97403	13229E0150	..CABLE ASSEMBLY,SPEC W37 FKD INCLUDES ITEMS 13 THRU 56 EXCEPT ITEMS 21 AND 45.....	1
13	PBFFF	5935013467133	17549	CA3108F28-11PWB-15-57	...CONNECTOR,PLUG,ELEC P12.....	1
14	PBFFF	5935013467134	17549	CA3108F28-21P-B-15-57	...CONNECTOR,PLUG,ELEC P14.....	1
15	PBFFF	5935013467135	17549	CA3108F28-11PXB-15-57	...CONNECTOR,PLUG,ELEC P16.....	1
16	PBFFF	5935013467136	17549	CA3108F22-23P-B-15-57	...CONNECTOR,PLUG,ELEC P18.....	1
17	PBFFF	5935013467137	17549	CA3108F28-11S-B-15-57	...CONNECTOR,PLUG,ELEC P52.....	1
18	PBFFF	5935013475398	17549	CA3101E14S-7SXB-02-57	...CONNECTOR,PLUG,ELEC J37, J51.....	1
19	PBFFF	5935013467138	17549	CA3101E14S-7SWB-02-57	...CONNECTOR,PLUG,ELEC J36, J46, J50.....	3
20	PBFFF	5935013525856	17549	CA3101E14S-7S-B-02-57	...CONNECTOR,PLUG,ELEC J35, J42, J45, J47, J49.....	5
21	PBFFF	5935013467140	17549	CA3101E18-4S-B-02-57	...CONNECTOR,PLUG,ELEC J44.....ETN	1
22	PBFFF	5935013467141	17549	CA3101E18-11S-B-02-57	...CONNECTOR,PLUG,ELEC J43.....	1
23	PAFZZ	5999012793055	71468	030-8587-000	....CONTACT,ELECTRICAL PART OF KIT 120-02593-P.....	73
24	PAFZZ	5999013448759	71468	030-8588-000	....CONTACT,ELECTRICAL PART OF KIT 120-02593-P.....	16
25	PAFZZ	5999013438906	17549	031-8555-000	....CONTACT,ELECTRICAL PART OF KIT 120-02593-P.....	30
26	PAFZZ	5999011588887	71468	031-8556-000	....CONTACT,ELECTRICAL PART OF ETN KIT 120-02593-P.....	22
26	PAFZZ	5999011588887	71468	031-8556-000	....CONTACT,ELECTRICAL PART OF FKD KIT 120-02593-P.....	18
27	PAFZZ	5999013438909	71468	031-8557-000	....CONTACT,ELECTRICAL PART OF	9

(1) ITEM NO	(2) SMR CODE	(3) NSN	(4) CAGEC	(5) PART NUMBER	(6) DESCRIPTION AND USABLE ON CODES(UOC)	(7) QTY
					KIT 120-02593-P.....	
29	XDFZZ		17549	225-0018-000	...PLUG,WIRE.....	7
28	XDFZZ		17549	225-0017-000	...PLUG,WIRE.....ETN	35
28	XDFZZ		17549	225-0017-000	...PLUG,WIRE.....FKD	31
30	PBFZZ	5970010930413	06090	222A163-3/42	...INSULATION SLEEVING NOT SUPPLIED WITH CONNECTOR.....	4
31	PBFZZ	5970010931683	06090	222A174-3/42	...INSULATION SLEEVING.....	1
32	PBFZZ	5970013484761	97403	13229E1213-1	...INSULATION SLEEVING.....FKD	15
32	PBFZZ	5970013484761	97403	13229E1213-1	...INSULATION SLEEVING.....ETN	10
33	PBFZZ	5970013498562	97403	13229E1213-2	...INSULATION SLEEVING.....	2
33	PBFZZ	5970013498562	97403	13229E1213-2	...INSULATION SLEEVING.....	1
34	XDFZZ		09647	120-02433-87	..MARKER NOT SUPPLIED WITH CONNECTOR.....	1
35	XDFZZ		09647	120-02433-89	...MARKER.....	1
36	XDFZZ		09647	120-02433-91	...MARKER.....	1
37	XDFZZ		09647	120-02433-93	...MARKER.....	1
38	XDFZZ		09647	120-02433-127	...MARKER.....	1
39	XDFZZ		09647	120-02433-180	...MARKER.....	1
40	XDFZZ		09647	120-02433-179	...MARKER.....	1
41	XDFZZ		09647	120-02433-178	...MARKER.....	1
42	XDFZZ		09647	120-02433-176	...MARKER.....	1
43	XDFZZ		09647	120-02433-175	...MARKER.....	1
44	XDFZZ		09647	120-02433-174	...MARKER.....	1
45	XDFZZ		09647	120-02433-173	...MARKER.....ETN	1
46	XDPZZ		09647	120-02433-171	...MARKER.....	1
47	XDFZZ		09647	120-02433-172	...MARKER.....	1
48	XDFZZ		09647	120-02433-166	...MARKER.....	1
49	XDFZZ		09647	120-02433-165	...MARKER.....	1
50	XDFZZ		09647	120-02433-164	...MARKER.....	1
51	XDFZZ		09647	120-02433-177	...MARKER.....	1
52	XDFZZ		09647	120-02433-167	...MARKER.....	1
53	XDFZZ		09647	120-02433-168	...MARKER.....	1
54	XDFZZ		09647	120-02433-169	...MARKER.....	1
55	XDFZZ		09647	120-02433-170	...MARKER.....	1
56	PAFZZ	5935013518740	3Z033	BVP-ACTUC-2L	...CONNECTOR,PLUG, ELEC J38, J39, J40, J41, J49.....	5
57	XDFZZ		01121	B-321HCPS.9-3336 W	...MARKER USED ON INDIVIDUAL WIRE RUN IN HARNESS ASSEMBLY..... ETN	128

END OF FIGURE

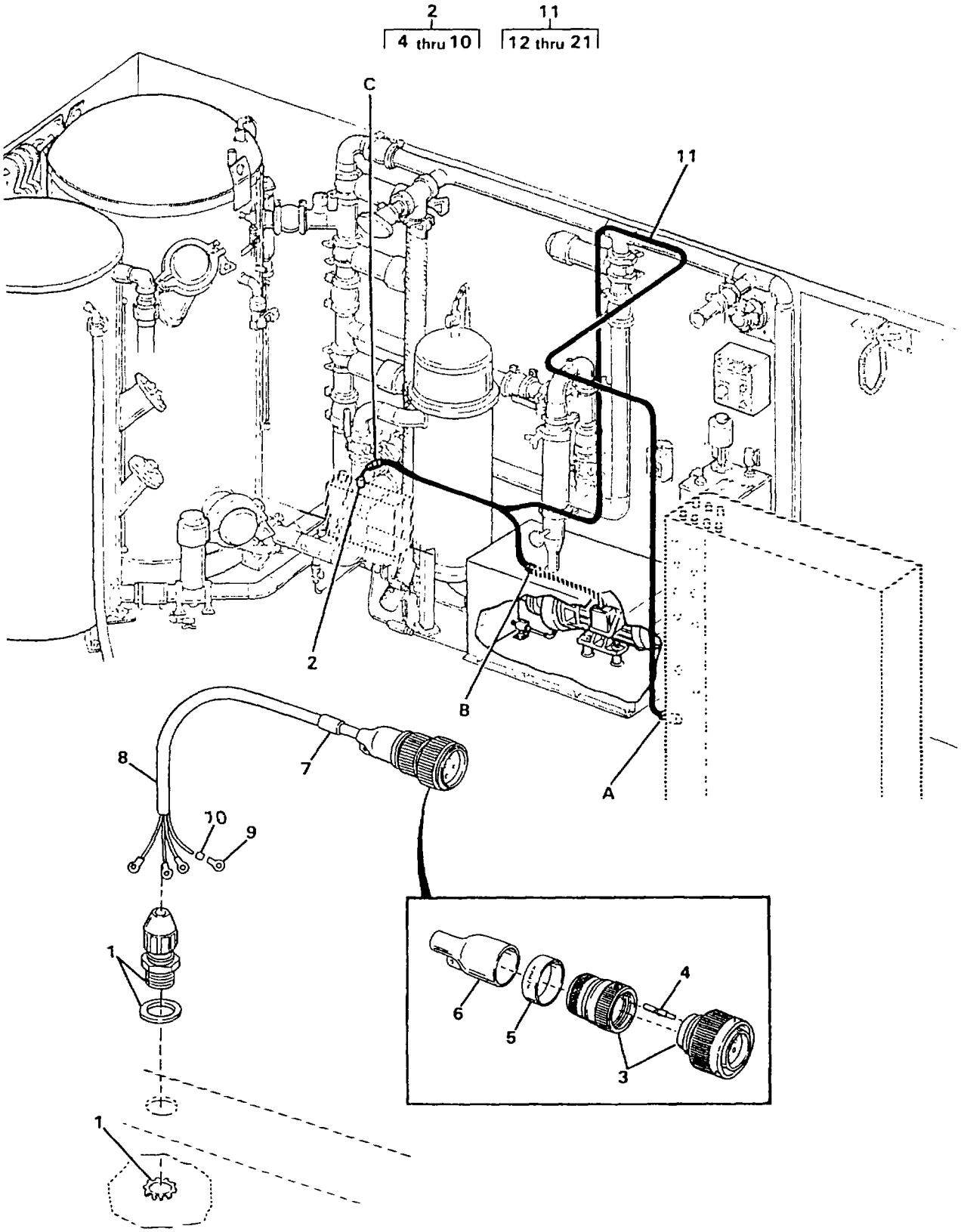

FIGURE 17. 440V HARNESS - FRONT WALL (SHEET 1 OF 3)

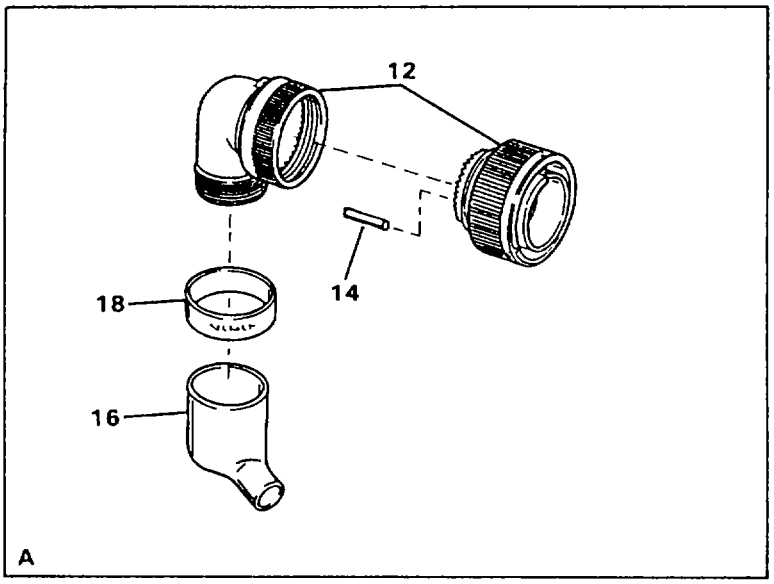

CONNECTOR P21 DETAIL	CONTACT	PLUG	WIRE RUN		WIRE SIZE	MARKER
			FROM	TO		
12	14	—	P21A	J23A	1-12-9	21
	14	—	P21B	J23B	1-12-9	21
	14	—	P21C	J23C	1-12-9	21
	14	—	P21D	J23D	1-12-9	21
	14	—	P21E	J22A	1-12-9	21
	14	—	P21F	J22B	1-12-9	21
	14	—	P21G	J22C	1-12-9	21
	14	—	P21H	J22D	1-12-9	21

FIGURE 17. 440V HARNESS - FRONT WALL (SHEET 2 OF 3)

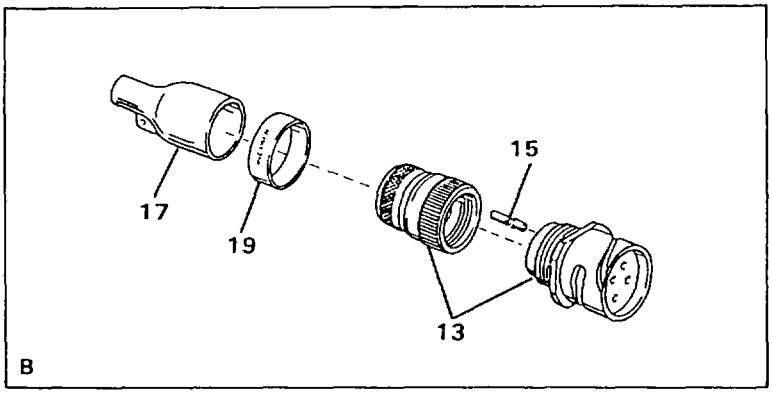

CONNECTOR J22 DETAIL	CONTACT	PLUG	WIRE RUN		WIRE SIZE	MARKER
			FROM	TO		
13	15	—	J22A	P21E	1-12-9	21
	15	—	J22B	P21F	1-12-9	21
	15	—	J22C	P21G	1-12-9	21
	15	—	J22D	P21H	1-12-9	21

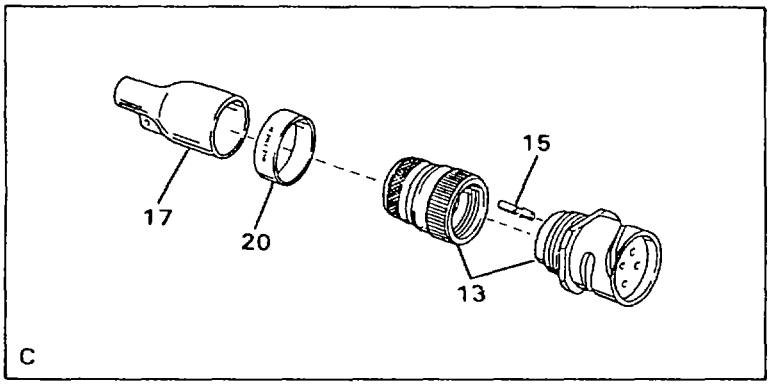

CONNECTOR J23 DETAIL	CONTACT	PLUG	WIRE RUN		WIRE SIZE	MARKER
			FROM	TO		
13	15	—	J23A	P21A	1-12-9	21
	15	—	J23B	P21B	1-12-9	21
	15	—	J23C	P21C	1-12-9	21
	15	—	J23D	P21D	1-12-9	21

FIGURE 17. 440V HARNESS - FRONT WALL (SHEET 3 OF 3)

(1) ITEM NO	(2) SMR CODE	(3) NSN	(4) CAGEC	(5) PART NUMBER	(6) DESCRIPTION AND USABLE ON CODES(UOC)	(7) QTY
					GROUP 02 WATER PURIFICATION SYSTEM FIG. 17 440V HARNESS - FRONT WALL	
1	PBFZZ	5975013520286	97403	13229E0738-1	..STUFFING TUBE.....	1
2	PBOFF	6150013455621	97403	13229E1260-14	..CABLE ASSEMBLY,SPEC W42.....	1
3	PBFFF	5935013500159	17549	CA3106E20-4P-B-02-57	...CONNECTOR,PLUG,ELEC P22.....	1
4	PAFZZ	5999013448759	71468	030-8588-000	...CONTACT,ELECTRICAL PART OF KIT P/N 120-02593-P.....	4
5	XDFZZ		09647	120-02433-97	...MARKER.....	1
6	PBFZZ	5970012268102	06090	202K163-3/42	...INSULATION SLEEVING.....	1
7	XDFZZ		09647	120-02433-49	...MARKER.....	2
8	MFFZZ		09647	120-02605-3	...CABLE CUT TO LENGTH FROM BULK, P/N 13229E0741-2.....	1
9	PAOZZ	5940001434777	96906	MS25036-157	...TERMINAL,LUG.....	4
10	XDFZZ		01121	B-321HCPS.9-3336W	...MARKER.....	8
11	PBOFF	6150013528531	97403	13229E1263	..CABLE ASSEMBLY,SPEC W40.....	1
12	PBFFF	5935013467143	17549	CA3108F22-23PWB-15-57	...CONNECTOR,PLUG,ELEC P21.....	1
13	PBFFF	5935013500166	17549	CA3101E20-4S-B-02-57	...CONNECTOR,RECEPTACL J22, J23.....	2
14	PAFZZ	5999013448759	71468	030-8588-000	...CONTACT,ELECTRICAL PART OF KIT P/N 120-02593-P.....	8
15	PAFZZ	5999013438909	71468	031-8557-000	...CONTACT,ELECTRICAL PART OF KIT P/N 120-02593-P.....	8
16	PBFZZ	5970010931683	06090	222A174-3/42	...INSULATION SLEEVING.....	1
17	PBFZZ	5970012268102	06090	202K163-3/42	...INSULATION SLEEVING.....	2
18	XDFZZ		09647	120-02433-96	...MARKER.....	1
19	XDFZZ		09647	120-02433-154	...MARKER.....	1
20	XDFZZ		09647	120-02433-155	...MARKER.....	1
21	XDFZZ		01121	B-321HCPS.9-3336W	...MARKER.....	16

END OF FIGURE

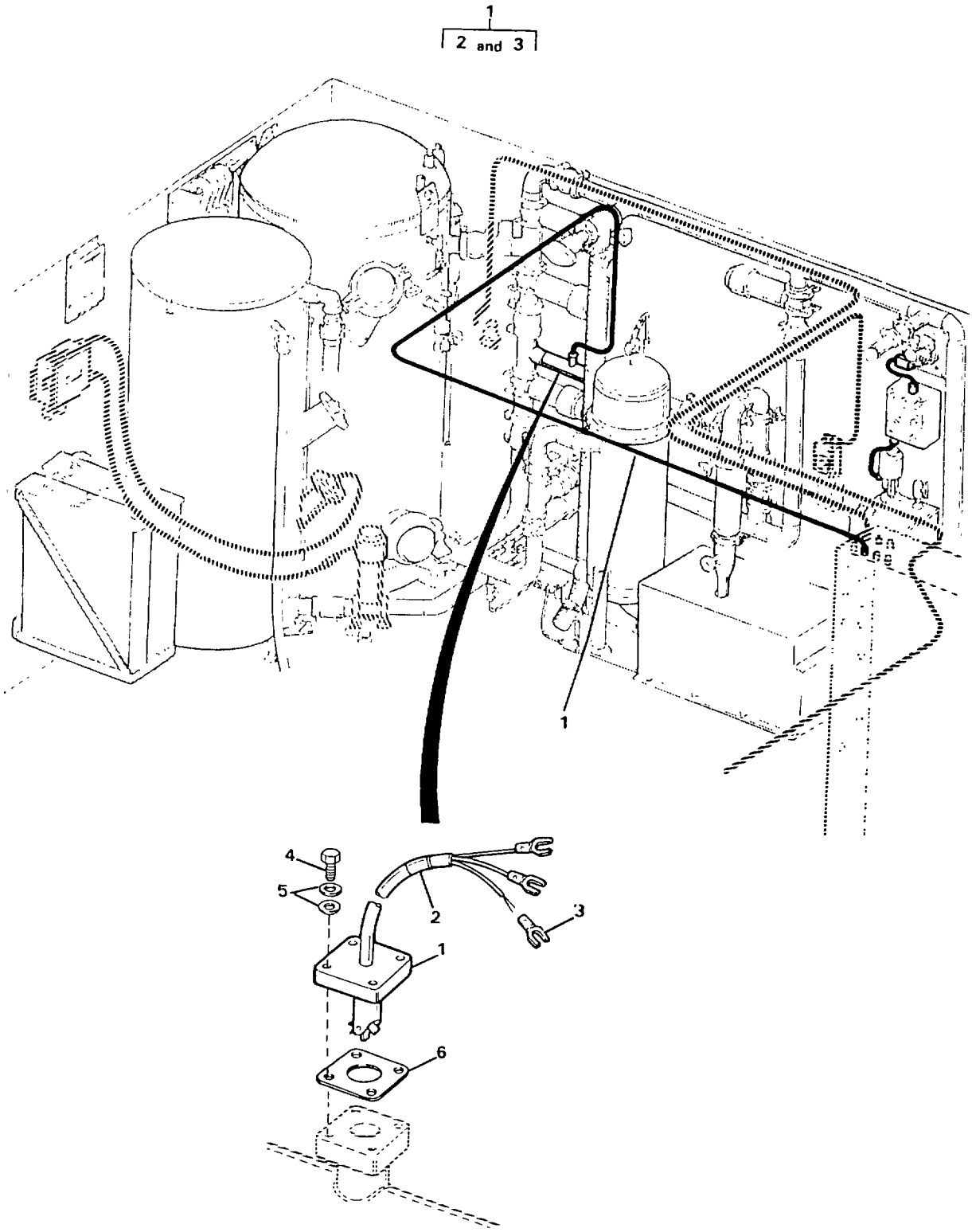

FIGURE 18. AUXILIARY WIRING - FRONT WALL

(1) ITEM NO	(2) SMR CODE	(3) NSN	(4) CAGEC	(5) PART NUMBER	(6) DESCRIPTION AND USABLE ON CODES(UOC)	(7) QTY
					GROUP 02 WATER PURIFICATION SYSTEM FIG. 18 AUXILIARY WIRING - FRONT WALL	
1	PBFFF	6350013501447	97403	13229E0210-1	..SENSOR,FLOW W30.....	1
2	XDFZZ		09647	120-02433-30	...MARKER.....	3
3	PAFZZ	5940007287593	00779	326880	...TERMINAL,LUG.....	3
4	PAOZZ	5305013488362	16290	3007-3716	..SCREW,MACHINE.....	4
5	PAOZZ		16290	3200-3700	..WASHER,FLAT.....	8
6	PAOZZ	5330013599350	16290	P52618	..GASKET.....	1

END OF FIGURE

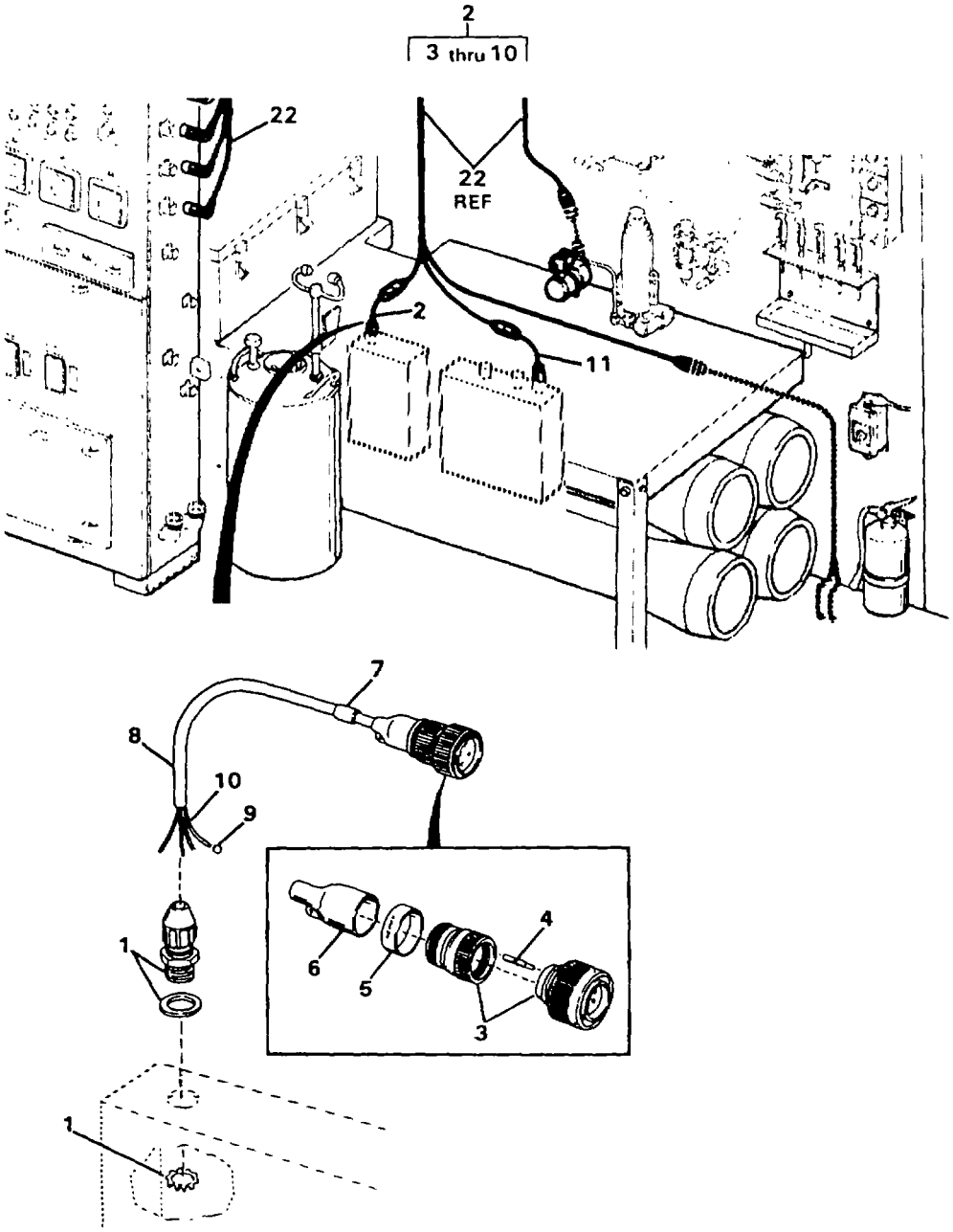

HARNESS ASSY	CONNECTOR	CONTACT PIN	PLUG	WIRE RUN		TERMINAL RING	WIRE	LENGTH
				FROM	TO			
2	3	4	—	P26A	SR7-H	—	10	20.00
		4	—	P26B	SR7-N	—	10	20.00
		4	—	P26C	GND	—	10	20.00
		4	—	P26D	SR5-H	—	10	20.00
		4	—	P26E	SR5-N	—	10	20.00

FIGURE 19. MAIN HARNESS - BACK WALL (SHEET 1 OF 12)

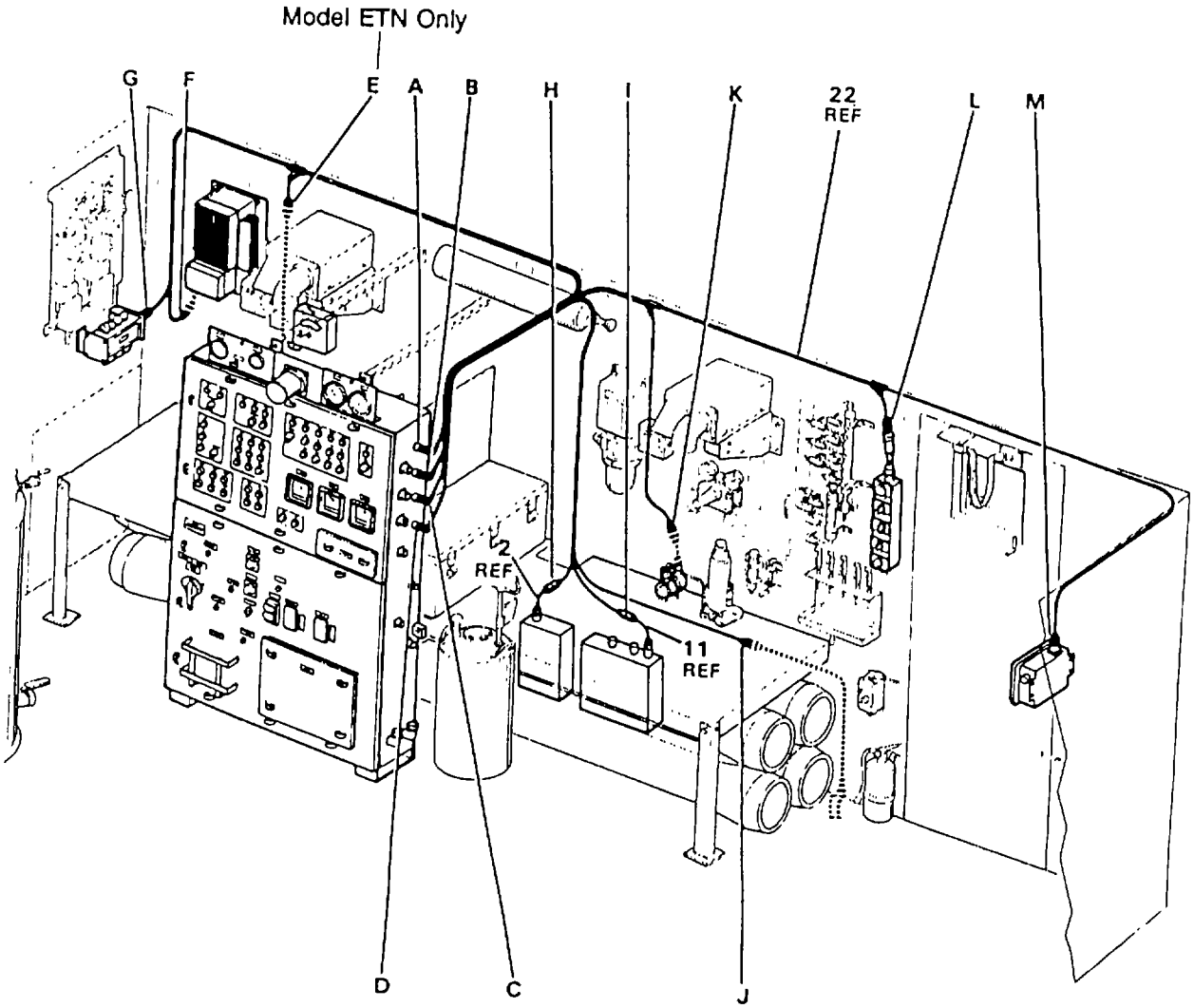

FIGURE 19. MAIN HARNESS - BACK WALL (SHEET 2 OF 12)

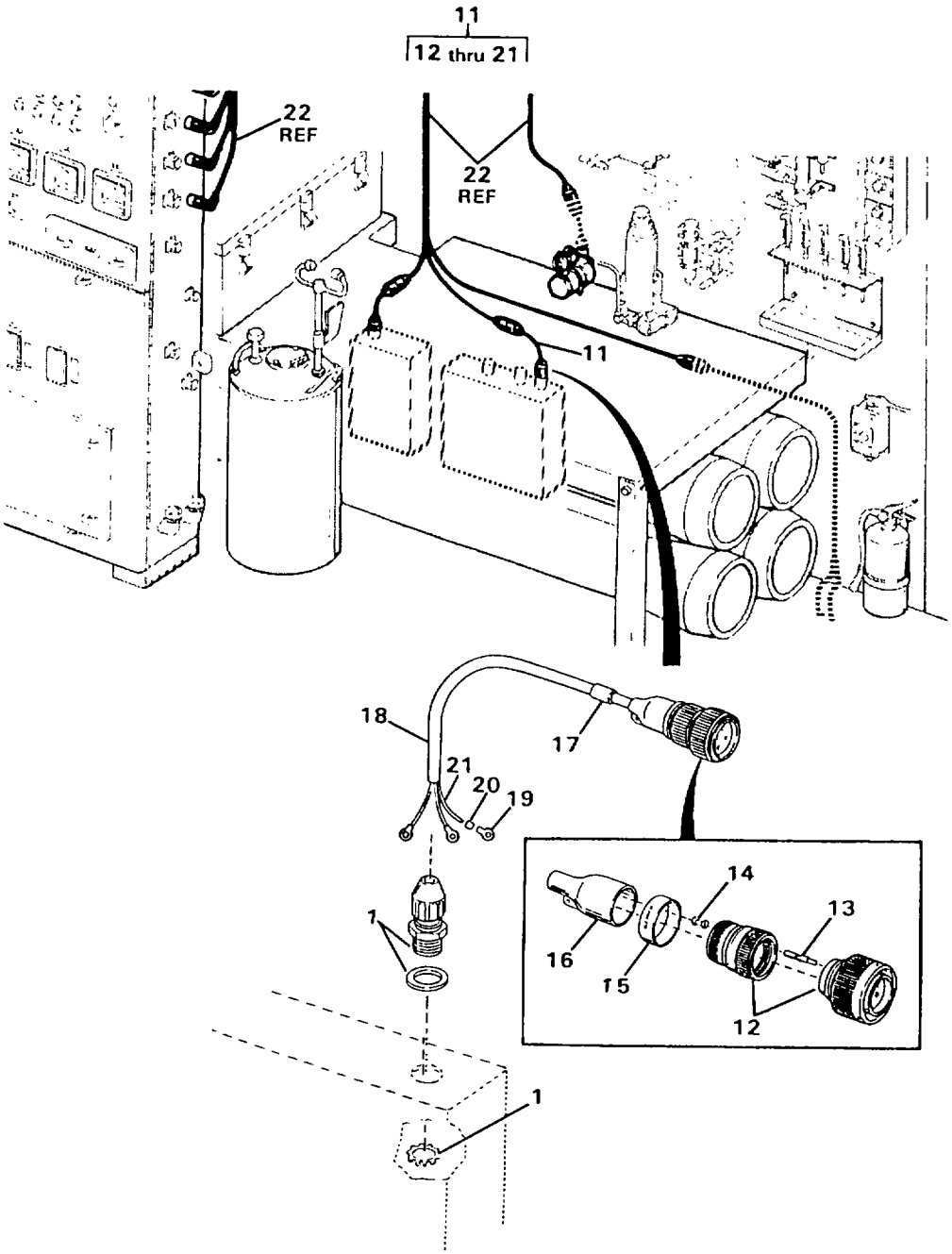

HARNESS ASSY	CONNECTOR	CONTACT PIN	PLUG	WIRE RUN FROM	WIRE RUN TO	TERMINAL RING	WIRE	LENGTH
11	12	13	—	P27A	MOV 12	19	21	28.00
		13	—	P27B	MOV 13	19	21	28.00
		13	—	P27C	GND	19	21	28.00
		13	14	P27D	—	—	—	—
		13	14	P27E	—	—	—	—

FIGURE 19. MAIN HARNESS - BACK WALL (SHEET 3 OF 12)

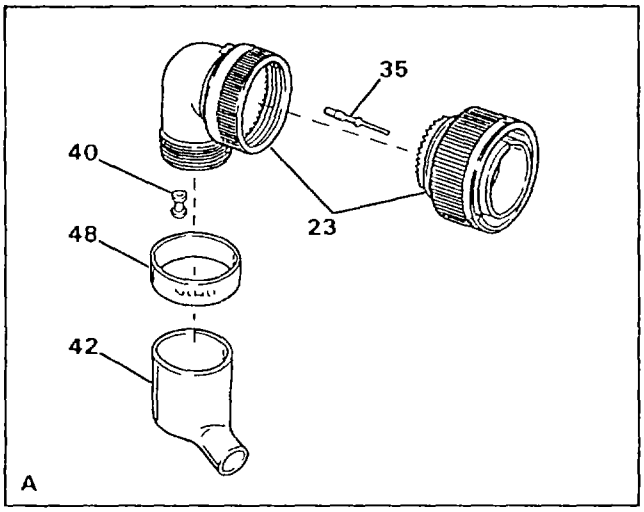

CONNECTOR P11 DETAIL	CONTACT	PLUG	WIRE RUN		WIRE SIZE
			FROM	TO	
23	35	—	P11A	P24A	1-16-9
	35	—	P11B	P24B	1-16-9
	35	—	P11C	P24C	1-16-9
	35	—	P11D	P24D	1-16-9
	35	—	P11E	P24E	1-16-9
	39	—	P11F	P24F	1-16-9
	35	—	P11H	P24H	1-16-9
	35	—	P11J	P24J	1-16-9
	35	—	P11K	P24K	1-16-9
	35	40	P11L	—	—
	35	—	P11M	P24M	1-16-9
	35	—	P11N	P24N	1-16-9

FIGURE 19. MAIN HARNESS - BACK WALL (SHEET 4 OF 12)

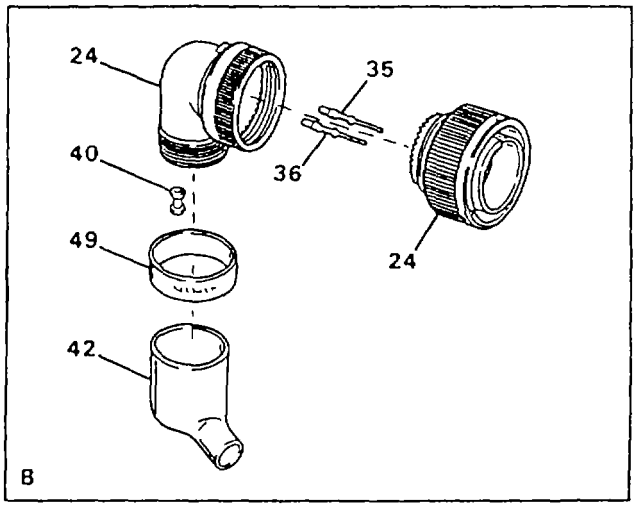

Model ETN Only

CONNECTOR P13 DETAIL	CONTACT	PLUG	WIRE RUN FROM	WIRE RUN TO	WIRE SIZE
24	35	—	P13A	J25A	1-16-9
	35	—	P13B	J25B	1-16-9
	35	—	P13C	J25C	1-16-9
	35	—	P13D	J29A	1-16-9
	35	—	P13E	J29B	1-16-9
	35	—	P13F	J29C	1-16-9
	35	—	P13G	J29D	1-16-9
	35	—	P13H	J29E	1-16-9
	35	—	P13I	J29N	1-16-9
	36	—	P13J	J29J	1-12-9
	35	—	P13K	J29K	1-12-9
	36	—	P13L	J29L	1-12-9
	36	—	P13M	J3C	1-12-9
	35	—	P13N	J29P	1-16-9
	35	—	P13P	J29R	1-16-9
	35	—	P13R	J31A	1-16-9
	35	—	P13S	J31B	1-16-9
	35	—	P13T	J28A	1-16-9
	35	—	P13U	J28B	1-16-9
	35	40	P13V	—	—
	35	40	P13W	—	—
	35	40	P13X	—	—

FIGURE 19. MAIN HARNESS - BACK WALL (SHEET 5 OF 12)

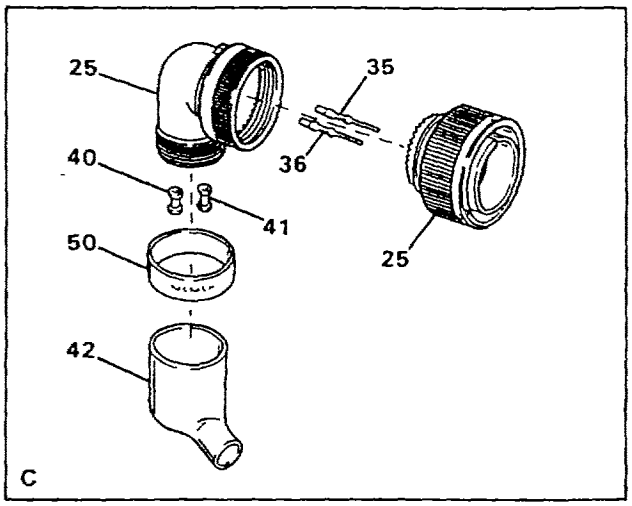

CONNECTOR P15 DETAIL	CONTACT	PLUG	WIRE RUN FROM	WIRE RUN TO	WIRE SIZE
25	35	40	P15A	—	—
	35	40	P15B	—	—
	35	—	P15C	P30A	1-16-9
	35	—	P15D	P30B	1-16-9
	35	—	P15E	P30C	1-16-9
	35	—	P15F	P30D	1-16-9
	35	—	P15G	P30E	1-16-9
	35	—	P15H	P30F	1-16-9
	35	—	P15I	P30G	1-16-9
	36	—	P15J	J27A	1-12-9
	36	—	P15K	J27B	1-12-9
	36	—	P15L	J27C	1-12-9
	36	41	P15M	—	—
	35	—	P15N	P30H	1-16-9
	35	—	P15P	P30I	1-16-9
	35	—	P15R	P30J	1-16-9
	35	—	P15S	P30K	1-16-9
	35	—	P15T	P30L	1-16-9
	35	40	P15U	—	—
	35	40	P15V	—	—
	35	40	P15W	—	—
	35	40	P15X	—	—

FIGURE 19. MAIN HARNESS - BACK WALL (SHEET 6 OF 12)

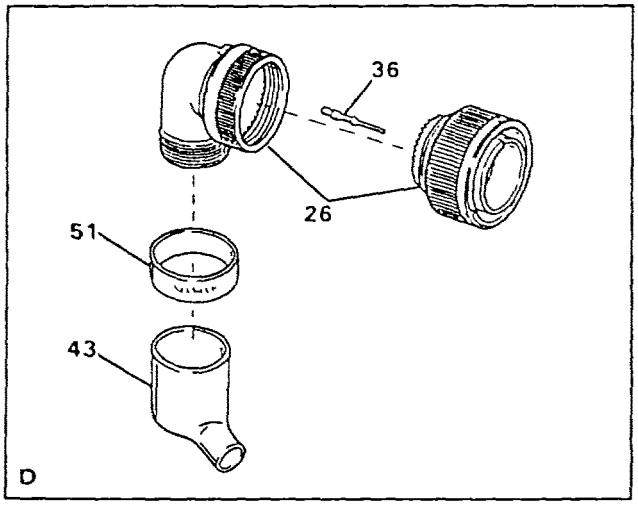

CONNECTOR P17 DETAIL	CONTACT	PLUG	WIRE RUN		WIRE SIZE
			FROM	TO	
26	36	—	P17A	J26A	1-12-9
	36	—	P17B	J26B	1-12-9
	36	—	P17C	J26C	1-12-9
	36	—	P17D	J26D	1-12-9
	36	—	P17E	J26E	1-12-9
	36	—	P17F	J3A	1-12-9
	36	—	P17G	J3B	1-12-9

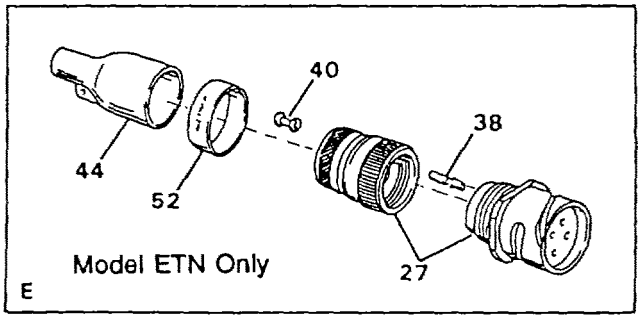

CONNECTOR J25 DETAIL	CONTACT	PLUG	WIRE RUN		WIRE SIZE
			FROM	TO	
27 Model ETN Only	38	—	J25A	P13A	1-16-9
	38	—	J25B	P13B	1-16-9
	38	—	J25C	P13C	1-16-9
	38	40	J25D	—	—

FIGURE 19. MAIN HARNESS - BACK WALL (SHEET 7 OF 12)

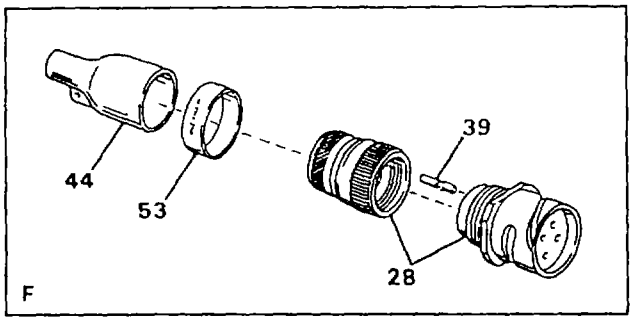

CONNECTOR J3 DETAIL	CONTACT	PLUG	WIRE RUN		WIRE SIZE
			FROM	TO	
28	39	—	J25D	P17F	1-12-9
	39	—	J3B	P17G	1-12-9
	39	—	J3C	P13M	1-12-9

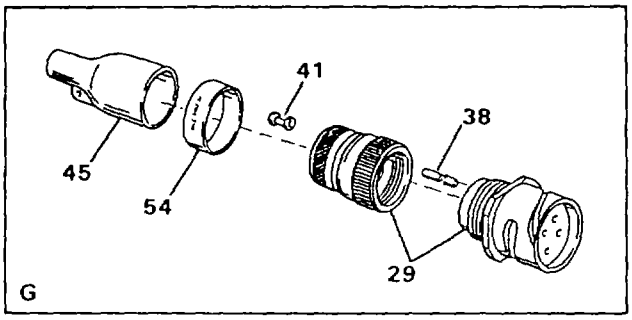

CONNECTOR P24 DETAIL	CONTACT	PLUG	WIRE RUN		WIRE SIZE
			FROM	TO	
29	38	—	P24A	P11A	1-16-9
	38	—	P24B	P11B	1-16-9
	38	—	P24C	P11C	1-16-9
	38	—	P24D	P11D	1-16-9
	38	—	P24E	P11E	1-16-9
	38	—	P24F	P11F	1-16-9
	38	—	P24H	P11H	1-16-9
	38	—	P24J	P11J	1-16-9
	38	—	P24K	P11K	1-16-9
	38	41	P24L	—	—
	38	—	P24M	P11M	1-16-9
	38	—	P24N	P11N	1-16-9

FIGURE 19. MAIN HARNESS - BACK WALL (SHEET 8 OF 12)

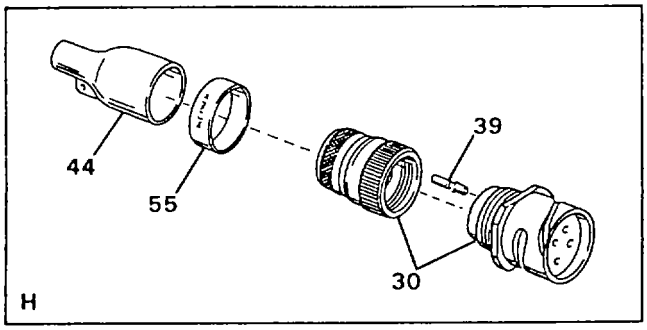

CONNECTOR J26 DETAIL	CONTACT	PLUG	WIRE RUN		WIRE SIZE
			FROM	TO	
30	39	—	J26A	P17A	1-12-9
	39	—	J26B	P17B	1-12-9
	39	—	J26C	P17C	1-12-9
	39	—	J26D	P17D	1-12-9
	39	—	J26E	P17E	1-12-9

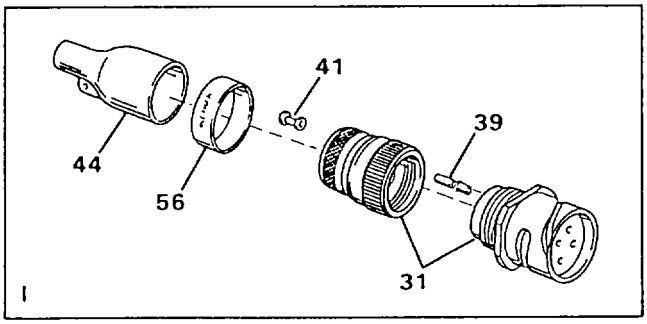

CONNECTOR J27 DETAIL	CONTACT	PLUG	WIRE RUN		WIRE SIZE
			FROM	TO	
31	39	—	J27A	P15J	1-12-9
	39	—	J27B	P15K	1-12-9
	39	—	J27C	P15L	1-12-9
	39	41	J27D	—	—
	39	41	J27E	—	—

FIGURE 19. MAIN HARNESS - BACK WALL (SHEET 9 OF 12)

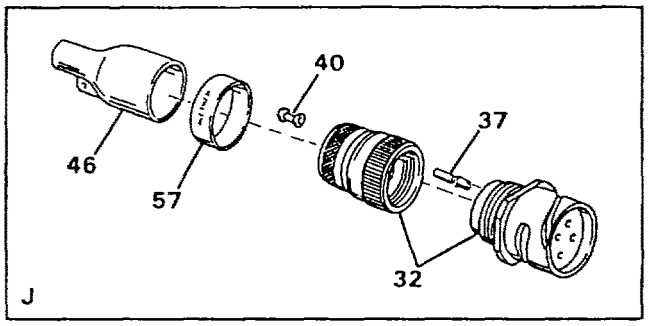

CONNECTOR J31 DETAIL	CONTACT	PLUG	WIRE RUN		WIRE SIZE
			FROM	TO	
32	37	—	J31A	P13R	1-16-9
	37	—	J31B	P13S	1-16-9
	37	40	J31C	—	—

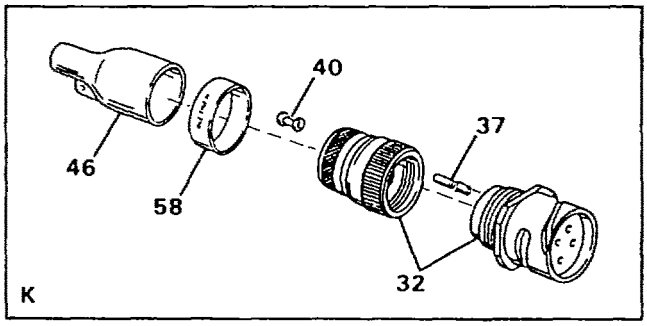

CONNECTOR J28 DETAIL	CONTACT	PLUG	WIRE RUN		WIRE SIZE
			FROM	TO	
32	37	—	J28A	P13S	1-16-9
	37	—	J28B	P13T	1-16-9
	37	40	J28C	—	—

FIGURE 19. MAIN HARNESS - BACK WALL (SHEET 10 OF 12)

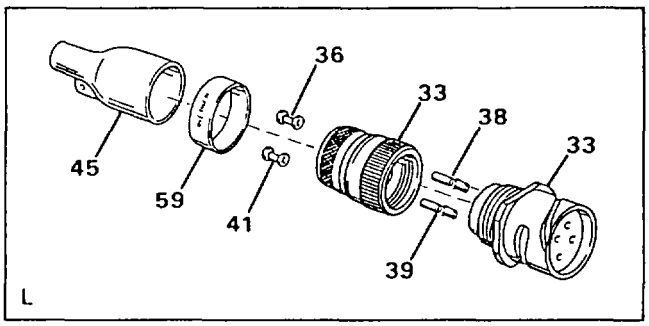

CONNECTOR J29 DETAIL	CONTACT	PLUG	WIRE RUN FROM	WIRE RUN TO	WIRE SIZE
33	38	—	J29A	P13D	1-16-9
	38	—	J29B	P13E	1-16-9
	38	—	J29C	P13F	1-16-9
	38	—	J29D	P13G	1-16-9
	38	—	J29E	P13H	1-16-9
	38	40	J29F	—	—
	38	40	J29G	—	—
	38	40	J29H	—	—
	38	40	J29I	—	—
	39	—	J29J	P13J	1-12-9
	39	—	J29K	P13K	1-12-9
	39	—	J29L	P13L	1-12-9
	39	41	J29M	—	—
	38	—	J29N	P13I	1-16-9
	38	—	J29P	P13N	1-16-9
	38	—	J29R	P13P	1-16-9
	38	40	J29S	—	—
	38	40	J29T	—	—
	38	40	J29U	—	—
	38	40	J29V	—	—
	38	40	J29W	—	—
	38	40	J29X	—	—

FIGURE 19. MAIN HARNESS - BACK WALL (SHEET 11 OF 12)

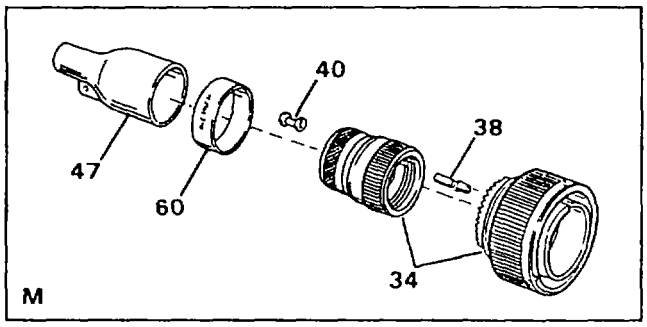

CONNECTOR P30 DETAIL	CONTACT	PLUG	WIRE RUN		WIRE SIZE
			FROM	TO	
34	38	—	P30A	P15C	1-16-9
	38	—	P30B	P15D	1-16-9
	38	—	P30C	P15E	1-16-9
	38	—	P30D	P15F	1-16-9
	38	—	P30E	P15G	1-16-9
	38	—	P30F	P15H	1-16-9
	38	—	P30G	P15I	1-16-9
	38	—	P30H	P15N	1-16-9
	38	—	P30I	P15P	1-16-9
	38	—	P30J	P15R	1-16-91
	38	—	P30K	P15S	1-16-9
	38	—	P30L	P15T	1-16-9
	38	40	P30M	—	—
	38	40	P30N	—	—

FIGURE 19. MAIN HARNESS - BACK WALL (SHEET 12 OF 12)

(1) ITEM NO	(2) SMR CODE	(3) NSN	(4) CAGEC	(5) PART NUMBER	(6) DESCRIPTION AND USABLE ON CODES(UOC)	(7) QTY
					GROUP 02 WATER PURIFICATION SYSTEM FIG. 19 MAIN HARNESS - BACK WALL	
1	PAOZZ	5975013520285	97403	13229E0738-3	..STUFFING TUBE.....	2
2	PBOFF	6150013455622	97403	13229E1259-2	..CABLE ASSEMBLY,SPEC W43.....	1
3	PBFFF	5935013467132	17549	CA3106E18-11P-B-02-57	...CONNECTOR,PLUG,ELEC P26.....	1
4	PAFZZ	5999012793055	71468	030-8587-000	....CONTACT,ELECTRICAL PART OF KIT P/N 120-02593-P.....	5
5	XDFZZ		09647	120-02433-101	...MARKER.....	1
6	PBFZZ	5970013498562	97403	13229E1213-2	...INSULATION SLEEVING.....	1
7	XDFZZ		09647	120-02433-50	...MARKER.....	1
8	MFFZZ		09647	120-02602-7	...TUBING CUT TO LENGTH FROM BULK, P/N 13229E1282-2.....	1
9	XDFZZ		01121	B-321HCPS.9-3336W	...MARKER.....	8
10	MFFZZ		09647	1-12-9-W43	...WIRE,PVC WHITE CUT TO LENGTH FROM BULK, P/N M5086/1-12-9.....	5
11	PBOFF	6150013455623	97403	13229E1259-3	..CABLE ASSEMBLY,SPEC W44.....	1
12	PBFFF	5935013467145	17549	CA3106E18-11PXB-02-57	...CONNECTOR,PLUG,ELEC P27.....	1
13	PAFZZ	5999012793055	71468	030-8587-000	...CONTACT,ELECTRICAL PART OF KIT P/N 5 120-02593-P.....	
14	XDFZZ		17549	225-0018-000	...PLUG,WIRE.....	2
15	XDFZZ		09647	120-02433-102	...MARKER.....	1
16	PBFZZ	5970013498562	97403	13229E1213-2	...INSULATION SLEEVING.....	1
17	XDFZZ		09647	120-02433-51	...MARKER.....	1
18	MFFZZ		09647	120-02602-6	...TUBING,ELECT CUT TO LENGTH FROM BULK, P/N 13229El282-3.....	1
19	PAOZZ	5940001434777	96906	MS25036-157	...TERMINAL,PLUG.....	3
20	XDFZZ		09647	120-02590-3	...MARKER.....	8
21	MFFZZ		09647	1-12-9-W44	...WIRE,PVC WHITE CUT TO LENGTH FROM BULK, P/N M5086/1-12-9.....	3
22	PBOFF	6150013455624	97403	13229E1264	..CABLE ASSEMBLY,SPEC W33.....ETN	1
22	PBOFF		97403	13229E0221	...CABLE ASSEMBLY,SPEC W33.....FKD	1
23	PBFFF	5935013467146	09647	120-02316-7 15-57	...CONNECTOR,PLUG,ELEC P11.....	1
24	PBFFF	5935013467147	17549	CA3108F28-11PYB-15-57	...CONNECTOR,PLUG,ELEC P13.....	1
25	PBFFF	5935013467148	17549	CA3108F24-19P-B-15-57	...CONNECTOR,PLUG,ELEC P15.....	1
26	PBFFF	5935013467143	17549	CA3108F22-23PWB-15-57	...CONNECTOR,PLUG,ELEC P17.....	1
27	PBFFF	5935013467140	17549	CA3101E18-4S-B-02-57	...CONNECTOR,PLUG,ELEC J25.....ETN	1
28	PBFFF	5935013473655	17549	CA3101E16-10S-B-02-57	...CONNECTOR,PLUG,ELEC J3.....	1
29	PBFFF	5935013467149	17549	CA3106E24-19S-B-02-57	...CONNECTOR,PLUG,ELEC P24.....	1
30	PBFFF	5935013467141	17549	CA3101E18-11S-B-02-57	...CONNECTOR,PLUG,ELEC J26.....	1

(1) ITEM NO	(2) SMR CODE	(3) NSN	(4) CAGEC	(5) PART NUMBER	(6) DESCRIPTION AND USABLE ON CODES(UOC)	(7) QTY
31	PBFFF	5935013467150	17549	CA3101E18-11SXB-02-57	...CONNECTOR,PLUG,ELEC0 J27.....	1
32	PBFFF	5935013525856	17549	CA3101E14S-7S-B-02-57	...CONNECTOR,PLUG,ELEC J31, J28.....	2
33	PBFFF	5935013464632	17549	CA3101E28-11S-B-02-57	...CONNECTOR,PLUG,ELEC J29.....	1
34	PBFFF	5935013467151	17549	CA3106E14S-7PWB-02-57	...CONNECTOR,PLUG,ELEC P30.....	1
35	PAFZZ	5999012793055	71468	030-8587-000	...CONTACT,ELECTRICAL PART OF KIT P/N 120-02593-P.....	48
36	PAFZZ	5999013448759	71468	030-8588-000	....CONTACT,ELECTRICAL PART OF KIT P/N 120-02593-P.....	15
37	PAFZZ	5999013438906	17549	031-8555-000	....CONTACT,ELECTRICAL PART OF KIT P/N 120-02593-P.....	6
38	PAFZZ	5999011588887	71468	031-8556-000	....CONTACT,ELECTRICAL PART OF KIT P/N 120-02593-P.....	49
39	PAFZZ	5999013438909	71468	031-8557-000	....CONTACT,ELECTRICAL PART OF KIT P/N 120-02593-P.....	17
40	XDFZZ		17549	225-0017-000	....PLUG,WIRE.....	21
41	XDFZZ		17549	225-0018-000	....PLUG,WIRE.....	5
42	PBFZZ	5970010931683	06090	222A174-3/42	...INSULATION SLEEVING.....	3
43	PBFZA	5970010930413	06090	222A163-3/42	...INSULATION SLEEVING.....	1
44	PBFZZ	5970013498562	97403	13229E1213-2	...INSULATION SLEEVING.....	4
45	PBFZZ	5970013488251	97403	13229E1213-4	...INSULATION SLEEVING.....	2
46	PBFZZ	5970013484761	97403	13229E1213-1	...INSULATION SLEEVING.....	2
47	PBFZZ		06090	202K163-3/42	...INSULATION SLEEVING.....	1
48	XDFZZ		09647	120-02433-86	...MARKER.....	1
49	XDFZZ		09647	120-02433-88	...MARKER.....	1
50	XDFZZ		09647	120-02433-90	...MARKER.....	1
51	XDFZZ		09647	120-02433-92	...MARKER.....	1
52	XDFZZ		09647	120-02433-156	...MARKER.....ETN	1
53	XDFZZ		09647	120-02433-147	...MARKER.....	1
54	XDFZZ		09647	120-02433-99	...MARKER.....	1
55	XDFZZ		09647	120-02433-157	...MARKER.....	1
56	XDFZZ		09647	120-02433-158	...MARKER.....	1
57	XDFZZ		09647	120-02433-161	...MARKER.....	1
58	XDFZZ		09647	120-02433-159	...MARKER.....	1
59	XDFZZ		09647	120-02433-160	...MARKER.....	1
60	XDFZZ		09647	120-02433-105	...MARKER.....	1
61	XDFZZ		01121	B-321HCPS.9-3336W	...MARKER USED ON INDIV WIRE RUNS IN HARNESS ASSY W33.....	104

END OF FIGURE

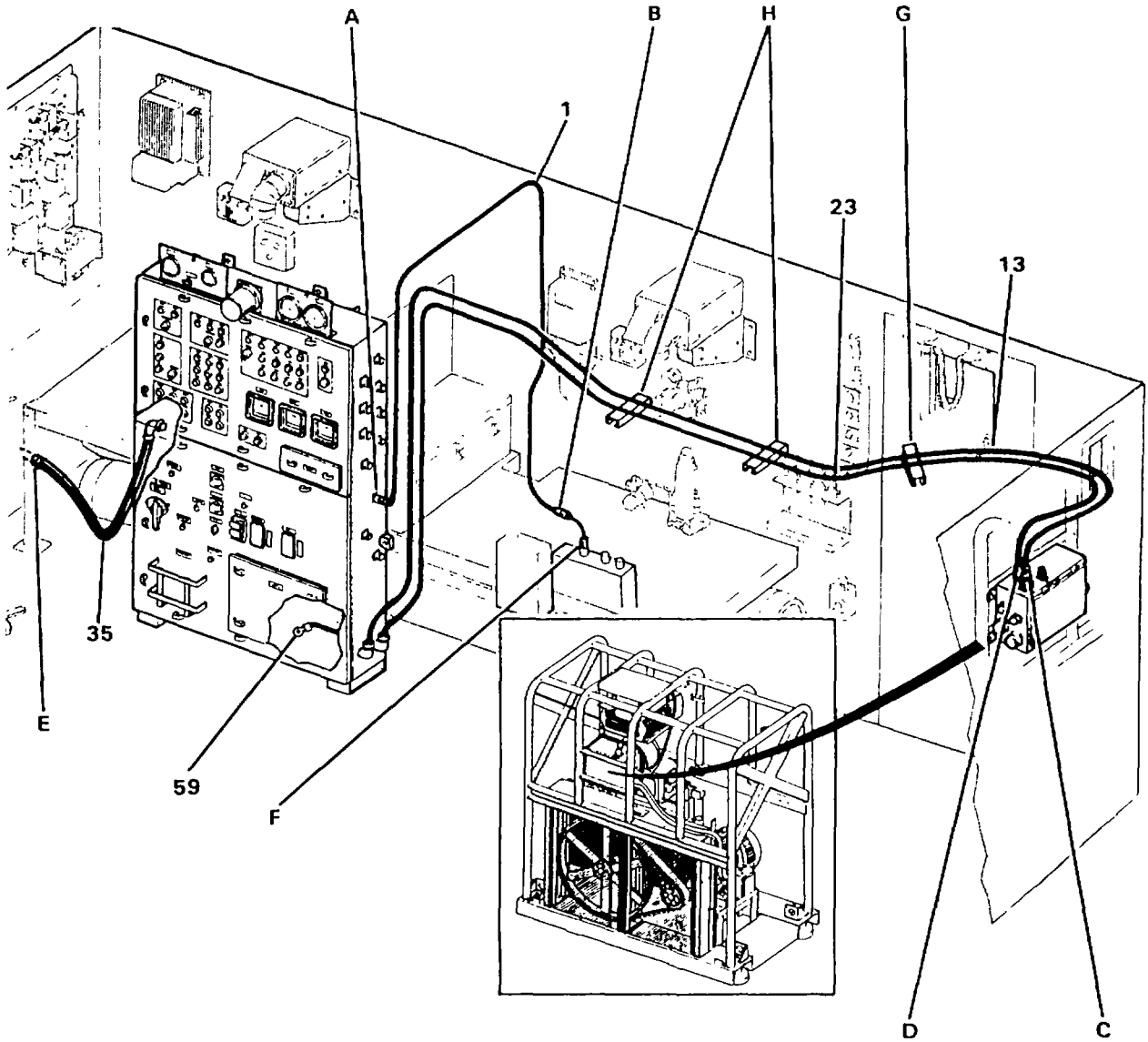

FIGURE 20. 440V HARNESS - BACK WALL (SHEET 1 OF 4)

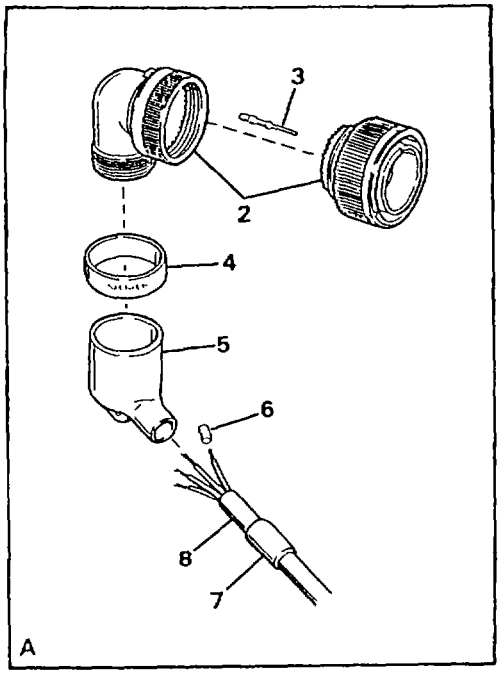

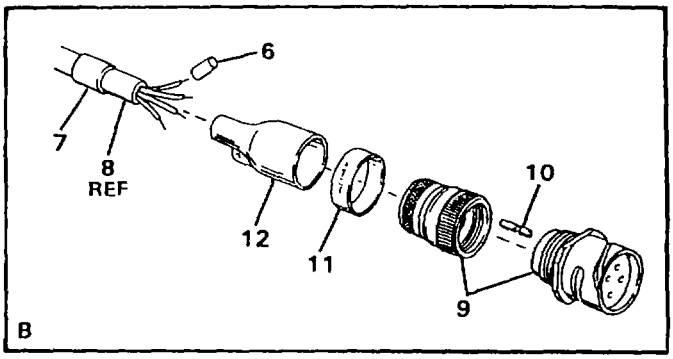

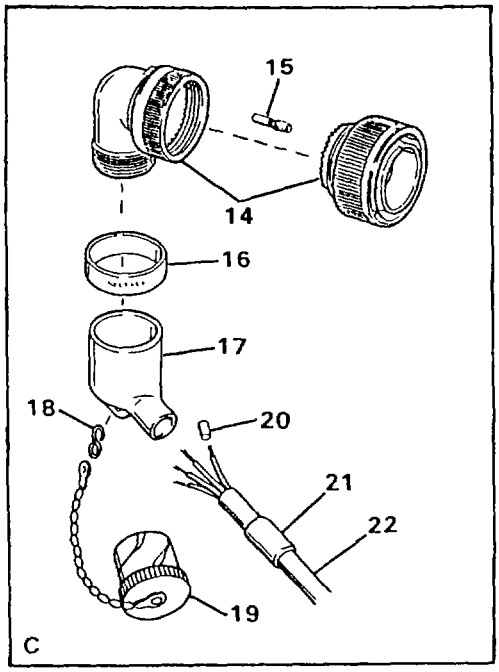

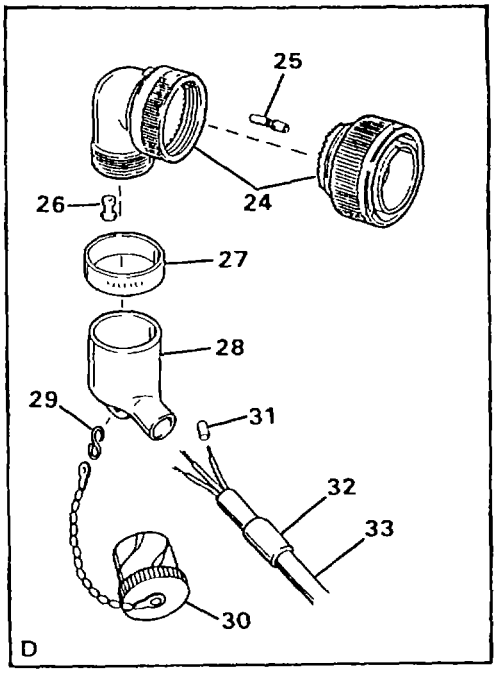

FIGURE 20. 440V HARNESS - BACK WALL (SHEET 2 OF 4)

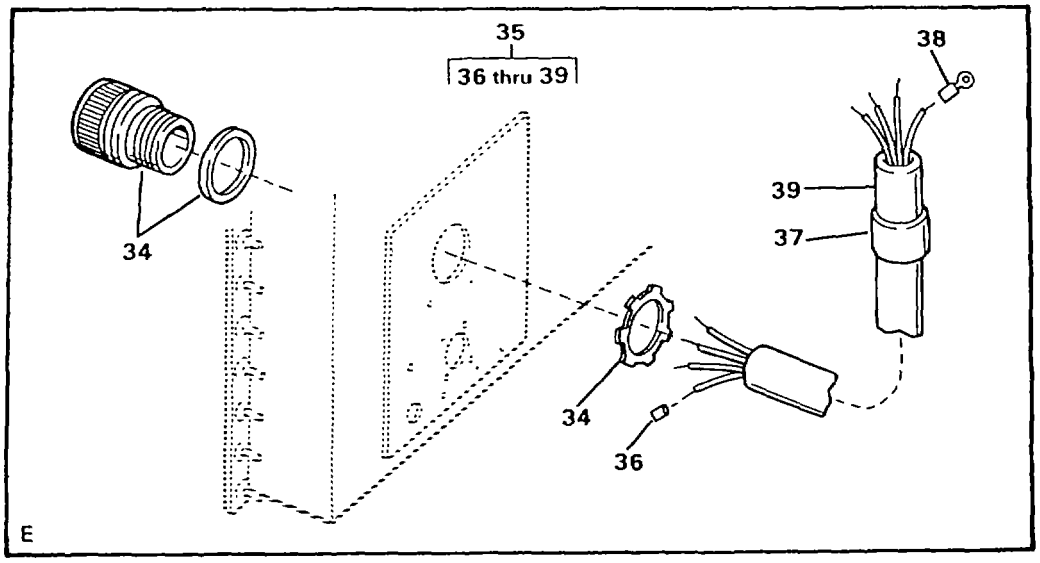

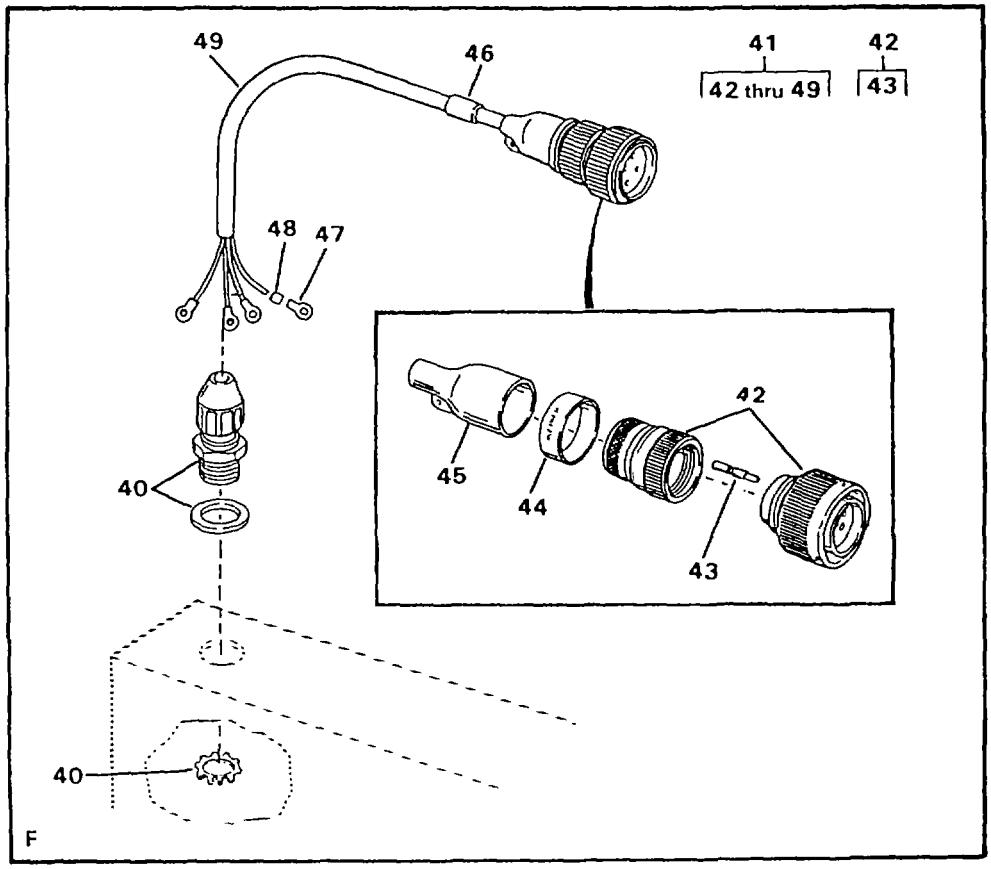

FIGURE 20. 440V HARNESS - BACK WALL (SHEET 3 OF 4)

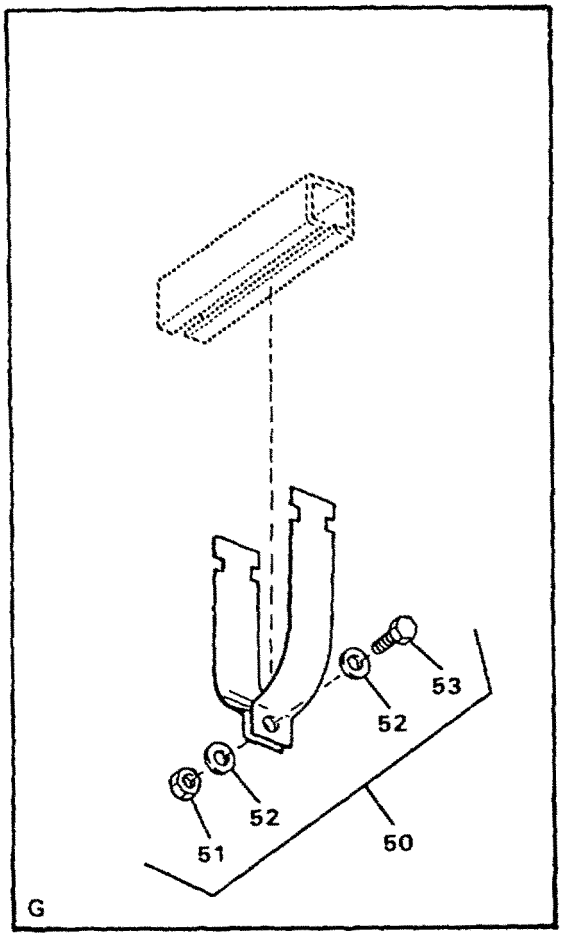

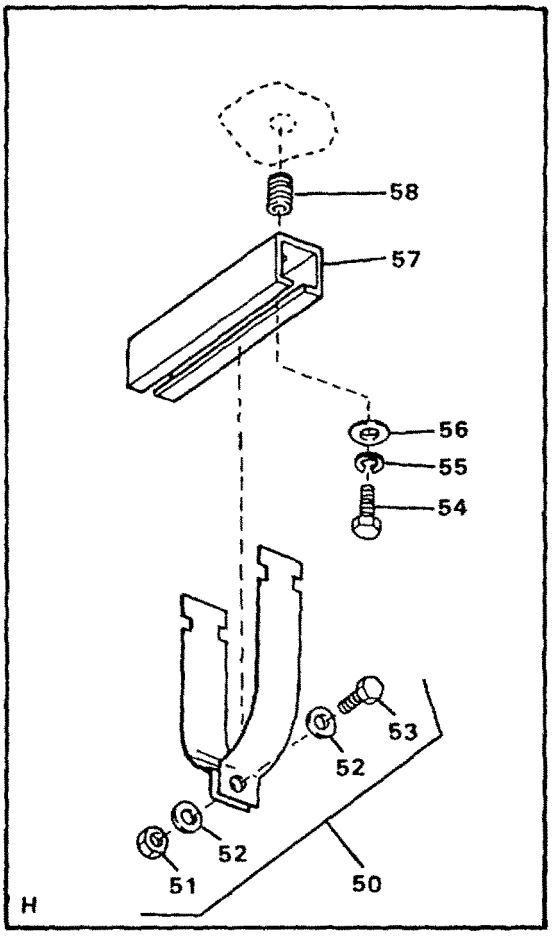

FIGURE 20. 440V HARNESS - BACK WALL (SHEET 4 OF 4)

(1) ITEM NO	(2) SMR CODE	(3) NSN	(4) CAGEC	(5) PART NUMBER	(6) DESCRIPTION AND USABLE ON CODES(UOC)	(7) QTY
					GROUP 02 WATER PURIFICATION SYSTEM FIG. 20 440V HARNES - BACK WALL	
1	PBFFF	6150013455615	97403	13229E1262-2	..CABLE ASSEMBLY,SPEC W35.....	1
2	PBFFF	5935013467152	17549	CA3108F20-4P-B-1 5-57	...CONNECTOR,PLUG,ELEC P19.....	1
3	PAFZZ	5999013448759	71468	030-8588-000	....CONTACT,ELECTRICAL PART OF KIT P/N 120-02593-P.....	4
4	XDFZZ		09647	120-02433-94	...MARKER.....	1
5	PBFZA	5970010930413	06090	222A163-3/42	...INSULATION SLEEVING.....	1
6	XDFZZ		01121	B-321HCPS.9-3336 W	...MARKER.....	8
7	XDFZZ		09647	120-02433-42	...MARKER.....	4
8	MFFZZ		09647	120-02605-3	...CABLE CUT TO LENGTH FROM BULK, P/N 13229E1147-2.....	1
9	PBFFF	5935013500166	17549	CA3101E20-4S-B-0 2-57	...CONNECTOR,RECEPTACL J34.....	1
10	PAFZZ	5999013438909	71468	031-8557-000	....CONTACT,ELECTRICAL PART OF KIT P/N 120-02593-P.....	4
11	XDFZZ		09647	120-02433-163	...MARKER.....	1
12	PBFZZ	5970012268102	06090	202K163-3/42	...INSULATION SLEEVING.....	1
13	PBFFF	6150013455625	97403	13229E1260-23	..CABLE ASSEMBLY,SPEC W38.....	1
14	PBFFF	5935013467153	17549	CA3108F32-17S-B-15-57	...CONNECTOR,PLUG,ELEC P63.....	1
15	PAFZZ	5999013506633	17549	031-8520-000	....CONTACT,ELECTRICAL PART OF KIT P/N 120-02593-P.....	4
16	XDFZZ		09647	120-02433-138	...MARKER.....	1
17	PBFZZ	5970013484762	97403	13229E1342-3	...INSULATION SLEEVING.....	1
18	PAOZZ	4030010225666	51489	700016	...HOOK,CHAIN,S.....	1
19	PAOZZ	5935013499010	97403	13229E1210-4	...COVER,ELECTRICAL.....	1
20	XDFZZ		01121	B-321HSCPS.9-750 8W	...MARKER.....	8
21	XDFZZ		09647	120-02433-45	...MARKER.....	5
22	MFFZZ		09647	120-02605-6	...CABLE CUT TO LENGTH FROM BULK, P/N 81644.....	1
23	PBFFF	6150013455616	97403	13229E1260-24	..CABLE ASSEMBLY,SPEC W39.....	1
24	PBFFF	5935013467154	17549	CA3108F32-17SW-1 5-57	...CONNECTOR,PLUG,ELEC P64.....	1
25	PAFZZ	5999013506633	17549	031-8520-000	....CONTACT,ELECTRICAL PART OF KIT P/N 120-02593-P.....	4
26	XDFZZ		71468	225-8502-000	....PLUG,WIRE.....	1
27	XDFZZ		09647	120-02433-139	...MARKER.....	1
28	PBFZZ		97403	13229E1342-4	...INSULATION SLEEVING.....FKD	1
28	PBFZZ	5970013484762	97403	13229E1342-3	...INSULATION SLEEVING.....ETN	1
29	PAOZZ	4030010225666	51489	700016	...HOOK,CHAIN,S.....	1
30	PAOZZ	5935013499010	97403	13229E1210-4	...COVER,ELECTRICAL.....	1
31	XDFZZ		01121	B-321HSCPS.9-750 8W	...MARKER.....	6
32	XDFZZ		09647	120-02433-46	...MARKER.....	5
33	MFFZZ		09647	120-02605-7	...CABLE CUT TO LENGTH FROM BULK, P/N 81644	1
34	PAFZZ		97403	13229E0880-3	..ADAPTER,CABLE B/O.....	1

(1) ITEM NO	(2) SMR CODE	(3) NSN	(4) CAGEC	(5) PART NUMBER	(6) DESCRIPTION AND USABLE ON CODES(UOC)	(7) QTY
35	PAFFF	6150013456104	97403	13229E1004	..CABLE,ASSEMBLY,SPEC W1.....	1
36	XDFZZ		01121	B-321HCPS.9-5008 W	...MARKER.....	8
37	XDFZZ		09647	120-02433-1	...MARKER.....	3
38	PAFZZ	5940001155006	96906	MS25036-133	...TERMINAL,LUG.....	1
39	MFFZZ		09647	120-02605-8	...CABLE CUT TO LENGTH FROM KIT P/N 81384.....	1
40	PAFZZ	5975013520286	97403	13229E0738-1	..STUFFING TUBE.....	1
41	PBFFF	6150013455617	97403	13229E1260-17	..CABLE ASSEMBLY,SPEC W36.....	1
42	PBFFF	5935013500159	17549	CA3106E20-4P-B-02-57	...CONNECTOR,PLUG,ELEC P34.....	1
43	PAFZZ	5999013448759	71468	030-8588-000	....CONTACT,ELECTRICAL PART OF KIT P/N 120-02593-P.....	4
44	XDFZZ		09647	120-02433-109	...MARKER.....	1
45	PBFZZ	5970012268102	06090	202K163-3/42	...INSULATION SLEEVING.....	1
46	XDFZZ		09647	120-02433-43	...MARKER.....	1
47	PAFZZ	5940001434777	96906	MS25036-157	...TERMINAL,LUG.....	4
48	XDFZZ		01121	B-321HCPS.9-3336 W	...MARKER.....	8
49	MFFZZ		09647	120-02605-3	...CABLE CUT TO LENGTH FROM BULK, P/N 13229E0741-2.....	1
50	PAFZZ		97403	13229E0685-1	..STRAP,RETAINING.....	6
51	PAFZZ	5310009291807	96906	MS51922-2	...NUT,SELF-LOCKING,HE.....	6
52	PAFZZ	5310010911248	96906	MS15795-810	...WASHER,FLAT.....	12
53	PAFZZ	5305002078253	96906	MS35307-308	...SCREW,CAP,HEXAGON H.....	6
54	PAFZZ	5305007175467	96906	MS35307-362	...SCREW,CAP,HEXAGON H.....	4
55	PAFZZ	5310009847042	96906	MS35338-141	..WASHER,LOCK.....	4
56	PAFZZ	5310007737618	96906	MS15795-814	..WASHER,FLAT.....	4
57	PAFZZ	5340013495665	97403	132229E0380-7	..BRACKET,DOUBLE ANGLE.....	2
58	PAFZZ	5325002904492	96906	MS122203	..INSERT,SCREW THREAD.....	4
59	PAFZZ	5325002904492	96906	MS25036-124	...TERMINAL,LUG.....	3

END OF FIGURE

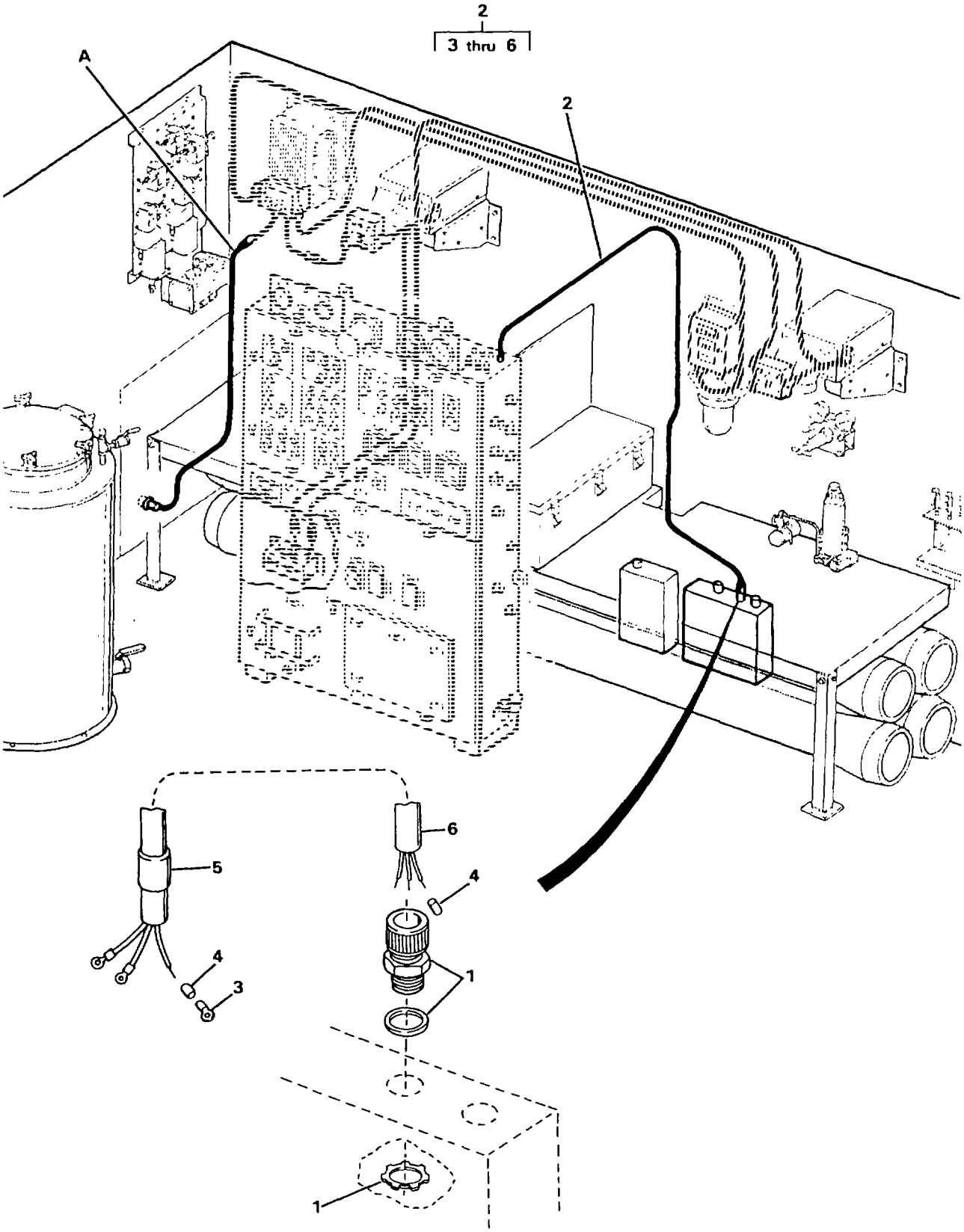

FIGURE 21. DC WIRING - BACK WALL (SHEET 1 OF 2)

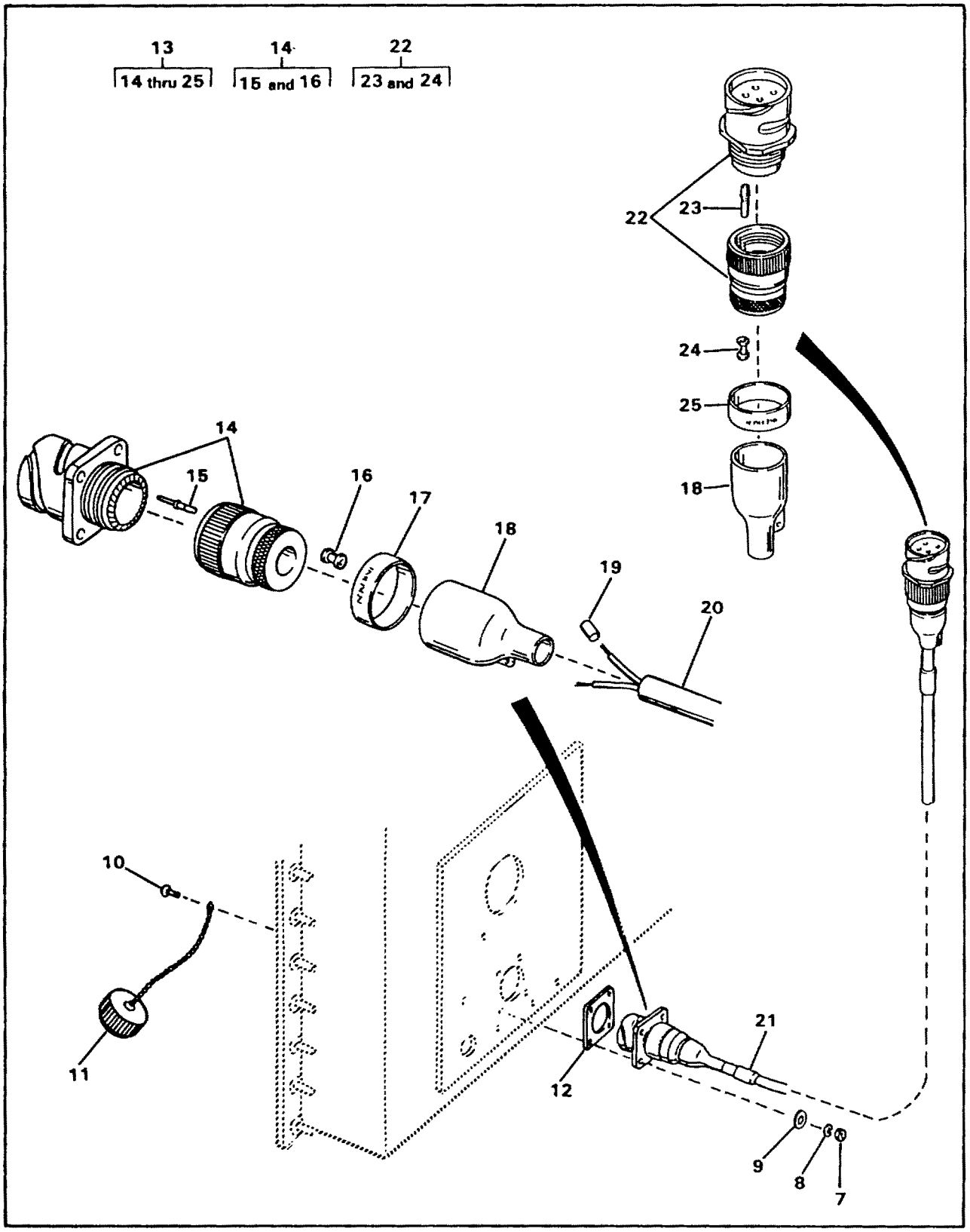

FIGURE 21. DC WIRING - BACK WALL (SHEET 2 OF 2)

(1) ITEM NO	(2) SMR CODE	(3) NSN	(4) CAGEC	(5) PART NUMBER	(6) DESCRIPTION AND USABLE ON CODES(UOC)	(7) QTY
					GROUP 02 WATER PURIFICATION SYSTEM FIG. 21 DC WIRING - BACK WALL	
1	PBFZZ	5975013622110	15235	CGB114-SG	..BOX CONNECTOR,ELECT.....	1
2	PBFFF	6150013455626	97403	13229E1257-13	..CABLE ASSEMBLY,SPEC W29.....	1
3	PAFZZ	5940001434774	96906	MS25036-153	...TERMINAL,LUG.....	3
4	XDFZZ		01121	B-321HCPS.9-3336 W	...MARKER.....	6
5	XDFZZ		09647	120-02433-29	...MARKER.....	4
6	MFFZZ		09647	120-02605-9	...CABLE CUT TO LENGTH FROM BULK, P/N 45371.....	1
7	PAOZZ	5310009349748	96906	MS35649-244	..NUT,PLAIN,HEXAGON.....	4
8	PAOZZ	5310009338118	96906	MS35338-135	..WASHER,LOCK.....	4
9	PAOZZ	5310007225998	96906	MS15795-805	..WASHER,FLAT.....	4
10	PAOZZ	5305000545652	96906	MS51957-18	..SCREW,MACHINE 0.112-40 UNC-2A X 0.625 LG.....	4
11	PAOZZ	5935013503278	97403	13229E1209-3	..COVER,ELECTRICAL.....	1
12	PAOZZ	5330013502912	97403	13229E1211-2	..GASKET.....	1
13	PBOFF	6150013455618	97403	13229E1262-1	..CABLE ASSEMBLY,SPEC W3.....	1
14	PBFFF	5935013467173	17549	CA3100E22-2P-B-0 2-05-57	...CONNECTOR,RECEPTACL J1.....	1
15	PAFZZ	5999013497667	17549	030-8612-000	....CONTACT,ELECTRICAL PART OF KIT P/N 120-02593-P.....	3
16	XDFZZ		17549	225-0019-000	....PLUG,WIRE.....	1
17	XDFZZ		09647	120-02433-145	...MARKER.....	1
18	PBFZZ	5970012268102	06090	202K163-3/42	...INSULATION SLEEVING.....	2
19	XDFZZ		01121	B-321HSCPS.9-500 8W	...MARKER.....	4
20	MFFZZ		09647	120-02605-10	...CABLE CUT TO LENGTH FROM BULK, P/N 120-07639-6.....	1
21	XDFZZ		09647	120-02433-3	...MARKER.....	2
22	PBFFF	5935013464631	17549	CA3101E22-2S-B-0 2-57	...CONNECTOR,PLUG,ELEC J2.....	1
23	PAFZZ	5999013497668	17549	031-8519-000	....CONTACT,ELECTRICAL PART OF KIT, P/N 120-02593-P.....	3
24	XDFZZ		17549	225-0019-000	....PLUG,WIRE.....	1
25	XDFZZ		09647	120-02433-146	...MARKER.....	1

END OF FIGURE

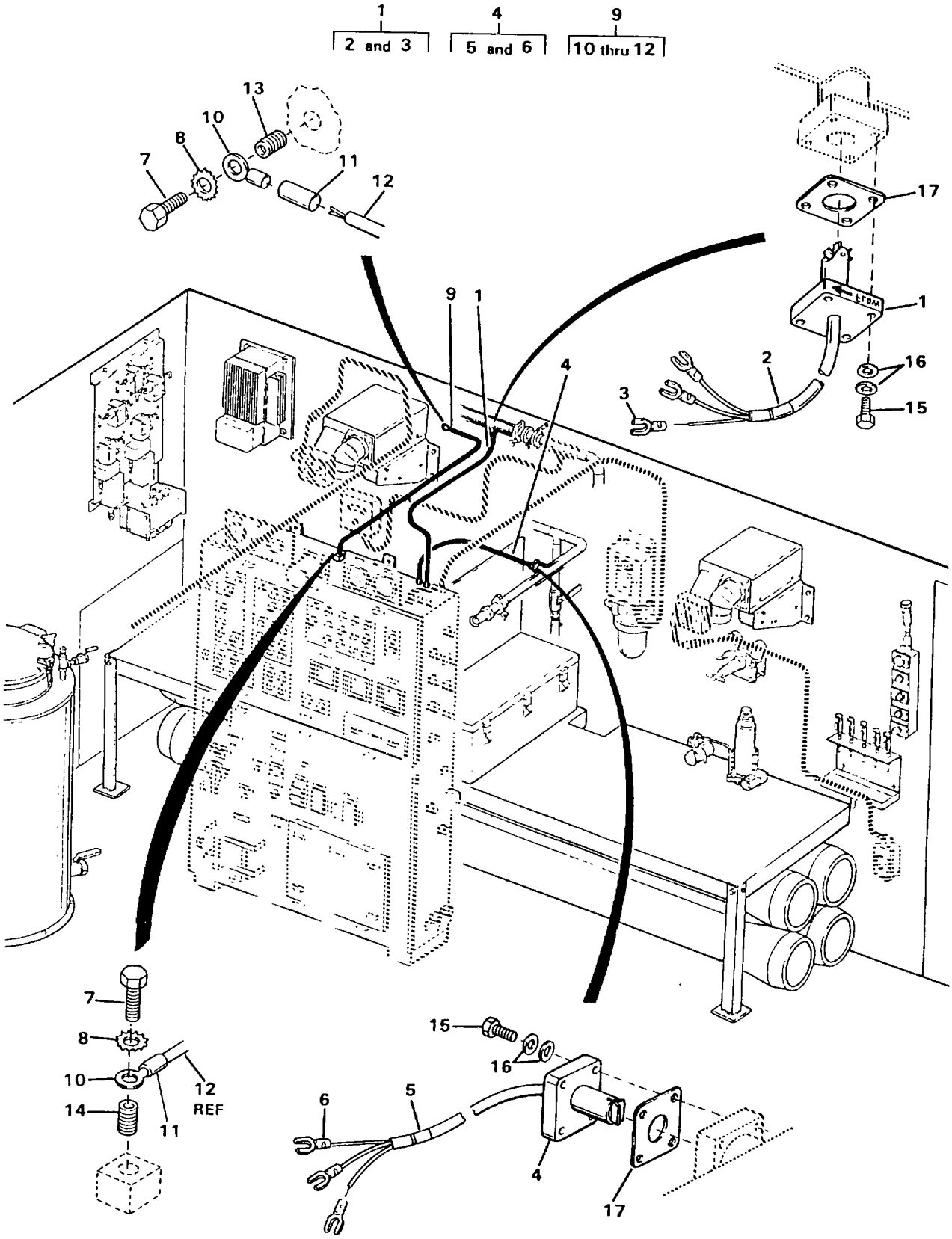

FIGURE 22. AUXILIARY WIRING - BACKWALL

(1) ITEM NO	(2) SMR CODE	(3) NSN	(4) CAGEC	(5) PART NUMBER	(6) DESCRIPTION AND USABLE ON CODES(UOC)	(7) QTY
					GROUP 02 WATER PURIFICATION SYSTEM FIG. 22 AUXILIARY WIRING - BACK WALL	
1	PAFFF	6350013501448	97403	13229E0210-2	..SENSOR,FLOW W31.....	1
2	XDFZZ		09647	120-02433-31	...MARKER.....	2
3	PAFZZ	5940007287593	00779	326880	...TERMINAL,LUG.....	3
4	PAFFF	6350013501449	97403	13229E0210-3	..SENSOR,FLOW W32.....	1
5	XDFZZ		09647	120-02433-32	...MARKER.....	2
6	PAFZZ	5940007287593	00779	326880	...TERMINAL,LUG.....	3
7	PAOZZ	5305007193997	96906	MS35307-303	..SCREW,CAP,HEXAGON H.....	2
8	PAOZZ	5310005273634	96906	MS35335-61	..WASHER,LOCK.....	2
9	AOOOO		97402	13229E0860-1	..WIRE ASSY,GND.....	1
10	PAOZZ	5940005574341	96906	MS25036-123	...TERMINAL,LUG.....	2
11	XDOZZ		97403	13229E0589-5	...MARKER,GND.....	2
12	MOOZZ		09647	2-4-9	...WIRE CUT TO LENGTH FROM BULK, P/N M5086/2-4-9.....	1
13	PAFZZ	5340002904489	96906	MS122241	..INSERT,SCREW THREAD.....	1
14	PAFZZ	5325007218352	96906	MS21209C4-20	..INSERT,SCREW THREAD.....	1
15	PAOZZ	5305013488362	16290	3007-3716	..SCREW,MACHINE.....	8
16	PAOZZ		16290	3200-3700	..WASHER,FLAT.....	16
17	PAOZZ	5330013599350	16290	P52618	..GASKET.....	2

END OF FIGURE

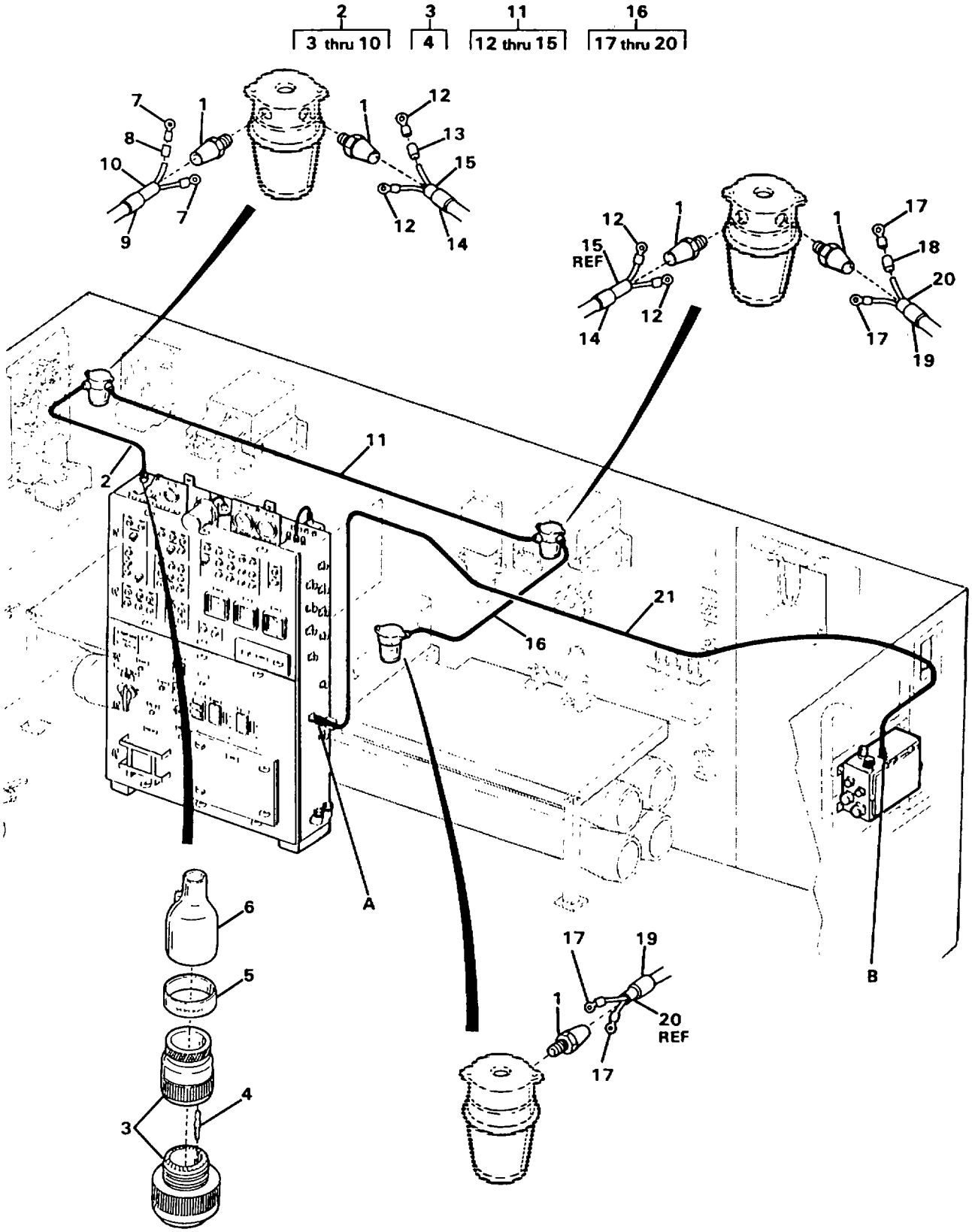

FIGURE 23. WIRING FOR CEILING LIGHTS (SHEET 1 OF 2)

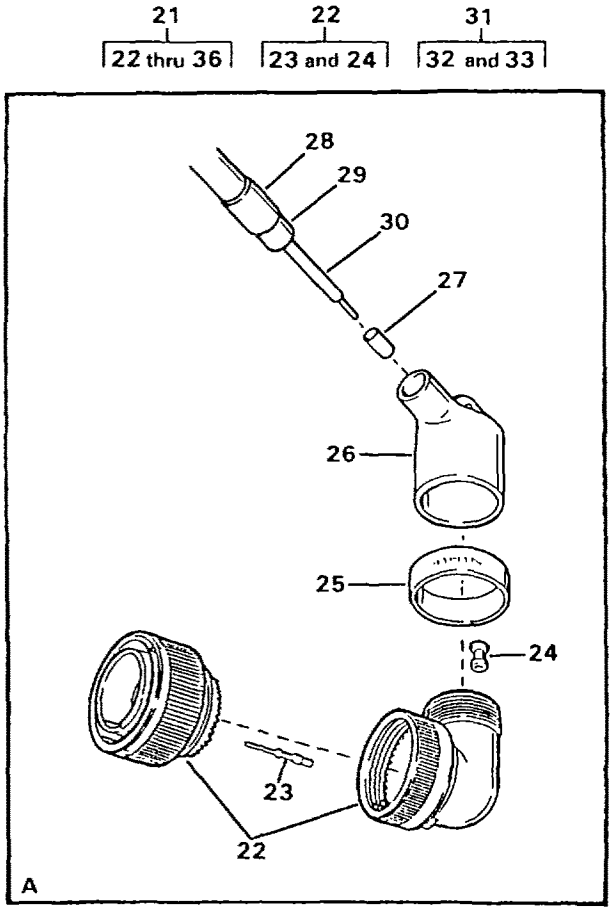

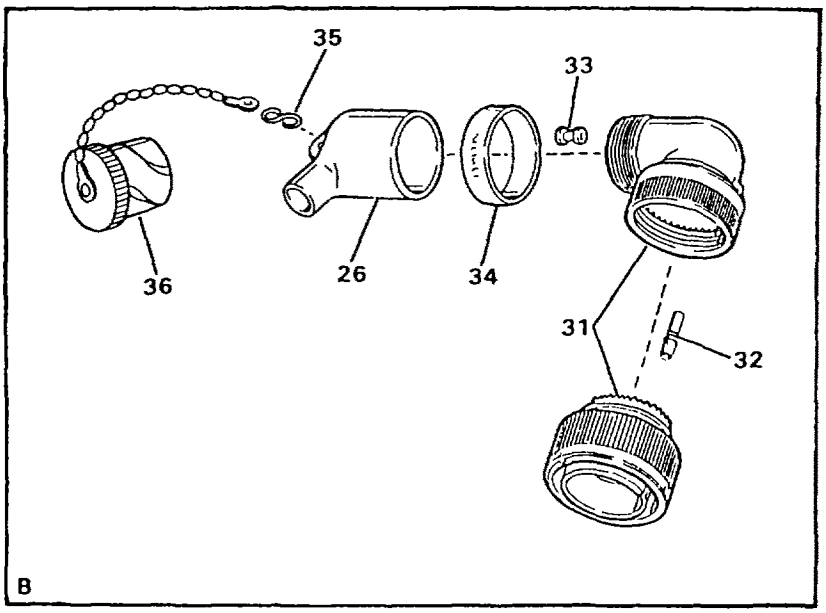

FIGURE 23. WIRING FOR CEILING LIGHTS (SHEET 2 OF 2)

(1) ITEM NO	(2) SMR CODE	(3) NSN	(4) CAGEC	(5) PART NUMBER	(6) DESCRIPTION AND USABLE ON CODES(UOC)	(7) QTY
					GROUP 02 WATER PURIFICATION SYSTEM FIG. 23 WIRING FOR CEILING LIGHTS	
1	PAOZZ	5975013520285	97403	13229E0738-3	..STUFFING TUBE.....	
2	PBOFF	6150013456105	97403	13229E1260-13	.CABLE ASSEMBLY,SPEC W23.....	1
3	PBFFF	5935013470023	17549	CA3106E14-9P-B-02-57	...CONNECTOR,PLUG,ELEC P10.....	1
4	PAFZZ	5999013448758	17549	030-8586-000	....CONTACT,ELECTRICAL PART OF KIT P/N 120-02593-P.....	2
5	XDFZZ		09647	120-02433-85	...MARKER.....	1
6	PBFZZ	5970013484761	97403	13229E1213-1	...INSULATION SLEEVING.....	1
7	PAOZZ	5940002835280	96906	MS25036-106	...TERMINAL,LUG.....	2
8	XDFZZ		01121	B-321HCPS.9-3336W	...MARKER.....	4
9	XDFZZ		09647	120-02433-23	...MARKER.....	2
10	MFFZZ		09647	120-02605-11-W23	...CABLE CUT TO LENGTH FROM BULK, P/N 13229E0556.....	1
11	AOOOO		97403	13229E1257-1	..CABLE ASSEMBLY W24.....	1
12	PAOZZ	5940002835280	96906	MS25036-106	...TERMINAL,LUG.....	4
13	XDOZZ		09647	120-02590-3	...MARKER.....	4
14	XDOZZ		09647	120-02433-24	...MARKER.....	3
15	MOOZZ		09647	120-02605-12-W24	...CABLE CUT TO LENGTH FROM BULK, P/N 13229E0556.....	1
16	AOOOO		97403	13229E1257-2	..CABLE ASSEMBLY W25.....	1
17	PAOZZ	5940002835280	96906	MS25036-106	...TERMINAL,LUG.....	4
18	XDOZZ		01121	B-321HCPS.9-3336W	...MARKER.....	4
19	XDOZZ		09647	120-02433-25	...MARKER.....	2
20	MOOZZ		09647	120-02605-13-W25	...CABLE CUT TO LENGTH FROM BULK, P/N 13229E0556.....	1
21	PBOFF	6150013456106	97403	13229E1261	..CABLE ASSEMBLY,SPEC W37.....	1
22	PBFFF	5935013467136	17549	CA3108F22-23P-B-15-57	...CONNECTOR,PLUG,ELEC P20.....	1
23	PAFZZ	5999013448759	71468	030-8588-000	....CONTACT,ELECTRICAL PART OF KIT P/N 120-02593-P.....	8
24	XDFZZ		17549	225-0018-000	....PLUG,WIRE.....	1
25	XDFZZ		09647	120-02433-95	...MARKER.....	1
26	PBFZA	5970010930413	06090	222A163-3/42	...INSULATION SLEEVING.....	2
27	XDFZZ		01121	B-321HCPS.9-3336W	..MARKER.....	14
28	XDFZZ		09647	120-02433-44	...MARKER.....	5
29	MFFZZ		09647	120-02602-9	...TUBING CUT TO LENGTH FROM BULK, P/N M23053/4-304-0.....	1
30	MFFZZ		09647	1-12-9-W37	...WIRE CUT TO LENGTH FROM BULK, P/N M5086/1-12-9.....	7
31	PBFFF	5935013467155	17549	CA3108F22-23S-B-15-57	...CONNECTOR,PLUG,ELEC P65.....	1
32	PAFZZ	5999013438909	71468	031-8557-000	....CONTACT,ELECTRICAL PART OF KIT P/N 120-02593-P.....	8
33	XDFZZ		17549	225-0018-000	...PLUG,WIRE.....	1
34	XDFZZ		09647	120-02433-140	...MARKER.....	1

(1) ITEM NO	(2) SMR CODE	(3) NSN	(4) CAGEC	(5) PART NUMBER	(6) DESCRIPTION AND USABLE ON CODES(UOC)	(7) QTY
35	PAOZZ	4030010225666	51489	700016	...HOOK,CHAIN,S.....	1
36	PAOZZ		97403	13229E1210-3	...PLUG,PROTECTIVE,DUS.....	1

END OF FIGURE

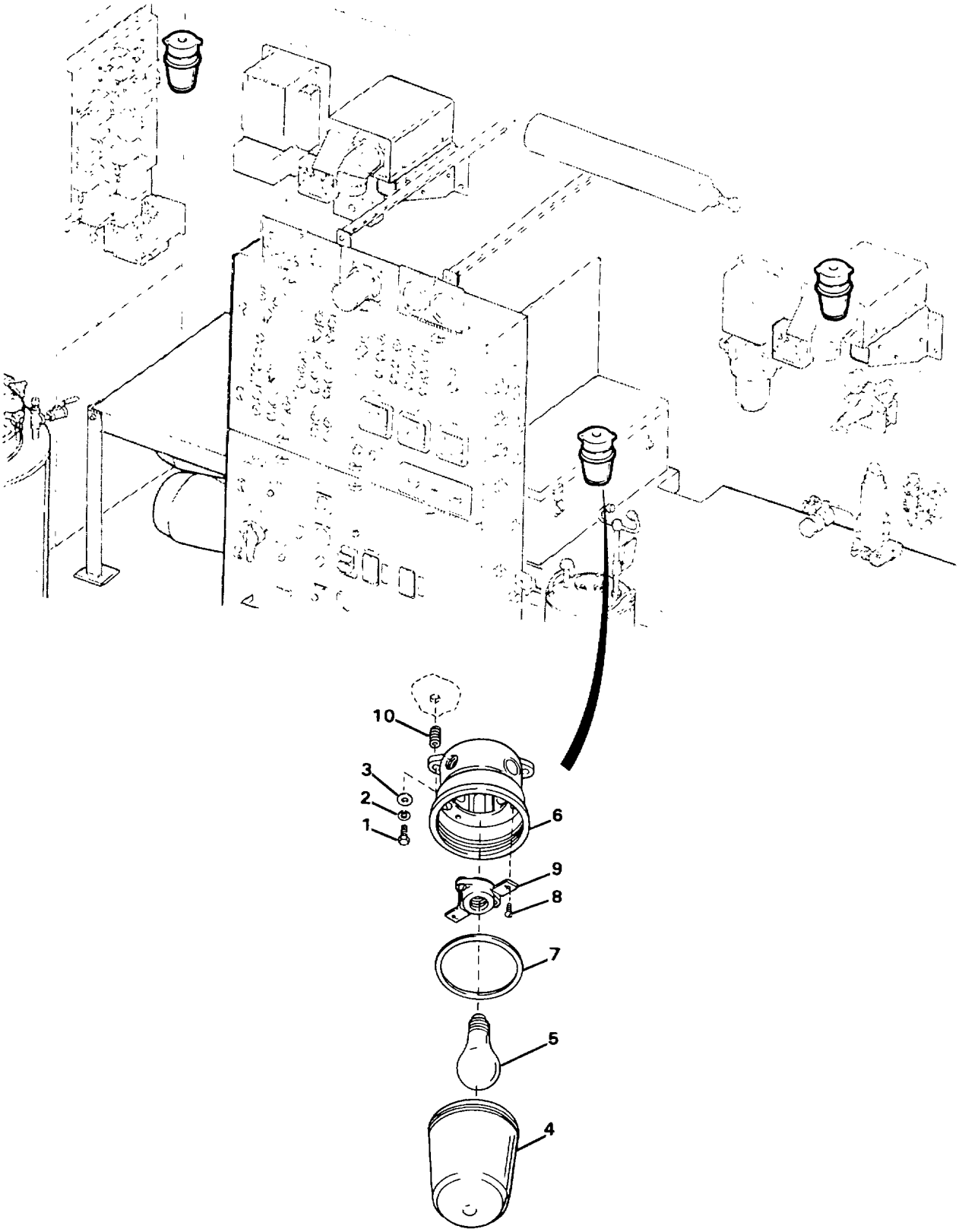

FIGURE 24. CEILING LIGHT ASSEMBLY

(1) ITEM NO	(2) SMR CODE	(3) NSN	(4) CAGEC	(5) PART NUMBER	(6) DESCRIPTION AND USABLE ON CODES(UOC)	(7) QTY
					GROUP 02 WATER PURIFICATION SYSTEM FIG. 24 CEILING LIGHT ASSEMBLY	
1	PAFZZ	5305000213620	96906	MS35307-307	.SCREW,CAP,HEXAGON H.....	6
2	PAFZZ	5310009338121	96906	MS35338-139	.WASHER,LOCK.....	6
3	PAFZZ	5310010911248	96906	MS15795-81A	.WASHER,FLAT.....	6
4	PAFZZ	6210012327683	15235	G63	.GLOBE,ELECTRIC LIGH CLEAR PLASTIC.....	3
5	PAFZZ	6240002465052	81348	WL101-77T	.LAMP,INCANDESCENT.....	3
6	XDOZZ		97403	13229E0208	.LIGHTING FIXTURE.....	3
7	PAFZZ	5330013500486	15235	13B22-1139	.GASKET.....	1
8	PAFZZ	5305004333711	96906	MS51861-35C	.SCREW,TAPPING.....	2
9	PAFZZ	6250012717504	15235	V84	.LAMPHOLDER.....	1
10	PAFZZ	5340002904489	96906	MS122241	.INSERT,SCREW THREAD.....	6

END OF FIGURE

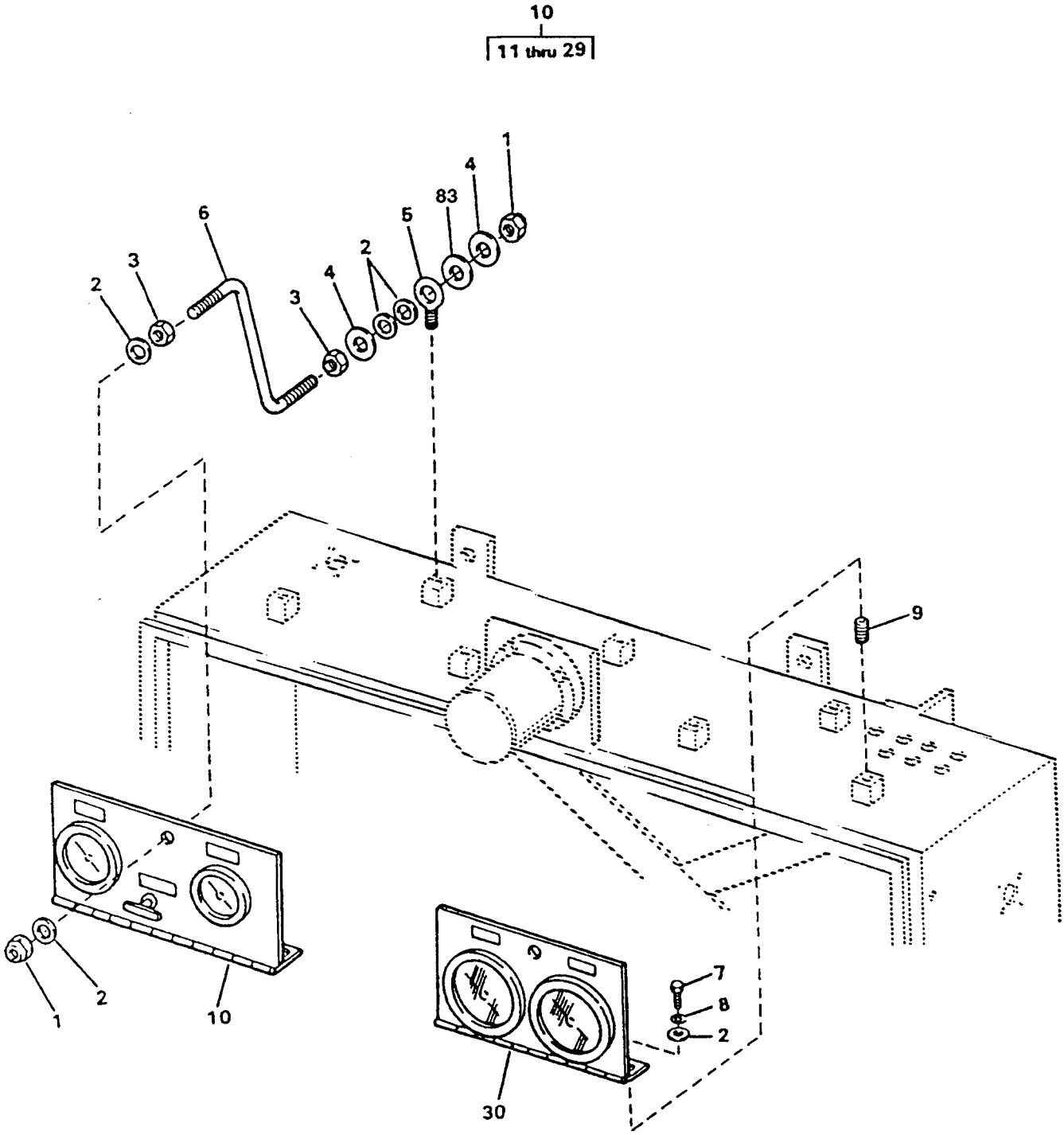

FIGURE 25. PRESSURE GAGES AND MOUNTING HARDWARE (SHEET 1 OF 5)

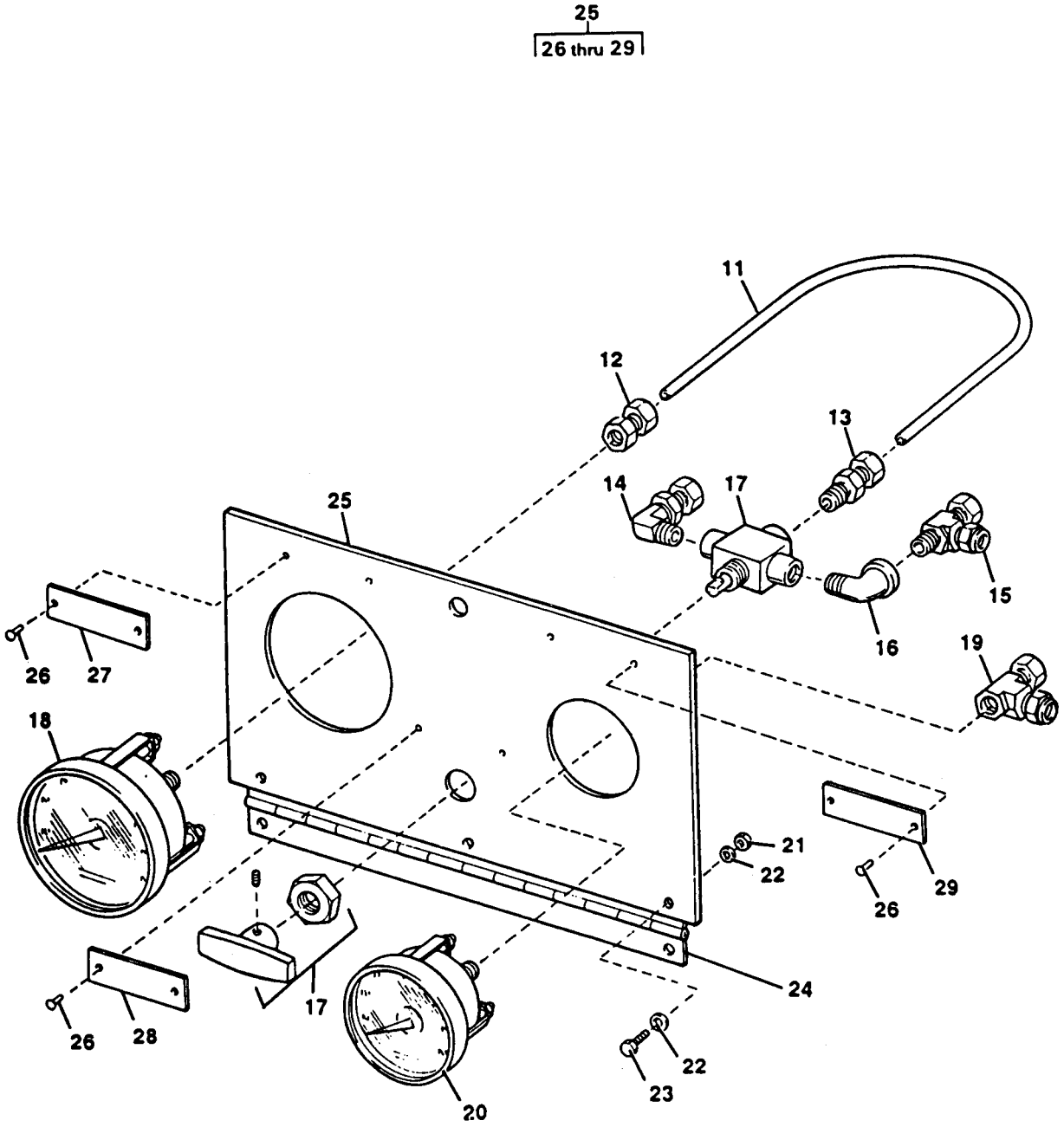

FIGURE 25. PRESSURE GAGES AND MOUNTING HARDWARE (SHEET 2 OF 5)
(MODEL ETN ONLY)

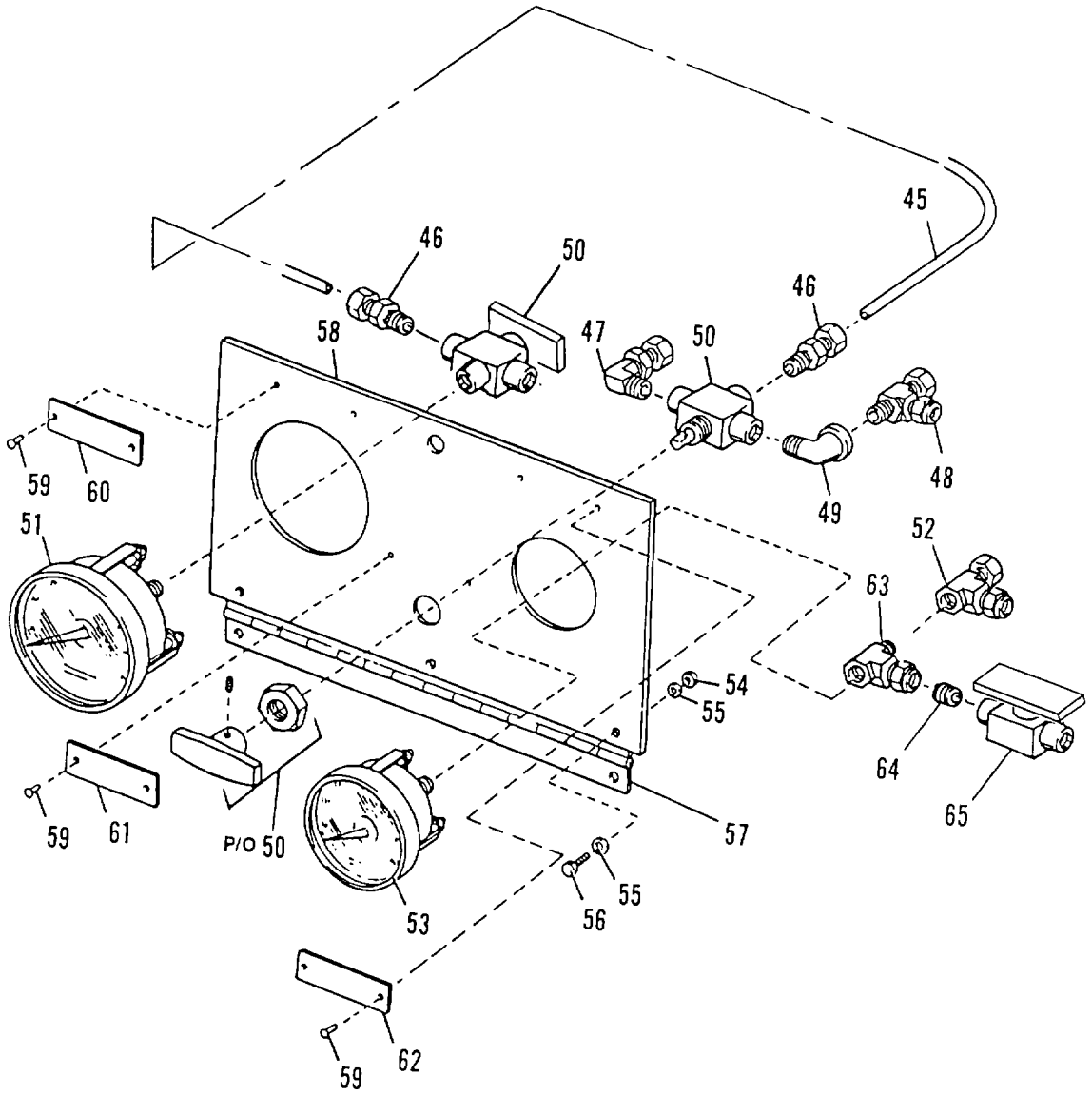

FIGURE 25. PRESSURE GAGES AND MOUNTING HARDWARE (SHEET 3 OF 5)
(MODEL FKD ONLY)

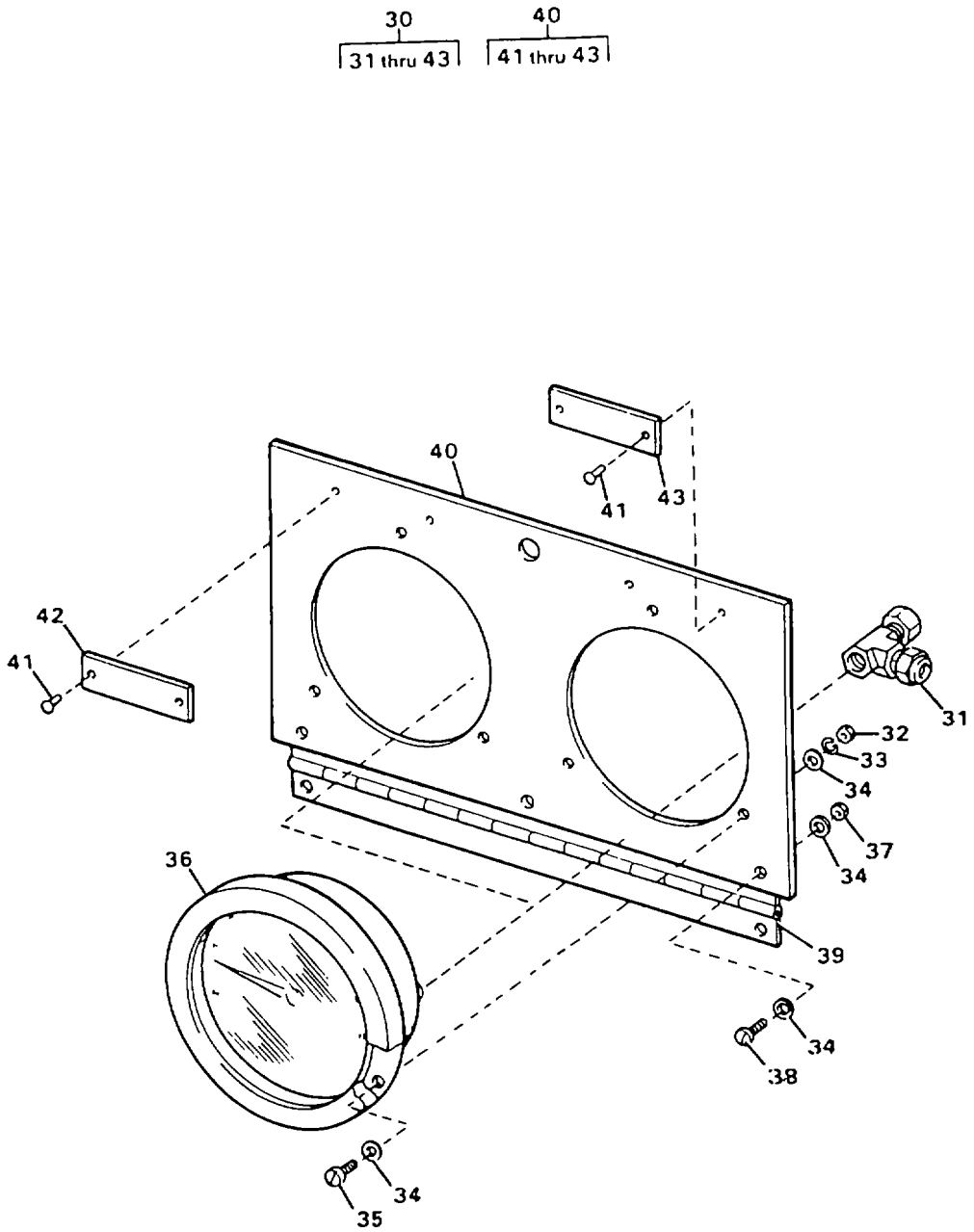

FIGURE 25. PRESSURE GAGES AND MOUNTING HARDWARE (SHEET 4 OF 5)
(MODEL ETN ONLY)

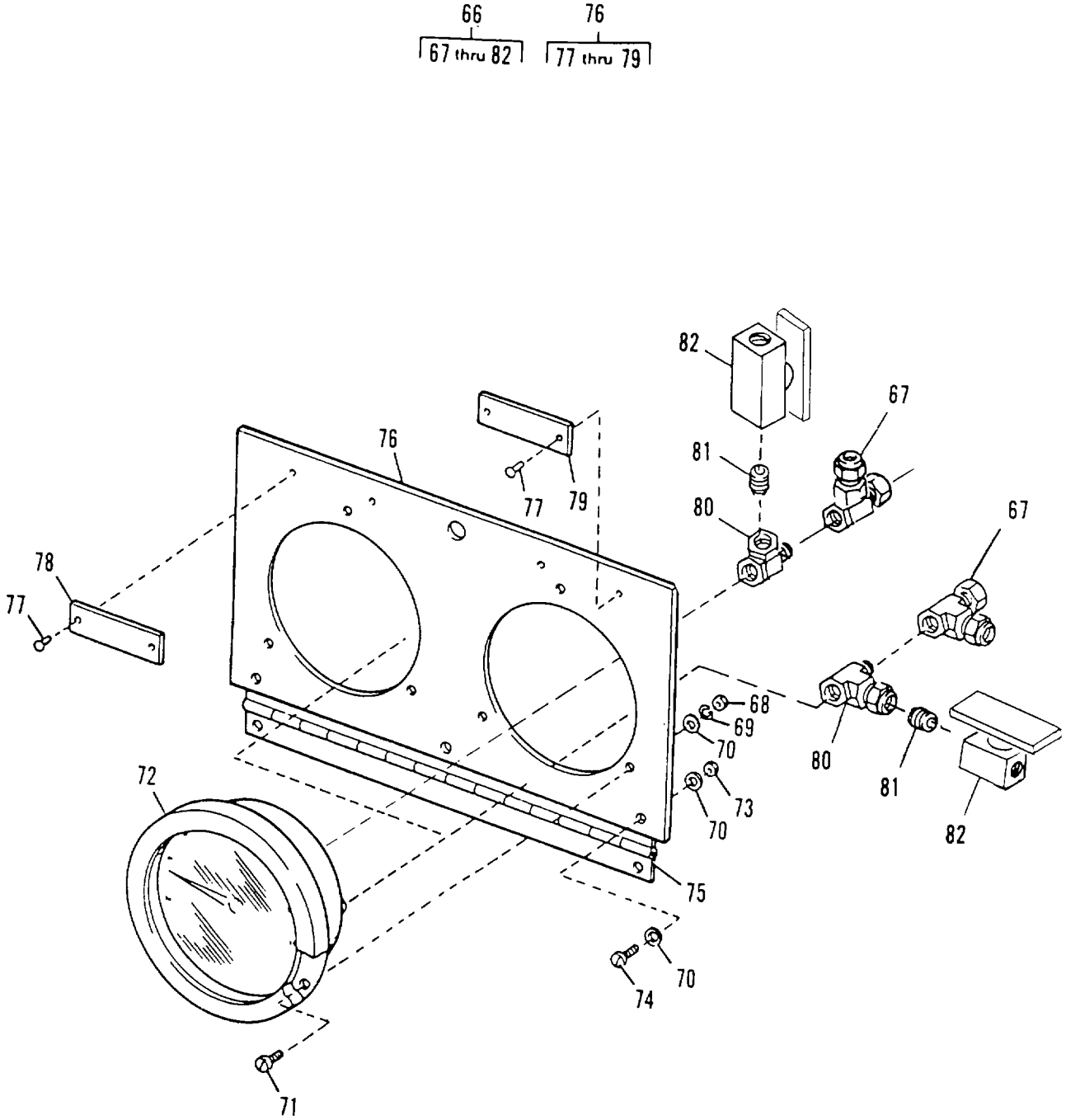

FIGURE 25. PRESSURE GAGES AND MOUNTING HARDWARE (SHEET 5 OF 5)
(MODEL FKD ONLY)

(1) ITEM NO	(2) SMR CODE	(3) NSN	(4) CAGEC	(5) PART NUMBER	(6) DESCRIPTION AND USABLE ON CODES(UOC)	(7) QTY
					GROUP 02 WATER PURIFICATION SYSTEM FIG. 25 PRESSURE GAGES AND MOUNTING HARDWARE	
1	PAFZZ	5310009291807	96906	MS51922-2	.NUT,SELF-LOCKING,HE.....	4
2	PAFZZ	5310010911248	96906	MS15795-810	.WASHER,FLAT.....	12
3	PAFZZ	5310009035966	96906	MS51971-1	.NUT,PLAIN,HEXAGON.....	4
4	PAFZZ		97403	13229E0161-197	.WASHER,FLAT 0.25 IN ID.....	4
5	PAFZZ	5306013522735	97403	13229E0161-180	.EYEBOLT 0.250-20 UNC-2A X 0.75 INCHES LONG.....	2
6	XDFZZ		97403	13229E1331	.ROD,SUPPORT.....	2
7	PAFZZ	5305000213620	96906	MS35307-307	.SCREW,CAP,HEXACON H.....	4
8	PAFZZ	5310009338121	96906	MS35338-139	.WASHER,LOCK.....	4
9	PAFZZ	5325007218352	96906	MS21209C4-20	.INSERT,SCREW THREAD.....	6
10	XDFFF		97403	13229E0425	.GAUGE,PANEL ASSY.....ETN	1
11	PBFZZ	4710013487108	09647	120-51151-000	..TUBE,BENT,METALLIC.....ETN	1
12	PBFZZ	4730013487730	97403	13229E0463	..ADAPTER,STRAIGHT,PI.....ETN	1
13	PBFZZ	4730001759387	97403	13229E0682-2	..ADAPTER,STRAIGHT,PI.....ETN	1
14	PBFZZ	4730004906257	81343	4-4 080202SA	..ELBOW,PIPE TO TUBE.....ETN	1
15	PBFZZ	4730011414132	96906	MS51924-5SS	..TEE,PIPE TO TUBE.....ETN	1
16	PBFZZ	4730012932917	06581	AA67044-2K	..ELBOW,PIPE.....ETN	1
17	PAFZZ	4820011337860	97403	13229E0144	..VALVE,BALL,STAINLESS.....ETN	1
18	PAFZZ	6620013498685	57273	1558525	..GAGE,PRESSURE,DIAL RO SYSTEM...ETN	1
19	PBFZZ	4730011486945	97403	13229E0710	..TEE,PIPE TO TUBE.....ETN	1
20	PAFZZ	6685013519055	57273	1528597	..GAGE,DIFFERENTIAL,D PRODUCT WATER..... ETN	1
21	PAFZZ	5310013499616	97403	13229E0425-15	...NUT,SELF-LOCKING,HE 0.190-24..ETN	3
22	PAFZZ	5905013924321	96906	MS15765-842	..RESISTOR,FIXED,WIR.....ETN	6
23	PAFZZ		02769	8200157-3	..SCREW,CAP,HEXAGON H 0.190-24 UNC-2A X 0.625 INCH LONG..... ETN	3
24	MFFZZ		97403	13229E1273	..HINGE CUT TO LENGTH FROM BULK, P/N MS35823-7A..... ETN	1
25	XDFFF		97403	13229E0467	..PANEL,GAUGE.....ETN	1
26	PAFZZ	5320013490933	97403	13229E0350-1	...RIVET,BLIND.....ETN	6
27	XDOZZ		97403	13229E0782-149	...PLATE,ID.....ETN	1
28	XDOZZ		97403	13229E0782-150	...PLATE,ID.....ETN	1
29	XDOZZ		97403	13229E0782-151	...PLATE,ID.....ETN	1
30	XDOFF		97403	13229E0423	.GAUGE,PANEL ASSY.....ETN	1
31	PAFZZ	4730011486945	97403	13229E0710	..TEE,PIPE TO TUBE.....ETN	4
32	PAFZZ	5310009349760	96906	MS35649-204	..NUT,PLAIN,HEXAGON.....ETN	6
33	PAFZZ	5310009338120	96906	MS35338-138	..WASHER,LOCK.....ETN	6
34	PAFZZ	5905013924321	96906	MS15765-842	..RESISTOR,FIXED,WIR.....ETN	12
35	PAFZZ		02769	8200157-3	..SCREW,CAP,HEXAGON H 0.190-24 UNC-2A X 0.625 INCH LONG..... ETN	6
36	PAFZZ	6685014333415	57273	2650932	..GAGE,DIFFERENTIAL,D MEDIA INLET/OUTLET AND CARTRIDGE INLET/ OUTLET..... ETN	2
37	PAFZZ		96906	MS17630-3C	..NUT,SELF-LOCKING,HE 0.194-24 UNC-2B..... ETN	3
38	PAFZZ		02769	8200157-3	..SCREW,CAP,HEXAGON H 0.194-24 UNC-2A X 0.625 INCH LONG..... ETN	3
39	PFFZZ		97403	13229E1273	..HINGE CUT TO LENGTH FROM BULK, P/N MS35823-7A..... ETN	1

(1) ITEM NO	(2) SMR CODE	(3) NSN	(4) CAGEC	(5) PART NUMBER	(6) DESCRIPTION AND USABLE ON CODES(UOC)	(7) QTY
40	XDFFF		97403	13229E0466	..PANEL.....ETN	1
41	PAFZZ	5320013490933	97403	13229E0350-1	...RIVET,BLIND.....ETN	4
42	XDFZZ		97403	13229E0782-148	...PLATE,ID.....ETN	1
43	XDFZZ		97403	13229E0782-147	...PLATE,ID.....ETN	1
44	XDFFF		97403	13229E0328	.GAUGE,PANEL ASSY.....FKD	1
45	PBFZZ	4710013487108	09647	120-51151-000	..TUBE,BENT,METALLIC.....FKD	1
46	PBFZZ	4730001759387	97403	13229E0682-2	..ADAPTER,STRAIGHT,PI.....FKD	2
47	PBFZZ	4730004906257	81343	4-4 080202SA	..ELBOW,PIPE TO TUBE.....FKD	1
48	PBFZZ		97403	13229E1410	..TEE.....FKD	1
49	PBFZZ	4730012932917	06581	AA67044-2K	..ELBOW,PIPE.....FKD	1
50	PAFZZ	4820011337860	97403	13229E0144	..VALVE,BALL.....FKD	2
51	PAFZZ	6620013498685	57273	1558525	..GAGE,PRESSURE,DIAL RO SYSTEM...FKD	1
52	PBFZZ	4730011486945	97403	13229E0710	..TEE,PIPE TO TUBE.....FKD	1
53	PAFZZ	6685013519055	57273	1528597	..GAGE,DIFFERENTIAL,D PRODUCT FKD WATER.....	1
54	PAFZZ	5310013499616	97403	13229E0425-15	..NUT,SELF-LOCKING,HE 0.190-24 FKD UNC-2B.....	3
55	PAFZZ	5310006191148	96906	MS15795-808	..WASHER,FLAT.....FKD	6
56	PAFZZ		02769	8200157-3	..SCREW,CAP,HEXAGON H 0.190-24 FKD UNC-2A X 0.625 INCH LONG.....	3
57	MFFZZ		97403	13229E1273	..HINGE CUT TO LENGTH FROM FKD BULK, P/N MS35823-7A.....	1
58	XDFFF		97403	13229E0467	..PANEL,GAUGE.....FKD	1
59	PAFZZ	5320013490933	97403	13229E0350-1	...RIVET,BLIND.....FKD	6
60	XDOZZ		97403	13229E0782-149	...PLATE,ID.....FKD	1
61	XDOZZ		97403	13229E0782-150	...PLATE,ID.....FKD	1
62	XDOZZ		97403	13229E0782-151	...PLATE,ID.....FKD	1
63	XDOZZ		97403	13229E0328-17	..FITTING,TUBE 1/4 NPT CRES.....FKD	1
64	PAOZZ	4730013486248	97403	13229E1255-1	..NIPPLE,PIPE.....FKD	1
65	PAOZZ	4820013493816	97403	13229E0678-2	..VALVE,PLUG.....FKD	1
66	XDFFF		97403	13229E0327	.GAUGE,PANEL ASSY.....FKD	1
67	PAFZZ	4730011486945	97403	13229E0710	..TEE,PIPE TO TUBE.....FKD	4
68	PAFZZ	5310009349760	96906	MS35649-204	..NUT,PLAIN,HEXAGON.....FKD	6
69	PAFZZ	5310009338120	96906	MS35338-138	..WASHER,LOCK.....FKD	6
70	PAFZZ	5310006191148	96906	MS15795-808	..WASHER,FLAT.....FKD	12
71	PAFZZ		02769	8200157-3	..SCREW,CAP,HEXAGON H 0.194-24 FKD UNC-2A X 0.625 INCH LONG.....	6
72	PAFZZ	6685013506997	97403	13229E0147	..GAGE,DIFFERENTIAL,D MEDIA FKD INLET/OUTLET AND CARTRIDGE INLET/ OUTLET.....	2
73	PAFZZ	5310004363290	96906	MS17830-3C	..NUT,SELF-LOCKING,HE 0.194-24 FKD UNC-2B.....	3
74	PAFZZ		02769	8200157-3	..SCREW,CAP,HEXAGON H 0.194-24 FKD UNC-2A X 0.625 INCH LONG.....	3
75	MFFZZ		97403	13229E1273	..HINGE CUT TO LENGTH FROM FKD BULK, P/N MS35823-7A.....	1
76	XDFFF		97403	13229E0466	..PANEL.....FKD	1
77	PAFZZ	5320013490933	97403	13229E0350-1	...RIVET,BLIND.....FKD	4
78	XDFZZ		97403	13229E0782-148	...PLATE,ID.....FKD	1
79	XDFZZ		97403	13229E0782-147	...PLATE,ID.....FKD	1
80	XDOZZ		97403	13229E0328-17	..FITTING,TUBE.....FKD	4
81	XDOZZ		97403	13229E1255-1	...NIPPLE,PIPE.....FKD	4

(1) ITEM NO	(2) SMR CODE	(3) NSN	(4) CAGEC	(5) PART NUMBER	(6) DESCRIPTION AND USABLE ON CODES(UOC)	(7) QTY
82	XDOZZ		97403	13229E0678-2	..VALVE,PLUG.....FKD	4
83	PAFZZ	5310008024710	96906	MS15795-813	.WAHSER,FLAT 0.38 INCH ID.....FKD	2

END OF FIGURE

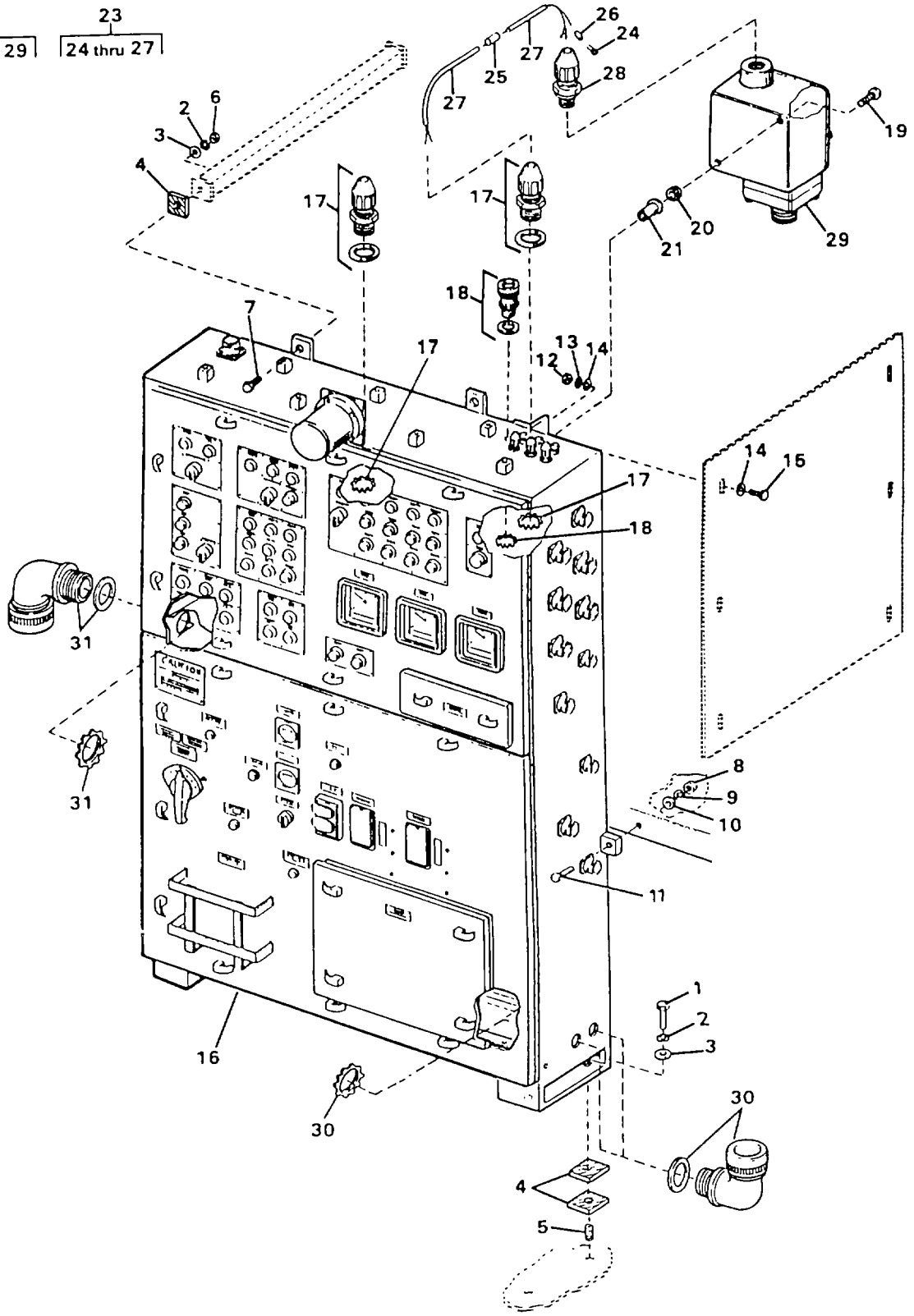

FIGURE 26. CONTROL PANEL MOUNTING (SHEET 1 OF 2)
(MODEL ETN ONLY)

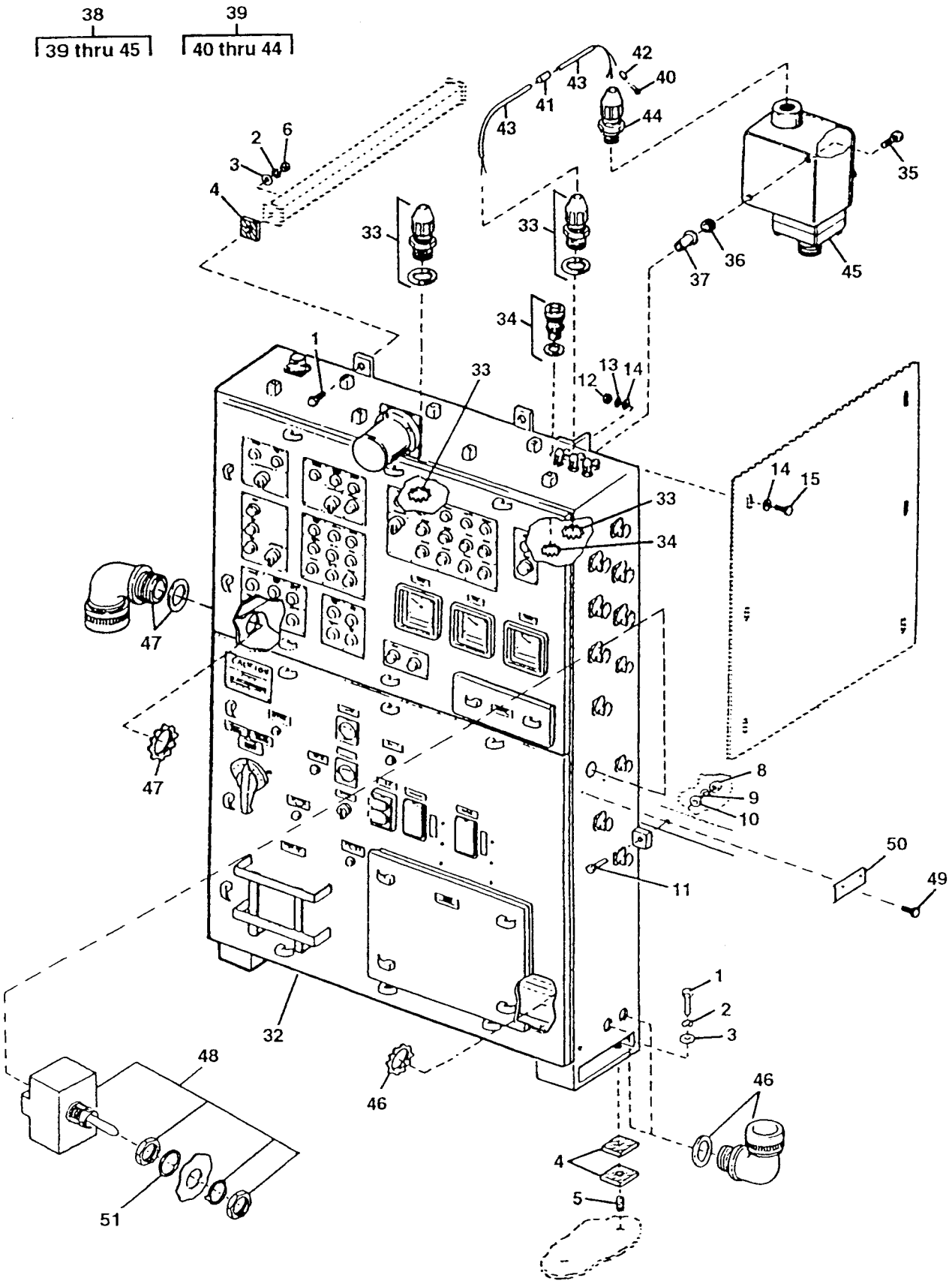

FIGURE 26. CONTROL PANEL MOUNTING (SHEET 2 OF 2)
(MODEL FKD ONLY)

(1) ITEM NO	(2) SMR CODE	(3) NSN	(4) CAGEC	(5) PART NUMBER	(6) DESCRIPTION AND USABLE ON CODES(UOC)	(7) QTY
					GROUP 02 WATER PURIFICATION SYSTEM FIG. 26 CONTROL PANEL MOUNTING	
1	PAFZZ	5305009480667	96906	MS35307-487	.SCREW,CAP,HEXAGON H.....FKD	6
1	PAFZZ	5305009480667	96906	MS35307-487	.SCREW,CAP,HEXAGON H.....ETN	4
2	PAFZZ	5310009370454	96906	MS35338-146	.WASHER,LOCK.....	6
3	PAFZZ	5310005847799	96906	MS15795-822	.WASHER,FLAT.....	6
4	PBFZZ		97403	13229E0826-1	.CUSHIONING MATERIAL.....	10
5	PAFZZ	5325000452812	96906	MS122128	.INSERT,SCREW THREAD.....	4
6	PAFZZ	5310009245897	96906	MS51971-8	.NUT,PLAIN,HEXAGON.....	2
7	PAFZZ	5305009477051	96906	MS35307-485	.SCREW,CAP,HEXAGON H.....ETN	2
8	PAFZZ	5310009138881	96906	MS51971-3	.NUT,PLAIN,HEXAGON.....	1
9	PAFZZ	5310009847042	96906	MS35338-141	.WASHER,LOCK.....	1
10	PAFZZ	5310007737618	96906	MS15795-814	.WASHER,FLAT.....	1
11	PAFZZ	5305006389837	96906	MS35307-366	.SCREW,CAP,HEXAGON H.....	1
12	PAFZZ	5310009035966	96906	MS51971-1	.NUT,PLAIN,HEXAGON.....	3
13	PAFZZ	5310009338121	96906	MS35338-139	.WASHER,LOCK.....	3
14	PAFZZ	5310010911248	96906	MS15795-810	.WASHER,FLAT.....	6
15	PAPZZ	5305000213620	96906	MS35307-307	.SCREW,CAP,HEXAGON H.....	3
16	XDFFF		97403	13229E0082	.PANEL,MAIN CONT INCLUDES ALL ITEMS ON FIGURES 27 THROUGH 43 WITH UOC OF BLANK OR ETN.....	ETN 1
17	PAFZZ	5975013557891	97403	13229E0738-6	..STUFFING TUBE.....ETN	4
18	PAFZZ	5975013622110	15235	CGB114-SG	..BOX CONNECTOR,ELECT.....ETN	4
19	PAFZZ	5305000593663	96906	MS51958-67	..SCREW,MACHINE 0.190-32 UNF-2A X 1 INCH LONG.....	ETN 2
20	PAFZZ	5310013512613	97403	13229E0557-1	..WASHER,SEAL.....ETN	2
21	PAFZZ	5310012119838	29372	H111P363-130M	..NUT,PLAIN,BLIND RIV.....ETN	2
22	XDFFF		97403	13229E1123	..SWITCH ASSEMBLY.....ETN	1
23	AFFFF		97403	13229E1257-5	...CABLE ASSY.....ETN	1
24	PAFZZ	5940001434774	96906	MS25036-153	....TERMINAL,LUG.....ETN	2
25	XDFZZ		01121	B-321HCPS.9-3336 W	.....MARKER.....ETN	4
26	XDFZZ		09647	120-02433-28	....MARKER.....ETN	1
27	MFFZZ		09647	120-01617-W28	....CABLE CUT TO LENGTH FROM BULK, P/N 13229E0556.....	ETN 1
28	PBFZZ	5975013557891	97403	13229E0738-6	...STUFFING TUBE.....ETN	1
29	PAFZZ	5930013485049	97403	13229E1115	...SWITCH,PRESSURE.....ETN	1
30	PBFZZ	5975013530829	97403	13229E1201-1	..STUFFING TUBE.....ETN	2
31	PBFZZ	5975013530830	15235	CGE5915-3G	..STUFFING TUBE.....ETN	1
32	XDFFF		97403	13229E0260	.PANEL,MAIN CONT INCLUDES ALL ITEMS ON FIGURES 27 THROUGH 43 WITH UOC OF BLANK OR FKD.....	FKD 1
33	PAFZZ	5975013557891	97403	13229E0738-6	..STUFFING TUBE.....FKD	4
34	PAFZZ	5975013622110	15235	CGB114-SG	..BOX CONNECTOR,ELECT.....FKD	4
35	PAFZZ		97403	13229E40260-158	..SCREW,MACHINE 0.190-32 UNF-2A X 2.25 INCHES LONG.....	FKD 2
36	PAFZZ	5310013512613	97403	13229E0557-1	..WASHER,SEAL.....FKD	2
37	PAFZZ	5310012119838	29372	H111P363-130M	..NUT,PLAIN,BLIND RIV.....FKD	2
38	XDFFF		97403	13229E1123	..SWITCH ASSEMBLY.....FKD	1
39	AFFZZ		97403	13229E1257-5	...CABLE ASSY.....FKD	1
40	PAFZZ	5940001434774	96906	MS25036-153	....TERMINAL,LUG.....FKD	2

(1) ITEM NO	(2) SMR CODE	(3) NSN	(4) CAGEC	(5) PART NUMBER	(6) DESCRIPTION AND USABLE ON CODES(UOC)	(7) QTY
41	XDFZZ		01121	B-321HCPS.9-3336 W	....MARKER.....FKD	4
42	XDFZZ		09647	120-02433-28	....MARKER.....FKD	1
43	MFFZZ		09647	120-01617-W28	....CABLE CUT TO LENTH FROM BULK, P/N 13229E0556.....FKD	1
44	PBFZZ	5975013557891	97403	13229E0738-6	...STUFFING TUBE.....FKD	1
45	PAFZZ	5930013485049	97403	13229E1115	...SWITCH,PRESSURE.....FKD	1
46	PBFZZ	5975013530829	97403	13229E1201-1	..STUFFING TUBE.....FKD	2
47	PBFZZ	5975013530830	15235	CGE5915-3G	..STUFFING TUBE.....FKD	1
48	PAFZZ	5930006831633	96906	MS24523-27	..SWITCH,TOGGLE.....FKD	1
49	PAFZZ		97403	13229E0260-8	..SCREW,TAPPING CRES, .112-40 X .375 INCH LONG, TYPE F.....FKD	2
50	PAFZZ		97403	13229E0782-160	..PLATE,ID.....FKD	1
51	PAFZZ		96906	MS28755-111	..PACKING,PREFORMED.....FKD	1

END OF FIGURE

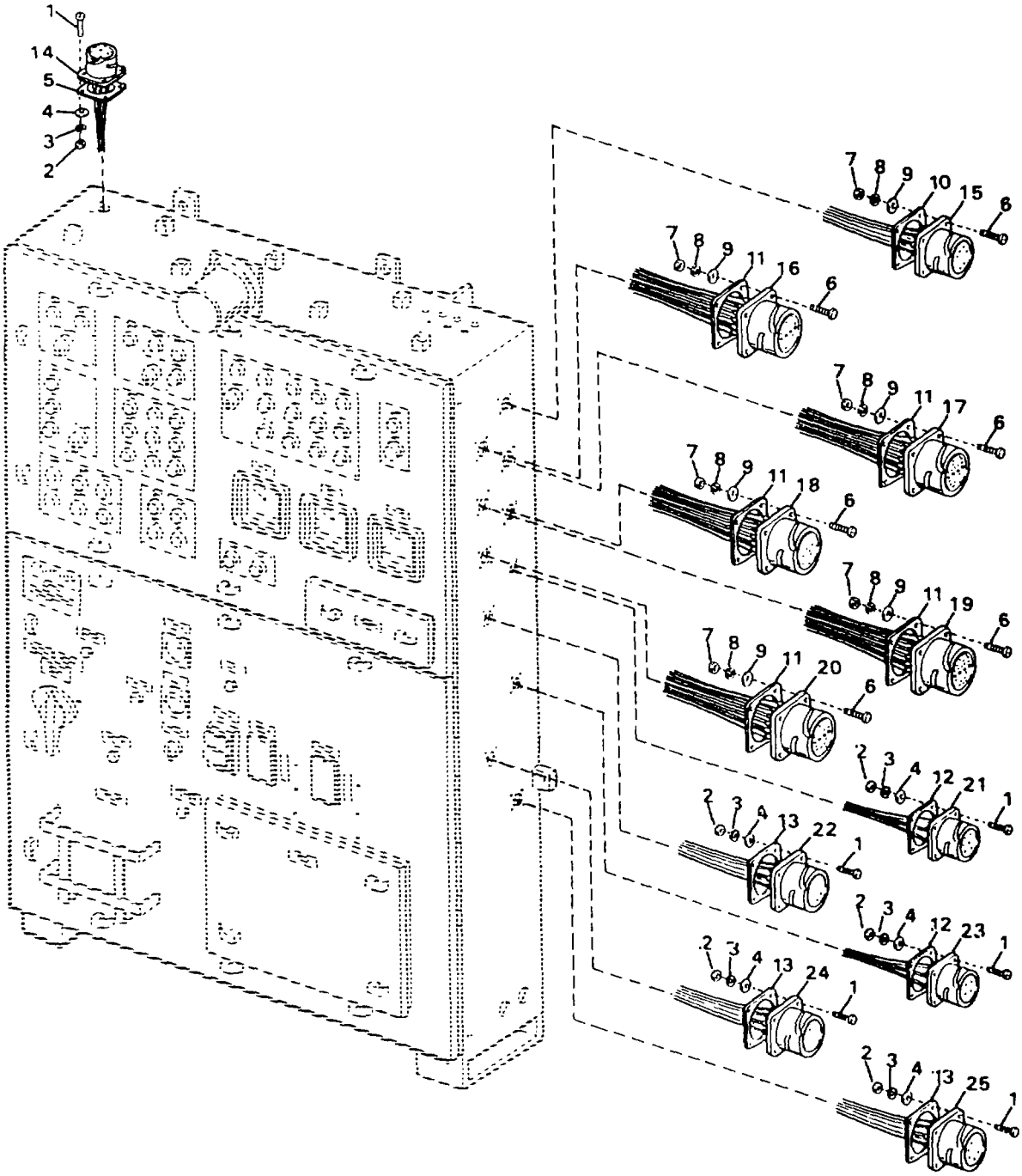

FIGURE 27. MAIN CONTROL PANEL CABLE ASSEMBLY AND CONNECTORS (SHEET 1 OF 11)

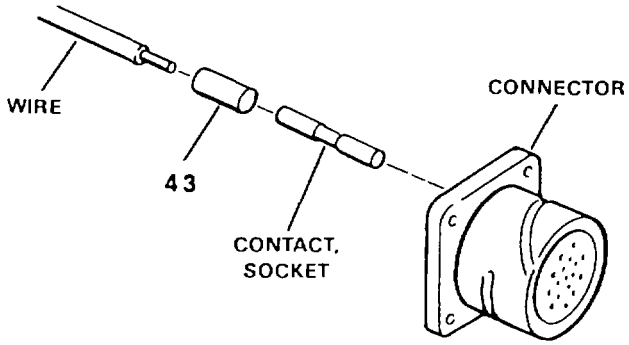

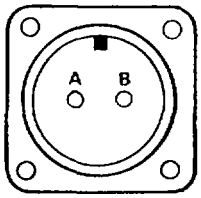

J10
DETAIL A

HARNESS ASSY	CONNECTOR	DETAIL	WIRE RUN		SOCKET	WIRE	LENGTH
			FROM	TO			
14	26	A	J10A	TB1-64	37	41	56.50
			J10B	TB1-76	37	41	59.00

FIGURE 27. MAIN CONTROL PANEL CABLE ASSEMBLY AND CONNECTORS (SHEET 2 OF 11)

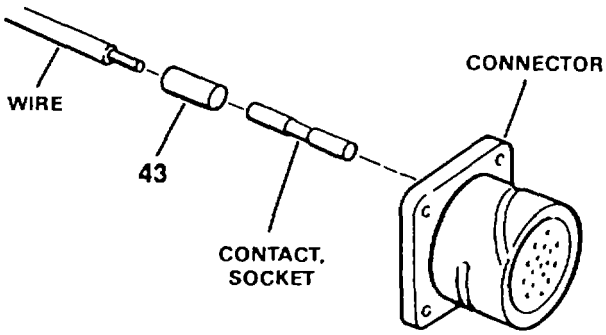

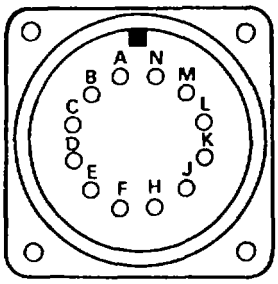

J11
DETAIL B

HARNESS ASSY	CONNECTOR	DETAIL	WIRE RUN		SOCKET	WIRE	LENGTH
			FROM	TO			
15	27	B	J11A	TB1-7	38	41	11.00
			J11B	TB1-46	38	41	18.00
			J11C	TB1-23	38	41	13.00
			J11D	TB1-11	38	41	10.50
			J11E	TB1-12	38	41	11.50
			J11F	TB1-13	38	41	10.50
			J11H	TB1-15	38	41	11.50
			J11J	TB1-28	38	41	14.00
			J11K	TB1-29	38	41	14.00
			J11L	—	38	—	—
			J11M	TB1-92	38	41	25.00
			J11N	TB1-14	38	41	11.50

FIGURE 27. MAIN CONTROL PANEL CABLE ASSEMBLY AND CONNECTORS (SHEET 3 OF 11)

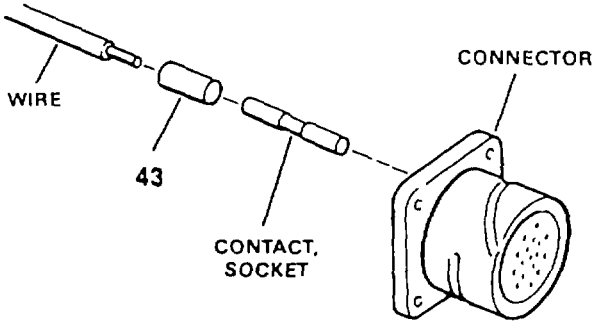

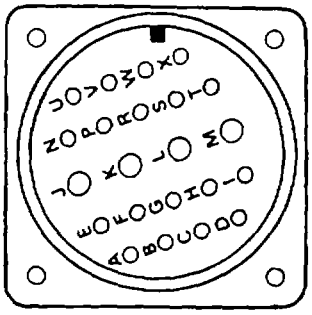

J12
DETAIL C

Model ETN Only

HARNESS ASSY	CONNECTOR	DETAIL	WIRE RUN FROM	WIRE RUN TO	SOCKET	WIRE	LENGTH
16	28	C	J12A	TB1-22	38	41	15.00
			J12B	TB1-18	38	41	15.00
			J12C	TB1-9	38	41	16.00
			J12D	TB1-32	38	41	16.00
			J12E	TB1-30	38	41	15.50
			J12F	TB1-16	38	41	13.50
			J12G	TB1-63	38	41	21.50
			J12H	TB1-65	38	41	21.00
			J12I	TB1-1	38	41	13.50
			J12J	TB1-73	39	42	23.50
			J12K	TB1-52	39	42	19.50
			J12L	TB1-87	39	42	26.00
			J12M	TB1-95	39	42	28.00
			J12N	TB1-79	38	41	24.00
			J12P	TB1-96	38	41	28.00
			J12R	TB1-1	38	41	15.00
			J12S	TB1-79	38	41	26.00
			J12T	TB1-94	38	41	27.50
			J12U	—	38	—	—
			J12V	—	38	—	—
			J12W	—	38	—	—
			J12X	—	38	—	—

FIGURE 27. MAIN CONTROL PANEL CABLE ASSEMBLY AND CONNECTORS (SHEET 4 OF 11)

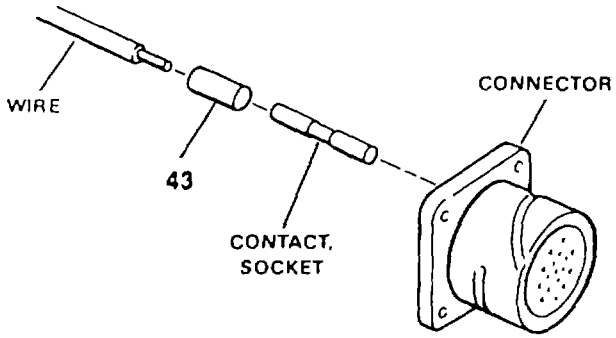

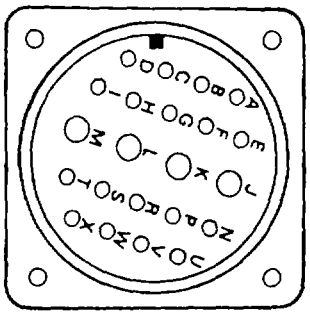

J13
DETAIL D

Model ETN Only

HARNESS ASSY	CONNECTOR	DETAIL	WIRE RUN FROM	WIRE RUN TO	SOCKET	WIRE	LENGTH
17	29	D	J13A	TB1-21	38	41	9.50
			J13B	TB1-71	38	41	15.50
			J13C	TB1-93	38	41	21.50
			J13D	TB1-9	38	41	12.00
			J13E	TB1-24	38	41	9.00
			J13F	TB1-17	38	41	10.50
			J13G	TB1-47	38	41	11.00
			J13H	TB1-71	38	41	16.00
			J13I	TB1-64	38	41	15.00
			J13J	TB1-51	39	42	12.50
			J13K	TB1-86	39	42	18.50
			J13L	TB1-93	39	42	20.00
			J13M	TB1-94	39	42	21.50
			J13N	TB1-63	38	41	14.50
			J13P	TB1-65	38	41	15.00
			J13R	TB1-57	38	41	13.50
			J13S	TB1-84	38	41	18.50
			J13T	TB1-10	38	41	12.50
			J13U	TB1-72	38	41	15.50
			J13V	—	38	—	—
			J13W	—	38	—	—
			J13X	—	38	—	—

FIGURE 27. MAIN CONTROL PANEL CABLE ASSEMBLY AND CONNECTORS (SHEET 5 OF 11)

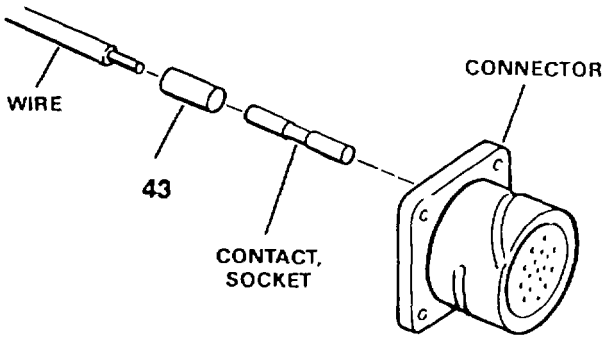

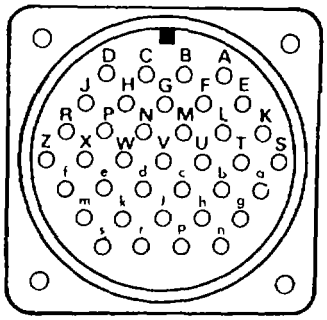

J14
DETAIL E

HARNESS ASSY	CONNECTOR	DETAIL	WIRE RUN FROM	WIRE RUN TO	SOCKET	WIRE	LENGTH
18	30	E	J14A	TB1-4	38	40	15.00
			J14B	TB1-75	38	40	18.00
			J14C	TB1-19	38	40	17.50
			J14D	TB1-42	38	40	14.00
			J14E	TB1-25	38	40	19.00
			J14F	TB1-76	38	40	17.50
			J14G	TB1-20	38	40	17.50
			J14H	TB1-39	38	40	13.00
			J14J	TB1-25	38	40	17.50
			J14K	TB1-76	38	40	17.00
			J14L	TB1-20	38	40	17.50
			J14M	TB1-40	38	40	12.50
			J14N	TB1-58	38	41	16.00
			J14P	TB1-85	38	41	20.00
			J14R	TB1-4	38	40	20.50
			J14S	TB1-77	38	40	16.00
			J14T	TB1-19	38	40	17.00
			J14U	TB1-41	38	40	13.00
			J14V	TB1-49	38	41	13.50
			J14W	TB1-50	38	41	13.50
			J14X	TB1-48	38	41	12.00
			J14Z	TB1-49	38	41	13.50
			J14a	—	38	—	—
			J14b	TB1-3	38	40	20.00
			J14c	—	38	—	—
			J14d	TB1-75	38	40	18.00
			J14e	—	38	—	—
			J14f	TB1-21	38	40	18.00
			J14g	—	38	—	—
			J14h	TB1-38	38	40	13.50
			J14j	—	38	—	—
			J14k	—	38	—	—
			J14m	—	38	—	—
			J14n	—	38	—	—
			J14p	—	38	—	—
			J14r	—	38	—	—
			J14s	—	38	—	—

FIGURE 27. MAIN CONTROL PANEL CABLE ASSEMBLY AND CONNECTORS (SHEET 6 OF 11)

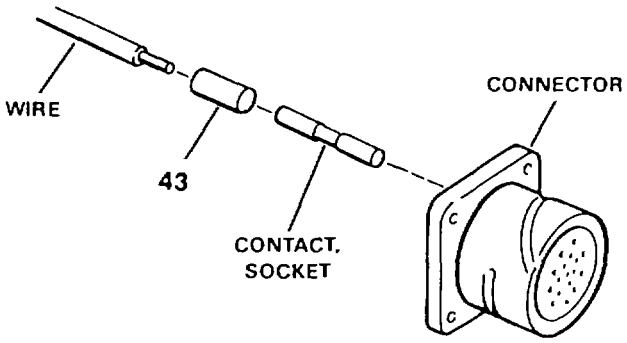

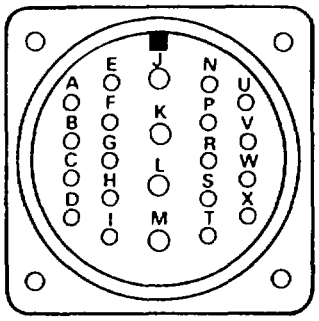

HARNESS ASSY	CONNECTOR	DETAIL	WIRE RUN FROM	WIRE RUN TO	SOCKET	WIRE	LENGTH
19	31	F	J15A	—	38	—	—
			J15B	—	38	—	—
			J15C	TB1-8	38	41	20.50
			J15D	TB1-30	38	41	15.50
			J15E	TB1-34	38	41	14.00
			J15F	TB1-33	38	41	14.00
			J15G	TB1-35	38	41	14.50
			J15H	TB1-5	38	41	19.50
			J15I	TB1-73	38	41	10.50
			J15J	TB1-60	39	42	10.00
			J15K	TB1-54	39	42	10.50
			J15L	TB1-96	39	42	15.00
			J15M	—	39	—	—
			J15N	TB1-18	38	41	16.00
			J15P	TB1-43	38	41	12.50
			J15R	TB1-58	38	41	9.50
			J15S	TB1-84	38	41	11.50
			J15T	TB1-95	38	41	14.00
			J15U	—	38	—	—
			J15V	—	38	—	—
			J15W	—	38	—	—
			J15X	—	38	—	—

FIGURE 27. MAIN CONTROL PANEL CABLE ASSEMBLY AND CONNECTORS (SHEET 7 OF 11)

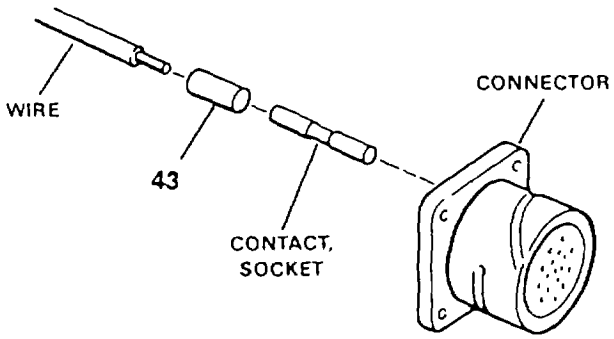

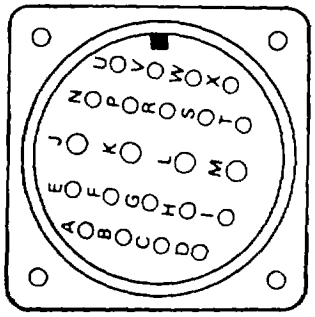

J16
DETAIL G

Model ETN Only

HARNESS ASSY	CONNECTOR	DETAIL	WIRE RUN FROM	WIRE RUN TO	SOCKET	WIRE	LENGTH
20	32	G	J16A	TB1-2	38	41	27.00
			J16B	TB1-80	38	41	13.00
			J16C	TB1-97	38	41	21.50
			J16D	TB1-27	38	41	24.00
			J16E	TB1-74	38	41	14.00
			J16F	TB1-97	38	41	16.50
			J16G	TB1-19	38	41	28.50
			J16H	TB1-98	38	41	16.00
			J16I	TB1-74	38	41	15.00
			J16J	—	39	—	—
			J16K	—	39	—	—
			J16L	—	39	—	—
			J16M	—	39	—	—
			J16N	TB1-26	38	41	26.00
			J16P	TB1-77	38	41	15.00
			J16R	TB1-6	38	41	28.00
			J16S	TB1-75	38	41	15.00
			J16T	TB1-45	38	41	19.00
			J16U	TB1-44	38	41	20.00
			J16V	—	38	—	—
			J16W	—	38	—	—
			J16X	—	38	—	—

FIGURE 27. MAIN CONTROL PANEL CABLE ASSEMBLY AND CONNECTORS (SHEET 8 OF 11)

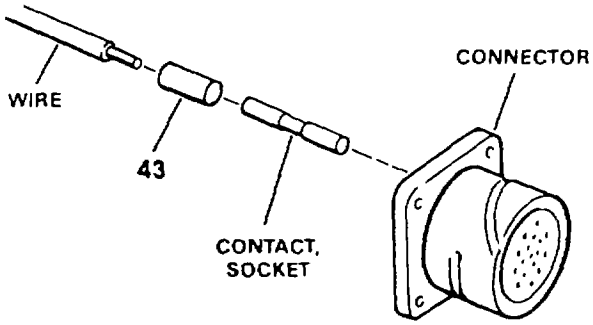

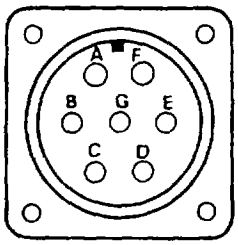

J17
DETAIL H

HARNESS ASSY	CONNECTOR	DETAIL	WIRE RUN		SOCKET	WIRE	LENGTH
			FROM	TO			
21	33	H	J17A	TB1-36	39	42	21.50
			J17B	TB1-90	39	42	10.00
			J17C	TB1-98	39	42	12.00
			J17D	TB1-53	39	42	19.50
			J17E	TB1-86	39	42	11.50
			J17F	TB1-62	39	42	14.00
			J17G	TB1-87	39	42	12.00

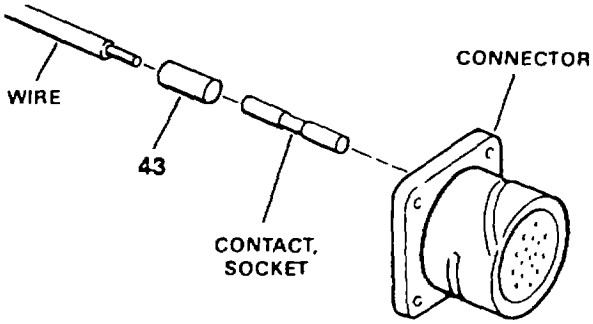

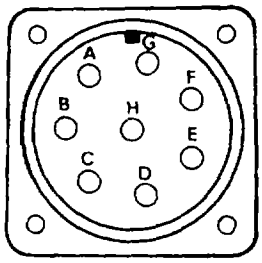

J18, J20
DETAIL I

HARNESS ASSY	CONNECTOR	DETAIL	WIRE RUN		SOCKET	WIRE	LENGTH
			FROM	TO			
22	34	I	J18A	TB1-53	39	42	24.00
			J18B	TB1-88	39	42	18.00
			J18C	TB1-99	39	42	14.00
			J18D	TB1-59	39	42	24.50
			J18E	TB1-55	39	42	18.00
			J18F	—	39	—	—
			J18G	—	39	—	—
			J18H	—	39	—	—

FIGURE 27. MAIN CONTROL PANEL CABLE ASSEMBLY AND CONNECTORS (SHEET 9 OF 11)

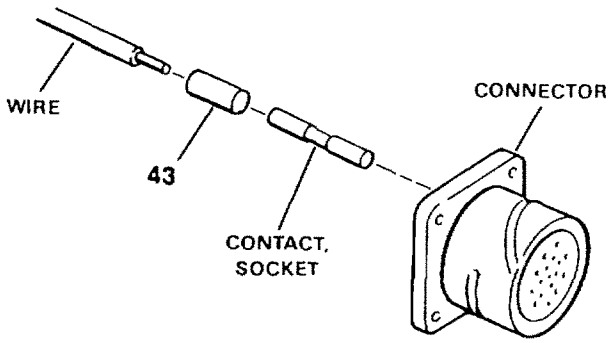

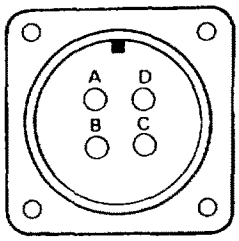

J19
DETAIL J

HARNESS ASSY	CONNECTOR	DETAIL	WIRE RUN		SOCKET	WIRE	LENGTH
			FROM	TO			
23	35	J	J19A	TB3-4	39	42	11.00
			J19B	TB3-5	39	42	11.00
			J19C	TB3-6	39	42	11.00
			J19D	TB3-23	39	42	15.00

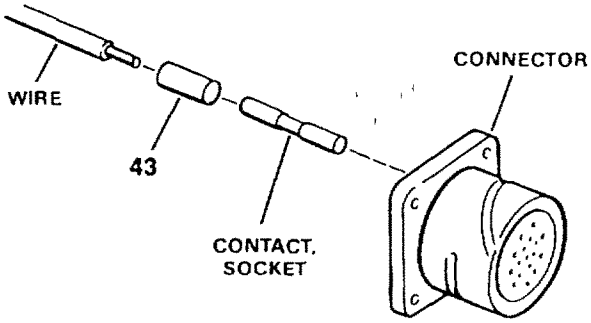

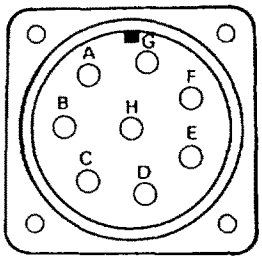

J18, J20
DETAIL K

HARNESS ASSY	CONNECTOR	DETAIL	WIRE RUN		SOCKET	WIRE	LENGTH
			FROM	TO			
24	34	K	J20A	TB3-1	39	42	8.00
			J20B	TB3-2	39	42	8.00
			J20C	TB3-3	39	42	8.00
			J20D	TB3-10	39	42	10.00
			J20E	TB3-11	39	42	10.00
			J20F	TB3-12	39	42	10.00
			J20G	—	39	—	—
			J20H	TB3-23	39	42	13.00

FIGURE 27. MAIN CONTROL PANEL CABLE ASSEMBLY AND CONNECTORS (SHEET 10 OF 11)

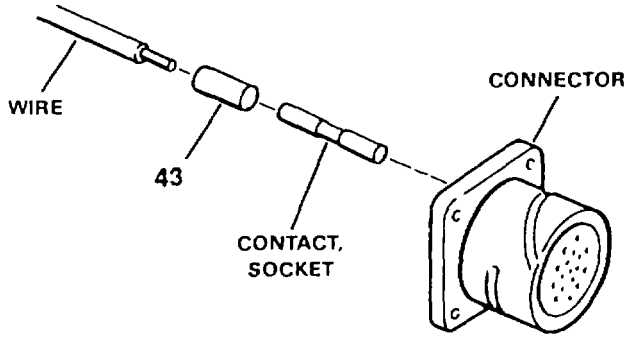

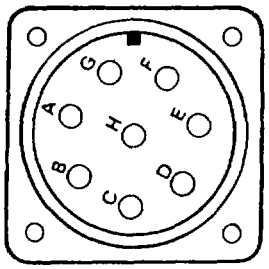

J21
DETAIL L

HARNESS ASSY	CONNECTOR	DETAIL	WIRE RUN		SOCKET	WIRE	LENGTH
			FROM	TO			
25	36	L	J21A	TB3-13	39	42	8.00
			J21B	TB3-14	39	42	8.00
			J21C	TB3-15	39	42	8.00
			J21D	TB3-24	39	42	6.50
			J21E	TB3-7	39	42	10.00
			J21F	TB3-8	39	42	10.00
			J21G	TB3-9	39	42	10.00
			J21H	TB3-25	39	42	6.00

FIGURE 27. MAIN CONTROL PANEL CABLE ASSEMBLY AND CONNECTORS (SHEET 11 OF 11)

(1) ITEM NO	(2) SMR CODE	(3) NSN	(4) CAGEC	(5) PART NUMBER	(6) DESCRIPTION AND USABLE ON CODES(UOC)	(7) QTY
					GROUP 02 WATER PURIFICATION SYSTEM FIG. 27 MAIN CONTROL PANEL CABLE ASSEMBLY AND CONNECTORS	
1	PAFZZ	5305000545652	96906	MS51957-18	..SCREW,MACHINE 0.112-40 UNC-2A X 0.625 INCH LONG.....	24
2	PAFZZ	5310009349748	96906	MS35649-244	..NUT,PLAIN,HEXAGON.....	24
3	PAFZZ	5310009338118	96906	MS35338-135	..WASHER,LOCK.....	24
4	PAFZZ	5310007225998	96906	MS15795-805	..WASHER,FLAT.....	24
5	PAFZZ	5330006414338	96906	MS52000-4	..GASKET.....	1
6	PAFZZ	5305000546656	96906	MS51957-32	..SCREW,MACHINE 0.138-32 UNC-2A X 0.75 INCH LONG.....	24
7	PAFZZ	5310009349761	96906	MS35649-264	..NUT,PLAIN,HEXAGON.....	24
8	PAFZZ	5310009296395	96906	MS35338-136	..WASHER,LOCK.....	24
9	PAFZZ	5310008805976	96906	MS15795-806	..WASHER,FLAT.....	24
10	PAFZZ	5330008272813	96906	MS52000-9	..GASKET.....	1
11	PAFZZ	5330009480704	96906	MS52000-10	..GASKET.....	5
12	PAFZZ	5330009681753	96906	MS52000-7	..GASKET.....	2
13	PAFZZ	5330006414336	96906	MS52000-8	..GASKET.....	3
14	XDFFF		97403	13229E1258-1	..HARNESS ASSEMBLY J10.....	1
15	XDFFF		97403	13229E1258-2	..HARNESS ASSEMBLY J11.....	1
16	XDFFF		97403	13229E1258-3	..HARNESS ASSEMBLY J12.....	1
17	XDFFF		97403	13229E1258-4	..HARNESS ASSEMBLY J13.....	1
18	XDFFF		97403	13229E1258-5	..HARNESS ASSEMBLY J14.....	1
19	XDFFF		97403	13229E1258-6	..HARNESS ASSEMBLY J15.....	1
20	XDFFF		97403	13229E1258-7	..HARNESS ASSEMBLY J16.....	1
21	XDFFF		97403	13229E1258-8	..HARNESS ASSEMBLY J17.....	1
22	XDFFF		97403	13229E1258-9	..HARNESS ASSEMBLY J18.....	1
23	XDFFF		97403	13229E1258-10	..HARNESS ASSEMBLY J19.....	1
24	XDFFF		97403	13229E1258-11	..HARNESS ASSEMBLY J20.....	1
25	XDFFF		97403	13229E1258-12	..HARNESS ASSEMBLY J21.....	1
26	PBFFF	5935013467156	09647	120-02312-2	...CONNECTOR,PLUG,ELEC J10.....	1
27	PBFFF	5935013470024	17549	CA3102E24-19S-B-F80-05-57	...CONNECTOR,PLUG,ELEC J11.....	1
28	PBFFF	5935013470025	17549	CA3102E28-11SWB-F80-05-57	...CONNECTOR,PLUG,ELEC J12.....	1
29	PBFFF	5935013470026	17549	CA3102E28-11SYB-05-F80-05-57	...CONNECTOR,PLUG,ELEC J13.....	1
30	PBFFF	5935013470027	17549	CA3102E28-215-S-F80-05-57	...CONNECTOR,PLUG,ELEC J14.....	1
31	PBFFF	5935013470025	17549	CA3102E28-11SWB-F80-05-57	...CONNECTOR,PLUG,ELEC J15.....	1
32	PBFFF	5935013470028	17549	CA3102E28-11SXB-05-F80-05-57	...CONNECTOR,PLUG,ELEC J16.....	1
33	PBFFF	5935013470029	17549	CA3102E20-15S-B-F80-05-57	...CONNECTOR,PLUG,ELEC J17.....	1
34	PBFFF	5935013467139	17549	CA3102E22-23S-B-F80-05-57	...CONNECTOR,PLUG,ELEC J18, J20.....	2
35	PBFFF	5935013470030	17549	CA3102E20-4S-B-F80-05-57	...CONNECTOR,PLUG,ELEC J19.....	1
36	PBFFF		17549	CA3102E22-23SWB-05-P80-05-07	...CONNECTOR,PLUG,ELEC J21.....	1

(1) ITEM NO	(2) SMR CODE	(3) NSN	(4) CAGEC	(5) PART NUMBER	(6) DESCRIPTION AND USABLE ON CODES(UOC)	(7) QTY
37	PAFZZ	5999013438906	17549	031-8555-000	....CONTACT,ELECTRICAL PART OF KIT P/N 120-02593-P.....	2
38	PAFZZ	5999011588887	71468	031-8556-000	....CONTACT,ELECTRICAL PART OF ETN KIT P/N 120-02593-P.....	121
38	PAFZZ	5999011588887	71468	031-8556-000	....CONTACT,ELECTRICAL PART OF FKD KIT P/N 120-02593-P.....	118
39	PAFZZ	5999013438909	71468	031-8557-000	....CONTACT,ELECTRICAL PART OF KIT P/N 120-02593-P.....	51
40	MFFZZ		09647	1-18-9-J14	...WIRE,PVC,WHITE CUT TO LENGTH FROM BULK, P/N M5086/1-18-9.....	V
41	MFFZZ		09647	1-16-9-J10-J16	...WIRE,PVC,WHITE CUT TO LENGTH FROM BULK, P/N M5086/1-16-9.....	V
42	MFFZZ		09647	1-12-9-J12	...WIRE,PVC,WHITE CUT TO LENGTH FROM BULK, P/N M5086/1-12-9.....	V
43	XDFZZ		01121	B-321HCPS.9-3336W	...MARKER.....	V

END OF FIGURE

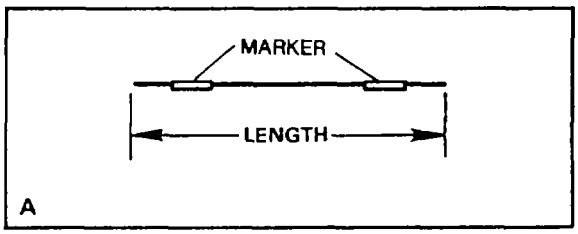

WIRE RUN				TERMINAL				
FROM	TO	WIRE	LENGTH	FIRST	SECOND	THIRD	FOURTH	MARKER
K1-B1Y	MS3-3	2	76.00					24
K1-B3Y	MS8 1M-4	1	84.00					24
K2-A4Y	MS7-4	2	80.00					24
K2-B1X	MS7-3	2	100.00					24
K3-B1X	MS7-2	2	95.00					24
K3-B4X	MS8 1M-8	2	88.00					24
K11-A4Y	MS8 1M-3	1	74.00					24
K12-A1X	MS3-A	2	73.50					24
K13-A1X	MS3-2	2	69.00					24
LTK1-C1Y	MS8 1M-9	2	58.00					24
LTK2-A3Y	MS8 1M-67	2	27.00					24
K4-K1	SS2-1B1	1	105.50					24
K5-K1	SS2-2A4	2	108.50					24
K1-K1	PB4-3A3	2	99.00					24
K2-K1	PB4-1A3	2	98.00					24
K3-K1	PB4-2A4	2	101.00					24
K4-A2X	PB6-1B2	2	105.00					24
K1-B1X	PB7-1A3	2	110.00					24
K1-B2X	PB9-1A4	2	113.50					24
K4-A3X	PB12-1A3	2	109.00					24
K7-K1	PB9-1A3	2	100.00					24
K2-B3X	PB16-1B1	2	108.50					24
K6-K1	PB15-1A3	2	117.00					24
K1-A1X	PB4-1B2	2	98.00					24
K4-A1Y	PL3-1	2	111.00					24
K5-A1Y	PL4-1	2	107.00					24
K1-A1Y	PL5-1	2	110.00					24
K2-A1Y	PL6-1	2	105.50					24
K3-A1Y	PL7-1	2	100.00					24
K7-A1Y	PL9-1	2	81.00					24
K1-A3Y	PB4-3A4	2	107.00					24
K2-A3Y	PB4-1A4	2	104.00					24
K3-A3Y	PB4-2A3	2	109.00					24
K13-A1X	PB7-1A4	2	110.50					24
K15-A1X	PB12-1A4	2	112.50					24

FIGURE 28. MAIN CONTROL PANEL WIRING LIST (SHEET 1 OF 22)

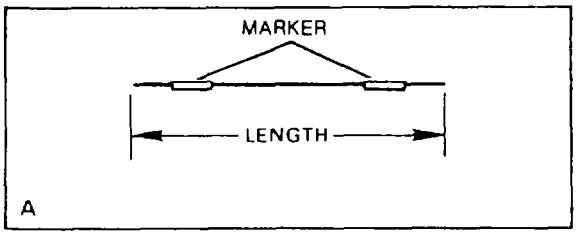

WIRE RUN				TERMINAL				
FROM	TO	WIRE	LENGTH	FIRST	SECOND	THIRD	FOURTH	MARKER
K22-A1X	PB4-2B2	2	116.00					24
K26-A4X	PB5-1A3	1	119 50					24
LTK1-B4X	PL8-1	2	96 00					24
LTK2-A1X	PL10-1	2	90.50					24
LTK2-A3X	PL11-1	2	84 00					24
LTK4-B1X	PL20-1	2	96.00					24
LTK2-B3X	PL12-1	2	116.00					24
LTK2-B4X	PL13-1	2	114 00					24
LTK2-C2X	PL14-1	2	123.50					24
LTK2-C3X	PL15-1	2	119 00					24
LTK3-A1X	PL16-1	2	119 50					24
LTK4-A2X	PL17-1	2	117 00					24
LTK3-A3X	PL18-1	2	109 50					24
LTK4-B2X	PL19-1	2	125 50					24
K21-A4Y	PB16-2A4	2	135 00					24
LTK4-K1	PB18-1A4	1	127 00					24
LTK3-A4X	PL21-1	2	127.50					24
LTK3-B1X	PL22-1	2	122.50					24
LTK3-B2X	PL23-1	2	141 00					24
LTK3-B3X	PL24-1	2	137.00					24
LTK3-B4X	PL25-1	2	131.00					24
LTK3-C1X	PL26-1	2	122 50					24
LTK3-C2X	PL27-1	2	131.00					24
LTK3-C3X	PL28-1	2	135 50					24
LTK4-B3X	PL29-1	2	128.50					24
LTK4-B4X	PL30-1	2	120.50					24
K26-A2Y	PB5-1A4	1	128 00					24
K26-A4Y	PB5-2A3	1	117 00					24
SS2-2A3	SS3-2A3	2	17 00					24
SS3-2A3	SS3-1B2	2	10 00					24
SS3-1B2	SS3-2B1	2	11 50					24
SS3-2B1	PB4-2B1	2	11.50					24
PB4-2B1	PB4-1B2	2	10 50					24
SS2-2A3	SS2-1B2	2	13.00					24
SS2-1B2	PL2-1	2	45.00					24

FIGURE 28. MAIN CONTROL PANEL WIRING LIST (SHEET 2 OF 22)

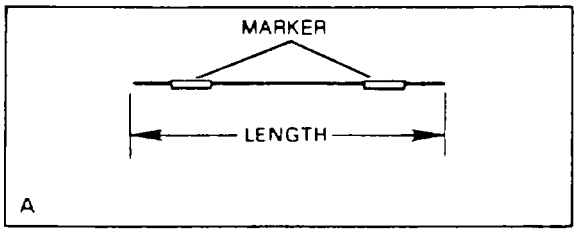

WIRE RUN				TERMINAL				
FROM	TO	WIRE	LENGTH	FIRST	SECOND	THIRD	FOURTH	MARKER
PL2-1	PB3-2B2	2	13.50					24
PB3-2B2	PB15-1A4	2	50.00					24
SS3-2A4	PB4-3A4	2	14 00					24
SS3-1B1	PB4-1A4	2	9.50					24
SS3-2B2	PB4-2A3	2	9.50					24
PB6-1B1	PB7-1A4	2	7.00					24
PB8-1B1	PB9-1A4	2	7 00					24
PB4-1B1	PB11-1B2	2	20 00					24
PB11-1B1	PB12-1A4	2	7 00					24
PB13-1B2	PB14-1A4	2	7 00					24
PL2-2	PL11-2	2	13 00					24
PL11-2	PL10-2	2	9 50					24
PL10-2	PL9-2	2	9.50					24
PL9-2	PL8-2	2	9 50					24
PL8-2	PL7-2	2	15 50					24
PL7-2	PL6-2	2	9 50					24
PL6-2	PL5-2	2	9 50					24
PL5-2	PL4-2	2	11 00					24
PL4-2	PL3-2	2	9 50					24
PL20-2	PL18-2	2	19 50					24
PL18-2	PL13-2	2	11 00					24
PL13-2	PL15-2	2	11 00					24
PL15-2	PL16-2	2	28 00					24
PL16-2	PL14-2	2	10.50					24
PL14-2	PL12-2	2	10 50					24
PL12-2	PL17-2	2	10.50					24
PL17-2	PL19-2	2	9 50					24
PL19-2	PL28-2	2	32 00					24
PL28-2	PL29-2	2	10 00					24
PL29-2	PL27-2	2	10.00					24
PL27-2	PL30-2	2	12.00					24
PL30-2	PL26-2	2	10 00					24
PL26-2	PL22-2	2	6 00					24
PL22-2	PL21-2	2	11 50					24

FIGURE 28. MAIN CONTROL PANEL WIRING LIST (SHEET 3 OF 22)

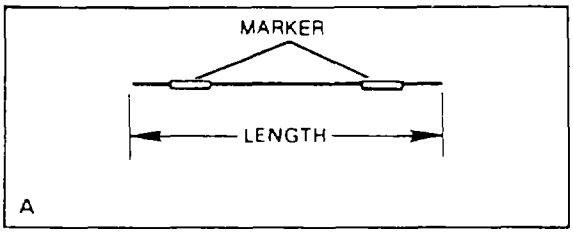

WIRE RUN				TERMINAL				
FROM	TO	WIRE	LENGTH	FIRST	SECOND	THIRD	FOURTH	MARKER
PL21-2	PL25-2	2	13 00					24
PL25-2	PL24-2	2	11.50					24
PL24-2	PL23-2	2	11 50					24
SS5-1A4	PB17-2A3	1	32 00					24
PB17-2A3	PB17-1A4	1	10 00					24
PB17-1A4	PB18-1A3	1	7 00					24
PB5-1A3	PB5-2A4	2	9 00					24
SS6-1A4	TB1-57	1	98 00					24
PB10-2A4	TB1-56	2	103 00					24
PB10-2A3	TB1-51	2	101 00					24
PB17-1A3	TB1-16	1	83 00					24
PB17-2A4	TB1-22	1	87 00					24
PB16-1B2	TB1-3	1	71 50					24
PB3-1B1	TB1-67	2	108 50					24
PL20-2	TB1-72	2	67.00					24
PL2-2	TB1-80	2	49 00					24
SS5-1A4	TB1-7	2	72.00					24
SS5-1A3	TB1-46	2	77.00					24
CB7-T1	PB3-1B2	2	129 50					24
CB7-T2	PB3-2B1	2	124 50					24
CB8-L1	K4-A2X	2	77.00					24
CB8-T1	PB8-1B2	1	115.50					24
CB9-T1	MS8 1M-2	1	63 50					24
CB9-L1	PB3-1B1	2	134.50					24
CB9-L1	CB10-L1	2	4 00					24
CB10-T1	LTK3-A4Y	1	36 50					24
CB10-T1	GF1 2-L1	1	105.50					24
CB11-LP(B)	K27-A4Y	2	41.00					24
CB11-LN(S)	SR9-N	2	115.50					24
CB11-LN(S)	TB1-87	2	33.00					24
CB12-L1	K27-A2Y	1	47 50					24
CB12-T1	SS6-1A3	1	132.50					24
CB13-LN(S)	TB1-55	2	41.00					24
CB13-LB(B)	SS6-3A4	2	139 00					24
CB13-LINE	CB14-LINE	4	4 00					23

FIGURE 28. MAIN CONTROL PANEL WIRING LIST (SHEET 4 OF 22)

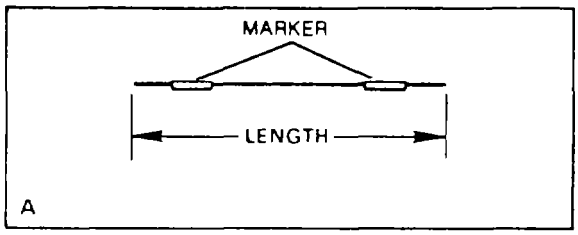

WIRE RUN				TERMINAL				
FROM	TO	WIRE	LENGTH	FIRST	SECOND	THIRD	FOURTH	MARKER
CB14-LN(S)	TB1-54	2	41 00					24
CB14-LP(B)	SS6-2A3	2	140.00					24
GFI 1-C	GFI 1-L2	2	4 00					24
GFI 2-C	GFI 2-L2	2	4 00					24
SS8-1A3	SR9-H	2	18.00					24
GFI 2-L1	LTK4-C1X	2	99.00					24
GFI 1-L1	LTK2-A2Y	2	99.50					24
MS7-5	PB13-1B1	2	158.50					24
MS8 1M-6	PB14-1A4	2	157 50					24
MS8 1S-2	PB13-1A3	2	145 50					24
MS3-4	SS6-3A3	2	159 50					24
MS2-61	SS6-2A4	2	163 00					24
MS8 2M-3	PB16-2A3	2	151.50					24
MS3-5	TB1-59	2	63.00					24
MS2-62	TB1-60	2	66.50					24
MS2-NC	TB1-74	1	60.00					24
MS3-NC	TB1-81	2	55 00					24
SS8-1A4	TB1-62	2	119.50					24
SS8-1A3	TB1-51	2	115 50					24
GFI 1-C	TB3-21	2	47 00					24
GFI 1-NC	TB3-22	2	47 00					24
GFI 2-C	TB3-19	2	48 50					24
GFI 2-NC	TB3-20	2	48.50					24
GFI 2-GND	GFI 1-GND	2	11.00					24
K1-A1X	K2-A1X	2	11.00					24
K2-A1X	K2-A4X	2	11 00					24
K2-A4X	K3-A1X	2	9.50					24
K3-A1X	K4-A1X	2	11.00					24
K4-A1X	K5-A1X	2	11.00					24
K5-A1X	K7-A1X	2	12 00					24
K7-A1X	LTK1-A1Y	2	53 00					24
LTK1-A1Y	LTK1-A2Y	2	9.00					24
LTK1-A2Y	LTK1-A3Y	2	9 00					24
LTK1-A3Y	LTK1-A4Y	2	9 00					24
LTK1-A4Y	LTK1-B1Y	2	11 50					24

FIGURE 28. MAIN CONTROL PANEL WIRING LIST (SHEET 5 OF 22)

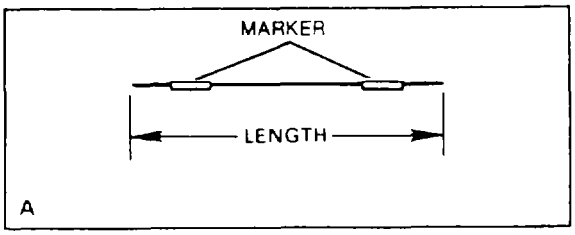

WIRE RUN				TERMINAL				
FROM	TO	WIRE	LENGTH	FIRST	SECOND	THIRD	FOURTH	MARKER
LTK1-B1Y	LTK1-B2Y	2	12.00					24
LTK1-B2Y	LTK1-B3Y	2	12.00					24
LTK1-B3Y	LTK2-A1Y	2	10 50					24
LTK2-A1Y	LTK2-A2Y	2	9 00					24
K3-B4X	K5-B1X	2	13 00					24
K1-A3X	K2-A2X	2	10 50					24
K1-K1	K3-A2X	2	11 50					24
K1-A2X	K2-A3X	2	12 00					24
K1-A4X	K3-A3X	2	12 50					24
K7-K1	K7-A3X	2	9 00					24
K2-C1X	K3-C1X	1	15.50					24
K3-B2X	K5-A4X	2	14 50					24
K1-B4X	K2-C2X	1	13 50					24
K2-C2X	K3-C3X	1	15 00					24
K1-C1X	K2-C3X	1	15.00					24
K2-C3X	K3-C4X	1	14.50					24
K8-A1X	K8-K1	1	9 00					24
K9-K2	K7-K2	2	10 00					24
K7-K2	K6-K2	2	9 00					24
K6-K2	K5-K2	2	9 00					24
K5-K2	K4-K2	2	9 00					24
K4-K2	K3-K2	2	9 00					24
K3-K2	K2-K2	2	9 00					24
K2-K2	K1-K2	2	9 00					24
K2-A2Y	K3-A2Y	2	9 00					24
K3-A4Y	K4-A2Y	2	9 00					24
K1-B2Y	K7-A3Y	1	23.00					24
K14-A1Y	K15-A1X	2	10 00					24
K3-B1Y	K14-A1X	2	17 00					24
K2-B1Y	K4-A3Y	2	15 00					24
K14-A1Y	K19-A2X	2	16.50					24
K3-B2Y	K5-A4Y	2	15.00					24
K5-A4Y	K9-A1Y	2	14.00					24
K2-B2Y	B3-B4Y	2	13 00					24
K3-B4Y	K5-B1Y	2	14 00					24

FIGURE 28. MAIN CONTROL PANEL WIRING LIST (SHEET 6 OF 22)

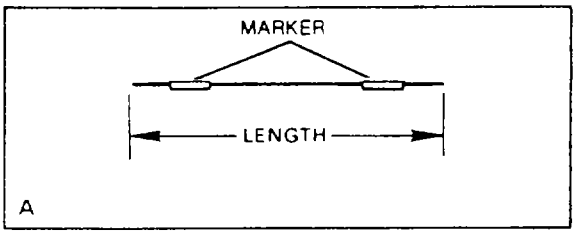

WIRE RUN				TERMINAL				
FROM	TO	WIRE	LENGTH	FIRST	SECOND	THIRD	FOURTH	MARKER
K5-B1Y	K15-A3Y	2	13 00					24
LTK2-B3Y	LTK2-B4Y	1	12.00					24
LTK2-B4Y	LTK2-C2Y	1	13 00					24
LTK2-C2Y	LTK2-C3Y	1	14 00					24
LTK2-C3Y	LTK3-A1Y	1	12 00					24
LTK3-A1Y	LTK3-A3Y	1	10 00					24
LTK3-A3Y	LTK4-A1Y	1	10.00					24
LTK4-A1Y	LTK4-A4Y	1	10 50					24
K3-C2Y	K3-C1Y	1	13 50					24
K3-C1Y	K2-B4Y	1	12 00					24
K2-B4Y	K2-B3Y	1	11 00					24
K2-B3Y	K11-A1X	1	10 50					24
K11-A1X	K11-A2X	1	8 50					24
K11-A2X	K11-A3X	1	8 50					24
K11-A3X	K12-A2X	1	9.50					24
K12-A2X	K12-A3X	1	9.00					24
K12-A3X	K13-A3X	1	10 00					24
K15-B4X	K11-A4X	1	18 00					24
K2-C1Y	K11-K1	1	11.00					24
K3-B3Y	K5-A3Y	1	12 50					24
K15-K1	K15-B1X	1	8 50					24
K16-K1	K16-A2X	1	8 00					24
K17-K1	K17-A2X	1	8 00					24
K18-K1	K18-A2X	1	8 00					24
K1-B4Y	K2-C2Y	1	13 00					24
K2-C2Y	K3-C3Y	1	16.50					24
K3-C3Y	K16-A3X	1	20 00					24
K16-A3X	K17-A3X	1	10 50					24
K17-A3X	K18-A3X	1	10 50					24
K1-C1Y	K2-C3Y	1	16.00					24
K2-C3Y	K3-C4Y	1	15 00					24
K3-C4Y	K15-A4X	1	17 00					24
K10-K2	K11-K2	2	9 00					24
K11-K2	K12-2	2	9 00					24
K12-K2	K13-K2	2	9 00					24
K13-K2	K14-K2	2	9 00					24

FIGURE 28. MAIN CONTROL PANEL WIRING LIST (SHEET 7 OF 22)

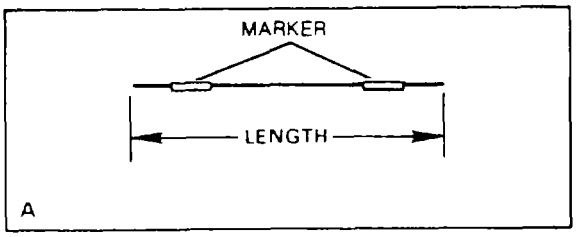

WIRE RUN				TERMINAL				
FROM	TO	WIRE	LENGTH	FIRST	SECOND	THIRD	FOURTH	MARKER
K14-K2	K15-K2	2	9 00					24
K15-K2	K16-K2	2	9 00					24
K16-K2	K17-K2	2	9.00					24
K17-K2	K18-K2	2	9 00					24
K19-K2	K20-K2	2	9.00					24
K20-K2	K21-K2	2	9 00					24
K21-K2	K22-K2	2	9 00					24
K22-K2	K23-K2	2	9 00					24
K23-K2	K24-K2	2	9 00					24
K24-K2	K25-K2	2	9 00					24
K25-K2	K26-K2	2	9 00					24
LTK4-K2	LTK3-K2	2	8.00					24
LTK3-K2	LTK2-K2	2	8.00					24
LTK2-K2	LTK1-K2	2	8 00					24
K12-A1Y	K13-A1Y	2	11 00					24
K21-A4X	K22-A4X	2	11 00					24
K10-A1Y	K11-A4Y	1	12.00					24
K6-A1X	K15-A2Y	1	45 00					24
K15-A2Y	K15-A4Y	1	9.00					24
K15-A4Y	K16-A1Y	1	8.50					24
K16-A1Y	K16-A3Y	1	9 00					24
K16-A3Y	K17-A1Y	1	9 00					24
K17-A1Y	K17-A3Y	1	9 00					24
K17-A3Y	K18-A1Y	1	9 00					24
K18-A1Y	K18-A3Y	1	9 00					24
K18-A3Y	K19-A1X	1	27 50					24
K19-A1X	K19-A3X	1	9.00					24
K19-A3X	K20-A3X	1	10 50					24
K20-A3X	K21-A2X	1	10 50					24
K21-A2X	K21-A3X	1	8.50					24
K21-A3X	K22-A2X	1	10.50					24
K22-A2X	K22-A3X	1	8.50					24
K22-A3X	K23-A2X	1	10.50					24
K23-A2X	K23-A3X	1	8 50					24

FIGURE 28. MAIN CONTROL PANEL WIRING LIST (SHEET 8 OF 22)

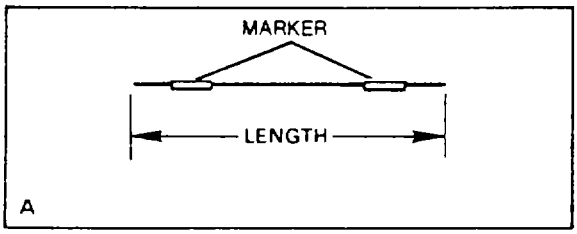

WIRE RUN		WIRE	LENGTH	TERMINAL				MARKER
FROM	TO			FIRST	SECOND	THIRD	FOURTH	
K23-A3X	K24-A2X	1	10 50					24
K24-A2X	K24-A3X	1	8 50					24
K24-A3X	K25-A2X	1	10.50					24
K25-A2X	K25-A3X	1	8 50					24
K25-A3X	LTK4-B4Y	1	31.00					24
LTK4-B4Y	LTK4-B3Y	1	12 00					24
LTK4-B3Y	LTK4-B1Y	1	12.50					24
LTK4-B1Y	LTK3-C3Y	1	12.00					24
LTK3-C3Y	LTK3-C2Y	1	14.50					24
LTK3-C2Y	LTK3-C1Y	1	14.50					24
LTK3-C1Y	LTK3-B4Y	1	13 00					24
LTK3-B4Y	LTK3-B3Y	1	12.00					24
LTK3-B3Y	LTK3-B2Y	1	12.00					24
LTK3-B2Y	LTK3-B1Y	1	12.00					24
LTK3-B1Y	LTK3-A4Y	1	11 50					24
K15-B1Y	K20-A4X	1	17 00					24
K25-K1	K25-A1X	1	8.00					24
K24-K1	K24-A1X	1	8.00					24
K23-K1	K23-A1X	1	8.00					24
K22-K1	K22-B1X	1	9.50					24
K21-K1	K21-B1X	1	9.50					24
K16-A2Y	K20-B1X	1	21.50					24
K17-A2Y	K20-B2X	1	22.50					24
K18-A2Y	K20-B3X	1	25.00					24
K19-B1X	K20-B4X	1	15.00					24
K26-A2X	K26-K1	1	8.00					24
K26-K1	K26-A4X	1	9 00					24
K20-A1X	K26-A3X	1	23 00					24
K27-2	K27-A1X	2	8.00					24
K21-A1Y	K22-A1Y	2	10 00					24
K19-A2Y	K22-A4Y	2	15.50					24
LTK1-B3X	LTK1-B4X	2	11 50					24
LTK1-C1X	LTK2-A1X	2	12 00					24

FIGURE 28. MAIN CONTROL PANEL WIRING LIST (SHEET 9 OF 22)

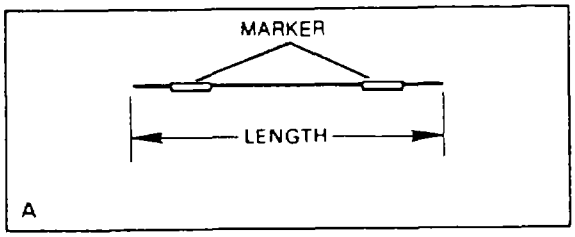

WIRE RUN				TERMINAL				
FROM	TO	WIRE	LENGTH	FIRST	SECOND	THIRD	FOURTH	MARKER
LTK2-A2X	LTK2-A3X	2	9.00					24
LTK2-A4X	LTK2-B3X	1	10 00					24
LTK2-B1X	LTK2-B4X	1	12.00					24
LTK2-B2X	LTK2-C2X	1	12 00					24
LTK2-C1X	LTK2-C3X	1	14.00					24
LTK2-C4X	LTK3-A1X	1	10 50					24
LTK3-A2X	LTK3-A3X	1	9 00					24
LTK1-C2X	LTK4-B1X	1	19 00					24
LTK4-A1X	LTK4-A2X	1	9 00					24
LTK4-A4X	LTK4-B2X	1	10 00					24
K19-B1Y	K20-B4Y	1	15 00					24
K21-A3Y	LTK3-A4X	1	20 00					24
K22-A3Y	LTK3-B1X	1	17 50					24
K23-A3Y	LTK3-B2X	1	16 00					24
K24-A3Y	LTK3-B3X	1	14.50					24
K25-A3Y	LTK3-B4X	1	13 00					24
K19-A1Y	LTK4-B4X	1	28 00					24
K23-A2Y	K24-A2Y	1	11 00					24
K24-A2Y	K25-A2Y	1	11 00					24
K25-A2Y	K26-A2Y	1	11 00					24
K19-A3Y	K21-A2Y	1	12 00					24
K21-A2Y	K22-A2Y	1	11 00					24
K22-A2Y	K26-A4Y	1	19 00					24
LTK1-K1	LTK2-K1	1	7 00					24
LTK2-K1	LTK3-K1	1	7 00					24
LTK3-K1	LTK4-K1	1	7 00					24
LTK4-A3Y	LTK4-C1Y	1	12.50					24
K2-K1	K1-A2Y	2	55 00					24
K3-K1	K1-A4Y	2	51 00					24
K2-B4X	K11-A4X	1	51 00					24
K3-A4X	K21-A1X	2	57 00					24
K1-B1X	K13-A1Y	2	60.00					24
K9-A1X	K15-A1Y	2	38.00					24
K5-A4X	K14-A1Y	2	48 00					24

FIGURE 28. MAIN CONTROL PANEL WIRING LIST (SHEET 10 OF 22)

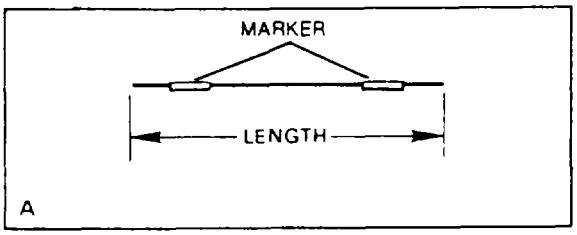

WIRE RUN				TERMINAL				
FROM	TO	WIRE	LENGTH	FIRST	SECOND	THIRD	FOURTH	MARKER
K2-B2X	K15-A3Y	2	54.00					24
K9-K1	K19-A4X	2	49 00					24
K3-C1X	K10-A1Y	1	63.00					24
K3-C2X	K11-A2Y	1	61 00					24
K3-B3X	K12-A3Y	1	58.00					24
K3-C3X	K26-A1X	1	46.00					24
K4-A3X	K22-A4Y	2	56.00					24
K6-A2X	K21-B1Y	1	58 00					24
K6-A3X	K22-B1Y	1	53.50					24
K6-A4X	K23-A1Y	1	50 00					24
K6-B1X	K24-A1Y	1	52 50					24
K6-B2X	K25-A1Y	1	47 00					24
K3-C4X	K26-A3Y	1	51 50					24
K8-A1X	LTK4-A3X	1	37 00					24
K2-C4X	K26-A1Y	1	55.00					24
K1-B3X	LTK4-B2Y	1	61 50					24
K6-A2Y	K21-B1X	1	44.00					24
K6-A3Y	K22-B1X	1	41.00					24
K6-A4Y	K23-A1X	1	33 50					24
K6-B1Y	K24-A1X	1	36.00					24
K6-B2Y	K25-A1X	1	30 50					24
K6-B4Y	K20-K1	1	41.50					24
K1-A1Y	LTK1-A1X	2	54 50					24
K2-A1Y	LTK1-A2X	2	52 00					24
K3-A1Y	LTK1-A3X	2	46.00					24
K4-A1Y	LTK1-A4X	2	44 00					24
K5-A1Y	LTK1-B1X	2	42 50					24
K7-A1Y	LTK1-B2X	2	40.00					24
K9-A1Y	K19-A4Y	2	43.50					24
K15-A3Y	K21-A4Y	2	44 00					24
K15-B1X	K20-A4Y	1	50.00					24
K6-A1Y	K20-A3Y	1	50.00					24
K16-K1	K20-B1Y	1	48 00					24
K17-K1	K20-B2Y	1	47 00					24

FIGURE 28. MAIN CONTROL PANEL WIRING LIST (SHEET 11 OF 22)

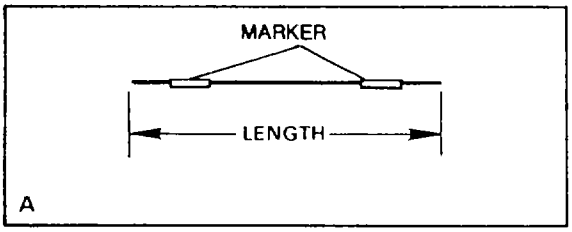

WIRE RUN				TERMINAL				
FROM	TO	WIRE	LENGTH	FIRST	SECOND	THIRD	FOURTH	MARKER
K18-K1	K20-B3Y	1	42.00					24
K15-A2X	LTK3-C1X	1	38.50					24
K16-A1X	LTK3-C2X	1	36.50					24
K17-A1X	LTK3-C3X	1	33.00					24
K18-A1X	LTK4-B3X	1	27.00					24
K18-A3X	K23-A2Y	1	34.00					24
K15-A4X	K19-A3Y	1	49.00					24
K5-A2Y	K20-A1Y	1	51.00					24
K2-C4Y	K20-A2Y	1	60.00					24
K12-A1X	LTK1-B4Y	2	52.00					24
K19-K1	K19-B1Y	1	55.00					24
K27-K1	K27-A3Y	2	19.00					24
K15-A3Y	LTK1-C1Y	2	42.00					24
K7-A3X	TB1-1	1	36.50					24
K2-C1X	TB1-3	1	53.00					24
K3-C2X	TB1-4	1	51.00					24
K5-A3X	TB1-5	1	43.00					24
K1-B3X	TB1-6	1	48.00					24
K6-A1X	TB1-7	1	43.00					24
K6-B4X	TB1-8	1	40.00					24
LTK4-C1X	TB1-9	1	41.50					24
K6-A2X	TB1-11	1	42.00					24
K6-A3X	TB1-12	1	40.00					24
K6-A4X	TB1-13	1	39.00					24
K6-B1X	TB1-14	1	41.50					24
K6-B2X	TB1-15	1	43.50					24
K5-A2X	TB1-16	1	44.50					24
K8-K1	TB1-17	1	35.00					24
K3-C2Y	TB1-18	1	44.00					24
K8-A1Y	TB1-24	1	30.00					24
K11-A1Y	TB1-25	1	48.00					24
K13-A3Y	TB1-27	1	42.00					24
K20-A4X	TB1-28	1	48.00					24
K16-A2Y	TB1-32	1	35.00					24

FIGURE 28. MAIN CONTROL PANEL WIRING LIST (SHEET 12 OF 22)

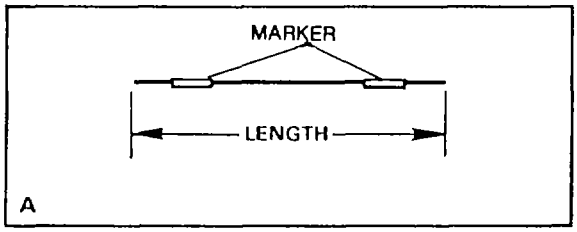

WIRE RUN		WIRE	LENGTH	TERMINAL				MARKER
FROM	TO			FIRST	SECOND	THIRD	FOURTH	
K17-A2Y	TB1-33	1	32.50					24
K18-A2Y	TB1-34	1	32.00					24
K19-B1Y	TB1-35	1	49.50					24
K27-K1	TB1-36	2	29.00					24
LTK2-A4Y	TB1-38	1	48.50					24
LTK2-B1Y	TB1-39	1	50.00					24
LTK2-B2Y	TB1-40	1	49.50					24
LTK2-C1Y	TB1-41	1	49.50					24
LTK2-C4Y	TB1-42	1	49.50					24
LTK3-A2Y	TB1-43	1	45.00					24
LTK1-C2Y	TB1-46	1	52.50					24
LTK4-C1Y	TB1-47	1	45.00					24
K27-A3X	TB1-53	1	27.00					24
K15-B4Y	TB1-68	1	38.00					24
K10-A1X	TB1-69	1	55.00					24
K8-K2	TB1-71	1	46.50					24
K9-K2	TB1-79	1	46.00					24
K27-A1Y	TB1-86	2	28.00					24
K27-A1X	TB1-90	2	35.00					24
CB1-T1	PDB-L1	6	9.00					25
CB1-T2	PDB-L2	6	9.00					25
CB1-T3	PDB-L3	6	9.00					25
CB1-T1	CB6-L1	6	52.00					25
CB1-T2	CB6-L2	6	55.00					25
CB1-T3	CB6-L3	6	57.00					25
MS8 2M-L1	MS8 1M-L1	6	33.50					25
MS8 2M-L2	MS8 1M-L2	6	33.50					25
MS8 2M-L3	MS8 1M-L3	6	33.50					25
PDB-TB11	CB5-L1	4	39.00					23
PDB-TB21	CB5-L2	4	39.00					23
PDB-TB31	CB5-L3	4	39.00					23
PDB-TB12	CB17-L1	4	46.00					23
PDB-TB22	CB17-L2	4	46.00					23
PDB-TB32	CB17-L3	4	46.00					23

FIGURE 28. MAIN CONTROL PANEL WIRING LIST (SHEET 13 OF 22)

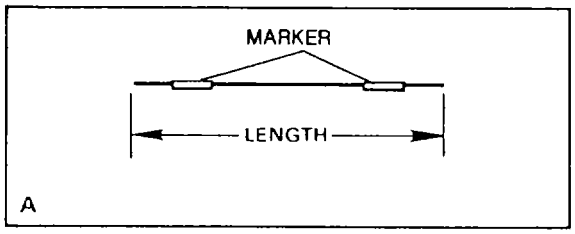

WIRE RUN				TERMINAL				
FROM	TO	WIRE	LENGTH	FIRST	SECOND	THIRD	FOURTH	MARKER
PDB-TT11	CB2-L1	3	47.00					24
PDB-TT21	CB2-L2	3	47.00					24
PDB-TT31	CB2-L3	3	47.00					24
PDB-TT12	CB3-L1	3	49.00					24
PDB-TT22	CB3-L2	3	49.00					24
PDB-TT32	CB3-L3	3	49.00					24
CB3-L1	CB4-L1	3	6.50					24
CB3-L2	CB4-L2	3	6.50					24
CB3-L3	CB4-L3	3	6.50					24
CB17-L1	CB15-L1	3	14.50					24
CB17-L2	CB15-L2	3	14.50					24
CB15-L2	CB16-L1	3	10.50					24
CB17-L3	CB16-L2	3	10.00					24
CB2-T1	MS1-L1	2	51.00					24
CB2-T2	MS1-L2	2	51.00					24
CB2-T3	MS1-L3	2	51.00					24
CB3-T1	MS2-L1	2	49.00					24
CB3-T2	MS2-L2	2	49.50					24
CB3-L3	MS2-L3	2	50.00					24
CB4-T1	MS3-L1	2	47.50					24
CB4-T2	MS3-L2	2	47.50					24
CB4-T3	MS3-L3	2	47.50					24
CB5-T1	MS7-L1	3	67.50					24
CB5-T2	MS7-L2	3	67.50					24
CB5-T3	MS7-L3	3	67.50					24
CB17-T1	TB3-10	3	78.00					24
CB17-T2	TB3-11	3	79.00					24
CB17-T3	TB3-12	3	80.00					24
MS1-T1	TB3-1	2	32.50					24
MS1-T2	TB3-2	2	31.50					24
MS1-T3	TB3-3	2	30.50					24
MS2-T1	TB3-4	2	63.00					24
MS2-T2	TB3-5	2	62.00					24

FIGURE 28. MAIN CONTROL PANEL WIRING LIST (SHEET 14 OF 22)

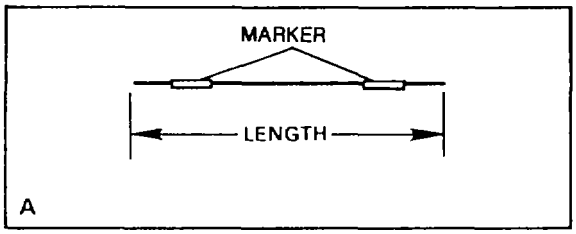

WIRE RUN				TERMINAL				
FROM	TO	WIRE	LENGTH	FIRST	SECOND	THIRD	FOURTH	MARKER
MS2-T3	TB3-6	2	61.00					24
MS3-T1	TB3-7	2	42.00					24
MS3-T2	TB3-8	2	40.50					24
MS3-T3	TB3-9	2	39.00					24
MS7-T1	TB3-13	3	54.50					24
MS7-T2	TB3-14	3	53.50					24
MS7-T3	TB3-15	3	52.50					24
MS1-NC	MS2-NC	2	30.00					24
MS3-NC	MS7-NC	2	31.00					24
MS7-NC	MS8 1M-NC	2	20.00					24
MS7-A	MS8 2M-2	2	53.50					24
MS7-A	MS8 1M-9	2	15.00					24
MS8 1S-2	MS8 2S-4	2	17.00					24
MS8 2M-4	MS8 2S-5	2	32.00					24
MS8 2M-5	MS8 1S-A	2	45.50					24
MS8 1S-3	MS8 1M-7	2	43.00					24
MS8 1M-7	MS8 1M-A	2	9.00					24
MS8 1M-A	MS8 1M-67	2	7.50					24
MS8 1S-5	MS8 1M-68	2	23.00					24
MS8 1S-5	MS8 2M-6	2	38.50					24
MS8 1S-4	MS8 2M-A	2	43.50					24
MS8 2M-7	MS8 2S-A	2	34.00					24
MS8 2M-8	MS8 1S-B	2	50.00					24
MS8 1S-B	MS8 2S-B	2	34.00					24
MS8 2S-B	MS8 1M-B	2	35.50					24

FIGURE 28. MAIN CONTROL PANEL WIRING LIST (SHEET 15 OF 22)

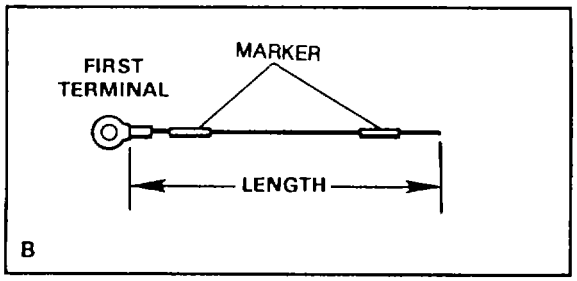

WIRE RUN				TERMINAL				
FROM	TO	WIRE	LENGTH	FIRST	SECOND	THIRD	FOURTH	MARKER
TDK1-4	MS1-3	1	58.50	9				24
PSK1-LD(B)	MS2-3	1	58.00	10				24
K27-A2X	T2-X1	1	61.00	11				24
K28-LOAD	MS8 1M-5	1	61.00	10				24
FM1-GND	TB1-92	1	102.00	9				24
T1-X1	CB7-L1	2	79.00	10				24
T1-X1	CB7-L2	2	79.00	10				24
LK1-AC	CB9-T1	1	53.00	9				24
T2-X1	CB11-LINE	2	76.50	11				24
CB14-LINE	T2-X1	4	79.50	12				23
MS8 1S-3	ETM2-1	2	90.50	18				24
MS1-A	ETM1-1	2	83.00	18				24
MS1-NC	ETM1-2	2	80.00	18				24
MS8 1M-NC	ETM2-2	2	105.50	18				24
ETM2-2	GFI 1-L2	2	41.00	18				24
ETM1-2	GFI 2-L2	2	37.00	18				24
GFI 1-GND	SR9-GND	2	23.00	18				24
GFI 2-GND	GS1	2	112.50	10				24
T1-X2	TB2-5	1	15.00	10				24
T2-X2	TB2-2	2	12.00	11				24
GS1	TB2-45	1	17.00	10				24
GS1	TB2-1	2	18.00	10				24
T1-X2	TB1-73	2	74.00	10				24
T1-X2	TB1-80	2	73.50	10				24
T2-X2	TB1-82	2	68.50	11				24
T2-X2	TB1-84	1	67.00	11				24
GS1	TB1-92	2	83.50	10				24
K28-AC	LTK2-B3Y	1	33.50	9				24
LTK4-A4Y	PS1-AC	1	28.50	18				24
K26-K2	PS1-NEG	2	19.00	9				24
PS1-NEG	LTK4-K2	2	23.00	20				24
LTK1-K2	K28-NEUT	2	9.50	20				24
LTK4-A3X	PSK1-AC	1	18.50	9				24

FIGURE 28. MAIN CONTROL PANEL WIRING LIST (SHEET 16 OF 22)

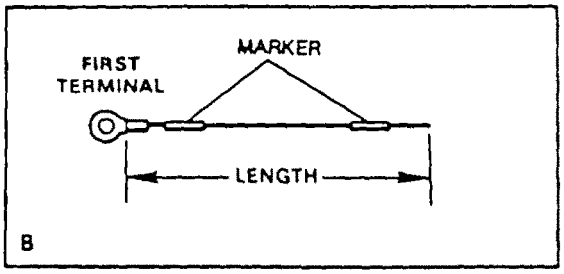

WIRE RUN				TERMINAL				
FROM	TO	WIRE	LENGTH	FIRST	SECOND	THIRD	FOURTH	MARKER
K13-A3X	PS1-AC	1	33.00	18				24
K10-K1	LK1-LOAD	1	62.50	9				24
TDK1-3	TB1-10	1	13.50	9				24
TDK1-11	TB1-23	1	9.00	9				24
LK1-SW1	TB1-44	1	48.50	9				24
LK1-SW2	TB1-45	1	55.50	9				24
K28-ON	TB1-48	1	50.00	9				24
K28-COM	TB1-49	1	51.50	9				24
K28-OFF	TB1-50	1	49.50	9				24
PSK1-LD(S)	TB1-72	1	19.50	9				24
CB6-T1	MS8 2M-A1	6	58.00	16				25
CB6-T2	MS8 2M-A2	6	61.00	16				25
CB6-T3	MS8 2M-A3	6	64.00	16				25
MS8 2S-A1	PRA-2	5	29.50	13				23
MS8 2S-A2	PRB-2	5	29.50	13				23
MS8 2A-A3	PRC-2	5	29.50	13				23
MS8 2S-B1	MS8 2M-T6	5	23.00	15				23
MS8 2S-B2	MS8 2M-T4	5	23.00	15				23
MS8 2S-B3	MS8 2M-T5	5	23.00	15				23
CB15-T1	T1-H1	2	21.00	10				24
CB15-T2	T1-H2	2	22.50	10				24
CB16-T1	T2-H1	2	41.00	19				24
CB16-T2	T2-H2	2	44.50	19				24
TB3-23	GS1	2	70.00	10				24
MSB 25-4	ST1-2	1	36.00	9				24
TB3-21	ST1-3	1	36.00	9				24

Model FKD Only

FIGURE 28. MAIN CONTROL PANEL WIRING LIST (SHEET 17 OF 22)

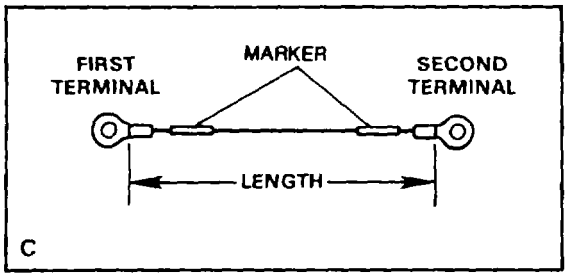

WIRE RUN		WIRE	LENGTH	TERMINAL				MARKER
FROM	TO			FIRST	SECOND	THIRD	FOURTH	
PS1-POS1	FM1-POS	1	114.00	9	9			24
PS1-NEG1	FM1-NEG	1	114.00	9	9			24
PS1-POS2	FM2-POS	1	122.00	9	9			24
PS1-NEG2	FM2-NEG	1	122.00	9	9			24
FM2-POS	FM3-POS	1	22.00	9	9			24
FM2-NEG	FM3-NEG	1	22.00	9	9			24
FM3-GND	FM2-GND	1	22.00	9	9			24
FM2-GND	FM1-GND	1	22.00	9	9			24
LK1-AC	K28-AC	1	8.00	9	9			24
TDK1-4	TDK1-11	1	17.00	9	9			24
MS8 1M-A1	PRA-1	5	34.00	14	13			23
MS8 1M-A2	PRB-1	5	34.00	14	13			23
MS8 1M-A3	PRC-1	5	34.00	14	13			23

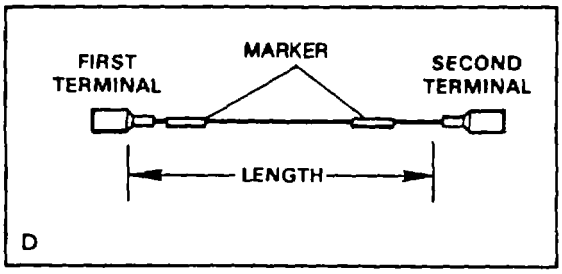

WIRE RUN		WIRE	LENGTH	TERMINAL				MARKER
FROM	TO			FIRST	SECOND	THIRD	FOURTH	
K18-K2 TDK2-2 TDK5-2	TDK2-2 TDK5-2 K19-K2	2	23.50 16.00 40.00	22	22			24

FIGURE 28. MAIN CONTROL PANEL WIRING LIST (SHEET 18 OF 22)

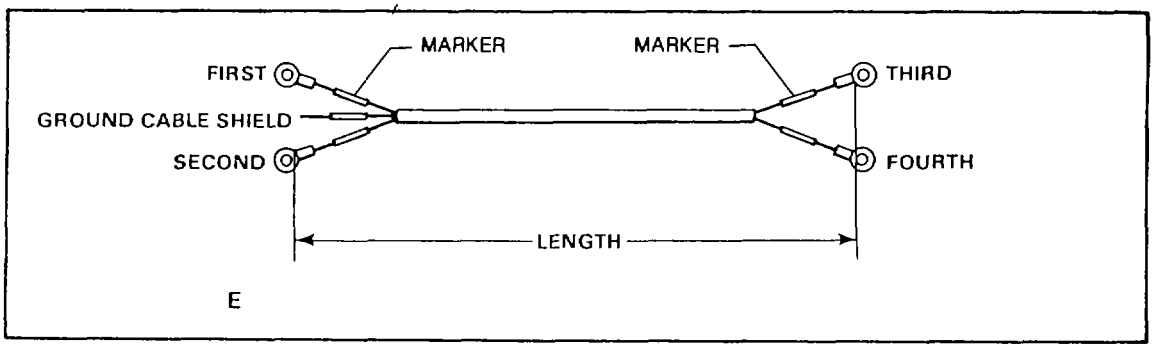

WIRE RUN				TERMINAL				
FROM	TO	WIRE	LENGTH	FIRST	SECOND	THIRD	FOURTH	MARKER
GFI 1-CT1 GFI 1-GND GFI 1-CT2	CS1-CT1 ——— CS1-CT2	7	57.50	8	8	17	17	24
GFI 1-CT3 GFI 1-GND GFI 1-CT4	CS1-CT3 ——— CS1-CT4	7	60.50	8	8	17	17	24
GFI 2-CT1 GFI 2-GND GFI 2-CT2	CS2-CT1 ——— CS2-CT2	7	88.50	8	8	17	17	24
GFI 2-CT3 GFI 2-GND GFI 2-CT4	CS2-CT3 ——— CS2-CT4	7	91.50	8	8	17	17	24

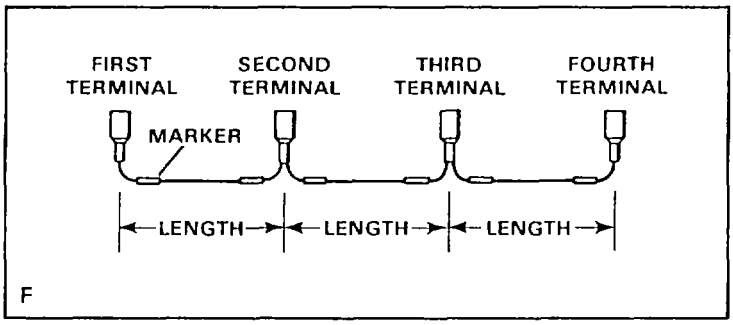

WIRE RUN				TERMINAL				
FROM	TO	WIRE	LENGTH	FIRST	SECOND	THIRD	FOURTH	MARKER
TDK4-9 TDK3-11 TDK3-1	TDK3-11 TDK3-1 TDK2-8	1	20.50 3.50 14.50	21	22	22	21	24

FIGURE 28. MAIN CONTROL PANEL WIRING LIST (SHEET 19 OF 22)

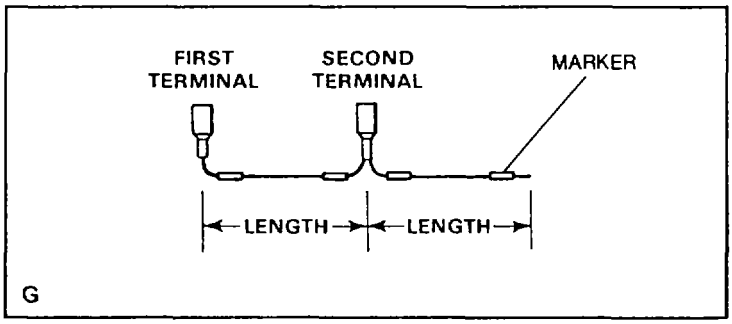

WIRE RUN		WIRE	LENGTH	TERMINAL				MARKER
FROM	TO			FIRST	SECOND	THIRD	FOURTH	
TDK4-11 TDK4-1	TDK4-1 K12-A2Y	1	3.50 44.50	21	22			24
TDK5-1 TDK5-3	TDK5-3 K6-B3Y	1	3.50 41.50	21	22			24

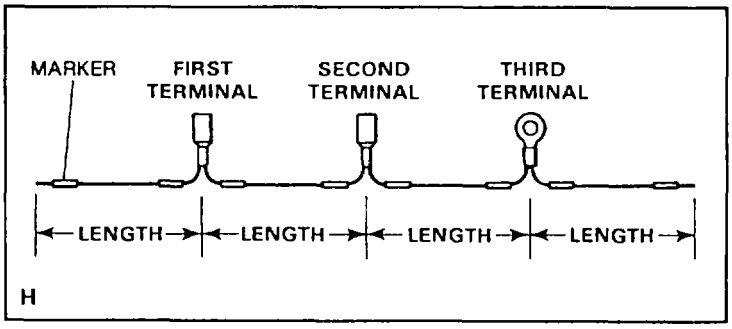

WIRE RUN		WIRE	LENGTH	TERMINAL				MARKER
FROM	TO			FIRST	SECOND	THIRD	FOURTH	
K8-K2 TDK3-2 TDK4-2 TDK1-2	TDK3-2 TDK4-2 TDK1-2 K10-K2	2	26.00 19.00 9.50 39.50	22	22	20		24

FIGURE 28. MAIN CONTROL PANEL WIRING LIST (SHEET 20 OF 22)

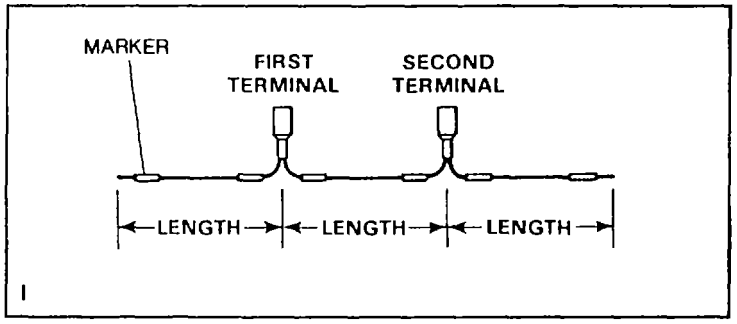

WIRE RUN		WIRE	LENGTH	TERMINAL				MARKER
FROM	TO			FIRST	SECOND	THIRD	FOURTH	
K18-K2 TDK2-2 TDK5-2	TDK2-2 TDK5-2 K19-K2	2	23.50 16.00 40.00	22	22			24

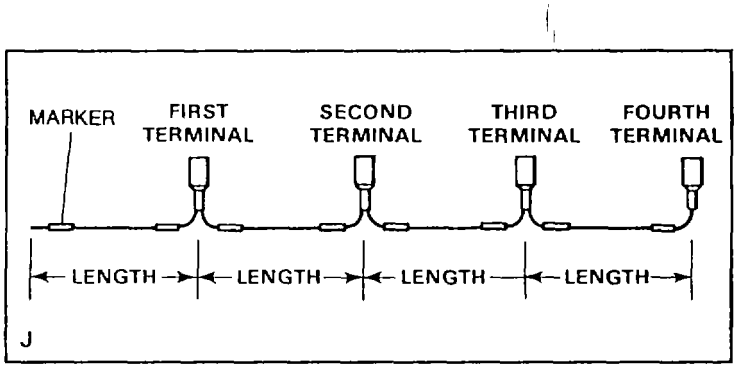

WIRE RUN		WIRE	LENGTH	TERMINAL				MARKER
FROM	TO			FIRST	SECOND	THIRD	FOURTH	
K11-A3Y TDK3-9 TDK2-11 TDK2-9	TDK3-9 TDK2-11 TDK2-9 TDK2-1	1	42.00 14.00 3.50 3.50	22	22	22	21	24

FIGURE 28. MAIN CONTROL PANEL WIRING LIST (SHEET 21 OF 22)

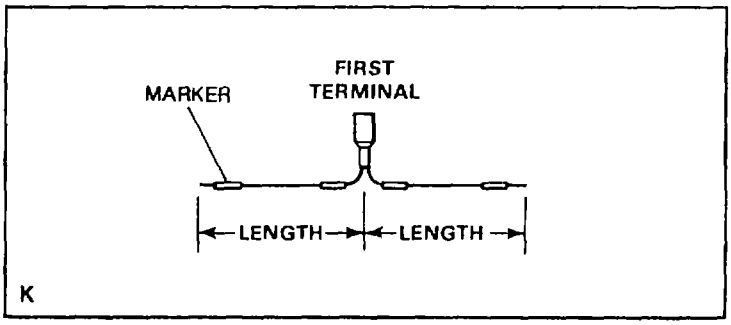

WIRE RUN		WIRE	LENGTH	TERMINAL				MARKER
FROM	TO			FIRST	SECOND	THIRD	FOURTH	
K13-1	TDK3-10	1	30.00	22				24
K12-K1	TDK3-8	1	32.00	22				24
K14-K1	TDK4-10	1	35.00	22				24
TDK5-9	K6-A1Y	1	39.50	21				24
TDK5-10	K20-K1	1	42.00	21				24
TDK5-11	K20-A3Y	1	47.00	21				24

FIGURE 28. MAIN CONTROL PANEL WIRING LIST (SHEET 22 OF 22)

(1) ITEM NO	(2) SMR CODE	(3) NSN	(4) CAGEC	(5) PART NUMBER	(6) DESCRIPTION AND USABLE ON CODES(UOC)	(7) QTY
					GROUP 02 WATER PURIFICATION SYSTEM FIG. 28 MAIN CONTROL PANEL WIRING LIST	
1	MFFZZ		09647	1-16-9CP	..WIRE,PVC,WHITE CUT TO LENGTH FROM BULK, P/N M5086/1-16-9.....	V
2	MFFZZ		09647	1-14-9CP	..WIRE,PVC,WHITE CUT TO LENGTH FROM BULK, P/N M5086/1-14-9.....	V
3	MFFZZ		09647	1-12-9CP	..WIRE,PVC,WHITE CUT TO LENGTH FROM BULK, P/N M5086/1-12-9.....	V
4	MFFZZ		09647	2-10-9CP	..WIRE,PVC,WHITE CUT TO LENGTH FROM BULK, P/N M5086/2-10-9.....	V
5	MFFZZ		09647	2-8-9CP	..WIRE,PVC,WHITE CUT TO LENGTH FROM BULK, P/N M5086/2-8-9.....	V
6	MFFZZ		09647	2-4-9CP	..WIRE,PVC,WHITE CUT TO LENGTH FROM BULK, P/N M5086/2-4-9.....	V
7	MFFZZ		09647	120-02347	..CABLE,MULTI-COND CUT TO LENGTH FROM BULK, P/N 45371.....	V
8	PAFZZ	5940002048966	96906	MS25036-102	..TERMINAL,LUG.....	8
9	PAFZZ	5940002835280	96906	MS25036-106	..TERMINAL,LUG.....ETN	41
9	PAFZZ	5940002835280	96906	MS25036-106	..TERMINAL,LUG.....FKD	43
10	PAFZZ	5940001434780	96906	MS25036-108	..TERMINAL,LUG.....	13
11	PAFZZ	5940002835281	96906	MS25036-109	..TERMINAL,LUG.....	5
12	PAFZZ	5940001138183	96906	MS25036-113	..TERMINAL,LUG.....	1
13	PAFZZ	5940001435284	96906	MS25036-115	..TERMINAL,LUG.....	6
14	PAFZZ	5940001141305	96906	MS25036-116	..TERMINAL,LUG.....	3
15	PAFZZ	5940001141305	96906	MS25036-117	..TERMINAL,LUG.....	3
16	PAFZZ	5940005574341	96906	MS25036-123	..TERMINAL,LUG.....	3
17	PAFZZ	5940005571629	96906	MS25036-149	..TERMINAL,LUG.....	8
18	PAFZZ	5940001434774	96906	MS25036-153	..TERMINAL,LUG.....	10
19	PAFZZ	5940002300515	96906	MS25036-154	..TERMINAL,LUG.....	2
20	PAFZZ	5940001434775	96906	MS25036-156	..TERMINAL,LUG.....	3
21	PAFZZ	5940009260085	14726	S09718SF	..TERMINAL,QUICK DISC.....	8
22	PAFZZ	5940004322660	97403	13216E6191-3	..TERMINAL,QUICK DISC.....	17
23	XDFZZ		01121	B321-HSCPS.9-500 8W	..MARKER.....	V
24	XDFZZ		01121	B-321HCPS.9-3336 W	..MARKER.....	V
25	PAFZZ	5975007275153	01121	B-321HSCPS.9-750 8W	..MARKER.....	V
26	PAFZZ		96906	MS3367-1-9	..STRAP,TIEDOWN,ELECT.....	V
27	PAFZZ	5975007275153	96906	MS3367-4-9	..STRAP,TIEDOWN,ELECT.....	V
28	PAFZZ		96906	MS3367-5-9	..STRAP,TIEDOWN,ELECT.....	V
29	PAFZZ		96906	MS3367-7	..STRAP.....	V

END OF FIGURE

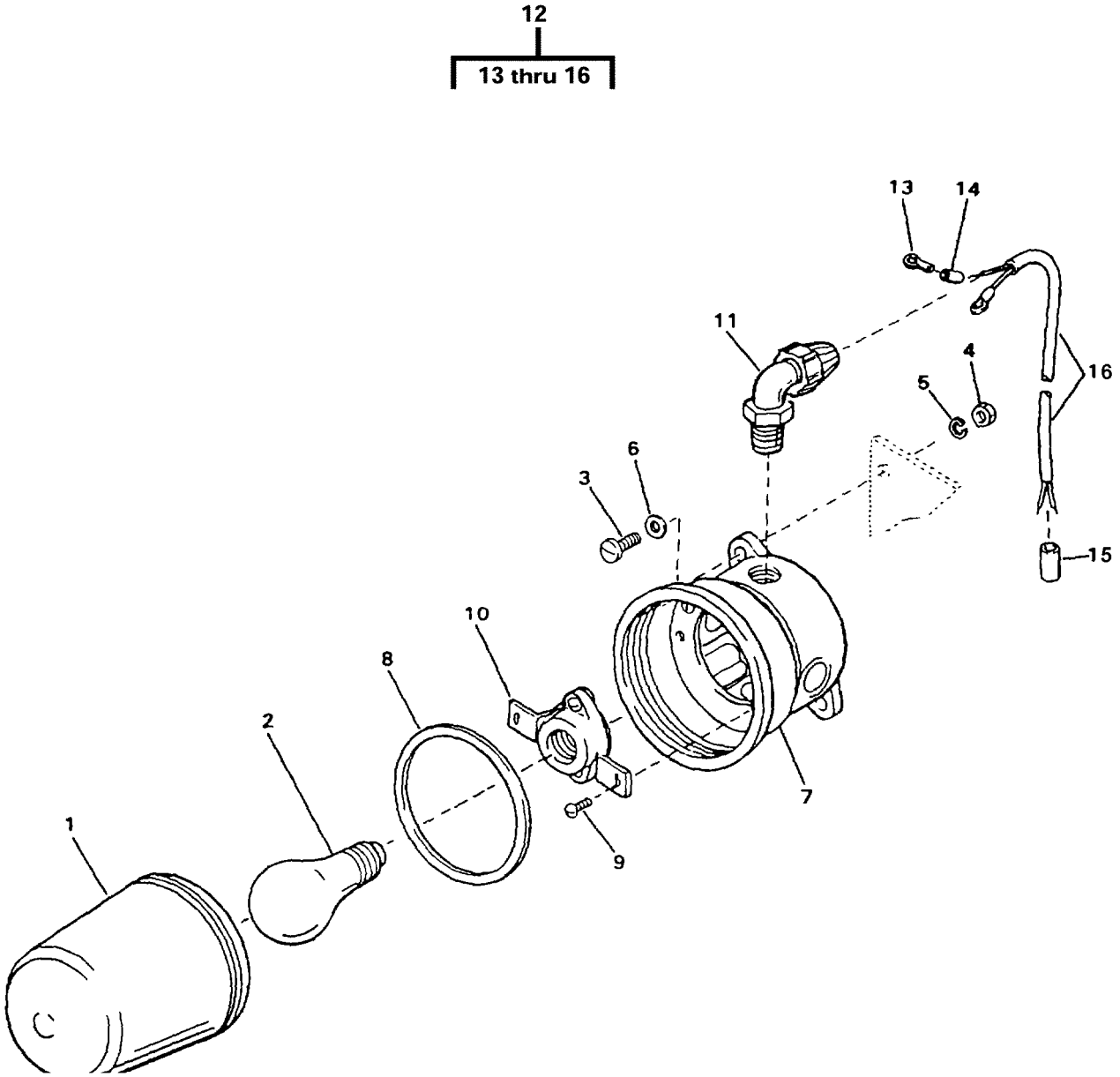

FIGURE 29. MAIN CONTROL PANEL LIGHT

(1) ITEM NO	(2) SMR CODE	(3) NSN	(4) CAGEC	(5) PART NUMBER	(6) DESCRIPTION AND USABLE ON CODES(UOC)	(7) QTY
					GROUP 02 WATER PURIFICATION SYSTEM FIG. 29 MAIN CONTROL PANEL LIGHT	
1	PAOZZ	6210013483133	97403	13229E0742-2	..GLOBE,ELECTRIC LIGH GREEN.....	1
2	PAOZZ		81348	W401-77T	..LAMP,INCANDESCENT.....	1
3	PAOZZ	5305002078253	96906	MS35307-308	..SCREW,CAP,HEXAGON H.....	2
4	PAOZZ	5310009035966	96906	MS51971-1	..NUT,PLAIN,HEXAGON.....	2
5	PAOZZ	5310009338121	96906	MS35338-139	..WASHER,LOCK.....	2
6	PAOZZ	5310010911248	96906	MS15795-810	..WASHER,FLAT.....	2
7	PAOZZ		97403	13229E0208	..LIGHTING FIXTURE.....	1
8	PAOZZ	5330013500486	15235	13B22-1139	..GASKET.....	1
9	PAOZZ	5305004333711	96906	MS51861-35C	..SCREW,TAPPING.....	2
10	PAOZZ	6250012717504	15235	V84	..LAMPHOLDER.....	1
11	PAOZZ	5975013533190	97403	13229E0753-4	..STUFFNG TUBE.....	1
12	AOOOO		97403	13229E1257-3	..CABLE ASSY W26.....	1
13	PAOZZ	5940002835280	96906	MS25036-106	...TERMINAL,LUG.....	2
14	XDOZZ		01121	B-321HCPS.9-3336 W	...MARKER.....	4
15	XDOZZ		09647	120-02433-1	...MARKER.....	1
16	MOOZZ		09647	120-02605-13-W26	...CABLE CUT TO LENGTH FROM BULK, P/N 13229E0556.....	1

END OF FIGURE

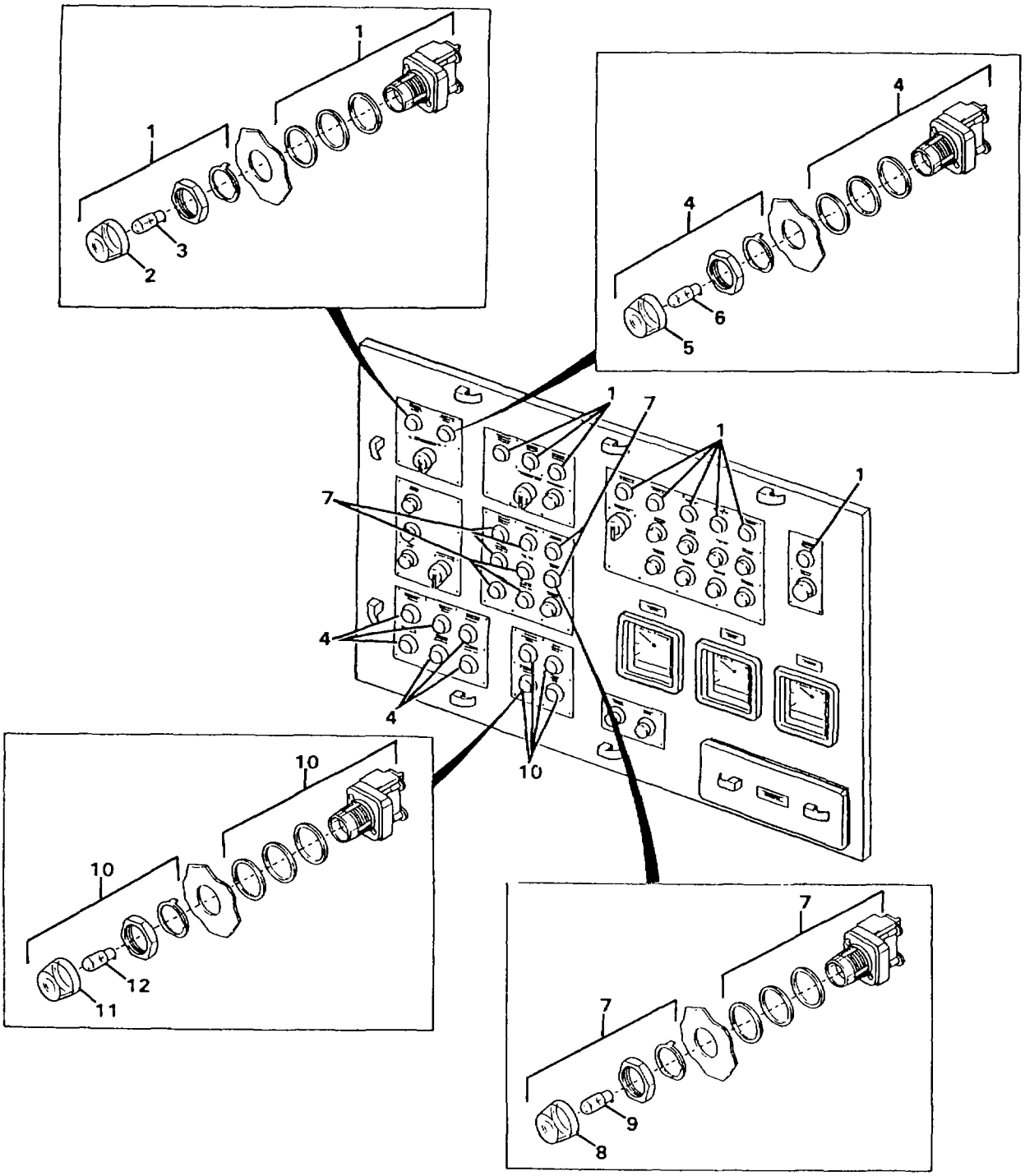

FIGURE 30. UPPER EXTERIOR PANEL (SHEET 1 OF 5)

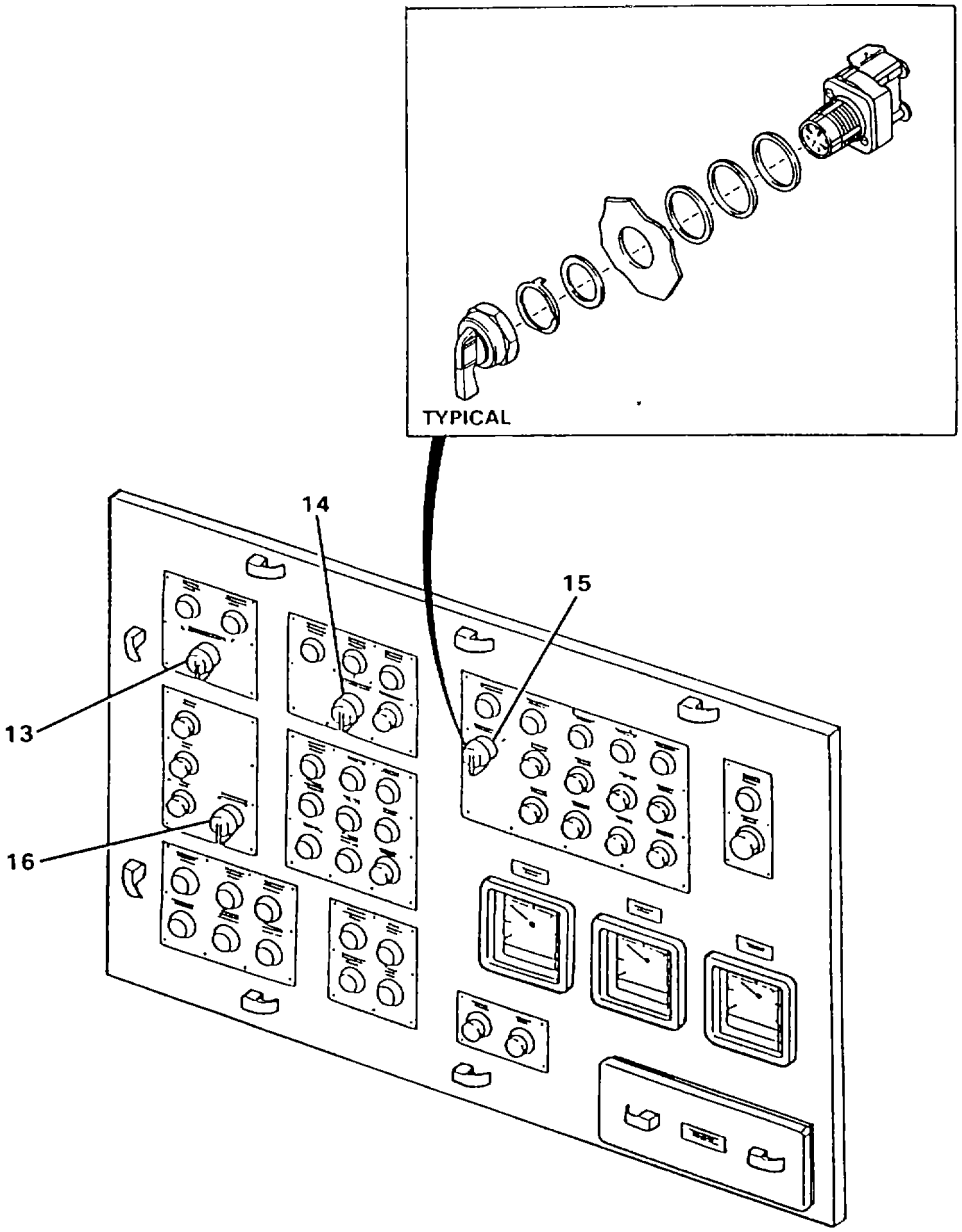

FIGURE 30. UPPER EXTERIOR PANEL (SHEET 2 OF 5)

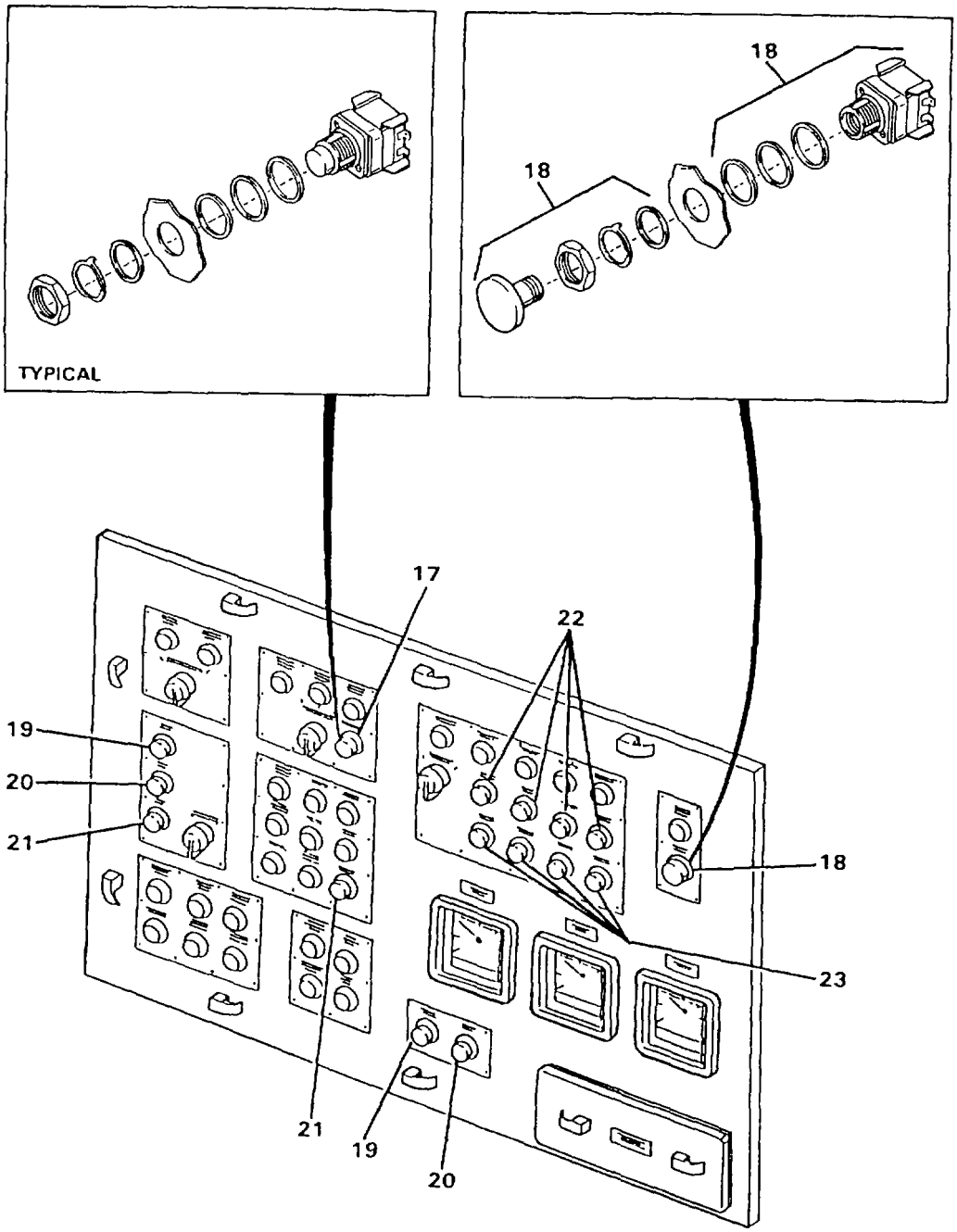

FIGURE 30. UPPER EXTERIOR PANEL (SHEET 3 OF 5)

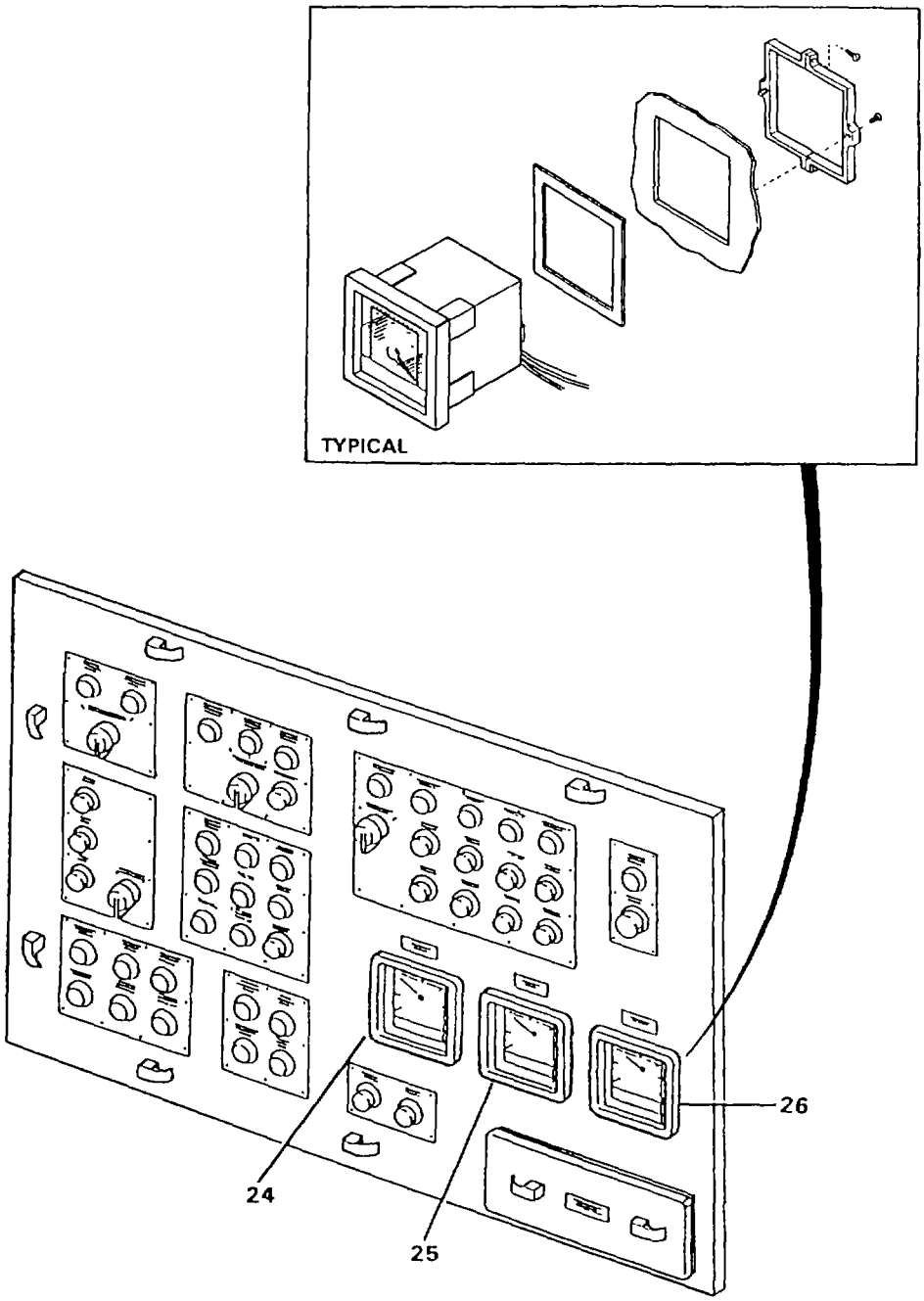

FIGURE 30. UPPER EXTERIOR PANEL (SHEET 4 OF 5)

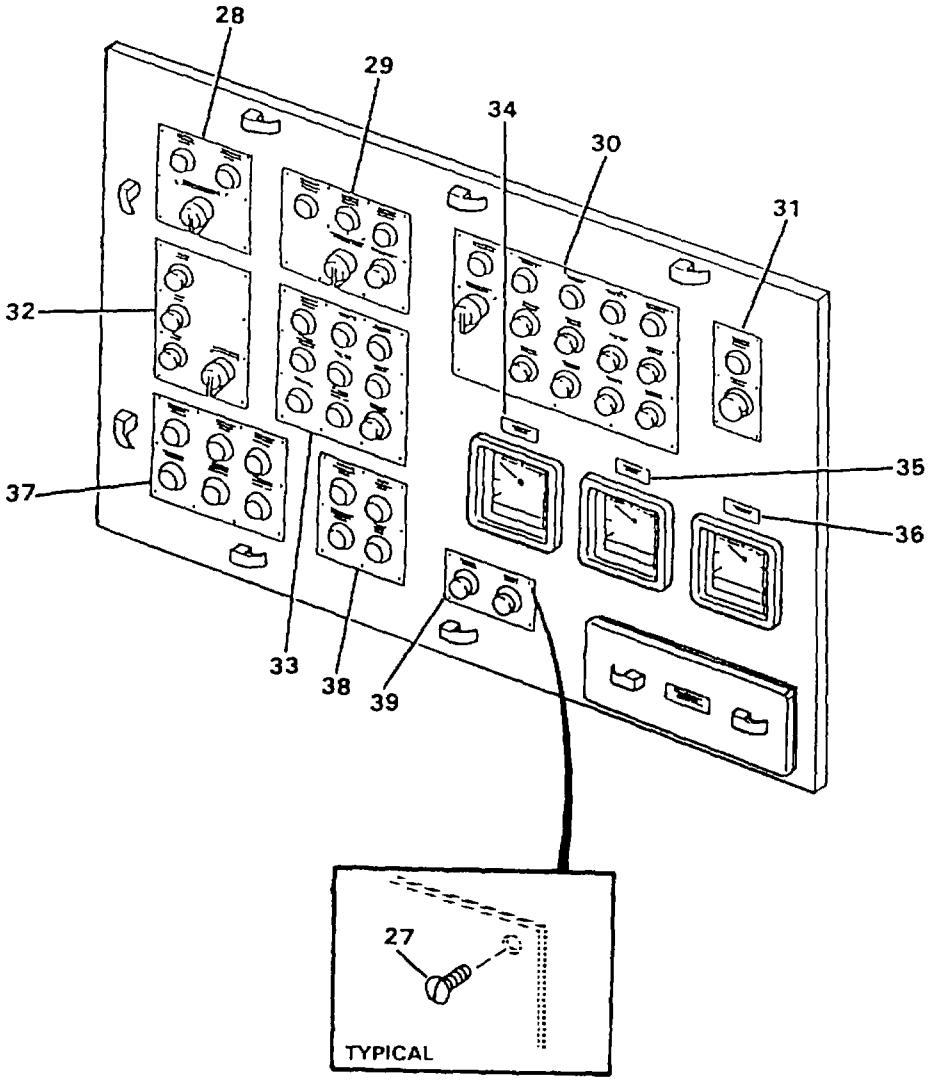

FIGURE 30. UPPER EXTERIOR PANEL (SHEET 5 OF 5)

(1) ITEM NO	(2) SMR CODE	(3) NSN	(4) CAGEC	(5) PART NUMBER	(6) DESCRIPTION AND USABLE ON CODES(UOC)	(7) QTY
					GROUP 02 WATER PURIFICATION SYSTEM FIG. 30 UPPER EXTERIOR PANEL	
1	PAFFF	6210002268798	01121	800T-P16G	..LIGHT,INDICATOR GREEN.....	10
2	PAOZZ	6210010077973	01121	800T-N26G	...LENS,LIGHT GREEN.....	1
3	PAOZZ	6240009418487	17773	11361966	...LAMP,INCANDESCENT.....	1
4	PAFFF	6210001395072	01121	800T-P16A	..LIGHT,INDICATOR AMBER.....	7
5	PAOZZ	6210010077972	01121	800T-N26A	...LENS,LIGHT AMBER.....	1
6	PAOZZ	6240009418487	17773	11361966	...LAMP,INCANDESCENT.....	1
7	PAFFF	6210001943236	01121	800T-P1GB	..LIGHT,INDICATOR BLUE.....	8
8	PAOZZ	6210010887481	01121	800T-N26B	...LENS,LIGHT BLUE.....	1
9	PAOZZ	6240009418487	17773	11361966	...LAMP,INCANDESCENT.....	1
10	PAFFF	6210002952426	25573	800T-P16R	..LIGHT,INDICATOR RED.....	4
11	PAOZZ		01121	800T-N26R	...LENS,LIGHT RED.....	1
12	PAOZZ	6240009418487	17773	11361966	...LAMP,INCANDESCENT.....	1
13	PAFZZ	5930013501868	97403	13229E1245	..SWITCH,ROTARY.....	1
14	PAFZZ	5930013490117	97403	13229E1247	..SWITCH,ROTARY.....	1
15	PAFZZ	5930013485821	97403	13229E0736	..SWITCH,ROTARY.....	1
16	PAFZZ	5930013485822	97403	13229E1246	..SWITCH,ROTARY.....	1
17	PAFZZ	5930013488590	97403	13229E1244	..SWITCH,PUSH.....	1
18	PAFZZ	5930013488592	97403	13229E0108	..SWITCH,PUSH.....	1
19	PAFZZ	5930013488591	97403	13229E1243	..SWITCH,PUSH.....	2
20	PAFZZ	5930010867489	01121	800T-B2D1	..SWITCH,PUSH.....	2
21	PAFZZ	5930013487197	97403	13229E0735	..SWITCH,PUSH.....	2
22	PAFZZ	5930010360980	01121	800T-B1D1	..SWITCH,PUSH GREEN.....	4
23	PAFZZ	5930001621875	01121	800T-B6D2	..SWITCH,PUSH.....	4
24	PAFZZ	6680013533280	16290	P58440 0-180GMP2 IN. SCH 5S	..METER,FLOW RATE IND FEED FLOW.....	1
25	PAFZZ	6680013533281	16290	P58440 0-80GMP2I N SCH 5S	..METER,FLOW RATE IND PRODUCT FLOW.....	1
26	PAFZZ	6680013533282	97403	13229E0732-2	..METER,FLOW RATE IND WASTE FLOW.....	1
27	PAFZZ	5305013499586	97403	13229E0621-19	..SCREW,TAPPING 0.112-40, TYPE F, X 0.375 INCH LONG.....	42
28	XDFZZ		97403	13229E0454	..PLATE,ID.....	1
29	XDFZZ		97403	13229E0453	..PLATE,ID.....	1
30	XDFZZ		97403	13229E0451	..PLATE,ID.....	1
31	XDFZZ		97403	13229E0455	..PLATE,ID.....	1
32	XDFZZ		97403	13229E0456	..PLATE,ID.....	1
33	XDFZZ		97403	13229E0457	..PLATE,ID.....	1
34	XDOZZ		97403	13229E0782-128	..PLATE,ID.....	1
35	XDOZZ		97403	13229E0782-129	..PLATE,ID.....	1
36	XDOZZ		97403	13229E0782-157	..PLATE,ID.....	1
37	XDFZZ		97403	13229E0458	..PLATE,ID.....	1
38	XDFZZ		97403	13229E0459	..PLATE,ID.....	1
39	XDFZZ		97403	13229E0452	..PLATE,ID.....	1

END OF FIGURE

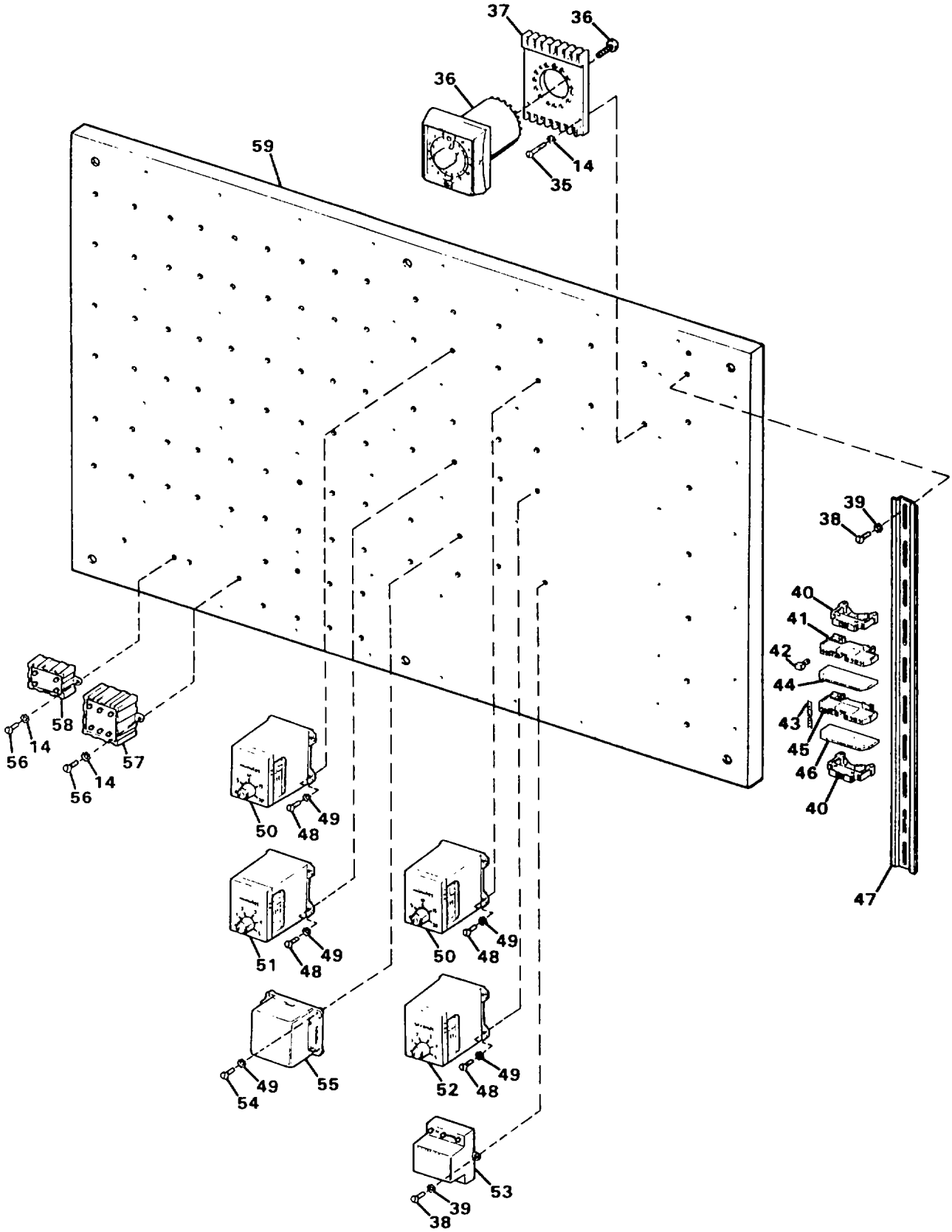

FIGURE 31. UPPER INTERIOR PANEL - RELAYS (SHEET 1 OF 2)

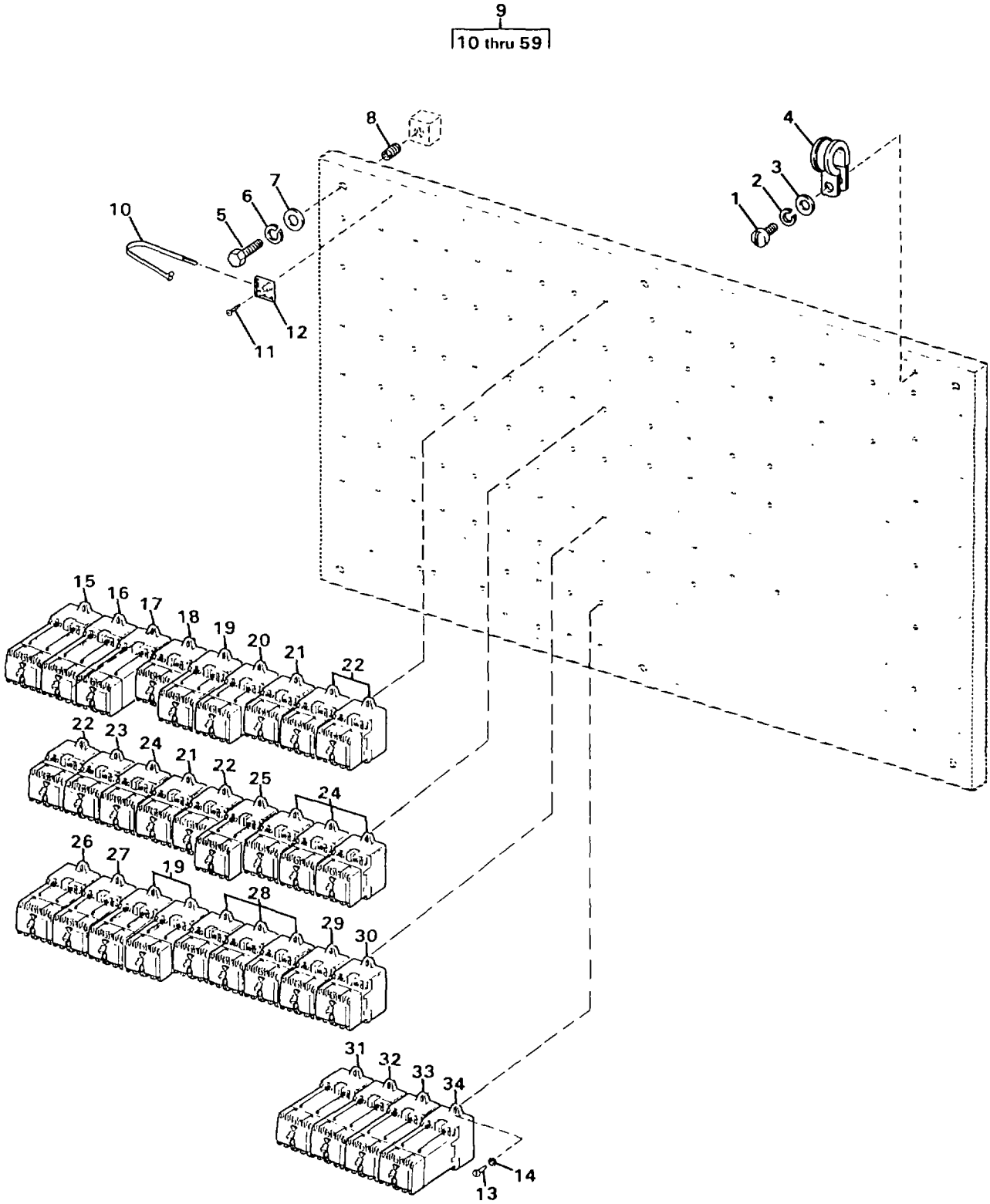

FIGURE 31. UPPER INTERIOR PANEL - RELAYS (SHEET 2 OF 2)

(1) ITEM NO	(2) SMR CODE	(3) NSN	(4) CAGEC	(5) PART NUMBER	(6) DESCRIPTION AND USABLE ON CODES(UOC)	(7) QTY
					GROUP 02 WATER PURIFICATION SYSTEM	
					FIG. 31 UPPER INTERIOR PANEL - RELAYS	
1	PAFZZ	5305000593663	96906	MS51958-67	..SCREW,MACHINE 0.190-32 UNF-2A X 1 INCH LONG.....	1
2	PAFZZ	5310009338120	96906	MS35338-138	..WASHER,LOCK.....	1
3	PAFZZ	5905013924321	96906	MS15765-842	..RESISTOR,FIXED,WIR.....	1
4	PAFZZ	5340011668694	96906	MS21919WCF16	..CLAMP,LOOP.....	1
5	PAFZZ	5305006322777	96906	MS35307-358	..SCREW,CAP,HEXAGON H.....	6
6	PAFZZ	5310009847042	96906	MS35338-141	..WASHER,LOCK.....	6
7	PAFZZ	5310005956057	96906	MS15795-815	..WASHER,FLAT.....	6
8	PAFZZ	5325008121894	96906	MS21209C6-20	..INSERT,SCREWTHREAD.....	6
9	XDFFF		97403	13229E0084	..PANEL,UPPER.....	1
10	PAFZZ	5975001113208	96906	MS3367-5-9	...STRAP,TIEDOWN,ELECT.....	V
10	PAFZZ	5975000742072	96906	MS3367-1-9	...STRAP,TIEDOWN,ELECT.....	V
11	PAFZZ	5305013510821	97403	13229E0082-154	...SCREW,TAPPING 0.164, TYPE F X 5 INCHES LONG.....	49
12	PAFZZ	5975013589415	97403	13229E1180	....MOUNT,CABLE TIE.....	49
13	PAFZZ	5305000546671	96906	MS51957-46	...SCREW,MACHINE 0.164-32 UNC-2A X 0.625 INCH LONG.....	62
14	PAFZZ	5310006143552	96906	MS35335-59	...WASHER,LOCK.....	70
15	PAFZZ	5945013487142	97403	13229E0719-1	...RELAY,ELECTROMAGNET K1.....	1
16	PAFZZ	5945013487143	97403	13229E0719-2	...RELAY,ELECTROMAGNET K2.....	1
17	PAFZZ	5945013487144	97403	13229E0719-3	...RELAY,ELECTROMAGNET K3.....	1
18	PAFZA	5945013485783	97403	13229E1248-1	...RELAY,ELECTROMAGNET K4.....	1
19	PAFZZ	5945013490893	97403	13229E1249-1	...RELAY,ELECTROMAGNET K5, K21, AND K22.....	3
20	PAFZZ	5945013490894	97403	13229E1249-2	...RELAY,ELECTROMAGNET K6.....	1
21	PAFZZ	5945013485784	97403	13229E1248-2	...RELAY,ELECTROMAGNET K7 AND K13.....	2
22	PAFZZ	5945013485785	97403	13229E1248-3	...RELAY,ELECTROMAGNET K8, K9, K10, AND K14.....	4
23	PAFZZ	5945013485786	97403	13229E1248-4	...RELAY,ELECTROMAGNET K11.....	1
24	PAFZZ	5945013487145	97403	13229E1248-5	...RELAY,ELECTROMAGNET K12, K16, K17, AND K18.....	4
25	PAFZZ	5945013490895	97403	13229E1249-3	...RELAY,ELECTROMAGNET K15.....	1
26	PAFZZ	5945013495445	97403	13229E1249-4	...RELAY,ELECTROMAGNET K19.....	1
27	PAFZZ	5945013490896	97403	13229E1249-5	...RELAY,ELECTROMAGNET K20.....	1
28	PAFZZ	5945013490897	97403	13229E1248-6	...RELAY,ELECTROMAGNET K23, K24, AND K25.....	3
29	PAFZZ	5945013487146	97403	13229E1248-7	....RELAY,ELECTROMAGNET K26.....	1
30	PAFZZ	5945013506554	97403	13229E1248-8	...RELAY,ELECTROMAGNET K27.....	1
31	PAFZZ	5945013491770	97403	13229E0719-4	...RELAY,ELECTROMAGNET LTK1.....	1
32	PAFZZ	5945013491771	97403	13229E0719-5	...RELAY,ELECTROMAGNET.....	1
33	PAFZZ	5945013491772	97403	13229E0719-6	...RELAY,ELECTROMAGNET LTK3.....	1
34	PAFZZ	5945013487837	97403	13229E0719-7	...RELAY,ELECTROMAGNET LTK4.....	1
35	PAFZZ	5305000546672	96906	MS51957-47	...SCREW,MACHINE 0.164-32 UNC-2A X 0.75 INCH LONG.....	4
36	PAFZZ	6645013516900	97403	13229E0109	...TIMER,SEQUENTIAL INCLUDES MOUNTING HARDWARE.....	1
37	XDFZZ		97403	13229E0102	...SOCKET TIMER.....	1
38	PAFZZ	5305000593659	96906	MS51958-63	SCREW,MACHINE 0.190-32 UNF-2A X 5 INCHES LONG.....	9

(1) ITEM NO	(2) SMR CODE	(3) NSN	(4) CAGEC	(5) PART NUMBER	(6) DESCRIPTION AND USABLE ON CODES(UOC)	(7) QTY
39	PAFZZ	5310002091239	96906	MS35335-60	...WASHER,LOCK.....	9
40	PAFZZ	5340123059524	D8969	209-101	...END SECTION TERMINA.....	2
41	PAFZZ	5940013614782	65996	280-681	...TERMINAL JUNCTION B.....	91
42	PAFZZ		97403	13229E0827-1	...TERMINAL JUNCTION B.....	22
43	XDFZZ		97403	13229E0097	...MARKERS,TERMINAL.....	99
44	PAFZZ	5940013492716	97403	13229E0095-1	...TERMINAL,PLATE END.....	1
45	PAFZZ	5940013485462	97403	13229E0094-2	...TERMINAL,QUICK DISC.....	8
46	PAFZZ	5940013486660	97403	13229E0095-2	...TERMINAL,BOARD.....	1
47	XDFZZ		97403	13229E0091-3	...RAIL,TERMINAL.....	1
48	PAFZZ	5305000546654	96906	MS51957-30	...SCREW,MACHINE 0.138-32 UNC-2A X 5 INCHES LONG.....	16
49	PAFZZ	5305000546654	96906	MS35335-42	...WASHER,LOCK.....	20
50	PAFZZ	5945013490037	97403	13229E0720-2	...RELAY,ELECTROMAGNET 20 MIN.....	2
51	PAFZZ	5945013490038	97403	13229E0720-3	...RELAY,ELECTROMAGNET 5 MIN.....	1
52	PAFZZ	5945013490039	97403	13229E0720-1	...RELAY,ELECTROMAGNET 5 SEC.....	1
53	PAFZZ	5945005971458	04034	22445	...RELAY,SOLID STATE.....	1
54	PAFZZ	5305000546655	96906	MS51957-31	...SCREW,MACHINE 0.138-32 UNC-2A X 0.625 INCH LONG.....	4
55	PAFZZ	6130013500828	97403	13229E0754	...POWER SUPPLY.....	1
56	PAFZZ	5305000546668	96906	MS51957-43	...SCREW,MACHINE 0.164-32 UNC-2A X 0.375 INCH LONG.....	4
57	PAFZZ	5945000097995	04034	28196	...RELAY,SOLID STATE.....	1
58	PAFZZ	6680008902920	04034	20173	...LOAD PACK,FLOATSWI.....	1
59	XDFZZ		97403	13229E0323	...PLATE,UPPER.....	1

END OF FIGURE

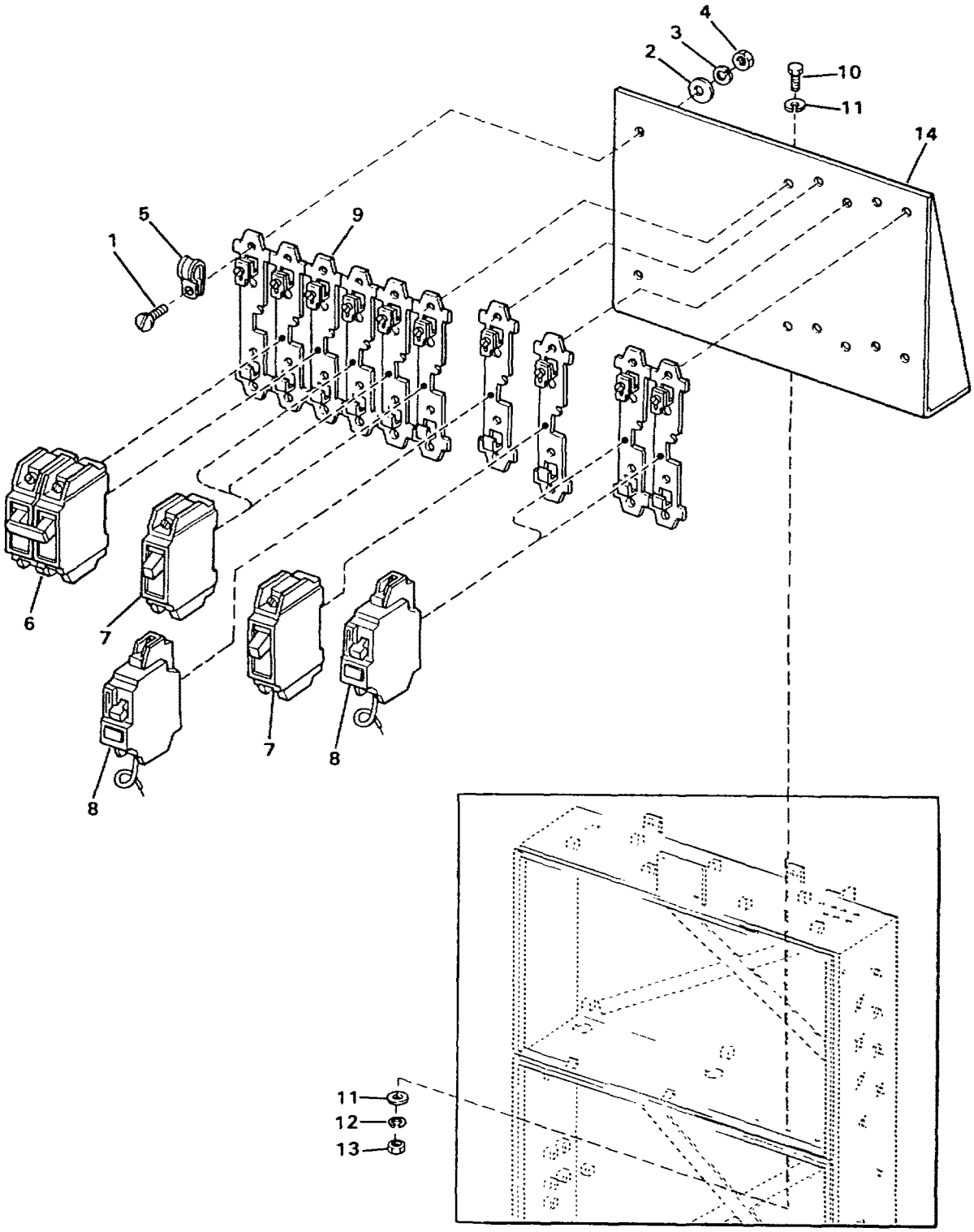

FIGURE 32. CIRCUIT BREAKER PANEL

(1) ITEM NO	(2) SMR CODE	(3) NSN	(4) CAGEC	(5) PART NUMBER	(6) DESCRIPTION AND USABLE ON CODES(UOC)	(7) QTY
					GROUP 02 WATER PURIFICATION SYSTEM FIG. 32 CIRCUIT BREAKER PANEL	
1	PAFZZ	5305000546670	96906	MS51957-45	..SCREW,MACHINE.....	12
2	PAFZZ	5310002255328	96906	MS15795-841	..WASHER,FLAT.....	12
3	PAFZZ	5310009338119	96906	MS35338-137	..WASHER,LOCK.....	12
4	PAFZZ	5310009349759	96906	MS35649-284	..NUT,PLAIN,HEXAGON.....	12
5	PAFZZ	5340011429988	96906	MS21919-WCF6	..CLAMP,LOOP.....	1
6	PAFZZ	5925007245531	03497	THQC2115WL	..CIRCUIT BREAKER.....	1
7	PAFZZ	5925013501844	97403	13229E0717	..CIRCUIT BREAKER.....	4
8	PAFZZ	5925013501845	97403	13229E1316	..CIRCUIT BREAKER.....	3
9	PAFZZ		97403	13229E0752	..ADAPTER.....	1
10	PAFZZ	5305002078253	96906	MS35307-308	..SCREW,CAP,HEXAGONH.....	3
11	PAFZZ	5310010911248	96906	MS15795-810	..WASHER,FLAT.....	6
12	PAFZZ	5310009338121	96906	MS35338-139	..WASHER,LOCK.....	3
13	PAFZZ	5310009035966	96906	MS51971-1	..NUT,PLAIN,HEXAGON.....	3
14	XDFZZ		97403	13229E0007	..BRACKET.....	11

END OF FIGURE

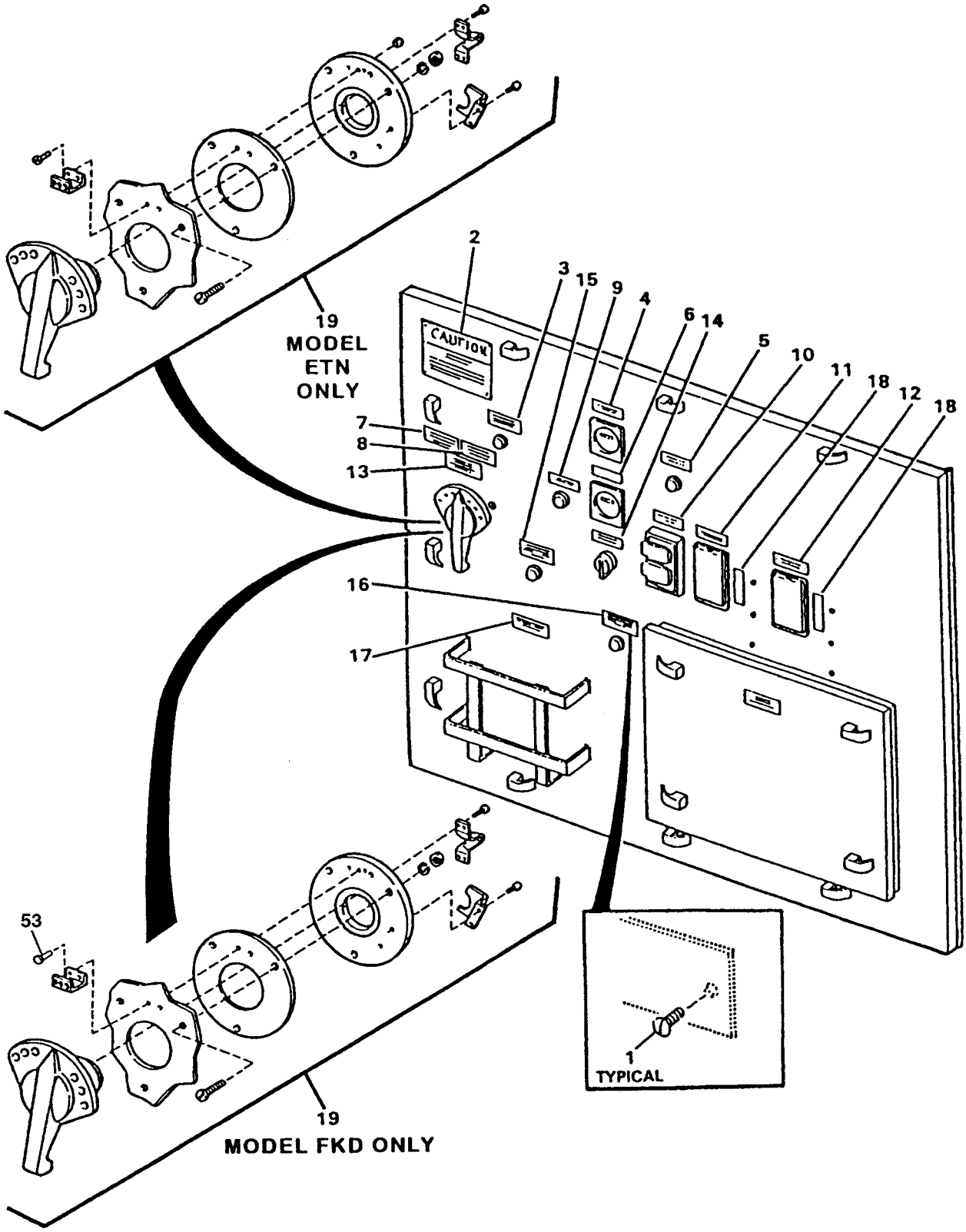

FIGURE 33. LOWER EXTERIOR PANEL (SHEET 1 OF 3)

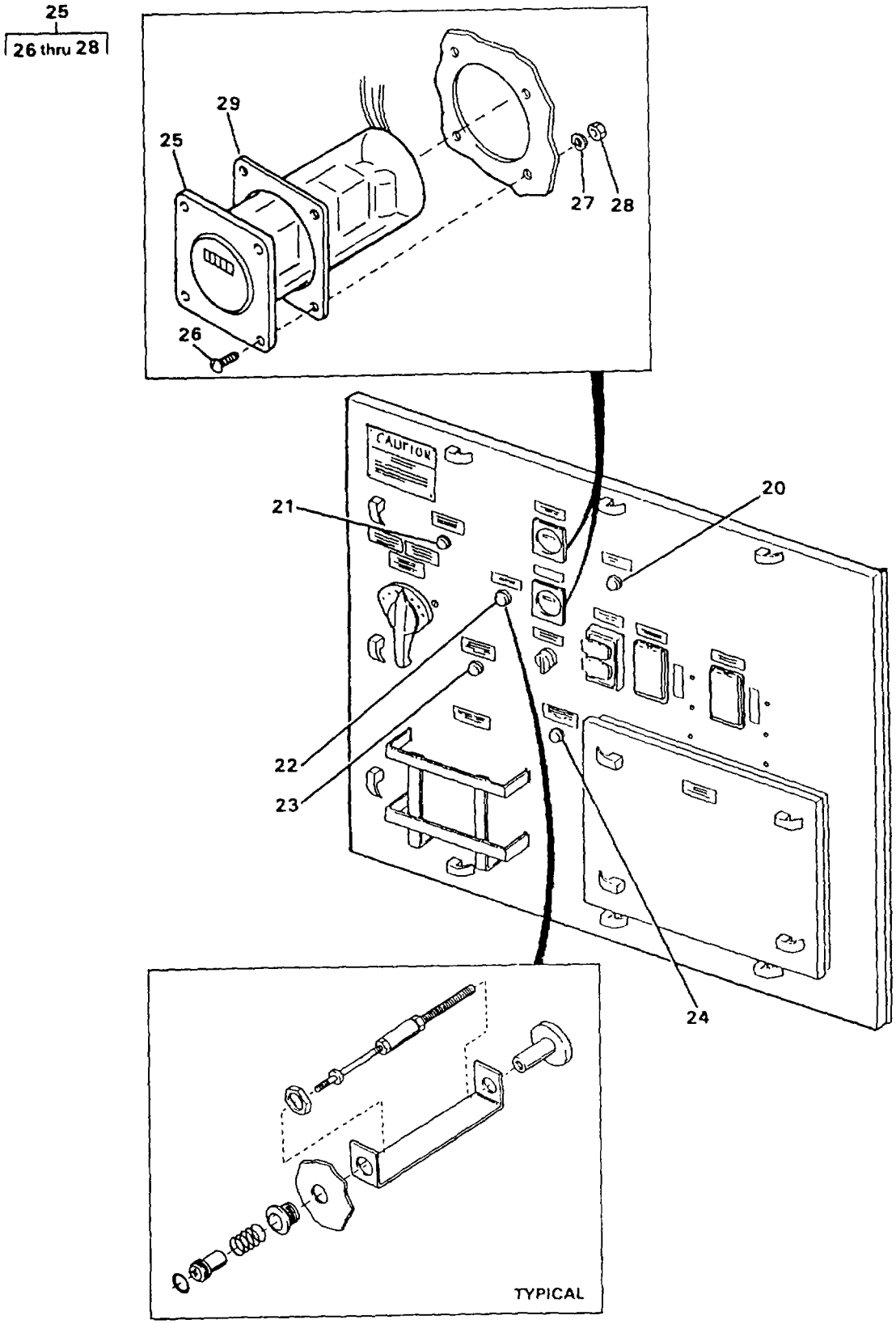

FIGURE 33. LOWER EXTERIOR PANEL (SHEET 2 OF 3)

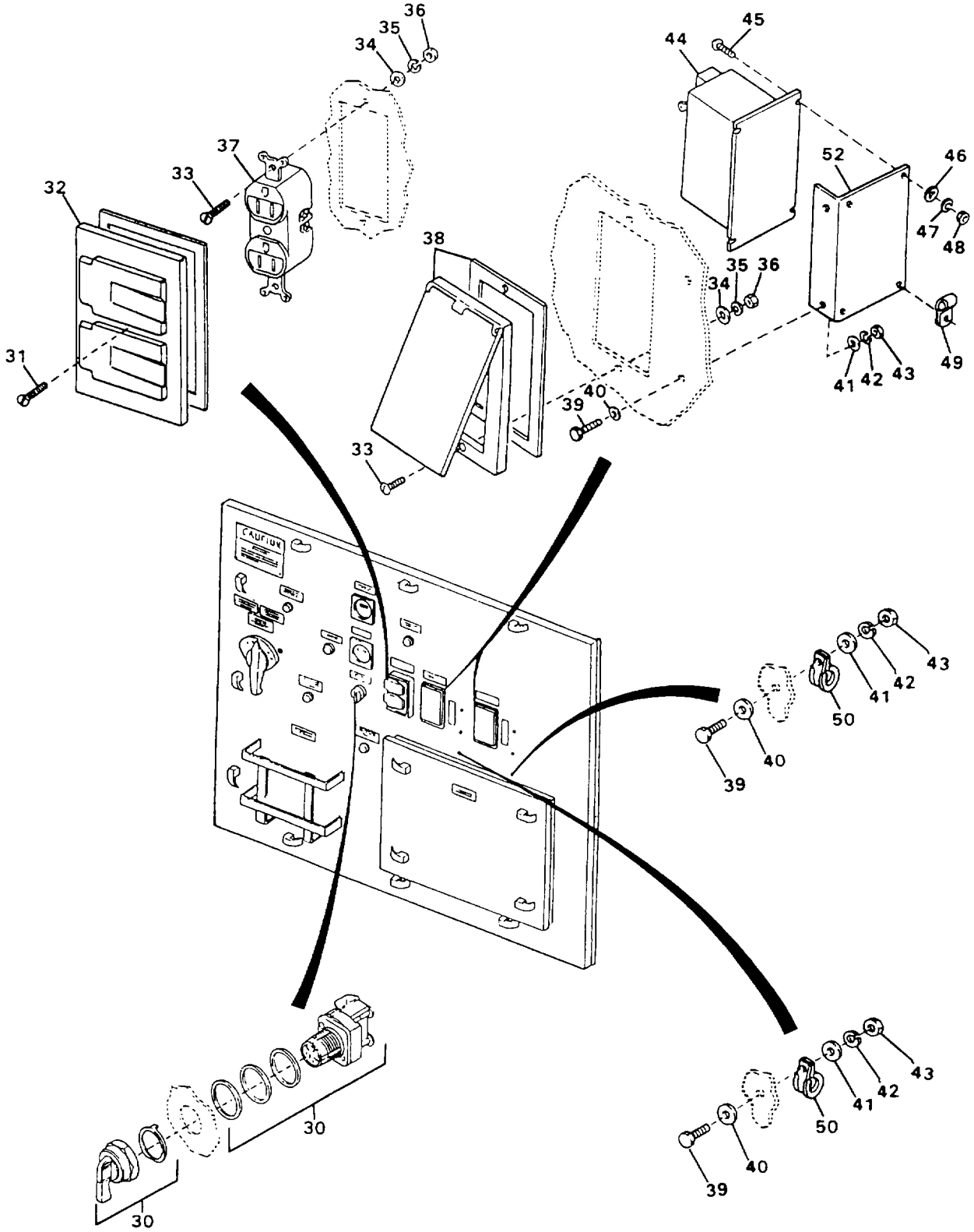

FIGURE 33. LOWER EXTERIOR PANEL (SHEET 3 OF 3)

(1) ITEM NO	(2) SMR CODE	(3) NSN	(4) CAGEC	(5) PART NUMBER	(6) DESCRIPTION AND USABLE ON CODES(UOC)	(7) QTY
					GROUP 02 WATER PURIFICATION SYSTEM FIG. 33 LOWER EXTERIOR PANEL	
1	PAFZZ	5305013499586	97403	13229E0621-19	..SCREW,TAPPING 0.112-40,TYPE F, X 0.375 LG.....	38
2	XDFZZ		97403	13229E0411-8	..PLATE,ID.....	1
3	XDFZZ		97403	13229E0782-47	..PLATE,ID.....	1
4	XDFZZ		97403	13229E0782-73	..PLATE,ID.....	1
5	XDFZZ		97403	13229E0782-14	..PLATE,ID.....	1
6	XDFZZ		97403	13229E0782-145	..PLATE,ID.....	1
7	XDFZZ		97403	13229E0782-19	..PLATE,ID.....	1
8	XDFZZ		97403	13229E0782-17	..PLATE,ID.....	1
9	XDFZZ		97403	13229E0782-121	..PLATE,ID.....	1
10	XDFZZ		97403	13229E0782-71	..PLATE,ID.....	1
11	XDFZZ		97403	13229E0782-127	..PLATE,ID.....	1
12	XDFZZ		97403	13229E0782-126	..PLATE,ID.....	1
13	XDFZZ		97403	13229E0782-57	..PLATE,ID.....	1
14	XDFZZ		97403	13229E0782-56	..PLATE,ID.....	1
15	XDFZZ		97403	13229E0782-120	..PLATE,ID.....	1
16	XDFZZ		97403	13229E0782-49	..PLATE,ID.....	1
17	XDFZZ		97403	13229E0782-119	..PLATE,ID.....	1
18	XDFZZ		97403	13229E1203	..PLATE,ID.....	2
19	XDFZZ		97403	13229E0745	..HANDLE ASSY INCLUDES MOUNTING ETN HARDWARE.....	1
20	XDFZZ		97403	13229E0103-1	..BUTTON,RESET.....	1
21	XDFZZ		97403	132Z9E0103-5	..BUTTON,RESET.....	1
22	XDFZZ		97403	13229E0103-3	..BUTTON,RESET.....	1
23	XDFZZ		97403	13229E0103-4	..BUTTON,RESET.....	1
25	PAFZZ	6645013162183	60969	40711AAAD	..METER,TIME TOTALIZI.....	2
26	PAFZZ	5305000545651	96906	MS51957-17	...SCREW,MACHINE 0.112-40 UNC-2A X 5 INCHES LONG.....	4
27	PAFZZ	5310000583599	96906	MS35335-57	..WASHER,LOCK.....	4
28	PAFZZ	5310009349748	96906	MS35649-244	..NUT,PLAIN,HEXAGON.....	4
29	PAFZZ	5330013495604	97403	13229E0530	..GASKET.....	2
30	PAFZZ	5930013485821	97403	13229E0736	..SWITCH,ROTARY.....	1
31	PAFZZ	5305007195064	96906	MS51959-30	..SCREW,MACHINE.....	1
32	PBOZZ	5935013504123	97403	13229E0757	..COVER,ELECTRICAL.....	2
33	PAFZZ	5305000546654	96906	MS51957-30	...SCREW,MACHINE 0.138-32 UNC 2A X 5 INCHES LONG.....	6
34	PAFZZ	5310008805976	96906	MS15795-806	..WASHER,FLAT.....	2
35	PAFZZ	5310009296395	96906	MS35338-136	..WASHER,LOCK.....	2
36	PAFZZ	5310009349761	96906	MS35649-264	..NUT,PLAIN,HEXAGON.....	2
37	PAFZZ		81348	WC596/12-3	..CONNECTOR,RECEPTACL.....	1
38	PBOZZ	5999013508908	97403	13229E1319	..CAP,ELECTRICAL.....	6
39	PAFZZ		02769	8200157-3	..SCREW,CAP,HEXAGON H 0.190-24 UNC-2A X 0.625 INCH LONG.....	6
40	PAFZZ	5310013512613	97403	13229E0557-1	..WASHER,SEAL.....	6
41	PAFZZ	5905013924321	96906	MS15765-842	..RESISTOR,FIXED,WIR.....	6
42	PAFZZ	5310009338120	96906	MS35338-138	..WASHER,LOCK.....	6
43	PAFZZ	5310009349760	96906	MS35649-204	..NUT,PLAIN,HEXAGON.....	6
44	PAFZZ	5945013485038	97403	13229E1219	..RELAY,ELECTROMAGNET.....	2
45	PAFZZ	5305000546671	96906	MS51957-46	..SCREW,MACHINE 0.164-32 UNC-	8

(1) ITEM NO	(2) SMR CODE	(3) NSN	(4) CAGEC	(5) PART NUMBER	(6) DESCRIPTION AND USABLE ON CODES(UOC)	(7) QTY
					2A X 0.625 INCH LONG.....	
46	PAFZZ	5310002255328	96906	MS15795-841	..WASHER,FLAT.....	8
47	PAFZZ	5310009338119	96906	MS35338-137	..WASHER,LOCK.....	8
48	PAFZZ	5310009349759	96906	MS35649-284	..NUT,PLAIN,HEXAGON.....	8
49	PAFZZ	5340011429987	96906	MS21919WCF10	..CLAMP,LOOP USED ON DISTRUBITION PUMP GROUND FAULT.....	1
50	PAFZZ	5340011429988	96906	MS21919WCF6	..CLAMP,LOOP.....	1
51	PAFZZ	5340011387808	96906	MS21919WCF12	..CLAMP,LOOP.....	1
52	XDFZZ		97403	13229E1217	..BRACKET,MOUNTING.....	2
53	XDFZZ		97403	13229E0358	..HANDLE ASSY INCLUDES MOUNTING FKD HARDWARE.....	1

END OF FIGURE

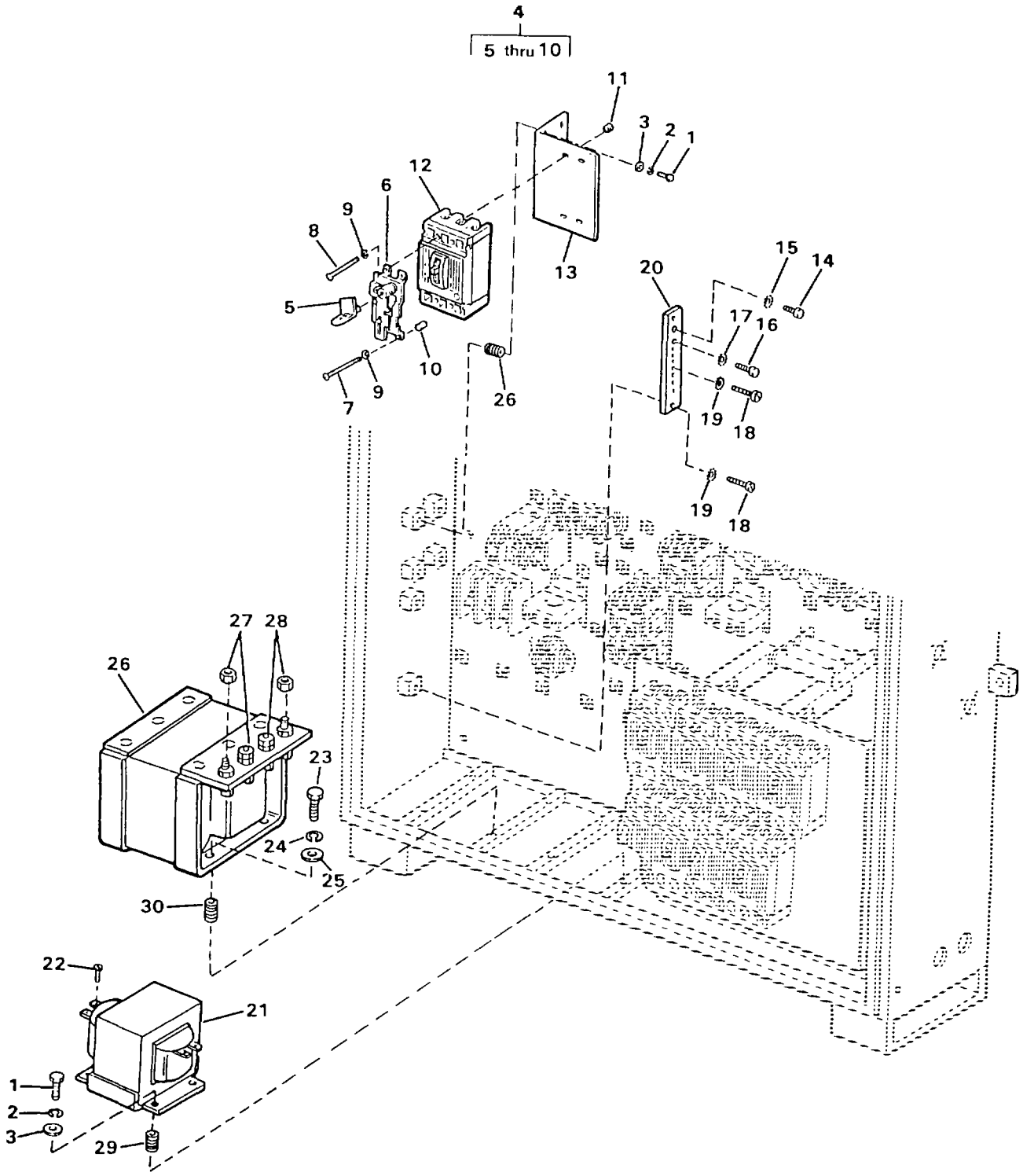

FIGURE 34. MAIN CIRCUIT BREAKER AND TRANSFORMER

(1) ITEM NO	(2) SMR CODE	(3) NSN	(4) CAGEC	(5) PART NUMBER	(6) DESCRIPTION AND USABLE ON CODES(UOC)	(7) QTY
					GROUP 02 WATER PURIFICATION SYSTEM FIG. 34 MAIN CIRCUIT BREAKER AND TRANSFORMER	
1	PAFZZ	5305007024523	96906	MS35307-306	..SCREW,CAP,HEXAGON H.....	8
2	PAFZZ	5310009338121	96906	MS35338-139	..WASHER,LOCK.....	8
3	PAFZZ	5310010911248	96906	MS15795-810	..WASHER,FLAT.....	8
4	XDFFF		03514	TEFOM 2	..MECHANISM,OPER.....	1
5	XDFZZ		97403	13229E01329	...ARM.....	1
6	XDFZZ		03514	568B118G2	...OPEN MECHANISM.....	1
7	XDFZZ		03514	N37P15060B13	...SCREW 8-32 X 3 9/16 INCH LONG.....	2
8	XDFZZ		03514	N37P15057B13	...SCREW 8-32 X 3 3/4 INCHES LONG.....	4
9	XDFZZ		03514	N405P38C	...WASHER,LOCK NO. 8.....	4
10	XDFZZ		03514	791A819P4	...SPACER.....	2
11	PAFZZ	5310009349759	96906	MS35649-284	..NUT,PLAIN,HEXAGON.....	4
12	PAFZZ	5925013501846	97403	13229E1317-2	..CIRCUIT BREAKER.....	1
13	XDFZZ		97403	13229E1224	..BRACKET,CB MTG.....	1
14	PAFZZ	5305004780273	96906	MS35307-355	..SCREW,CAP,HEXAGON H.....	1
15	PAFZZ	5310002090790	96906	MS35335-63	..WASHER,LOCK.....	1
16	PAFZZ	5305007193997	96906	MS35307-303	..SCREW,CAP,HEXAGON H.....	1
17	PAFZZ	5310005273634	96906	MS35335-61	..WASHER,LOCK.....	1
18	PAFZZ	5305000593659	96906	MS51958-63	..SCREW,MACHINE 0.190-32 UNF-2A X 5 INCHES LONG.....	9
19	PAFZZ	5310002091239	96906	MS35335-60	..WASHER,LOCK.....	9
20	XDFZZ		97403	13229E0244	..BUS,GROUND.....	1
21	PAFZZ	5950014231525	03512	9T58B3364G08	..TRANSFORMER,POWER.....	1
22	PAFZZ	5305000546651	96906	MS51957-27	..SCREW,MACHINE.....	4
23	PAFZZ	5305006322777	96906	MS35307-358	..SCREW,CAP,HEXAGON H.....	4
24	PAFZZ	5310009847042	96906	MS35338-141	..WASHER,FLAT.....	4
25	PAFZZ	5310005956057	96906	MS15795-815	..WASHER,FLAT.....	4
26	PAFZZ	5950014231526	03512	9T22B4020G16	..TRANSFORMER,POWER.....	1
27	PAFZZ	5310009035966	96906	MS51971-1	..NUT,PLAIN,HEXAGON.....	2
28	PAFZZ	5310007670445	96906	MS51971-2	..NUT,PLAIN,HEXAGON.....	2
29	PAFZZ		96906	MS21209C4-20	..INSERT,SCREW THREAD.....	4
30	PAFZZ	5325008121894	96906	MS21209C6-20	..INSERT,SCREW THREAD.....	4

END OF FIGURE

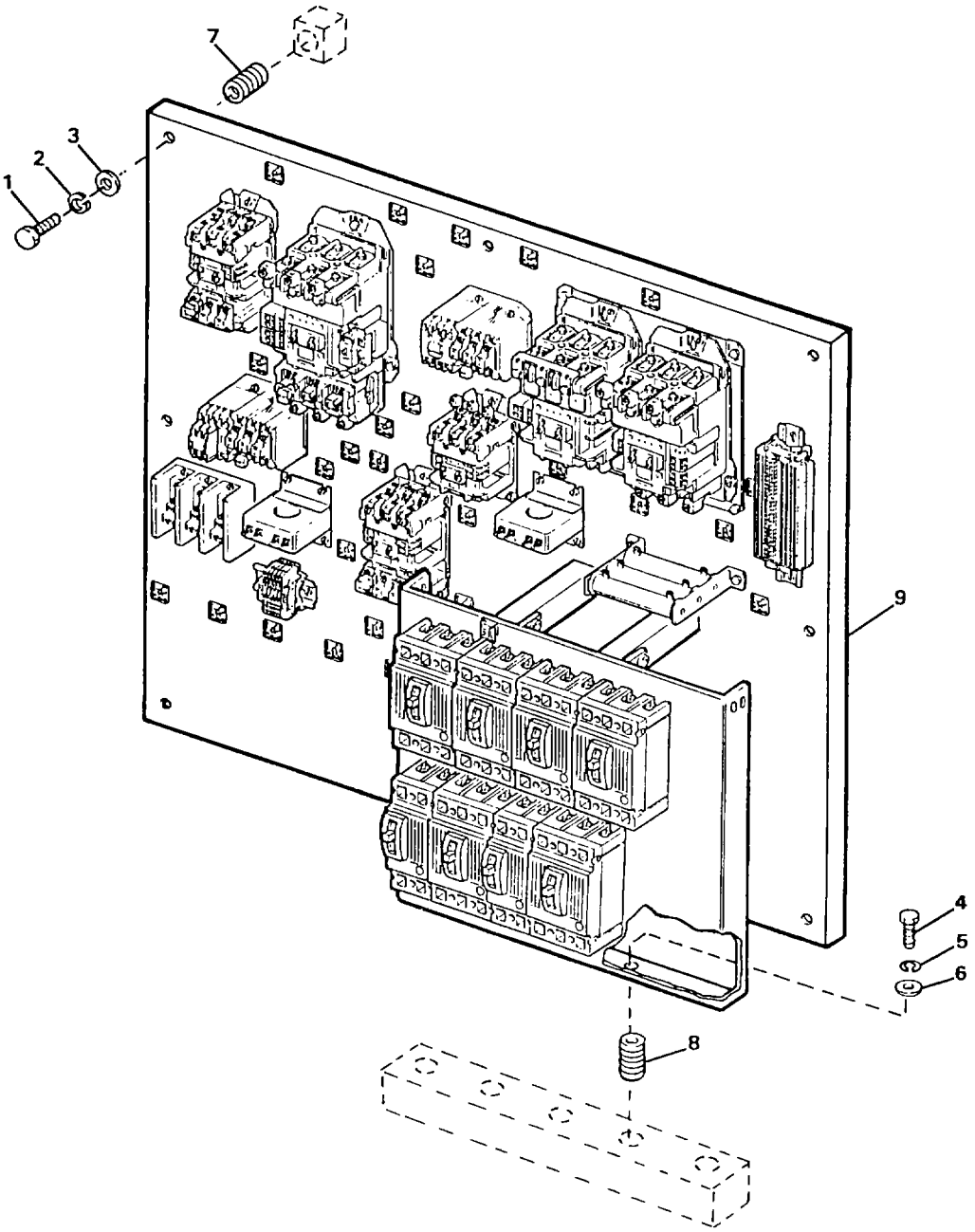

FIGURE 35. LOWER INTERIOR PANELS, CIRCUIT BREAKERS AND MOTOR STARTER (SHEET 1 OF 4)

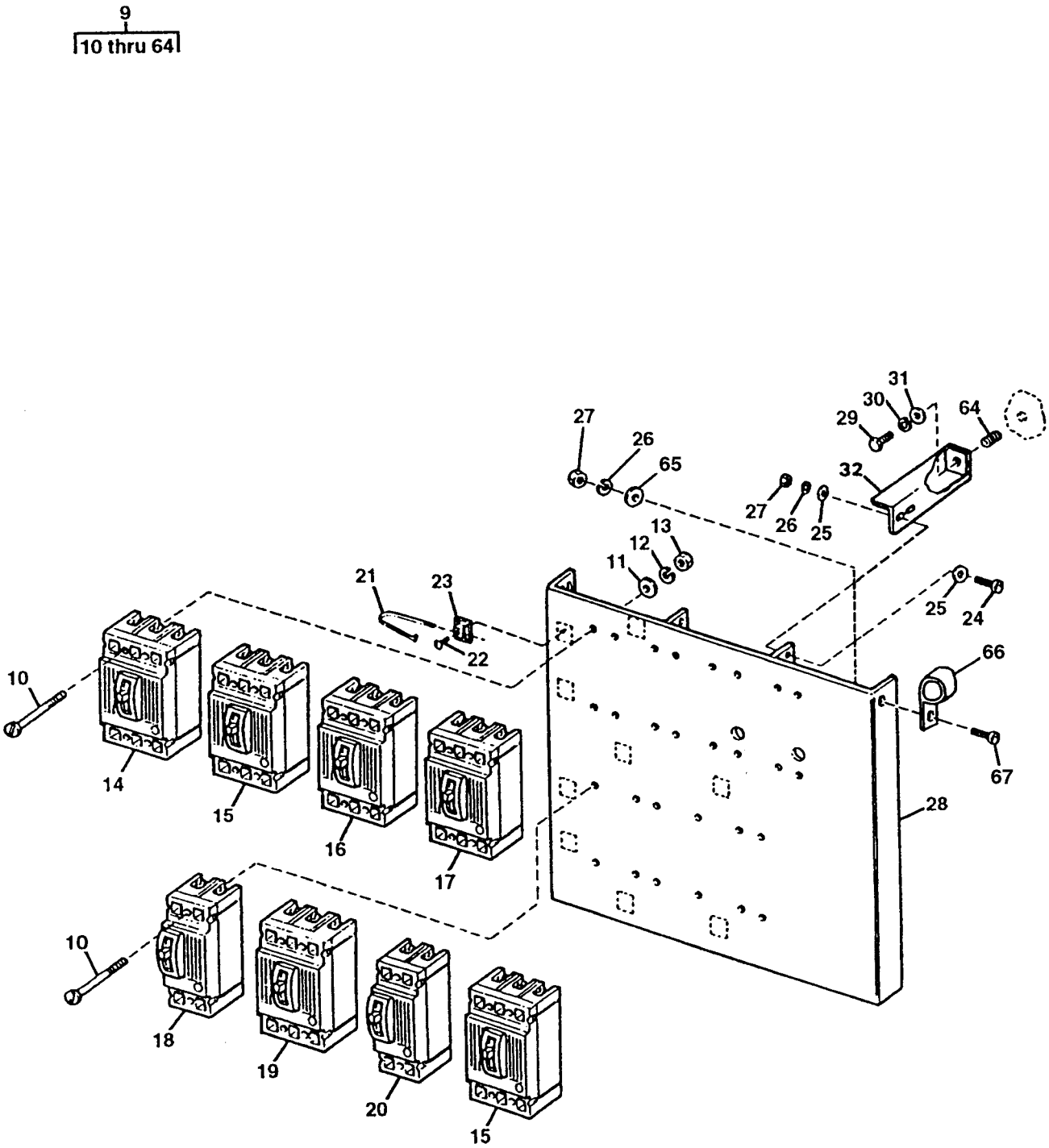

FIGURE 35. LOWER INTERIOR PANELS, CIRCUIT BREAKERS AND MOTOR STARTER (SHEET 2 OF 4)

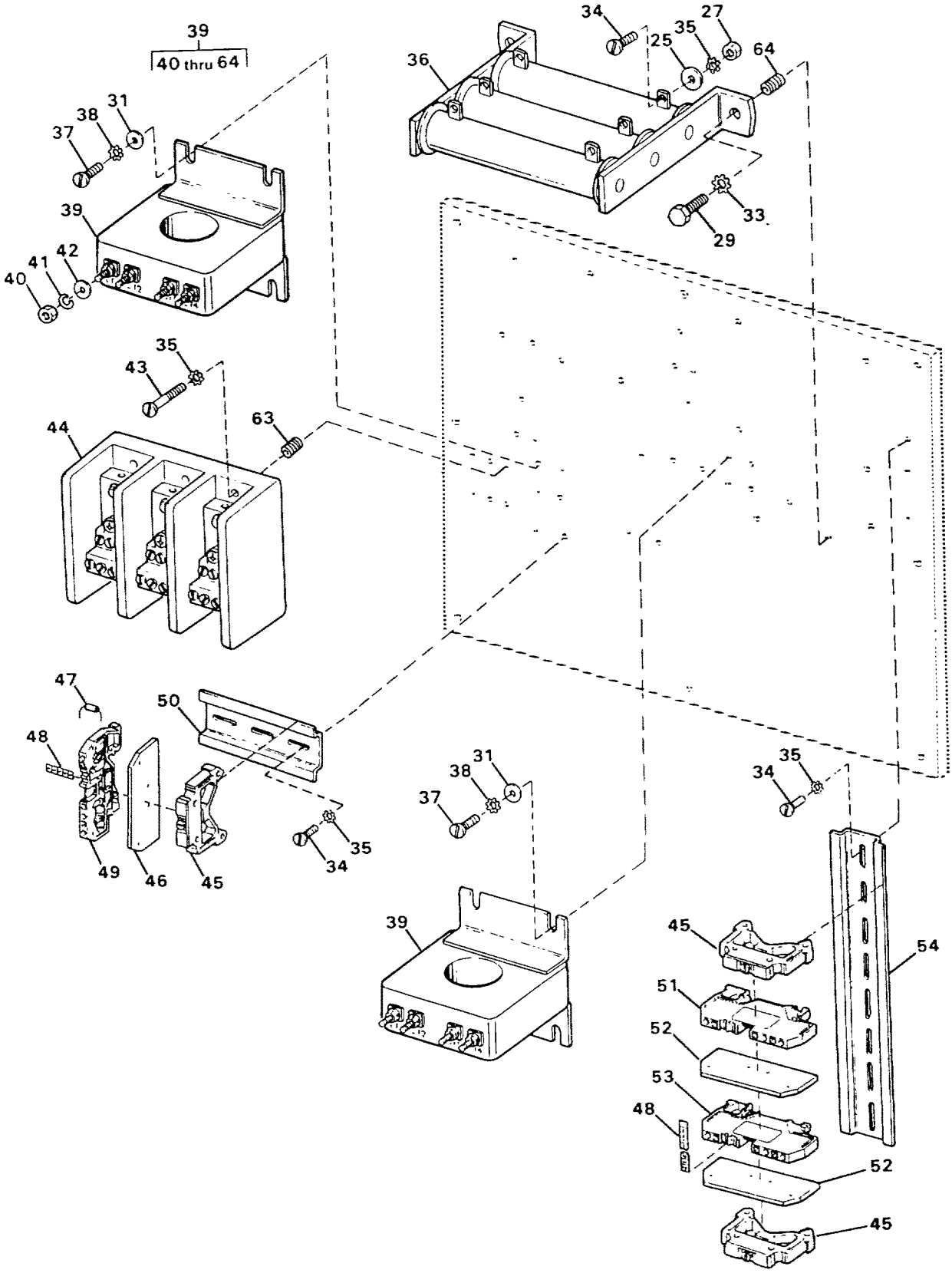

FIGURE 35. LOWER INTERIOR PANELS, CIRCUIT BREAKERS AND MOTOR STARTER (SHEET 3 OF 4)

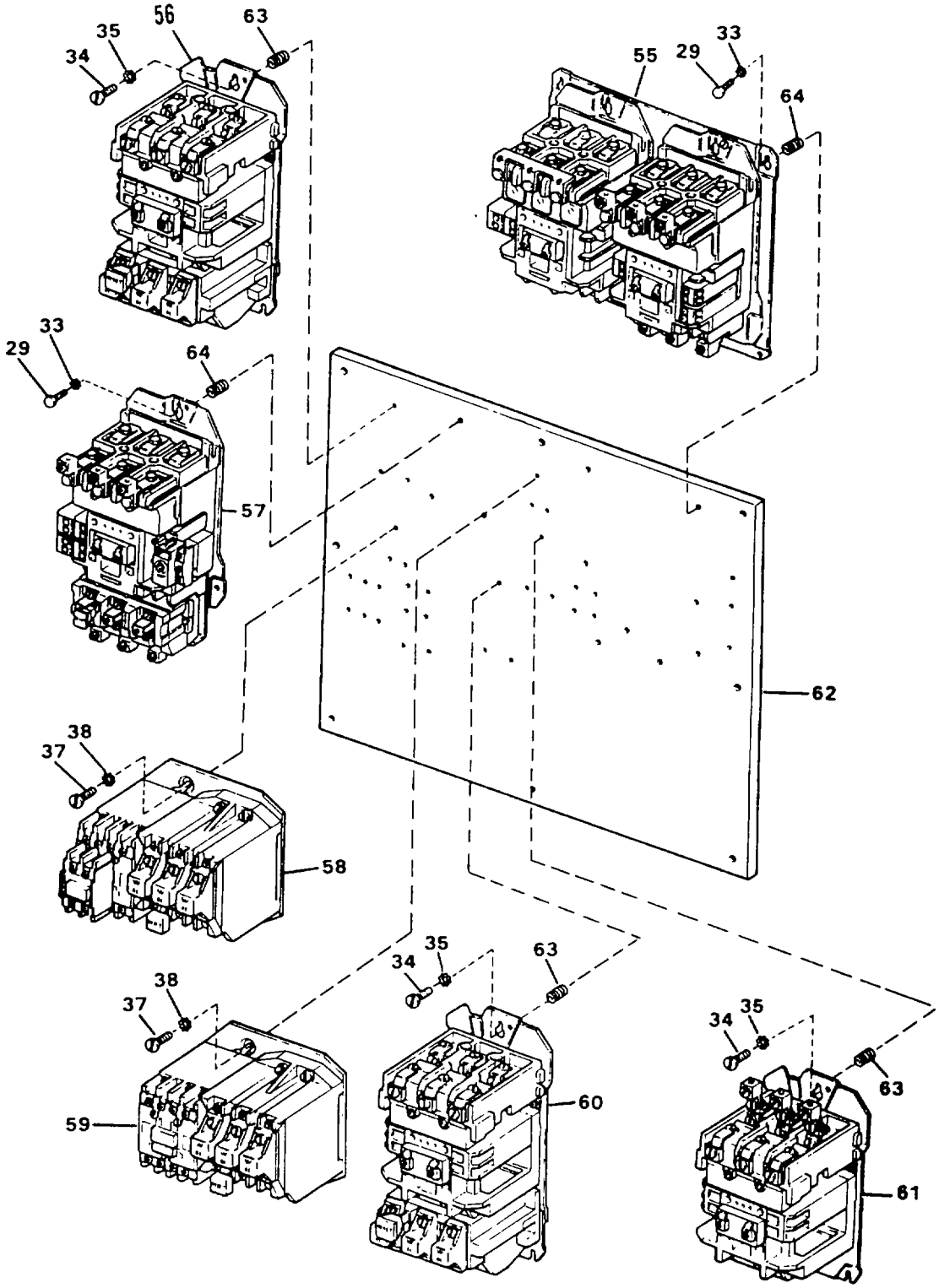

FIGURE 35. LOWER INTERIOR PANELS, CIRCUIT BREAKERS AND MOTOR STARTER (SHEET 4 OF 4)

(1) ITEM NO	(2) SMR CODE	(3) NSN	(4) CAGEC	(5) PART NUMBER	(6) DESCRIPTION AND USABLE ON CODES(UOC)	(7) QTY
					GROUP 02 WATER PURIFICATION SYSTEM FIG. 35 LOWER INTERIOR PANELS, CIRCUIT BREAKERS AND MOTOR STARTER	
1	PAFZZ	5305006322777	96906	MS35307-358	..SCREW,CAP,HEXAGON H.....	8
2	PAFZZ	5310009847042	96906	MS35338-141	..WASHER,LOCK.....	8
3	PAFZZ	5310005956057	96906	MS15795-815	..WASHER,FLAT.....	8
4	PAFZZ	5305007024523	96906	MS35307-306	..SCREW,CAP,HEXAGON H.....	5
5	PAFZZ	5310009338121	96906	MS35338-139	..WASHER,LOCK.....	5
6	PAFZZ	5310010911248	96906	MS15795-810	..WASHER,FLAT.....	5
7	PAFZZ	5325008121894	96906	MS21209C6-20	..INSERT,SCREW THREAD.....	8
8	PAFZZ	5325007218352	96906	MS21209C4-20	..INSERT,SCREW THREAD.....	5
9	XDFFF		97403	13229E0536	..PANEL,LOWER,INTL.....	1
10	PAFZZ	5305004655481	96906	MS35206-336	...SCREW,MACHINE 0.164-32 UNC-2A X 3.5 INCHES LONG.....	28
11	PAFZZ	5310002255328	96906	MS15795-841	...WASHER,FLAT.....	28
12	PAFZZ	5310009338119	96906	MS35338-137	...WASHER,LOCK.....	28
13	PAFZZ	5310009349759	96906	MS35649-284	...NUT,PLAIN,HEXAGON.....	28
14	PAFZZ	5925013487825	97403	13229E1317-4	...CIRCUIT BREAKER.....	1
15	PAFZZ		02295	TED134010WLFP	...CIRCUIT BREAKER.....	2
16	PAFZZ	5925013495601	97403	13229E1318-1	...CIRCUIT BREAKER.....	1
17	PAFZZ	5925013495602	97403	13229E1318-2	...CIRCUIT BREAKER.....	1
18	PAFZZ	5925013490855	97403	13229E0718-2	...CIRCUIT BREAKER.....	1
19	PAFZZ	5925013491799	97403	13229E1317-3	...CIRCUIT BREAKER.....	1
20	PAFZZ	5925013487826	97403	13229E0718-1	...CIRCUIT BREAKER.....	1
21	PAFZZ	5975001113208	96906	MS3367-5-9	...STRAP,TIEDOWN,ELECT.....	V
22	PAFZZ	5305013510821	97403	13229E0082-154	...SCREW,TAPPING 0.164, TYPE F X 0.5 INCH LONG.....	55
23	PAFZZ	5975013589415	97403	13229E1180	...MOUNT,CABLE TIE.....	55
24	PAFZZ	5305000593661	96906	MS51958-65	...SCREW,MACHINE 0.190-32 UNF-2A X 0.75 INCH LONG.....	4
25	PAFZZ	5905013924321	96906	MS15765-842	...RESISTOR,FIXED,WIR.....	14
26	PAFZZ	5310009338120	96906	MS35338-138	...WASHER,LOCK.....ETN	4
26	PAFZZ	5310009338120	96906	MS35338-138	...WASHER,LOCK.....FKD	5
27	PAFZZ	5310009349765	96906	MS35650-304	...NUT,PLAIN,HEXAGON.....ETN	4
27	PAFZZ		96906	MS35650-309	...NUT,PLAIN,HEXAGON.....FKD	5
28	XDFZZ		97403	13229E0755	...PANEL,LOWER.....	1
29	PAFZZ	5305007024523	96906	MS35307-306	...SCREW,CAP,HEXAGON H 0.25-20 UNC-2A X 0.750 INCH LONG.....	11
30	PAFZZ	5310009338121	96906	MS35338-139	...WASHER,LOCK.....	2
31	PAFZZ	5310010911248	96906	MS15795-810	...WASHER,FLAT.....	10
32	XDFZZ		97403	13229E0756	...BRACE,PANEL.....	2
33	PAFZZ	5310005273634	96906	MS35335-61	...WASHER,LOCK.....	9
34	PAFZZ	5305000593659	96906	MS51958-63	...SCREW,MACHINE 0.190-32 UNF-2A X 0.5 INCH LONG.....	19
35	PAFZZ	5310002091239	96906	MS35335-60	...WASHER,LOCK.....	25
36	PAFZZ	5905013517301	97403	13229E0730	...RESISTOR ASSEMBLY.....	1
37	PAFZZ	5305000546670	96906	MS51957-45	...SCREW,MACHINE 0.164-32 UNC-2A X 0.5 INCH LONG.....	14
38	PAFZZ	5310006143552	96906	MS35335-59	...WASHER,LOCK.....	14
39	PAFZZ	6625013514899	97403	13229E1220	...SENSOR,GND FAULT.....	2

(1) ITEM NO	(2) SMR CODE	(3) NSN	(4) CAGEC	(5) PART NUMBER	(6) DESCRIPTION AND USABLE ON CODES(UOC)	(7) QTY
40	PAFZZ	5310003499529	96906	MS35649-266	...NUT,PLAIN,HEXAGON.....	4
41	PAFZZ	5310001848977	96906	MS35338-98	...WASHER,LOCK.....	4
42	PAFZZ	5310005458402	82423	10643	...WASHER,FLAT.....	4
43	PAFZZ	5305000593663	96906	MS51958-67	...SCREW,MACHINE 0.190-32 UNF-2A X... 1.000 LG.....	6
44	XDFZZ		97403	13229E0098	...BLOCK,POWERDIST.....	1
45	PAFZZ	5340123059524	D8969	209-101	...END SECTION TERMINA.....	4
46	PAFZZ	5940013492716	97403	13229E0095-1	...TERMINAL,PLATE,END.....	1
47	PAFZZ		81349	MIL-R-39008/4	...RESISTOR,FIXED,COMP.....	2
48	XDFZZ		97403	13229E0097	...MARKER,TERM.....	30
49	PAFZZ	5940013614782	65996	280-681	...TERMINAL JUNCTION B.....	5
50	XDFZZ		97403	13229E0091-2	...RAIL,TERM.....	1
51	PAFZZ	5940013488231	97403	13229E0093-2	...TERMINAL,QUICK DISC.....	22
52	PAFZZ	5940013486660	97403	13229E0095-2	...TERMINAL,BOARD.....	2
53	PAFZZ	5940013485462	97403	13229E0094-2	...TERMINAL,QUICK DISC.....	3
54	XDFZZ		97403	13229E0091-5	...RAIL,TERM.....	1
55	PAFFF	6110013464747	01121	540-PODX5	...STARTER,MOTOR SEE FIGURE 36 FOR BREAKDOWN.....	1
56	PAFFF	6110013464748	01121	509BOD-90	...STARTER,MOTOR SEE FIGURE 37 ETN FOR BREAKDOWN.....	1
56	PAFFF		01121	509 BOD X22	...STARTER,MOTOR SEE FIGURE 37 FKD FOR BREAKDOWN.....	1
57	PAFFF	6110013464749	01121	505-DODX16	...STARTER,MOTOR SEE FIGURE 38 FOR BREAKDOWN.....	1
58	PAFFF		01121	509-TODX17	...STARTER,MOTOR SEE FIGURE 39 FOR BREAKDOWN.....	1
59	PAFFZ	6110010136482	01121	509-TOD/W-39	...STARTER,MOTOR SEE FIGURE 40 FOR BREAKDOWN.....	1
60	PAFFF	6110013511674	01121	509-AOD-91	...STARTER,MOTOR SEE FIGURE 41 FOR BREAKDOWN.....	1
61	PAFFF	6110013464751	01121	500-BODX18	...STARTER,MOTOR SEE FIGURE 42 FOR BREAKDOWN.....	1
62	XDFZZ		97403	13229E0324	...SUB-PANEL,LOWER.....	1
63	PAFZZ	5310013490828	97403	13229E0114-6	...NUT,PLAIN,BLIND RIV.....	15
64	PAFZZ	5310013508556	97403	13229E0114-7	...NUT,PLAIN,BLIND RIV.....	11
65	PAFZZ		96906	MS15795-808	...WASHER,FLAT.....FKD	1
66	PAFZZ	5340011635499	96906	MS21919WCH20	...CLAMP,LOOP.....FKD	1
67	PAFZZ	5305000593659	96906	MS51958-63	...SCREW,MACHINE 0.180-32 FKD UNF-2A.....	1

END OF FIGURE

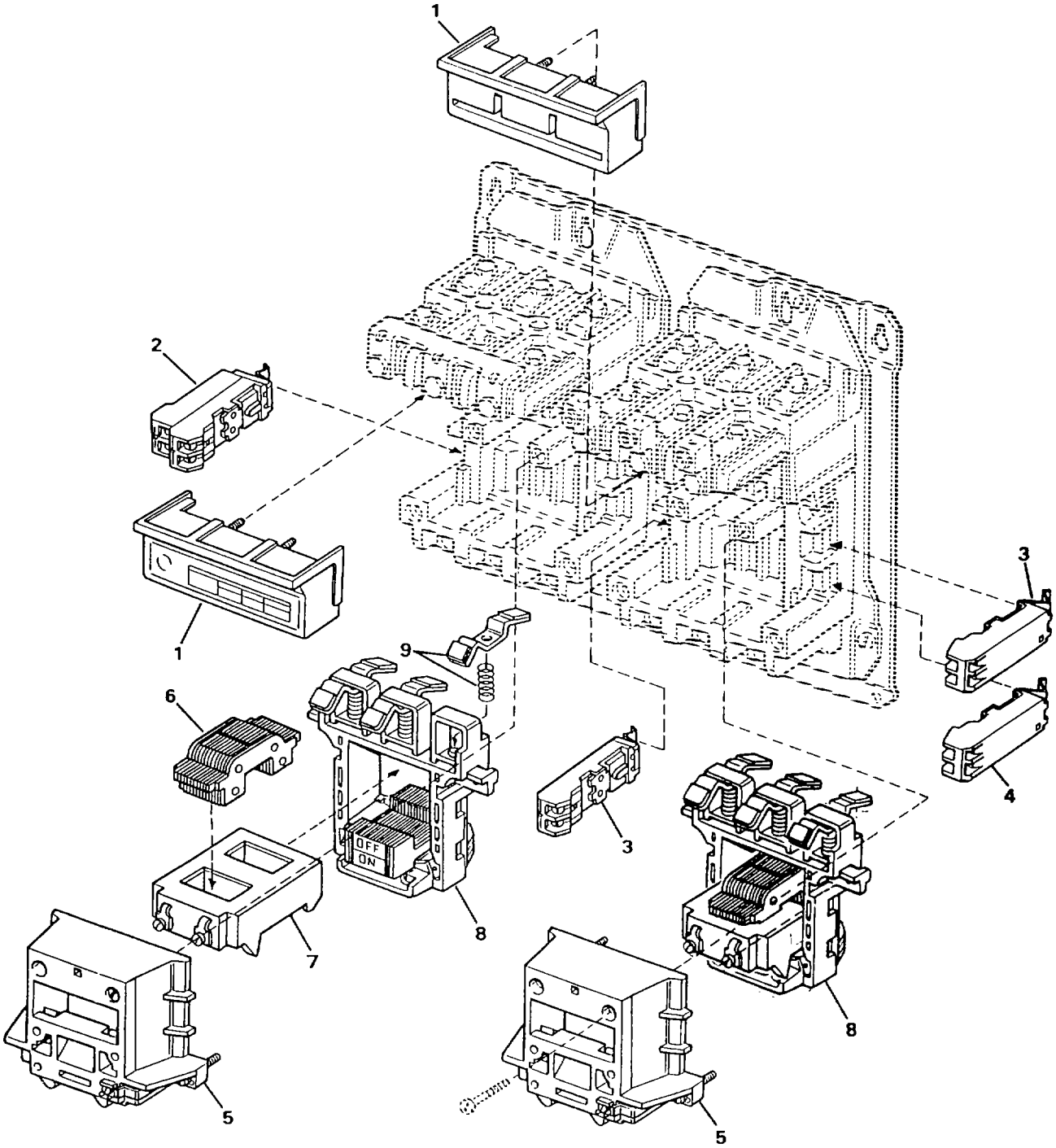

FIGURE 36. MOTOR STARTER MS8-15, MS8-2M

(1) ITEM NO	(2) SMR CODE	(3) NSN	(4) CAGEC	(5) PART NUMBER	(6) DESCRIPTION AND USABLE ON CODES(UOC)	(7) QTY
					GROUP 02 WATER PURIFICATION SYSTEM	
					FIG. 36 MOTOR STARTER	
					MS8-15, MS8-2M	
	PAFFF	6110013464747	01121	540-PODX5	...STARTER,MOTOR.....	1
1	XDFZZ		01121	40430-457-51	....COVER,CONT BLOCK.....	2
2	PBFZZ	5999012358936	01121	595-AB	....CONTACT ASSEMBLY,EL.....	1
3	PBFZZ	6110012737849	01121	595-B	....CONTACT SET,MOTOR S.....	2
4	PBFZZ	5999013495096	01121	595-BL	....CONTACT,ELECTRICAL.....	1
5	XDFZZ		01121	40430-454-51	....COVER,COIL.....	2
6	XDFZZ		01121	40430-455-51	....YOKE.....	2
7	XDFZZ		01121	CD236	....COIL.....	2
8	XDFZZ		01121	40430-452-51	....SUPPORT,CONTACT.....	2
9	PAFZZ	5999013069577	01121	40430-300-51	....CONTACT ASSORTMENT.....	6

END OF FIGURE

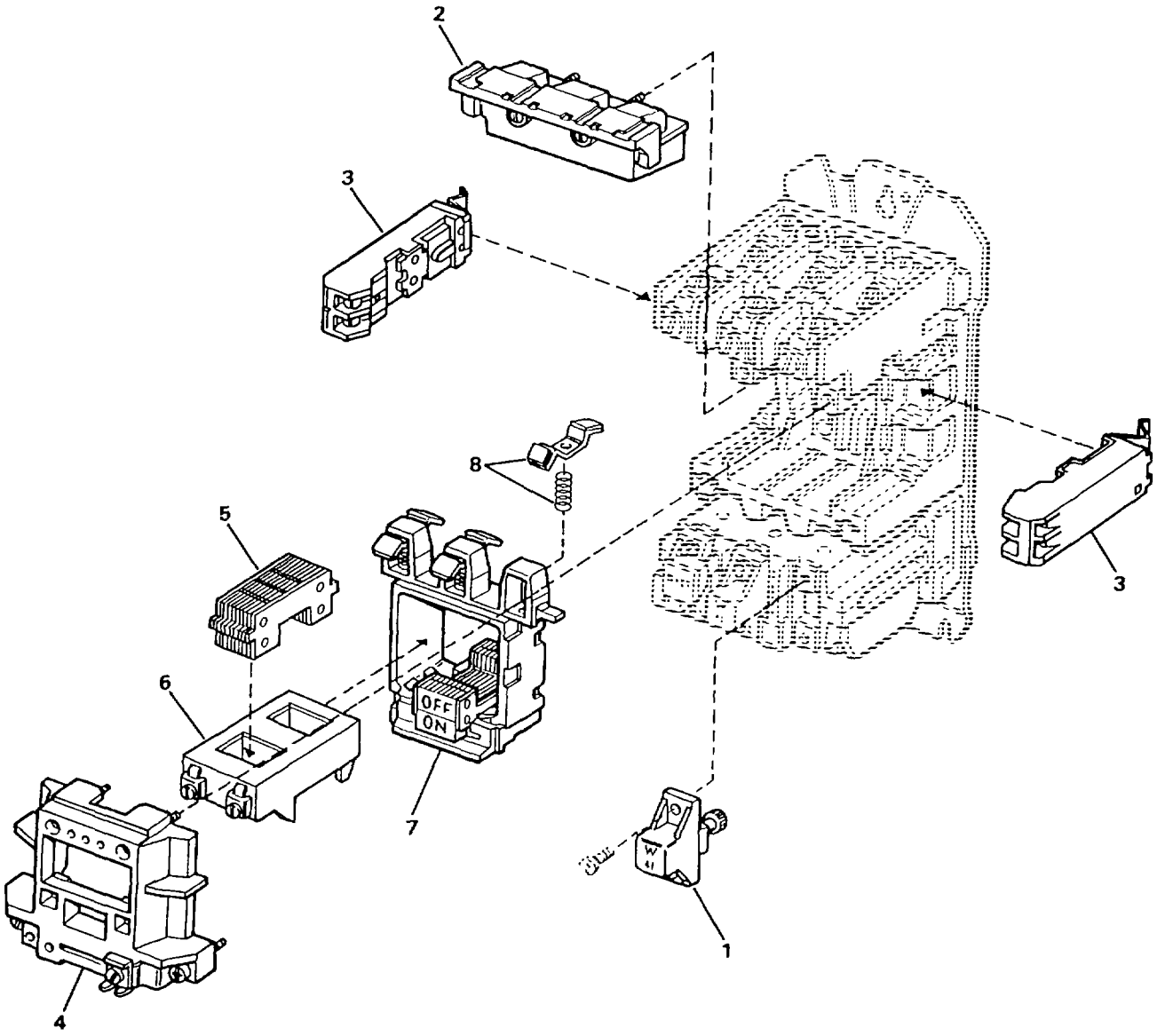

FIGURE 37. MOTOR STARTER MS7

(1) ITEM NO	(2) SMR CODE	(3) NSN	(4) CAGEC	(5) PART NUMBER	(6) DESCRIPTION AND USABLE ON CODES(UOC)	(7) QTY
					GROUP 02 WATER PURIFICATION SYSTEM FIG. 37 MOTOR STARTER MS7	
	PAFFF	6110013464748	01121	509BOD-90	...STARTER,MOTOR.....ETN	1
	PAFFF		01121	509 BOD X22	...STARTER,MOTOR.....FKD	1
1	PAFZZ	5999011104623	19200	12618149-15	....HEATER.....	3
2	XDFZZ		01121	40410-499-02	....COVER,CONT BLOCK.....	1
3	PBFZZ		01121	595-A	....CONTACT ASSEMBLY,EL.....	2
4	XDFZZ	5950014263675	01121	40410-496-01	....COIL,ASSEMBLY,ELECT.....	1
5	XDFZZ	5930014308739	01121	40410-497-01	....YOKE,ELECTRICAL SWI.....	1
6	XDFZZ	5950010525951	01121	CB236	....COIL,RADIO FREQUENC.....	1
7	XDFZZ	6110011847387	01121	40410-498-01	....CONTACT SUPPORT ASS.....	1
8	PAFZZ	5999010523522	01121	40410-331-52	....CONTACT ASSEMBLY,EL.....	3

END OF FIGURE

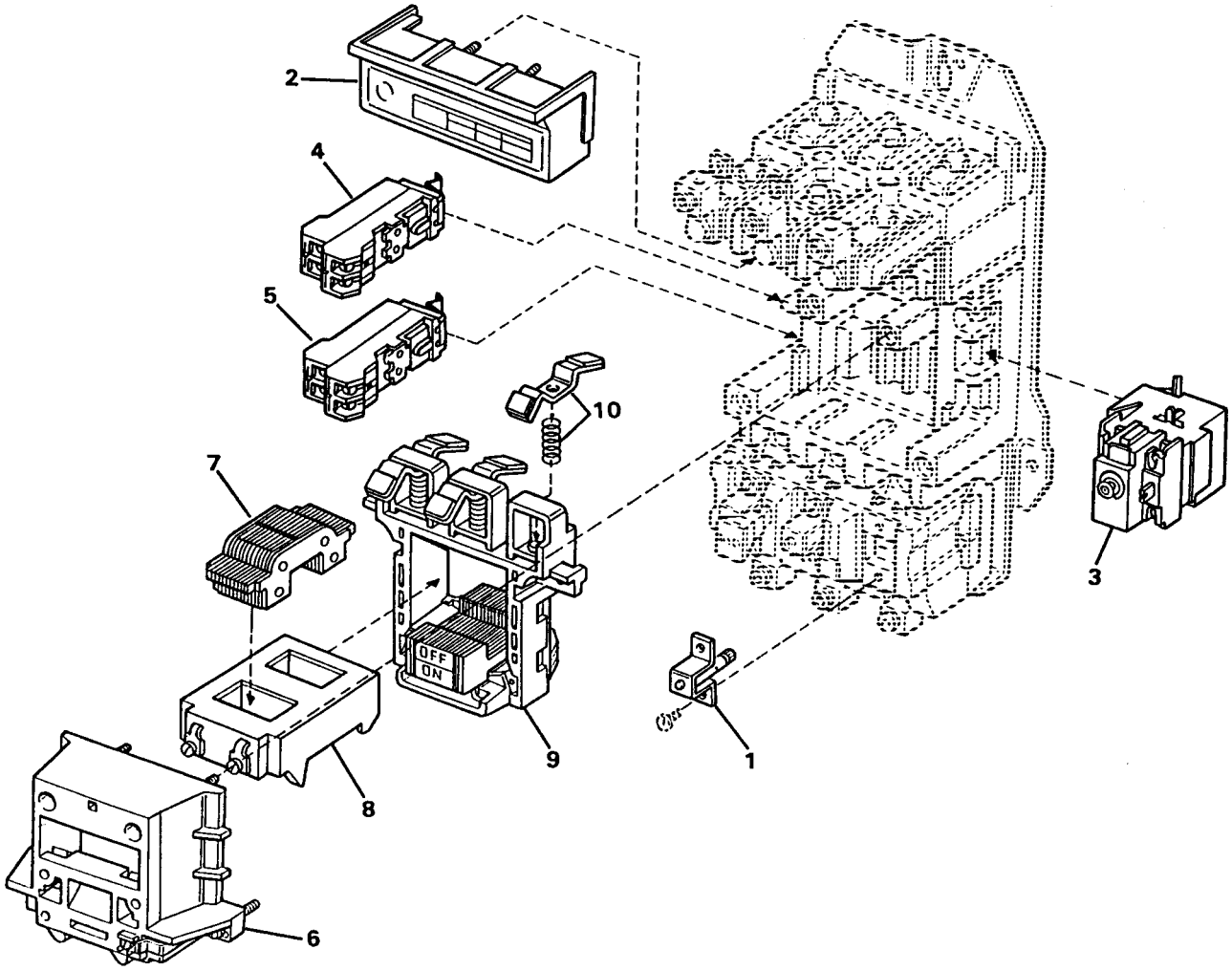

FIGURE 38. MOTOR STARTER MS8-1M

(1) ITEM NO	(2) SMR CODE	(3) NSN	(4) CAGEC	(5) PART NUMBER	(6) DESCRIPTION AND USABLE ON CODES(UOC)	(7) QTY
					GROUP 02 WATER PURIFICATION SYSTEM	
					FIG. 38 MOTOR STARTER MS8-lM	
	PAFFF	6110013464749	01121	509-DODX16	...STARTER,MOTOR.....	1
1	PAFZZ	6110013226414	01121	W 74	....PROTECTOR,THERMAL-O.....	3
2	XDFZZ		01121	40430-457-51	....COVER,CONT BLOCK.....	1
3	PBFZZ	6645013487435	01121	596-TR32	....TIMER,SEQUENTIAL.....	1
4	PBFZZ	5999012358936	01121	595-AB	....CONTACT ASSEMBLY,EL.....	1
5	PBFZZ	5999013495272	01121	595-AA	....CONTACT,ELECTRICAL.....	1
6	XDFZZ		01121	40430-454-31	....COVER,COIL.....	1
7	XDFZZ		01121	40430-455-51	....YOKE.....	1
8	XDFZZ		01121	CD236	....COIL.....	1
9	XDFZZ		01121	40430-452-51	....SUPPORT,CONTACT.....	1
10	PAFZZ	5999013069577	01121	40430-300-51	....CONTACT ASSORTMENT.....	3

END OF FIGURE

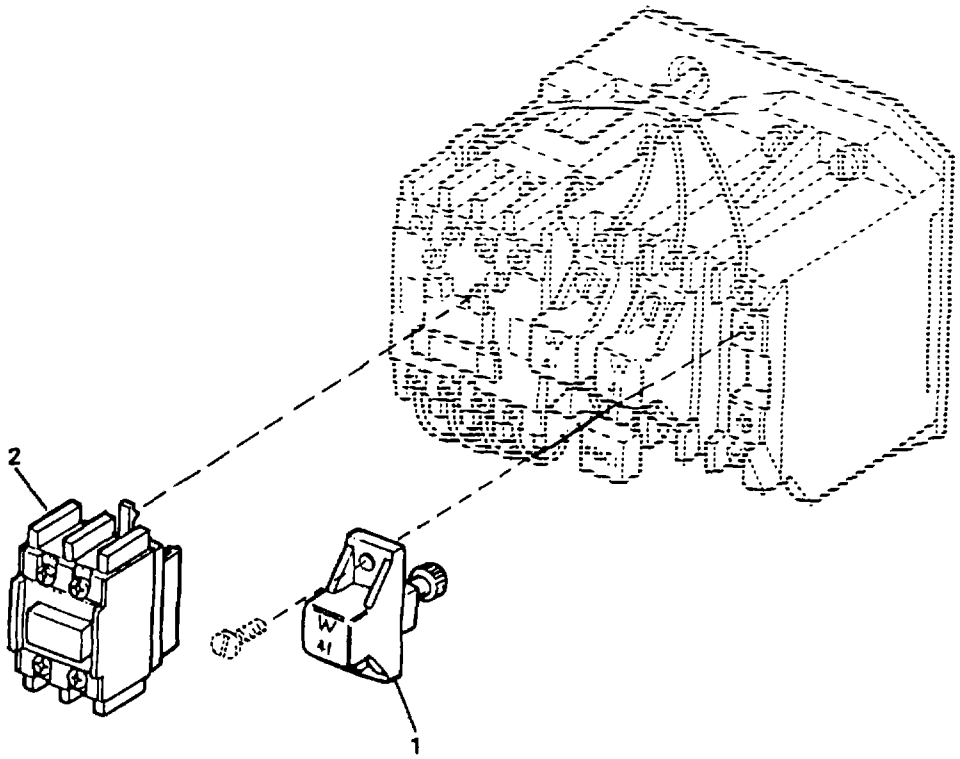

FIGURE 39. MOTOR STARTER MS2

(1) ITEM NO	(2) SMR CODE	(3) NSN	(4) CAGEC	(5) PART NUMBER	(6) DESCRIPTION AND USABLE ON CODES(UOC)	(7) QTY
					GROUP 02 WATER PURIFICATION SYSTEM	
					FIG. 39 MOTOR STARTER MS2	
	PAFFF	6110013464750	01121	509-TODX17	...STARTER,MOTOR.....	1
1	PAFZZ	4520012378038	01121	W-39	....ELEMENT,HEATER.....	3
2	PAFZZ	5999013498336	01121	195-FA11	....CONTACT,ELECTRICAL.....	1

END OF FIGURE

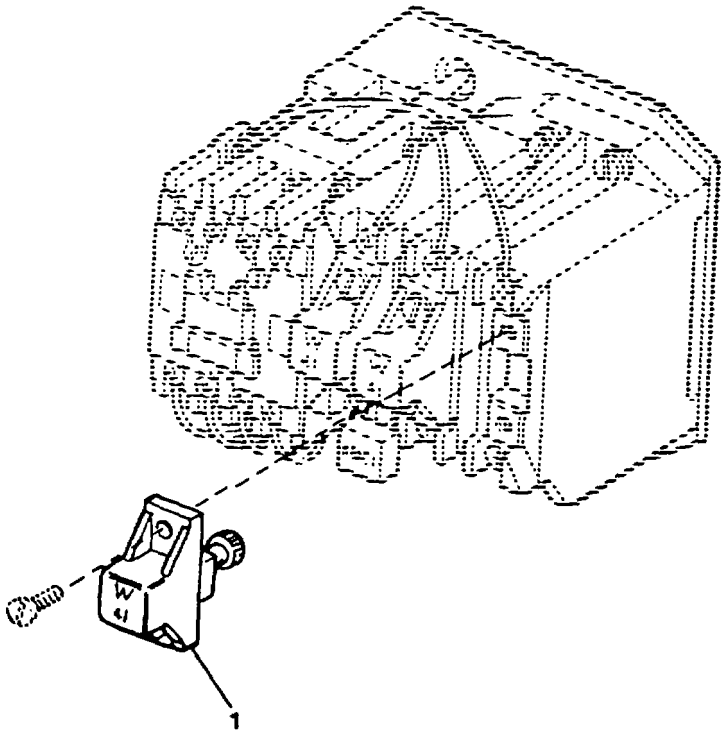

FIGURE 40. MOTOR STARTER MS1

(1) ITEM NO	(2) SMR CODE	(3) NSN	(4) CAGEC	(5) PART NUMBER	(6) DESCRIPTION AND USABLE ON CODES(UOC)	(7) QTY
					GROUP 02 WATER PURIFICATION SYSTEM	
					FIG. 40 MOTOR STARTER MS1	
	PAFFZ	6110010136482	01121	509-TOD/W-39	...STARTER,MOTOR.....	1
1	PAFZZ	5999011884254	65504	114-0032	...HEATER,THERMAL RELE.....	3

END OF FIGURE

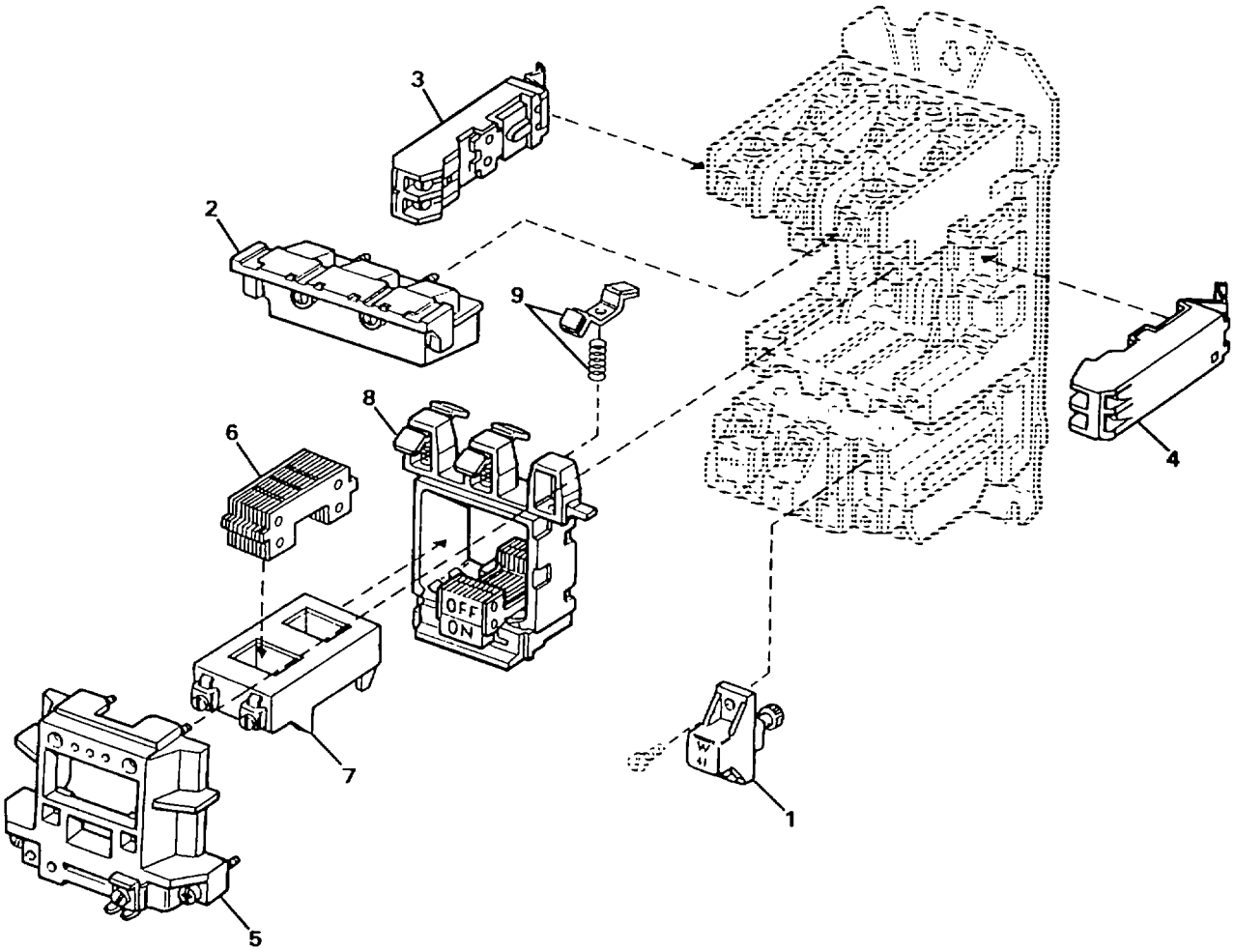

FIGURE 41. MOTOR STARTER MS3

(1) ITEM NO	(2) SMR CODE	(3) NSN	(4) CAGEC	(5) PART NUMBER	(6) DESCRIPTION AND USABLE ON CODES(UOC)	(7) QTY
					GROUP 02 WATER PURIFICATION SYSTEM FIG. 41 MOTOR STARTER MS3	
	PAFFF	6110013511674	01121	509-AOD-91	...STARTER,MOTOR.....	1
1	PAFZZ	5999012033814	01121	W-48	....HEATER,THERMALRELE.....	3
2	XDFZZ		01121	40410-499-01	....COVER,CONT BLOCK.....	1
3	PBFZZ	5999011104623	01121	595-A	....CONTACT ASSEMBLY,EL.....	1
4	PBFZZ	6110012737849	01121	595-B	....CONTACT SET,MOTOR S.....	1
5	PAFZZ	5950014263675	01121	40410-496-01	....COIL,ASSEMBLY,ELECT.....	1
6	PAFZZ	5930014308739	01121	40410-497-01	....YOKE,ELECTRICAL SWI.....	1
7	XDFZZ		01121	CB236	....COIL.....	1
8	PAFZZ	6110011847387	01121	40410-498-01	....CONTACT SUPPORT ASS.....	1
9	PAFZZ	5999011767106	01121	40410-331-51	....CONTACT ASSEMBLY,EL.....	3

END OF FIGURE

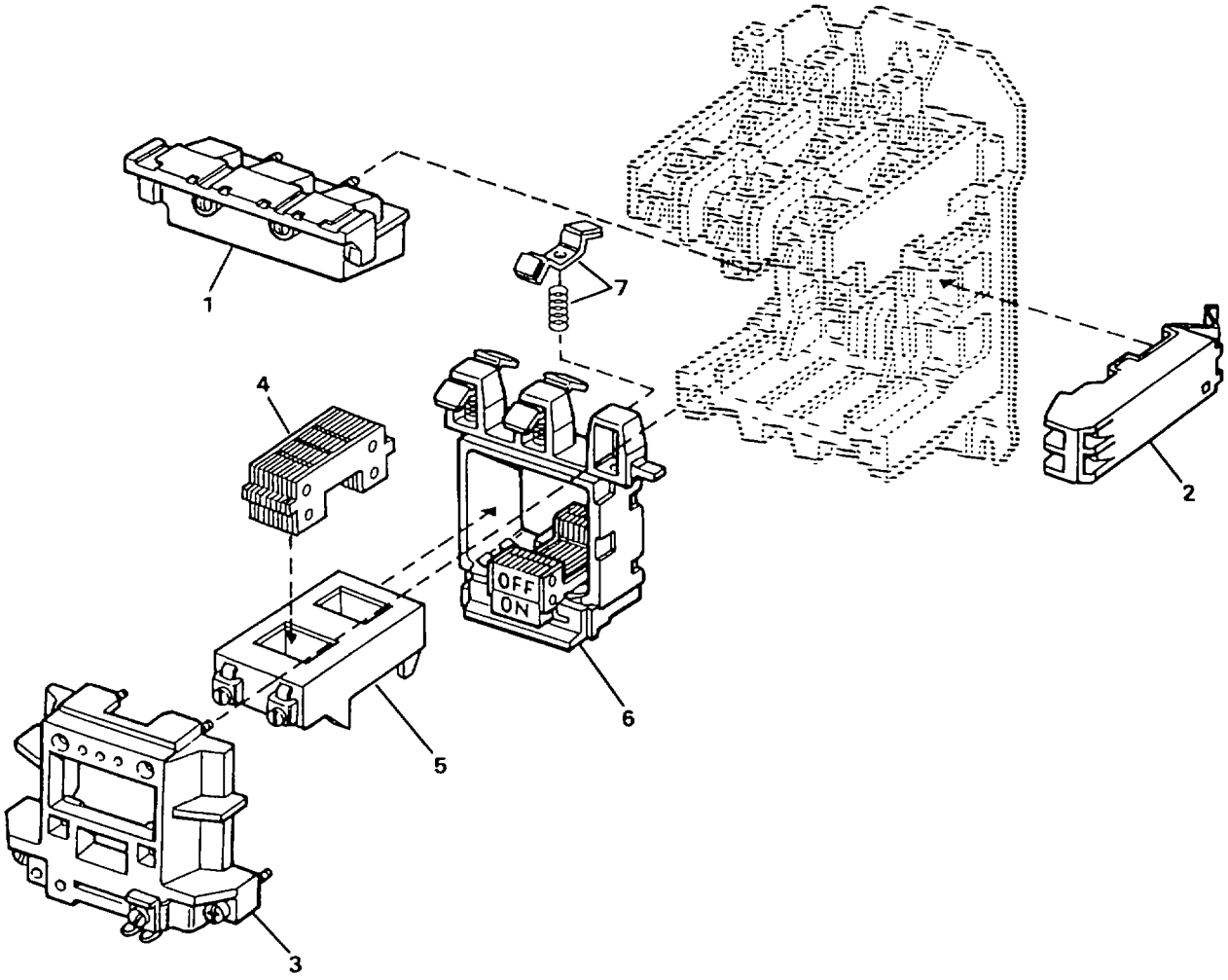

FIGURE 42. MOTOR STARTER MS8-25

(1) ITEM NO	(2) SMR CODE	(3) NSN	(4) CAGEC	(5) PART NUMBER	(6) DESCRIPTION AND USABLE ON CODES(UOC)	(7) QTY
					GROUP 02 WATER PURIFICATION SYSTEM	
					FIG. 42 MOTOR STARTER MS8-25	
	PAFFF	6110013464751	01121	500-BODX18	...STARTER,MOTOR.....	1
1	XDFZZ		01121	40410-499-02	....COVER,CONTBLOCK.....	1
2	PBFZZ	5999013495096	01121	595-BL	....CONTACT,ELECTRICAL.....	1
3	PAFZZ	5950014263675	01121	40410-496-01	....COIL,ASSEMBLY,ELECT.....	1
4	PAFZZ	5930014308739	01121	40410-497-01	....YOKE,ELECTRICAL SWI.....	1
5	XDFZZ		01121	CB236	....COIL.....	1
6	PAFZZ	6110011847387	01121	40410-498-01	....CONTACT SUPPORT ASS.....	1
7	PAFZZ	5999010523522	01121	40410-331-52	....CONTACT ASSEMBLY,EL.....	3

END OF FIGURE

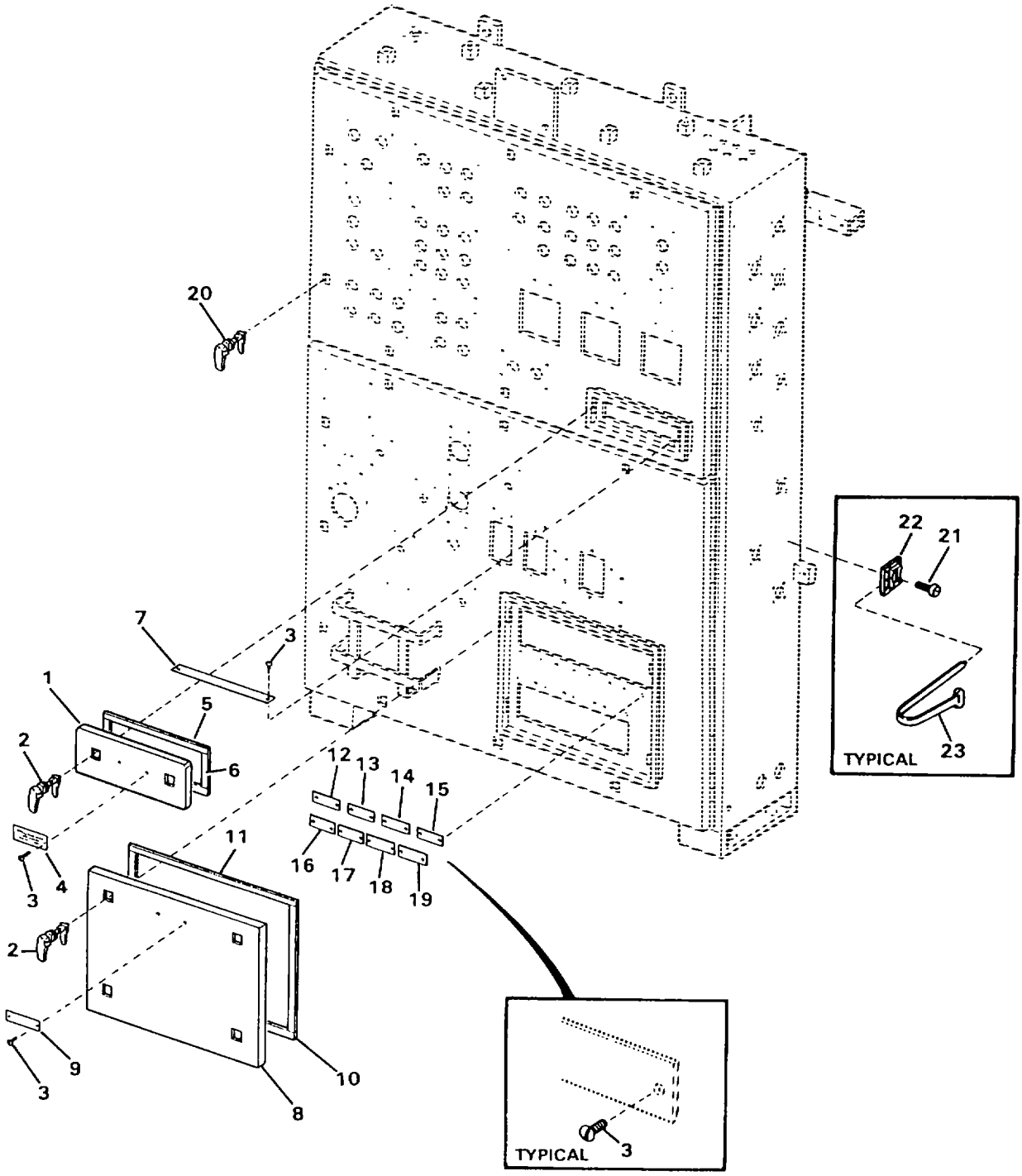

FIGURE 43. MAIN CONTROL PANEL (SHEET 1 OF 2)

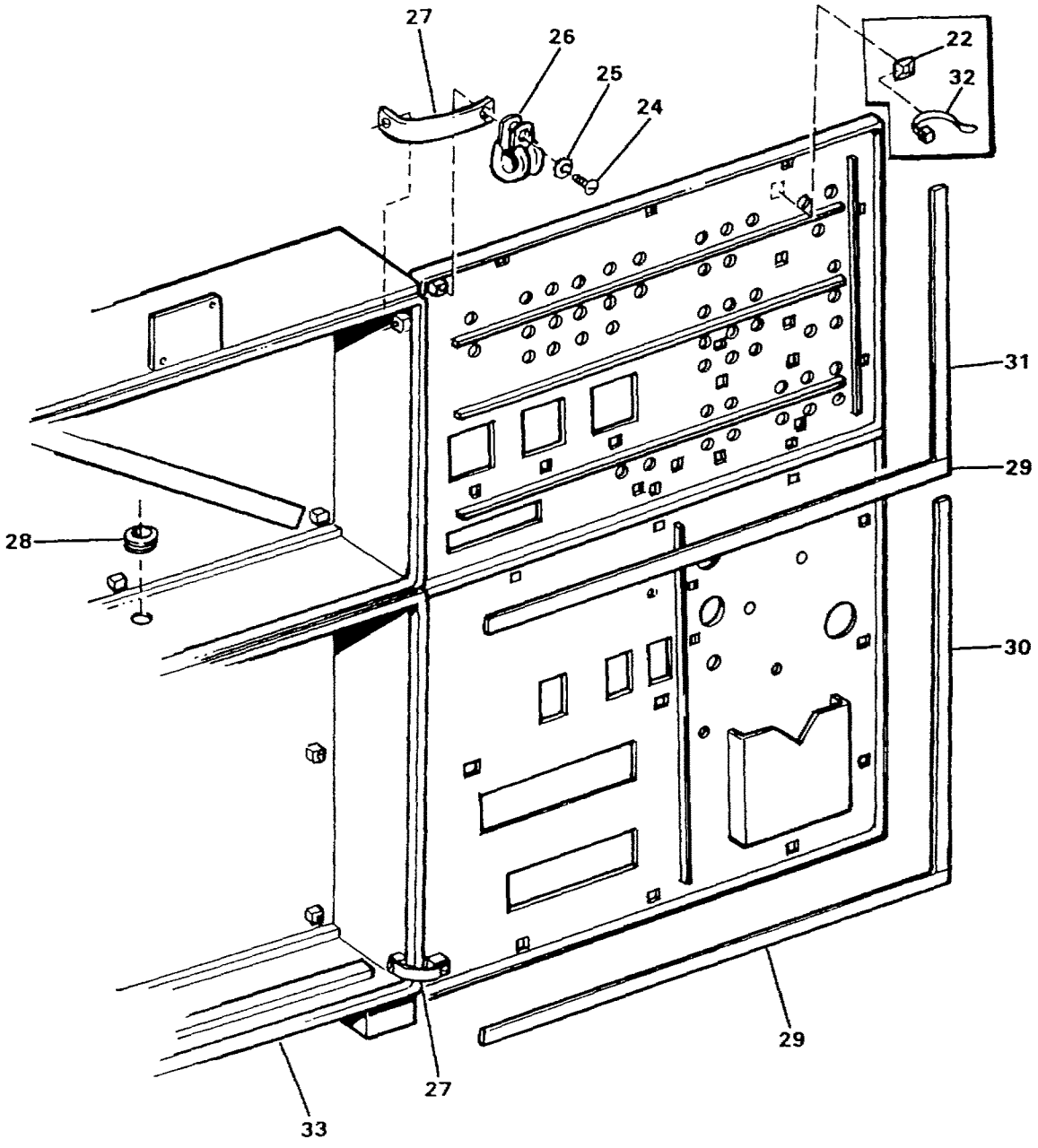

FIGURE 43. MAIN CONTROL PANEL (SHEET 2 OF 2)

(1) ITEM NO	(2) SMR CODE	(3) NSN	(4) CAGEC	(5) PART NUMBER	(6) DESCRIPTION AND USABLE ON CODES(UOC)	(7) QTY
					GROUP 02 WATER PURIFICATION SYSTEM FIG. 43 MAIN CONTROL PANEL	
1	XDFZZ		97403	13229E0584	..DOOR,UPPER.....	1
2	XDOZZ		97403	13229E0746-2	..ELECTRICAL PANEL DOOR LATCH.....	6
3	PAFZZ	5305013499586	97403	13229E0621-19	..SCREW,TAPPING 0.112-40, TYPE F, X 0.375 INCH LONG.....	22
4	XDFZZ		97403	13229E0782-146	..PLATE,ID.....	1
5	MOOZZ		09647	120-57645-1	..GASKET CUT TO LENGTH FORM BULK, P/N 13229E0744.....	2
6	MOOZZ		09647	120-57645-2	..GASKET CUT TO LENGTH FROM BULK, P/N 13229E0744.....	2
7	XDFZZ		97403	13229E0460	..PLATE,ID.....	1
8	XDFZZ		97403	13229E0585	..DOOR,LOWER.....	1
9	XDFZZ		97403	13229E0782-113	..PLATE,ID.....	1
10	MOOZZ		09647	120-57645-3	..GASKET CUT TO LENGTH FROM BULK, P/N 13229E0744.....	2
11	MOOZZ		09647	120-57645-4	..GASKET CUT TO LENGTH FROM BULK, P/N 13229E0744.....	2
12	XDFZZ		97403	13229E0782-102	..PLATE,ID.....	1
13	XDFZZ		97403	13229E0782-110	..PLATE,ID.....	1
14	XDFZZ		97403	13229E0782-106	..PLATE,ID.....	1
15	XDFZZ		97403	13229E0782-104	..PLATE,ID.....	1
16	XDFZZ		97403	13229E0782-100	..PLATE,ID.....	1
17	XDFZZ		97403	13229E0782-103	..PLATE,ID.....	1
18	XDFZZ		97403	13229E0782-101	..PLATE,ID.....	1
19	XDFZZ		97403	13229E0782-97	..PLATE,ID.....	1
20	XDOZZ		97403	13229E0746-2	..LATCH ASSEMBLY.....	16
21	PAFZZ	5305013510821	97403	13229E0082-154	..SCREW,TAPPING,THREA 0.164, TYPE F X .5 INCH LONG.....	6
22	PBFZZ	5975013589415	97403	13229E1180	..MOUNT,CABLE TIE.....	35
23	PAFZZ	9905000274577	96906	MS3367-2	..BAND,MARKER.....	6
24	PAFZZ	5305000593663	96906	MS51958-67	..SCREW,MACHINE 0.190-32 UNF--2A X 1 INCH LONG.....	4
25	PAFZZ	5310002091239	96906	MS35335-60	..WASHER,LOCK.....	4
26	PAFZZ	5340010899033	96906	MS21919WCF20	..CLAMP,LOOP.....	1
27	PBFZZ	5999013505851	97403	13229E0662	..STRIP,ELECTRICAL GR.....	2
28	PAFZZ	5325009386702	96906	MS35489-55	..GROMMET,NONMETALLIC.....	1
29	MOOZZ		09647	120-57645-7	..GASKET CUT TO LENGTH FROM BULK, P/N 13229E0744.....	4
30	MOOZZ		09647	120-57645-6	..GASKET CUT TO LENGTH FROM BULK, P/N 13229E0744.....	2
31	MOOZZ		09647	120-57645-5	..GASKET CUT TO LENGTH FROM BULK, P/N 13229E0744.....	2
32	PAFZZ	5975000742072	96906	MS3367-1-9	..STRAP,TIEDOWN,ELECT.....	V
32	PAFZZ	5975001113208	96906	MS3367-5-9	..STRAP,TIEDOWN,ELECT.....	V
33	XDFZZ		97403	13229E0322	..CONTROL PANEL.....ETN	1
33	XDFZZ		97403	13229E0233	..CONTROL PANEL.....FKD	1

END OF FIGURE

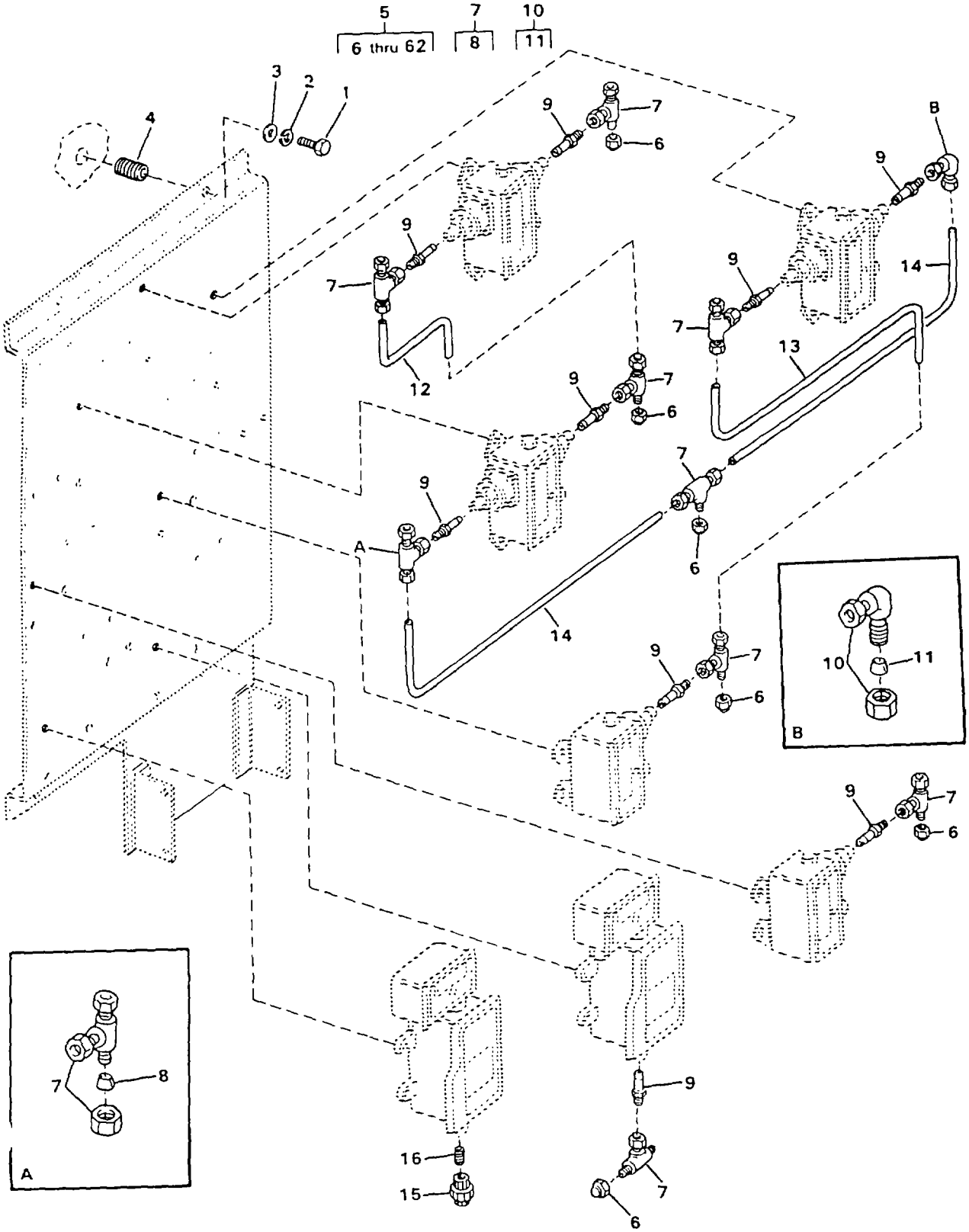

FIGURE 44. PRESSURE SWITCHES PANEL ASSEMBLY (SHEET 1 OF 8)
(Model ETN Only)

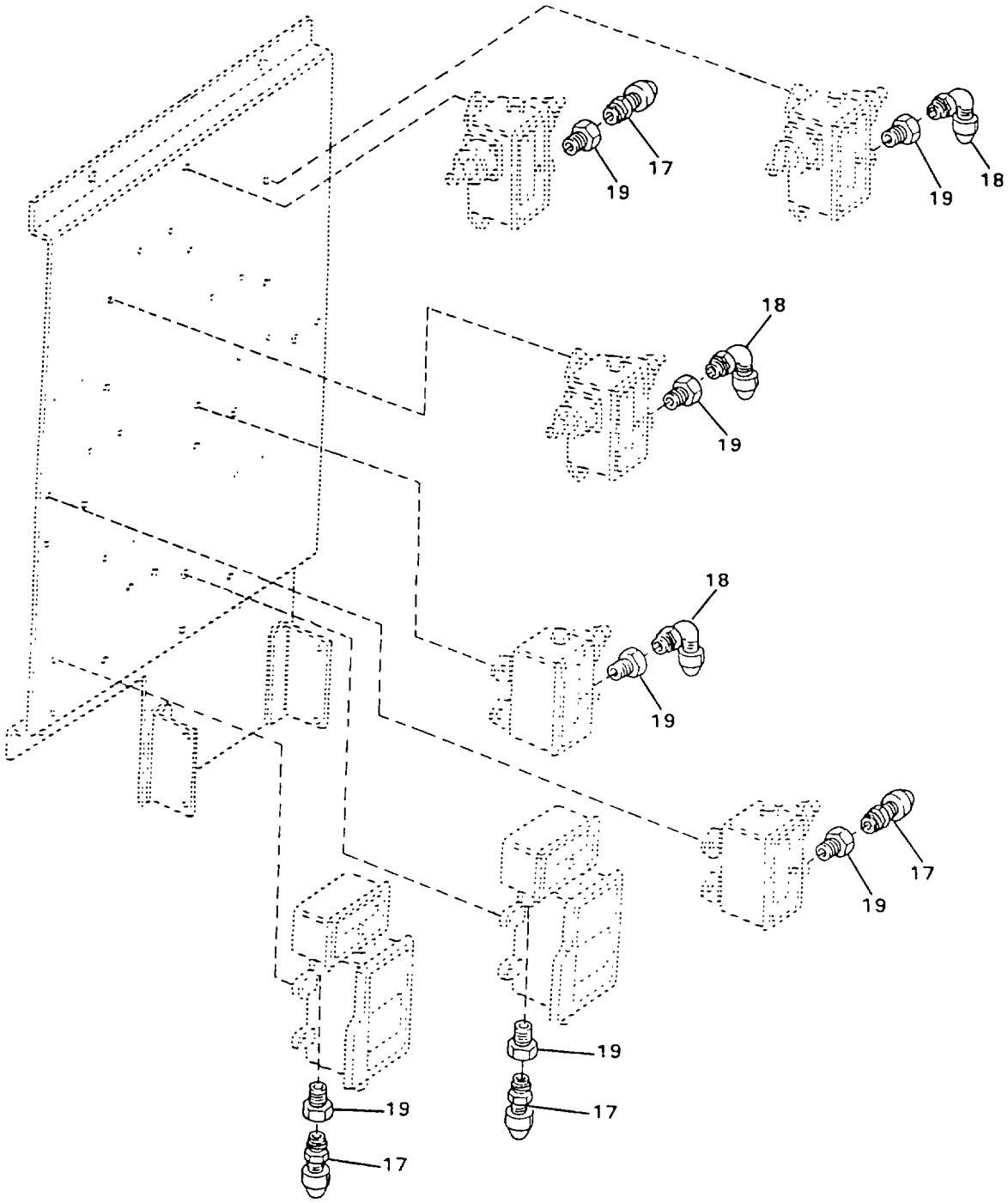

FIGURE 44. PRESSURE SWITCHES PANEL ASSEMBLY (SHEET 2 OF 8)
(Model ETN Only)

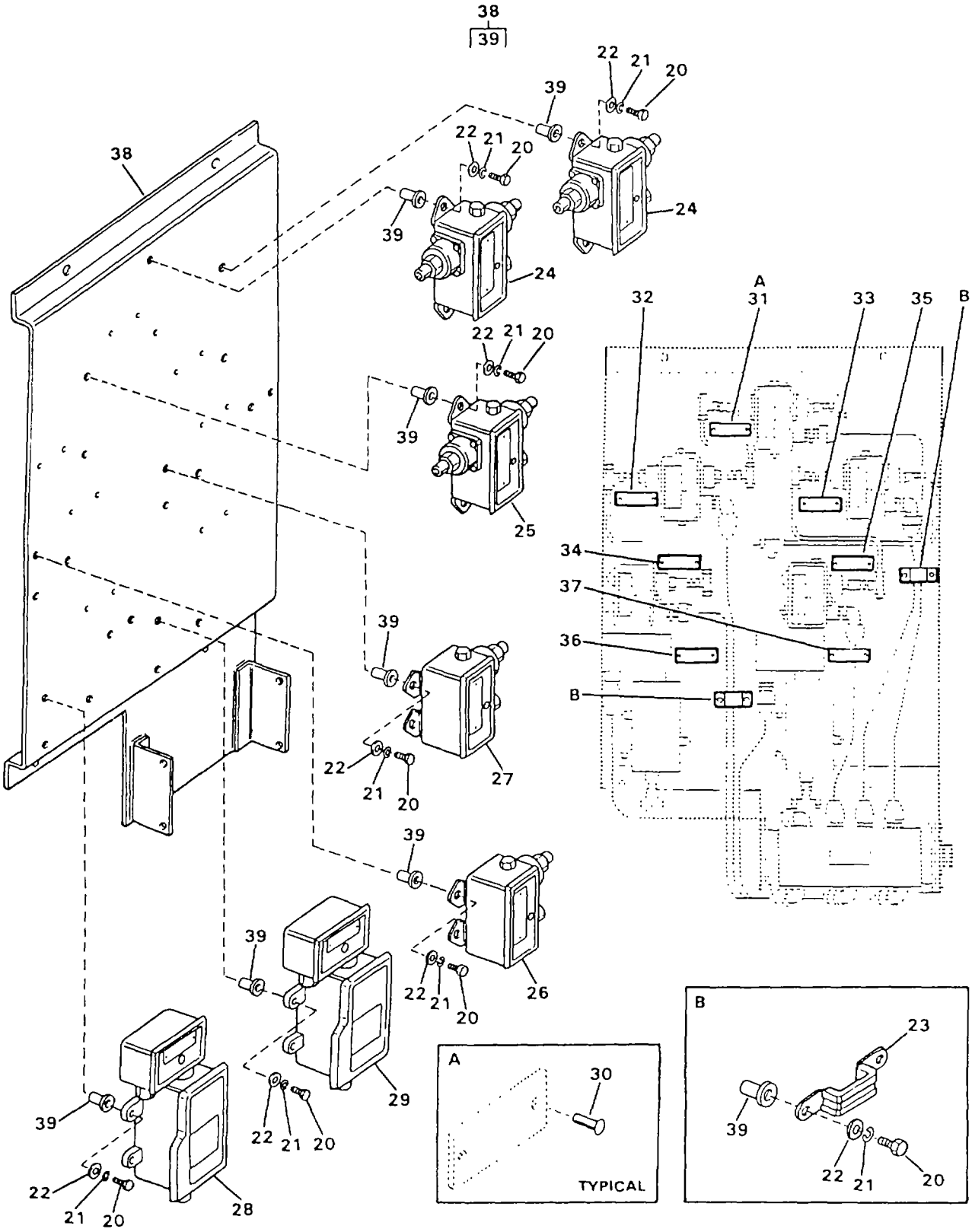

FIGURE 44. PRESSURE SWITCHES PANEL ASSEMBLY (SHEET 3 OF 8)
(Model ETN Only)

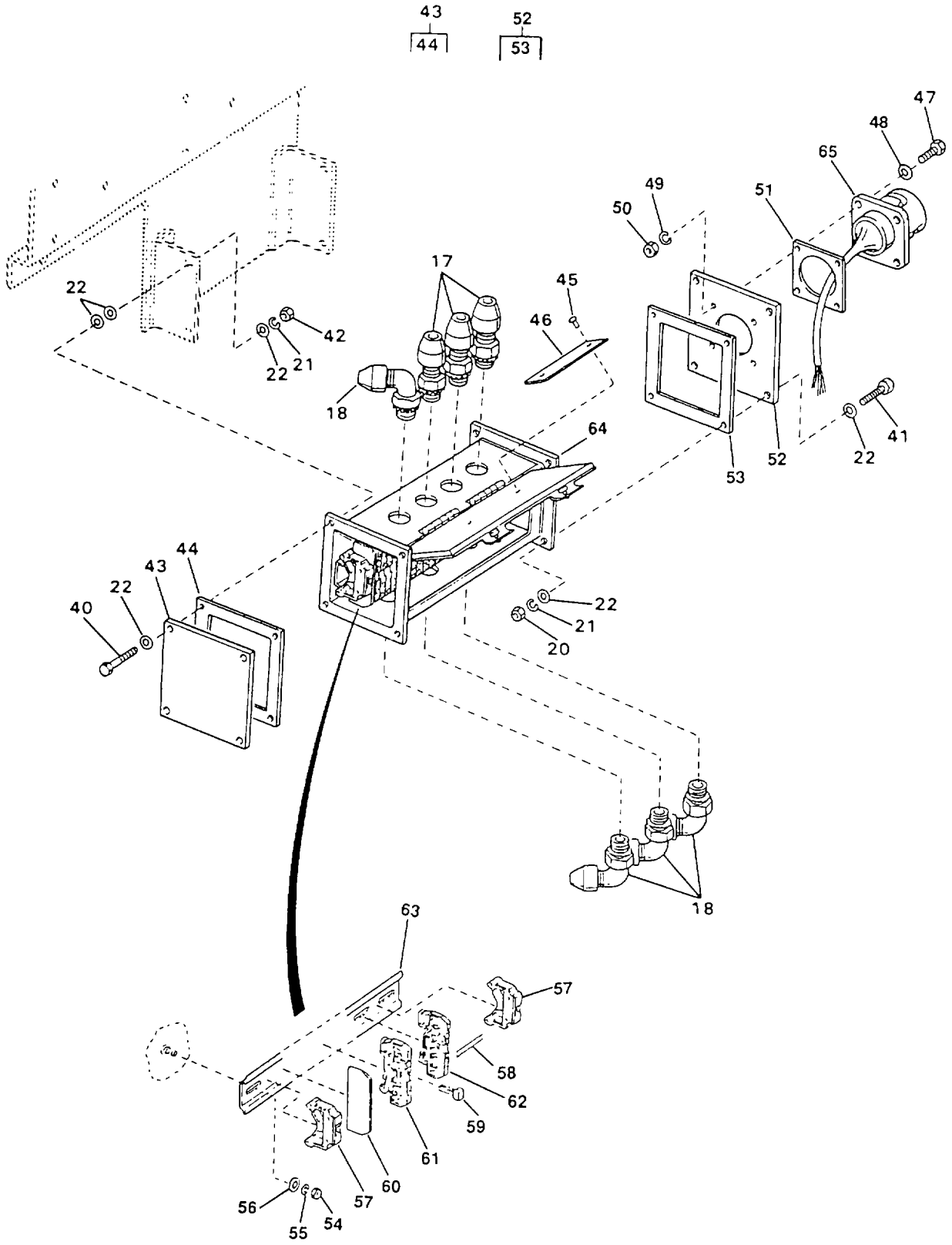

FIGURE 44. PRESSURE SWITCHES PANEL ASSEMBLY (SHEET 4 OF 8)
(Model ETN Only)

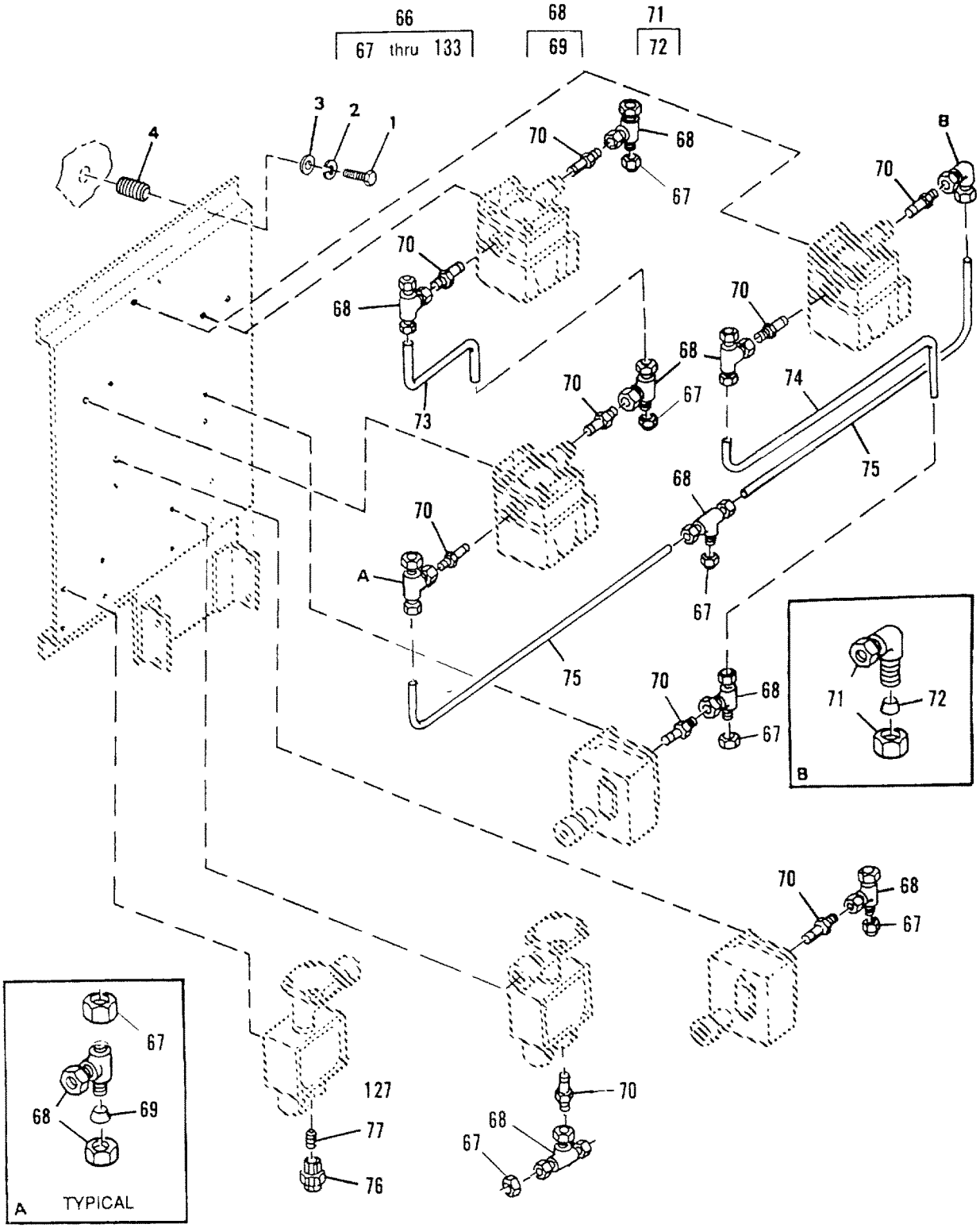

FIGURE 44. PRESSURE SWITCHES PANEL ASSEMBLY (SHEET 5 OF 8)
(Model FKD Only)

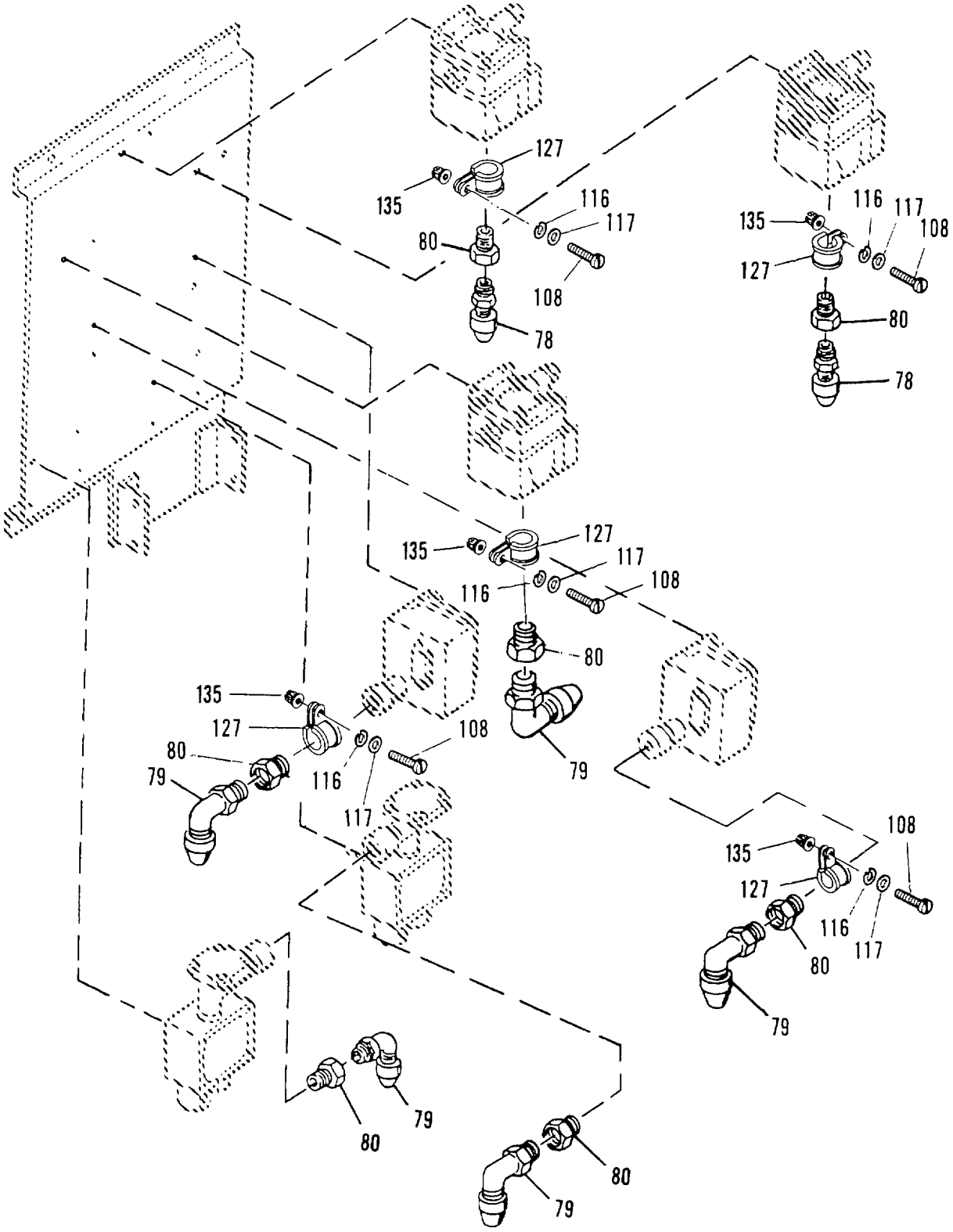

FIGURE 44. PRESSURE SWITCHES PANEL ASSEMBLY (SHEET 6 OF 8)
(Model FKD Only)

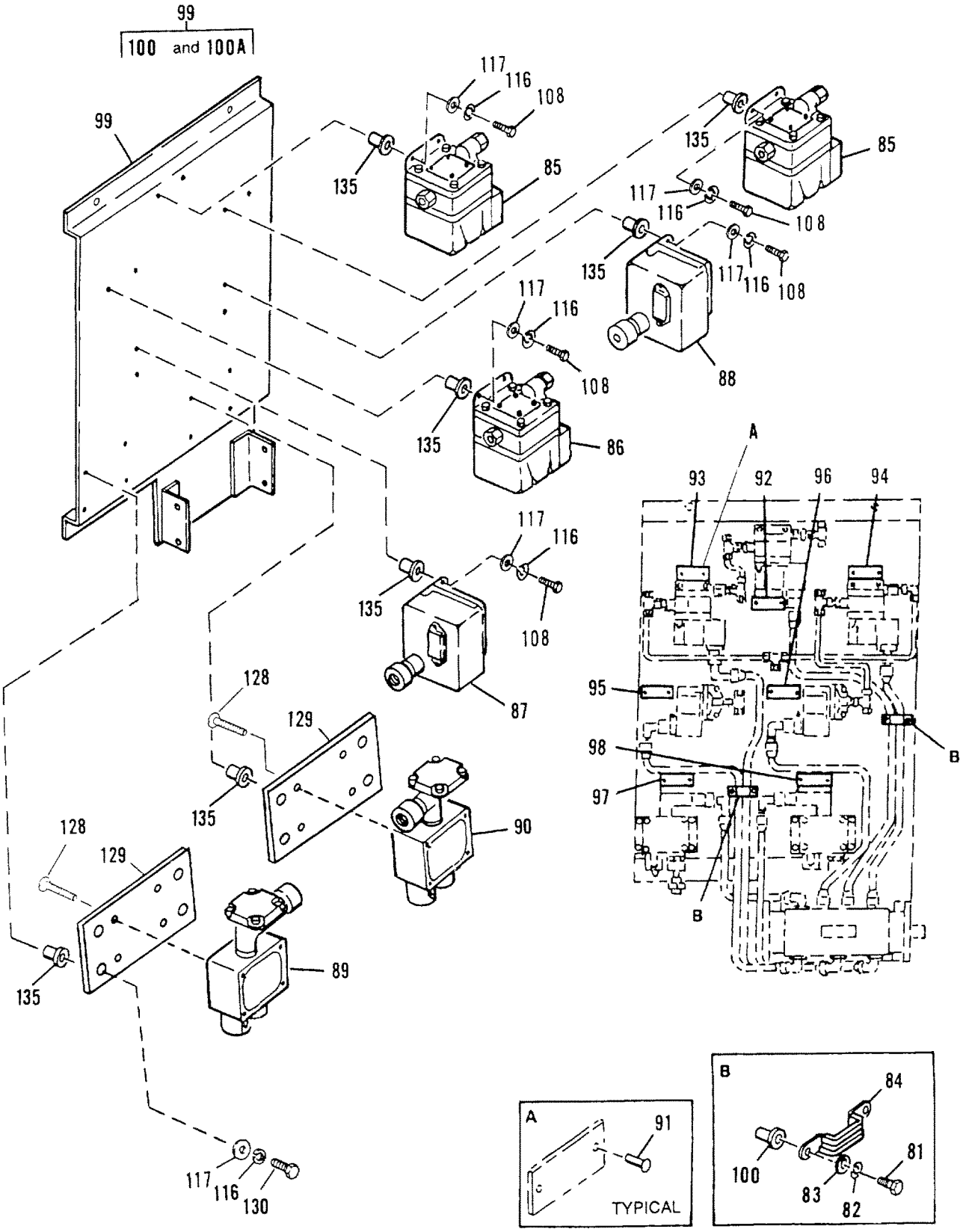

FIGURE 44. PRESSURE SWITCHES PANEL ASSEMBLY (SHEET 7 OF 8)
(Model FKD Only)

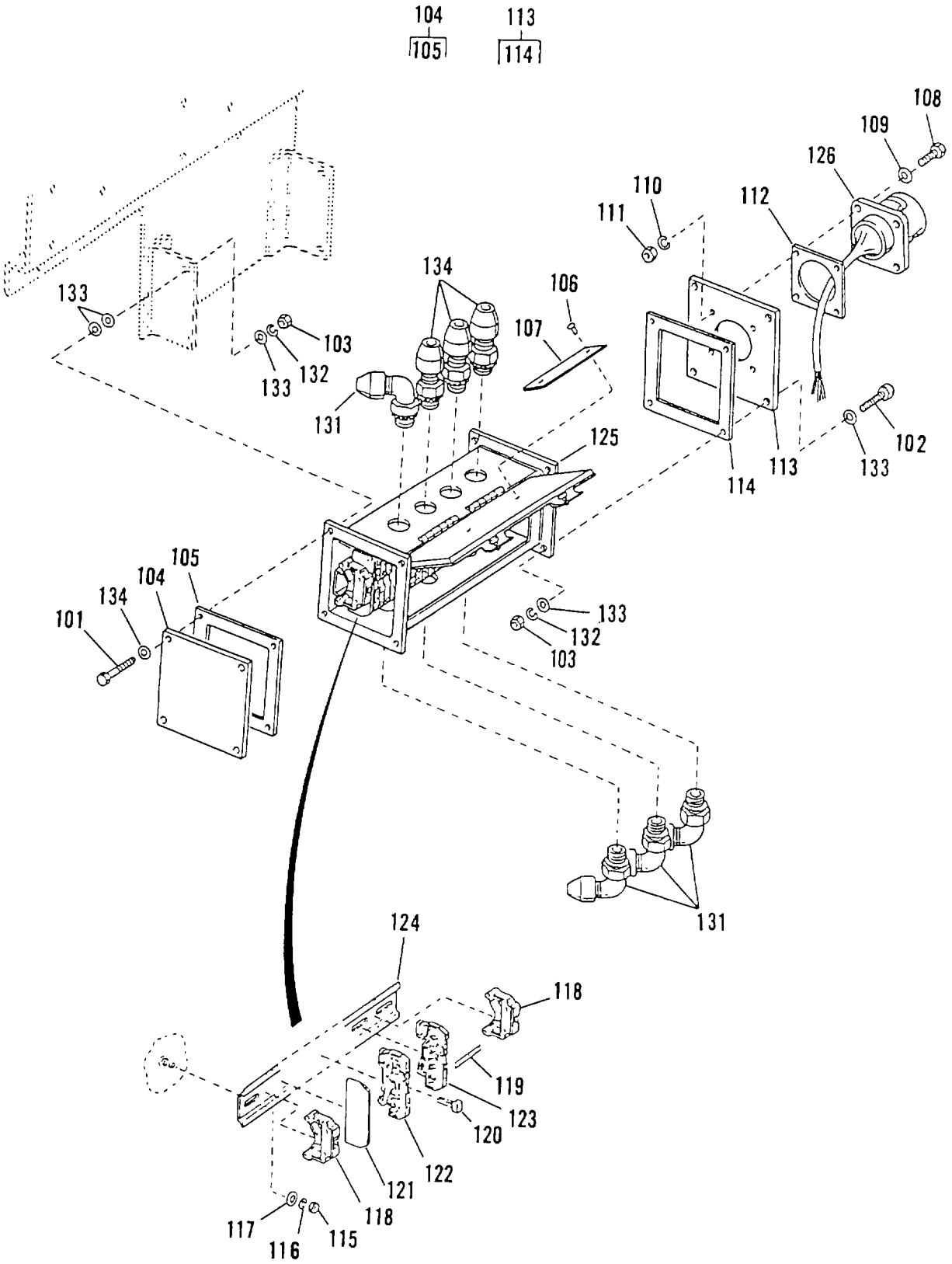

FIGURE 44. PRESSURE SWITCHES PANEL ASSEMBLY (SHEET 8 OF 8)
(Model FKD Only)

(1) ITEM NO	(2) SMR CODE	(3) NSN	(4) CAGEC	(5) PART NUMBER	(6) DESCRIPTION AND USABLE ON CODES(UOC)	(7) QTY
					GROUP 02 WATER PURIFICATION SYSTEM FIG. 44 PRESSURE SWITCHES PANEL ASSEMBLY	
1	PAFZZ	5305000213806	96906	MS35307-413	.SCREW,CAP,HEXAGON H.....	4
2	PAFZZ	5310009338778	96906	MS35338-143	.WASHER,LOCK.....	4
3	PAFZZ	5310007679425	96906	MS15795-818	.WASHER,FLAT.....	4
4	PAFZZ	5340009907158	96906	MS122165	.INSERT,SCREW THREAD.....	4
5	XDFFF		97403	13229E0072	.PANEL ASSY,PRES SW.....ETN	1
6	XDFZZ		97403	13229E0382	..PLUG,TUBE.....ETN	6
7	PBFZZ	4730006843796	54938	4-4-4JBZSS	..TEE,TUBE.....ETN	9
8	PAFZZ	4730000884338	54938	4TZSS	..SLEEVE,COMPRESSION.....ETN	9
9	PBFZZ	4730013497767	97403	13229EO148	..ADAPTER,STRAIGHT,TU.....ETN	9
10	PBFZZ	4730009651235	96906	MS51820-355	..ELBOW,TUBE.....ETN	1
11	PAFZZ	4730000884338	54938	4TZSS	..SLEEVE,COMPRESSION.....ETN	1
12	PBFZZ	4710013497173	09647	120-51244-2	..TUBE,BENT,METALLIC.....ETN	1
13	PBFZZ	4710013497174	09647	120-51244-1	..TUBE,BENT,METALLIC.....ETN	1
14	PBFZZ	4710013497175	09647	120-54095-8	..TUBE,BENT,METALLIC.....	2
15	PBFZZ	4730013509033	97403	13229E1189	..UNION,PIPE.....ETN	1
16	PBFZZ	4730013486246	97403	13229El255-2	..NIPPLE,PIPE.....ETN	1
17	PBFZZ	5975013557891	97403	13229E0738-6	..STUFFING TUBE.....ETN	4
18	PBFZZ	5975013533190	97403	13229E0753-4	..ASTUFFING TUBE.....ETN	3
19	PBFZZ	4730000711671	88044	AN 912-7K	..BUSHING,PIPE 3/4 MPT X 1/2 ETN INCH LONG.....	7
20	PAFZZ	5305002078253	96906	MS35307-308	..SCREW,CAP,HEXAGON H.....ETN	22
21	PAFZZ	5310009338121	96906	MS35338-139	..WASHER,LOCK.....ETN	30
22	PAFZZ	5310010911248	96906	MS15795-810	..WASHER,FLAT.....ETN	22
23	PBFZZ	5340013500865	97403	13229E0377	..STRAP,RETAINING.....ETN	2
24	PAFZZ	5930013495677	97403	13229E0105-2	..SWITCH,PRESSURE.....ETN	2
25	PAFZZ	5930013495678	97403	13229E0105-1	..SWITCH,PRESSURE.....ETN	1
26	PAFZZ	5930013495679	97403	13229E0106-2	..SWITCH,PRESSURE.....ETN	1
27	PAFZZ	5930013495680	97403	13229E0106-1	..SWITCH,PRESSURE.....ETN	1
28	PAFZZ	5930013495681	97403	13229E0107	..SWITCH,PRESSURE.....ETN	1
29	PAFZZ	5930013495682	97403	13229E0104	..SWITCH,PRESSURE.....ETN	1
30	PAOZZ	5320013490933	97403	13229E0350-1	..RIVET,BLIND.....ETN	16
31	XDOZZ		97403	13229E0792-130	..PLATE,ID.....ETN	1
32	XDOZZ		97403	13229E0792-132	..PLATE,ID.....ETN	1
33	XDOZZ		97403	13229E0782-131	..PLATE,ID.....ETN	1
34	XDOZZ		97403	13229E0782-135	..PLATE,ID.....ETN	1
35	XDOZZ		97403	13229E0782-134	..PLATE,ID.....ETN	1
36	XDOZZ		97403	13229E0782-136	..PLATE,ID.....ETN	1
37	XDOZZ		97403	13229E0792-133	..PLATE,ID.....ETN	1
38	XDFZZ		97403	13229E0071	..PANEL,PRESSSWITCH.....ETN	1
39	PAFZZ	5310011190460	97403	13229E0114-4	...NUT,PLAIN,BLIND RIV.....ETN	22
40	PAFZZ	5305000213668	96906	MS35307-310	..SCREW,CAP,HEXAGON H.....ETN	4
41	PAFZZ	5305000213620	96906	MS35307-307	..SCREW,CAP,HEXAGON H.....ETN	4
42	PAFZZ	5310009035966	96906	MS51971-1	..NUT,PLAIN,HEXAGON.....ETN	8
43	XDFZZ		97403	13229EO545-1	..COVER.....ETN	1
44	PBFZZ	5330013500466	00843	F-44WGSS	...GASKET.....ETN	1
45	PAFZZ		97403	13229E0350-6	..RIVET,POP.....ETN	2
46	XDFZZ		97403	13229E0782-99	..PLATE,ID.....ETN	1
47	PAFZZ	5305013510881	97403	13229E0072-57	..SCREW,MACHINE 0.138-32 UNC- ETN 2A X 0.5 INCH LONG.....	4

(1) ITEM NO	(2) SMR CODE	(3) NSN	(4) CAGEC	(5) PART NUMBER	(6) DESCRIPTION AND USABLE ON CODES(UOC)	(7) QTY
48	PAFZZ	5310008805976	96906	MS15795-806	..WASHER,FLAT.....ETN	4
49	PAFZZ	5310009296395	96906	MS35338-136	..WASHER,LOCK.....ETN	4
50	PAFZZ	5310009349761	96906	MS35649-264	..NUT,PLAIN,HEXAGON.....ETN	4
51	PAFZZ	5330009480704	96906	MS52000-10	..GASKET.....ETN	1
52	XDFZZ		97403	13229E0546	..COVER.....ETN	1
53	PBFZZ	5330013500466	00843	F-44WGSS	..GASKET.....ETN	1
54	PAFZZ	5310009349760	96906	MS35649-204	..NUT,PLAIN,HEXAGON.....ETN	2
55	PAFZZ	5310009338120	96906	MS35338-138	..WASHER,LOCK.....ETN	2
56	PAFZZ	5905013924321	96906	MS15765-842	..RESISTOR,FIXED,WIR.....ETN	2
57	PBFZZ	5340123059524	D8969	209-101	..END SECTION TERMINA.....ETN	2
58	XDFZZ		97403	13229E0097	..MARKER STRIP,TERMIN.....ETN	15
59	PBFZZ		97403	13229E0827-1	..TERMINAL JUNCTION B.....ETN	2
60	PBFZZ	5940013492716	97403	13229E0095-1	..TERMINAL,PLATE,END.....ETN	1
61	PAFZZ	5940013614782	65996	280-681	..TERMINAL JUNCTION B.....ETN	12
62	PAFZZ	5940013498395	97403	313229E0094-1	..TERMINAL,BOARD.....ETN	3
63	XDFZZ		97403	13229E0091-1	..RAIL,TERMINAL.....ETN	1
64	XDFZZ		97403	13229E0384	..ENCLOSURE.....ETN	1
65	XDFFF		97403	13229E1258-13	..HARNESS ASSEMBLY SEE FIGURE 45, ITEM 19 FOR BREAKDOWN..... ETN	1
66	XDFFF		97403	13229E0145	..PANEL ASSY,PRES SW.....FKD	1
67	XDFZZ		97403	13229E0382	..PLUG,TUBE.....FKD	6
68	PBFZZ	4730006843796	54938	4-4-4JBZSS	..TEE,TUBE.....FKD	9
69	PAFZZ	4730000884338	54938	4TZSS	...SLEEVE,COMPRESSION.....FKD	2
70	PBFZZ	4730013497767	97403	13229E0148	..ADAPTER,STRAIGHT,TU.....FKD	9
71	PBFZZ	4730009651235	96906	MS51820-355	..ELBOW,TUBE.....FKD	1
72	PAFZZ	4730000884338	54938	4TZSS	...SLEEVE,COMPRESSION.....FKD	2
73	PBFZZ		94833	13229E0145K10	..TUBE,BENT,METALLIC 3/16 SS, .25 OD X .035 INCH WALL STOCK..... FKD	1
74	PBFZZ		94833	13229E0145K16	..TUBE,BENT,METALLIC 3/16 SS, .25 OD X .035 INCH WALL STOCK..... FKD	1
75	PBFZZ		94833	13229E0145K13	..TUBE,BENT,METALLIC 3/16 SS, .25 OD X .035 INCH WALL STOCK..... FKD	2
76	PBFZZ	4730013509033	97403	13229E0189	..UNION,PIPE.....FKD	1
77	PBFZZ	4730013486246	97403	13229E1255-2	..NIPPLE,PIPE.....FKD	1
78	PBFZZ	5975013557891	97403	13229E0738-6	..STUFFING TUBE.....FKD	2
79	PBFZZ	5975013533190	97403	13229E0753-4	..STUFFING TUBE.....FKD	5
80	PBFZZ	4730000711671	88044	AN 912-7K	..BUSHING,PIPE 3/4 MPT X 1/2 INCH LONG..... FKD	7
81	PAFZZ	5305002078253	96906	MS35307-308	..SCREW,CAP,HEXAGON H.....FKD	4
82	PAFZZ	5310009338121	96906	MS35338-139	..WASHER,LOCK.....FKD	4
83	PAFZZ	5310010911248	96906	MS15795-810	..WASHER,FLAT.....FKD	4
84	PBFZZ	5340013500865	97403	13229E0377	..STRAP,RETAINING.....FKD	2
85	PAFZZ		97403	13229E0006-2	..SWITCH,PRESSURE.....FKD	2
86	PAFZZ		97403	13229E0006-1	..SWITCH,PRESSURE.....FKD	1
87	PAFZZ		97403	13229E0010-2	..SWITCH,PRESSURE.....FKD	1
88	PAFZZ		97403	13229E0010-1	..SWITCH,PRESSURE.....FKD	1
89	PAFZZ		97403	13229E0044	..SWITCH,PRESSURE.....FKD	1
90	PAFZZ		97403	13229E0041	..SWITCH,PRESSURE.....FKD	1
91	PAOZZ	5320013490933	97403	13229E0350-1	..RIVET,BLIND.....FKD	14
92	XDOZZ		97403	13229E0782-130	..PLATE,ID.....FKD	1
93	XDOZZ		97403	13229E0782-132	..PLATE,ID.....FKD	1
94	XDOZZ		97403	13229E0782-131	..PLATE,ID.....FKD	1

(1) ITEM NO	(2) SMR CODE	(3) NSN	(4) CAGEC	(5) PART NUMBER	(6) DESCRIPTION AND USABLE ON CODES(UOC)	(7) QTY
95	XDOZZ		97403	13229E0782-135	..PLATE,ID.....FKD	1
96	XDOZZ		97403	13229E0782-134	..PLATE,ID.....FKD	1
97	XDOZZ		97403	13229E0782-136	..PLATE,ID.....FKD	1
98	XDOZZ		97403	13229E0782-133	..PLATE,ID.....FKD	1
99	XDFZZ		97403	13229E0046	..PANEL,PRESS SWITCH.....FKD	1
100	PAFZZ	5310011190460	97403	13229E0114-4	...NUT,PLAIN,BLIND RIV.....FKD	4
101	PAFZZ	5305000213668	96906	MS35307-310	..SCREW,CAP,HEXAGON H.....FKD	4
102	PAFZZ	5305000213620	96906	MS35307-307	..SCREW,CAP,HEXAGON H.....FKD	4
103	PAFZZ	5310009035966	96906	MS51971-1	..NUT,PLAIN,HEXAGON.....FKD	8
104	XDFZZ		97403	13229E0545-1	..COVER.....FKD	1
105	PBFZZ	5330013500466	00843	F-44WGSS	..GASKET.....FKD	1
106	PAFZZ		97403	13229E0350-6	..RIVET,POP.....FKD	2
107	XDFZZ		97403	13229E0782-99	..PLATE,ID.....FKD	1
108	PAFZZ	5305013510881	97403	13229E0072-57	..SCREW,MACHINE 0.138-32 UNC- 2A X 0.5 INCH LONG..... FKD	19
109	PAFZZ	5310008805976	96906	MS15795-806	..WASHER,FLAT.....FKD	4
110	PAFZZ	5310009296395	96906	MS35338-136	..WASHER,LOCK.....FFD	4
111	PAFZZ	5310009349761	96906	MS35649-264	..NUT,PLAIN,HEXAGON.....FKD	4
112	PAFZZ	5330008272813	96906	MS52000-9	..GASKET.....FKD	1
113	XDFZZ		97403	13229E0546	..COVER.....FKD	1
114	PBFZZ	5330013500466	00843	F-44WGSS	..GASKET.....FKD	1
115	PAFZZ	5310009349760	96906	MS35649-204	..NUT,PLAIN,HEXAGON.....FKD	2
116	PAFZZ	5310009338120	96906	MS35338-138	..WASHER,LOCK.....FKD	25
117	PAFZZ	5310006191148	96906	MS15795-808	..WASHER,FLAT.....FKD	25
118	PBFZZ	5340123059524	D8969	209-101	..END SECTION TERMINA.....FKD	2
119	XDFZZ		97403	13229E0097	..MARKER STRIP,TERMIN.....FKD	15
120	PBFZZ		97403	13229E0827-1	..TERMINAL JUNCTION B.....FKD	2
121	PBFZZ	5940013492716	97403	13229E0095-1	..TERMINAL,PLATE,END.....FKD	1
122	PAFZZ	5940013614782	65996	280-681	..TERMINAL JUNCTION B.....FKD	12
123	PAFZZ	5940013498395	97403	13229E0094-1	..TERMINAL,BOARD.....FKD	3
124	XDFZZ		97403	13229E0091-1	..RAIL,TERMINAL.....FKD	1
125	XDFZZ		97403	13229E0384	..ENCLOSURE.....FKD	1
126	XDFFF		97403	13229E1258-13	..HARNESS ASSEMBLY SEE FIGURE 45, ITEM 19 FOR BREAKDOWN..... FKD	1
127	PAFZZ	5340008785257	96906	MS21919WCF-24	..CLAMP,LOOP.....FKD	5
128	PAFZZ	5305007247878	96906	MS24693-C94	..SCREW,MACHINE.....FKD	8
129	XDFZZ		97403	13229E0052	..PLATE.....FKD	2
130	PAFZZ	5305000546655	96906	MS51957-31	..SCREW,MACHINE 0.138-32 UNF- -2A X 0.625 INCH LONG..... FKD	8
131	PBFZZ	5975013533190	97403	13229E0753-4	..STUFFING TUBE.....FKD	3
132	PAFZZ	5310009338121	96906	MS35338-139	..WASHER,LOCK.....FKD	30
133	PAFZZ	5310010911248	96906	MS15795-810	..WASHER,FLAT.....FKD	22
134	PBFZZ	5975013557891	97403	13229E0738-6	..STUFFING TUBE.....FKD	4
135	PAFZZ		97403	13229E0114-5	...NUT,PLAIN,BLIND RIV.....FKD	23

END OF FIGURE

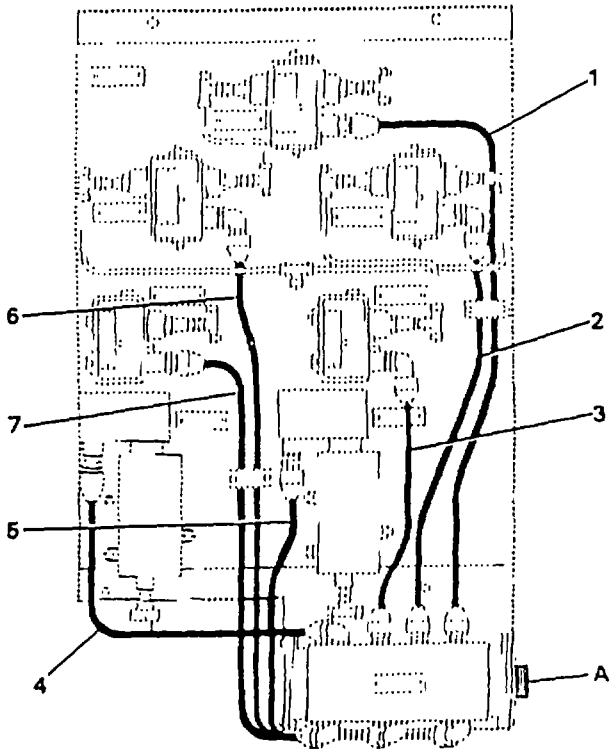

Model ETN Only

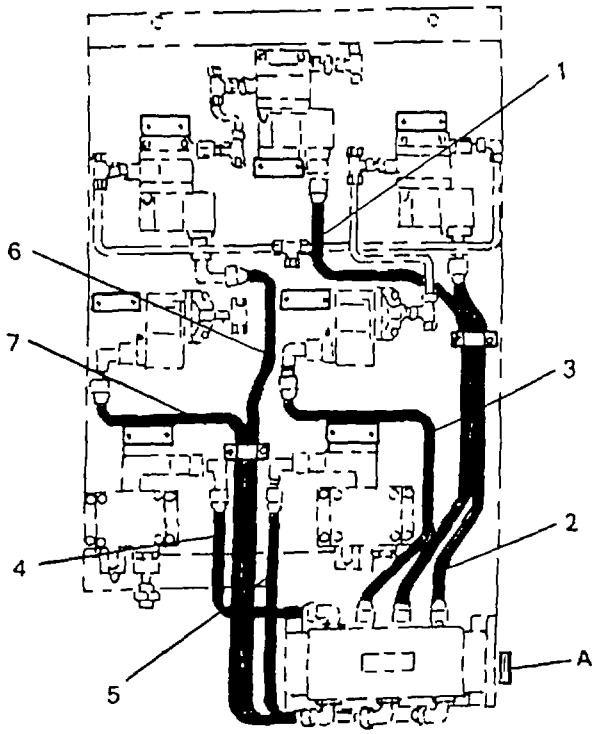

Model FKD Only

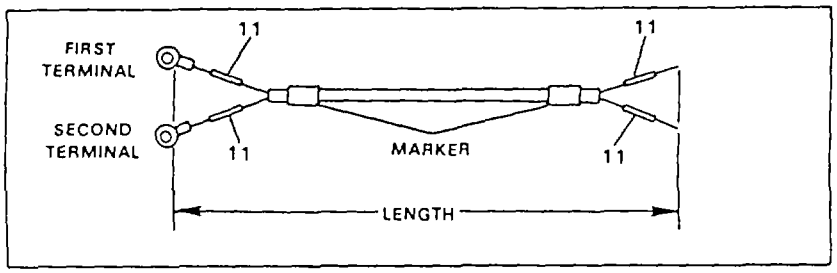

CABLE ASSY	WIRE RUN		CABLE	LENGTH	TERMINAL		MARKER
	FROM	TO			FIRST	SECOND	
1	PDSH1-C	TB5-3	9	47.00	10	10	12
	PDSH1-NC	TB5-8					
2	PDSH3-C	TB5-3	9	37.00	10	10	13
	PDSH3-NC	TB5-10					
4	PSH7-C	TB5-4	9	37.00	10	10	15
	PSH7-NC	TB5-5					
5	PSH5-C	TB5-2	9	36.00	10	10	16
	PSH5-NC	TB5-6					
6	PDSH2-C	TB5-1	9	50.00	10	10	17
	PDSH2-NC	TB5-9					
7	PSH6-C	TB5-2	9	48.00	10	10	18
	PSH6-NC	TB5-7					

FIGURE 45. PRESSURE SWITCHES PANEL WIRING (SHEET 1 OF 3)

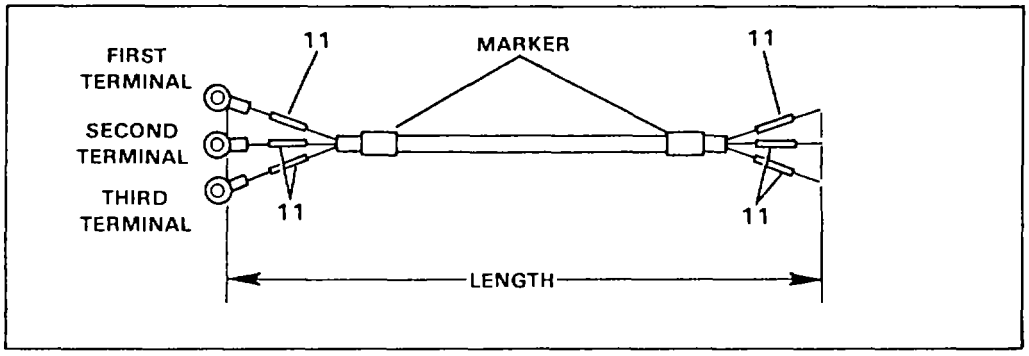

CABLE ASSY	WIRE RUN		CABLE	LENGTH	TERMINAL			MARKER
	FROM	TO			FIRST	SECOND	THIRD	
3	PSL4-C	TB5-1	8	35.00	10	10	10	14
	PSL4-NO	TB5-11						
	PSL4-NC	TB5-12						

FIGURE 45. PRESSURE SWITCHES PANEL WIRING (SHEET 2 OF 3)

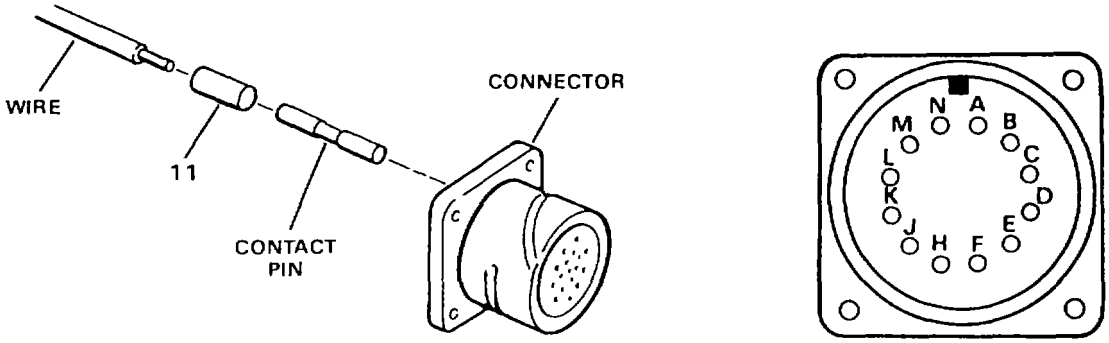

A

HARNESS ASSY	CONNECTOR	WIRE RUN		PIN	WIRE	LENGTH
		FROM	TO			
19	20	J24A	TB5-1	21	22	14.00
		J24B	TB5-4	21	22	12.50
		J24C	TB5-5	21	22	13.00
		J24D	TB5-6	21	22	12.50
		J24E	TB5-7	21	22	14.00
		J24F	TB5-8	21	22	14.00
		J24H	TB5-10	21	22	15.00
		J24J	TB5-11	21	22	13.50
		J24K	TB5-12	21	22	14.00
		J24L	—	21	—	—
		J24M	TB5-13	21	22	15.00
		J24N	TB5-9	21	22	14.00

FIGURE 45. PRESSURE SWITCHES PANEL WIRING (SHEET 3 OF 3)

(1) ITEM NO	(2) SMR CODE	(3) NSN	(4) CAGEC	(5) PART NUMBER	(6) DESCRIPTION AND USABLE ON CODES(UOC)	(7) QTY
					GROUP 02 WATER PURIFICATION SYSTEM FIG. 45 PRESSURE SWITCHES PANEL WIRING	
1	AFFFF		97403	13229E1257-6	..CABLE ASSEMBLY W50.....	1
2	AFFFF		97403	13229E1257-7	..CABLE ASSEMBLY W51.....	1
3	AFFFF		97403	13229E1257-8	..CABLE ASSEMBLY W52.....	1
4	AFFFF		97403	13229E1257-9	..CABLE ASSEMBLY W53.....	1
5	AFFFF		97403	13229E1257-10	..CABLE ASSEMBLY W54.....	1
6	AFFFF		97403	13229E1257-11	..CABLE ASSEMBLY W55.....	1
7	AFFFF		97403	13229E1257-12	..CABLE ASSEMBLY W56.....	1
8	MFFZZ		09647	120-07639-1-W52	...CABLE CUT TO LENGTH FROM BULK, P/N 13229E0741-1.....	1
9	MFFZZ		09647	120-01617-W50	...CABLE CUT TO LENGTH FROM BULK, P/N 13229E0556.....	6
10	PAFZZ	5940001434774	96906	MS25036-153	...TERMINAL,LUG.....	15
11	XDFZZ		01121	B-321HCPS.9-3336 W	...MARKER.....	30
12	XDFZZ		09647	120-02433-57	...MARKER.....	2
13	XDFZZ		09647	120-02433-58	...MARKER.....	2
14	XDFZZ		09647	120-02433-59	...MARKER.....	2
15	XDFZZ		09647	120-02433-60	...MARKER.....	2
16	XDFZZ		09647	120-02433-61	...MARKER.....	2
17	XDFZZ		09647	120-02433-62	...MARKER.....	2
18	XDFZZ		09647	120-02433-63	...MARKER.....	2
19	XDFFF		97403	13229E1258-13	..HARNESS ASSEMBLY J24.....	1
20	PBFFF	5935013470032	17549	CA3102E24-19P-B-F80-05-57	...CONNECTOR,RECEPTACL.....	1
21	PAFZZ	5999012793055	71468	030-8587-000	....CONTACT,ELECTRICAL PART OF KIT P/N 120-02593-P.....	12
22	MFFZZ		09647	1-16-9-J24	....WIRE,16 AWG CUT TO LENGTH FROM BULK, P/N M5086/1-16-9.....	11

END OF FIGURE

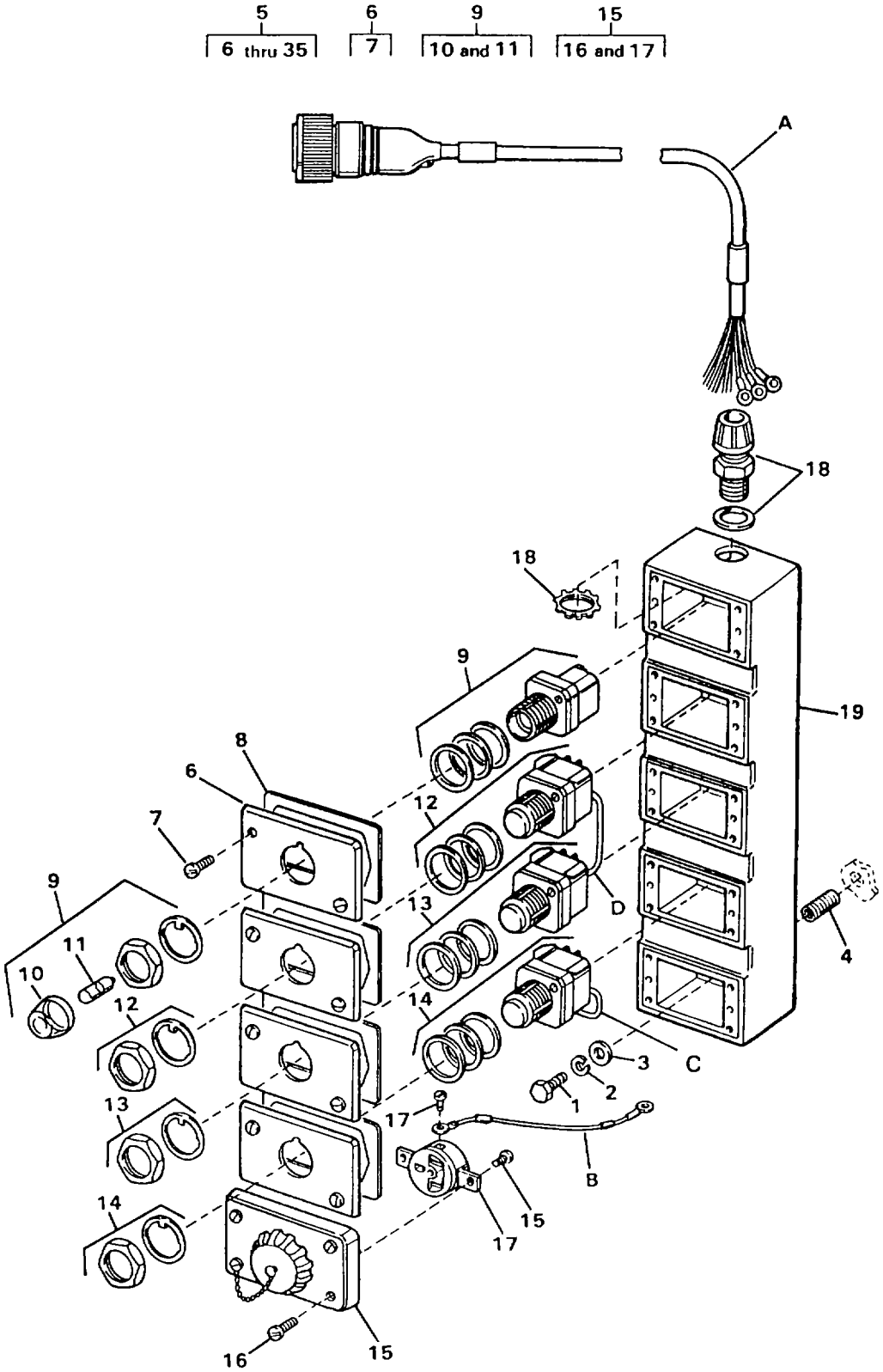

FIGURE 46. SWITCH PANEL NO. 1 (SHEET 1 OF 3)

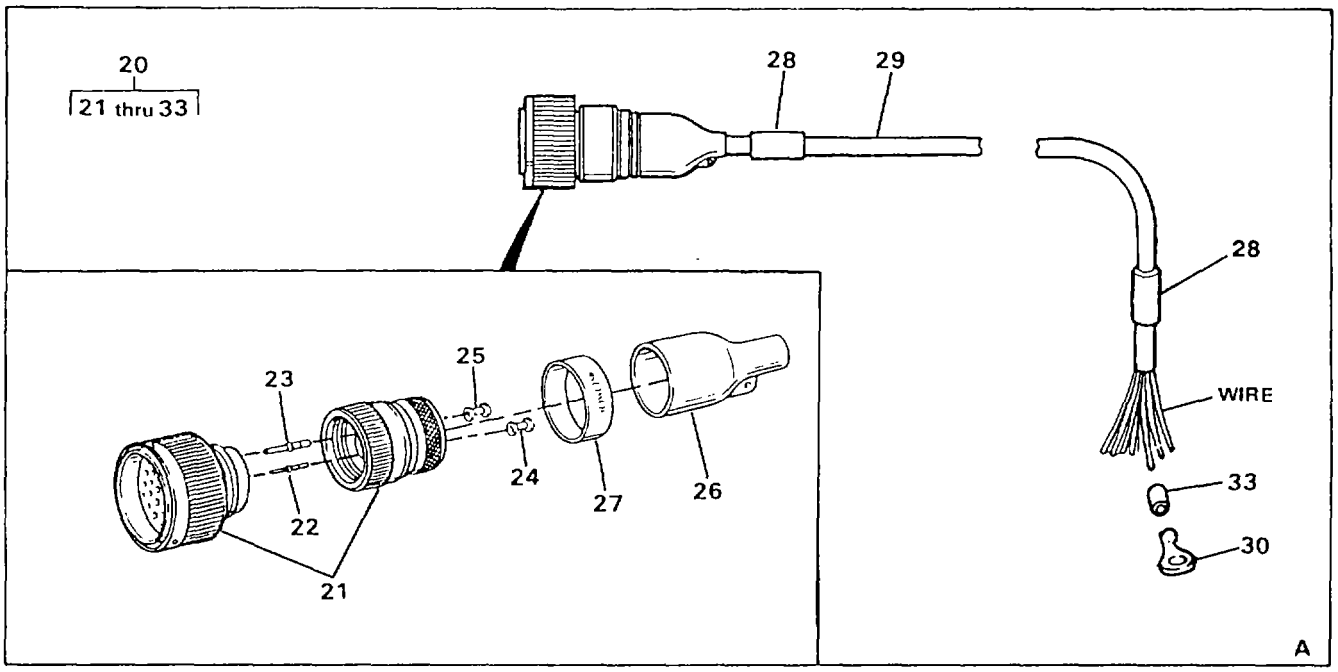

HARNESS ASSY	CONNECTOR DETAIL	CONTACT PIN	PLUG	WIRE RUN FROM	WIRE RUN TO	WIRE	LENGTH	TERMINAL
20	21	22	—	P29A	PB1-1B1	32	23.00	—
		22	—	P29B	PB2-1A3	32	19.00	—
		22	—	P29C	PB2-1A4	32	19.00	—
		22	—	P29D	PL1-1	32	15.00	—
		22	—	P29E	PL1-2	32	15.00	—
		22	24	P29F	———	—	—	—
		22	24	P29G	———	—	—	—
		22	24	P29H	———	—	—	—
		22	24	P29I	———	—	—	—
		23	—	P29J	SR4H	31	31.00	30
		23	—	P29K	SR4N	31	31.00	30
		23	—	P29L	SR4 GND	31	31.00	30
		23	25	P29M	———	—	—	—
		22	—	P29N	PB20-2A4	32	27.00	—
		22	—	P29P	PB20-2A3	32	27.00	—
		22	—	P29R	PB20-1B2	32	27.00	—
		22	24	P29S	———	—	—	—
		22	24	P29T	———	—	—	—
		22	24	P29U	———	—	—	—
		22	24	P29V	———	—	—	—
		22	24	P29W	———	—	—	—
		22	24	P29X	———	—	—	—

FIGURE 46. SWITCH PANEL NO. 1 (SHEET 2 OF 3)

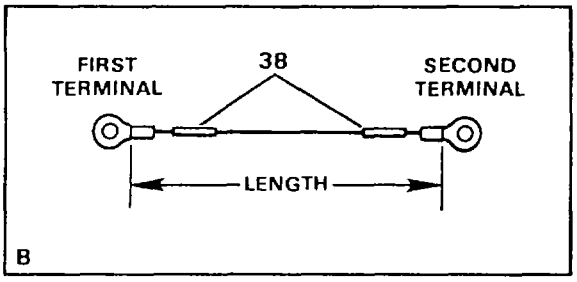

WIRE ASSY	WIRE RUN		WIRE	LENGTH	TERMINAL			
	FROM	TO			FIRST	SECOND	THIRD	FOURTH
34	SR4 GND	GND	35	9.50	36	37		

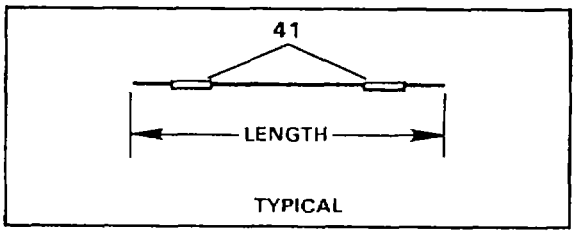

DETAIL	WIRE RUN		WIRE	LENGTH	TERMINAL			
	FROM	TO			FIRST	SECOND	THIRD	FOURTH
C	PB20-1B1	PD20-2A4	39	3.00				
D	PB1-1B2	PB2-1A3	40	15.00				

FIGURE 46. SWITCH PANEL NO. 1 (SHEET 3 OF 3)

(1) ITEM NO	(2) SMR CODE	(3) NSN	(4) CAGEC	(5) PART NUMBER	(6) DESCRIPTION AND USABLE ON CODES(UOC)	(7) QTY
					GROUP 02 WATER PURIFICATION SYSTEM FIG. 46 SWITCH PANEL NO. 1	
1	PAOZZ	5305000213740	96906	MS35307-364	.SCREW,CAP,HEXAGON H.....	2
2	PAOZZ	5310009847042	96906	MS35338-141	.WASHER,LOCK.....	2
3	PAOZZ	5330013501351	97403	13229E0557-2	.RETAINER, PACKING.....	2
4	PAOZZ	5325002904492	96906	MS122203	.INSERT,SCREW THREAD.....	2
5	XDOFF		97403	13229E0590	.JUNCTION BOX ASSY.....	1
6	PAOZZ	5975002960014	15235	DS100	..COVER,CONDUIT OUTLET.....	4
7	PAOZZ	5305000546654	96906	MS51957-30	...SCREW,MACHINE.....	2
8	PAOZZ	5330000653797	15235	GASK91	..GASKET.....	4
9	PAOOO	6210001395072	01121	800T-P16A	..LIGHT,INDICATOR AMBER.....	1
10	PAOZZ	6210010077972	01121	800T-N26A	...LENS,LIGHT AMBER.....	1
11	PAOZZ	6240009418487	17773	11361966	...LAMP,INCANDESCENT.....	1
12	PAOZZ	5930010360980	01121	800T-B1D1	..SWITCH,PUSH GREEN.....	1
13	PAOZZ	5930001621875	01121	800T-B6D2	..SWITCH,PUSH.....	1
14	PAOZZ	5930013487197	97403	13229E0735	..SWITCH,PUSH.....	1
15	PAOZZ	5935000611962	18876	9995761	..CONNECTOR,RECEPTACL MOUNTING HARDWARE INCLUDED.....	1
16	XAOZZ		96906	MS51957-47	...SCREW,MACHINE.....	8
17	PAOZZ	5935000569628	15235	CC55	...CONNECTOR,RECEPTACL.....	1
18	PBOZZ	5975013520286	97403	13229E0738-1	..STUFFING TUBE.....	1
19	XDOZZ		97403	13229E0303	..BOX,JUNCTION.....	1
20	XDOFF		97403	13229E1259-4	..HARNESS ASSEMBLY W18.....	1
21	PBFFF	5935013545176	17549	CA3106E28-11P-B-02-57	...CONNECTOR,PLUG,ELEC P29.....	1
22	PAFZZ	5999012793055	71468	030-8587-000	....CONTACT,ELECTRICAL PART OF KIT P/N 120-02593-P.....	18
23	PAFZZ	5999013448759	71468	030-8588-000	....CONTACT,ELECTRICAL PART OF KIT P/N 120-02593-P.....	4
24	XDFZZ		17549	225-0017-000	....PLUG,WIRE.....	10
25	XDFZZ		17549	225-0018-000	....PLUG,WIRE.....	1
26	PBFZZ	5970013488251	97403	13229E1213-4	...INSULATION SLEEVING.....	1
27	XDFZZ		09647	120-02433-104	...MARKER.....	1
28	XDFZZ		09647	120-02433-18	...MARKER.....	1
29	MFFZZ		09647	120-02602-10-W18	....TUBING CUT TO LENGTH FROM BULK, P/N 13229E1282-3.....	1
29	MFFZZ		09647	1200260211W	...TUBING CUT TO LENGTH FROM FKD BULK, P/N 13229E1282-2.....	1
30	PAFZZ	5940001434775	96906	MS25036-156	...TERMINAL,LUG.....	3
31	MFFZZ		09647	1-12-9-W18	...WIRE,PVC,WHITE CUT TO LENGTH FROM BULK, P/N M5086/1-12-9.....	3
32	MFFZZ		09647	1-16-9-W18	...WIRE,PVC,WHITE CUT TO LENGTH FROM BULK, P/N M5086-1-16-9.....	8
33	XDFZZ		01121	B-321HCPS.9-3336W	...MARKER.....	22
34	AOOZZ		97403	13229E0860-2	..WIRE,ASSEMBLY.....	1
35	MOOZZ		97403	13229E0860-2-1	...WIRE,PVC CUT TO LENGTH FROM BULK, P/N M5086/1-12-9.....	1
36	PAOZZ	5940001434775	96906	MS25036-156	...TERMINAL,LUG.....	1
37	PAOZZ	5940001139826	96906	MS25036-114	...TERMINAL,LUG.....	1
38	XDOZZ		01121	B-321HCPS.9-3336W	..MARKER.....	2

(1) ITEM NO	(2) SMR CODE	(3) NSN	(4) CAGEC	(5) PART NUMBER	(6) DESCRIPTION AND USABLE ON CODES(UOC)	(7) QTY
39	MOOZZ		09647	1-16-9-PB20-1B1	..WIRE,PVC CUT TO LENGTH FROM BULK, P/N M5086/1-16-9.....	1
40	MOOZZ		09647	1-16-9-PB1-1B2	..WIRE,PVC CUT TO LENGTH FROM BULK, P/N M5086/1-16-9.....	1
41	XDOZZ		01121	B-321HCPS.9-3336 W	..MARKER.....	2

END OF FIGURE

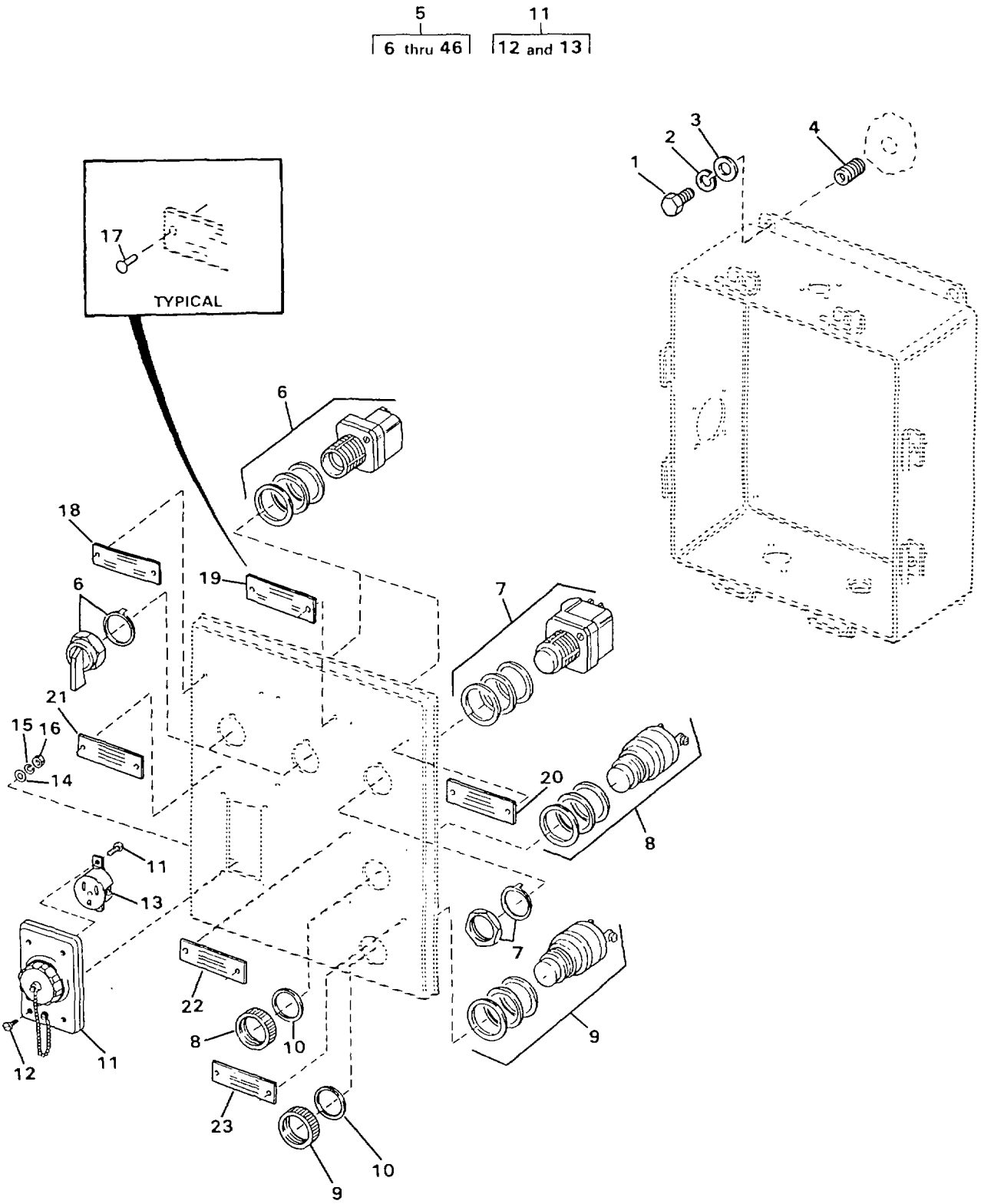

FIGURE 47. SWITCH PANEL NO. 2 (SHEET 1 OF 2)

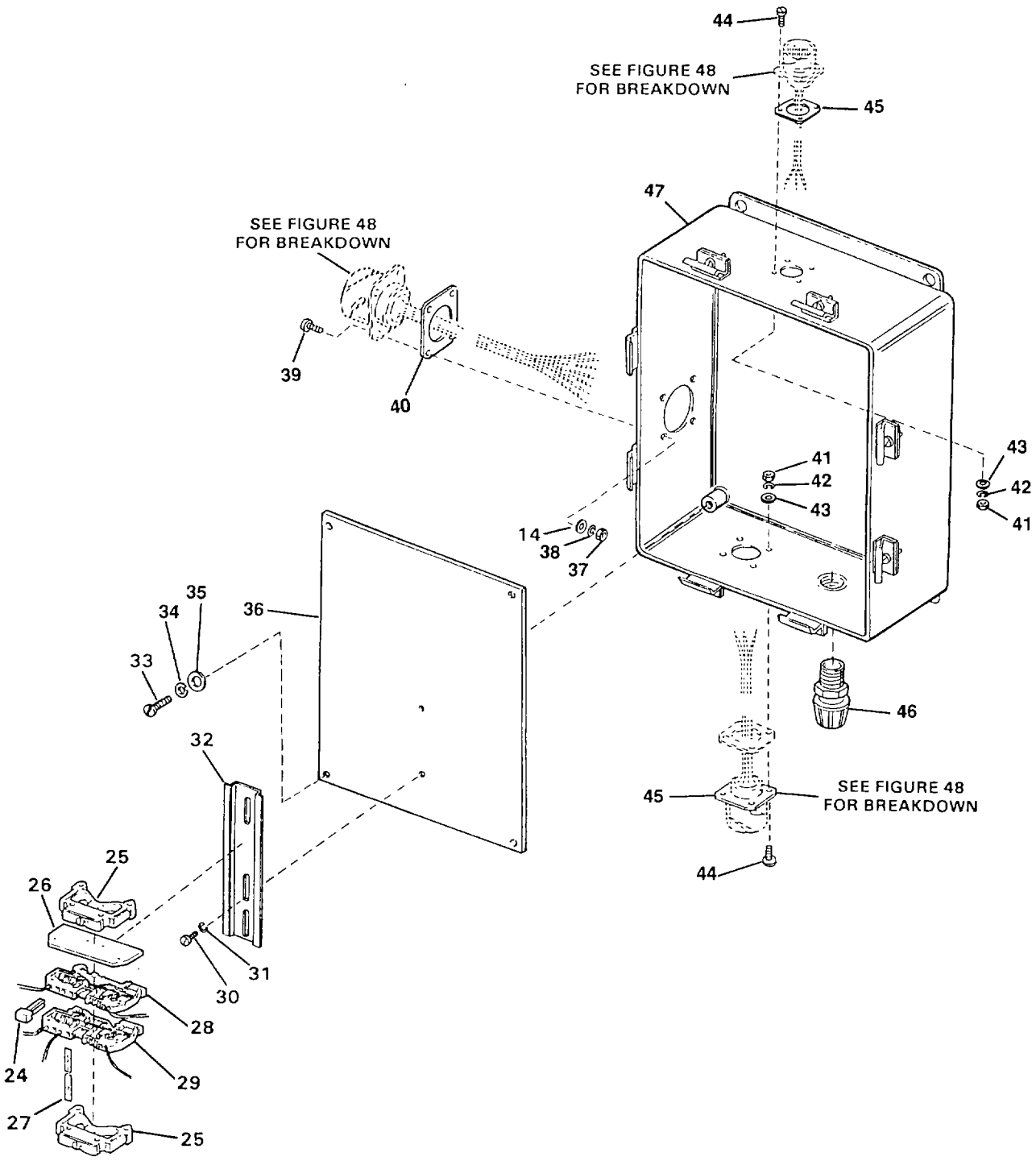

FIGURE 47. SWITCH PANEL NO. 2 (SHEET 2 OF 2)

(1) ITEM NO	(2) SMR CODE	(3) NSN	(4) CAGEC	(5) PART NUMBER	(6) DESCRIPTION AND USABLE ON CODES(UOC)	(7) QTY
					GROUP 02 WATER PURIFICATION SYSTEM	
					FIG. 47 SWITCH PANEL NO. 2	
1	PAOZZ	5305007175467	96906	MS35307-362	.SCREW,CAP,HEXAGON H 3/8-16 UNC -2A X 1.25 INCHES LONG.....	4
2	PAOZZ	5310009847042	96906	MS35338-141	.WASHER,LOCK.....	4
3	PAOZZ	5310007737618	96906	MS15795-814	.WASHER,FLAT.....	4
4	PAFZZ	5325002904492	96906	MS122203	.INSERT,SCREW THREAD.....	4
5	XDOFF		97403	13229E0275	.PANEL ASSY,SWITCH.....	1
6	PAOZZ	5930013485821	97403	13229E0736	..SWITCH,ROTARY.....	2
7	PAOZZ	5930013487197	97403	13229E0735	..SWITCH,PUSH.....	1
8	PAOZZ	6350012326245	06124	SC110NJ	..BUZZER.....	1
9	PAOZZ	6350011960142	37942	SC110N	..BUZZER.....	1
10	PBOZZ	5330013498925	97403	13229E0989	..GASKET.....	2
11	PAOZZ	5935000611962	18876	9995761	..CONNECTOR,RECEPTACL MOUNTING HARDWARE INCLUDED.....	1
12	XAOZZ		96906	MS51957-47	..SCREW,MACHINE.....	4
13	PAOZZ	5935000569628	15235	CC55	..CONNECTOR,RECEPTACL.....	1
14	PAOZZ	5310008805976	96906	MS15795-806	..WASHER,FLAT.....	8
15	PAOZZ	5310009296395	96906	MS35338-136	..WASHER,LOCK.....	8
16	PAOZZ	5310009349761	96906	MS35649-264	..NUT,PLAIN,HEXAGON.....	8
17	PAOZZ	5305013499586	97403	13229E0621-19	..SCREW,TAPPING 0.112-40, TYPE F X 0.375 INCH LONG.....	12
18	XDOZZ		97403	13229E0782-137	..PLATE,ID.....	1
19	XDOZZ		97403	13229E0782-138	..PLATE,ID.....	1
20	XDOZZ		97403	13229E0782-86	..PLATE,ID.....	1
21	XDOZZ		97403	13229E0782-71	..PLATE,ID.....	1
22	XDOZZ		97403	13229E0782-140	..PLATE,ID.....	1
23	XDOZZ		97403	13229E0782-139	..PLATE,ID.....	1
24	PAOZZ		97403	13229E0827-2	..TERMINAL,JUNCTION.....	2
25	PAOZZ	5340123059524	D8969	209-101	..END SECTION TERMINA.....	2
26	PAOZZ	5940013486660	97403	13229E0095-2	..TERMINAL BOARD END.....	1
27	XDOZZ		97403	13229E0097	..MARKER,TERM.....	18
28	PAOZZ	5940013488231	97403	13229E0093-2	..TERMINAL,QUICK DISC.....	16
29	PAOZZ	5940013485462	97403	13229E0094-2	..TERMINAL,QUICK DISC.....	2
30	PAOZZ	5305000593659	96906	MS51958-63	..SCREW,MACHINE 0.190-32 UNF-2A X 0.5 INCH LONG.....	2
31	PAOZZ	5310002091239	96906	MS35335-60	..WASHER,LOCK.....	2
32	XDOZZ		97403	13229E0091-1	..RAIL,TERM MOUNT..... FKD	1
32	XDOZZ		97403	13229E0091-6	..RAIL,TERM MOUNT..... ETN	1
33	PAOZZ	5305000593657	96906	MS51958-61	..SCREW,MACHINE.....	4
33	PAOZZ		97403	13229E0275-56	..SCREW,MACHINE 0.190-32 X 0.05 INCH LONG..... FKD	1 4
34	PAOZZ	5310009338120	96906	MS35338-138	..WASHER,LOCK.....	4
35	PAOZZ		96906	MS15795-808	..WASHER,FLAT.....	4
36	XDOZZ		97403	13229E0282	..SUBPANEL.....	1
37	PAOZZ	5310009349761	96906	MS35649-264	..NUT,PLAIN,HEXAGON.....	4
38	PAOZZ	5310009296395	96906	MS35338-136	..WASHER,LOCK.....	4
39	PAOZZ	5305000546654	96906	MS51957-30	..SCREW,MACHINE 0.138-32 UNC-2A X 0.5 INCH LONG.....	4

(1) ITEM NO	(2) SMR CODE	(3) NSN	(4) CAGEC	(5) PART NUMBER	(6) DESCRIPTION AND USABLE ON CODES(UOC)	(7) QTY
40	PAOZZ	5330009480704	96906	MS52000-10	..GASKET.....	1
41	PAOZZ	5310009349748	96906	MS35649-244	..NUT,PLAIN,HEXAGON.....	8
42	PAOZZ	5310009338118	96906	MS35338-135	..WASHER,LOCK.....	8
43	PAOZZ	5310007225998	96906	MS15795-805	..WASHER,FLAT.....	8
44	PAOZZ	5305000545651	96906	MS51957-17	..SCREW,MACHINE 0.112-40 UNC-2A X 0.5 INCH LONG.....	8
45	PAOZZ	533J006414338	96906	MS52000-4	..GASKET.....	2
46	PAOZZ	5975013557891	97403	13229E0738-6	..STUFFING TUBE.....	1
47	XDOZZ		97403	13229E0274	..ENCLOSURE.....	1

END OF FIGURE

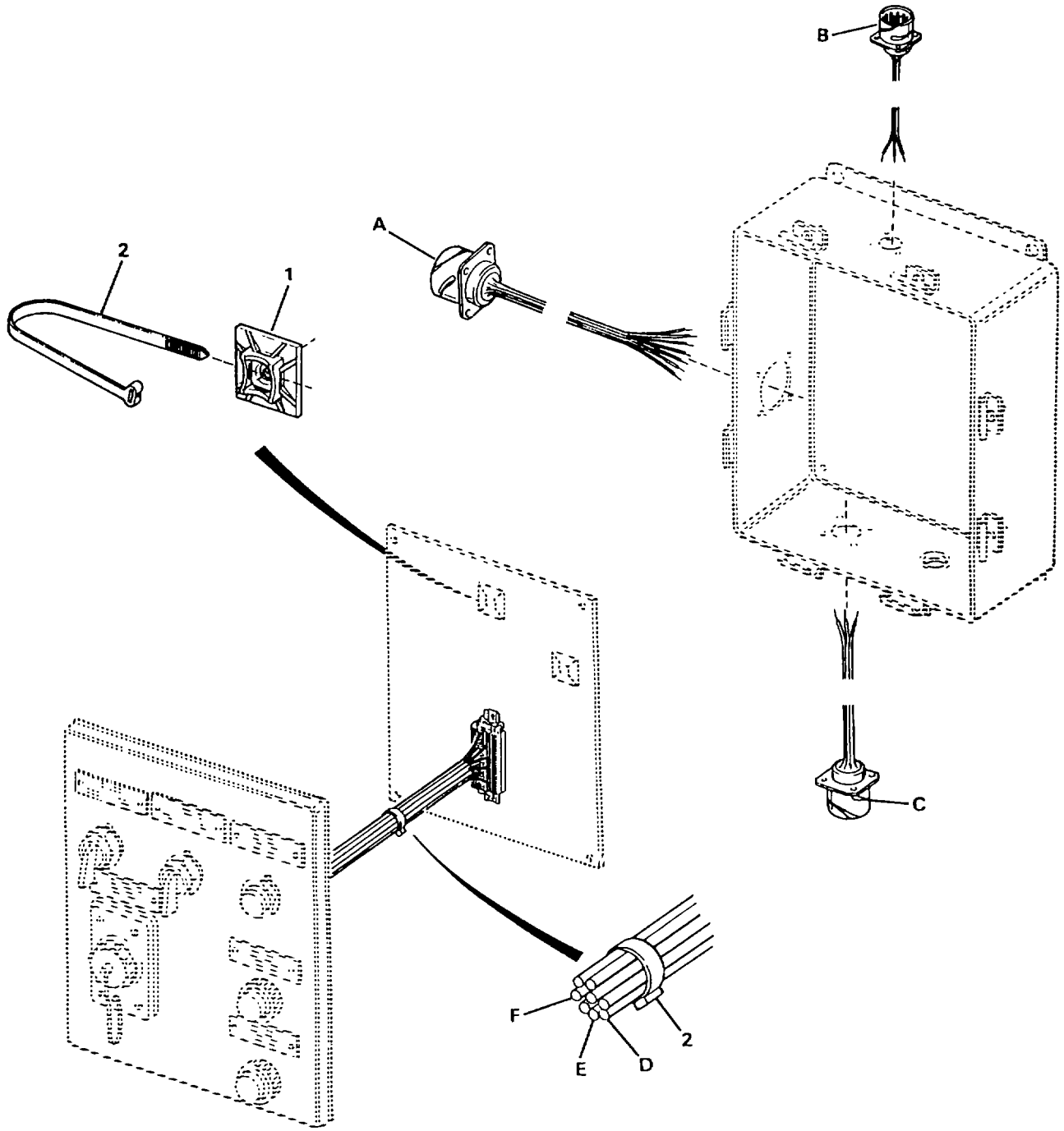

FIGURE 48. SWITCH PANEL NO. 2 WIRING (SHEET 1 OF 4)

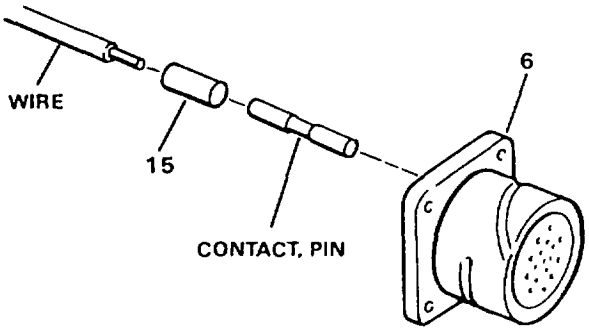

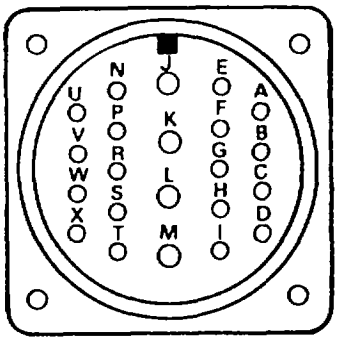

A

HARNESS ASSY	CONNECTOR	WIRE RUN FROM	WIRE RUN TO	PIN	WIRE	LENGTH
3	6	J52A	TB6-1	8	14	12.50
		J52B	TB6-2	8	14	12.75
		J52C	TB6-3	8	14	13.00
		J52D	TB6-4	8	14	13.25
		J52E	TB6-5	8	14	13.50
		J52F	—	8	—	—
		J52G	—	8	—	—
		J52H	—	8	—	—
		J52I	—	8	—	-
		J52J	TB6-10	9	13	14.75
		J52K	TB6-12	9	13	15.00
		J52L	TB6-13	9	13	15.25
		J52M	TB6-18	9	13	15.50
		J52N	TB6-6	8	14	13.75
		J52P	—	8	—	—
		J52R	TB6-8	8	14	14.25
		J52S	—	8	—	—
		J52T	—	8	—	—
		J52U	—	8	—	—
		J52V	—	8	—	—
		J52W	TB6-9	8	14	14.50
		J52X	—	8	—	—

FIGURE 48. SWITCH PANEL NO. 2 WIRING (SHEET 2 OF 4)

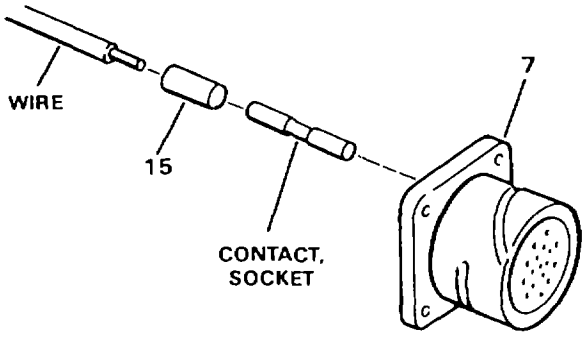

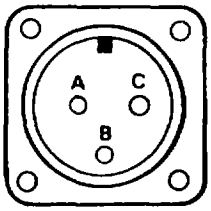

B AND C

DETAIL	HARNESS ASSY	CONNECTOR	WIRE RUN		SOCKET	WIRE	LENGTH
			FROM	TO			
B	4	7	J53A	TB6-7	10	14	14.00
			J53B	TB6-10	10	14	14.75
			J53C	TB6-17	10	14	15.50
C	5	7	J54A	TB6-14	10	14	9.75
			J54B	TB6-10	10	14	10.00
			J54C	TB6-17	10	14	10.00

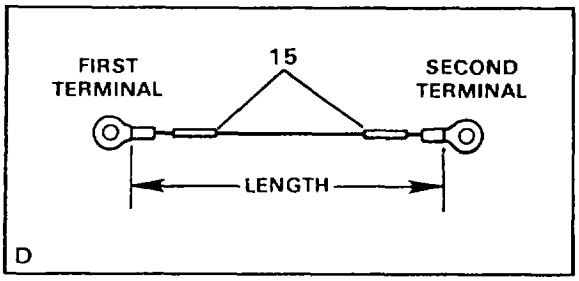

WIRE RUN		WIRE	LENGTH	TERMINAL	
FROM	TO			FIRST	SECOND
HN1-	HN2-	13	9.75	11	11

FIGURE 48. SWITCH PANEL NO. 2 WIRING (SHEET 3 OF 4)

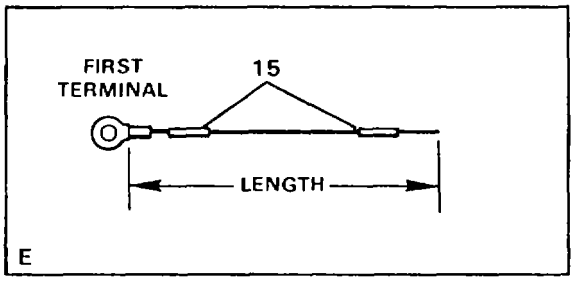

WIRE RUN				TERMINAL	
FROM	TO	WIRE	LENGTH	FIRST	SECOND
HN1+	TB6-1	14	31.00	11	—
HN2+	TB6-6	14	26.00	11	—
HN1–	TB6-11	13	31.00	11	—
SR2-B	TB6-12	13	36.00	12	—
SR2-S	TB6-13	13	35.00	12	—
SR2-G	TB6-18	13	34.00	12	—

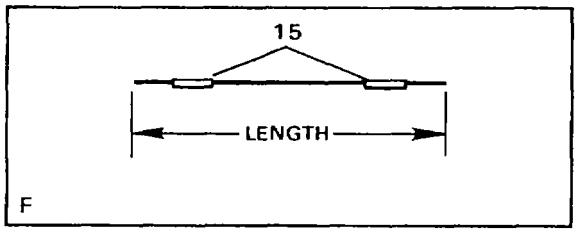

WIRE RUN				TERMINAL	
FROM	TO	WIRE	LENGTH	FIRST	SECOND
SS4-1A3	TB6-2	14	30.00	—	—
SS4-1A4	TB6-14	14	32.50	—	—
PB19-1B1	TB6-3	14	33.00	—	—
PB19-1B1	PB19-2A4	14	10.00	—	—
SS7-1A3	PB19-2A4	14	10.50	—	—
SS7-1A3	TB6-7	14	34.50	—	—
PB19-1B2	TB6-8	14	36.00	—	—
PB19-2A3	TB6-9	14	32.50	—	—

FIGURE 48. SWITCH PANEL NO. 2 WIRING (SHEET 4 OF 4)

(1) ITEM NO	(2) SMR CODE	(3) NSN	(4) CAGEC	(5) PART NUMBER	(6) DESCRIPTION AND USABLE ON CODES(UOC)	(7) QTY
					GROUP 02 WATER PURIFICATION SYSTEM FIG. 48 SWITCH PANEL NO. 2 WIRING	
1	PAOZZ	5975013589415	97403	13229E1180	..MOUNT,CABLE TIE.....	7
2	PAOZZ	5975001113208	96906	MS3367-5-9	..STRAP,TIEDOWN,ELECT.....	V
3	XDOFF		97403	13229E1258-16	..HARNESS ASSEMBLY J52.....	1
4	XDOFF		97403	13229E1258-17	..HARNESS ASSEMBLY J53.....	1
5	XDOFF		97403	13229E1258-18	..HARNESS ASSEMBLY J54.....	1
6	PBFFF	5935013470033	17549	CA3102E28-11P-B-F80-05-57	...CONNECTOR,RECEPTACL J52.....	1
7	PBFFF	5935013470034	17549	CA3102E14S-7S-B-F80-05-57	...CONNECTOR,RECEPTACL J53 AND J54.....	2
8	PAFZZ	5999012793055	71468	030-8587-000	...CONTACT,ELECTRICAL PART OF KIT P/N 120-02593-P.....	18
9	PAFZZ	5999013448759	71468	030-8588-000	...CONTACT,ELECTRICAL PART OF KIT P/N 120-02593-P.....	4
10	PAFZZ	5999013438906	17549	031-8555-000	...CONTACT,ELECTRICAL PART OF KIT P/N 120-02593-P.....	6
11	PAOZZ	5940002835280	96906	MS25036-106	..TERMINAL,LUG.....	5
12	PAOZZ	5940001434775	96906	MS25036-156	..TERMINAL,LUG.....	3
13	MOOZZ		09647	1-12-9-E0860	..WIRE,PVC,WHITE CUT TO LENGTH FROM BULK, P/N M5086/1-12-9.....	9
14	MOOZZ		09647	1-16-9-E0860	..WIRE,PVC,WHITE CUT TO LENGTH FROM BULK, P/N M5086/1-16-9.....	24
15	XDOZZ		01121	B-321HCPS.9-3336W	..MARKER.....	66

END OF FIGURE

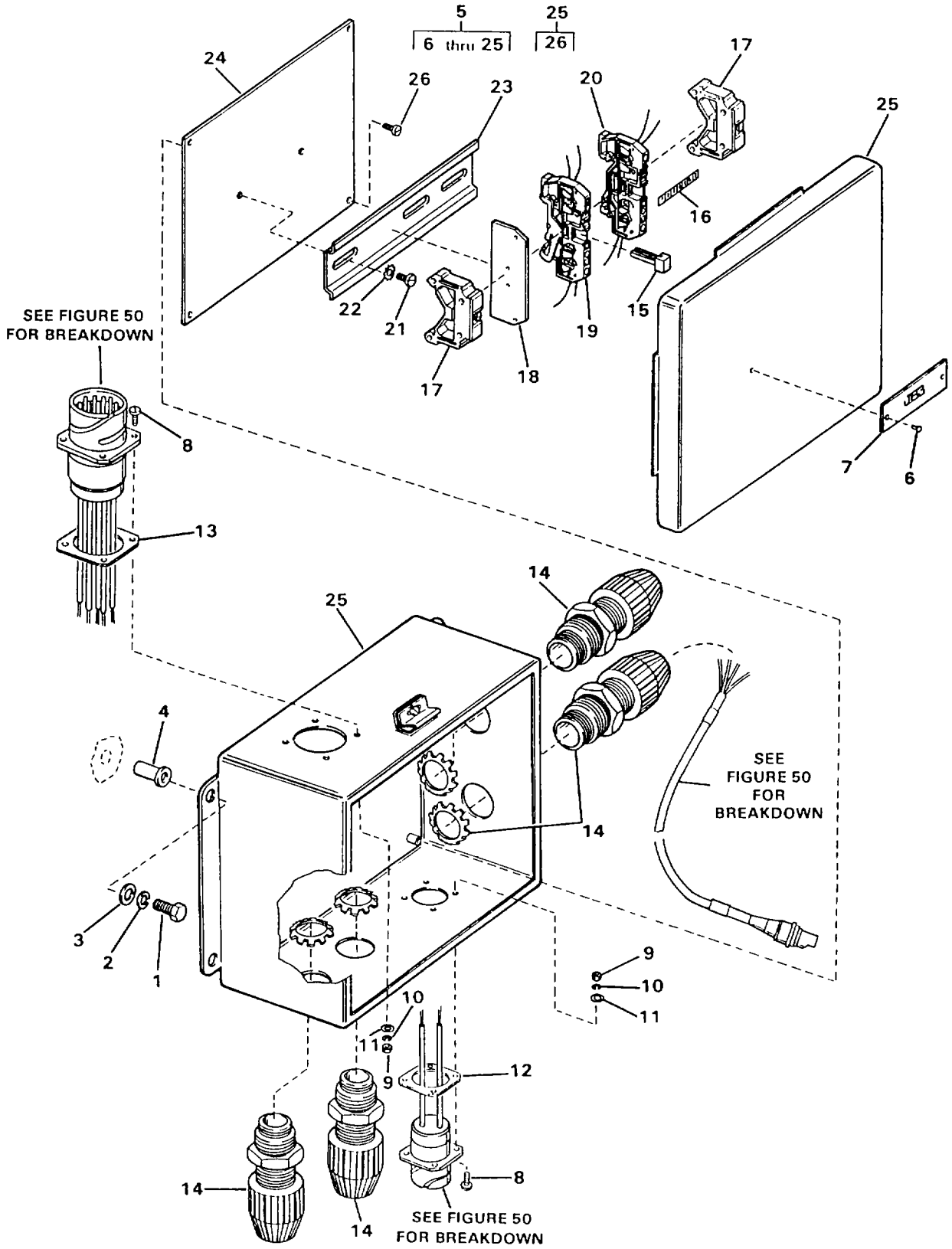

FIGURE 49. JUNCTION BOX ASSEMBLY NO. 3

(1) ITEM NO	(2) SMR CODE	(3) NSN	(4) CAGEC	(5) PART NUMBER	(6) DESCRIPTION AND USABLE ON CODES(UOC)	(7) QTY
					GROUP 02 WATER PURIFICATION SYSTEM	
					FIG. 49 JUNCTION BOX ASSEMBLY NO. 3	
1	PAOZZ	5305000213620	96906	MS35307-307	.SCREW,CAP,HEXAGON H.....	4
2	PAOZZ	5310009338121	96906	MS35338-139	.WASHER,LOCK.....	4
3	PAOZZ	5310010911248	96906	MS15795-810	.WASHER,FLAT.....	4
4	PAOZZ	5310013499615	97403	13229E0114-3	.NUT,PLAIN,BLIND RIV.....	4
5	XDOFF		97403	13229E0669	.JCT BOX SUB-ASSY.....	1
6	PAOZZ	5305013499586	97403	13229E0621-19	..SCREW,TAPPING 0.112-40,TYPE F X 0.375 INCH LONG.....	2
7	XDOZZ		97403	13229E0782-54	..PLATE,ID.....	1
8	PAOZZ	5305000545651	96906	MS51957-17	..SCREW,MACHINE 0.112-40 UNC-2A X 0.5 INCH LONG.....	8
9	PAOZZ	5310009349748	96906	MS35649-244	..NUT,PLAIN,HEXAGON.....	8
10	PAOZZ	5310000583599	96906	MS35335-57	..WASHER,LOCK.....	8
11	PAOZZ	5310007225998	96906	MS15795-805	..WASHER,FLAT.....	8
12	PAOZZ	533J006414338	96906	MS52000-4	..GASKET.....	1
13	PAOZZ	5330009681753	96906	MS52000-7	..GASKET.....	1
14	PAOZZ	5975013557891	97403	13229E0738-6	..STUFFING TUBE.....	4
15	PAOZZ		97403	13229E0827-1	..TERMINAL JUNCTION B.....	2
16	XDOZZ		97403	13229E0097	..MARKER,TERM,BLANK.....	14
17	PAOZZ	5340123059524	D8969	209-101	..END SECTION TERMINA.....	2
18	PAOZZ	5940013492716	97403	13229E0095-1	..TERMINAL,PLATE,END.....	1
19	PAOZZ	5940013498395	97403	313229E0094-1	..TERMINAL,BOARD.....	1
20	PAOZZ	5940013614782	65996	280-681	..TERMINAL JUNCTION B.....	13
21	PAOZZ	5305000593659	96906	MS51958-63	..SCREW,MACHINE 0.190-32 UNF-2A X 0.5 INCH LONG.....	2
22	PAOZZ	5310002091239	96906	MS35335-60	..WASHER,LOCK.....	2
23	XDOZZ		97403	13229E0091-6	..RAIL,TERM MOUNT.....	1
24	XDOZZ		97403	13229E0668	..SUBPANEL,JCT BOX.....	1
25	XDOZZ		97403	13229E0665	..JUNCTION BOX.....	1
26	PAOZZ	5305000593655	96906	MS51958-59	..SCREW,MACHINE.....	4

END OF FIGURE

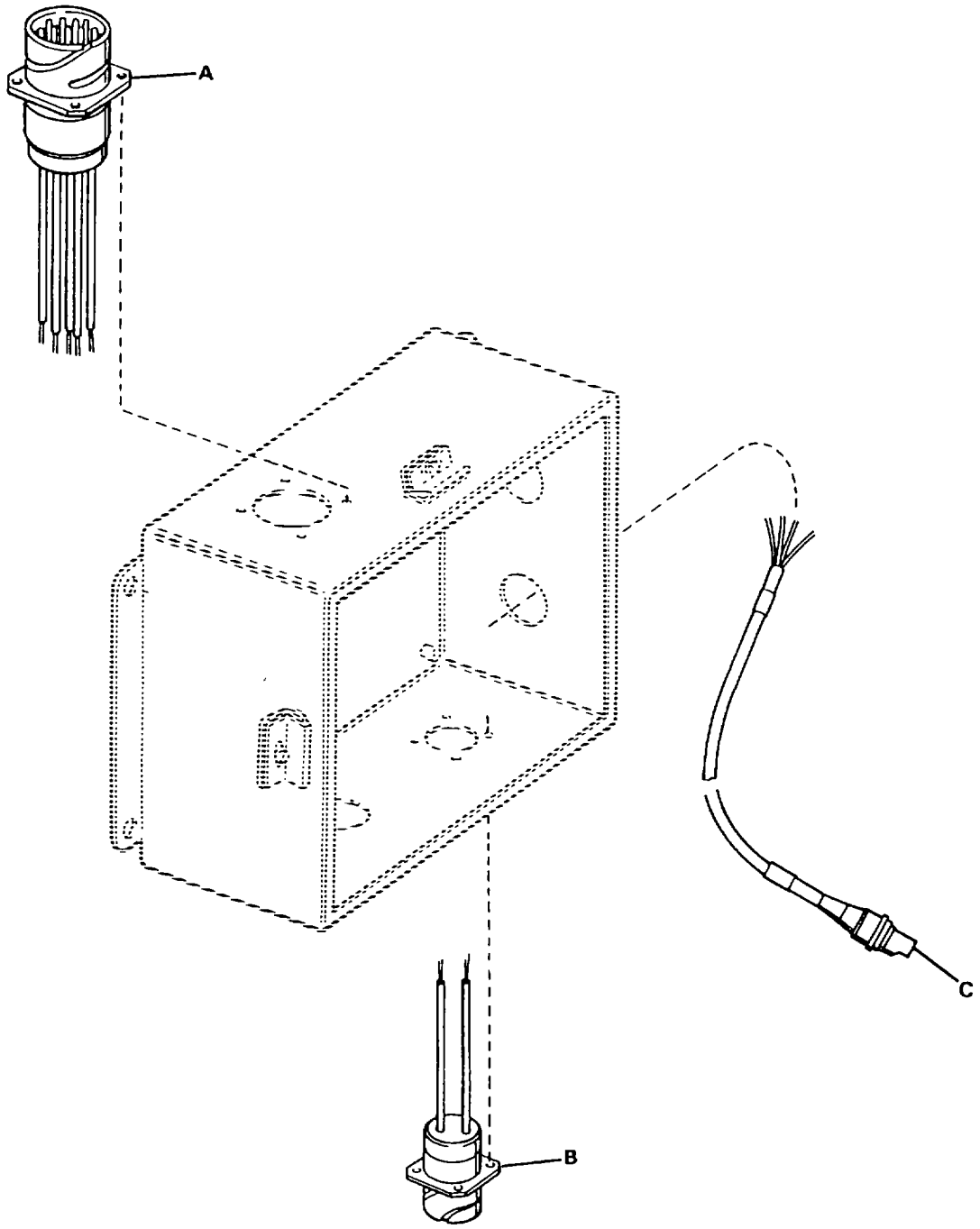

FIGURE 50. JUNCTION BOX NO. 3 WIRING (SHEET 1 OF 3)

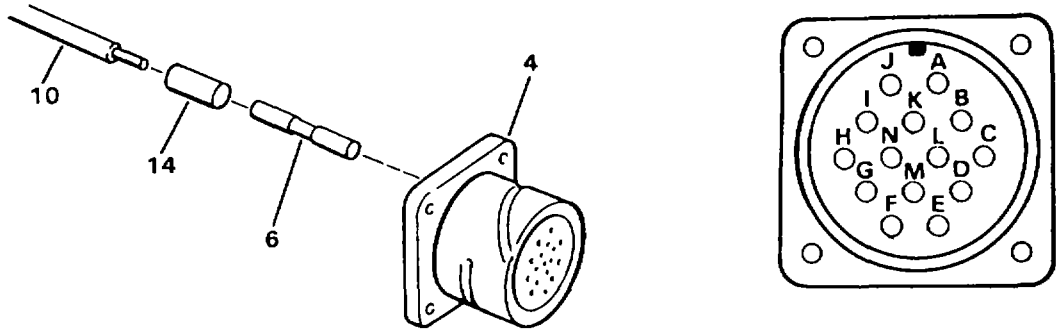

A

HARNESS ASSY	CONNECTOR	WIRE RUN		PIN	WIRE	LENGTH
		FROM	TO			
1	4	J52A	TB7-1	6	10	10.50
		J30B	TB7-3	6	10	10.50
		J30C	TB7-6	6	10	10.50
		J30D	TB7-7	6	10	10.50
		J30E	TB7-5	6	10	10.50
		J30F	TB7-8	6	10	10.50
		J30G	TB7-9	6	10	10.50
		J30H	TB7-10	6	10	10.50
		J30I	TB7-11	6	10	10.50
		J30J	TB7-12	6	10	10.50
		J30K	TB7-13	6	10	10.50
		J30L	TB7-14	6	10	10.50
		J30M	—	6	—	—
		J30N	—	6	—	—

FIGURE 50. JUNCTION BOX NO. 3 WIRING (SHEET 2 OF 3)

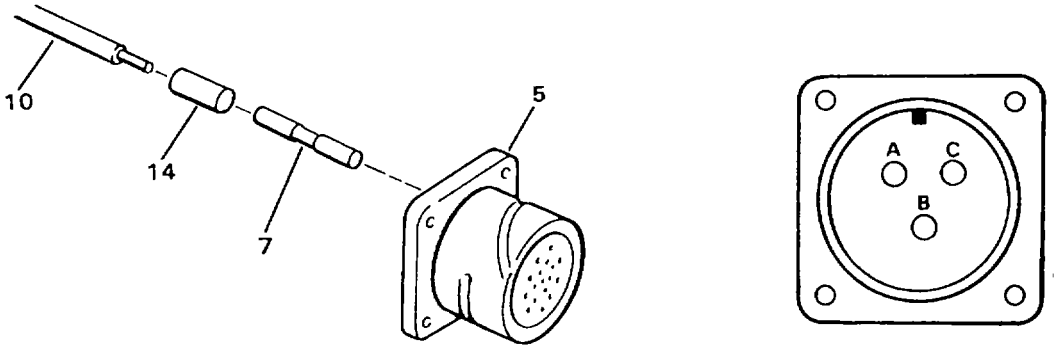

B

HARNESS ASSY	CONNECTOR	WIRE RUN		SOCKET	WIRE	LENGTH
		FROM	TO			
2	5	J32A	TB7-12	7	10	9.00
		J32B	TB7-13	7	10	9.00
		J32C	—	7	—	—

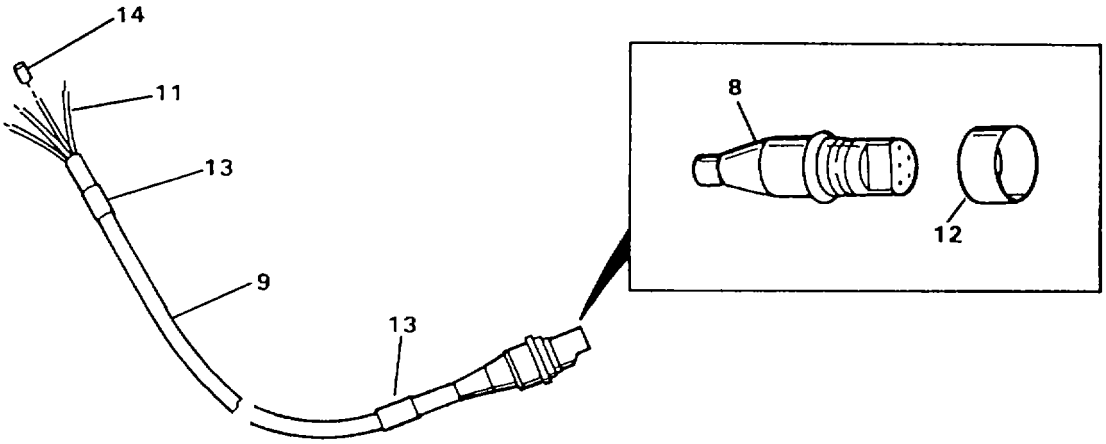

C

HARNESS ASSY	CONNECTOR	WIRE RUN		WIRE	LENGTH
		FROM	TO		
3	8	J33A	TB7-10	11	—
		J33B	—	—	—
		J33C	TB7-11	11	—
		J33D	TB7-8	11	—
		J33E	TB7-9	11	—

FIGURE 50. JUNCTION BOX NO. 3 WIRING (SHEET 3 OF 3)

(1) ITEM NO	(2) SMR CODE	(3) NSN	(4) CAGEC	(5) PART NUMBER	(6) DESCRIPTION AND USABLE ON CODES(UOC)	(7) QTY
					GROUP 02 WATER PURIFICATION SYSTEM FIG. 50 JUNCTION BOX NO. 3 WIRING	
1	XDOFF		97403	13229E1258-14	..HARNESS ASSEMBLY J30.....	1
2	XDOFF		97403	13229E1258-15	..HARNESS ASSEMBLY J32.....	1
3	PBOFF	6150013464668	97403	13229E1259-1	..WIRING HARNESS,BRAN W22.....	1
4	PBFFF	5935013470035	17549	CA3102E20-27P-B-F80-05-57	...CONNECTOR,RECEPTACL J30.....	1
5	PBFFF	5935013470034	17549	CA3102E14S-7S-B-F80-05-57	...CONNECTOR,RECEPTACL J32.....	1
6	PAFZZ	5999012793055	71468	030-8587-000	....CONTACT,ELECTRICAL PART OF KIT P/N 120-02593-P.....	14
7	PAFZZ	5999013438906	17549	031-8555-000	....CONTACT,ELECTRICAL PART OF KIT P/N 120-02593-P.....	3
8	PAFZZ	5935013518740	3Z033	BVP-ACTUC-2L	...CONNECTOR,PLUG,ELEC J33.....	1
9	MFFZZ		09647	120-02602-11-W22	...TUBING,ELECT CUT TO LENGTH FROM BULK, P/N 13229E1282-2.....	1
10	MFFZZ		09647	1-16-9-J30-J32	...WIRE,PVC CUT TO LENGTH FROM BULK, P/N M5086/1-16-9.....	14
11	MFFZZ		09647	1-18-9-W22	...WIRE,PVC CUT TO LENGTH FROM BULK, P/N M5086/1-18-9.....	4
12	XDOZZ		09647	120-02433-162	...MARKER.....	1
13	XDOZZ		09647	120-02433-22	...MARKER.....	2
14	XDOZZ		01121	B-321HCPS.9-3336W	...MARKER.....	32

END OF FIGURE

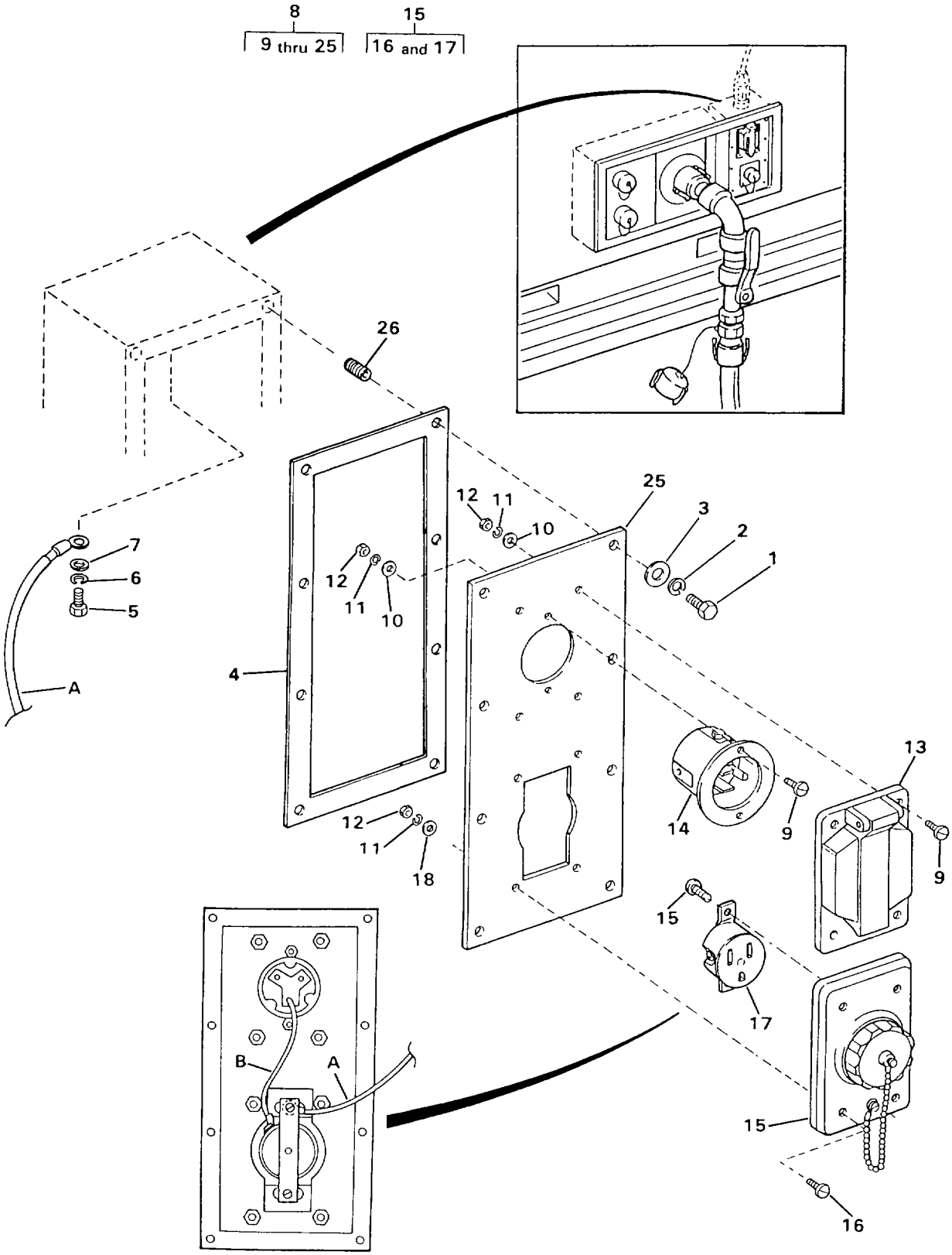

FIGURE 51. UTILITY CABLE JUNCTION BOX (SHEET 1 OF 2)

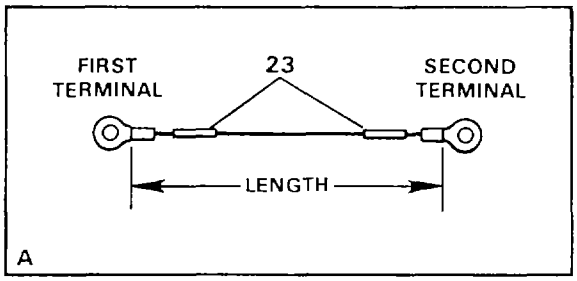

WIRE ASSY	DETAIL	WIRE RUN		WIRE	LENGTH	TERMINAL	
		FROM	TO			FIRST	SECOND
19	A	SR5 GND	GND	24	16.00	21	22

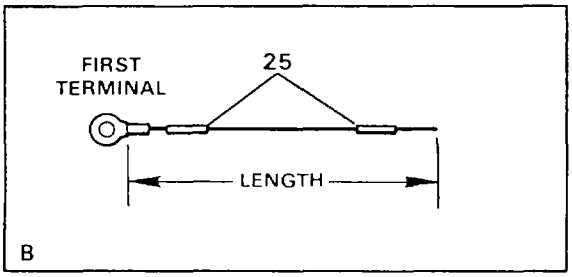

WIRE ASSY	DETAIL	WIRE RUN		WIRE	LENGTH	TERMINAL	
		FROM	TO			FIRST	SECOND
20	B	SR5 GND	SR7 GND	24	8.00	21	—

FIGURE 51. UTILITY CABLE JUNCTION BOX (SHEET 2 OF 2)

(1) ITEM NO	(2) SMR CODE	(3) NSN	(4) CAGEC	(5) PART NUMBER	(6) DESCRIPTION AND USABLE ON CODES(UOC)	(7) QTY
					GROUP 02 WATER PURIFICATION SYSTEM FIG. 51 UTILITY CABLE JUNCTION BOX	
1	PAOZA	5305009844686	99974	8599621-312	.SCREW,CAP,HEXAGON H 0.190-32 UNF-2A X 1 INCH LONG.....	8
2	PAOZZ	5310009338120	96906	MS35338-138	.WASHER,LOCK.....	8
3	PAOZZ	5905013924321	96906	MS15765-842	.RESISTOR,FIXED,WIR.....	8
4	PBOZZ	5330013502913	97403	13229E0429	.GASKET.....	1
5	PAOZZ	5305007024523	96906	MS35307-306	.SCREW,CAP,HEXAGON H.....	1
6	PAOZZ	5310009338121	96906	MS35338-139	.WASHER,LOCK.....	1
7	PAOZZ	5310010911248	96906	MS15795-810	.WASHER,FLAT.....	1
8	XDOOO		97403	13229E1178	.PANEL ASSEMBLY.....	1
9	PAOZZ	5305000546655	96906	MS51957-31	..SCREW,MACHINE 0.138-32 UNC-2A X 0.625 INCH LONG.....	6
10	PAOZZ	5310008805976	96906	MS15795-806	..WASHER,FLAT.....	10
11	PAOZZ	5310009296395	96906	MS35338-136	..WASHER,LOCK.....	6
12	PAOZZ	5310009349761	96906	MS35649-264	..NUT,PLAIN,HEXAGON.....	6
13	PBOZA	5975010840987	15235	WLRS-1	..PLATE,WALL,ELECTRIC.....	1
14	PBOZZ	5935010731638	00724	16-01310-002	..CONNECTOR,RECEPTACL.....	1
15	PAOZZ	5935000611962	18876	9995761	..CONNECTOR,RECEPTACL MOUNTING HARDWARE INCLUDED.....	1
16	XAOZZ		96906	MS51957-47	...SCREW,MACHINE.....	4
17	PAOZZ	5935000569628	15235	CC55	...CONNECTOR,RECEPTACL.....	1
18	PAOZZ	5310008805976	96906	MS15795-806	..WASHER,FLAT.....	4
19	AOOZZ		97403	13229E0860-93	..WIRE ASSEMBLY.....	1
20	AOOZZ		97403	13229E0860-16	..WIRE ASSEMBLY.....	1
21	PAOZZ	5940001434775	96906	MS25036-156	...TERMINAL,LUG.....	2
22	PAOZZ	5940001434777	96906	MS25036-157	...TERMINAL,LUG.....	1
23	XDOZZ		01121	B-321HCPS.9-3336 W	...MARKER.....	2
24	MOOZZ		09647	1-12-9-SR5GND	...WIRE,PVC,WHITE CUT TO LENGTH FROM BULK, P/N M5086/1-12-9.....	2
25	XDOZZ		97403	13229E0348	..PANEL,BACK WALL.....	1
26	PAFZZ	5325009862929	96906	MS124655	.INSERT,SCREW THREAD.....	8

END OF FIGURE

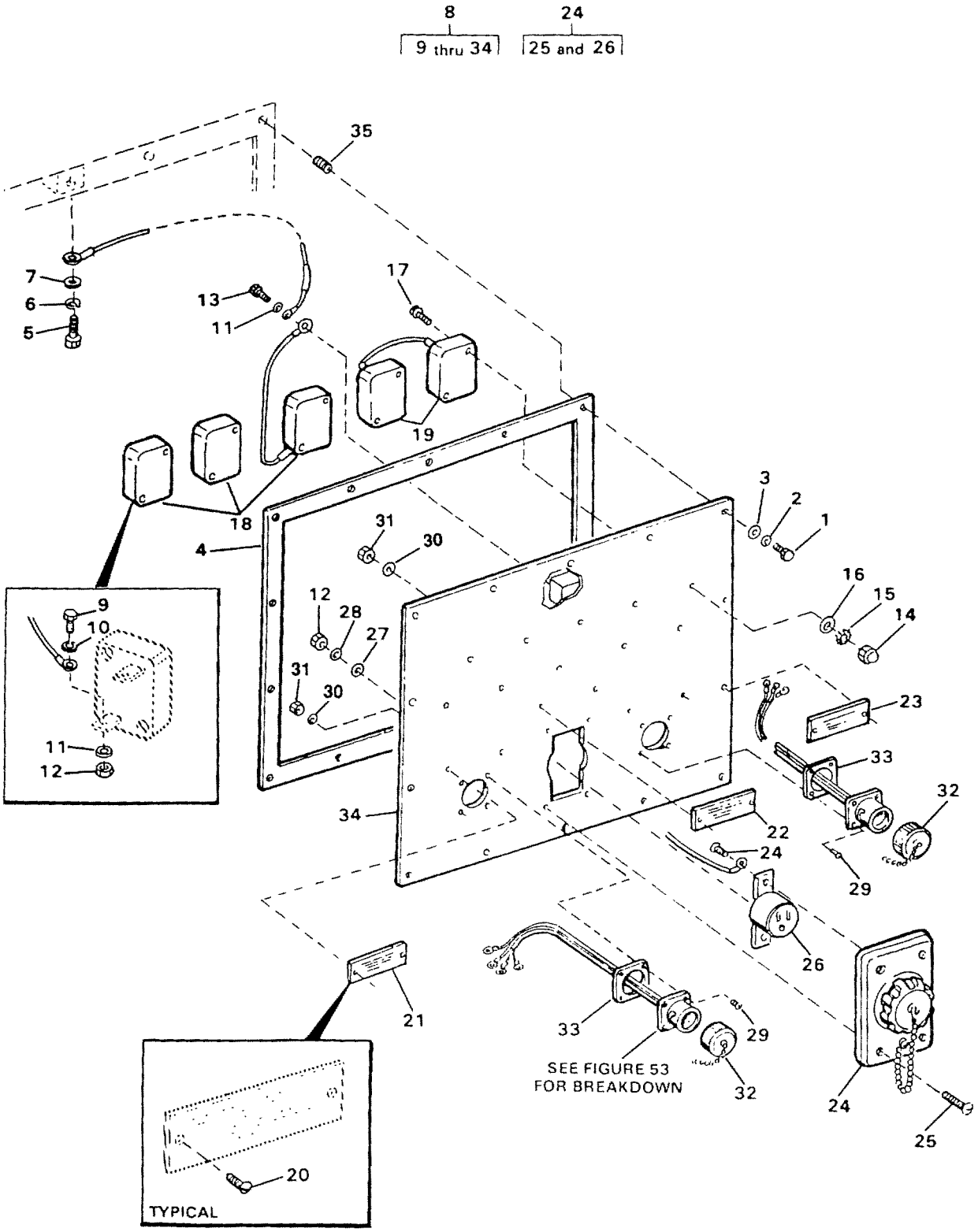

FIGURE 52. RAW WATER PUMP JUNCTION BOX

(1) ITEM NO	(2) SMR CODE	(3) NSN	(4) CAGEC	(5) PART NUMBER	(6) DESCRIPTION AND USABLE ON CODES(UOC)	(7) QTY
					GROUP 02 WATER PURIFICATION SYSTEM	
					FIG. 52 RAW WATER PUMP JUNCTION BOX	
1	PAOZA	5305009844686	99974	8599621-312	.SCREW,CAP,HEXAGON H 0.190-32 UNF-2A X 1 INCH LONG.....	14
2	PAOZZ	5310009338120	96906	MS35338-138	.WASHER,LOCK.....	14
3	PAOZZ	5905013924321	96906	MS15765-842	.RESISTOR,FIXED,WIR.....	14
4	PAOZZ	5330013498926	97403	13229E0427	.GASKET.....	1
5	PAOZZ	5305007024523	96906	MS35307-306	.SCREW,CAP,HEXAGON H.....	1
6	PAOZZ	5310009338121	96906	MS35338-139	.WASHER,LOCK.....	1
7	PAOZZ	5310010911248	96906	MS15795-810	.WASHER,FLAT.....	1
8	XDOFF		97403	13229E0621	.PANEL ASSY,ELEC SEE FIGURE 53 FOR WIRING ASSEMBLIES.....	1
9	PAOZZ	5305007193997	96906	MS35307-303	..SCREW,CAP,HEXAGON H.....	10
10	PAOZZ	5310009338121	96906	MS35338-139	..WASHER,LOCK.....	10
11	PAOZZ	5310005273634	96906	MS35335-61	..WASHER,LOCK.....	11
12	PAOZZ		96906	MS51971-264	..NUT,PLAIN,HEX.....	10
13	PAOZZ	5305007024523	96906	MS35307-306	..SCREW,CAP,HEXAGON H.....	1
14	PAOZZ	5310009952723	96906	MS24679-22	..NUT,PLAIN,CAP 0.164-32 UNC-2B.....	10
15	PAOZZ	5310006143552	96906	MS35335-59	..WASHER,LOCK.....	10
16	PAOZZ	5330013501352	97403	13229E0557-4	..RETAINED,PACKING.....	10
17	PAOZZ	5305000546674	96906	MS51957-49	..SCREW,MACHINE 0.164-32 UNC-2A X 1 INCH LONG.....	10
18	PAOZZ	5920013497981	97403	13229E0326-1	..ARRESTER,ELECTRICAL.....	3
19	PAOZZ	5905011432706	34371	V131DB40	..ARRESTER,ELECTRICAL.....	2
20	PAOZZ	5305013499586	97403	13229E0621-19	..SCREW,TAPPING THREA 0.112-40, TYPE F, X 0.375 INCH LONG.....	6
21	XDOZZ		97403	13229E0782-6	..PLATE,ID RAW WATER PUMP.....	1
22	XDOZZ		97403	13229E0782-71	..PLATE,ID UTILITY OUTLET.....	1
23	XDOZZ		97403	13229E0782-8	..PLATE,ID RAW WATER PUMP HEATER.....	1
24	PAOZZ	5935000611962	18876	9995761	..CONNECTOR,RECEPTACL MOUNTING HARDWARE INCLUDED.....	1
25	PAOZZ	5305000546672	96906	MS51957-47	...SCREW,MACHINE.....	4
26	PAOZZ	5935000569628	15235	CC55	...CONNECTOR,RECEPTACL.....	1
27	PAOZZ	5310008805976	96906	MS15795-806	..WASHER,FLAT.....	4
28	PAOZZ	5310009296395	96906	MS35338-136	..WASHER,LOCK.....	4
29	PAOZZ	5305000545653	96906	MS51957-19	..SCREW,MACHINE 0.112-40 UNC-2A X 0.75 INCH LONG.....	8
30	PAOZZ	5310000583599	96906	MS35335-57	..WASHER,LOCK.....	8
31	PAOZZ	5310009349748	96906	MS35649-244	..NUT,PLAIN,HEXAGON.....	8
32	PAOZZ	5935013571807	97403	13229E1209-2	..CAP,COVER,ELECTRICAL CO.....	2
33	PAOZZ	5330009681753	96906	MS52000-7	..GASKET.....	2
34	XDOZZ		97403	13229E0344	..COVER,FRONT WALL.....	1
35	PAFZZ	5325009862929	96906	MS124655	.INSERT,SCREW THREAD.....	14

END OF FIGURE

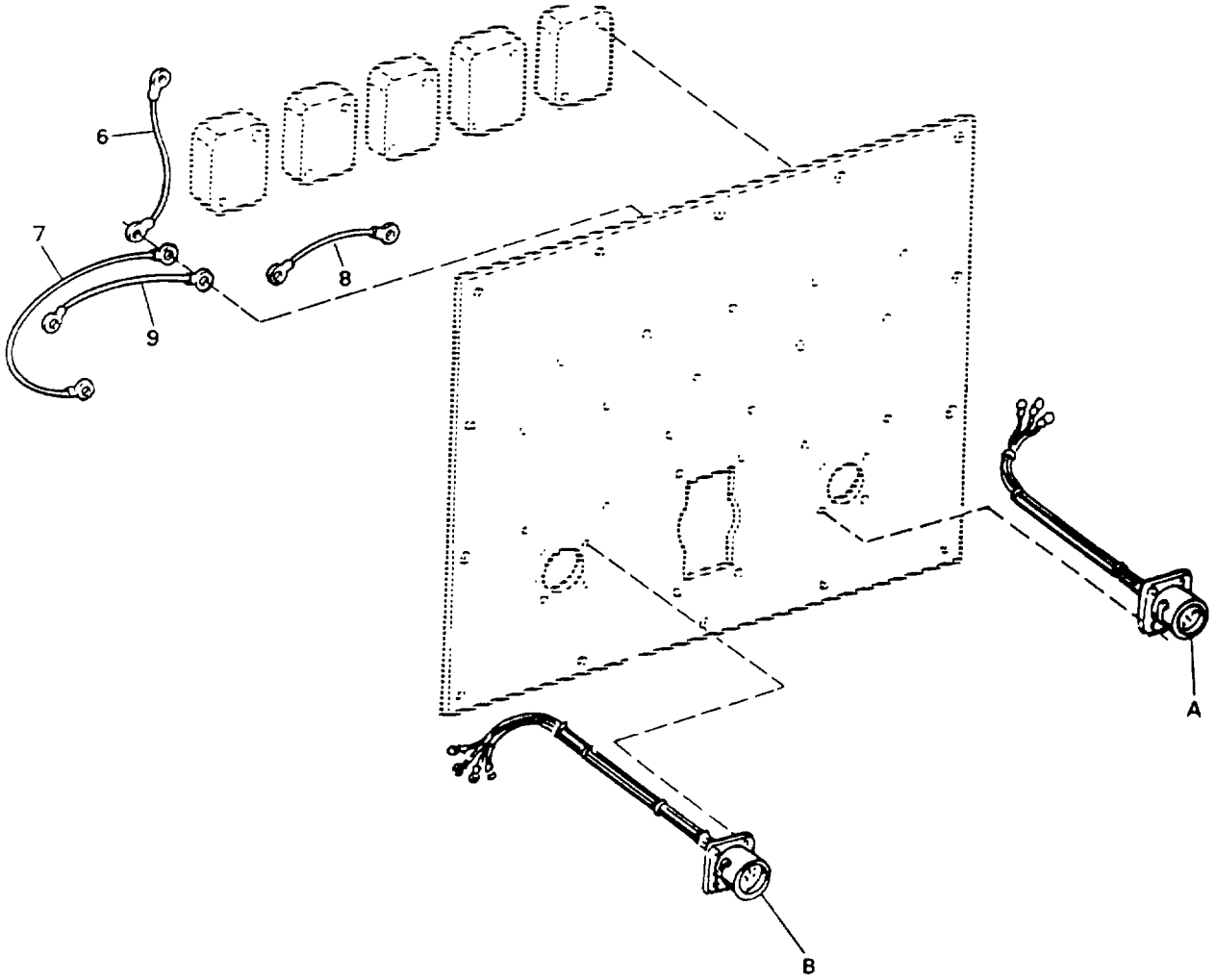

FIGURE 53. RAW WATER PUMP JUNCTION BOX — WIRING (SHEET 1 OF 3)

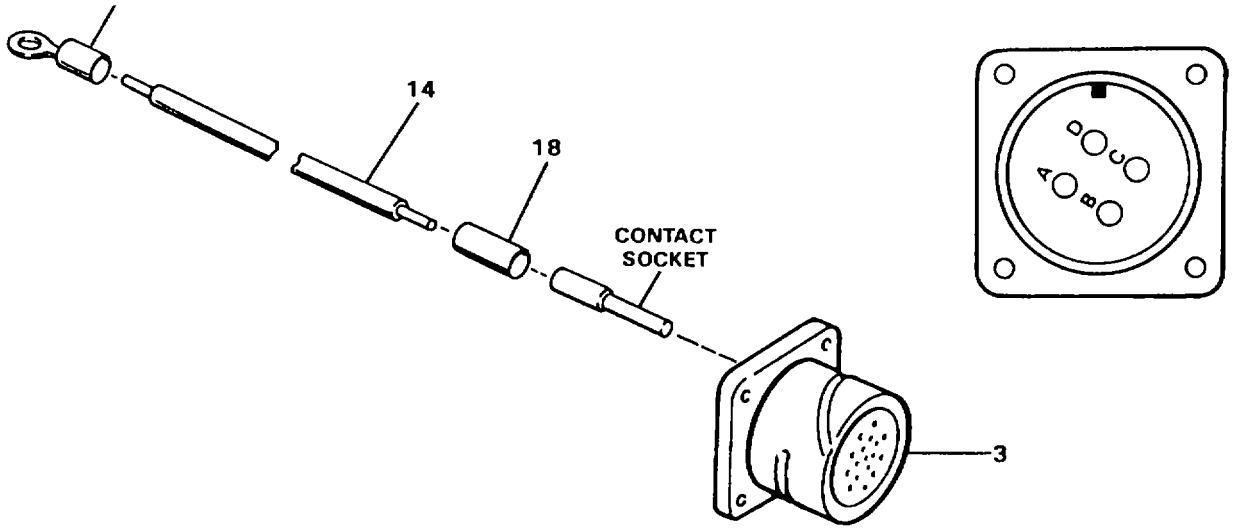

A

HARNESS ASSY	CONNECTOR	WIRE RUN		SOCKET	WIRE	LENGTH	TERMINAL
		FROM	TO				
1	3	J55A	MOV 14	5	14	7.00	13
		J55B	MOV 15	5	14	6.00	13
		J55C	GND	5	14	12.00	13
		J55D	—	5	—	—	—

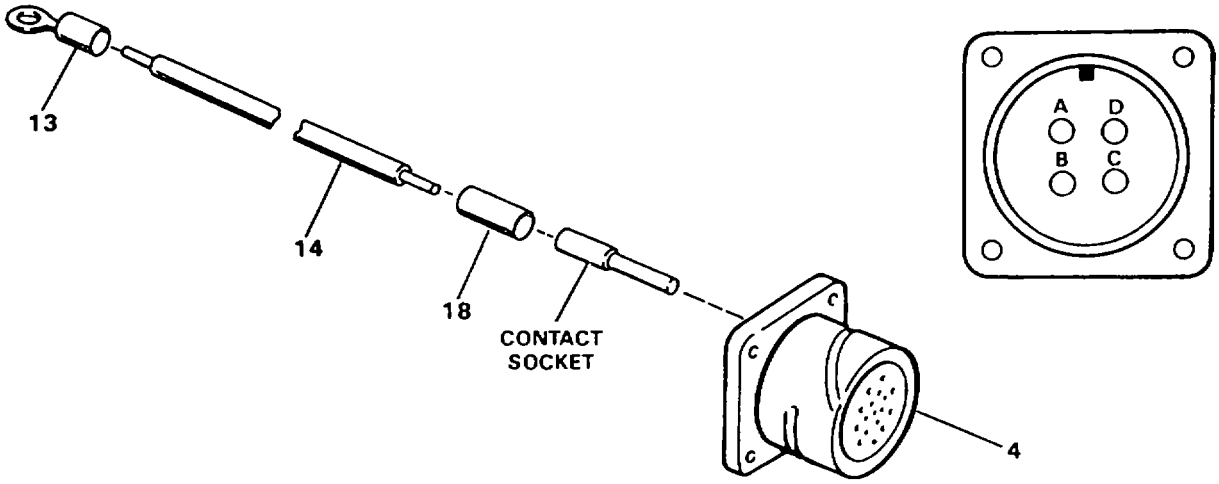

B

HARNESS ASSY	CONNECTOR	WIRE RUN		SOCKET	WIRE	LENGTH	TERMINAL
		FROM	TO				
2	4	J57A	MOV 4	5	14	6.25	13
		J57B	MOV 5	5	14	6.25	13
		J57C	MOV 6	5	14	8.75	13
		J57D	GND	5	14	12.25	13

FIGURE 53. RAW WATER PUMP JUNCTION BOX — WIRING (SHEET 2 OF 3)

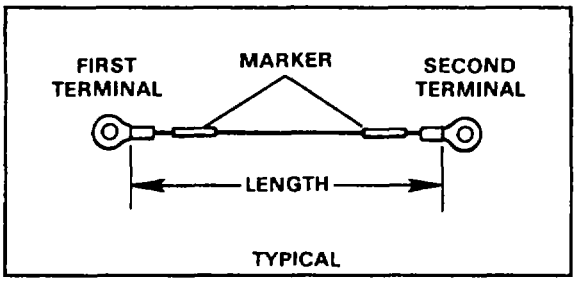

WIRE ASSY	WIRE RUN		WIRE	LENGTH	TERMINAL		MARKER
	FROM	TO			FIRST	SECOND	
6	GND	GND	15	16.00	13	13	18
7	SR6 GND	GND	15	9.50	12	10	18
8	MOV 4	GND	16	10.00	11	11	17
9	MOV	MOV	16	3.00	11	11	17

FIGURE 53. RAW WATER PUMP JUNCTION BOX — WIRING (SHEET 3 OF 3)

(1) ITEM NO	(2) SMR CODE	(3) NSN	(4) CAGEC	(5) PART NUMBER	(6) DESCRIPTION AND USABLE ON CODES(UOC)	(7) QTY
					GROUP 02 WATER PURIFICATION SYSTEM FIG. 53 RAW WATER PUMP JUNCTION BOX - WIRING	
1	XDOFF		97403	13229E1258-19	..HARNESS ASSEMBLY J55.....	1
2	XDOFF		97403	13229E1258-20	..HARNESS ASSEMBLY J57.....	1
3	PBFFF	5935013470036	17549	CA3120E20-4SWB-05-F80-05-57	...CONNECTOR,RECEPTACL J55.....	1
4	PBFFF	5935013470030	17549	CA3102E20-4S-B-F80-05-57	...CONNECTOR,PLUG,ELEC J57.....	1
5	PAOZZ	5999013438909	71468	031-8557-000	....CONTACT,ELECTRICAL PART OF KIT P/N 120-02593-P.....	4
6	AOOOO		97403	13229E0860-3	..WIRE ASSEMBLY.....	1
7	AOOOO		97403	13229E0860-2	..WIRE ASSEMBLY.....	1
8	AOOOO		97403	13229E0885-1	..WIRE ASSEMBLY.....	1
9	AOOOO		97403	13229E0885-5	..WIRE ASSEMBLY.....	1
10	PAOZZ	5940001139826	96906	MS25036-114	...TERMINAL,LUG.....	1
11	PAOZZ	5940001141305	96906	MS25036-116	...TERMINAL,LUG.....	4
12	PAOZZ	5940001434775	96906	MS25036-156	...TERMINAL,LUG.....	1
13	PAOZZ	5940001434777	96906	MS25036-157	...TERMINAL,LUG.....	9
14	MFFZZ		09647	1-12-9-J55-J57	...WIRE,PVC CUT TO LENGTH FROM BULK, P/N M5086/1-12-9.....	7
15	MOOZZ		09647	1-12-9	...WIRE,PVC CUT TO LENGTH FROM BULK, P/N M5086/2-8-9.....	2
16	MOOZZ		09647	2-8-9-MOV	...WIRE,PVC CUT TO LENGTH FROM BULK, P/N M5086/2-8-9.....	2
17	XDOZZ		01121	B-321HSCPS.9-5008W	...MARKER.....	4
18	XDOZZ		01121	B-321HCPS.9-3336W	...MARKER.....	18

END OF FIGURE

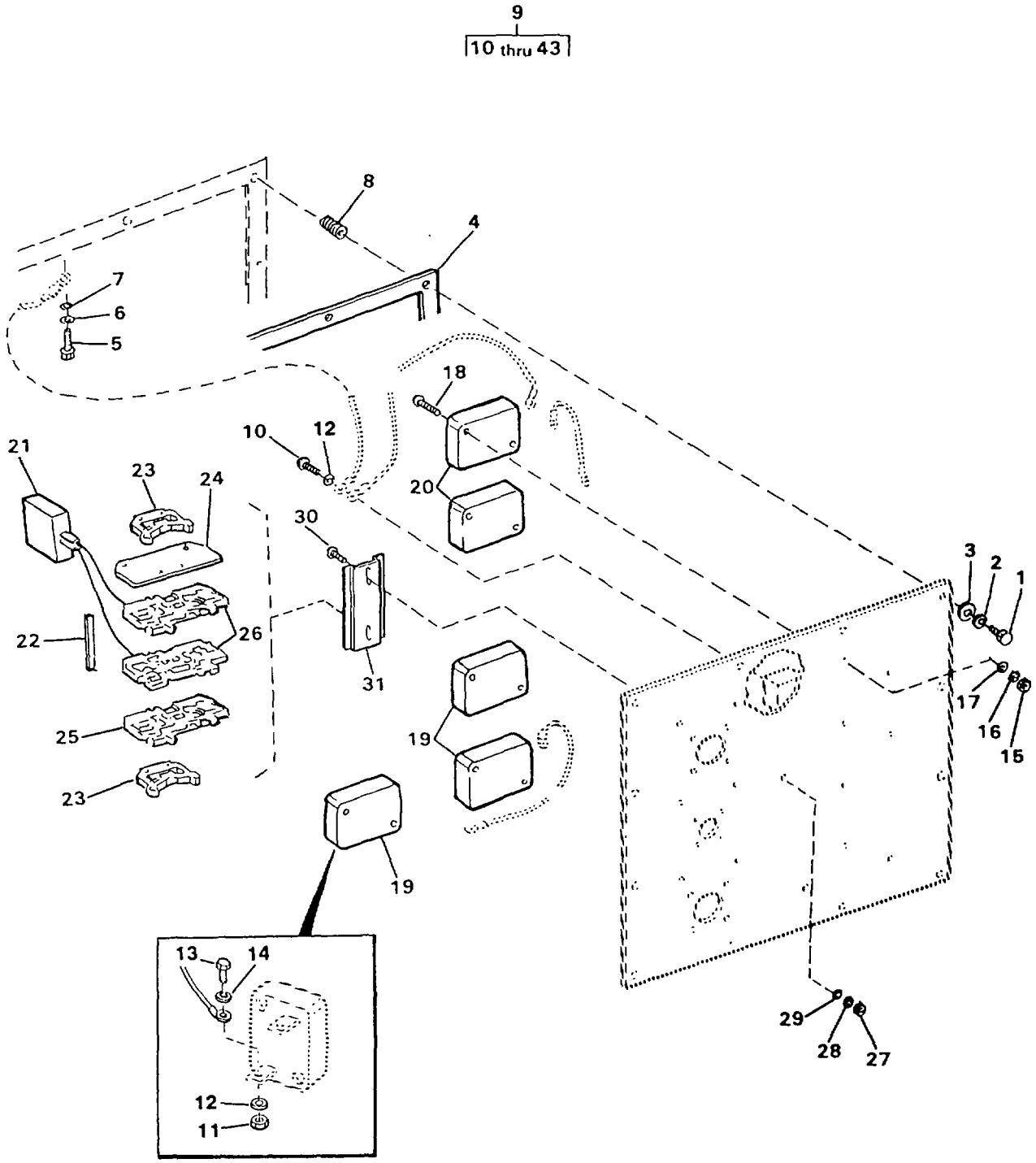

FIGURE 54. DISTRIBUTION PUMP JUNCTION BOX (SHEET 1 OF 2)

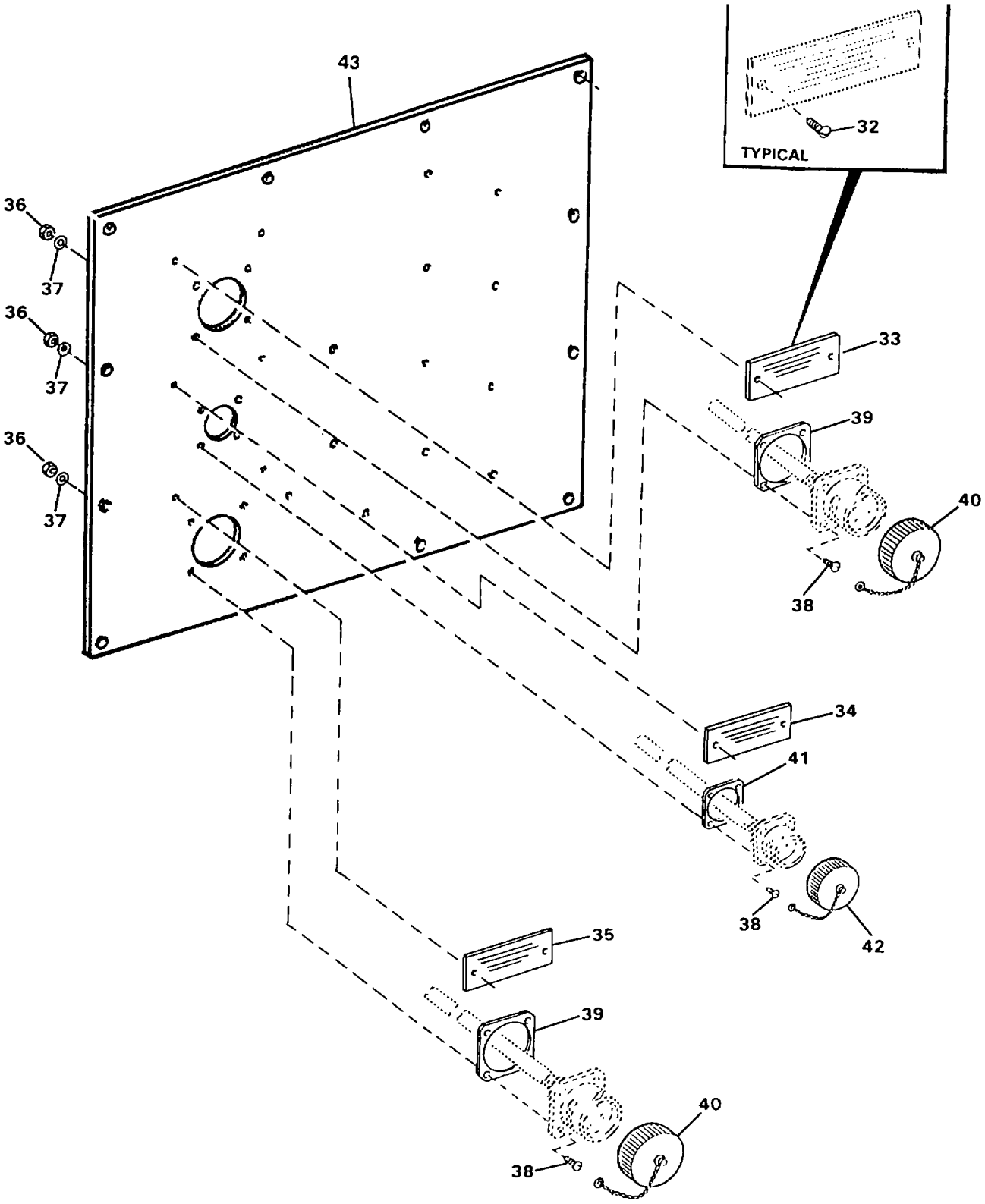

FIGURE 54. DISTRIBUTION PUMP JUNCTION BOX (SHEET 2 OF 2)

(1) ITEM NO	(2) SMR CODE	(3) NSN	(4) CAGEC	(5) PART NUMBER	(6) DESCRIPTION AND USABLE ON CODES(UOC)	(7) QTY
					GROUP 02 WATER PURIFICATION SYSTEM	
					FIG.54 DISTRIBUTION PUMP JUNCTION BOX	
1	PAOZZ	5305009844686	99974	8599621-312	.SCREW,CAP,HEXAGON H 0.190-32 UNF-2A X 1 INCH LONG.....	12
2	PAOZZ	5310009338120	96906	MS35338-138	.WASHER,LOCK.....	12
3	PAOZZ	5905013924321	96906	MS15765-842	.RESISTOR,FIXED,WIR.....	12
4	PAOZZ	5330013516361	97403	13229E0430	.GASKET.....	1
5	PAOZZ	5305007024523	96906	MS35307-306	.SCREW,CAP,HEXAGON H.....	1
6	PAOZZ	5310009338121	96906	MS35338-139	.WASHER,LOCK.....	1
7	PAOZZ	5310010911248	96906	MS15795-810	.WASHER,FLAT.....	1
8	PAOZZ	5325009862929	96906	MS124655	.INSERT,SCREW THREAD.....	12
9	XDOFF		97403	13229E0599	.PANEL ASSEMBLY SEE FIGURE 55 FOR WIRING ASSEMBLIES.....	1
10	PAOZZ	5305007024523	96906	MS35307-306	.SCREW,CAP,HEXAGON H.....	1
11	PAOZZ	5310009035966	96906	MS51971-1	..NUT,PLAIN,HEXAGON.....	10
12	PAOZZ	5310005273634	96906	MS35335-61	..WASHER,LOCK.....	11
13	PAOZZ	5305007193997	96906	MS35307-303	..SCREW,CAP,HEXAGON.....	10
14	PAOZZ	5310009338121	96906	MS35338-139	..WASHER,LOCK.....	10
15	PAOZZ	5310009952723	96906	MS24679-22	..NUT,PLAIN,CAP O.164-32 UNC-2B.....	10
16	PAOZZ	5310006143552	96906	MS35335-59	..WASHER,LOCK.....	10
17	PAOZZ	5330013501352	97403	13229E0557-4	..RETAINER,PACKING.....	10
18	PAOZZ	5305000546674	96906	MS51957-49	..SCREW,MACHINE 0.164-32 UNC-2A X 1 INCH LONG.....	10
19	PAOZZ	5920013497981	97403	13229E0326-1	..ARRESTER,ELECTRICAL.....	3
20	PAOZZ	5905011432706	34371	V131DB40	..ARRESTER,ELECTRICAL.....	2
21	PAOZZ	5920013535149	97403	13229E1221	..ARRESTER,ELECTRICAL.....	2
22	XDOZZ		97403	13229E0097	..MARKER,TERM.....	5
23	PAOZZ	5340123059524	D8969	209-101	..END SECTION TERMINA.....	2
24	PAOZZ	5940013492716	97403	13229E0095-1	..TERMINAL,PLATE,END.....	1
25	PAOZZ	5940013614782	65996	280-681	..TERMINAL JUNCTION B.....	2
26	PAOZZ	5940013498395	97403	313229E0094-1	..TERMINAL,BOARD.....	3
27	PAOZZ	5310009432139	96906	MS24679-83	..NUT,PLAIN,CAP 0.190-32 UNF-2B.....	2
28	PAOZZ	5310002091239	96906	MS35335-60	..WASHER,LOCK.....	2
29	PAOZZ	5310013512613	97403	13229E0557-1	..WASHER,SEAL.....	2
30	PAOZZ	5305000593659	96906	MS51958-63	..SCREW,MACHINE 0.190-32 UNF-2A X 0.5 INCH LONG.....	2
31	XDOZZ		97403	13229E0091-2	..RAIL,TRM MOUNT.....	1
32	PAOZZ	5305013499586	97403	13229E0621-19	..SCREW,TAPPING 0.112-40, TYPE F, X 0.375 INCH LONG.....	6
33	XDOZZ		97403	13229E0782-12	..PLATE, ID DISTRIBUTION PUMP HEATER.....	1
34	XDOZZ		97403	13229E0782-98	..PLATE,ID DISTRIBUTION PUMP CONTROL.....	1
35	XDOZZ		97403	13229E0782-13	..PLATE,ID DISTRIBUTION PUMP.....	1
36	PAOZZ	5310009349748	96906	MS35649-244	..NUT,PLAIN,HEXAGON.....	12
37	PAOZZ	5310000583599	96906	MS35335-57	..WASHER,LOCK.....	12
38	PAOZZ	5305000545653	96906	MS51957-19	..SCREW,MACHINE 0.112-40 UNC-2A X 0.75 INCH LONG.....	12
39	PAOZZ	5330009681753	96906	MS52000-7	..GASKET.....	2
40	PAOZZ	5935013571807	97403	13229E1209-2	..COVER,ELECTRICAL CO.....	2
41	PAOZZ	5330006414338	96906	MS52000-4	..GASKET.....	1
42	PAOZZ	5935011808025	K6941	LMB-14S-TF	..COVER,ELECTRICAL CO.....	1

(1) ITEM NO	(2) SMR CODE	(3) NSN	(4) CAGEC	(5) PART NUMBER	(6) DESCRIPTION AND USABLE ON CODES(UOC)	(7) QTY
43	XDOZZ		97403	13229E0347	..PANEL,BACK WALL.....	1

END OF FIGURE

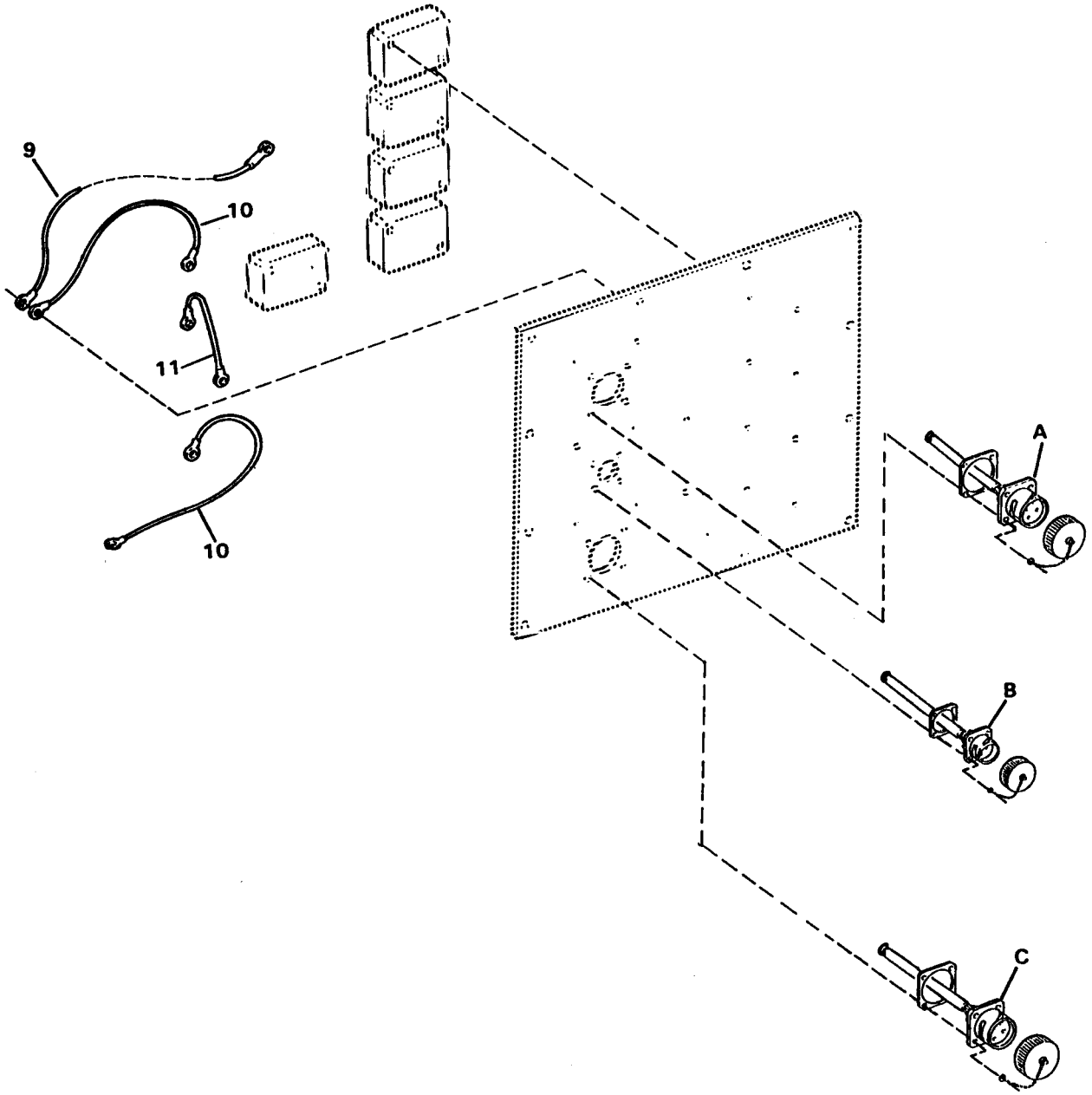

FIGURE 55. DISTRIBUTION PUMP JUNCTION BOX - WIRING (SHEET 1 OF 3)

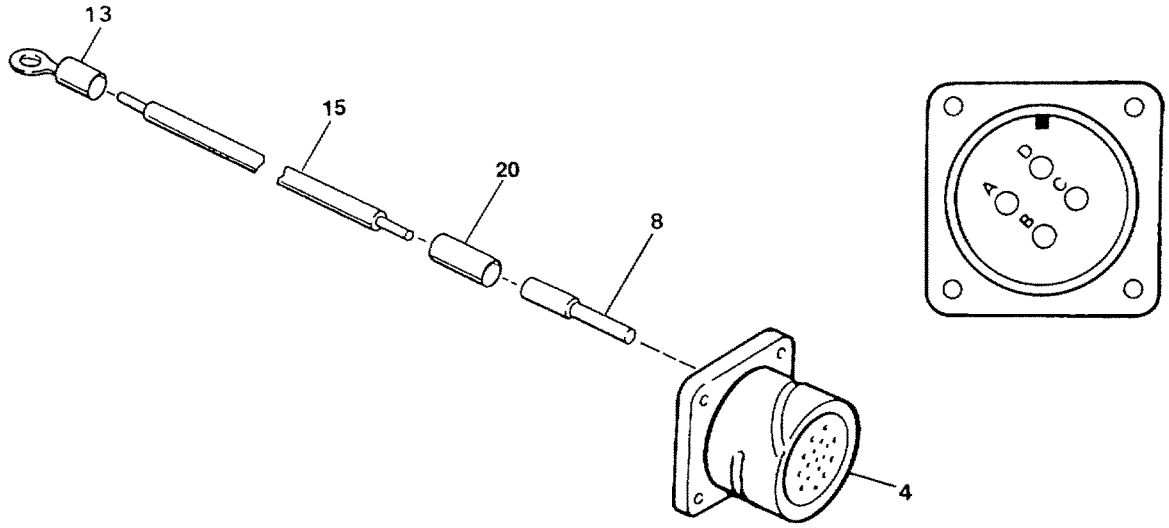

A

HARNESS ASSY	CONNECTOR	WIRE RUN		SOCKET	WIRE	LENGTH	TERMINAL
		FROM	TO				
1	4	J60A	MOV 12	8	15	14.50	13
		J60B	MOV 13	8	15	16.25	13
		J60C	GND	8	15	11.00	13
		J60D	—	8	—	—	—

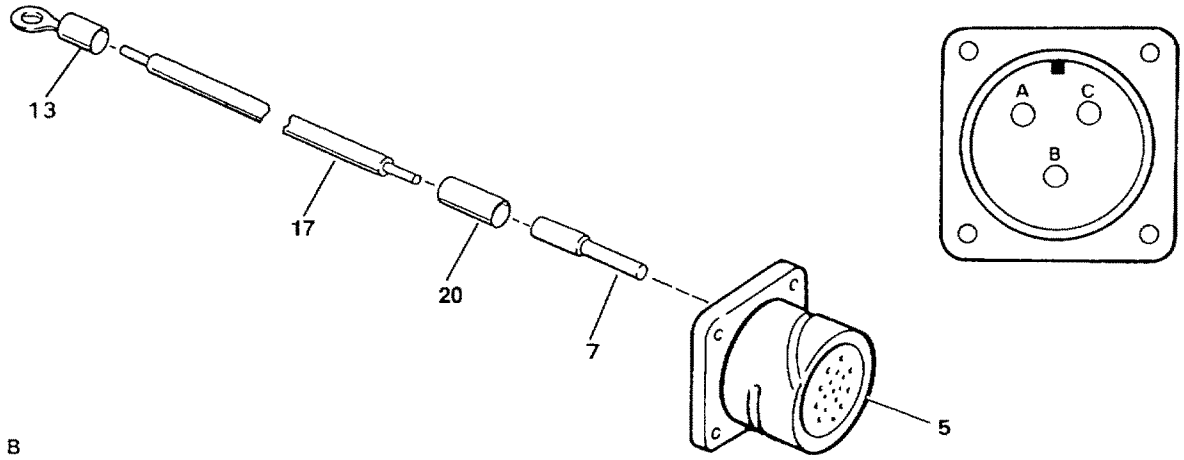

B

HARNESS ASSY	CONNECTOR	WIRE RUN		SOCKET	WIRE	LENGTH	TERMINAL
		FROM	TO				
2	5	J61A	TB4-5	7	17	10.75	—
		J61B	TB4-1	7	17	10.00	—
		J61C	GND	7	17	11.50	14

FIGURE 55. DISTRIBUTION PUMP JUNCTION BOX - WIRING (SHEET 2 OF 3)

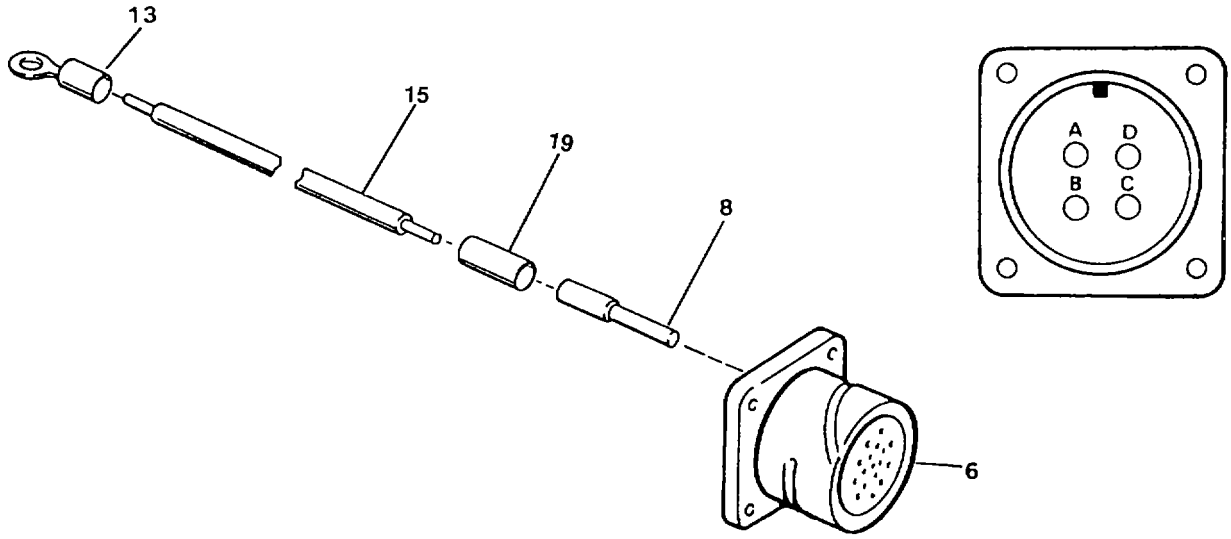

C

HARNESS ASSY	CONNECTOR	WIRE RUN		SOCKET	WIRE	LENGTH	TERMINAL
		FROM	TO				
3	6	J62A	MOV 7	8	15	12.00	13
		J62B	MOV 8	8	15	14.25	13
		J62C	MOV 9	8	15	15.50	13
		J62D	GND	8	15	15.00	13

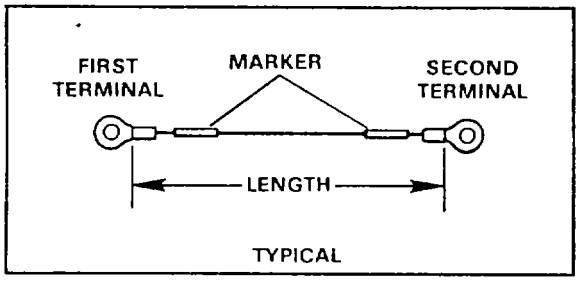

WIRE ASSY	WIRE RUN		WIRE	LENGTH	TERMINAL		MARKER
	FROM	TO			FIRST	SECOND	
9	GND	GND	16	16.00	13	13	19
10	MOV 13	GND	18	6.00	12	12	20
10	MOV 7	MOV 8	18	6.00	12	12	20
11	MOV	MOV	18	3.00	12	12	20

FIGURE 55. DISTRIBUTION PUMP JUNCTION BOX - WIRING (SHEET 3 OF 3)

(1) ITEM NO	(2) SMR CODE	(3) NSN	(4) CAGEC	(5) PART NUMBER	(6) DESCRIPTION AND USABLE ON CODES(UOC)	(7) QTY
					GROUP 02 WATER PURIFICATION SYSTEM FIG.55 DISTRIBUTION PUMP JUNCTION BOX BOX - WIRING	
1	XDOFF		97403	13229E1258-21	..HARNESS ASSEMBLY J60.....	1
2	XDOFF		97403	13229E1258-22	..HARNESS ASSEMBLY J61.....	1
3	XDOFF		97403	13229E1258-23	..HARNESS ASSEMBLY J62.....	1
4	PBFFF	5935013470036	17549	CA3120E20-4SWB-05-F80-05-57	...CONNECTOR,RECEPTACL J60.....	1
5	PBFFF	5935013470034	17549	CA3102E14S-7S-B-F80-05-57	...CONNECTOR,RECEPTACL J61.....	1
6	PBFFF	5935013470030	17549	CA3102E20-4S-B-F80-05-57	...CONNECTOR,PLUG,ELEC J62.....	1
7	PAOZZ	5999013438906	17549	031-8555-000	....CONTACT,ELECTRICAL PART OF KIT P/N 120-02593-P.....	3
8	PAOZZ	5999013438909	71468	031-8557-000	....CONTACT,ELECTRICAL PART OF KIT P/N 120-02593-P.....	8
9	AOOOO		97403	13229E0860-3	..WIRE ASSEMBLY.....	1
10	AOOOO		97403	13229E0885-4	..WIRE ASSEMBLY.....	2
11	AOOOO		97403	13229E0885-1	..WIRE ASSEMBLY.....	1
12	PAOZZ	5940001141305	96906	MS25036-116	...TERMINAL,LUG.....	6
13	PAOZZ	5940001434777	96906	MS25036-157	...TERMINAL,LUG.....	10
14	PAOZZ	5940002300515	96906	MS25036-154	...TERMINAL,LUG.....	1
15	MFFZZ		09647	1-12-9-J60-J62	...WIRE,PVC CUT TO LENGTH FROM BULK, P/N M5086/1-12-9.....	7
16	MOOZZ		09647	1-12-9-GND-GND	...WIRE,PVC CUT TO LENGTH FROM BULK, P/N M5086/1-12-9.....	1
17	MFFZZ		09647	1-16-9-J61	...WIRE,PVC CUT TO LENGTH FROM BULK, P/N M5086/1-16-9.....	3
18	MOOZZ		09647	2-8-9-MOV13-7-8	...WIRE,PV CCUT TO LENGTH FROM BULK, P/N M5086/2-8-9.....	5
19	XDOZZ		01121	B-321HSCPS.9-5008W	....MARKER.....	10
20	XDOZZ		01121	B-321HCPS.9-3336W	....MARKER.....	22

END OF FIGURE

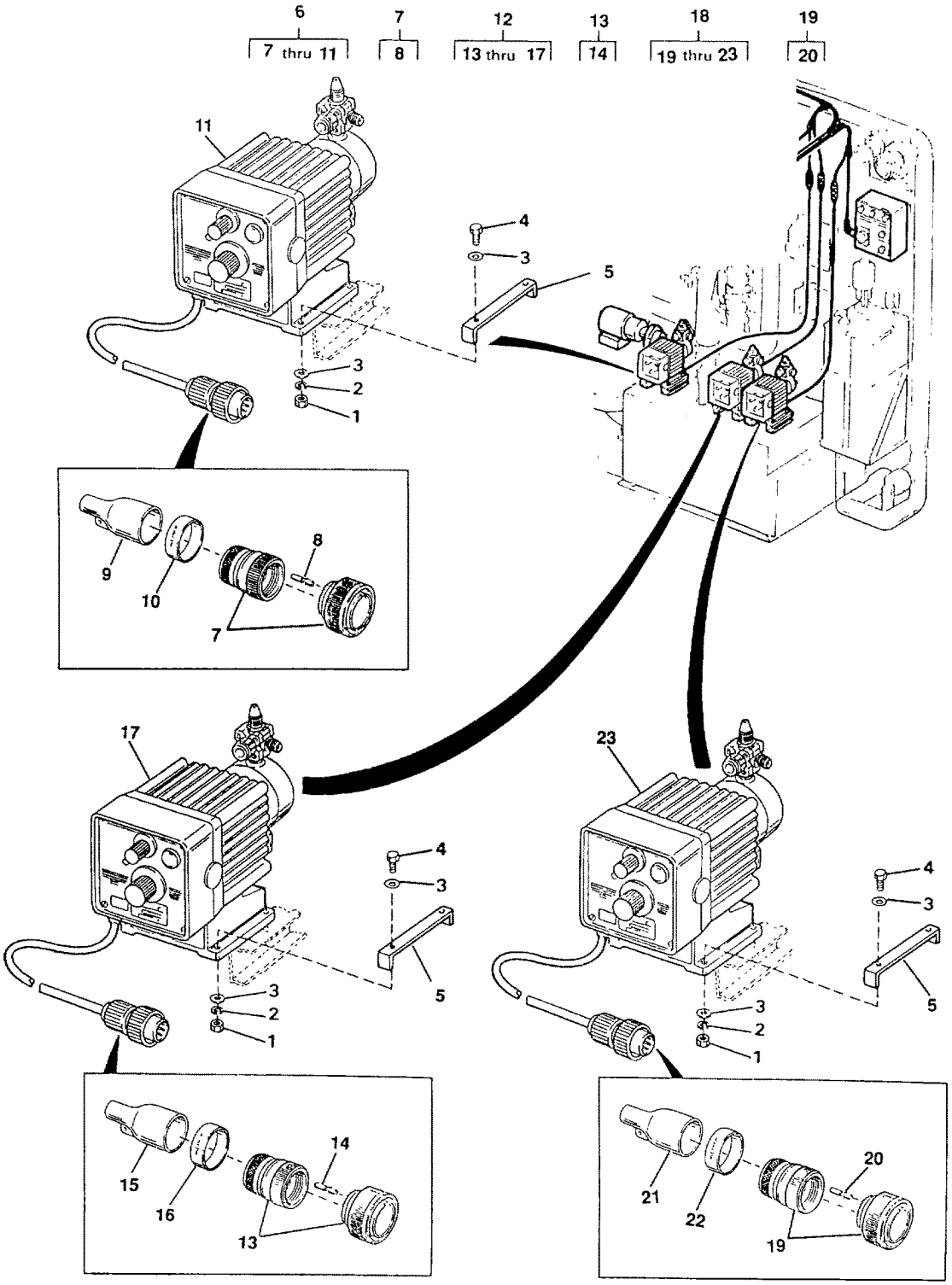

FIGURE 56. CHEMICAL INJECTION PUMP MOUNTING AND CONNECTIONS

(1) ITEM NO	(2) SMR CODE	(3) NSN	(4) CAGEC	(5) PART NUMBER	(6) DESCRIPTION AND USABLE ON CODES(UOC)	(7) QTY
					GROUP 02 WATER PURIFICATION SYSTEM FIG.56 CHEMICAL INJECTION PUMP MOUNTING AND CONNECTIONS	
1	PAOZZ	5310009349760	96906	MS35649-204	.NUT,PLAIN,HEXAGON.....	12
2	PAOZZ	5310009338120	96906	MS35338-138	.WASHER,LOCK.....	12
3	PAOZZ	5905013924321	96906	MS15765-842	.RESISTOR,FIXED,WIR.....	24
4	PAOZZ	5935013545177	97403	13229E0161-166	.SCREW,CAP,HEXAGON H 0.190-24 UNC-2A X 1 INCH LONG.....	12
5	PAOZZ	4610014214888	97403	13229E1416	.BRACKET.....	6
6	XDOFF		97403	13229E1266-3	.PUMP ASSY,CHEMICAL SEQUESTRANT.....	1
7	PBFFF		17549	CA3106E14S-7PXB-02-57	..CONNECTOR,PLUG,ELEC P51.....	1
8	PAFZZ	5999013448758	17549	030-8586-000	...CONTACT,ELECTRICAL PART OF KIT P/N 120-02593-P.....	3
9	PBFZZ	5970013484761	97403	13229E1213-1	..INSULATION SLEEVING.....	1
10	XDFZZ		09647	120-02433-126	..MARKER.....	1
11	PBOOO	4610013470064	62866	30487	..FEEDER,CHEMICAL SOL SEE FIGURE 57 FOR BREAKDOWN.....	1
12	XDOFF		97403	13229E1266-2	.PUMP ASSY,CHEMICAL POLYELECTROLYTE.....	1
13	PBFFF	5935013467151	17549	CA3106E14S-7PWB-02-57	..CONNECTOR,PLUG,ELEC P50.....	1
14	PAFZZ	5999013448758	17549	030-8586-000	...CONTACT,ELECTRICAL PART OF KIT P/N 120-02593-P.....	3
15	PBFZZ	5970013484761	97403	13229E1213-1	..INSULATION SLEEVING.....	1
16	XDFZZ		09647	120-02433-125	..MARKER.....	1
17	PBOOO	4610013470064	62866	30487	..FEEDER,CHEMICAL SOL SEE FIGURE 57 FOR BREAKDOWN.....	1
18	XDOFF		97403	13229E1266-1	.PUMP ASSY, CHEMICAL HYPOCHLORITE....	1
19	PBFFF	5935013545178	17549	CA3106E14S-7P-B-02-57	..CONNECTOR,PLUG,ELEC P49.....	1
20	PAFZZ	5999013448758	17549	030-8586-000	...CONTACT,ELECTRICAL PART OF KIT P/N 120-02593-P.....	3
21	PBFZZ	5970013484761	97403	13229E1213-1	..INSULATION SLEEVING.....	1
22	XDFZZ		09647	120-02433-124	..MARKER.....	1
23	PBOOO	4610013470064	62866	30487	..FEEDER,CHEMICAL SOL SEE FIGURE 57 FOR BREAKDOWN.....	1

END OF FIGURE

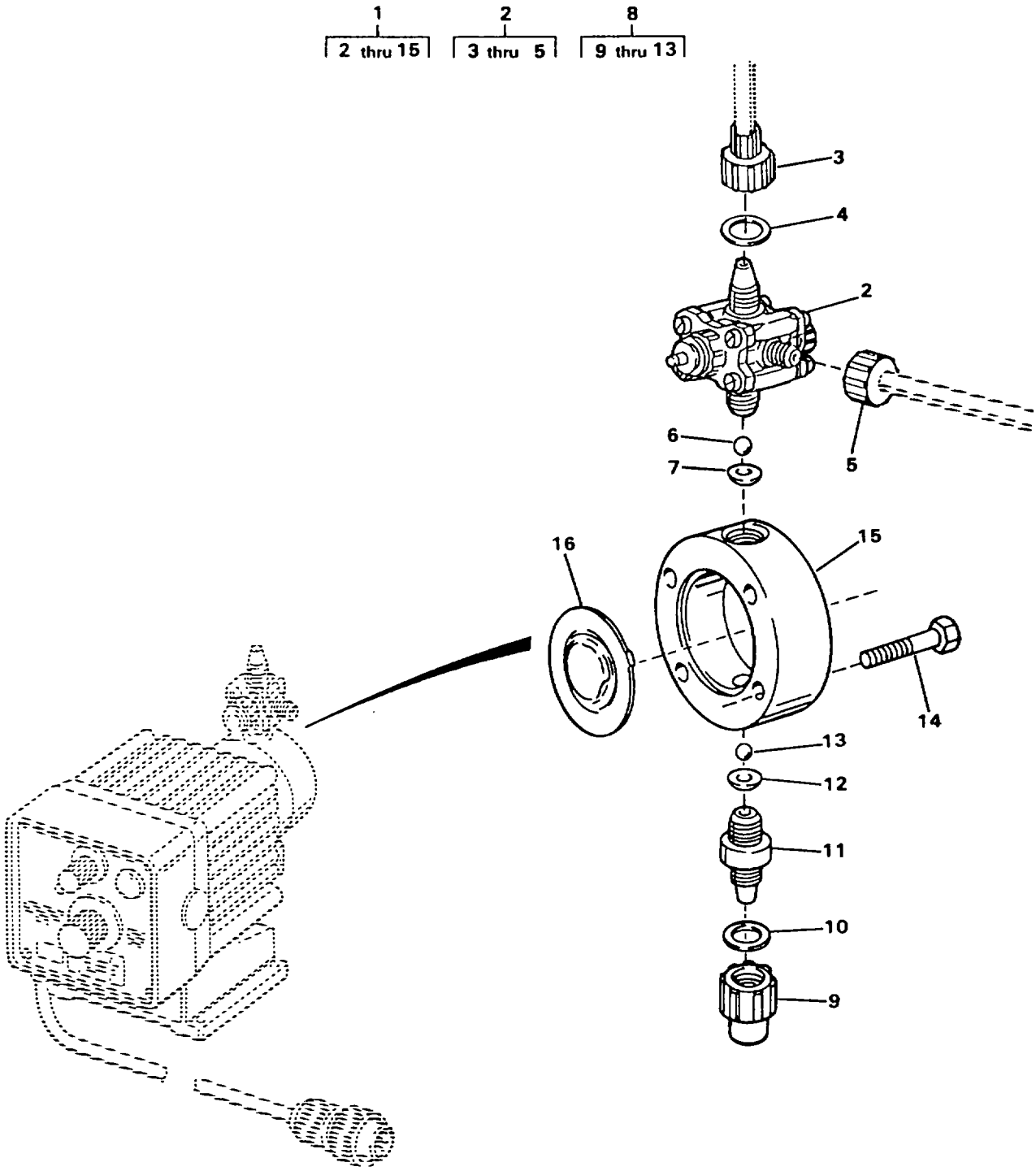

FIGURE 57. CHEMICAL INJECTION PUMP (SHEET 1 OF 2)

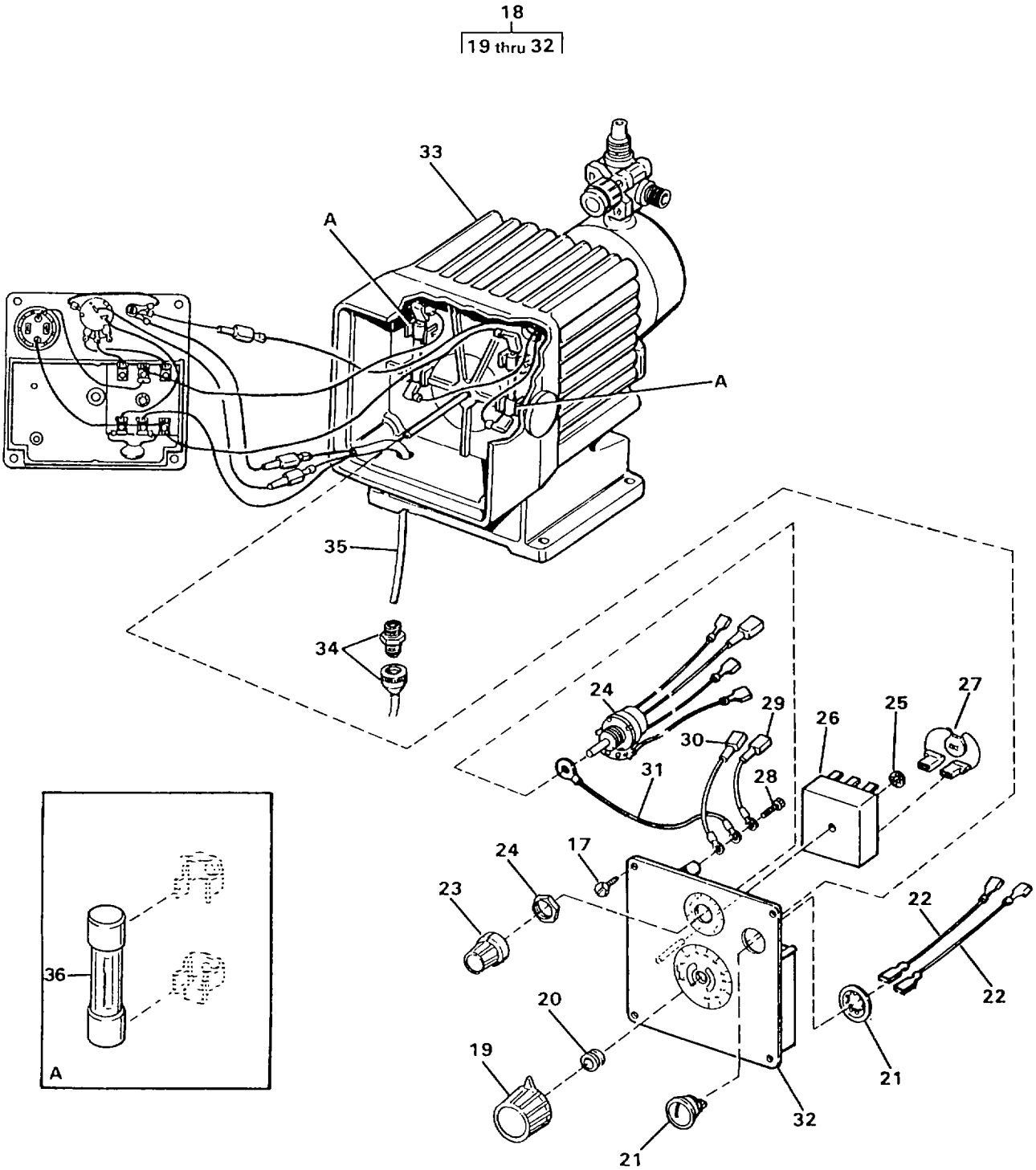

FIGURE 57. CHEMICAL INJECTION PUMP (SHEET 2 OF 2)

(1) ITEM NO	(2) SMR CODE	(3) NSN	(4) CAGEC	(5) PART NUMBER	(6) DESCRIPTION AND USABLE ON CODES(UOC)	(7) QTY
					GROUP 02 WATER PURIFICATION SYSTEM FIG.57 CHEMICAL INJECTION PUMP	
1	PAOOO	4320013464704	62866	25696	...PUMP,RECIPROCATING.....	1
2	PAOOO	4820013464660	62866	25690	....VALVE,VACUUM BREAKI.....	1
3	PAOZZ	5310013540077	62866	10299	.....NUT,PLAIN,HEXAGON.....	3
4	PAOZZ	5325013500515	62866	26136	.....RING,RETAINING.....	3
5	PAOZZ	5310013500420	62866	25631	.....NUT,PLAIN,HEXAGON.....	3
6	KFOZZ		62866	10338	....BALL,CERAMIC PART OF KIT P/N SP-30487.....	1
7	KFOZZ		62866	10407	...RING,SEAL PART OF KIT P/N SP-30487.....	1
8	PBOOO	4820013237038	62866	25232	....VALVE,CHECK.....	3
9	PAOZZ	5310013540077	62866	10299	.....NUT,PLAIN,HEXAGON.....	1
10	PAOZZ	5325013500515	62866	26136	.....RING,RETAINING.....	1
11	PAOZZ	4820013237049	62866	10292	.....SEAT,VALVE.....	1
12	KFOZZ		62866	10407	.....RING, SEAL PART OF KIT P/N SP-30487.....	1
13	KFOZZ		62866	10338	....BALL, CERAMIC PART OF KIT P/N SP-30487.....	1
14	PAOZZ	5305013506058	62866	10340	...SCREW,CAP,SOCKET HE NO. 10-24 X 3/4 INCH LONG, SS.....	4
15	XAOZZ		62866	10113	...HEAD, PLEXIGLAS.....	1
16	KFOZZ		62866	10302	...DIAPHRAGM PART OF KIT P/N SP-30487.....	1
17	PBOZZ	5305013506059	62866	30306	...SCREW,CAP,HEXAGON H.....	4
18	XDOZZ		62866	26071	...CONTROL PANEL ASSY.....	1
19	PAOZZ	4610014397580	62866	25891	....KNOB,PUMP.....	1
20	XDOZZ		62866	10465	....GROMMET.....	1
21	PBOZZ	6210013491005	62866	26052	....LIGHT,INDICATOR.....	1
22	XDOZZ		62866	25506	....WIRE ASSEMBLY.....	2
23	PAOZZ	4610014398815	62866	25889	....KNOB,PUMP.....	1
24	XDFZZ		62866	27718	....POT ASSEMBLY.....	1
25	PAFZZ	5325013754241	62866	10422	....RING,RETAINING.....	1
26	XDFZZ		62866	25050	....PULSER.....	1
27	PAFZZ	5905013180794	62866	10626	....RESISTOR,VOLTAGE SENSITIVE.....	1
28	XDFZZ		62866	10598	....SCREW.....	1
29	XDFZZ		62866	25667	....WIRE ASSEM1BLY.....	1
30	XDFZZ		62866	26055	....WIRE ASSEMBLY.....	1
31	XDFZZ		62866	10403	....WIRE ASSEMBLY.....	1
32	XAFZZ		62866	26075	....PANEL.....	1
33	PAFZZ	4320014218610	62866	26895	...HOUSING ASSEMBLY.....	1
34	PAOZZ	4320014218620	62866	25957	...CONNECTOR.....	1
35	PAOZZ	4320014218559	62866	26293	...CORD,POWER.....	1
36	PAOZZ	5920002846787	81349	F02A250V5A	...FUSE,CARTRIDGE.....	2

END OF FIGURE

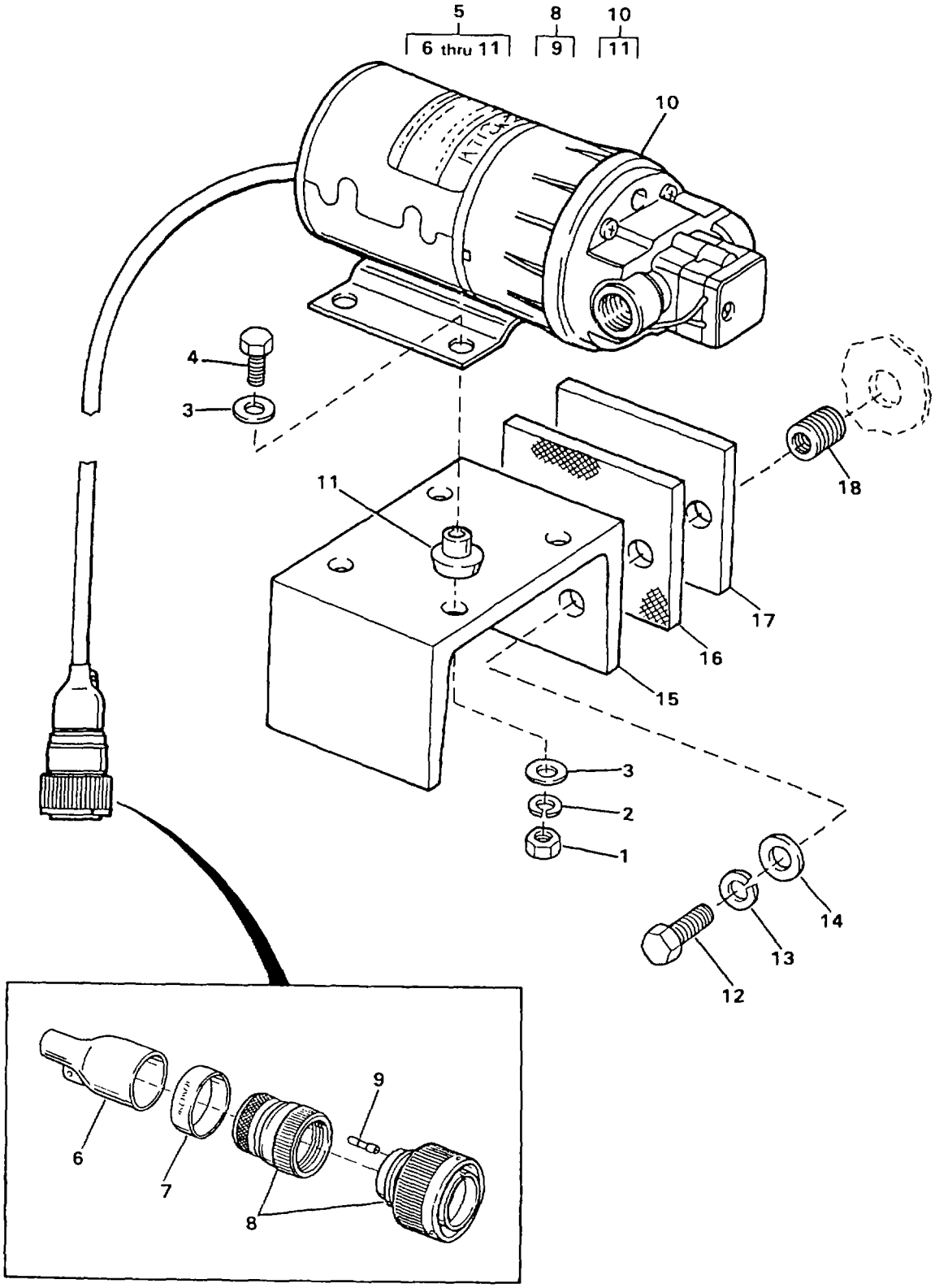

FIGURE 58. HYPOCHLORITE BACKWASH PUMP

(1) ITEM NO	(2) SMR CODE	(3) NSN	(4) CAGEC	(5) PART NUMBER	(6) DESCRIPTION AND USABLE ON CODES(UOC)	(7) QTY
					GROUP 02 WATER PURIFICATION SYSTEM FIG. 58 HYPOCHLORITE BACKWASH PUMP	
1	PAFZZ	4610014214891	96906	MS35649-204	.NUT,PLAIN,HEXAGON.....	4
2	PAFZZ	5310009338120	96906	MS35338-138	.WASHER,LOCK.....	4
3	PAFZZ	5905013924321	96906	MS15765-842	.RESISTOR,FIXED,WIR.....	8
4	PAFZZ	5305013516318	97403	13229E0161-166	.SCREW,CAP,HEXAGON H 0.190-24 UNC-2A X 1 INCH LONG.....	4
5	XDFFF		97403	13229E1267	.PUMP ASSEMBLY.....	1
6	PBFZZ	5970013484761	97403	13229E1213-1	..INSULATION SLEEVING.....	1
7	XDFZZ		09647	120-02433-120	..MARKER.....	1
8	PBFFF	5355013702456	17549	CA3106E14S-7P-B-02-57	..CONNECTOR,PLUG,ELEC P45.....	1
9	PAFZZ	5999013448758	17549	030-8586-000	..CONTACT,ELECTRICAL PART OF KIT P/N 120-02593-P.....	3
10	PAFZZ	4320013564579	97403	13229E0002	..PUMP UNIT,RECIPROCA.....	1
11	PBFZZ		1L965	20132-000	..GROMMET,NONMETALLIC SET OF FOUR.....	1
12	PAFZZ	5305000213740	96906	MS35307-364	.SCREW,CAP,HEXAGON H.....	2
13	PAFZZ	5310009847042	96906	MS35338-141	.WASHER,LOCK.....	2
14	PAFZZ	5310007737618	96906	MS15795-814	.WASHER,FLAT.....	2
15	XDFZZ		97403	13229E1148	.BRACKET,PUMP.....	1
16	XDFZZ		97403	1322291159	.SPACER.....	1
17	PBFZZ	5330013516362	97403	13229E1163	.GASKET.....	1
18	PAFZZ	5325002904492	96906	MS122203	.INSERT,SCREW THREAD.....	2

END OF FIGURE

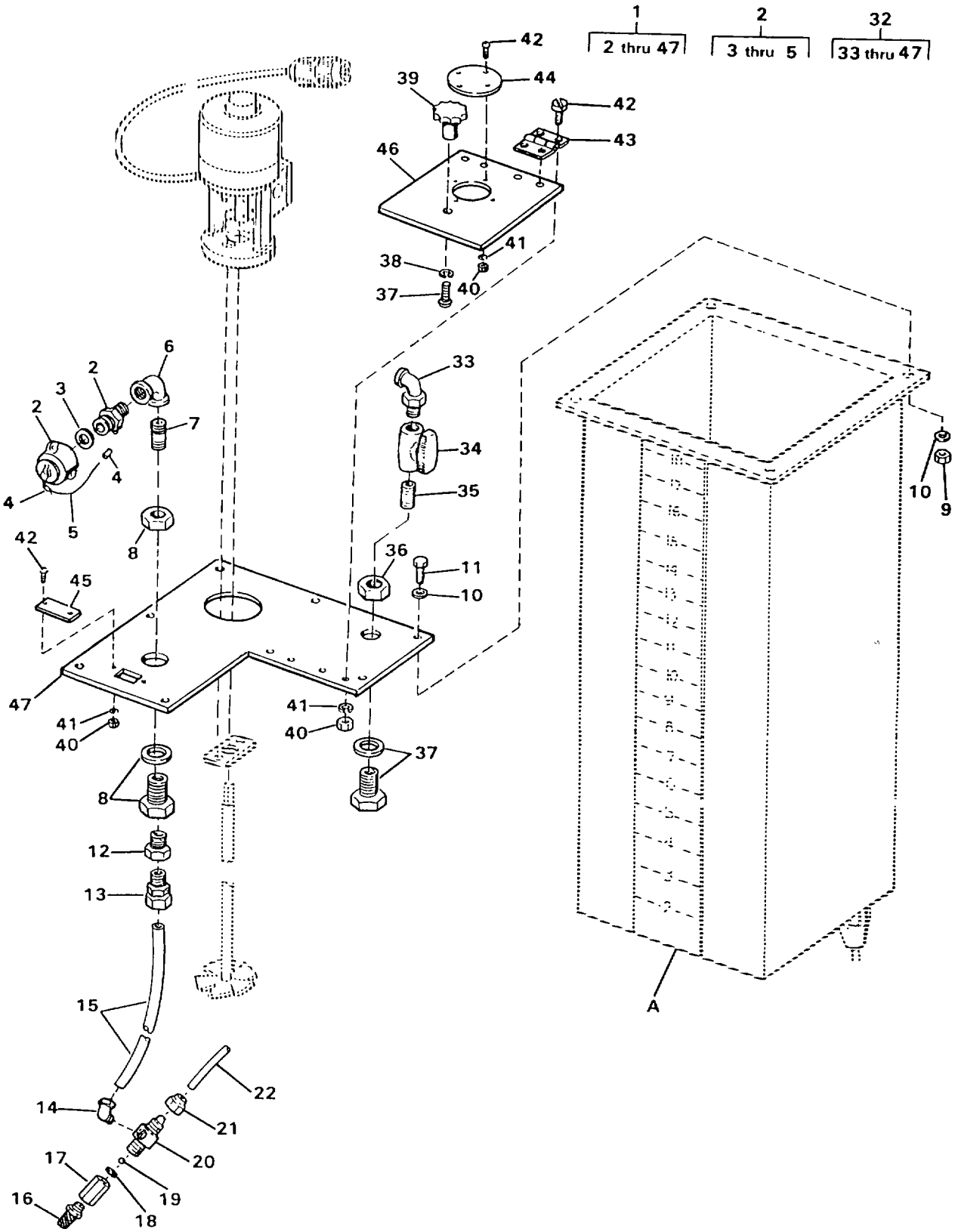

FIGURE 59. HYPOCHLORITE TANK ASSEMBLY (SHEET 1 OF 2)

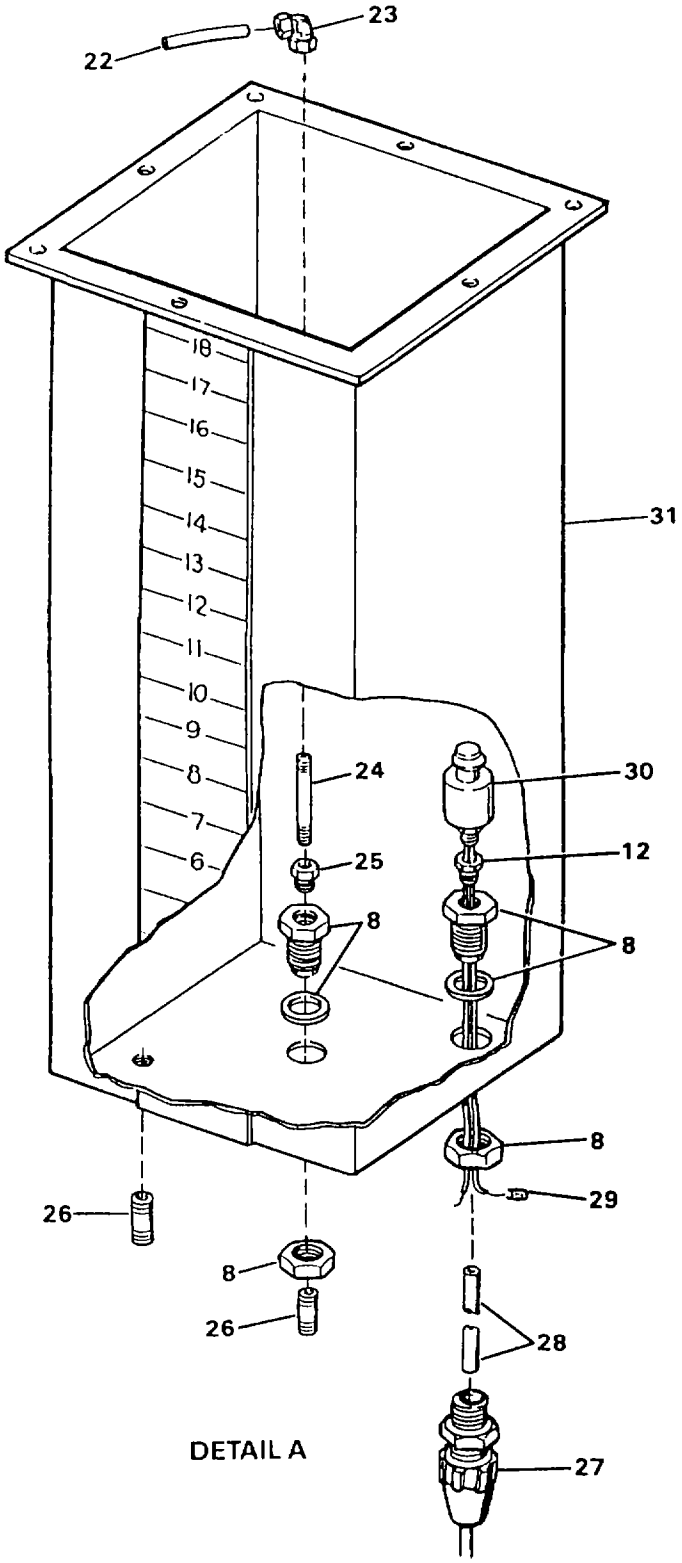

FIGURE 59. HYPOCHLORITE TANK ASSEMBLY (SHEET 2 OF 2)

(1) ITEM NO	(2) SMR CODE	(3) NSN	(4) CAGEC	(5) PART NUMBER	(6) DESCRIPTION AND USABLE ON CODES(UOC)	(7) QTY
					GROUP 02 WATER PURIFICATION SYSTEM FIGURE 59. HYPOCHLORITE TANK ASSEMBLY	
1	XDOFF		97403	13229E0438	.CHEM TANK ASSY CALCIUM HYPOCHLORITE, INCLUDES MIXER ASSEMBLY.....	1
2	XDOOO		97403	13229E0431	..COUPLING HALF,QUICK.....	1
3	PAOZZ	5330013498922	97403	13229E0857-1	...GASKET.....	1
4	XDOZZ		96906	MS51844-64	...SWAGING SLEEVE,WIRE.....	2
5	MOOZZ		09647	120-02598-6	...CABLE CUT TO LENGTH FROM BULK, P/N 13229E1147-1.....	1
6	PBOZZ	4730013503731	97403	13229E0438-13	..ELBOW,PIPE 90 DEG, SCH 80, PVC, 0.5 INCH LONG, NPT-14.....	1
7	PBOZZ	4730012974659	97403	13229E0694-2	..NIPPLE,PIPE.....	1
8	PBOZZ	4730013503770	97403	13229E0676	..COUPLING,PIPE.....	3
9	PAOZZ	5310010127400	96906	MS51858-5	..NUT,PLAIN,HEXAGON.....	7
10	PAOZZ	5310001384315	96906	MS51859-5	..WASHER,FLAT.....	14
11	PAOZZ		97403	13229E0438-16	..SCREW,CAP,HEXAGON H 0.190-24 UNC-2A 1.25 INCHES LONG.....	7
12	PAOZZ	4730001888266	97403	13229E0688-4	..BUSHING,PIPE.....	2
13	PAOZZ	4730013506213	97403	13229E0450-1	..ADAPTER,STRAIGHT,PI.....	1
14	PAOZZ	4730013506205	97403	13229E0449-2	..ELBOW,PIPE TO TUBE.....	1
15	MOOZZ		97403	13229E0438-9	..TUBING CUT TO LENGTH FROM BULK, P/N 13229E0691-2.....	1
16	PAOZZ	4730013235135	62866	10123	..STRAINER,SEDIMENT.....	1
17	PAOZZ	4820013237050	62866	10978	..SEAT,VALVE.....	1
18	KFOZZ		62866	10407	..RING,SEAL PART OF KIT P/N SP-30487.....	1
19	KFOZZ		62866	10338	.BALL,CERAMIC PART OF KIT P/N SP-30487.....	1
20	PAOZZ	4810013501518	62866	26029	..VALVE,SOLENOID.....	1
21	PAOZZ	5310013540077	62866	10299	..NUT,PLAIN,HEXAGON.....	1
22	MOOZZ		97403	13229E0438-5	..TUBING CUT TO LENGTH FROM BULK, P/N 13229E0691-2.....	1
23	PAOZZ	4730013509028	97403	13229E1078	..ELBOWJ,PIPE TO TUBE.....	1
24	PAOZZ	4730013514007	97403	13229E0694-6	..NIPPLE,PIPE.....	1
25	PAOZZ	4730013509193	97403	13229E0688-1	..BUSHING,PIPE.....	1
26	PAOZZ	4730004890313	34895	104P014	..NIPPLE,PIPE.....	1
27	PBOZZ	5975013557891	97403	13229E0738-6	..STUFFING TUBE.....	1
28	MFFZZ		97403	13229E0438-25	..TUBING CUT TO LENGTH FROM BULK, P/N 13229E1282-1.....	1
29	XDFZZ		01121	B-321HCPS.9-3336 W	..MARKER.....	3
30	PAOZZ	5930013504171	97403	13229E0310	..SWITCH,LIQUID LEVEL INCLUDES ELECTRICAL WIRES.....	1
31	PBOZZ	5430013574180	09647	120-00-356-000	..TANK,LIQUID STORAGE.....	1
32	XDOOO		97403	13229E0009	..COVER ASSY,CHEM TK.....	1
33	PAOZZ	4730013487920	97403	13229E0689-5	...ELBOW,PIPE TO TUBE.....	1
34	PAOZZ	4820013513432	97403	13229E0170-2	...VALVE,BALL.....	1
35	PAOZZ	4730012974659	97403	13229E0694-2	...NIPPLE,PIPE.....	1
36	PAOZZ	4730013503770	97403	13229E0676	...COUPLING,PIPE.....	1
37	PAOZZ	5305011022665	96906	MS18212-81	...SCREW,MACHINE.....	1
38	PAOZZ	5310005020106	96906	MS51859-6	...WASHER,FLAT.....	1

(1) ITEM NO	(2) SMR CODE	(3) NSN	(4) CAGEC	(5) PART NUMBER	(6) DESCRIPTION AND USABLE ON CODES(UOC)	(7) QTY
39	XDOZZ		97403	13229E0206	...KNOB,HAND.....	1
40	PAOZZ	5310004219608	96906	MS51858-4	...NUT,PLAIN,HEXAGON.....	14
41	PAOZZ	5310002134960	96906	MS51859-4	...WASHER,FLAT.....	14
42	PAOZZ	5305005816488	96906	MS18212-49	...SCREW,MACHINE.....	14
43	PBOZZ	5340013513329	97403	13229E0207	...HINGE,BUTT.....	2
44	XDOZZ		97403	13229E0019	...PLATE,ID HYPOCHIORITE.....	1
45	XDOZZ		97403	13229E0782-84	...PLATE,ID HYPOCHLORITE SYS FLUSH.....	1
46	XDOZZ		97403	13229E0390	...COVER.....	1
47	XDOZZ		97403	13229E0389	...COVER.....	1
48	PAOZZ		62866	SP-30487	..PARTS KIT,SEAL REPL.....	1
					BALL, CERAMIC (1) 57-6.....	
					BALL, CERAMIC (1) 57-13.....	
					BALL, CERAMIC (1) 59-19.....	
					DIAPHRAGM (1) 57-16.....	
					RING, SEAL (1) 57-7.....	
					RING, SEAL (1) 57-12.....	
					RING, SEAL (1) 59-18.....	

END OF FIGURE

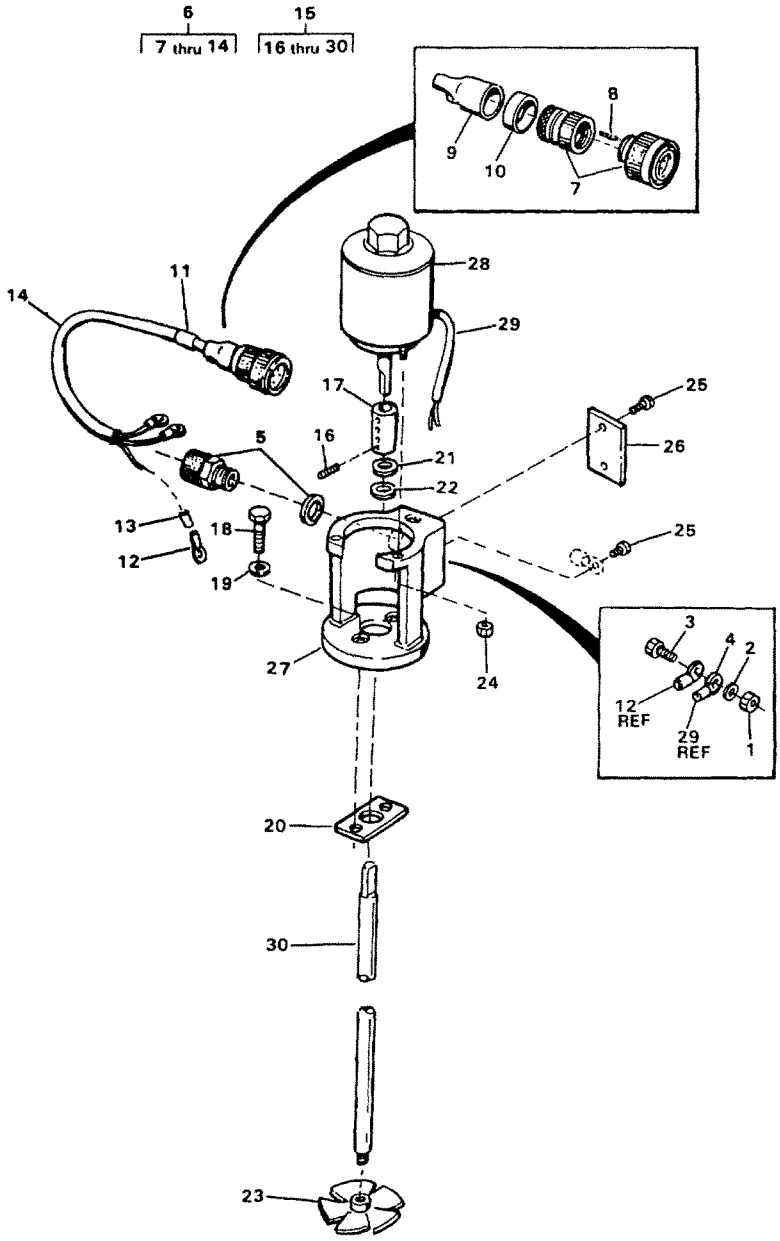

FIGURE 60. MIXER ASSEMBLY

(1) ITEM NO	(2) SMR CODE	(3) NSN	(4) CAGEC	(5) PART NUMBER	(6) DESCRIPTION AND USABLE ON CODES(UOC)	(7) QTY
					GROUP 02 WATER PURIFICATION SYSTEM FIGURE 60. MIXER ASSEMBLY	
1	PAOZZ	5310009349760	96906	MS35649-204	..NUT,PLAIN,HEXAGON.....	2
2	PAOZZ	5310009338120	96906	MS35338-138	..WASHER,LOCK.....	2
3	PAOZZ	5305013514313	97403	13229E0671-5	..SCREW,CAP,HEXAGON H 0.190-24 UNC-2A X 0.375 LG.....	2
4	PAOZZ	5940001434780	96906	MS25036-108	..TERMINAL,LUG USED ON MOTOR LEAD.....	2
5	PBOZZ	5975010297710	56501	2632	..BOX CONNECTOR,ELECT.....	1
6	PBOFF	6150013464661	97403	13229E1260-20	..CABLE ASSEMBLY,POWE W46.....	1
7	PBFFF	5935013545178	17549	CA3106E14S-7P-B-02-57	...CONNECTOR,PLUG,ELEC P54.....	1
8	PAFZZ	5999013448758	17549	030-8586-000	...CONTACT,ELECTRICAL PART OF KIT P/N 120-02593-P.....	3
9	PAFZZ	5970013484761	97403	13229E1213-1	...INSULATION SLEEVING.....	1
10	XDFZZ		09647	120-02433-129	...MARKER.....	1
11	XDFZZ		09647	120-02433-53	...MARKER.....	1
12	PAFZZ	5940001434780	96906	MS25036-108	...TERMINAL,LUG.....	3
13	XDFZZ		01121	B-321HCPS.9-3336 W	...MARKER.....	6
14	MOOZZ		09647	120-02605-16-W46	...CABLE CUT TO LENGTH FROM BULK, P/N 13229E0741-1.....	1
15	PBOOO	4940013545599	97403	13229E0447	..MIXER,LIQUID,REVOLV.....	1
16	PAOZZ	5305013956271	79172	P32368	...SETSCREW NO. 10-24 UNC-2A X 0.25 INCH LONG.....	4
17	PAOZZ	3010012592375	79172	P46099	...COUPLING,SHAFT,RIGID.....	1
18	XDOZZ		79172	P-17949	...SCREW,CAP,HEX HD 5/16-18-1-1/4 INCH STAINLESS STEEL.....	2
19	XDOZZ		79172	P-22616	...WASHER,FLAT 5/16 INCH STAINLESS STEEL.....	2
20	XDOZZ		79172	P-46075	...CLAMP.....	1
21	XDOZZ		79172	P-19803	...WASHER,FLAT 1/2 INCH STAINLESS STEEL.....	1
22	PBOZZ	5330012645952	79172	P50219	...GASKET.....	1
23	PAOZZ	4610016222101	79172	UXA21720	...IMPELLER,MIXER.....	1
24	XDOZZ		79172	P-47486	...NUT,LOCK,NYLOK NO.10-32	
25	XDOZZ		79172	P-40971	...SCREW,MACH,PAN HD NO.6-32 X 5/16 INCH LONG, SS.....	3
26	XDOZZ		79172	P-46370	...COVER.....	1
27	XDOZZ		79172	P-46074	...BASE,MOTOR.....	1
28	PBOZZ	6105012511491	79172	U-21781	...MOTOR,ALTERNATING.....	1
29	XDOZZ		79172	RP684818	...TUBING 3/8 O.D. X 1/4 I.O. X 1/2 INCH LONG.....	1
30	XDOZZ		97403	13229E0447-2	...SHAFT.....	1

END OF FIGURE

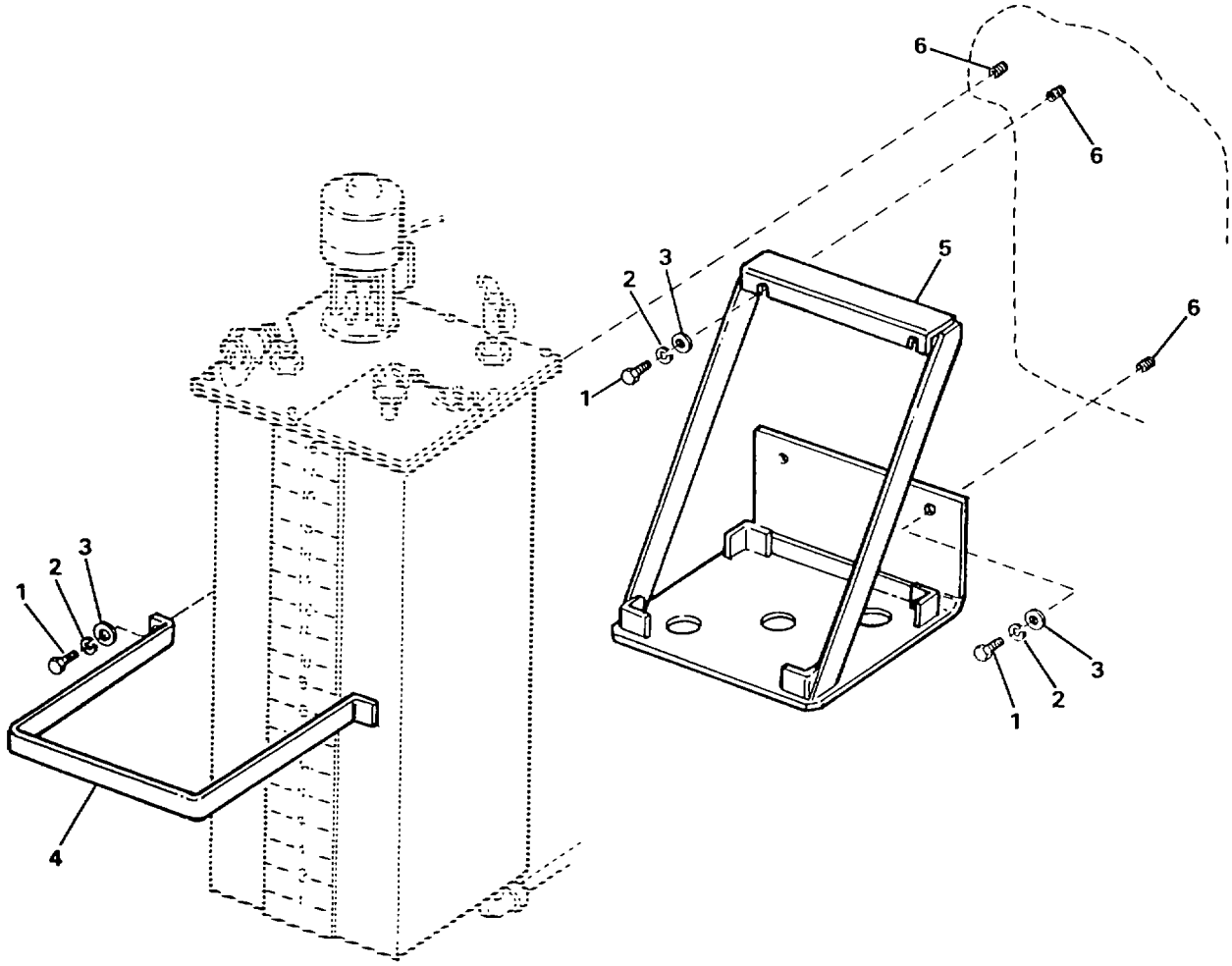

FIGURE 61. HYPOCHLORITE TANK ASSEMBLY MOUNTING BRACKET

(1) ITEM NO	(2) SMR CODE	(3) NSN	(4) CAGEC	(5) PART NUMBER	(6) DESCRIPTION AND USABLE ON CODES(UOC)	(7) QTY
					GROUP 02 WATER PURIFICATION SYSTEM FIGURE 61. HYPOCHLORITE TANK ASSEMBLY MOUNTING BRACKET	
1	PAOZZ	5305000213740	96906	MS35307-364	.SCREW,CAP,HEXAGON H.....	6
2	PAOZZ	5310009847042	96906	MS35338-141	.WASHER,LOCK.....	6
3	PAOZZ	5310007737618	96906	MS15795-814	.WASHER,FLAT.....	6
4	XDOZZ		97403	13229E0269	.STRAP,HOLD-DOWN.....	1
5	XDOZZ		97403	13229E0286	.BRACKET,CHEM TANK.....	1
6	PBFZZ	5325002904492	96906	MS122203	.INSERT,SCREW THREAD.....	6

END OF FIGURE

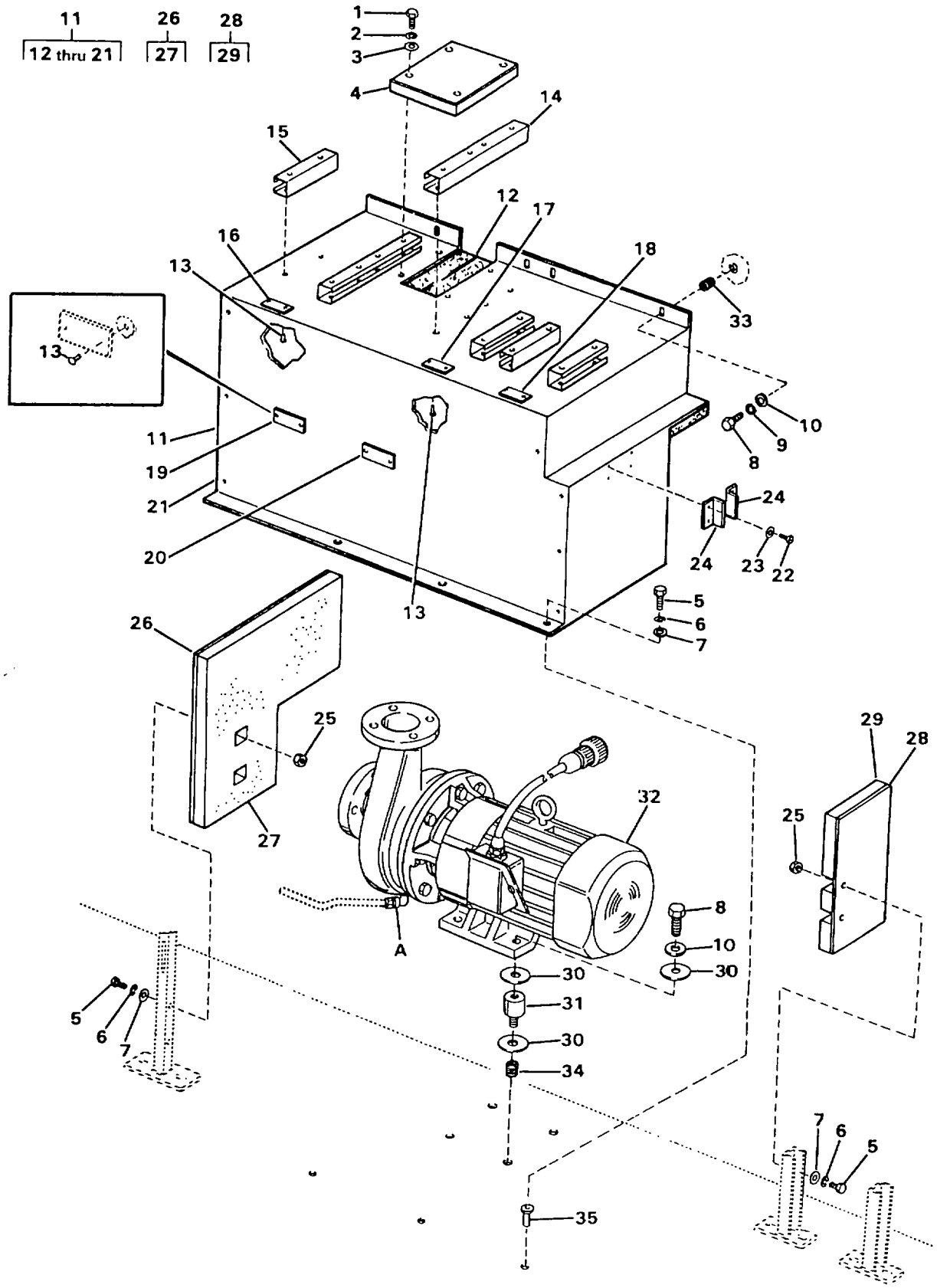

FIGURE 62. BOOSTER PUMP INSTALLATION (SHEET 1 OF 2)

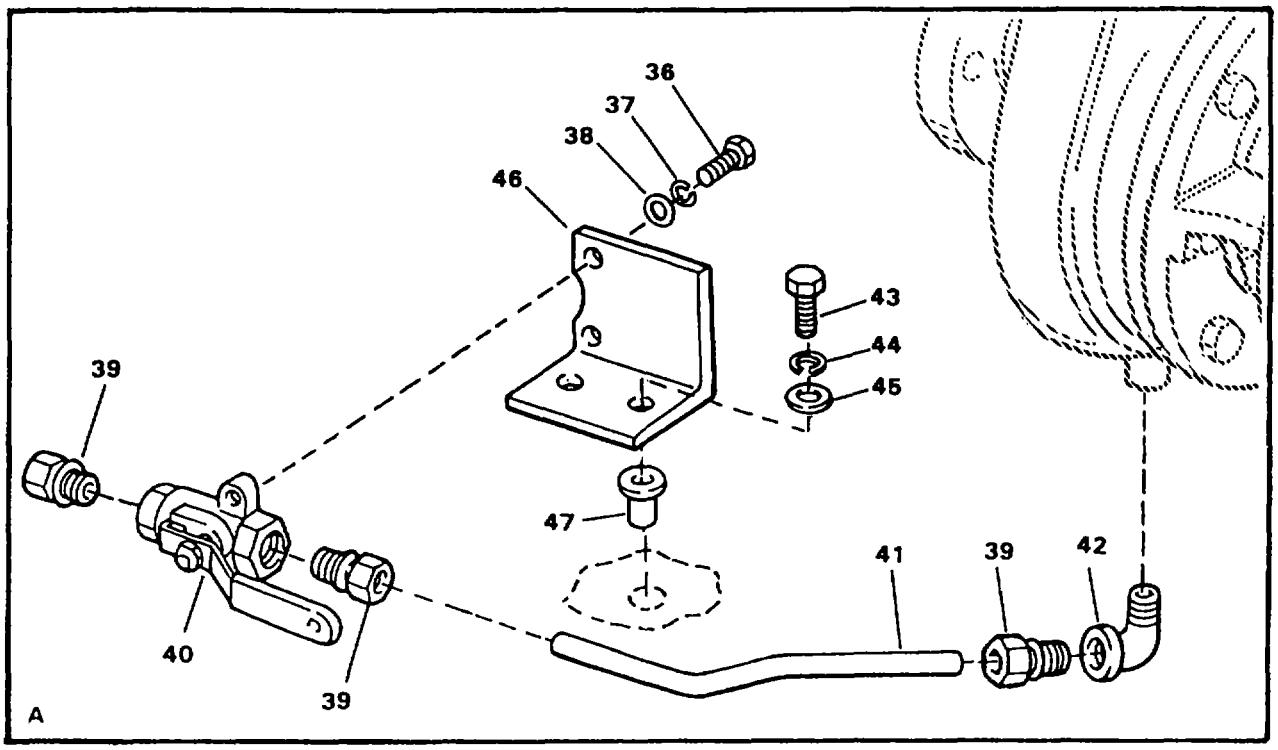

FIGURE 62. BOOSTER PUMP INSTALLATION (SHEET 2 OF 2)

(1) ITEM NO	(2) SMR CODE	(3) NSN	(4) CAGEC	(5) PART NUMBER	(6) DESCRIPTION AND USABLE ON CODES(UOC)	(7) QTY
					GROUP 02 WATER PURIFICATION SYSTEM FIGURE 62. BOOSTER PUMP INSTALLATION	
1	PAOZZ	5305013516318	97403	13229E0161-166	.SCREW,CAP,HEXAGON H 0.190-24 UNC-2A X 1 INCH LONG.....	4
2	PAOZZ	5310009338120	96906	MS35338-138	.WASHER,LOCK.....	4
3	PAOZZ	5905013924321	96906	MS15765-842	.RESISTOR,FIXED,WIR.....	4
4	XDOZZ		97403	13229E0870	.COVER,TOP SOUND ENCLOSURE.....	1
5	PAOZZ	5305000213620	96906	MS35307-307	.SCREW,CAP,HEXAGON H.....ETN	7
5	PAOZZ	5305002078253	96906	MS35307-308	.SCREW,CAP,HEXAGON H.....FKD	7
6	PAOZZ	5310009338121	96906	MS35338-139	.WASHER,LOCK.....	7
7	PAOZZ	5310010911248	96906	MS15795-810	.WASHER,FLAT.....	7
8	PAOZZ	5305005765417	96906	MS35307-360	.SCREW,CAP,HEXAGON H.....	8
9	PAOZZ	5310009847042	96906	MS35338-141	.WASHER,LOCK WK.....	4
10	PAOZZ	5310007737618	96906	MS15795-814	.WASHER,FLAT.....	8
11	XDOZZ		97403	13229E0868	.ENCLOSURE,SOUND.....	1
12	MOOZZ		97403	13229E0868-2	.FOAM,POLYESTER MAKE FROM BULK, P/N 13229E0948.....	1
13	PAOZZ	5320013490933	97403	13229E0350-1	..RIVET,BLIND.....	26
14	MOOZZ		97403	13229E0868-9	..CHANNEL,SUPPORT MAKE FROM BULK, P/N P-1000-EA.....	2
15	MOOZZ		97403	13229E0868-5	..CHANNEL,SUPPORT MAKE FROM BULK, P/N P-1000-EA.....	4
16	XDOZZ		97403	13229E0782-44	..PLATE,ID SEQUESTRANT PUMP.....	1
17	XDOZZ		97403	13229E0782-45	..PLATE,ID POLYELECTROLYTE PUMP.....	1
18	XDOZZ		97403	13229E0782-46	..PLATE,ID PRODUCT HYPOCHLORITE PUMP.....	1
19	XDOZZ		97403	13229E0782-85	..PLATE,ID POLY PUMP INJECTOR.....	1
20	XDOZZ		97403	13229E0782-50	..PLATE,ID BOOSTER PUMP.....	1
21	PAOZZ	5320013490932	97403	13229E0350-2	..RIVET,BLIND.....	7
22	PAOZZ		96906	MS24629-66	.SCREW,TAPPING 0.190,TYPE F X 0.5 INCH LONG.....ETN	4
22	PAOZZ	5305004423217	97403	13229E0350-2	.RIVET,BLIND.....FKD	4
23	PAOZZ	5905013924321	96906	MS15765-842	.RESISTOR,FIXED,WIR.....ETN	4
24	XDOZZ		97403	13229E1092	.BRACKET,ANGLE.....	2
25	PAOZZ	5310009035966	96906	MS51971-1	.NUT,PLAIN,HEXAGON.....	4
26	XDOZZ		97403	13229E0869	.BAFFLE,INSIDE.....	1
27	MOOZZ		97403	13229E0869-2	..FOAM,POLYESTER MAKE FROM BULK, P/N 13229E0948.....	1
28	XDOZZ		97403	13229E0871	.BAFFLE,OUTSIDE.....	1
29	MOOZZ		97403	13229E0871-2	..FOAM,POLYESTER MAKE FROM BULK, P/N 13229E0948.....	1
30	PAOZZ	5330013521166	97403	13229E0661	.GASKET.....	12
31	PBOZZ	5342013533568	97403	13229E0638	.MOUNT,RESILIENT.....	4
32	AOOFF		97403	13229E0784	.PUMP/110TOR ASSY.....	1
33	PAFZZ	5325002904492	96906	MS122203	.INSERT,SCREW THREAD.....	4
34	PAFZZ	5325006821453	96906	MS122243	.INSERT,SCREW THREAD.....	4
35	PAOZZ	5310011190460	97403	13229E0114-4	.NUT,PLAIN,BLIND RIV.....	3
36	PAOZZ	5305013514310	97403	13229E0086-207	..SCREW,CAP,HEXAGON H 0.190-24 UNC-2A 0.5 INCH LONG.....	2
37	PAFZZ	5310009338120	96906	MS35338-138	..WASHER,LOCK.....	2
38	PAFZZ	5905013924321	96906	MS15765-842	..RESISTOR,FIXED,WIR.....	2
39	PAOZZ	4730006915460	97403	13229E0682-7	..ADAPTER,STRAIGHT,PI.....	2

(1) ITEM NO	(2) SMR CODE	(3) NSN	(4) CAGEC	(5) PART NUMBER	(6) DESCRIPTION AND USABLE ON CODES(UOC)	(7) QTY
40	PAOZZ		97403	13229E0680-2	..VALVE,BALL.....	1
41	XDOZZ		09647	120-51245	..TUBING,BENT.....	1
42	PAOZZ	4730013507163	97403	13229E0086-90	..ELBOW,PIPE 0.375 N PS, 90 DEGREE, CLS 150, 316 SS.....	1
43	PAOZZ	5305002078253	96906	MS35307-308	..SCREW,CAP,HEXAGON H.....	2
44	PAFZZ	5310009338121	96906	MS35338-139	..WASHER,LOCK.....	2
45	PAFZZ	5310010911248	96906	MS15795-810	..WASHER,FLAT.....	2
46	XDOZZ		97403	13229E1064	..BRACKET,SUPPORT.....	1
47	PAFZZ	5310011190460	97403	13229E0114-4	..NUT,PLAIN,BLIND RIV.....	2

END OF FIGURE

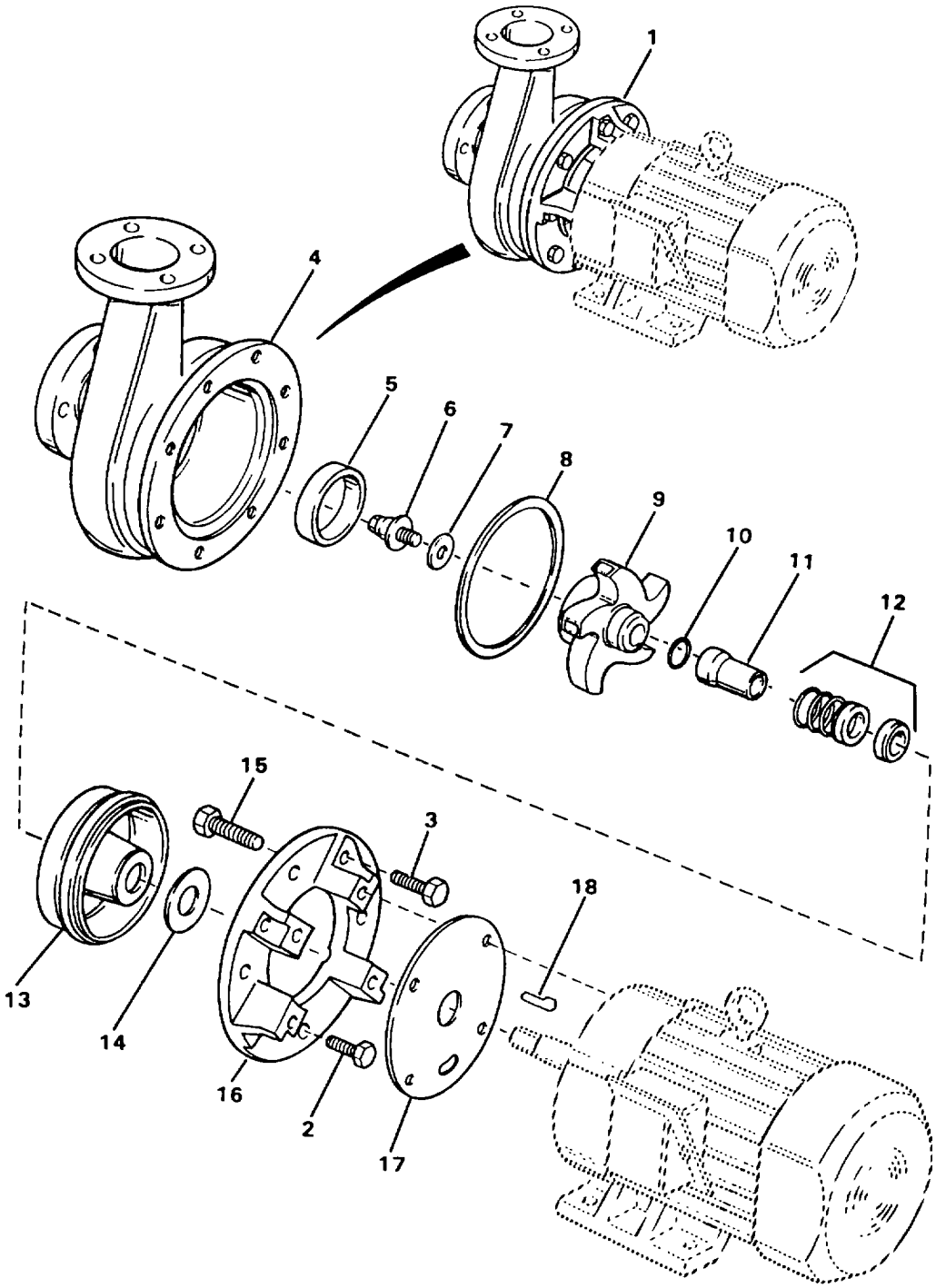

FIGURE 63. BOOSTER PUMP

(1) ITEM NO	(2) SMR CODE	(3) NSN	(4) CAGEC	(5) PART NUMBER	(6) DESCRIPTION AND USABLE ON CODES(UOC)	(7) QTY
					GROUP 02 WATER PURIFICATION SYSTEM	
					FIGURE 63. BOOSTER PUMP	
1	PBFFF	4320013464703	03306	2X1-1/2ZC2	..PUMP,CENTRIFUGAL BOOSTER.....	1
2	PAFZZ	5305012996602	03306	500-771	...SCREW,CAP,HEXAGON H.....	4
3	XDFZZ		03306	500-772	...SCREW,CAP STAINLESS STEEL.....	4
4	XAFZZ		03306	48-4-0075-01	...CASING,FLANGED.....	1
5	PBFZZ	4320006892809	03306	48-1-0011-02	...RING,WEARING.....	1
6	PAFZZ	5305008240951	03306	48-1-0127-01	...SCREW,IMPELLER BRONZE.....	1
7	PAFZZ	5330008237106	03306	500-405	...GASKET IMPELLER SCREW PART OF KIT P/N 48-1-0341.....	1
8	PAFZZ	5330013027671	03306	500-410	...GASKET CASING PART OF KIT P/N 48-1-0341.....	1
9	PBFZZ	4320013511668	03306	48-2-0006-02	...IMPELLER,PUMP,CENTR.....	1
10	PAFZZ		03306	500-983	...PACKING,PREFORMED BUNA-N, PART OF KIT P/N 48-1-0341.....	1
11	PAFZZ	4320006892935	03306	48-1-0372-01	...SLEEVE,SHAFT,PUMP PART OF KIT P/N 48-1-0341.....	1
12	KFFZZ		03306	500-974	...SEAL ASSEMBLY,SHAFT PART OF KIT P/N 48-1-0341.....	1
13	XDFZZ		03306	48-3-0133-01	...COVER,REAR.....	1
14	PBFZZ	5330013260781	03306	500-423-1	...DEFLECTOR,DIRT AND.....	1
15	PAFZZ	5305011557201	03306	500-774	...SCREW.....	4
16	XDFZZ		03306	48-3-0139-01	...ADAPTER.....	1
17	XDFZZ		03306	500-914	...PLATE,SPLASH.....	1
18	PBFZZ	5315012605614	03306	500-513	...KEY,WOODRUFF.....	1
19	PAFZZ		03306	48-1-0341	...SEAL KIT,SHAFT.....	1
					GASKET (1) 63-7.....	
					GASKET (1) 63-8.....	
					PACKING,PREFORMED (1) 63-10.....	
					SEAL ASSEMBLY,SHAFT (1) 63-12.....	
					SLEEVE, SHAFT (1) 63-11.....	

END OF FIGURE

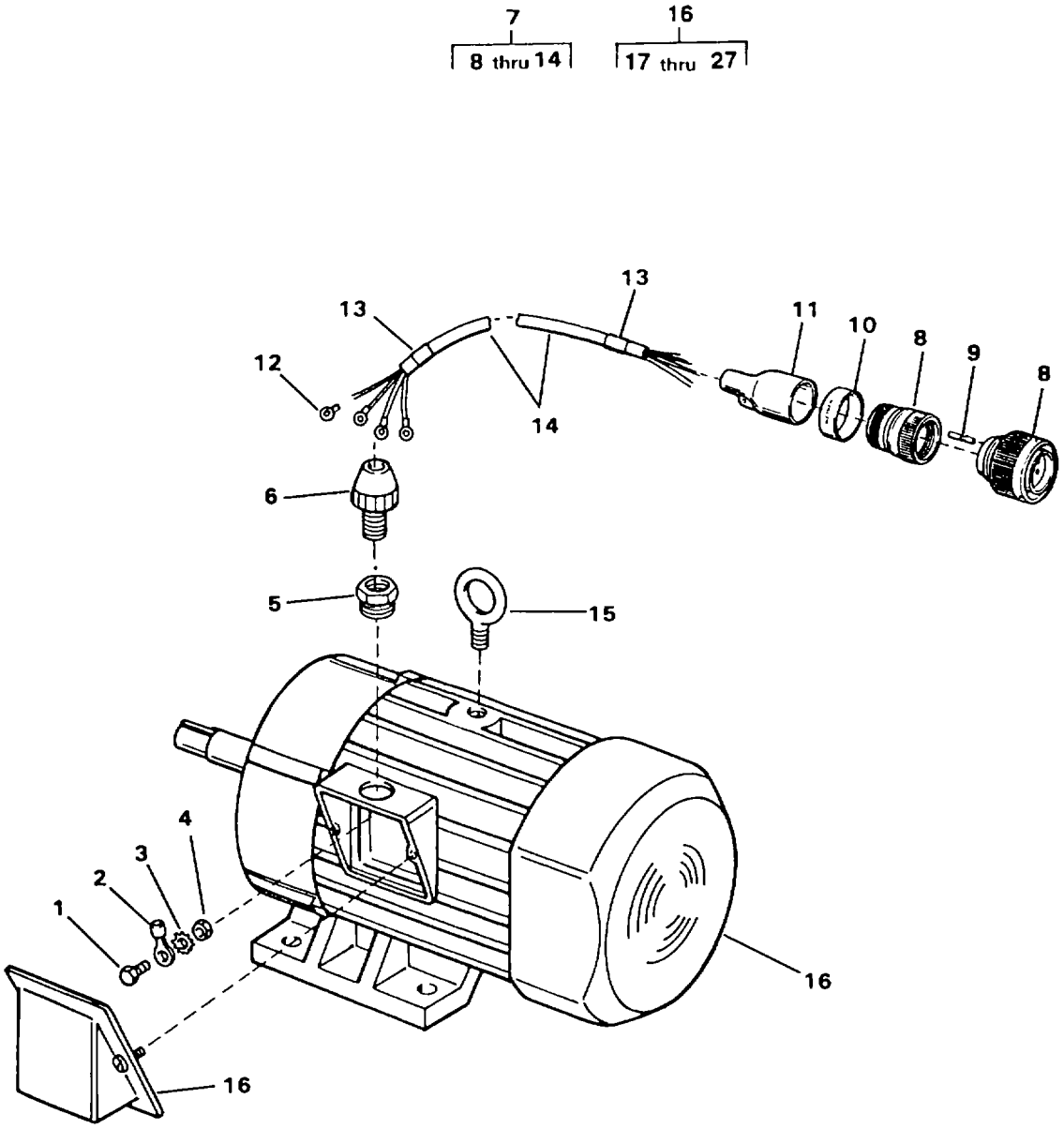

FIGURE 64. BOOSTER PUMP MOTOR (SHEET 1 OF 2)

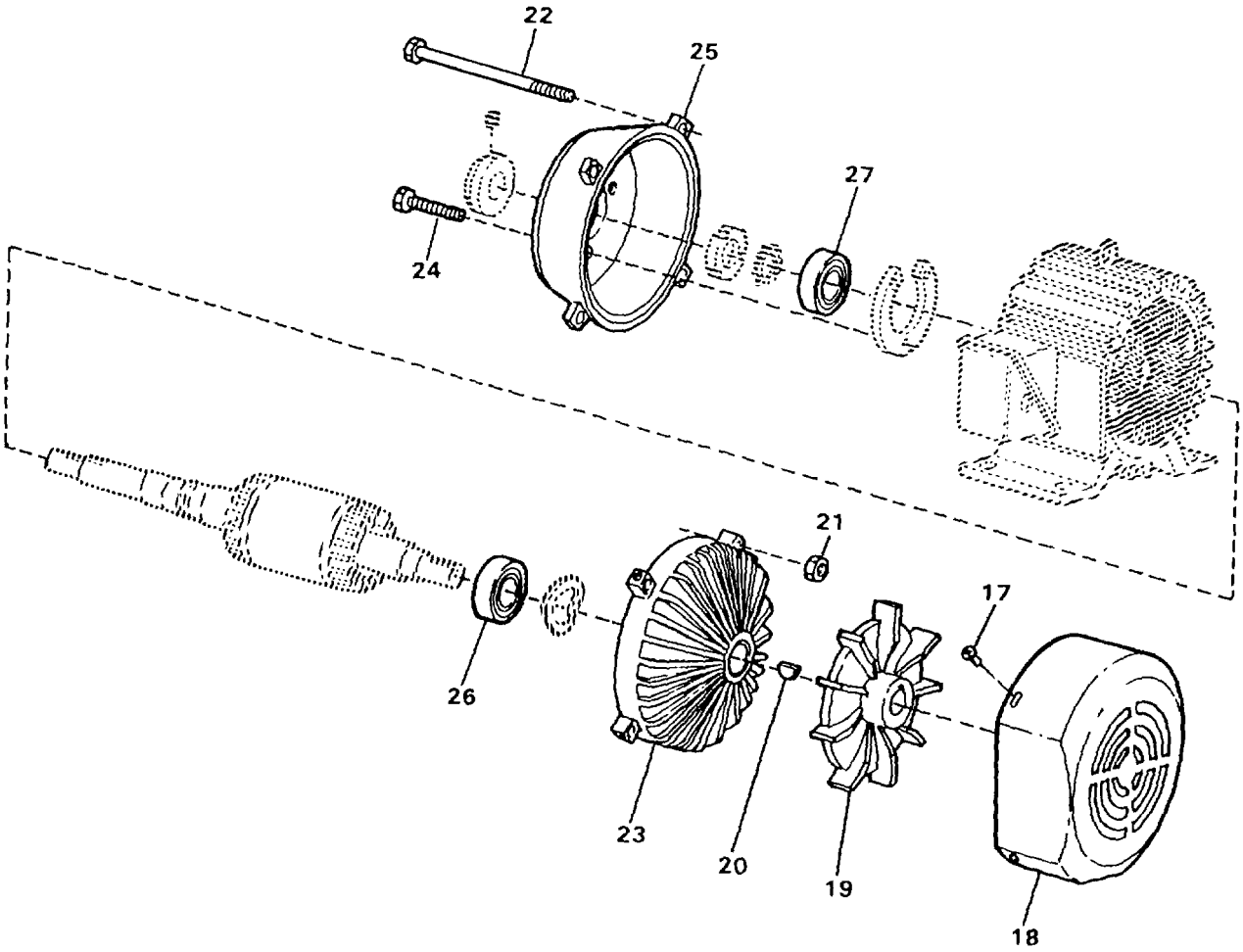

FIGURE 64. BOOSTER PUMP MOTOR (SHEET 2 OF 2)

(1) ITEM NO	(2) SMR CODE	(3) NSN	(4) CAGEC	(5) PART NUMBER	(6) DESCRIPTION AND USABLE ON CODES(UOC)	(7) QTY
					GROUP 02 WATER PURIFICATION SYSTEM FIG. 64 BOOSTER PUMP MOTOR	
1	PAFZZ	5305005766107	96906	MS35307-301	..SCREW,CAP,HEXAGON H.....	6
2	PAFZZ	5940002300515	96906	MS25036-154	..TERMINAL,LUG USED ON MOTOR LEADS.....	9
3	PAFZZ	5310005273634	96906	MS35335-61	..WASHER,LOCK.....	6
4	PAFZZ	5310009035966	96906	MS51971-1	..NUT,PLAIN,HEXAGON.....	6
5	PBFZZ	5975013585971	97403	13229E0784-3	..ADAPTER,ELECTRICAL 1 INCH MPT X 0.75 INCH FPT, CLS 150, 316 SS.....	1
6	PBFZZ	5975013520286	97403	13229E0738-1	..STUFFING TUBE.....	1
7	XDOFF		97403	13229E1260-15	..HARNESS ASSEMBLY W41.....	1
8	PBFFF	5935013500159	17549	CA3106E20-4P-B-02-57	...CONNECTOR,PLUG,ELEC P23.....	1
9	PAFZZ	5999013448759	71468	030-8588-000	....CONTACT,ELECTRICAL PART OF KIT P/N 120-02593-P.....	4
10	XDFZZ		09647	120-02433-98	...MARKER.....	1
11	PBFZZ	5970012268102	06090	202K163-3/42	...INSULATION SLEEVING.....	1
12	PAFZZ	5940001434777	96906	MS25036-157	...TERMINAL,LUG.....	4
13	XDFZZ		09647	120-02433-48	...MARKER.....	2
14	MFFZZ		09647	120-07639-2-W41	...CABLE CUT TO LENGTH FROM BULK, P/N 13229E0741-2.....	1
15	PBFZZ	5306013515167	97403	13229E1131-1	..BOLT,EYE.....ETN	1
15	PBFZZ		97403	13229E1131-3	..BOLT,EYE.....FKD	1
16	PBFFF	6105013540723	11349	6-333519	..MOTOR,ALTERNATING C.....	1
17	XDFZZ		0D5S3	4-40114332	...SCREW.....	3
18	PBFZZ	4140013510964	0D5S3	2-33732401	...HOUSING,CENTRIFUGAL.....	1
19	PBFZZ	4140013505618	0D5S3	1-35945701	...FAN,CENTRIFUGAL.....	1
20	PAOZZ	5315006165522	96906	MS35756-12	...KEY,WOODRUFF.....	1
21	XDFZZ		0D5S3	4-10006212	...NUT,HEX.....	4
22	XDFZZ		0D5S3	4-34385401	...BOLT,THRU.....	4
23	XDOZZ		0D5S3	2-3375001	...HOUSING,FAN END.....	1
24	XDFZZ		0D5S3	4-40114332	...SCREW.....	4
25	XDFZZ		0D5S3	2-316388-01	...HOUSING.....	1
26	PAFZZ	3120013522024	0D5S3	4-20000446	...BEARING,SLEEVE.....	1
27	PAFZZ	3120013522039	0D5S3	4-10000640	...BUSHING,SLEEVE.....	1

END OF FIGURE

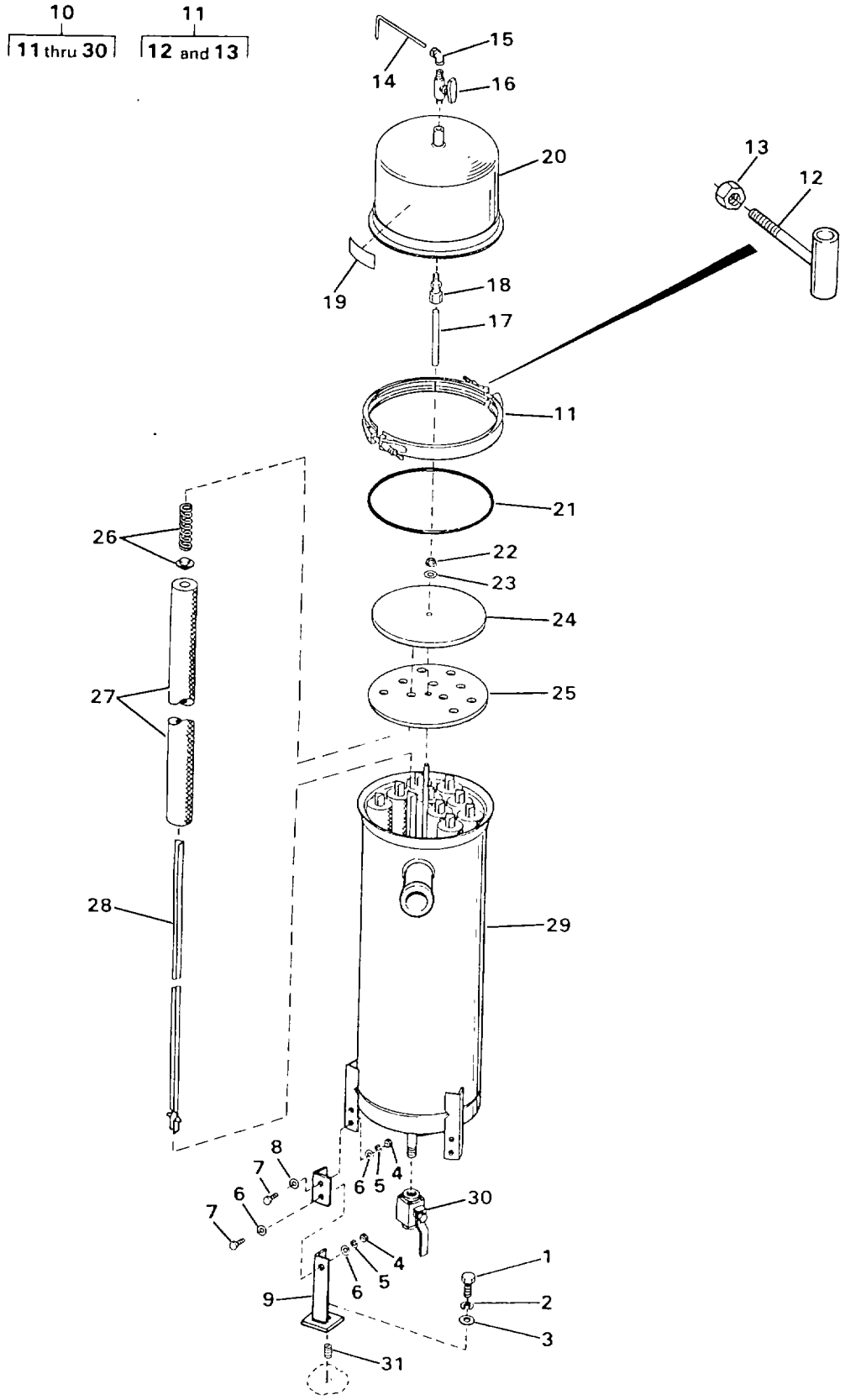

FIGURE 65. CARTRIDGE FILTER ASSEMBLY

(1) ITEM NO	(2) SMR CODE	(3) NSN	(4) CAGEC	(5) PART NUMBER	(6) DESCRIPTION AND USABLE ON CODES(UOC)	(7) QTY
					GROUP 02 WATER PURIFICATION SYSTEM	
					FIG. 65 CARTRIDGE FILTER ASSEMBLY	
1	PAOZZ	5305009477051	96906	MS35307-485	.SCREW,CAP,HEXAGON H.....	3
2	PAOZZ	5310009370454	96906	MS35338-146	.WASHER,LOCK.....	3
3	PAOZZ	5310005847799	96906	MS15795-822	.WASHER,FLAT.....	3
4	PAOZZ	5310009138881	96906	MS51971-3	.NUT,PLAIN,HEXAGON.....	12
5	PAOZZ	5310009847042	96906	MS35338-141	.WASHER,LOCK.....	12
6	PAOZZ	5310007737618	96906	MS15795-814	.WASHER,FLAT.....	24
7	PAOZZ	5305005765417	96906	MS35307-360	.SCREW,CAP,HEXAGON H.....	12
8	XDOZZ		97403	13229E1053	.BRACKET.....	3
9	XDOZZ		97403	13229E1091	.LEG,FILTER.....	3
10	XDOFF		97403	13229E0037	.FILTER ASSY,CRTG.....	1
11	XDOOO		00624	MV86144-KJ-1316C	..COUPLING ASSY QUICK DISCONNECT....	1
12	PBOZZ	5306013517744	00624	56555AW125-500	...BOLT,TEE HEAD.....	1
13	PBOZZ	5310013532582	00624	56541A6C-C	....NUT,PLAIN,HEX.....	1
14	XDOZZ		09647	120-50089-3	..TUBING,BENT.....	1
15	PAOZZ	4730013509030	54938	6-6DBZ-SS	..ELBOW,PIPE TO TUBE.....	1
16	PAOZZ	4820013509009	97403	13229E0679-2	..VALVE,PLUG.....	1
17	XDOZZ		09647	120-51259-1	..TUBING,STRAIGHT.....	1
18	PAOZZ	4730006915460	97403	13229E0682-7	..ADAPTER,STRAIGHT,PI.....	1
19	XDOZZ		97403	13229E1335-4	..PLATE,ID CARTRIDGE FILTER.....	1
20	XDOZZ		97403	13229E0077	..SHELL ASSY,TOP.....	1
21	PAOZZ	5330013521160	97403	13229E0117	..O-RING.....	1
22	PAOZZ	5310013513476	97403	13229E0037-4	..NUT,PLAIN,HEXAGON 0.5-13 UNC-	1
					-2B, BRONZE.....	
23	PAOZZ	5310013513532	97403	13229E0037-17	..WASHER,FLAT 0.5 INCH BRONZE.....	1
24	XDOZZ		97403	13229E0014	..PLATE,PRESSURE.....	1
25	PBOZZ	5340013527262	97403	13229E0015	..PLATE,MOUNTING,FLAT.....	1
26	PAOZZ	5340013533586	97403	13229E0116	..SEAT,HELICAL COMPRE.....	10
27	PAOZZ	4330013509102	97403	13229E0181	..FILTER ELEMENT,FLUI.....	10
28	XDOZZ		97403	13229E0179	..GUIDE,SHAFT.....	10
29	XDOZZ		97403	13229E0078	..SHELL,BOTTOM.....	1
30	PAOZZ	4820013512948	97403	13229E0123	..VALVE,BALL.....	1
31	PAFZZ	5325000452812	96906	MS122128	.INSERT,SCREW THREAD.....	3

END OF FIGURE

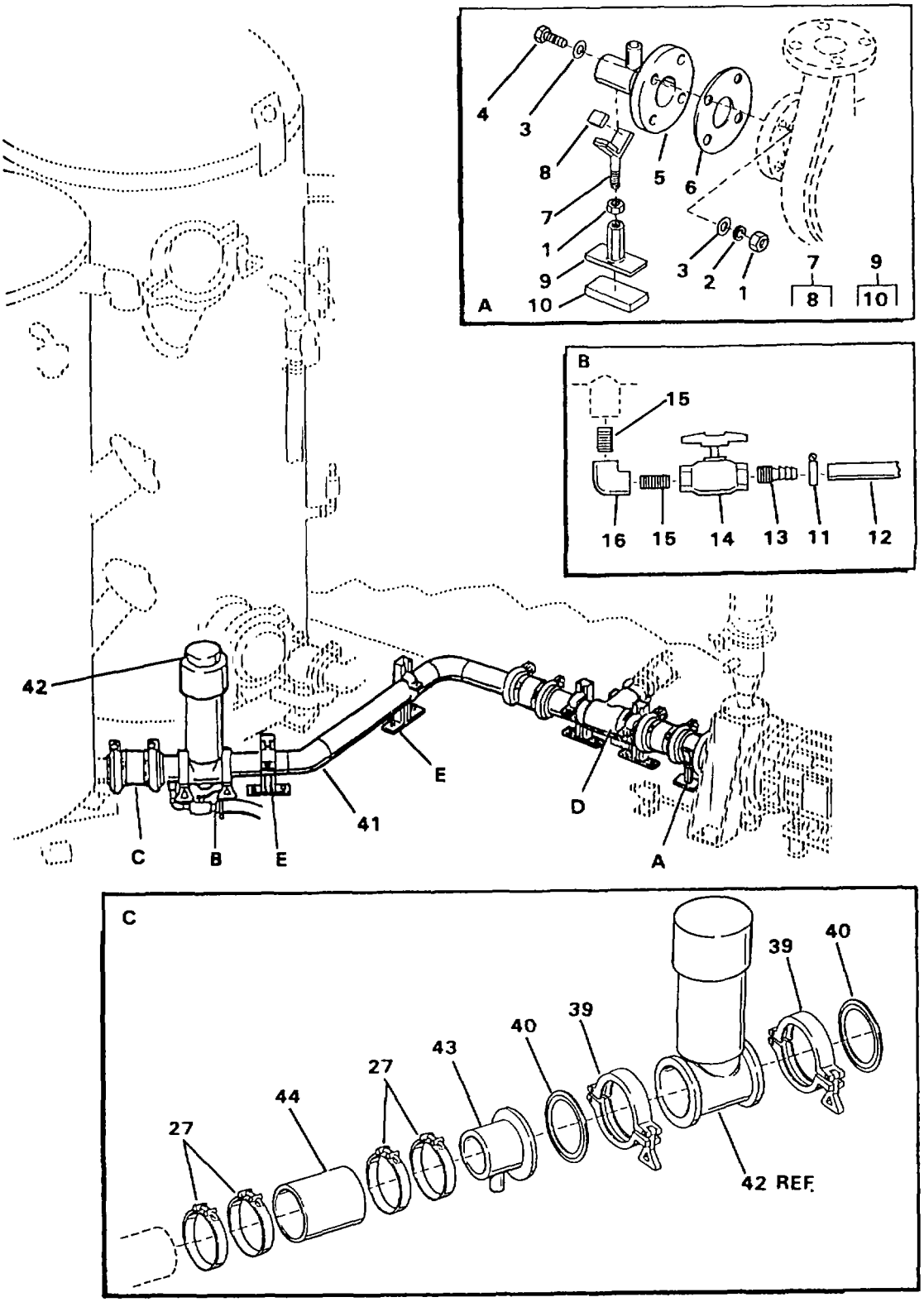

FIGURE 66. BOOSTER PUMP SUCTION FEED (SHEET 1 OF 2)

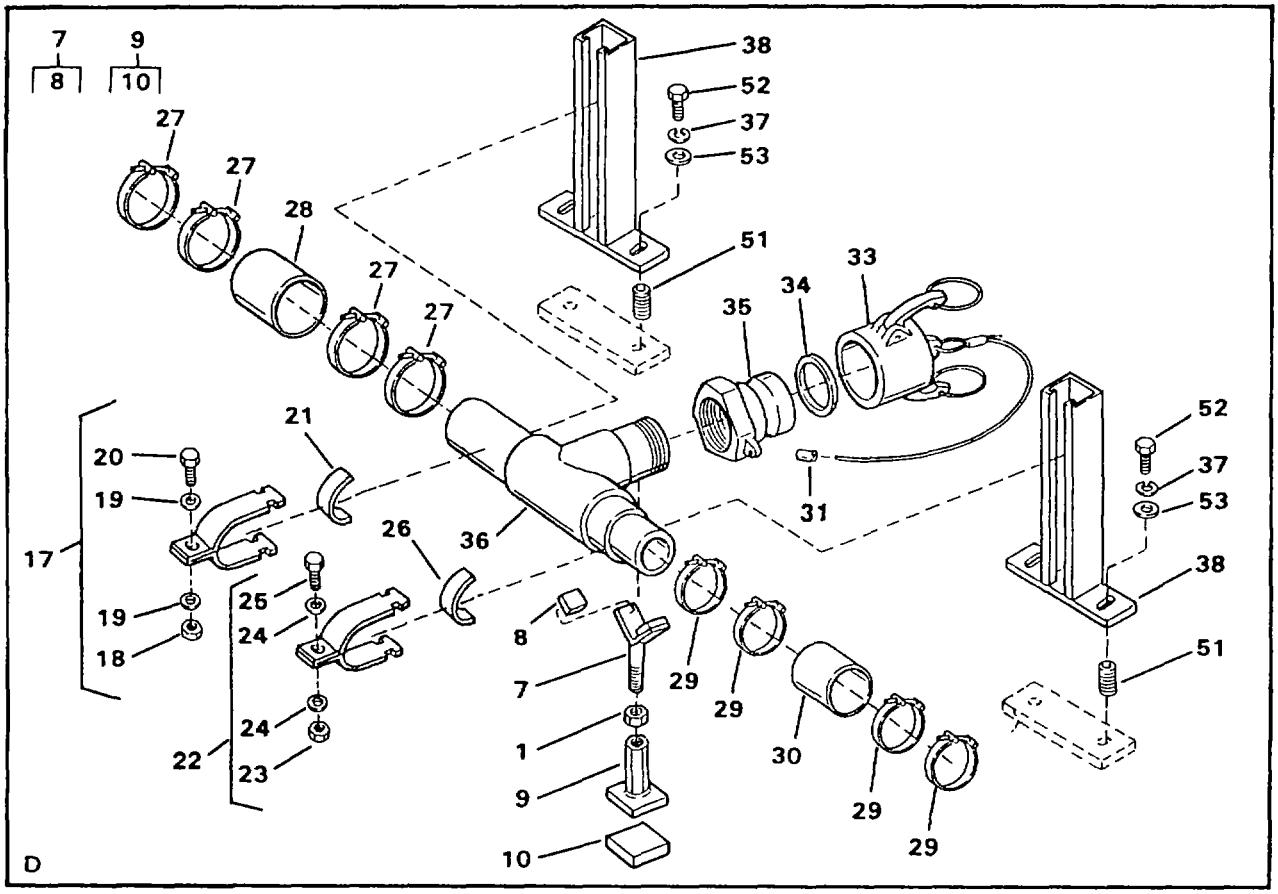

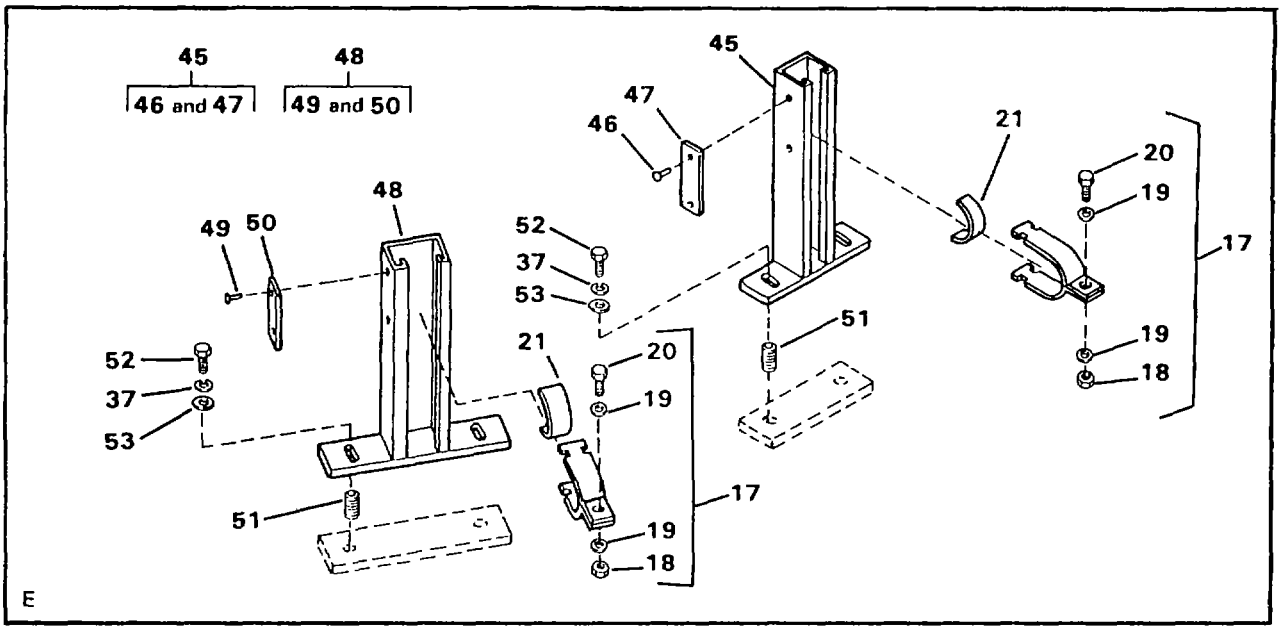

FIGURE 66. BOOSTER PUMP SUCTION FEED (SHEET 2 OF 2)

(1) ITEM NO	(2) SMR CODE	(3) NSN	(4) CAGEC	(5) PART NUMBER	(6) DESCRIPTION AND USABLE ON CODES(UOC)	(7) QTY
					GROUP 02 WATER PURIFICATION SYSTEM FIG. 66 BOOSTER PUMP SUCTION FEED	
1	PAOZZ	5310007646609	96906	MS51971-7	..NUT,PLAIN,HEXAGON.....	6
2	PAOZZ	5310009370453	96906	MS35338-145	..WASHER,LOCK.....	4
3	PAOZZ	5310006143505	96906	MS15795-820	..WASHER,FLAT.....	8
4	PAOZZ	5305009257853	96906	MS35307-465	..SCREW,CAP,HEXAGON H.....	4
5	PBOZZ	4710013507665	97403	13229E0334	..PIPE,METALLIC.....	1
6	PAOZZ	5330013516363	97403	13229E0702	..GASKET.....	1
7	XDOZZ		97403	13229E1021	..PIPE SUPPORT,UPPER.....	2
8	MOOZZ		97403	13229E1021-1	...GASKET CUT TO LENGTH FROM BULK, P/N ASTM D2000 MLBC614, 0.97 INCH THICK.....	1
9	XDOZZ		97403	13229E1020	..PIPE SUPPORT,LOWER.....	2
10	MOOZZ		97403	13229E1020-3	...GASKET CUT TO LENGTH FROM BULK, P/N ASTM D2000 MLBC614, 0.375 INCH THICK.....	1
11	PAOZZ	4730011465901	76599	4812SS	..CLAMP,HOSE.....	1
12	MOOZZ		97403	13229E0086-30	..HOSE CUT TO LENGTH FROM BULK, P/N 028870.....	1
13	PAOZZ	4730012064814	72661	RST-5	..ADAPTER,STRAIGHT,PI.....	1
14	PAOZZ	4820013501564	97403	13229E1303-1	..VALVE,BALL.....	1
15	PBOZZ		97403	13229E1255-6	..NIPPLE,PIPE.....	2
16	PBOZZ	4730013518084	97403	13229E0086-27	..ELBOW,PIPE 0.75 NOM PIPE SIZE, 90 DEGREE CLS 150 316 SS.....	1
17	XOOZZ		97403	13229E0685-6	..CLAMP,PIPE.....	3
18	PAOZZ	5310002416606	96906	MS17830-5C	...NUT,SELF-LOCKING, HE 5/16-18 UNC-2B, SS.....	3
19	PAOZZ	5310006255756	96906	MS15795-812	....WASHER,FLAT.....	2
20	PAOZZ	5306006379675	96906	MS35307-332	...BOLT,MACHINE.....	1
21	MOOZZ		97403	13229E0086-9	..CUSHION CUT FROM BULK, P/N P-2600.....	3
22	XDOZZ		97403	13229E0685-5	..CLAMP,TUBE.....	1
23	PBOZZ	5310002416606	96906	MS17830-5C	...NUT,SELF-LOCKING, HE 5/16-18 UNC-2B.....	1
24	PAOZZ	5310006255756	96906	MS15795-812	...WASHER,FLAT.....	2
25	PAOZZ	5306006379675	96906	MS35307-332	...BOLT,MACHINE.....	1
26	MOOZZ		09647	120-52328-2	..CUSHION CUT TO LENGTH FROM BULK, P/N P-2600.....	1
27	XDOZZ		97403	13229E0809-4	..CLAMP,T-BOLT.....	8
28	MOOZZ		09647	120-02599-69	..HOSE CUT TO LENGTH FROM BULK, P/N 35W-2 7/8.....	1
29	PAOZZ	5340013951398	97403	13229E0809-7	..CLAMP,LOOP.....	4
30	MOOZZ		09647	120-02599-70	..HOSE CUT TO LENGTH FROM BULK, P/N 13229E0775-2.....	1
31	PAOZZ	4030001455721	96906	MS51844-64	..SWAGING SLEEVE,WIRE.....	2
32	MOOZZ		09647	120-02598-6	..CABLE CUT TO LENGTH FROM BULK, P/N 13229E1147-1.....	1
33	PAOZZ	4730005908083	96906	MS27028-14	..CAP,QUICK DISCONNEC.....	1
34	PAOZZ	5330013496191	97403	13229E0857-5	..GASKET.....	1
35	PAOZZ	4730010216346	96906	MS27020-14	..COUPLING HALF,QUICK.....	1
36	PBOZZ	4730013508944	97403	13229E0335	..TEE,TUBE.....	1

(1) ITEM NO	(2) SMR CODE	(3) NSN	(4) CAGEC	(5) PART NUMBER	(6) DESCRIPTION AND USABLE ON CODES(UOC)	(7) QTY
37	PAOZZ	5310009847042	96906	MS35338-141	..WASHER,LOCK.....	6
38	XDOZZ		97403	13229E0333	..SUPPORT,PIPE.....	2
39	PBOZZ	5340013528169	97403	13229E0692-4	..CLAMP,LOOP.....	2
40	PAOZZ	5330013516364	97403	13229E0693-4	..GASKET.....	2
41	PBOZZ	4710013507666	97403	13229E0336	..PIPE,BENT,METALLIC.....	1
42	PAOFF	4810013476842	3Z033	EGPCCA3.0	..VALVE,BUTTERFLY SEE FIGURE ETN 73 FOR BREAKDOWN.....	1
42	PAOFF	4820014464092	OLU89	B53-6300T-3-X-316L-20-5-31	..VALVE,BUTTERFLY SEE FIGURE FKD 73 FOR BREAKDOWN.....	1
43	PBOZZ	4710013507667	97403	13229E0337	..PIPE,METALLIC.....	1
44	MOOZZ		09647	120-02599-67	..HOSE CUT TO LENGTH FROM BULK, P/N 35W-2 7/8.....	1
45	XDOZZ		97403	13229E1199	..SUPPORT,PIPE.....	1
46	PAOZZ	5320013490933	97403	13229E0350-1	...RIVET,BLIND.....	2
47	XDOZZ		97403	13229E0782-87	...PLATE,ID BACKWASH HYPOCHLORITE CHECK.....	1
48	XDOZZ		97403	13229E1200	..SUPPORT,PIPE.....	1
49	PAOZZ	5320013490933	97403	13229E0350-1	...RIVET,BLIND.....	2
50	XDOZZ		97403	13229E0782-152	...PLATE,ID.....	1
51	PAOZZ	5325009907157	96906	MS122163	..INSERT,SCREW THREAD.....	8
52	PAOZZ	5305007175467	96906	MS35307-362	..SCREW,CAP,HEXAGON H.....	8
53	PAOZZ	5310007737618	96906	MS15795-814	..WASHER,FLAT.....	8

END OF FIGURE

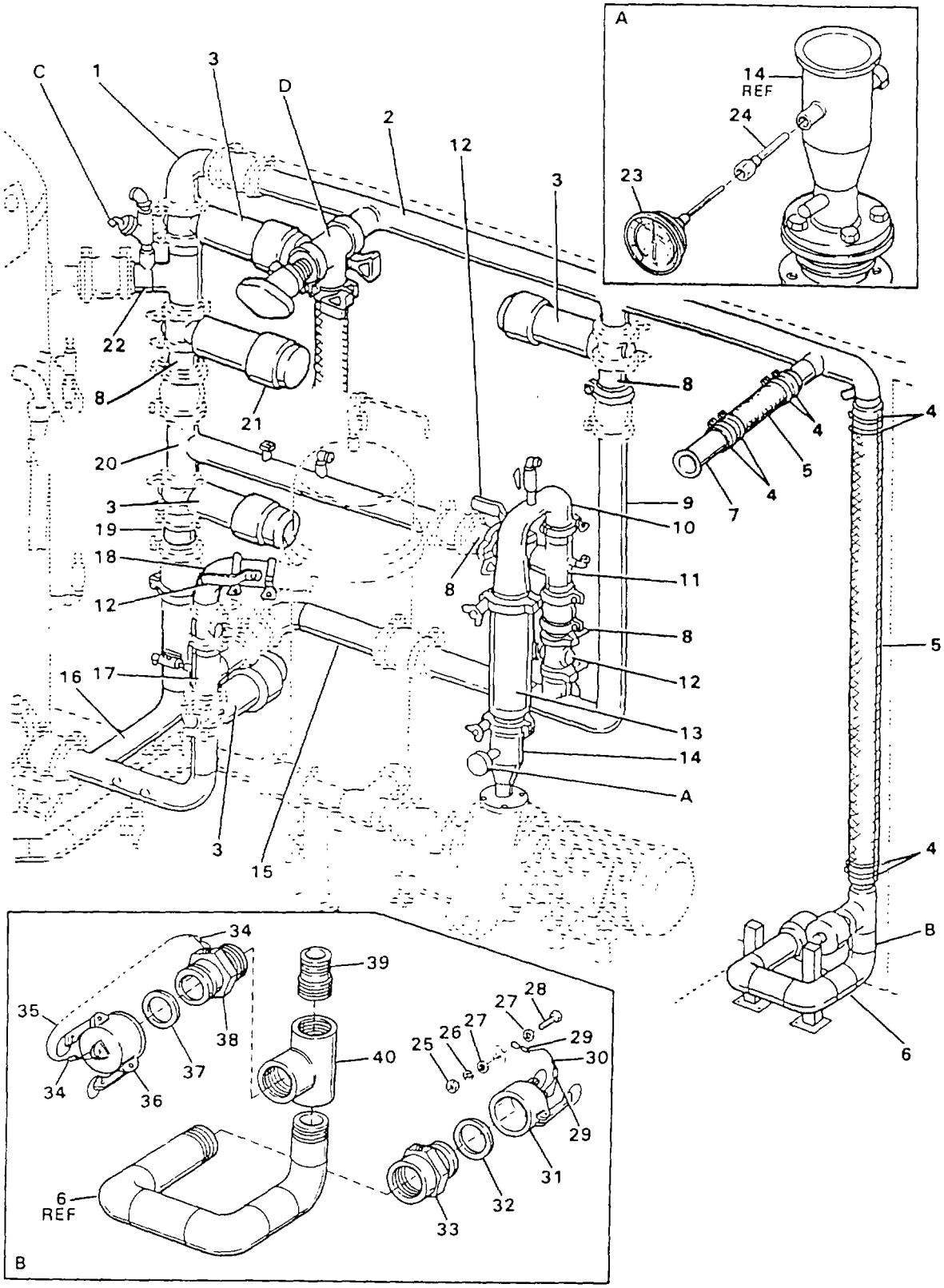

FIGURE 67. BOOSTER PUMP DISCHARGE (SHEET 1 OF 9)
(MODEL ETN ONLY)

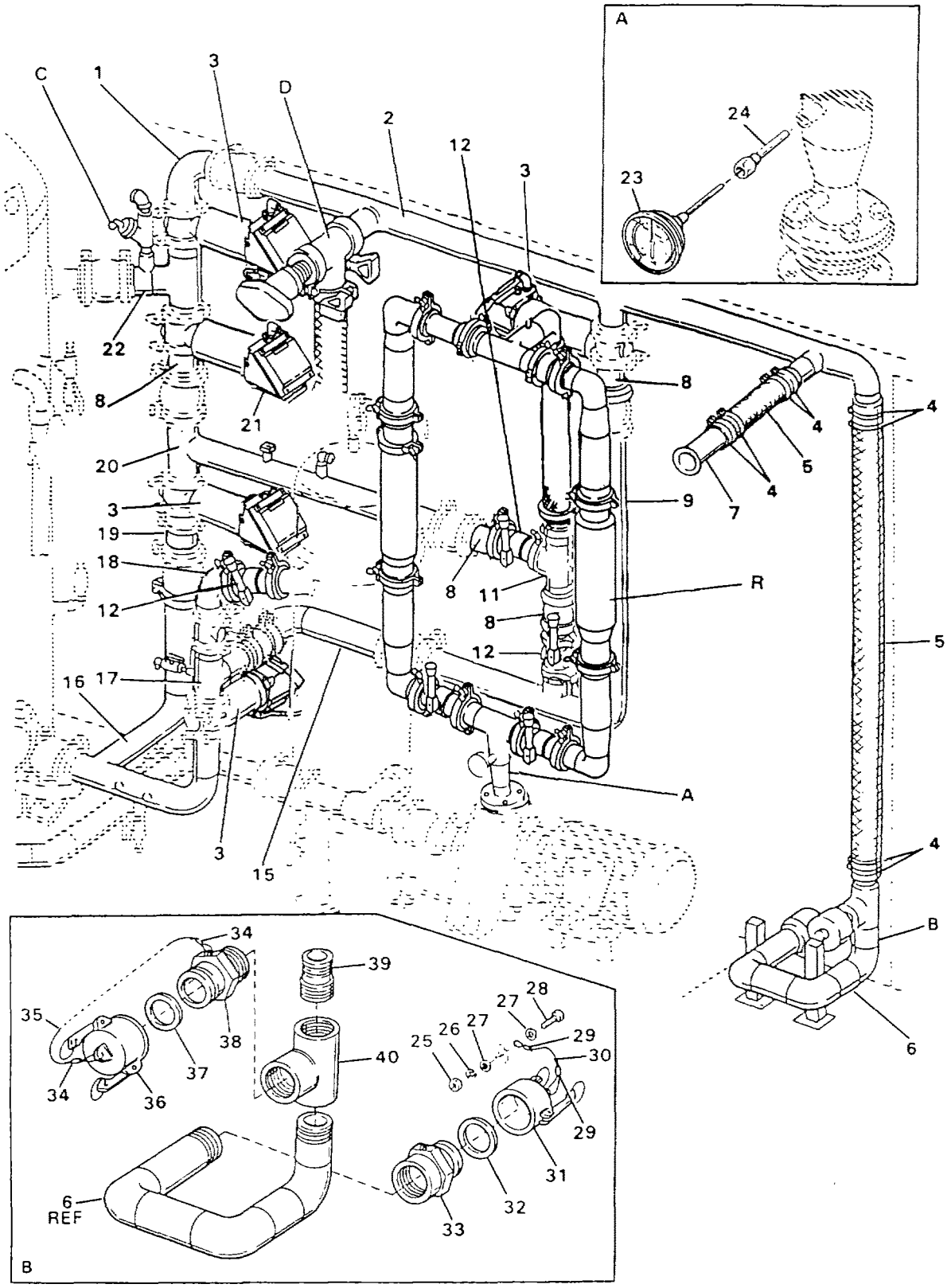

FIGURE 67. BOOSTER PUMP DISCHARGE (SHEET 2 OF 9)
(MODEL FKD ONLY)

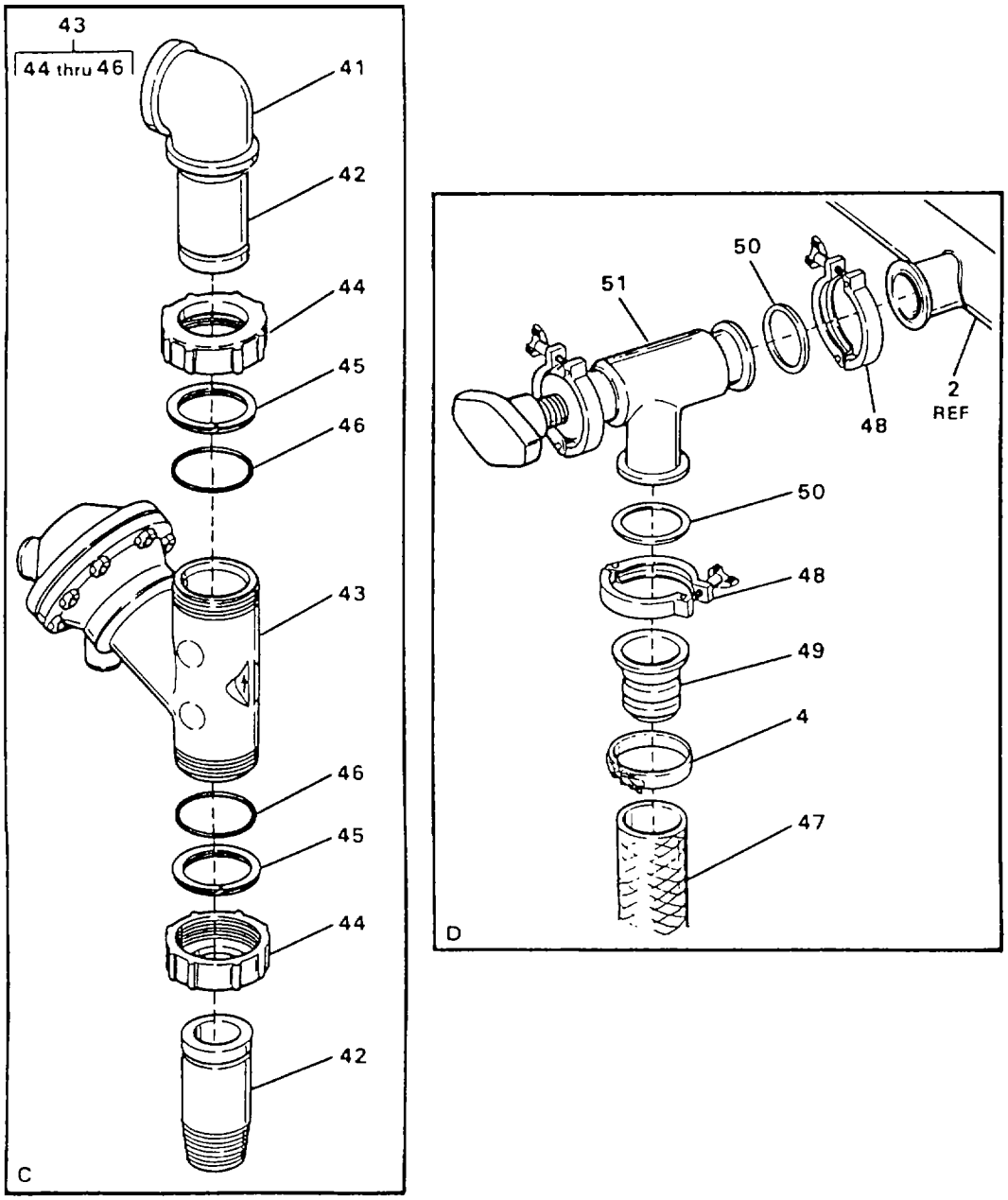

FIGURE 67. BOOSTER PUMP DISCHARGE (SHEET 3 OF 9)

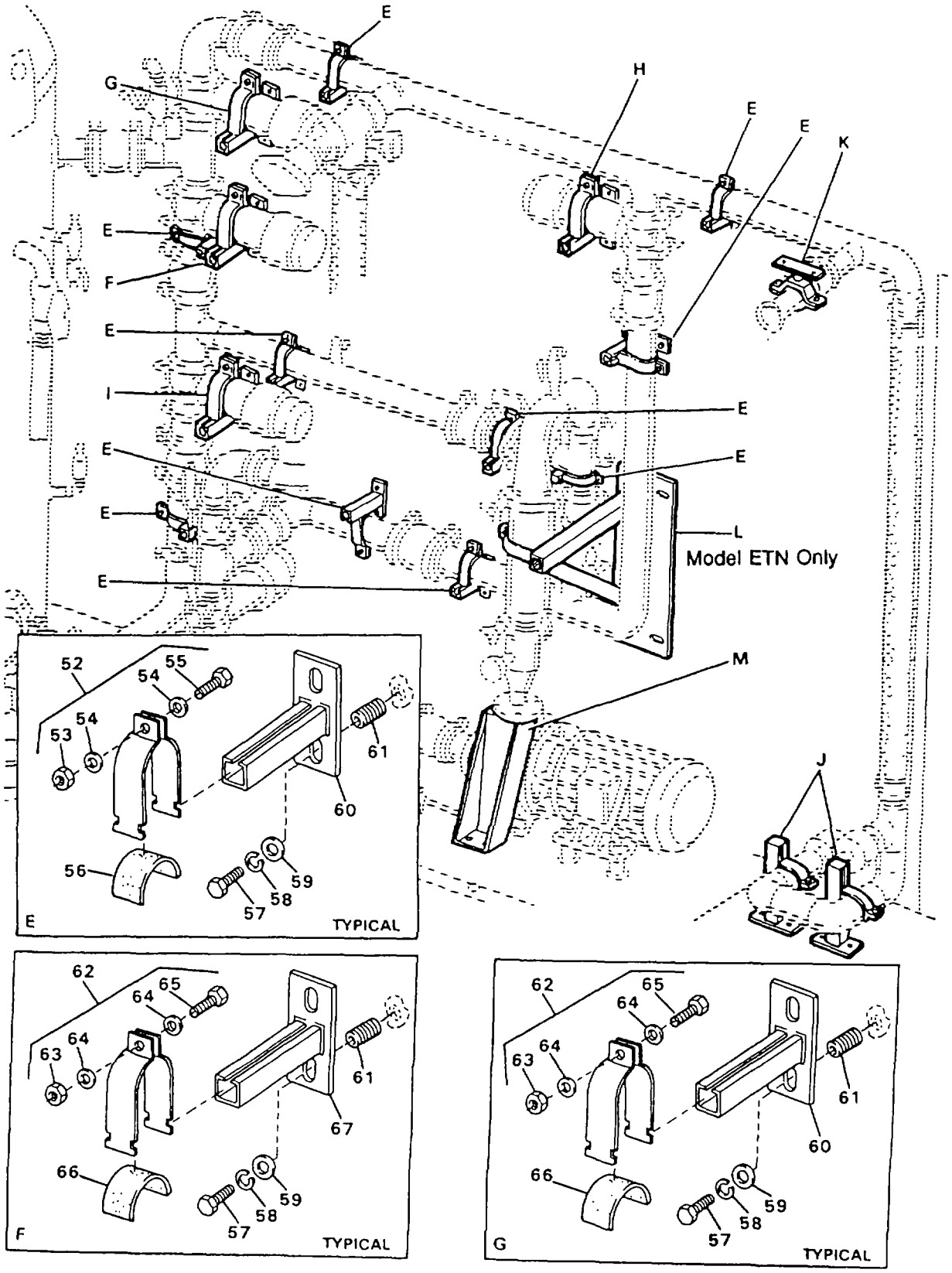

FIGURE 67. BOOSTER PUMP DISCHARGE (SHEET 4 OF 9)

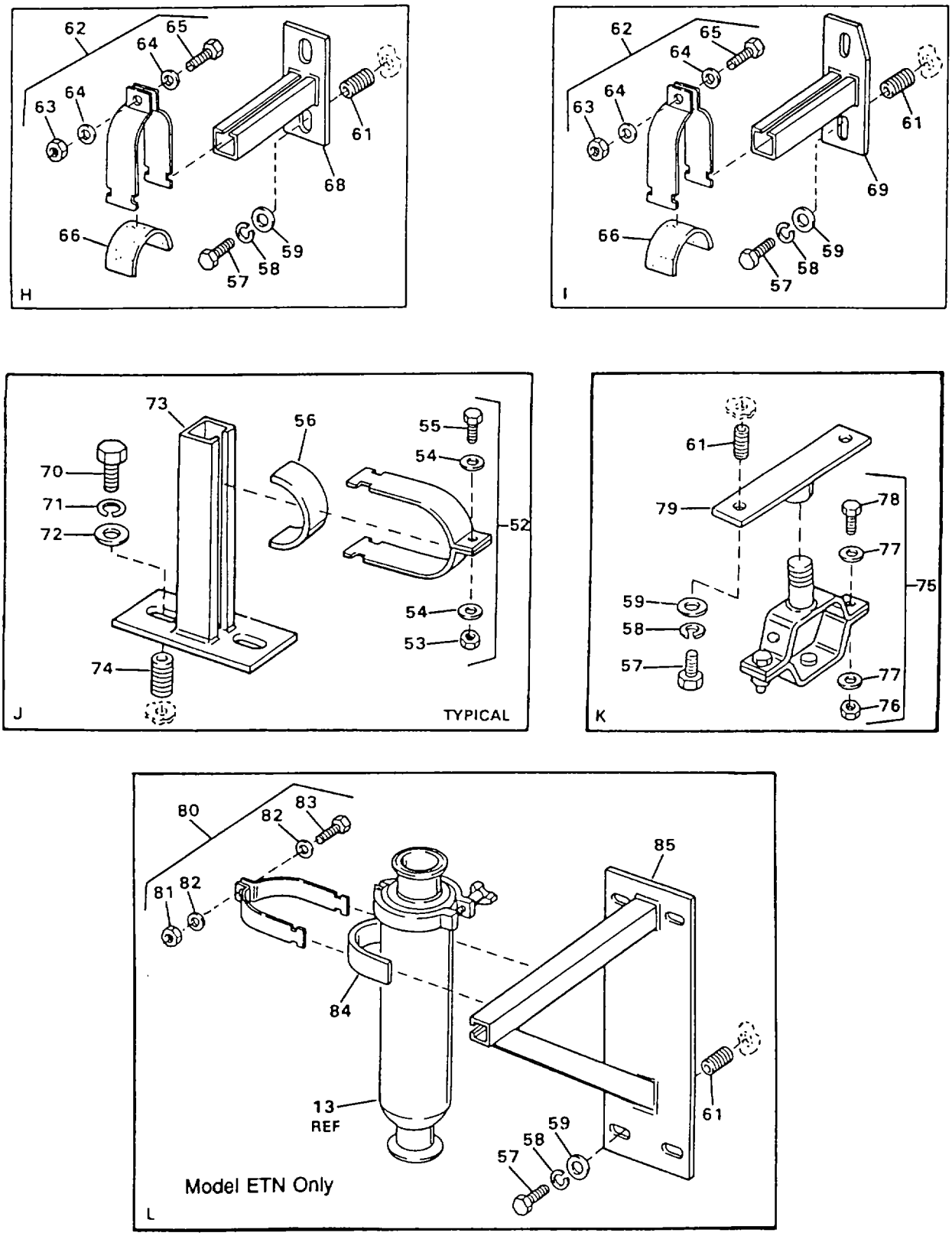

FIGURE 67. BOOSTER PUMP DISCHARGE (SHEET 5 OF 9)

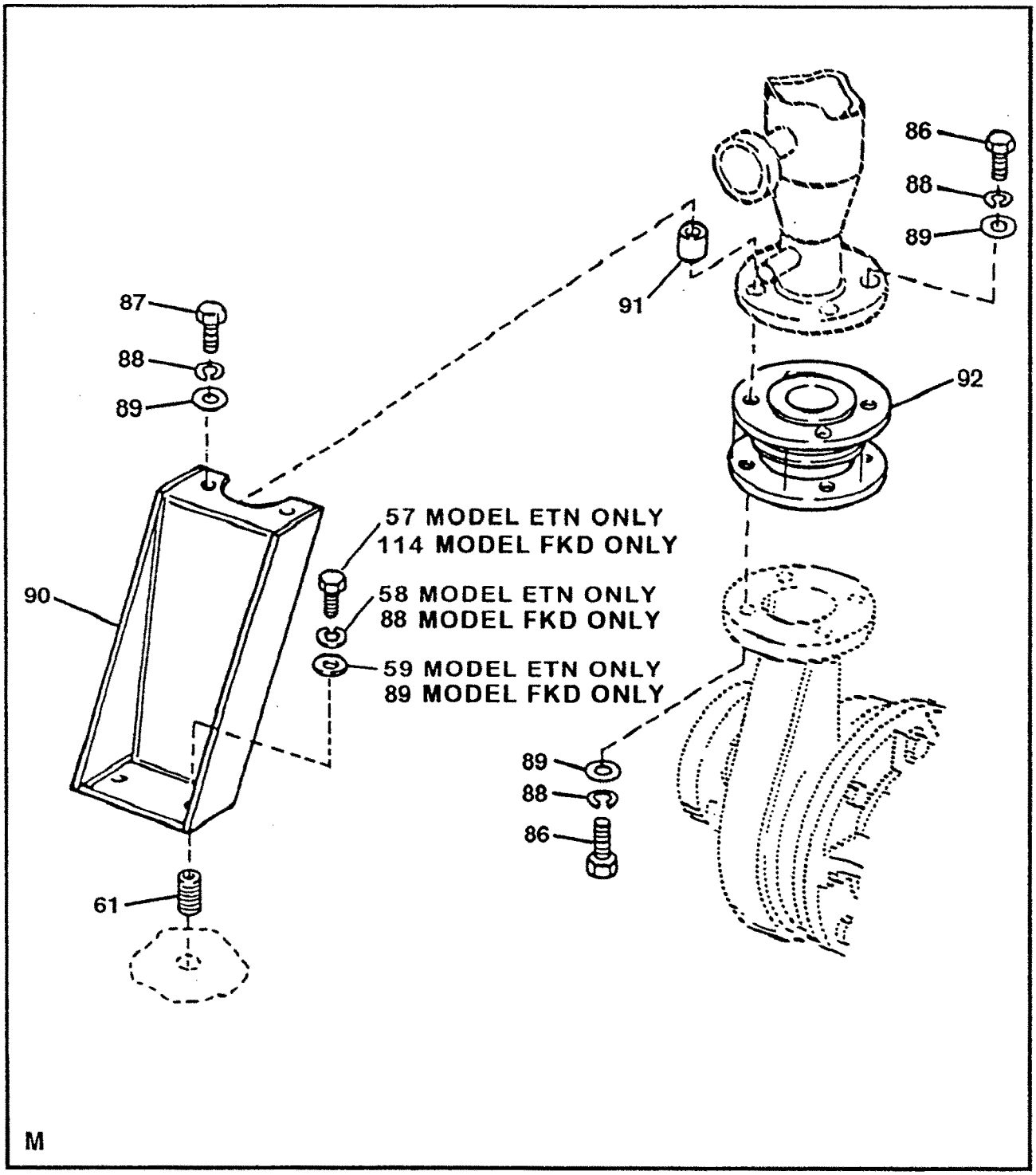

FIGURE 67. BOOSTER PUMP DISCHARGE (SHEET 6 OF 9)

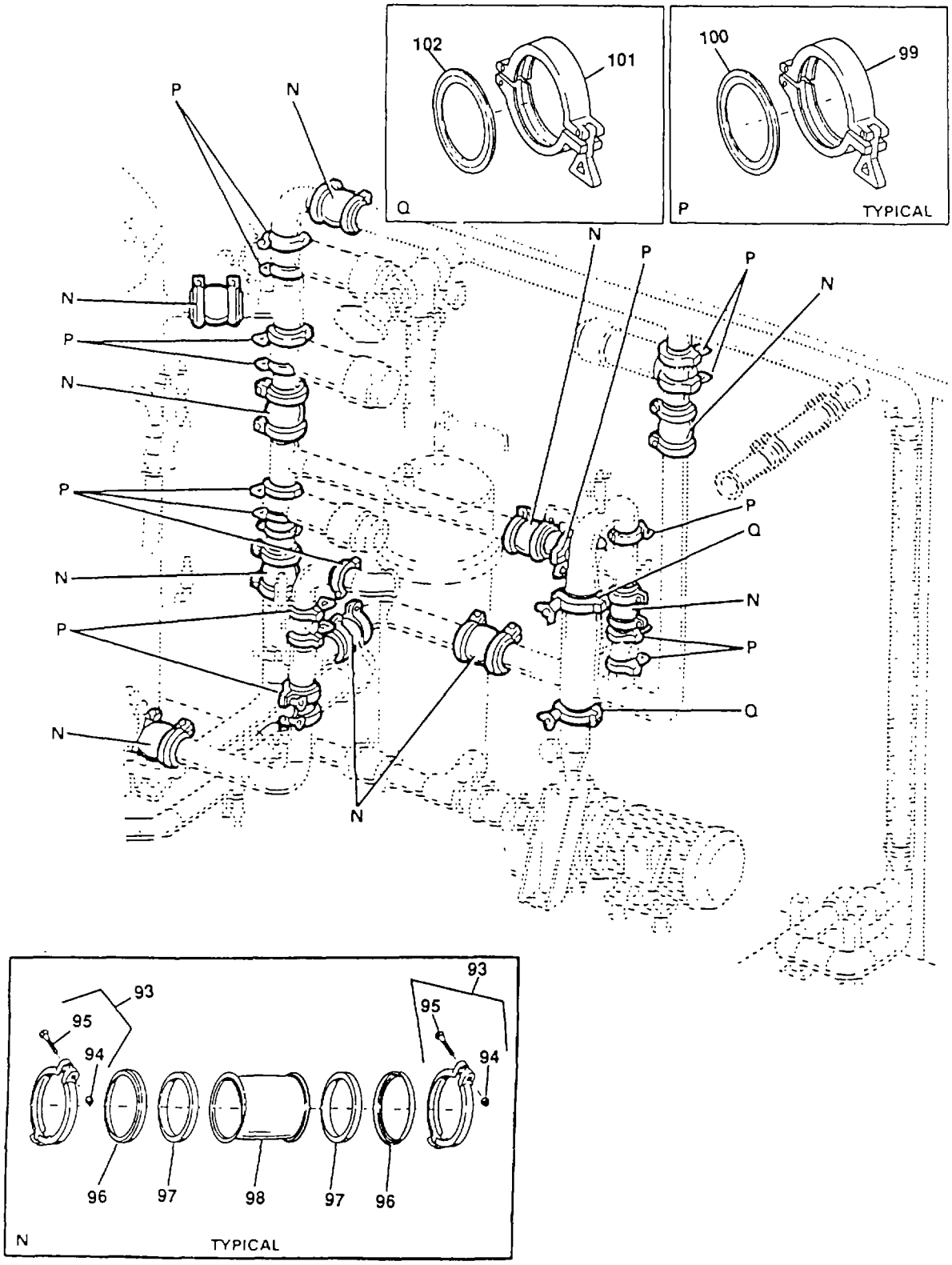

FIGURE 67. BOOSTER PUMP DISCHARGE (SHEET 7 OF 9)
(MODEL ETN ONLY)

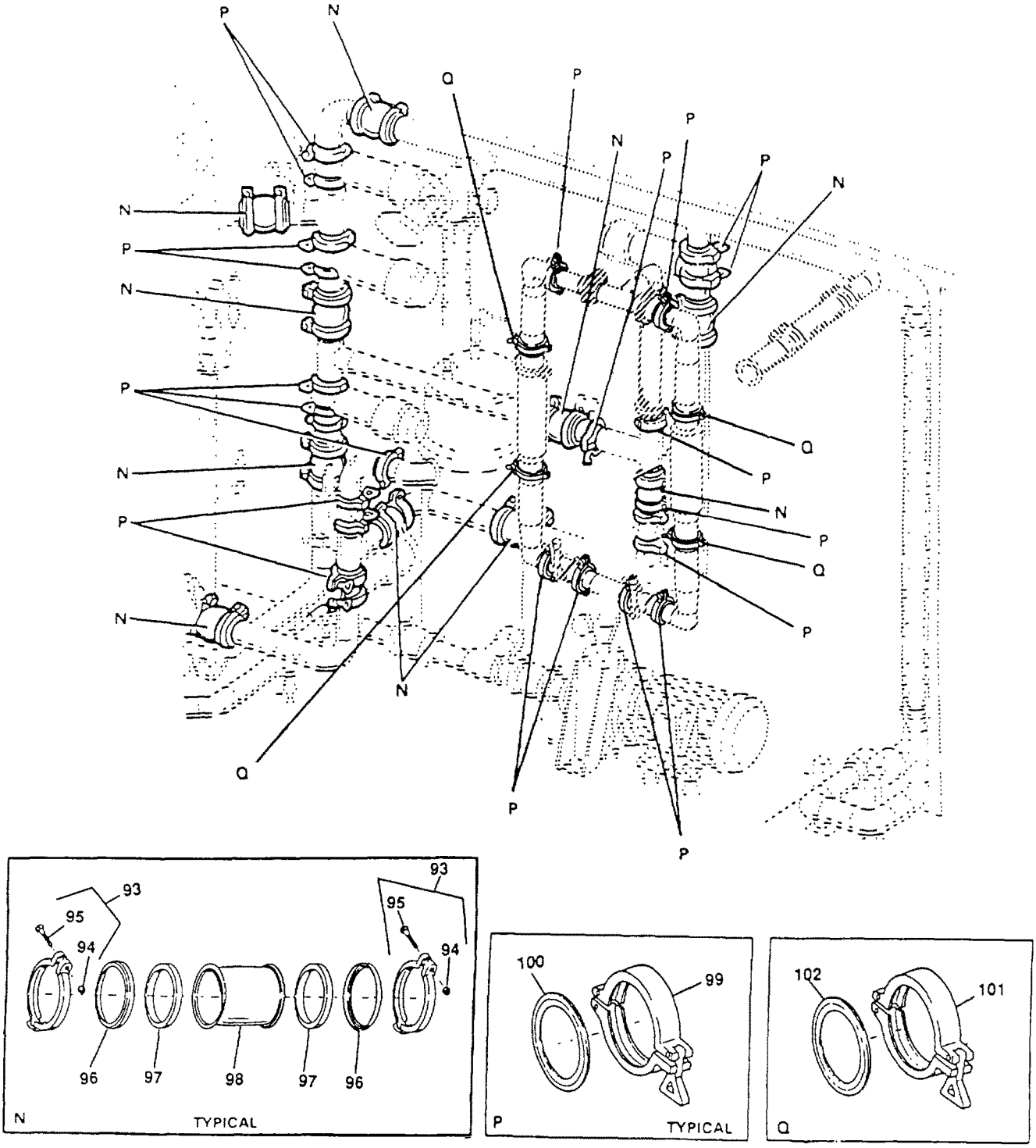

FIGURE 67. BOOSTER PUMP DISCHARGE (SHEET 8 OF 9)
(MODEL FKD ONLY)

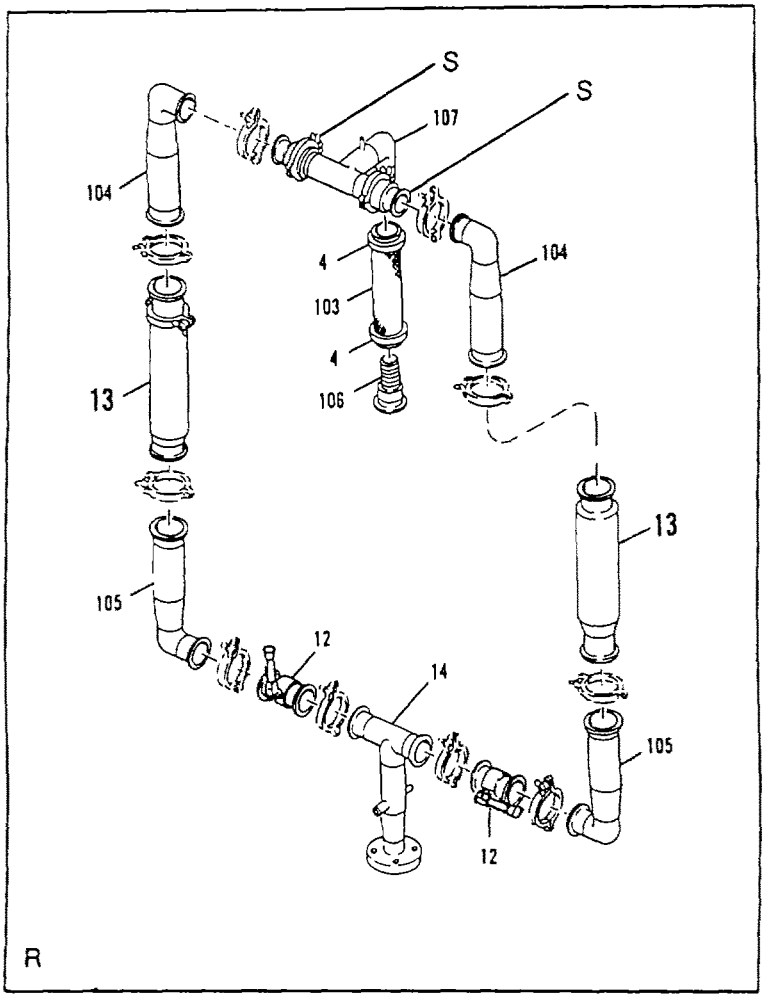

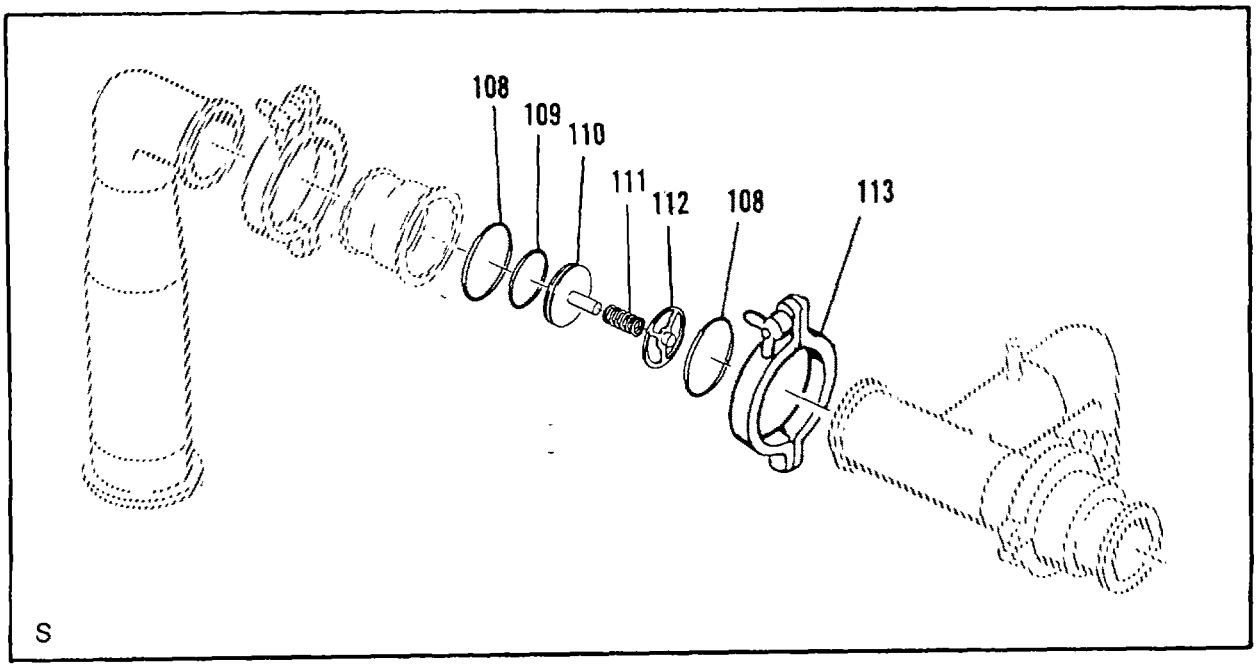

FIGURE 67. BOOSTER PUMP DISCHARGE (SHEET 9 OF 9)
(MODEL FKD ONLY)

(1) ITEM NO	(2) SMR CODE	(3) NSN	(4) CAGEC	(5) PART NUMBER	(6) DESCRIPTION AND USABLE ON CODES(UOC)	(7) QTY
					GROUP 02 WATER PURIFICATION SYSTEM FIG. 67 BOOSTER PUMP DISCHARGE	
1	PBOZZ	4710013505640	97403	13229E0059	..PIPE,BENT,METALLIC MEDIA FILTER TO WASTE.....	1
2	PBOZZ	4710013500126	97403	13229E0570	..TUBE ASSEMBLY,METAL BASKWASH ETN TO WASTE.....	1
2	PBOZZ		97403	13229E0149	..PIPE SECTION BACKWASH TO FKD WASTE.....	1
3	PAFFF	4810013528511	3Z033	EGPCCA2 1/2	..VALVE,BUTTERFLY 2 1/2 INCH, ETN SEE FIGURE 74 FOR BREAKDOWN.....	4
3	PBFFF	4820014464090	OLU89	7510-105-316L	..VALVE,BUTTERFLY 1 1/2 INCH, FKD SEE FIGURE 74 FOR BREAKDOWN, NO HOLES IN DISK AND SHAFT.....	4
4	XDOZZ		97403	13229E0809-6	..CLAMP,LOOP.....ETN	9
4	XDOZZ		97403	13229E0809-6	..CLAMP,LOOP.....FKD	11
5	MOOZZ		09647	120-02599-78	..HOSE CUT TO LENGTH FROM BULK, ETN P/N 13229E0774-5.....	1
5	MOOZZ		09647	120-02599-78	..HOSE CUT TO LENGTH FROM BULK, FKD P/N 13229E0774-5.....	2
6	PBOZZ	4710013505831	97403	13229E0069	..PIPE ASSEMBLY,METAL WASTE OUTLET.....	1
7	PBOZZ	4730013503782	97403	13229E0655	..ADAPTER,STRAIGHT,FL BACKWASH TO WASTE.....	1
8	PBOZZ	4730013950424	97403	13229E0058-1	..COUPLING,PIPE.....	3
9	PBOZZ	4710013505639	97403	13229E0056	..PIPE,BENT,METALLIC FORWARD FLUSH TO WASTE.....	1
10	PBOZZ	4710013507319	97403	13229E0060	..PIPE,BENT,METALLIC STRAINER ETN OUTLET TO MEDIA FILTER.....	1
11	PBOZZ	4730013507449	97403	13229E0988	..TEE,PIPE STRAINER OUTLET.....	1
12	PBOFF	4810013464654	3Z033	EG CC-A 2-1/2	..VALVE,BUTTERFLY 2 1/2 INCH, ETN SEE FIGURE 76 FOR BREAKDOWN.....	3
12	PBOFF	4820014464091	OLU89	7510-104-316L	..VALVE,BUTTERFLY 2 1/2 INCH, FKD SEE FIGURE 76 FOR BREAKDOWN.....	5
13	PBOOO	4610013476847	OJR79	F4C19E-8E	..FILTER,UNIT,WATER P ETN SEE FIGURE 72 FOR BREAKDOWN.....	1
13	PBOOO	4610013476847	OJR79	F4C19E-8E	..FILTER,UNIT,WATER P FKD SEE FIGURE 72 FOR BREAKDOWN.....	2
14	PBOZZ	4730013504025	97403	13229E0057	..MANIFOLD,HYDRAULIC BOOSTER ETN PUMP DISCHARGE.....	1
14	PBOZZ		97403	13229E0076	..TEE,PIPE BOOSTER PUMP FKD DISCHARGE.....	1
15	PBOZZ	4710013505642	97403	13229E0987	..PIPE,BENT,METALLIC FORWARD FLUSH TO WASTE.....	1
16	PBOZZ	4710013505641	97403	13229E0062	..PIPE ASSEMBLY,METAL MEDIA ETN FILTER OUTLET TO CARTRIDGE FILTER....	1
16	PBOZZ		97403	13229E0146	..PIPE,BENT,METALLIC MEDIA FKD FILTER OUTLET TO CARTRIDGE FILTER....	1
17	PBOZZ	4730013503762	97403	13229E0338	..TEE,PIPE BOOSTER PUMP DISCHARGE.....	1
18	PBOZZ	4710013509801	97403	13229E0065	..PIPE,BENT,METALLIC BOOSTER PUMP DISCHARGE.....	1

(1) ITEM NO	(2) SMR CODE	(3) NSN	(4) CAGEC	(5) PART NUMBER	(6) DESCRIPTION AND USABLE ON CODES(UOC)	(7) QTY
19	PBOZZ	4710013514483	97403	13229E0064	..PIPE ASSEMBLY,METAL BACKWASH TO MEDIA FILTER.....	1
20	PBOZZ	4710013502151	97403	13229E0061	..ASSEMBLY,METAL PIPE FEEDWATER TO MEDIA FILTER.....	1
21	PBFFF	4810013470038	97403	13229E0351-1	..VALVE,BUTTERFLY SEE FIGURE 75 FOR BREAKDOWN..... ETN	1
21	PBFFF	4820014464089	OLU89	7510-106-316L	..VALVE,BUTTERFLY,2.50 SEE FIGURE 75 FOR BREAKDOWN..... FKD	1
22	PBOZZ	4730013515872	09647	12001219	..TEE,PIPE FEEDWATER TO MEDIA FILTER INLET.....	1
23	PAOZZ	6685000530493	60586	30040	..THERMOMETER,SELF-IN.....	1
24	XDOZZ		97403	13229E1281	..THERMOWELL.....	1
25	PAOZZ	5310009035966	96906	MS51971-1	.NUT,PLAIN,HEXAGON.....	1
26	PAOZZ	5310009338121	96906	MS35338-139	.WASHER,LOCK.....	1
27	PAOZZ	5310010911248	96906	MS15795-810	.WASHER,FLAT.....	2
28	PAOZZ	5305007024523	96906	MS35307-306	.SCREW,CAP,HEXAGON H.....	1
29	PAOZZ	4030001455721	96906	MS51844-64	.SWAGING SLEEVE,WIRE.....	2
30	MOOZZ		09647	120-02598-6	.CABLE CUT TO LENGTH FROM BULK, P/N 13229Ell47-1.....	1
31	PAOZZ	4730010866157	96906	MS27028-12	.CAP,QUICK DISCONNECT.....	1
32	PAOZZ	3300134989215	97403	13229E0857-4	.GASKET 2 INCH.....	1
33	PBOZZ	4730013509058	97403	13229E1226	..COUPLING HALF,QUICK.....	1
34	PAOZZ	4030001455721	96906	MS51844-64	..SWAGING SLEEVE,WIRE.....	2
35	MOOZZ		09647	120-02598-6	..CABLE CUT TO LENGTH FROM BULK, P/N 13229E1147-1.....	1
36	PAOZZ	4730010866157	96906	MS27028-12	..CAP,QUICK DISCONNEC.....	1
37	PAOZZ	5330013498921	97403	13229E0857-4	...GASKET 2 INCH.....	1
38	PAOZZ	4730001153740	96906	MS27022-12	..COUPLING HALF,QUICK.....	1
39	PBOZZ	4730013503742	97403	13229E0713-3	..ADAPTER,STRAIGHT,PI.....	1
40	PBOZZ		81348	WWP460	..TEE,PIPE 2 INCH NOM PIPE SIZE, BRONZE.....	1
41	PAOZZ	4730013515847	81343	ASTMD2464	..ELBOW,PIPE 1 INCH NPT, 90 DEGREE, SCH 80.....	1
42	PAOZZ	4730013515880	04816	521-P	..COUPLING,PIPE.....	2
43	PAOOO	4820013464655	04816	521DV	..VALVE,DIAPHRAGM,STO.....	1
44	PAOZZ	5310013500558	04816	521-M	...NUT,PLAIN,ROUND.....	2
45	PAOZZ	5325013500516	04816	521-N	...RING,RETAINING.....	2
46	PAOZZ	5330012501498	04816	ORE-125	...PACKING,PREFORMED.....	2
47	MOOZZ		09647	120-02599-79	..HOSE CUT TO LENGTH FROM BULK, P/N 13229E0774-5.....	1
48	PBOZZ	5340013513323	97403	13229E0692-2	..CLAMP,LOOP 1 1/2 INCH.....	2
49	XDOZZ		97403	13229E0990-2	..ADAPTER.....	1
50	PAOZZ	5330013516367	97403	13229E0693-2	..GASKET 1 1/2 INCH.....	2
51	PAOZZ	4820013512935	97403	13229E0359-1	..VALVE,RELIEF,PRESSU 30 PSI.....	1
52	XDOZZ		97403	13229E0685-5	..CLAMP,TUBE.....	12
53	PAOZZ	5310002416606	96906	MS17830-5C	...NUT,SELF-LOCKING,HE 5/16-18 UNC-2B, SS.....	1
54	PAOZZ	5310006255756	96906	MS15795-812	...WASHER,FLAT.....	2
55	PAOZZ	5306006379675	96906	MS35307-332	...BOLT,MACHINE.....	1
56	MOOZZ		09647	120-52328-2	..CUSHION CUT TO LENGTH FROM BULK, P/N P-2600.....	12

(1) ITEM NO	(2) SMR CODE	(3) NSN	(4) CAGEC	(5) PART NUMBER	(6) DESCRIPTION AND USABLE ON CODES(UOC)	(7) QTY
57	PAOZZ	5305007175467	96906	MS35307-362	..SCREW,CAP,HEXAGON H.....ETN	42
57	PAOZZ	5305007175467	96906	MS35307-362	..SCREW,CAP,HEXAGON H.....FKD	40
58	PAOZZ	5310009847042	96906	MS35338-141	..WASHER,LOCK.....ETN	42
58	PAOZZ	5310009847042	96906	MS35338-141	..WASHER,LOCK.....FKD	40
59	PAOZZ	5310007737618	96906	MS15795-814	..WASHER,FLAT.....ETN	42
59	PAOZZ	5310007737618	96906	MS15795-814	..WASHER,FLAT.....FKD	40
60	XDOZZ		97403	13229E0329	..SUPPORT,PIPE.....	11
61	PAFZZ	5325002904492	96906	MS122203	..INSERT,SCREW THREAD.....	36
62	PAOZZ	5340013533617	97403	13229E0685-7	..HANGAR,PIPE.....	4
63	PAOZZ	5310009146028	96906	MS51922-18	...NUT,SELF-LOCKING,HE.....	1
64	PAOZZ	5310007737618	96906	MS15795-814	...WASHER,FLAT.....	2
65	PAOZZ	5305007175467	96906	MS35307-362	...SCREW,CAP,HEXAGON H.....	1
66	MOOZZ		09647	120-52328-4	..CUSHION CUT FROM BULK, P/N P-2600.....	4
67	XDOZZ		97403	13229E0560-1	..SUPPORT,PIPE.....	1
68	XDOZZ		97403	13229E0561	..SUPPORT,PIPE.....	1
69	XDOZZ		97403	13229El074	..SUPPORT,PIPE.....	1
70	PAOZZ	5305000213668	96906	MS35307-310	..SCREW,CAP,HEXAGON H.....	4
71	PAOZZ	5310009338121	96906	MS35338-139	..WASHER,LOCK.....	4
72	PAOZZ	5310010911248	96906	MS15795-810	..WASHER,FLAT.....	4
73	XDOZZ		97403	13229E0560-2	..SUPPORT,PIPE.....	2
74	PAOZZ	5325002007224	96906	MS122081	..INSERT,SCREW THREAD.....	4
75	PBOZZ	5340013519560	97403	13229E0618-3	..HANGER,PIPE.....	1
76	PAOZZ	5310002416606	96906	MS17830-5C	..NUT,SELF-LOCKING,HE 5/16-18 UNC-2B, SS.....	2
77	PAOZZ	5310006255756	96906	MS15795-812	...WASHER,FLAT.....	4
78	PAOZZ	5306005434405	96906	MS35307-334	...BOLT,MACHINE.....	2
79	XDOZZ		97403	13229E0619-2	..BRACKET,SUPPORT.....	1
80	XDOZZ		97403	13229E0685-8	..CLAMP,TUBE.....	1
81	PAOZZ	5310009146028	96906	MS51922-18	...NUT,SELF-LOCKING,HE.....	1
82	PAOZZ	5310007737618	96906	MS15795-814	...WASHER,FLAT.....	2
83	PAOZZ	5305007175467	96906	MS35307-362	...SCREW,CAP,HEXAGON H.....	1
84	MOOZZ		96906	120-52328-3	..CUSHION CUT FROM BULK, P/N P-2600.....	1
85	XDOZZ		97403	13229E0332	..SUPPORT,PIPE.....ETN	1
86	PAOZZ	5305007276804	96906	MS35307-414	..SCREW,CAP,HEXAGON H.....	6
87	PAOZZ	5305006858156	96906	MS35307-416	..SCREW,CAP,HEXAGON H.....	2
88	PAOZZ	5310009338778	96906	MS35338-143	..WASHER,LOCK.....ETN	8
88	PAOZZ	5310009338778	96906	MS35338-143	..WASHER,LOCK.....FKD	10
89	PAOZZ	5310007679425	96906	MS15795-818	..WASHER,FLAT.....ETN	8
89	PAOZZ	5310007679425	96906	MS15795-818	..WASHER,FLAT.....FKD	10
90	XDOZZ		97403	13229E0343	..SUPPORT,PIPE PUMP DISCHARGE.....	1
91	XBOZZ		97403	13229El397	..SPACER.....	2
92	PBOZZ	4730013504064	97403	13229E0712	..EXPANSION JOINT,PIP.....	1
93	XDOZZ		97403	13229E0033-3	..COUPLING.....	20
94	PAOZZ	5310002416606	96906	MS17830-5C	...NUT,SELF-LOCKING,HE 5/16-18 UNC-2B, SS.....	1
95	PAOZZ	5306013512083	09647	120-01673	...BOLT,CARRIAGE 5/16-18 UNC-2A X 2 INCHES LONG.....	1
96	XDOZZ		97403	13229E0034-3	..RETAINER GASKET IN BOOSTER PUMP DISCHARGE ASSEMBLY.....	20

(1) ITEM NO	(2) SMR CODE	(3) NSN	(4) CAGEC	(5) PART NUMBER	(6) DESCRIPTION AND USABLE ON CODES(UOC)	(7) QTY
97	PAOZZ	5330013516366	97403	13229E0035-3	..GASKET 2 INCH.....	20
98	PBOZZ	4730013515879	09647	120-07574	..COUPLING,PIPE 1 1/2 INCHES.....	10
99	XDOZZ		97403	13229E0692-3	..COUPLING,CLAMP,PIPE 2 INCHES...ETN	16
99	XDOZZ		97403	13229E0692-3	..COUPLING,CLAMP,PIPE 2 INCHES...FKD	21
100	PAOZZ	5330013512757	97403	13229E0693-3	..GASKET 2 INCHES.....ETN	16
100	PAOZZ	5330013512757	97403	13229E0693-3	..GASKET 2 INCHES.....FKD	21
101	XDOZZ		97403	13229E0692-4	..CLAMP 2 1/2 INCHES.....ETN	2
101	XDOZZ		97403	13229E0692-4	..CLAMP 2 1/2 INCHES.....FKD	4
102	PAOZZ	5330013516364	97403	13229E0693-4	..GASKET.....ETN	2
102	PAOZZ	5330013516364	97403	13229E0693-4	..GASKET.....FKD	4
103	MOOZZ		98433	13229E0086-88	..HOSE CUT TO LENGTH FROM BULK, P/N 13229E0774-5..... FKD	1
104	PBOZZ		97403	13229E0085	..PIPE SECTION VALVE TO STRAINER OUTLET..... FKD	2
105	PBOZZ		94833	13229E0308	..PIPE SECTION STRAINER INLET....FKD	2
106	PBOZZ	5610014294402	97403	13229E0307	..GRAVEL,WATER FILTER.....FKD	1
107	PBOZZ		97403	13229E0054	..PIPE,BENT,METALLIC STRAINER OUTLET TO MEDIA FILTER..... FKD	1
108	PAOZZ	5330014476732	0D8P3	CV4V-2 INCH	...O-RING VITON BODY.....FKD	2
109	PAOZZ	5330014476731	0D8P3	CV6V-2 INCH	...O-RING SEAT.....FKD	2
110	XDOZZ		0D8P3	CV3-2 INCH	...DISC AND STEM.....FKD	1
111	XDOZZ		0D8P3	CV2-2 INCH	...SPRING.....FKD	1
112	XDOZZ		0D8P3	CV1-2 INCH	...SPIDER.....FKD	1
113	XDOZZ		0D8P3	CV5-2 INCH	...CLAMP VALVE BODY.....FKD	1
114	PAOZZ		96906	MS35307-409	..SCREW,CAP,HEXAGON H.....FKD	2

END OF FIGURE

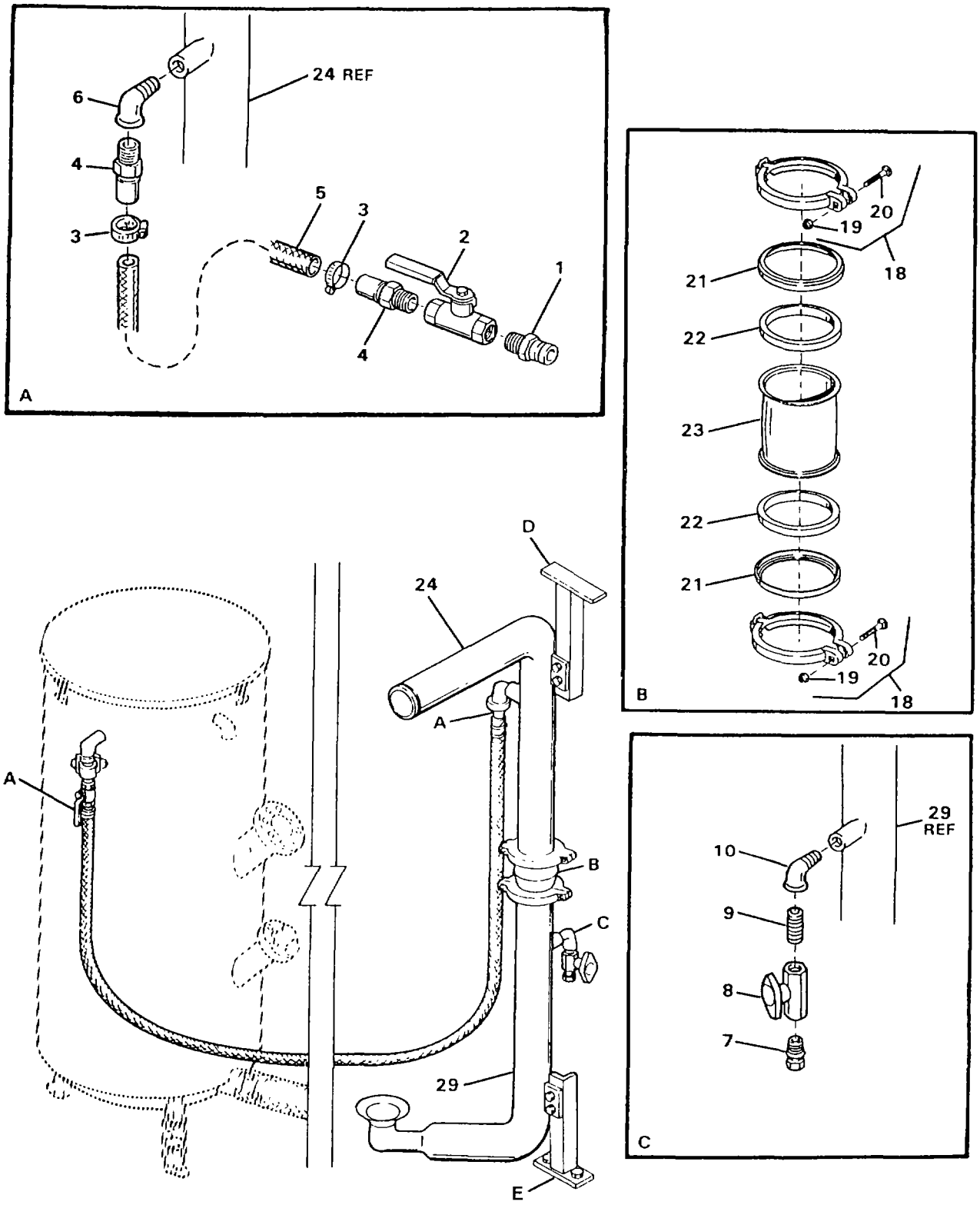

FIGURE 68. HIGH PRESSURE PUMP SUCTION (SHEET 1 OF 2)

39
40 and 41

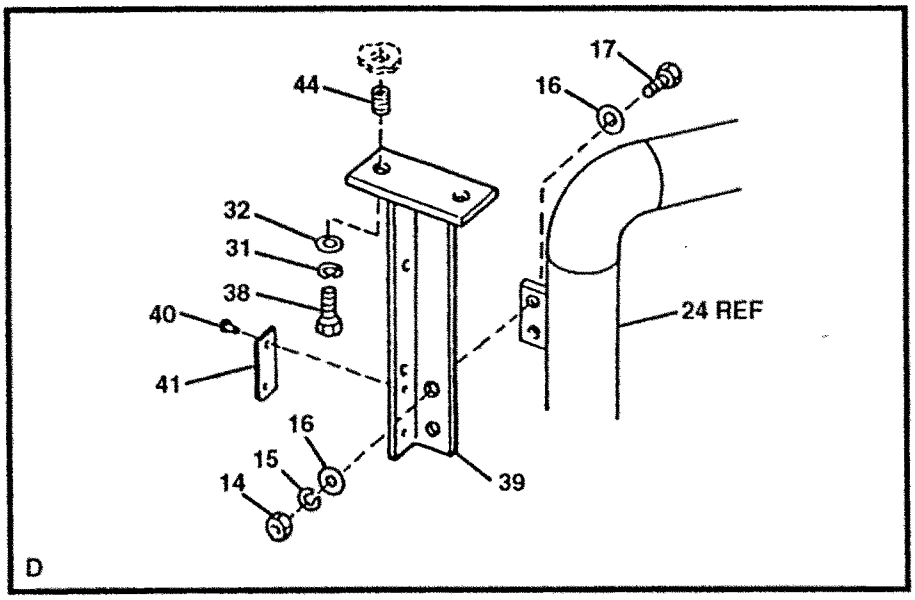

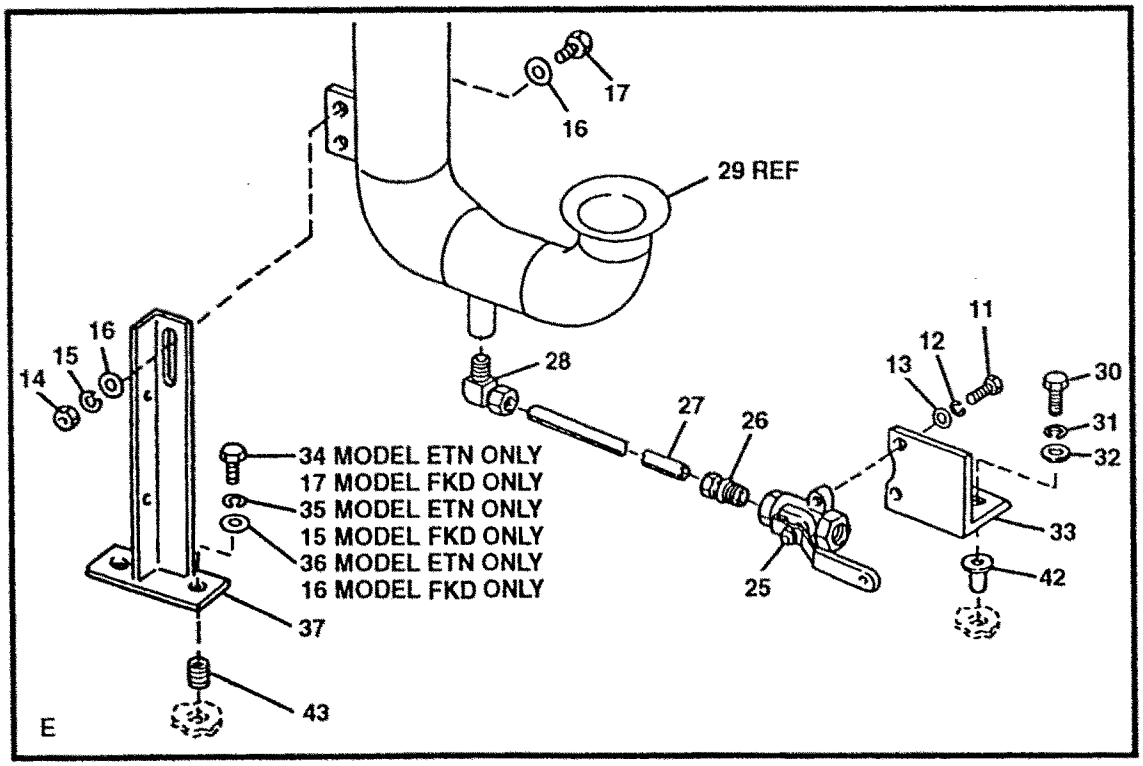

FIGURE 68. HIGH PRESSURE PUMP SUCTION (SHEET 2 OF 2)

(1) ITEM NO	(2) SMR CODE	(3) NSN	(4) CAGEC	(5) PART NUMBER	(6) DESCRIPTION AND USABLE ON CODES(UOC)	(7) QTY
					GROUP 02 WATER PURIFICATION SYSTEM	
					FIG. 68 HIGH PRESSURE PUMP SUCTION	
1	PAOZZ	4730013515906	97403	13229E0341	..COUPLING HALF,QUICK.....	1
2	PAOZZ	4820013509014	97403	13229E0680-4	..VALVE,BALL 1 INCH.....	1
3	PAOZZ	5340013522604	97403	13229E0809-5	..CLAMP,LOOP.....	2
4	PAOZZ	4730013515866	72661	RST-10	..ADAPTER,STRAIGHT,PI.....	2
5	MOOZZ		09647	120-02599-72	..HOSE,SUCTION CUT TO LENGTH FROM BULK, P/N ZZ-H-561.....	1
6	PBOZZ		80204	B16.3	..ELBOW,PIPE 1 INCH NPS, CLS 150, 90 DEG, 316 SS.....	1
7	PBOZZ	4730001759387	97403	13229E0682-2	..ADAPTER,STRAIGHT,PI.....	1
8	PAOZZ	4820013493816	97403	13229E0678	..VALVE,PLUG.....	1
9	PAOZZ	4730013486248	97403	13229E1255-1	..NIPPLE,PIPE.....	1
10	PAOZZ	4730013507441	97403	13229E0086-191	..ELBOW,PIPE 0.25 INCH NPS, 90 DEGREE, CLS 150, 316 SS.....	1
11	PAOZZ	5305013514310	97403	13229E0086-207	..SCREW,CAP,HEXAGON H 0.19-24 UNC-2A X 0.5 INCH LONG.....	2
12	PAOZZ	5310009338120	96906	MS35338-138	..WASHER,LOCK.....	2
13	PAOZZ	5905013924321	96906	MS15765-842	..RESISTOR,FIXED,WIR.....	2
14	PAOZZ	5310009138881	96906	MS51971-3	..NUT,PLAIN,HEXAGON.....	4
15	PAOZZ	5310009847042	96906	MS35338-141	..WASHER,LOCK.....ETN	4
15	PAOZZ	5310009847042	96906	MS35338-141	..WASHER,LOCK.....FKD	6
16	PAOZZ	5310007737618	96906	MS15795-814	..WASHER,FLAT.....ETN	8
16	PAOZZ	5310007737618	96906	MS15795-814	..WASHER,FLAT.....FKD	10
17	PAOZZ	5305007175467	96906	MS35307-362	..SCREW,CAP,HEXAGON H.....ETN	4
17	PAOZZ	5305007175467	96906	MS35307-362	..SCREW,CAP,HEXAGON H.....FKD	6
18	PAOZZ	4730013507737	97403	13229E0033-1	..COUPLING ASSEMBLY.....	2
19	PAOZZ	5310009146028	96906	MS51922-18	...NUT,SELF-LOCKING,HE.....	1
20	PAOZZ	5306013529741	09647	120-00975	...BOLT,EYE 3/8-16 UNC-2A X 3 INCHES LONG.....	1
21	XDOZZ		97403	13229E0034-1	..RETAINER,GASKET 3 INCHES.....	2
22	PAOZA		97403	13229E0035-1	..GASKET 3 INCHES.....	2
23	PBOZZ	4730013507469	97403	13229E0708-1	..ADAPTOR,STRAIGHT,FL.....	1
24	PBOZZ	4710013507320	97403	13229E0565	..TUBE,BENT,METALLIC.....	1
25	PAOZZ		97403	13229E0680-2	..VALVE,BALL.....	1
26	PAOZZ	4730006915460	97403	13229E0682-7	..ADAPTER,STRAIGHT,PI.....	1
27	MOOZZ		09647	120-51243-1	..TUBE CUT TO LENGTH FROM BULK, P/N ASTMA269.....	1
28	PAOZZ	4730007932660	97403	13229E0683-6	..ELBOW,PIPE TO TUBE.....	1
29	PBOZZ	4710013518285	97403	13229E0564	..PIPE,METALLIC CARTR FILTER OUT....	1
30	PAOZZ	5305002078253	96906	MS35307-308	..SCREW,CAP,HEXAGON H.....	2
31	PAOZZ	5310009338121	96906	MS35338-139	..WASHER,LOCK.....	4
32	PAOZZ	5310010911248	96906	MS15795-810	..WASHER,FLAT.....	4
33	XDOZZ		97403	13229E1064	..BRACKET.....	1
34	PAOZZ	5305000213806	96906	MS35307-413	..SCREW,CAP,HEXAGON H.....ETN	2
35	PAOZZ	5310009338778	96906	MS35338-143	..WASHER,LOCK.....ETN	2
36	PAOZZ	5310007679425	96906	MS15795-818	..WASHER,FLAT.....ETN	2
37	XDOZZ		97403	13229E0615	..SUPPORT,PIPE.....	1
38	PAOZZ	5305000213668	96906	MS35307-310	..SCREW,CAP,HEXAGON H.....	2
39	PBOZZ	4710013509187	97403	13229E0616	..TUBE ASSEMBLY,METAL.....	1
40	PAOZZ	5320013490932	97403	13229E0350-2	...RIVET,BLIND.....	2

(1) ITEM NO	(2) SMR CODE	(3) NSN	(4) CAGEC	(5) PART NUMBER	(6) DESCRIPTION AND USABLE ON CODES(UOC)	(7) QTY
41	XDOZZ		97403	13229E0782-114	..PLATE,ID UTILITY HOSE FILTERED WATER.....	1
42	PAOZZ	5310011190460	97403	13229E0114-4	..NUT,PLAIN,BLIND RIV.....	2
43	PAFZZ	5340009907158	96906	MS122165	..INSERT,SCREW THREAD.....	2
44	PAFZZ	5340002904489	96906	MS122241	..INSERT,SCREW THREAD.....	2

END OF FIGURE

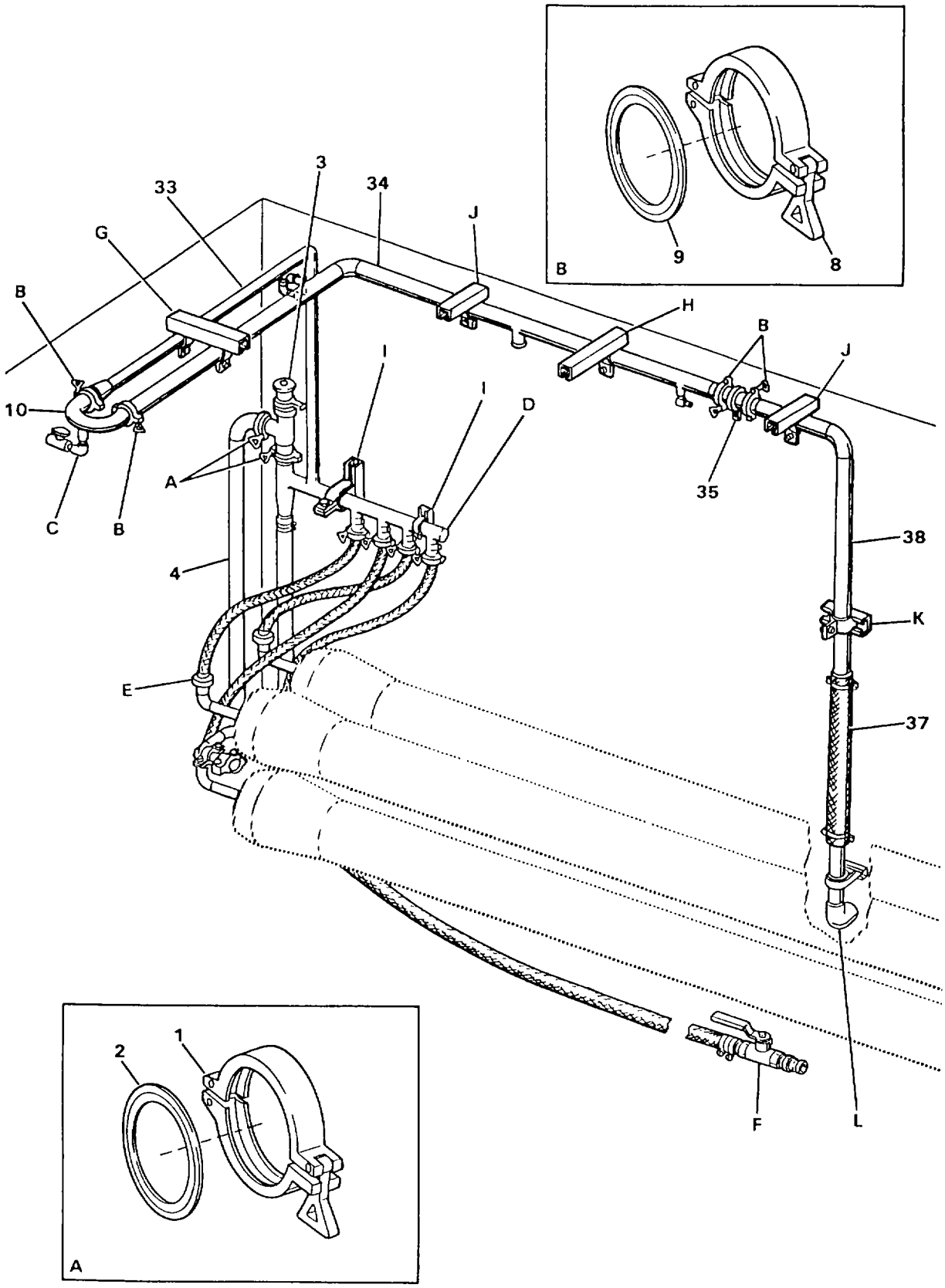

FIGURE 69. PRODUCT WATER OUT (SHEET 1 OF 4)

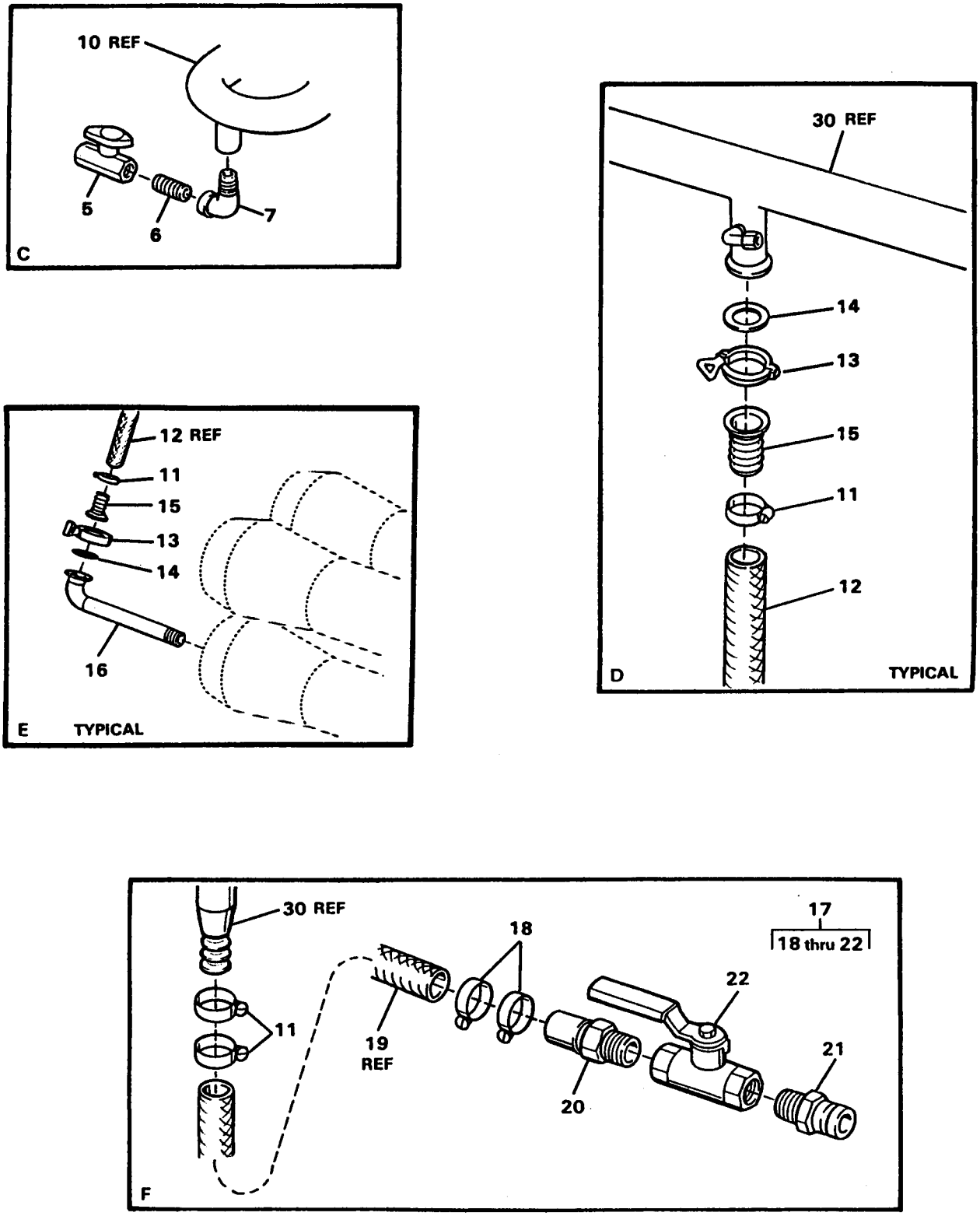

FIGURE 69. PRODUCT WATER OUT (SHEET 2 OF 4)

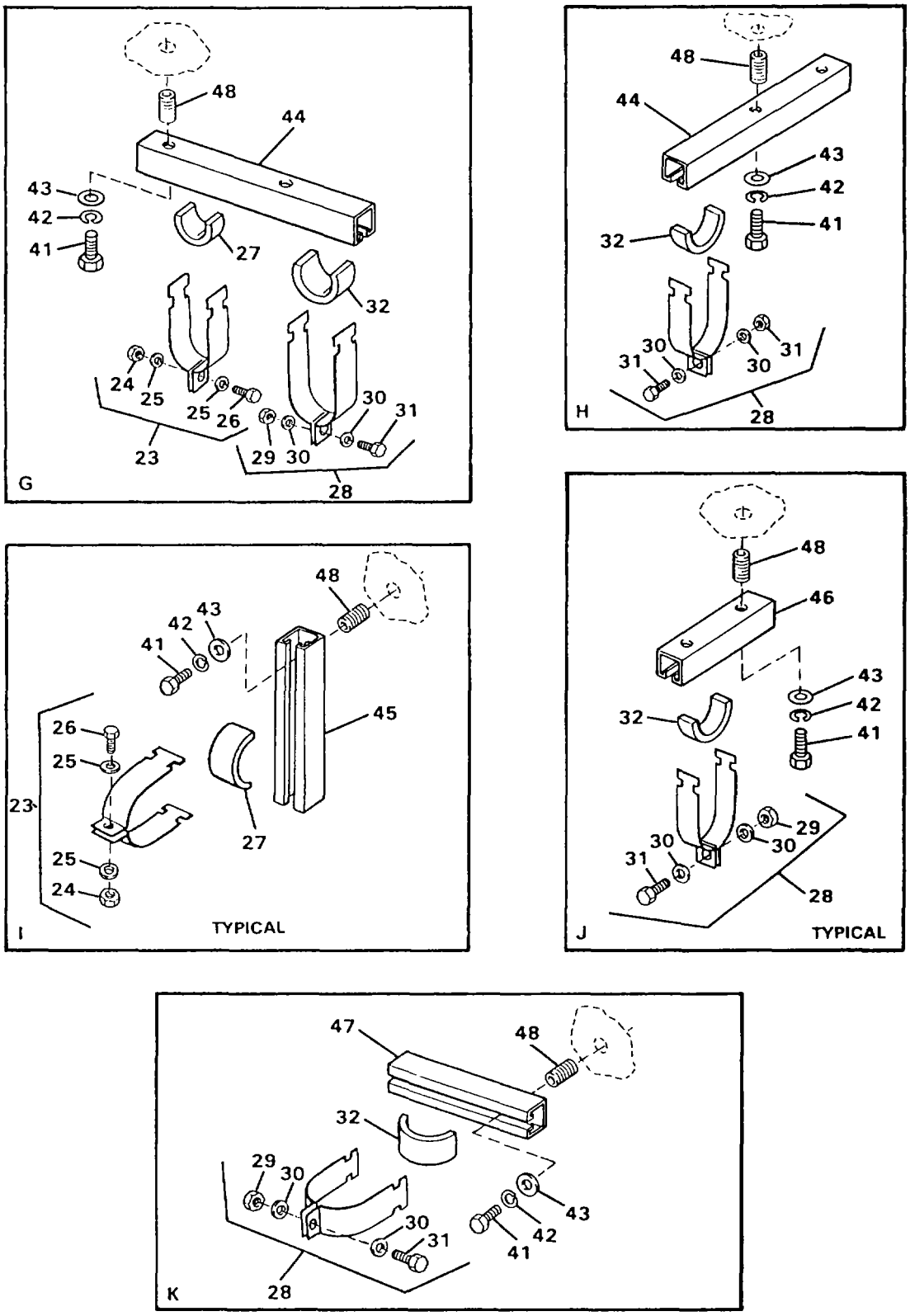

FIGURE 69. PRODUCT WATER OUT (SHEET 3 OF 4)

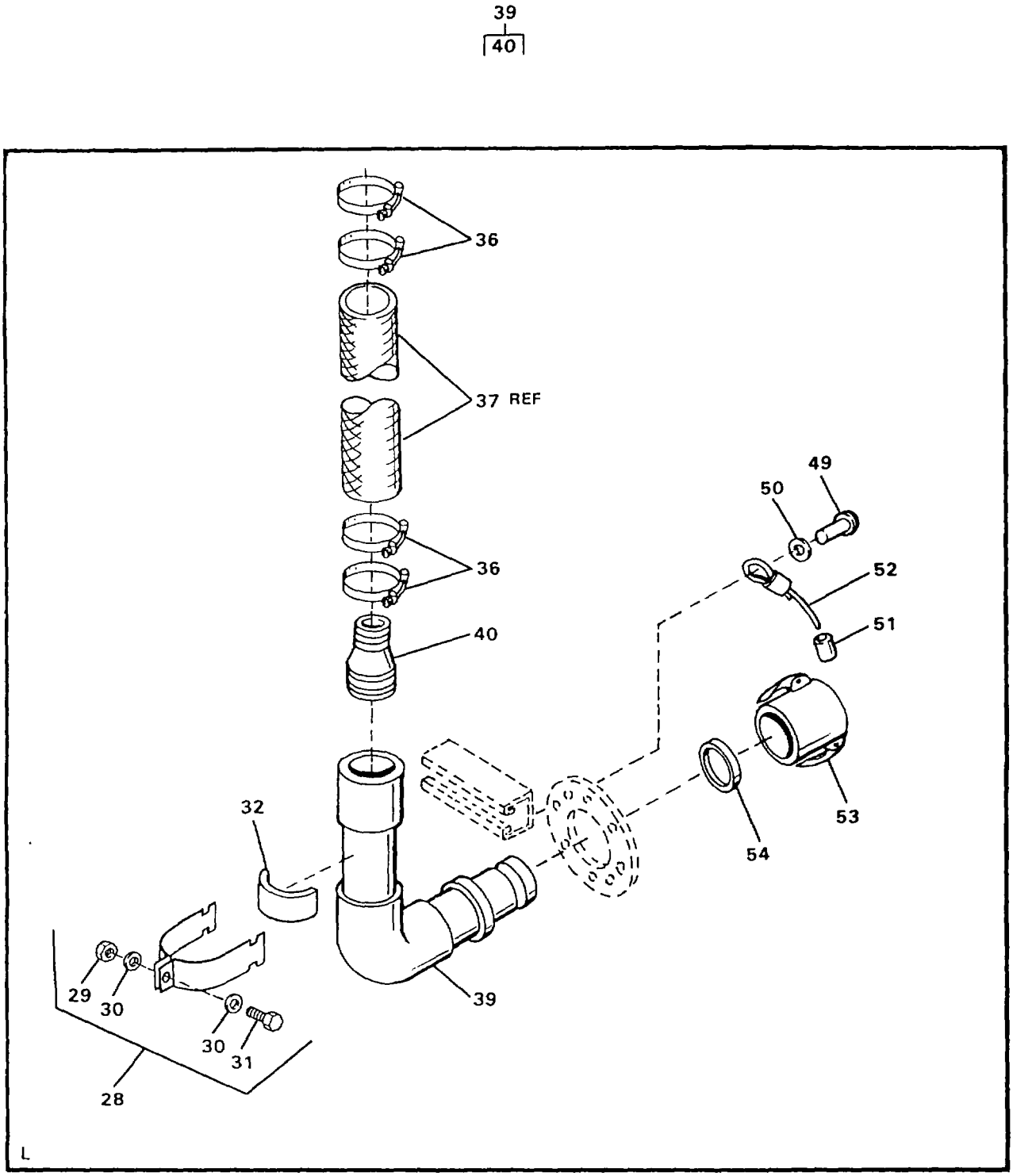

FIGURE 69. PRODUCT WATER OUT (SHEET 4 OF 4)

(1) ITEM NO	(2) SMR CODE	(3) NSN	(4) CAGEC	(5) PART NUMBER	(6) DESCRIPTION AND USABLE ON CODES(UOC)	(7) QTY
					GROUP 02 WATER PURIFICATION SYSTEM FIG. 69 PRODUCT WATER OUT	
1	PFOZZ	5340013513323	97403	13229E0692-2	..CLAMP,LOOP.....	2
2	PAOZZ	5330013516367	97403	13229E0693-2	..GASKET.....	2
3	PBOZZ	4820013512936	97403	13229E0359-2	..VALVE,RELIEF,PRESSU 45 PSI.....	1
4	PBOZZ	4710013510156	97403	13229E0066	..PIPE,METALLIC RELIEF VALVE DISCHARGE.....	1
5	PAOZZ	4820013493816	97403	13229E0678	..VALVE,PLUG.....	1
6	PBOZZ	4730013486246	97403	13229E1255-2	..NIPPLE,PIPE.....	1
7	PAOZZ	4730013507441	97403	13229E0086-191	..ELBOW,PIPE 0.25 NPS, 90 DEGREE, CLS 150, 316 SS.....	1
8	XDOZZ		97403	13229E0692-3	..COUPLING,CLAMP,PIPE 2 INCHES.....	4
9	PAOZZ	5330013516367	97403	13229E0693-2	..GASKET.....	4
10	PBOZZ	4710013510157	97403	13229E0573	..PIPE,METALLIC NBC FILTER RETURN RETURN.....	1
11	PAOZZ	5120002782423	97403	13229E0511-4	..CLAMP,HOSE 1.75 INCHES NOM SIZE.....	10
12	MOOZZ		09647	120-02599-73	..HOSE CUT TO LENGTH FROM BULK, P/N 13229E0774-2.....	4
13	XDOZZ		97403	13229E0692-1	..CLAMP,PRODUCT WATER OUT, 1 INCH.....	8
14	PAOZZ	5330013516999	97403	13229E0693-1	..GASKET 1 INCH.....	8
15	XDOZZ		97403	13229E0990-1	..ADAPTER,HOSE.....	8
16	PBOZZ	4710013510158	97403	13229E0349	..PIPE,METALLIC.....	4
17	AOOOO		97403	13229E0050	..HOSE ASSEMBLY UTILITY.....	1
18	PAOZZ		97403	13229E0511-4	...CLAMP,HOSE.....	2
19	MOOZZ		09647	120-02599-74	...HOSE CUT TO LENGTH FROM BULK, P/N 13229E0774-2.....	1
20	PAOZZ	4730013515866	72661	RST-10	...ADAPTER,STRAIGHT,PI.....	1
21	PAOZZ	4730013515906	97403	13229E0341	...COUPLING HALF,QUICK	1
22	PAOZZ	4820013509014	97403	13229E0680-4	...VALVE,BALL.....	1
23	XDOZZ		97403	13229E0685-4	..CLAMP.....	3
24	PAOZZ	5310002416606	96906	MS17830-5C	...NUT,SELF-LOCKING,HE 5/16-18 UNC-2B, SS.....	1
25	PAOZZ	5310006255756	96906	MS15795-812	...WASHER,FLAT.....	2
26	PAOZZ	5306006379675	96906	MS35307-332	...BOLT,MACHINE.....	1
27	MOOZZ		09647	120-52328-2	..CUSHION CUT TO LENGTH FROM BULK, P/N P-2600.....	3
28	XDOZZ		97403	13229E0685-5	..CLAMP.....	6
29	PAOZZ	5310002416606	96906	MS17830-5C	...NUT,SELF-LOCKING, HE 5/16-18 UNC-2B, SS.....	1
30	PAOZZ	5310006255756	96906	MS15795-812	...WASHER,FLAT.....	2
31	PAOZZ	5306006379675	96906	MS35307-332	...BOLT,MACHINE.....	1
32	MOOZZ		09647	120-52328-2	..CUSHION MAKE FROM BULK, P/N P-2600.....	6
33	PBOZZ	4710013510159	97403	13229E0574	..PIPE,METALLIC PRODUCT OUT.....	1
34	PBOZZ	4710013510160	97403	13229E0567	..PIPE,METALLIC PRODUCT COLLECTION.....	1
35	PBOZZ	4820013509002	97403	13229E0698	..VALVE,CHECK.....	1
36	XDOZZ		97403	13229E0809-6	..CLAMP,LOOP.....	4
37	MOOZZ		09647	120-02599-75	..HOSE CUT TO LENGTH FROM BULK, P/N 13229E0774-5.....	1

(1) ITEM NO	(2) SMR CODE	(3) NSN	(4) CAGEC	(5) PART NUMBER	(6) DESCRIPTION AND USABLE ON CODES(UOC)	(7) QTY
38	PBOZZ	4710013521249	97403	13229E0580	..PIPE,METALLIC PRODUCT OUT.....ETN	1
38	PBOZZ	4710013521249	97403	13229E0220	..PIPE,METALLIC PRODUCT OUT.....FKD	1
39	PBOZZ	4710013525646	97403	13229E0632	..PIPE,METALLIC PRODUCT OUT.....	1
40	PBOZZ	4730013503742	97403	13229E0713-3	...ADAPTER,STRAIGHT,PI.....	1
41	PAOZZ	5305007175467	96906	MS35307-362	..SCREW,CAP,HEXAGON H.....	14
42	PAOZZ	5310009847042	96906	MS35338-141	..WASHER,LOCK.....	14
43	PAOZZ	5310007737618	96906	MS15795-814	..WASHER,FLAT.....	14
44	XDOZZ		97403	13229E0380-2	..SUPPORT,PIPE.....	2
45	XDOZZ		97403	13229E0380-5	..SUPPORT,PIPE.....	2
46	XDOZZ		97403	132229E0380-7	..BRACKET,DOUBLE ANGLE.....	2
47	XDOZZ		97403	13229E0380-4	..SUPPORT,PIPE.....	1
48	PAFZZ	5325002904492	96906	MS122203	..INSERT,SCREW THREAD.....	14
49	PAOZZ	5320013490933	97403	13229E0350-1	.RIVET,BLIND.....	1
50	PAOZZ	5905013924321	96906	MS15765-842	.RESISTOR,FIXED,WIR.....	1
51	PAOZZ	4030001455721	96906	MS51844-64	.SWAGING SLEEVE,WIRE.....	2
52	MOOZZ		09647	120-02598-6	.CABLE CUT TO LENGTH FROM BULK, P/N 13229E1147-1.....	1
53	PAOZZ	4730010866157	96906	MS27028-12	.CAP,QUICK DISCONNECT.....	1
54	PAOZZ	5330013498921	97403	13229E0857-4	.GASKET.....	1

END OF FIGURE

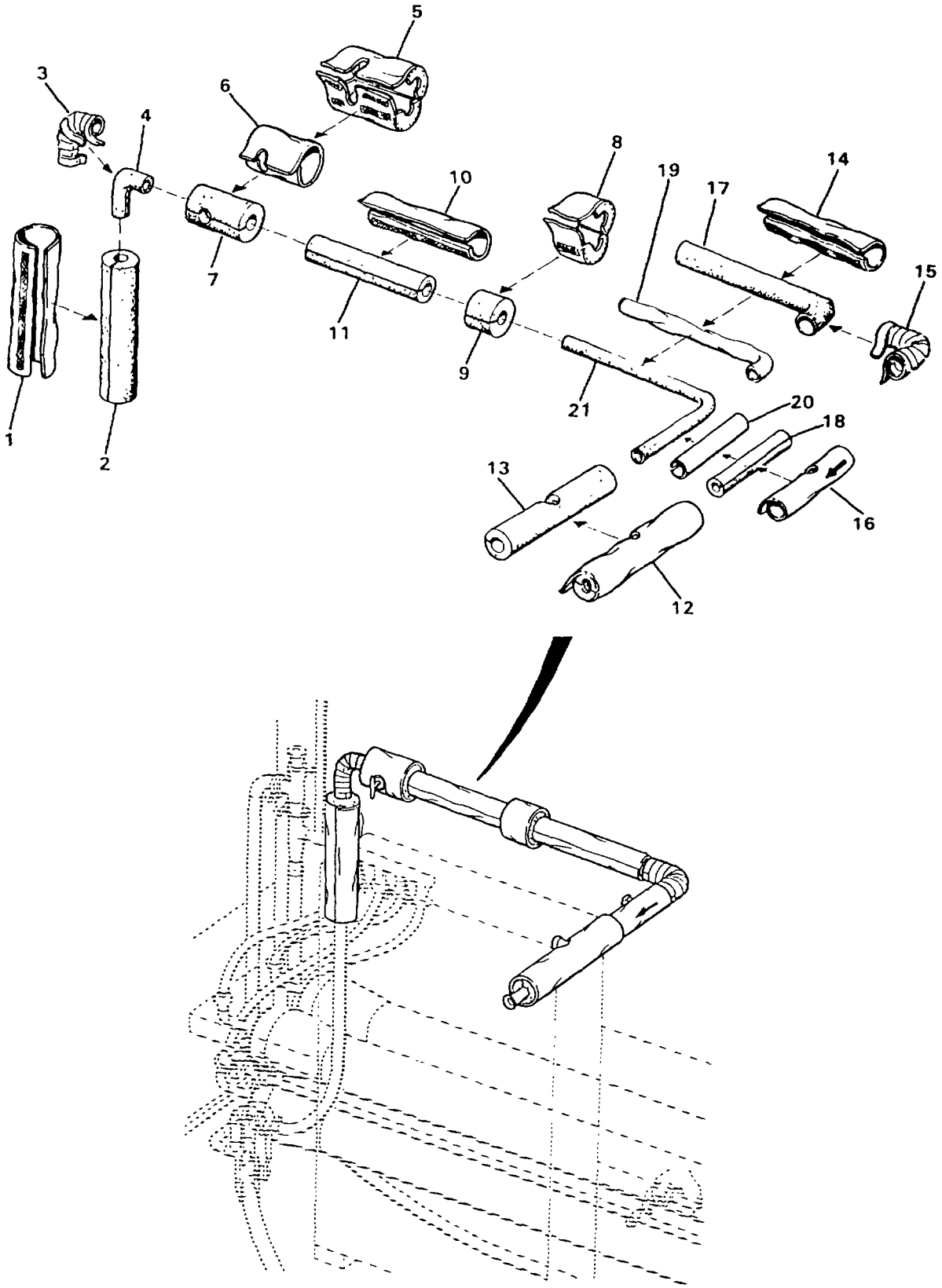

FIGURE 70. SOUND CONTROLLING BLANKETS (PIPING)

(1) ITEM NO	(2) SMR CODE	(3) NSN	(4) CAGEC	(5) PART NUMBER	(6) DESCRIPTION AND USABLE ON CODES(UOC)	(7) QTY
					GROUP 02 WATER PURIFICATION SYSTEM FIG. 70 SOUND CONTROLLING BLANKETS (PIPING)	
1	PBOZZ	5640013514186	97403	13229E1361-3	..INSULATING SLEEVE.....	1
2	PBOZZ	5640013514187	97403	13229E1376	..INSULATING SLEEVE.....	1
3	PBOZZ	5640013635970	97403	13229E1369	..INSULATING SLEEVE.....	1
4	PBOZZ	5640013514188	97403	13229E1363-2	..INSULATING SLEEVE.....	1
5	PBOZZ	5640013514189	97403	13229E1375	..INSULATING SLEEVE.....	1
6	PBOZZ	5640013514190	97403	13229E1374	..INSULATING SLEEVE.....	1
7	PBOZZ	5640013524249	97403	13229E1373	..INSULATING SLEEVE.....	1
8	PBOZZ	5640013524250	97403	13229E1372	..INSULATING SLEEVE.....	1
9	PBOZZ	5640013514191	97403	13229E1371	..INSULATING SLEEVE.....	1
10	PBOZZ	5640013514192	97403	13229E1361-2	..INSULATING SLEEVE.....	1
11	PBOZZ	5640013524251	97403	13229E1370	..INSULATING SLEEVE.....	1
12	PBOZZ	5640013514193	97403	13229E1368	..INSULATING SLEEVE.....	1
13	PBOZZ	5640013524252	97403	13229E1367	..INSULATING SLEEVE.....	1
14	PBOZZ	5640013514194	97403	13229E1361-1	..INSULATING SLEEVE.....	1
15	PBOZZ	5640013633691	97403	13229E1360	..INSULATING SLEEVE.....	1
16	PBOZZ	5640013633692	97403	13229E1366	..INSULATING SLEEVE.....	1
17	PBOZZ	5640013514195	97403	13229E1363-1	..INSULATING SLEEVE.....	1
18	PBOZZ	5640013514196	97403	13229E1365	..INSULATING SLEEVE.....	1
19	PBOZZ	5640013514197	97403	13229E1364	..INSULATING SLEEVE.....	1
20	PBOZZ	5640013514198	97403	A3229E1362	..INSULATING SLEEVE.....	1
21	PBOZZ	5640013524253	97403	13229E1359	..INSULATING SLEEVE.....	1

END OF FIGURE

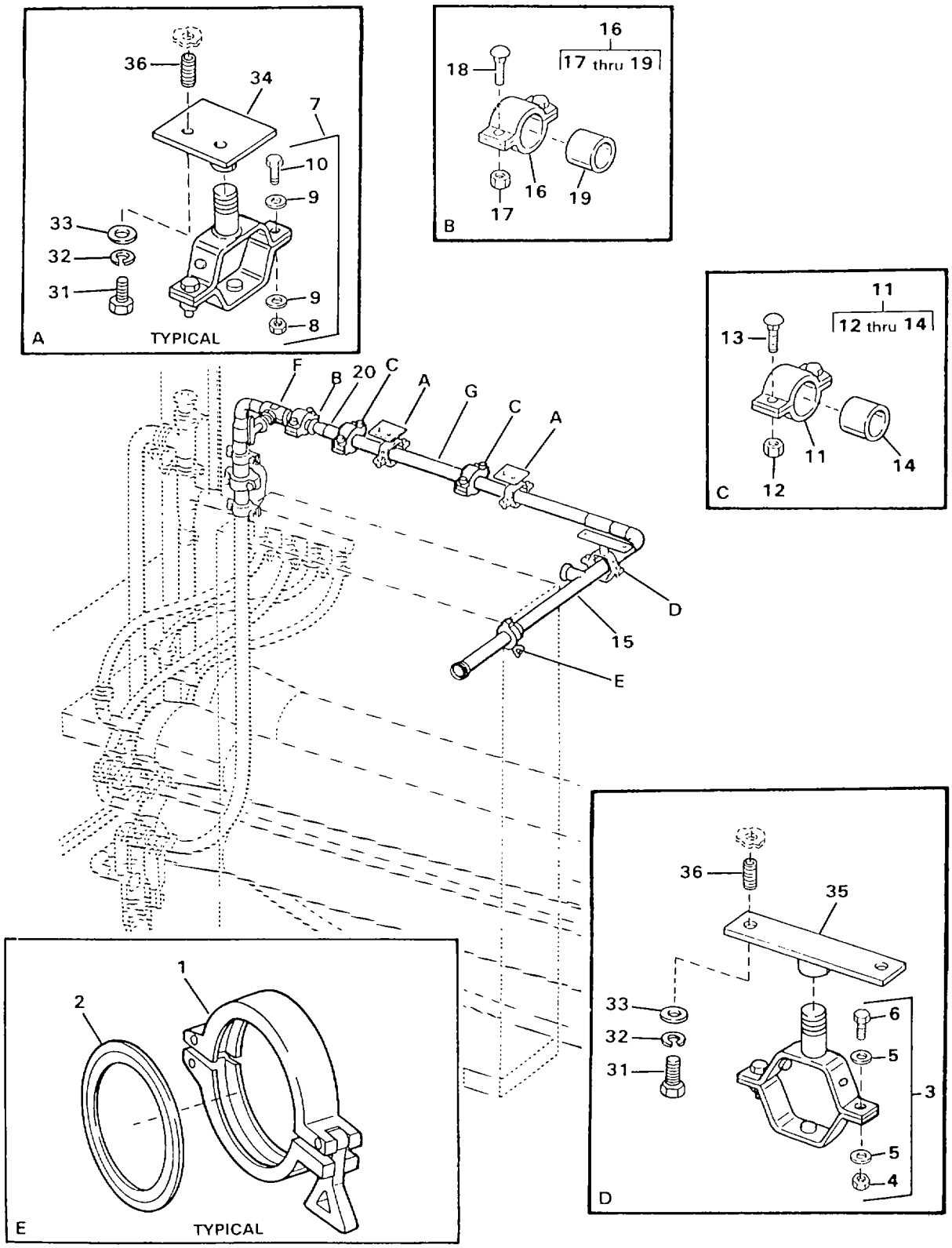

FIGURE 71. PRESSURE CONTROL VALVE AND WASTE OUT PIPING (SHEET 1 OF 2)

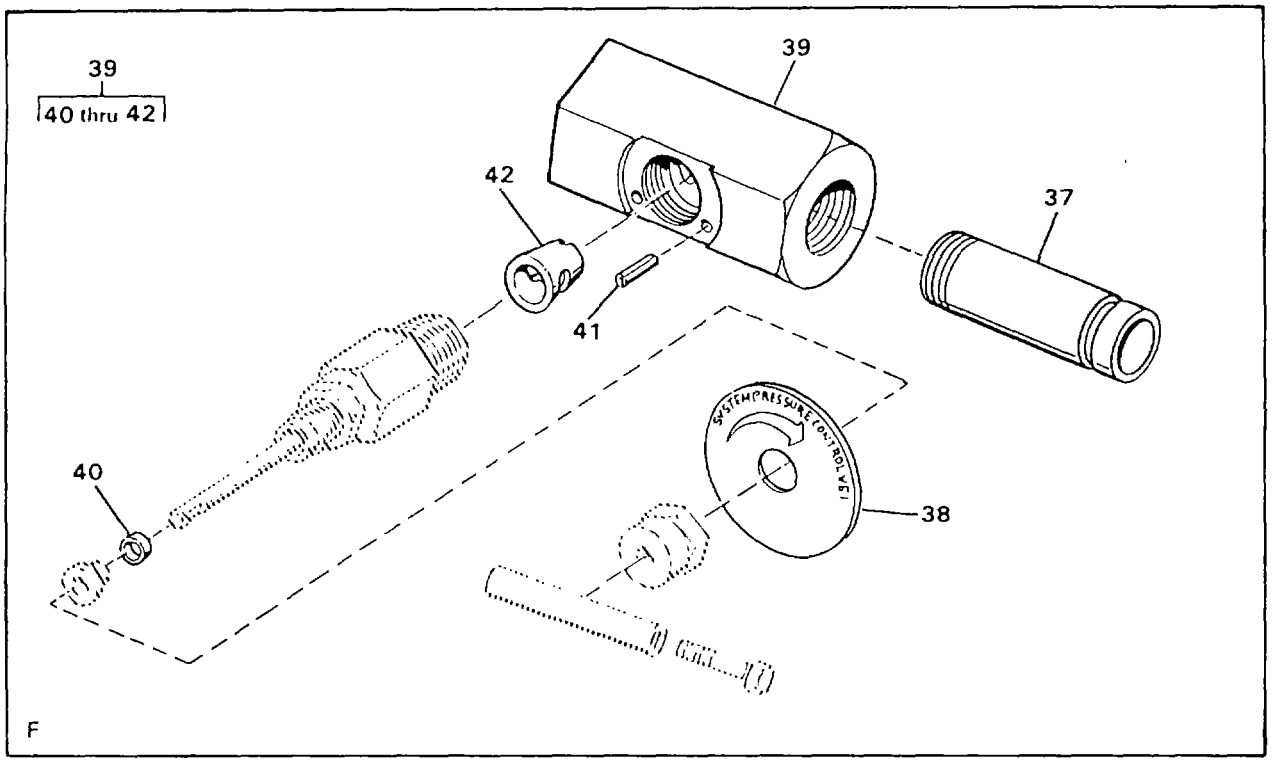

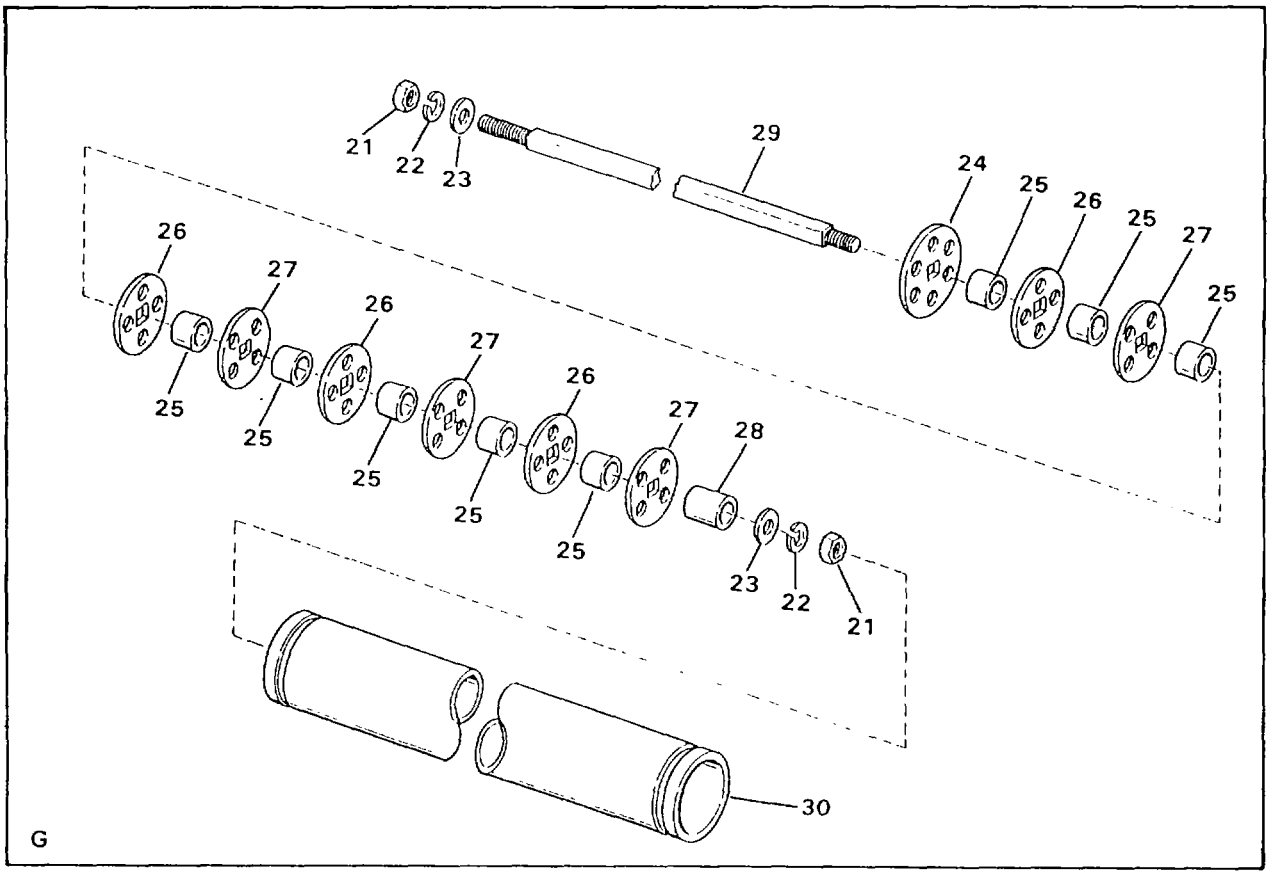

FIGURE 71. PRESSURE CONTROL VALVE AND WASTE OUT PIPING (SHEET 2 OF 2)

(1) ITEM NO	(2) SMR CODE	(3) NSN	(4) CAGEC	(5) PART NUMBER	(6) DESCRIPTION AND USABLE ON CODES(UOC)	(7) QTY
					GROUP 02 WATER PURIFICATION SYSTEM FIG. 71 PRESSURE CONTROL VALVE AND WASTE OUT PIPING	
1	XDOZZ		97403	13229E0692-2	..CLAMP LOOP.....	2
2	PAOZZ		97403	13229E0693-2	..GASKET 1 1/2 INCHES.....	2
3	XDOZZ		97403	13229E0618-3	..HANGER,PIPE.....	1
4	PAOZZ	5310002416606	96906	MS17830-5C	...NUT,SELF-LOCKING,HE 5/16-18 UNC-2B, SS.....	2
5	PAOZZ	5310006255756	96906	MS15795-812	...WASHER,FLAT.....	4
6	PAOZZ	5306005434405	96906	MS35307-334	...BOLT,MACHINE.....	2
7	XDOZZ		97403	13229E0618-2	..HANGER,PIPE.....	2
8	PAOZZ	5310002416606	96906	MS17830-5C	...NUT,SELF-LOCKING,HE 5/16-18 UNC-2B, SS.....	1
9	PAOZZ	5310006255756	96906	MS15795-812	...WASHER,FLAT.....	4
10	PAOZZ	5306005434405	96906	MS35307-334	...BOLT,MACHINE.....	2
11	XDOZZ		97403	13229E0156-2	..COUPLING,CLAMP 1 1/2 INCHES.....	1
12	XDOZZ		09647	120-07593-1	...NUT,HEAVY,HEX 0.5-13 UNC-2B.....	2
13	PAOZZ	5306013514304	09647	120-02079-3	...BOLT,SQUARE NECK 0.5-13 UNC-2A X 2.5 INCHES LONG.....	2
14	PAOZZ	5330013498928	97403	13229E0855-2	...PACKING,PREFORMED 1 1/2 INCHES	1
15	PBOZZ	4730013525945	97403	13229E0568	..ELBOW,FLANGE.....	
16	XDOZZ		97403	13229E0156-1	..COUPLING,PIPE 1 INCH.....	1
17	XDOZZ		09647	120-07593-2	...NUT,HEAVY,HEX 0.375-16 UNC-2B....	2
18	XDOZZ		09647	120-02079-1	...BOLT,CARRIAGE 0.375-16 UNC-2A X 2 INCHES LONG.....	2
19	PAOZZ	5330013517096	97403	13229E0855-1	...PACKING,PREFORMED 1 INCH.....	1
21	PAOZZ	5310009035966	96906	MS51971-1	..NUT,PLAIN,HEXAGON.....	2
22	PAOZZ	5310009338121	96906	MS35338-139	..WASHER,LOCK.....	2
23	PAOZZ	5310010911248	96906	MS15795-810	..WASHER,FLAT.....	2
24	XDOZZ		97403	13229E1399	..PLATE,ORIFICE.....	1
25	XDOZZ		97403	13229E0086-279	..SPACER LENGTH IS 0.567 + OR - 0.03, 304 STAINLESS STEEL.....	8
26	XDOZZ		97403	13229E1400	..PLATE,ORIFICE TYPE A.....	4
27	XDOZZ		97403	13229E1401	..PLATE,ORIFICE TYPE B.....	4
28	XDOZZ		97403	13229E0086-280	..SPACER.....	1
29	XDOZZ		97403	13229E0086-275	..BAR,STACK.....	1
30	PBOZZ	4710013961373	97403	13229E1402	..PIPE METALLIC.....	1
31	PAOZZ	5305007175467	96906	MS35307-362	..SCREW,CAP,HEXAGON H.....	6
32	PAOZZ	5310009847042	96906	MS35338-141	..WASHER,LOCK.....	6
33	PAOZZ	5310007737618	96906	MS15795-814	..WASHER,FLAT.....	6
34	XDOZZ		97403	13229E0620	..BRACKET,SUPPORT.....	2
35	XDOZZ		97403	13229E0619-1	..BRACKET,SUPPORT.....	1
36	PAFZZ	5325002904492	96906	MS122203	..INSERT,SCREW THREAD.....	6
37	PBOZZ	4730013528985	97403	13229E0371	..COUPLING,PIPE.....	1
38	XDOZZ		97403	13229E0024	..PLATE,ID SYSTEM PRESSURE CONTROL.....	1
39	PAOOO	4820013464647	01343	H1VS-8-P-SP	..VALVE,CHECK.....	1
40	PAOZZ		01343	02-6251-000	...PACKING,PREFORMED.....	1
41	PAOZZ	5315008440342	96906	MS16562-250	..PIN,SPRING.....	1
42	PAOZA		01343	02-6502-003	..SEAT,VALVE.....	1

END OF FIGURE

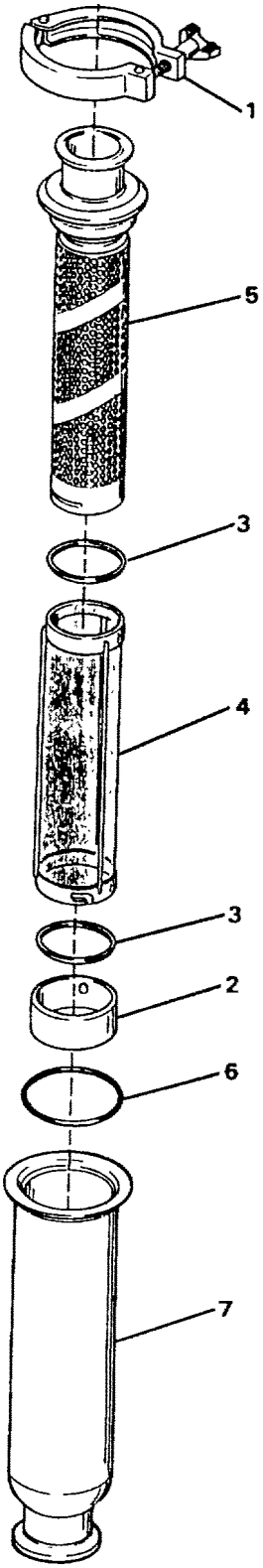

FIGURE 72. BASKET STRAINER

(1) ITEM NO	(2) SMR CODE	(3) NSN	(4) CAGEC	(5) PART NUMBER	(6) DESCRIPTION AND USABLE ON CODES(UOC)	(7) QTY
					GROUP 02 WATER PURIFICATION SYSTEM	
					FIG. 72 BASKET STRAINER	
	PBOOO	4610013476847	0JR79	F4C19E-8E	..FILTER,UNIT,WATER P.....	1
1	XDOZZ		0JR79	3525-48	...CLAMP,BASKET STRAINER 14 INCHES.....	1
2	XDOZZ		0JR79	4080-48	...CAP.....	1
3	PAOZZ		0JR79	3274-E0	...GASKET.....	2
4	PBOZZ		0JR79	4135-8D	...STRAINER ELEMENT,SE.....	1
5	PBOZZ		0JR79	4509-87	...STRAINER ELEMENT,SE.....	1
6	PAOZZ		0JR79	3176-E0	...O-RING.....	1
7	XDOZZ		0JR79	3818-87	...CASE,STRAINER.....	1

END OF FIGURE

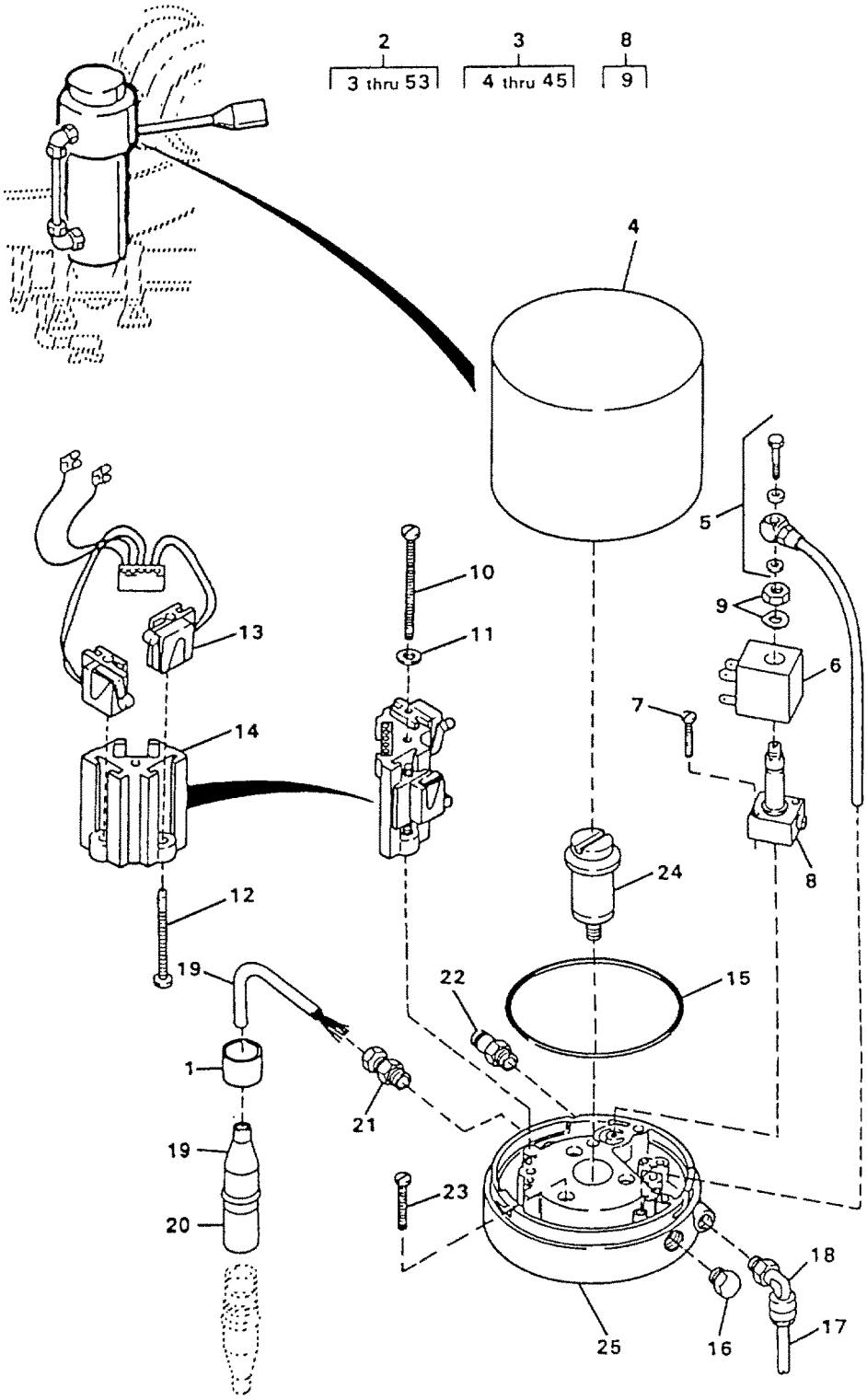

FIGURE 73. BUTTERFLY VALVE AND ACTUATOR (SHEET 1 OF 6)
(MODEL ETN ONLY)

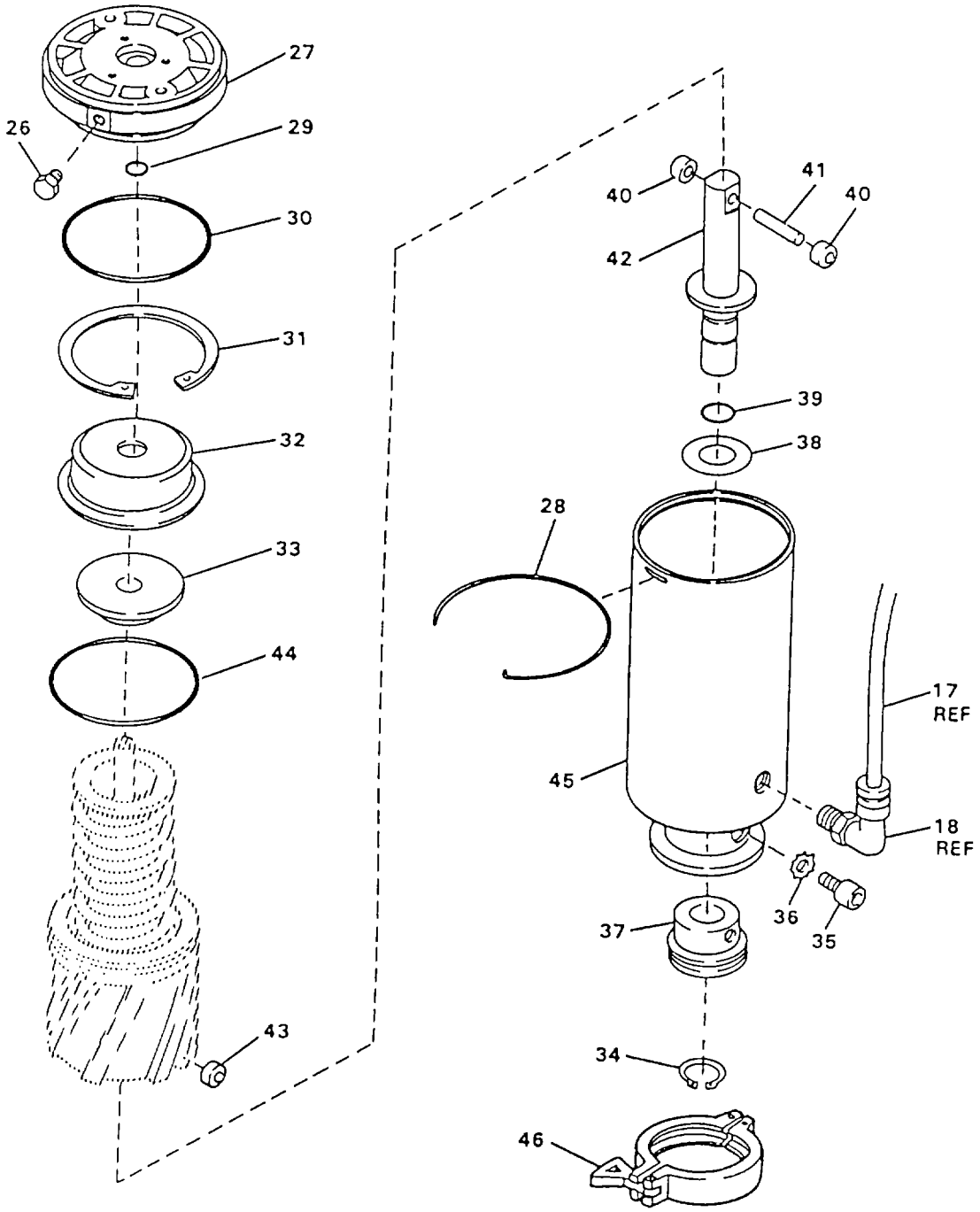

FIGURE 73. BUTTERFLY VALVE AND ACTUATOR (SHEET 2 OF 6)
(MODEL ETN ONLY)

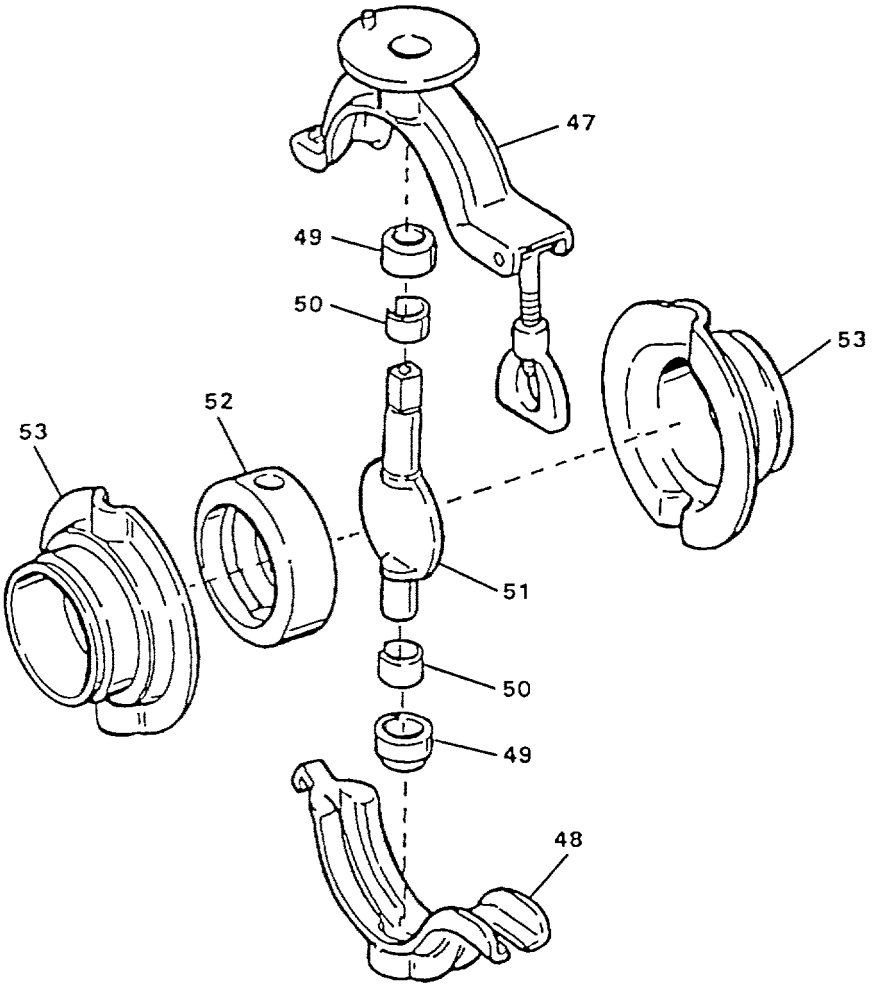

FIGURE 73. BUTTERFLY VALVE AND ACTUATOR (SHEET 3 OF 6)
(MODEL ETN ONLY)

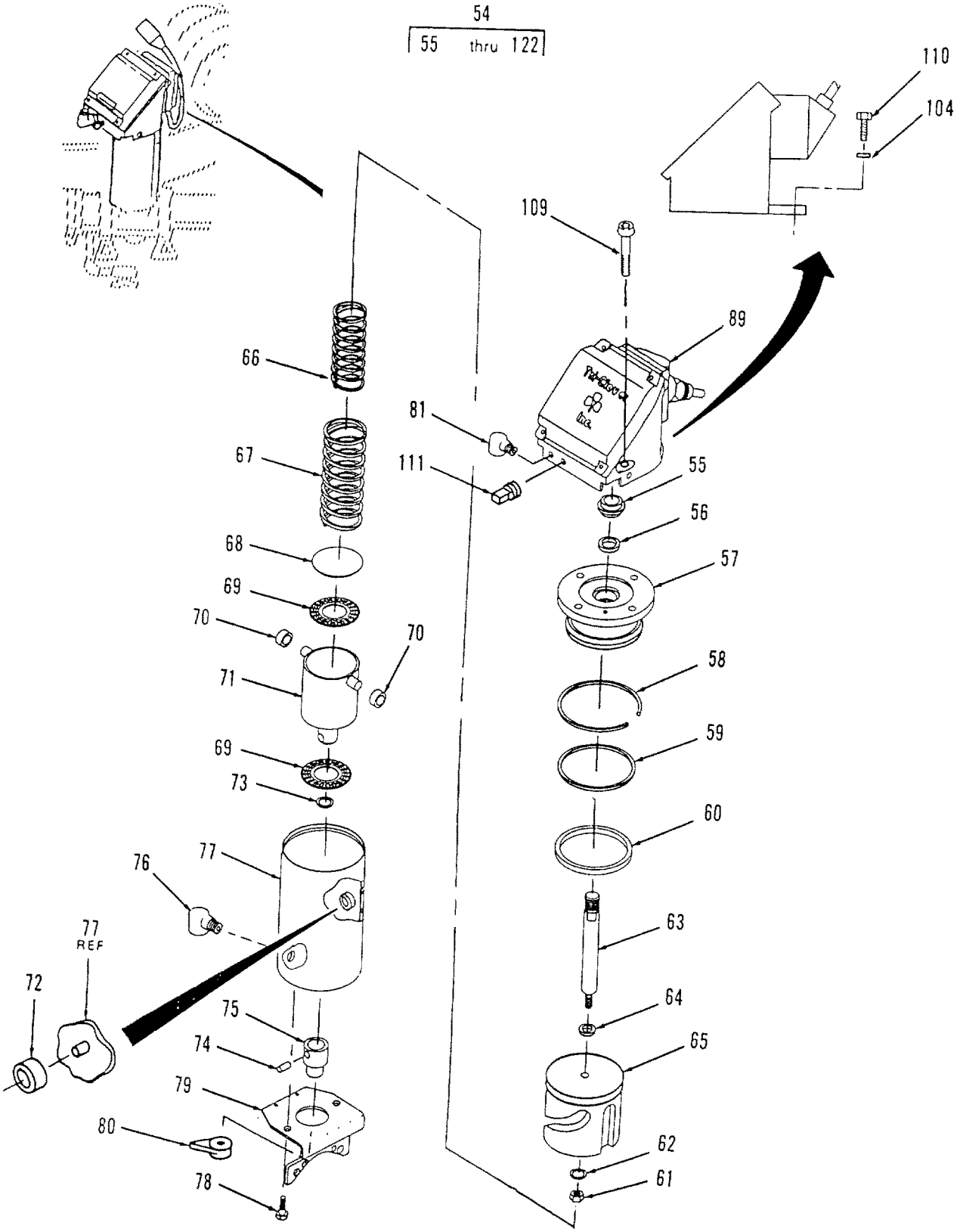

FIGURE 73. BUTTERFLY VALVE AND ACTUATOR (SHEET 4 OF 6)
(MODEL FKD ONLY)

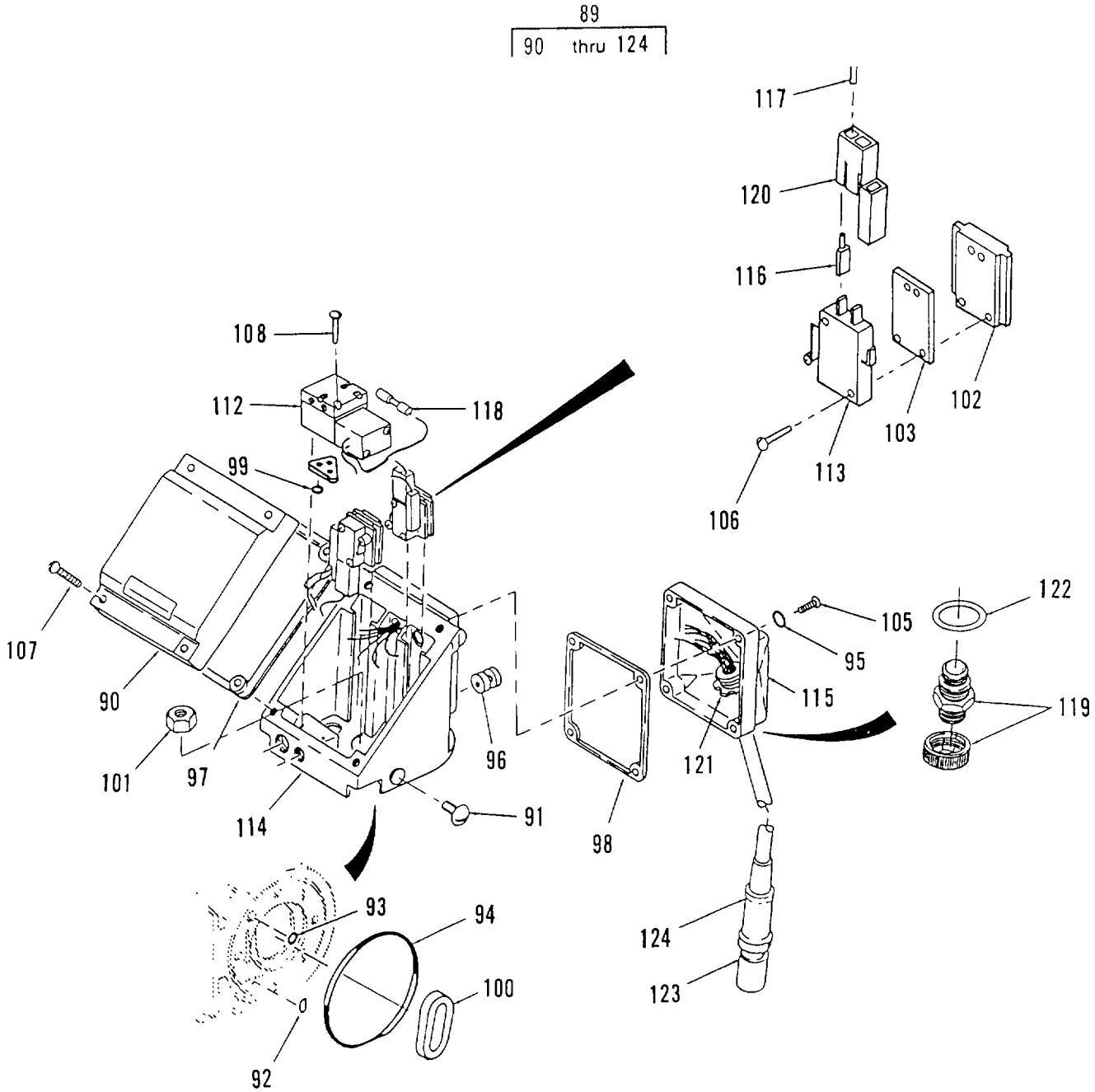

FIGURE 73. BUTTERFLY VALVE AND ACTUATOR (SHEET 5 OF 6)
(MODEL FKD ONLY)

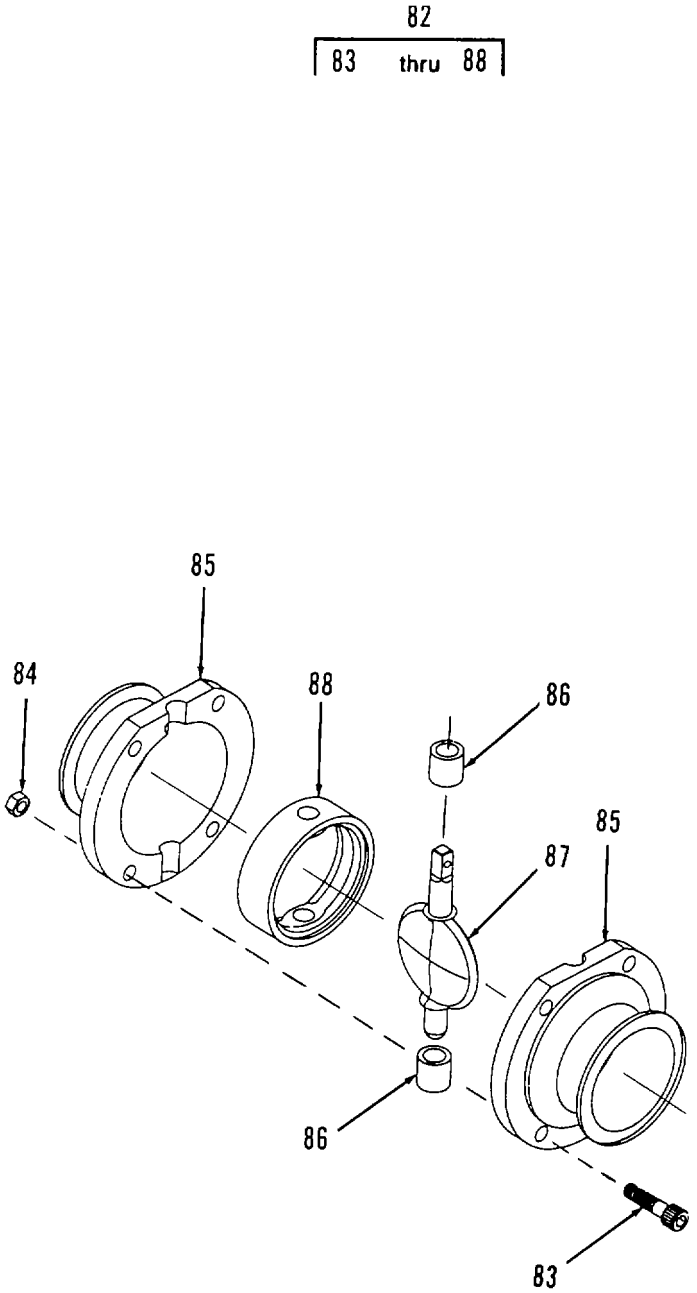

FIGURE 73. BUTTERFLY VALVE AND ACTUATOR (SHEET 6 OF 6)
(MODEL FKD ONLY)

(1) ITEM NO	(2) SMR CODE	(3) NSN	(4) CAGEC	(5) PART NUMBER	(6) DESCRIPTION AND USABLE ON CODES(UOC)	(7) QTY
					GROUP 02 WATER PURIFICATION SYSTEM FIG 73 BUTTERFLY VALVE AND ACTUATOR	
1	XDFZZ		09647	120-02433-108	..MARKER.....ETN	1
2	PBOFF	4810013476842	3Z033	EGPCCA3.0	..VALVE,BUTTERFLY.....ETN	1
3	XDOFF		3Z033	BVP-ACT-110V	...ACTUATOR.....ETN	1
4	XDOZZ		3Z033	BVP-ACTUC-14	....COVER.....ETN	1
5	PBOZZ	4710013526035	3Z033	BVP-ACTUC-6	....TUBE ASSEMBLY,METAL.....ETN	1
6	PBOZZ	5945013501851	3Z033	BVP-ACTUC-15-1	....SOLENOID,ELECTRICAL.....ETN	1
7	XDOZZ		3Z033	BVP-ACTUC-22	....SCREW,SST.....ETN	2
8	PBOZZ	4810013506039	3Z033	BVP-ACTUC-15	....VALVE ASSEMBLY,SOLE.....ETN	1
9	PBOZZ	5310013517801	3Z033	BVP-ACTUC-24	....WASHER,FLAT.....ETN	1
10	XDOZZ		3Z033	BVP-ACTUC-21	....SCREW,MACHINE,SST.....ETN	1
11	XDOZZ		3Z033	BVP-ACTUC-11	....WASHER,FLAT.....ETN	1
12	XDOZZ		3Z033	BVP-ACTUC-8	....SCREW,ADJUSTMENT.....ETN	2
13	PBOZZ	6150013572954	3Z033	BVP-ACTUC-3-4	....SWITCH ASSEMBLY.....ETN	1
14	XDOZZ		3Z033	BVP-ACTUC-13	....BRACKET,MOUNTING.....ETN	1
15	PAOZZ	5331013517616	3Z033	BVP-ACTUC-18	....O-RING.....ETN	1
16	XDOZZ		3Z033	BVP-ACTUC-1	....PLUG.....ETN	1
17	PBOZZ	4720013529039	3Z033	BVP-ACT-86-34	....TUBING,NONMETALLIC AIR.....ETN	1
18	XDOZZ		3Z033	BVP-ACT-86-42	....FITTING,AIR.....ETN	1
19	XDOZZ		3Z033	BVP-ACTUC-2	....CONNECTOR W/CABLE.....ETN	1
20	XDFZZ		3Z033	BVP-ACTUC-2A	....ADAPTER.....ETN	1
21	XDOZZ		3Z033	BVP-ACTUC-16	....FITTING,ADAPTER.....ETN	1
22	XDOZZ		3Z033	BVP-ACTUC-19	....FITTING,AIR INLET.....ETN	1
23	XDOZZ		3Z033	BVP-ACTUC-12	....SCREW,FLAT HEAD.....ETN	3
24	XDOZZ		3Z033	BVP-ACTUC-5	....ACTIVATOR.....ETN	1
25	XDOZZ		3Z033	BVP-ACTUC-7	....BASE,MOLDED.....ETN	1
26	XDFZZ		3Z033	BVP-ACT-86-40	....SCREW,CAP,SOLID.....ETN	1
27	XDFZZ		3Z033	BVP-ACT-86-12	....COVER,CYLINDER.....ETN	1
28	PBFZZ	5325013511290	3Z033	BVP-ACT-86-11	....RING,RETAINING.....ETN	1
29	PBOZZ	5331013517617	3Z033	BVP-ACT-86-16	....O-RING.....ETN	1
30	PAFZZ	5331013517618	3Z033	BVP-ACT-86-10	....O-RING.....ETN	1
31	PBFZZ	5325013511287	3Z033	BVP-ACT-86-38	....RING,RETAINING.....ETN	1
32	XDFZZ		3Z033	BVP-ACT-86-37	....CAP,SAFETY.....ETN	1
33	PBFZZ	3120013517790	3Z033	BVP-ACT-86-39	....BEARING,WASHER,THRU.....ETN	1
34	PBFZZ	5325013511288	3Z033	BVP-ACT-86-30	....RING,RETAINING.....ETN	1
35	XDFZZ		3Z033	BVP-ACT-86-36	....SCREW,LOCKING.....ETN	1
36	XDFZZ		3Z033	BVP-ACT-86-43	....WASHER,LOCK.....ETN	1
37	XDFZZ		3Z033	BVP-ACT-86-41	....BASE,ACTUATOR.....ETN	1
38	PBFZZ	5310013517806	3Z033	BVP-ACT-86-26	....WASHER,PLAT.....ETN	1
39	PBFZZ	5331013517620	3Z033	BVP-ACT-86-28	....O-RING.....ETN	1
40	XDFZZ		3Z033	BVP-ACT-86-5	....BEARING,INNER.....ETN	2
41	XDFZZ		3Z033	BVP-ACT-86-21	....SHAFT,BEARING.....ETN	1
42	XDFZZ		3Z033	BVP-ACT-86-31	....STEM WITH DISC.....ETN	1
43	XDFZZ		3Z033	BVP-ACT-86-20	....BEARING,OUTER.....ETN	2
44	PAFZZ	5331013517619	3Z033	BVP-ACT-86-6	....O-RING.....ETN	1
45	XDFZZ		3Z033	BVP-ACT-66-1	....CYLINDER.....ETN	1
46	XDOZZ		3Z033	EG13MM-3	...CLAMP.....ETN	1
47	XDOZZ		3Z033	BVP-66-13-3.0	...CLAMP,UPPER HALF.....ETN	1
48	XDOZZ		3Z033	BVP-86-14-3.0	...CLAMP,LOWER HALF.....ETN	1
49	PBOZZ	3120013517783	3Z033	BVP-86-5-3.0	...BUSHING,SLEEVE.....ETN	2

(1) ITEM NO	(2) SMR CODE	(3) NSN	(4) CAGEC	(5) PART NUMBER	(6) DESCRIPTION AND USABLE ON CODES(UOC)	(7) QTY
50	PBOZZ	3120013514284	3Z033	BVP86-4-15-25	...BUSHING,SLEEVE.....ETN	2
51	XDOZZ		3Z033	BVP-86-3-3.0	...DISC AND SHAFT.....ETN	1
52	PBOZZ	5330013517598	3Z033	BVP-86-7-3.0	...SEAL,PLAIN.....ETN	1
53	XDOZZ		3Z033	BVP-86-2-3.0	...VALVE BODY HALF.....ETN	2
54	PBOFF	4820014464092	0LU89	B53-6300T-3-X-316L-20-5-31	...VALVE,BUTTERFLY 3.0 INCH.....FKD	1
55	XDFZZ		0LU89	25-428-05	....SEAL RETAINER.....FKD	1
56	PBFZZ		0LU89	17-98	....VEE PACKING.....FKD	1
57	XDFZZ		0LU89	B53-6000-19-S	....CONTROL TOP ADAPT.....FKD	1
58	XDFZZ		0LU89	B53-6000-6	....RING,RETAINING.....FKD	1
59	PBFZZ	5330014476713	0LU89	B53-6000-7	....O-RING.....FKD	1
60	PBFZZ	5330014476715	0LU89	B53-6000-4	....O-RING.....FKD	1
61	XDFZZ		0LU89	NU1300E02-SS	....NUT.....FKD	1
62	XDFZZ		0LU89	LWA1300-SS	....WASHER,LOCK.....FKD	1
63	XDFZZ		0LU89	B53-6000-20-S	....STEM.....FKD	1
64	PBFZZ	5330014476729	0LU89	17-352	....GASKET.....FKD	1
65	XDFZZ		0LU89	B53-6000-3	....PISTON.....FKD	1
66	XDFZZ		0LU89	B53-6000-8	....INNER SPRING.....FKD	1
67	XDFZZ		0LU89	B53-6000-9	....OUTER SPRING.....FKD	1
68	XDFZZ		0LU89	B53-6000-27	....THRUST PLATE.....FKD	1
69	XDFZZ		0LU89	B53-6000-12	....THRUST BEARING.....FKD	2
70	XDFZZ		0LU89	B53-6000-11	....NEEDLE BEARING.....FKD	2
71	XDFZZ		0LU89	B53-6000-2	....DRIVE ASSEMBLY.....FKD	1
72	XDFZZ		0LU89	B53-6000-10	....NEEDLE BEARING.....FKD	2
73	PAFZZ	5330014476696	0LU89	B53-6000-14	....O-RING.....FKD	1
74	XDFZZ		0LU89	B53-6000-15	....SPLIT PIN.....FKD	1
75	XDFZZ		0LU89	B53-6000-17-3	....COUPLER.....FKD	1
76	XDOZZ		0LU89	B53-6000-23	....WATER EJECTOR.....FKD	1
77	XDFZZ		0LU89	B53-6000-1	....CYLINDER.....FKD	1
78	XDFZZ		0LU89	B53-1-10-SS	....BRACKET SCREW.....FKD	2
79	XDFZZ		0LU89	B53-3-09-S	....MOUNTING BRACKET.....FKD	1
80	XDFZZ		0LU89	B53-6000-18	....POSITION INDICATOR.....FKD	1
81	XDFZZ		0LU89	42-15-78	....AIR FITTING.....FKD	1
82	XDOOO		0LU89	B51-3-51-X-316L	....BUTTERFLY VALVE.....FKD	1
83	XDOZZ		0LU89	SC1316E-SS	.....SCREW.....FKD	4
84	XDOZZ		0LU89	NU1300H-SS	.....NUT.....FKD	4
85	XDOZZ		0LU89	B51-3-01-316	.....VALVE BODY.....FKD	2
86	XDOZZ		0LU89	B51-3-06	.....BUSHING.....FKD	2
87	XDOZZ		0LU89	B53-3-05-316L	.....DISC.....FKD	1
88	XDOZZ		0LU89	B51-3-42-X	.....SEAT.....FKD	1
89	PBOZZ		0LU89	74-100-X-Y-Z	....CONTROL TOP.....FKD	1
90	XDOZZ		0LU89	1-37	....COVER.....FKD	1
91	XDOZZ		0LU89	14-124	....PLUG.....FKD	2
92	XDOZZ		0LU89	17-35-U	....PACKING,PREFORMED.....FKD	1
93	XDOZZ		0LU89	17-63-U	....PACKING,PREFORMED.....FKD	1
94	XDOZZ		0LU89	17-109-U25	....PACKING,PREFORMED.....FKD	1
95	XDOZZ		0LU89	17-139-U-90	....PACKING,PREFORMED.....FKD	4
96	XDOZZ		0LU89	17-348	....BLOW OUT PLUG PRESSURE RELIEF..... FKD	1
97	XDOZZ		0LU89	17-337B-E	....GASKET.....FKD	1
98	XDOZZ		0LU89	17-340B-E	....GASKET.....FKD	1
99	XDOZZ		0LU89	17-344-U	....PACKING,PREFORMED.....FKD	3
100	XDOZZ		0LU89	25-428-04	....PACKING GLAND.....FKD	1

(1) ITEM NO	(2) SMR CODE	(3) NSN	(4) CAGEC	(5) PART NUMBER	(6) DESCRIPTION AND USABLE ON CODES(UOC)	(7) QTY
101	XDOZZ		0LU89	36-82A	....STEM GUIDE NUT.....FKD	1
102	XDOZZ		0LU89	54-100	....MOUNTING BLOCK.....FKD	2
103	XDOZZ		0LU89	54-101	....SPACER BLOCK.....FKD	2
104	XDOZZ		0LU89	LWA1300-SS	....LOCKWASHER.....FKD	1
105	XDOZZ		0LU89	SC107R-SS	....MACHINE SCREW.....FKD	4
106	XDOZZ		0LU89	SC108R-SS	....SCREW.....FKD	4
107	XDOZZ		0LU89	SC707R-SS	....SCREW.....FKD	4
108	XDOZZ		0LU89	SC512F-SS	....SCREW.....FKD	2
109	XDOZZ		0LU89	SS1307E-SS	....SCREW.....FKD	3
110	XDOZZ		0LU89	SC1307H-SS	....SCREW.....FKD	1
111	XDOZZ		0LU89	MS-105-58A-CP	....PLUG-VENTED.....FKD	1
112	XDOZZ		0LU89	33-169A	....SOLENOID.....FKD	1
113	XDOZZ		0LU89	EL-79500-0013	....MICRO SWITCH.....FKD	2
114	XDOZZ		0LU89	1-39	....HOUSING BASE.....FKD	1
115	XDOZZ		0LU89	44-262	....COVER.....FKD	1
116	XDOZZ		0LU89	EL-19870-0037	....MOLEX TERMINAL.....FKD	4
117	XDOZZ		0LU89	EL-96750-0022	....WIRE 18 GAUGE, BLACK.....FKD	1
118	XDOZZ		0LU89	EL-96010-0022	....SPLICE,BUTT.....FKD	2
119	XDOZZ		0LU89	EL-19170-0005	....GRIP,CORD.....FKD	1
120	XDOZZ		0LU89	EL-19760-0011	....SOCKET.....FKD	4
121	XDOZZ		0LU89	13-169	....NUT.....FKD	1
122	XDOZZ		0LU89	17-347	....GASKET.....FKD	1
123	XDOZZ		0LU89	EL-20650-0001	...MALE PLUG ASSY.....FKD	1
124	XDOZZ		0LU89	EL-20760-0001	...RECEPTACLE ASSY.....FKD	1

END OF FIGURE

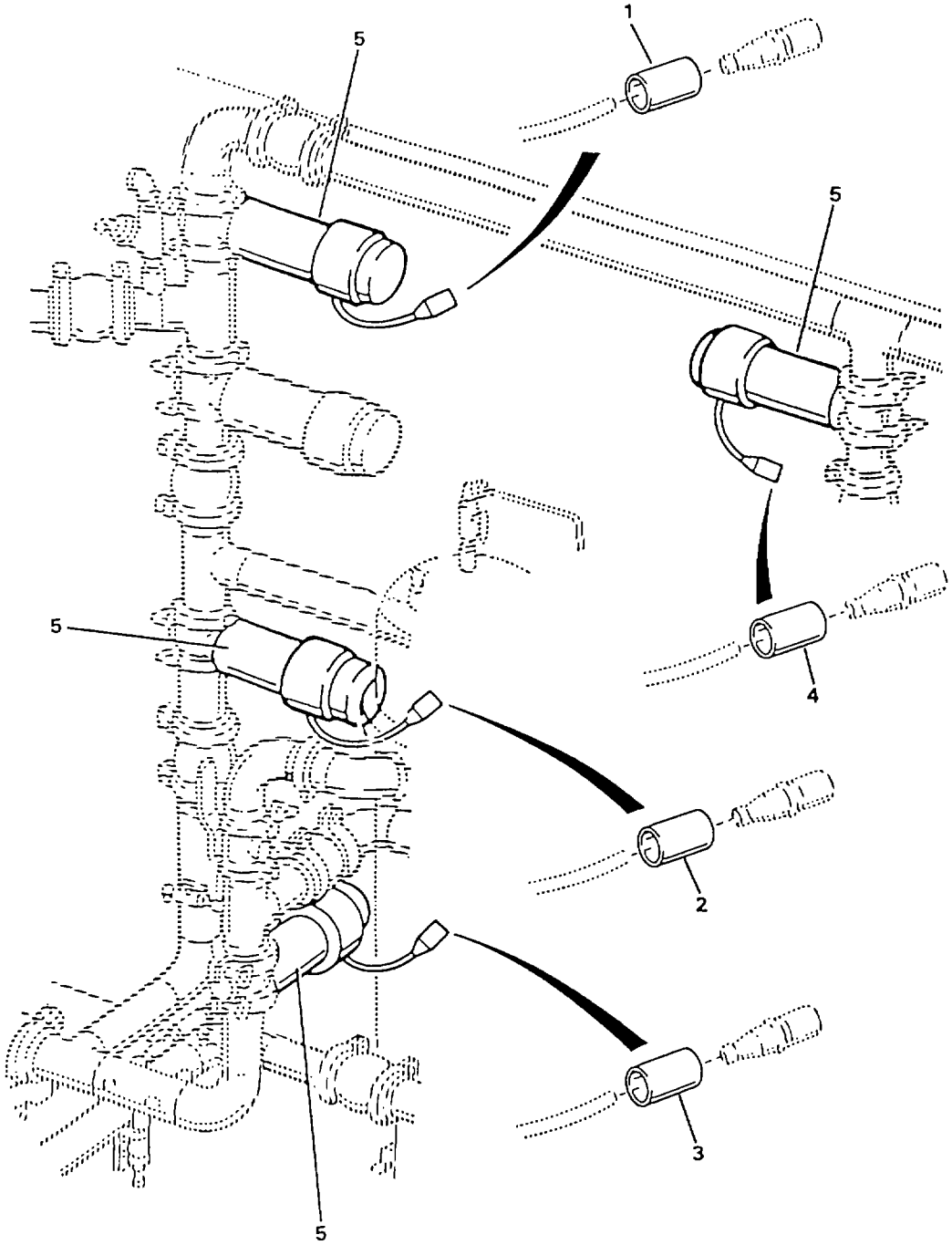

FIGURE 74. BUTTERFLY VALVE AND ACTUATOR (SHEET 1 OF 8)
(Model ETN Only)

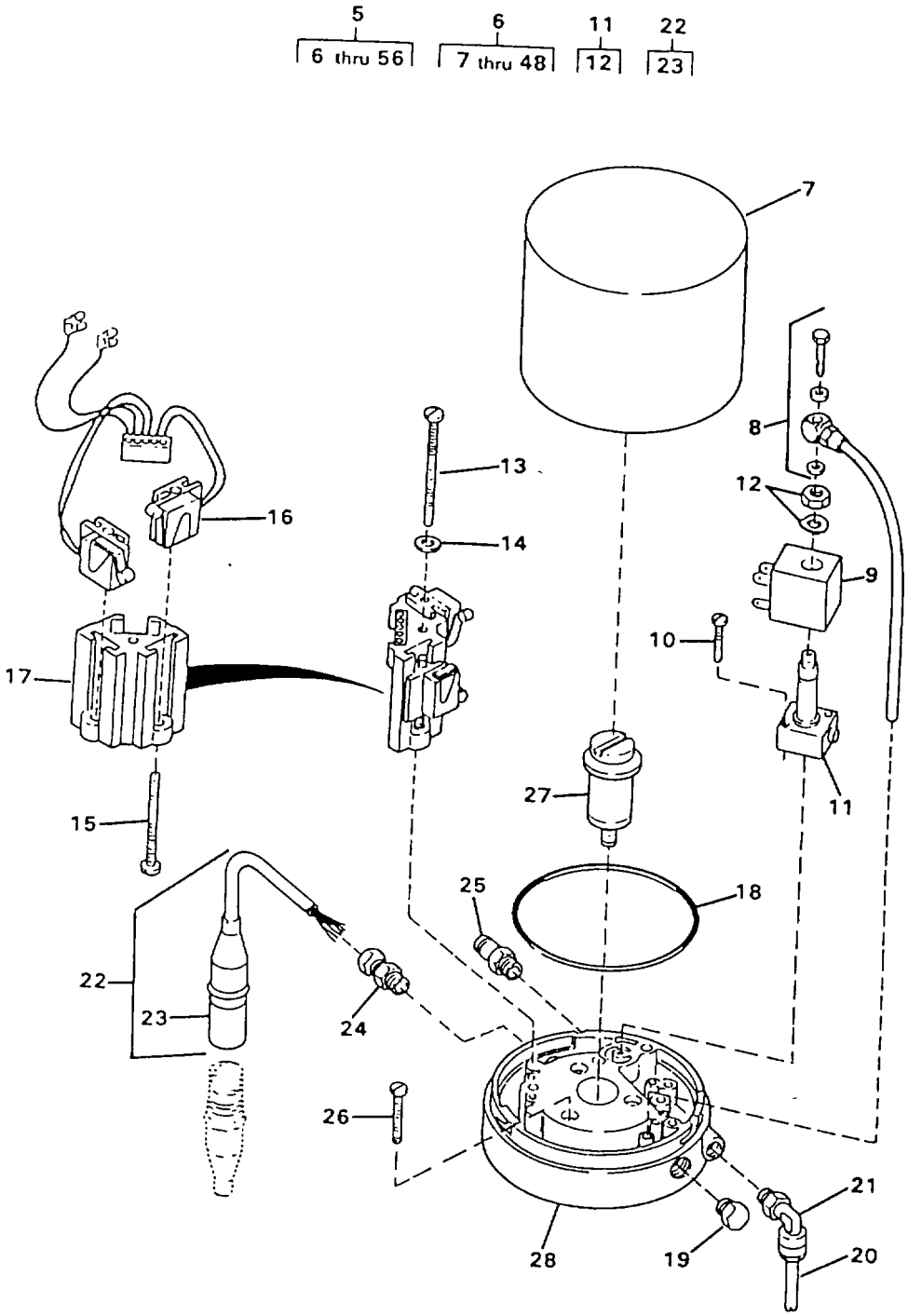

FIGURE 74. BUTTERFLY VALVE AND ACTUATOR (SHEET 2 OF 8)
(Model ETN Only)

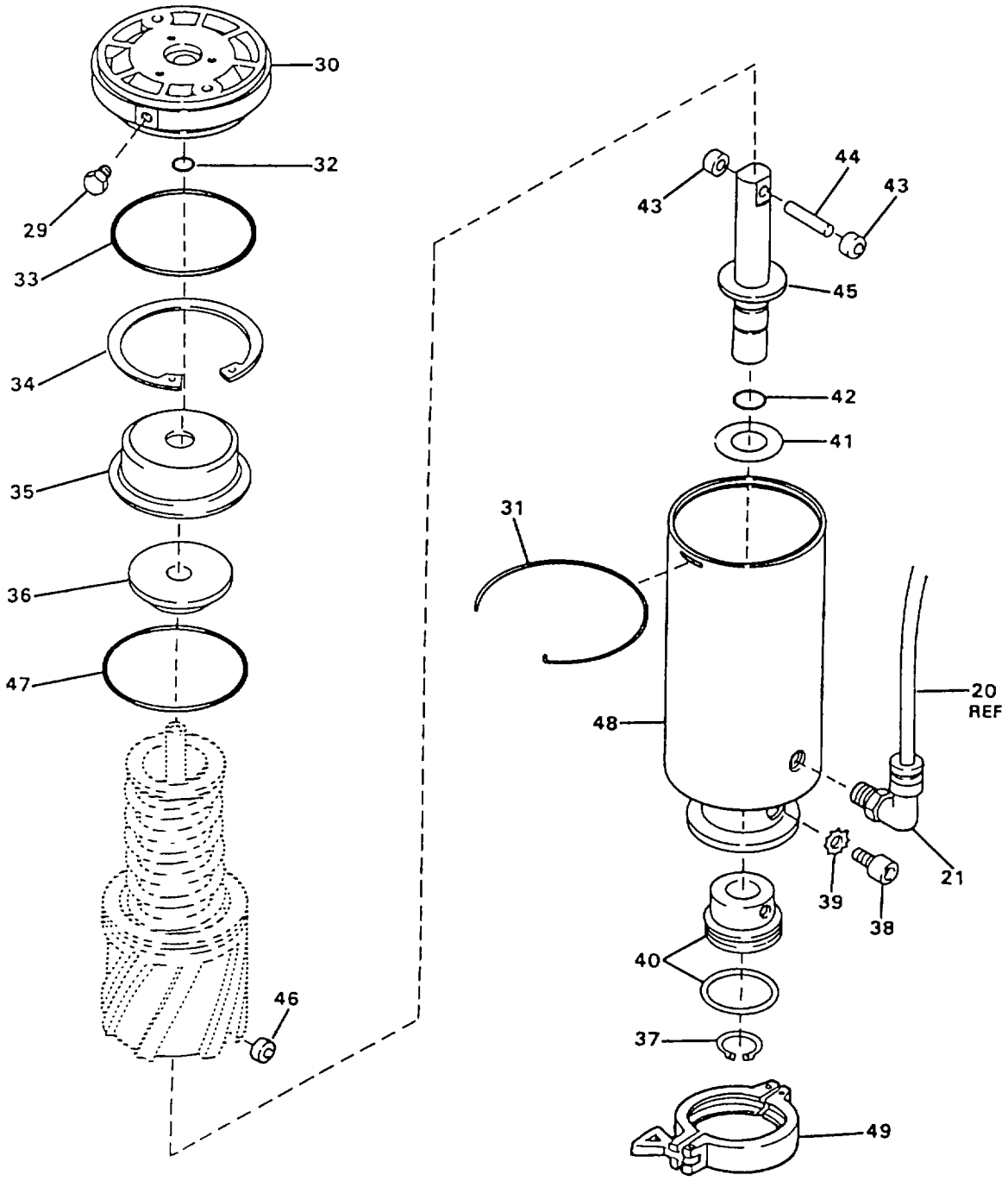

FIGURE 74. BUTTERFLY VALVE AND ACTUATOR (SHEET 3 OF 8)
(Model ETN Only)

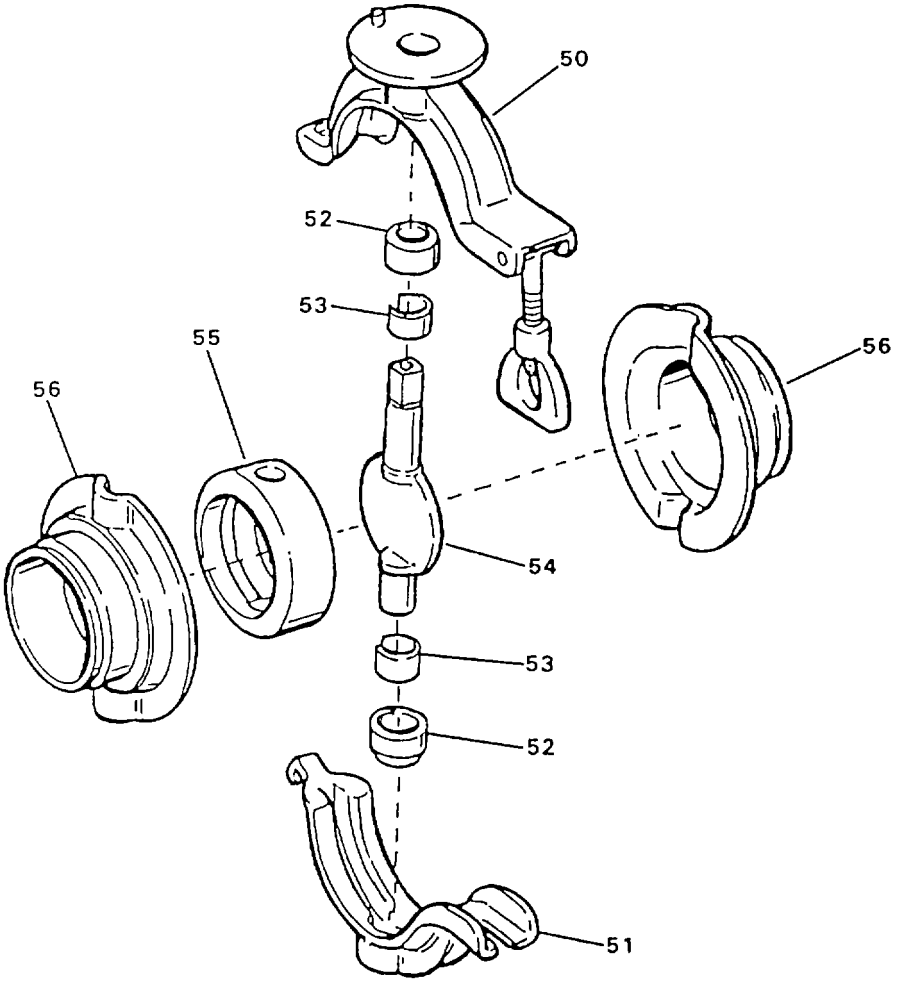

FIGURE 74. BUTTERFLY VALVE AND ACTUATOR (SHEET 4 OF 8)
(Model ETN Only)

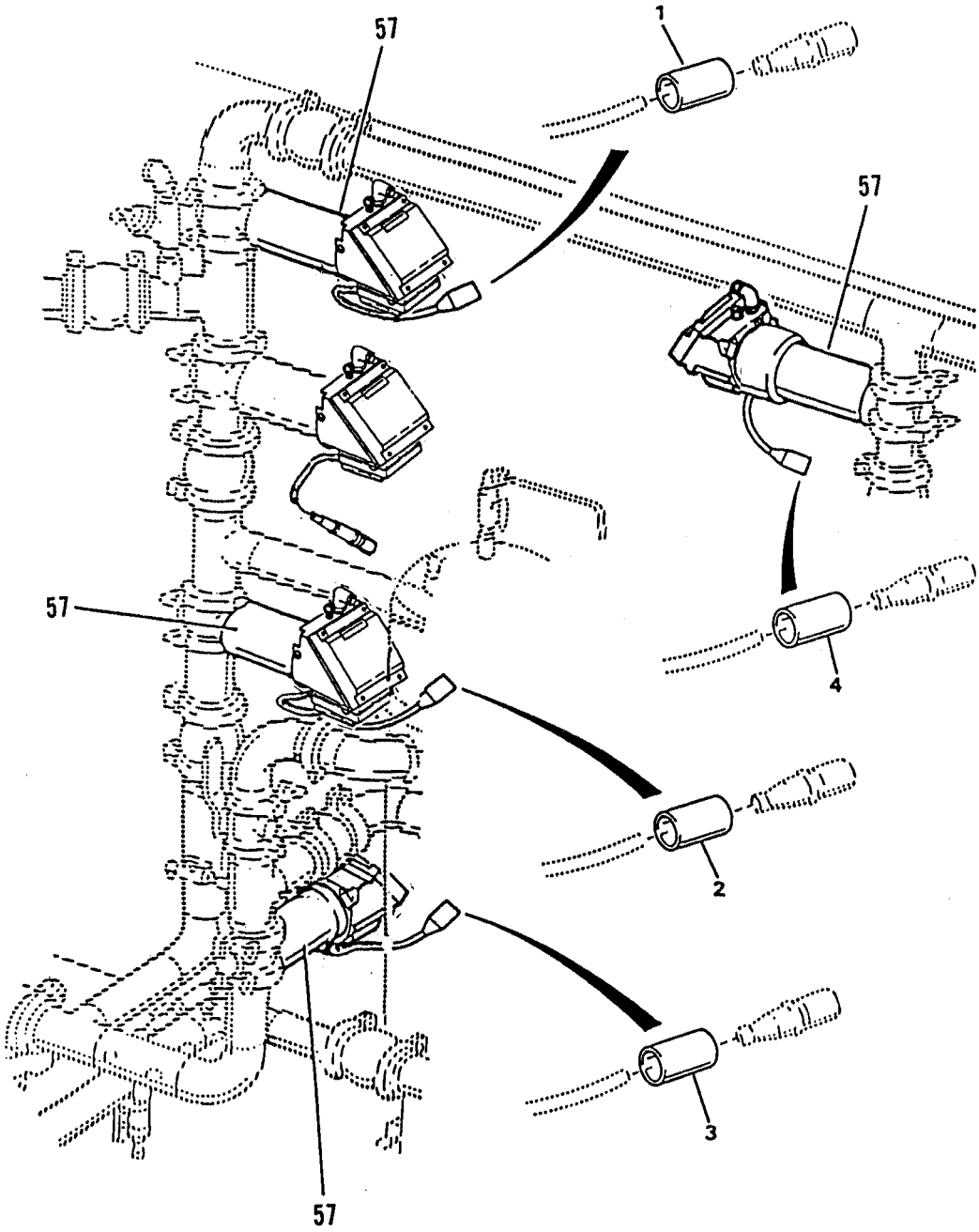

FIGURE 74. BUTTERFLY VALVE AND ACTUATOR (SHEET 5 OF 8)
(Model FKD Only)

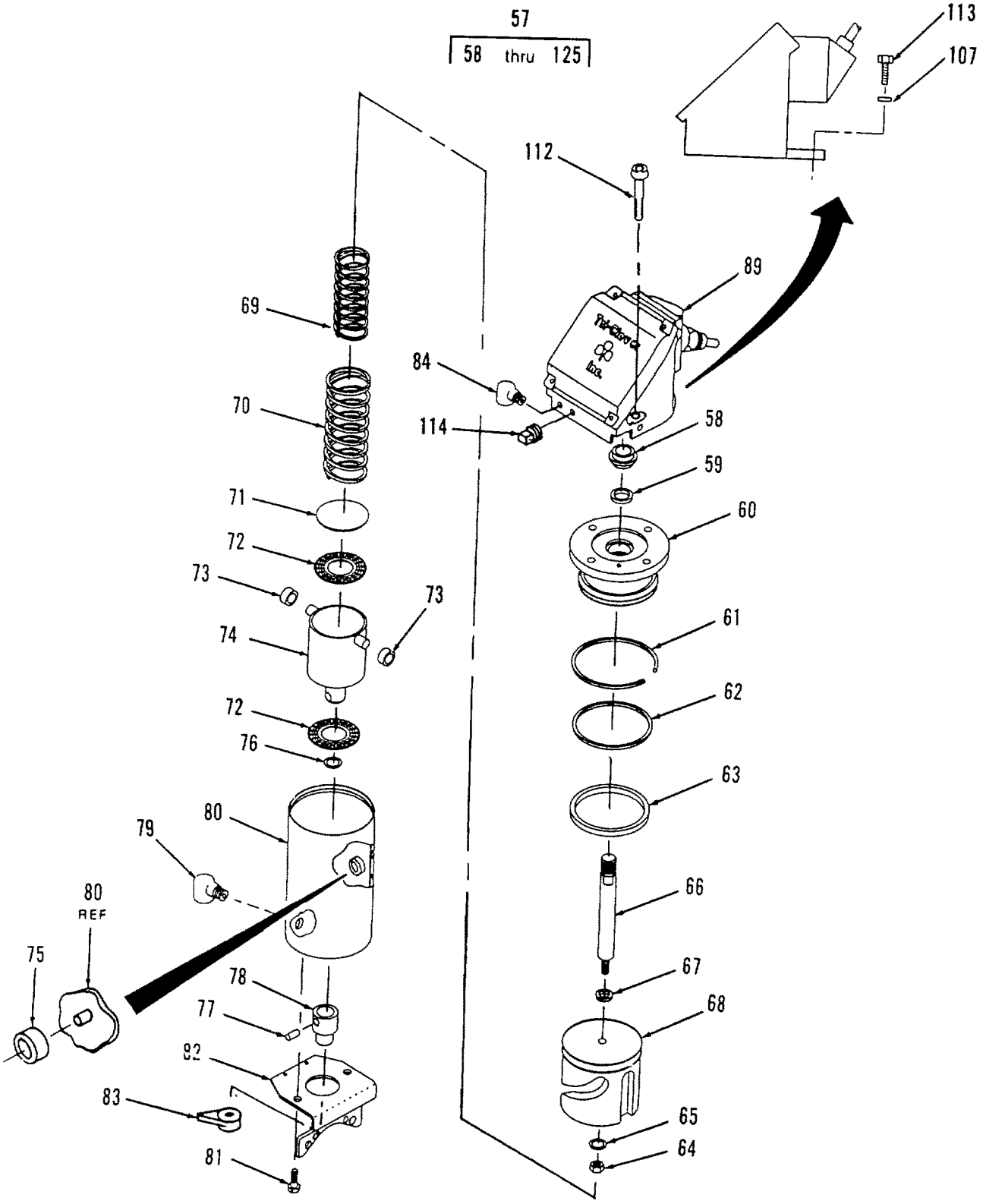

FIGURE 74. BUTTERFLY VALVE AND ACTUATOR (SHEET 6 OF 8)
(Model FKD Only)

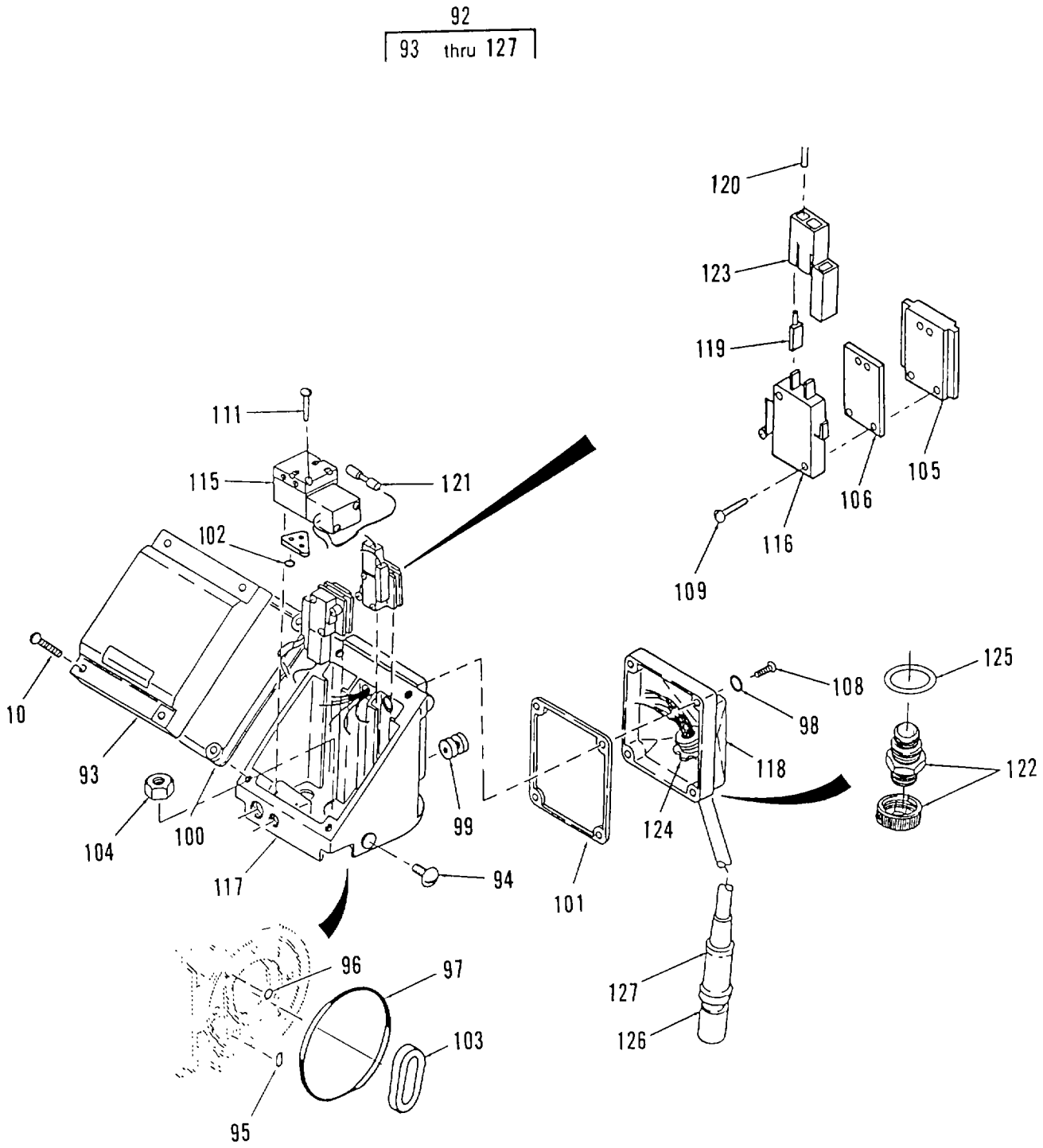

FIGURE 74. BUTTERFLY VALVE AND ACTUATOR (SHEET 7 OF 8)
(Model FKD Only)

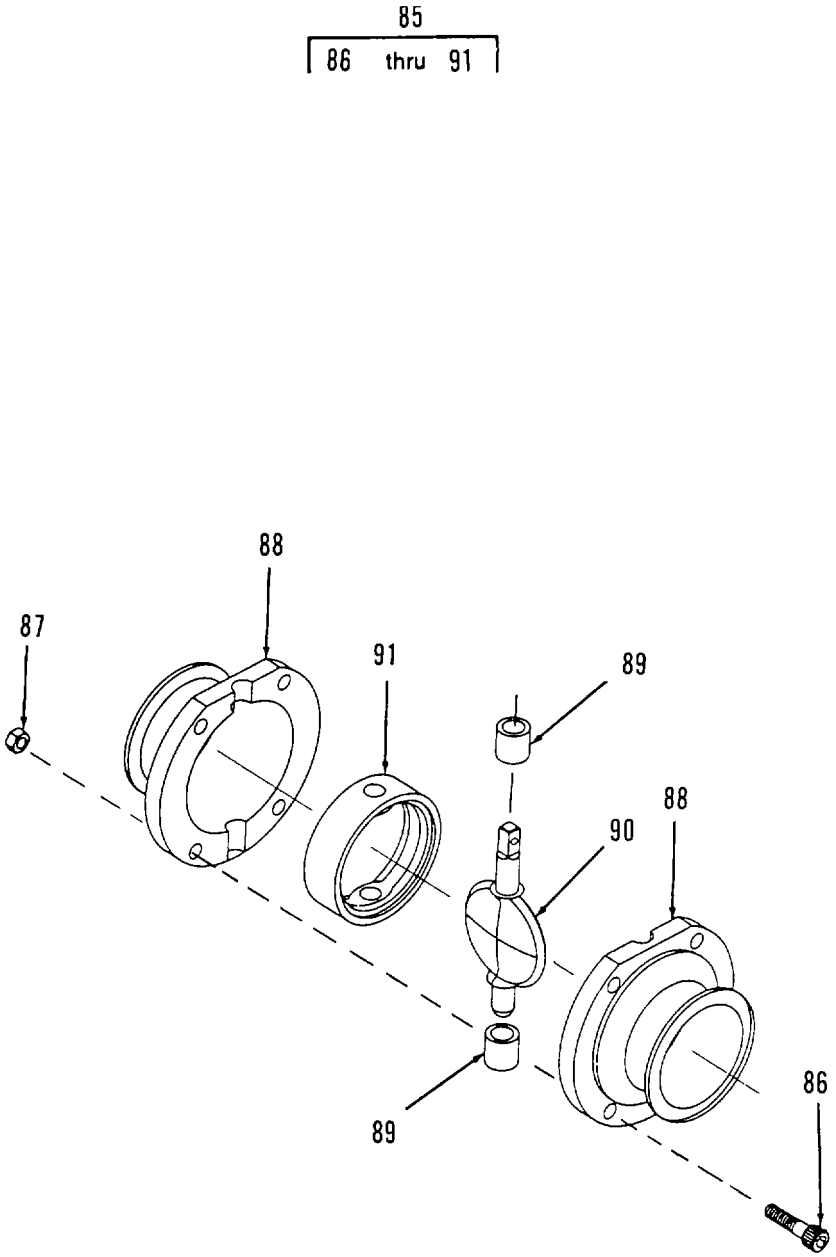

FIGURE 74. BUTTERFLY VALVE AND ACTUATOR (SHEET 8 OF 8)
(Model FKD Only)

(1) ITEM NO	(2) SMR CODE	(3) NSN	(4) CAGEC	(5) PART NUMBER	(6) DESCRIPTION AND USABLE ON CODES(UOC)	(7) QTY
					GROUP 02 WATER PURIFICATION SYSTEM	
					FIG. 74 BUTTERFLY VALVE AND ACTUATOR	
1	XDFZZ		09647	120-02433-113	..MARKER.....ETN	1
2	XDFZZ		09647	120-02433-115	..MARKER.....ETN	1
3	XDFZZ		09647	120-02433-116	..MARKER.....ETN	1
4	XDFZZ		09647	120-02433-123	..MARKER.....ETN	1
5	PBOFF	4810013528511	3Z033	EGPCCA2	..1/2 VALVE,BUTTERFLY.....ETN	4
6	XDOFF		3Z033	BVP-ACT-110V	...ACTUATOR.....ETN	1
7	XDOZZ		3Z033	BVP-ACTUC-14	....ACTUATOR.....ETN	1
8	PBOZZ	4710013526035	3Z033	BVP-ACTUC-6	.....TUBE ASSEMBLY,METAL.....ETN	1
9	PBOZZ	5945013501851	3Z033	BVP-ACTUC-15-1	....SOLENOID,ELECTRICAL.....ETN	1
10	XDOZZ		3Z033	BVP-ACTUC-22	....SCREW,SST.....ETN	2
11	PBOZZ	4810013506039	3Z033	BVP-ACTUC-15	....VALVE ASSEMBLY,SOLE.....ETN	1
12	PAFZZ	5310013517801	3Z033	BVP-ACTUC-24	.....WASHER,FLAT.....ETN	1
13	XDOZZ		3Z033	BVP-ACTUC-21	....SCREW,MACHINE STAINLESS STEEL.....ETN	1
14	XDOZZ		3Z033	BVP-ACTUC-11	....WASHER,FLAT.....ETN	1
15	XDOZZ		3Z033	BVP-ACTUC-8	....SCREW,ADJUSTMENT.....ETN	2
16	PBOZZ	6150013572954	3Z033	BVP-ACTUC-3-4	....SWITCH ASSEMBLY.....ETN	1
17	XDOZZ		3Z033	BVP-ACTUC-13	....BRACKET,MOUNTING.....ETN	1
18	PAOZZ	5331013517616	3Z033	BVP-ACTUC-18	....O-RING.....ETN	1
19	XDOZZ		3Z033	BVP-ACTUC-1	....PLUG.....ETN	1
20	PBOZZ	4720013529039	3Z033	BVP-ACT-86-34	....TUBING,NONMETALLIC.....ETN	1
21	XDOZZ		3Z033	BVP-ACT-86-42	....PITTING,AIR.....ETN	1
22	XDOZZ		3Z033	BVP-ACTUC-2	....CONNECTOR W/CABLE.....ETN	1
23	XDFZZ		3Z033	BVP-ACTUC-2A	....ADAPTER.....ETN	1
24	XDOZZ		3Z033	BVP-ACTUC-16	....FITTING,ADAPTER.....ETN	1
25	XDOZZ		3Z033	BVP-ACTUC-19	....FITTING,AIR INLET.....ETN	1
26	XDOZZ		3Z033	BVP-ACTUC-12	....SCREW,FLAT HEAD.....ETN	3
27	XDOZZ		3Z033	BVP-ACTUC-5	....ACTIVATOR.....ETN	1
28	XDOZZ		3Z033	BVP-ACTUC-7	....BASE,MOLDED.....ETN	1
29	XDFZZ		3Z033	BVP-ACT-86-40	....SCREW,CAP,SOLID.....ETN	1
30	XDFZZ		3Z033	BVP-ACT-86-12	....COVER,CYLINDER.....ETN	1
31	PBFZZ	5325013511290	3Z033	BVP-ACT-86-11	....RING,RETAINING.....ETN	1
32	PAFZZ	5331013517617	3Z033	BVP-ACT-86-16	....O-RING.....ETN	1
33	PAFZZ	5331013517618	3Z033	BVP-ACT-86-10	....O-RING.....ETN	1
34	PBFZZ	5325013511287	3Z033	BVP-ACT-86-38	....RING,RETAINING.....ETN	1
35	XDFZZ		3Z033	BVP-ACT-86-37	....CAP,SAFETY.....ETN	1
36	PBFZZ	5330013516364	3Z033	BVP-ACT-86-39	....BEARING,WASHER,THRU.....ETN	1
37	PBFZZ	5325013511288	3Z033	BVP-ACT-86-30	....RING,RETAINING.....ETN	1
38	XDFZZ		3Z033	BVP-ACT-86-36	....SCREW,LOCKING.....ETN	1
39	XDFZZ		3Z033	BVP-ACT-86-43	....WASHER,LOCK.....ETN	1
40	XDFZZ		3Z033	BVP-ACT-86-41	....BASE,ACTUATOR.....ETN	1
41	PBFZZ	5310013517806	3Z033	BVP-ACT-86-26	....WASHER,FLAT.....ETN	1
42	PBFZZ	5331013517620	3Z033	BVP-ACT-86-28	....O-RING.....ETN	1
43	XDFZZ		3Z033	BVP-ACT-86-5	....BEARING,INNER.....ETN	2
44	XDFZZ		3Z033	BVP-ACT-86-21	....SHAFT,BEARING.....ETN	1
45	XDFZZ		3Z033	BVP-ACT-86-31	....STEM WITH DISC.....ETN	1
46	XDFZZ		3Z033	BVP-ACT-86-20	....BEARING,OUTER.....ETN	2
47	PAFZZ	5330013517619	3Z033	BVP-ACT-86-6	....O-RING.....ETN	1
48	XDFZZ		3Z033	BVP-ACT-86-1	....CYLINDER.....ETN	1
49	XDOZZ		3Z033	EG 13 MM 2-1/2	...CLAMP.....ETN	1

(1) ITEM NO	(2) SMR CODE	(3) NSN	(4) CAGEC	(5) PART NUMBER	(6) DESCRIPTION AND USABLE ON CODES(UOC)	(7) QTY
50	XDOZZ		3Z033	BVP-86-13-2-1/2	...CLAMP,UPPER HALF.....ETN	1
51	XDOZZ		3Z033	BVP-86-14-2-1/2	...CLAMP,LOWER HALF.....ETN	1
52	PBOZZ	3120013517780	3Z033	BVP-86-5-2-1/2	...BUSHING,SLEEVE.....ETN	2
53	XDOZZ		3Z033	BVP-86-4-2-1/2	...BUSHING,SLEEVE.....ETN	2
54	PBOZZ	4820013509171	3Z033	BVP-B6-3-2-1/2	...DISK,VALUE.....ETN	1
55	PBOZZ	5330013521099	3Z033	BVP-86-7-2-1/2	...GASKET.....ETN	1
56	XDOZZ		3Z033	BVP-86-2-2-1/2	...VALVE BODY HALF.....ETN	2
57	PBOFF	4820014464090	0LU89	7510-105-316L	..VALVE,BUTTERFLY.....FKD	3
58	XDFZZ		0LU89	25-428-05	...STEM SEAL RETAINER.....FKD	1
59	PBFZZ		0LU89	17-98	...VEE PACKING.....FKD	1
60	XDFZZ		0LU89	B53-6000-19-S	...CONTROL TOP ADAPTER.....FKD	1
61	XDFZZ		0LU89	B53-6000-6	...RING,RETAINING.....FKD	1
62	PBFZZ	5330014476713	0LU89	B53-6000-7	...O-RING.....FKD	1
63	PBFZZ	5330014476715	0LU89	B53-6000-4	...O-RING.....FKD	1
64	XDFZZ		0LU89	NU1300E02-SS	...NUT.....FKD	1
65	XDFZZ		0LU89	LWA1300-SS	...WASHER,LOCK.....FKD	1
66	XDFZZ		0LU89	B53-6000-20-S	...STEM.....FKD	1
67	PBFZZ	5330014476729	0LU89	17-352	...GASKET.....FKD	1
68	XDFZZ		0LU89	B53-6000-3A	...PISTON.....FKD	1
69	XDFZZ		0LU89	B53-6000-B	...INNER SPRING.....FKD	1
70	XDFZZ		0LU89	B53-6000-9	...OUTER SPRING.....FKD	1
71	XDFZZ		0LU89	B53-6000-27	...THRUST PLATE.....FKD	1
72	XDFZZ		0LU89	B53-6000-12	...THRUST BEARING.....FKD	2
73	XDFZZ		0LU89	B53-6000-11	...NEEDLE BEARING.....FKD	2
74	XDFZZ		0LU89	B53-6000-2	...DRIVE ASSEMBLY.....FKD	1
75	XDFZZ		0LU89	B53-6000-10	...NEEDLE BEARING THRUST WASHER..FKD	2
76	PAFZZ	5330014476696	0LU89	B53-6000-14	...O-RING.....FKD	1
77	XDFZZ		0LU89	B53-6000-15	...SPLIT PIN.....FKD	1
78	XDFZZ		0LU89	B53-6000-17-1	...COUPLER.....FKD	1
79	XDOZZ		0LU89	B53-6000-23	...WATER EJECTOR.....FKD	1
80	XDFZZ		0LU89	B53-6000-1	...CYLINDER.....FKD	1
81	XDFZZ		0LU89	B53-1-10-SS	...BRACKET SCREW.....FKD	2
82	XDFZZ		0LU89	B53-1-09-S	...MOUNTING BRACKET.....FKD	1
83	XDFZZ		0LU89	B53-6000-18	...POSITION INDICATOR.....FKD	1
84	XDFZZ		0LU89	42-15-78	...AIR FITTING.....FKD	1
85	XDOOO		0LU89	7510-105-51-3161	...BUTTERFLY VALVE.....FKD	1
86	XDOZZ		0LU89	SC1316E-SS	....SCREW.....FKD	4
87	XDOZZ		0LU89	NU1300H-SS	....NUT.....FKD	4
88	XDOZZ		0LU89	7510-105-01-316L	....VALVE BODY.....FKD	2
89	XDOZZ		0LU89	B51-2-1/2-06	....BUSHING.....FKD	2
90	XDOZZ		0LU89	B53-2-1/2-05-316 L	....DISC.....FKD	1
91	XDOZZ		0LU89	B53-2-1/2-42-X	....SEAT.....FKD	1
92	PBOZZ		0LU89	74-100-X-Y-Z	...CONTROL TOP.....FKD	1
93	XDOZZ		0LU89	1-37	....COVER.....FKD	1
94	XDOZZ		0LU89	14-124	....PLUG.....FKD	2
95	XDOZZ		0LU89	17-35-U	....PACKING,PREPORMED.....FKD	1
96	XDOZZ		0LU89	17-63-U	....PACKING,PREPORMED.....FKD	1
98	XDOZZ		0LU89	17-139-U-90	....PACKING,PREFORMED.....FKD	4
99	XDOZZ		0LU89	17-348	....BLOW OUT PLUG PRESSURE RELIEF..... FKD	1
100	XDOZZ		0LU89	17-337B-E	...GASKET.....FKD	1
101	XDOZZ		0LU89	17-340B-E	...GASKET.....FKD	1

(1) ITEM NO	(2) SMR CODE	(3) NSN	(4) CAGEC	(5) PART NUMBER	(6) DESCRIPTION AND USABLE ON CODES(UOC)	(7) QTY
102	XDOZZ		0LU89	17-344-U	....PACKING,PREPORMED.....FKD	3
103	XDOZZ		0LU89	25-428-04	....PACKING GLAND.....FKD	1
104	XDOZZ		0LU89	36-82A	....STEM GUIDE NUT.....FKD	1
105	XDOZZ		0LU89	54-100	....MOUNTING BLOCK.....FKD	2
106	XDOZZ		0LU89	54-101	....SPACE BLOCK.....FKD	2
107	XDOZZ		0LU89	LWA1300-SS	....LOCKWASHER.....FKD	1
108	XDOZZ		0LU89	SC107R-SS	....MACHINE SCREW.....FKD	4
109	XDOZZ		0LU89	SC108R-SS	....SCREW.....FKD	4
110	XDOZZ		0LU89	SC707R-SS	....SCREW.....FKD	4
111	XDOZZ		0LU89	SC512P-SS	....SCREW.....FKD	2
112	XDOZZ		0LU89	SS1307E-SS	....SCREW.....FKD	3
113	XDOZZ		0LU89	SC1307H-SS	....SCREW.....FKD	1
114	XDOZZ		0LU89	MS-105-58A-CP	....PLUG-VENTED.....FKD	1
115	XDOZZ		0LU89	33-169A	....SOLENOID.....FKD	1
116	XDOZZ		0LU89	EL-79500-0013	....MICRO SWITCH.....FKD	2
117	XDOZZ		0LU89	1-39	....HOUSING ASE.....FKD	1
118	XDOZZ		0LU89	44-262	....COVER.....FKD	1
119	XDOZZ		0LU89	EL-19870-0037	....MOLEX TERMINAL.....FKD	4
120	XDOZZ		0LU89	EL-96750-0022	....WIRE 18 GAUGE, BLACK.....FKD	1
121	XDOZZ		0LU89	EL-96010-0022	....SPLICE,BUTT.....FKD	2
122	XDOZZ		0LU89	EL-19170-0005	....GRIP,CORD.....FKD	1
123	XDOZZ		0LU89	EL-19760-0011	....SOCKET.....FKD	4
124	XDOZZ		0LU89	13-169	....NUT.....FKD	1
125	XDOZZ		0LU89	17-347	....GASKET.....FKD	1
126	XDOZZ		0LU89	EL-20650-0001	....MALE PLUG ASSY.....FKD	1
127	XDOZZ		0LU89	EL-20760-0001	....RECEPTACLE ASSY.....FKD	1

END OF FIGURE

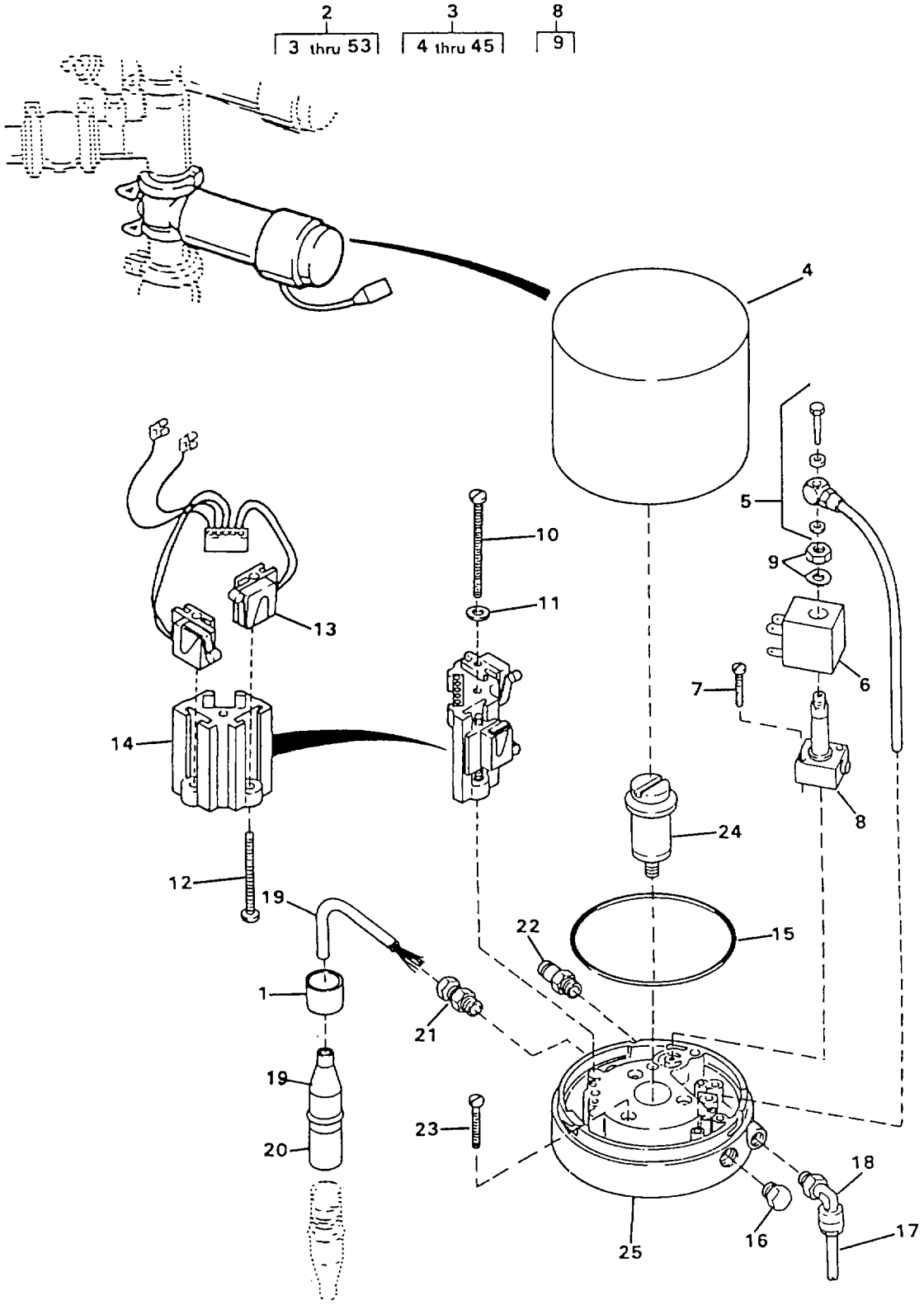

FIGURE 75. BUTTERFLY VALVE AND ACTUATOR (SHEET 1 OF 6)
(Model ETN Only)

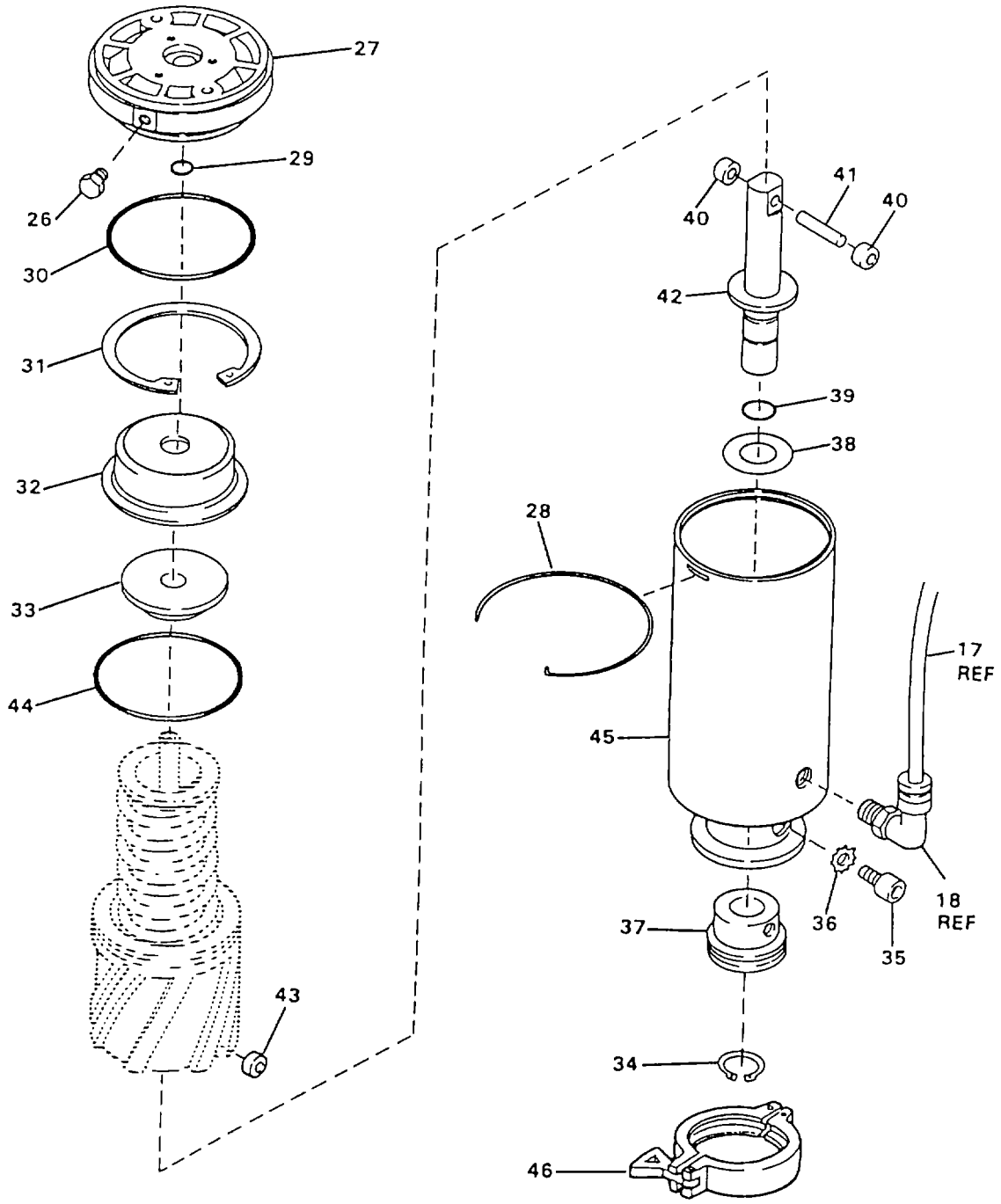

FIGURE 75. BUTTERFLY VALVE AND ACTUATOR (SHEET 2 OF 6)
(Model ETN Only)

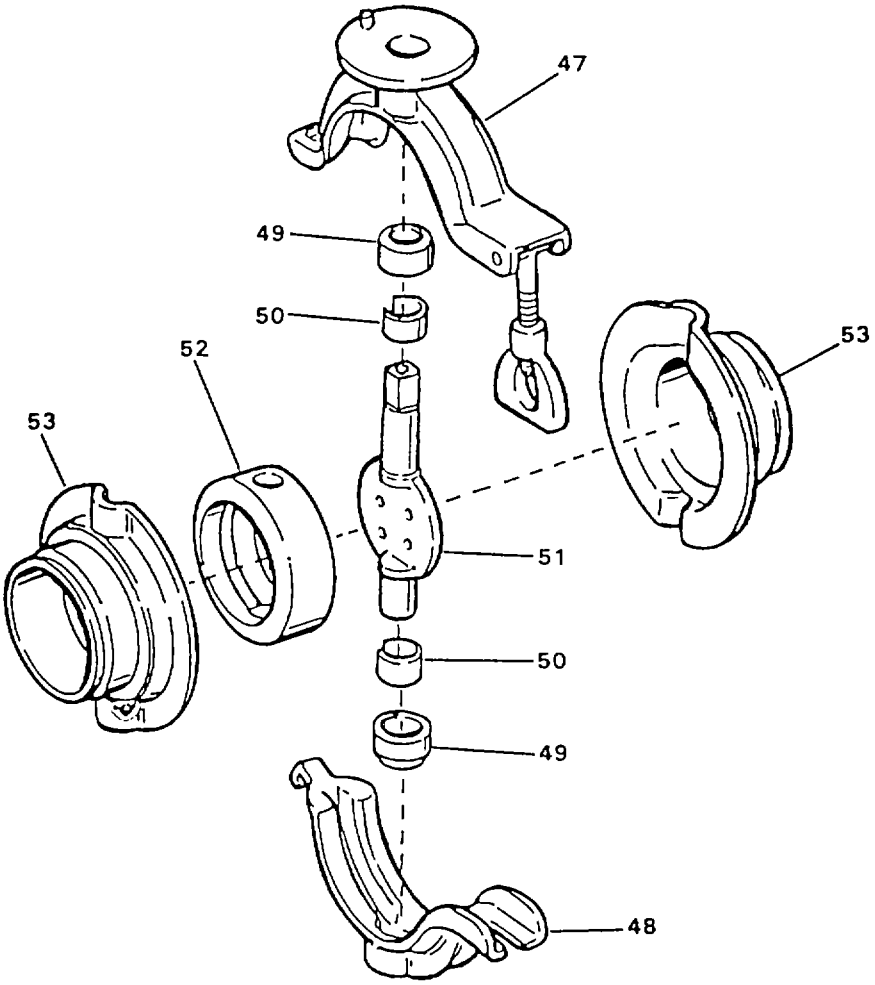

FIGURE 75. BUTTERFLY VALVE AND ACTUATOR (SHEET 3 OF 6)
(Model ETN Only)

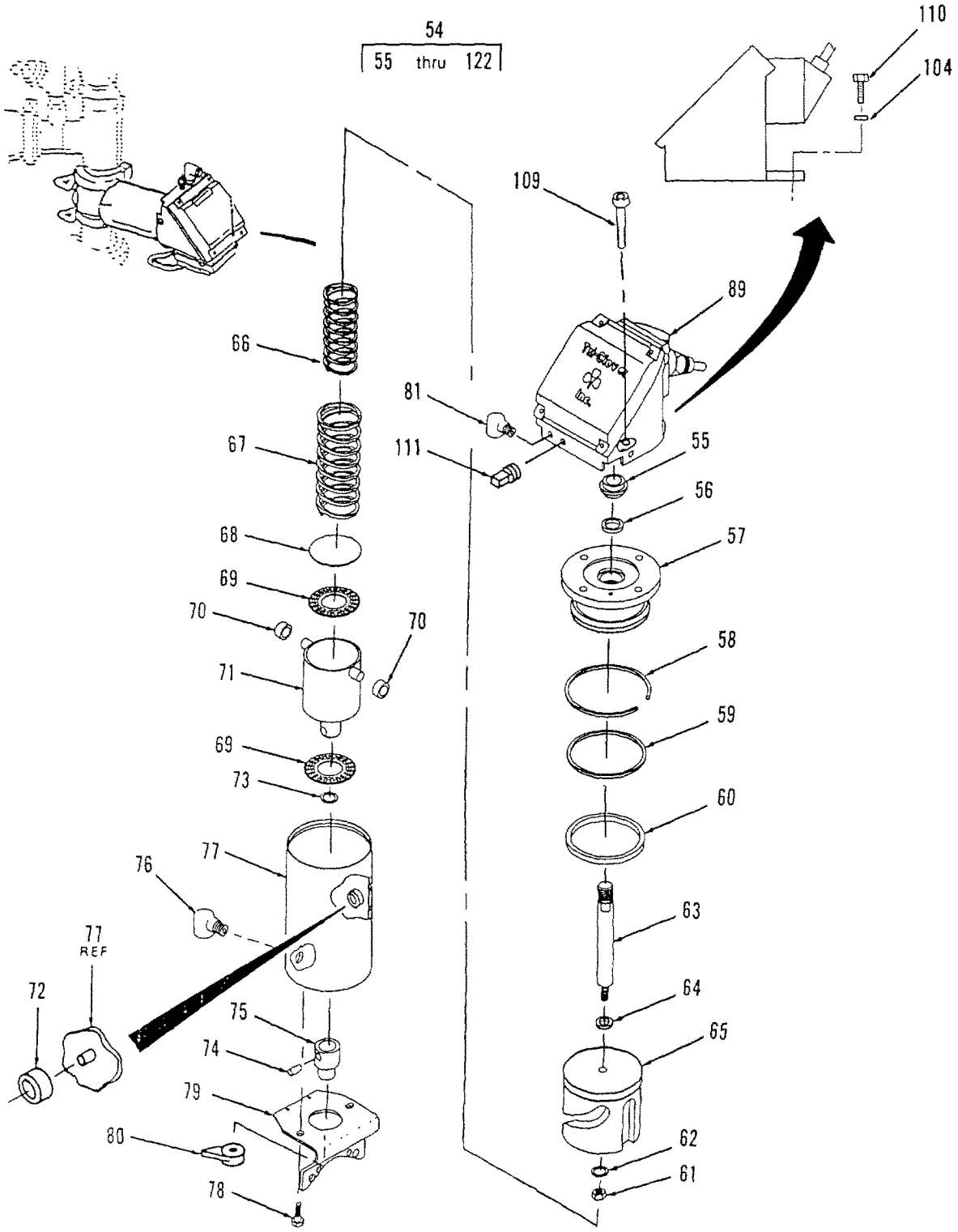

FIGURE 75. BUTTERFLY VALVE AND ACTUATOR (SHEET 4 OF 6)
(Model FKD Only)

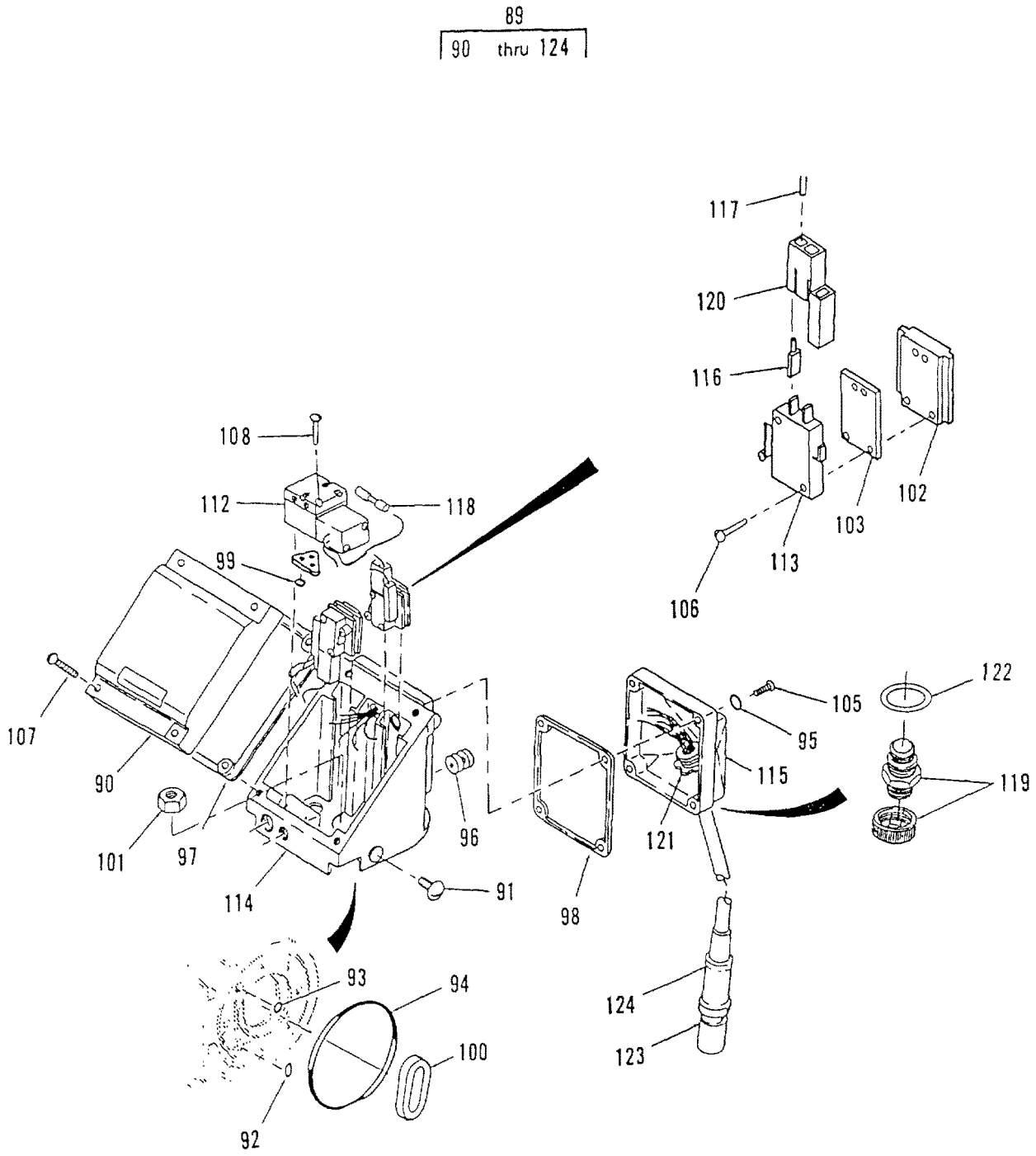

FIGURE 75. BUTTERFLY VALVE AND ACTUATOR (SHEET 5 OF 6)
(Model FKD Only)

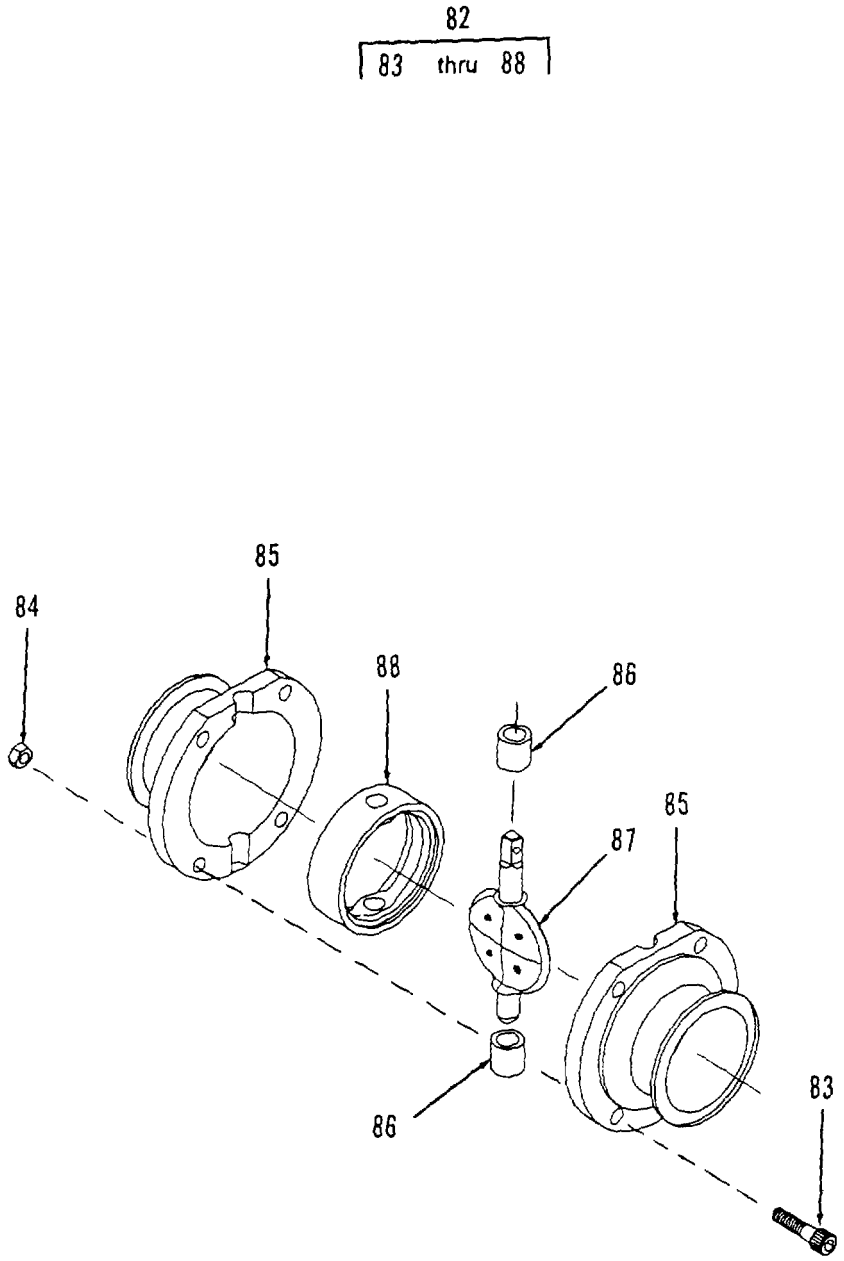

FIGURE 75. BUTTERFLY VALVE AND ACTUATOR (SHEET 6 OF 6)
(Model FKD Only)

(1) ITEM NO	(2) SMR CODE	(3) NSN	(4) CAGEC	(5) PART NUMBER	(6) DESCRIPTION AND USABLE ON CODES(UOC)	(7) QTY
					GROUP 02 WATER PURIFICATION SYSTEM	
					FIG. 75 BUTTERFLY VALVE AND ACTUATOR	
1	XDOZZ		09647	120-02433-114	..MARKER.....ETN	1
2	PBOFF		97403	13229E0351-1	..ACTUATED,ELECTRO-ME MEDIA ETN FILTER INLET VALVE.....	1
3	XDOFF		3Z033	BVP-ACT-110V	...ACTUATOR.....ETN	1
4	XDOZZ		3Z033	BVP-ACTUC-14	....COVER.....ETN	1
5	PBOZZ	4710013526035	3Z033	BVP-ACTUC-6	....TUBE ASSEMBLY,METAL.....ETN	1
6	PBOZZ	5945013501851	3Z033	BVP-ACTUC-15-1	....SOLENOID,ELECTRICAL.....ETN	1
7	XDOZZ		3Z033	BVP-ACTUC-22	....SCREW,SST.....ETN	2
8	PBOZZ	4810013506039	3Z033	BVP-ACTUC-15	....VALVE ASSEMBLY,SOLE.....ETN	1
9	PBOZZ	5310013517801	3Z033	BVP-ACTUC-24	....WASHER,FLAT.....ETN	1
10	XDOZZ		3Z033	BVP-ACTUC-21	....SCREW,MACHINE,SST.....ETN	1
11	XDOZZ		3Z033	BVP-ACTUC-11	....WASHER,FLAT.....ETN	1
12	XDOZZ		3Z033	BVP-ACTUC-8	....SCREW,ADJUSTMENT.....ETN	2
13	PBOZZ	6150013572954	3Z033	BVP-ACTUC-3-4	....SWITCH ASSEMBLY.....ETN	1
14	XDOZZ		3Z033	BVP-ACTUC-13	....BRACKET,MOUNTING.....ETN	1
15	PBOZZ	5331013517616	3Z033	BVP-ACTUC-18	....O-RING.....ETN	1
16	XDOZZ		3Z033	BVP-ACTUC-1	....PLUG.....ETN	1
17	PBOZZ	4720013529039	3Z033	BVP-ACT-86-34	....TUBING,NONMETALLIC.....ETN	1
18	XDOZZ		3Z033	BVP-ACT-86-42	....FITTING,AIR.....ETN	2
19	XDOZZ		3Z033	BVP-ACTUC-2A	....CONNECTOR W/CABLE.....ETN	1
20	XDFZZ		3Z033	BVP-ACTUC-2A	....ADAPTER.....ETN	1
21	XDOZZ		3Z033	BVP-ACTUC-16	....FITTING,ADAPTER.....ETN	1
22	XDOZZ		3Z033	BVP-ACTUC-19	....FITTING,AIR INLET.....ETN	1
23	XDOZZ		3Z033	BVP-ACTUC-12	....SCREW,FLAT HEAD.....ETN	1
24	XDOZZ		3Z033	BVP-ACTUC-5	....ACTIVATOR.....ETN	1
25	XDOZZ		3Z033	BVP-ACTUC-7	....BASE,MOLDED.....ETN	1
26	XDFZZ		3Z033	BVP-ACT-86-40	....SCREW,CAP,SOLID.....ETN	1
27	XDFZZ		3Z033	BVP-ACT-86-12	....COVER,CYLINDER.....ETN	1
28	PBFZZ	5325013511290	3Z033	BVP-ACT-86-11	....RING,RETAINING.....ETN	1
29	PAFZZ	5331013517617	3z033	BVP-ACT-86-16	....O-RING.....ETN	1
30	PAFZZ	5331013517618	3Z033	BVP-ACT-86-10	....O-RING.....ETN	1
31	PBFZZ	5325013511287	3Z033	BVP-ACT-86-38	....RING,RETAINING.....ETN	1
32	XDFZZ		3Z033	BVP-ACT-86-37	....CAP,SAFETY.....ETN	1
33	PBFZZ	3120013517790	3Z033	BVP-ACT-86-39	....BEARING,WASHER,THRU.....ETN	1
34	PBFZZ	5325013511288	3Z033	BVP-ACT-86-30	....RING,RETAINING.....ETN	1
35	XDFZZ		3Z033	BVP-ACT-86-36	....SCREW,LOCKING.....ETN	1
36	XDFZZ		3Z033	BVP-ACT-86-43	....WASHER,LOCK.....ETN	1
37	XDFZZ		3Z033	BVP-ACT-86-41	....BASE,ACTUATER.....ETN	1
38	PBFZZ	5310013517806	3Z033	BVP-ACT-86-26	....WASHER,FLAT.....ETN	1
39	PBFZZ	5331013517620	3Z033	BVP-ACT-86-28	....O-RING.....ETN	1
40	XDFZZ		3Z033	BVP-ACT-86-5	....BEARING,INNER.....ETN	2
41	XDFZZ		3Z033	BVP-ACT-86-21	....SHAFT,BEARING.....ETN	1
42	XDFZZ		3Z033	BVP-ACT-86-31	....STEM WITH DISC.....ETN	1
43	XDFZZ		3Z033	BVP-ACT-86-20	....BEARING,OUTER.....ETN	2
44	PAFZZ	5330013517619	3Z033	BVP-ACT-86-6	....O-RING.....ETN	1
45	XDFZZ		3Z033	BVP-ACT-86-1	....CYLINDER.....ETN	1
46	XDOZZ		3Z033	EG13MM-2-1/2	...CLAMP.....ETN	1
47	XDOZZ		3Z033	BVP-86-13-2-1/2	...CLAMP,UPPERHALF.....ETN	1
48	XDOZZ		3Z033	BVP-86-14-2-1/2	...CLAMP,LOWER HALF.....ETN	1
49	PBOZZ	3120013517780	3Z033	BVP-86-5-2-1/2	...BUSHING,SLEEVE.....ETN	2

(1) ITEM NO	(2) SMR CODE	(3) NSN	(4) CAGEC	(5) PART NUMBER	(6) DESCRIPTION AND USABLE ON CODES(UOC)	(7) QTY
50	XDOZZ		3Z033	BVP-86-4-2-1/2	...BUSHING,SLEEVE.....ETN	2
51	XDOZZ		3Z033	BVP-86-3-2-1/2	...DISC,VALUE.....ETN	1
52	PBOZZ	5330013521099	3Z033	BVP-86-7-2-1/2	...GASKET.....ETN	1
53	XDOZZ		3Z033	BVP-86-2-2-1/2	...VALVE BODY HALF.....ETN	2
54	PBOFF		OLU89	7510-106-316L	..VALVE,BUTTERFLY,2.50 INCHES MEDIA FILTER, INLET VALVE, HOLES, IN DISK AND SHAFT.....FKD	1
55	XDFZZ		OLU89	25-428-05	...SEAL RETAINER.....FKD	1
56	PBFZZ		OLU89	17-98	...VEE PACKING.....FKD	1
57	XDFZZ		OLU89	B53-6000-10-S	...CONTROL TOP ADAPTER.....FKD	1
58	XDFZZ		OLU89	B53-6000-6	...RING,RETAINING.....FKD	1
59	PBFZZ	5330014476713	OLU89	B53-6000-7	...O-RING.....FKD	1
60	PBFZZ	5330014476715	OLU89	B53-6000-4	...O-RING.....FKD	1
61	XDFZZ		OLU89	NU1300E02-SS	...NUT.....FKD	1
62	XDFZZ		OLU89	LWA1300-SS	...WASHER,LOCK.....FKD	1
63	XDFZZ		OLU89	B53-6000-20-S	...STEM.....FKD	1
64	PBFZZ	5330014476729	OLU89	17-352	...GASKET.....FKD	1
65	XDFZZ		OLU89	B53-6000-3A	...PISTON.....FKD	1
66	XDFZZ		OLU89	B53-6000-8	...INNER SPRING.....FKD	1
67	XDFZZ		OLU89	B53-6000-9	...OUTER SPRING.....FKD	1
68	XDFZZ		OLU89	B53-6000-27	...THRUST PLATE.....FKD	1
69	XDFZZ		OLU89	B53-6000-12	...THRUST BEARING.....FKD	2
70	XDFZZ		OLU89	B53-6000-11	...NEEDLE BEARING.....FKD	2
71	XDFZZ		OLU89	B53-6000-2	...DRIVE ASSEMBLY.....FKD	1
72	XDFZZ		OLU89	B53-6000-10	...NEEDLEBEARING.....FKD	2
73	PBFZZ	5330014476696	OLU89	B53-6000-14	...O-RING.....FKD	1
74	XDFZZ		OLU89	B53-6000-15	...SPLIT PIN.....FKD	1
75	XDFZZ		OLU89	B53-6000-17-1	...COUPLER.....FKD	1
76	XDOZZ		OLU89	B53-6000-23	...WATER EJECTOR.....FKD	1
77	XDFZZ		OLU89	B53-6000-1	...CYLINDER.....FKD	1
78	XDFZZ		OLU89	B53-1-10-SS	...BRACKET SCREW.....FKD	2
79	XDFZZ		OLU89	B53-3-09-S	...MOUNTING BRACKET.....FKD	1
80	XDFZZ		OLU89	B53-6000-18	...POSITION INDICATOR.....FKD	1
81	XDFZZ		OLU89	42-15-78	...AIR FITTING.....FKD	1
82	XDOOO		OLU89	7510-106-21/2-51 -316L	...BUTTERFLY VALVE.....FKD	1
83	XDOZZ		OLU89	SC1316E-SS	....SCREW.....FKD	4
84	XDOZZ		OLU89	NU1300H-SS	....NUT.....FKD	4
85	XDOZZ		OLU89	7510-105-01-316L	....VALVE BODY.....FKD	2
86	XDOZZ		OLU89	B51-2-1/2-06	....BUSHING.....FKD	2
87	XDOZZ		OLU89	7510-106-2-1/2-0 5-316L	....DISC.....FKD	1
88	XDOZZ		OLU89	B51-2-1/2-42-X	....SEAT.....FKD	1
89	PBOZZ		OLU89	74-100-X-Y-Z	...CONTROL TOP.....FKD	1
90	XDOZZ		OLU89	1-37	....COVER.....FKD	1
91	XDOZZ		OLU89	14-124	....PLUG.....FKD	2
92	XDOZZ		OLU89	17-35-U	....PACKING,PREFORMED.....FKD	1
93	XDOZZ		OLU89	17-63-U	....PACKING,PREFORMED.....FKD	1
94	XDOZZ		OLU89	17-109-U25	....PACKING,PREFORMED.....FKD	1
95	XDOZZ		OLU89	17-139-U-90	....PACKING,PREFORMED.....FKD	4
96	XDOZZ		OLU89	17-348	....BLOW OUT PLUG PRESSURE RELIEF.....FKD	1

(1) ITEM NO	(2) SMR CODE	(3) NSN	(4) CAGEC	(5) PART NUMBER	(6) DESCRIPTION AND USABLE ON CODES(UOC)	(7) QTY
97	XDOZZ		OLU89	17-337B-E	....GASKET.....FKD	1
98	XDOZZ		OLU89	17-340B-E	....GASKET.....FKD	1
99	XDOZZ		OLU89	17-344-U	....PACKING,PREFORMED.....FKD	3
100	XDOZZ		OLU89	25-428-04	....PACKING GLAND.....FKD	1
101	XDOZZ		OLU89	36-82A	....STEM GUIDE NUT.....FKD	1
102	XDOZZ		OLUB9	54-100	....MOUNTING BLOCK.....FKD	2
103	XDOZZ		OLU89	54-101	....SPACE BLOCK.....FKD	2
104	XDOZZ		OLU89	LWA1300-SS	....LOCKWASHER.....FKD	1
105	XDOZZ		OLU89	SC107R-SS	....MACHINE SCREW.....FKD	4
106	XDOZZ		OLU89	SC108R-SS	....SCREW.....FKD	4
107	XDOZZ		OLU89	SC707R-SS	....SCREW.....FKD	4
108	XDOZZ		OLU89	SC512F-SS	....SCREW.....FKD	2
109	XDOZZ		OLU89	SS1307E-SS	....SCREW.....FKD	3
110	XDOZZ		OLU89	SC1307H-SS	....SCREW.....FKD	1
111	XDOZZ		OLU89	MS-105-58A-CP	....PLUG-VENTED.....FKD	1
112	XDOZZ		OLU89	33-169A	....SOLENOID.....FKD	1
113	XDOZZ		OLU89	EL-79500-0013	....MICRO SWITCH.....FKD	2
114	XDOZZ		OLU89	1-39	....HOUSING BASE.....FKD	1
115	XDOZZ		OLU89	44-262	....COVER.....FKD	1
116	XDOZZ		OLU89	EL-19870-0037	....MOLEX TERMINAL.....FKD	4
117	XDOZZ		OLU89	EL-96750-0022	....WIRE 18 GAUGE, BLACK.....FKD	1
118	XDOZZ		OLU89	EL-96010-0022	....SPLICE,BUTT.....FKD	2
119	XDOZZ		OLU89	EL-19170-0005	....GRIP,CORD.....FKD	1
120	XDOZZ		OLU89	EL-19760-0011	....SOCKET.....FKD	4
121	XDOZZ		OLU89	13-169	....NUT.....FKD	1
122	XDOZZ		OLU89	17-347	....GASKET.....FKD	1
123	XDOZZ		OLU89	EL-20650-0001	....MALE PLUG ASSY.....FKD	1
124	XDOZZ		OLU89	EL-20760-0001	....RECEPTACLE ASSY.....FKD	1

END OF FIGURE

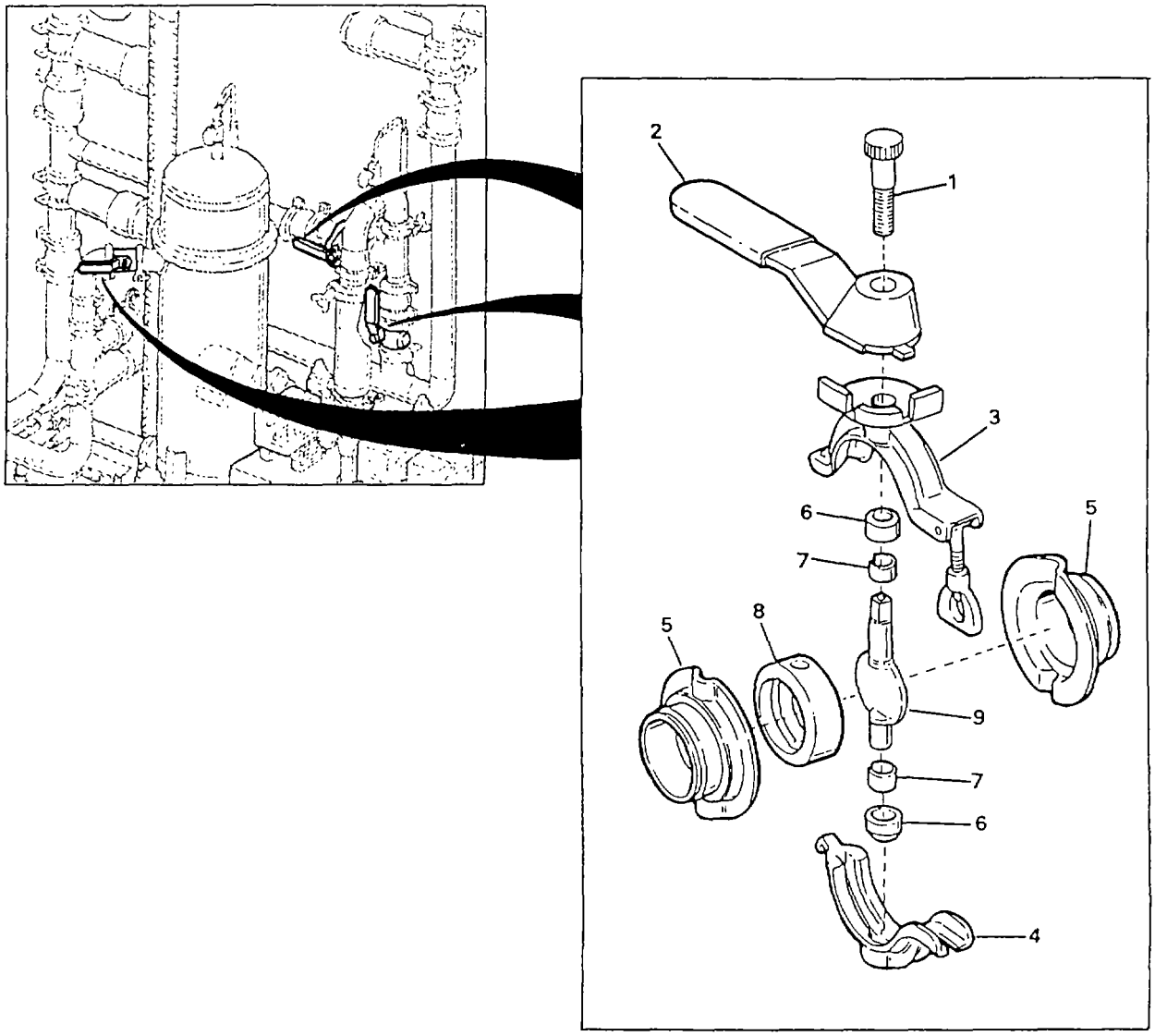

FIGURE 76. MANUAL BUTTERFLY VALVE (SHEET 1 OF 2)
(MODEL ETN ONLY)

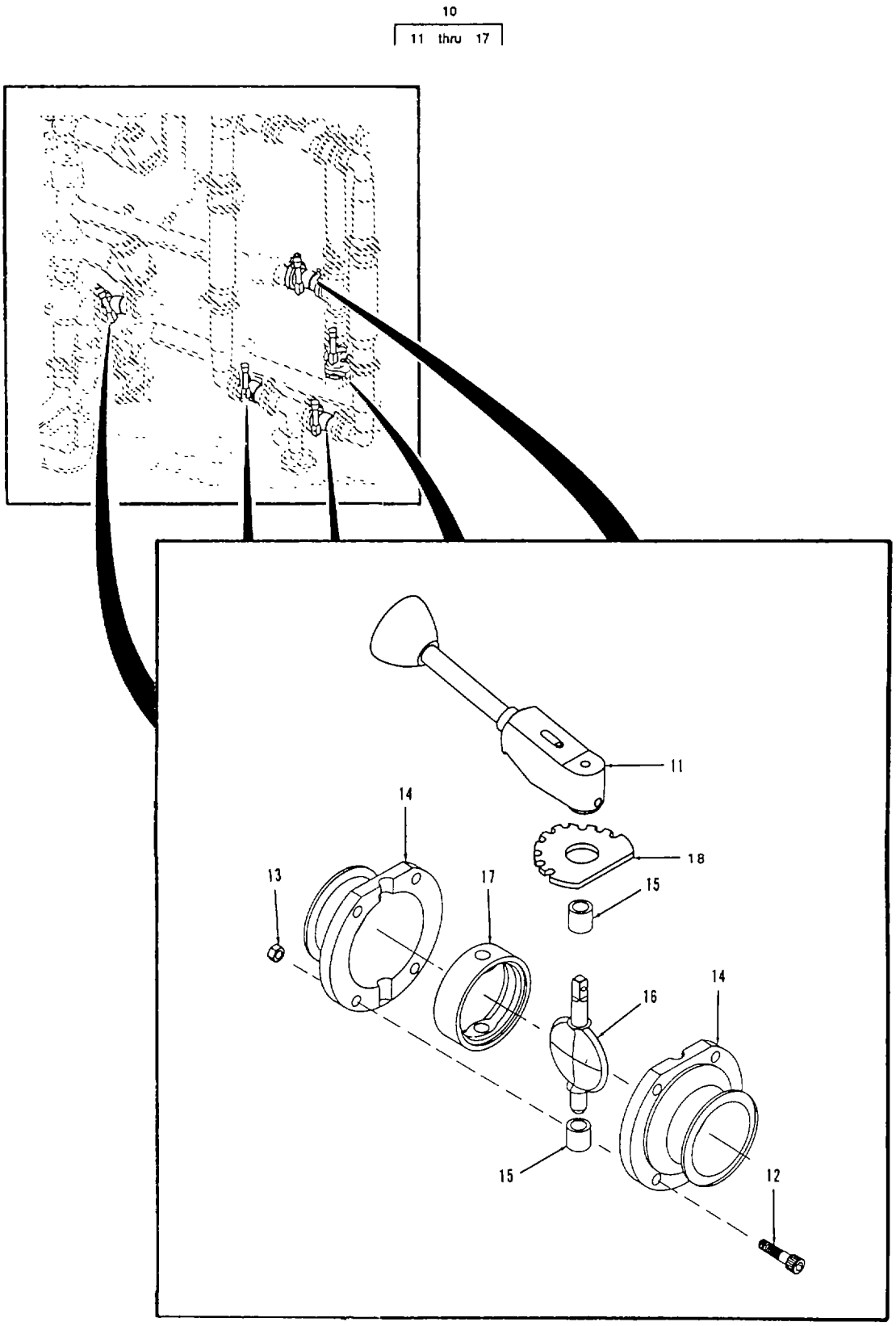

FIGURE 76. MANUAL BUTTERFLY VALVE (SHEET 2 OF 2)
(MODEL FKD ONLY)

(1) ITEM NO	(2) SMR CODE	(3) NSN	(4) CAGEC	(5) PART NUMBER	(6) DESCRIPTION AND USABLE ON CODES(UOC)	(7) QTY
					GROUP 02 WATER PURIFICATION SYSTEM FIG. 76 MANUAL BUTTERFLY VALVE	
	PBOOO	4810013464654	3Z033	EG CC-A 2-1/2	..VALVE,BUTTERFLY.....ETN	3
1	PBOZZ	5305013508600	3Z033	BVP-86-11-2-1/2	...THUMBSCREW.....ETN	1
2	XDOZZ		3Z033	BVP-86-10-2-1/2	...HANDLE.....ETN	1
3	XDOOO		3Z033	BVP-86-12-2-1/2	...CLAMP,UPPER HALF.....ETN	1
4	XDOZZ		3Z033	BVP-86-14-2-1/2	...CLAMP,LOWER HALF.....ETN	1
5	XDOZZ		3Z033	BVP-86-2-2-1/2	...VALVE BODY HALF.....ETN	2
6	PBOZZ	3120013517780	3Z033	BVP-86-5-2-1/2	...BUSHING,SLEEVE.....ETN	2
7	PBOZZ	3120013517781	3Z033	BVP-86-4-2-1/2	...BUSHING,SLEEVE.....ETN	2
8	PBOZZ	5330013521099	3Z033	BVP-86-7-2-1/2	...GASKET.....ETN	1
9	XDOZZ		3Z033	BVP-86-3-2-1/2	...DISC,VALUE.....ETN	1
10	PBOOO	4820014464091	0LU89	7510-104-316L	..VALVE,BUTTERFLY 2.5 INCHES.....FKD	3
11	XDOZZ		0LU89	B51-1-48-S	...HANDLE ASSEMBLY.....FKD	1
12	XDOZZ		0LU89	SC1316E-SS	...SCREW.....FKD	4
13	XDOZZ		0LU89	NU1300H-SS	...NUT.....FKD	4
14	XDOZZ		0LU89	7510-104-01-316L	...VALVE BODY.....FKD	2
15	XDOZZ		0LU89	B51-2-1/2-06	...BUSHING.....FKD	2
16	XDOZZ		0LU89	B53-2-1/2-05-316 L	...DISC.....FKD	1
17	XDOZZ		0LU89	B51-2-1/2-42-X	...SEAT.....FKD	1
18	XDOZZ		0LU89	B51-3-08-316LSC	...STOP PLATE.....FKD	1

END OF FIGURE

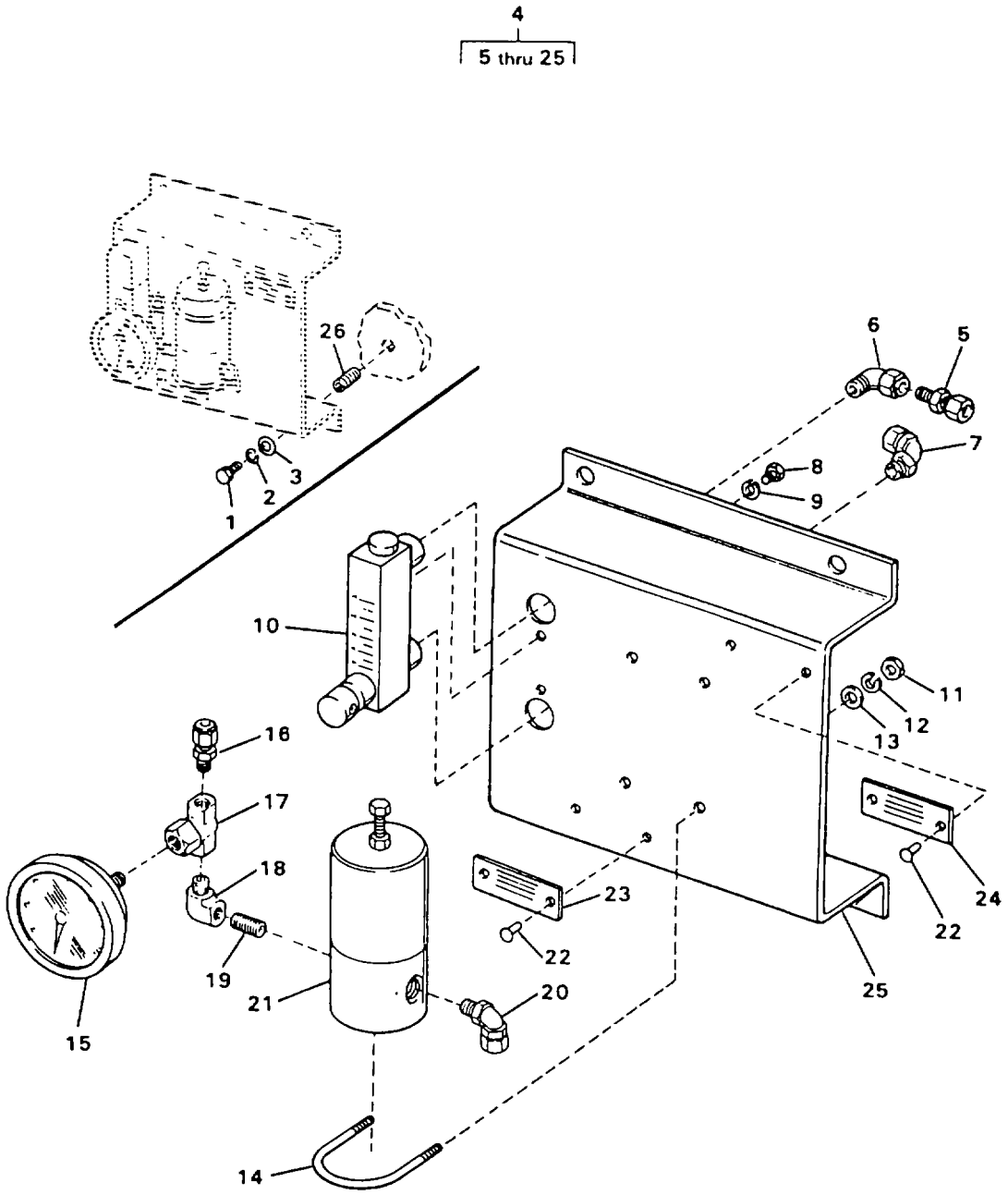

FIGURE 77. TURBIDITY FLOW PANEL ASSEMBLY
(Model ETN Only)

(1) ITEM NO	(2) SMR CODE	(3) NSN	(4) CAGEC	(5) PART NUMBER	(6) DESCRIPTION AND USABLE ON CODES(UOC)	(7) QTY
					GROUP 02 WATER PURIFICATION SYSTEM FIG. 77 TURBIDITY FLOW PANEL ASSEMBLY (MODEL ETN ONLY)	
1	PAOZZ	5305007175467	96906	MS35307-362	.SCREW,CAP,HEXAGON H.....ETN	3
2	PAOZZ	5310009847042	96906	MS35338-141	.WASHER,LOCK.....ETN	3
3	PAOZZ	5310007737618	96906	MS15795-814	.WASHER,FLAT.....ETN	3
4	XDOOO		97403	13229E0554	.FLOW CONTROL,NTU.....ETN	1
5	PAOZZ	4730013503777	97403	13229E0684-10	..ADAPTER,STRAIGHT,TU.....ETN	1
6	PBOZZ		97403	13229E0554-4	..ELBOW,PIPE 0.125 NPS, 90 DEGREE, CLS 150, 316 SS.....ETN	1
7	PBOZZ	4730013515853	61424	N5ME2	..ELBOW,PIPE TO TUBE.....ETN	1
8	PAOZZ	5305000593657	96906	MS51958-61	..SCREW,MACHINE 0.190-32 UNF-2A X 0.375 INCH LONG.....ETN	2
9	PAOZZ	5310009338120	96906	MS35338-138	..WASHER,LOCK.....ETN	2
10	PBOZZ	6680013544464	97403	13229E0552	..METER,FLOW RATE IND.....ETN	1
11	PAOZZ	5310009035966	96906	MS51971-1	..NUT,PLAIN,HEXAGON.....ETN	4
12	PAOZZ	5310009338121	96906	MS35338-139	..WASHER,LOCK.....ETN	4
13	PAOZZ	5310010911248	96906	MS15795-810	..WASHER,FLAT.....ETN	4
14	XDOZZ		97403	13229E0697-1	..CLAMP,U-BOLT.....ETN	2
15	PBOZZ	6685013519055	57273	1528597	..GAGE,DIFFERENTIAL,D.....ETN	1
16	PBOZZ	4730013503778	97403	13229E0684-9	..ADAPTER,STRAIGHT,TU.....ETN	1
17	PBOZZ	4730013503760	97403	13229E0554-10	..TEE,PIPE 0.25 NPS, CLS 150, 316 SS.....ETN	1
18	PBOZZ	4730013503733	97403	13229E0554-9	..ELBOW,PIPE 0.25 NPS, 90 DEGREE, CLS 150, 316 SS.....ETN	1
19	PBOZZ		97403	13229E0694-18	..NIPPLE,PIPE.....ETN	1
20	PBOZZ	4730012899537	97403	13229E0689-3	..ELBOW,PIPE TO TUBE.....ETN	1
21	PBOZZ	4820013505777	97403	13229E0551	..VALVE,REGULATING,FL.....ETN	1
22	PAOZZ	5320013490933	97403	13229E0350-1	..RIVET,BLIND.....ETN	4
23	XDOZZ		97403	13229E0782-55	..PLATE,ID TURBIDITY WATER FLOW..ETN	1
24	XDOZZ		97403	13229E0782-81	...PLATE,ID TURBIDITY WATER FLOW PANEL.....ETN	1
25	XDOZZ		97403	13229E0553	..PANEL.....ETN	1
26	PAFZZ	5325002904492	96906	MS122203	.INSERT,SCREW THREAD.....ETN	3

END OF FIGURE

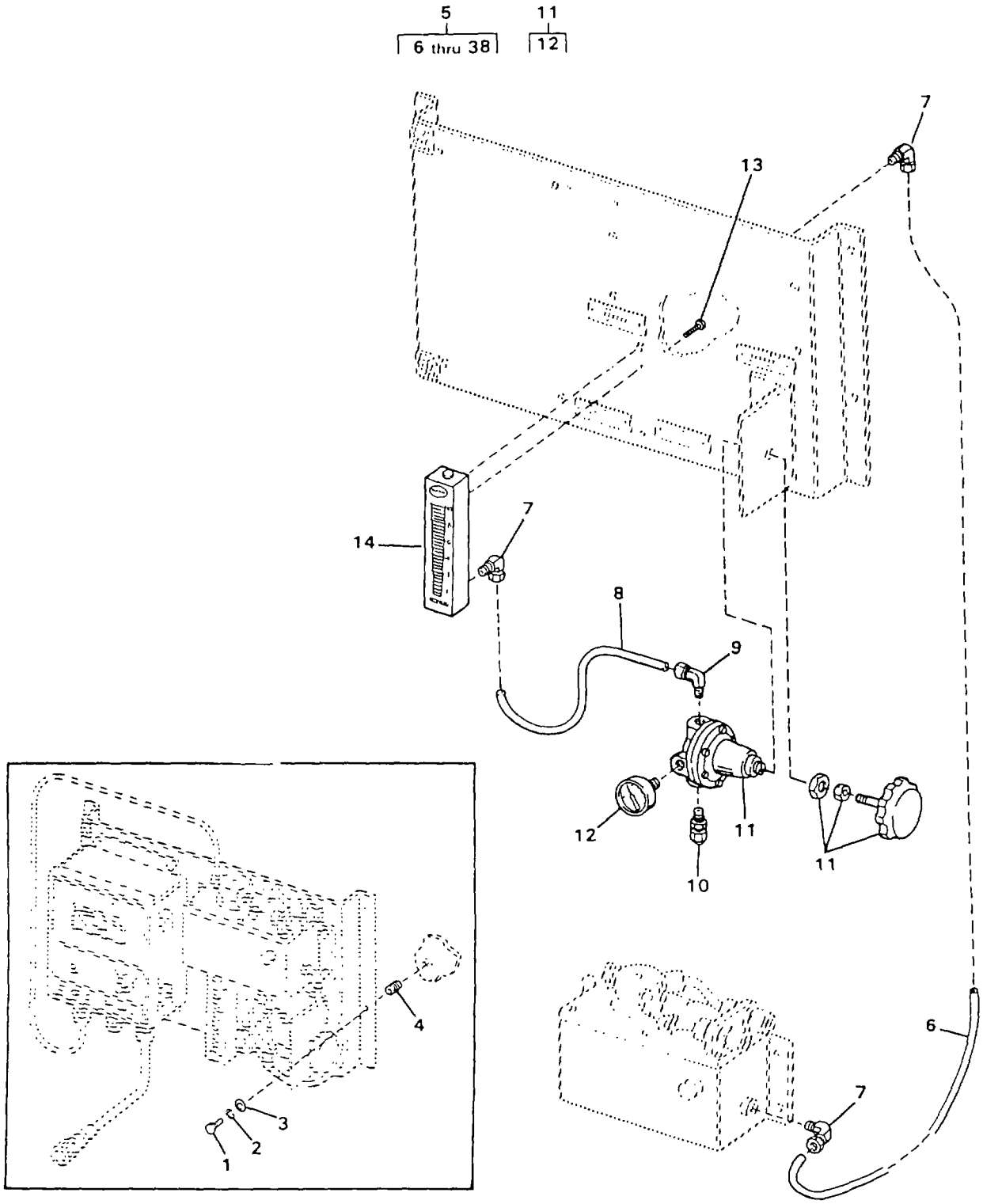

FIGURE 78. TURBIDITY METER PANEL ASSEMBLY (SHEET 1 OF 2)
(Model ETN Only)

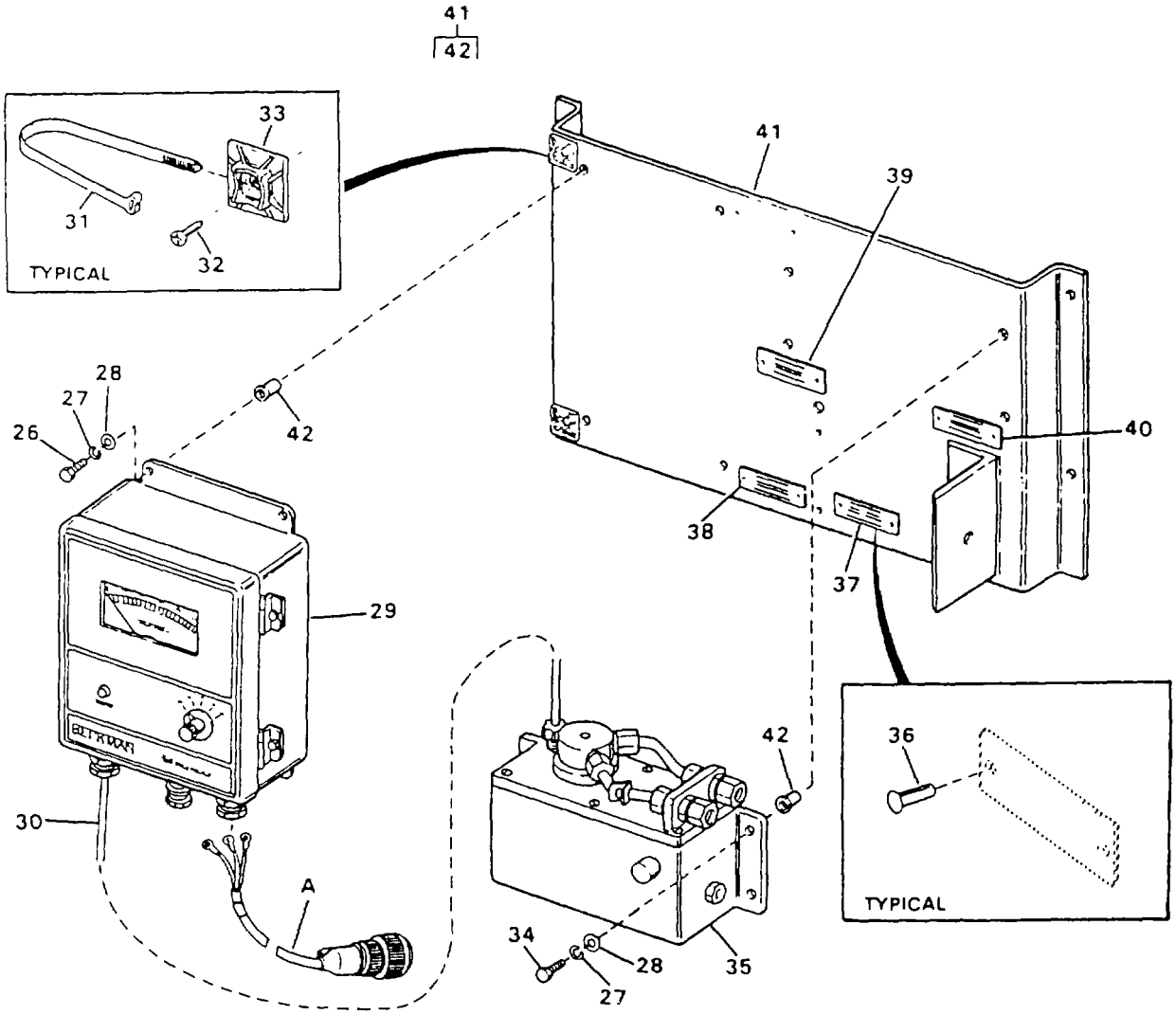

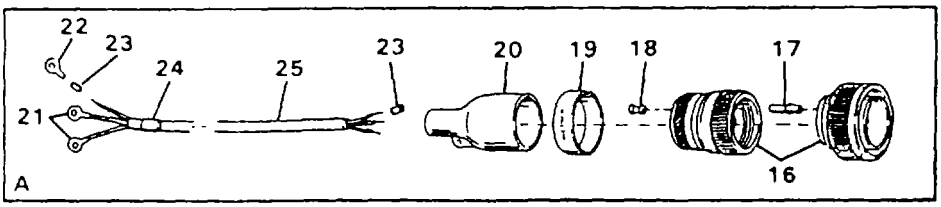

HARNESS ASSY	CONNECTOR	CONTACT PIN	PLUG	WIRE RUN FROM	WIRE RUN TO	TERMINAL
15	16	17	—	P44A	TS-H	21
		17	—	P44B	TS-N	21
		17	—	P44C	GND	22
		17	18	P44D	—	—

FIGURE 78. TURBIDITY METER PANEL ASSEMBLY (SHEET 2 OF 2)
(Model ETN Only)

(1) ITEM NO	(2) SMR CODE	(3) NSN	(4) CAGEC	(5) PART NUMBER	(6) DESCRIPTION AND USABLE ON CODES(UOC)	(7) QTY
					GROUP 02 WATER PURIFICATION SYSTEM FIG. 78 TURBIDITY METER PANEL ASSEMBLY (MODEL ETN ONLY)	
1	PAOZZ	5305007175467	96906	MS35307-362	.SCREW,CAP,HEXAGON H.....ETN	5
2	PAOZZ	5310009847042	96906	MS35338-141	.WASHER,LOCK.....ETN	5
3	PAOZZ	5310007737618	96906	MS15795-814	.WASHER,FLAT.....ETN	5
4	PAFZZ	5325002904492	96906	MS122203	.INSERT,SCREW THREAD.....ETN	5
5	XDOFF		97403	13229E0289	.TURBIDITY PANEL ASY.....ETN	1
6	MOOZZ		09647	120-02599-76	..TUBING CUT TO LENGTH FROM BULK, P/N 77C714976P006..... ETN	1
7	PBOZZ	4730010768903	97403	13229E0689-1	..ELBOW,MALE.....ETN	3
8	MOOZZ		09647	120-02599-77	..TUBING CUT TO LENGTH FROM BULK, P/N 77C714976P006..... ETN	1
9	PBOZZ	4730011605762	97403	13229E0689	..ELBOW,PIPE TO TUBE.....ETN	1
10	PBOZZ	4730011169214	61424	N4MC4	..ADAPTER,STRAIGHT,PI.....ETN	1
11	PBOOO	4820013500213	43990	11-002-021-W/18-003-001	..VALVE,REGULATING,FL.....ETN	1
12	PAOZZ	6685009326301	72100	23C	...GAGE,PRESSURE,DIAL.....ETN	1
13	PAOZZ	5305000593657	96906	MS51958-61	..SCREW,MACHINE 0.190-32 UNF-2A X 0.375 INCH LONG..... ETN	2
14	PBOZZ	6680013539775	97403	13229E0281	..METER,FLOW RATE IND.....ETN	1
15	PBOFZ	6150013464662	97403	13229E1260-18	..CABLE ASSEMBLY,POWE W47.....ETN	1
16	PBFFF	5935013500156	17549	CA3106E18-4P-B-02-567	...CONNECTOR,PLUG,ELEC P44.....ETN	1
17	PAFZZ	5999012793055	71468	030-8587-000	....CONTACT,ELECTRICAL.....ETN	4
18	XDFZZ		17549	225-0017-000	....PLUG,WIRE.....ETN	1
19	XDFZZ		09647	120-02433-119	....MARKER.....ETN	1
20	PBFZZ	5970013498562	97403	13229E1213-2	...INSULATION SLEEVING.....ETN	1
21	PAFZZ	5940002835280	96906	MS25036-106	...TERMINAL,LUG.....ETN	2
22	PAFZZ	5940001434780	96906	MS25036-108	...TERMINAL,LUG.....ETN	1
23	XDFZZ		01121	B-321HCPS.9-3336W	...MARKER.....ETN	6
24	XDFZZ		09647	120-02433-54	...MARKER.....ETN	1
25	MFFZZ		09647	120-02605-19	...CABLE CUT TO LENGTH FROM BULK, P/N 13229E0741-1..... ETN	1
26	PAFZZ	5305007024523	96906	MS35307-306	..SCREW,CAP,HEXAGON H.....ETN	4
27	PAFZZ	5310009338121	96906	MS35338-139	..WASHER,LOCK.....ETN	8
28	PAFZZ	5310010911248	96906	MS15795-810	..WASHER,FLAT.....ETN	8
29	PBFFF	6625013546830	09647	120-01065-1	..METER,SPECIAL SCALE SEE FIGURE 79 FOR BREAKDOWN..... ETN	1
30	XDFZZ		30646	D-664-757066	..CABLE ASSEMBLY.....ETN	1
31	PAFZZ	5975001113208	96906	MS3367-5-9	..STRAP,TIEDOWN,ELECT.....ETN	2
32	PAFZZ	5305013510821	97403	13229E0082-154	..SCREW,TAPPING 0.164, TYPE P, X 0.5 INCH LONG..... ETN	2
33	PBFZZ	5975013589415	97403	13229E1180	..MOUNT,CABLE TIE.....ETN	2
34	PAOZZ	5305002078253	96906	MS35307-308	..SCREW,CAP,HEXAGON H.....ETN	4
35	PBOOO	6350013545656	58177	20130	..SENSOR,OPAQUE PART SEE FIGURE 79 FOR BREAKDOWN..... ETN	1
36	PAOZZ	5320013490933	97403	13229E0350-1	..RIVET,BLIND.....ETN	8
37	XDOZZ		97403	13229E0782-141	..PLATE,ID TURBIDITY METER AIR FLOW..... ETN	1

(1) ITEM NO	(2) SMR CODE	(3) NSN	(4) CAGEC	(5) PART NUMBER	(6) DESCRIPTION AND USABLE ON CODES(UOC)	(7) QTY
38	XDOZZ		97403	13229E0782-142	..PLATE,ID TURBIDITY METER AIR FLOW.....ETN	1
39	XDOZZ		97403	13229E0782-143	..PLATE,ID TURBIDITY METER.....ETN	1
40	XDOZZ		97403	13229E0782-144	..PLATE,ID TURBIDITY METER.....ETN	1
41	XDOZZ		97403	13229E0288	..PANEL.....ETN	1
42	PAOZZ	5310011190460	97403	13229E0114-4	...NUT,PLAIN,BLIND RIV.....ETN	8

END OF FIGURE

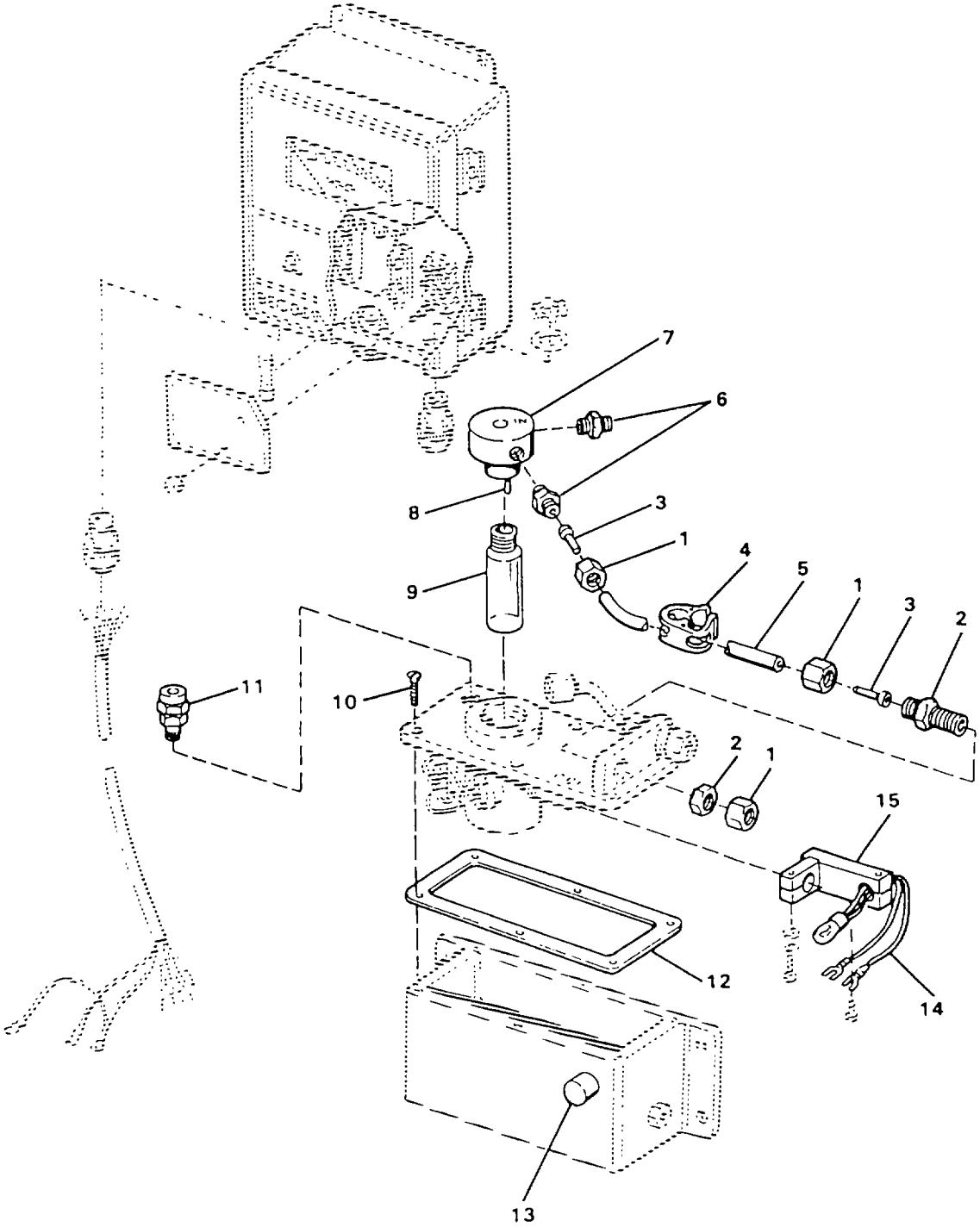

FIGURE 79. TURBIDITY METER (SHEET 1 OF 2)
(Model ETN Only)

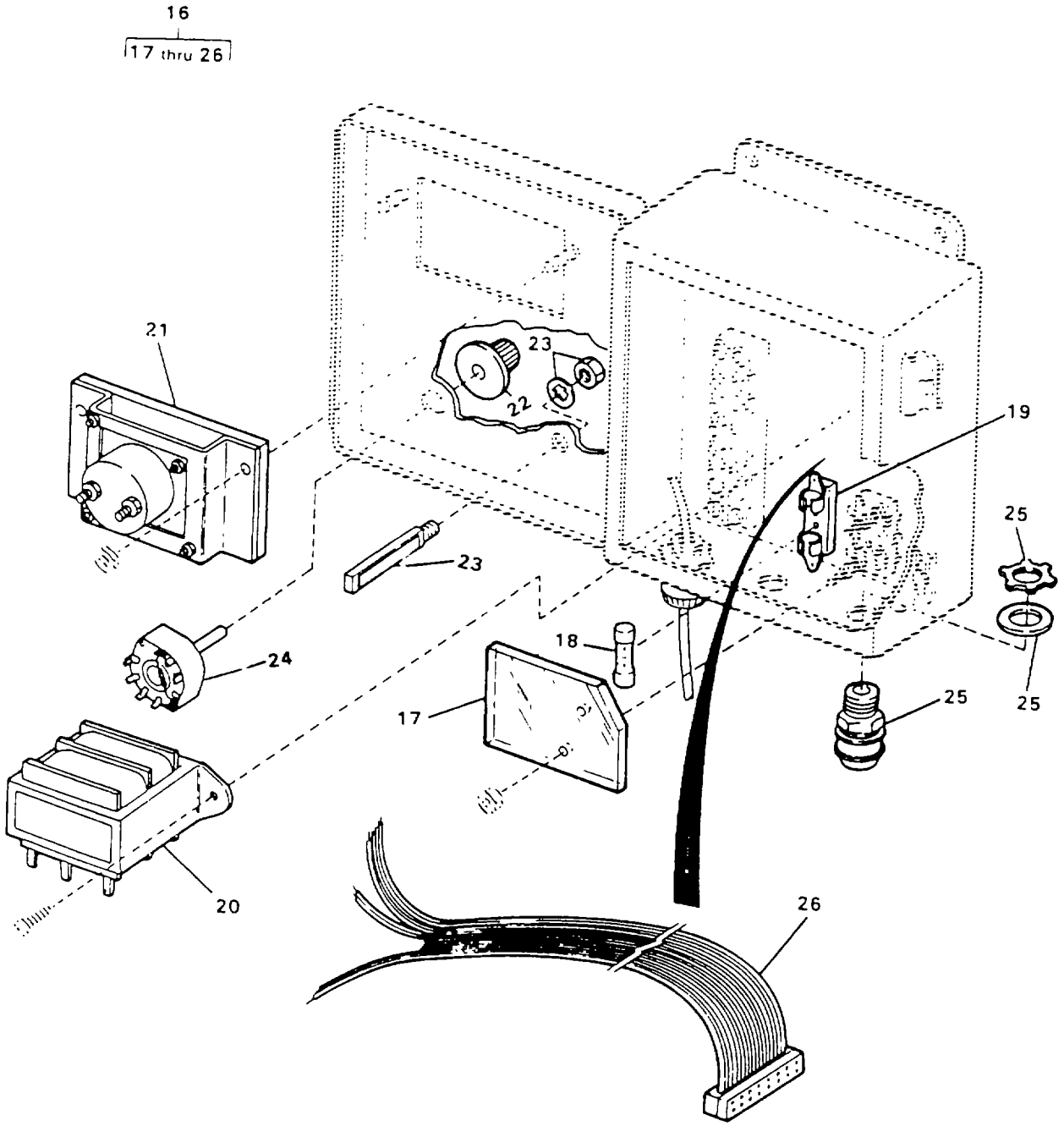

FIGURE 79. TURBIDITY METER (SHEET 2 OF 2)
(Model ETN Only)

(1) ITEM NO	(2) SMR CODE	(3) NSN	(4) CAGEC	(5) PART NUMBER	(6) DESCRIPTION AND USABLE ON CODES(UOC)	(7) QTY
					GROUP 02 WATER PURIFICATION SYSTEM FIG. 79 TURBIDITY METER (MODEL ETN ONLY)	
	PBOOO	6350013545656	58177	20130	..SENSOR,OPAQUE PARTI.....ETN	1
1	PAOZZ	5310013500421	58177	21153	...NUT,PERRULE.....ETN	6
2	PAOZZ	5310013512598	58177	21148	...NUT,PLAIN,HEXAGON.....ETN	2
3	PAOZZ	4730013497972	58177	21136	...INSERT,TUBE FITTING.....ETN	4
4	PAOZZ	5340013500567	58177	50004	...CLAMP,LOOP.....ETN	1
5	PAOZZ	4720013497320	58177	50010	...TUBING,NONMETALLIC 5/16 INCH ETN O.D. X 3/16 INCH I.D.....	2
6	PAOZZ	4730013497634	58177	21135	...ADAPTER,STRAIGHT,TU.....ETN	2
7	PAOZZ	4610013538421	58177	50028	...HEAD,CUVETTE.....ETN	1
8	PAOZZ		58177	21059	...TUBE,INLET.....ETN	1
9	PAOZZ	6640013556443	58177	50036	...CUVETTE,TURBIDITY I FLOW-THRU.ETN	1
10	PAOZZ	5305000546672	96906	MS51957-47	...SCREW,MACHINE 0.164-32 UNC- ETN 2A X 0.75 INCH LONG.....	6
11	PAOZZ	5935013501923	58177	21123	...ADAPTER,CABLE CLAMP.....ETN	1
12	PAOZZ	5330013500467	58177	21201	...GASKET.....ETN	1
13	PAOZZ	66S0013507971	58177	20763	...LENS,OPTICAL INSTRU WHITE.....ETN	1
14	PAOZZ		58177	50096	...LEAD,ELECTRICAL.....ETN	1
15	XDOZZ		58177	21001	...BRACKET,LAMP.....ETN	1
16	PBFFF	6625013546830	09647	120-01065-1	...METER,SPECIAL SCALE.....ETN	1
17	XDOZZ		30646	499-756358	...FUSE,COVER.....ETN	1
18	PAOZZ	5920001999498	81349	F02B250V1-2A	...FUSE,CARTRIDGE.....ETN	1
19	XDFZZ		30646	115LU	...MOUNTING,FUSE.....ETN	1
20	XDFZZ		30646	792-892486	...TRANSFORMER,POWER.....ETN	1
21	XDFZZ		30646	817-10756392	...METER.....ETN	1
22	XDFZZ		30646	325-816816	...KNOB.....ETN	1
23	XDFZZ		30646	711-806120	...SWITCH,RANGE.....ETN	1
24	XDFZZ		30646	613-867898	...POTENTIOMETER.....ETN	1
25	XDFZZ		15235	CCB-192	...CONNECTOR,CABLE.....ETN	1
26	XDFZZ		15235	664-10757066	...CABLE,RIBBON.....ETN	1

END OF FIGURE

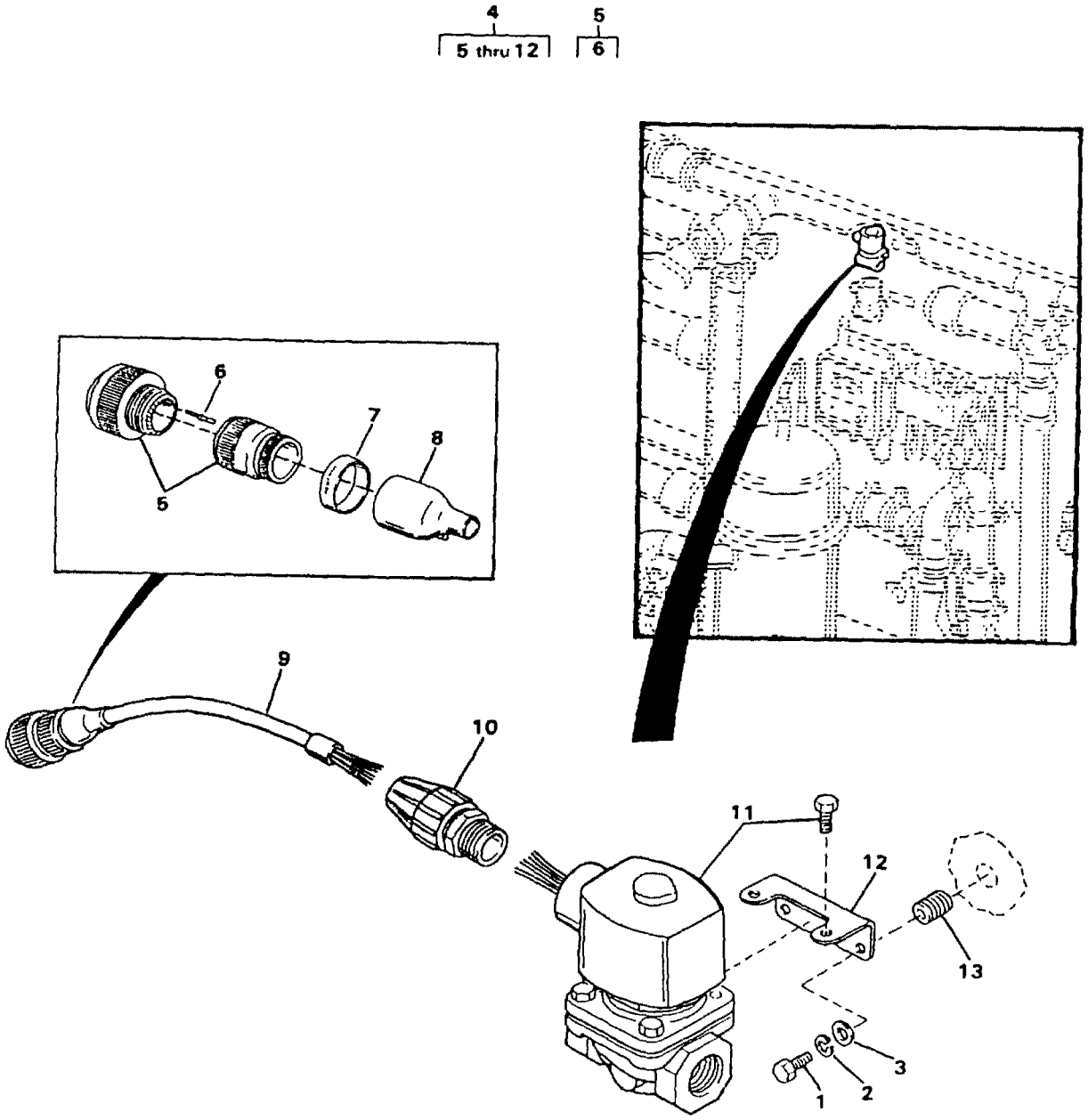

CONNECTOR	CONTACT PIN	WIRE RUN
5	6	P46A
	6	P46B
	6	P46C

FIGURE 80. LOW PRESSURE SOLENOID VALVE AIR BLANKET

(1) ITEM NO	(2) SMR CODE	(3) NSN	(4) CAGEC	(5) PART NUMBER	(6) DESCRIPTION AND USABLE ON CODES(UOC)	(7) QTY
					GROUP 02 WATER PURIFICATION SYSTEM FIG. 80 LOW PRESSURE SOLENOID VALVE AIR BLANKET	
1	PAOZZ	5305000213668	96906	MS35307-310	.SCREW,CAP,HEXAGON H.....	2
2	PAOZZ	5310009338121	96906	MS35338-139	.WASHER,LOCK.....	2
3	PAOZZ	5310010911248	96906	MS15795-810	.WASHER,FLAT.....	2
4	XDOFF		97403	13229E1269-2	.VALVE SOLENOID ASSY.....	1
5	PBFFF	5935013467151	17549	CA3106E14S-7PWB-02-57	..CONNECTOR,PLUG,ELEC P46.....	1
6	PAFZZ	5999013448758	17549	030-8586-000	...CONTACT,ELECTRICAL PART OF KIT P/N 120-02593-P.....	3
7	XDFZZ		09647	120-02433-121	..MARKER.....	1
8	PBFZZ	5970013484761	97403	13229E1213-1	..INSULATION SLEEVING.....	1
9	MOOZZ		09647	120-02602-1	..TUBING CUT TO LENGTH FROM BULK, P/N 13229E1282-1.....	1
10	PBOZZ	5975013557891	97403	13229E0738-6	..STUFFING TUBE.....	1
11	PAOZZ	4810013512942	97403	13229E0239-1	..VALVE,SOLENOID.....	1
12	XDOZZ		97403	13229E0239-2	...BRACKET,MTG.....	1
13	PFOZZ	5340010306854	96906	MS122121	.INSERT,SCREW THREAD.....	2

END OF FIGURE

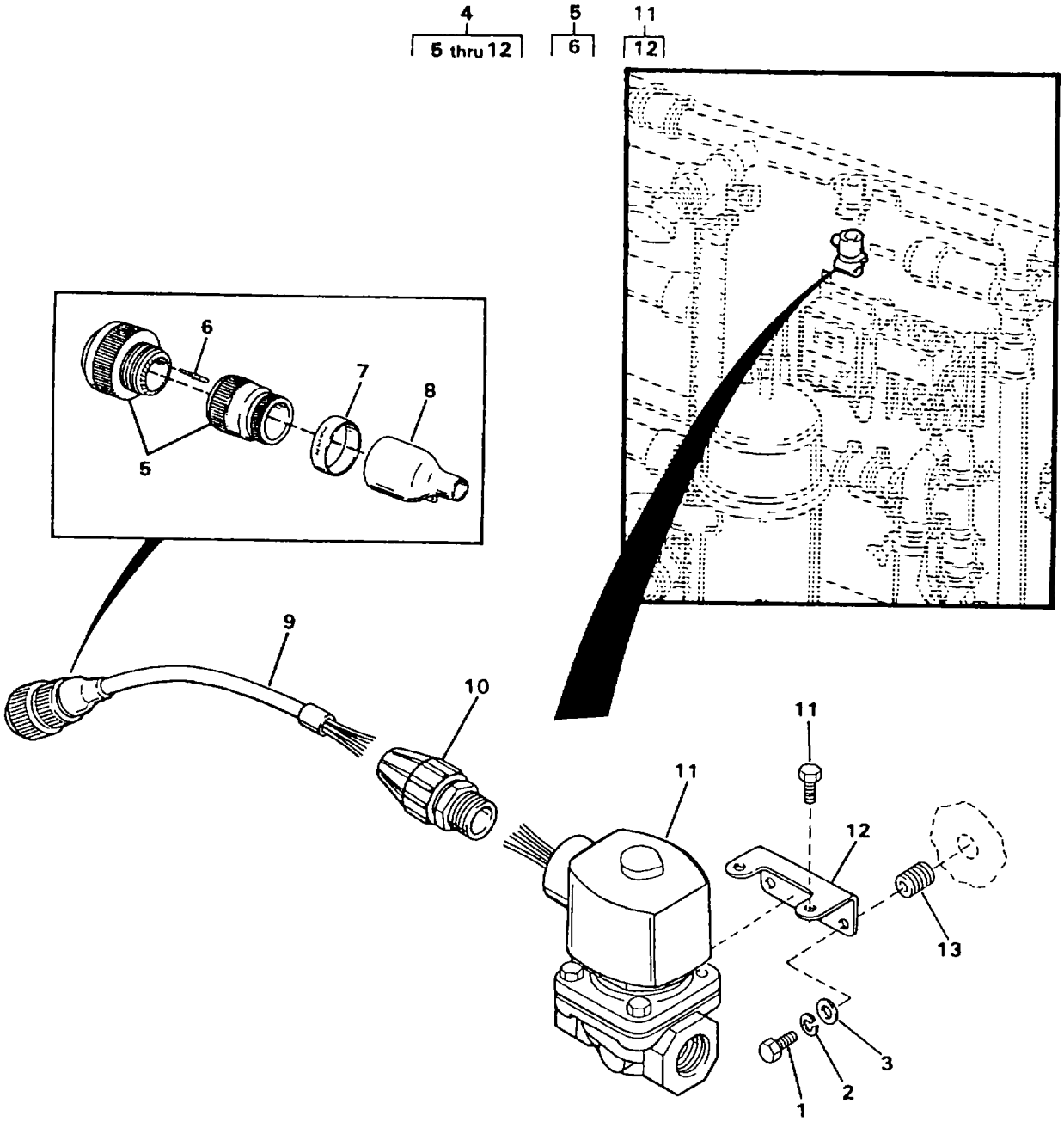

CONNECTOR	CONTACT PIN	WIRE RUN
5	6	P47A
	6	P47B
	6	P47C

FIGURE 81. LOW PRESSURE SOLENOID VALVE BACKWASH AIR

(1) ITEM NO	(2) SMR CODE	(3) NSN	(4) CAGEC	(5) PART NUMBER	(6) DESCRIPTION AND USABLE ON CODES(UOC)	(7) QTY
					GROUP 02 WATER PURIFICATION SYSTEM FIG. 81 LOW PRESSURE SOLENOID VALVE BACKWASH AIR	
1	PAOZZ	5305000213668	96906	MS35307-310	.SCREW,CAP,HEXAGON H.....	2
2	PAOZZ	5310009338121	96906	MS35338-139	.WASHER,LOCK.....	2
3	PAOZZ	5310010911248	96906	MS15795-810	.WASHER,FLAT.....	2
4	XDOFF		97403	13229E1269-3	.VALVE SOLENOID ASSY.....	1
5	PBFFF	5935013545178	17549	CA3106E14S-7P-B-02-57	..CONNECTOR,PLUG,ELEC P47.....	1
6	PAFZZ	5999013448758	17549	030-8586-000	...CONTACT,ELECTRICAL PART OF KIT P/N 120-02593-P.....	3
7	XDFZZ		09647	120-02433-122	..MARKER.....	1
8	PBFZZ	5970013484761	97403	13229E1213-1	..INSULATION SLEEVING.....	1
9	MOOZZ		09647	120-02602-1	..TUBING CUT TO LENGTH FROM BULK, P/N 13229E1282-1.....	1
10	PBOZZ	5975013557891	97403	13229E0738-6	..STUFFING TUBE.....	1
11	PAOZZ	4810013512942	97403	13229E0239-1	..VALVE,SOLENOID.....	1
12	XAOZZ		97403	13229E0239-2	...BRACKET,MTG.....	1
13	PAFZZ	5340010306854	96906	MS122121	.INSERT,SCREW THREAD.....	2

END OF FIGURE

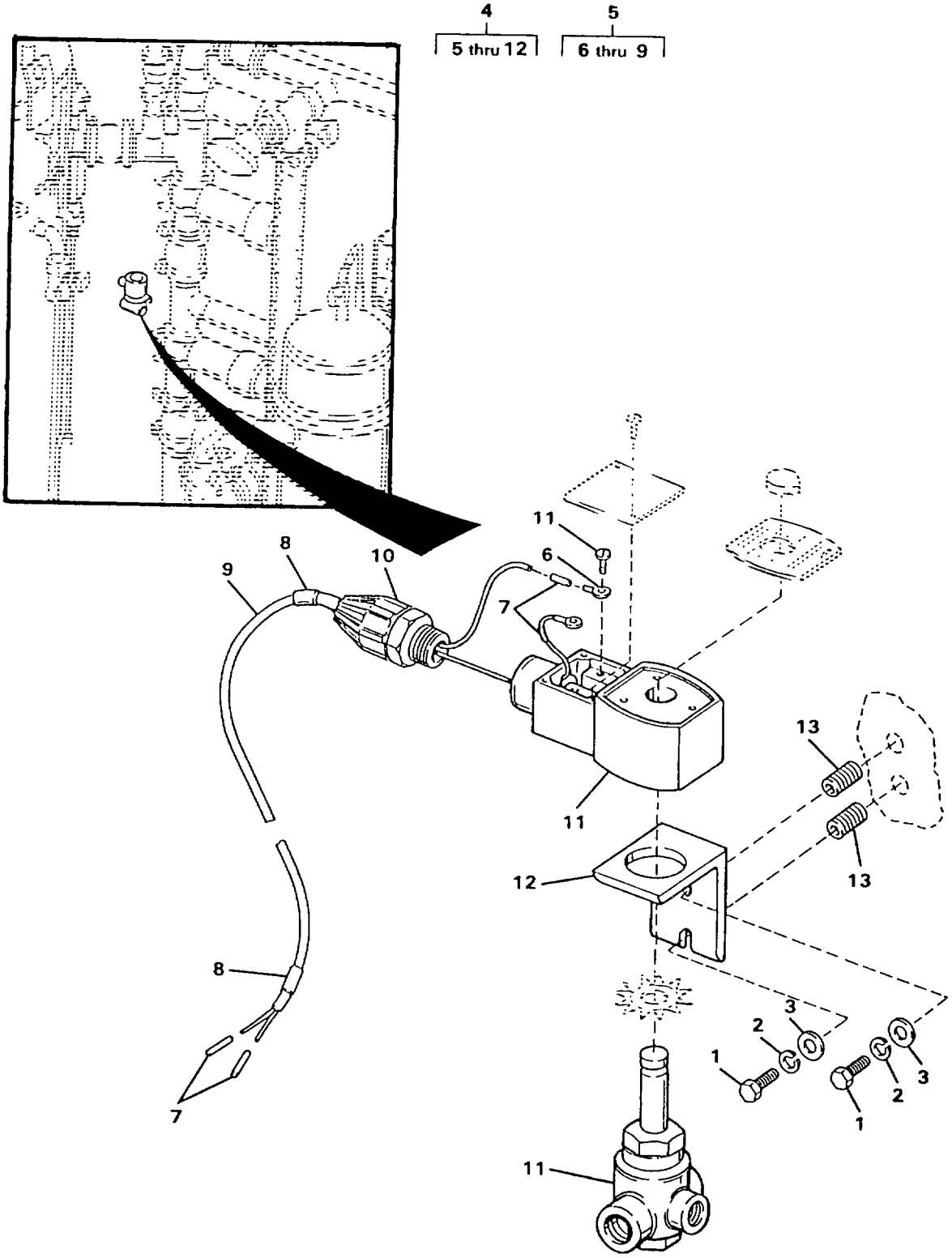

FIGURE 82. LOW PRESSURE SOLENOID VALVE

(1) ITEM NO	(2) SMR CODE	(3) NSN	(4) CAGEC	(5) PART NUMBER	(6) DESCRIPTION AND USABLE ON CODES(UOC)	(7) QTY
					GROUP 02 WATER PURIFICATION SYSTEM FIG. 82 LOW PRESSURE SOLENOID VALVE	
1	PAOZZ	5305000213620	96906	MS35307-307	.SCREW,CAP,HEXAGON H.....	2
2	PAOZZ	5310009338121	96906	MS35338-139	.WASHER,LOCK.....	2
3	PAOZZ	5310010911248	96906	MS15795-810	.WASHER,FLAT.....	2
4	AFFFF		97403	13229E0445	.SOLENOID ASSEMBLY.....	1
5	AFFFF		97403	13229E1257-4	..CABLE ASSEMBLY W27.....	1
6	PAFZZ	5940001434774	96906	MS25036-153	...TERMINAL,LUG.....	2
7	XDFZZ		01121	B-321HCPS.9-3336 W	...MARKER.....	4
8	XDFZZ		09647	120-02433-27	...MARKER.....	2
9	MFFZZ		09647	120-02605-4	...CABLE CUT TO LENGTH FROM BULK, P/N 13229E0556.....	1
10	PBOZZ	5975013557891	97403	13229E0738-6	..STUFFING TUBE.....	1
11	PAOZZ	4810013509010	04845	JPKF8320G172	..VALVE,SOLENOID.....	1
12	XDOZZ		97403	13229E1327	..BRACKET.....	1
13	PAFZZ	5340010306854	96906	MS122121	..INSERT,SCREW THREAD.....	2

END OF FIGURE

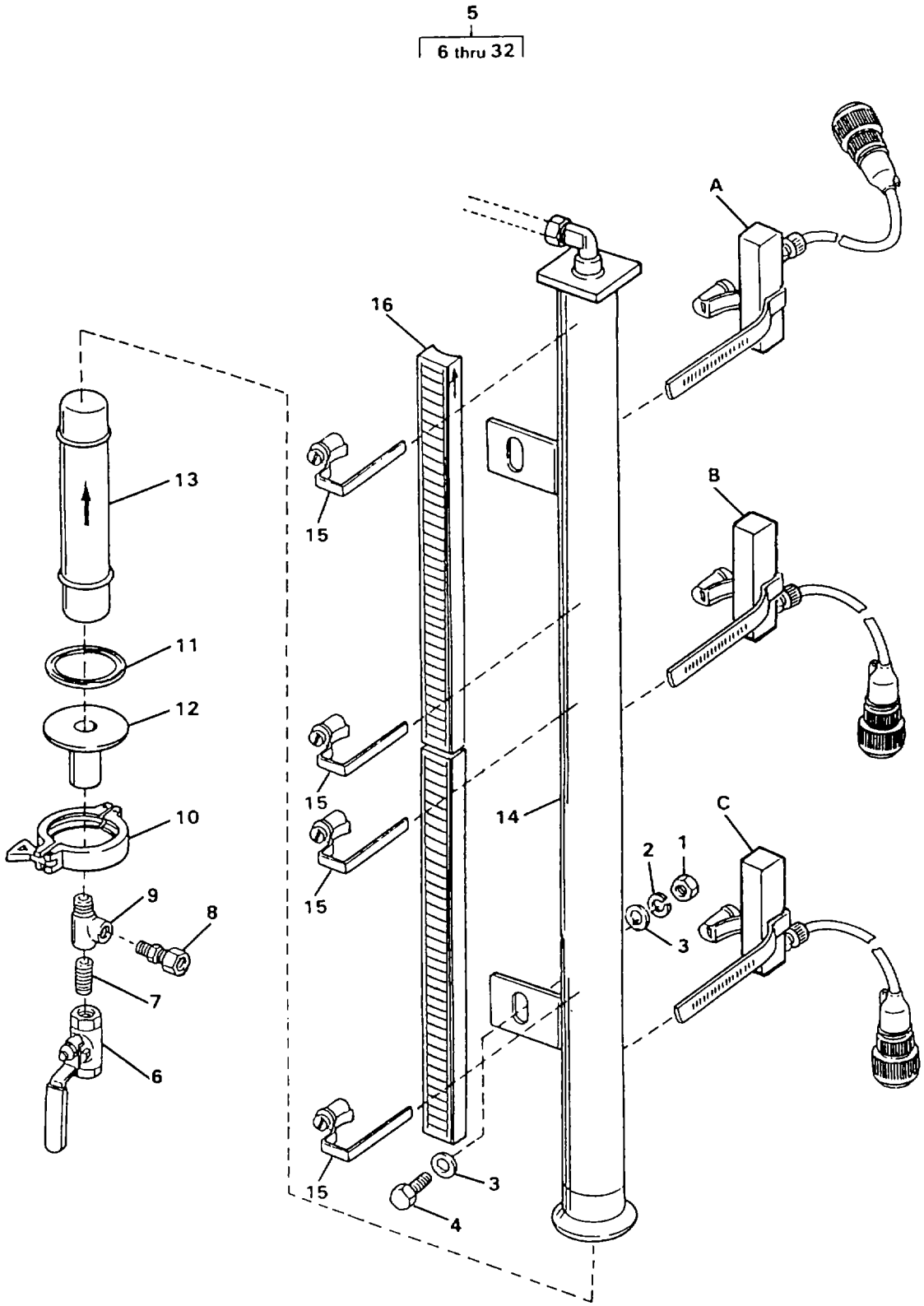

FIGURE 83. MEDIA FILTER LEVEL INDICATOR ASSEMBLY (SHEET 1 OF 2)

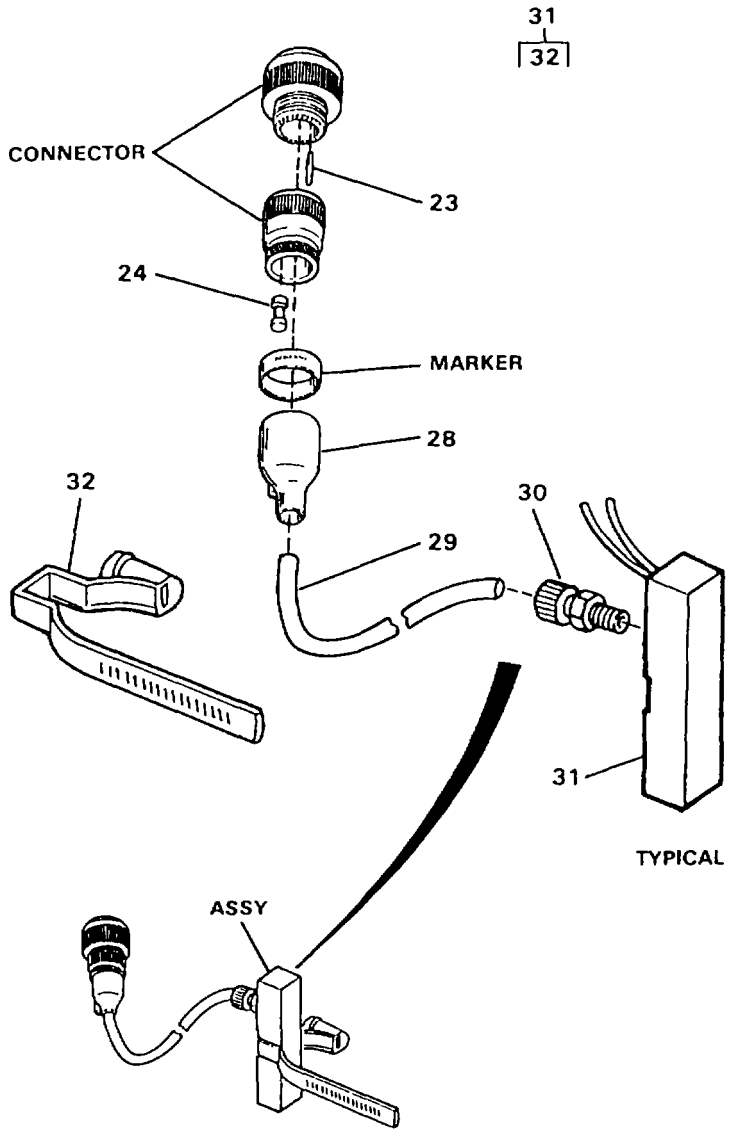

DETAIL	SWITCH ASSY	CONNECTOR	WIRE RUN	PIN	PLUG	MARKER
A	17	20	P35A	23	—	25
			P35B	23	—	
			P35C	23	24	
B	18	21	P36A	23	—	26
			P36B	23	—	
			P36C	23	24	
C	19	22	P37A	23	—	27
			P37B	23	—	
			P37C	23	24	

FIGURE 83. MEDIA FILTER LEVEL INDICATOR ASSEMBLY (SHEET 2 OF 2)

(1) ITEM NO	(2) SMR CODE	(3) NSN	(4) CAGEC	(5) PART NUMBER	(6) DESCRIPTION AND USABLE ON CODES(UOC)	(7) QTY
					GROUP 02 WATER PURIFICATION SYSTEM FIG. 83 MEDIA FILTER LEVEL INDICATOR ASSEMBLY	
1	PAOZZ	5310009138881	96906	MS51971-3	.NUT,PLAIN,HEXAGON.....	2
2	PAOZZ	5310009847042	96906	MS35338-141	.WASHER,LOCK.....	2
3	PAOZZ	5310007737618	96906	MS15795-814	.WASHER,FLAT.....	4
4	PAOZZ	5305007175467	96906	MS35307-362	.SCREW,CAP,HEXAGON H.....	2
5	XDOFF		97403	13229E0769	.LEVEL SWITCH ASSY.....	1
6	PBOZZ	4820012832992	97403	13229E0680-1	..VALVE,BALL.....	1
7	PBOZZ	4730013486246	97403	13229E1255-2	..NIPPLE,PIPE.....	1
8	PAOZZ	4730006915459	97403	13229E0682-5	..ADAPTER,STRAIGHT,PI.....	1
9	PBOZZ	4730011054065	81343	4-4-4 140424S	..TEE,PIPE 1/4-18 MPT X 1/4-18 FPT X 1/4-18 FPT.....	1
10	XDOZZ		97403	13229E0692-1	..CLAMP WATERPRODUCT OUT 1 INCH.....	1
11	PAOZZ	5330013516999	97403	13229E0693-1	..GASKET 1 INCH.....	1
12	PBOZZ	4610013512092	97403	13229E0763	..END CAP ASSEMBLY.....	1
13	PBOZZ	6680013496669	97403	13229E0767	..FLOAT,SIGHT INDICAT.....	1
14	PBOZZ	5930013507668	97403	13229E0761	..SUBASSEMBLEY.....	1
15	PAOZZ	4730013542717	97403	13229E0765	..CLAMP,HOSE,SPECIAL-.....	4
16	PBOZZ	6680013504912	97403	13229E0764	..INDICATOR,SIGHT,LIQ.....	2
17	XDOZZ		97403	13229E1268-3	..LEVEL,SWITCH P37.....	1
18	XDOFF		97403	13229E1268-2	..LEVEL,SWITCH P36.....	1
19	XDOFF		97403	13229E1268-1	..LEVEL,SWITCH P35.....	1
20	PAFFF	5935013545177	17549	CA3106E14S-7PXB-02-57	...CONNECTOR,PLUG,ELEC P37.....	2
21	PAFFF	5935013467151	17549	CA3106E14S-7PWB-02-57	...CONNECTOR,PLUG,ELEC P36.....	1
22	PAFFF	5935013545178	17549	CA3106E14S-7P-B-02-57	...CONNECTOR,PLUG,ELEC P35.....	1
23	PAFZZ	5999013448758	17549	030-8586-000	....CONTACT,ELECTRICAL PART OF KIT P/N 120-02593-P.....	9
24	XDFZZ		17549	225-0017-000	...PLUG.....	3
25	XDFZZ		09647	120-02433-112	...MARKER.....	1
26	XDFZZ		09647	120-02433-111	...MARKER.....	1
27	XDFZZ		09647	120-02433-110	...MARKER.....	1
28	PBFZZ	5970013484761	97403	13229E1213-1	...INSULATION SLEEVING.....	3
29	MFFZZ		09647	120-02602-8	...TUBING CUT TO LENGTH FROM BULK, P/N 13229E1282-1.....	3
30	PBFZZ	5975013506874	97403	13229E0627	...BOX CONNECTOR,ELEC.....	1
31	PAFZZ	5930013507669	04034	88802	...SWITCH,SUBASSEMBLY.....	3
32	PAOZZ	4730013542717	97403	13229E0765	....CLAMP,HOSE,SPECIAL-.....	1

END OF FIGURE

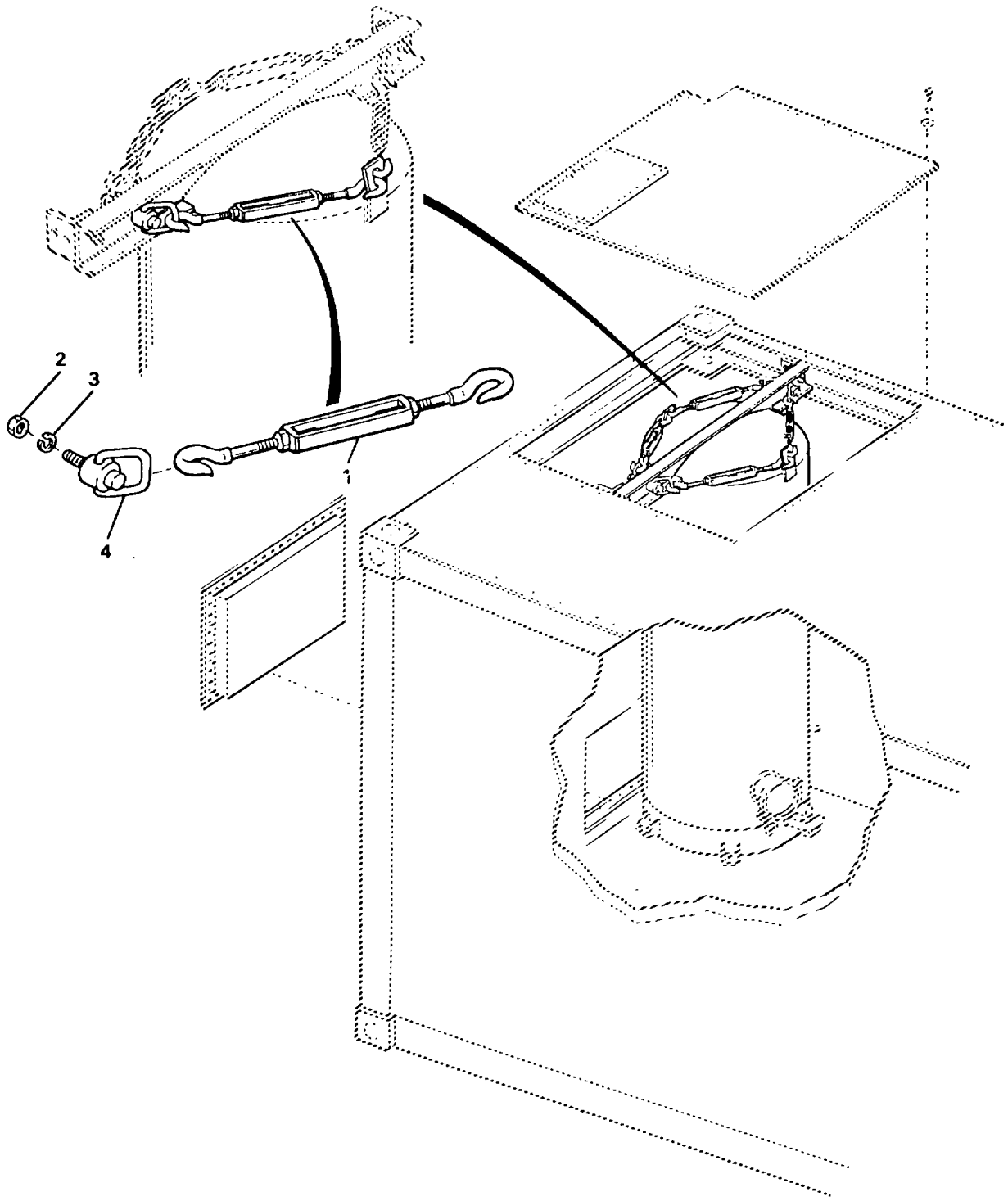

FIGURE 84. MEDIA FILTER ASSEMBLY (SHEET 1 OF 2)

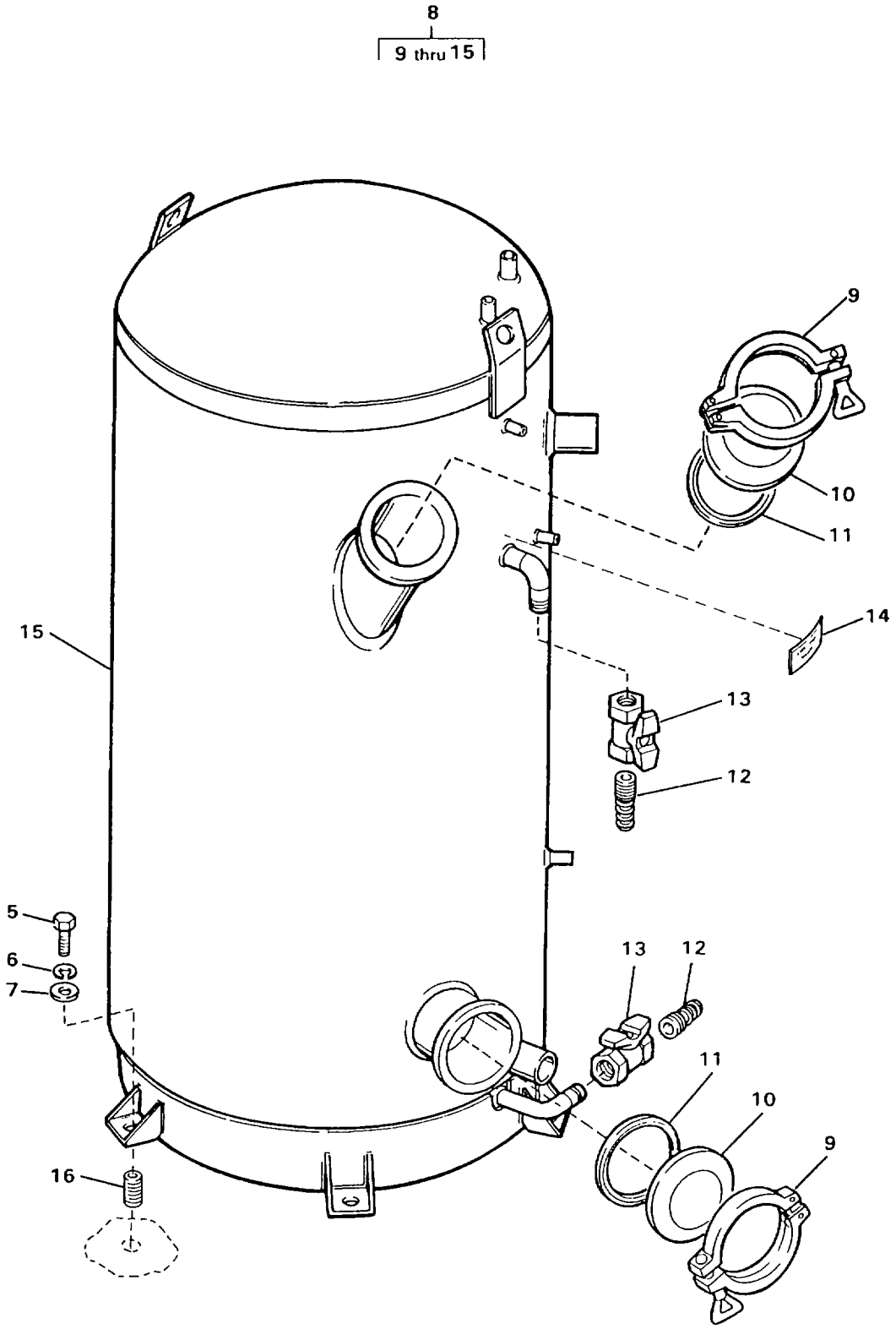

FIGURE 84. MEDIA FILTER ASSEMBLY (SHEET 2 OF 2)

(1) ITEM NO	(2) SMR CODE	(3) NSN	(4) CAGEC	(5) PART NUMBER	(6) DESCRIPTION AND USABLE ON CODES(UOC)	(7) QTY
					GROUP 02 WATER PURIFICATION SYSTEM FIG. 84 MEDIA FILTER ASSEMBLY	
1	PAOZZ	5340013531893	97403	13229E0161-22	.TURNBUCKLE.....	4
2	PAOZZ	5310009146028	96906	MS51922-18	.NUT,SELF-LOCKING,HE.....	4
3	PAOZZ	5310007737618	96906	MS15795-814	.WASHER,FLAT.....	4
4	PBOZZ	4030013517211	97403	13229E1395	.SWIVEL AND LINK ASY.....	4
5	PAFZZ	5305009480667	96906	MS35307-487	.SCREW,CAP,HEXAGON H 0.75-10 UNC-2A X 2 INCHES LONG.....	6
6	PAFZZ	5310009370454	96906	MS35338-146	.WASHER,LOCK.....	6
7	PAFZZ	5310005847799	96906	MS15795-822	.WASHER,FLAT.....	6
8	PAFFF	4330014559202	97403	13229E0038	.FILTER ASSY,MEDIA.....	1
9	XDOZZ		97403	13229E0692-5	..CLAMP MULTI-MEDIA TANK.....	2
10	XDOZZ		97403	13229E0696-2	..CAP.....	2
11	PAOZZ	5330013517106	97403	13229E0693-5	..GASKET.....	2
12	PAOZZ	4730013515866	72661	RST-10	..ADAPTER,STRAIGHT,PI.....	2
13	PBOZZ	4820013512949	97403	13229E1303-2	..VALVE,BALL.....	2
14	XDOZZ		97403	13229E1335-1	..PLATE,ID MEDIA FILTER.....	1
15	XDFZZ		97403	13229E0039	..TANK,FILTER.....	1
16	PAFZZ	5325000452812	96906	MS122128	.INSERT,SCREW THREAD.....	6

END OF FIGURE

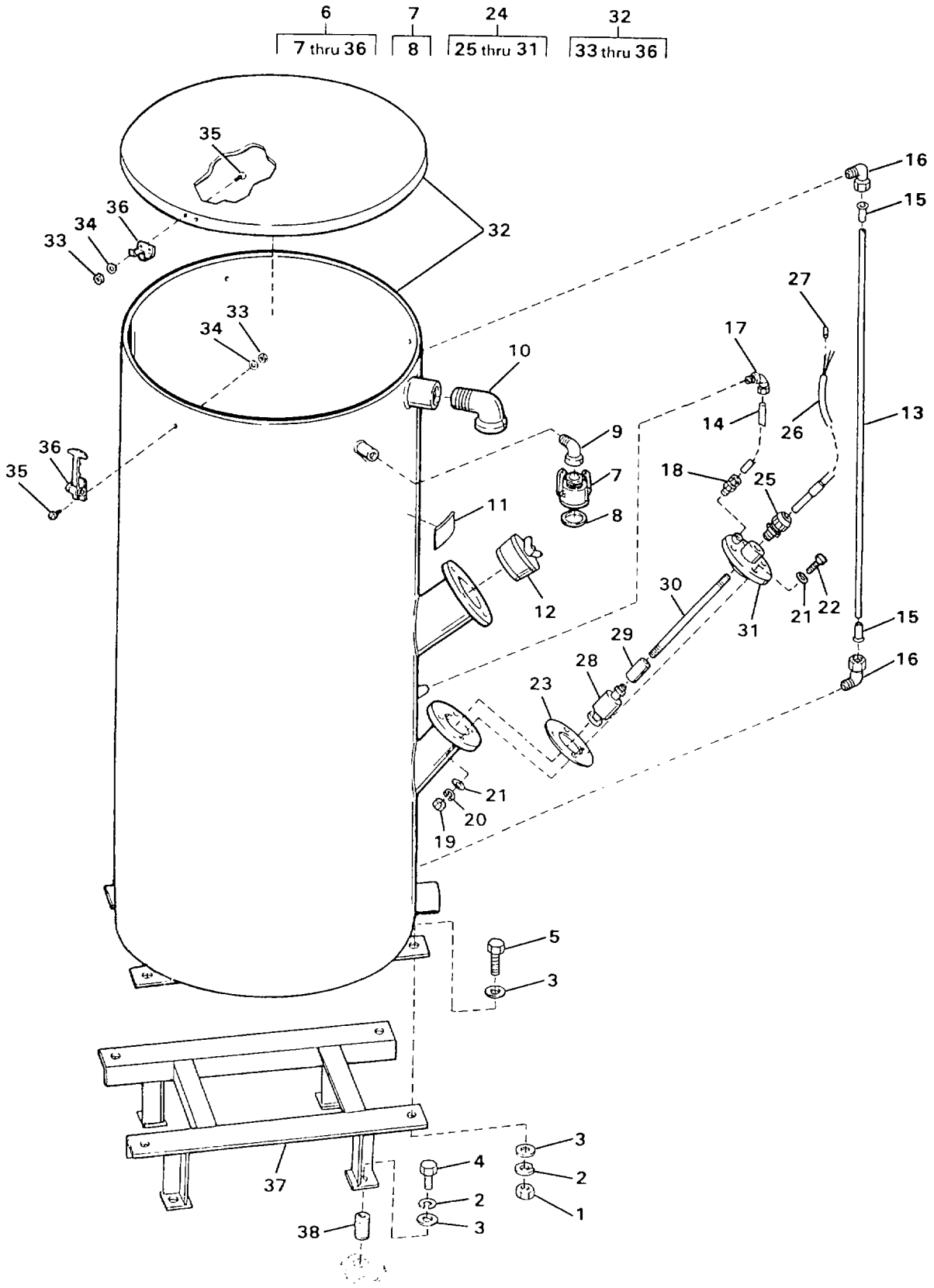

FIGURE 85. CLEAN FLUSH TANK ASSEMBLY

(1) ITEM NO	(2) SMR CODE	(3) NSN	(4) CAGEC	(5) PART NUMBER	(6) DESCRIPTION AND USABLE ON CODES(UOC)	(7) QTY
					GROUP 02 WATER PURIFICATION SYSTEM FIG. 85 CLEAN FLUSH TANK ASSEMBLY	
1	PAFZZ	5310009245897	96906	MS51971-8	.NUT,PLAIN,HEXAGON.....	4
2	PAFZZ	5310009370454	96906	MS35338-146	.WASHER,LOCK.....	8
3	PAFZZ	5310005847799	96906	MS15795-822	.WASHER,FLAT.....	12
4	PAFZZ	5305009480667	96906	MS35307-487	.SCREW,CAP,HEXAGON H.....	4
5	PAFZZ	5306013597990	97403	13229E0161-314	.BOLT,MACHINE 0.75-10, UNC-2A, X 6.5 INCHES LONG.....	4
6	XDFFF		97403	13229E0443	.TANK ASSEMBLY CLEAN/FLUSH.....	1
7	PBOZZ	4730013506281	97403	13229E0690	..COUPLING HALF,QUICK.....	1
8	PAOZZ	5330013517666	97403	13229E0857-2	...GASKET.....	1
9	PBOZZ		81343	J514	..ELBOW,PIPE 1 INCH NPS, 90 DEG, CLS 150, 316 SS.....	1
10	PBOZZ	4730012834927	97403	13229E0443-2	..ELBOW,PIPE 2 INCH NPS, 90 DEG, CLS 150, 316 SS.....	1
11	XDOZZ		97403	13229E1335-2	..PLATE,ID CLEAN FLUSH TANK.....	1
12	PBOZZ	5340013519562	97403	13229E0472	..PLUG,PROTECTIVE,DUS.....	1
13	MOOZZ		09647	120-02599-63	..TUBING CUT TO LENGTH FROM BULK, P/N 13229E0625-2.....	1
14	MOOZZ		09647	120-02599-64	..TUBING CUT TO LENGTH FROM BULK, P/N 77C714976P006.....	1
15	PBOZZ	4730013511694	97403	13229E0055-2	..INSERT,TUBE FITTING.....	2
16	PBOZZ	4730010270723	53918	070-11	..ELBOW,PIPE TO TUBE	2
17	PBOZZ	4730011605762	97403	13229E0689	..ELBOW,PIPE TO TUBE.....	1
18	PBOZZ	4730011169214	61424	N4MC4	..ADAPTER,STRAIGHT,PI.....	1
19	PAOZZ	5310007646609	96906	MS51971-7	..NUT,PLAIN,HEXAGON.....	4
20	PAOZZ	5310009370453	96906	MS35338-145	..WASHER,LOCK.....	4
21	PAOZZ	5310006143505	96906	MS15795-820	..WASHER,FLAT.....	8
22	PAOZZ	5305009432093	96906	MS35307-469	..SCREW,CAP,HEXAGON H.....	4
23	PAOZZ	5330013517667	97403	13229E0477	..GASKET.....	1
24	XDOFF		97403	13229E0474	..LEVEL SWITCH ASSY.....	1
25	PAFZZ	5975010297710	56501	2632	...BOX CONNECTOR,ELECT.....	1
26	MFFZZ		09647	120-02602-12	...TUBING,HEAT SHRINK CUT TO LENGTH FROM BULK, P/N 13229E1282-1...	1
27	XDFZZ		01121	B-321 HCPS.9-333 6W	...MARKER.....	3
28	PAFZZ	5930013504171	97403	13229E0310	...SWITCH,LIQUID LEVEL.....	1
29	XDFZZ		97403	13229E0474-3	...NIPPLE,PIPE 0.25 INCH NPT X 1.06 INCHES LONG, CLS 150, 316 SS....	1
30	XDFZZ		97403	13229E1255-12	...NIPPLE,PIPE 1/4 INCH NPS.....	1
31	XDFZZ		97403	13229E0473	...COVER,LEVEL SWITCH.....	1
32	XDFZZ		97403	13229E0112	..TANK,CLEAN/FLUSH.....	1
33	PAOZZ	5310009349761	96906	MS35649-264	...NUT,PLAIN,HEXAGON.....	8
34	PAOZZ	5310008805976	96906	MS15795-806	....WASHER,FLAT.....	8
35	PAOZZ	5305000546652	96906	MS51957-28	...SCREW,MACHINE.....	8
36	PAOZZ	5340013513340	94222	37-20-071-20	...LATCH,THUMB.....	3
37	XDFZZ		97403	13229E0074	..SUPPORT,TANK.....	1
38	PAFZZ	5325000452812	96906	MS122128	..INSERT,SCREW THREAD.....	4

END OF FIGURE

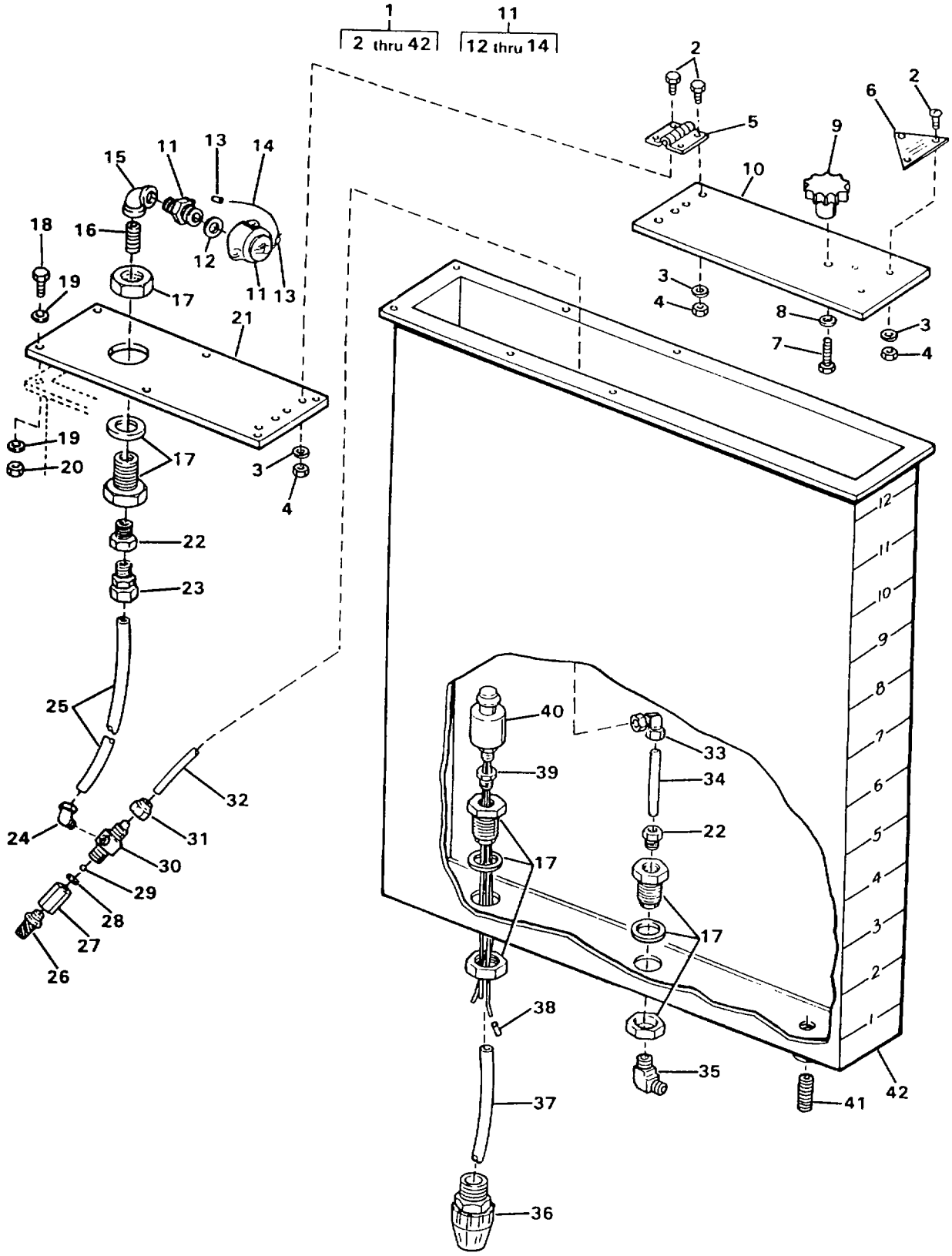

FIGURE 86. POLYELECTROLYTE TANK ASSEMBLY

(1) ITEM NO	(2) SMR CODE	(3) NSN	(4) CAGEC	(5) PART NUMBER	(6) DESCRIPTION AND USABLE ON CODES(UOC)	(7) QTY
					GROUP 02 WATER PURIFICATION SYSTEM FIGURE 86 POLYELECTROLYTE TANK ASSEMBLY	
1	XDOOO		97403	13229E0391	.TANK ASSEMBLY.....	1
2	PAOZZ	5305005816488	96906	MS18212-49	..SCREW,MACHINE.....	11
3	PAOZZ	5310001384315	96906	MS51859-5	..WASHER,FLAT.....	11
4	PAOZZ	5310004219608	96906	MS51858-4	..NUT,PLAIN,HEXAGON.....	11
5	PBOZZ	5340013513329	97403	13229E0207	..HINGE,BUTT.....	2
6	XDOZZ		97403	13229E0021	..PLATE,ID POLYELECTROLYTE.....	1
7	PAOZA	5305011022665	96906	MS18212-81	..SCREW,MACHINE.....	1
8	PAOZZ	5310005020106	96906	MS51859-6	..WASHER,FLAT.....	1
9	PAOZZ	5355013702456	97403	13229E0206	..KNOB,HAND.....	1
10	XDOZZ		97403	13229E0835	..COVER,CHEM TANK.....	1
11	PBOZZ	4730013503825	97403	13229E0431	..COUPLING HALF,QUICK	1
12	PAOZZ	5330013498922	97403	13229E0857-1	...GASKET.....	1
13	PAOZZ	4030001455721	96906	MS51844-64	...SWAGING SLEEVE,WIRE.....	2
14	MOOZZ		09647	120-02598-6	...CABLE CUT TO LENGTH FROM BULK, P/N 13229E1147-1.....	1
15	PBOZZ	4730013528700	97403	13229E0421-14	..ELBOW,PIPE 90 DEGREE, SCH 80, PCV, 0.5-14 INCH NPT.....	1
16	PBOZZ	4730012974659	97403	13229E0694-2	..NIPPLE,PIPE.....	1
17	PBOZZ	4730013503770	97403	13229E0676	..COUPLING,PIPE.....	3
18	PAOZZ		97403	13229E0391-25	..SCREW,CAP,HEXAGON H 0.19-24 UNC-2A X 1.25 INCHES LONG.....	6
19	PAOZZ	5310002134960	96906	MS51859-4	..WASHER,FLAT.....	12
20	PAOZZ	5310010127400	96906	MS51858-5	..NUT,PLAIN,HEXAGON.....	6
21	XDOZZ		97403	13229E0011	..COVER.....	1
22	PBOZZ	4730013509193	97403	13229E0688-1	..BUSHING,PIPE.....	2
23	PBOZZ	4730013511569	97403	13229E0432	..ADAPTER,STRAIGHT,PI.....	1
24	PAOZZ	4730013506205	97403	13229E0449-2	..ELBOW,PIPE TO TUBE.....	1
25	MOOZZ		09647	120-02599-66	..TUBING,PLASTIC CUT TO LENGTH FROM BULK, P/N 13229E0691-2.....	1
26	PAOZZ	4730013235135	62866	10123	..STRAINER,SEDIMENT.....	1
27	PAOZZ	4820013237050	62866	10978	..SEAT,VALVE.....	1
28	PAOZZ	5330013238846	62866	10407	..SEAL,PLAIN PART OF KIT P/N SP-30487.....	1
29	PAOZZ	4820013237325	62866	10338	..BALL,CHECK PART OF KIT P/N SP-30487.....	1
30	PAOZZ	4810013515925	62866	26220	..PARTS KIT,VALUE.....	1
31	PAOZZ	5310013540077	62866	10299	..NUT,PLAIN,HEXAGON.....	1
32	MOOZZ		09647	120-02599-65	.TUBING CUT TO LENGTH FROM BULK, P/N 13229E0691-2.....	1
33	PAOZZ	4730013509028	97403	13229E1078	..ELBOW,PIPE TO TUBE.....	1
34	PBOZZ	4730013514007	97403	13229E0694-6	..NIPPLE,PIPE.....	1
35	PBOZZ	4730013487920	97403	13229E0689-5	..ELBOW,PIPE TO TUBE.....	1
36	PBOZZ	5975013557891	97403	13229E0738-6	..STUFFING TUBE.....	1
37	MOOZZ		09647	120-02434-1	..TUBING,HEAT SHRINK CUT TO LENGTH FROM BULK, P/N 13229E1282-1...	1
38	XDOZZ		01121	B-321HCPS 9-3336 W	..MARKER.....	3
39	PBOZZ	4730001888266	97403	13229E0688-4	..BUSHING,PIPE.....	1
40	PBOZZ	5930013504171	97403	13229E0310	..SWITCH,LIQUID LEVEL.....	1

(1) ITEM NO	(2) SMR CODE	(3) NSN	(4) CAGEC	(5) PART NUMBER	(6) DESCRIPTION AND USABLE ON CODES(UOC)	(7) QTY
41	PAOZZ	4730004890313	34895	104P014	..NIPPLE,PIPE.....	
42	PBOZZ	5430013514547	09647	120-00355	..TANK,LIQUID STORAGE.....	1
	PAOZZ	5330013512818	62866	SP-30487	..PARTS KIT,SEAL REPL.....	1
					BALL,CHECK (1) 86-29.....	
					SEAL,PLAIN (1) 86-28.....	

END OF FIGURE

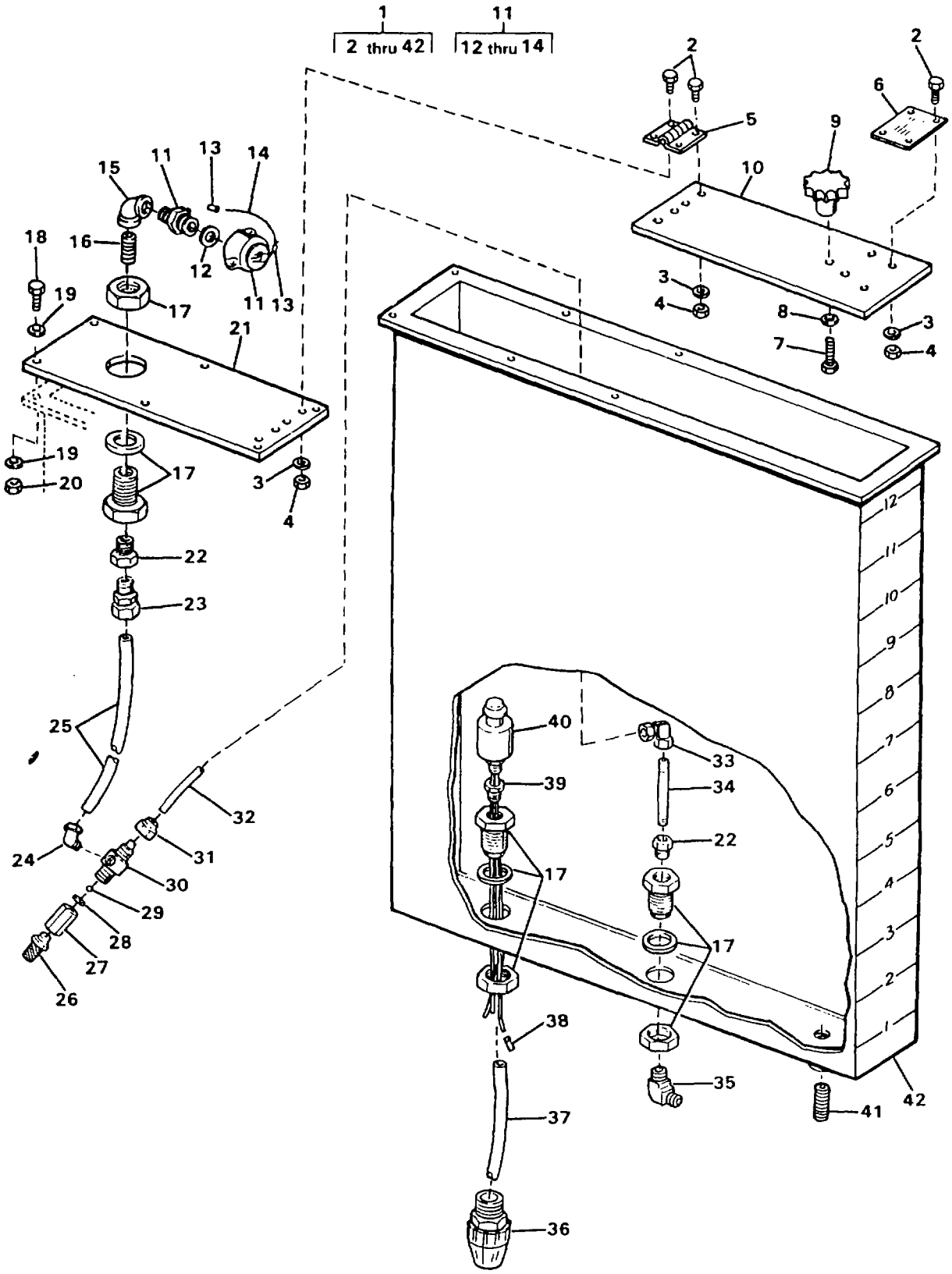

FIGURE 87. SEQUESTRANT TANK ASSEMBLY

(1) ITEM NO	(2) SMR CODE	(3) NSN	(4) CAGEC	(5) PART NUMBER	(6) DESCRIPTION AND USABLE ON CODES(UOC)	(7) QTY
					GROUP 02 WATER PURIFICATION SYSTEM FIG. 87 SEQUESTRANT TANK ASSEMBLY	
1	XDOOO		97403	13229E0421	.TANK ASSEMBLY SEQUESTRANT.....	1
2	PAOZZ	5305005816488	96906	MS18212-49	..SCREW,MACHINE.....	12
3	PAOZZ	5310001384315	96906	MS51859-5	..WASHER,FLAT.....	12
4	PAOZZ	5310004219608	96906	MS51858-4	..NUT,PLAIN,HEXAGON.....	12
5	PBOZZ	5340013513329	97403	13229E0207	..HINGE,BUTT.....	2
6	XDOZZ		97403	13229E0020	..PLATE,ID SEQUESTRANT.....	1
7	PAOZA	5305011022665	96906	MS18212-81	..SCREW,MACHINE.....	1
8	PAOZZ	5310005020106	96906	MS51859-6	..WASHER,FLAT.....	1
9	PAOZZ	5355013702456	97403	13229E0206	..KNOB,HAND.....	1
10	XDOZZ		97403	13229E1073	..COVER,CHEM TANK.....	1
11	PBOZZ	4730013503825	97403	13229E0431	..COUPLING HALF,QUICK.....	1
12	PAOZZ	5330013498922	97403	13229E0857-1	...GASKET.....	1
13	PAOZZ	4030001455721	96906	MS51844-64	...SWAGING SLEEVE,WIRE.....	2
14	MOOZZ		09647	120-02598-6	...CABLE CUT TO LENGTH FROM BULK, P/N 13229E1147-1.....	1
15	PBOZZ		97403	13229E0421-14	..ELBOW,PIPE 90 DEGREE, 1/2 INCH NPT.....	1
16	PBOZZ	4730012974659	97403	13229E0694-2	..NIPPLE,PIPE.....	
17	PBOZZ	4730013503770	97403	13229E0676	..COUPLING,PIPE.....	3
18	PAOZZ	5305013514311	97403	13229E0391-25	..SCREW,CAP,HEXAGON H 0.19-24 UNC X 1.25 INCHES LONG.....	6
19	PAOZZ	5310001384315	96906	MS51859-5	..WASHER,FLAT.....	12
20	PAOZZ	5310004219608	96906	MS51858-4	..NUT,PLAIN,HEXAGON.....	6
21	XDOZZ		97403	13229E0011	..COVER.....	1
22	PBOZZ	4730013509193	97403	13229E0688-1	..BUSHING,PIPE.....	2
23	PBOZZ	4730013511569	97403	13229E0432	..ADAPTER,STRAIGHT,PI.....	1
24	PAOZZ	4730013506205	97403	13229E0449-2	..ELBOW,PIPE TO TUBE.....	1
25	MOOZZ		09647	120-02599-66	.TUBING,PLASTIC CUT TO LENGTH FROM BULK, P/N 13229E0691-2.....	1
26	PAOZZ	4730013235135	62866	10123	..STRAINER,SEDIMENT.....	1
27	PAOZZ	4820013237050	62866	10978	..SEAT,VALVE.....	1
28	PAOZZ	5330013238846	62866	10407	..SEAL,PLAIN PART OF KIT P/N SP-30487.....	1
29	PAOZZ	4820013237325	62866	10338	..BALL,CHECK PART OF KIT P/N SP-30487.....	1
30	PAOZZ	4810013515925	62866	26220	..PARTS KIT,VALUE.....	1
31	PAOZZ	5310013540077	62866	10299	..NUT,PLAIN,HEXAGON.....	1
32	MOOZZ		09647	120-02599-65	..TUBING CUT TO LENGTH FROM BULK, P/N 13229E0691-2.....	1
33	PAOZZ	4730013509028	97403	13229E1078	..ELBOW,PIPE TO TUBE.....	1
34	PBOZZ	4730013514007	97403	13229E0694-6	..NIPPLE,PIPE.....	1
35	PBOZZ	4730013487920	97403	13229E0689-5	..ELBOW,PIPE TO TUBE.....	1
36	PBOZZ		97403	13229E0738-6	..STUFFING TUBE.....	1
37	MOOZZ		09647	120-02434-1	..TUBING,HEAT SHRINK CUT TO LENGTH FROM BULK, P/N 13229E1282-1...	1
38	XDOZZ		01121	B-321HCPS.9-3336 W	..MARKER.....	3
39	PBOZZ	4730001888266	97403	13229E0688-4	BUSHING,PIPE.....	1
40	PBOZZ	5930013504171	97403	13229E0310	SWITCH,LIQUID LEVEL.....	1

(1) ITEM NO	(2) SMR CODE	(3) NSN	(4) CAGEC	(5) PART NUMBER	(6) DESCRIPTION AND USABLE ON CODES(UOC)	(7) QTY
41	PAOZZ	4730004890313	34895	104P014	..NIPPLE,PIPE.....	1
42	PBOZZ	5430013514547	09647	120-00355	..TANK,LIQUID STORAGE.....	1
	PAOZZ	5330013512818	62866	SP-30487	..PARTS KIT,SEAL REPL.....	1
					BALL,CHECK (1) 87-29.....	
					SEAL,PLAIN (1) 87-28.....	

END OF FIGURE

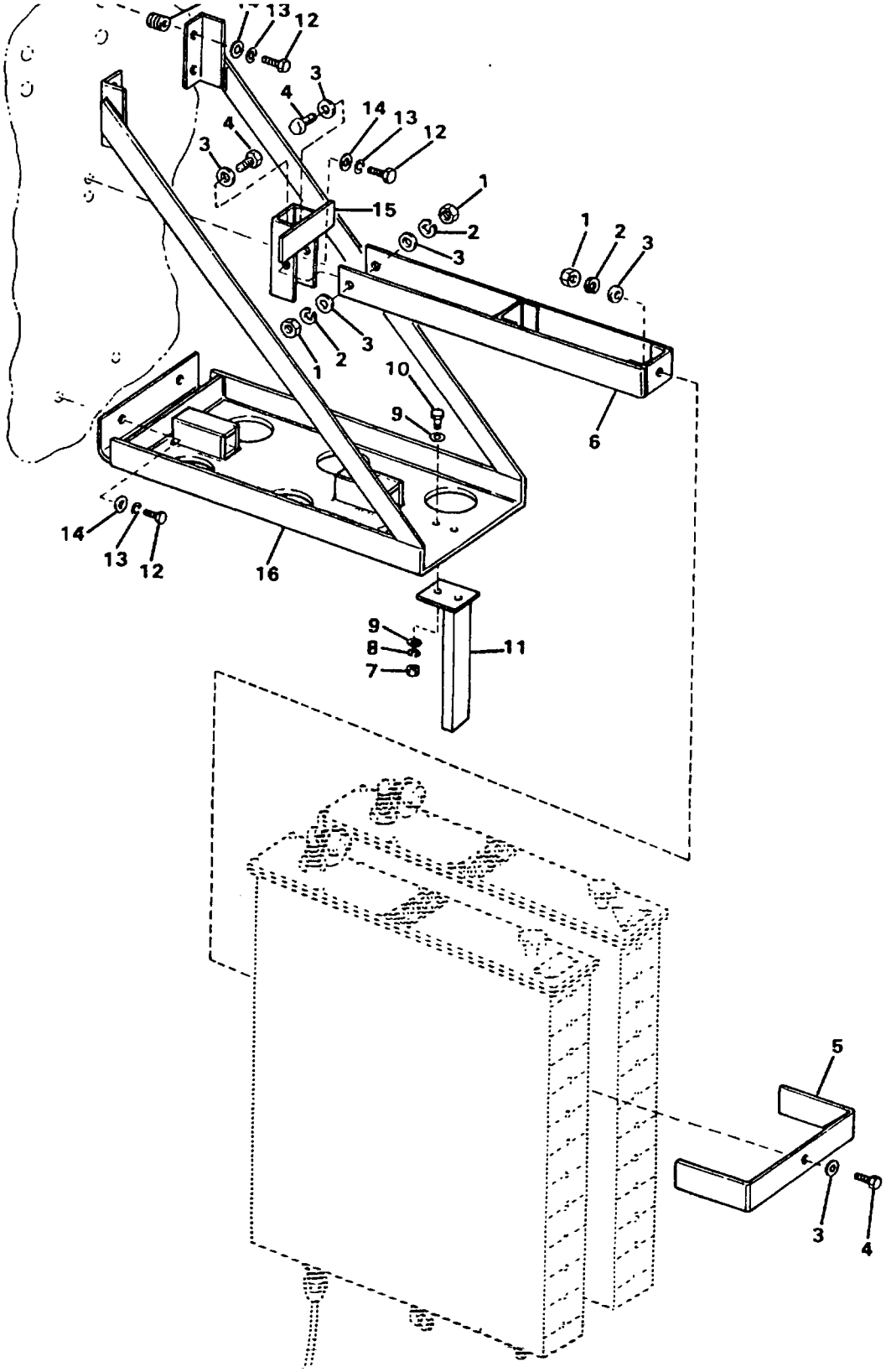

FIGURE 88. CHEMICAL TANK MOUNTING

(1) ITEM NO	(2) SMR CODE	(3) NSN	(4) CAGEC	(5) PART NUMBER	(6) DESCRIPTION AND USABLE ON CODES(UOC)	(7) QTY
					GROUP 02 WATER PURIFICATION SYSTEM FIG. 88 CHEMICAL TANK MOUNTING	
1	PAOZZ	5310009138881	96906	MS51971-3	.NUT,PLAIN,HEXAGON.....	3
2	PAOZZ	5310009847042	96906	MS35338-141	.WASHER,LOCK.....	3
3	PAOZZ	5310007737618	96906	MS15795-814	.WASHER,FLAT.....	6
4	PAOZZ	5305007175467	96906	MS35307-362	.SCREW,CAP,HEXAGON H.....	3
5	XDOZZ		97403	13229E0321	.STRAP,RESTRAINT.....	1
6	XDOZZ		97403	13229E0313	.ROD,RESTRAINT.....	1
7	PAOZZ	5310009035966	96906	MS51971-1	.NUT,PLAIN,HEXAGON.....	2
8	PAOZZ	5310009338121	96906	MS35338-139	.WASHER,LOCK.....	2
9	PAOZZ	5310010911248	96906	MS15795-810	.WASHER,FLAT.....	4
10	PAOZZ	5305000213620	96906	MS35307-307	.SCREW,CAP,HEXAGON H.....ETN	2
10	PAOZZ	5305000213620	96906	MS35307-308	.SCREW,CAP,HEXAGON H.....FKD	2
11	XDOZZ		97403	13229E1138	.BRACKET,KICK.....	1
12	PAOZZ	5305000213806	96906	MS35307-413	.SCREW,CAP,HEXAGON H.....	8
13	PAOZZ	5310009338778	96906	MS35338-143	.WASHER,LOCK.....	8
14	PAOZZ	5310007679425	96906	MS15795-818	.WASHER,FLAT.....	8
15	XDOZZ		97403	13229E0320	.BRACKET,RESTRAINT.....	1
16	XDOZZ		97403	13229E0312	.SUPPORT,CHEM TANKS.....	1
17	PAFZZ	5340009907158	96906	MS122165	.INSERT,SCREW THREAD.....	8

END OF FIGURE

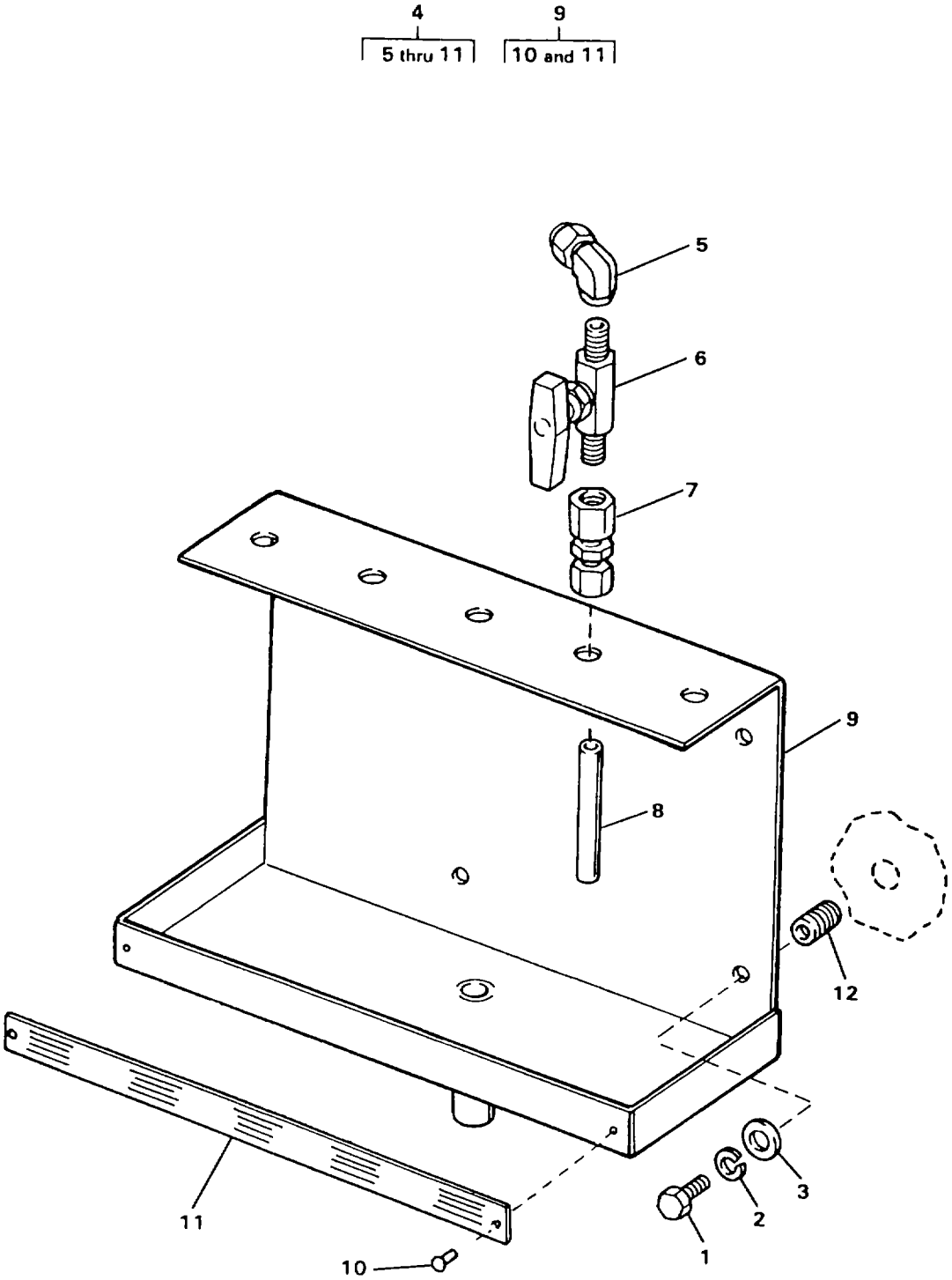

FIGURE 89. SAMPLE TROUGH ASSEMBLY

(1) ITEM NO	(2) SMR CODE	(3) NSN	(4) CAGEC	(5) PART NUMBER	(6) DESCRIPTION AND USABLE ON CODES(UOC)	(7) QTY
					GROUP 02 WATER PURIFICATION SYSTEM FIG. 89 SAMPLE TROUGH ASSEMBLY	
1	PAOZZ	5305000213620	96906	MS35307-307	.SCREW,CAP,HEXAGON H.....	4
2	PAOZZ	5310009338121	96906	MS35338-139	.WASHER,LOCK.....	4
3	PAOZZ	5310010911248	96906	MS15795-810	.WASHER,FLAT.....	4
4	XDOOO		97403	13229E0409	.SAMPLE TROUGH ASSY.....	1
5	PAOZZ	4730007932697	54938	4-4 DBZ-SS	..ELBOW,PIPE TO TUBE.....	5
6	PBOZZ	4820013501559	97403	13229E0679-1	..VALVE,PLUG 1/4 NPT.....	5
7	PAOZZ	4730003043552	97403	13229E0408	..ADAPTER,STRAIGHT,PI.....	5
8	MOOZZ		97403	13229E0409-5	..TUBING CUT TO LENGTH FROM BULK, P/N ASTM A269, 0.25 O.D. X 0.035 WALL THICKNESS.....	5
9	XDOZZ		97403	13229E0079	..TROUGH,SAMPLE.....	1
10	PAOZZ	5320013490933	97403	13229E0350-1	...RIVET,BLIND.....	2
11	XDOZZ		97403	13229E1225	...PLATE,ID.....	1
12	PAFZZ	5340002904489	96906	MS122241	..INSERT,SCREW THREAD.....	4

END OF FIGURE

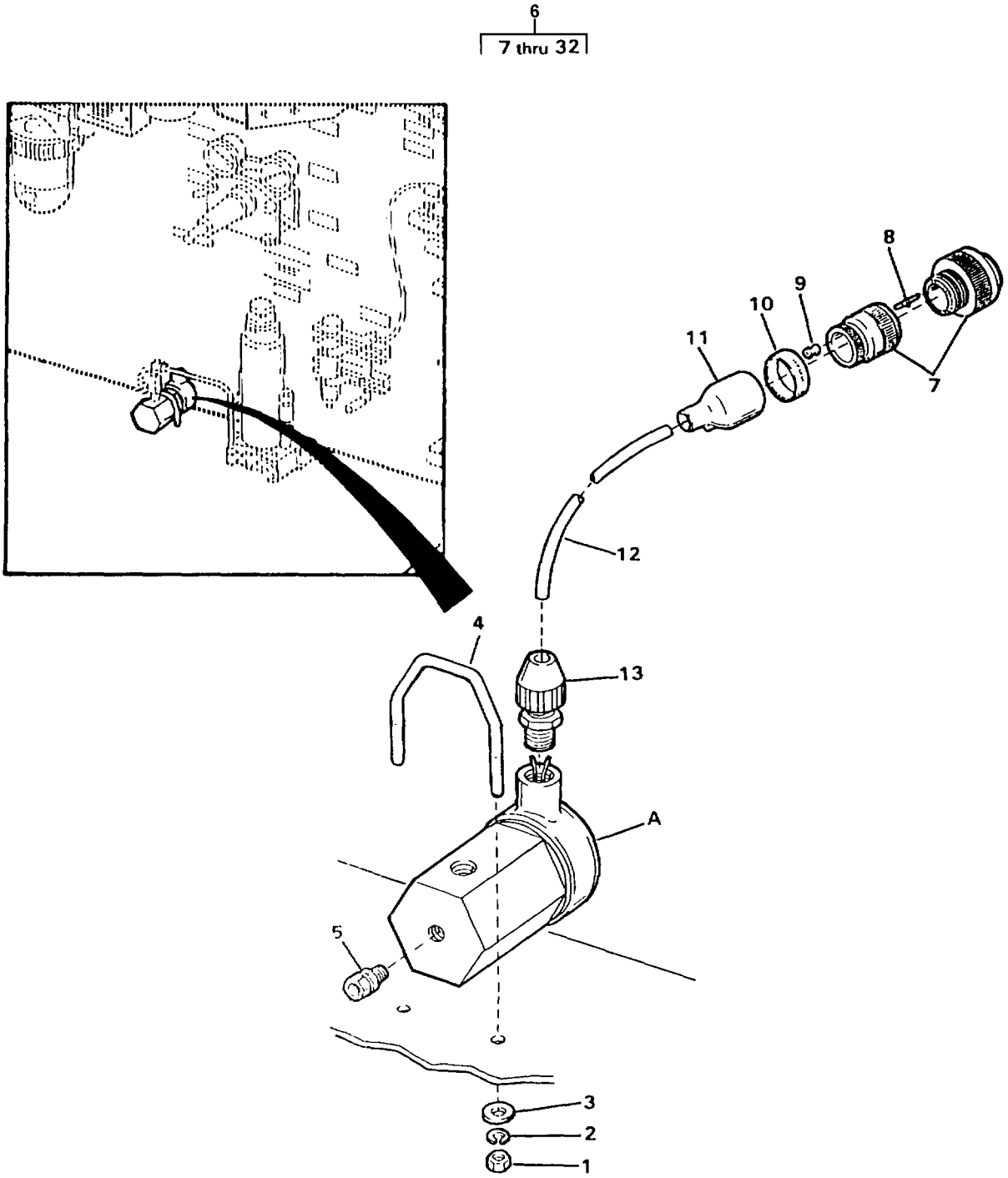

CONNECTOR	CONTACT PIN	PLUG	WIRE RUN
7	8	—	P28A
	8	—	P28B
	8	9	P28C

FIGURE 90. HIGH PRESSURE SOLENOID VALVE ASSEMBLY (SHEET 1 OF 2)

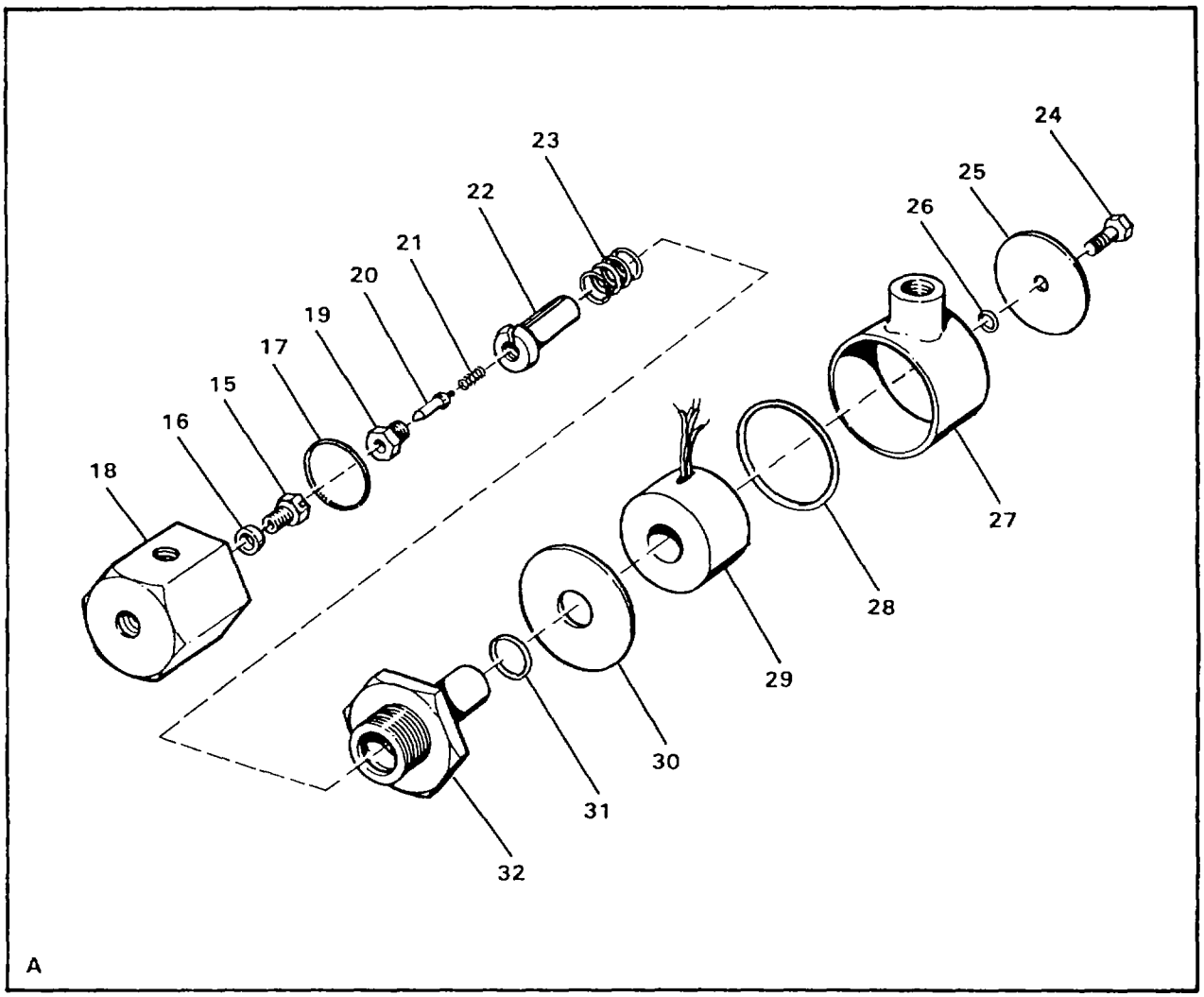

Figure 90. HIGH PRESSURE SOLENOID VALVE ASSEMBLY (SHEET 2 OF 2)

(1) ITEM NO	(2) SMR CODE	(3) NSN	(4) CAGEC	(5) PART NUMBER	(6) DESCRIPTION AND USABLE ON CODES(UOC)	(7) QTY
					GROUP 02 WATER PURIFICATION SYSTEM FIG. 90 HIGH PRESSURE SOLENOID VALVE ASSEMBLY	
1	PAFZZ	5310009035966	96906	MS51971-1	.NUT,PLAIN,HEXAGON.....	2
2	PAFZZ	5310009338121	96906	MS35338-139	.WASHER,LOCK.....	2
3	PAFZZ	5310010911248	96906	MS15795-810	.WASHER,FLAT.....	2
4	PBFZZ	5306013506863	97403	13229E0004	.BOLT,U.....	1
5	PAFZZ	4730001759387	97403	13229E0682-2	.ADAPTER,STRAIGHT,PI.....	1
6	XDFFF		97403	13229E1269-1	.VALVE SOLENOID ASSY.....	1
7	PAFFF		17549	CA3106E14S-7P-B-02-57	..CONNECTOR,PLUG,ELEC P28.....	1
8	PAFZZ	5999013448758	17549	030-8586-000	...CONTACT,ELECTRICAL PART OF KIT P/N 120-02593-P.....	3
9	XDFZZ		17549	225-0017-000	...PLUG,WIRE.....	1
10	XDFZZ		09647	120-02433-103	..MARKER.....	1
11	PBFZZ	5970013484761	97403	13229E1213-1	..INSULATION SLEEVING.....	1
12	MFFZZ		09647	120-02602-1	..TUBING CUT TO LENGTH FROM BULK, P/N 13229E1282-1.....	1
13	PBFZZ	5975013557891	97403	13229E0738-6	..STUFFING TUBE.....	1
14	PAFFF	4810013528512	70642	14800-WP	..VALVE,SOLENOID.....	1
15	KFFZZ		70642	12045L-1/16	...SCREW, SEAT PART OF KIT P/N RK14800.....	1
16	KFFZZ		70642	14046	...SPACER PART OF KIT P/N RK14800.....	1
17	KFFZZ		70642	12039	...PACKING,PREFORMED PART OF KIT P/N RK14800.....	1
18	XAFZZ		70642	14801	...BODY.....	1
19	XDFZZ		70642	12043	...STEM STOP.....	1
20	KFFZZ		70642	12097LKF	...STEM PART OF KIT P/N RK14800.....	1
21	KFFZZ		70642	12019	...SPRING,STEM PART OF KIT P/N RK14800.....	1
22	PBFZZ	5340013508619	70642	12041	...PLUNGER,DETENT.....	1
23	PAFZZ	5360009704237	70642	4019	...SPRING,HELICAL,COMP PART OF KIT P/N RK14800.....	1
24	KFFZZ		70642	12018	...SCREW PART OF KIT P/N RK14800.....	1
25	XDFZZ		70642	5H991	...PLATE,ID.....	1
26	KFFZZ		70642	5H993V	...PACKING,PREFORMED PART OF KIT P/N RK14800.....	1
27	XDFZZ		70642	12030	...COVER,COIL.....	1
28	KFFZZ		70642	4670V	.PACKING,PREFORMED PART OF KIT P/N RK14800.....	1
29	PAFZZ	5950013499862	70642	H186	...COIL,ELECTRICAL.....	1
30	KFFZZ		70642	12082	...END PLATE,LOWER PART OF KIT P/N RK14800.....	1
31	KFFZZ		70642	293V	...PACKING,PREFORMED PART OF KIT P/N RK14800.....	1
32	XDFZZ		70642	12154	...CAP,CYLINDER.....	1
	PAFZZ	4820013501538	70642	RK14800	..REPAIR KIT,VALVE..... END PLATE, LOWER (1) 90-30.....	1

(1) ITEM NO	(2) SMR CODE	(3) NSN	(4) CAGEC	(5) PART NUMBER	(6) DESCRIPTION AND USABLE ON CODES(UOC)	(7) QTY
					PACKING, PREFORMED (1) 90-17.....	
					PACKING, PREFORMED (1) 90-26.....	
					PACKING, PREFORMED (1) 90-28.....	
					PACKING, PREFORMED (1) 90-31.....	
					PACKING, PREFORMED (1) 90-28.....	
					PACKING, PREFORMED (1) 90-31.....	
					SCREW (1) 90-24.....	
					SCREW, SEAT (1) 90-15.....	
					SPACER (1) 90-16.....	
					SPRING, STEM (1) 90-21.....	
					SPRING, RETURN (1) 90-23.....	
					STEM (1) 90-20.....	

END OF FIGURE

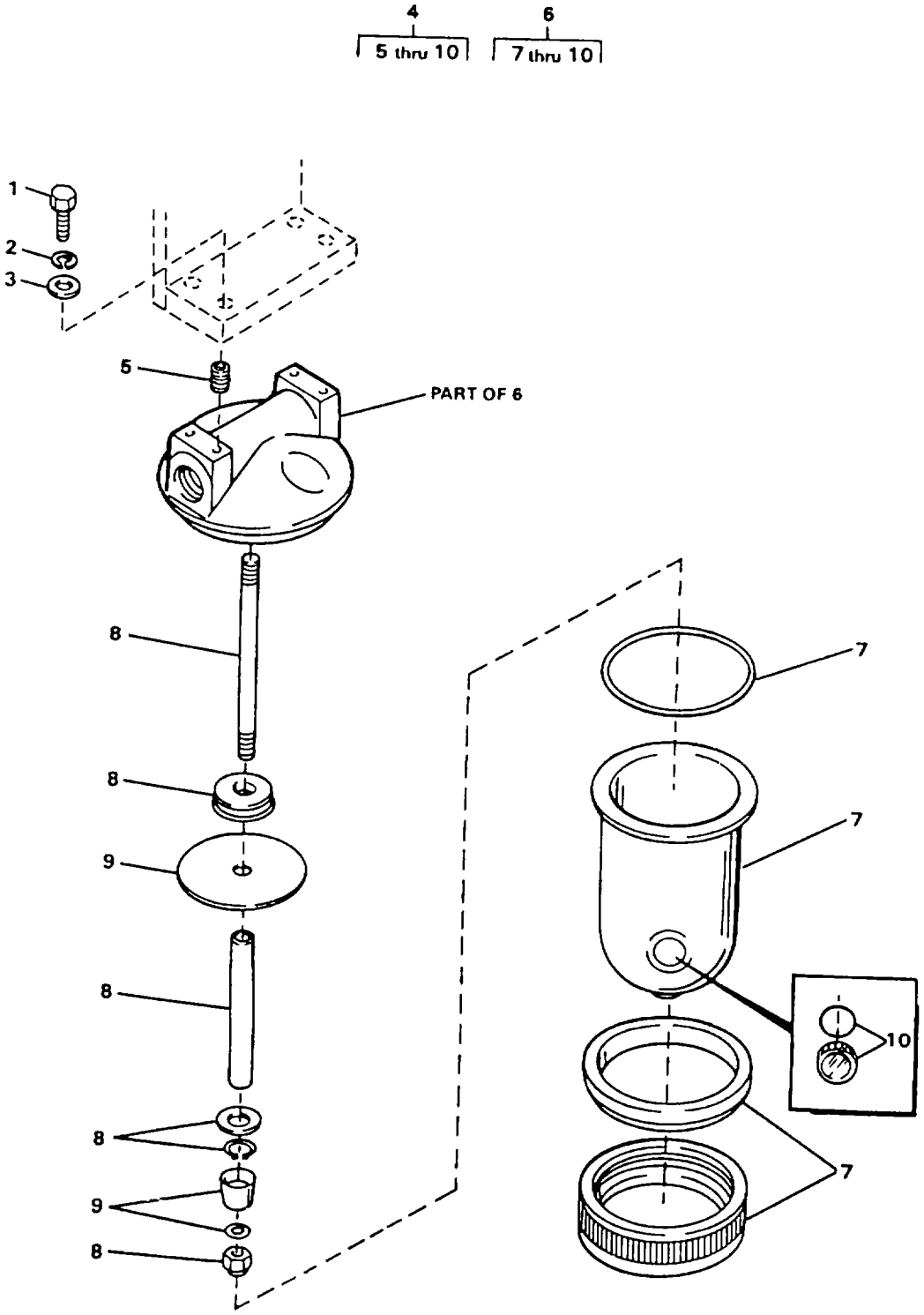

FIGURE 91. TURBIDITY METER AIR DRYER
(Model ETN Only)

(1) ITEM NO	(2) SMR CODE	(3) NSN	(4) CAGEC	(5) PART NUMBER	(6) DESCRIPTION AND USABLE ON CODES(UOC)	(7) QTY
					GROUP 02 WATER PURIFICATION SYSTEM FIG. 91 TURBIDITY METER AIR DRYER (MODEL ETN ONLY)	
1	PAOZZ	5305013521153	97403	13229E0161-322	.SCREW,CAP,HEXAGON H 0.190-32 UNF-2A X 0.75 INCHES LONG.....ETN	4
2	PAOZZ	5310009338120	96906	MS35338-138	.WASHER,LOCK.....ETN	4
3	PAOZZ	5905013924321	96906	MS15765-842	.RESISTOR,FIXED,WIR.....ETN	4
4	PBOOO	4440013464756	97403	13229E1351	.DEHYDRATOR UNIT,NON.....ETN	1
5	PAFZZ	5325009862929	96906	MS124655	..INSERT,SCREW THREAD.....ETN	4
6	XAOOO		04049	D10-04-V DN	..DESICCANT DRYER.....ETN	1
7	PBOZZ	4440013501647	04049	BKD10V	..PARTS KIT,AIR DRIER.....ETN	1
8	PBOZZ	4440013501648	04049	RKD10	...PARTS KIT,AIR DRIER.....ETN	1
9	PBOZZ	4440013501649	04049	EKD10	...PARTS KIT,AIR DRIER.....ETN	1
10	PBOZZ	6680013568003	04049	SKD10	...INDICATOR,SIGHT,LIQ.....ETN	1

END OF FIGURE

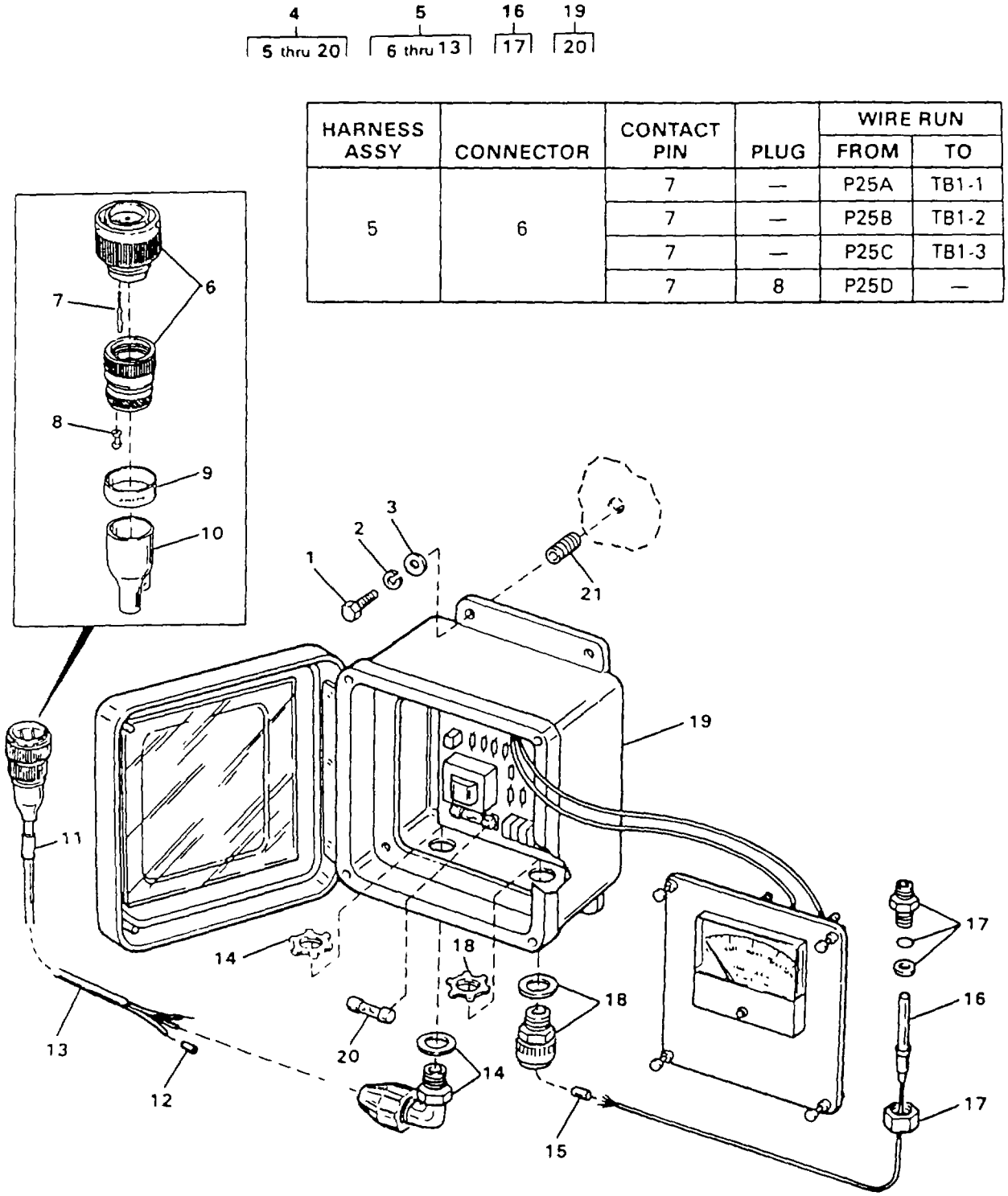

HARNESS ASSY	CONNECTOR	CONTACT PIN	PLUG	WIRE RUN FROM	WIRE RUN TO
5	6	7	—	P25A	TB1-1
		7	—	P25B	TB1-2
		7	—	P25C	TB1-3
		7	8	P25D	—

FIGURE 92. TDS METER ASSEMBLY
(Model ETN Only)

(1) ITEM NO	(2) SMR CODE	(3) NSN	(4) CAGEC	(5) PART NUMBER	(6) DESCRIPTION AND USABLE ON CODES(UOC)	(7) QTY
					GROUP 02 WATER PURIFICATION SYSTEM FIG. 92 TDS METER ASSEMBLY (MODEL ETN ONLY)	
1	PAOZZ	5305000213620	96906	MS35307-307	.SCREW,CAP,HEXAGON H.....ETN	4
2	PAOZZ	5310009338121	96906	MS35338-139	.WASHER,LOCK.....ETN	4
3	PAOZZ	5310010911248	96906	MS15795-810	.WASHER,FLAT.....ETN	4
4	AOOFF		97403	13229E0413	.METER ASSEMBLY TOTAL DISSOLVED SOLIDS..... ETN	1
5	PBFFF	6150013464663	97403	13229E1260-16	..CABLE ASSEMBLY,POWE W16.....ETN	1
6	PBFFF	5935013500156	17549	CA3106E18-4P-B-02-567	...CONNECTOR,PLUG,ELEC P25.....ETN	1
7	PAFZZ	5999012793055	71468	030-8587-000	....CONTACT,ELECTRICAL PART OF KIT P/N 120-02593-P..... ETN	4
8	XDFZZ		17549	225-0017-000	....PLUG,WIRE.....ETN	1
9	XDFZZ		09647	120-02433-100	...MARKER.....ETN	1
10	PBFZZ	5970013498562	97403	13229E1213-2	...INSULATION SLEEVING.....ETN	1
11	XDFZZ		09647	120-02433-16	...MARKER.....ETN	1
12	XDFZZ		01121	B-321HCPS.9-3336W	...MARKER.....ETN	6
13	MFFZZ		09647	120-02605-16	...CABLE CUT TO LENGTH FROM BULK, P/N 13229E0741-1..... ETN	1
14	PBOZZ	5975013533190	97403	13229E0753-4	..STUFFING TUBE.....ETN	1
15	XDOZZ		09647	120-02433-17	..ARKER.....ETN	2
16	PBOOO	6630013535103	30053	CS51	..CONDUCTIVITY CELL,W W17.....ETN	1
17	PAOZZ	4730013950418	30053	PPF	...NIPPLE,PIPE.....ETN	1
18	PBOZZ	5975013622110	15235	CGB114-SG	..BOX CONNECTOR,ELECT.....ETN	1
19	PBOOO	6680013464743	97403	13229E0243	..METER,FLOW RATE IND.....ETN	1
20	PAOZZ	5920002960451	81349	F02A250V1/8A	...FUSE,CARTRIDGE.....ETN	1
21	PAFZZ	5325002007224	96906	MS122081	.INSERT,SCREW THREAD.....ETN	4

END OF FIGURE

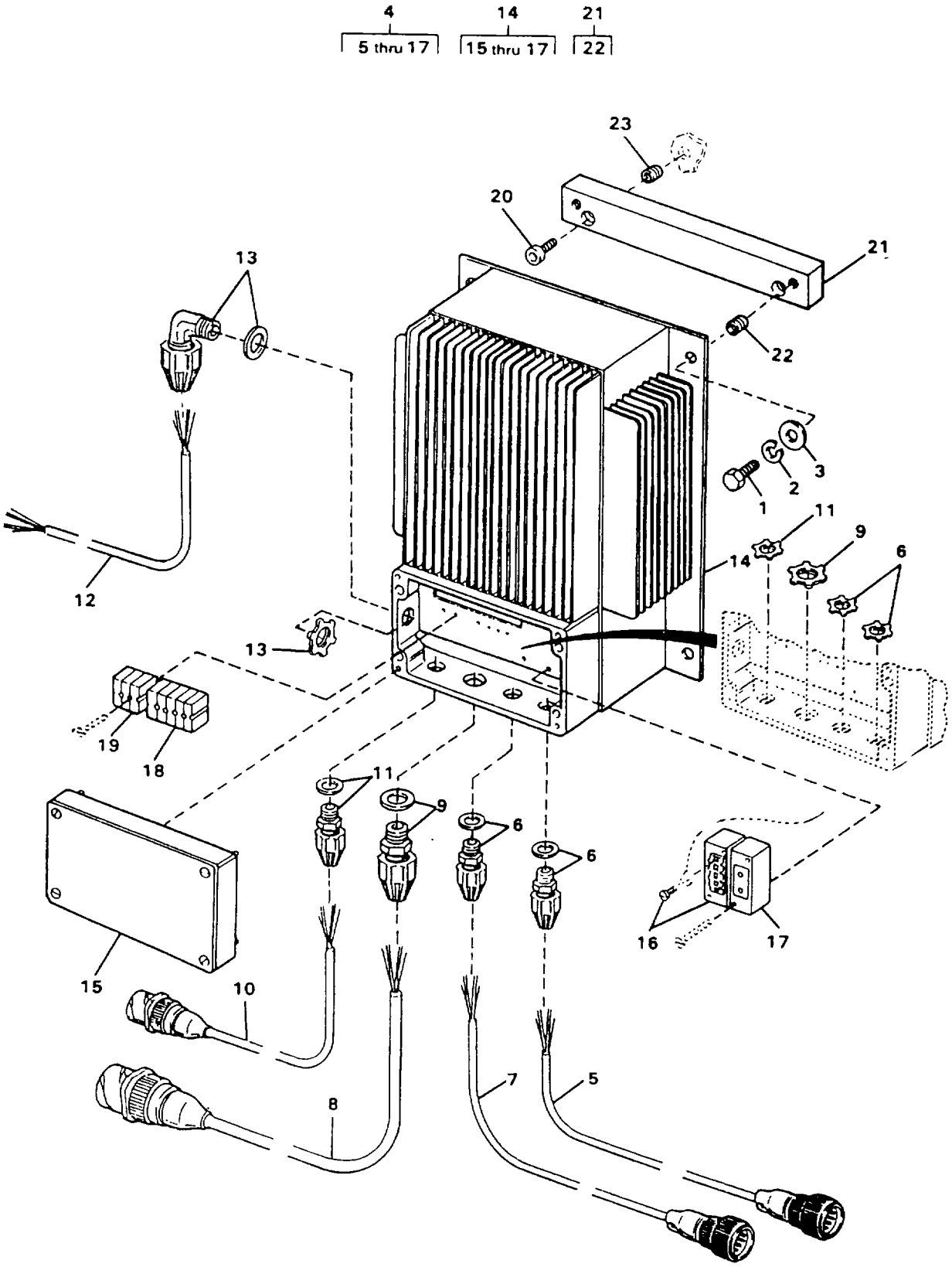

FIGURE 93. 24V DC POWER SUPPLY

(1) ITEM NO	(2) SMR CODE	(3) NSN	(4) CAGEC	(5) PART NUMBER	(6) DESCRIPTION AND USABLE ON CODES(UOC)	(7) QTY
					GROUP 02 WATER PURIFICATION SYSTEM FIG. 93 24V DC POWER SUPPLY	
1	PAFZZ	5305000213740	96906	MS35307-364	.SCREW,CAP,HEXAGON H.....	4
2	PAFZZ	5310009847042	96906	MS35338-141	.WASHER,LOCK.....	4
3	PAFZZ	5310007737618	96906	MS15795-814	.WASHER,FLAT.....	4
4	PBFFF	6130013464736	97403	13229E1176	.POWER SUPPLY ASSY.....	1
5	PBFFF	6150013464664	97403	13229E1260-2	..CABLE ASSEMBLY,POWE W7, SEE FIGURE 94, ITEM 1 FOR BREAKDOWN.....	1
6	PBFZZ	5975013520285	97403	13229E0738-3	..STUFFING TUBE.....	2
7	PBFFF	6150013464665	97403	13229E1260-1	..CABLE ASSEMBLY,POWE W6, SEE FIGURE 94, ITEM 2 FOR BREAKDOWN.....	1
8	PBFFF	6150013464666	97403	13229E1260-7	..CABLE ASSEMBLY,POWE W4, SEE FIGURE 94, ITEM 3 FOR BREAKDOWN.....	1
9	PBFZZ	5975013557103	97403	13229E0738-2	..STUFFING TUBE.....	1
10	PBFFF	6150013464667	97403	13229E1260-8	..CABLE ASSEMBLY,POWE W5, SEE FIGURE 94, ITEM 4 FOR BREAKDOWN.....	1
11	PBFZZ	5975013557891	97403	13229E0738-6	..STUFFING TUBE.....	1
12	AFFZZ		97403	13229E1257-19	..CABLE ASSEMBLY W70, SEE FIGURE 94, ITEM 5 FOR BREAKDOWN.....	1
13	PBFZZ	5975013533190	97403	13229E0753-4	..STUFFING TUBE.....	1
14	PBFFF	6130013464737	98664	5587C12M	..POWER SUPPLY.....	1
15	PBFZZ	5340013554834	98664	5587B21M	...COVER,ACCESS.....	1
16	PAFZZ		98664	5587B20A	...ARRESTER,LIGHTING.....	1
17	PAFZZ		98664	5587B19A	...ARRESTER,LIGHTING.....	1
18	XDFZZ		98664	5587A33M	...BLOCK,OUTUT TERM.....	1
19	XDFZZ		98664	5587A32M	...BLOCK,INPUT TERM.....	1
20	PAFZZ	5305010479435	80205	NAS1352C6-24	.SCREW,CAP,SOCKET HE 0.375-16 UNC-2A X 1.5 INCHES LONG.....	4
21	PBFZZ	5365013515213	97403	13229E0945	.SPACER,PLATE.....	2
22	PAFZZ	5325002904492	96906	MS122203	..INSERT,SCREW THREAD.....	4
23	PAFZZ	5325002904492	96906	MS122203	.INSERT,SCREW THREAD.....	4

END OF FIGURE

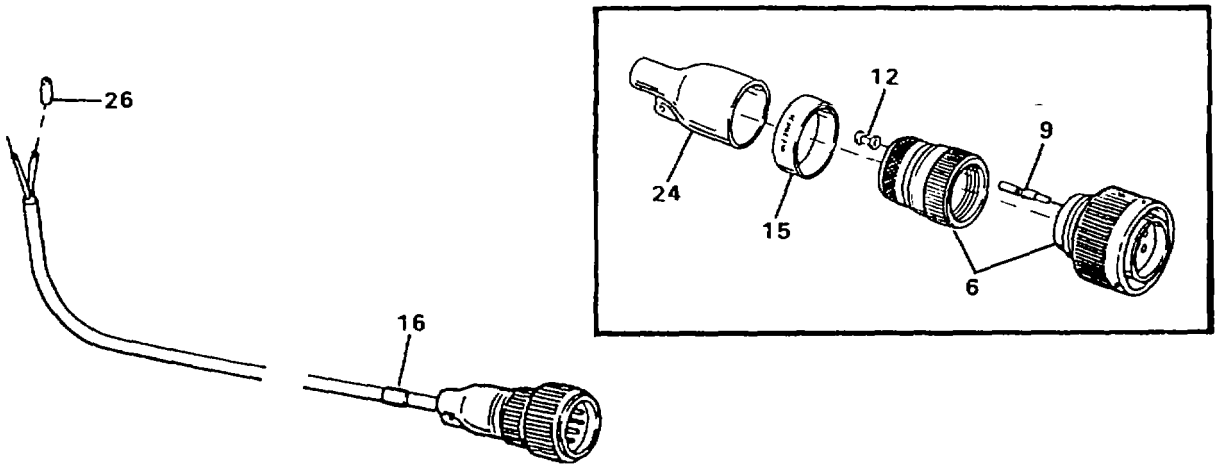

HARNESS ASSY	CONNECTOR	WIRE RUN		SOCKET	PLUG	WIRE	LENGTH	TERMINAL
		FROM	TO					
1	6	J5A	+ (RT)	9	—	28	30.00	—
		J5B	- (RT)	9	—			—
		J5C	—	9	12			—

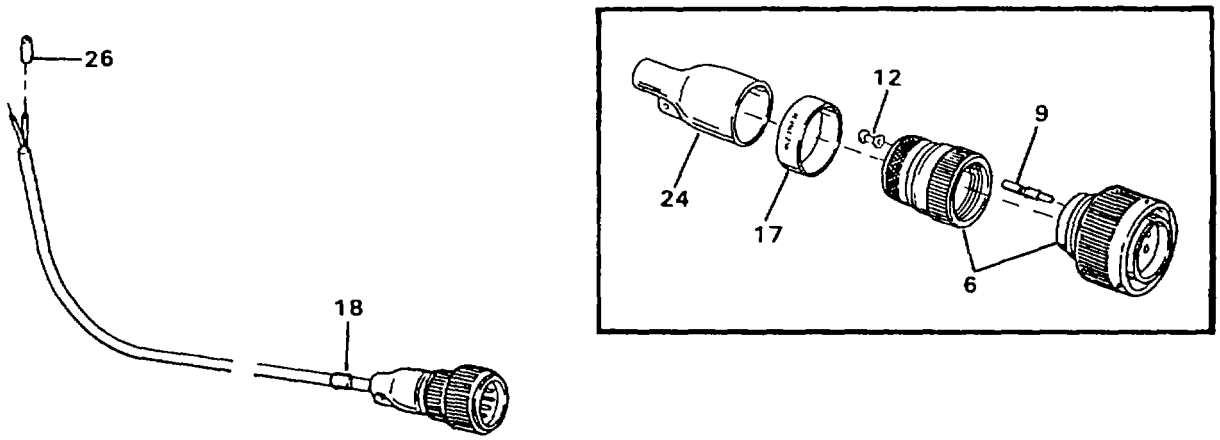

HARNESS ASSY	CONNECTOR	WIRE RUN		SOCKET	PLUG	WIRE	LENGTH	TERMINAL
		FROM	TO					
2	6	J4A	+ (RT)	9	—	28	42.00	—
		J4B	- (RT)	9	—			—
		J4C	—	9	12			—

FIGURE 94. 24V DC POWER SUPPLY WIRING (SHEET 1 OF 3)

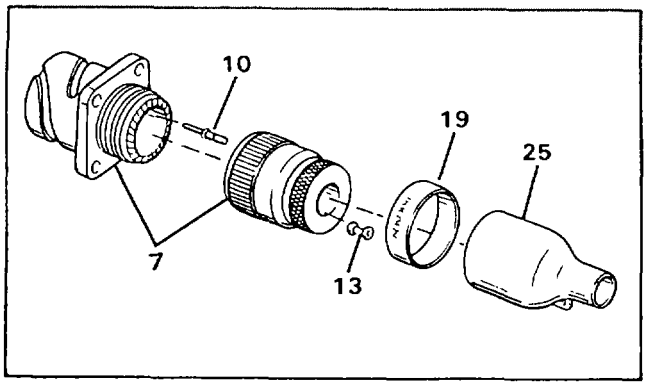

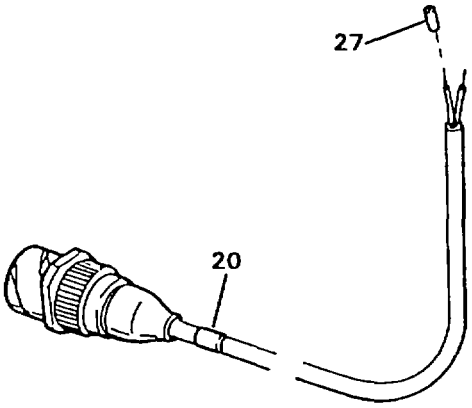

HARNESS ASSY	CONNECTOR	WIRE RUN		PIN	PLUG	WIRE	LENGTH	TERMINAL
		FROM	TO					
3	7	P2A	+ (LT)	10	—	29	14.00	—
		P2B	– (LT)	10	—			—
		P2C	—	10	13			—

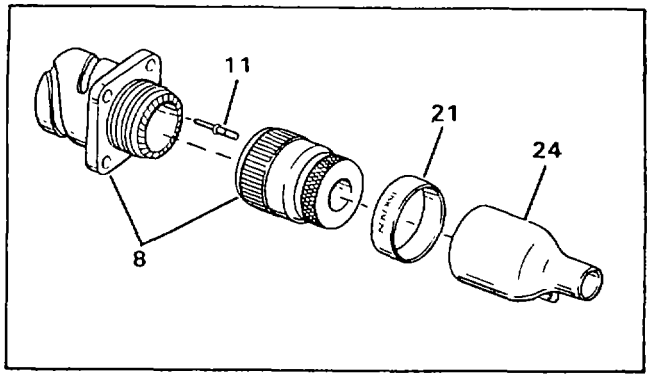

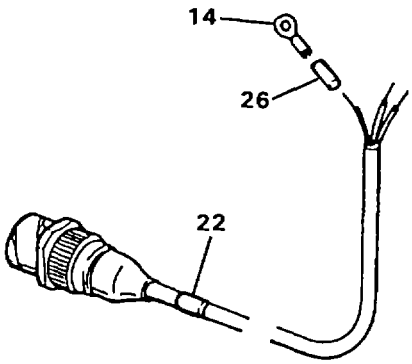

HARNESS ASSY	CONNECTOR	WIRE RUN		PIN	PLUG	WIRE	LENGTH	TERMINAL
		FROM	TO					
4	8	P3A	L1	11	—	30	14.00	—
		P3B	L2	11	—			—
		P3C	GND	11	—			14

FIGURE 94. 24V DC POWER SUPPLY WIRING (SHEET 2 OF 3)

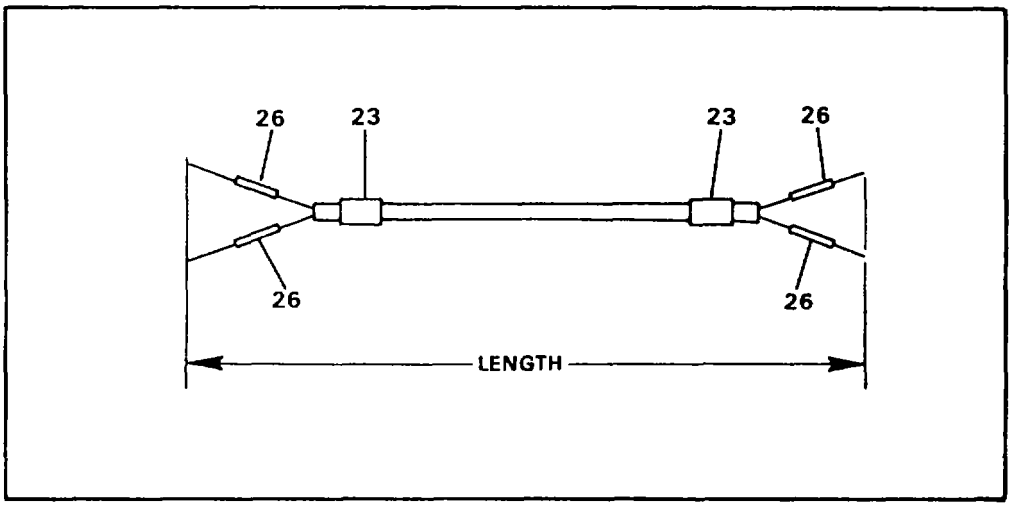

HARNESS ASSY	WIRE RUN		WIRE	LENGTH	TERMINAL	
	FROM	TO			FIRST	SECOND
5	+ (LT)	CO DC +	31	211.00	—	—
	– (LT)	CO DC –				

FIGURE 94. 24V DC POWER SUPPLY WIRING (SHEET 3 OF 3)

(1) ITEM NO	(2) SMR CODE	(3) NSN	(4) CAGEC	(5) PART NUMBER	(6) DESCRIPTION AND USABLE ON CODES(UOC)	(7) QTY
					GROUP 02 WATER PURIFICATION SYSTEM FIG. 94 24V DC POWER SUPPLY WIRING	
1	PBFFF	6150013464664	97403	13229E1260-2	..CABLE ASSEMBLY,POWE W7.....	1
2	PBFFF	6150013464665	97403	13229E1260-1	..CABLE ASSEMBLY,POWE W6.....	1
3	PBFFF	6150013464666	97403	13229E1260-7	..CABLE ASSEMBLY,POWE W4.....	1
4	PBFFF	6150013464667	97403	13229E1260-8	..CABLE ASSEMBLY,POWE W5.....	1
5	AFFFF		97403	13229E1257-19	..CABLE ASSEMBLY W70.....	1
6	PBFFF	5935013470037	17549	CA3106E16-10S-B-02-57	...CONNECTOR,RECEPTACL J4, J5.....	1
7	PBFFF	5935013500157	17549	CA3106E22-2P-B-02-57	...CONNECTOR,PLUG,ELEC P2.....	1
8	PBFFF	5935013500158	17549	CA3106E16-10P-B-02-57	...CONNECTOR,PLUG,ELEC P3.....	1
9	PAFZZ	5999013438909	71468	031-8557-000	....CONTACT,ELECTRICAL PART OF KIT P/N 120-02593-P.....	3
10	PAFZZ	5999013497667	17549	030-8612-000	....CONTACT,ELECTRICAL PART OF KIT P/N 120-02593-P.....	3
11	PAFZZ	5999013448759	71468	030-8588-000	....CONTACT,ELECTRICAL PART OF KIT P/N 120-02593-P.....	3
12	XDFZZ		17549	225-0018-000	....PLUG,WIRE.....	1
13	XDFZZ		17549	225-0019-000	....PLUG,WIRE.....	1
14	PAFZZ	5940002300515	96906	MS25036-154	...TERMINAL,LUG.....	1
15	XDFZZ		09647	120-02433-149	...MARKER.....	1
16	XDFZZ		09647	120-02433-7	...MARKER.....	1
17	XDFZZ		09647	120-02433-148	...MARKER.....	1
18	XDFZZ		09647	120-02433-6	...MARKER.....	1
19	XDFZZ		09647	120-02433-77	...MARKER.....	1
20	XDFZZ		09647	120-02433-4	...MARKER.....	1
21	XDFZZ		09647	120-02433-78	...MARKER.....	1
22	XDFZZ		09647	120-02433-5	...MARKER.....	1
23	XDFZZ		09647	120-02433-185	...MARKER.....	2
24	PBFZZ	5970013498562	97403	13229E1213-2	...INSULATION SLEEVING.....	1
25	PBFZZ	5970012268102	06090	202K163-3/42	...INSULATION SLEEVING.....	1
26	XDFZZ		01121	B-321HCPS.9-3336W	...MARKER.....	18
27	XDFZZ		01121	B-321HSCPS.9-5008W	...MARKER.....	4
28	MFFZZ		09647	120-07639-8	...CABLE CUT TO LENGTH FROM BULK, P/N 120-07639-8.....	1
29	MFFZZ		09647	120-07639-6	...CABLE CUT TO LENGTH FROM BULK, P/N 120-07639-6.....	1
30	MFFZZ		09647	120-07639-7	...CABLE CUT TO LENGTH FROM BULK, P/N 120-07639-7.....	1
31	MFFZZ		09647	120-01617	...CABLE,POWER,ELECT CUT TO LENGTH FROM BULK, P/N 13229E0556.....	1

END OF FIGURE

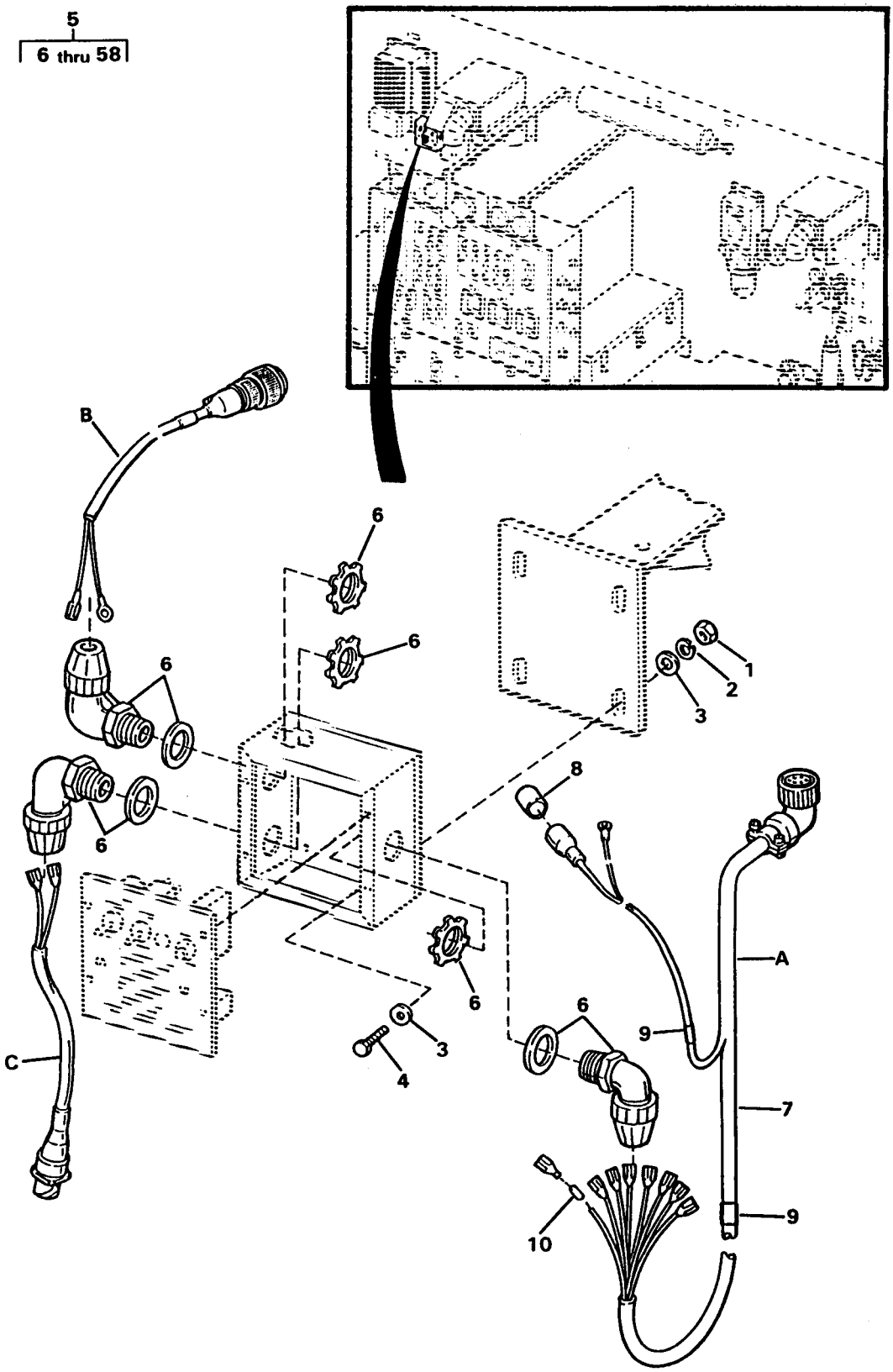

FIGURE 95. DIESEL HEATER CONTROL BOX 1 AND WIRING (SHEET 1 OF 4)

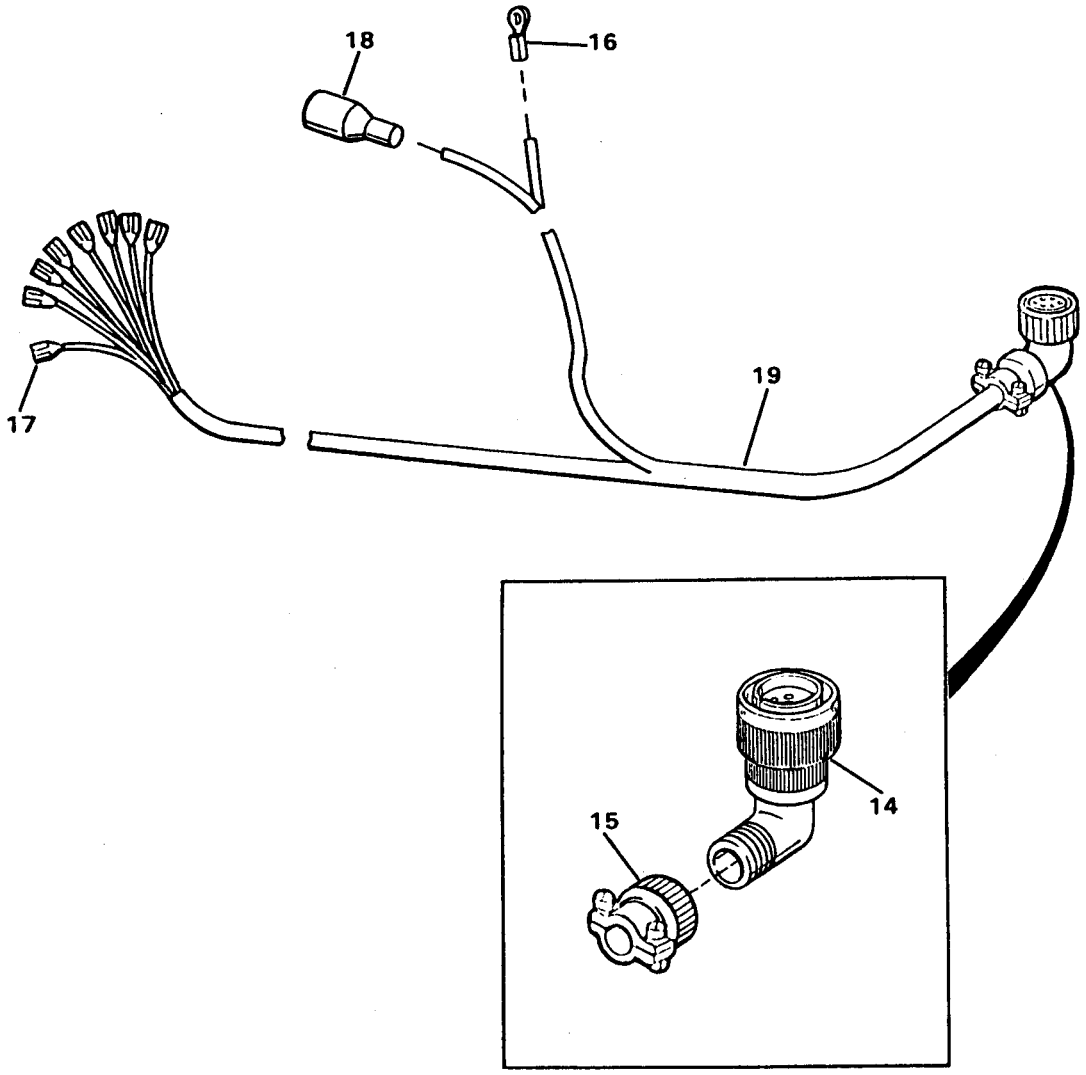

A

HARNESS ASSY	CONNECTOR	WIRE RUN		WIRE	LENGTH	TERMINAL
		FROM PIN	TO			
11	14	A	TERM 1	21	41.75	17
		B	TERM 2	22	41.75	17
		C	TERM 3	23	41.75	17
		D	TERM 4	24	41.75	17
		E	J8	20	96.25	16
		F	TERM 6	25	41.75	17
		G	TERM 7	26	41.75	17
		H	TERM 8	27	41.75	17
	18	TERM 1	GND	21	123.50	17

FIGURE 95. DIESEL HEATER CONTROL BOX 1 AND WIRING (SHEET 2 OF 4)

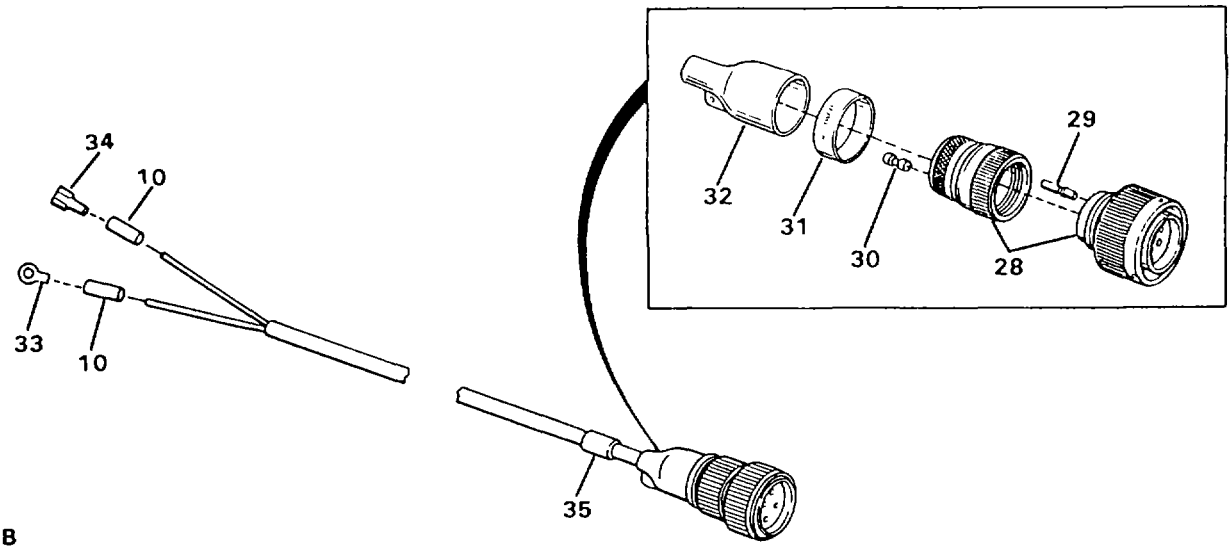

B

CABLE ASSY	CONNECTOR	WIRE RUN		PIN	PLUG	WIRE	LENGTH	TERMINAL
		FROM	TO					
12	28	P4A	BREAKER	29	—	36	14.00	33
		P4B	TERM 1	29	—	36	14.00	34
		P4C	—	29	30	—	—	—

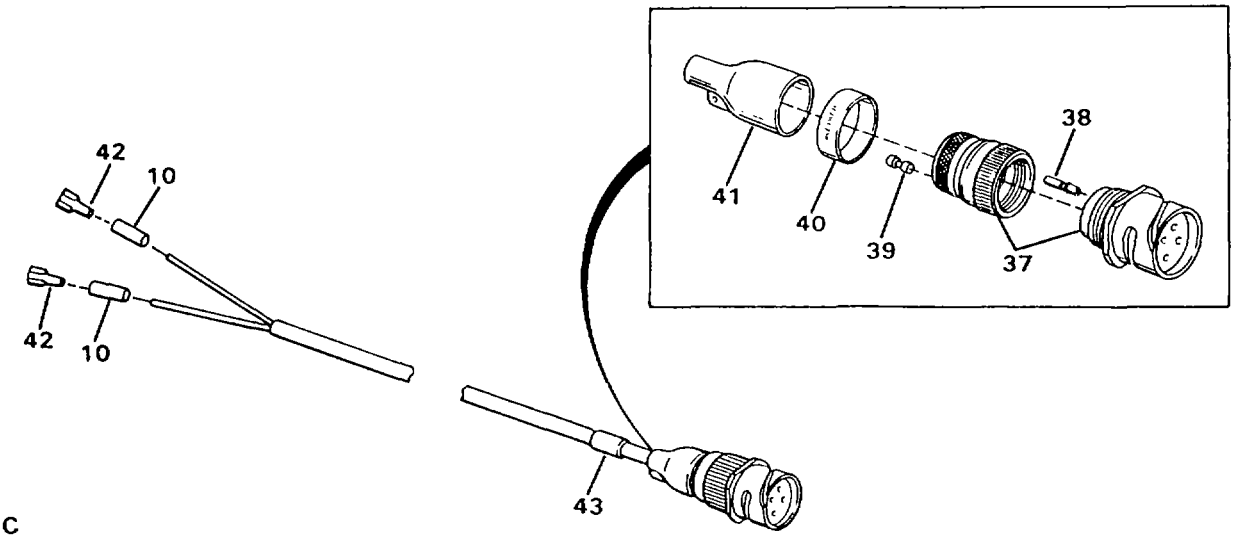

C

CABLE ASSY	CONNECTOR	WIRE RUN		SOCKET	PLUG	WIRE	LENGTH	TERMINAL
		FROM	TO					
13	37	J6A	TERM 6	38	—	44	14.00	42
		J6B	TERM 3	38	—	44	14.00	42
		J6C	—	38	39	—	—	—

FIGURE 95. DIESEL HEATER CONTROL BOX 1 AND WIRING (SHEET 3 OF 4)

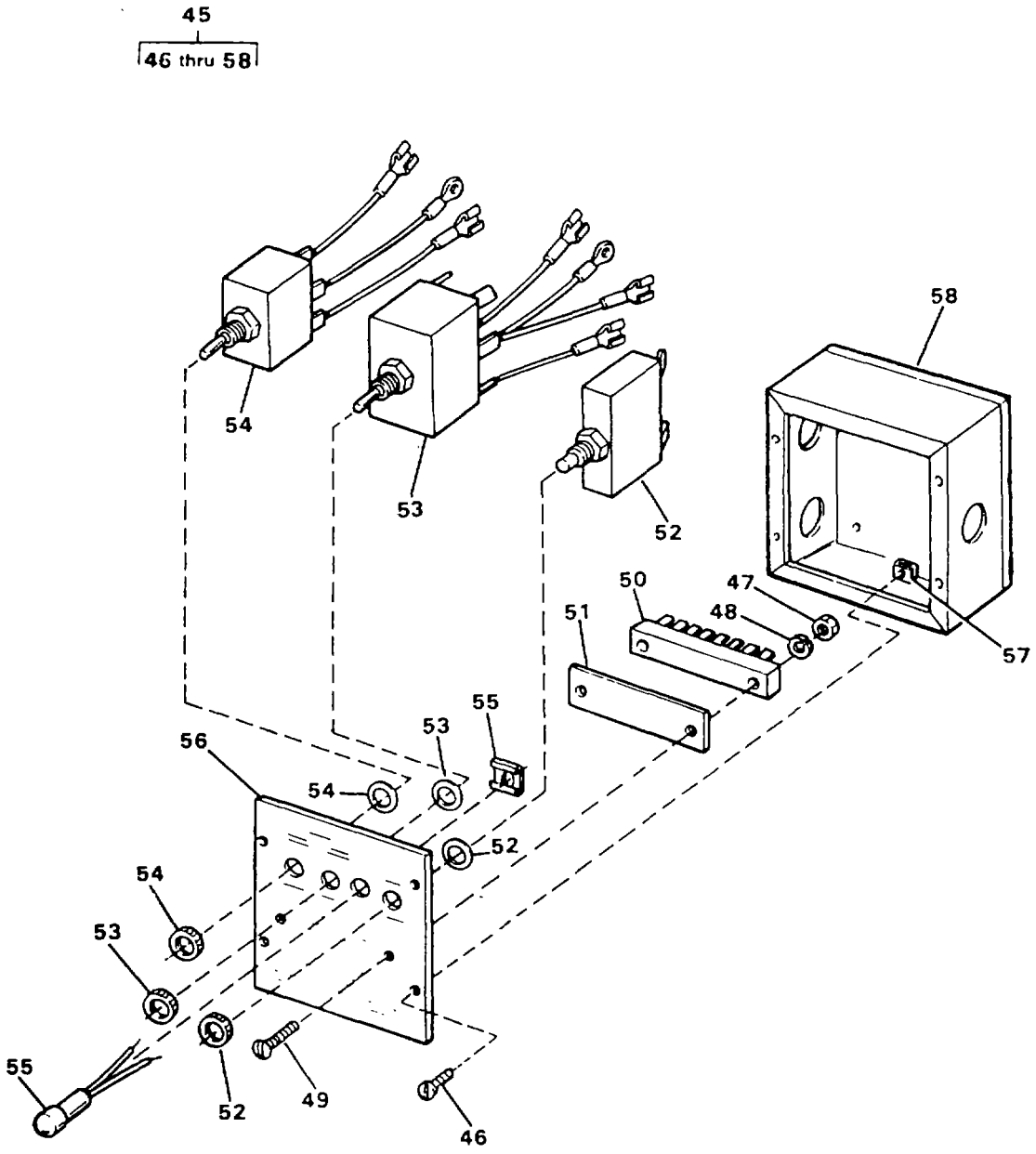

FIGURE 95. DIESEL HEATER CONTROL BOX 1 AND WIRING (SHEET 4 OF 4)

(1) ITEM NO	(2) SMR CODE	(3) NSN	(4) CAGEC	(5) PART NUMBER	(6) DESCRIPTION AND USABLE ON CODES(UOC)	(7) QTY
					GROUP 02 WATER PURIFICATION SYSTEM FIG. 95 DIESEL HEATER CONTROL BOX 1 AND WIRING	
1	PAOZZ	5310009035966	96906	MS51971-1	.NUT,PLAIN,HEXAGON.....	4
2	PAOZZ	5310009338121	96906	MS35338-139	.WASHER,LOCK.....	4
3	PAOZZ	5310010911248	96906	MS15795-810	.WASHER,FLAT.....	8
4	PAOZZ	5305000213620	96906	MS35307-307	.SCREW,CAP,HEXAGON H.....	4
5	XDOFF		97403	13229E1188	.CONTROL BOX ASSY HEATER.....	1
6	PAOZZ	5975014456260	97403	13229E0753-1	..STUFFING TUBE.....	3
7	XDOFF		97403	13229E0158-1 ITE M7	..HARNESS ASSEMBLY W14, 78 INCHES LONG.....	1
8	XDFZZ		09647	120-02433-152	...MARKER.....	1
9	XDFZZ		09647	120-02433-14	...MARKER.....	2
10	XDFZZ		01121	B321HCPS 9-3336W	...MARKER.....	10
11	XAFFF		92878	49309-01	...HARNESS ASSEMBLY.....	1
12	XDFFF		97403	13229E1260-9	..CABLE ASSEMBLY W8.....	1
13	XDFFF		97403	13229E1260-3	..CABLE ASSEMBLY W10.....	1
14	PBFZZ	5935010769456	96906	MS3456W20-7S	...CONNECTOR,PLUG,ELEC.....	1
15	PBFZZ	5935011676148	81349	M85049/41-12A	....CLAMP,CABLE,ELECTRI.....	1
16	PAFZZ	5940001071481	96906	MS20659-104	....TERMINAL,LUG.....	1
17	PAFZZ	5940013037417	98410	BB8141	....TERMINAL,QUICK DISC.....	8
18	PAFZZ	5935001677775	96906	MS27144-1	....CONNECTOR,PLUG,ELEC J8.....	1
19	MFFZZ		92878	49309-01N3	....PROTECTIVE COVER CUT TO LENGTH FROM BULK, P/N 17 1/2IN BLACK.....	1
20	MFFZZ		92878	49309-01-WHITE	....WIRE CUT TO LENGTH FROM BULK, P/N M5086/1-14-9.....	1
21	MFFZZ		92878	49309-01-1 WHITE /BLACK STRIPE	....WIRE CUT TO LENGTH FROM BULK, P/N M5086/1-16-90.....	2
22	MFFZZ		92878	49309-001-2 ORAN	....WIRE CUT TO LENGTH FROM BULK, P/N M5086/1-16-3.....	1
23	MFFZZ		92878	49309-01-3 BLACK	....WIRE CUT TO LENGTH FROM BULK, P/N M5086/1-16-0.....	1
24	MFFZZ		92878	49309-01-4 RED	....WIRE CUT TO LENGTH FROM BULK, P/N M5086/1-16-2.....	1
25	MFFZZ		92878	49309-01-6 GREY	....WIRE CUT TO LENGTH FROM BULK, P/N M5086/1-16-8.....	1
26	MFFZZ		92878	49309-01-7 BLUE	....WIRE CUT TO LENGTH FROM BULK, P/N M5086/1-16-6.....	1
27	MFFZZ		92878	49309-01-8 YELLO W	....WIRE CUT TO LENGTH FROM BULK, P/N M5086/1-16-4.....	1
28	PBFFF	5935013500158	17549	CA3106E16-10P-B-02-57	...CONNECTOR,PLUG,ELEC P4.....	1
29	PAFZZ	5999013448759	71468	030-8588-000	....CONTACT,ELECTRICAL PART OF KIT P/N 120-02593-P.....	3
30	XDFZZ		17549	225-0018-000	....PLUG,WIRE.....	1
31	XDFZZ		09647	120-02433-79	...MARKER.....	1
32	PBFZZ	5970013498562	97403	13229E1213-2	...INSULATION SLEEVING.....	1
33	PAFZZ	5940001434775	96906	MS25036-156	...TERMINAL,LUG.....	1
34	PAFZZ	5940004322660	97403	13216E6191-3	...TERMINAL,QUICK DISC.....	1
35	XDFZZ		09647	120-02433-8	...MARKER.....	2
36	MFFZZ		09647	120-02605-17	...CABLE CUT TO LENGTH FROM	2

(1) ITEM NO	(2) SMR CODE	(3) NSN	(4) CAGEC	(5) PART NUMBER	(6) DESCRIPTION AND USABLE ON CODES(UOC)	(7) QTY
					BULK, P/N 120-07639-8.....	
37	PBFFF	5935013525856	17549	CA3101E14S-7S-B-02-57	...CONNECTOR,PLUG,ELEC J6.....	1
38	PAFZZ	5999013438906	17549	031-8555-000	....CONTACT,ELECTRICAL PART OF KIT P/N 120-02593-P.....	3
39	XDFZZ		17549	225-0017-000	....PLUG,WIRE.....	1
40	XDFZZ		09647	120-02433-150	...MARKER.....	1
41	PBFZZ	5970013484761	97403	13229E1213-1	...INSULATION SLEEVING.....	1
42	PAFZZ	5940009260085	14726	S09718SF	...TERMINAL,QUICK DISC.....	2
43	XDFZZ		09647	120-02433-10	...MARKER.....	1
44	MFFZZ		09647	120-02605-18	...CABLE CUT TO LENGTH FROM BULK, P/N 13229E0741-1.....	2
45	XDOZZ		97403	13229E0158-1 ITEM 2	..CONTROL BOX.....	1
46	PAOZZ	5305013527538	92878	3816	...SCREW,MACHINE.....	4
47	XDFZZ		92878	49391	...NUT,HEX.....	2
48	XDFZZ		96906	MS35333-37	...WASHER,LOCK.....	2
49	XDFZZ		97403	13229E0158	...SCREW,MACHINE.....	2
50	XDFZZ		92878	49306	...BLOCK,TERMINAL.....	1
51	XDFZZ		92878	49386	...STRIP,MARKER.....	1
52	PBFZZ	5925013500403	09647	49303	...CIRCUIT BREAKER.....	1
53	PBFZZ	5930013499378	92878	49302	...SWITCH,TOGGLE.....	1
54	PBFZZ	5930013499379	92878	49301	...SWITCH,TOGGLE.....	1
55	PBFZZ	6210013522900	92878	49304	...LIGHT,INDICATOR.....	1
56	XDFZZ		92878	49305	...COVER.....	1
57	PAFZZ	5310014126024	92878	3626	...NUT,PLAIN,HEXAGON.....	4
58	XAFZZ		92878	49296	...BOX.....	1

END OF FIGURE

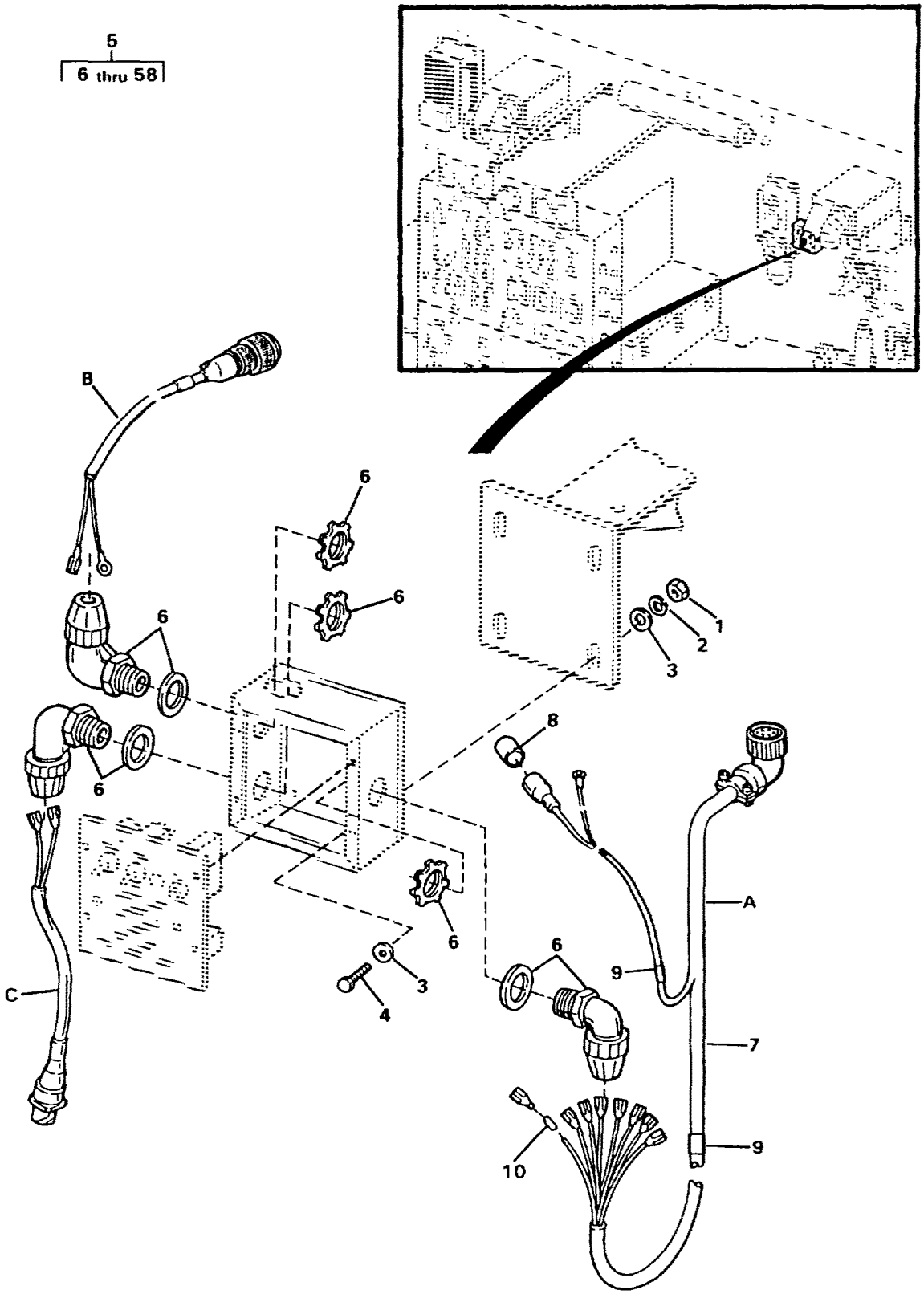

FIGURE 96. DIESEL HEATER CONTROL BOX 2 AND WIRING (SHEET 1 OF 4)

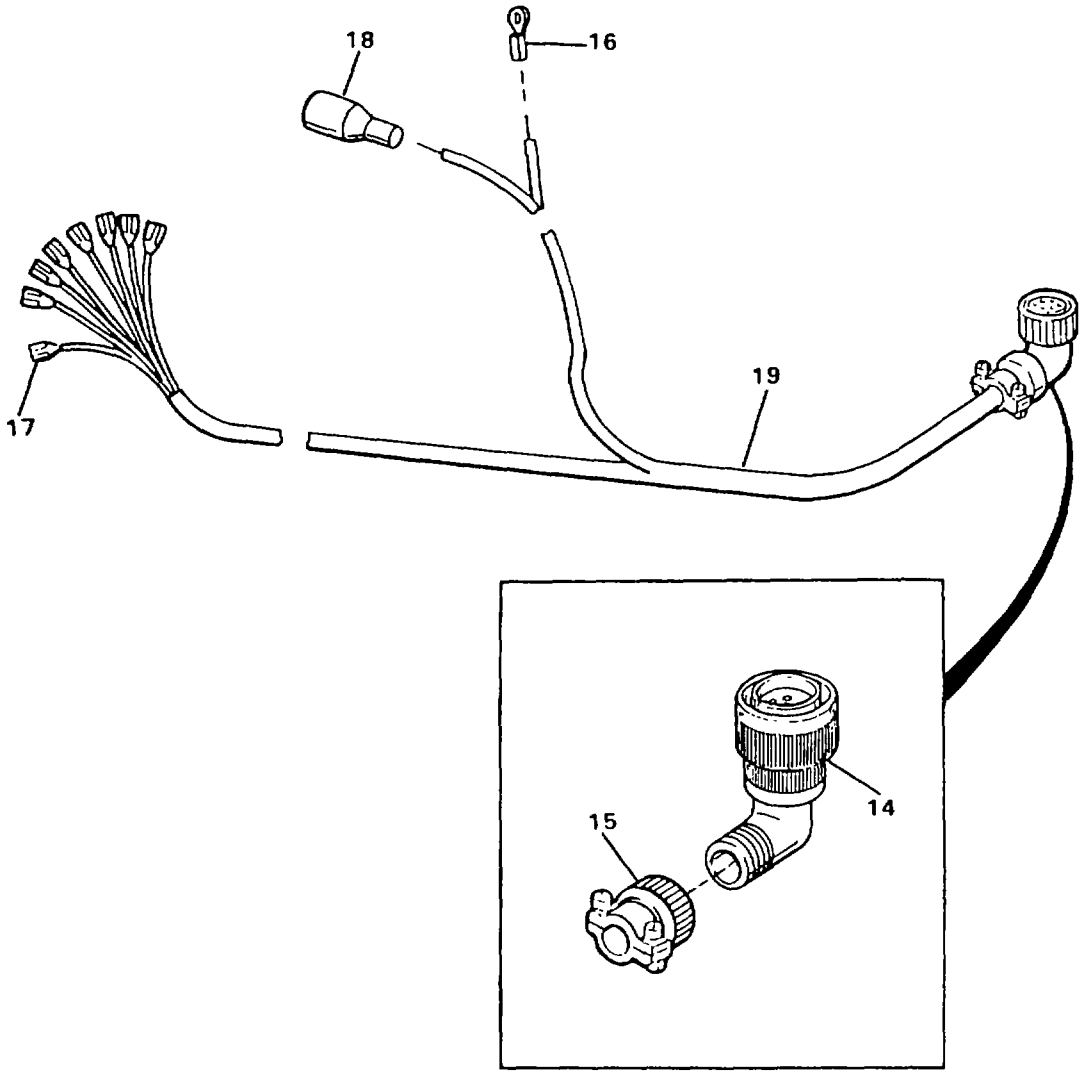

A

HARNESS ASSY	CONNECTOR	WIRE RUN		WIRE	LENGTH	TERMINAL
		FROM PIN	TO			
11	14	A	TERM 1	21	41.75	17
		B	TERM 2	22	41.75	17
		C	TERM 3	23	41.75	17
		D	TERM 4	24	41.75	17
		E	J9	20	223.25	16
		F	TERM 6	25	41.75	17
		G	TERM 7	26	41.75	17
		H	TERM 8	27	41.75	17
	18	TERM 1	GND	21	250.50	17

FIGURE 96. DIESEL HEATER CONTROL BOX 2 AND WIRING (SHEET 2 OF 4)

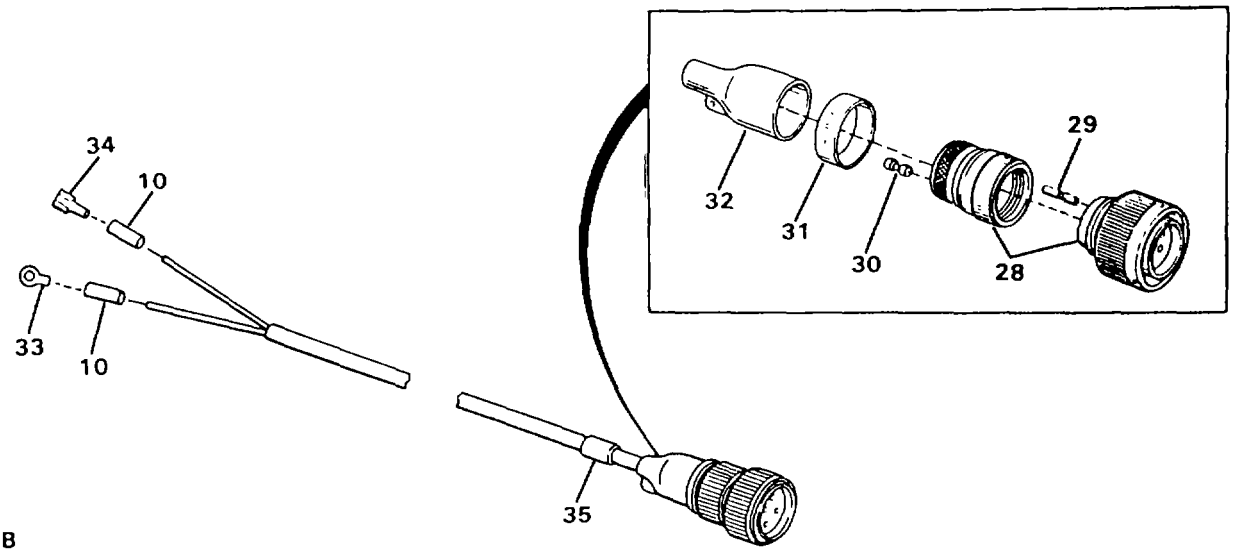

B

CABLE ASSY	CONNECTOR	WIRE RUN		PIN	PLUG	WIRE	LENGTH	TERMINAL
		FROM	TO					
12	28	P4A	BREAKER	29	—	36	14.00	33
		P4B	TERM 1	29	—	36	14.00	34
		P4C	—	29	30	—	—	—

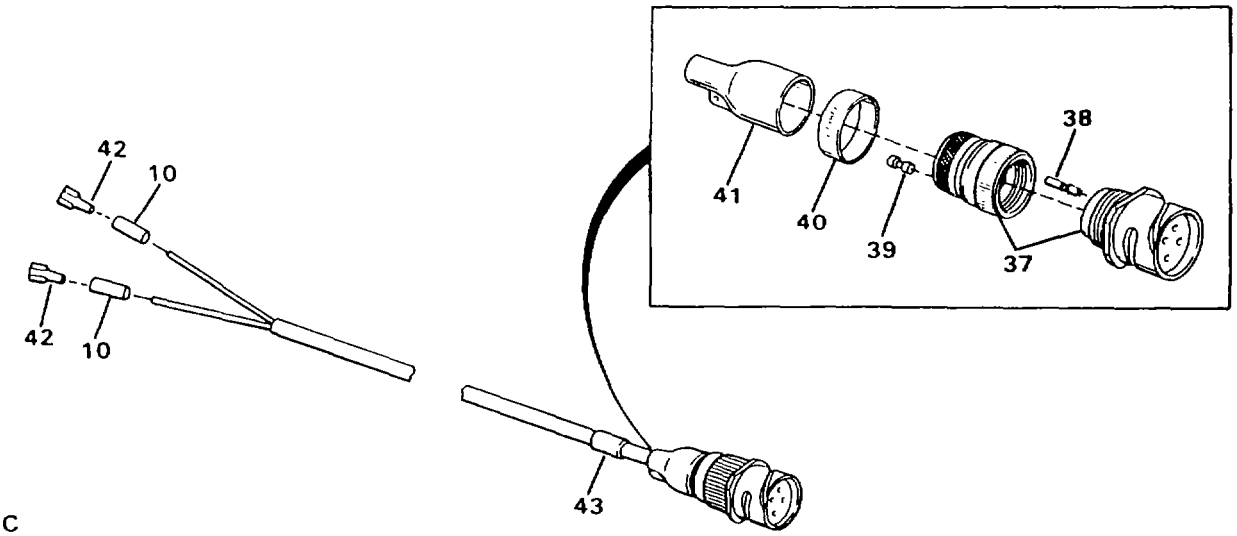

C

CABLE ASSY	CONNECTOR	WIRE RUN		SOCKET	PLUG	WIRE	LENGTH	TERMINAL
		FROM	TO					
13	37	J6A	TERM 6	38	—	44	14.00	42
		J6B	TERM 3	38	—	44	14.00	42
		J6C	—	38	39	—	—	—

FIGURE 96. DIESEL HEATER CONTROL BOX 2 AND WIRING (SHEET 3 OF 4)

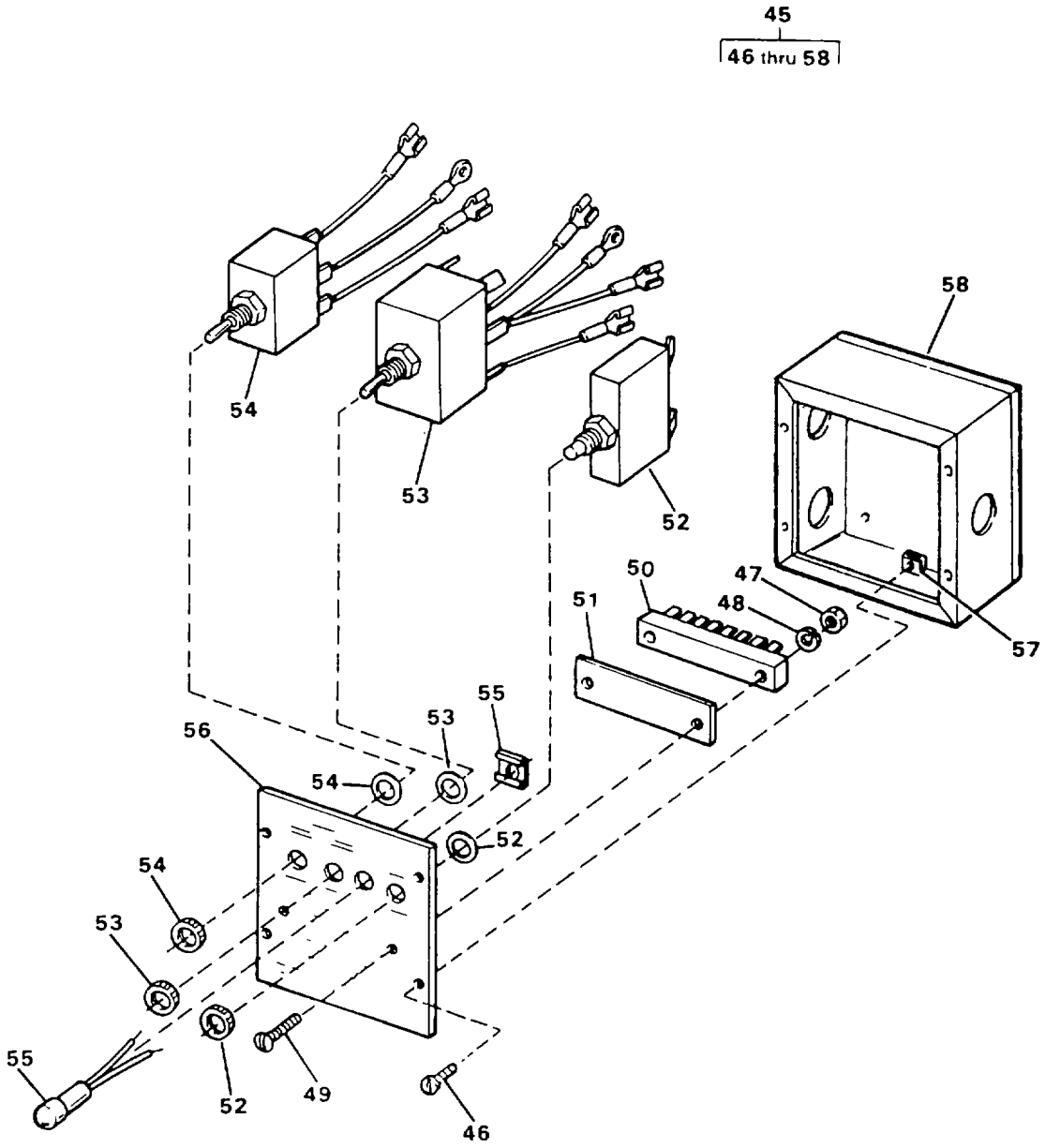

FIGURE 96. DIESEL HEATER CONTROL BOX 2 AND WIRING (SHEET 4 OF 4)

(1) ITEM NO	(2) SMR CODE	(3) NSN	(4) CAGEC	(5) PART NUMBER	(6) DESCRIPTION AND USABLE ON CODES(UOC)	(7) QTY
					GROUP 02 WATER PURIFICATION SYSTEM FIG. 96 DIESEL HEATER CONTROL BOX 2 AND WIRING	
1	PAOZZ	5310009035966	96906	MS51971-1	.NUT,PLAIN,HEXAGON.....	4
2	PAOZZ	5310009338121	96906	MS35338-139	.WASHER,LOCK.....	4
3	PAOZZ	5310010911248	96906	MS15795-810	.WASHER,FLAT.....	8
4	PAOZZ	5305000213620	96906	MS35307-307	.SCREW,CAP,HEXAGON H.....	4
5	XDOFF		97403	13229E1189	.CONTROL BOX ASSY.....	1
6	PAOZZ	5975014456260	97403	13229E0753-1	..STUFFING TUBE.....	3
7	XDOFF		97403	13229E0158-2ITEM8	..HARNESS ASSEMBLY W15.....	1
8	XDFZZ		09647	120-02433-153	...MARKER.....	1
9	XDFZZ		09647	120-02433-15	...MARKER.....	3
10	XDFZZ		01121	B321-HCPS.9-3336W	...MARKER.....	16
11	XAFFF		92878	49309-02	...HARNESS ASSEMBLY.....	1
12	XDFFF		97403	13229E1260-10	..CABLE ASSEMBLY W9.....	1
13	XDFFF		97403	13229E1260-4	..CABLE ASSEMBLY W11.....	1
14	PBFZZ	5935010769456	96906	MS3456W20-7S	...CONNECTOR,PLUG,ELEC.....	1
15	PBFZZ	5935011676148	81349	M85049/41-12A	....CLAMP,CABLE,ELECTRI.....	1
16	PAFZZ	5940001071481	96906	MS20659-104	....TERMINAL,LUG.....	1
17	PAFZZ	5940013037417	98410	BB8141	....TERMINAL,QUICK DISC.....	8
18	PAFZZ	5935001677775	96906	MS27144-1	...CONNECTOR,PLUG,ELEC J9.....	1
19	MFFZZ		92878	49309-01N3	....PROTECTIVE COVER CUT TO LENGTH FROM BULK, P/N 17 1/2IN BLACK.....	1
20	MFFZZ		92878	49309-01 WHITE	....WIRE CUT TO LENGTH FROM BULK, P/N M5086/1-14-9.....	1
21	MFFZZ		92878	49309-01-1 WHITE/BLACK STRIPE	....WIRE CUT TO LENGTH FROM BULK, P/N M5086/1-16-90.....	3
22	MFFZZ		92878	49309-01-2ORANGE	....WIRE CUT TO LENGTH FROM BULK, P/N M5086/1-16-2.....	1
23	MFFZZ		92878	49309-01-3 BLACK	....WIRE CUT TO LENGTH FROM BULK, P/N M5086/1-16-0.....	1
24	MFFZZ		92878	49309-01-4 RED	....WIRE CUT TO LENGTH FROM BULK, P/N M5086/1-16-2.....	1
25	MFFZZ		92878	49309-01-6 GREY	....WIRE CUT TO LENGTH FROM BULK, P/N M5086/1-16-8.....	1
26	MFFZZ		92878	49309-01-7 BLUE	....WIRE CUT TO LENGTH FROM BULK, P/N M5086/1-16-6.....	1
27	MFFZZ		92878	49309-01-8 YELLOW	....WIRE CUT TO LENGTH FROM BULK, P/N M5086/1-16-4.....	1
28	PBFFF	5935013500158	17549	CA3106E16-10P-B-02-57	...CONNECTOR, PLUG, ELEC P5.....	1
29	PAFZZ	5999013448759	71468	030-8588-000	....CONTACT,ELECTRICAL PART OF KIT P/N 120-02593-P.....	3
30	XDFZZ		17549	225-0018-000	....PLUG,WIRE PART OF KIT P/N 120-02593-P.....	1
31	XDFZZ		09647	120-02433-80	...MARKER.....	1
32	PBFZZ	5970013498562	97403	13229E1213-2	...INSULATION SLEEVING.....	1
33	PAFZZ	5940001434775	96906	MS25036-156	...TERMINAL,LUG.....	1

(1) ITEM NO	(2) SMR CODE	(3) NSN	(4) CAGEC	(5) PART NUMBER	(6) DESCRIPTION AND USABLE ON CODES(UOC)	(7) QTY
34	PAFZZ	5940004322660	97403	13216E6191-3	...TERMINAL,QUICK DISC.....	1
35	XDFZZ		09647	120-02433-9	...MARKER.....	2
36	MFFZZ		09647	120-02605-17	...CABLE CUT TO LENGTH FROM BULK, P/N 120-07639-8.....	1
37	PBFFF	5935013525856	17549	CA3101E14S-7S-B-02-57	...CONNECTOR,PLUG,ELEC J7.....	1
38	PAFZZ	5999013438906	17549	031-8555-000	....CONTACT,ELECTRICAL PART OF KIT P/N 120-02593-P.....	3
39	XDFZZ		17549	225-0017-000	....PLUG,WIRE.....	2
40	XDFZZ		09647	120-02433-15	...MARKER.....	1
41	PBFZZ	5970013484761	97403	13229E1213-1	...INSULATION SLEEVING.....	1
42	PAFZZ	5940009260085	14726	S09718SF	...TERMINAL,QUICK DISC.....	2
43	XDFZZ		09647	120-02433-11	...MARKER.....	1
44	MFFZZ		09647	120-02605-18	...CABLE CUT TO LENGTH FROM BULK, P/N 13229E0741-1.....	2
45	XDOFF		97403	13229E0158-2 ITEM 2	..CONTROL BOX ASSY.....	1
46	XDFZZ		92878	3816	...SCREW,MACH.....	4
47	XDFZZ		92878	49391	...NUT,HEX.....	2
48	XDFZZ		96906	MS35333-37	...WASHER,LOCK.....	2
49	PAFZZ	5305009844993	96906	MS35206-233	...SCREW,MACHINE.....	2
50	XDFZZ		92878	49306	...BLOCK,TERMINAL.....	1
51	XDFZZ		92878	49386	...STRIP,MARKER.....	1
52	PBFZZ	5925013500403	09647	49303	...CIRCUIT BREAKER.....	1
53	PBFZZ	5930013499378	92878	49302	...SWITCH,TOGGLE.....	1
54	PBFZZ	5930013499379	92878	49301	...SWITCH,TOGGLE.....	1
55	PBFZZ	6210013522900	92878	49304	...LIGHT,INDICATOR.....	1
56	XDFZZ		92878	49305	...COVER.....	1
57	PAFZZ	5310014126024	92878	3626	...NUT,PLAIN,HEXAGON.....	4
58	XAFZZ		92878	49296	...BOX.....	1

END OF FIGURE

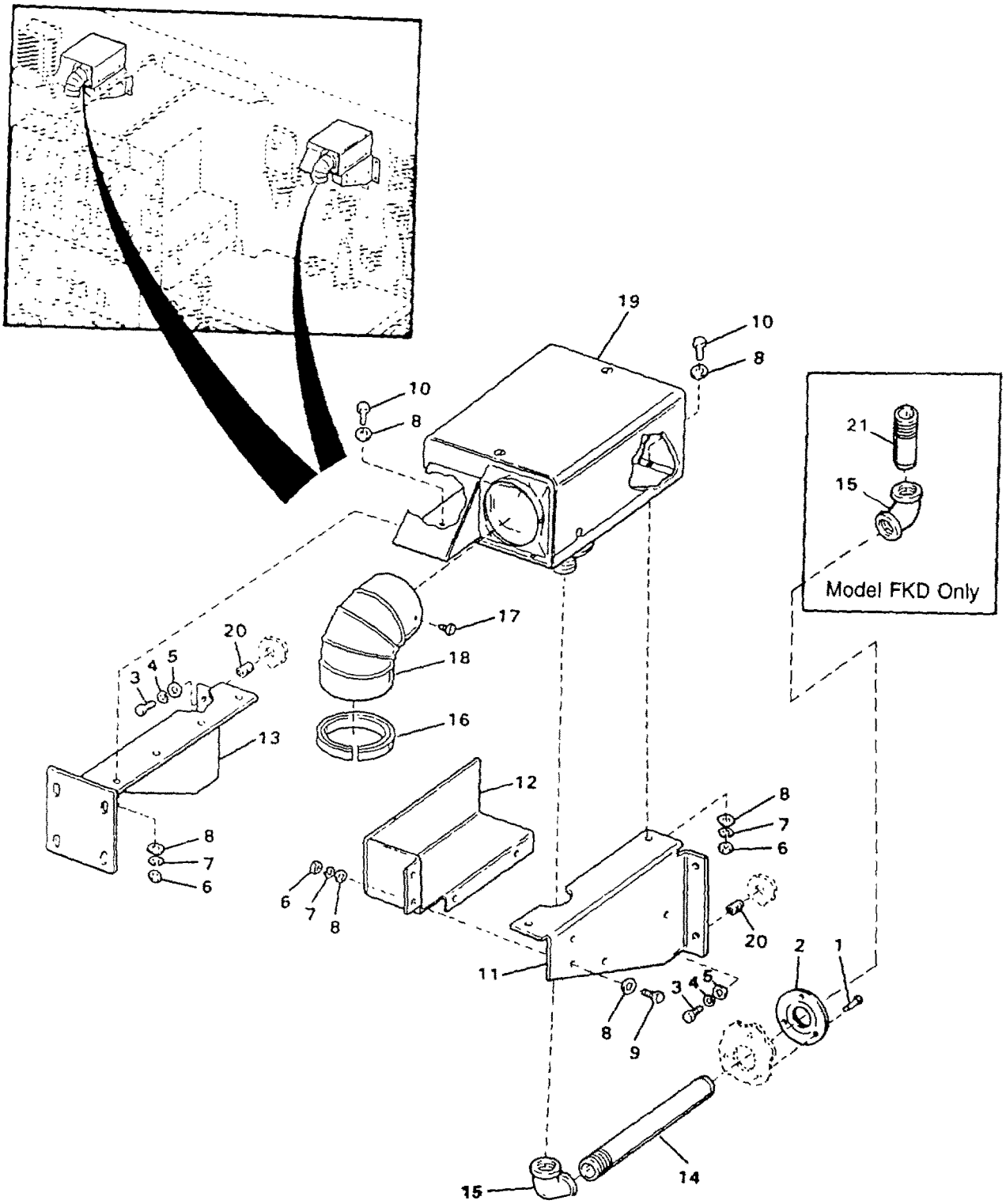

FIGURE 97. DIESEL HEATER AND MOUNTING BRACKETS

(1) ITEM NO	(2) SMR CODE	(3) NSN	(4) CAGEC	(5) PART NUMBER	(6) DESCRIPTION AND USABLE ON CODES(UOC)	(7) QTY
					GROUP 02 WATER PURIFICATION SYSTEM FIG. 97 DIESEL HEATER AND MOUNTING BRACKETS	
1	PAOZZ	5320013490933	97403	13229E0350-1	.RIVET,BLIND.....	6
2	PBOZZ	5330013517001	97403	13229E0277	.GASKET.....	2
3	PAOZZ	5305000213740	96906	MS35307-364	.SCREW,CAP,HEXAGON H.....	8
4	PAOZZ	5310009847042	96906	MS35338-141	.WASHER,LOCK.....	8
5	PAOZZ	5310007737618	96906	MS15795-814	.WASHER,FLAT.....	8
6	PAOZZ	5310009035966	96906	MS51971-1	.NUT,PLAIN,HEXAGON.....	16
7	PAOZZ	5310009338121	96906	MS35338-139	.WASHER,LOCK.....	16
8	PAOZZ	5310010911248	96906	MS15795-810	.WASHER,FLAT.....	32
9	PAOZZ	5305002078253	96906	MS35307-308	.SCREW,CAP,HEXAGON H.....	8
10	PAOZZ	5305000213620	96906	MS35307-307	.SCREW,CAP,HEXAGON H.....	8
11	XDOZZ		97403	13229E0789	.BRACKET RIGHT HAND.....	2
12	XDOZZ		97403	13229E0795	.SHROUD,EXHAUST.....	2
13	XDOZZ		97403	13229E0814	.BRACKET LEFT HAND.....	2
14	XDOZZ		97403	13229E0794	.PIPE,EXHAUST.....	2
15	PBOZZ	4730002215012	97403	13229E0161-201	.ELBOW,PIPE 90 DEGREE, 1 1/4 ETN NPT.....	2
15	PBOZZ	4730002215012	97403	13229E0161-201	.ELBOW,PIPE..90 DEGREE, 1 1/4 FKD NPT.....	4
16	MOOZZ		97403	13229E0161-318	.PROFILE,TRIM MAKE FROM BULK, P/N 13229E1341.....	2
17	PAOZZ	5305013521155	97403	13229E0161-192	.SCREW,TAPPING 0.112-40 UNC-2A 0.375 INCH LONG.....	6
18	XDOZZ		97403	13229E0508	.ELBOW,HEATER.....	2
19	XDFFF		92878	4940001DIESEL150 000BTUS	.HEATER SEE FIGURE 98 FOR BREAKDOWN	2
20	PAFZZ	5325002904492	96906	MS122203	.INSERT,SCREW THREAD.....	8
21	PAOZZ	4730001962015	96906	MS51846-120	.NIPPLE,PIPE.....FKD	2

END OF FIGURE

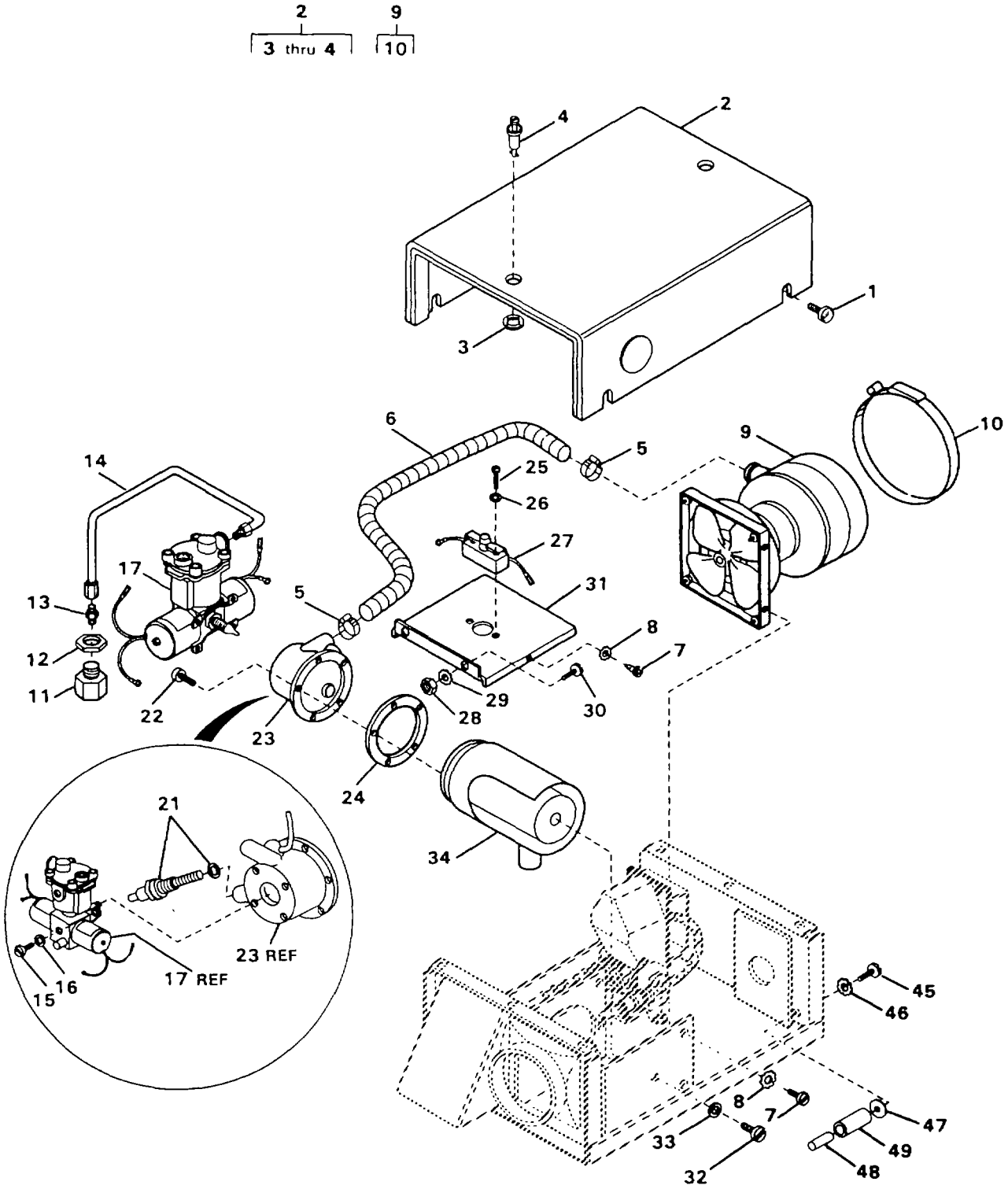

FIGURE 98. DIESEL HEATER (SHEET 1 OF 2)

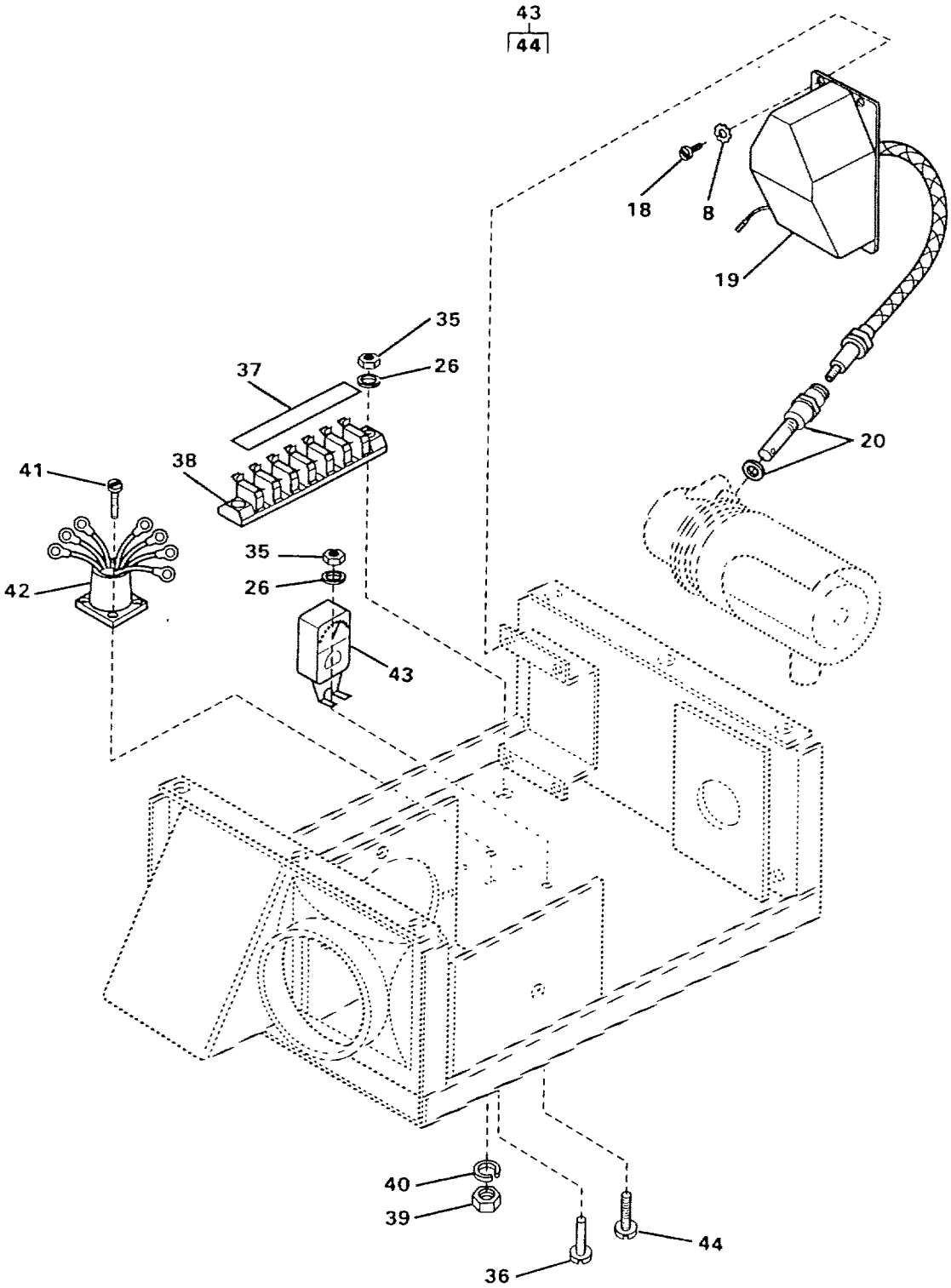

FIGURE 98. DIESEL HEATER (SHEET 2 OF 2)

(1) ITEM NO	(2) SMR CODE	(3) NSN	(4) CAGEC	(5) PART NUMBER	(6) DESCRIPTION AND USABLE ON CODES(UOC)	(7) QTY
					GROUP 02 WATER PURIFICATION SYSTEM FIG. 98 DIESEL HEATER	
	XDFFF		92878	4940001DIESEL150 00BTUS	.HEATER.....	2
1	PAOZZ	5305000120628	92878	3495	..SCREW,MACHINE 1/4-20 X 1/2 INCH LONG.....	4
2	XDOZZ		92878	49367	..COVER ASSEMBLY.....	1
3	XDOZZ		92878	5864	...WASHER,LOCK.....	2
4	XDOZZ		92878	5876	...STUD ASSY,CAM LOCK.....	2
5	XDFZZ		92878	105602	..CLAMP,HOSE.....	2
6	PBFZZ	4720013271606	92878	49342-01	..HOSE,AIR DUCT.....	1
7	XDFZZ		92878	49034	..SCREW,SELF TAP NO. 10 X 1/4 INCH LONG.....	5
8	PAFZZ	5310005967691	96906	MS35335-32	..WASHER,LOCK.....	8
9	PBFZZ	4140013505753	92878	49360	..IMPELLER,FAN,AXIAL.....	1
10	XDFZZ		92878	105161	..CLAMP,MOTOR.....	1
11	XDOZZ		92878	47632	..FITTING,BULKHEAD.....	1
12	XDOZZ		92878	5697	..NUT,LOCK.....	1
13	XDOZZ		92878	49326	..CONNECTOR.....	2
14	XDOZZ		92878	49325	..FUEL LINE ASSEMBLY.....	1
15	XDFZZ		92878	5404	..SCREW,MACHINE.....	4
16	XDFZZ		96906	MS35333-37	..WASHER,LOCK.....	4
17	PBFZZ	2910013513018	92878	49310	..CARBURETOR ASSEMBLY.....	1
18	XDFZZ		92878	3496	..SCREW,MACHINE.....	2
19	PBFZZ	2920013510185	92878	49350	..COIL,IGNITION.....	1
20	PBFZZ	4540004067094	92878	48174-02	..HEATING ELEMENT.....	1
21	PBFZZ	2920010243965	92878	48862-02	..GLOW PLUG.....	1
22	PAFZZ	5305010221950	92878	7520	..SCREW,CAP,SOCKET HEAD.....	5
23	XDFZZ		92878	49320	..HEAD ASSY,BURNER.....	1
24	PBFZZ	5330010878831	92878	49093	..GASKET.....	1
25	XDFZZ		92878	49035	..SCREW NO. 6 X 1/2 INCH LONG.....	2
26	PAFZZ	5310002090788	92878	22821	..WASHER,LOCK NO. 6 EXTERNAL TOOTH.....	6
27	PBFZZ	5930008768493	92878	4347	..SWITCH,THERMOSTATIC.....	1
28	PAFZZ	5310009349757	96906	MS35649-282	..NUT,PLAIN,HEXAGON.....	2
29	PAFZZ	5310005967693	92878	1037	..WASHER,LOCK NO. 8 EXTERNAL TOOTH.....	2
30	PAFZZ	5305010216824	92878	3922	..SCREW,MACHINE.....	2
31	XDFZZ		92878	50585	..COVER,HEAT EXCH.....	1
32	XDFZZ		92878	3414	..SCREW,MACHINE.....	1
33	XDFZZ		96906	MS35335-18	..WASHER,LOCK.....	1
34	PBFZZ		92878	4914403	..HEATER,SPACE.....	1
35	XDFZZ		92878	134530	..NUT,HEX NO. 6-32.....	4
36	XDFZZ		92878	3772	..SCREW,MACHINE NO. 6-32 X 9/16 INCH LONG.....	2
37	XDFZZ		92878	49386	..STRIP,MARKER.....	1
38	XDFZZ		92878	49306	..BLOCK,TERMINAL.....	1
39	XDFZZ		92878	1047	..NUT,HEX NO. 4-40.....	4
40	PAFZZ	5310006063554	92878	3463	..WASHER,LOCK NO. 4 EXTERNAL TOOTH.....	4
41	XDFZZ		92878	1578	..SCREW,MACHINE NO. 4-40 X 5/16	4

(1) ITEM NO	(2) SMR CODE	(3) NSN	(4) CAGEC	(5) PART NUMBER	(6) DESCRIPTION AND USABLE ON CODES(UOC)	(7) QTY	
					INCH LONG.....		
42	PBFZZ	6150013518956	92878	49330	..WIRING HARNESS.....	1	
43	PBFZZ	5945013508263	92878	49341	..RELAY,ELECTROMAGNET.....	2	49
44	XDFZZ		92878	3497	..SCREW,MACHINE NO. 6-32 X	2	
					3/8 INCH LONG.....	2	
45	XDFZZ		92878	4203	..SCREW,MACHINE 1/4-20 X 3/8	2	
					INCH LONG.....		
46	XDFZZ		92878	105459	..WASHER,LOCK 1/4 ID.....	2	
47	XDFZZ		92878	65838	..WASHER,FLAT 1 OD X 9/32 ID.....	2	
48	XDFZZ		92878	170308	..PIN,MOUNTING.....	2	
49	PAFZZ	4720014295332	92878	10619-05	..TUBING,NONMETALLIC.....	2	

END OF FIGURE

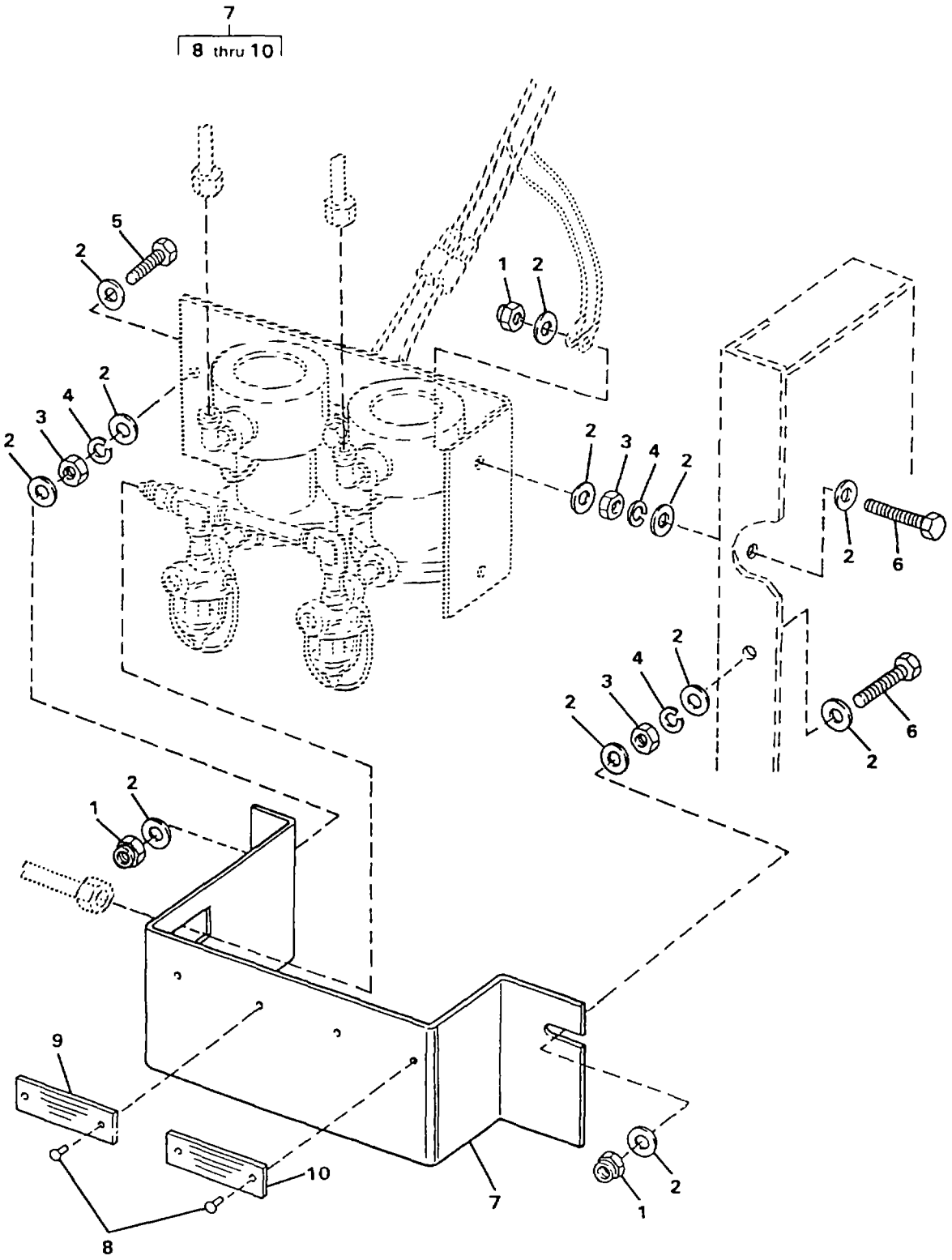

FIGURE 99. HEATER FUEL PUMP (SHEET 1 OF 2)

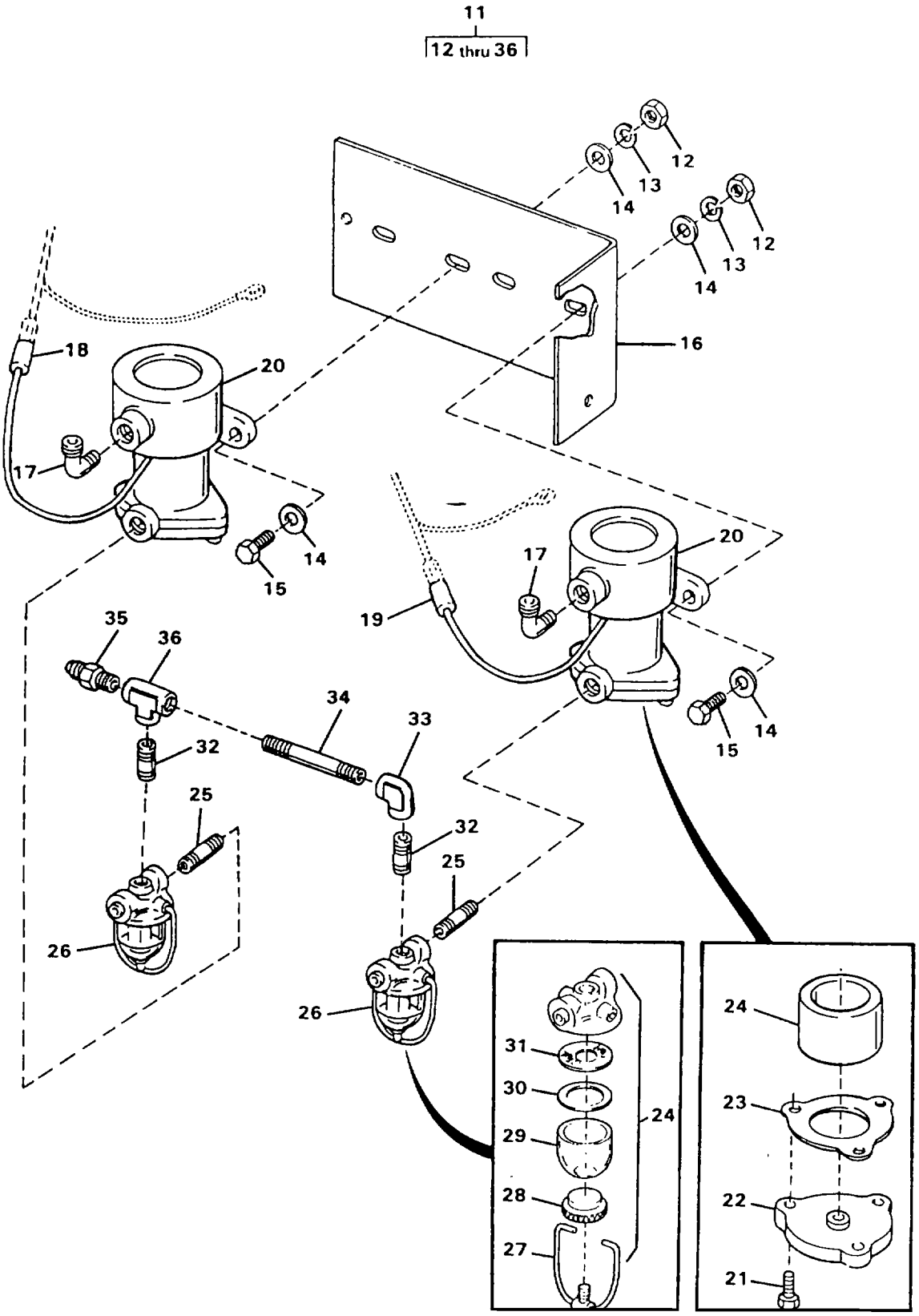

FIGURE 99. HEATER FUEL PUMP (SHEET 2 OF 2)

(1) ITEM NO	(2) SMR CODE	(3) NSN	(4) CAGEC	(5) PART NUMBER	(6) DESCRIPTION AND USABLE ON CODES(UOC)	(7) QTY
					GROUP 02 WATER PURIFICATION SYSTEM	
					FIG. 99 HEATER FUEL PUMP	
1	PAOZZ	5310009291807	96906	MS51922-2	.NUT,SELF-LOCKING,HE.....	4
2	PAOZZ	5310010911248	96906	MS15795-810	.WASHER,FLAT.....	15
3	PAOZZ	5310009035966	96906	MS51971-1	.NUT,PLAIN,HEXAGON.....	4
4	PAOZZ	5310009338121	96906	MS35338-139	.WASHER,LOCK.....	4
5	PAOZZ	5305005907863	96906	MS35308-308	.SCREW,CAP,HEXAGON H.....	1
6	PAOZZ	5305000213668	96906	MS35307-310	.SCREW,CAP,HEXAGON H.....	3
7	XDOOO		97403	13229E0304	.GUARD,FUEL FILTER.....	1
8	PAOZZ	5320013490933	97403	13229E0350-1	..RIVET,BLIND.....	4
9	XDOZZ		97403	13229E0782-30	..PLATE,ID HEATER 1 FUEL PUMP.....	1
10	XDOZZ		97403	13229E0782-31	..PLATE,ID HEATER 2 FUEL PUMP.....	1
11	XDOOO		97403	13229E0791	.FUEL PUMP ASSY.....	1
12	PAOZZ	5310009035966	96906	MS51971-1	..NUT,PLAIN,HEXAGON.....	4
13	PAOZZ	5310009338121	96906	MS35338-139	..WASHER,LOCK.....	4
14	PAOZZ	5310010911248	96906	MS15795-810	..WASHER,FLAT.....	8
15	PAOZZ	5305000213620	96906	MS35307-307	..SCREW,CAP,HEXAGON H.....	4
16	XDOZZ		97403	13220E0793	..BRACKET,FUEL PUMP.....	1
17	PBOZZ		30327	E14A	..ELBOW,PIPE TO TUBE 90 DEGREE,..... 0.125 MPT X 0.438-20 TUBE	2
18	XDOZZ		09647	120-02433-83	..MARKER.....	1
19	XDOZZ		09647	120-02433-84	..MARKER.....	1
20	PBOOO	2910007106054	96906	MS51321-1-24N1	..PUMP,FUEL,ELECTRICA.....	2
21	XDOZZ		92878	106097	...SCREW,CAP.....	3
22	XDOZZ		92878	106055	...COVER.....	1
23	PAOZZ	5330013511247	92878	106057	...GASKET.....	1
24	PAOZZ		92878	917001	...FILTER ELEMENT,FLUI.....	1
25	PAOZZ	4730001932707	96906	MS51846-6	...NIPPLE,PIPE.....	2
26	XDOOO		92878	47329	...FILTER,FUEL.....	1
27	XDOZZ		02878	07772	...CLAMP WIRE AND STUD.....	1
28	XDFZZ		92878	07765	...THUMBNUT.....	1
29	XDOZZ		92878	07759	...BOWL.....	1
30	XDOZZ		92878	47326	...GASKET.....	1
31	XDOZZ		92878	47322	...SCREEN.....	1
32	PAOZZ	4730002301996	96906	MS51846-1	..NIPPLE,PIPE.....	2
33	XDOZZ		81343	SAE J5142-214023	..ELBOW,FEMALE 90 DEGREE, 1/8 NPT, BRASS.....	8
34	PAOZZ	4730001961965	96906	MS51846-12	..NIPPLE,PIPE.....	1
35	XDOZZ		97403	13229E0846	..ADAPTER.....	1
36	XDOZZ		97403	13229E0791-9	..TEE,FEMALE 1/8 NPT, BRASS.....	1

END OF FIGURE

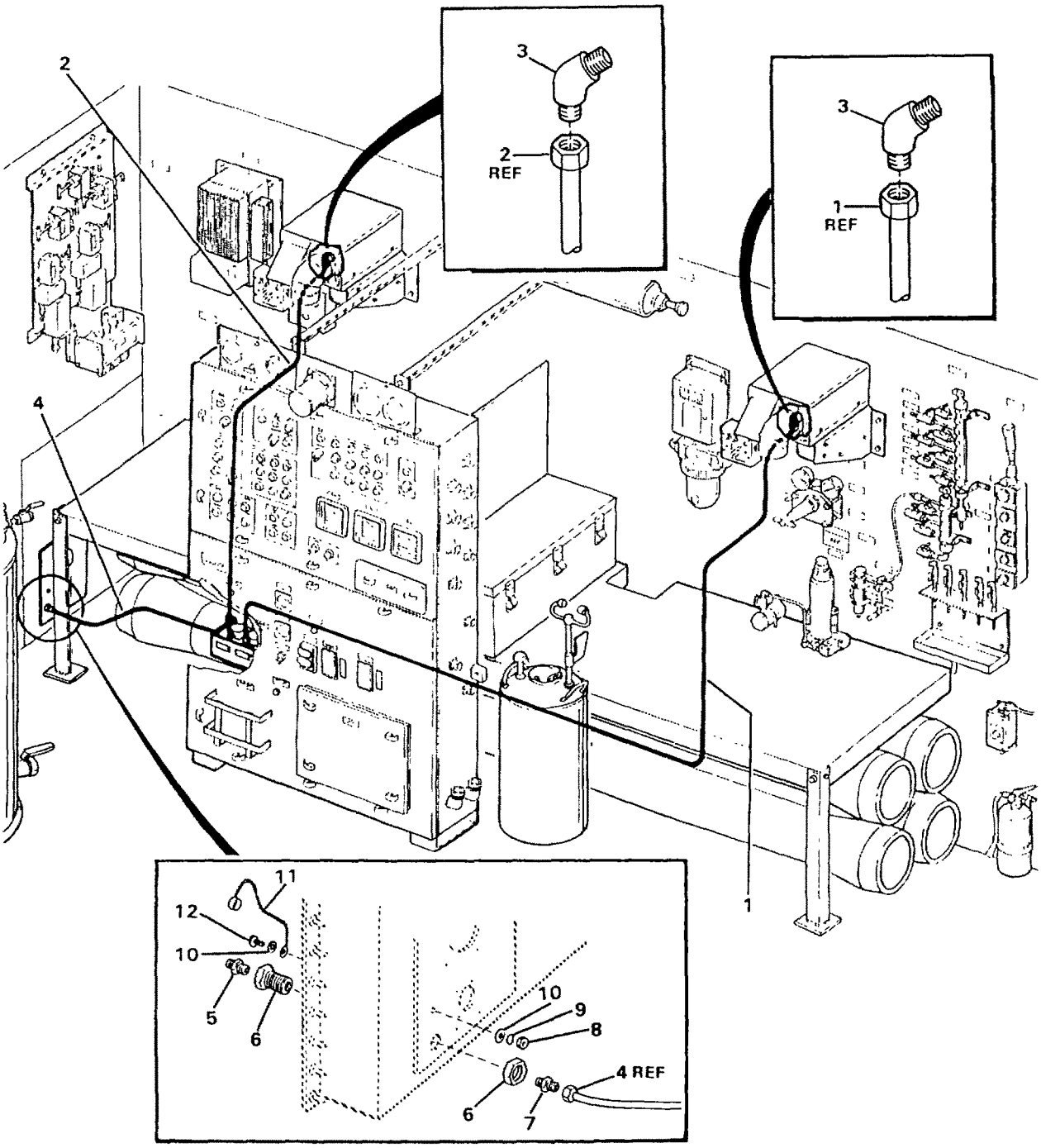

FIGURE 100. FUEL LINES

(1) ITEM NO	(2) SMR CODE	(3) NSN	(4) CAGEC	(5) PART NUMBER	(6) DESCRIPTION AND USABLE ON CODES(UOC)	(7) QTY
					GROUP 02 WATER PURIFICATION SYSTEM	
					FIG. 100 FUEL LINES	
1	PBOZZ	4720013553270	0K1P3	120-07881-3	..HOSE ASSEMBLY,NONME DIESEL 69.....	1
2	PBOZZ	4720013553271	0K1P3	120-07881-1	..HOSE ASSEMBLY,NONME.....	1
3	PBOZZ	4730013511567	81343	J512-010302	..ELBOW,PIPE 45 DEGREE, 1/8 MPT X 7/16-20 FLARE	2
4	PBOZZ	4720013545324	97403	13229E0836-2	..HOSE ASSEMBLY,NONME DIESEL 67.....	1
5	PBOZZ		81343	SAE J514-070102	..ADAPTER,STRAIGHT,PI 1/4 MPT X 1/2-20 FLARE.....	1
6	PBOZZ	4730011643365	97403	13229E0849	..COUPLING,PIPE.....	1
7	PBOZZ		81343	4-7010102B	..ADAPTER,STRAIGHT,PI 1/4 MPT X 7/16-20 FLARE.....	1
8	PAOZZ	5310009035966	96906	MS51971-1	..NUT,PLAIN,HEXAGON.....	1
9	PAOZZ	5310009338121	96906	MS35338-139	..WASHER,LOCK.....	1
10	PAOZZ	5310010911248	96906	MS15795-810	..WASHER,FLAT.....	2
11	PBOZZ	5340013519180	97403	13229E1343	..CAP,PROTECTIVE,DUST.....	1
12	PAOZZ	5305000213620	96906	MS35307-307	..SCREW,CAP,HEXAGON H.....	1

END OF FIGURE

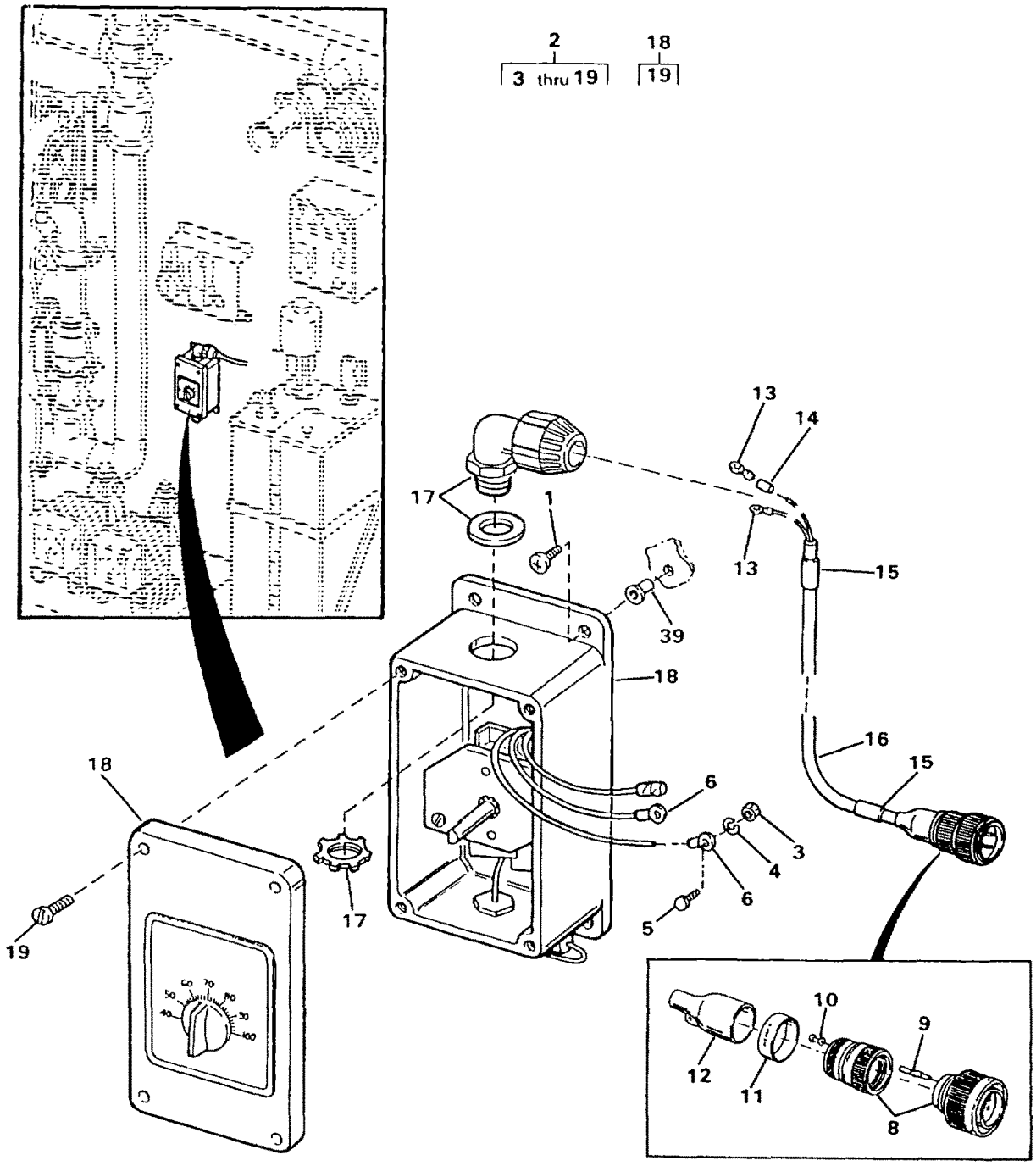

CABLE ASSY	CONNECTOR DETAIL	CONTACT PIN	PLUG	WIRE RUN	
				FROM	TO
7	8	9	—	P6A	BLACK
		9	—	P6B	RED
		9	10	P6C	—

FIGURE 101. THERMOSTAT ASSEMBLY (HEATER 2) (SHEET 1 OF 2)

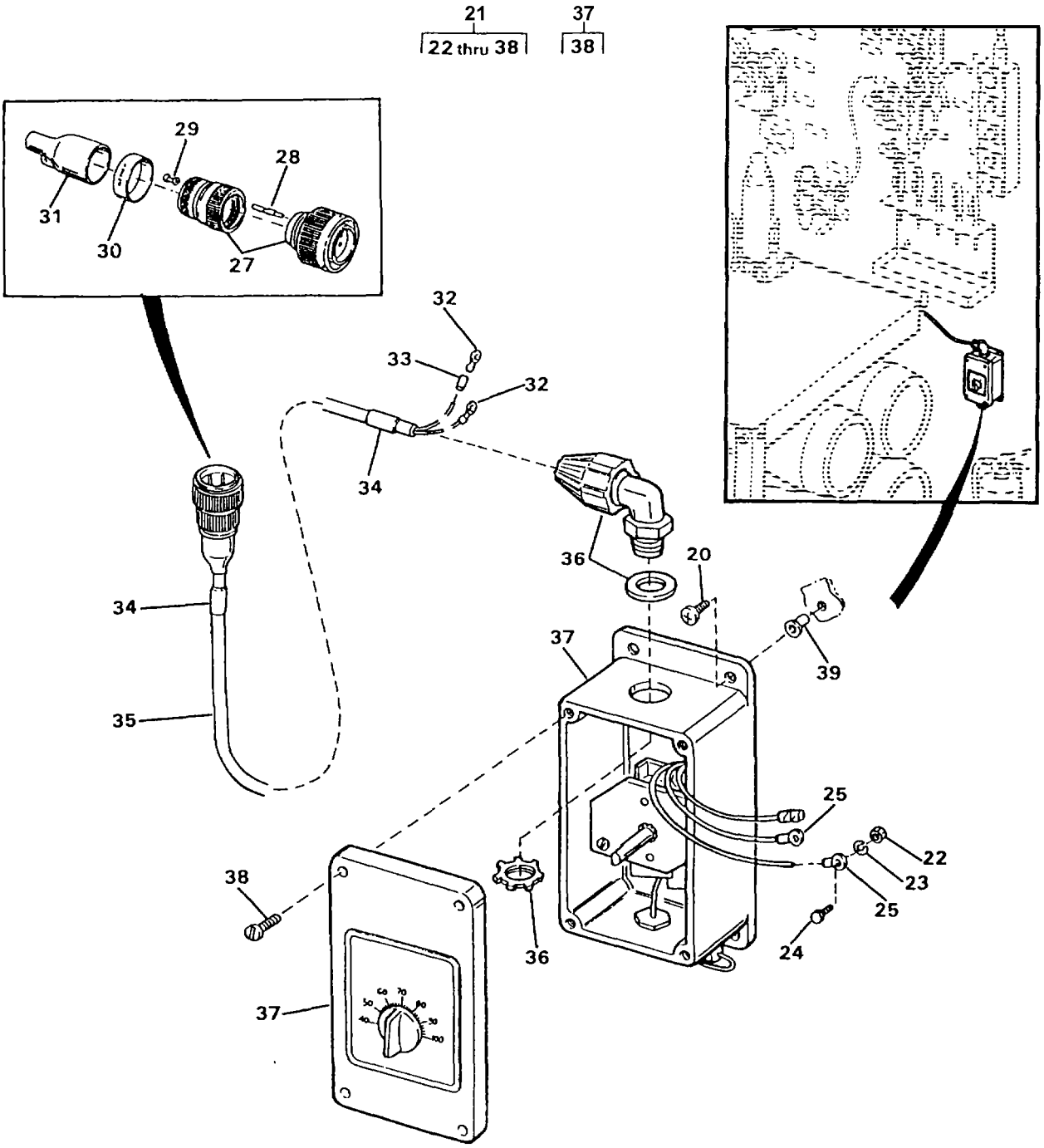

HARNESS ASSY	CONNECTOR DETAIL	CONTACT PIN	PLUG	WIRE RUN	
				FROM	TO
26	27	28	—	P7A	BLACK
		28	—	P7B	RED
		28	29	P7C	—

FIGURE 101. THERMOSTAT ASSEMBLY (HEATER 2) (SHEET 2 OF 2)

(1) ITEM NO	(2) SMR CODE	(3) NSN	(4) CAGEC	(5) PART NUMBER	(6) DESCRIPTION AND USABLE ON CODES(UOC)	(7) QTY
					GROUP 02 WATER PURIFICATION SYSTEM	
					FIG. 101 THERMOSTAT ASSEMBLY (HEATER 2)	
1	PAOZZ	5305000593659	96906	MS51958-63	.SCREW,MACHINE 0.190-32 UNC-2A X 0.750 LG.....	4
2	XDOFF		97403	13229E1187	.THERMOSTAT ASSY HEATER 1.....	1
3	PAOZZ	5310009349759	96906	MS35649-284	..NUT,PLAIN,HEXAGON.....	2
4	PAOZZ	5310009338119	96906	MS35338-137	..WASHER,LOCK.....	2
5	PAOZZ	5305013514312	97403	13229E1187-4	..SCREW,CAP,HEXAGON H 0.164-32 UNC-2A X 0.25 INCH LONG.....	2
6	PAOZZ	5940001434794	96906	MS25036-112	..TERMINAL,LUG.....	2
7	XDOFF		97403	13229E1260-11	..CABLE ASSEMBLY W12.....	1
8	PBFFF	5935013545178	17549	CA3106E14S-7P-B-02-57	...CONNECTOR,PLUG,ELEC P6.....	1
9	PAFZZ	5999013448758	17549	030-8586-000	...CONTACT,ELECTRICAL PART OF KIT P/N 120-02593-P.....	3
10	XDFZZ		17549	225-0017-000	....PLUG,WIRE.....	1
11	XDFZZ		09647	120-02433-81	...MARKER.....	1
12	PBFZZ	5970013484761	97403	13229E1213-1	...INSULATION SLEEVING.....	1
13	PAFZZ	5940001434774	96906	MS25036-153	...TERMINAL,LUG.....	2
14	XDFZZ		01121	B-321HCPS.9-3336W	...MARKER.....	4
15	XDFZZ		09647	120-02433-12	...MARKER.....	2
16	MFFZZ		09647	120-02605-15	...CABLE CUT TO LENGTH FROM BULK, P/N 13229E0741-1.....	1
17	PBOZZ	5975014456260	97403	13229E0753-1	..STUFFING TUBE.....	1
18	PBOZZ	5930013546684	97403	13229E1289	..SWITCH,THERMOSTATIC.....	1
19	PAOZZ	5305000546670	96906	MS51957-45	..SCREW,MACHINE 0.164-32 UNC-2A X 0.5 INCH LONG.....	4
20	PAOZZ	5305000593659	96906	MS51958-63	.SCREW,MACHINE 0.190-32 UNF-2A X 0.75 INCH LONG.....	4
21	XDOFF		97403	13229E1320	.THERMOSTAT ASSY HEATER 2.....	1
22	PAOZZ	5310009349759	96906	MS35649-284	..NUT,PLAIN,HEXAGON.....	2
23	PAOZZ	5310009338119	96906	MS35338-137	..WASHER,LOCK.....	2
24	PAOZZ	5305013514312	97403	13229E1187-4	..SCREW,CAP,HEXAGON H 0.164-32 UNC-2A X 0.25 INCH LONG.....	2
25	PAOZZ	5940001434794	96906	MS25036-112	..TERMINAL,LUG.....	2
26	XDOFF		97403	13229E1260-12	..CABLE ASSEMBLY W13.....	1
27	PBFFF	5935013545178	17549	CA3106E14S-7P-B-02-57	...CONNECTOR,PLUG,ELEC P7.....	1
28	PAFZZ	5999013448758	17549	030-8586-000	....CONTACT,ELECTRICAL PART OF KIT P/N 120-02593-P.....	3
29	XDFZZ		17549	225-0017-000	....PLUG,WIRE.....	1
30	XDFZZ		09647	120-02433-82	...MARKER.....	1
31	PBFZZ	5970013484761	97403	13229E1213-1	...INSULATION SLEEVING.....	1
32	PAFZZ	5940001434774	96906	MS25036-153	...TERMINAL,LUG.....	2
33	XDFZZ		01121	B-321HCPS.9-3336W	...MARKER.....	4
34	XDFZZ		09647	120-02433-13	...MARKER.....	2
35	MFFZZ		09647	120-02605-14	...CABLE CUT TO LENGTH FROM BULK, P/N 13229E0741-1.....	1
36	PBOZZ	5975014456260	97403	13229E0753-1	..STUFFING TUBE.....	1

(1) ITEM NO	(2) SMR CODE	(3) NSN	(4) CAGEC	(5) PART NUMBER	(6) DESCRIPTION AND USABLE ON CODES(UOC)	(7) QTY
37	PBOZZ	5930013546684	97403	13229E1289	..SWITCH,THERMOSTATIC.....	1
38	PAOZZ	5305000546670	96906	MS51957-45	..SCREW,MACHINE 0.164-32 UNC-2A X 0.5 INCH LONG.....	4
39	PAFZZ	5310012119838	29372	H111P363-130M	.NUT,PLAIN,BLIND RIV.....	8

END OF FIGURE

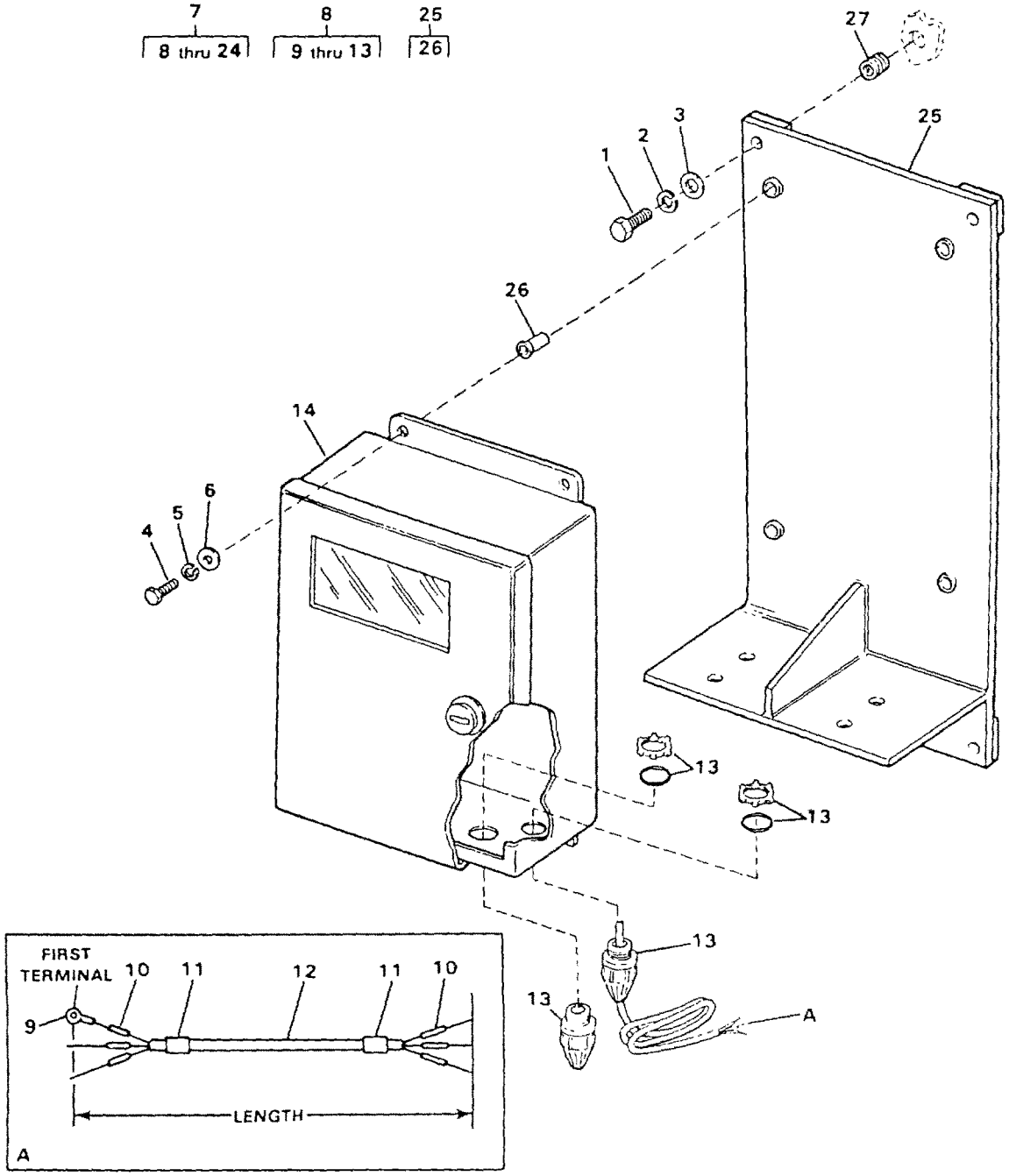

HARNESS ASSY	WIRE RUN		TERMINAL	
	FROM	TO	FIRST	SECOND
8	ACH1	TBI-52	—	—
	ACL0	PBI-88	—	—
	GND	TB1-93	9	—

FIGURE 102. CO MONITOR (SHEET 1 OF 3)
(MODEL ETN ONLY)

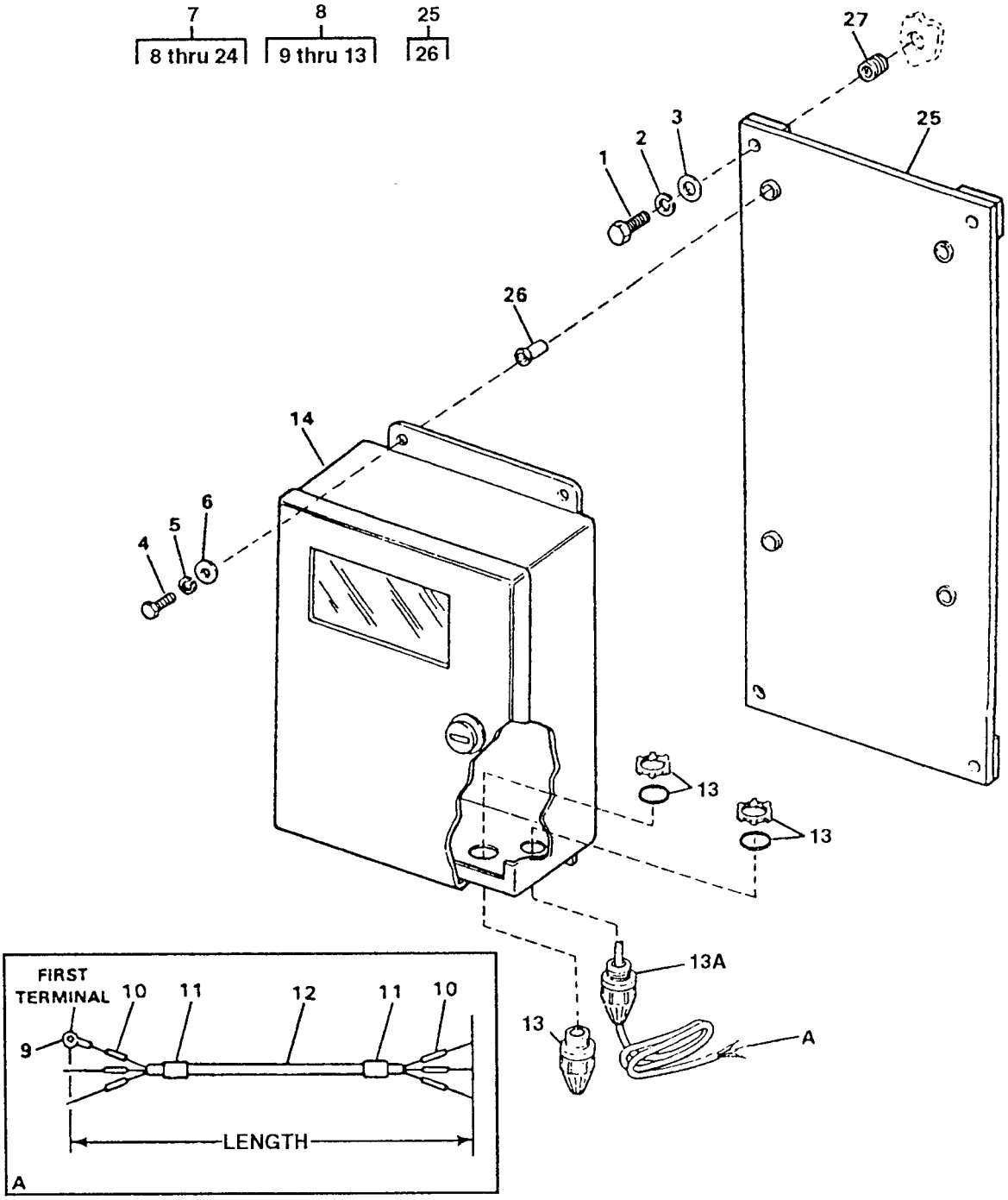

HARNESS ASSY	WIRE RUN		TERMINAL	
	FROM	TO	FIRST	SECOND
8	ACH1	TBI-52	—	—
	ACLO	PBI-88	—	—
	GND	TB1-93	9	—

FIGURE 102. CO MONITOR (SHEET 2 OF 3)
(MODEL FKD ONLY)

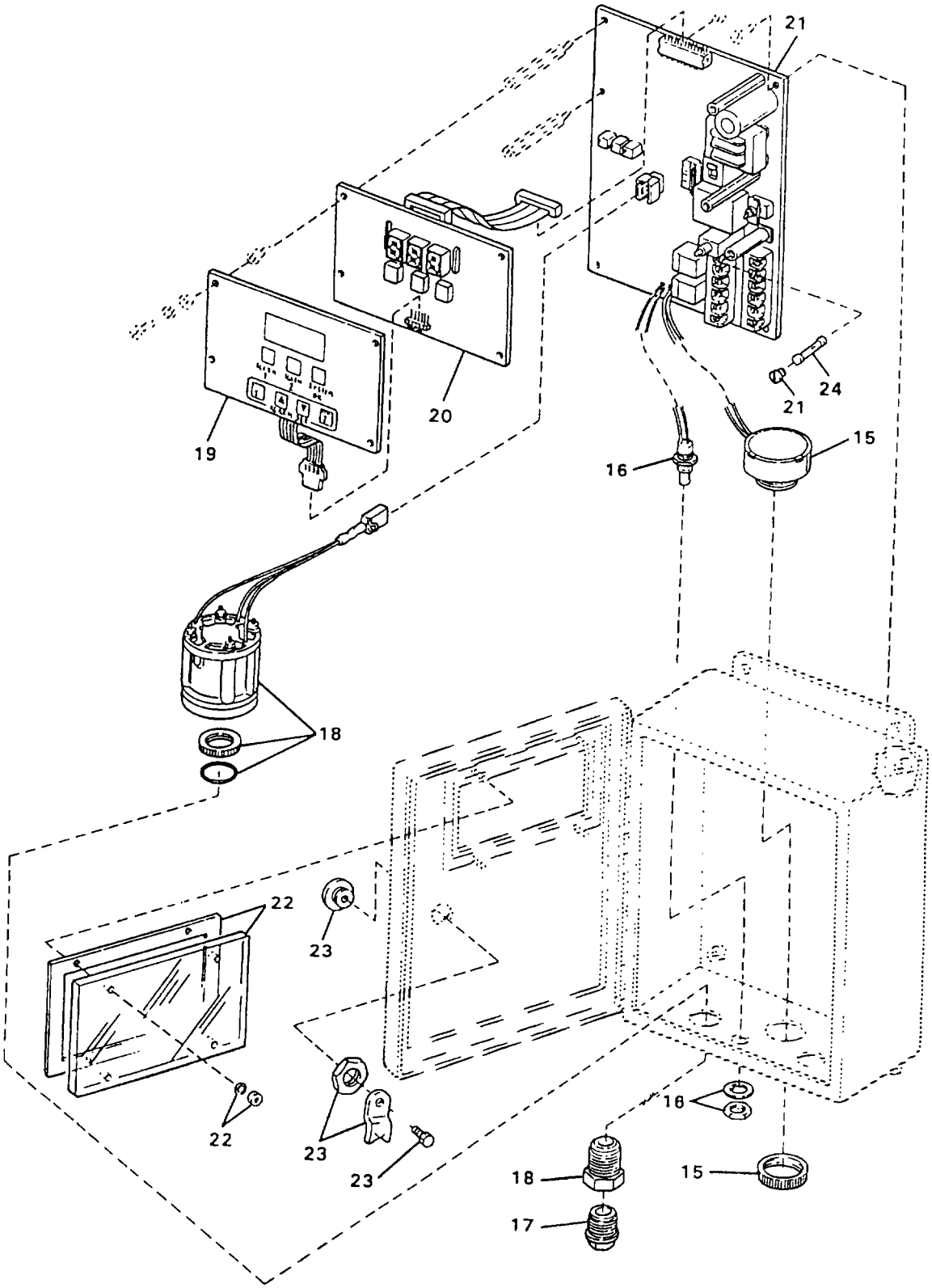

FIGURE 102. CO MONITOR (SHEET 3 OF 3)

(1) ITEM NO	(2) SMR CODE	(3) NSN	(4) CAGEC	(5) PART NUMBER	(6) DESCRIPTION AND USABLE ON CODES(UOC)	(7) QTY
					GROUP 02 WATER PURIFICATION SYSTEM	
					FIG. 102 CO MONITOR	
1	PAFZZ	5305007175467	96906	MS35307-362	.SCREW,CAP,HEXAGON H.....	4
2	PAFZZ	5310009847042	96906	MS35338-141	.WASHER,LOCK.....	4
3	PAFZZ	5310007737618	96906	MS15795-814	.WASHER,FLAT.....	4
4	PAFZZ	5305000213620	96906	MS35307-307	.SCREW,CAP,HEXAGON H.....	4
5	PAFZZ	5310009338121	96906	MS35338-139	.WASHER,LOCK.....	4
6	PAFZZ	5310010911248	96906	MS15795-810	.WASHER,FLAT.....	4
7	XDFFF		97403	13229E1358	.MONITOR ASSEMBLY.....	1
8	AFFFF		97403	13229E1257-18	..CABLE ASSEMBLY.....	1
9	PAFZZ	5940001434780	96906	MS25036-108	...TERMINAL,LUG.....	1
10	XDFZZ		01121	B-321HCPS.9-3336 W	...MARKER.....	6
11	XDFZZ		09647	120-02433-184	...MARKER.....	2
12	MFFZZ		09647	120-02605-20	...CABLE CUT TO LENGTH FROM BULK, P/N 13229E0741-1.....	1
13	PBFZZ	5975013557891	97403	13229E0738-6	...STUFFING TUBE.....ETN	2
13	PBFZZ	5975013557891	97403	13229E0738-6	...STUFFING TUBE.....FKD	1
14	PBFZZ	6665013507047	97403	13229E1334-1	..ALARM,GAS,AUTOMATIC.....	1
15	PBFZZ	6625013502301	55799	629693	..METER,AUDIO LEVEL.....	1
16	PBFZZ	5930013505602	55799	629432	..SWITCH,PUSH.....	1
17	PAOZZ		55799	069217	..CAP-PLUG,PROTECTIVE.....	1
18	PBFZZ	6350013590408	40912	480595	..SENSOR.....	1
19	XDFZZ		93886	485185	..KEYBOARD,DISPLAY.....	1
20	XDFZZ		93886	483792	..BOARD,DISPLAY.....	1
21	XDFZZ		93886	486752	..BOARD,MAIN.....	1
22	XDOZZ		93886	A-PWKES2	..WINDOW KIT.....	1
23	XDOZZ		93886	A-L31	..LOCK KIT.....	1
24	PAOZZ	5920013508641	55799	68315	..FUSE,CARTRIDGE.....	1
25	XDFZZ		97403	13229E1356	.BRACKET.....	1
26	PAFZZ	5310013550216	97403	13229E0114-2	..NUT,PLAIN,BLIND RIV.....	4
27	PAFZZ	5325002904492	96906	MS122203	.INSERT,SCREW THREAD.....	4
28	PAFZZ	5975013520285	97403	13229E0738-3	...STUFFING TUBE.....FKD	1

END OF FIGURE

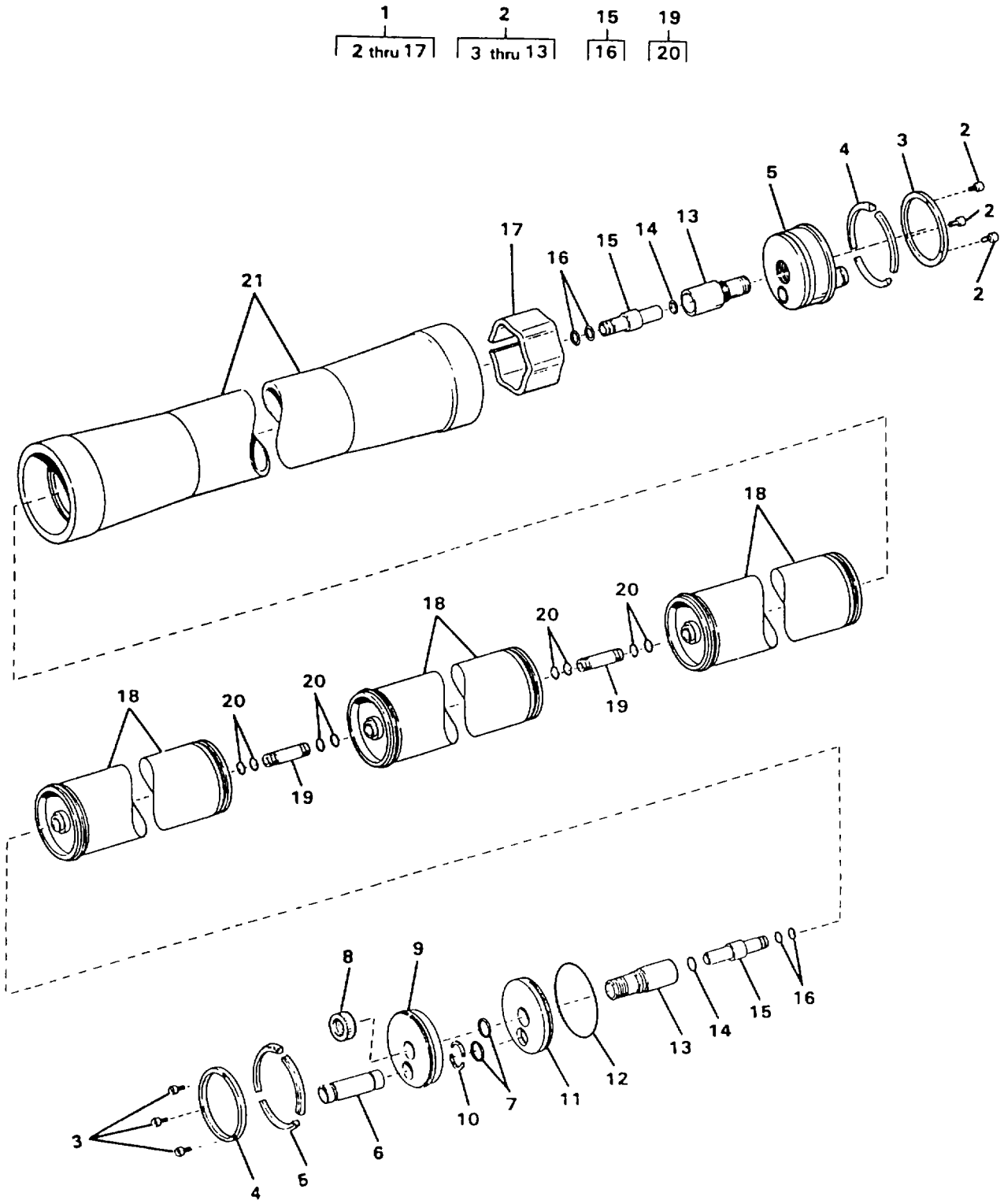

FIGURE 103. RO VESSELS AND ELEMENTS

(1) ITEM NO	(2) SMR CODE	(3) NSN	(4) CAGEC	(5) PART NUMBER	(6) DESCRIPTION AND USABLE ON CODES(UOC)	(7) QTY
					GROUP 02 WATER PURIFICATION SYSTEM	
					FIG. 103 RO VESSELS AND ELEMENTS	
1	XDFFF		64382	E8S-3W-11B-HA	.VESSEL ASSY RO.....	4
2	PBOOO	4730014003112	64382	107019-1	..FLANGE,PIPE.....	2
3	PAOZZ	5305013536049	64382	6CF016-1	...SCREW,CAP,SOCKET HE NYLON.....	6
4	PAOZZ	5325013515143	64382	407007-1	...RING,RETAINING.....	2
5	XDOZZ		64382	407006-1	...RING SET,LOCKING.....	2
6	XDOZZ		64382	407003-1	...PORT,FEED/CONC.....	2
7	KFOZZ		64382	6ER001-225	...SEAL,PORT PART OF KIT	2
					P/N 1ER001-225.....	
8	PBOZZ	5310013527426	64382	407005-1	...NUT,PLAIN,HEXAGON.....	2
9	PBOZZ	6695013550112	64382	407001-1	...PLATE,BEARING.....	2
10	PBOZZ	6695013550113	64382	403010-1	...RETAINER SET,PORT.....	2
11	PBOZZ	6695013550114	64382	407002-1	...PLATE,SEALING.....	2
12	PBOZZ	5330013521980	64382	6ER002-442	...PACKING,PREFORMED.....	2
13	PBOZZ	6695013554171	64382	407004-1	...PORT,PERMEATE.....	2
14	PBOZZ	5331013527478	64382	6ER001-221	..O-RING.....	4
15	PBOZZ	4730013507445	64382	107096-1	..ADAPTER,STRAIGHT,PI.....	2
16	KFOZZ		64382	6ER001-119	...SEAL,PWT PART OF KIT	4
					P/N 1ER001-221.....	
17	PBOZZ	4730013512965	64382	407052-1	..ADAPTER,STRAIGHT,PIPE.....	1
18	PAOZZ	4610012534294	63624	SW30-8040	.ELEMENT,REVERSE OSM.....	12
19	PBOZZ		63624	81282	.COUPLER,MEMBRANE.....	8
20	PAOZZ	5331013539383	63624	80478	..O-RING.....	8
21	XDFZZ		64382	107001-3	.SHELL.....	4
	PAOZZ	5342013527582	64382	1ER001-225	..KIT,PORT SEAL	1
					SEAL, PORT (20) 103-7.....	
	PAOZZ	6695013554172	64382	1ER001-221	..KIT,ADAPTER SEAL.....	1
					SEAL, PWT (20) 103-16.....	

END OF FIGURE

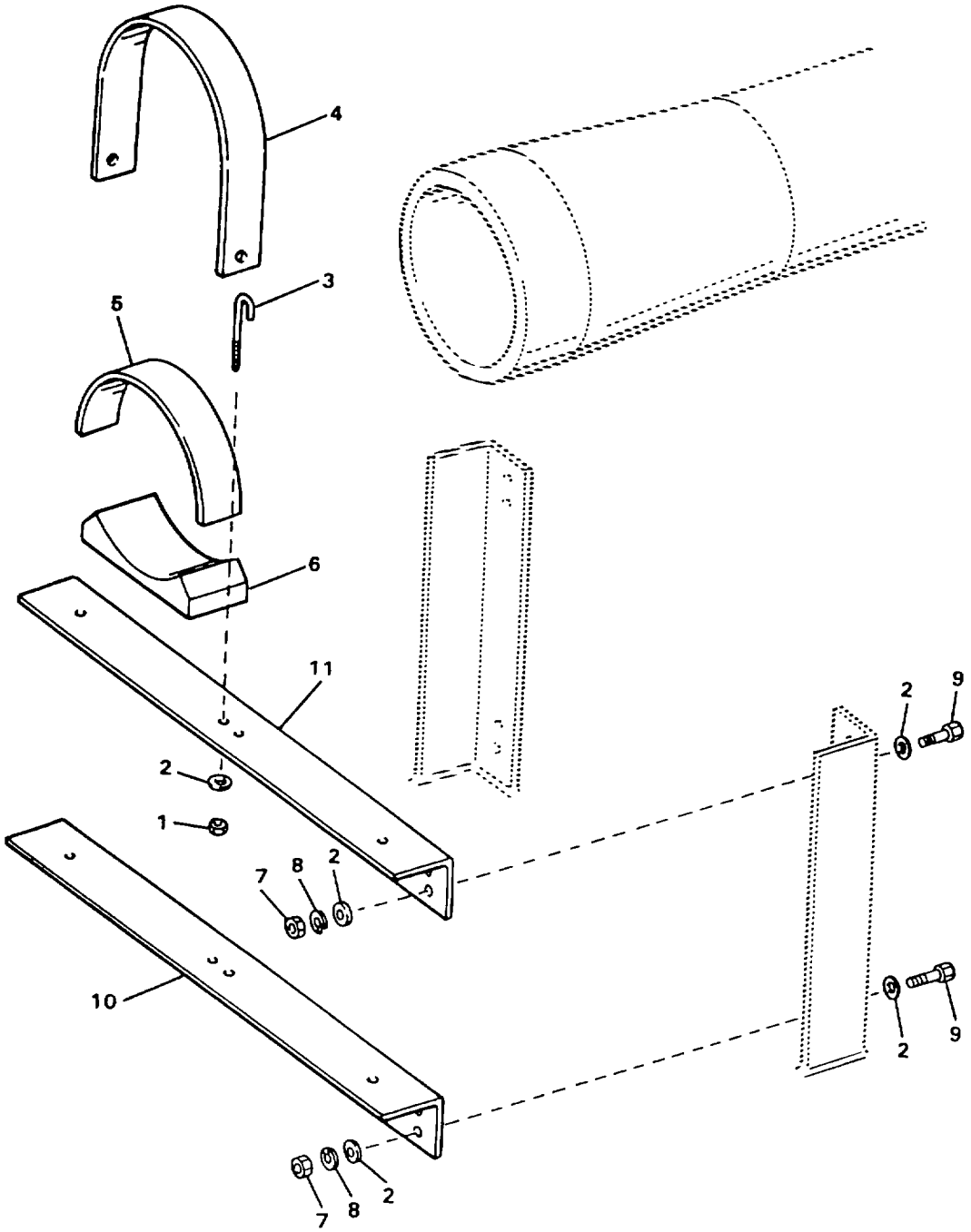

FIGURE 104. RO ELEMENT MOUNTING

(1) ITEM NO	(2) SMR CODE	(3) NSN	(4) CAGEC	(5) PART NUMBER	(6) DESCRIPTION AND USABLE ON CODES(UOC)	(7) QTY
					GROUP 02 WATER PURIFICATION SYSTEM FIG. 104 RO ELEMENT MOUNTING	
1	PAFZZ	5310009146028	96906	MS51922-18	.NUT,SELF-LOCKING,HE.....	16
2	PAFZZ	5310007737618	96906	MS15795-814	.WASHER,FLAT.....	31
3	XDFZZ		97403	13229E1254 J	.BOLT.....	16
4	XDFZZ		97403	13229E0008	.U-CLAMP.....	8
5	MFFZZ		97403	13229E0161-239	.PAD,NEOPRENE MAKE FROM BULK, P/N ASTMD2000 M1BC614, 0.097 INCH THICK.....	8
6	XDFZZ		64382	407008-1	.BLOCK,MOUNTING.....	8
7	PAFZZ	5310009138881	96906	MS51971-3	.NUT,PLAIN,HEXAGON.....	16
8	PAFZZ	5310009847042	96906	MS35338-141	.WASHER,LOCK.....	16
9	PAFZZ	5305005765417	96906	MS35307-360	.SCREW,CAP,HEXAGON H.....	16
10	XDFZZ		97403	13229E0018	.SUPPORT,LOWER.....	2
11	XDFZZ		97403	13229E0017	.SUPPORT,UPPER.....	2

END OF FIGURE

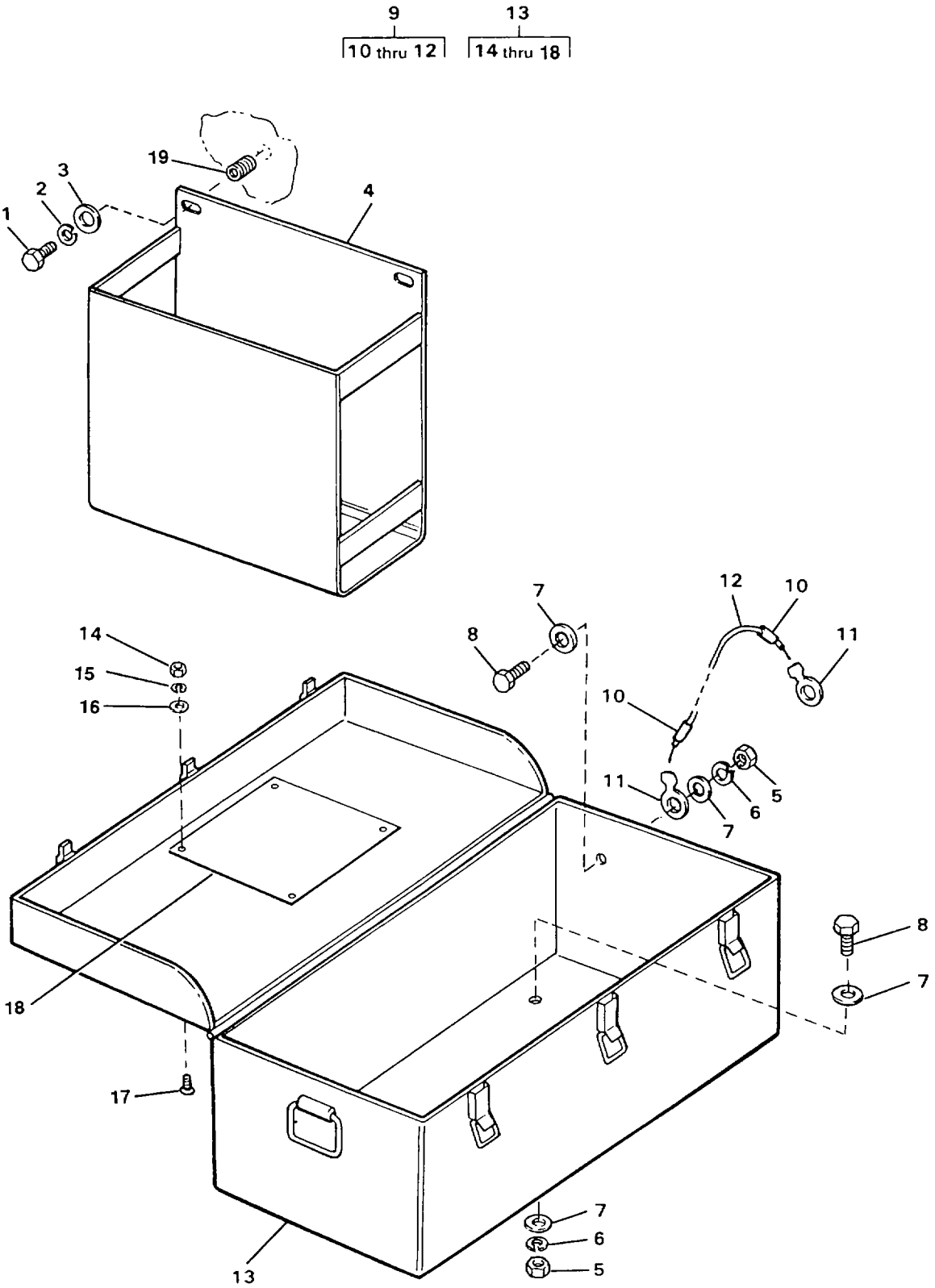

FIGURE 105. STORAGE RACK AND BOX

(1) ITEM NO	(2) SMR CODE	(3) NSN	(4) CAGEC	(5) PART NUMBER	(6) DESCRIPTION AND USABLE ON CODES(UOC)	(7) QTY
					GROUP 02 WATER PURIFICATION SYSTEM	
					FIG. 105 STORAGE RACK AND BOX	
1	PAOZZ	5305007175467	96906	MS35307-362	.SCREW,CAP,HEXAGON H.....	2
2	PAOZZ	5310009847042	96906	MS35338-141	.WASHER,LOCK.....	2
3	PAOZZ	5310007737618	96906	MS15795-814	.WASHER,FLAT.....	2
4	XDOZZ		97403	13229E1136	.RACK,MANUAL.....	1
5	PAOZZ	5310009035966	96906	MS51971-1	.NUT,PLAIN,HEXAGON.....	5
6	PAOZZ	5310009338121	96906	MS35338-139	.WASHER,LOCK.....	5
7	PAOZZ	5310010911248	96906	MS15795-810	.WASHER,FLAT.....	10
8	PAOZZ	5305000213620	96906	MS35307-307	.SCREW,CAP,HEXAGON H.....	5
9	AOOOO		97403	13229E0860-6	.LEAD ASSY,GRND ELE.....	1
10	XDOZZ		97403	13229E0589-4	..MARKER,GROUND.....ETN	2
10	XDOZZ		97403	13229E0589-3	..MARKER,GROUND.....FKD	2
11	PAOZZ	5940001434777	96906	MS25036-157	..TERMINAL,LUG.....	2
12	MOOZZ		97403	13229E0860-6-1	..WIRE MAKE FROM BULK P/N M5086/1-12-9.....	1
13	XDOOO		97403	13229E0234-2	.BOX,STORAGE.....	1
14	PAOZZ	5310009349760	96906	MS35649-204	..NUT,PLAIN,HEXAGON.....	4
15	PAOZZ	5310009338120	96906	MS35338-138	..WASHER,LOCK.....	4
16	PAOZZ		96906	MS15795-808	..WASHER,FLAT.....	4
17	PAOZZ		97403	13229E0234-2-4	..SCREW,MACHINE NO. 10-24 UNC-2A X 3/8 INCH LONG.....	4
18	XDOZZ		97403	13229E1379-2	..PLATE,LOAD PLAN.....	1
19	PAFZZ	5325002904492	96906	MS122203	.INSERT,SCREW THREAD.....	2

END OF FIGURE

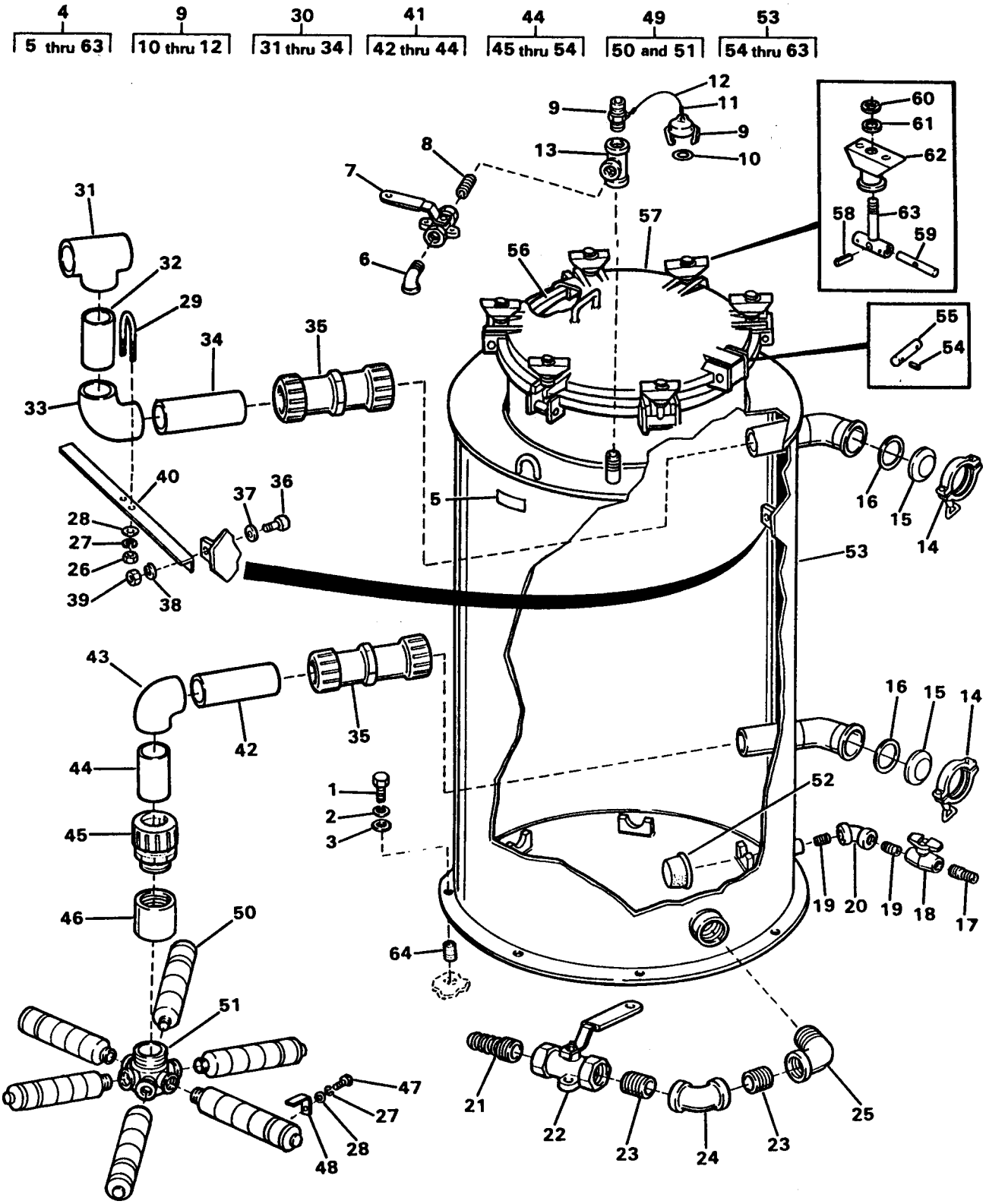

FIGURE 106. NBC FILTER ASSEMBLY

(1) ITEM NO	(2) SMR CODE	(3) NSN	(4) CAGEC	(5) PART NUMBER	(6) DESCRIPTION AND USABLE ON CODES(UOC)	(7) QTY
					GROUP 02 WATER PURIFICATION SYSTEM FIG. 106 NBC FILTER ASSEMBLY	
1	PAFZZ	5305009480667	96906	MS35307-487	.SCREW,CAP,HEXAGON H 0.75-10 UNC-2A X 2 INCHES LONG.....	5
2	PAFZZ	5310009370454	96906	MS35338-146	.WASHER,LOCK.....	5
3	PAFZZ	5310005847799	96906	MS15795-822	.WASHER,FLAT.....	5
4	XDFFF		97403	13229E0656	.FILTER ASSEMBLY.....	1
5	XDOZZ		97403	13229E1335-3	..PLATE,ID NBC FILTER.....	1
6	PBOZZ	4730013550439	09647	120-01-466-5	..ELBOW,PIPE 0.5 NPS, 90 DEGREE, CLS 150, 316 SS.....	1
7	PBOZZ	4820012890996	72219	76-108-01	.VALVE,BALL.....	1
8	PAOZZ	4730012404263	97403	13229E1255-10	..NIPPLE,PIPE.....	1
9	PBOZZ	4730013503825	97403	13229E0431	..COUPLING HALF,QUICK.....	1
10	PAOZZ	5330013498922	97403	13229E0857-1	...GASKET.....	1
11	PAOZZ	4030001455721	96906	MS51844-64	...SWAGING SLEEVE,WIRE.....	2
12	MFOZZ		09647	120-02598-6	...CABLE,A/C,12 IN CUT TO LENGTH FROM BULK, P/N 13229E1147 -1.....	1
13	PBOZZ	4730013511571	97403	13229E0656-21	..TEE,PIPE 0.5 NPS, CLS 150, 316, SS.....	1
14	PBOZZ	4730013538590	97403	13229E0692-3	..COUPLING,CLAMP,PIPE.....	2
15	PBOZZ	4730013549049	64233	K16-2.50	..CAP,PIPE.....	2
16	PAOZZ	5306013514304	97403	13229E0693-3	..GASKET.....	2
17	PBOZZ	4730012064814	72661	RST-5	..ADAPTER,STRAIGHT,PI.....	1
18	PBOZZ	4820013501564	97403	13229E1303-1	..VALVE,BALL.....	1
19	PBOZZ		97403	13229E1255-6	..NIPPLE,PIPE.....	2
20	PBOZZ	4730013511566	97403	13229E0656-30	..ELBOW,PIPE 0.75 NPS,45 DEGREE, CLS 150, 316 SS.....	1
21	PBOZZ	4730012551219	72661	RST-25	..ADAPTER,STRAIGHT,PI.....	1
22	PBOZZ	4820012890996	72219	76-108-01	..VALVE,BALL.....	1
23	PBOZZ	4730013518095	97403	13229E1255-9	..NIPPLE,PIPE.....	2
24	PBOZZ	4730013509026	97403	13229E0656-34	..ELBOW,PIPE 2 INCH NPS, 45 DEGREE, CLS 150, 316 SS.....	1
25	PBOZZ	4730013509027	97403	13229E0656-35	..ELBOW,PIPE 2 INCH NPS, 90 DEGREE, CLS 150, 316 SS.....	1
26	PAFZZ	5310009035966	96906	MS51971-1	..NUT,PLAIN,HEXAGON.....	2
27	PAFZZ	5310009338121	96906	MS35338-139	..WASHER,LOCK.....	8
28	PAFZZ	5310010911248	96906	MS15795-810	..WASHER,FLAT.....	8
29	PAFZZ	5306013532006	97403	13229E0697-2	..BOLT,U.....	1
30	AFFFF		97403	13229E1381	..PIPE SECTION,TOP.....	1
31	PBFZZ	4730007026363	14007	01013012	...TEE,PIPE 2 INCH, SCH 80 PVC.....	1
32	MFFZZ		97403	13229E1381-3	...PIPE,PLASTIC 5 5/8 INCHES LONG, MAKE FROM BULK P/N ASTM D1785, 2 INCHES, SCHEDULE 80 PVC.....	1
33	PAFZZ	4730013550438	97403	13229E1381-2	...ELBOW,PIPE 90 DEGREE, 2 INCH, SCHEDULE 80 PVC.....	1
34	MFFZZ		97403	13229E1381-1	...PIPE,PLASTIC 5 3/4 INCHES LONG, MAKE FROM BULK P/N ASTM D1785, 2 INCHES, SCHEDULE 80 PVC.....	1
35	PBFZZ	4730013513127	97403	13229E0541	..COUPLING,CLAMP,PIPE.....	2
36	PAFZZ	5305005765417	96906	MS35307-360	..SCREW,CAP,HEXAGON H.....	2

(1) ITEM NO	(2) SMR CODE	(3) NSN	(4) CAGEC	(5) PART NUMBER	(6) DESCRIPTION AND USABLE ON CODES(UOC)	(7) QTY
37	PAFZZ	5310007737618	96906	MS15795-814	..WASHER,FLAT.....	2
38	PAFZZ	5310009847042	96906	MS35338-141	..WASHER,LOCK.....	2
39	PAFZZ	5310009138881	96906	MS51971-3	..NUT,PLAIN,HEXAGON.....	2
40	XDFZZ		97403	13229E0656-5	..BRACKET,ANGLE.....	1
41	PAFFF		97403	13229E1382	..PIPE SECTION,BOTTOM.....	1
42	MFFZZ		97403	13229E1382-3	...PIPE,PLASTIC 5 5/8 INCHES LONG, MAKE FROM BULK P/N ASTM D1785, 2 INCHES, SCHEDULE 80 PVC.....	1
43	PAFZZ	4730013514005	81346	ASTM D2467	...ELBOW,PIPE 90 DEGREE, 2 INCHES, SCHEDULE 80 PVC.....	
44	MFFZZ		97403	13229E1382-1	...PIPE,PLASTIC 5 3/4 INCHES LONG, MAKE FROM BULK P/N ASTM D1785 2 INCH SCHEDULE 80 PVC.....	1
45	PBFZZ	4730013515230	97403	13229E0542	..ADAPTER,STRAIGHT,PI.....	1
46	PAFZZ	4730008570866	97403	13229E0656-14	..COUPLING,PIPE 2 INCHES NPT, SCH 80 PVC.....	1
47	PAFZZ	5305007024523	96906	MS35307-306	..SCREW,CAP,HEXAGON H.....	6
48	XDFZZ		97403	13229E1230	..BRACKET.....	6
49	XDFFF		60173	SG6-0.2-635 (0+4)	..HUB AND LATERAL ASY.....	1
50	XDFZZ		60173	A-270 (0+4)	...ARM.....	6
51	XDFZZ		60173	SG6	...HUB.....	1
52	PBOZZ	4730013511536	60173	A-0.2-3/4 IN NPT	..NOZZLE,DISTRIBUTION.....	1
53	XDFFF		97403	13229E0587	..TANK,NBC.....	1
54	XDOZZ		13226	9Q8594	...PIN,ROLL.....	2
55	XDOZZ		13226	3818SL	...PIN,HINGE.....	1
56	PAOZZ	5330013517684	13226	3513BN	...GASKET.....	1
57	XDOZZ		13226	6381LC	..COVER,ACCESS.....	1
58	XDOZZ		13226	9Q8592	...PIN,ROLL.....	6
59	XDOZZ		13226	3086SL	...PIN,BOLT,SWING.....	6
60	XDOZZ		13226	9Q4933	...RING,SNAP.....	6
61	XDOZZ		13226	3575SL	...WASHER.....	6
62	XDOZZ		13226	3576SL	...WING NUT ASSEMBLY.....	6
63	XDOZZ		13226	3765SL	..BOLT,SWING.....	6
64	PAFZZ	5325000452812	96906	MS122128	.INSERT,SCREW THREAD.....	5

END OF FIGURE

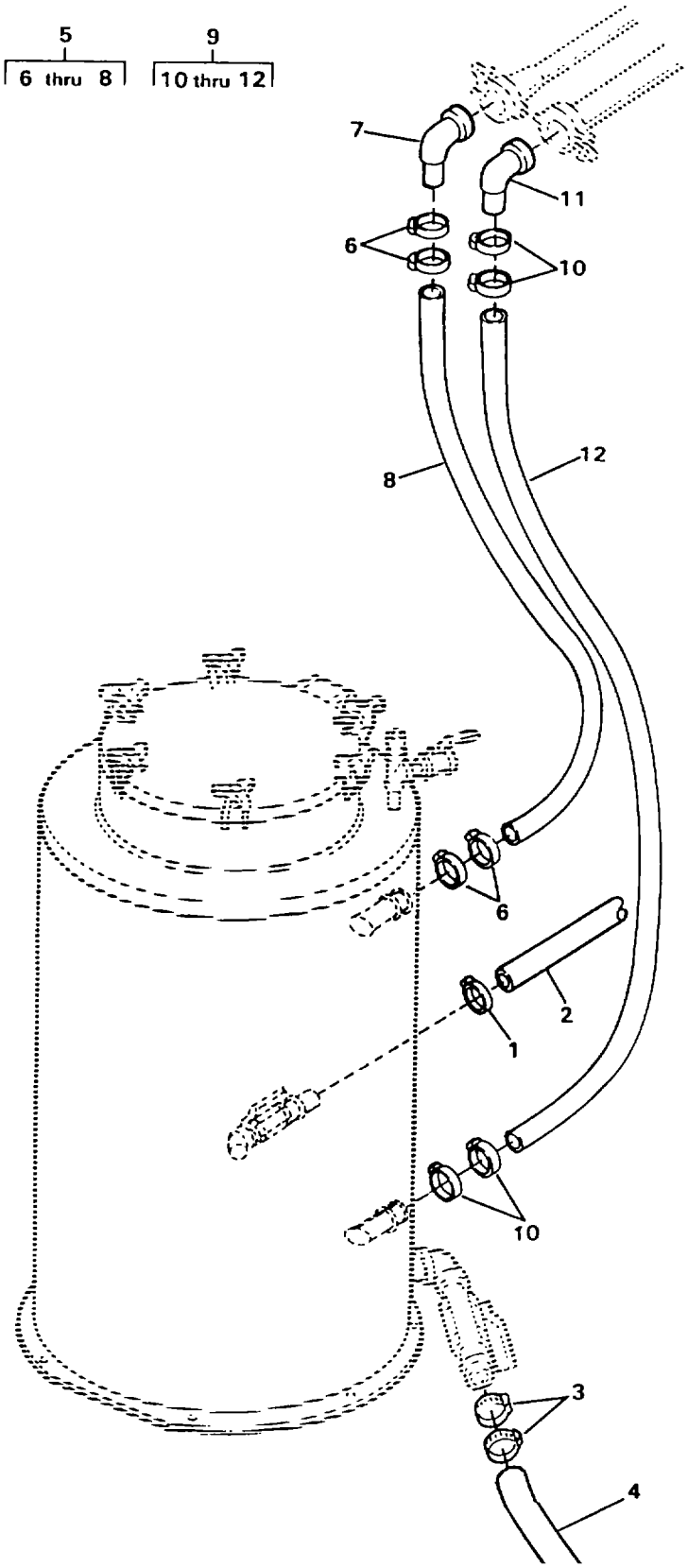

FIGURE 107. NBC FILTER HOSES

(1) ITEM NO	(2) SMR CODE	(3) NSN	(4) CAGEC	(5) PART NUMBER	(6) DESCRIPTION AND USABLE ON CODES(UOC)	(7) QTY
					GROUP 02 WATER PURIFICATION SYSTEM	
					FIG. 107 NBC FILTER HOSES	
1	PAOZZ	5120002782423	97403	13229E0511-4	..CLAMP,HOSE.....	1
2	MOOZZ		97403	13229E0086-107	..HOSE CUT TO LENGTH FROM BULK, P/N 028810.....	1
3	XDOZZ		97403	13229E0809-3	.CLAMP,T-BOLT.....	2
4	MOOZZ		97403	13229E1378-27	.HOSE CUT TO LENGTH FROM BULK, P/N 13229E0774-5.....	1
5	AOOOO		97403	13229E0624-1	.HOSE ASSEMBLY.....	1
6	PAOZZ		97403	13229E0809-6	..CLAMP,LOOP.....	4
7	XDOZZ		97403	13229E0623	..ADAPTER.....	1
8	XDOZZ		97403	13229E0624-1-1	..HOSE CUT TO LENGTH FROM BULK, P/N 13229E0774-5.....	1
9	AOOOO		97403	13229E0624-2	.HOSE ASSEMBLY.....	1
10	PAOZZ		97403	13229E0809-6	..CLAMP,LOOP.....	4
11	XDOZZ		97403	13229E0623	..ADAPTER.....	1
12	MOOZZ		97403	13229E0624-2-1	..HOSE CUT TO LENGTH FROM BULK, P/N 13229E0774-5.....	1

END OF FIGURE

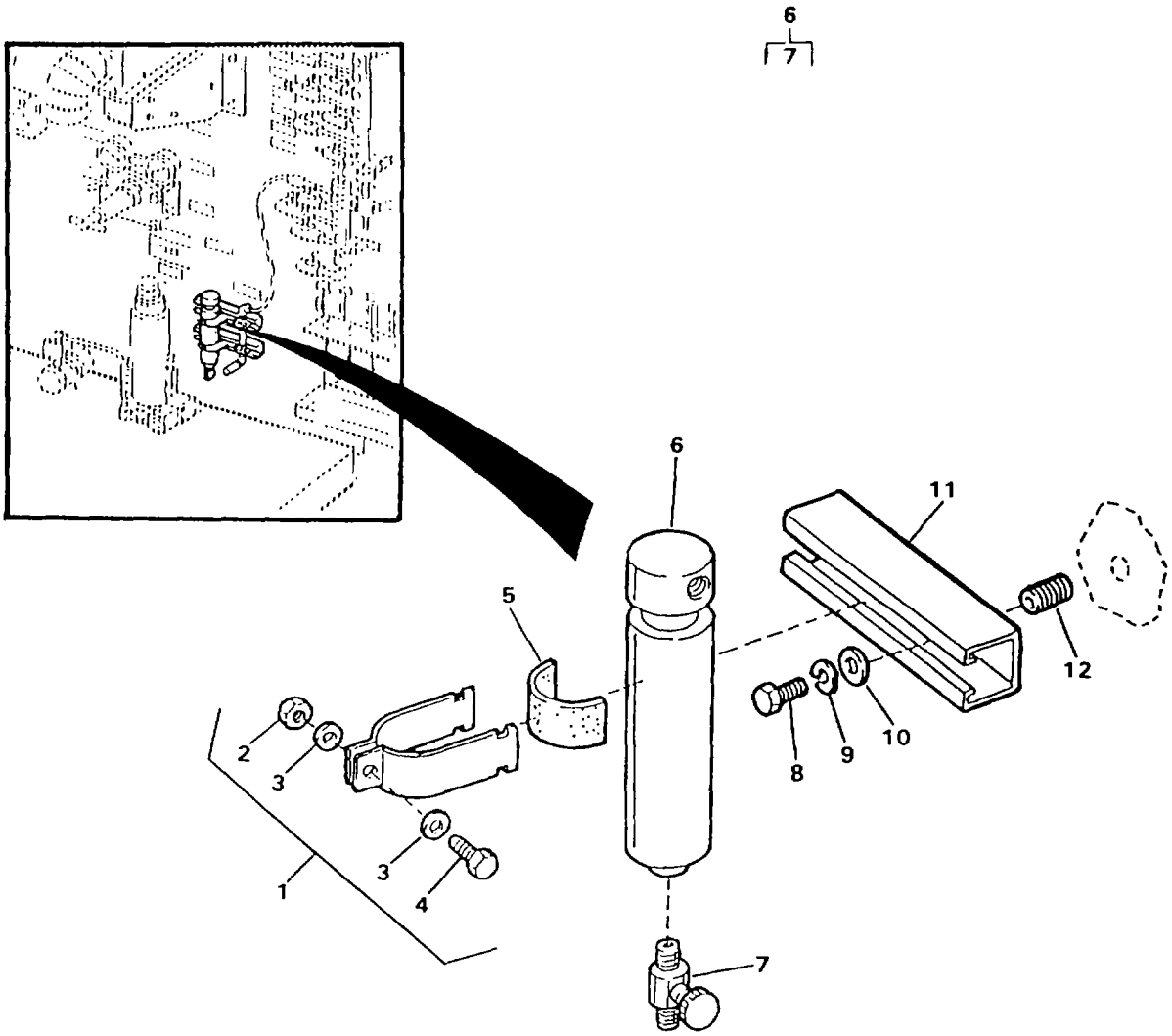

FIGURE 108. AIR DRYER

(1) ITEM NO	(2) SMR CODE	(3) NSN	(4) CAGEC	(5) PART NUMBER	(6) DESCRIPTION AND USABLE ON CODES(UOC)	(7) QTY
					GROUP 02 WATER PURIFICATION SYSTEM	
					FIG. 108 AIR DRYER	
1	PAOZZ	4610014214881	97403	13229E0685-3	.CLAMP,TUBE.....	2
2	PAOZZ	5310009291807	96906	MS51922-2	..NUT,SELF-LOCKING,HE.....	1
3	PAOZZ	5310010911248	96906	MS15795-810	..WASHER,FLAT.....	2
4	PAOZZ	5305002078253	96906	MS35307-308	..SCREW,CAP,HEXAGON H.....	1
5	MOOZZ		97403	13229E0161-228	.CUSHION CUT TO LENGTH FROM BULK, P/N P-2600.....	2
6	PBOZZ	4440013575445	3J802	E5.5-150PSI	.CARTRIDGE,DEHYDRATO.....	1
7	XDOZZ		3J802	E9105NV	..VALVE,NEEDLE.....	1
8	PAOZZ		96906	MS35307-307	.SCREW,CAP,HEXAGON H.....	4
9	PAOZZ	5310009338121	96906	MS35338-139	.WASHER,LOCK.....	4
10	PAOZZ	5310010911248	96906	MS15795-810	.WASHER,FLAT.....	4
11	XDOZZ		97403	13229E0380-1	.SUPPORT,PIPE.....	2
12	PAFZZ	5340002904489	96906	MS122241	.INSERT,SCREW THREAD.....	4

END OF FIGURE

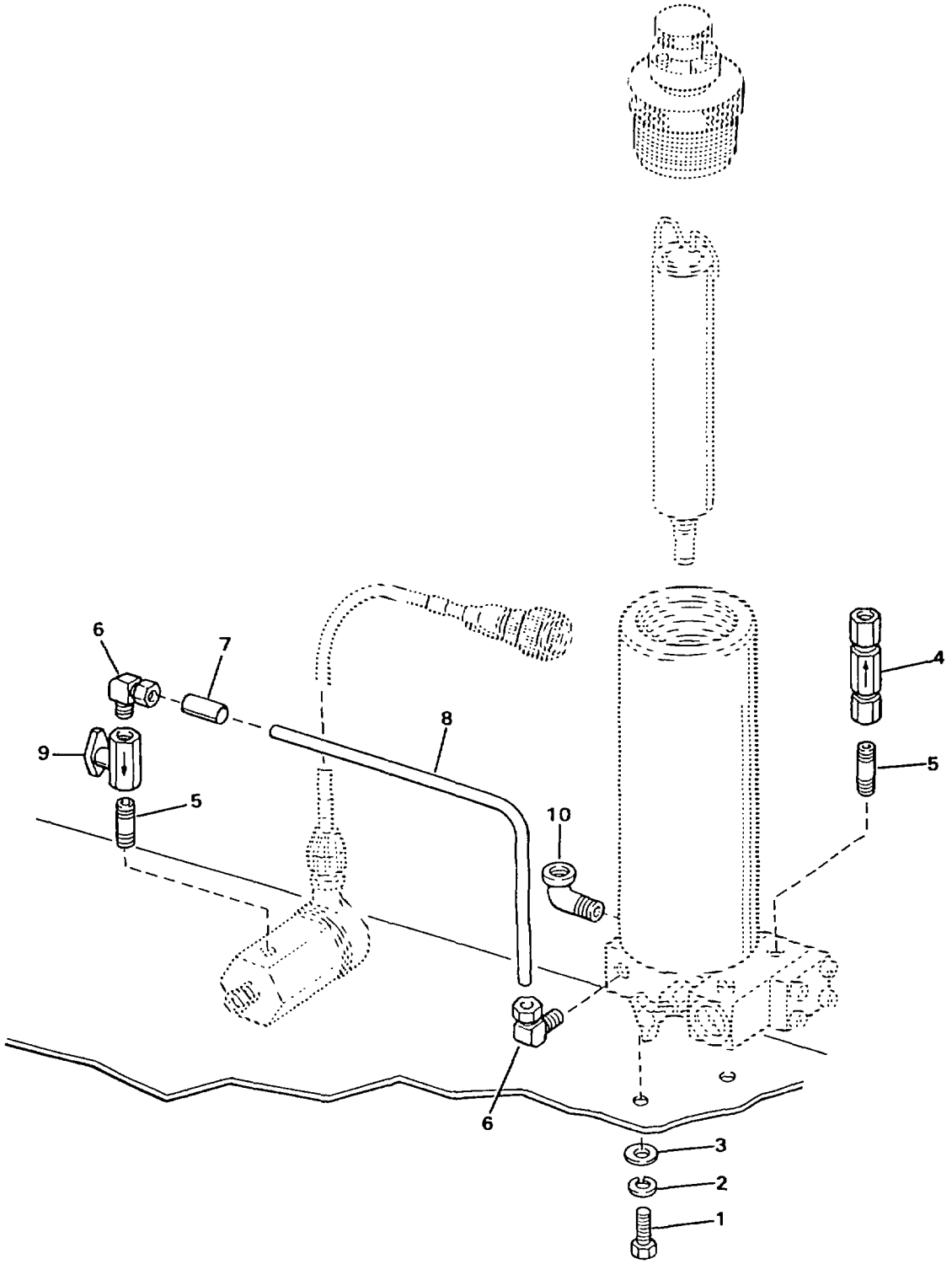

FIGURE 109. OUTLET AIR FILTER (SHEET 1 OF 2)

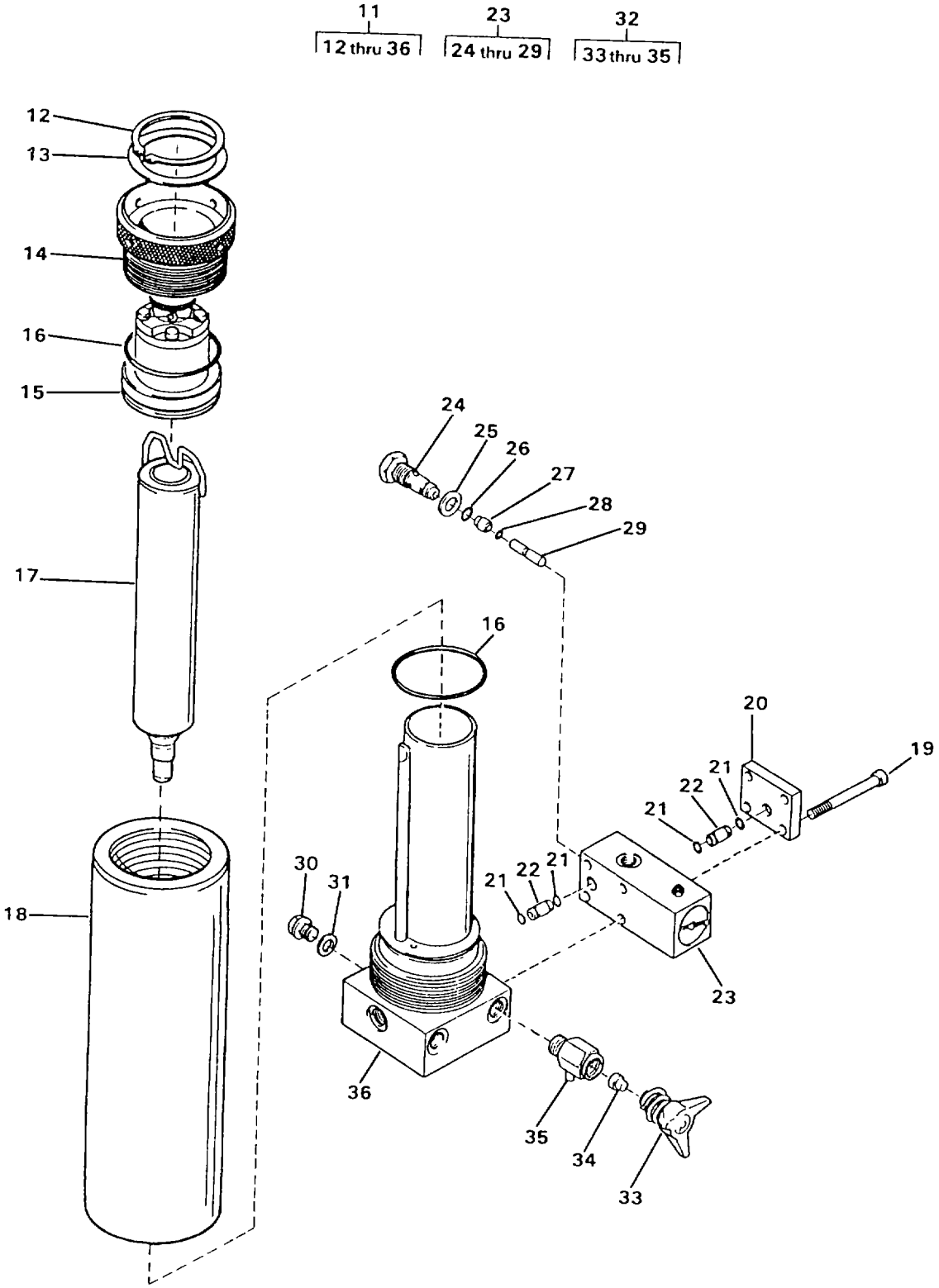

FIGURE 109. OUTLET AIR FILTER (SHEET 2 OF 2)

(1) ITEM NO	(2) SMR CODE	(3) NSN	(4) CAGEC	(5) PART NUMBER	(6) DESCRIPTION AND USABLE ON CODES(UOC)	(7) QTY
					GROUP 02 WATER PURIFICATION SYSTEM	
					FIG. 109 OUTLET AIR FILTER	
1	PAFZZ	5305013514470	97403	13229E0161-161	.SCREW,MACHINE M8-1.25 X 25 MM LONG.....	2
2	PAFZZ	5310009746623	96906	MS35338-140	.WASHER,LOCK.....	2
3	PAFZZ	5310006255756	96906	MS15795-812	.WASHER,FLAT.....	2
4	PBFZZ	4820012517616	97403	13229E0226	.VALVE,CHECK.....	1
5	XDFZZ		97403	13229E1255-2	.NIPPLE,PIPE.....	2
6	PAFZZ	4730004906257	81343	4-4 080202SA	.ELBOW,PIPE TO TUBE.....	2
7	XDFZZ		09647	120-02456-80	.MARKER.....	1
8	XDFZZ		09647	120-50495-7	.TUBING,BENT.....	1
9	PBFZZ	4820013493816	97403	13229E0678	.VALVE,PLUG.....	1
10	PAFZZ	4730013599534	97403	13229E0161-301	.ELBOW,PIPE 90 DEGREE, 1/4 INCH NPT.....	1
11	PAFFF	4610014496771	57328	62211-410	.FILTER ASSY,AIR SEP.....	1
12	XDFZZ		57328	N 15598	..RING,SNAP.....	1
13	XDFZZ		57328	63438-410	..RING,SLIDE.....	1
14	XDFZZ		57328	61711-340	..PLUG.....	1
15	XDFZZ		57328	061114-340	..SAFETY VALVE.....	1
16	PAFZZ	5331003381441	57328	N04586	..PACKING,PREFORMED.....	2
17	PAFZZ	4330013509101	57328	057679-410	..FILTER BODY,FLUID.....	1
18	XDFZZ		57328	57682-410	..HOUSING,FILTER.....	1
19	XDFZZ		57328	N781	..SCREW.....	4
20	XDFZZ		57328	57937-341	..COVER.....	1
21	PAFZZ	5331013516993	57328	N16591	..O-RING.....	4
22	XDFZZ		57328	57904-410	..CONNECTING,PIPE.....	2
23	XDFFF		57328	058037-341	..VALVE ASSEMBLY.....	1
24	PBFZZ	4810013508967	57328	57741-341	...SEAT,VALVE.....	1
25	PAFZZ	5330013517685	57328	N 4602	...GASKET.....	1
26	PAFZZ	5331013517623	57328	N 16554	...O-RING.....	1
27	XDFZZ		57328	57735-341	...PISTON,VALVE.....	1
28	PAFZZ	5331013517624	57328	N 16553	...O-RING.....	1
29	XDFZZ		57328	57760-341	...PIN,VALVE PISTON.....	1
30	PAFZZ	4730013457673	57328	N3459	..PLUG,PIPE.....	1
31	PAFZZ	5330121708127	D8286	A10X15DIN7603AL	..GASKET.....	1
32	XDFFF		57328	011430-635	..DRAIN TAP ASSEMBLY.....	1
33	PBFZZ	4730013512812	57328	055888-635	...PLUG,QUICK DISCON.....	1
34	PAFZZ	5330013517002	57328	013283	...GASKET.....	1
35	XDFZZ		57328	2371-635	...HOUSING,DRAIN.....	1
36	XDFZZ		57328	058050-410	..FILTER BOTTOM ASSY.....	1

END OF FIGURE

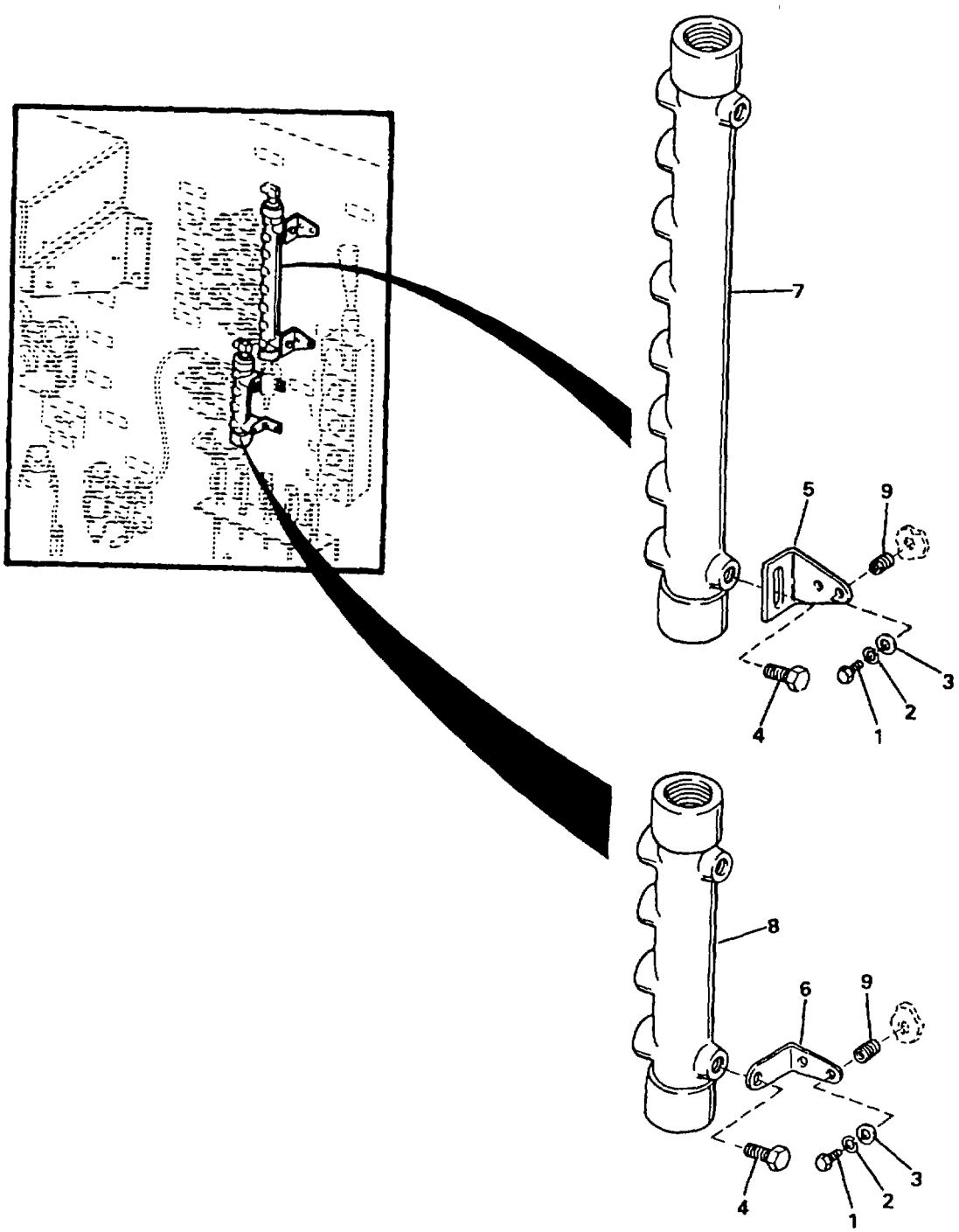

FIGURE 110. AIR MANIFOLDS

(1) ITEM NO	(2) SMR CODE	(3) NSN	(4) CAGEC	(5) PART NUMBER	(6) DESCRIPTION AND USABLE ON CODES(UOC)	(7) QTY
					GROUP 02 WATER PURIFICATION SYSTEM	
					FIG. 110 AIR MANIFOLDS	
1	PAOZZ	5305000213620	96906	MS35307-307	.SCREW,CAP,HEXAGON H.....	8
2	PAOZZ	5310009338121	96906	MS35338-139	.WASHER,LOCK.....	8
3	PAOZZ	5310010911248	96906	MS15795-810	.WASHER,FLAT.....	8
4	XDOZZ	5305000609831	96906	MS35307-404	.SCREW,CAP,HEXAGON H.....	4
5	XDOZZ		97403	13229E1195	.BRACKET,MOUNTING.....	2
6	XDOZZ		97403	13229E1388	.BRACKET,MOUNTING.....	2
7	PAOZZ	4610014218538	97403	13229E0296	.MANIFOLD,AIR.....	1
8	PAOZZ	4610014218533	97403	13229E0029	.MANIFOLD,AIR.....	1
9	PAFZZ	5340002904489	96906	MS122241	.INSERT,SCREW THREAD.....	4

END OF FIGURE

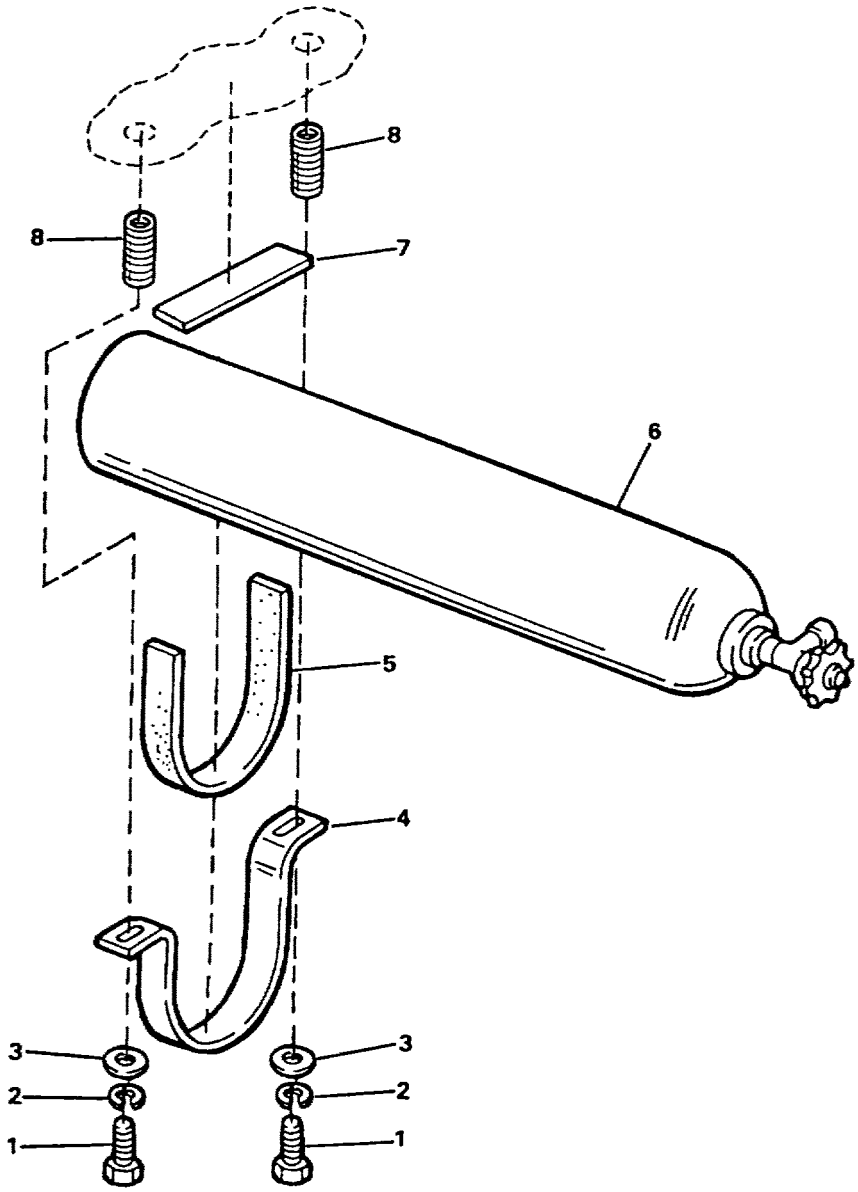

FIGURE 111. AIR TANK

(1) ITEM NO	(2) SMR CODE	(3) NSN	(4) CAGEC	(5) PART NUMBER	(6) DESCRIPTION AND USABLE ON CODES(UOC)	(7) QTY
					GROUP 02 WATER PURIFICATION SYSTEM	
					FIG. 111 AIR TANK	
1	PAFZZ	5305000213806	96906	MS35307-413	.SCREW,CAP,HEXAGON H.....	4
2	PAFZZ	5310009338778	96906	MS35338-143	.WASHER,LOCK.....	4
3	PAFZZ	5310007679425	96906	MS15795-818	.WASHER,FLAT.....	4
4	XDFZZ		97403	13229E0005	.BRACKET,AIR TANK.....	2
5	MFFZZ		97403	13229E0161-112	.NEOPRENE MAKE FROM BULK, P/N ASTM D2000 MIBC614, 0.375 THICK	2
6	PBFZZ		97403	13229E0113	.CYLINDER,COMPRESSED.....	1
7	MFFZZ		97403	13229E0161-336	.NEOPRENE MAKE FROM BULK, P/N ASTM D2000 MIBC614, 0.375 THICK	2
8	PAFZZ	5340009907158	96906	MS122165	.INSERT,SCREW THREAD.....	4

END OF FIGURE

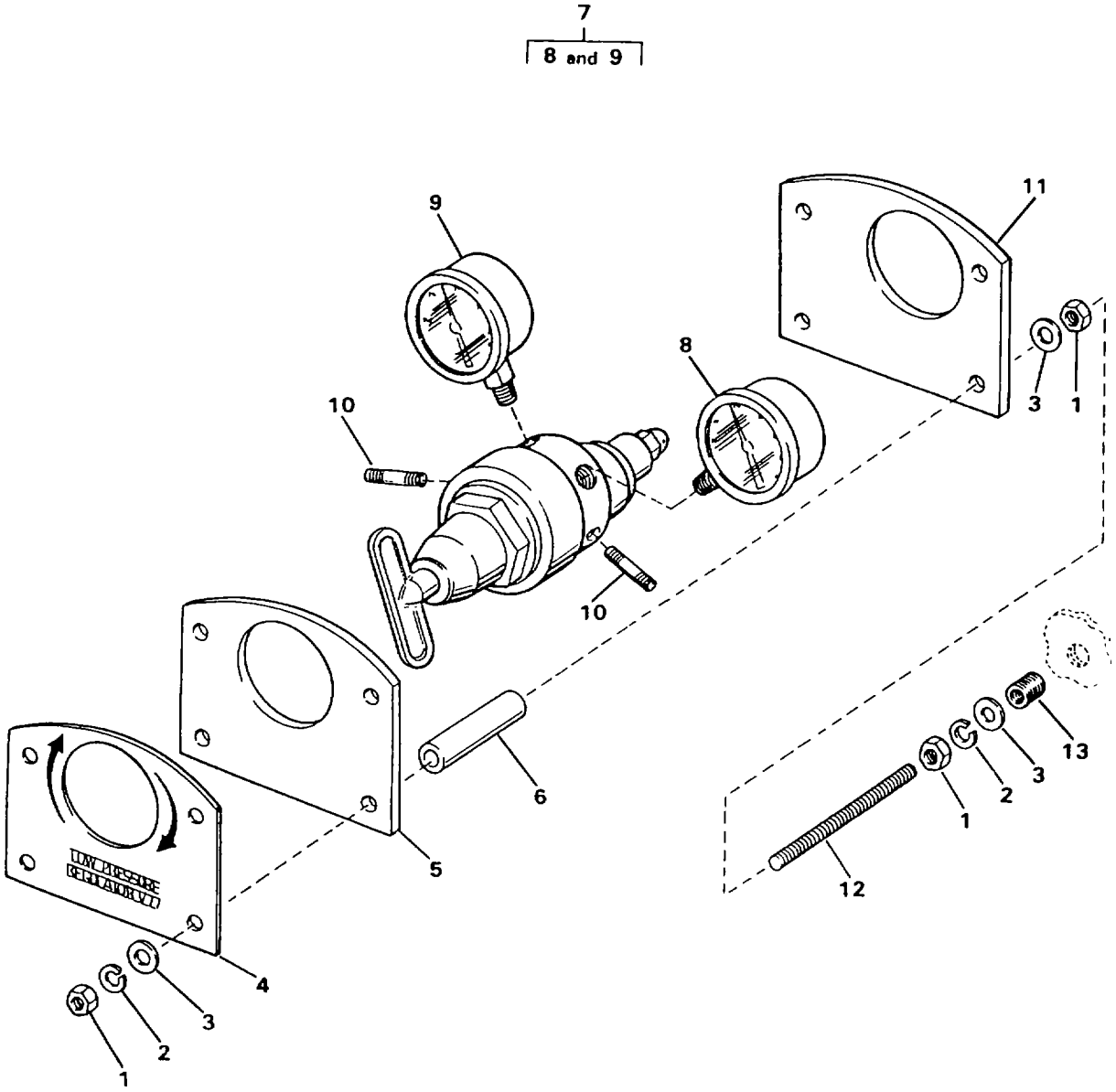

FIGURE 112. AIR REGULATOR

(1) ITEM NO	(2) SMR CODE	(3) NSN	(4) CAGEC	(5) PART NUMBER	(6) DESCRIPTION AND USABLE ON CODES(UOC)	(7) QTY
					GROUP 02 WATER PURIFICATION SYSTEM FIG. 112 AIR REGULATOR	
1	PAFZZ	5310009138881	96906	MS51971-3	.NUT,PLAIN,HEXAGON.....	12
2	PAFZZ	5310009847042	96906	MS35338-141	.WASHER,LOCK.....	8
3	PAFZZ	5310007737618	96906	MS15795-814	.WASHER,FLAT.....	12
4	XDFZZ		97403	13229E0635	.PLATE,ID GAUGE PANEL.....	1
5	XDFZZ		97403	13229E0118-1	.BRACKET,PRESS REG.....	1
6	MFFZZ		97403	13229E0161-207	.TUBE CUT TO LENGTH FROM BULK, P/N ASTM A269, 0.500 O.D. X 0.035 WALL THICKNESS.....	4
7	PBFFF	4820013516018	63026	VTS450B-346-0781 -4013	.REGULATOR,COMPRESSED.....	1
8	PAFZZ	6685010124235	63026	1424-0057	..GAGE,PRESSURE,DIAL HIGH PRESSURE.....	1
9	PAFZA	6685010124234	63026	1424-0039	..GAGE,PRESSURE,DIAL LOW PRESSURE.....	1
10	XDFZZ		97403	13229E1255-3	.NIPPLE,PIPE.....	2
11	XDFZZ		97403	13229E0118-2	.BRACKET,PRESS REG.....	1
12	XDFZZ		97403	13229E0161-203	.STUD,THREADED 0.375-16 UNC-2A X 5.75 INCHES LONG	4
13	PAFZZ	5325002904492	96906	MS122203	.INSERT,SCREW THREAD.....	4

END OF FIGURE

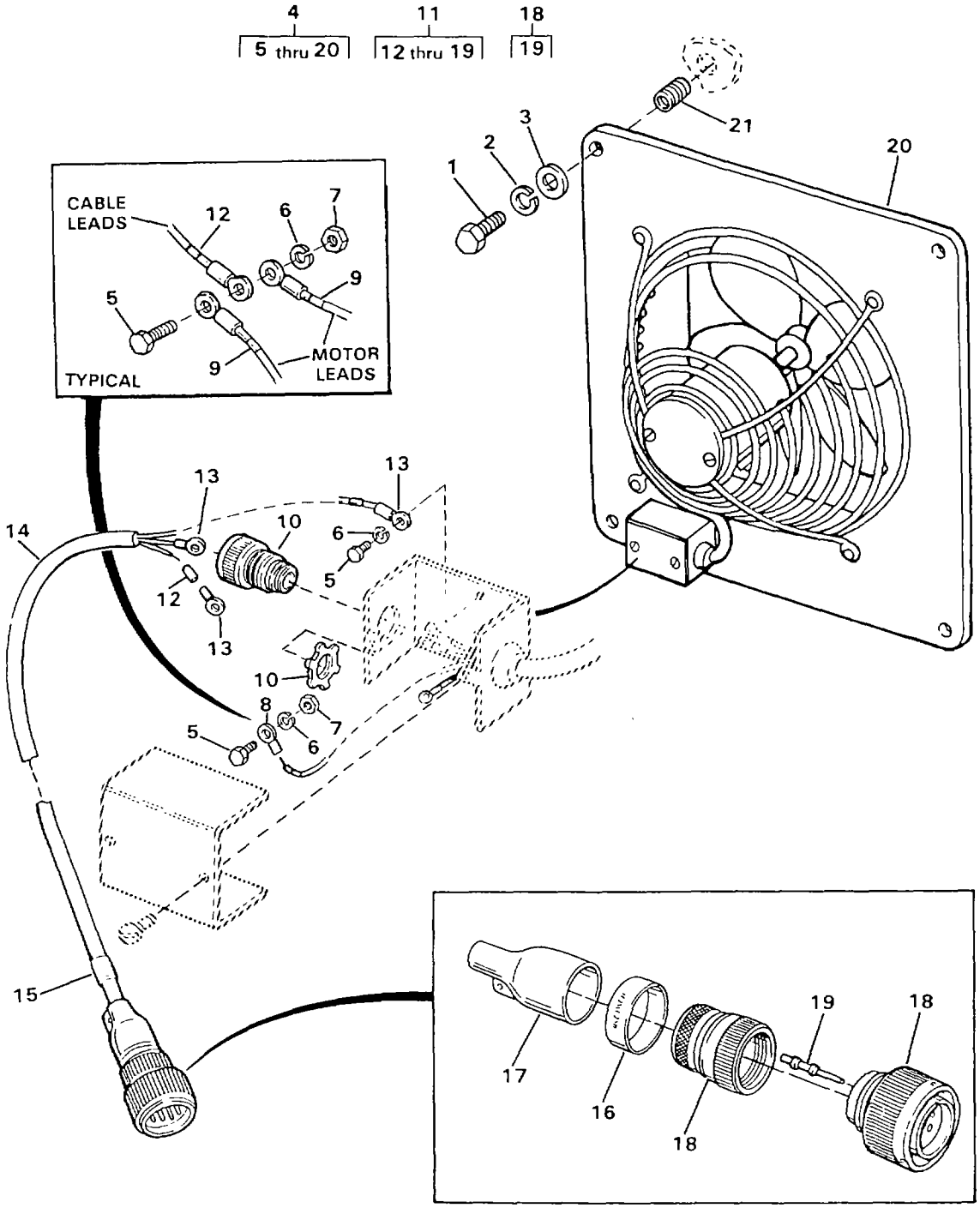

CONNECTOR	CONTACT PIN	PLUG	WIRE RUN
18	19	—	P53A
	19	—	P53B
	19	—	P53C

FIGURE 113. FAN ASSEMBLY
(Serial Nos. 16461 thru 16556)

(1) ITEM NO	(2) SMR CODE	(3) NSN	(4) CAGEC	(5) PART NUMBER	(6) DESCRIPTION AND USABLE ON CODES(UOC)	(7) QTY
					GROUP 02 WATER PURIFICATION SYSTEM FIG. 113 FAN ASSEMBLY (SERIAL NO. 16461 THRU 16556)	
1	PAOZZ	5305000213668	96906	MS35307-310	.SCREW,CAP,HEXAGON H.....	4
2	PAOZZ	5310009338121	96906	MS35338-139	.WASHER,LOCK.....	4
3	PAOZZ	5310010911248	96906	MS15795-810	.WASHER,FLAT.....	4
4	XDOFF		97403	13229E0671	.FAN ASSEMBLY.....	1
5	PAOZZ	5305013514313	97403	13229E0671-5	..SCREW,CAP,HEXAGON H 0.19-24 UNC-2A X 0.375 INCH LONG.....	3
6	PAOZZ	5310009338120	96906	MS35338-138	..WASHER,LOCK.....	3
7	PAOZZ	5310009349760	96906	MS35649-204	..NUT,PLAIN,HEXAGON.....	2
8	PAOZZ	5940001434780	96906	MS25036-108	..TERMINAL,LUG MOTOR LEADS.....	5
9	XDOZZ		01121	B-321HSCPS.9-750 8W	..MARKER MOTOR LEADS.....	4
10	PAFZZ	5975010297710	56501	2632	..BOX CONNECTOR,ELECT.....	1
11	XDFFF		97403	13229E1260-19	..CABLE ASSEMBLY.....	1
12	XDFZZ		01121	B-321HSCPS.9-750 8W	...MARKER.....	3
13	PAOZZ	5940001434780	96906	MS25036-108	...TERMINAL,LUG.....	3
14	MFFZZ		97403	13229E1260-19-3	...CABLE CUT TO LENGTH FROM BULK, P/N 13229E0741-1.....	1
15	XDFZZ		09647	120-02433-52	...MARKER.....	1
16	XDFZZ		09647	120-02433-128	...MARKER.....	1
17	PBFZZ	5970013484761	97403	13229E1213-1	...INSULATION SLEEVING.....	1
18	PBFFF	5935013545178	17549	CA3106E14S-7P-B-02-57	...CONNECTOR,PLUG,ELEC.....	1
19	PAFZZ	5999013448758	17549	030-8586-000	....CONTACT,ELECTRICAL PART OF KIT P/N 120-02593-P.....	3
20	PBOZZ	4140013557199	97403	13229E0806	..FAN,VENTILATING.....	1
21	PAFZZ	5340002904489	96906	MS122241	..INSERT,SCREW THREAD.....	4

END OF FIGURE

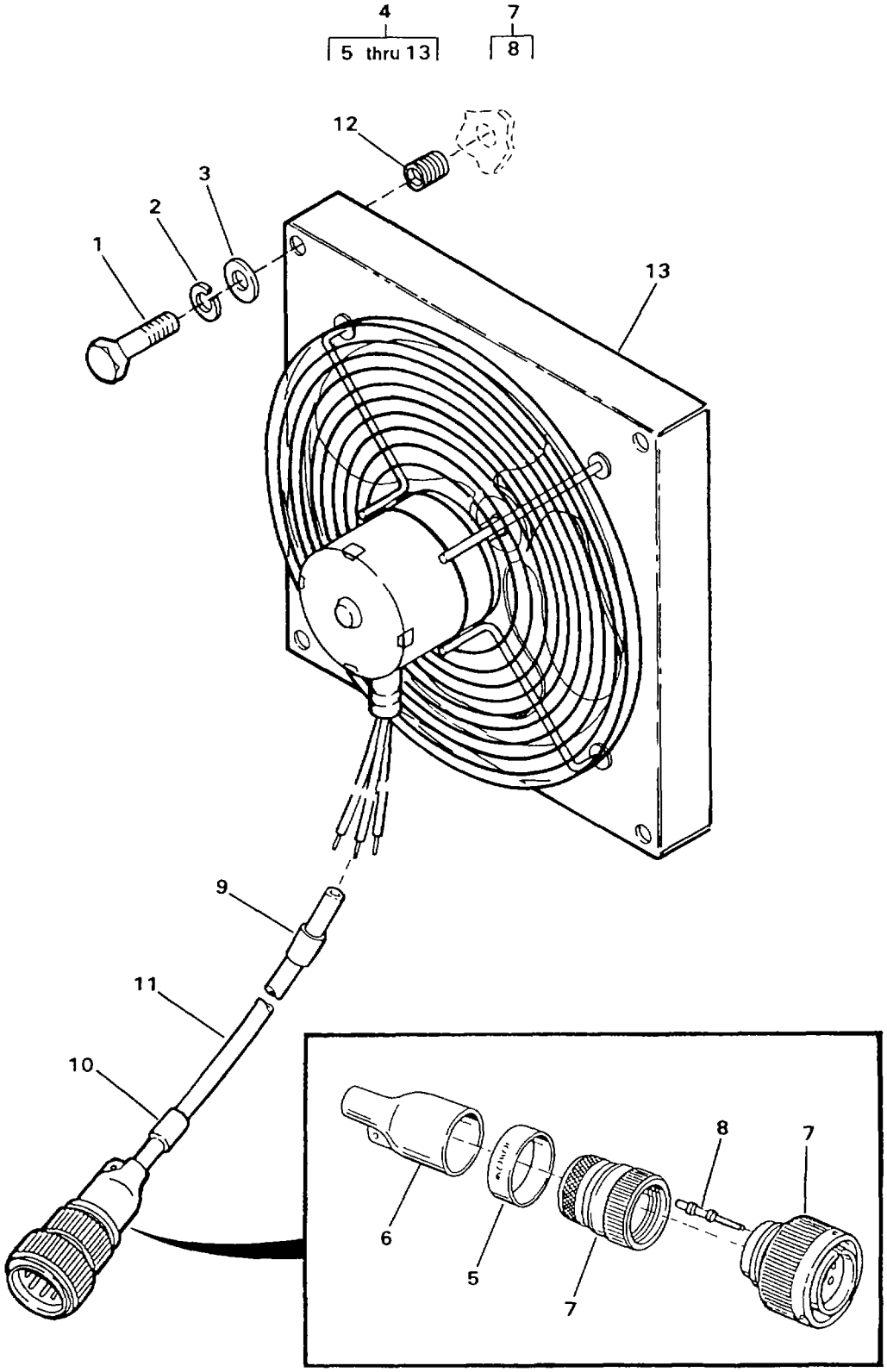

FIGURE 114. FAN ASSEMBLY
(Serial Nos. 16557 thru 17099)

(1) ITEM NO	(2) SMR CODE	(3) NSN	(4) CAGEC	(5) PART NUMBER	(6) DESCRIPTION AND USABLE ON CODES(UOC)	(7) QTY
					GROUP 02 WATER PURIFICATION SYSTEM FIG. 114 FAN ASSEMBLY (SERIAL NO. 16557 THRU 17099)	
1	PAOZZ	5305007218005	96906	MS35307-316	.SCREW,CAP,HEXAGON H.....	4
2	PAOZZ	5310009338121	96906	MS35338-139	.WASHER,LOCK.....	4
3	PAOZZ	5310010911248	96906	MS15795-810	.WASHER,FLAT.....	4
4	AFOFF		97403	13229E1418	.FAN ASSEMBLY.....	1
5	XDFZZ		09647	120-02433-128	..MARKER.....	1
6	PAFZZ	5970013484761	97403	13229E1213-1	..INSULATION SLEEVING.....	1
7	PAFFF	5935013545178	17549	CA3106E14S-7P-B-02-57	..CONNECTOR,PLUG,ELEC.....	1
8	PAFZZ	5999013448758	17549	030-8586-000	...CONTACT,ELECTRICAL PART OF KIT P/N 120-02593-P.....	3
9	XDFZZ		09647	120-02433-52	..MARKER.....	1
10	XDFZZ		09647	120-02433-128	..MARKER.....	1
11	MFFZZ		09647	120-02434-2	..TUBING,NONMETALLIC CUT TO LENGTH FROM BULK, P/N 13229E1282-1	V
12	PAFZZ	5340002904489	96906	MS122241	..INSERT,SCREW THREAD.....	4
13	PAOFF	4140013958275	97403	13229E1417	..FAN.....	1

END OF FIGURE

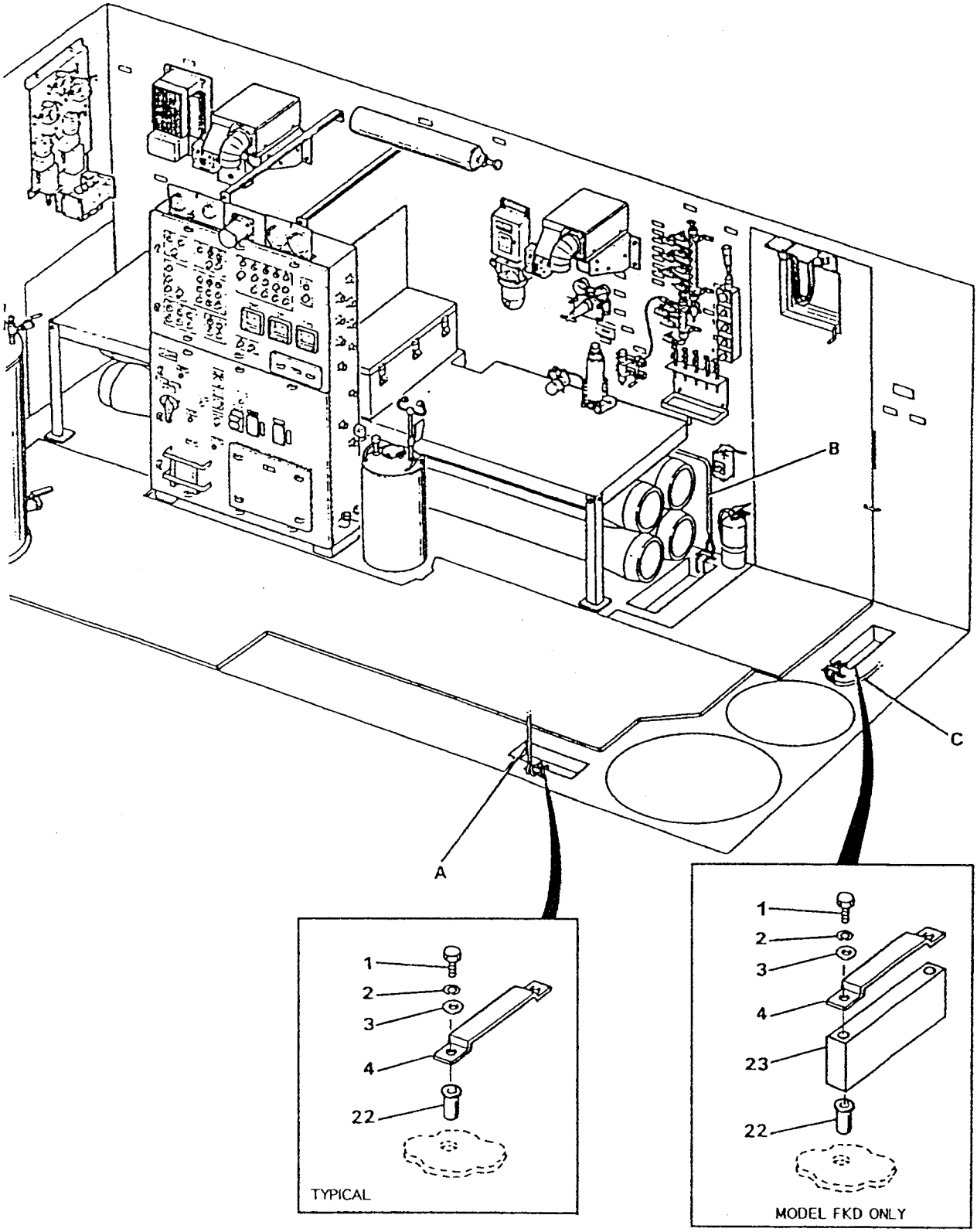

FIGURE 115. SUMP DRAIN HEATER (SHEET 1 OF 3)

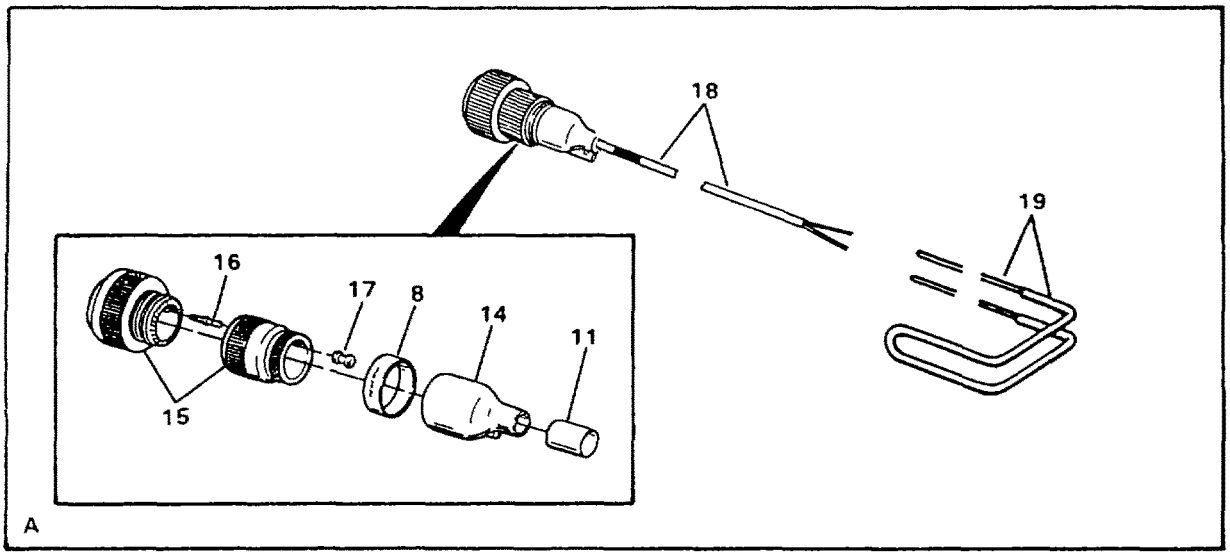

ASSY.	CONNECTOR	WIRE RUN	PIN	PLUG	TUBING	LENGTH
5	15	P42A	16	—	18	36.00
		P42B	16	—		
		P42C	16	17		

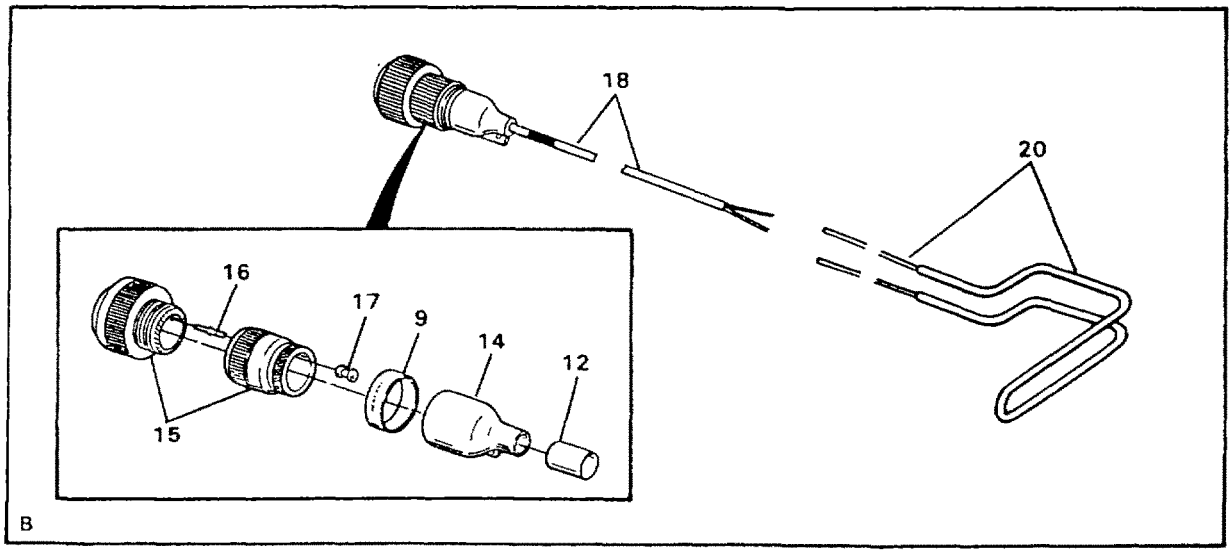

ASSY.	CONNECTOR	WIRE RUN	PIN	PLUG	TUBING	LENGTH
6	15	P31A	16	—	18	36.00
		P31B	16	—		
		P31C	16	17		

FIGURE 115. SUMP DRAIN HEATER (SHEET 2 OF 3)

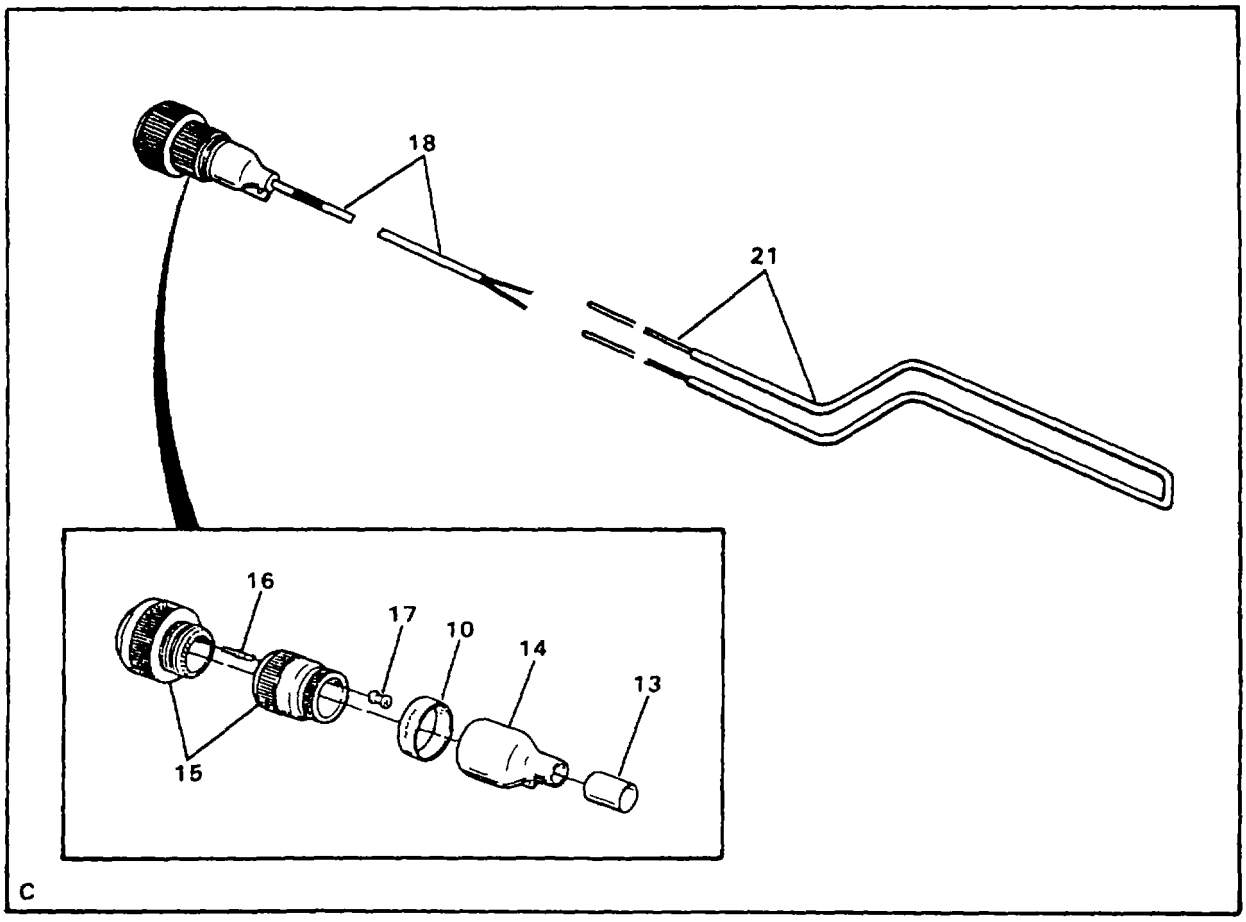

ASSY.	CONNECTOR	WIRE RUN	PIN	PLUG	TUBING	LENGTH
7	15	P32A	16	—	18	72.00
		P32B	16	—		
		P32C	16	17		

FIGURE 115. SUMP DRAIN HEATER (SHEET 3 OF 3)

(1) ITEM NO	(2) SMR CODE	(3) NSN	(4) CAGEC	(5) PART NUMBER	(6) DESCRIPTION AND USABLE ON CODES(UOC)	(7) QTY
					GROUP 02 WATER PURIFICATION SYSTEM FIG. 115 SUMP DRAIN HEATER	
1	PAOZZ	5305009844686	99974	8599621-312	.SCREW,CAP,HEXAGON H 0.190-32 ETN UNC-2A X 1 INCH LONG.....	6
1	PAOZZ	5305009844686	99974	8599621-312	.SCREW,CAP,HEXAGON H 0.190-32 FKD UNC-2A X 1 INCH LONG.....	4
1	PAOZZ		97403	13229E0161-354	.SCREW,CAP,HEXAGON H 0.190-32 FKD UNC-2A X 2.25 INCHES LONG.....	2
2	PAOZZ	5310009338120	96906	MS35338-138	.WASHER,LOCK.....	6
3	PAOZZ	5905013924321	96906	MS15765-842	.RESISTOR,FIXED,WIR.....	6
4	XDOZZ		97403	13229E0540	.BRACKET.....	3
5	PBOFF	6150013500180	97403	13229E1270-3	.WIRING HARNESS W48.....	1
6	PBOFF	6150013500181	97403	13229E1270-1	.WIRING HARNESS W20.....	1
7	PBOFF	6150013500182	97403	13229E1270-2	.WIRING HARNESS W21.....	1
8	XDFZZ		09647	120-02433-117	..MARKER.....	1
9	XDFZZ		09647	120-02433-106	..MARKER.....	1
10	XDFZZ		09647	120-02433-107	..MARKER.....	1
11	XDFZZ		09647	120-02433-55	..MARKER.....	1
12	XDFZZ		09647	120-02433-20	..MARKER.....	1
13	XDFZZ		09647	120-02433-21	..MARKER.....	1
14	PBFZZ	5970013484761	97403	13229E1213-1	..INSULATION SLEEVING.....	1
15	PBFFF	5935013545178	17549	CA3106E14S-7P-B-02-57	..CONNECTOR,PLUG,ELEC.....	3
16	PAFZZ	5999013448758	17549	030-8586-000	...CONTACT,ELECTRICAL PART OF KIT P/N 120-02593-P.....	3
17	XDFZZ		17549	225-0017-000	...PLUG,WIRE PART OF KIT P/N 120-02593-P.....	1
18	MOOZZ		97403	13229E1270 ITEM 2	..TUBING CUT TO LENGTH FROM BULK, P/N 13229E1282-2.....	3
19	XDFZZ		97403	13229E0521-2	..HEATER,SUMP DRAIN.....	1
20	XDFZZ		97403	13229E0521-1	..HEATER,SUMP DRAIN.....	1
21	PBOZZ	4540013553149	65586	087-872162-001	..HEATING ELEMENT,ELE.....	1
22	PAOZZ	5310012119838	29372	H111P363-130M	.NUT,PLAIN,BLIND RIV.....	6
23	XDOZZ		97403	13229E0410	.SPACER.....FKD	1

END OF FIGURE

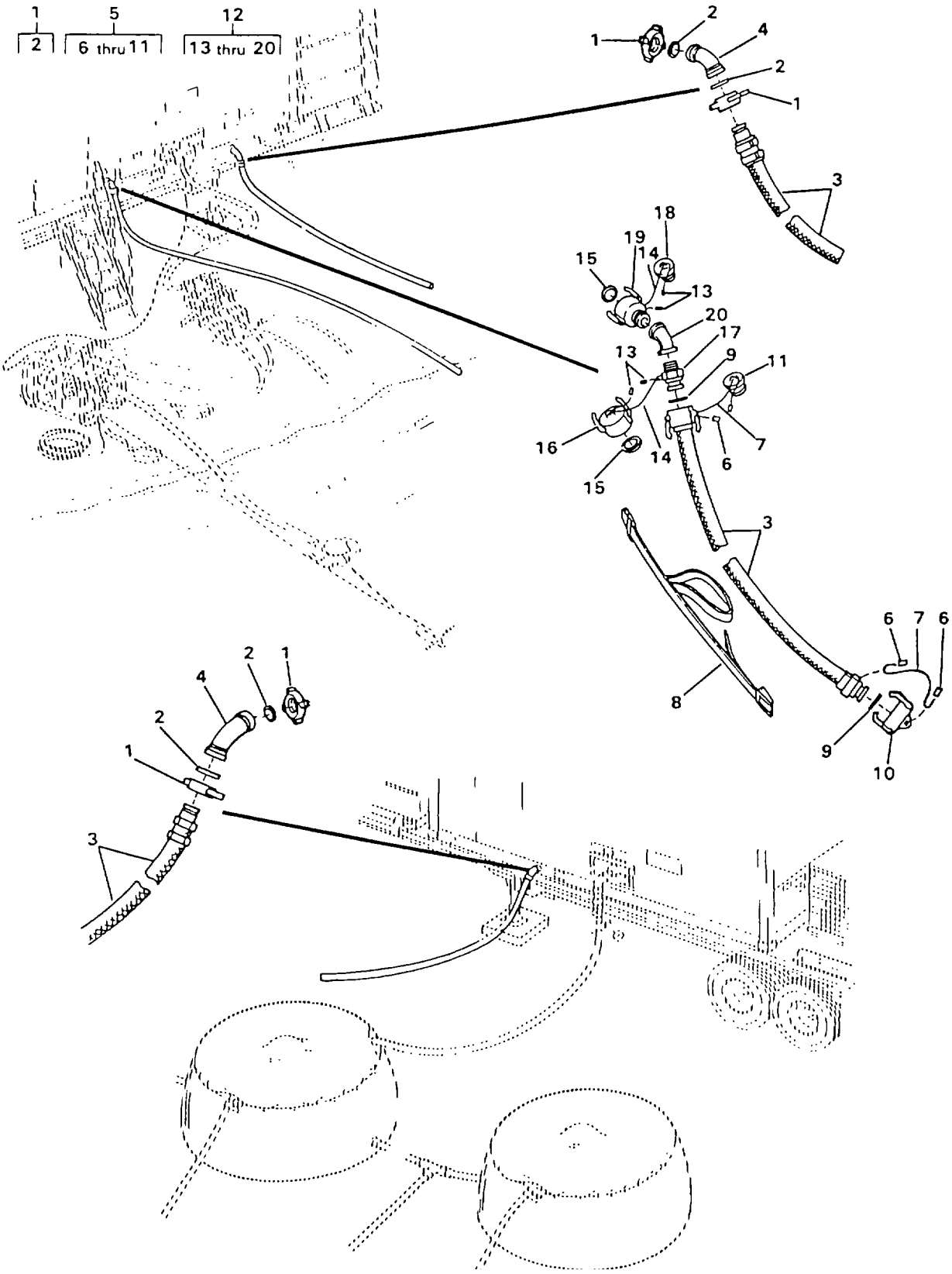

FIGURE 116. WASTE WATER HOSES (SHEET 1 OF 2)
(MODEL ETN ONLY)

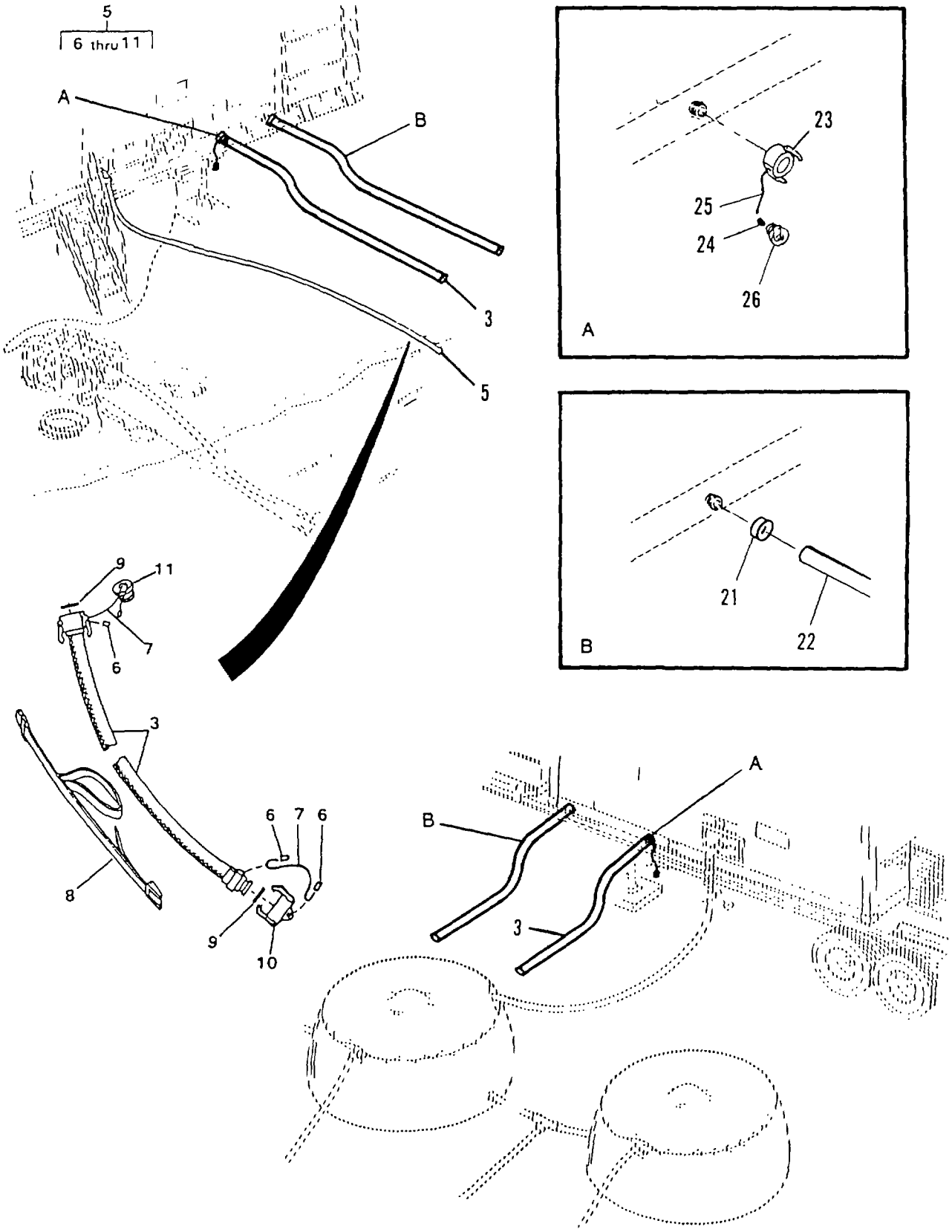

FIGURE 116. WASTE WATER HOSES (SHEET 2 OF 2)
(MODEL FKD ONLY)

(1) ITEM NO	(2) SMR CODE	(3) NSN	(4) CAGEC	(5) PART NUMBER	(6) DESCRIPTION AND USABLE ON CODES(UOC)	(7) QTY
					GROUP 02 WATER PURIFICATION SYSTEM	
					FIG. 116 WASTE WATER HOSES	
1	PBOZZ	4730009470364	19207	13229E1122	.COUPLING,CLAMP,PIPE.....ETN	4
2	PAOZZ	5330013498930	97403	13229E0855-3	..PACKING,PREFORMED.....ETN	1
3	PAOZZ	4720013537429	97403	13229E0127	.HOSE ASSEMBLY,NONME DRAIN ETN SUMP.....	2
3	PAOZZ		97403	13229E0188	.HOSE ASSEMBLY,NONME DRAIN FKD SUMP.....	2
4	XDOZZ		97403	13229E1141	.WASTE OUT ELBOW AGUACHEM ETN MODELS ONLY	2
5	PAOZZ	4720013528999	97403	13229E1157	.HOSE ASSEMBLY,NONME WASTE OUT...ETN	6
5	PAOZZ	4720013528999	97403	13229E1157	.HOSE ASSEMBLY,NONME WASTE OUT...FKD	7
6	PAOZZ	4030001455721	96906	MS51844-64	..SWAGING SLEEVE,WIRE.....	4
7	MOOZZ		09647	120-02598-3	..CABLE CUT TO LENGTH FROM BULK, P/N 13229E1147-1.....	2
8	PAOZZ	5340013496290	97403	13229E1000-1	..STRAP,WEBBING.....	1
9	PAOZZ	5330013498921	97403	13229E0857-4	..GASKET.....	2
10	PAOZZ	4730010866157	96906	MS27028-12	..CAP,QUICK DISCONNECT.....	1
11	PAOZZ		96906	MS27029-12	..COUPLING HALF, QUICK.....	1
12	XDOOO		97403	13229E0140	.PIPE SECTION WASTE OUT.....	2
13	PAOZZ	4030001455721	96906	MS51844-64	..SWAGING SLEEVE,WIRE.....	4
14	MOOZZ		97403	13229E0140-8	..CABLE CUT TO LENGTH FROM BULK, P/N 13229E1147-1.....	2
15	PAOZZ	5330013498921	97403	13229E0857-4	..GASKET.....	2
16	PAOZZ	4730010866157	96906	MS27028-12	..CAP,QUICK DISCONNECT.....	1
17	PAOZZ	4730001153740	96906	MS27022-12	..COUPLING HALF,QUICK.....	1
18	PAOZZ	4730010866157	96906	MS27028-12	..CAP,QUICK DISCONNECT.....	1
19	PAOZZ	4730004109530	96906	MS27026-12	..COUPLING HALF,QUICK.....	1
20	PAOZZ	4730013528964	97403	13229E0140-2	..ELBOW,PIPE 45 DEGREE, 2 INCH NPT.....	1
21	PAOZZ	4730009098627	96906	MS35842-13	.CLAMP,HOSE.....FKD	2
22	MOOZZ		97403	13229E0302-1R	.HOSE,RUBBER MAKE FROM HOSE FKD P/N 13229E0302, CUT TO 300 INCHES LONG.....	2
23	PAOZZ	4730006499103	96906	MS27024-11	.COUPLING HALF,QUICK.....FKD	2
24	PAOZZ	4030001455721	96906	MS51844-64	.SWAGING SLEEVE,WIRE.....FKD	4
25	MOOZZ		09647	120-02598-3	.CABLE CUT TO LENGTH FROM BULK, P/N 13229E1147-1..... FKD	2
26	PAOZZ		96906	MS27029-12	.COUPLING HALF,QUICK.....FKD	2

END OF FIGURE

FIGURE 117. LADDER

(1) ITEM NO	(2) SMR CODE	(3) NSN	(4) CAGEC	(5) PART NUMBER	(6) DESCRIPTION AND USABLE ON CODES(UOC)	(7) QTY
					GROUP 02 WATER PURIFICATION SYSTEM	
					FIG. 117 LADDER	
1	XDOZZ		97403	13229E0538	.HANDRAIL,LADDER.....	4
2	XDOZZ		97403	13229E0539	.HANDRAIL,LADDER.....	2
3	PAOOO	5310007737618	97403	13229E0030	.LADDER,ACCESS ASSY.....	2
4	PBOZZ		97403	13229E1352	..SNAP,HOOK.....	2
5	PBOZZ	4010012252681	97403	13229E0637	..LINK,CHAIN,DETACHAB.....	2
6	PAOZZ	5310009035966	96906	MS51971-1	..NUT,PLAIN,HEXAGON.....	2
7	PAOZZ	5310009338121	96906	MS35338-139	..WASHER,LOCK.....	2
8	PAOZZ	5310010911248	96906	MS15795-810	..WASHER,FLAT.....	4
9	PAOZZ	5305002078253	96906	MS35307-308	..SCREW,CAP,HEXAGON H.....	2
10	MOOZZ		97403	13229E0030-6	..CHAIN CUT TO LENGTH FROM BULK, P/N 13229E0195.....	2
11	PAOZZ	5305005765417	96906	MS35307-360	..SCREW,CAP,HEXAGON H.....	12
12	PAOZZ	5310009847042	96906	MS35338-141	..WASHER,LOCK.....	12
13	PAOZZ		96906	MS15795-814	..WASHER,FLAT.....	12
14	XDOZZ		97403	13229E1063	..CLAMP,HANDRAIL.....	6
15	PAOZZ	5305013535185	97403	13229E1063-5	..THUMBSCREW 0.375-16 UNC-2A X 1 INCH LONG.....	2
16	XDOZZ		97403	13229E0598	..LADDER,ACCESS.....	1

END OF FIGURE

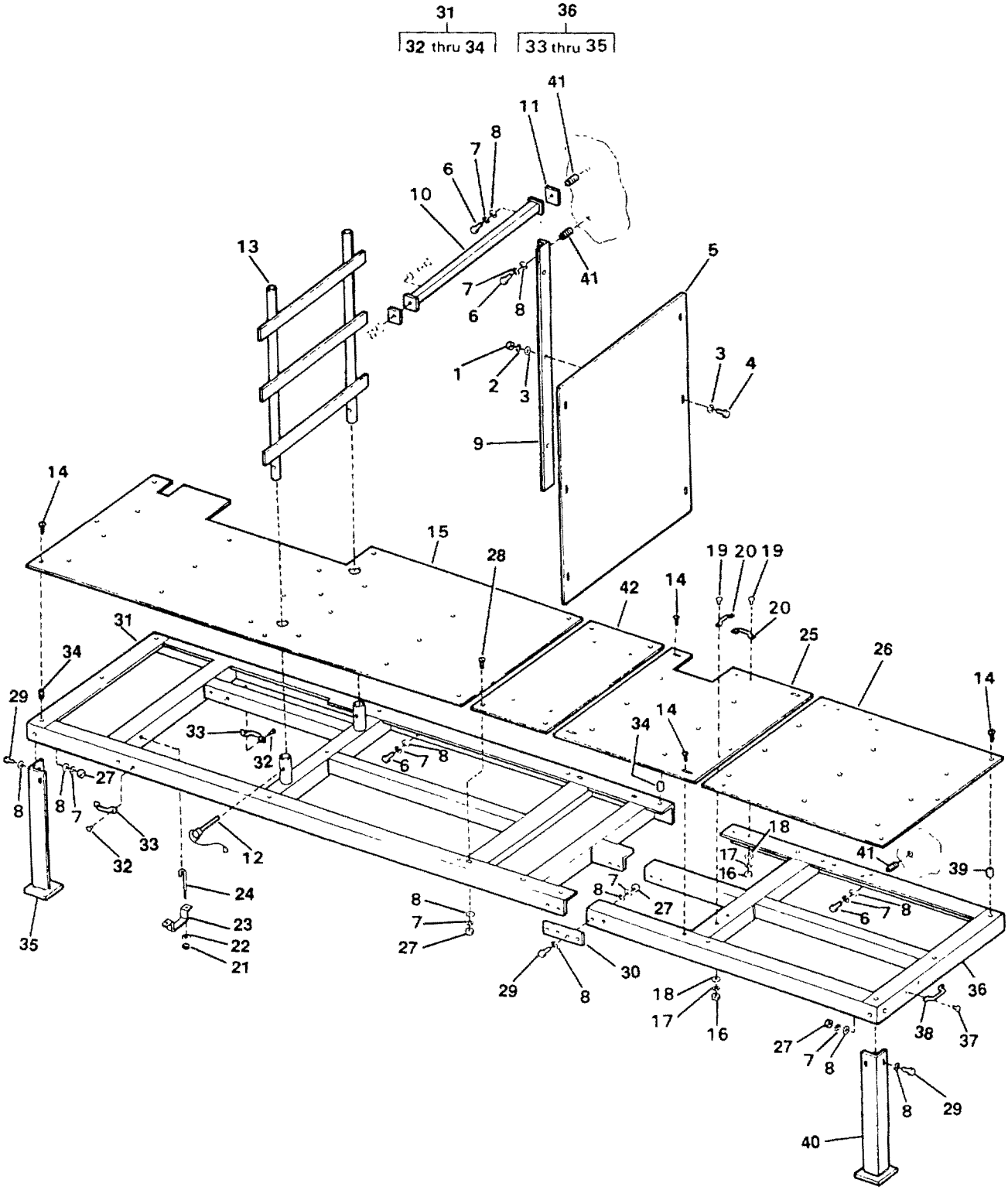

FIGURE 118. ACCESSORY TABLES

(1) ITEM NO	(2) SMR CODE	(3) NSN	(4) CAGEC	(5) PART NUMBER	(6) DESCRIPTION AND USABLE ON CODES(UOC)	(7) QTY
					GROUP 02 WATER PURIFICATION SYSTEM FIG. 118 ACCESSORY TABLES	
1	PAOZZ	5310009035966	96906	MS51971-1	.NUT,PLAIN,HEXAGON.....	3
2	PAOZZ	5310009338121	96906	MS35338-139	.WASHER,LOCK.....	3
3	PAOZZ	5310010911248	96906	MS15795-810	.WASHER,FLAT.....	6
4	PAOZZ	5305000213620	96906	MS35307-307	.SCREW,CAP,HEXAGON H.....	3
5	XDOZZ		97403	13229E1076	.PANEL DIVIDER.....	1
6	PAOZZ	5305000213740	96906	MS35307-364	.SCREW,CAP,HEXAGON H.....	12
7	PAOZZ	5310009847042	96906	MS35338-141	.WASHER,LOCK.....	28
8	PAOZZ	5310007737618	96906	MS15795-814	.WASHER,FLAT.....	44
9	XDOZZ		97403	13229E0232	.SUPPORT,CABINET.....	1
10	XDOZZ		97403	13229E0609	.SUPPORT,CONT PANEL.....	2
11	PAOZZ		97403	13229E0826-1	.CUSHIONING MATERIAL.....ETN	2
11	PAOZZ		97403	13229E0826-5	.CUSHIONING MATERIAL.....FKD	4
12	PBOZZ	5315013518179	97403	13229E0566	.PIN,STRAIGHT,HEADED.....	2
13	XDOZZ		97403	13229E0651	.GATE FILTER CARTRIDGE RETAINER.....	1
14	PAOZZ	5305013521246	97403	13229E0161-141	.SCREW 0.25-20 UNC-2A X 0.375 INCH LONG.....	16
15	XDOZZ		97403	13229E0943	.TOP,TABLE,LS.....	1
16	PAOZZ	5310009349760	96906	MS35649-204	.NUT,PLAIN,HEXAGON.....	4
17	PAOZZ	5310009338120	96906	MS35338-138	.WASHER,LOCK.....	2
18	PAOZZ	5905013924321	96906	MS15765-842	.RESISTOR,FIXED,WIR.....	4
19	PAOZZ	5305000509231	96906	MS51957-65	.SCREW,MACHINE 0.190-24 UNC-2A X 0.75 INCH LONG.....	2
20	PBOZZ	5340005220381	19220	6411E	.LOOP,STRAP FASTENER.....	2
21	PAOZZ	5310009146028	96906	MS51922-18	.NUT,SELF-LOCKING,HE.....	4
22	PAOZZ	5310007737618	96906	MS15795-814	.WASHER,FLAT.....	4
23	XDOZZ		97403	13229E1012	.BRACKET.....	2
24	XDOZZ		97403	13229E1254	.J-BOLT.....	4
25	XDOZZ		97403	13229E0941	.TOP,TABLE,CENTER.....	1
26	XDFZZ		97403	13229E0942	.TOP,TABLE,RSS.....	1
27	PAOZZ	5310009138881	96906	MS51971-3	.NUT,PLAIN,HEXAGON.....	12
28	PAOZZ	5305013522117	97403	13229E0161-149	.SCREW,MACHINE 0.375-16 UNC-2A X 1 INCH LONG.....	4
29	PAOZZ	5305007175467	96906	MS35307-362	.SCREW,CAP,HEXAGON H.....	12
30	XDOZZ		97403	13229E0991	.PLATE,ADJUSTING.....	2
31	XDOZZ		97403	13229E0650	.FRAME,TABLE LEFT SIDE.....	1
32	PAOZZ	5320013490932	97403	13229E0350-2	..RIVET,BLIND.....	4
33	PAOZZ	5340005220381	19220	6411E	..LOOP,STRAP FASTENER.....	2
34	PAFZZ	5325002007224	96906	MS122081	..INSERT,SCREW THREAD.....	16
35	XDOZZ		97403	13229E1071	.SUPPORT,TABLE LEFT SIDE.....	1
36	XDFZZ		97403	13229E1175	.FRAME,TABLE RIGHT SIDE.....	1
37	PAOZZ	5320013518808	97403	13229E0350-3	..RIVET,BLIND.....	2
38	PAOZZ	5340005220381	19220	6411E	..LOOP,STRAP FASTENER.....	1
39	PAFZZ	5325002007224	96906	MS122081	..INSERT,SCREW THREAD.....	5
40	XDFZZ		97403	13229E1072	.SUPPORT,TABLE RIGHT SIDE.....	1
41	PAFZZ	5325002904492	96906	MS122203	.INSERT,SCREW THREAD.....	12
42	XDOZZ		97403	13229E0944	.TOP,TABLE,SUPPORT.....	1

END OF FIGURE

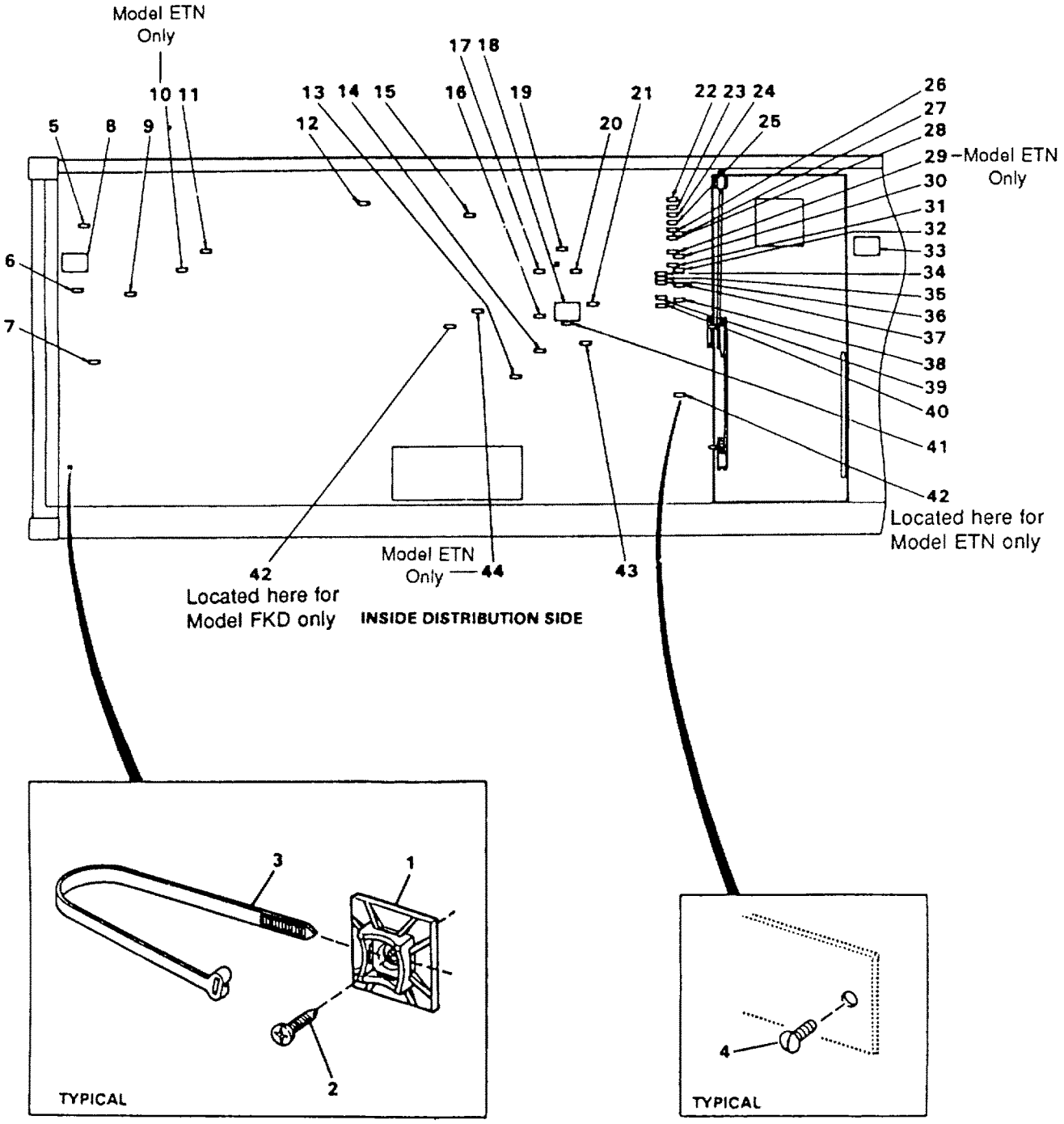

FIGURE 119. ID PLATE & CABLE MOUNTS (SHEET 1 OF 4)

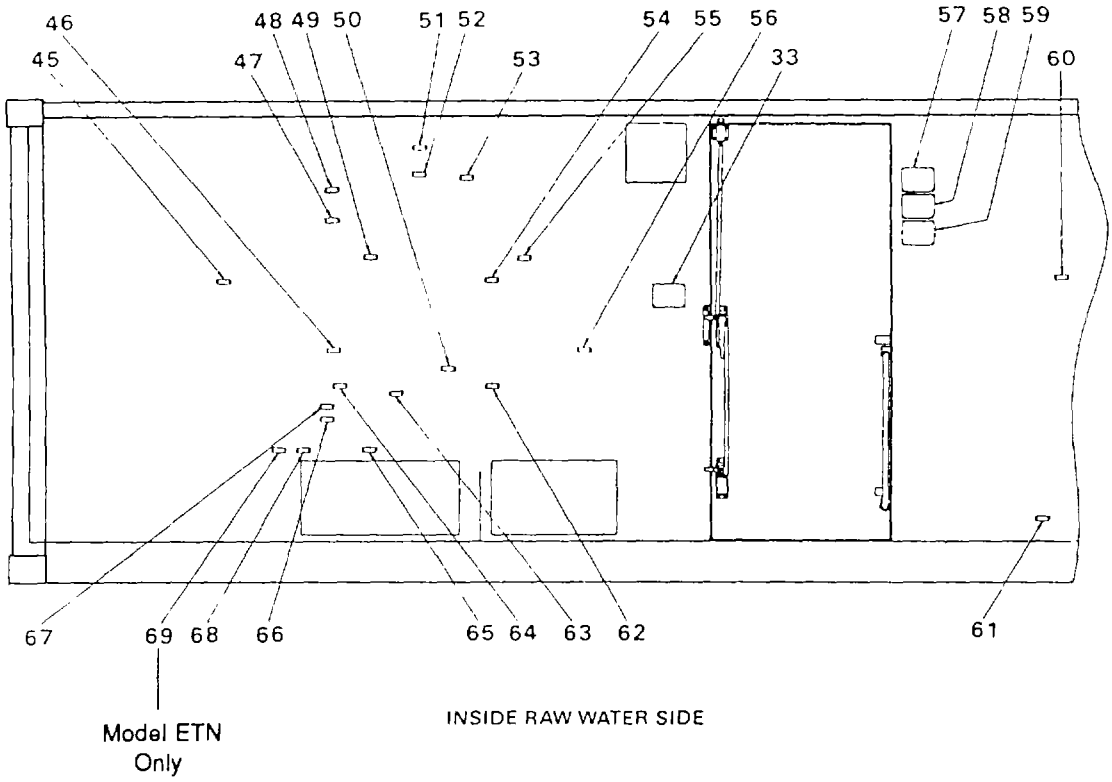

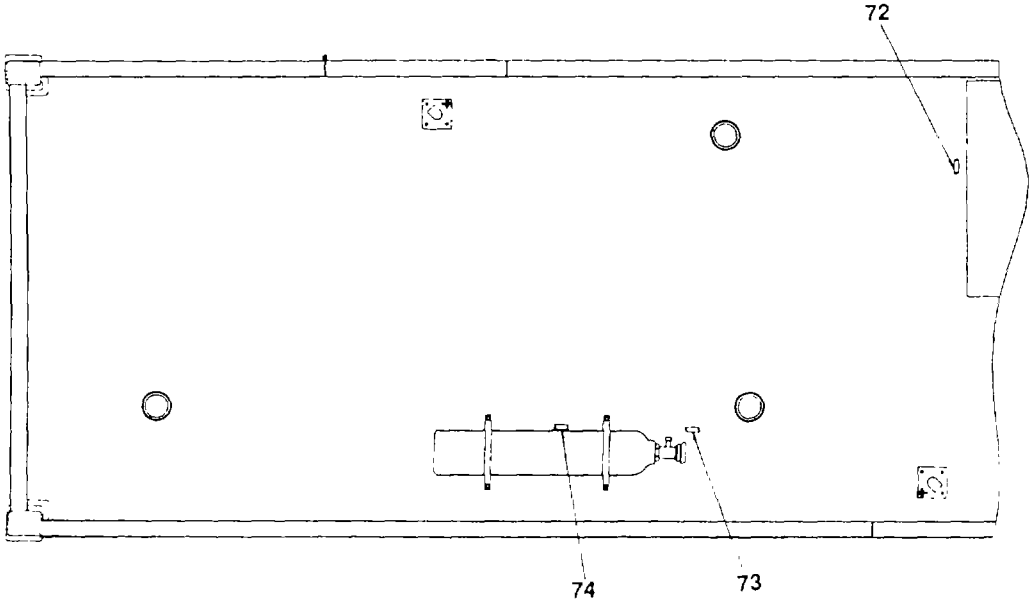

FIGURE 119. ID PLATE & CABLE MOUNTS (SHEET 2 OF 4)

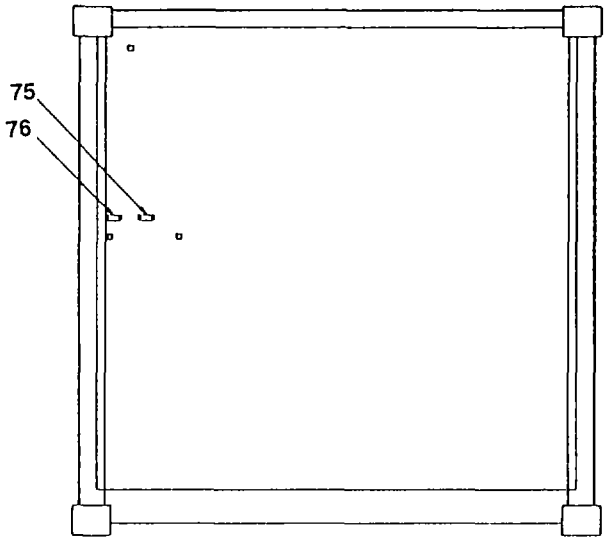

INSIDE HIGH PRESSURE
PUMP SIDE

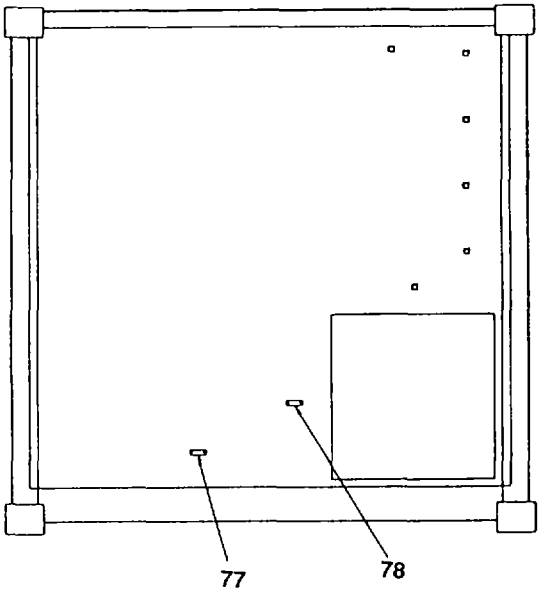

FIGURE 119. ID PLATE & CABLE MOUNTS (SHEET 3 OF 4)

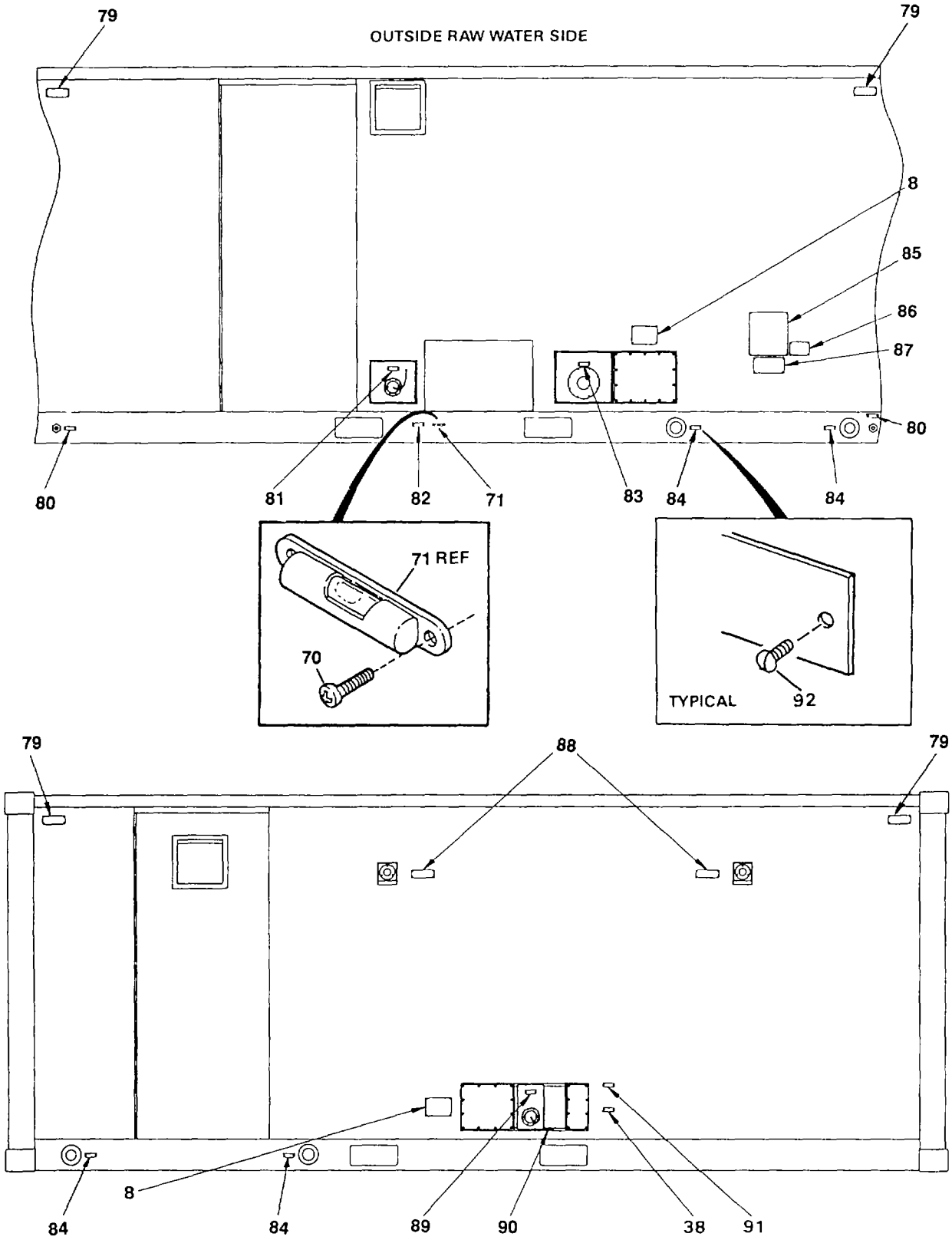

FIGURE 119. ID PLATE & CABLE MOUNTS (SHEET 4 OF 4)

(1) ITEM NO	(2) SMR CODE	(3) NSN	(4) CAGEC	(5) PART NUMBER	(6) DESCRIPTION AND USABLE ON CODES(UOC)	(7) QTY
					GROUP 02 WATER PURIFICATION SYSTEM FIG. 119 ID PLATE & CABLE MOUNTS	
1	PBOZZ	5975013589415	97403	13229E1180	.MOUNT,CABLE TIE.....	226
2	PAOZZ	5305007214782	96906	MS24628-34	.SCREW,TAPPING.....ETN	226
2	PAOZZ	5305007214782	96906	MS24628-34	.SCREW,TAPPING.....FKD	220
3	PAOZZ	9905000274577	96906	MS3367-1-9	.STRAP,TIEDOWN,ELECT.....	V
3	PAOZZ	5975000742072	96906	MS3367-2	.BAND,MARKER.....	V
3	PAOZZ	5975007275153	96906	MS3367-4-9	.STRAP,TIEDOWN,ELECT.....	V
3	PAOZZ	5975001113208	96906	MS3367-5-9	.STRAP,TIEDOWN,ELECT.....	V
3	PAOZZ	5975012055379	96906	MS3367-7	.STRAP.....	V
4	PAOZZ	5320013490933	97403	13229E0350-1	.RIVET,BLIND.....ETN	242
4	PAOZZ	5320013490933	97403	13229E0350-1	.RIVET,BLIND.....FKD	192
5	XDOZZ		97403	13229E0782-105	.PLATE,ID PRODUCT VACUUM BREAKER.....	1
6	XDOZZ		97403	13229E0782-107	.PLATE,ID PRODUCT HIGH PRESSURE RELEASE 1.....	
7	XDOZZ		97403	13229E0782-122	.PLATE,ID UTILITY HOSE PRODUCT WATER.....	1
8	XDOZZ		97403	13229E0411-12	.PLATE,ID DISCONNECT WARNING.....	3
9	XDOZZ		97403	13229E0782-22	.PLATE,ID HEATER POWER SUPPLY.....	3
10	XDOZZ		97403	13229E0782-32	.PLATE,ID TDS METER.....ETN	1
11	XDOZZ		97403	13229E0782-23	.PLATE,ID HEATER.....	1
12	XDOZZ		97403	13229E0782-108	.PLATE,ID PRODUCT CHECK.....	1
13	XDOZZ		97403	13229E0782-27	.PLATE,ID H.P. AIR AUTO BLOWDOWN.....	1
14	XDOZZ		97403	13229E0782-28	.PLATE,ID H.P. AIR AUTO BLOWDOWN BLOCK.....	1
15	XDOZZ		97403	13229E0782-109	.PLATE,ID HYPOCHLORITE INJECTOR.....	1
16	XDOZZ		97403	13229E0782-117	.PLATE,ID AIR SYSTEM L.P. PRESSURE RELIEF.....	1
17	XDOZZ		97403	13229E0782-34	.PLATE,ID AIR MANIFOLD PRESSURE.....	1
18	XDOZZ		97403	13229E0411-11	.PLATE,ID AIR COMPRESSOR WARNING.....	1
19	XDOZZ		97403	13229E0782-24	.PLATE,ID HEATER 2.....	1
20	XDOZZ		97403	13229E0782-35	.PLATE,ID AIR TANK PRESSURE.....	1
21	XDOZZ		97403	13229E0782-33	.PLATE,ID AIR DRYER.....	1
22	XDOZZ		97403	13229E0782-59	.PLATE,ID MEDIA FILTER FLUSH BLOCK.....	1
23	XDOZZ		97403	13229E0782-63	.PLATE,ID MEDIA FILTER BACKWASH INLET BLOCK.....	1
24	XDOZZ		97403	13229E0782-61	.PLATE,ID MEDIA FILTER BACKWASH OUTLET BLOCK.....	1
25	XDOZZ		97403	13229E0782-62	.PLATE,ID MEDIA FILTER INLET BLOCK.....	1
26	XDOZZ		97403	13229E0782-60	.PLATE,ID MEDIA FILTER OUTLET BLOCK.....	1
27	XDOZZ		97403	13229E0782-36	.PLATE,ID DISTRIBUTION PUMP POWER.....	1
28	XDOZZ		97403	13229E0782-64	.PLATE,ID CLEAN/FLUSH OUTLET BLOCK.....	1
29	XDOZZ		97403	13229E0782-58	.PLATE,ID TURBIDITY METER BLOCK..ETN	1

(1) ITEM NO	(2) SMR CODE	(3) NSN	(4) CAGEC	(5) PART NUMBER	(6) DESCRIPTION AND USABLE ON CODES(UOC)	(7) QTY
30	XDOZZ		97403	13229E0782-37	.PLATE,ID DISTRIBUTION PUMP ON.....	1
31	XDOZZ		97403	13229E0782-65	.PLATE,ID MANIFOLD BLEED.....	1
32	XDOZZ		97403	13229E0782-38	.PLATE,ID DISTRIBUTION PUMP OFF.....	1
33	XDOZZ		97403	13229E0411-6	.PLATE,ID CHEMICAL WARNING.....	2
34	XDOZZ		97403	13229E0782-69	.PLATE,ID UTILITY AIR BLOCK.....	1
35	XDOZZ		97403	13229E0782-66	.PLATE,ID AIR BLANKET BLOCK.....	1
36	XDOZZ		97403	13229E0782-67	.PLATE,ID BACKWASH AIR BLOCK.....	1
37	XDOZZ		97403	13229E0782-39	.PLATE,ID LIGHT SWITCH.....	1
38	XDOZZ		97403	13229E0782-7	.PLATE,ID UTILITY OUTLET.....	2
39	XDOZZ		97403	13229E0782-68	.PLATE,ID AIR PURGE MEDIA FILTER BLOCK.....	1
40	XDOZZ		97403	13229E0782-70	.PLATE,ID MANIFOLD BLEED.....	1
41	XDOZZ		97403	13229E0782-26	.PLATE,ID H.P. AIR FILTER.....	1
42	XDOZZ		97403	13229E0782-40	.PLATE,ID HEATER 2 THERMOSTAT.....	1
43	XDOZZ		97403	13229E0782-118	.PLATE,ID SECONDARY AIR DRYER DRAIN.....	1
44	XDOZZ		97403	13229E0782-159	.PLATE,ID TURBIDITY MEDIA AIR ETN DRYER.....	1
45	XDOZZ		97403	13229E0782-83	.PLATE,ID MEDIA FILTER UPPER DRAIN.....	1
46	XDOZZ		97403	13229E0782-78	.PLATE,ID BACKWASH INLET.....	1
47	XDOZZ		97403	13229E0782-79	.PLATE,ID MEDIA FILTER INLET.....	1
48	XDOZZ		97403	13229E0782-80	.PLATE,ID BACKWASH OUTLET.....	1
49	XDOZZ		97403	13229E0782-95	.PLATE,ID CARTRIDGE FILTER VENT.....	1
50	XDOZZ		97403	13229E0782-123	.PLATE,ID CARTRIDGE FILTER ETN OUTLET SAMPLE.....	1
51	XDOZZ		97403	13229E0782-42	.PLATE,ID AIR BLANKET.....	1
52	XDOZZ		97403	13229E0782-41	.PLATE,ID BACKWASH AIR INLET.....	1
53	XDOZZ		97403	13229E0782-93	.PLATE,ID MEDIA FILTER FLUSH.....	1
54	XDOZZ		97403	13229E0782-77	.PLATE,ID FEED.....	1
55	XDOZZ		97403	13229E0782-74	.PLATE,ID STRAINER VENT.....	1
56	XDOZZ		97403	13229E0782-48	.PLAIE,ID HEATER 1 THERMOSTAT.....	1
57	XDOZZ		97403	13229E0411-2	.PLATE,ID H.P. HOSE RESTRAINT WARNING.....	1
58	XDOZZ		97403	13229E0411-7	.PLATE,ID GROUND ROD WARNING.....	1
59	XDOZZ		97403	13229E0411-5	.PLATE,ID AIR PRESSURE WARNING.....	1
60	XDOZZ		97403	13229E0782-155	.PLATE,ID NBC FILTER VENT/AIR PURGE.....	1
61	XDOZZ		97403	13229E0782-125	.PLATE,ID NBC MEDIA BLOWOUT.....	1
62	XDOZZ		97403	13229E0782-76	.PLATE,ID CLEANING BY-PASS.....	1
63	XDOZZ		97403	13229E0782-43	.PLATE,ID BACKWASH HYPOCHLORITE PUMP.....	1
64	XDOZZ		97403	13229E0782-94	.PLATE,ID CARTRIDGE FILTER BLOCK.....	1
65	XDOZZ		97403	13229E0782-96	.PLATE,ID CARTRIDGE FILTER DRAIN.....	1
66	XDOZZ		97403	13229E0782-92	.PLATE,ID MEDIA FILTER OUTLET.....	1
67	XDOZZ		97403	13229E0782-90	.PLATE,ID MEDIA FILTER OUTLET SAMPLE.....	1
68	XDOZZ		97403	13229E0782-89	.PLATE,ID SEQUESTRANT INJECTOR.....	1
69	XDOZZ		97403	13229E0782-91	.PLATE,ID TURBIDITY METER INLET..ETN DISCONNECT.....	1

(1) ITEM NO	(2) SMR CODE	(3) NSN	(4) CAGEC	(5) PART NUMBER	(6) DESCRIPTION AND USABLE ON CODES(UOC)	(7) QTY
70	XDOZZ		09647	120-01369-10	.SCREW,MACHINE 0.125-40 UNC-2A X 0.62 INCH LONG.....	2
71	PAOZZ	4610014368821	97403	13229E0235	.LEVEL,BUBBLE.....	2
72	XDOZZ		97403	13229E0782-82	.PLATE,ID MEDIA FILTER VENT.....	1
73	XDOZZ		97403	13229E0782-116	.PLATE,ID AIR STORAGE.....	1
74	XDOZZ		97403	13229E0782-52	.PLATE,ID AIR STORAGE TANK.....	1
75	XDOZZ		97403	13229E0782-72	.PLATE,ID POLY SYSTEM FLUSH QUICK.....	1
76	XDOZZ		97403	13229E0782-88	.PLATE,ID SEQUESTRANT SYSTEM FLUSH DISCONNECT.....	1
77	XDOZZ		97403	13229E0782-156	.PLATE,ID NBC FILTER DRAIN.....	1
78	XDOZZ		97403	13229E0782-112	.PLATE,ID CLEAN RETURN.....	1
79	XDOZZ		97403	13229E0397-1	.PLATE,ID LIFTING POINT.....	4
80	XDOZZ		97403	13229E0782-1	.PLATE,ID GROUND.....	2
81	XDOZZ		97403	13229E0782-2	.PLATE,ID WASTE OUTLET.....	1
82	XDOZZ		97403	13229E0782-3	.PLATE,ID LEVEL INDICATOR.....	1
83	XDOZZ		97403	13229E0782-5	.PLATE,ID RAW WATER INLET.....	1
84	XDOZZ		97403	13229E0782-25	.PLATE,ID DRAIN.....	4
85	XDOZZ		97403	13229E0025	.PLATE,ID LIFTING OPERATION INS.....	1
86	XDOZZ		97403	13229E0022	.PLATE,ID MIODEL NO., SERIAL NO., CONTRACT DATA.....	1
87	XDOZZ		97403	13229E1194	.PLATE,ID CSC SAFETY APPROVAL.....	1
88	XDOZZ		97403	13229E0397-3	.PLATE,ID HEATER EXHAUST.....	2
89	XDOZZ		97403	13229E0782-18	.PLATE,ID PRODUCT WATER OUTLET.....	1
90	XDOZZ		97403	13229E0782-111	.PLATE,ID POTABLE WATER SHUTOFF.....	1
91	XDOZZ		97403	13229E0782-11	.PLATE,ID AUXILIARY POWER INPUT.....	1
92	PAOZZ	5320013522765	97403	13229E0350-5	.RIVET,BLIND.....	14

END OF FIGURE

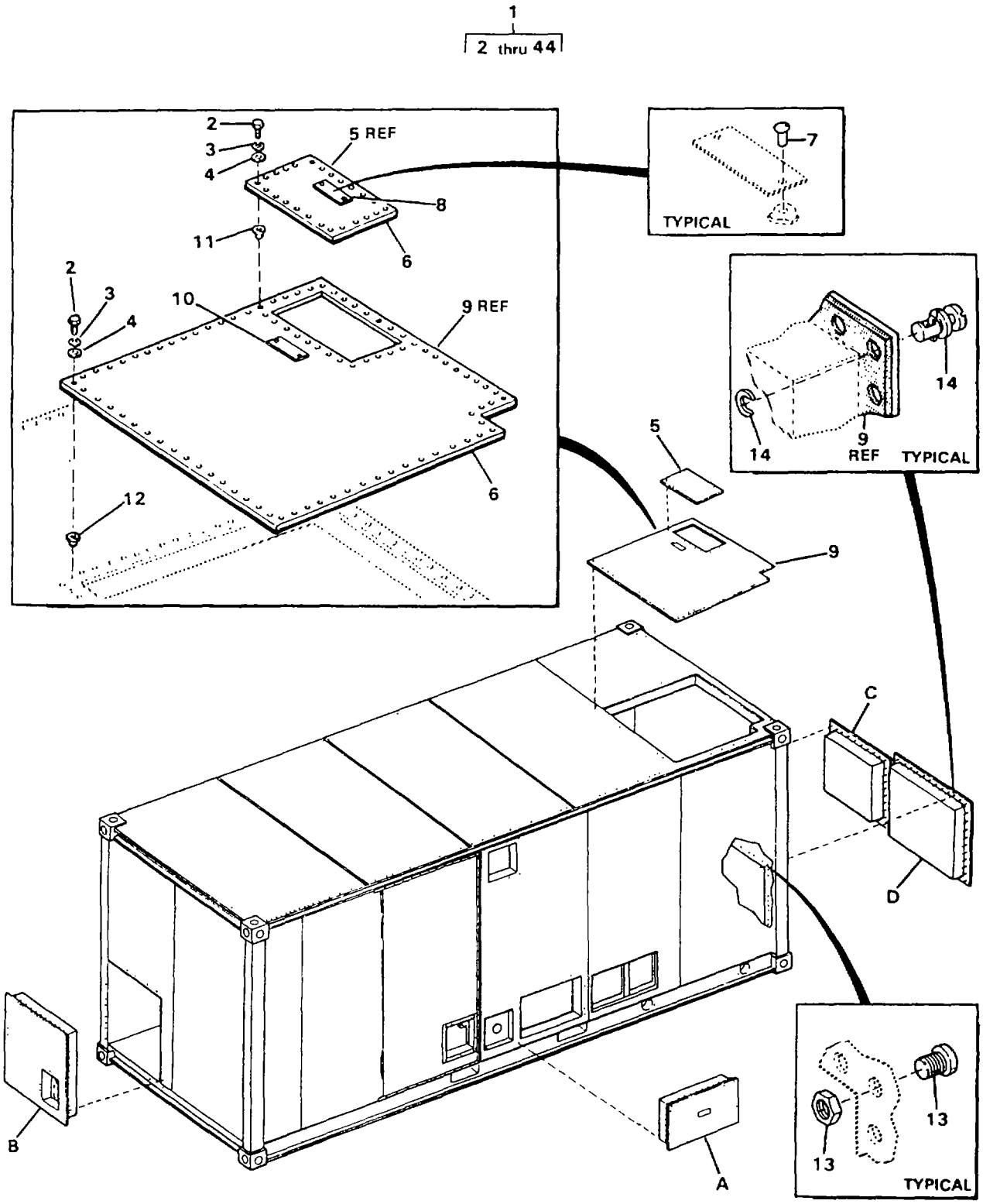

FIGURE 120. ISO CONTAINER (SHEET 1 OF 3)

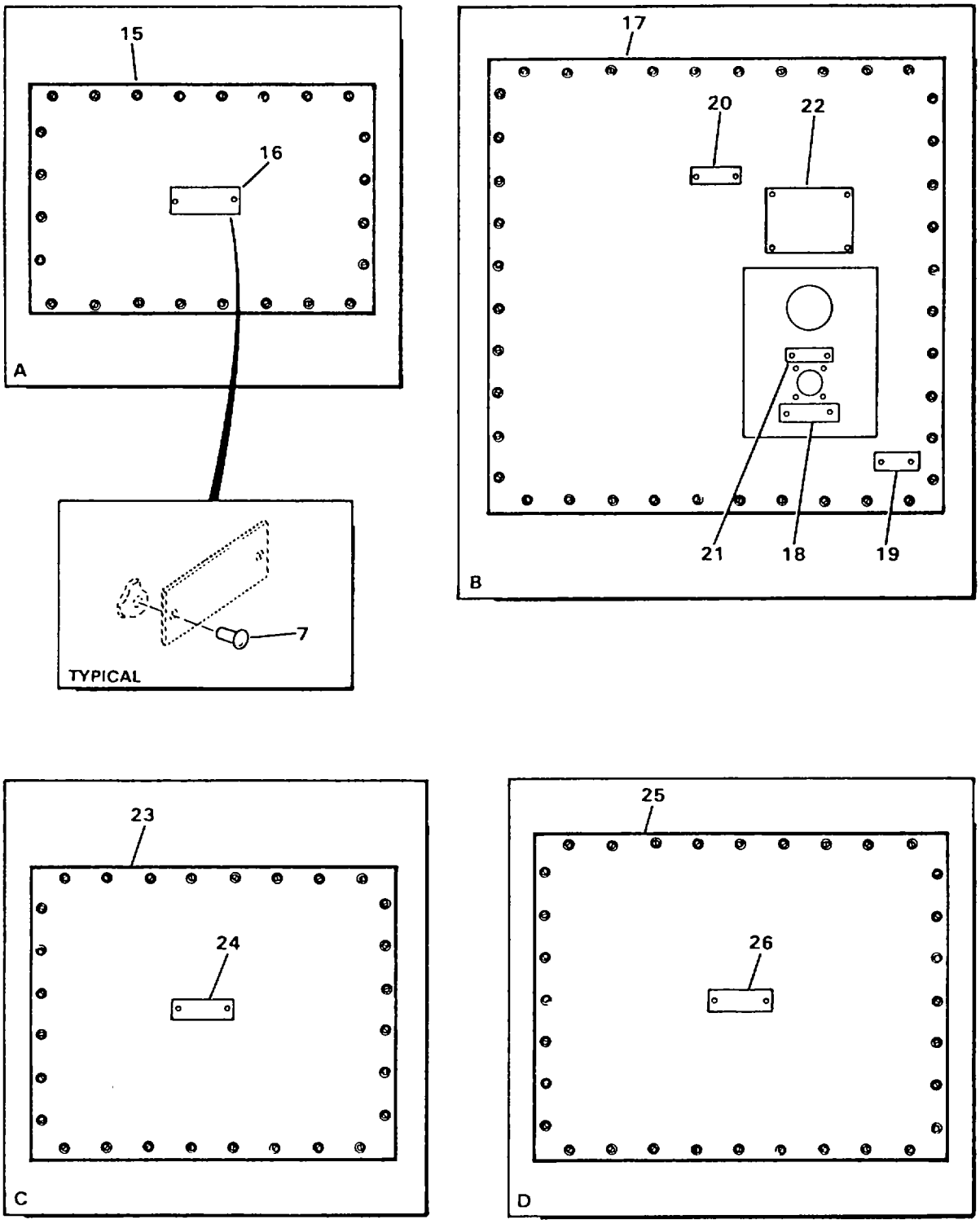

FIGURE 120. ISO CONTAINER (SHEET 2 OF 3)

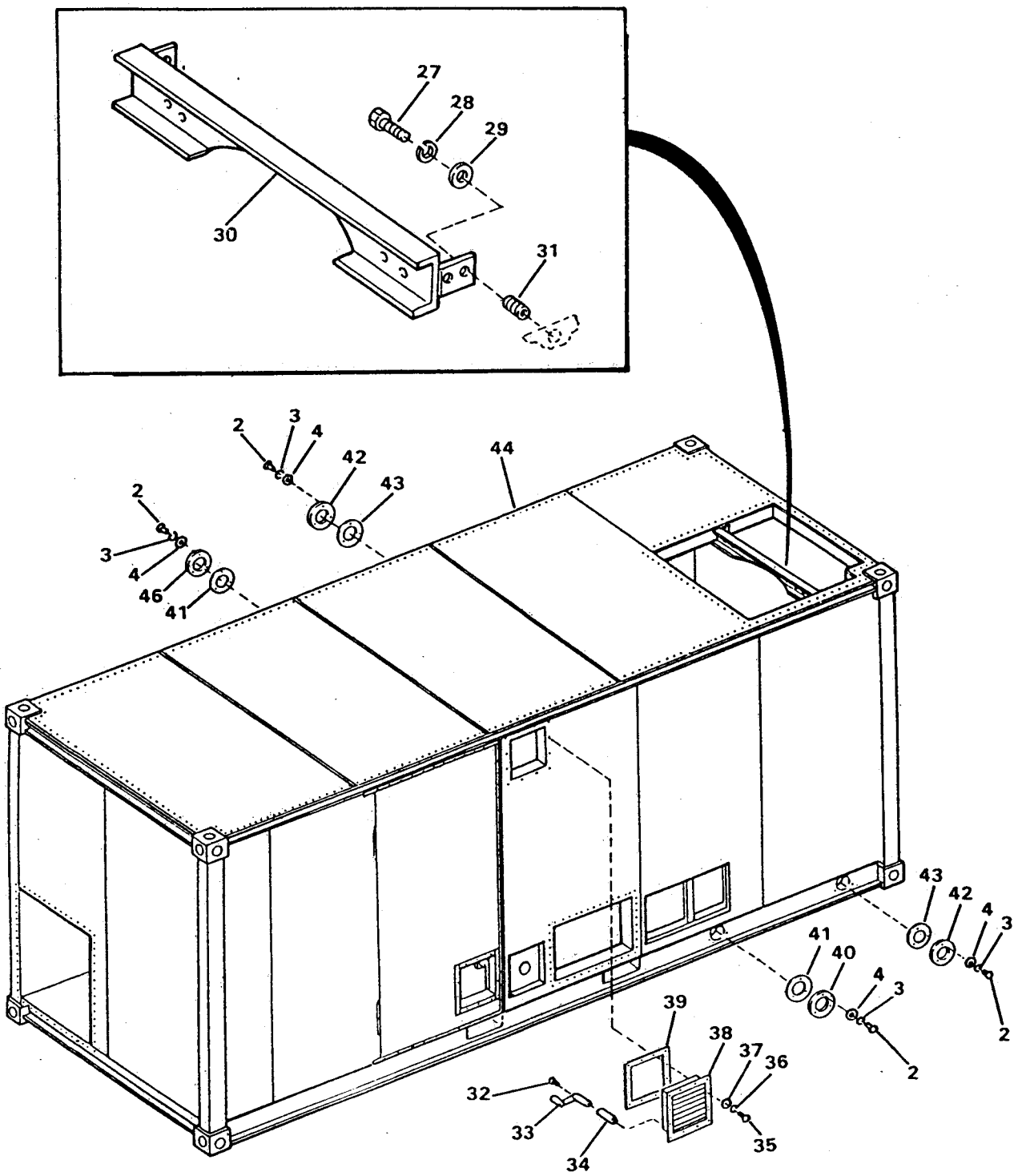

FIGURE 120. ISO CONTAINER (SHEET 3 OF 3)

(1) ITEM NO	(2) SMR CODE	(3) NSN	(4) CAGEC	(5) PART NUMBER	(6) DESCRIPTION AND USABLE ON CODES(UOC)	(7) QTY
					GROUP 02 WATER PURIFICATION SYSTEM FIG. 120 ISO CONTAINER	
1	XDHHH		97403	13229E0040	.CONTAINER,ISO.....	1
2	PAOZZ	5305002078253	96906	MS35307-308	..SCREW,CAP,HEXAGON H.....	95
3	PAOZZ	5310009338121	96906	MS35338-139	..WASHER,LOCK.....	95
4	PAOZZ	5310010911248	96906	MS15795-810	..WASHER,FLAT.....	95
5	XDOOO		97403	13229E0373	..PANEL,ACCESS LIFTING SLING.....ETN	1
5	XDOOO		97403	13229E0204	..PANEL,ACCESS LIFTING SLING.....FKD	1
6	MOOZZ		97403	13229E1172-WS	..WEATHERSTRIP CUT TO LENGTH FROM BULK, P/N 13229E1172.....	V
7	PAOZZ		97403	13229E0350-3	..RIVET,BLIND.....ETN	26
8	XDOZZ		97403	13229E0397-2	...PLATE,ID LIFTING SLING ACCESS PANEL.....	1
9	XDOOO		97403	13229E0374	...PANEL,ACCESS MEDIA FILTER REMOVAL..... ETN	1
9	XDOOO		97403	13229E0209	...PANEL,ACCESS MEDIA FILTER REMOVAL..... FKD	1
10	XDOZZ		97403	13229E0397-5	...PLATE,ID MEDIA FILTER ACCESS PANEL.....	1
11	PBFZZ	5310013499615	97403	13229E0114-3	..NUT,PLAIN,BLIND RIV.....	11
12	XDFZZ		97403	13229E0114-2	..NUT,BLIND RIVET.....	72
13	PBOZZ	5325005518054	82240	STR2-4-5	..RECEPTACLE,TURNLOCK QUICK LOCK.....	124
14	PBOZZ	5325013551579	97403	13229E1278	..STUD ASSEMBLY,TURNL QUICK LOCK.....	124
15	XDOOO		97403	13229E0810	..COVER,ACCESS BOOSTER PUMP.....	1
16	XDOZZ		97403	13229E0782-4	..PLATE,ID BOOSTER PUMP ACCESS PANEL.....	1
17	XDOOO		97403	13229E0811	..COVER,ACCESS R.O. VESSELS.....	1
18	XDOZZ		97403	13229E0782-15	...PLATE,ID POWER INLET.....	1
19	XDOZZ		97403	13229E0782-16	...PLATE,ID DIESEL FUEL INLET.....	1
20	XDOZZ		97403	13229E0782-20	...PLATE,ID R.O. ELEMENT/VESSEL ACCESS PANEL.....	1
21	XDOZZ		97403	13229E0782-21	...PLATE,ID MAIN POWER CONNECTION.....	1
22	XDOZZ		97403	13229E0411-9	...PLATE,ID ELECTRICAL CAUTION.....	1
23	XDOOO		97403	13229E0355	..COVER,ACCESS CLEAN/FLUSH TANK.....	1
24	XDOZZ		97403	13229E0782-10	...PLATE,ID CLEAN FLUSH/TANK ACCESS PANEL.....	1
25	XDOOO		97403	13229E0354	..COVER,ACCESS MEDIA FILTER.....	1
26	XDOZZ		97403	13229E0782-9	...PLATE,ID MEDIA FILTER ACCESS PANEL.....	1
27	PAFZZ	5305006322777	96906	MS35307-358	..SCREW,CAP,HEXAGON H.....ETN	4
27	PAFZZ	5305006322777	96906	MS35307-360	..SCREW,CAP,HEXAGON H.....FKD	4
28	PAFZZ	5310009847042	96906	MS35338-141	..WASHER,LOCK.....	4
29	PAFZZ	5310007737618	96906	MS15795-814	..WASHER,FLAT.....	4
30	XDFZZ		97403	13229E1391	..SUPPORT,ACS COVER.....	1
31	PAFZZ	5325002904492	96906	MS122203	..INSERT,SCREW THREAD.....	4
32	PAOZZ	5305000549315	96906	MS51957-56	..SCREW,MACHINE 0.164-32 UNC- 2A X 2.75 INCHES LONG..... ETN	1

(1) ITEM NO	(2) SMR CODE	(3) NSN	(4) CAGEC	(5) PART NUMBER	(6) DESCRIPTION AND USABLE ON CODES(UOC)	(7) QTY
32	PAOZZ	5305000549315	96906	MS51957-52	..SCREW,MACHINE 0.164-32 UNC- 2A X 2.75 INCHES LONG..... FKD	1
33	PAOZZ	5340014421755	97403	13229E1380	..CRANK,HAND.....	1
34	PAOZZ	5340014421695	97403	13229E1389	..HANDLE,EXTENSION.....	1
35	PAOZA	5305009844686	99974	8599621-312	..SCREW,CAP,HEXAGON H 0.190-32 UNF-2A X 1 INCH LONG.....	12
36	PAOZZ	5310009338120	96906	MS35338-138	..WASHER,LOCK.....	12
37	PAOZZ	5905013924321	96906	MS15765-842	..RESISTOR,FIXED,WIR.....	12
38	PAOZZ	4610014312068	97403	13229E1339	..VENT ASSEMBLY.....	1
39	PAOZZ	5330013563198	97403	13229E1338	..GASKET.....	1
40	XDOZZ		97403	13229E0367	..COVER,SUMP DRAIN.....	2
41	PBOZZ	5330013558804	97403	13229E0368	..GASKET.....	2
42	XDOZZ		97403	13229E0365	..COVER,SUMP DRAIN.....	2
43	PBOZZ	5330013558805	97403	13229E0366	..GASKET.....	2
44	XAFFF		97403	13229E0270	..FRAME ASSEMBLY.....ETN	1
44	XAFFF		97403	13229E0290	..FRAME ASSEMBLY.....FKD	1

END OF FIGURE

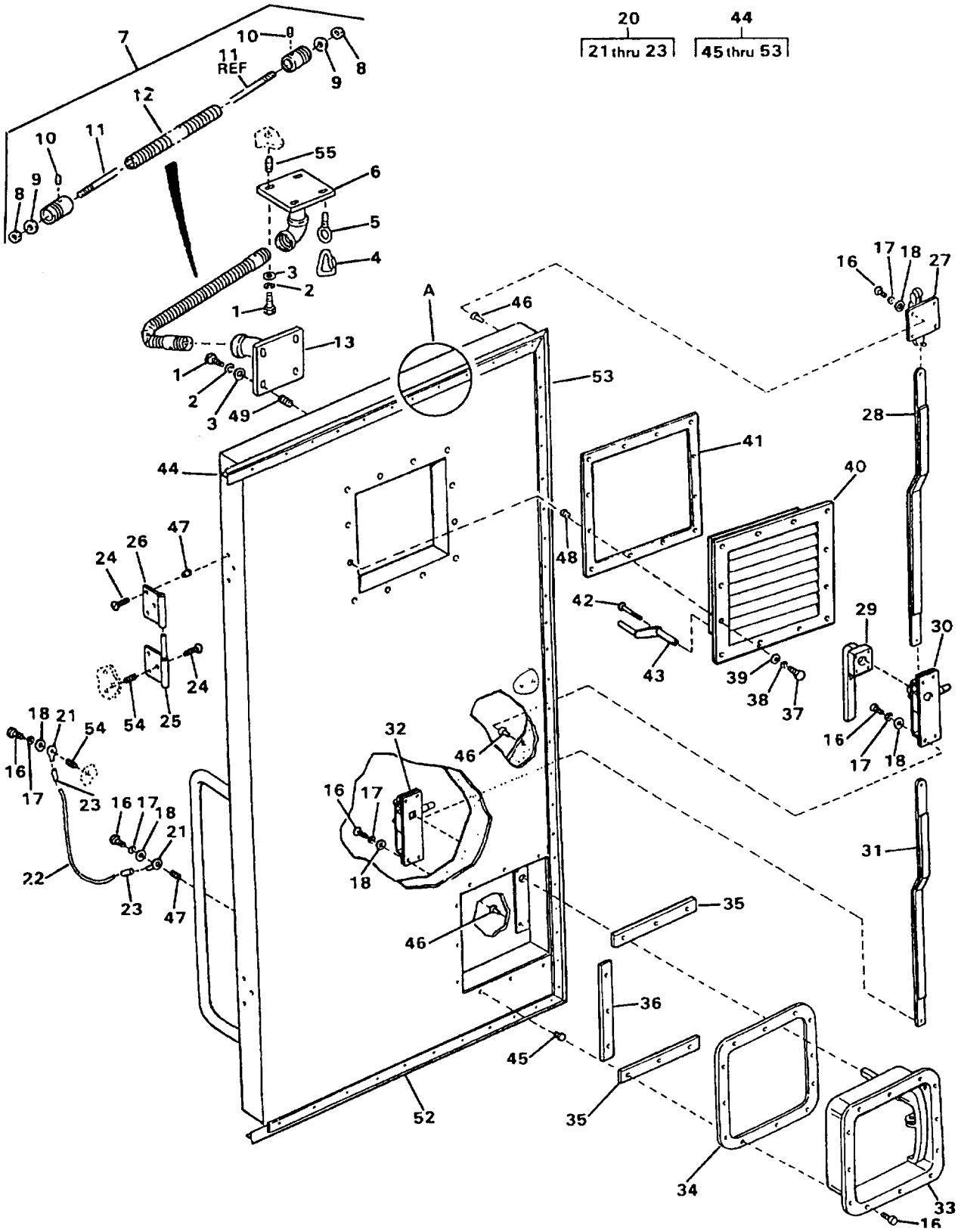

FIGURE 121. REAR DOOR - DISTRIBUTION SIDE (SHEET 1 OF 2)

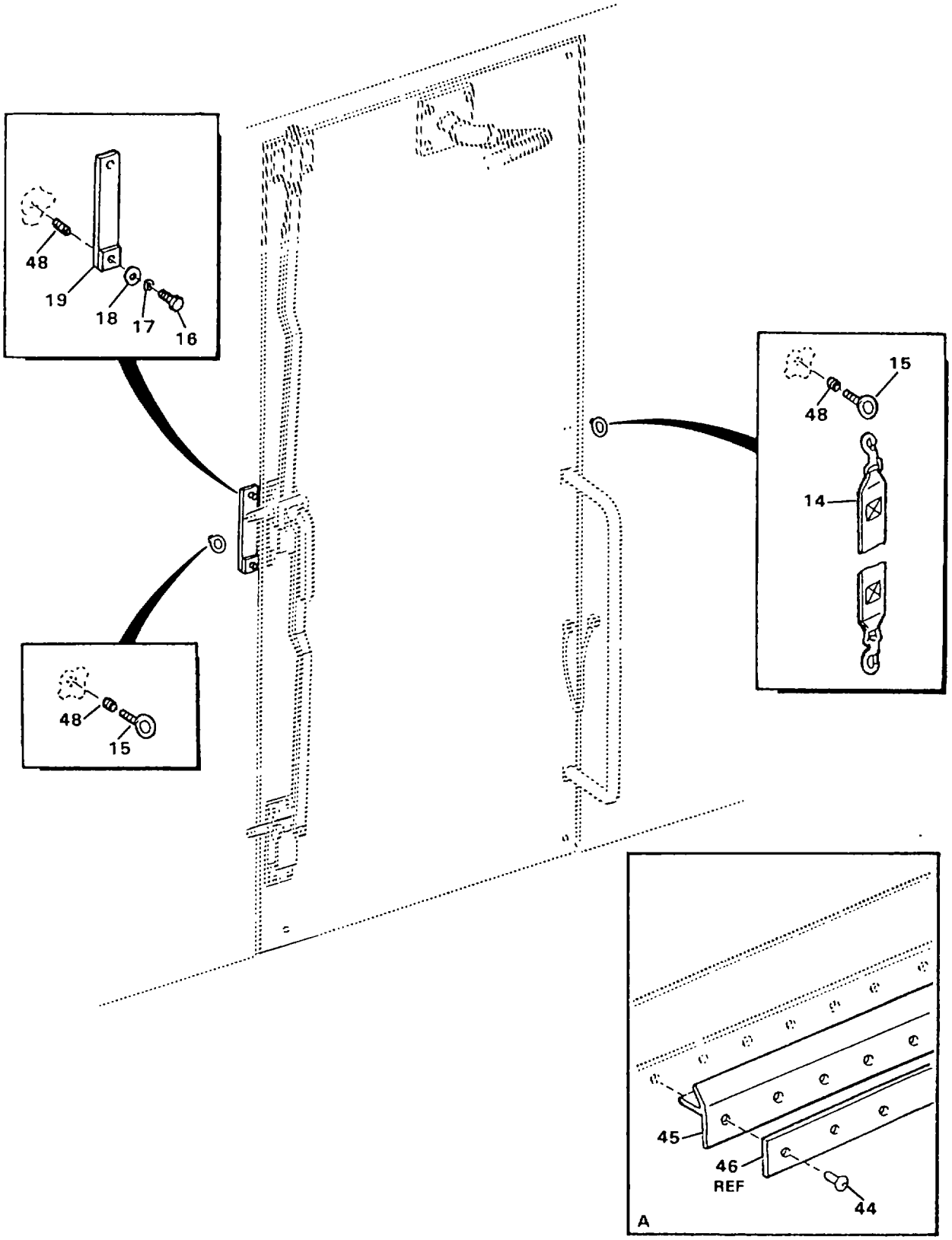

FIGURE 121. REAR DOOR - DISTRIBUTION SIDE (SHEET 2 OF 2)

(1) ITEM NO	(2) SMR CODE	(3) NSN	(4) CAGEC	(5) PART NUMBER	(6) DESCRIPTION AND USABLE ON CODES(UOC)	(7) QTY
					GROUP 02 WATER PURIFICATION SYSTEM FIG. 121 REAR DOOR - DISTRIBUTION SIDE	
1	PAOZZ	5305000213740	96906	MS35307-364	.SCREW,CAP,HEXAGON H.....	7
2	PAOZZ	5310009847042	96906	MS35338-141	.WASHER,LOCK.....	7
3	PAOZZ	5310007737618	96906	MS15795-814	.WASHER,FLAT.....	7
4	XDOZZ		97403	13229E1132	.CONNECTOR,CHAIN.....	1
5	XDOZZ		97403	13229E1131-1	.BOLT,EYE.....	1
6	XDOZZ		97403	13229E0575	.HOLDER,DOOR 90 DEGREE.....	2
7	XDOZZ		97403	13229E0581	.SPRING ASSEMBLY.....	2
8	PAOZZ	5310009291807	96906	MS51922-2	..NUT,SELF-LOCKING,HE.....	2
9	PAOZZ	5310010911248	96906	MS15795-810	..WASHER,FLAT.....	2
10	PAOZZ	5305009806871	96906	MS51023-74	..SETSCREW 0.312-24, UNF-3A, X 0.375 INCH LONG.....	2
11	PAOZZ	4010013531476	97403	13229E1302	..WIRE ROPE ASSEMBLY.....	1
12	PAOZZ	4610014310654	97403	13229E0576	..SPRING.....	1
13	XDOZZ		97403	13229E0582	.HOLDER,DOOR 45 DEGREE.....	1
14	PBOZZ	5340013570800	97403	13229E0796-1	.STRAP,WEBBING GREEN.....	1
14	PBOZZ	5340014332742	97403	13229E0796-2	.STRAP,WEBBING TAN.....	1
15	XDOZZ		97403	13229E0161-180	.EYEBOLT 0.25 UNC-2A X 0.75 INCH LONG.....	2
16	PAOZZ	5305002072297	96906	MS35307-312	..SCREW,CAP,HEXAGON H.....	28
17	PAOZZ	5310009338121	96906	MS35338-139	..WASHER,LOCK.....	16
18	PAOZZ	5310010911248	96906	MS15795-810	..WASHER,FLAT.....	16
19	XDOZZ		97403	13229E0830	..STRIKER,CENTER CS.....	1
20	AOOOO		97403	13229E0860-8	..WIRE ASSEMBLY.....	1
21	PAOZZ	5940001139826	96906	MS25036-114	...TERMINAL,LUG.....	2
22	MOOZZ		97403	13229E0860-8-1	...WIRE CUT TO LENGTH FROM BULK, P/N M5086/1-12-9.....	1
23	XDOZZ		97403	13229E0589-4	...MARKER.....	2
24	PAOZZ	5305009387827	96906	MS24671-31	..SCREW,CAP,SOCKET HE 0.25-20 UNC-2A X 1 INCH LONG (FLAT COUNTERSUNK).....	12
25	XDOZZ		97403	13229E0818	..HINGE,PIVOT.....	2
26	XDOZZ		97403	13229E0817	..HINGE,PLATE.....	2
27	PAOZZ	4610014223733	97403	13229E0828	..BOLT,SLIDING.....	1
28	PAOZZ	4610014213842	97403	13229E0831-3	..ROD,CENTER.....	1
29	PAOZZ	4610014213835	97403	13229E0833	..HANDLE,RELEASE INSIDE.....	1
30	PAOZZ	4610014223716	97403	13229E0829	..CENTER CASE ASSY.....	1
31	PAOZZ	4610014223696	97403	13229E0831-2	..ROD,SPT,BOTTOM.....	1
32	PAOZZ	4610014213855	97403	13229E0364	..CENTER CASE ASSY.....	1
33	PAOZZ	4610014310653	97403	13229E0832	..HANDLE,RECESSED.....	1
34	PAOZZ	4610014218539	97403	13229E0819	..GASKET.....	1
35	PAOZZ	4610014214865	97403	13229E1193-1	..SPACER.....	2
36	PAOZZ	4610014214870	97403	13229E1193-2	..SPACER.....	1
37	PAOZA	5305009844686	99974	8599621-312	..SCREW,CAP,HEXAGON H 0.190-32 UNF-2A X 1 INCH LONG.....	12
38	PAOZZ	5310009338120	96906	MS35338-138	..WASHER,LOCK.....	12
39	PAOZZ	5905013924321	96906	MS15765-842	..RESISTOR,FIXED,WIR.....	12
40	PAOZZ	4610014312068	97403	13229E1339	..VENT ASSEMBLY.....	1
41	PBOZZ	5330013563198	97403	13229E1338	..GASKET.....	1

(1) ITEM NO	(2) SMR CODE	(3) NSN	(4) CAGEC	(5) PART NUMBER	(6) DESCRIPTION AND USABLE ON CODES(UOC)	(7) QTY
42	PAOZZ	5305000546677	96906	MS51957-52	...SCREW,MACHINE 0.164-32 UNC-2A X 1.75 INCHES LONG.....	1
43	PBOZZ	5340014421755	97403	13229E1380	..CRANK,HAND.....	1
44	XDOFF		97403	13229E0797	..DOOR,REAR.....	1
45	PAFZZ	5325002007224	96906	MS122081	...INSERT,SCREW THREAD.....	12
46	PAFZZ	5310013550216	97403	13229E0114-2	...NUT,PLAIN,BLIND RIV.....	14
47	PAFZZ	5340002904489	96906	MS122241	...INSERT,SCREW THREAD.....	7
48	PAFZZ	5325009862929	96906	MS124655	...INSERT,SCREW THREAD.....	12
49	PAFZZ	5325006821453	96906	MS122243	...INSERT,SCREW THREAD.....	4
50	PAFZZ	5320013518808	97403	13229E0350-3	...RIVET,BLIND.....	44
51	MOOZZ		97403	13229E0797-29	...WEATHERSTRIPPING MAKE FROM BULK, P/N 13229E0315.....	1
52	XDOZZ		97403	13229E0797-28	...EDGING WEATHERSTRIP.....	2
53	XDOZZ		97403	13229E0797-27	...EDGING WEATHERSTRIP.....	1
54	PAFZZ	5340002904489	96906	MS122241	..INSERT,SCREW THREAD.....	10
55	PAFZZ	5325002904492	96906	MS122203	.INSERT,SCREW THREAD.....	4

END OF FIGURE

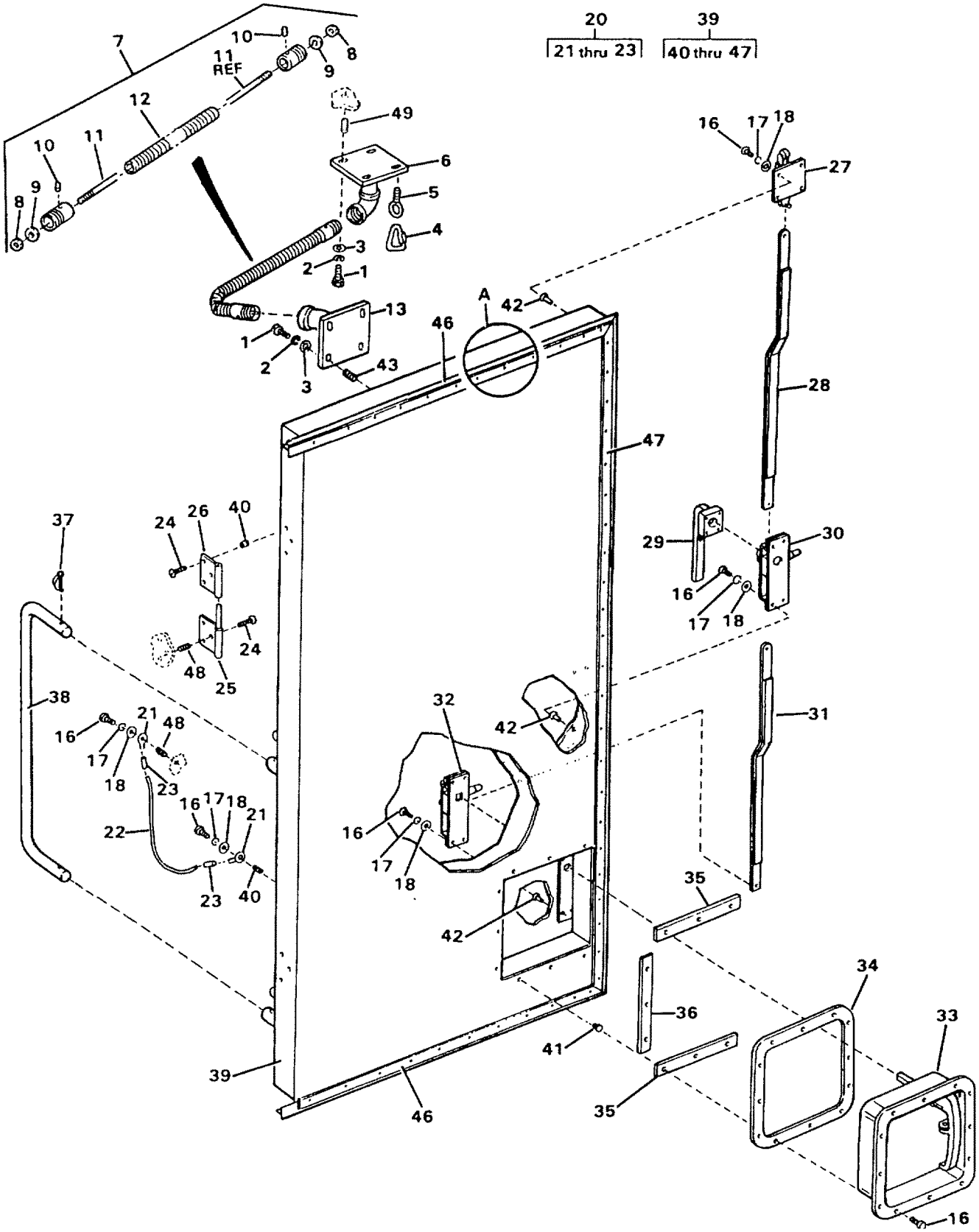

FIGURE 122. FRONT DOOR - RAW WATER SIDE (SHEET 1 OF 2)

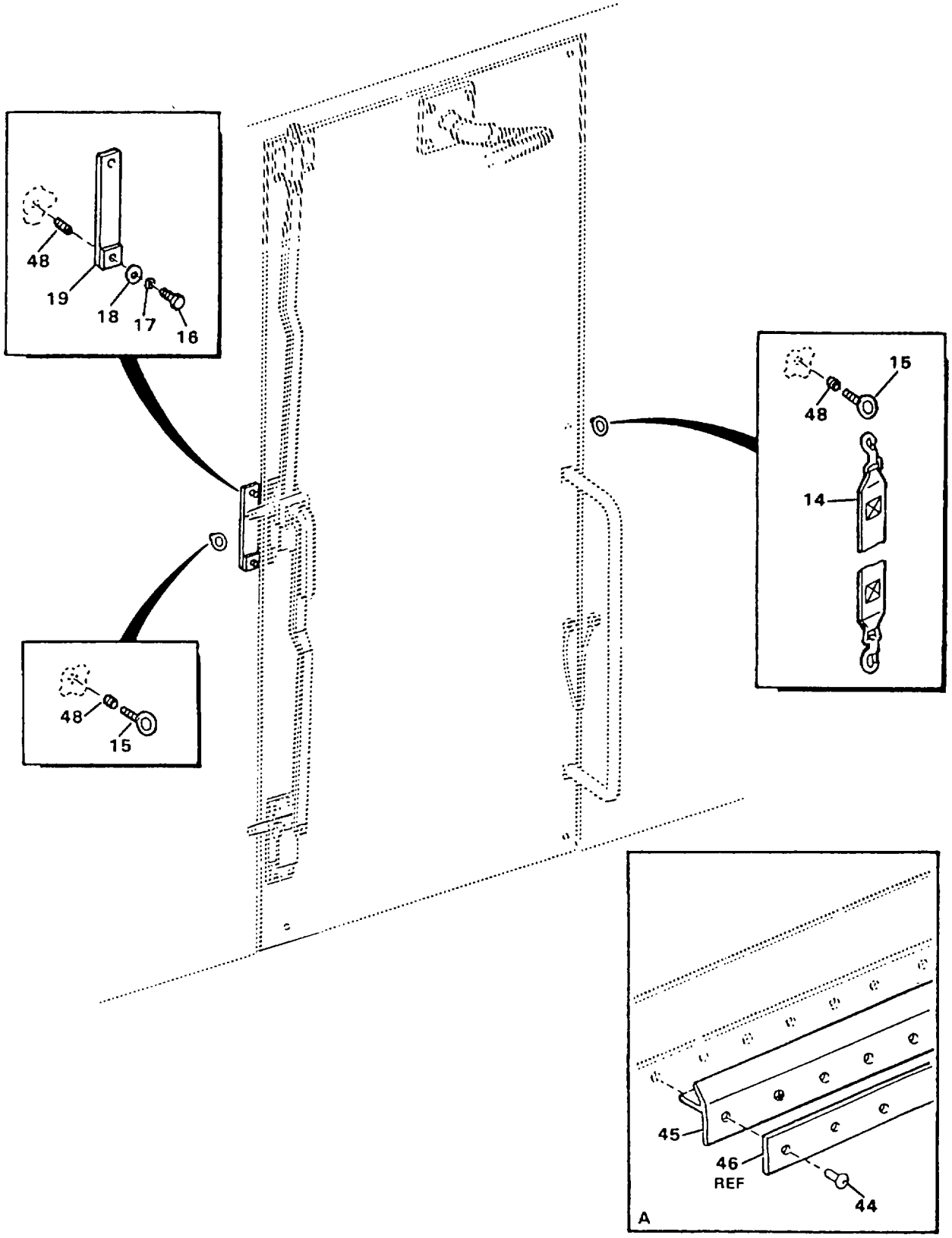

FIGURE 122. FRONT DOOR - RAW WATER SIDE (SHEET 2 OF 2)

(1) ITEM NO	(2) SMR CODE	(3) NSN	(4) CAGEC	(5) PART NUMBER	(6) DESCRIPTION AND USABLE ON CODES(UOC)	(7) QTY
					GROUP 02 WATER PURIFICATION SYSTEM FIG. 122 FRONT DOOR - RAW WATER SIDE	
1	PAOZZ	5305000213740	96906	MS35307-364	.SCREW,CAP,HEXAGON H.....	7
2	PAOZZ	5310009847042	96906	MS35338-141	.WASHER,LOCK.....	7
3	PAOZZ	5310007737618	96906	MS15795-814	.WASHER,FLAT.....	7
4	XDOZZ		97403	13229E1132	.CONNECTOR,CHAIN.....	1
5	XDOZZ		97403	13229E1131-1	.BOLT,EYE.....	1
6	XDOZZ		97403	13229E0575	.HOLDER,DOOR 90 DEGREE.....	1
7	XDOZZ		97403	13229E0581	.SPRING ASSEMBLY.....	1
8	PAOZZ	5310009291807	96906	MS51922-2	..NUT,SELF-LOCKING,HE.....	2
9	PAOZZ	5310010911248	96906	MS15795-810	..WASHER,FLAT.....	2
10	PAOZZ	5305009806871	96906	MS51023-74	..SETSCREW 0.312-24 UNF-3A X 0.375 INCH LONG.....	2
11	PAOZZ	4010013531476	97403	13229E1302	..WIRE ROPE ASSEMBLY.....	1
12	PAOZZ	4610014310654	97403	13229E0576	..SPRING.....	1
13	XDOZZ		97403	13229E0582	.HOLDER,DOOR 45 DEGREE.....	1
14	PBOZZ	5340013570800	97403	13229E0796-1	.STRAP,WEBBING GREEN.....	1
14	PBOZZ	5340014332742	97403	13229E0796-2	.STRAP,WEBBING TAN.....	1
15	PAOZZ	5306013522735	97403	13229E0161-180	..EYEBOLT 0.25-20 UNC-2A X 0.75 INCH LONG.....	2
16	PAOZZ	5305002072297	96906	MS35307-312	..SCREW,CAP,HEXAGON H.....	28
17	PAOZZ	5310009338121	96906	MS35338-139	..WASHER,LOCK.....	16
18	PAOZZ	5310010911248	96906	MS15795-810	..WASHER,FLAT.....	16
19	XDOZZ		97403	13229E0830	..STRIKER,CENTER.....	1
20	AOOOO		97403	13229E0860-8	..WIRE ASSEMBLY.....	1
21	PAOZZ	5940001139826	96906	MS25036-114	...TERMINAL,LUG.....	2
22	MOOZZ		97403	13229E0860-8-1	...WIRE CUT TO LENGTH FROM BULK, P/N M5086/1-12-9.....	1
23	XDOZZ		97403	13229E0589-4	...MARKER.....	2
24	PAOZZ	5305009387827	96906	MS24671-31	..SCREW,CAP,SOCKET HE 0.25-20 UNC-2A X 1 INCH LONG (FLAT COUNTERSUNK).....	12
25	XDOZZ		97403	13229E0818	..HINGE.....	2
26	XDOZZ		97403	13229E0817	..HINGE.....	2
27	PAOZZ	4610014223733	97403	13229E0828	..BOLT,SLIDING.....	1
28	PAOZZ	4610014213842	97403	13229E0831-3	..ROD,CENTER.....	1
29	PAOZZ	4610014213835	97403	13229E0833	..HANDLE,RELEASE.....	1
30	PAOZZ	4610014223716	97403	13229E0829	..CENTER CASE ASSY.....	1
31	PAOZZ	4610014223696	97403	13229E0831-2	..ROD,SPT,BOTTOM.....	1
32	PAOZZ	4610014213855	97403	13229E0364	..CENTER CASE ASSY.....	1
33	PAOZZ	4610014310653	97403	13229E0832	..HANDLE,RECESSED.....	1
34	PAOZZ	4610014218539	97403	13229E0819	..GASKET.....	1
35	PAOZZ	4610014214865	97403	13229E1193-1	..SPACER.....	2
36	PAOZZ	4610014214870	97403	13229E1193-2	..SPACER.....	1
37	PAOZZ	5315013518179	97403	13229E0566	..PIN,STRAIGHT,HEADED.....	2
38	XDOFF		97403	13229E1190	..HANDLE.....	1
39	XDOFF		97403	13229E0798	..DOOR,FRONT.....	1
40	PAFZZ	5340002904489	96906	MS122241	...INSERT,SCREW THREAD.....	7
41	PAFZZ	5325002007224	96906	MS122081	...INSERT,SCREW THREAD.....	12
42	PAFZZ	5310013550216	97403	13229E0114-2	...NUT,PLAIN,BLIND RIV.....	12

(1) ITEM NO	(2) SMR CODE	(3) NSN	(4) CAGEC	(5) PART NUMBER	(6) DESCRIPTION AND USABLE ON CODES(UOC)	(7) QTY
43	PAFZZ	5325006821453	96906	MS122243	...INSERT,SCREW THREAD.....	1
44	PAOZZ	5320013518808	97403	13229E0350-3	...RIVET,BLIND.....	45
45	MOOZZ		97403	13229E0798-22	...WEATHERSTRIPPING MAKE FROM BULK, P/N 13229E0315.....	1
46	XDOZZ		97403	13229E0798-23	...EDGING WEATHERSTRIP.....	2
47	XDOZZ		97403	13229E0798-24	...EDGING WEATHERSTRIP.....	1
48	PAFZZ	5340002904489	96906	MS122241	..INSERT,SCREW THREAD.....	8
49	PAFZZ	5325002904492	96906	MS122203	.INSERT,SCREW THREAD.....	4

END OF FIGURE

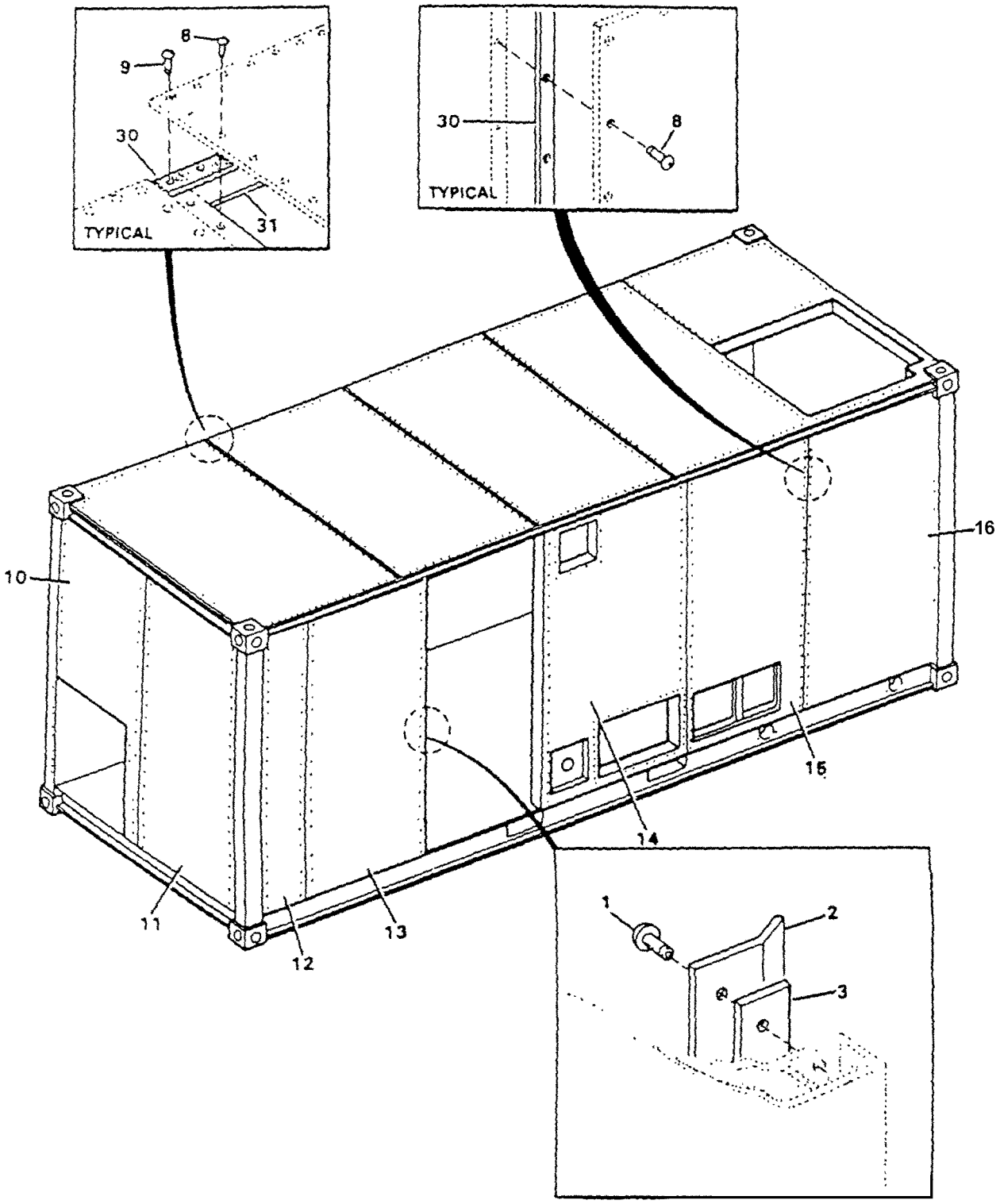

FIGURE 123. ISO CONTAINER- EXTERIOR SKIN (SHEET 1 OF 3)
(MODEL ETN ONLY)

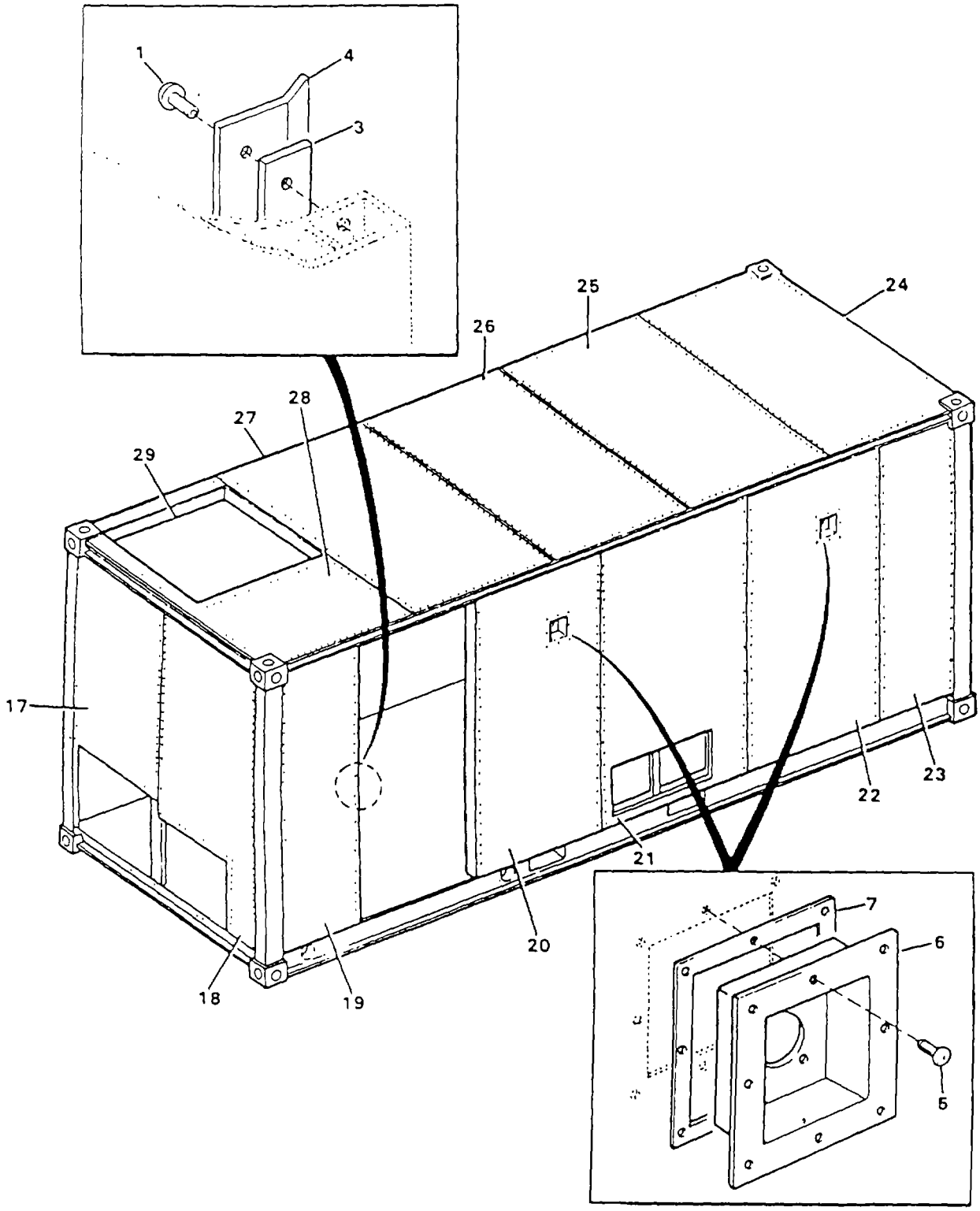

FIGURE 123. ISO CONTAINER- EXTERIOR SKIN (SHEET 2 OF 3)
(MODEL ETN ONLY)

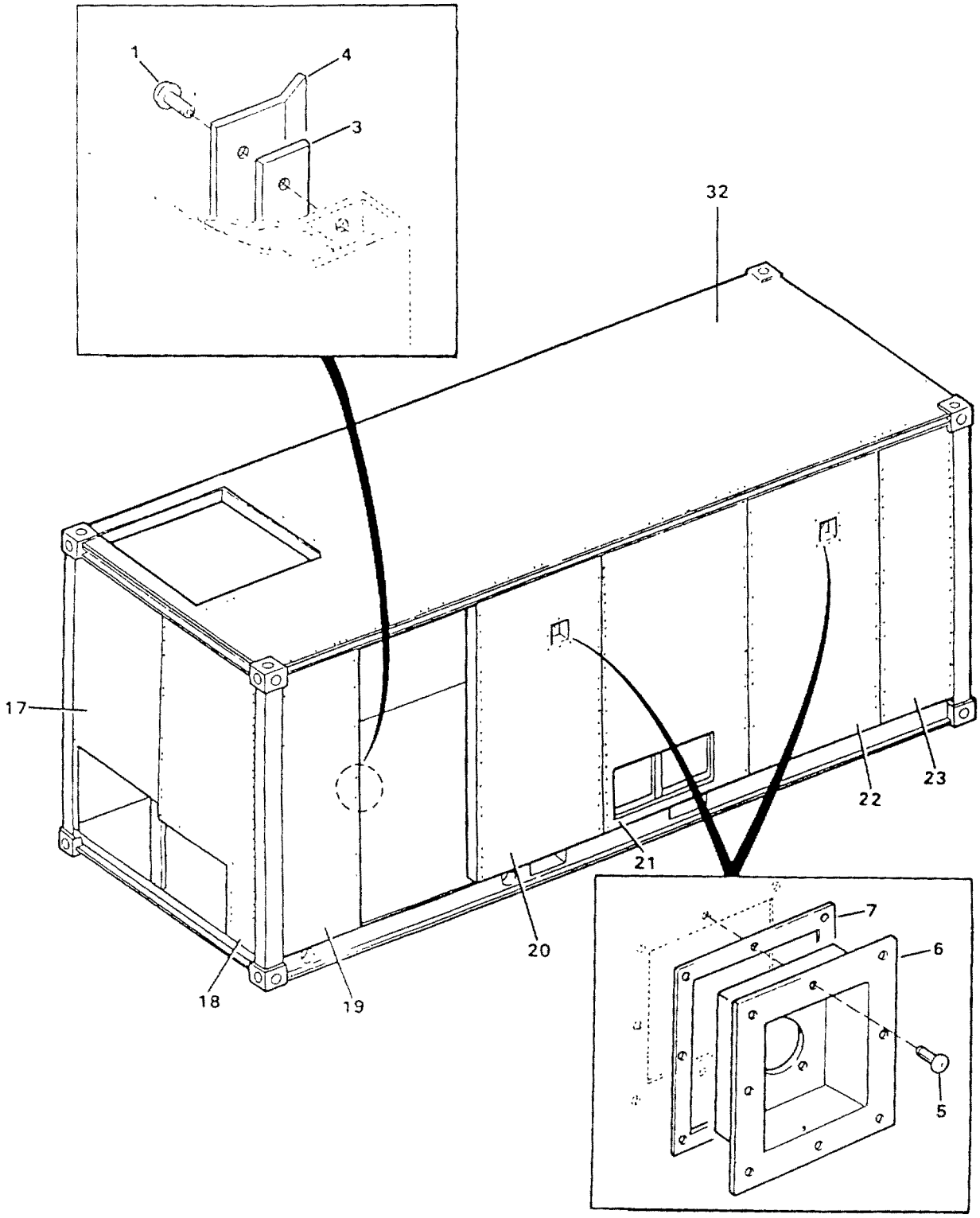

FIGURE 123. ISO CONTAINER- EXTERIOR SKIN (SHEET 3 OF 3)
(MODEL FKD ONLY)

(1) ITEM NO	(2) SMR CODE	(3) NSN	(4) CAGEC	(5) PART NUMBER	(6) DESCRIPTION AND USABLE ON CODES(UOC)	(7) QTY
					GROUP 02 WATER PURIFICATION SYSTEM FIG. 123 ISO CONTAINER - EXTERIOR SKIN	
1	PAOZZ	5320013518808	97403	13229E0350-3	...RIVET,BLIND.....	68
2	XDOZZ		97403	13229E0270-69	...EDGING,WEATHERSTRIP.....	1
3	MOOZZ		97403	13229E-0270-65	...WEATHERSTRIPPING CUT TO LENGTH FROM BULK, P/N 13229E1392.....	2
4	XDOZZ		97403	13229E0270-85	...EDGING,WEATHERSTRIP.....	1
5	PBHZZ	5320013490933	97403	13229E0350-1	...RIVET,BLIND.....	16
6	XDHZZ		97403	13229E0340	...RECESS,BACK WALL.....	2
7	MHHZZ		97403	13229E0270-21	...GASKET MAKE FROM BULK, P/N 13229E1171.....	2
8	PAHZZ	5320013490932	97403	13229E0350-2	...RIVET,BLIND.....ETN	428
8	PAHZZ	5320013490932	97403	13229E0350-2	...RIVET,BLIND.....FKD	605
9	PAHZZ	5320013518808	97403	13229E0350-3	...RIVET,BLIND.....ETN	214
9	PAHZZ	5320013518808	97403	13229E0350-3	...RIVET,BLIND.....FKD	200
10	XDHZZ		97403	13229E0270-47	...SKIN,SHEET.....	1
11	XDHZZ		97403	13229E0270-46	...SKIN,SHEET.....	1
12	XDHZZ		97403	13229E0270-28	...SKIN,SHEET.....	1
13	XDHZZ		97403	13229E0270-67	...SKIN,SHEET.....	1
14	XDHZZ		97403	13229E0270-29	...SKIN,SHEET.....	1
15	XDHZZ		97403	13229E0270-30	...SKIN,SHEET.....	1
16	XDHZZ		97403	13229E0270-31	...SKIN,SHEET.....	1
17	XDHZZ		97403	13229E0270-53	...SKIN,SHEET.....	1
18	XDHZZ		97403	13229E0270-52	...SKIN,SHEET.....	1
19	XDHZZ		97403	13229E0270-41	...SKIN,SHEET.....	1
20	XDHZZ		97403	13229E0270-42	...SKIN,SHEET.....	1
21	XDHZZ		97403	13229E0270-43	...SKIN,SHEET.....	1
22	XDHZZ		97403	13229E0270-44	...SKIN,SHEET.....	1
23	XDHZZ		97403	13229E0270-45	...SKIN,SHEET.....	1
24	XDHZZ		97403	13229E0261-49	...SKIN,SHEET.....ETN	1
25	XDHZZ		97403	13229E0261-50	...SKIN,SHEET.....ETN	1
26	XDHZZ		97403	13229E0261-51	...SKIN,SHEET.....ETN	1
27	XDHZZ		97403	13229E0261-52	...SKIN,SHEET.....ETN	1
28	XDHZZ		97403	13229E0261-53	...SKIN,SHEET.....ETN	1
29	XDHZZ		97403	13229E0261-54	...SKIN,SHEET.....ETN	1
30	MHHZZ		97403	13229E0261-56	...WEATHERSTRIPPING MAKE FROM BULK, P/N 13229E1172.....	V
31	MHHZZ		97403	13229E0261-55	...EDGING,WEATHERSTRI MAKE FROM BULK, P/N 13229E1171.....	V
32	XDHZZ		97403	13229E0270-11	...SKIN,SHEET.....FKD	1

END OF FIGURE

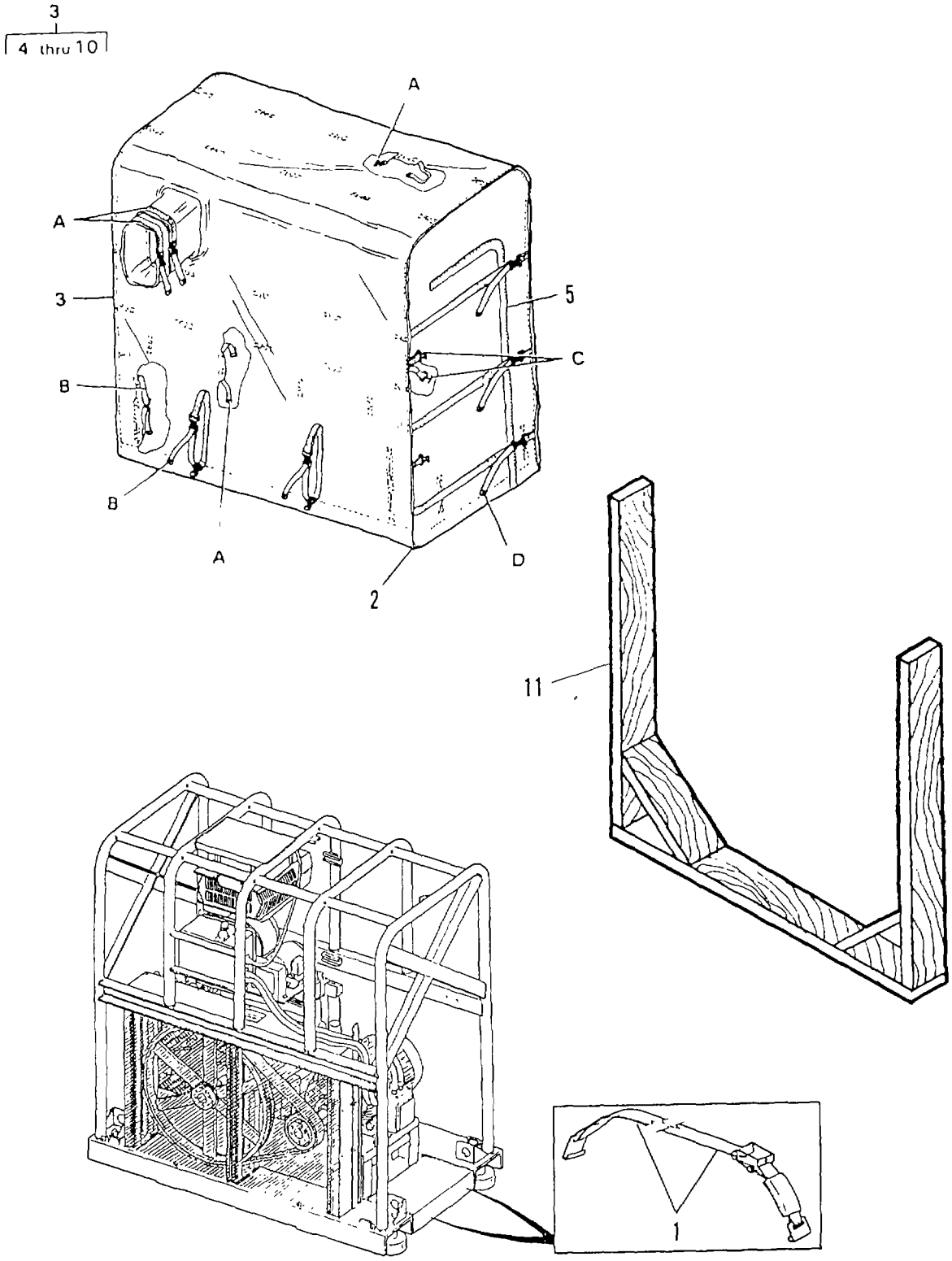

FIGURE 124. HIGH PRESSURE PUMP ASSEMBLY AND COVER (SHEET 1 OF 2)

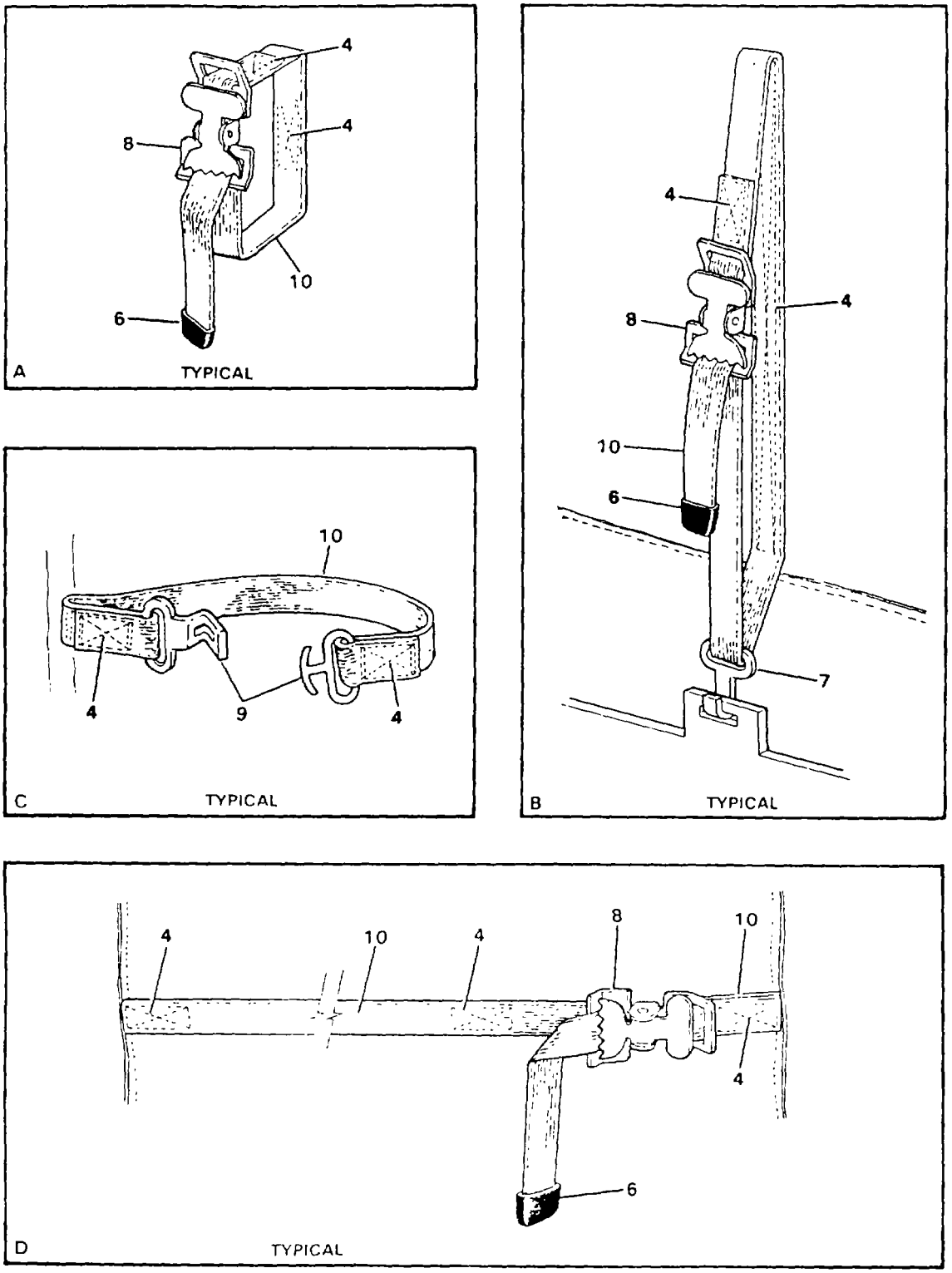

FIGURE 124. HIGH PRESSURE PUMP ASSEMBLY AND COVER (SHEET 2 OF 2)

(1) ITEM NO	(2) SMR CODE	(3) NSN	(4) CAGEC	(5) PART NUMBER	(6) DESCRIPTION AND USABLE ON CODES(UOC)	(7) QTY
					GROUP 02 WATER PURIFICATION SYSTEM FIG. 124 HIGH PRESSURE PUMP ASSEMBLY AND COVER	
1	PAFZZ	5340013568369	97403	13229E1324-1	.STRAP,WEBBING 132 INCHES LONG, GREEN, USED TO SECURE HIGH PRESSURE PUMP ASSEMBLY TO TRAILER....	1
1	PAFZZ	5340013997465	97403	13229E1324-2	.STRAP,WEBBING 132 INCHES LONG, TAN, USED TO SECURE HIGH PRESSURE PUMP ASSEMBLY TO TRAILER....	1
2	XDFHH		97403	13229E1017	.HP PUMP ASSEMBLY INCLUDES COVER ASSEMBLY.....	1
3	PBFFF	4320013490641	97403	13229E1035-1	.COVER ASSEMBLY GREEN.....	1
3	PBFFF	4320013490642	97403	13229E1035-2	.COVER ASSEMBLY TAN.....	1
4	PAFZZ		81348	V-T-295E	.THREAD GREEN, TYPE II, CLASS A, SIZE FF.....	V
4	PAFZZ		81348	V-T-295E	.THREAD TAN, TYPE II, CLASS A, SIZE FF.....	V
5	PAFZZ	5325010175623	81348	V-F-106	..FASTENER,SLIDE,INTE GREEN.....	2
5	PAFZZ		81348	V-F-106	..FASTENER,SLIDE,INTE TAN.....	2
6	PAFZZ	5340000787029	96906	MS51926-3	..CLIP,END,STRAP.....	63
7	PAFZZ	5340009166532	88044	NAS1382-4	..HOOK,FLAT.....	13
8	PAFZZ	5340000576956	96906	MS51929-2	..BUCKLE.....	63
9	PAFZZ		97403	13229E1035-9	..BUCKLE.....	4
10	MFFZZ		97403	13229E1035-10 GREEN	..WEBBING,NYLON CUT TO LENGTH FROM BULK, P/N MIL-W-4088, TYPE XVII, CLASS I, CONDITIONER R, NYLON, GREEN.....	73
10	MFFZZ		97403	13229E1035-10 TAN	..WEBBING,NYLON CUT TO LENGTH FROM BULK, P/N MIL-W-4088, TYPE XVII, CLASS I, CONDITIONER R, NYLON, TAN.....	73
11	MOOZZ		97403	13229E0000-20	BRACE,WOODEN MAKE FROM BULK, P/N MIL-STD-751..... FKD	1

END OF FIGURE

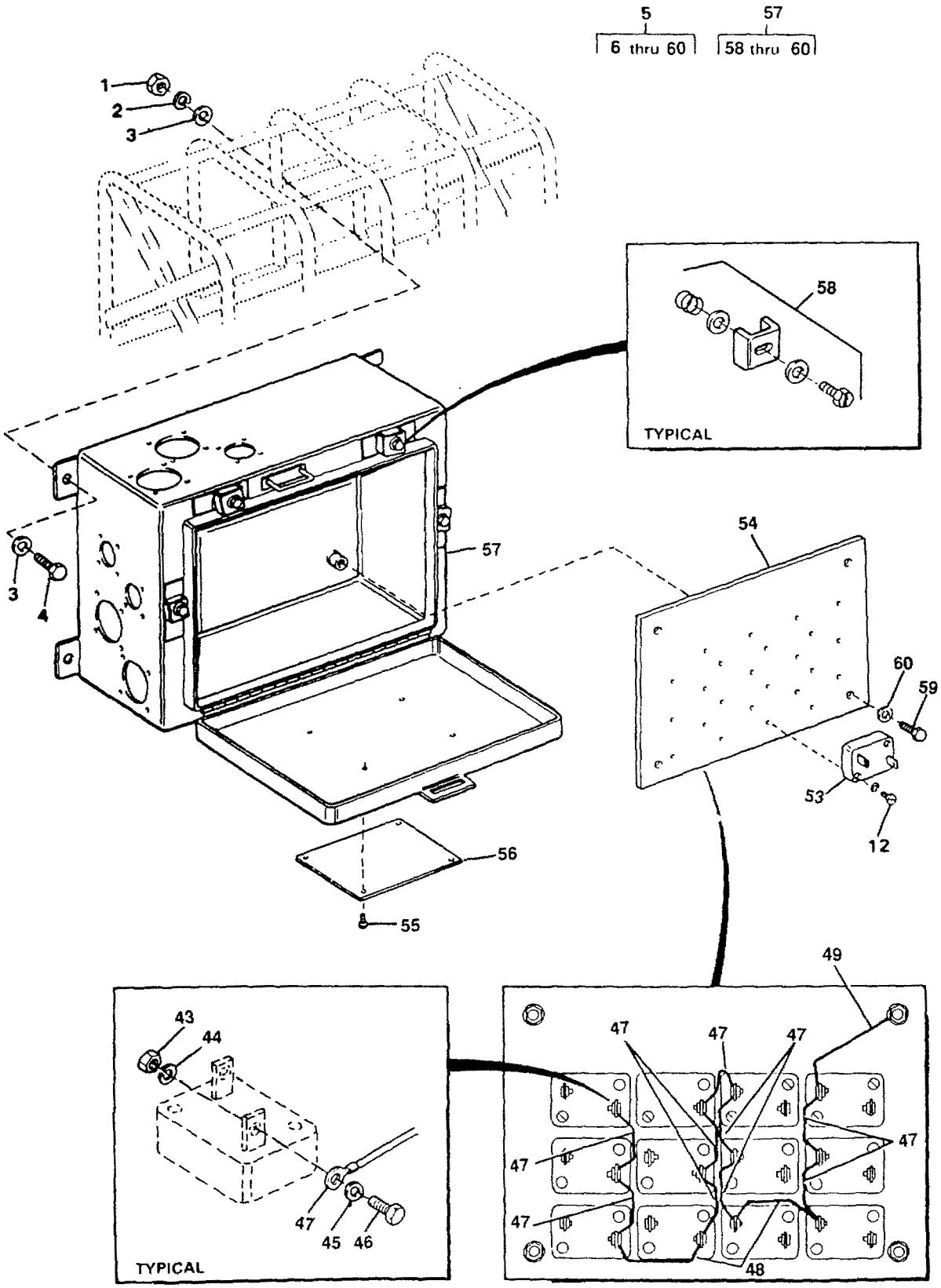

FIGURE 125. METAL OXIDE VARISTOR (MOV) ASSEMBLY (SHEET 1 OF 7)

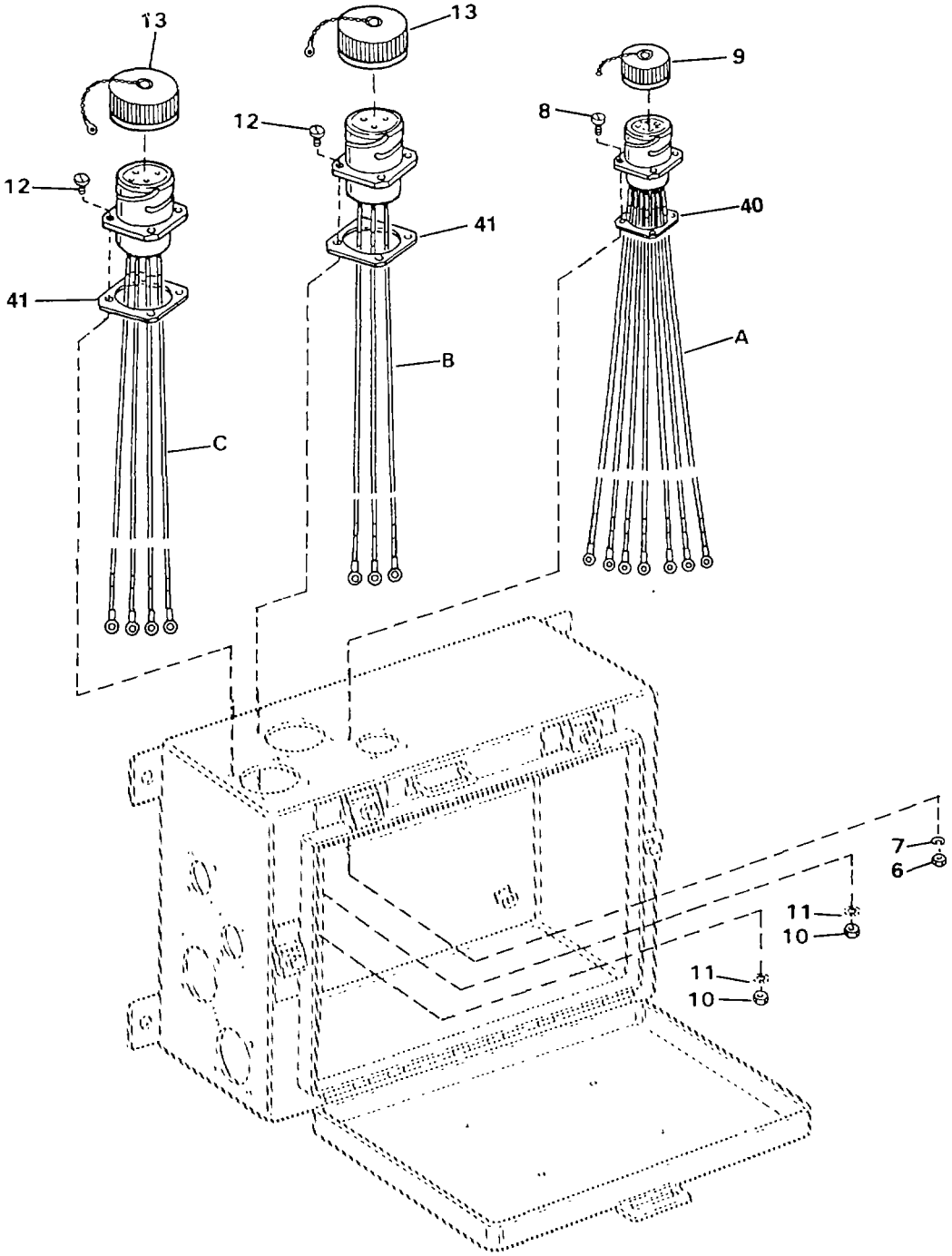

FIGURE 125. METAL OXIDE VARISTOR (MOV) ASSEMBLY (SHEET 2 OF 7)

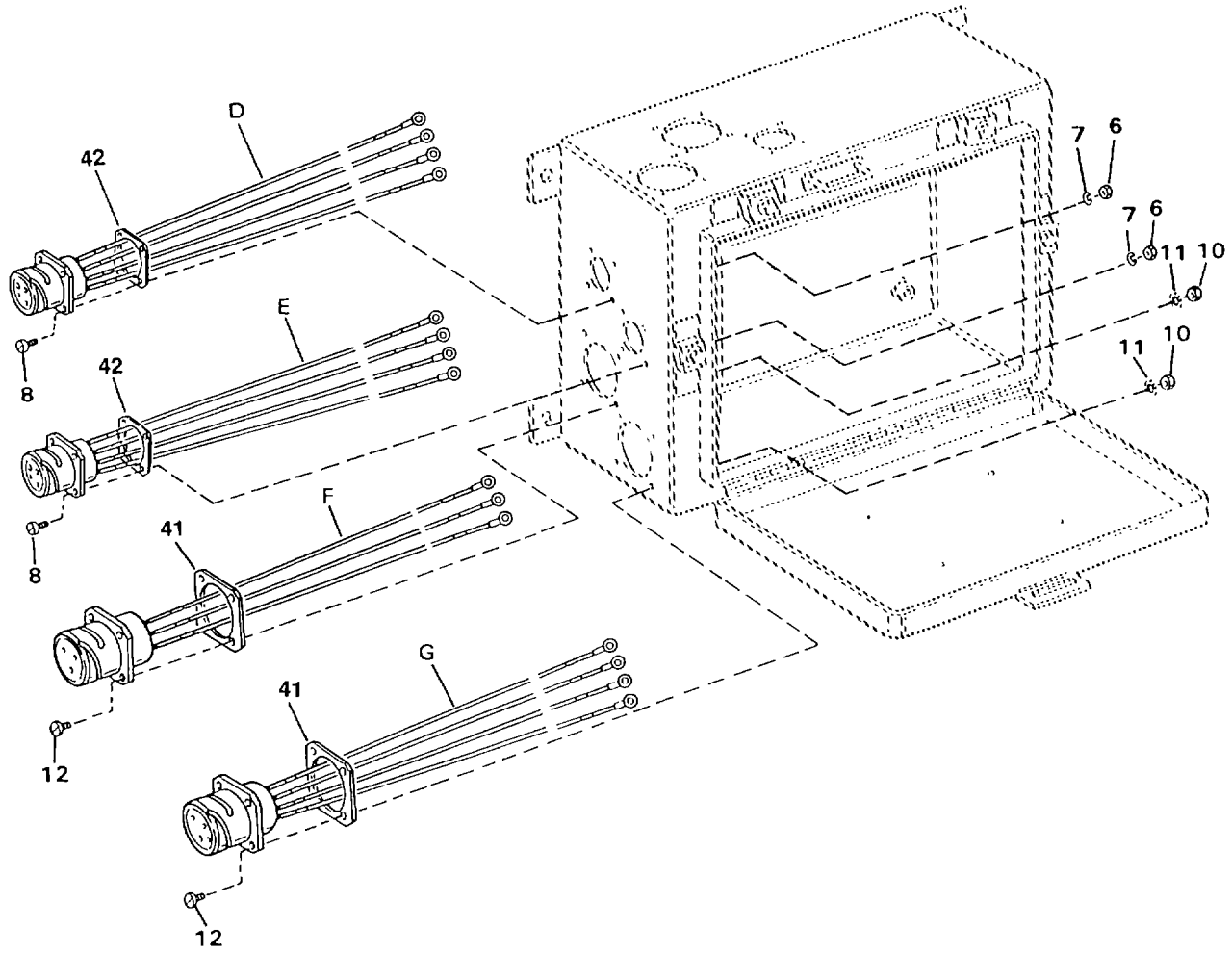

FIGURE 125. METAL OXIDE VARISTOR (MOV) ASSEMBLY (SHEET 3 OF 7)

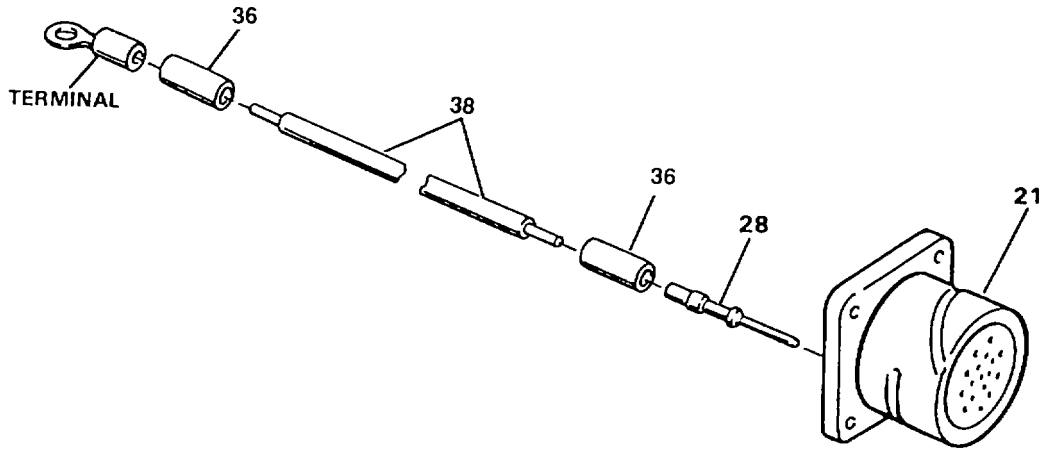

A

HARNESS ASSY.	CONNECTOR	WIRE RUN FROM	WIRE RUN TO	PIN	WIRE NO.	WIRE MARKER	WIRE	LENGTH	TERMINAL
14	21	J65A	MOV22	28	1T1	36	38	6.00	32
		J65B	MOV23	28	1T2	36	38	9.50	32
		J65C	MOV24	28	1T3	36	38	11.00	32
		J65H	GND	28	1T0	36	38	10.50	33
		J65D	MOV25	28	HL1	36	38	10.50	32
		J65E	MOV26	28	HL2	36	38	13.00	32
		J65F	MOV27	28	HL3	36	38	10.00	32
		J65G	—	28	—	—	—	—	—

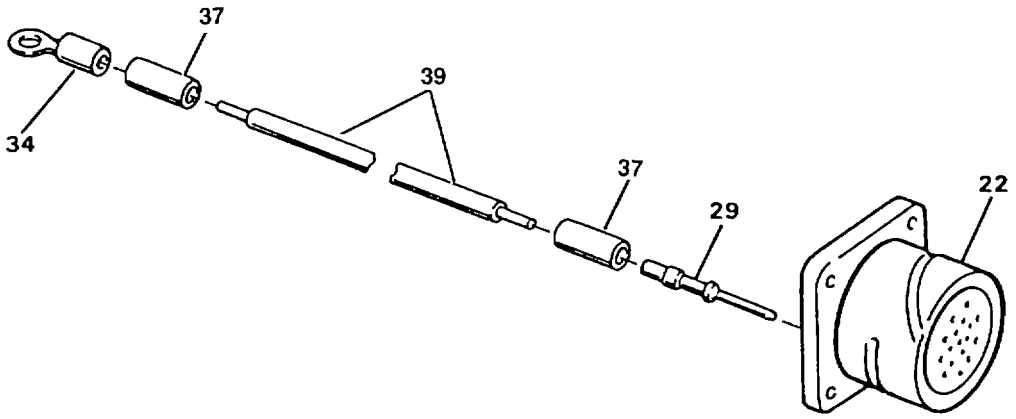

B

HARNESS ASSY.	CONNECTOR	WIRE RUN FROM	WIRE RUN TO	PIN	WIRE NO.	WIRE MARKER	WIRE	INCHES	TERMINAL
15	22	J64A	MOV18	29	8T4	37	39	9.25	34
		J64B	MOV20	29	8T5	37	39	7.00	34
		J64C	MOV16	29	8T6	37	39	4.75	34
		J64D	—	29	—	—	—	—	—

FIGURE 125. METAL OXIDE VARISTOR (MOV) ASSEMBLY (SHEET 4 OF 7)

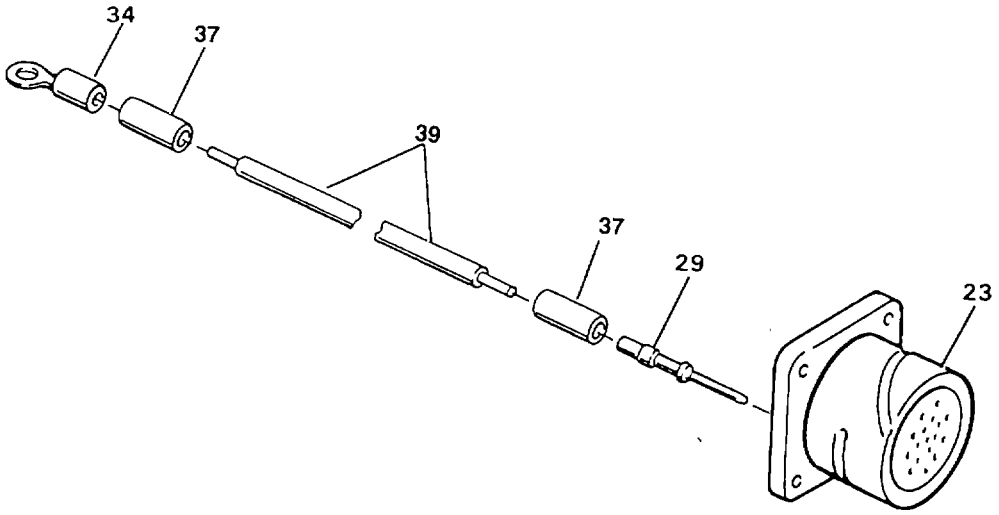

C

HARNESS ASSY.	CONNECTOR	WIRE RUN FROM	WIRE RUN TO	PIN	WIRE NO.	WIRE MARKER	WIRE	LENGTH	TERMINAL
16	23	J63A	MOV17	29	8T1	**37**	**39**	8.00	34
		J63B	MOV19	29	8T2	**37**	**39**	7.00	34
		J63C	MOV21	29	8T3	**37**	**39**	11.25	34
		J63D	GND	29	8T0	**37**	**39**	4.00	**35**

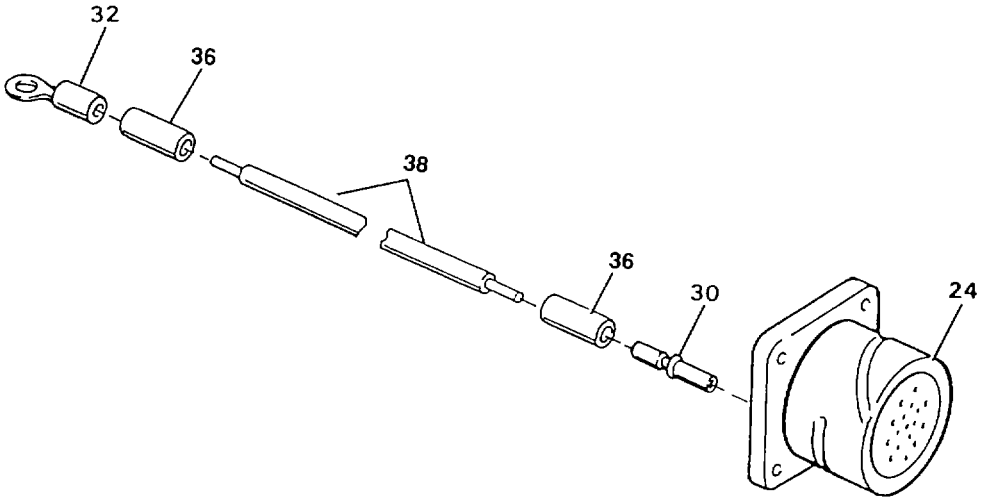

D

HARNESS ASSY.	CONNECTOR	WIRE RUN FROM	WIRE RUN TO	SOCKET	WIRE NO.	WIRE MARKER	WIRE	LENGTH	TERMINAL
17	24	J66A	MOV25	30	HL1	**36**	**38**	16.00	32
		J66B	MOV26	30	HL2	**36**	**38**	14 75	32
		J66C	MOV27	30	HL3	**36**	**38**	17.50	32
		J66D	GND	30	HL0	**36**	**38**	4.50	32

FIGURE 125. METAL OXIDE VARISTOR (MOV) ASSEMBLY (SHEET 5 OF 7)

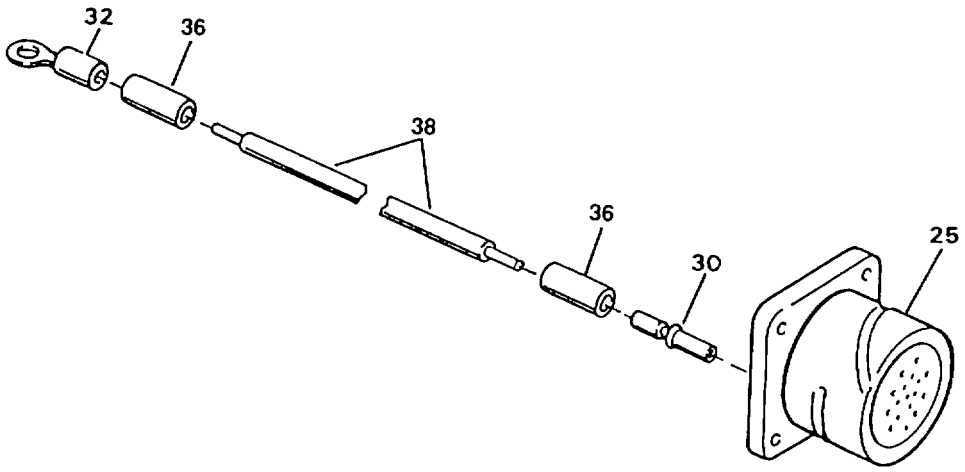

E

HARNESS ASSY.	CONNECTOR	WIRE RUN		SOCKET	WIRE NO.	WIRE MARKER	WIRE	LENGTH	TERMINAL
		FROM	TO						
18	25	J67A	MOV22	30	1T1	36	38	13.50	32
		J67B	MOV23	30	1T2	36	38	15.50	32
		J67C	MOV24	30	1T3	36	38	12.00	32
		J67D	GND	30	1T0	36	38	6.50	32

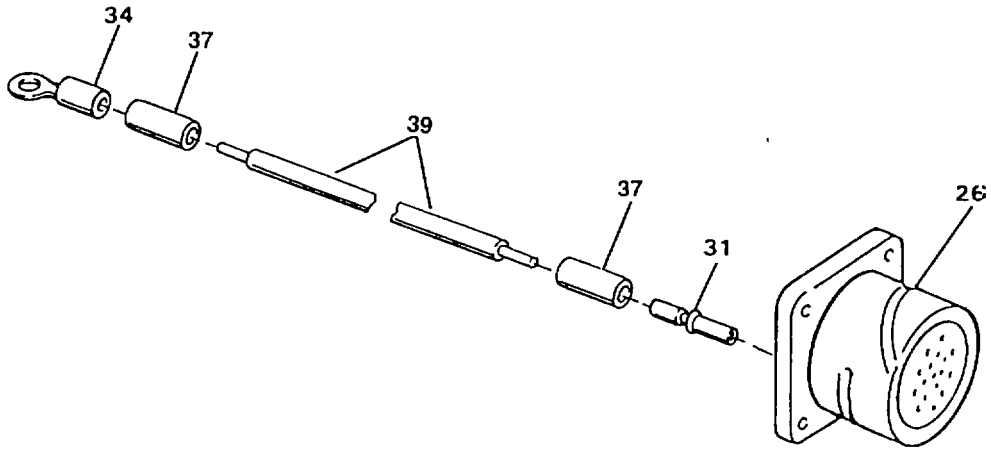

F

HARNESS ASSY.	CONNECTOR	WIRE RUN		SOCKET	WIRE NO.	WIRE MARKER	WIRE	LENGTH	TERMINAL
		FROM	TO						
19	26	J68A	MOV18	31	8T4	37	39	6.25	34
		J68B	MOV20	31	8T5	37	39	10.50	34
		J68C	MOV16	31	8T6	37	39	5.00	34
		J68D	—	31	—	—	—	—	—

FIGURE 125. METAL OXIDE VARISTOR (MOV) ASSEMBLY (SHEET 6 OF 7)

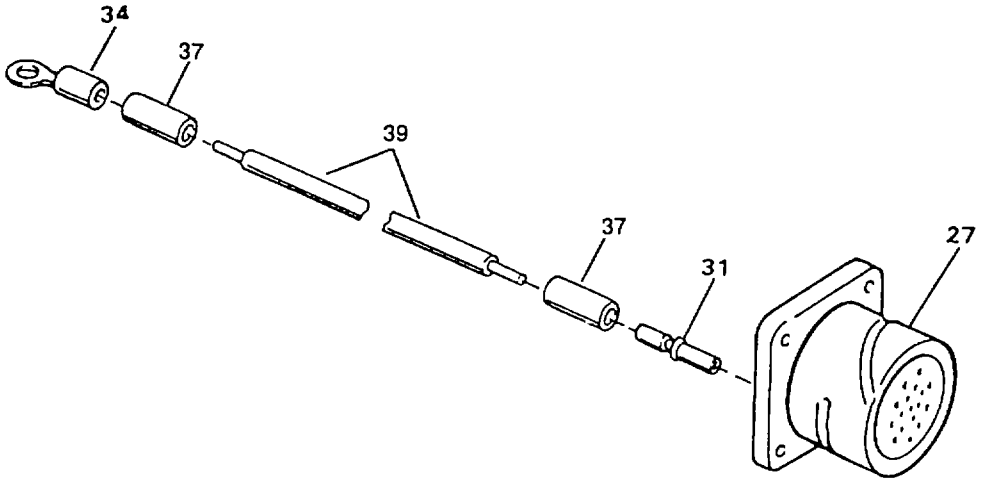

G

HARNESS ASSY.	CONNECTOR	WIRE RUN		SOCKET	WIRE NO.	WIRE MARKER	WIRE	LENGTH	TERMINAL
		FROM	TO						
20	27	J69A	MOV17	31	8T1	37	39	6.25	34
		J69B	MOV19	31	8T2	37	39	11.00	34
		J69C	MOV21	31	8T3	37	39	7.50	34
		J69D	GND	31	8T0	37	39	10.00	34

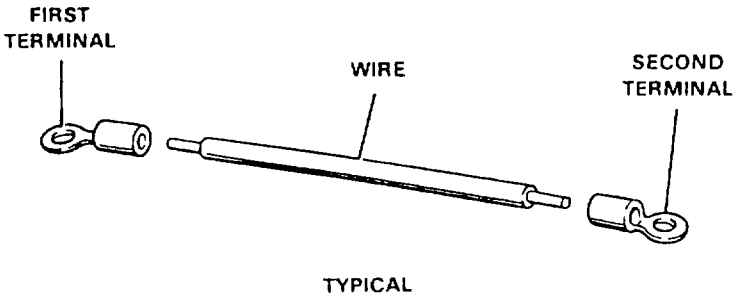

WIRE ASSY.	FIRST TERMINAL	WIRE	SECOND TERMINAL
47	50	52	50
48	50	52	50
49	50	52	51

FIGURE 125. METAL OXIDE VARISTOR (MOV) ASSEMBLY (SHEET 7 OF 7)

(1) ITEM NO	(2) SMR CODE	(3) NSN	(4) CAGEC	(5) PART NUMBER	(6) DESCRIPTION AND USABLE ON CODES(UOC)	(7) QTY
					GROUP 02 WATERPURIFICATION SYSTEM FIG. 125 METAL OXIDE VARISTOR (MOV) ASSEMBLY	
1	PAOZZ	5310009138881	96906	MS51971-3	.NUT,PLAIN,HEXAGON.....	4
2	PAOZZ	5310009847042	96906	MS35338-141	.WASHER,LOCK.....	4
3	PAOZZ	5310007737618	96906	MS15795-814	.WASHER,FLAT.....	8
4	PAOZZ	5305005765417	96906	MS35307-360	.SCREW,CAP,HEXAGON H.....	4
5	XDOFF		97403	13229E0884	.M.O.V.BOX ASSY.....	1
6	PAOZZ	5310009349748	96906	MS35649-244	..NUT,PLAIN,HEXAGON.....	12
7	PAOZZ	5310000583599	96906	MS35335-57	..WASHER,LOCK.....	12
8	PAOZZ	5305000545651	96906	MS51957-17	..SCREW,MACHINE 0.112-40 UNC-2A X 0.5 INCH LONG.....	12
9	PAOZZ	5935013503278	97403	13229E1209-3	..COVER ELECTRICAL.....	1
10	PAOZZ	5310009349759	96906	MS35649-284	..NUT,PLAIN,HEXAGON.....	16
11	PAOZZ	5310002091239	96906	MS35335-60	.WASHER,LOCK.....	16
12	PAOZZ	5305000546672	96906	MS51957-47	.SCREW,MACHINE 0.164-32 UNC-2A X 0.75 INCH LONG.....	40
13	PAOZZ	5935013593326	97403	13229E1209-4	..COVER,ELECTRICAL.....	2
14	XDOFF		97403	13229E1258-26	..HARNESS ASSEMBLY.....	1
15	XDOFF		97403	13229E1258-25	..HARNESS ASSEMBLY.....	1
16	XDOFF		97403	13229E1258-24	..HARNESS ASSEMBLY.....	1
17	XDOFF		97403	13229E1258-27	..HARNESS ASSEMBLY.....	1
18	XDOFF		97403	13229E1258-28	..HARNESS ASSEMBLY.....	1
19	XDOFF		97403	13229E1258-29	..HARNESS ASSEMBLY.....	1
20	XDOFF		97403	13229E1258-30	..HARNESS ASSEMBLY.....	1
21	PBFFF	5935013500161	17549	CA3102E22-23P-B-F80-05-57	...CONNECTOR,RECEPTACL J65.....	1
22	PBFFF	5935013500162	17549	CA3102E32-17PWB-05-F80-05-57	...CONNECTOR,RECEPTACL J64.....	1
23	PBFFF	5935013500163	17549	CA3102E32-17P-B-F80-05-57	...CONNECTOR,RECEPTACL J63.....	1
24	PBFFF	5935013470036	17549	CA3102E20-4SWB-05-F80-05-57	...CONNECTOR,RECEPTACL J66.....	1
25	PBFFF	5935013470030	17549	CA3102E20-4S-B-F80-05-57	...CONNECTOR,PLUG,ELEC J67.....	1
26	PBFFF	5935013500164	17549	CA3102E32-17SWB-05-F80-05-57	...CONNECTOR,RECEPTACL J68.....	1
27	PBFFF	5935013500165	17549	CA3102E32-17S-B-F80-05-57	...CONNECTOR,RECEPTACL J69.....	1
28	PAFZZ	5999013448759	71468	030-8588-000	...CONTACT,ELECTRICAL PART OF KIT P/N 120-02593-P.....	8
29	PAFZZ	5999013520898	17549	030-8613-000	...CONTACT,ELECTRICAL PART OF KIT P/N 120-02593-P.....	4
30	PAFZZ	5999013438909	71468	031-8557-000	...CONTACT,ELECTRICAL PART OF KIT P/N 120-02593-P.....	4
31	PAFZZ	5999013506633	17549	031-8520-000	...CONTACT,ELECTRICAL PART OF KIT P/N 120-02593-P.....	4
32	PAFZZ	5940001434777	96906	MS25036-157	...TERMINAL,LUG.....	14
33	PAFZZ	5940001139826	96906	MS25036-114	...TERMINAL,LUG.....	1
34	PAFZZ	5940005574341	96906	MS25036-123	...TERMINAL,LUG.....	13

(1) ITEM NO	(2) SMR CODE	(3) NSN	(4) CAGEC	(5) PART NUMBER	(6) DESCRIPTION AND USABLE ON CODES(UOC)	(7) QTY
35	PAFZZ	5940005574338	96906	MS25036-125	...TERMINAL,LUG.....	1
36	XDFZZ		01121	B321HSCPS.9-3336 W	...MARKER.....	30
37	XDFZZ		01121	B321HSCPS.9-5008 W	...MARKER.....	28
38	MFFZZ		09647	1-12-9-J65-J66-J 67	...WIRE CUT TO LENGTH FROM BULK, P/N M5086/1-12-9.....	15
39	MFFZZ		09647	2-4-9-J63-J64-J6 8-J69	...WIRE CUT TO LENGTH FROM BULK, P/N M5086/2-4-9.....	14
40	PAOZZ	5330006414336	96906	MS52000-8	..GASKET.....	1
41	PAOZZ	5330008272815	96906	MS52000-12	..GASKET.....	4
42	PAOZZ	5330009681753	96906	MS52000-7	..GASKET.....	2
43	PAOZZ	5310009035966	96906	MS51971-1	.NUT,PLAIN,HEXAGON.....	24
44	PAOZZ	5310005273634	96906	MS35335-61	..WASHER,LOCK.....	24
45	PAOZZ	5310009500440	96906	MS15795-409	..WASHER,FLAT.....	24
46	PAOZZ	5305007193997	96906	MS35307-303	..SCREW,CAP,HEXAGON H.....	24
47	AOOOO		97403	13229E0885-1	..WIRE ASSY.....ETN	9
47	AOOOO		97403	13229E0885-1	..WIRE ASSY.....FKD	8
48	AOOOO		97403	13229E0885-2	..WIRE ASSY.....	2
49	AOOOO		97403	13229E0885-3	..WIRE ASSY.....	1
50	PAOZZ	5940001141305	96906	MS25036-116	...TERMINAL,LUG.....	23
51	PAOZZ	5940005574345	96906	MS25036-118	...TERMINAL,LUG.....	1
52	MOOZZ		97403	13229E0885 ITEM 2	..WIRE CUT TO LENGTH FROM BULK, P/N M5086/2-8-9.....	11 53
53	PAOZZ	5920013497981	97403	13229E0326-1	..ARRESTER,ELECTRICAL.....	12
54	XDOZZ		97403	13229E0878	..PANEL.....	1
55	PAOZZ	5305013499586	97403	13229E0621-19	..SCREW,TAPPING 0.112-40, TYPE F, X 0.375 INCH LONG.....	4
56	XDOZZ		97403	13229E0411-10	..PLATE,ID POWER DISCONNECT WARNING.....	1
57	XDOOO		97403	13229E0879	..ENCLOSURE,ELEC.....	1
58	XDOZZ		00843	91307-400	...CLAMP ASSEMBLY.....	6
59	XDOZZ	5306009613444	80204	ANSI B18.2.1	...BOLT,MACHINE.....	6
60	XDOZZ	5306009613444	80204	ANSI B18.2.1	...BOLT,MACHINE 0.812 OD X 0.406 ID X 0.065 TK.....	6

END OF FIGURE

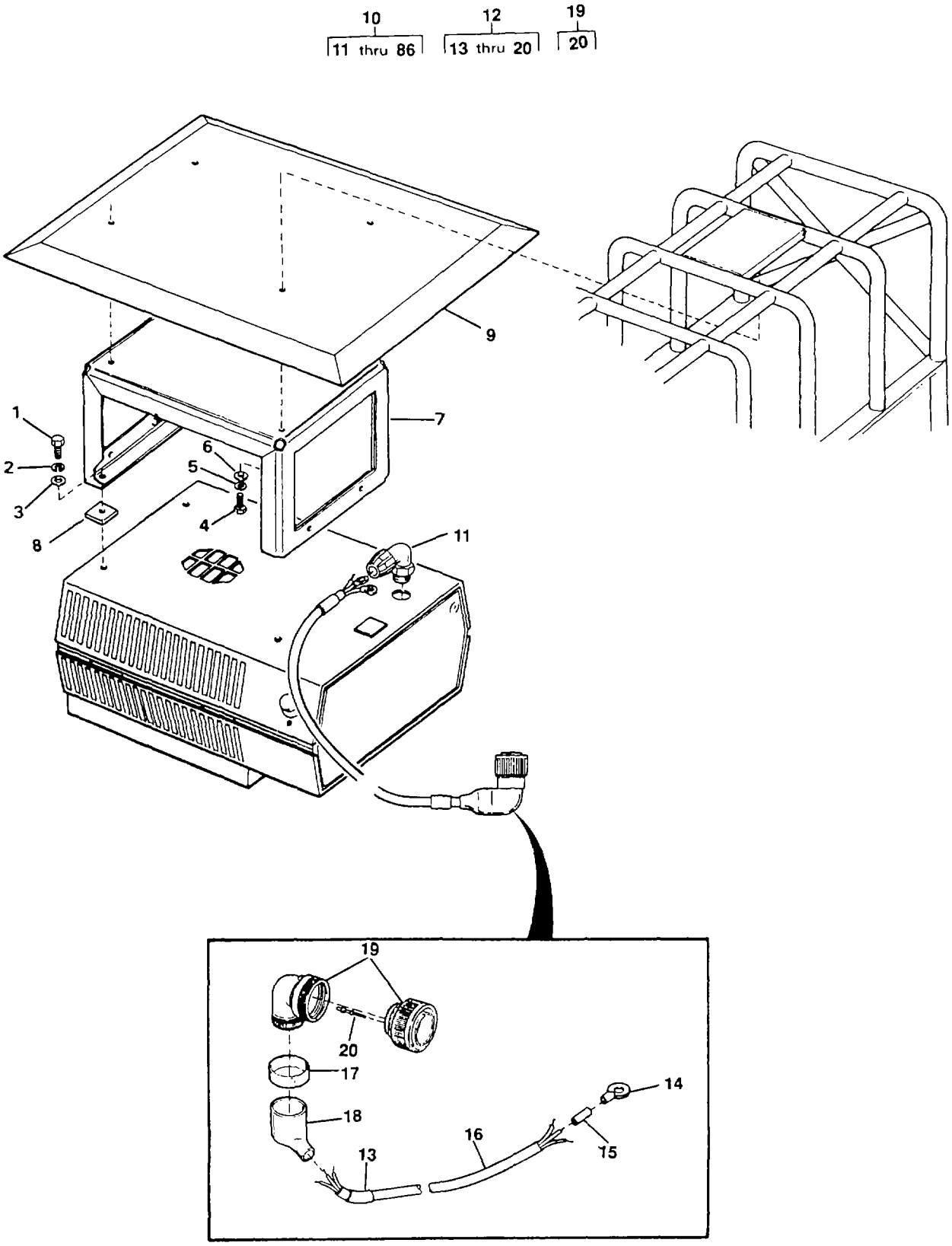

FIGURE 126. ELECTRIC HEATER (SHEET 1 OF 4)

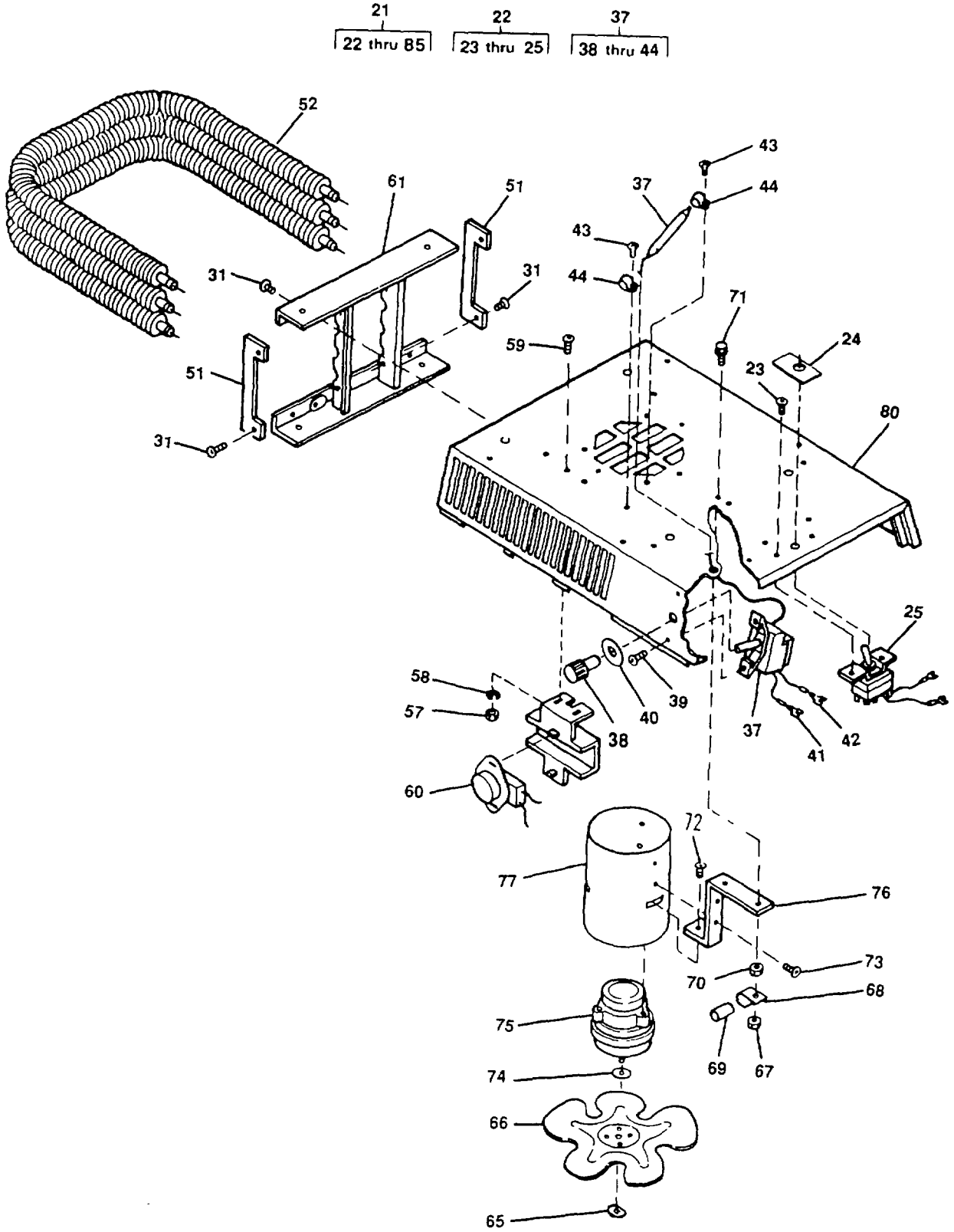

FIGURE 126. ELECTRIC HEATER (SHEET 2 OF 4)

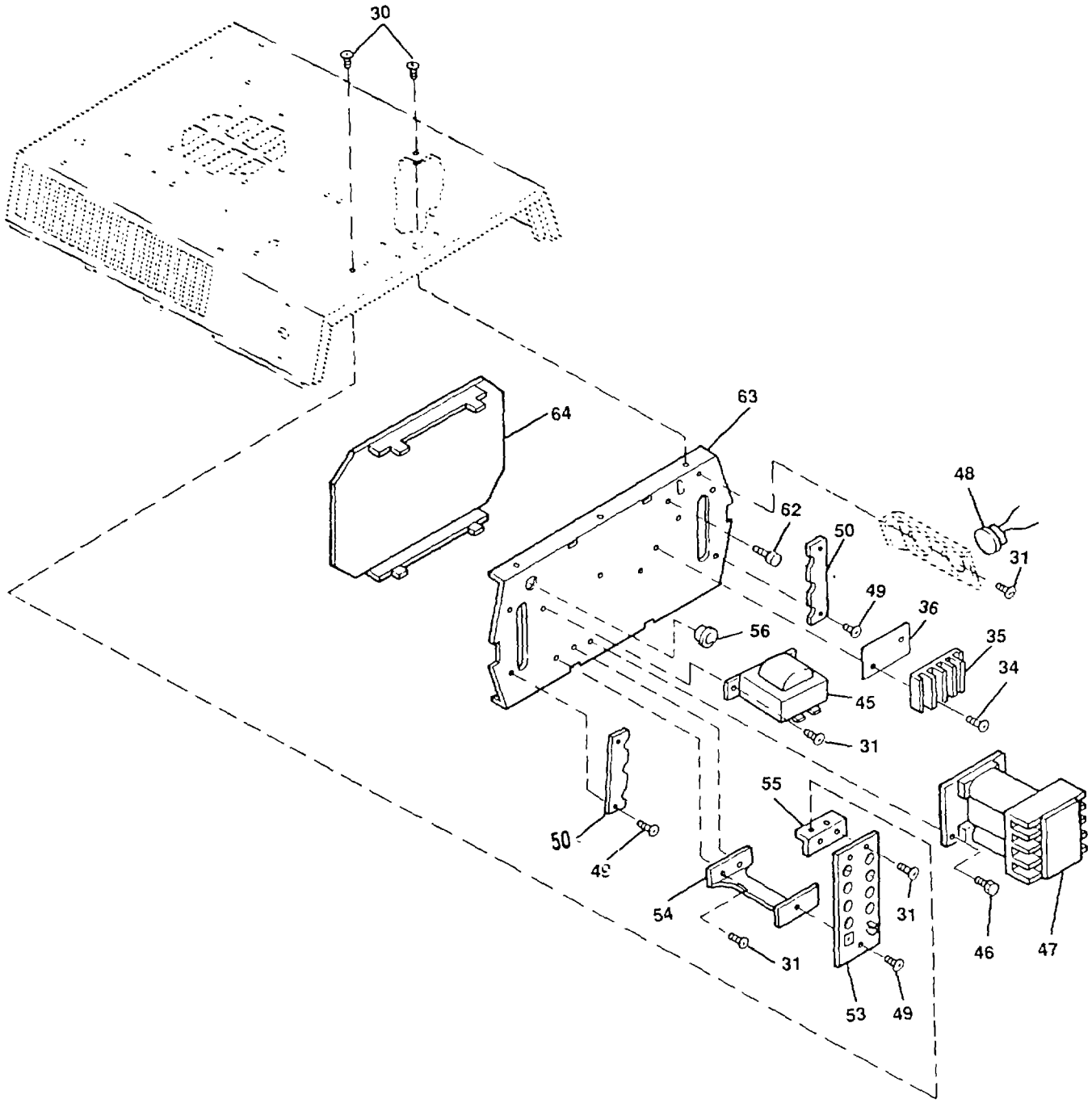

FIGURE 126. ELECTRIC HEATER (SHEET 3 OF 4)

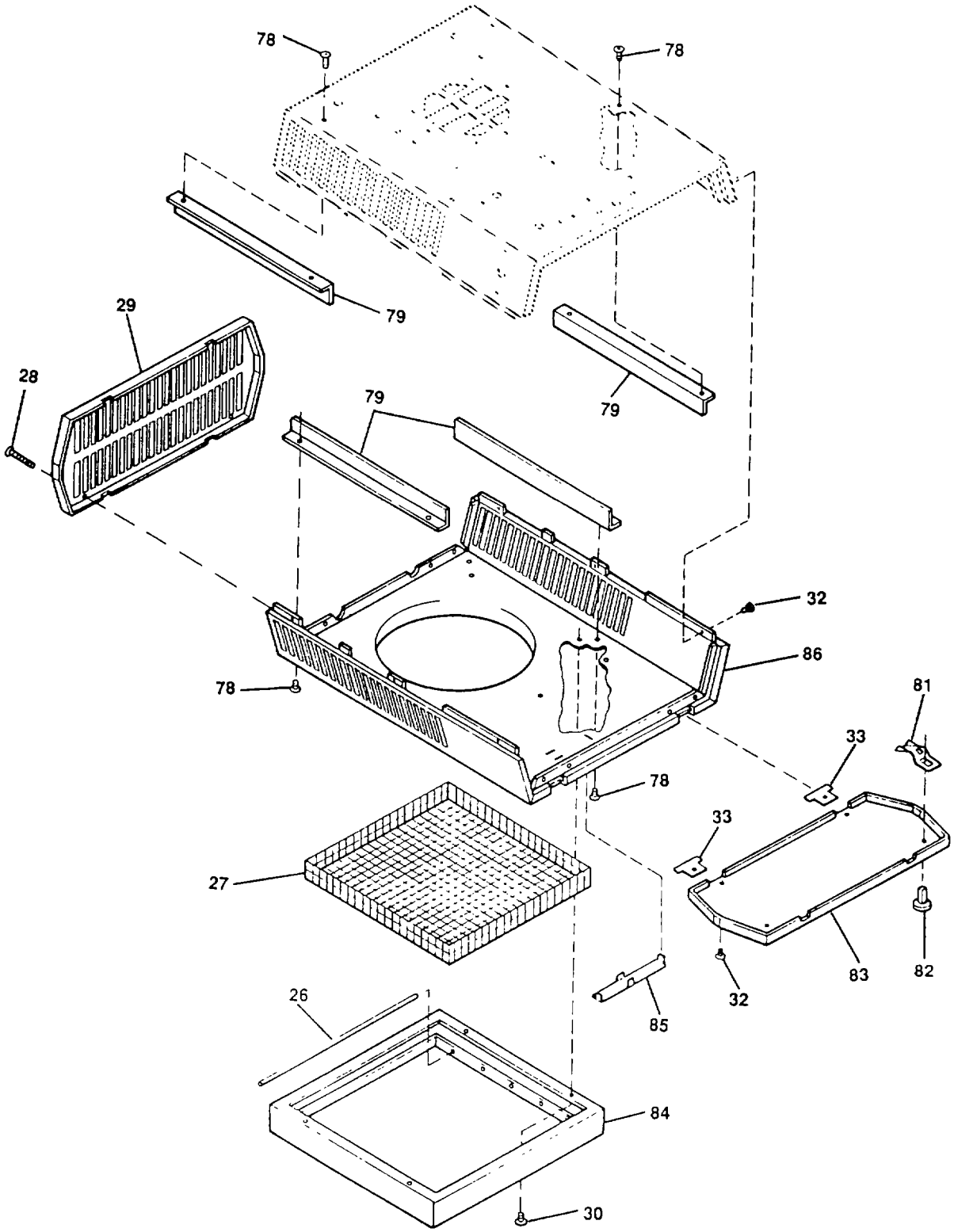

FIGURE 126. ELECTRIC HEATER (SHEET 4 OF 4)

(1) ITEM NO	(2) SMR CODE	(3) NSN	(4) CAGEC	(5) PART NUMBER	(6) DESCRIPTION AND USABLE ON CODES(UOC)	(7) QTY
					GROUP 02 WATER PURIFICATION SYSTEM FIG. 126 ELECTRIC HEATER	
1	PAOZZ	5306006379675	96906	MS35307-332	.BOLT,MACHINE.....ETN	4
1	PAOZZ		96906	MS35307-334	.BOLT,MACHINE.....FKD	4
2	PAOZZ	5310009746623	96906	MS35338-140	.WASHER,LOCK.....	4
3	PAOZZ	5310006255756	96906	MS15795-812	.WASHER,FLAT.....	4
4	PAOZZ	5305000213620	96906	MS35307-307	.SCREW,CAP,HEXAGON H.....	4
5	PAOZZ	5310009338121	96906	MS35338-139	.WASHER,LOCK.....	4
6	PAOZZ	5310010911248	96906	MS15795-810	.WASHER,FLAT.....	4
7	XDOZZ		97403	13229E0872	.BRACKET,HEATER.....	1
8	PBFZZ	2590013950423	97403	13229E0826-5	.PAD,CUSHIONING.....	4
9	XDOZZ		97403	13229E0914	.COVER,HEATER.....	1
10	XDOFF		97403	13229E0893	.HEATER ASSY,PUMP.....	1
11	PBOZZ	5975013581058	15235	NCGE2234-SG	..STUFFING TUBE.....	1
12	XDOFF		97403	13229E1260-25	..HARNESS ASSEMBLY W68.....	1
13	XDFZZ		09647	120-02433-75	...MARKER.....	1
14	PAFZZ	5940001434794	96906	MS25036-112	...TERMINAL,LUG.....	1
15	XDFZZ		01121	B-321HSCPS.9-500 8W	...MARKER.....	4
16	MFFZZ		09647	120-02605-22	...CABLE CUT TO LENGTH FROM BULK, P/N 13229E0741-2.....	1
17	XDFZZ		09647	120-02433-141	...MARKER.....	1
18	PBFZZ	5970010930413	06090	222A163-3/42	...INSULATION SLEEVING.....ETN	1
18	PBFZZ		06090	222A174-3/42	...INSULATION SLEEVING.....FKD	1
19	PBFFF	5935013500167	17549	CA3108F20-4PWB-1 5-57	...CONNECTOR BODY,PLUG P66.....	1
20	PAFZZ	5999013448759	71468	030-8588-000	....CONTACT,ELECTRICAL PART OF KIT P/N 120-02593-P.....	4
21	PBOFF	4520013484216	09647	120-01867	..HEATER,SPACE,ELECTR.....	1
22	XDFZZ		83750	FS5102	...SWITCH,SUMMER FAN.....	1
23	XDFZZ		83750	3985	....SCREW,DRIVE.....	16
24	XDFZZ		83750	NA-4804	....PLATE,CONTROL.....	1
25	XAFZZ		83750	57858-004	....SWITCH,TOGGLE.....	1
26	XDOZZ		83750	P3P-05-OSHA-RT	...ROD,RETAINING.....	5
27	XDFZZ		83750	P3P-05-OSHA-WG	...WIRE,MESH.....	1
28	XDFZZ		83750	3988	..SCREW,BRASS.....	4
29	XDFZZ		83750	56962-001	...PANEL.....	1
30	XDFZZ		83750	3985	...SCREW,DRIVE.....	12
31	XDFZZ		83750	3602	...SCREW.....	16
32	XDFZZ		83750	3984	...SCREW,BRASS.....	6
33	XDFZZ		83750	56974-001	..HINGE.....	2
34	XDFZZ		83750	1486	...SCREW.....	2
35	XDFZZ		83750	56815-001	...TERM BLOCK.....	1
36	XDFZZ		83750	57088-001	...INSULATOR.....	1
37	XDFFF		83750	T5100	..THERMOSTAT ASSEMBLY.....	1
38	XDFZZ		83750	56120-001	....KNOB.....	1
39	XDFZZ		83750	4104	....SCREW.....	2
40	XDFZZ		83750	57574-001	....PLATE,CONTROL.....	1
41	XDFZZ		83750	56543-010	....BRACELET,WIRE.....	1
42	XDFZZ		83750	56543-011	....BRACELET,WIRE.....	1
43	XDOZZ	5305014429834	80205	ANSIB18.6.4	....SCREW,DRIVE 8-32 X 1/2	2

(1) ITEM NO	(2) SMR CODE	(3) NSN	(4) CAGEC	(5) PART NUMBER	(6) DESCRIPTION AND USABLE ON CODES(UOC)	(7) QTY
					TYPE F, SELF TAPPING, PHILLIPS FLAT HEAD, SS.....	
44	XDFZZ		83750	1742	....CLIP,BULB.....	2
45	XDFZZ		83750	60719-006	...TRANSFORMER.....	1
46	XDFZZ		83750	1374	...SCREW.....	2
47	XDFZZ		83750	50378-016	...CONTACTOR.....	1
48	XDFZZ		83750	60149-036	...SW,THERMAL LIMIT.....	1
49	XDFZZ		83750	3624	...SCREW.....	5
50	XDFZZ		83750	56978-001	...RETAINER,ELEMENT.....	2
51	XDFZZ		83750	56976-001	...CLIP,ELEM LOCKING.....	2
52	XDFZZ		83750	60715-010	...ELEMENT ASSEMBLY.....	3
53	XDFZZ		83750	56809-001	...TERM BOARD.....	1
54	XDFZZ		83750	57052-001	...BRACKET,LEG.....	
55	XDFZZ		83750	57047-001	...BRACKET,TERM. BD.....	
56	XDFZZ		83750	40881-004	...BUSHING.....	1
57	XDFZZ		83750	3895	...NUT.....	2
58	PAFZZ	5310013532662	83750	3740	...WASHER,LOCK.....	2
59	PAFZZ	5305013522009	83750	3939	...SCREW,MACHINE.....	2
60	XDFZZ		83750	56811-001	...FAN OVERRIDE.....	1
61	XDFZZ		83750	54914-001	...ELEMENT HANGER ASSY.....	1
62	XDFZZ		83750	1458	...SCREW.....	1
63	XDFZZ		83750	56981-001	...CONTROL PANEL.....	1
64	XDFZZ		83750	56994-001	...PLATE,BAFFLE.....	1
65	XDFZZ		83750	3807	...SPEED NUT.....	1
66	XDFZZ		83750	56806-001	...FAN BLADE.....	1
67	XDFZZ		83750	1038	...NUT.....	1
68	XDFZZ		83750	57004-001	...CLIP,TIE DOWN.....	1
69	XDFZZ		83750	56036-008	...SLEEVE.....	1
70	XDFZZ		83750	3904	...NUT,SELF LOCKING.....	6
71	XDFZZ		83750	4197	...SCREW.....	6
72	XDFZZ		83750	4365	...SCREW.....	3
73	XDOZZ		83750	3813	...SCREW.....	6
74	XDFZZ		83750	4364	...WASHER,G.E.....	1
75	XDFZZ		83750	56562-018	...MOTOR 480 V.....	1
76	XDFZZ		83750	57081-001	...MOUNTING LEG,MOTOR.....	3
77	XDFZZ		83750	56970-001	...ENCLOSURE,MOTOR.....	1
78	XDOZZ		83750	3321	...SCREW.....	8
79	XDOZZ		83750	54912-001	...ANGLE,AIR DFTR.....	4
80	XDFZZ		83750	56957-001	...BACK,HEATER.....	1
81	XDFZZ		83750	57452-002	...PAWL.....	2
82	XDFZZ		83750	57452-001	...STUD,SQUARE.....	2
83	XDFZZ		83750	56963-001	...PANEL.....	1
84	XDFZZ		83750	56982-001	...FRAME.....	1
85	XDFZZ		83750	57092-001	...NAMEPLATE.....	1
86	XDFZZ		83750	56956-001	...CASE,HEATER.....	1

END OF FIGURE

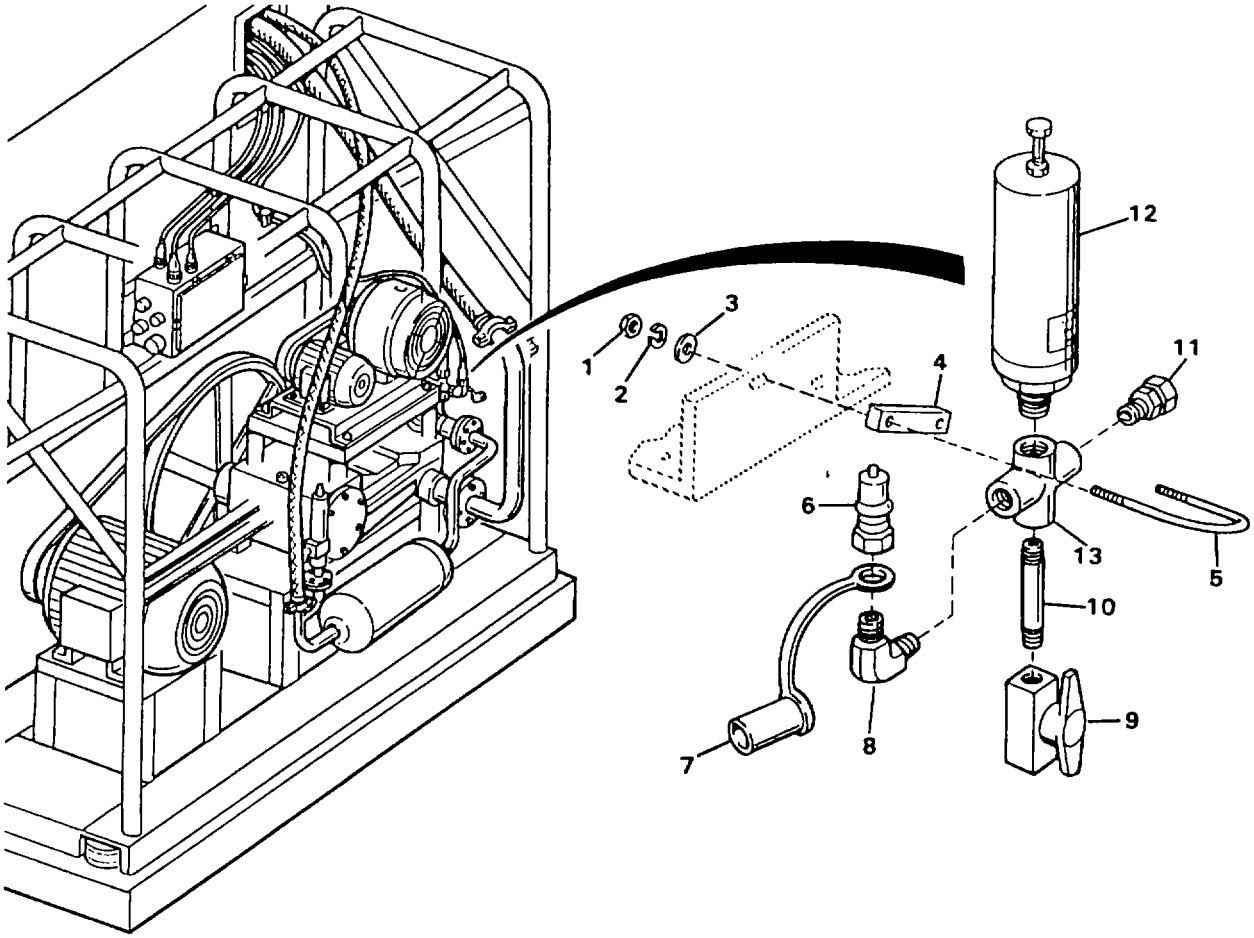

FIGURE 127. AIR COMPRESSOR RELIEF VALVE

(1) ITEM NO	(2) SMR CODE	(3) NSN	(4) CAGEC	(5) PART NUMBER	(6) DESCRIPTION AND USABLE ON CODES(UOC)	(7) QTY
					GROUP 02 WATER PURIFICATION SYSTEM FIG. 127 AIR COMPRESSOR RELIEF VALVE	
1	PAFZZ	5310009035966	96906	MS51971-1	.NUT,PLAIN,HEXAGON.....	2
2	PAFZZ	5310009338121	96906	MS35338-139	.WASHER,LOCK.....	2
3	PAFZZ	5310010911248	96906	MS15795-810	.WASHER,FLAT.....	2
4	XDFZZ		97403	13229E1298	.SPACER,VALVE.....	1
5	XDFZZ		97403	13229E0697-3	.CLAMP,U-BOLT.....	1
6	PAFZZ	4730013519998	97111	SSH2-63Y	.COUPLING HALF,QUICK.....	1
7	PAFZZ	5340013074394	97111	H2-66M	.PLUG,PROTECTIVE,DUS.....	1
8	XDFZZ		81343	SAE J5144-4-1402 37	.ELBOW,SCREWED 90 DEGREE, 1/4 NPT NPT.....	1
9	PBFZZ	4820013493816	97403	13229E0678	.VALVE,PLUG.....	1
10	XDFZZ		97403	13229E1255-5	.NIPPLE,PIPE.....	1
11	PAFZZ	4730006915458	54938	5MSC4N-316	.ADAPTER,STRAIGHT,PI.....	1
12	PBFZZ	4820013523714	97403	13229E0383	.VALVE,SAFETY RELIEF 2000 PSIG.....	1
13	PAFZZ	4730007265859	97403	13229E0907	.CROSS,PIPE,FEMALE.....	1

END OF FIGURE

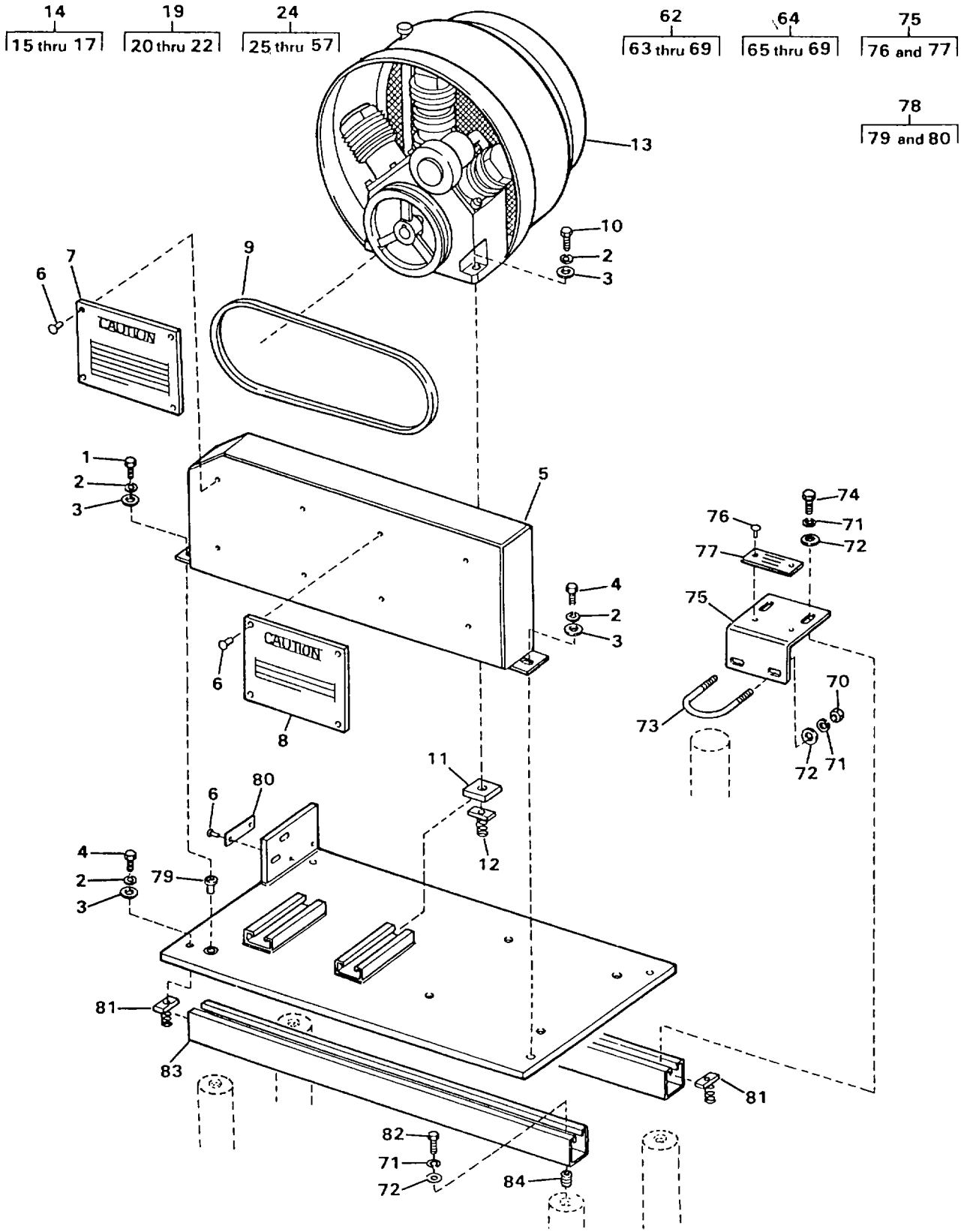

FIGURE 128. AIR COMPRESSOR MOUNTING, BELT GUARD AND MOTOR (SHEET 1 OF 4)

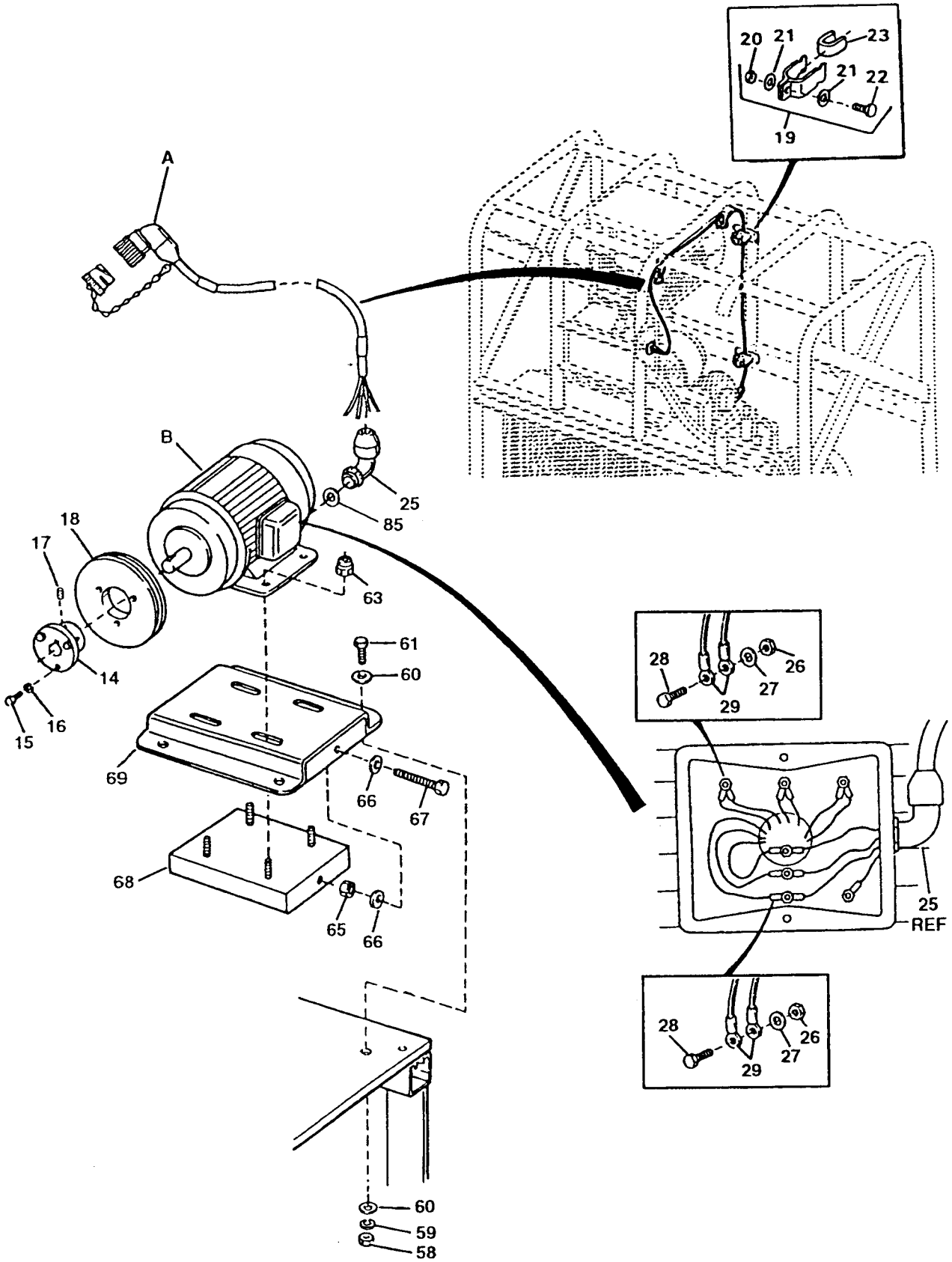

FIGURE 128. AIR COMPRESSOR MOUNTING, BELT GUARD AND MOTOR (SHEET 2 OF 4)

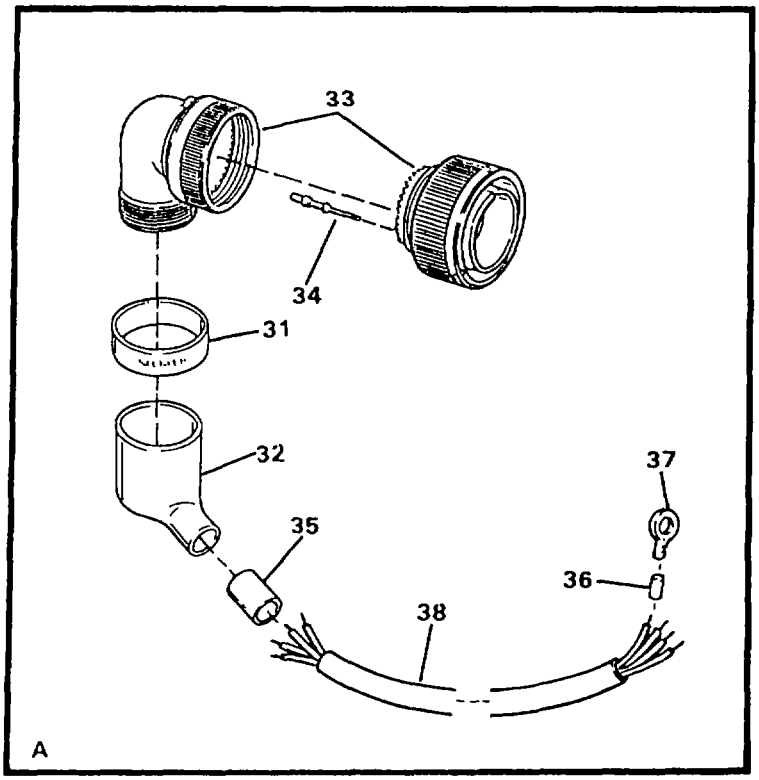

CABLE ASSY	CONNECTOR DETAIL	CONTACT	PLUG	WIRE RUN		TERMINAL
				FROM	TO	
30	33	34	—	P67A	1T1	37
		34	—	P67B	1T2	37
		34	—	P67C	1T3	37
		34	—	P67D	1T0	37

FIGURE 128. AIR COMPRESSOR MOUNTING, BELT GUARD AND MOTOR (SHEET 3 OF 4)

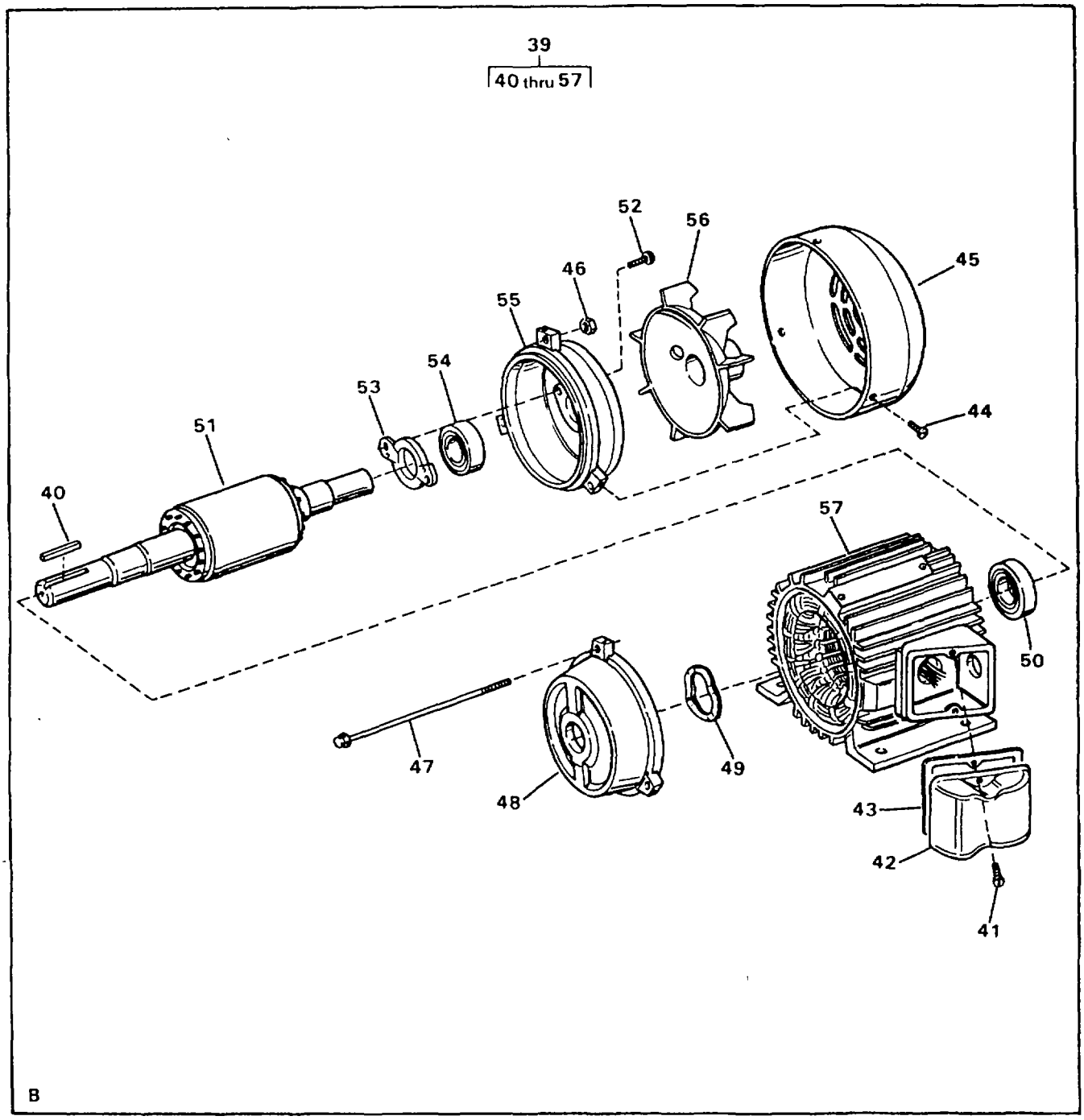

FIGURE 128. AIR COMPRESSOR MOUNTING, BELT GUARD AND MOTOR (SHEET 4 OF 4)

(1) ITEM NO	(2) SMR CODE	(3) NSN	(4) CAGEC	(5) PART NUMBER	(6) DESCRIPTION AND USABLE ON CODES(UOC)	(7) QTY
					GROUP 02 WATER PURIFICATION SYSTEM FIG. 128 AIR COMPRESSOR MOUNTING, BELT GUARD AND MOTOR	
1	PAOZZ	5305007024523	96906	MS35307-306	.SCREW,CAP,HEXAGON H.....	1
2	PAOZZ	5310009338121	96906	MS35338-139	.WASHER,LOCK.....	13
3	PAOZZ	5310010911248	96906	MS15795-810	.WASHER,FLAT.....	13
4	PAOZZ	5305002078253	96906	MS35307-308	.SCREW,CAP,HEXAGON H.....	4
5	XDOOO		97403	13229E1016	.BELT GUARD ASSY.....	1
6	PAOZZ	5320013490933	97403	13229E0350-1	..RIVET,BLIND.....	10
7	XDOZZ		97403	13229E0411-5	..PLATE,ID RELIEVE AIR PRESSURE WARNING	1
8	XDOZZ		97403	13229E0411-4	..PLATE,ID BELT GUARD WARNING.....	1
9	PAOZZ	3030013521238	97403	13229E0652	.BELT,V.....	1
10	PAFZZ	5305006166370	96906	MS35307-313	.SCREW,CAP,HEXAGON H.....	4
11	XDFZZ		97403	13229E1143-2	.SPACER,PAD.....	4
12	PBFZZ	5310013532044	97403	13229E1142-3	.NUT,PLAIN, RECTANGULAR.....	4
13	PBFHH	4310013505466	57328	PURUSP1-H	AIR COMPRESSOR SEE FIGURE 129 FOR BREAKDOWN.....	1
14	XDOZZ		97403	13229E0369	.BUSHING.....	1
15	PAOZZ	5305005765807	96906	MS35307-311	..SCREW,CAP,HEXAGON H.....	3
16	PAOZZ	5310009338121	96906	MS35338-139	..WASHER,LOCK.....	3
17	PAOZA	5305002088063	10001	346454PC295	..SETSCREW 0.250-20 UNC-2A X 0.375 INCH LONG.....	1
18	XDOZZ		97403	13229E0653	.PULLEY,GROOVE.....	1
19	PAOZZ	5340013528430	97403	13229E0685-10	.HANGER,PIPE.....	4
20	PAOZZ	5310013533634	09647	120-02383	..NUT,SELF-LOCKING,HE 1/4-20 UNC-2B.....	1
21	PAOZZ	5310010911248	96906	MS15795-810	..WASHER,FLAT.....	2
22	PAOZZ	5305002078253	96906	MS35307-308	..SCREW,CAP,HEXAGON H.....	1
23	MOOZZ		97403	13229E1017-80	.CUSHION CUT TO LENGTH FROM BULK, P/N P-2600.....	4
24	PAOFF	6105013518237	97403	13229E0895	.MOTOR,DIRECT CURRENN.....	1
25	PBOZZ	5975013581058	15235	NCGE2234-SG	..STUFFING TUBE.....	1
26	PAOZZ	5310009035966	96906	MS51971-1	..NUT,PLAIN,HEXAGON.....	
27	PAOZZ	5310005273634	96906	MS35335-61	..WASHER,LOCK.....	6
28	PAOZZ	5305007193997	96906	MS35307-303	..SCREW,CAP,HEXAGON H.....	6
29	PAOZZ	5940001138184	96906	MS25036-150	..TERMINAL,LUG MOTOR LEADS.....	9
30	PBOFF	6150013505439	97403	13229E1260-26	..CABLE ASSEMBLY,POWE W67.....	1
31	XDFZZ		09647	120-02433-142	...MARKER.....	1
32	PBFZZ		06090	222A163-3/42	...INSULATION SLEEVING.....ETN	1
32	PBFZZ	5970010930413	06090	222A174-3/42	...INSULATION SLEEVING.....FKD	1
33	PBFFF	5935013467152	17549	CA3108F20-4P-B-1 5-57	...CONNECTOR,PLUG,ELEC P67.....	1
34	PAFZZ	5999013448759	71468	030-8588-000	....CONTACT,ELECTRICAL PART OF KIT P/N 120-02593-P.....	4
35	XDFZZ		09647	120-02433-73	...MARKER.....	2
36	XDFZZ		01121	B-321HSCPS.9-500 8W	...MARKER.....	8
37	PAFZZ	5940001434777	96906	MS25036-157	...TERMINAL,LUG.....	4
38	MFFZZ		97403	13229E1260ITEM 3	...CABLE CUT TO LENGTH FROM BULK, P/N 13229E0741-2.....	1

(1) ITEM NO	(2) SMR CODE	(3) NSN	(4) CAGEC	(5) PART NUMBER	(6) DESCRIPTION AND USABLE ON CODES(UOC)	(7) QTY
39	PBOFF	6105013514040	0D5S3	18240TC	..MOTOR,DIRECT CURREN.....	1
40	PAOZZ	5315008005440	96906	MS20066-1	...KEY,MACHINE.....	1
41	XDOZZ		0D5S3	A4466-B	...SCREW.....	2
42	XDOZZ		0D5S3	A4466	...COVER.....	1
43	XDOZZ		0D5S3	A4466-A	..GASKET.....	1
44	XDFZZ		0D5S3	F90-M4X10	..SCREW,FAN COVER.....	3
45	XDFZZ		0D5S3	F90C43/3	...COVER,FAN.....	1
46	XDFZZ		0D5S3	4-10006212	...NUT,SQ,SST.....	3
47	XDFZZ		0D5S3	F90A3734/5	...THRU BOLT,MTG.....	3
48	XAFZZ		0D5S3	F90A14/9	...ENDSHIELD DRIVE END.....	1
49	XDFZZ		0D5S3	F90X45MM	...WASHER,WAVE.....	1
50	XDFZZ		0D5S3	F90-620522	...BEARING,END DRIVE.....	1
51	XAFZZ		0D5S3	F90C474/F14N415/ 5	...ROTOR AND SHAFT.....	1
52	XDFZZ		0D5S3	M8X12HX.HD	...SCREW,BRG RETAINER.....	2
53	XDFZZ		0D5S3	F90-C33	...RETAINER,BEARING.....	1
54	XDFZZ		0D5S3	F90-620322	...BEARING NON-DRIVE END.....	1
55	XDFZZ		0DSS3	F90A14/9	...ENDSHIELD NON-DRIVE END.....	1
56	XDFZZ		0D5S3	F90C4513/2	...FAN,EXTERNAL.....	1
57	XAFZZ		0D5S3	F90659	...WOUND STATOR ASSY.....	1
58	PAOZZ	5310007670445	96906	MS51971-2	.NUT,PLAIN,HEXAGON.....	4
59	PAOZZ	5310009746623	96906	MS35338-140	.WASHER,LOCK.....	4
60	PAOZZ	5310006255756	96906	MS15795-812	.WASHER,FLAT.....	8
61	PAOZZ	5306005434405	96906	MS35307-334	.BOLT,MACHINE.....	4
62	XDOOO		97403	13229E0758-1	.BASE ASSY,MOTOR.....	1
63	PBOZZ	5310002416606	96906	MS17830-5C	..NUT,SELF-LOCKING,HE 5/16-18 UNC-2B, SS.....	4
64	XAOOO		30647	MB-200A	..BASE,MOTOR.....	1
65	XDOZZ		30647	21NE066	...NUT,SELF LOCKING 3/8-16 UNC-2B.....	1
66	XDOZZ		30647	W-38	...WASHER,FLAT 3/8 ID.....	2
67	XDOZZ		30647	AB-23	...SCREW,CAP HEX HD 3/8-16-2A X 4 INCHES LONG.....	1
68	XAOZZ		30647	145-2	...MOTOR BASE,BOTTOM.....	1
69	XAOZZ		30647	145-1	...MOTOR BASE,UPPER.....	1
70	PAFZZ	5310009035966	96906	MS51971-1	.NUT,PLAIN,HEXAGON.....	2
71	PAFZZ	5310009338121	96906	MS35338-139	.WASHER,LOCK.....	6
72	PAFZZ	5310010911248	96906	MS15795-810	.WASHER,FLAT.....	6
73	XDFZZ		97403	13229E0697-2	.CLAMP,U BOLT.....	1
74	PAFZZ	5305002078253	96906	MS35307-308	.SCREW,CAP,HEXAGON H.....	2
75	XDFFF		97403	13229E0959	.SUPPORT,VALVE.....	1
76	PAFZZ	5320013490932	97403	13229E0350-2	..RIVET,BLIND.....	2
77	XDFZZ		97403	13229E0782-53	..PLATE,ID SYSTEM H.P. RELIEF.....	1
78	XDFFF		97403	13229E1288	.BASE,AIR COMP.....	1
79	XDOZZ		97403	13229E0114-2	..NUT,BLIND RIVET.....	1
80	XDOZZ		97403	13229E0782-115	..PLATE,ID AIR SYSTEM H.P. RELIEF.....	1
81	PBFZZ	5310013540226	97403	13229E1142-2	..NUT,PLAIN,RECTANGULAR.....	6
82	XDFZZ		96906	MS35307-307	.SCREW,CAP,HEXAGON H.....	4
83	XDFZZ		97403	13229E0380-9	.SUPPORT,PIPE.....	2
84	PAFZZ	5340002904489	96906	MS122241	.INSERT,SCREW THREAD.....	4
85	PAOZZ	5330013790587	15235	SG2	.WASHER,SEALING.....	1

END OF FIGURE

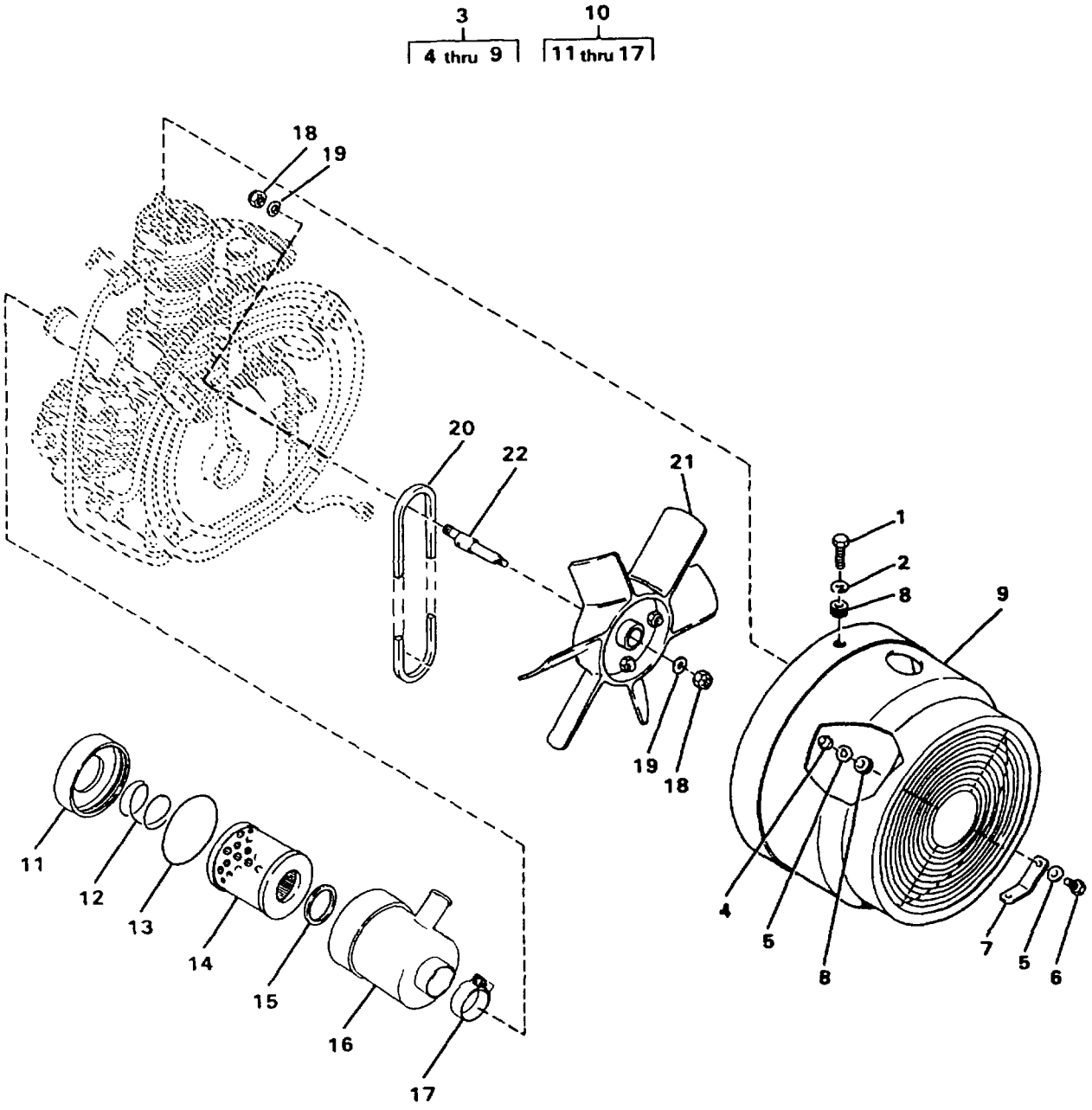

FIGURE 129. AIR COMPRESSOR (SHEET 1 OF 7)

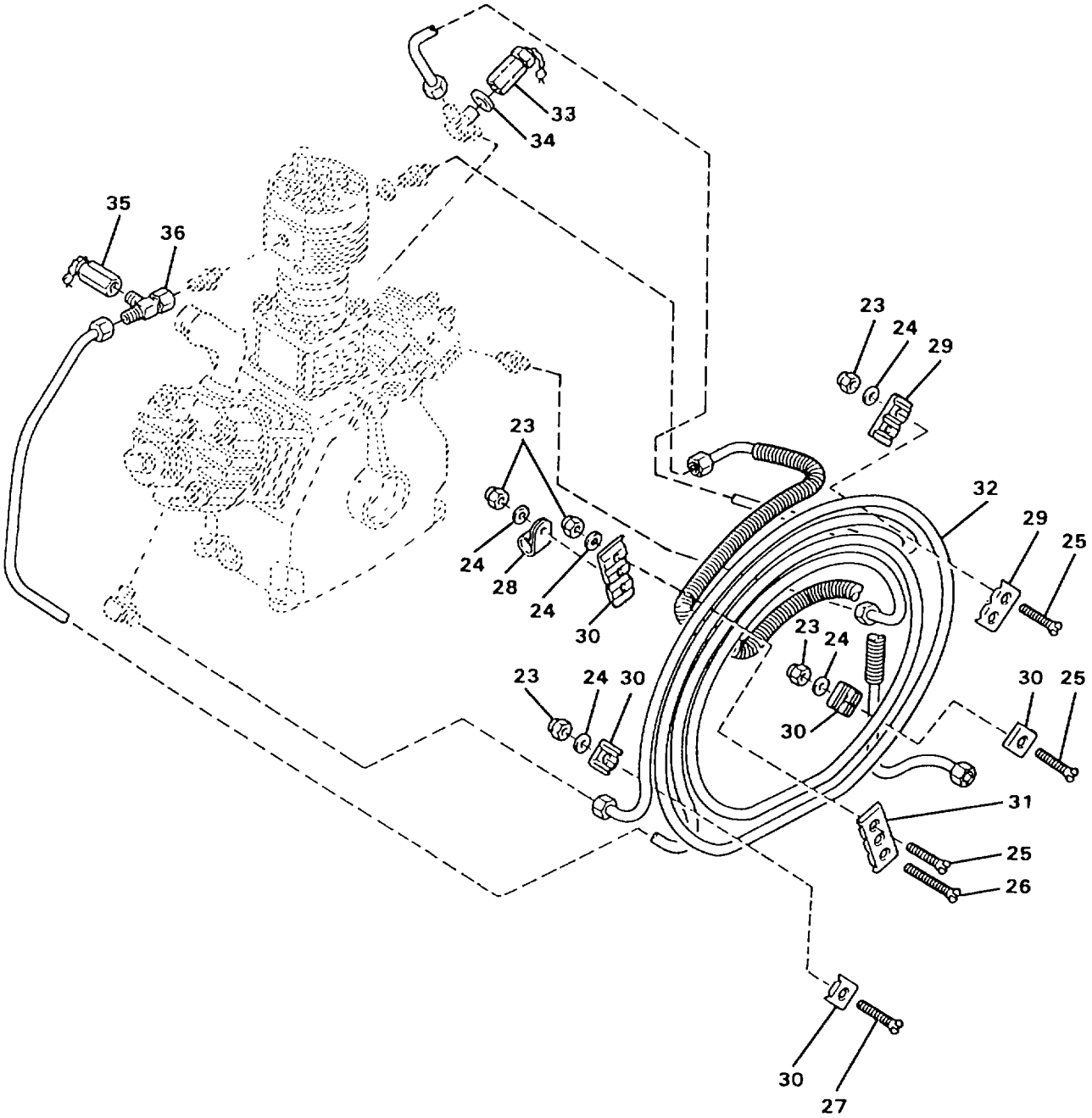

FIGURE 129. AIR COMPRESSOR (SHEET 2 OF 7)

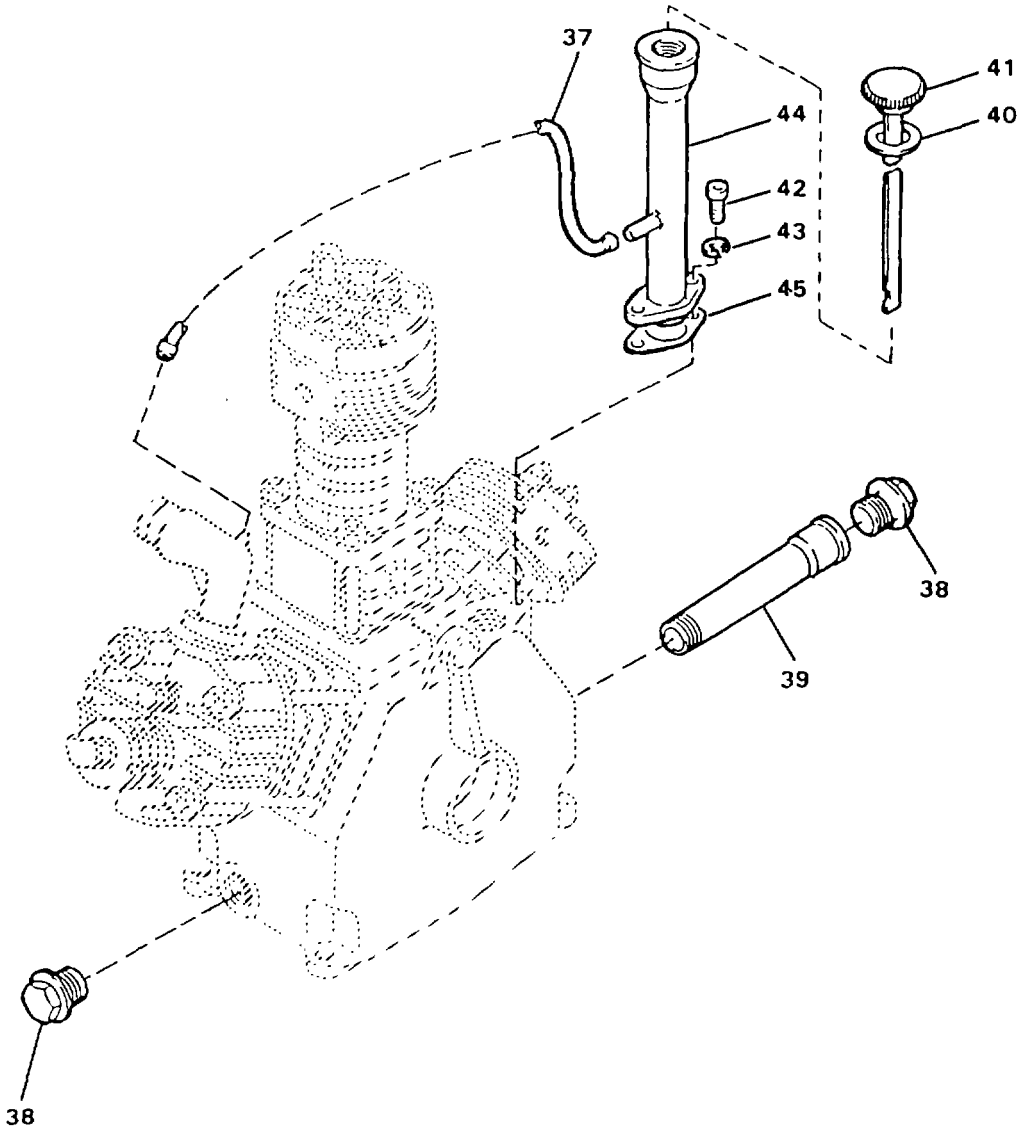

FIGURE 129. AIR COMPRESSOR (SHEET 3 OF 7)

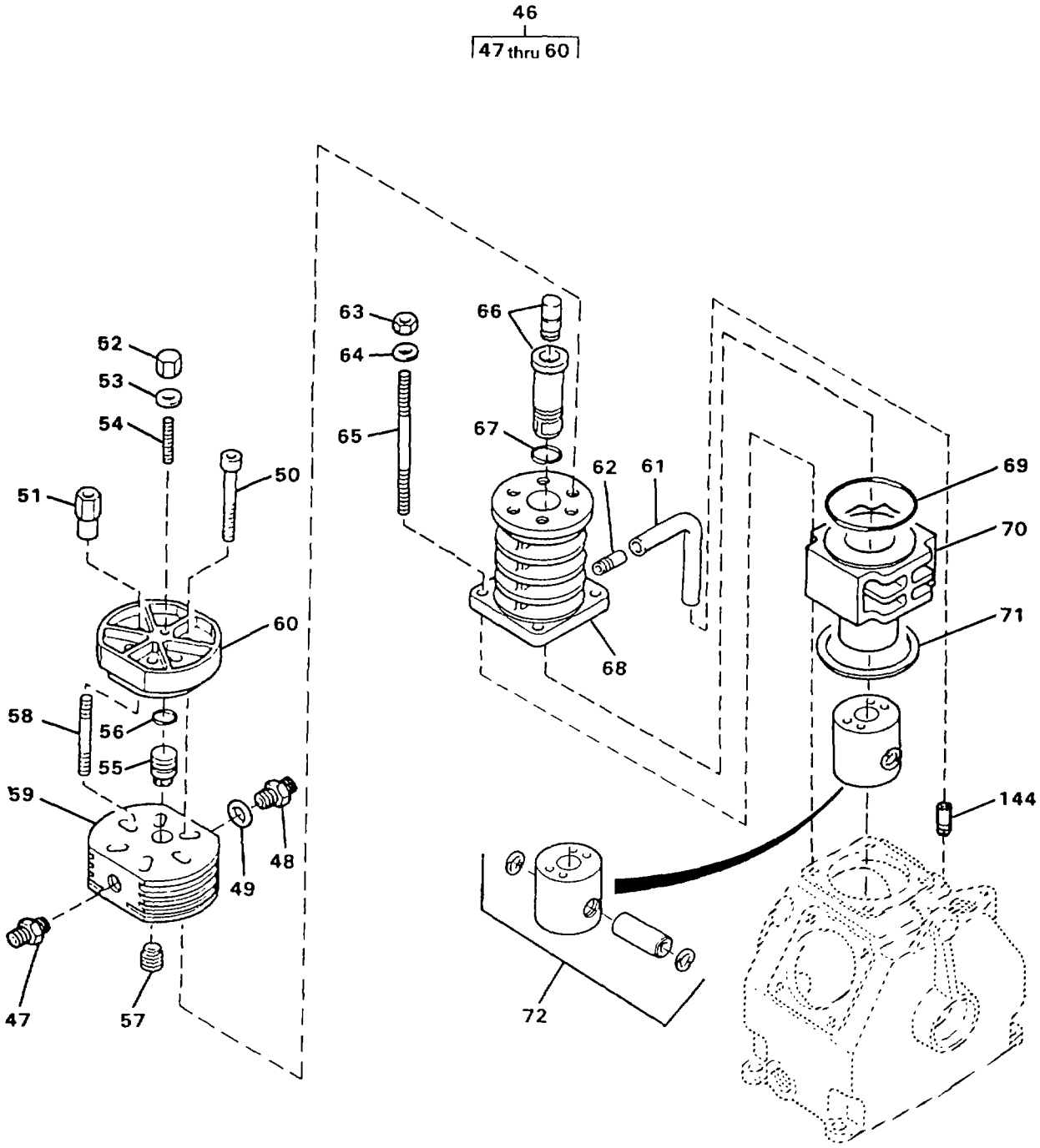

FIGURE 129. AIR COMPRESSOR (SHEET 4 OF 7)

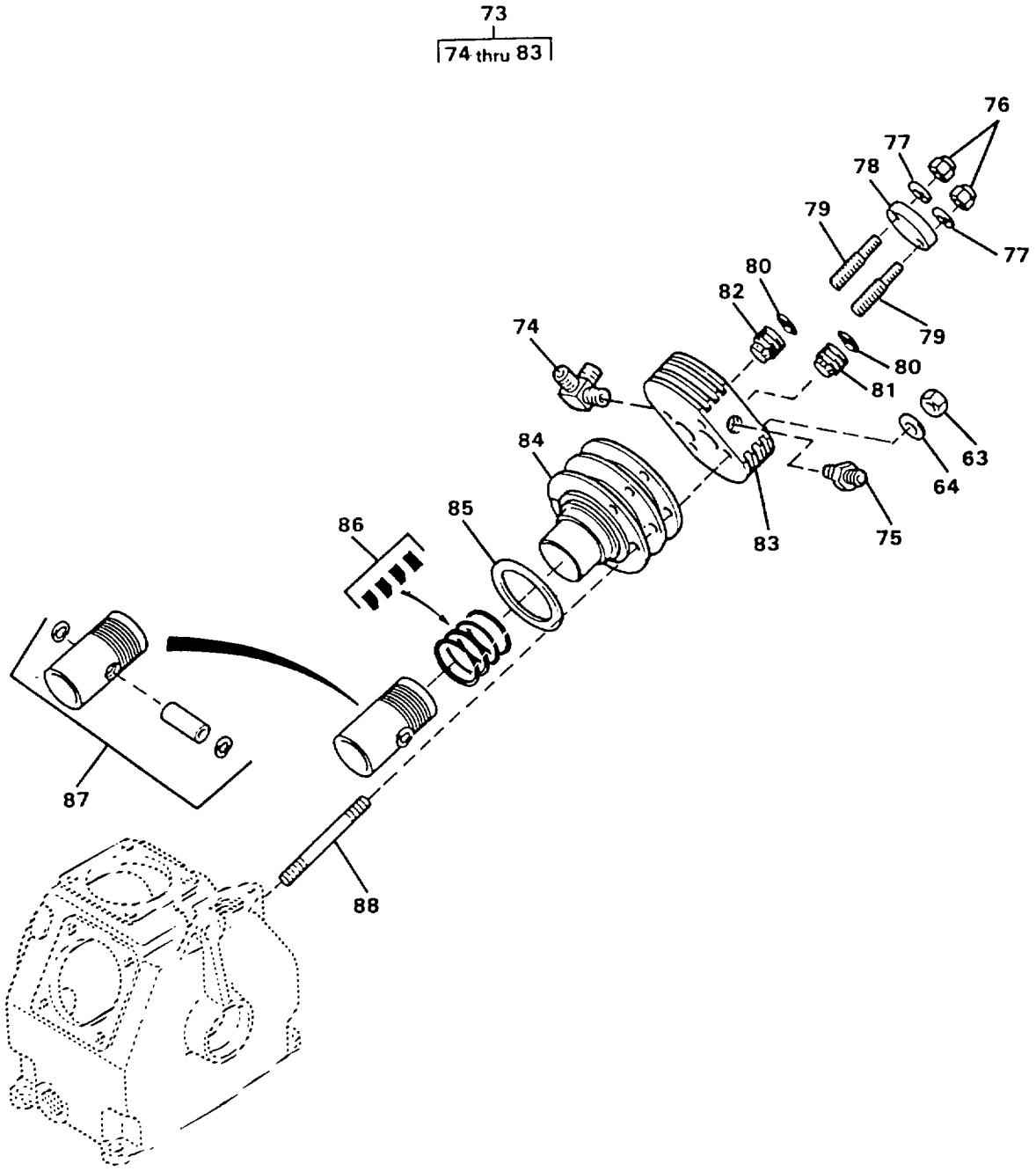

FIGURE 129. AIR COMPRESSOR (SHEET 5 OF 7)

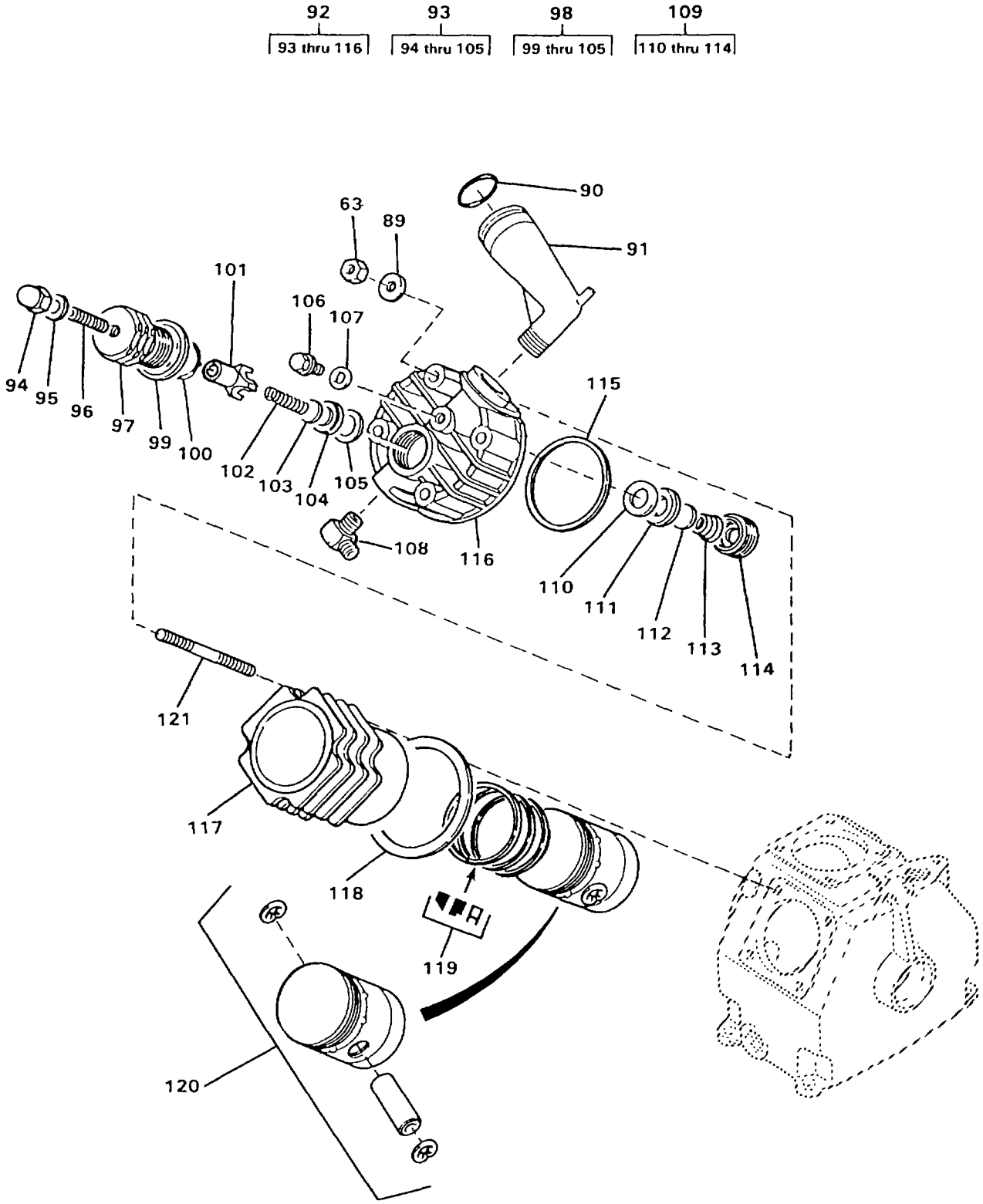

FIGURE 129. AIR COMPRESSOR (SHEET 6 OF 7)

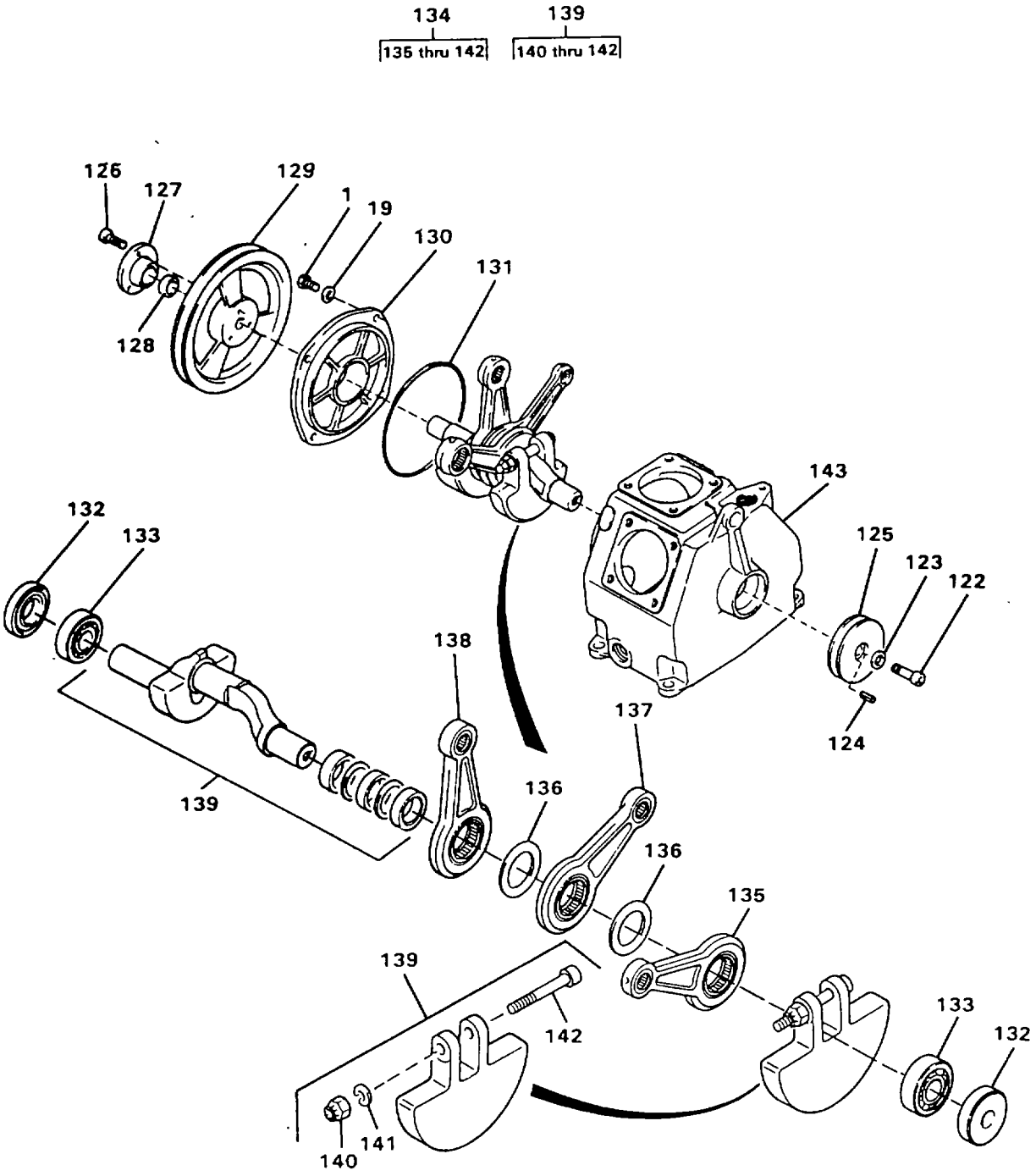

FIGURE 129. AIR COMPRESSOR (SHEET 7 OF 7)

(1) ITEM NO	(2) SMR CODE	(3) NSN	(4) CAGEC	(5) PART NUMBER	(6) DESCRIPTION AND USABLE ON CODES(UOC)	(7) QTY
					GROUP 02 WATER PURIFICATION SYSTEM FIG. 129 AIR COMPRESSOR	
	PBFHH		57328	PURUSP1-H	.AIR COMPRESSOR.....	1
1	XDOZZ		57328	N88	..SCREW,HEX M 8 X 25 DIN 933.....	1
2	XDOZZ		57328	N108	..WASHER,LOCK A8 DIN 127.....	1
3	XDOOO		57328	09889-864	..AIR SHROUD ASSY.....	1
4	XDOZZ		57328	N1042	...NUT,HEX SELF-LOCK.....	2
5	XDOZZ		57328	N3313	...WASHER.....	4
6	XDOZZ		57328	N101	...SCREW,HEX.....	2
7	XDOZZ		57328	62503-635	...ANGLE,MOUNTING.....	2
8	XDOZZ		57328	N15626	...GROMMET.....	3
9	XDOZZ		57328	013764-864	...SHROUD,AIR.....	1
10	PBOOO	4330013518585	57328	013758-400	..FILTER FLUID.....	1
11	XDOZZ		57328	12771-400	...COVER,FILTER INTK.....	1
12	XDOZZ		57328	10528-640	...SPRING.....	1
13	PAOZZ	5330012333247	57328	N4451	..PACKING,PREFORMED PART OF KIT P/N N 5681, PART OF KIT P/N N 5682, PART OF KIT P/N N 5688.....	1
14	PAOZZ	4330012570870	57328	N70	...FILTER ELEMENT,FLUI PART OF KIT P/N N 5682, PART OF KIT P/N N 5688...	1
15	PAOZZ	5330012333248	57328	13757-090	PACKING,PREFORMED PART OF KIT KIT P/N N 5681, PART OF KIT P/N N 5682, PART OF KIT P/N N 5688.....	1
16	XAOZZ		57328	12770-400	...HOUSING,INTK FLTR.....	1
17	XDOZZ		57328	N3374	...CLAMP.....	1
18	XDOZZ		57328	N370	...NUT,HEX SELF LOCK.....	2
19	XDOZZ		57328	N58	..WASHER.....	2
20	PAOZZ	3030013518189	57328	N2003	..BELT,V.....	1
21	XDOZZ		57328	09377-110	..FAN.....	1
22	XDOZZ		57328	9343-864	..SHAFT,FAN.....	1
23	XDFZZ		57328	N1042	..NUT,HEX,SELF LOCK.....	5
24	XDFZZ		57328	N3313	..WASHER,FLAT.....	5
25	XDFZZ		57328	N3462	..SCREW.....	3
26	XDFZZ		57328	N2915	..SCREW.....	1
27	XDFZZ		57328	N3848	..SCREW.....	1
28	XDFZZ	5340121860157	D9135	14370-500	..CLAMP,LOOP.....	1
29	XDFZZ		57328	55579-500	..CLAMP.....	2
30	XDFZZ		57328	13967-500	..CLAMP.....	6
31	XDFZZ		57328	55589-500	..CLAMP.....	1
32	XDFZZ		57328	014546-500	..INTER/AFTER COOLER.....	1
33	PBFZZ	4820013523686	57328	010776-340	..VALVE,SAFETY RELIEF FIRST STAGE....	1
34	PBFZZ	5330013188208	57328	8263-090	..GASKET.....	1
35	PBFZZ	4820013523687	57328	011555-340	..VALVE,SAFETY RELIEF SECOND STAGE...	1
36	XDFZZ		57328	14027-635	..REDUCER,TEE.....	1
37	MFFZZ		09647	120-02599-83	..TUBING .CUT TO LENGTH FROM BULK, P/N PV53-1.....	1
38	PAOZZ	5365012542346	57328	N3707	..PLUG,MACHINE THREAD.....	2
39	XDOZZ		57328	N2393	..PIPE,NIPPLE EXTEN.....	1
40	PBOZZ	6680013535816	57328	56805-650	..GAGE ROD,LIQUID LEV.....	1
41	PAOZZ	5330013521999	57328	N2050	..GASKET PART OF KIT P/N N 5681, PART OF KIT P/N N 5688.....	1

(1) ITEM NO	(2) SMR CODE	(3) NSN	(4) CAGEC	(5) PART NUMBER	(6) DESCRIPTION AND USABLE ON CODES(UOC)	(7) QTY
42	XDFZZ		57328	N158	..SCREW,INTERNAL HEX.....	2
43	XDFZZ		57328	N3026	..WASHER,SPRING.....	2
44	XDFZZ		57328	12559-635	..INLET,OIL TANK.....	1
45	KFFZZ		57328	12560-090	..GASKET PART OF KIT P/N N 5681.....	1
46	XDFFF		57328	057056-070	..VALVE HEAD ASSY THIRD STAGE.....	1
47	PAFZZ	4730013695874	57328	N3811	...FITTING.....	1
48	XDFZZ		57328	N7838	...FITTING.....	1
49	KFFZZ		57328	N1316	...GASKET PART OF KIT P/N N 5681.....	1
50	XDFZZ		57328	N150	...SCREW,INTERNAL HEX.....	5
51	XDFZZ		57328	14259-080	...EXTENSION,N U T.....	1
52	XDFZZ		57328	N3623	...NUT,ACORN.....	1
53	PBFZZ	5330013521998	57328	N3625	...GASKET.....	1
54	XDFZZ		57328	N3624	...STUD.....	1
55	PAFZZ	4820121662100	D9135	014121-080	...VALVE,SAFETY RELIEF PART OF KIT P/N N 5688.....	1
56	PBFZZ	5331013521981	57328	N2789	...O-RING.....	1
57	PAFZZ	4310121662258	D9135	07790-080	...VALVE,INLET THIRD STAGE, PART OF PART OF KIT P/N N 5682, PART OF KIT P/N N 5688.....	1
58	XDFZZ		57328	N3111	..STUD.....	1
59	XDFZZ		57328	14117-070	...HEAD THIRD STAGE.....	1
60	XDFZZ		57328	14118-070	...COVER,HEAD.....	1
61	MFFZZ		09647	120-02599-84	..TUBING CUT TO LENGTH FROM BULK, P/N PV53-1.....	1
62	XDFZZ		57328	12421-864	..TUBE,OIL RETURN.....	1
63	XDFZZ		57328	N287	..NUT,HEX.....	12
64	XDFZZ		57328	N102	..WASHER.....	8
65	XDFZZ		57328	N3784	..STUD.....	4
66	KFFZZ		57328	057154-050	..PSTN & SLEEVE ASSY PART OF KIT P/N N 5688.....	1
67	PAFZZ	5331012829268	57328	N2507	..O-RING PART OF KIT P/N N 5681, PART OF KIT P/N N 5682, PART OF KIT P/N N 5688.....	1
68	XDFZZ		57328	14875-060	..CYLINDER THIRD STAGE.....	1
69	PAFZZ	5331001668396	57328	N3712	..O-RING PART OF KIT P/N N 5681, PART OF KIT P/N N 5682, PART OF KIT P/N N 5688.....	1
70	XDFZZ		57328	12141-060	..CYLINDER THIRD STAGE.....	1
71	KFFZZ		57328	9284-090	..GASKET,CYLINDER PART OF KIT P/N N 5681, PART OF KIT P/N N 5682, PART OF KIT P/N N 5688.....	1
72	XDFZZ		57328	N8953-050	..PISTON,GUIDE THIRD STAGE.....	1
73	XDFFF		57328	058137-070	..VALVE HEAD ASSY SECOND STAGE.....	1
74	XDFZZ		57328	055581-635	...TEE.....	1
75	XDFZZ		57328	N2166	...FITTING.....	1
76	XDFZZ		57328	N1042	...NUT,HEX,SELF LOCK.....	2
77	XDFZZ		57328	N4640	...WASHER,SPRING.....	2
78	XDFZZ		57328	58133-080	...FLANGE.....	1
79	XDFZZ		57328	58134-080	...STUD.....	2
80	PAFZZ	5330012896097	57328	N638	...O-RING PART OF KIT P/N N 5681, PART OF KIT P/N N 5688.....	2
81	KFFZZ		57328	058136-080	...VALVE,INLET PART OF KIT P/N	1

(1) ITEM NO	(2) SMR CODE	(3) NSN	(4) CAGEC	(5) PART NUMBER	(6) DESCRIPTION AND USABLE ON CODES(UOC)	(7) QTY
					N 5682, PART OF KIT P/N N 5688.....	
82	KFFZZ		57328	058135-080	...VALVE,DISCHARGE PART OF KIT P/N N 5688.....	1
83	XDFZZ		57328	58130-070	...VALVE,HEAD SECOND STAGE.....	1
84	XDFZZ		57328	8931-060	..CYLINDER SECOND STAGE.....	1
85	KFFZZ		57328	9285-090	..GASKET PART OF KIT P/N N 5681.....	1
86	KFFZZ		57328	N4205	..RING SET,PISTON PART OF KIT P/N N 5682, PART OF KIT P/N N 5688...	1
87	XDFZZ		57328	8952-050	..PISTON SECOND STAGE.....	1
88	XDFZZ		57328	N4615	..STUD.....	1
89	XDFZZ		57328	N2863	..WASHER.....	1
90	PAOZZ	5331013521982	57328	N1539	..O-RING PART OF KIT P/N N 5681, PART OF KIT P/N N 5682, PART OF KIT P/N N 5688.....	1
91	XDFZZ		57328	13911-080	..ELBOW,INTAKE.....	1
92	XDFFF		57328	013984-070	..VALVE HEAD ASSY FIRST STAGE.....	1
93	PAFZF	4220012793927	57328	014582-080	...VALVE,DISCHARGE ASS.....	1
94	XDFZZ		57328	N84	....NUT,ACORN.....	1
95	KFFZZ		57328	N380	....GASKET PART OF KIT P/N N 5681, PART OF KIT P/N N 5682, PART OF KIT P/N N 5688.....	1
96	XDFZZ		57328	N3520	....STUD.....	1
97	XDFFF		57328	14124-080	....PLUG.....	1
98	KFFZZ		57328	12835-080	....DISCH VALVE ASSY PART OF KIT P/N N 5688.....	1
99	XDFZZ		57328	14332-080	.....SPRING PLATE.....	1
100	KFFZZ		57328	N3521	.....PACKING,PREFORMED PART OF KIT P/N N 5681.....	1
101	XDFZZ		57328	228-080	.....INSERT,VALVE DISCHARGE.....	1
102	XDFZZ		57328	1026-640	.....SPRING,VALVE.....	1
103	XDFZZ		57328	232-080	.....DISC,VALVE.....	1
104	XDFZZ		57328	1100-080	.....SEAT,VALVE.....	1
105	KFFZZ		57328	240-090	.....GASKET PART OF KIT P/N N 5681, PART OF KIT P/N N 5688.....	1
106	XDFZZ		57328	N3459	...PLUG.....	1
107	XDFZZ		57328	N2010	...GASKET.....	1
108	XDFZZ		57328	N3458	...CONNECTOR.....	1
109	PAFFF	4310121662256	D9135	012841-080	...VENTIL,SAUG-KOMP PART OF KIT P/N N 5682, PART OF KIT P/N N 5688.....	1
110	XDHZZ		57328	240-090	....GASKET.....	1
111	XDFZZ		57328	233-080	....SEAT,VALVE.....	1
112	XDFZZ		57328	232-080	....DISC,VALVE.....	1
113	XDFZZ		57328	279-640	....SPRING,VALVE INLET.....	1
114	XDFZZ		57328	319-080	....PLUG.....	1
115	PBFZZ	5330121451511	57328	4466-090	...GASKET.....	1
116	XDFZZ		57328	14929-070	...HEAD,VALVE FIRST STAGE.....	1
117	XDFZZ		57328	8933-060	..CYLINDER FIRST STAGE.....	1
118	KFFZZ		57328	9284-090	..GASKET,CYLINDER PART OF KIT P/N N 5681, PART OF KIT P/N N 5682, PART OF KIT P/N N 5688.....	1
119	KFFZZ		57328	N 4206	..RING SET,PISTON PART OF KIT	1

(1) ITEM NO	(2) SMR CODE	(3) NSN	(4) CAGEC	(5) PART NUMBER	(6) DESCRIPTION AND USABLE ON CODES(UOC)	(7) QTY
					P/N N 5682, PART OF KIT P/N N 5688...	
122	XDHZZ		57328	N 4247	..SCREW,INTERNAL HEX.....	1
123	XDHZZ		57328	N 2144	..WASHER,SPRING.....	1
124	XDHZZ		57328	N 2152	..KEY.....	1
125	XDHZZ		57328	9796-864	..PULLEY,V-BELT.....	1
126	XDHZZ		57328	N 3859	..SCREW,INTERNAL HEX.....	3
127	XDHZZ		57328	10944-100	..BUSHING.....	1
128	XDHZZ		57328	N 2391	..TENSIONING PIECE.....	1
129	XDHZZ		57328	10936-110	..FLYWHEEL.....	1
130	XDHZZ		57328	12140-030	..COVER.....	1
131	KFHZZ		57328	N 2858	..PACKING,PREFORMED PART OF KIT P/N N 5681, PART OF KIT P/N N 5688.....	1
132	KFHZZ		57328	N 2861	..SEAL,SHAFT PART OF KIT P/N N 5681, PART OF KIT P/N N 5688.....	2
133	KFHZZ		57328	N 2857	..BEARING,BALL PART OF KIT P/N N 5688.....	2
134	XDHZZ		57328	058172-010	..CRANKSHAFT ASSEMBLY.....	1
135	XDHZZ		57328	58173-040	...ROD,CONNECTING FIRST STAGE.....	1
136	XDHZZ		57328	4180-040	...SPACER.....	2
137	XDHZZ		57328	8941-040	...ROD,CONNECTING SECOND STAGE.....	1
138	XDHZZ		57328	8940-040	...ROD,CONNECTING THIRD STAGE.....	1
139	XDHHH		57328	058141-010	...CRANKSHAFT.....	1
140	XDHZZ		57328	N 2765	....NUT,HEX,SELF LOCK.....	1
141	XDHZZ		57328	N 108	....WASHER,LOCK.....	1
142	XDHZZ		57328	N 1234	....SCREW,INTERNAL HEX.....	1
143	XDHZZ		57328	5662-000	..CRANKCASE.....	1
144	PAOZZ	4310013516568	57328	10284-864	..TUBE,OIL RETURN.....	1
	PAFZZ	4310013505466	57328	N 5681	..GASKET SET.....	1
					GASKET (1) 129-41.....	
					GASKET (1) 129-45.....	
					GASKET (1) 129-49.....	
					GASKET (1) 129-85.....	
					GASKET (1) 129-95.....	
					GASKET (1) 129-105.....	
					GASKET, CYLINDER (1) 129-71.....	
					GASKET, CYLINDER (1) 129-118.....	
					PACKING, PREFORMED (1) 129-13.....	
					PACKING, PREFORMED (1) 129-15.....	
					PACKING, PREFORMED (1) 129-67.....	
					PACKING, PREFORMED (1) 129-69.....	
					PACKING, PREFORMED (2) 129-80.....	
					PACKING, PREFORMED (1) 129-90.....	
					PACKING, PREFORMED (1) 129-100.....	
					PACKING, PREFORMED (1) 129-131.....	
					SEAL, SHAFT (2) 129-132	
	PAFZZ	5330013522000	57328	N 5682	..REPAIR KIT,COMPRESS TWO YEAR.....	1
					FILTER ELEMENT, FLUI(1) 129-14.....	
					GASKET (1) 129-95.....	
					GASKET, CYLINDER (1) 129-71.....	
					GASKET, CYLINDER (1) 129-118.....	
					PACKING, PREFORMED (1) 129-13.....	

(1) ITEM NO	(2) SMR CODE	(3) NSN	(4) CAGEC	(5) PART NUMBER	(6) DESCRIPTION AND USABLE ON CODES(UOC)	(7) QTY
					PACKING, PREFORMED (1) 129-15.....	
					PACKING, PREFORMED (1) 129-67.....	
					PACKING, PREFORMED (1) 129-69.....	
					PACKING, PREFORMED (1) 129-90.....	
					RING SET, PISTON (1) 129-86.....	
					RING SET, PISTON (1) 129-119.....	
					VALVE ASSY (1) 129-109.....	
					VALVE, INLET (1) 129-57.....	
					VALVE, INLET (1) 129-81.....	
	PAHZZ		57328	N 5688	..REPAIR KIT,COMPRESS FIVE YEAR	1
					BEARING, BALL (2) 129-133.....	
					DISCH VALVE ASSY (1) 129-98.....	
					FILTER ELEMENT, FLUID (1) 129-14.....	
					GASKET (1) 129-41.....	
					GASKET (1) 129-95.....	
					GASKET (1) 129-105.....	
					GASKET, CYLINDER (1) 129-71.....	
					GASKET, CYLINDER (1) 129-118.....	
					PACKING, PREFORMED (1) 129-13.....	
					PACKING, PREFORMED (1) 129-15.....	
					PACKING, PREFORMED (1) 129-67.....	
					PACKING, PREFORMED (1) 129-69.....	
					PACKING, PREFORMED (2) 129-80.....	
					PACKING, PREFORMED (1) 129-90.....	
					PACKING, PREFORMED (1) 129-131.....	
					PSTN & SLEEVE ASSY (1) 129-66.....	
					RING SET, PISTON (1) 129-86.....	
					RING SET, PISTON (1) 129-119.....	
					SEAL, SHAFT (2) 129-132.....	
					VALVE ASSY (1) 129-109.....	
					VALVE, DISCHARGE (1) 129-55.....	
					VALVE, DISCHARGE (1) 129-82.....	
					VALVE, INLET (1) 129-57.....	
					VALVE, INLET (1) 129-81.....	

END OF FIGURE

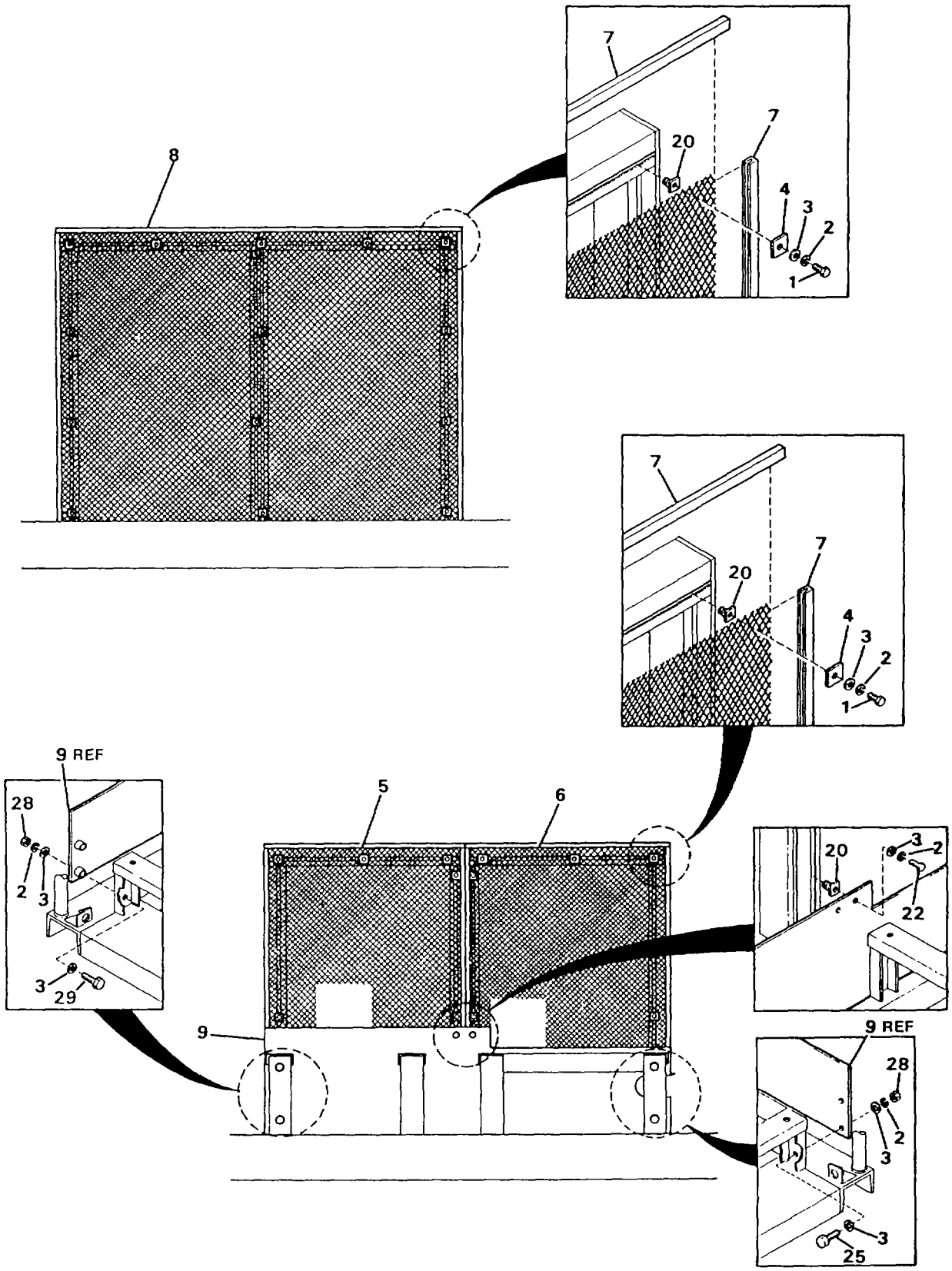

FIGURE 130. HIGH PRESSURE PUMP GUARD (SHEET 1 OF 2)

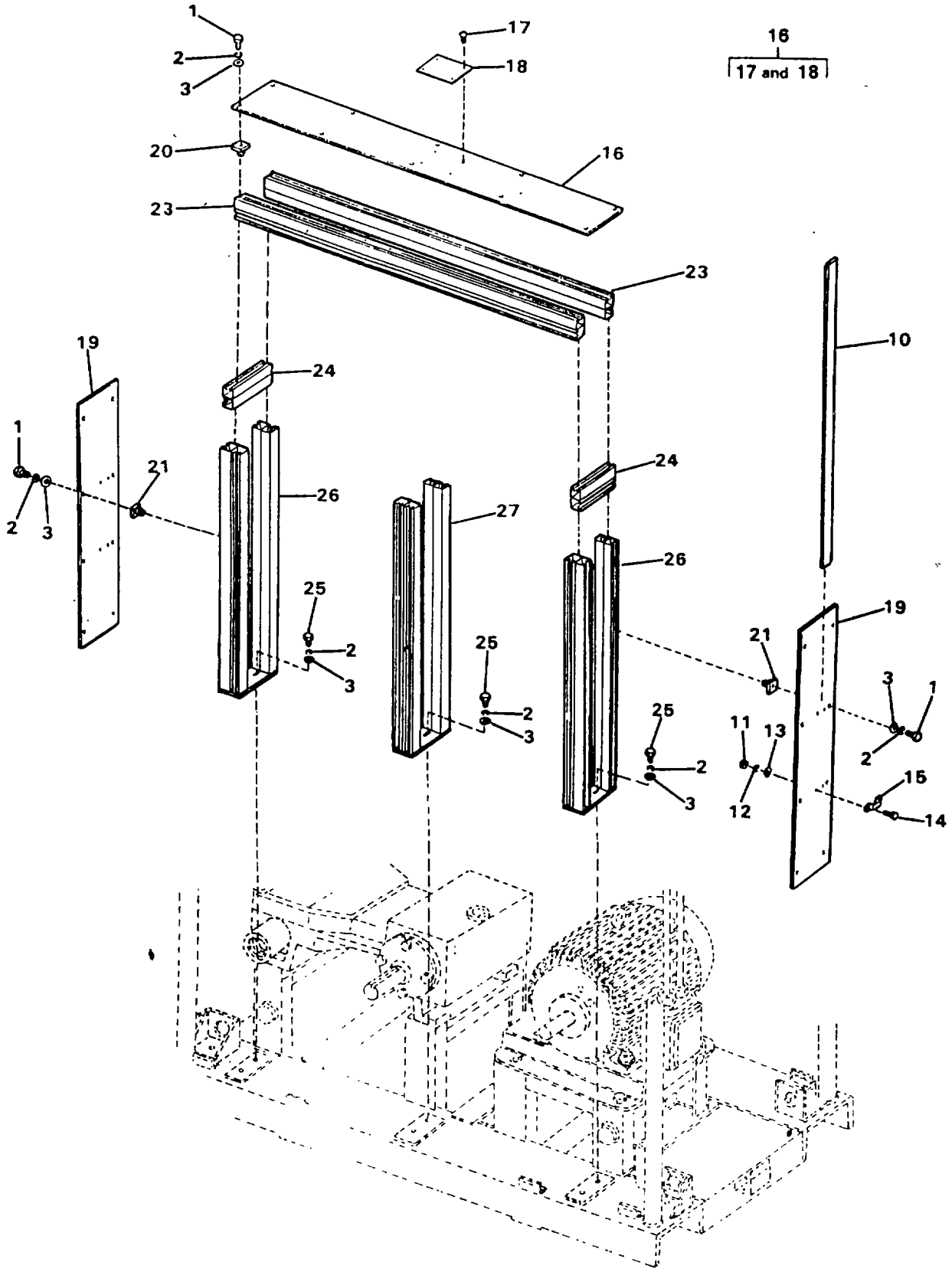

FIGURE 130. HIGH PRESSURE PUMP GUARD (SHEET 2 OF 2)

(1) ITEM NO	(2) SMR CODE	(3) NSN	(4) CAGEC	(5) PART NUMBER	(6) DESCRIPTION AND USABLE ON CODES(UOC)	(7) QTY
					GROUP 02 WATER PURIFICATION SYSTEM	
					FIG. 130 HIGH PRESSURE PUMP GUARD	
1	PAOZZ	5305002078253	96906	MS35307-308	.SCREW,CAP,HEXAGON H.....	67
2	PAOZZ	5310009338121	96906	MS35338-139	.WASHER,LOCK.....	67
3	PAOZZ	5310010911248	96906	MS15795-810	.WASHER,FLAT.....	59
4	XDOZZ		97403	13229E1143-3	.CLAMP,PIPE SUPPORT.....	27
5	XDOZZ		97403	13229E1310	.GUARD,BELT.....	1
6	XDOZZ		97403	13229E1311	.GUARD,BELT.....	1
7	MOOZZ		97403	13229E1341-PT	..TRIM,NEOPRENE CUT TO LENGTH FROM BULK, P/N 13229E1341.....	1
8	XDFZZ		97403	13329E1307	.GUARD,BELT.....	1
9	XDFZZ		97403	13229E1312	.GUARD,BELT.....	1
10	XDOZZ		97403	13229E0003	.STRAIGHTEDGE.....	1
11	PAOZZ	5310009349760	96906	MS35649-204	.NUT,PLAIN,HEXAGON.....	4
12	PAOZZ	5310009338120	96906	MS35338-138	.WASHER,LOCK.....	4
13	PAOZZ	5905013924321	96906	MS15765-842	.RESISTOR,FIXED,WIR.....	4
14	PAOZZ		02769	8200157-3	.SCREW,CAP,HEXAGON H 0.190-24 UNC-2A X 0.625 INCH LONG.....	4
15	PAOZZ	5340005220381	19220	6411E	.LOOP,STRAP FASTENER.....	2
16	XDFZZ		97403	13229E1309	.GUARD,BELT,TOP.....	1
17	PAFZZ	5320013490933	97403	13229E0350-1	..RIVET,BLIND.....	4
18	XDFZZ		97403	13229E0411-1	..PLATE,ID CAUTION.....	1
19	XDFZZ		97403	13229E1308	.GUARD,BELT,SIDE.....	2
20	PBFZZ	5310013540226	97403	13229E1142-2	.NUT,PLAIN,RECTANGULAR.....	51
21	PBFZZ	5310013532044	97403	13229E1142-3	.NUT,PLAIN,RECTANGULAR.....	8
22	PAFZZ	5305000213668	96906	MS35307-310	.SCREW,CAP,HEXAGON H.....	2
23	MFFZZ		97403	13229E1017-27	.CHANNEL,PIPE SPRT CUT TO LENGTH FROM BULK,P/N P1001C.....	2
24	MFFZZ		97403	13229E1017-28	.CHANNEL,PIPE SPRT CUT TO LENGTH FROM BULK,P/N P1001C.....	2
25	PAFZZ	5305000213620	96906	MS35307-307	.SCREW,CAP,HEXAGON H	8
26	XDFZZ		97403	13229E1306	.SUPPORT,BELT GUARD.....	2
27	XDFZZ		97403	13229E1305	.SUPPORT,BELT GUARD.....	1
28	PAFZZ	5310009035966	96906	MS51971-1	.NUT,PLAIN,HEXAGON.....	4
29	PAFZZ	5305002072297	96906	MS35307-312	.SCREW,CAP,HEXAGON H.....	2

END OF FIGURE

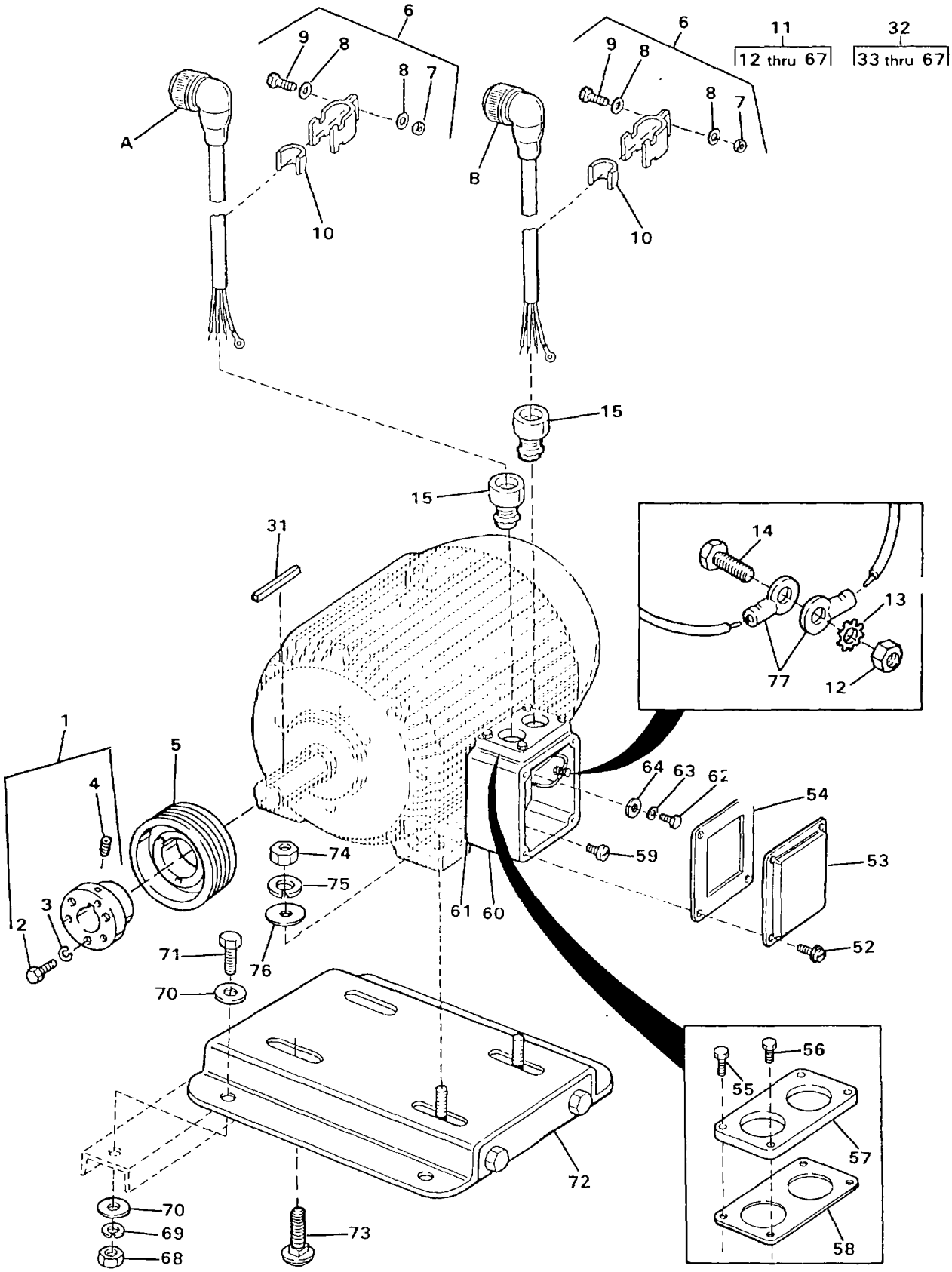

FIGURE 131. HIGH PRESSURE MOTOR ASSEMBLY (SHEET 1 OF 3)

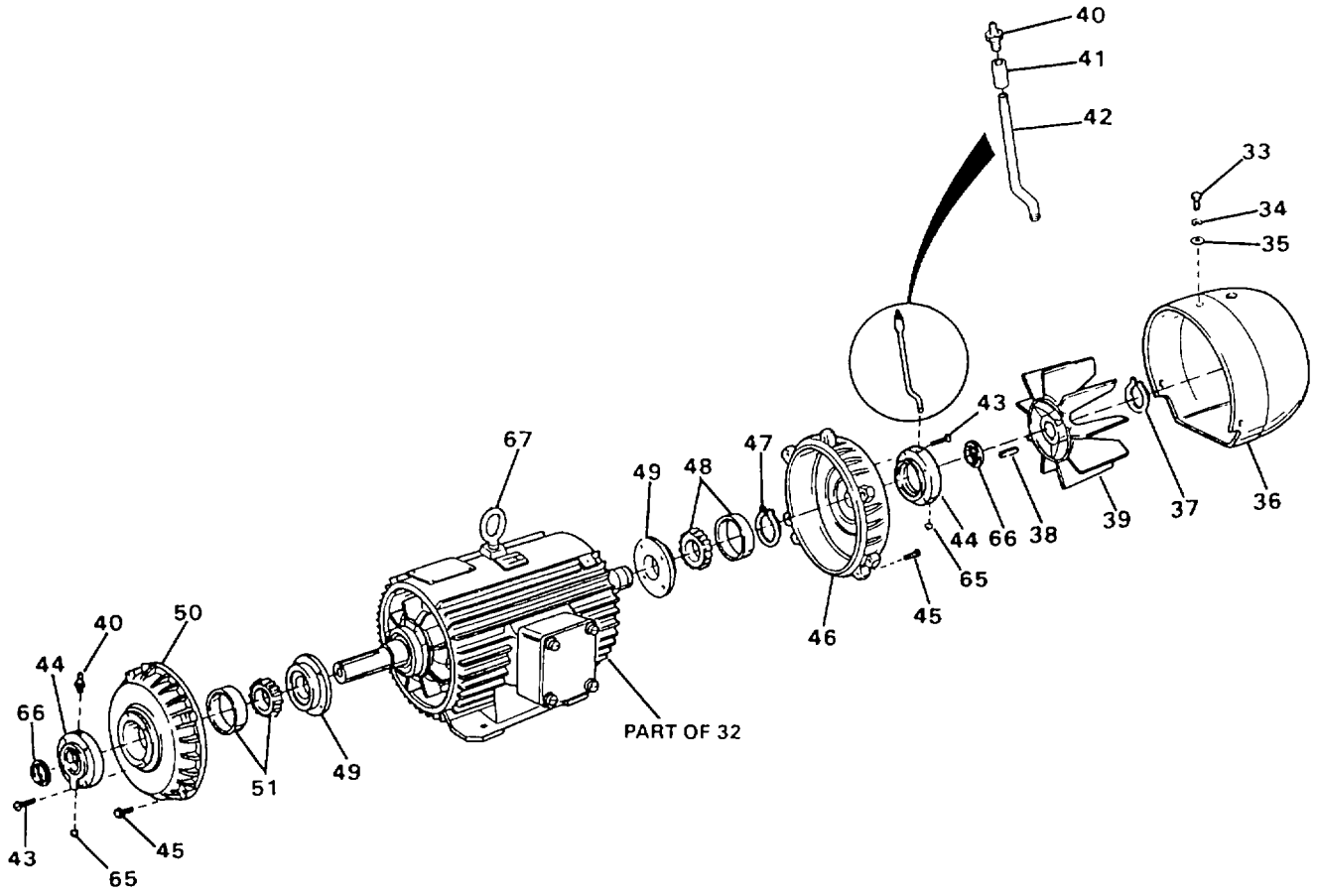

FIGURE 131. HIGH PRESSURE MOTOR ASSEMBLY (SHEET 2 OF 3)

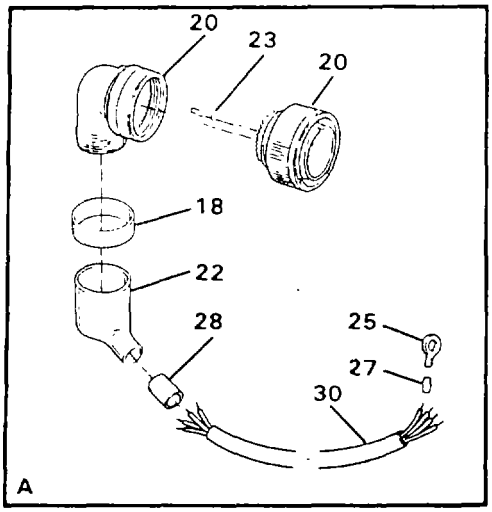

CABLE ASSY	CONNECTOR	CONTACT	PLUG	WIRE RUN FROM	WIRE RUN TO	WIRE SIZE
16	20	23	—	8T0	GRD	AWG 12
		23	—	8T1	1	AWG 12
		23	—	8T2	2	AWG 12
		23	—	8T3	3	AWG 12

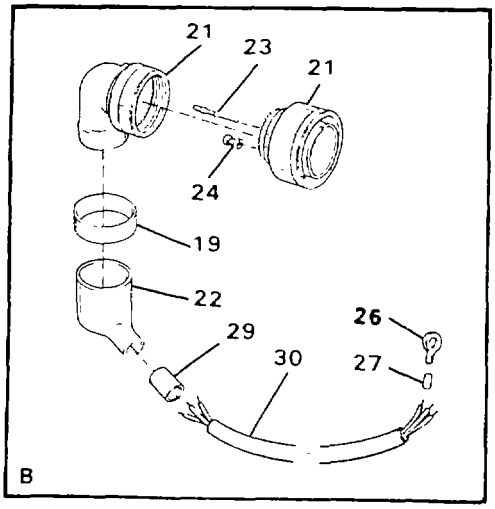

CABLE ASSY	CONNECTOR	CONTACT	PLUG	WIRE RUN FROM	WIRE RUN TO	WIRE SIZE
17	21	23	24	8T4	4	AWG 12
		23	—	8T5	5	AWG 12
		23	—	8T6	6	AWG 12

FIGURE 131. HIGH PRESSURE MOTOR ASSEMBLY (SHEET 3 OF 3)

(1) ITEM NO	(2) SMR CODE	(3) NSN	(4) CAGEC	(5) PART NUMBER	(6) DESCRIPTION AND USABLE ON CODES(UOC)	(7) QTY
					GROUP 02 WATER PURIFICATION SYSTEM FIG. 131 HIGH PRESSURE MOTOR ASSEMBLY	
1	XDOOO		24161	QD-E 2.375 BORE	.BUSHING.....	1
2	PAOZZ	5305006196050	96906	MS35307-418	..SCREW,CAP,HEXAGON H.....	3
3	PAOZZ	5310009338778	96906	MS35338-143	..WASHER,LOCK.....	3
4	PAOZZ	5305007245882	96906	MS51963-105	..SETSCREW.....	1
5	XDOZZ		97403	13229E0154	.PULLEY,GROOVE.....	1
6	XDOZZ		97403	13229E0685-11	.CLAMP,TUBE.....	2
7	PAOZZ	5310002416604	96906	MS17830-4C	..NUT,SELF-LOCKING,HE 1/4-20 UNC-2B, SS.....	1
8	PAOZZ		96906	MS15795-810	..WASHER,FLAT.....	2
9	PAOZZ	5305002078253	96906	MS35307-308	..SCREW,CAP,HEXAGON H.....	1
10	MOOZZ		09647	120-02328-6	.CUSHION CUT TO LENGTH FROM BULK, P/N P-2600.....	2
11	XDFFF		97403	13229E0894	.MOTOR ASSEMBLY.....	1
12	PAFZZ	5310009138881	96906	MS51971-3	..NUT,PLAIN,HEXAGON.....	6
13	PAFZZ	5310002090790	96906	MS35335-63	..WASHER,LOCK.....	6
14	PAFZZ	5305006322777	96906	MS35307-358	..SCREW,CAP,HEXAGON H.....	6
15	XDFZZ		97403	13229E0880-1	..FITTING,CABLE.....	2
16	PBFFF	6150013528522	97403	13229E1260-28	..CABLE ASSEMBLY,POWE W65.....	1
17	PBFFF	6150013500184	97403	13229E1260-27	..CABLE ASSEMBLY,POWE W66.....	1
18	XDFZZ		09647	120-02433-144	...MARKER.....	1
19	XDFZZ		09647	120-02433-143	...MARKER.....	1
20	PBFFF	5935013500168	17549	CA3108F32-17P-8-15-57	...CONNECTOR BODY,PLUG P69.....	1
21	PBFFF	5935013523701	17549	CA310BF32-17PWB-15-57	...CONNECTOR BODY,PLUG P68.....	1
22	PAFZZ	5970013484762	97403	13229E1342-3	...INSULATION SLEEVING.....ETN	1
22	PAFZZ		97403	13229E1342-4	...INSULATION SLEEVING.....FKD	1
23	PAFZZ	5999013520898	17549	030-8613-000	....CONTACT,ELECTRICAL PART OF KIT P/N 120-02593-P.....	7
24	XDFZZ		71468	225-8502-000	...PLUG PART OF KIT P/N 120-02593-P.....	1
25	PAFZZ	5940001434777	96906	MS25036-157	...TERMINAL,LUG.....	4
26	PAFZZ	5940005574338	96906	MS25036-125	...TERMINAL,LUG.....	3
27	XDFZZ		01121	B-321HCPS.9-3336W	...MARKER.....	7
28	XDFZZ		09647	120-02433-72	...MARKER.....	1
29	XDFZZ		09647	120-02433-73	...MARKER.....	1
30	MFFZZ		09647	120-02605-23	...CABLE CUT TO LENGTH FROM BULK, P/N 13229E0741-2.....	1
31	PAOZZ	5315007320589	96906	MS20066-703	...KEY,MACHINE.....	1
32	PBFFF	6105013523848	0D5S3	3224218	..MOTOR ASSEMBLY,ELEC.....	1
33	XDFZZ		0D5S3	M8 X 12 HX-HD	...SCREW.....	3
34	XDFZZ		0D5S3	8MM-INT TOOTH	...WASHER,LOCK.....	3
35	XDFZZ		0D5S3	8MM-STEEL	...WASHER,FLAT.....	3
36	XDFZZ		0D5S3	A21011A-P3646	...COVER,FAN,EXT.....	1
37	XDFZZ		0D5S3	D1400-0600	...CLIP,FAN,EXT.....	1
38	XDFZZ		0D5S3	Q717K-225	...KEY,FAN.....	1
39	XDFZZ		0D5S3	Q717B-D225-146/SM	...FAN.....	1

(1) ITEM NO	(2) SMR CODE	(3) NSN	(4) CAGEC	(5) PART NUMBER	(6) DESCRIPTION AND USABLE ON CODES(UOC)	(7) QTY
40	XDFZZ		0D5S3	NA7010	...NIPPLE,GREASE.....	1
41	XDFZZ		0D5S3	10MM-STEEL	...SOCKET,NIPPLE.....	1
42	XDFZZ		0D5S3	10MM-BRASS	...PIPE,GREASE.....	1
43	XDFZZ		0D5S3	M6 X 60 HX-HD	...SCREW.....	8
44	XDFZZ		0D5S3	E3721B-225-139-G P	...COVER,OUTER BRG.....	2
45	XDFZZ		0D5S3	M12 X 50 HX-HD	...SCREW.....	8
46	XDFZZ		0D5S3	H2105-D225-150/F C	...END SHIELD (NDE).....	1
47	XDFZZ		0D5S3	D1400-0750	...CIRCLIP.....	1
48	PBFZZ	3110001807737	52676	6215C3	...BEARING,BALL,ANNULA.....	1
49	XDFZZ		0D5S3	E3722A-225-135/S M	...COVER,INNER BRG.....	2
50	XDFZZ		0D5S3	H2105-225-153/SM	...END SHIELD (DE).....	1
51	PBFZZ	3110013546665	0D5S3	N215/C3	...BEARING(DE).....	1
52	XDFZZ		0D5S3	M8X20 HX-HD	...SCREW,TERM.....	4
53	PAFZZ	4730013550115	0D5S3	A20488	...LID,TERM BOX.....	1
54	PBOZZ	5330013524334	0D5S3	A20488-1-3MM NEO PRENE	...GASKET.....	1
55	XDFZZ		0D5S3	M8 X 45 HX-HD	...SCREW.....	2
56	XDFZZ		0D5S3	M8 X 30 HX-HD	...SCREW.....	2
57	XDFZZ		0D5S3	A31729B-7225-80F	...PLATE,GLAND.....	1
58	XDFZZ		0DSS3	A31729B-1-NEOPRE NE	...GASKET,GLAND PLATE.....	1
59	XDFZZ		0D5S3	M6 X 20 HX-HD	...SCREW.....	4
60	XDFZZ		0D5S3	A20497F-7225.56N /5M	...TERMINAL BOX.....	1
61	XDFZZ		0D5S3	A20497-3MM NEOPR ENE	...GASKET,TERM BOX.....	1
62	XDOZZ		0D5S3	M10 X 20 HX-HD	...SCREW GROUND.....	1
63	XDOZZ		0D5S3	10MM INT TOOTH	...WASHER,LOCK GROUND.....	1
64	XDOZZ		0D5S3	10MM STEEL	...WASHER,FLAT GROUND.....	1
65	XDFZZ		0D5S3	10MM BRASS	...VALVE,GREASE RLF.....	2
66	PBFZZ	5330013524335	0D5S3	DPSM-7510010	...GASKET.....	2
67	XDOZZ		0D5S3	S236	...EYEBOLT.....	1
68	PAOZZ	5310007646609	96906	MS51971-7	.NUT,PLAIN,HEXAGON.....	4
69	PAOZZ	5310009370453	96906	MS35338-145	.WASHER,LOCK.....	4
70	PAOZZ	5310006143505	96906	MS15795-820	.WASHER,FLAT.....	8
71	PAOZZ	5305009413579	96906	4MS35307-463	.SCREW,CAP,HEXAGON H.....	4
72	XDFFF		30647	364-B2	BASE,MOTOR.....	1
73	PAFZZ	5306013517532	30647	CB-1	..BOLT,MACHINE.....	2
74	PAFZZ	5310007646609	96906	MS51971-7	..NUT,PLAIN,HEXAGON.....	4
75	PAFZZ	5310009370453	96906	MS35338-145	..WASHER,LOCK.....	4
76	PAFZZ	5310006143505	96906	MS15795-820	..WASHER,FLAT.....	4
77	PAFZZ	5940005574345	96906	MS25036-118	..TERMINAL,LUG MOTOR LEADS.....	6

END OF FIGURE

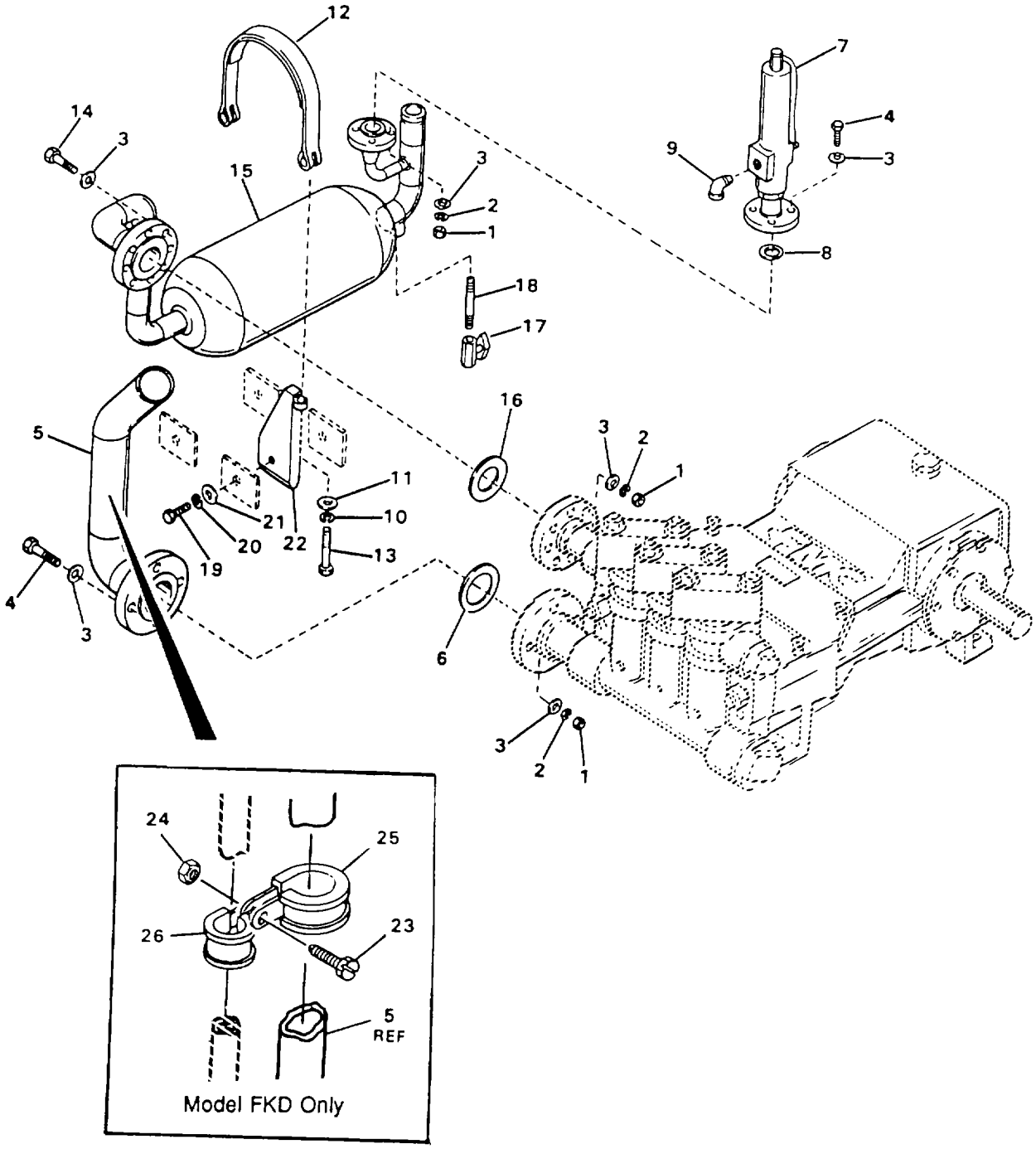

FIGURE 132. PIPING FOR HIGH PRESSURE PUMP

(1) ITEM NO	(2) SMR CODE	(3) NSN	(4) CAGEC	(5) PART NUMBER	(6) DESCRIPTION AND USABLE ON CODES(UOC)	(7) QTY
					GROUP 02 WATER PURIFICATION SYSTEM	
					FIG. 132 PIPING FOR HIGH PRESSURE PUMP	
1	PAFZZ	5310007646609	96906	MS51971-7	.NUT,PLAIN,HEXAGON.....	16
2	PAFZZ	5310009370453	96906	MS35338-145	.WASHER,LOCK.....	16
3	PAFZZ	5310006143505	96906	MS15795-820	.WASHER,FLAT.....	32
4	PAPZZ	5305009432093	96906	MS35307-469	.SCREW,CAP,HEXAGON H.....	8
5	PBFZZ	4710013533943	97403	13229E0936	.PIPE ASSEMBLY,METAL.....	1
6	PCFZZ	5330013521100	97403	13229E0311	.GASKET.....	1
7	PBFZZ	4820013523715	97403	13229E0228	.VALVE,SAFETY RELIEF	1
					1000 PSIG.....	
8	PBFZZ	5330013387875	81349	M24716TY2CLA.750 NPS600PSI	.GASKET,SPIRAL WOUND.....	1
9	XDFZZ		81343	SAE 140239	.ELBOW,STREET	1
					90 DEGREE,1 IN NPTF.....	
10	PAFZZ	5310009746623	96906	MS35338-140	.WASHER,LOCK.....	4
11	PAFZZ	5310006255756	96906	MS15795-812	.WASHER,FLAT.....	4
12	XDFZZ		64382	107016-3	.STRAP.....	2
13	XDFZZ		64382	6CF007-16	..SCREW,STRAP 0.312-18 UNC-2A	4
					X 2 INCHES LONG.....	
14	PAFZZ		96906	MS35307-471	.SCREW,CAP,HEXAGON H.....	8
15	PBFZZ	4730013521398	97403	13229E0937	.PIPE SECTION,DISCH.....	1
16	PBFZZ	5330013450251	81349	M24716TY2CLA2. 000NPS600PSI	.GASKET,SPIRAL WOUND.....	1
17	PBFZZ	4820013493816	97403	13229E0678	.VALVE,PLUG.....	1
18	XDFZZ		97403	13229E1255-2	.NIPPLE,PIPE.....	1
19	PAFZZ	5305000213740	96906	MS35307-364	.SCREW,CAP,HEXAGON H.....	4
20	PAFZZ	5310009847042	96906	MS35338-141	.WASHER,LOCK.....	4
21	PAFZZ	5310007737618	96906	MS15795-814	.WASHER,FLAT.....	4
22	XDFZZ		97403	13229E0909	.SUPPORT,DAMPENER.....	4
23	PAFZZ	5305000593663	96906	MS51958-67	.SCREW,MACHINE 0.190-32 UNF- FKD	1
					-2A X 1 INCH LONG.....	
24	PAFZZ		96906	MS21044	.LOCK NUT 0.190-32 UNF.....FKD	1
25	PAFZZ		96906	MS21919WCG56	.CLAMP,LOOP.....FKD	1
26	PAFZZ	5340011968801	96906	MS21919WCG32	.CLAMP,LOOP.....FKD	1

END OF FIGURE

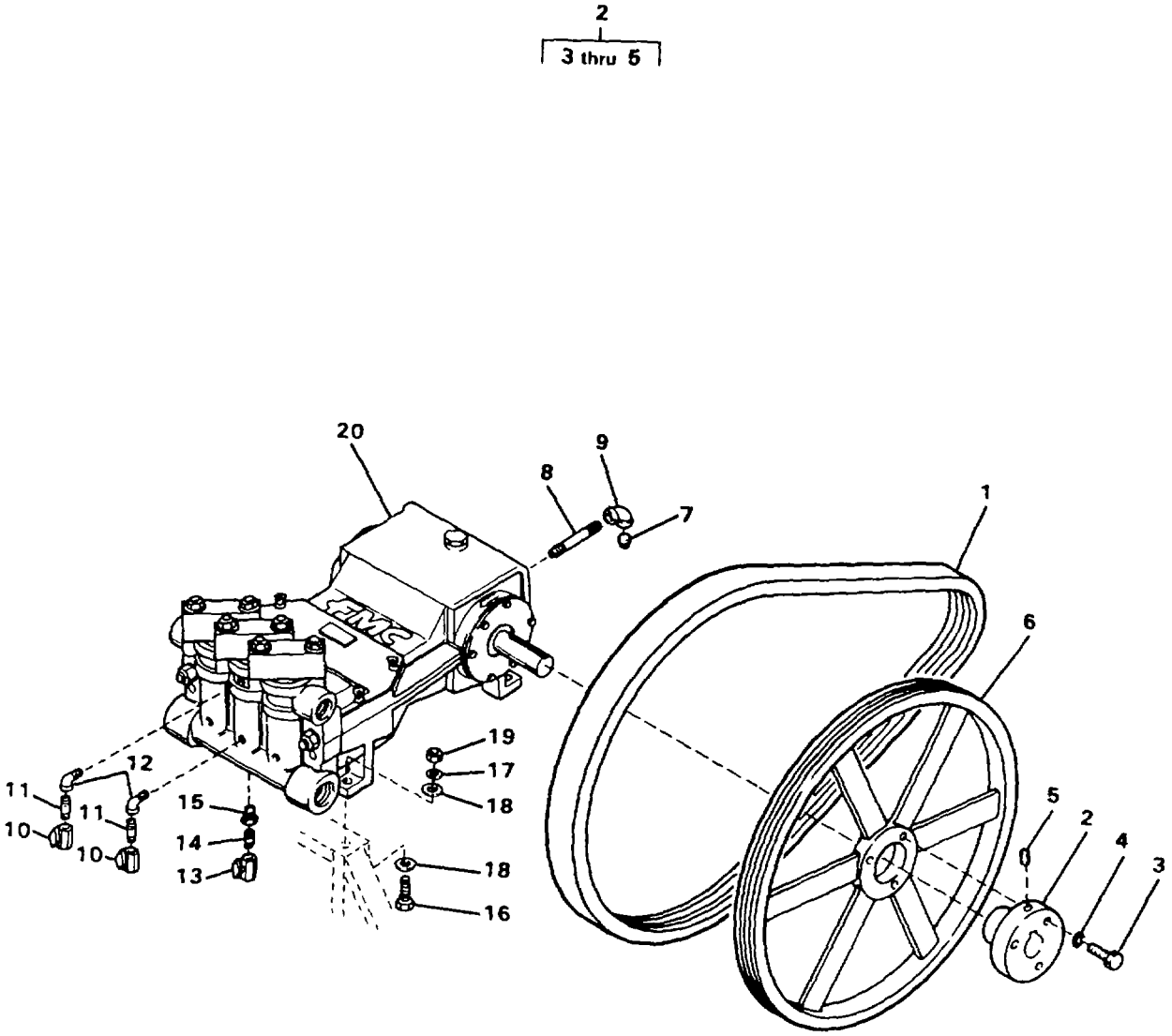

FIGURE 133. HIGH PRESSURE PUMP MOUNTING

(1) ITEM NO	(2) SMR CODE	(3) NSN	(4) CAGEC	(5) PART NUMBER	(6) DESCRIPTION AND USABLE ON CODES(UOC)	(7) QTY
					GROUP 02 WATER PURIFICATION SYSTEM	
					FIG. 133 HIGH PRESSURE PUMP MOUNTING	
1	PAOZZ	3030013518190	97403	13229E0089	.BELT,V.....	1
2	XDFFF		24161	QD-F 2.5 BORE	.BUSHING.....	1
3	PAFZZ	5305012588209	96906	MS35307-443	..SCREW,CAP,HEXAGON H.....	3
4	PAFZZ	5310009265870	96906	MS35338-144	..WASHER,LOCK.....	3
5	PAFZZ	5305007245882	96906	MS51963-105	..SETSCREW.....	1
6	XDFZZ		97403	13229E0153	.PULLEY,GROOVE.....	1
7	XDOZZ		30780	1/1 HPSS	.PLUG,HEX HEAD.....	1
8	XDOZZ		97403	13229E1255-11	.NIPPLE,PIPE.....	1
9	XDOZZ		81343	SAE 140238	.ELBOW,SCREWED 1/2 NPT.....	1
10	PBOZZ	4820013523721	97403	13229E0678-1	.VALVE,PLUG.....	4
11	XDOZZ		97403	13229E1255-8	.NIPPLE,PIPE.....	4
12	XDOZZ		81343	SAE 140239	.ELBOW,STREET.....	4
13	PBOZZ	4820013493816	97403	13229E0678	.VALVE,PLUG.....	3
14	XDOZZ		97403	13229E1255-2	.NIPPLE,PIPE.....	3
15	PBOZZ	4730011276274	81343	12-4 140140S	.BUSHING,PIPE 3/4 X 1/4 NPT.....	3
16	PAOZA	5305009480669	96906	MS35307-490	.SCREW,CAP,HEXAGON H.....	4
17	PAOZZ	5310009370454	96906	MS35338-146	.WASHER,LOCK.....	4
18	PAOZZ	5310005847799	96906	MS15795-822	.WASHER,FLAT.....	8
19	PAOZZ	5310009245897	96906	MS51971-8	.NUT,PLAIN,HEXAGON.....	4
20	PDFHH	4320013518586	50492	5266613	.PUMP,TRIPLEX,HP SEE FIGURE 134 AND 135 FOR DETAIL BREAKDOWN.....	1

END OF FIGURE

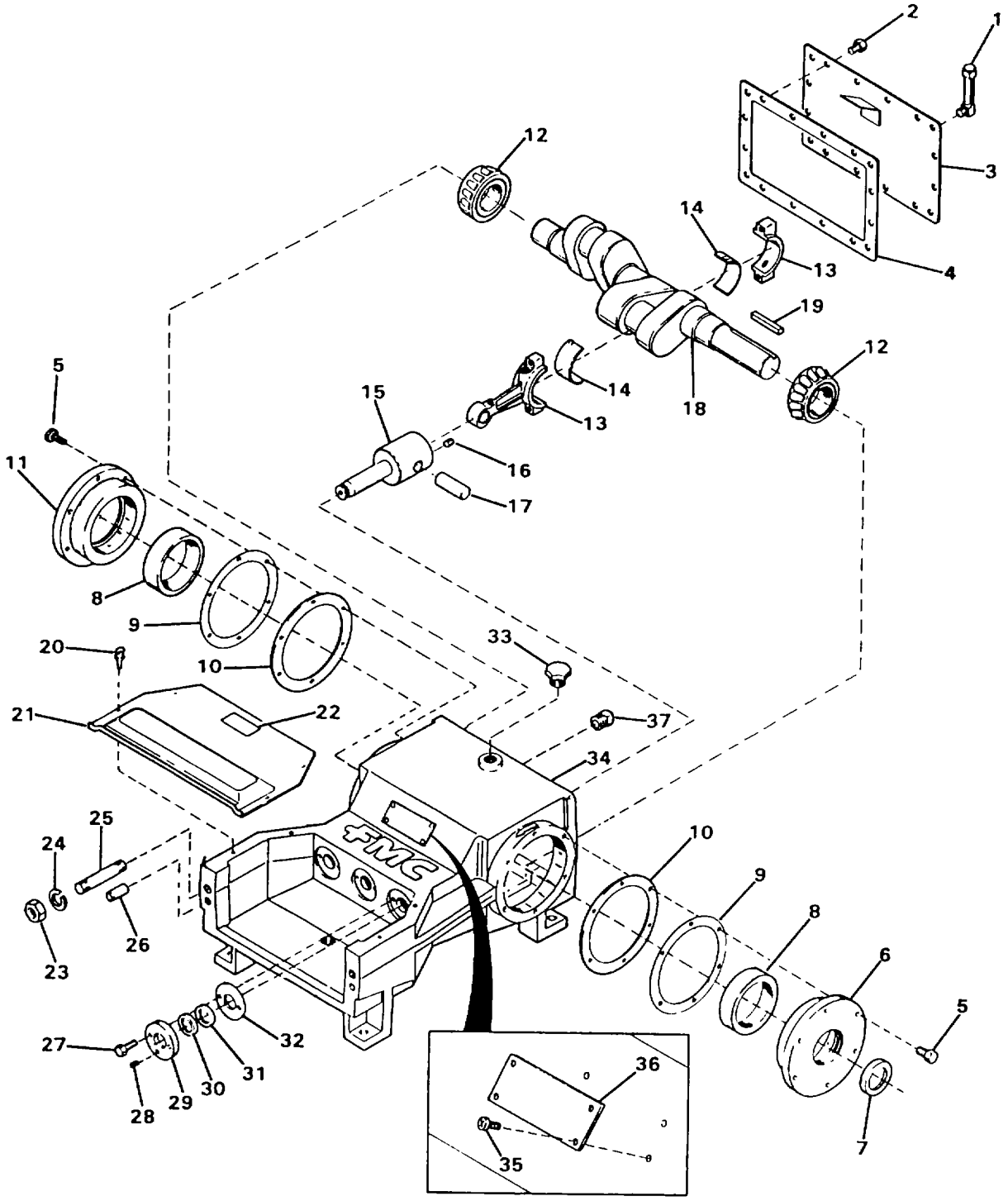

FIGURE 134. HIGH PRESSURE PUMP (DRIVE END)

(1) ITEM NO	(2) SMR CODE	(3) NSN	(4) CAGEC	(5) PART NUMBER	(6) DESCRIPTION AND USABLE ON CODES(UOC)	(7) QTY
					GROUP 02 WATER PURIFICATION SYSTEM FIG. 134 HIGH PRESSURE PUMP (DRIVE END)	
1	PBFZZ	6680013547482	50492	5266462	..INDICATOR,SIGHT,LIQ.....	1
2	PAHZZ	5305007320512	80204	B1821BH050C075N	..SCREW,CAP,HEXAGON H.....	16
3	XDHZZ		50492	5266586	..COVER.....	1
4	PCHZZ	5330013524336	50492	5262847	..GASKET.....	1
5	PAHZZ	5305013258388	96906	MS90725-113	..SCREW,CAP,HEXAGON H.....	12
6	XDHZZ		50492	5266571	..HOUSING,BEARING.....	1
7	PCHZZ	5330011878604	12204	3496557	..SEAL,PLAIN ENCASED.....	1
8	PBHZA	3110010396477	50492	320312	..CUP,TAPERED ROLLER.....	2
9	PBHZZ	5365013519409	50492	5262849	..SHIM.....	10
10	PCHZZ	5330013527756	50492	5262848	..GASKET.....	2
11	XDHZZ		50492	5266536	..HOUSING,BEARING.....	1
12	PBHZA	3110010396476	50492	320313	..CONE AND ROLLERS,TA.....	2
13	XDHZZ		50492	5266814	..ROD,CONNECTING.....	3
14	PBHZZ		50492	1284709	..BEARING,SLEEVE.....	6
15	XDHZZ		50492	5262836	..CRSHD AND ROD ASSY.....	3
16	PAHZZ	5305007245903	96906	MS51963-85	..SETSCREW.....	3
17	XDHZZ		50492	5262837	..PIN,WRIST.....	3
18	XDHHH		50492	5266556	..CRANKSHAFT.....	1
19	XDFZZ		50492	5271593	..KEY.....	1
20	XDOZZ		50492	320441	..SCREW,THUMB.....	4
21	XDOZZ		50492	5266591	..COVER,ACCESS.....	1
22	XDOZZ		50492	5266887	..DECAL,CAUTION.....	1
23	PAFZZ	5310007638927	96906	MS51971-10	..NUT,PLAIN,HEXAGON.....	2
24	PAFZZ	5310009746642	96906	MS35338-148	..WASHER,LOCK.....	2
25	XDFZZ		50492	5266592	..STUD.....	2
26	XDFZZ		50492	1113543	..PIN,DOWEL.....	2
27	XDFZZ	5305012104595	96906	MS90725-60	..SCREW,ROLLER ASSEMBLY.....	6
28	PAFZZ	5305006825973	96906	MS51021-72	..SETSCREW.....	3
29	PAFZZ	5330013527776	50492	5266255	..RETAINER,PACKING.....	3
30	XDFZZ	5330013349937	50492	5262846	..SEAL,PLAIN ENCASED.....	3
31	PCFZZ	5330013347177	50492	1101090	..SEAL,PLAIN ENCASED.....	3
32	PCFZZ	5330013527745	50492	5264602	..GASKET.....	3
33	XDFZZ	4730013350115	50492	A5054	..PLUG,PIPE.....	1
34	XDHZZ		50492	5266543	..CASE,PUMP.....	1
35	XDOZZ		50492	1187413	..SCREW.....	4
36	XDOZZ		50492	5268488	..PLATE,ID.....	1
37	XDOZZ	4730013350114	50492	1187048	..PLUG,PIPE.....	1

END OF FIGURE

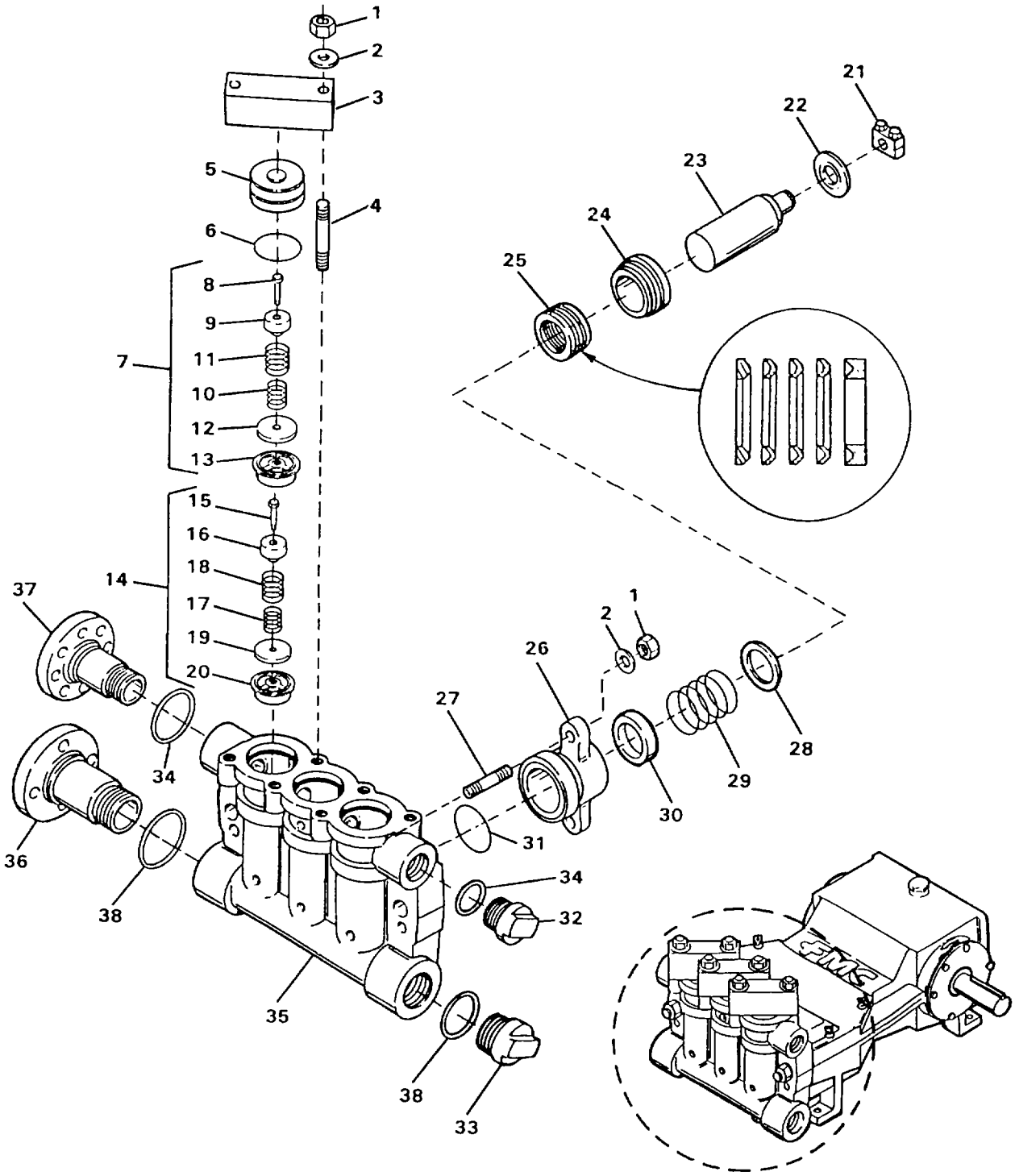

FIGURE 135. HIGH PRESSURE PUMP (FLUID END)

(1) ITEM NO	(2) SMR CODE	(3) NSN	(4) CAGEC	(5) PART NUMBER	(6) DESCRIPTION AND USABLE ON CODES(UOC)	(7) QTY
					GROUP 02 WATER PURIFICATION SYSTEM	
					FIG. 135 HIGH PRESSURE PUMP	
					(FLUID END)	
1	PAFZZ	5310009245897	96906	MS51971-8	..NUT,PLAIN,HEXAGON.....	12
2	PAFZZ	5310005847799	96906	MS15795-822	..WASHER,FLAT.....	12
3	XDFZZ		50492	5266457	..CLAMP,VALVE COVER.....	3
4	XDFZZ		50492	5262886	..STUD,VALVE COVER.....	6
5	XDFZZ		50492	5262884	..COVER,VALVE.....	3
6	PAFZZ	5331013528710	50492	320316	..O-RING.....	3
7	PBFFF	4820013484278	50492	5266588	..VALVE,LIFT-CHECK.....	3
8	XDFZZ		50492	5263973	...SCREW,CAP TITANIUM.....	1
9	XDFZZ		50492	5266463	...RETAINER.....	1
10	XDFZZ		50492	5267473	...SPRING.....	1
11	XDFZZ		50492	5267472	...SPRING,STANDARD.....	1
12	XDFZZ		50492	5263968	...PLATE,VALVE.....	1
13	PBFZZ	4820013519972	50492	5263964	...SEAT,VALVE.....	1
14	PBFFF	4820013500179	50492	5262907	..VALVE,LIFT-CHECK.....	3
15	XDFZZ		50492	5263973	...SCREW,CAP,HEX HD TITANIUM.....	1
16	XDFZZ		50492	5266463	...RETAINER.....	1
17	XDFZZ		50492	5263971	...SPRING.....	1
18	XDFZZ	5360013932618	50492	5263970	...SPRING,HELICAL,COMP.....	1
19	XDFZZ		50492	5263969	...PLATE,VALVE.....	1
20	PBFZZ	4820013519973	50492	5263965	...SEAT,VALVE.....	1
21	XDFZZ	3040013349258	50492	1252143	..CLAMP,HUB.....	3
22	XDFZZ	4320013377316	50492	5262851	..DEFLECTOR DIRT AND LIQUID.....	3
23	PBFZZ		50492	5266327	..PLUNGER,DETENT.....	3
24	XDFZZ		50492	5265205	..NUT,ADJUSTING.....	3
25	PAFZZ	5330013532633	50492	5265202	..PACKING,ASSEMBLY.....	3
26	XDFZZ		50492	5271595	..BOX,STUFFING.....	3
27	XDFZZ		50492	5262887	..STUD.....	6
28	XDFZZ		50492	5265204	..RING PKG,COMPR.....	3
29	XDFZZ		50492	5263324	..SPRING PACKING.....	3
30	XDFZZ		50492	5267474	..RING,THROAT.....	3
31	PAFZZ	5331013528711	50492	320315	..O-RING.....	3
	XAFZZ		50492	5266617	..H. P. PUMP ACCESS.....	1
32	XDFZZ		50492	5266557	...PLUG.....	1
33	XDFZZ		50492	5271591	...PLUG 3 INCH.....	1
34	PBFZZ	5331013528712	50492	320448	...O-RING.....	2
35	XDFZZ		50492	5266560	...CHAMBER,VALVE.....	1
36	XDFZZ		50492	5266187	...FLANGE,SUCTION.....	1
37	XDFZZ		50492	5266189	...FLANGE,DISCHARGE.....	1
38	PBFZZ	5331013528713	50492	320449	...O-RING.....	2

END OF FIGURE

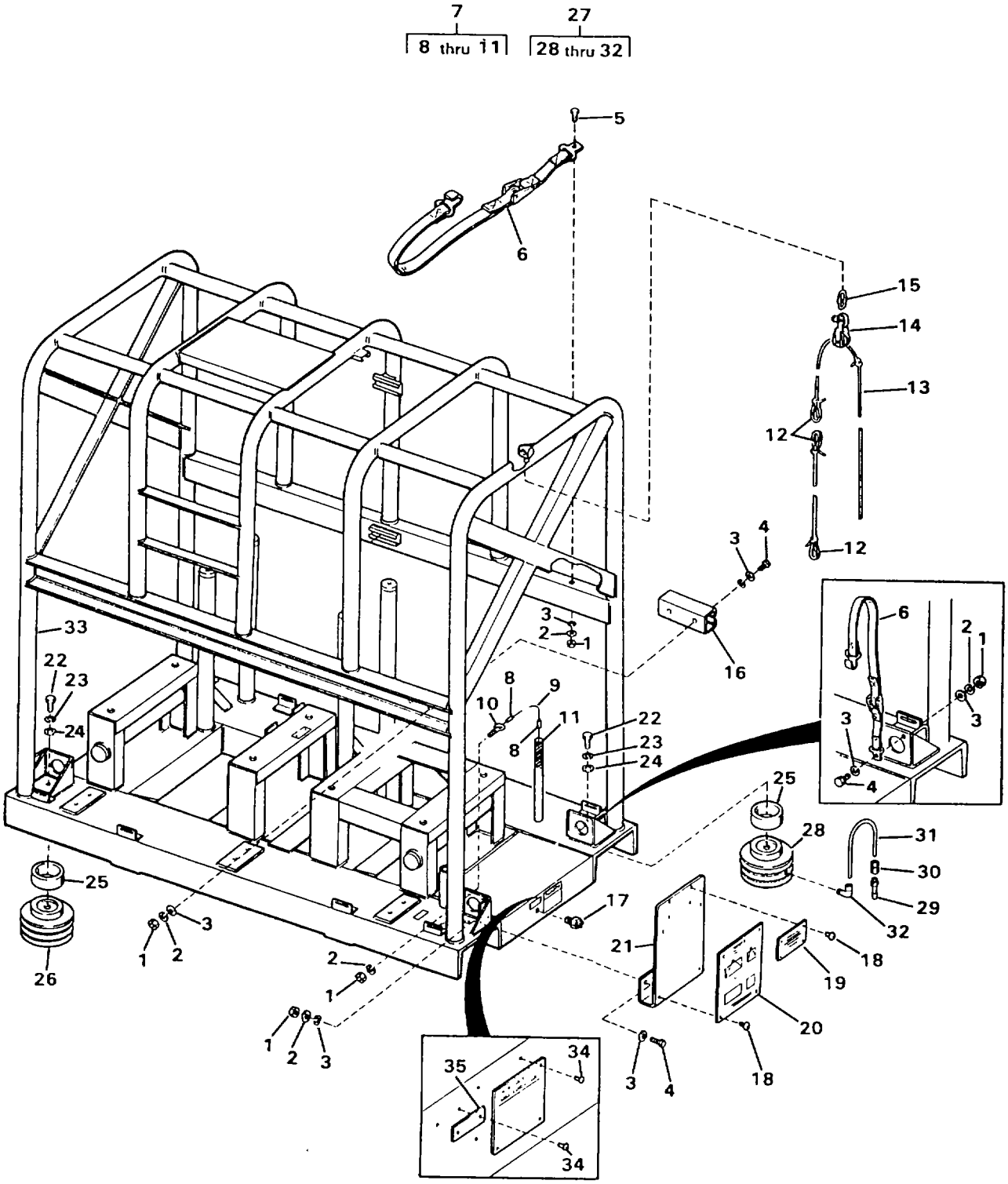

FIGURE 136. HIGH PRESSURE PUMP/MOTOR ASSEMBLY

(1) ITEM NO	(2) SMR CODE	(3) NSN	(4) CAGEC	(5) PART NUMBER	(6) DESCRIPTION AND USABLE ON CODES(UOC)	(7) QTY
					GROUP 02 WATER PURIFICATION SYSTEM FIG. 136 HIGH PRESSURE PUMP/MOTOR ASSEMBLY	
1	PAOZZ	5310009035966	96906	MS51971-1	.NUT,PLAIN,HEXAGON.....	9
2	PAOZZ	5310009338121	96906	MS35338-139	.WASHER,LOCK.....	9
3	PAOZZ	5310010911248	96906	MS15795-810	.WASHER,FLAT.....	18
4	PAOZZ	5305002078253	96906	MS35307-308	.SCREW,CAP,HEXAGON H.....	4
5	PAOZZ	5305007024523	96906	MS35307-306	.SCREW,CAP,HEXAGON H.....	4
6	PBOZZ	5340013531957	97403	13229E1333-2	.STRAP,WEBBING TAN.....	4
6	PBOZZ	5340013531958	97403	13229E1333-1	.STRAP,WEBBING GREEN.....	4
7	XDOOO		97403	13229E1336	.HANDLE ASSEMBLY.....	1
8	PAOZZ	4030001455721	96906	MS51844-64	..SWAGING SLEEVE,WIRE.....	2
9	MOOZZ		97403	13229E1336-1	..CABLE CUT TO LENGTH FROM BULK, P/N 13229E1147-1.....	1
10	XDOZZ		09647	120-00931	..EYEBOLT 0.250-20 UNC-2A X 0.750 INCH LONG, CRES.....	1
11	XDOZZ		97403	13229E1325	..EXTENSION,HANDLE.....	1
12	PAOZZ	4010013507105	97403	13229E1151	..LINK,CHAIN,DETACHABLE.....	3
13	MOOZZ		09647	120-02215	.ROPE,YACHT BRAID CUT TO LENGTH FROM BULK, P/N 13229E1153.....	1
14	PBOZZ	3940013507919	97403	13229E1152	.BLOCK,TACKLE.....	1
15	PAOZZ	4010012252681	97403	13229E0637	.LINK,CHAIN,DETACHAB.....	1
16	XDOZZ		97403	13229E0380-10	.CHANNEL,PIPE SPRT.....	1
17	PAOZZ	5940009787672	96906	MS39347-3	.TERMINAL,STUD.....	1
18	PAOZZ	5320013490933	97403	13229E0350-1	.RIVET,BLIND.....	8
19	XDOZZ		97403	13229E0023	.PLATE,ID.....	1
20	XDOZZ		97403	13229E0026	.PLATE,ID LIFTING INSTRUCTIONS.....	1
21	XDOZZ		97403	13229E0964	.BRACKET,NAMEPLATE.....	1
22	PAOZZ	5305006858156	96906	MS35307-416	.SCREW,CAP,HEXAGON H.....	4
23	PAOZZ	5310009338778	96906	MS35338-143	.WASHER,LOCK.....	4
24	PAOZZ	5310007679425	96906	MS15795-818	.WASHER,FLAT.....	4
25	XDFZZ		97403	13229E1297	.SPACER,PAD.....	4
26	PBFZZ	5342013532680	81860	SLM-12A	.MOUNT RESILIENT WITHOUT EXTENSION.....	2
27	XDFFF		81860	41760-1	.PAD,VIBRATION WITH EXTENSION.....	2
28	PBFZZ	5342013532680	81860	SLM-12A	..MOUNT RESILIENT.....	1
29	XDOZZ		97403	13229E1313 ITEM 4	..VALVE.....	2
30	XDOZZ		97403	13229E1313 ITEM 3	..CONNECTOR.....	2
31	PAOZZ	4720014584100	97403	13229E1313 ITEM 2	..TUBING.....	2
32	PAOZZ	4730014584131	97403	13229E1313 ITEM 1	..FITTING.....	2
33	XDOOO		97403	13229E1287	.FRAME.....	1
34	PAOZZ	5320013522765	97403	13229E0350-5	..RIVET,BLIND.....	10
35	XDOZZ		97403	13229E0782-1	..PLATE,ID.....	1
36	XDOZZ		97403	13229E0411-13	..PLATE,ID.....	1

END OF FIGURE

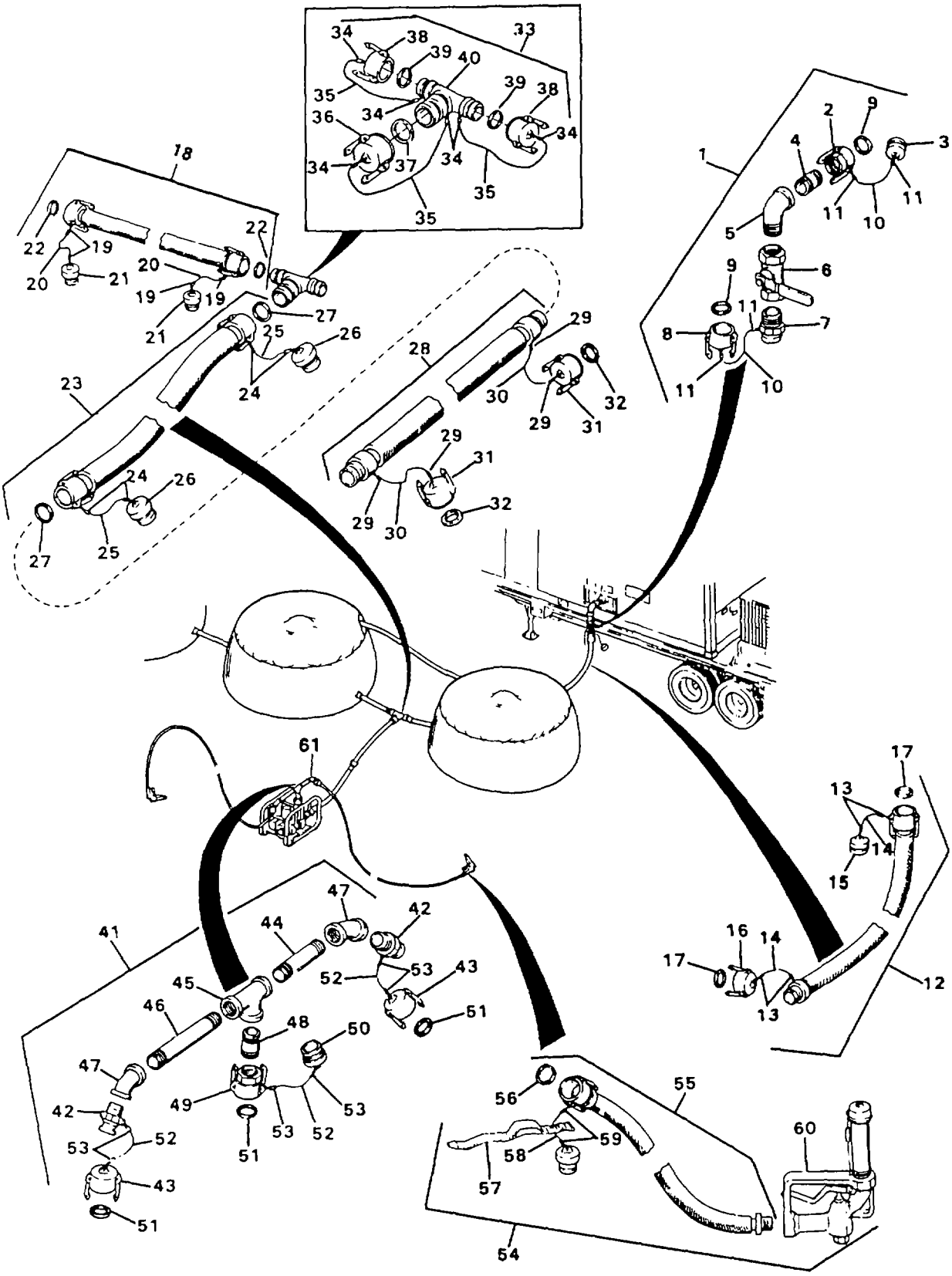

FIGURE 137. DISTRIBUTION SYSTEM (SHEET 1 OF 2)
(MODEL ETN ONLY)

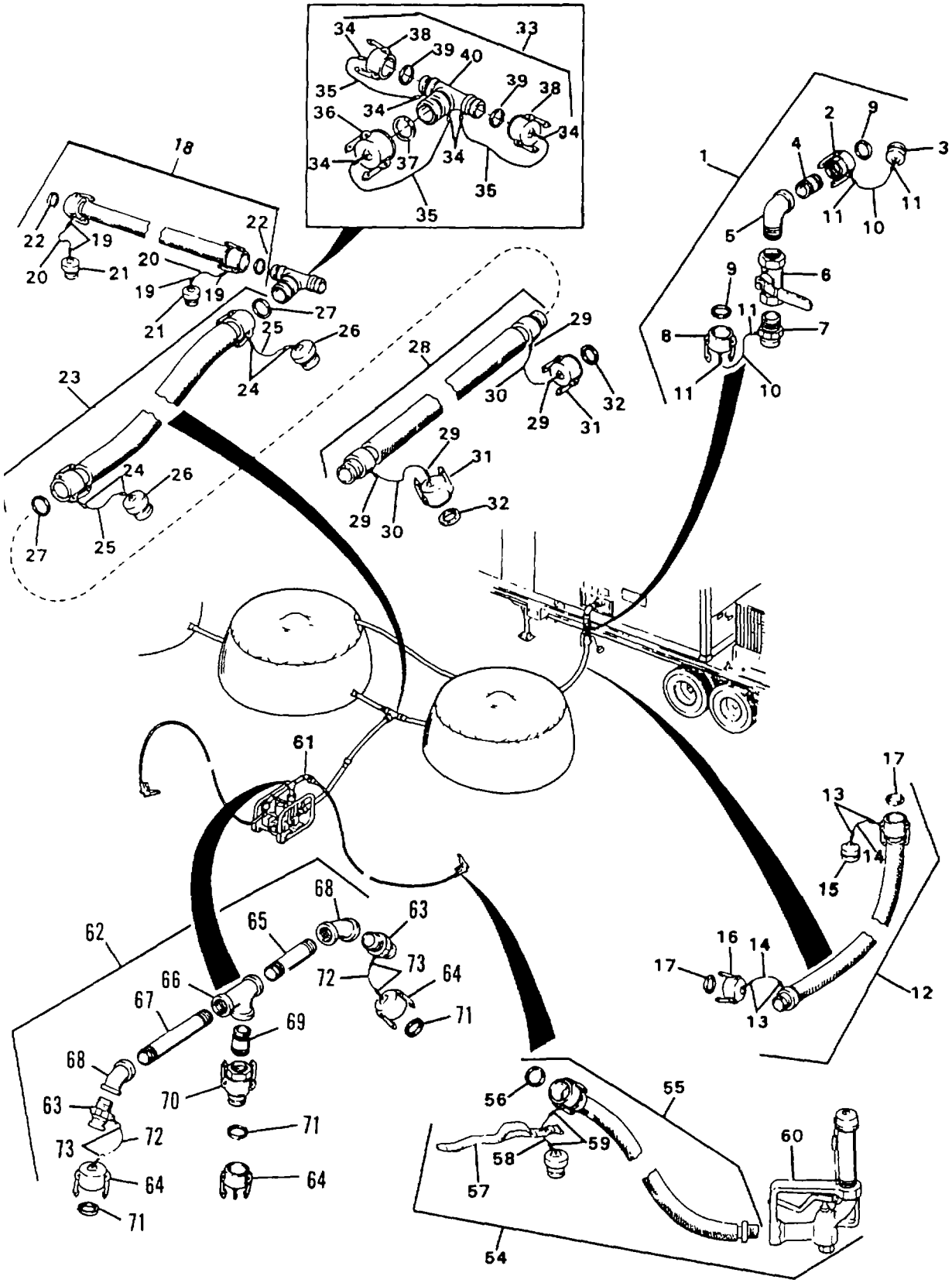

FIGURE 137. DISTRIBUTION SYSTEM (SHEET 2 OF 2)
(MODEL FKD ONLY)

(1) ITEM NO	(2) SMR CODE	(3) NSN	(4) CAGEC	(5) PART NUMBER	(6) DESCRIPTION AND USABLE ON CODES(UOC)	(7) QTY
					GROUP 03 WATER DISTRIBUTION SYSTEM	
					FIG. 137 DISTRIBUTION SYSTEM	
1	XDOOO		97403	13229E0630	.PIPE ASSY.....	1
2	PAOZZ	4730013478544	96906	MS27024-12	..COUPLING,HALF,QUICK.....	1
3	PAOZZ		96906	MS27029-12	..COUPLING,HALF,QUICK.....	1
4	PAOZZ	4730014665288	97403	13229E1256-8	..NIPPLE,PIPE.....	1
5	PAOZZ	4730014665290	97403	13229E0630-3	..ELBOW 90 DEGREE, 2 INCH NPS.....	1
6	PBOZZ	4820013523719	97403	13229E0433-3	..VALVE,BUTTERFLY.....	1
7	PAOZZ	4730001153740	96906	MS27022-12	..COUPLING HALF,QUICK.....	1
8	PAOZZ	4730010866157	96906	MS27028-12	..CAP,QUICK DISCONNEC.....	1
9	PCOZZ	5330006122414	96906	MS27030-6	..GASKET.....	2
10	MOOZZ		09647	120-02177-1	..CABLE CUT TO LENGTH FROM BULK, P/N 13229E1147-1.....	2
11	PAOZZ	4030001455721	96906	MS51844-64	..SWAGING SLEEVE,WIRE.....	4
12	PCOOO	4720013515891	97403	13229E0194	.HOSE ASSEMBLY,NONME PRODUCT OUT.....	5
13	PAOZZ	4030001455721	96906	MS51844-64	..SWAGING SLEEVE,WIRE.....	4
14	MOOZZ		97403	13229E0194-2C	..CABLE CUT TO LENGTH FROM BULK, P/N 13229E1147-1.....	2
15	PAOZZ		96906	MS27029-12	..COUPLING HALF,QUICK.....	1
16	PAOZZ	4730010866157	96906	MS27028-12	..CAP,QUICK DISCONNEC.....	1
17	PCOZZ	5330006122414	96906	MS27030-6	..GASKET.....	2
18	PBOOO	4720013514011	97403	13229E0202	.HOSE ASSEMBLY,NONME DISTRIBUTION.....	2
19	PAOZZ	4030001455721	96906	MS51844-64	..SWAGING SLEEVE,WIRE.....	4
20	MOOZZ		97403	13229EO202-2C	..CABLE CUT TO LENGTH FROM BULK, P/N 13229E1147-1.....	2
21	PAOZZ		96906	MS27029-12	..COUPLING HALF,QUICK.....	2
22	PAOZZ	5330006122414	96906	MS27030-6	..GASKET.....	2
23	PBOOO	4720013503787	97403	13229E0203	.HOSE ASSEMBLY,NONME.....	1
24	PAOZZ	4030001455721	96906	MS51844-64	..SWAGING SLEEVE,WIRE.....	4
25	MOOZZ		97403	13229EO203-2C	..CABLE CUT TO LENGTH FROM BULK, P/N 13229E1147-1.....	2
26	PAOZZ	4730013476073	96906	MS27029-16	..PLUG,QUICK DISCONNE.....	2
27	PCOZZ	5330000889166	96906	MS27030-8	..GASKET.....	2
28	PBOOO	4720013493637	97403	13229E0201	..HOSE ASSEMBLY,NONME DISTRIBUTION.....	1
29	PAFZZ	4030001455721	96906	MS51844-64	..SWAGING SLEEVE,WIRE.....	4
30	MFFZZ		97403	13229E0201-2C	.CABLE CUT TO LENGTH FROM BULK, P/N 13229E1147-1.....	2
31	PAOZZ	4730013506290	96906	MS27028-16	..CAP,QUICK DISCONNEC.....	2
32	PCOZZ	5330000889166	96906	MS27030-8	..GASKET.....	2
33	XDOOO		97403	13229E1133	..TEE,SPECIAL.....	1
34	PAOZZ	4030001455721	96906	MS51844-64	..SWAGING SLEEVE,WIRE.....	6
35	MOOZZ		97403	13229El133-6	.CABLE CUT TO LENGTH FROM BULK, P/N 13229E1147-1.....	3
36	PAOZZ	4730013506290	96906	MS27028-16	..CAP,QUICK DISCONNEC.....	1
37	PCOZZ	5330000889166	96906	MS27030-8	..GASKET.....	1
38	PAOZZ	4730010866157	96906	MS27028-12	..CAP,QUICK DISCONNEC.....	2
39	PBOZZ	5330006122414	96906	MS27030-6	..GASKET.....	2
40	PAOZZ	4730014663844	97403	13229E0900	..TEE.....	1

(1) ITEM NO	(2) SMR CODE	(3) NSN	(4) CAGEC	(5) PART NUMBER	(6) DESCRIPTION AND USABLE ON CODES(UOC)	(7) QTY
41	XDOOO		97403	13229E0036	..PIPE SECTION ASSY ETN DISTRIBUTION.....	1
42	PAOZZ	4730001153740	96906	MS27022-12	..COUPLING HALF,QUICK.....ETN	2
43	PAOZZ		96906	MS27026-12	..COUPLING HALF,QUICK.....ETN	2
44	XDOZZ		97403	13229E1256-2	..NIPPLE,PIPE.....ETN	1
45	PAOZZ		81348	WWP460	..TEE,PIPE 2 NPS, CLASS 125, ETN BRONZE.....	1
46	XDOZZ		97403	13229E1256-3	..NIPPLE,PIPE.....ETN	1
47	XDOZZ		97403	13229E0036-2	..ELBOW 2 NPS, 45 DEGREE, CLASS ETN 125, BRONZE.....	2
48	XDOZZ		97403	13229E1256-4	..NIPPLE,PIPE.....ETN	1
49	PAOZZ	4730013478544	96906	MS27024-12	..COUPLING,HALF,QUICK.....ETN	1
50	PAOZZ		96906	MS27029-12	..COUPLING HALF,QUICK.....ETN	1
51	PCOZZ	5330006122414	96906	MS27030-6	..GASKET.....ETN	3
52	MOOZZ		09647	120-02177-1	..CABLE CUT TO LENGTH FROM ETN BULK, P/N 13229E1147-1.....	3
53	PAOZZ	4030001455721	96906	MS51844-64	..SWAGING SLEEVE,WIRE.....ETN	6
54	XDOOO		97403	13229E1156	.HOSE ASSY WITH NOZZLE.....	2
55	PBOOO	4720013495226	97403	13229E0193	..HOSE ASSEMBLY,NONME.....	1
56	PCOZZ	5330000889166	96906	MS27030-8	..GASKET.....	1
57	PBOZZ	5340013496290	97403	13229E1000-1	..STRAP,WEBBING.....	1
58	MOOZZ		09647	120-02177-1	..CABLE,AIRCRAFT CUT TO LENGTH FROM BULK, P/N 13229E1147-1.....	1
59	PAOZZ	4030011420456	96906	MS51844-63	..SWAGING SLEEVE,WIRE.....	2
60	PBOZZ		97403	13229E0196	..NOZZLE,DISTRIBUTION.....	1
61	PDOFF	4320013484386	97403	13229E0043	.PUMP,CENTRIFUGAL SEE FIGURE ETN 138 FOR DETAIL BREAKDOWN.....	1
61	PDOFF		97403	13229E0190	.PUMP,CENTRIFUGAL SEE FIGURE FKD 138 FOR DETAIL BREAKDOWN.....	1
62	XDOOO		97403	13229E0191	.PIPE SECTION ASSY FKD DISTRIBUTION.....	1
63	PAOZZ	4730001153740	96906	MS27022-12	..COUPLING HALF,QUICK.....FKD	2
64	PAOZZ	4730010866157	96906	MS27028-12	..CAP,QUICK DISCONNECT.....FKD	3
65	XDOZZ		97403	13229E1256-2	..NIPPLE,PIPE.....FKD	1
66	PAOZZ		81348	WWP460	..TEE,PIPE 2 NPS, CLASS 125, FKD BRONZE	1
67	XDOZZ		97403	13229E1256-3	..NIPPLE,PIPE.....FKD	1
68	XDOZZ		97403	13229E0191-2	..ELBOW 2 NPS, 45 DEGREE, CLASS FKD 125, BRONZE.....	2
69	XDOZZ		97403	13229E1256-4	..NIPPLE,PIPE.....FKD	1
70	PAOZZ	4730013476070	96906	MS27020-12	..COUPLING,HALF,QUICK.....FKD	1
71	PCOZZ	5330006122414	96906	MS27030-6	..GASKET.....FKD	3
72	MOOZZ		09647	120-02177-1	..CABLE CUT TO LENGTH FROM FKD BULK, P/N 13229E1147-1.....	3
73	PAOZZ	4030001455721	96906	MS51844-64	..SWAGING SLEEVE,WIRE.....FKD	6

END OF FIGURE

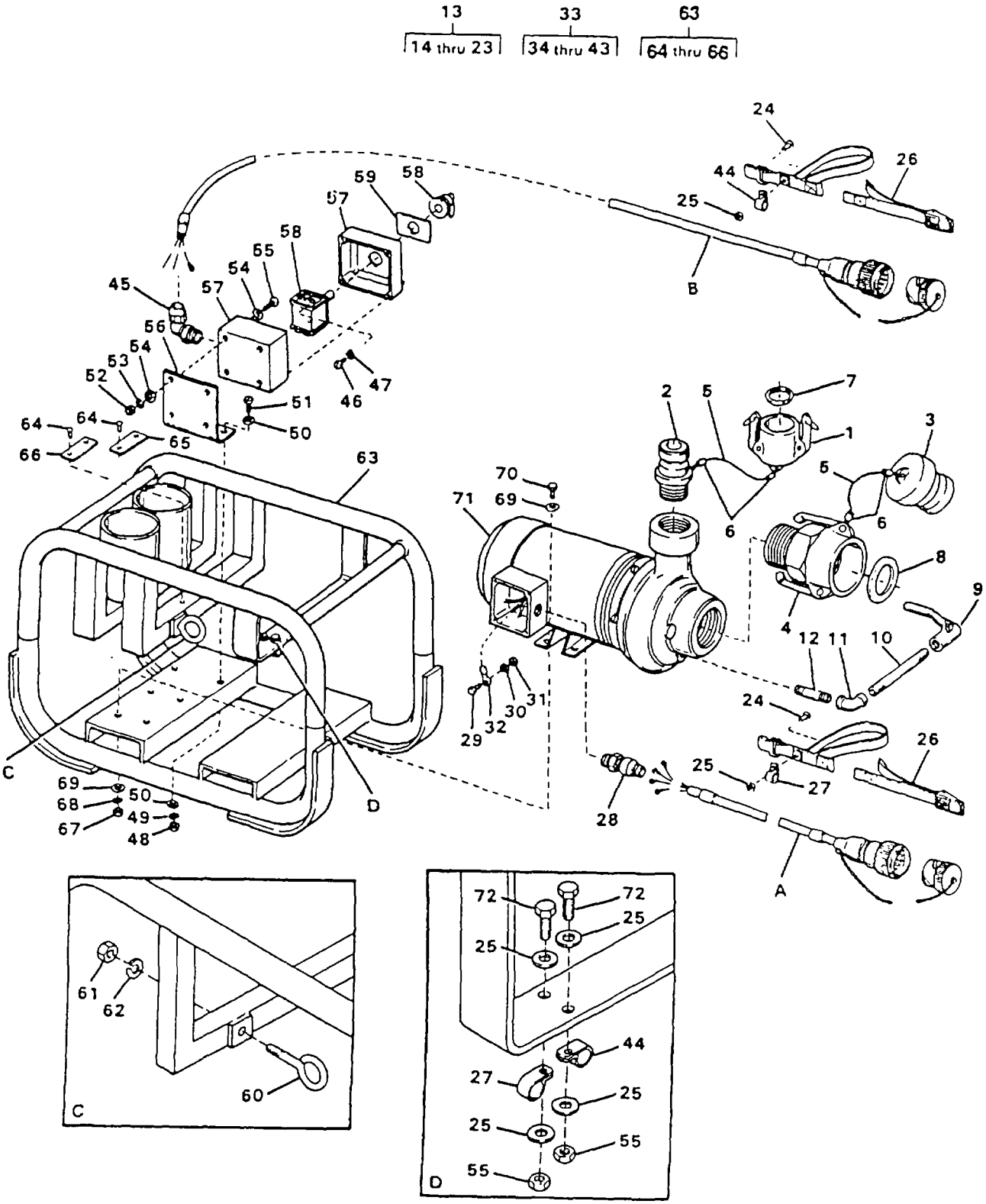

FIGURE 138. DISTRIBUTION PUMP ASSEMBLY (SHEET 1 OF 3)
(MODEL ETN ONLY)

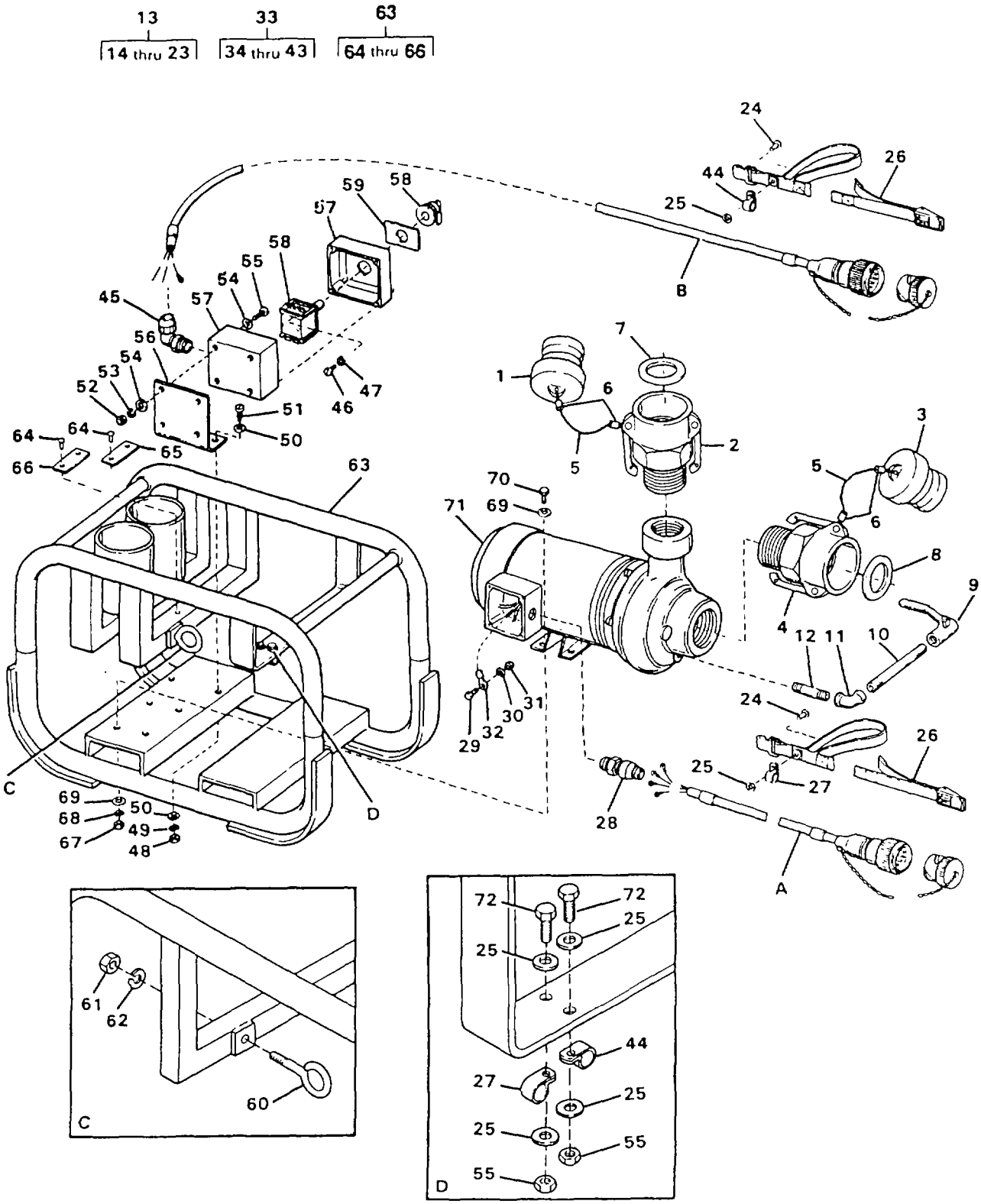

FIGURE 138. DISTRIBUTION PUMP ASSEMBLY (SHEET 2 OF 3)

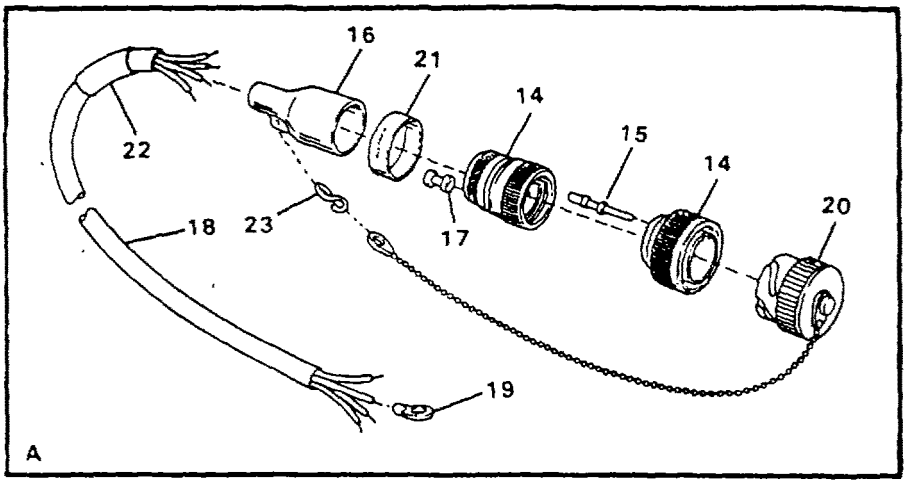

HARNESS ASSY	CONNECTOR DETAIL	CONTACT PIN	PLUG	WIRE ROD	
				FROM	TO
13	14	15	17	P62A	BLACK
		15	17	P62B	WHITE
		15	17	P62C	RED
		15	17	P62D	GREEN

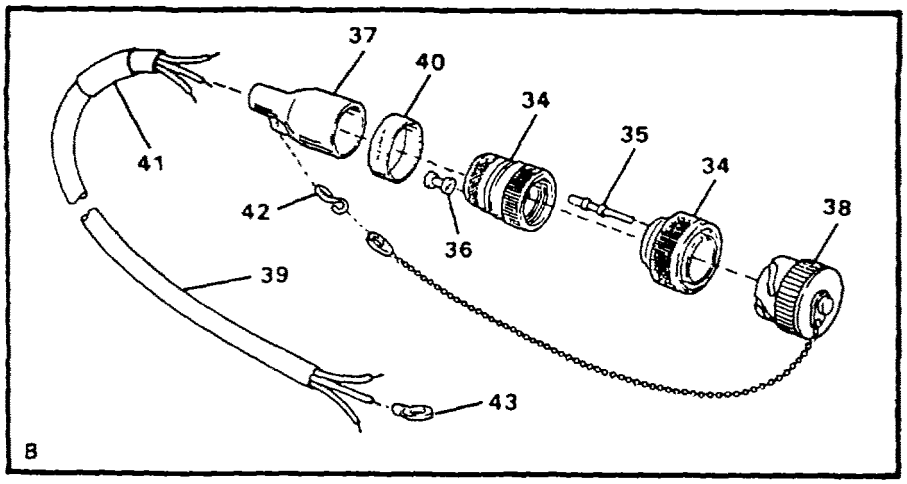

HARNESS ASSY	CONNECTOR DETAIL	CONTACT PIN	PLUG	WIRE ROD	
				FROM	TO
33	34	35	36	P61A	BLACK
		35	36	P61B	WHITE
		35	36	P61C	GREEN

FIGURE 138. DISTRIBUTION PUMP ASSEMBLY (SHEET 3 OF 3)

(1) ITEM NO	(2) SMR CODE	(3) NSN	(4) CAGEC	(5) PART NUMBER	(6) DESCRIPTION AND USABLE ON CODES(UOC)	(7) QTY
					GROUP 03 WATER DISTRIBUTION SYSTEM FIG. 138 DISTRIBUTION PUMP ASSEMBLY	
1	PAOZZ	4730010866157	96906	MS27028-12	..CAP,QUICK DISCONNECT.....ETN	1
1	PAOZZ		96906	MS27029-12	..COUPLING HALF,QUICK.....FKD	1
2	PAOZZ		96906	MS27022-12	..COUPLING HALF,QUICK.....ETN	1
2	PAOZZ	4730004109530	96906	MS27026-12	..COUPLING HALF,QUICK.....FKD	1
3	PAOZZ	4730013476073	96906	MS27029-16	..PLUG,QUICK DISCONNE.....	1
4	PAOZZ	4730004713117	96906	MS27026-16	..COUPLING HALF,QUICK.....	1
5	MOOZZ		09647	120-02177-1	..CABLE CUT TO LENGTH FROM BULK, P/N 13229E1147-1.....	2
6	PAOZZ	4030001455721	96906	MS51844-64	..SWAGING SLEEVE,WIRE.....	4
7	PAOZZ	5330006122414	96906	MS27030-6	..GASKET.....	1
8	PAOZZ	5330000889166	96906	MS27030-8	..GASKET.....	1
9	PAOZZ	4820013523720	97403	13229E0433-2	..VALVE,BUTTERFLY.....	1
10	XDOZZ		97403	13229E1256-6	..NIPPLE,PIPE.....	1
11	XDOZZ		97403	13229E0043-8	..ELBOW 90 DEGREE, 1/4 NPT, CLASS 125, BRONZE.....	1
12	XDOZZ		97403	13229E1256-9	..NIPPLE,PIPE.....	1
13	XDOFF		97403	13229E1260-22	..HARNESS ASSY W62.....	1
14	PAFFF	5935013500159	17549	CA3106E20-4P-B-02-57	...CONNECTOR,PLUG,ELEC P62.....	1
15	PAFZZ	5999013448759	71468	030-8588-000	....CONTACT,ELECTRICAL PART OF KIT P/N 120-02593-P.....	4
16	PBFZZ	5970013487360	97403	13229E1344-2	...INSULATION SLEEVING.....	1
17	XDFZZ		17549	225-0018-000	...PLUG,WIRE PART OF KIT P/N 120-02593-P.....	4
18	MFFZZ		09647	120-07639-2	...CABLE CUT TO LENGTH FORM BULK, P/N 13229E0741-2.....	1
19	PAFZZ	5940001434777	96906	MS25036-157	...TERMINAL,LUG.....	4
20	PAOZZ	5935013571806	97403	13229E1210-2	...COVER,ELECTRICAL CO.....	1
21	XDFZZ		09647	120-02433-137	...MARKER.....	1
22	XDFZZ		09647	120-02433-69	...MARKER.....	1
23	XDOZZ		51489	700016	...HOOK,CHAIN,S.....	1
24	PBOZZ	5320013490932	97403	13229E0350-2	..RIVET,BLIND.....	2
25	PAOZZ	5905013924321	96906	MS15765-842	..RESISTOR,FIXED,WIR.....	6
26	PBOZZ	5340013506801	97403	13229E1000-2	..STRAP,WEBBING.....	2
27	PAOZZ		96906	MS21919WCF12	..CLAMP,LOOP.....	2
28	PAOZZ	5975012109825	15235	CGB296SG	..BOX CONNECTOR,ELECT.....	1
29	PAOZZ	5305007193997	96906	MS35307-303	..SCREW,CAP,HEXAGON H.....	6
30	PAOZZ	5310009338121	96906	MS35338-139	..WASHER,LOCK.....	6
31	PAOZZ	5310009035966	96906	MS51971-1	..NUT,PLAIN,HEXAGON.....	6
32	PAFZZ	5940001138184	96906	MS25036-150	..TERMINAL,LUG MOTOR LEADS.....	9
33	XDOFF		97403	13229E1260-21	..HARNESS ASSEMBLY W63.....	1
34	PAFFF	5935013545178	17549	CA3106E14S-7P-B-02-57	...CONNECTOR,PLUG,ELEC P61.....	1
35	PAFZZ	5999013448758	17549	030-8586-000	....CONTACT,ELECTRICAL PART OF P/N 120-02593-P.....	3
36	XDFZZ		17549	225-0017-000	...PLUG,WIRE PART OF KIT P/N 120-02593-P.....	1
37	PBFZZ	5970013601531	97403	13229E1344-1	...INSULATION SLEEVING.....	1
38	PAOZZ	5935013517198	97403	13229E1210-1	...COVER,ELECTRICAL CO.....	1

(1) ITEM NO	(2) SMR CODE	(3) NSN	(4) CAGEC	(5) PART NUMBER	(6) DESCRIPTION AND USABLE ON CODES(UOC)	(7) QTY
39	MFFZZ		09647	120-07639-1	...CABLE CUT TO LENGTH FROM BULK, P/N 13229E0741-1.....	1
40	XDFZZ		09647	120-02433-136	...MARKER.....	1
41	XDFZZ		09647	120-02433-70	...MARKER.....	1
42	XDOZZ		51489	700016	...HOOK,CHAIN,S.....	1
43	PAFZZ	5940001434774	96906	MS25036-153	...TERMINAL,LUG.....	4
44	PBOZZ	5340011430638	96906	MS21919WCF4	...CLAMP,LOOP.....	1
45	XDOZZ		97403	13229E1201-2	..ADAPTER.....	1
46	PAOZZ	5305013514312	97403	13229E1187-4	..SCREW,CAP,HEXAGON H 0.164-32 UNC-2A X 0.250 LG.....	1
47	PAOZZ	5310009338119	96906	MS35338-137	..WASHER,LOCK.....	1
48	PAOZZ		96906	MS51971-1	..NUT,PLAIN,HEXAGON.....	2
49	PAOZZ	5310009338121	96906	MS35338-139	..WASHER,LOCK.....	2
50	PAOZZ	5310010911248	96906	MS15795-810	..WASHER,FLAT.....	4
51	PAOZZ	5305002078253	96906	MS35307-308	..SCREW,CAP,HEXAGON H.....	2
52	PAOZZ	5310009349760	96906	MS35649-204	..NUT,PLAIN,HEXAGON.....	4
53	PAOZZ	5310009338120	96906	MS35338-138	..WASHER,LOCK.....	4
54	PAOZZ	5905013924321	96906	MS15765-842	..RESISTOR,FIXED,WIR.....	8
55	PAOZZ	5305000509233	96906	MS51957-67	..SCREW,MACHINE 0.190-24 UNC-2A X 1 INCH LONG.....	4
56	XDOZZ		97403	13229E0470	..BRACKET,ENCLOSURE.....	1
57	XDFZZ		97403	13229E0505	..ENCLOSURE.....	1
58	PBOZA	5930013515664	97403	13229E0503	..SWITCH,ROTARY.....	1
59	XDOZZ		97403	13229E0468	..PLATE,ID.....	1
60	XDOZZ		97403	13229E0437	..BOLT,EYE.....	1
61	PAOZZ		96906	MS51971-5	..NUT,PLAIN,HEXAGON.....	1
62	PAOZZ	5310009338778	96906	MS35338-143	..WASHER,LOCK.....	1
63	XDOFF		97403	13229E0042	..FRAME,DIST PUMP.....	1
64	PBOZZ	5320013490933	97403	13229E0350-1	...RIVET,BLIND.....	4
65	XDOZZ		97403	13229E0782-154	...PLATE,ID DISTRIBUTION PUMP ASSEMBLY.....	1
66	XDOZZ		97403	13229E0782-158	...PLATE,ID LIFT HERE.....	1
67	PAOZZ	5310007670445	96906	MS51971-2	..NUT,PLAIN,HEXAGON.....	4
68	PAOZZ	5310009746623	96906	MS35338-140	..WASHER,LOCK.....	4
69	PAOZZ	5310006255756	96906	MS15795-812	..WASHER,FLAT.....	8
70	PAOZZ	5306005434405	96906	MS35307-334	..BOLT,MACHINE.....	4
71	XAOFF		97403	13229E0053	..PUMP/MOTOR ASSY SEE FIGURES 139 AND 140 FOR DETAIL BREAKDOWN.....	1
72	PAOZZ		02769	8200157-3	..SCREW,CAP,HEXAGON H 0.190-24 UNC-2A X 0.625 LG.....	2

END OF FIGURE

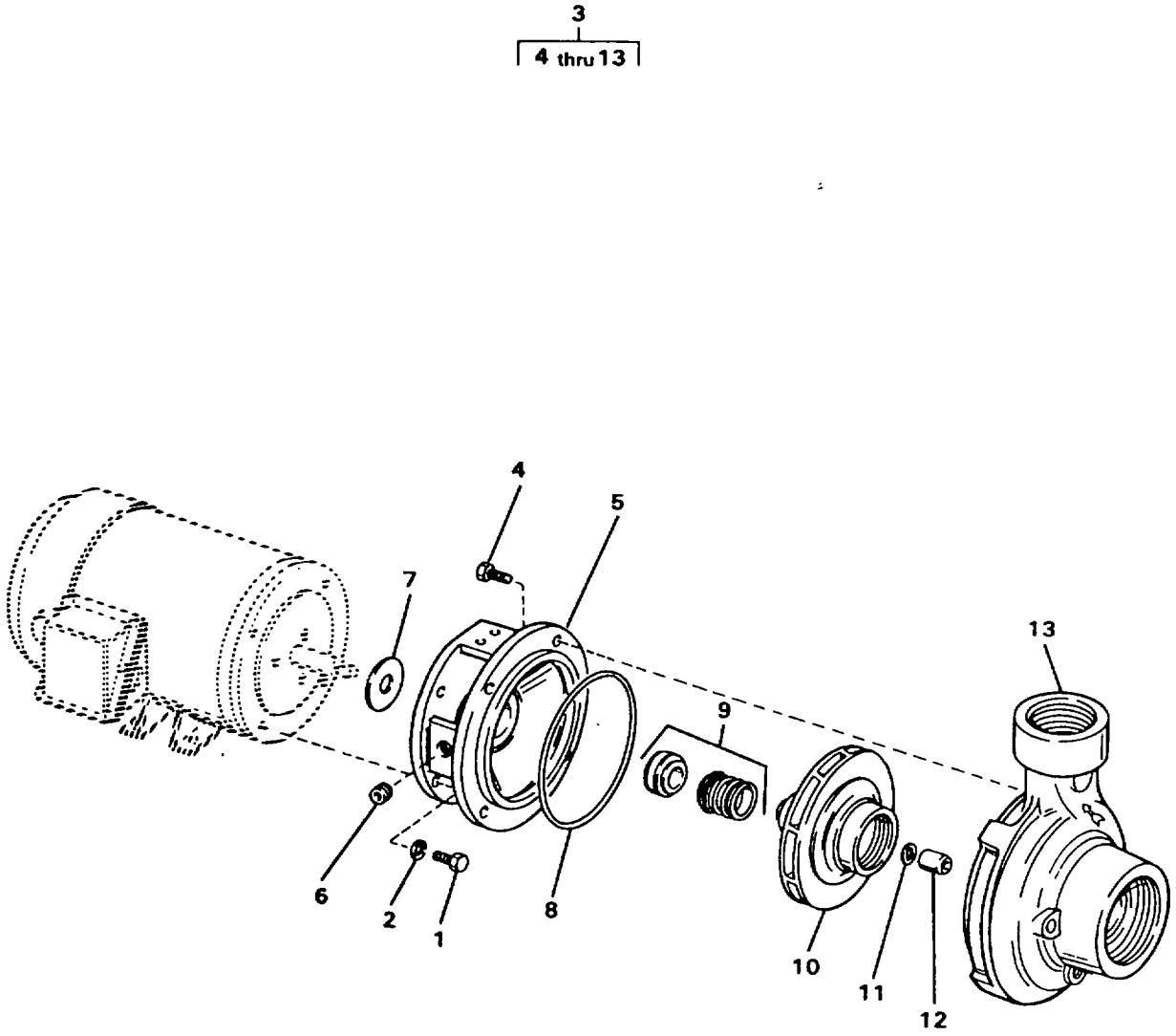

FIGURE 139. DISTRIBUTION PUMP

(1) ITEM NO	(2) SMR CODE	(3) NSN	(4) CAGEC	(5) PART NUMBER	(6) DESCRIPTION AND USABLE ON CODES(UOC)	(7) QTY
					GROUP 03 WATER DISTRIBUTION SYSTEM	
					FIG. 139 DISTRIBUTION PUMP	
1	PAFZZ	5305006322777	96906	MS35307-358	...SCREW,CAP,HEXAGON H.....	4
2	PAFZZ	5310009847042	96906	MS35338-141	...WASHER,LOCK.....	4
3	PBFFF	4320013484387	09647	120-00553	...PUMP,CENTRIFUGAL.....	1
4	PAFZZ	5305006322777	96906	MS35307-358	....SCREW,CAP,HEXAGON H.....	4
5	XDFZZ		13646	132.000.203A	....ADAPTER.....	1
6	XDFFF		13646	108.000.109	....PLUG,PIPE 1/8 NPT SS.....	1
7	PAFZZ	4320013262598	13646	104.000.171	....FLINGER.....	1
8	PAFZZ	5331011869054	13646	116.000.146	....O-RING.....	1
9	PAFZZ	4320011163316	13646	101.000.110	....SEAL ASSEMBLY,PUMP.....	1
10	XDFZZ		13646	131.000.773	....IMPELLER.....	1
11	PAFZZ	5310011569895	13646	104.000.168	....WASHER,FLAT SS.....	1
12	XDFZZ		13646	105.000.465	....RETAINER,IMPELLER SS.....	1
13	XAFZZ		13646	130.000.339	....CASE.....	1

END OF FIGURE

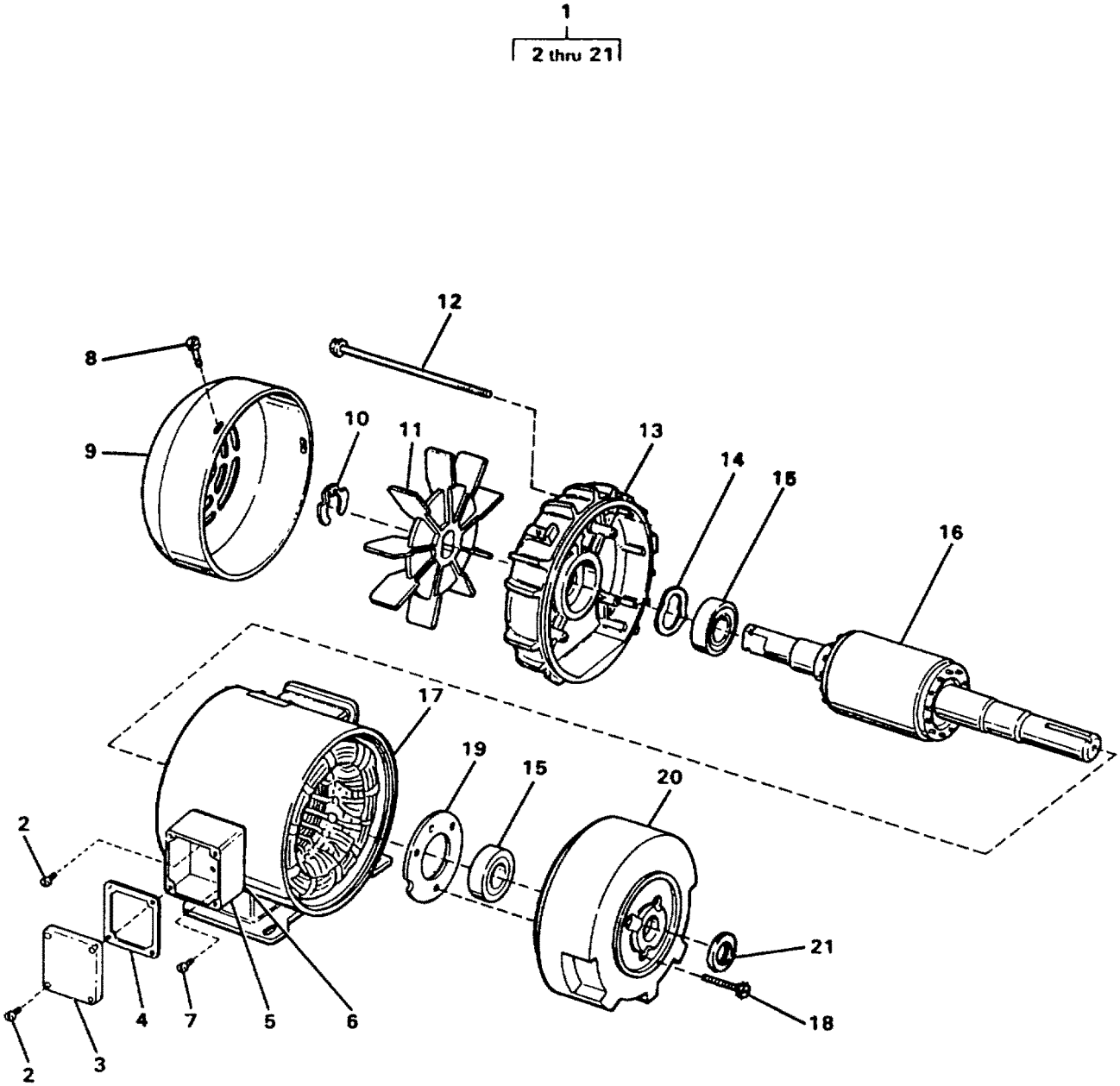

FIGURE 140. DISTRIBUTION PUMP MOTOR

(1) ITEM NO	(2) SMR CODE	(3) NSN	(4) CAGEC	(5) PART NUMBER	(6) DESCRIPTION AND USABLE ON CODES(UOC)	(7) QTY
					GROUP 03 WATER DISTRIBUTION SYSTEM FIG. 140 DISTRIBUTION PUMP MOTOR	
1	PBFFF	6105013514069	0D5S3	159365	...MOTOR ASSEMBLY,ELEC.....	1
2	XDOZZ		0D5S3	4-157714-02	....SCREW.....	6
3	XDFZZ		0D5S3	1-13891001	....COVER,TERM BOX.....	1
4	XDFZZ		0D5S3	4-17215501	....GASKET,TERM BOX.....	1
5	XDFZZ		0D5S3	2-13850251-75 NPT	....TERMINAL BOX BASE.....	1
6	XDFZZ		0D5S3	4-172155-01	....GASKET TERMINAL BOX.....	1
7	XDFZZ		0D5S3	4-15771501	....SCREW,GROUNDING.....	1
8	XDOZZ		0D5S3	4-15771401	....SCREW,FAN COVER.....	4
9	XDOZZ		0D5S3	2-17585602	....COVER,FAN.....	1
10	XDOZZ		0D5S3	4-13829302	....RING,SNAP.....	1
11	XDOZZ		0D5S3	4-15775801	....FAN ASSEMBLY.....	1
12	XDFZZ		0D5S3	4-16285646	....THRU BOLT.....	4
13	XDFZZ		0D5S3	1-15742701	....END SHIELD NON DRIVE END.....	1
14	XDFZZ		0D5S3	4-10371801	....SPRING BEARING LOAD.....	1
15	PBFZZ		0D5S3	1-10000353	....BEARING,BALL,ANNULA.....	2
16	XAFZZ		0D5S3	2-16236402	....ROTOR SHAFT ASSY.....	1
17	XAFZZ		0D5S3	1-16236402	....STATOR.....	1
18	PBFZZ	5305013522047	0D5S3	4-17816301	....SCREW,CAP,SOCKET H.....	3
19	XDFZZ		0D5S3	4-10020501	....CAP,BEARING.....	1
20	XDFZZ		0D5S3	1-10909202	....ENDSHIELD DRIVE END.....	1
21	XDFZZ		0D5S3	4-11020802	....SLINGER.....	1

END OF FIGURE

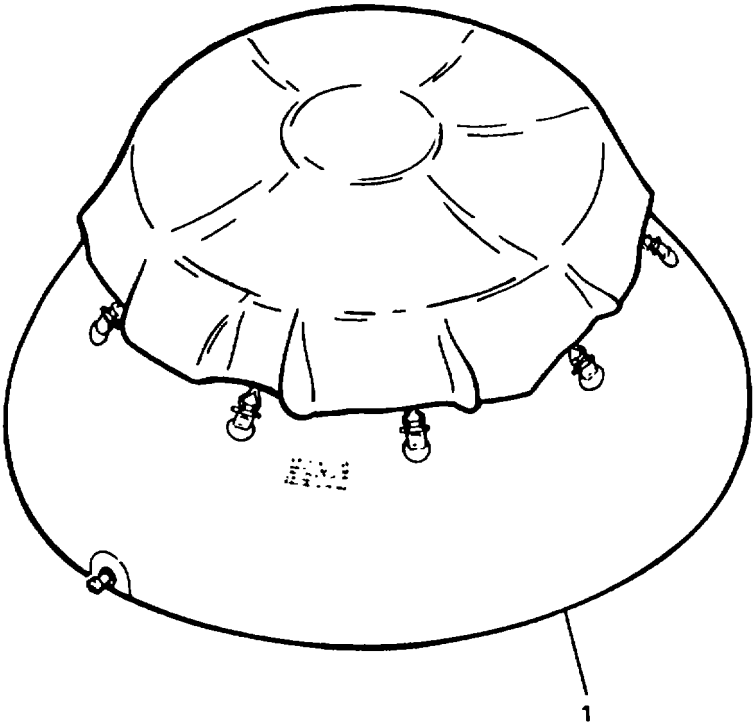

FIGURE 141. STORAGE TANK

(1) ITEM NO	(2) SMR CODE	(3) NSN	(4) CAGEC	(5) PART NUMBER	(6) DESCRIPTION AND USABLE ON CODES(UOC)	(7) QTY
					GROUP 03 WATER DISTRIBUTION SYSTEM FIG. 141 STORAGE TANK	
1	PDOFF	5430013189434	05476	91038	TANK,FABRIC,COLLAPS SEE TM 5-5430-225-12&P FOR DETAILED BREAKDOWN.....	3

END OF FIGURE

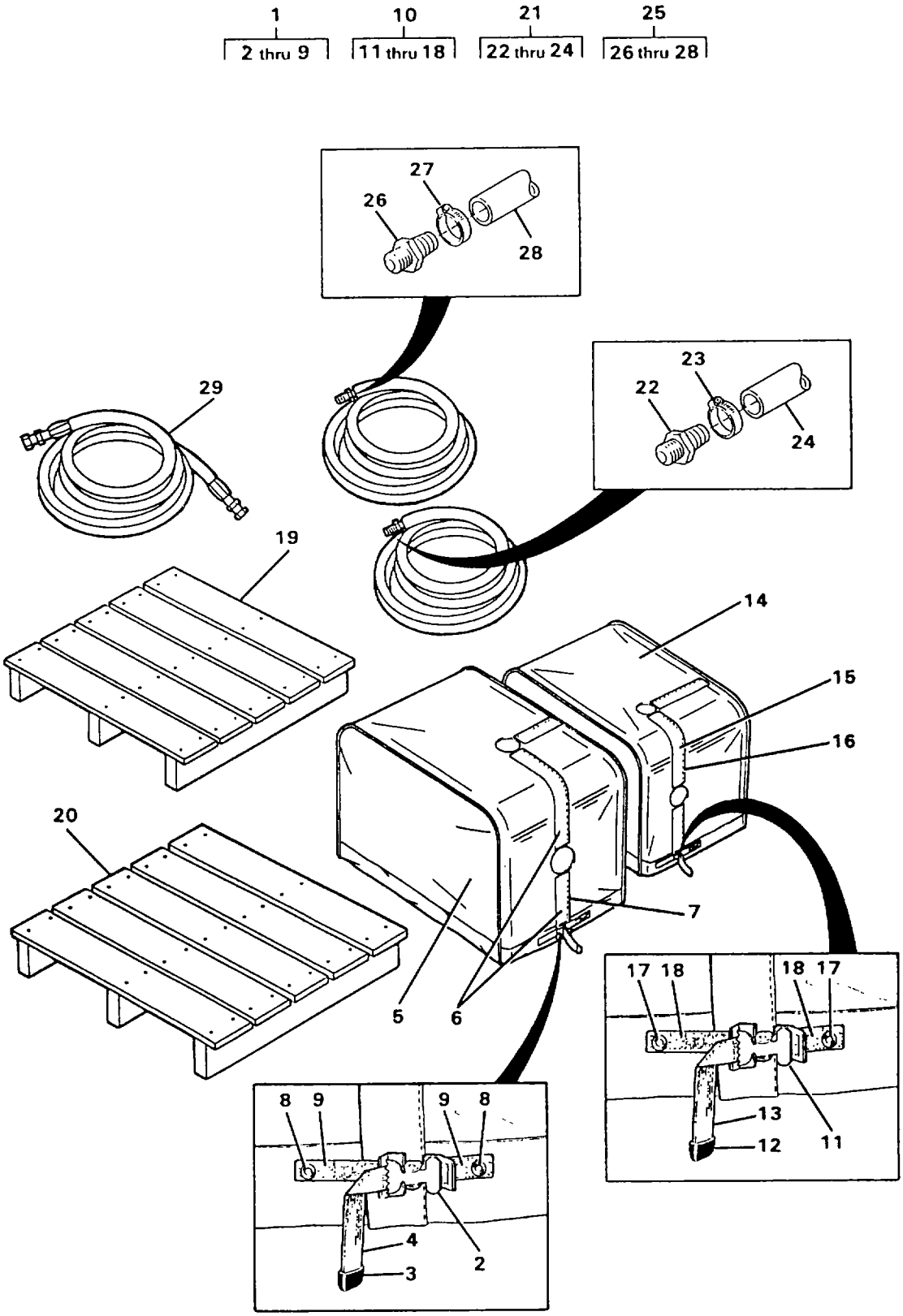

FIGURE 142. WINTER KIT (SHEET 1 OF 5)

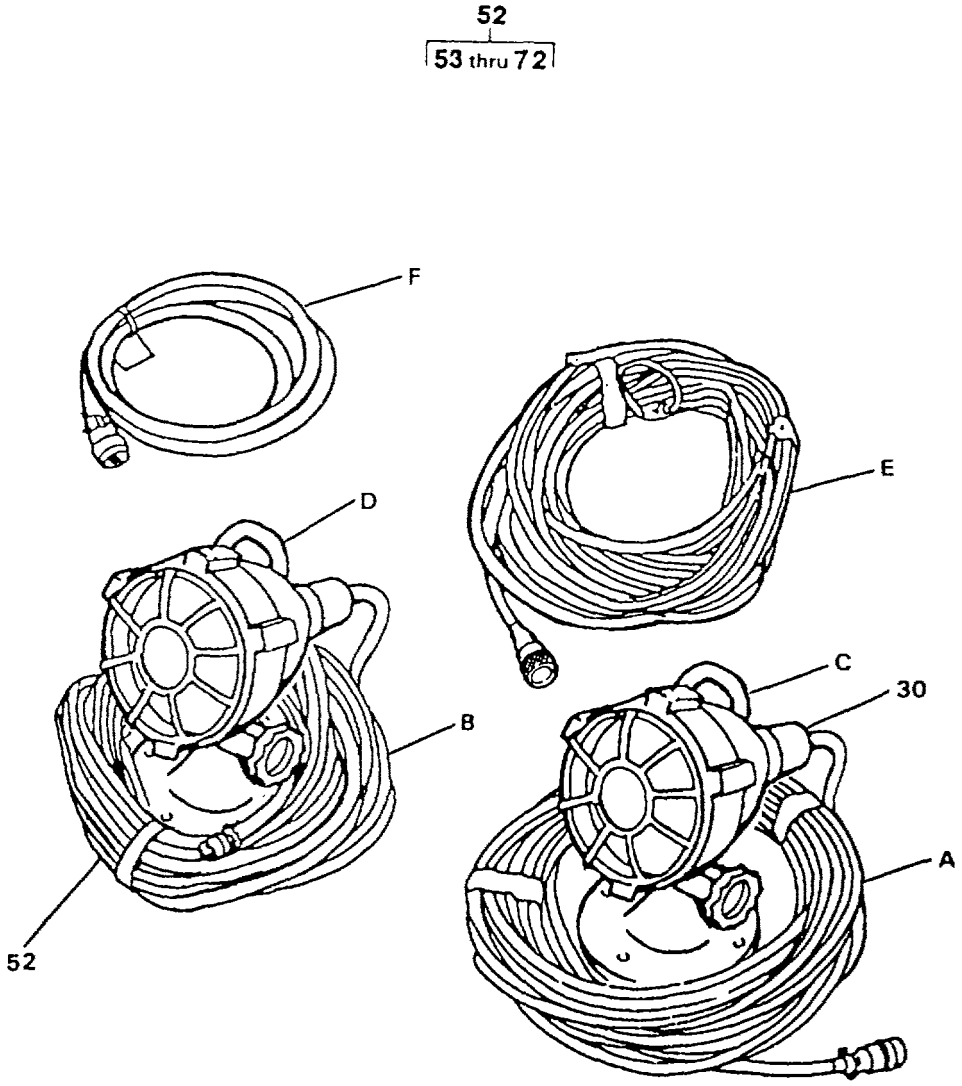

FIGURE 142. WINTER KIT (SHEET 2 OF 5)

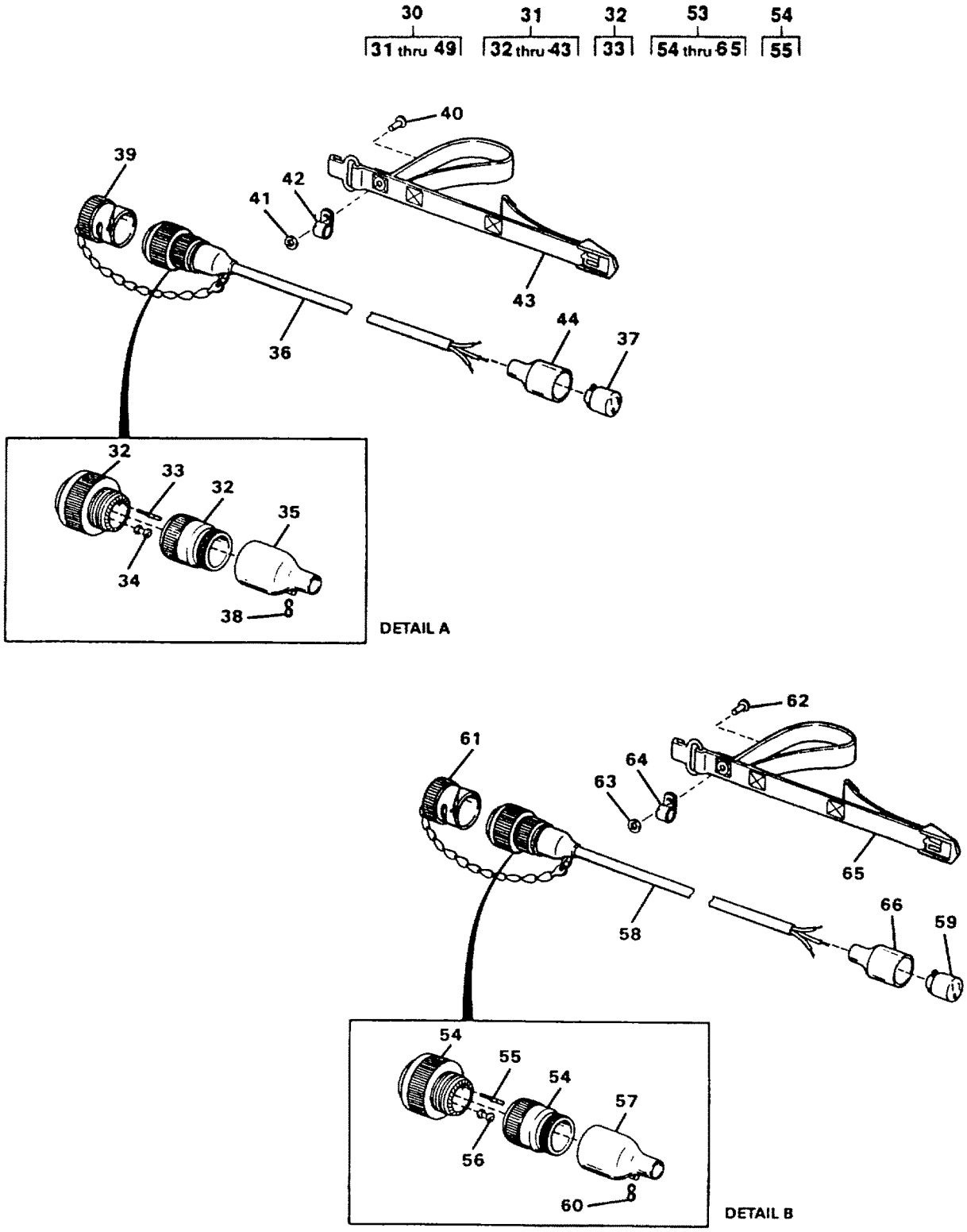

FIGURE 142. WINTER KIT (SHEET 3 OF 5)

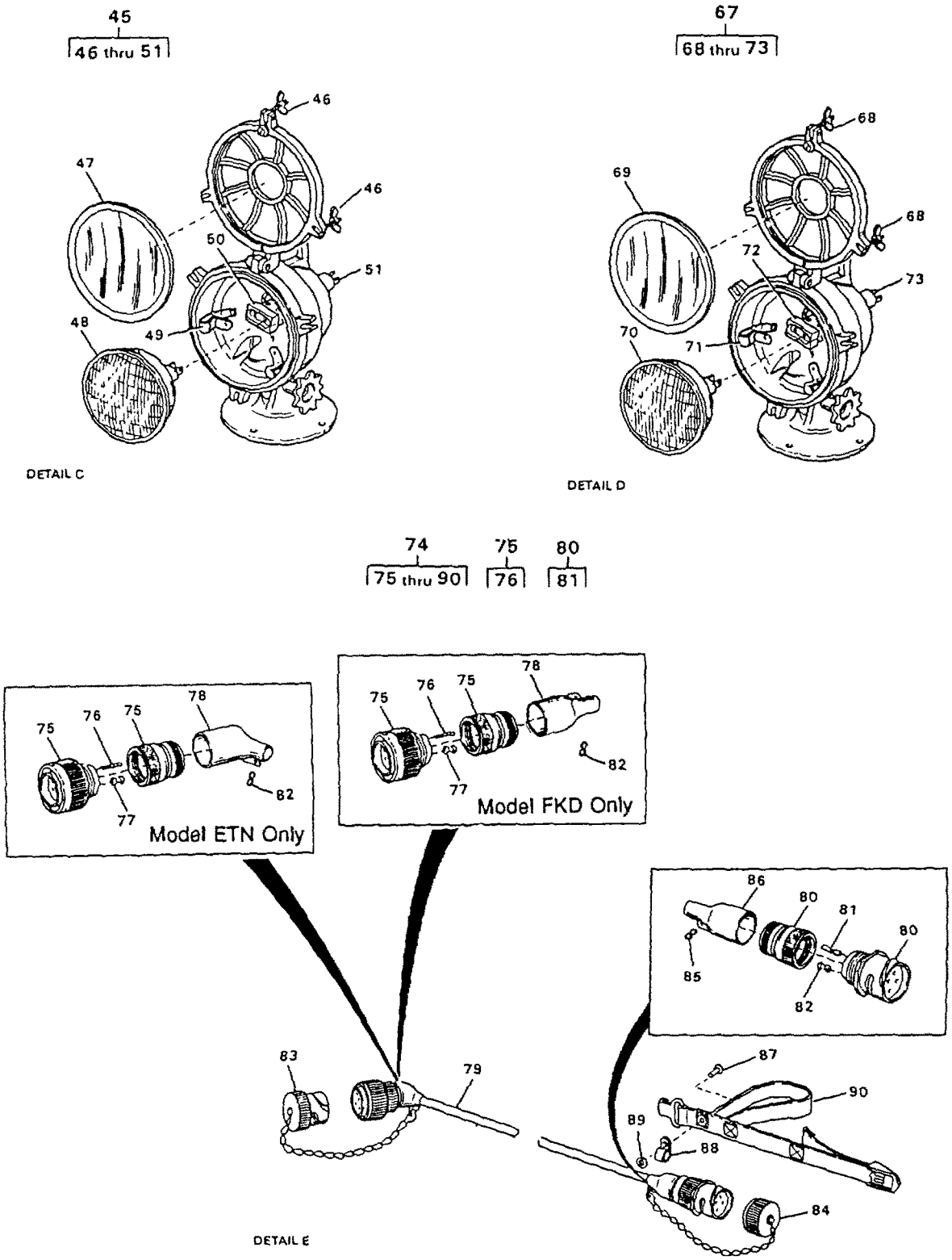

FIGURE 142. WINTER KIT (SHEET 4 OF 5)

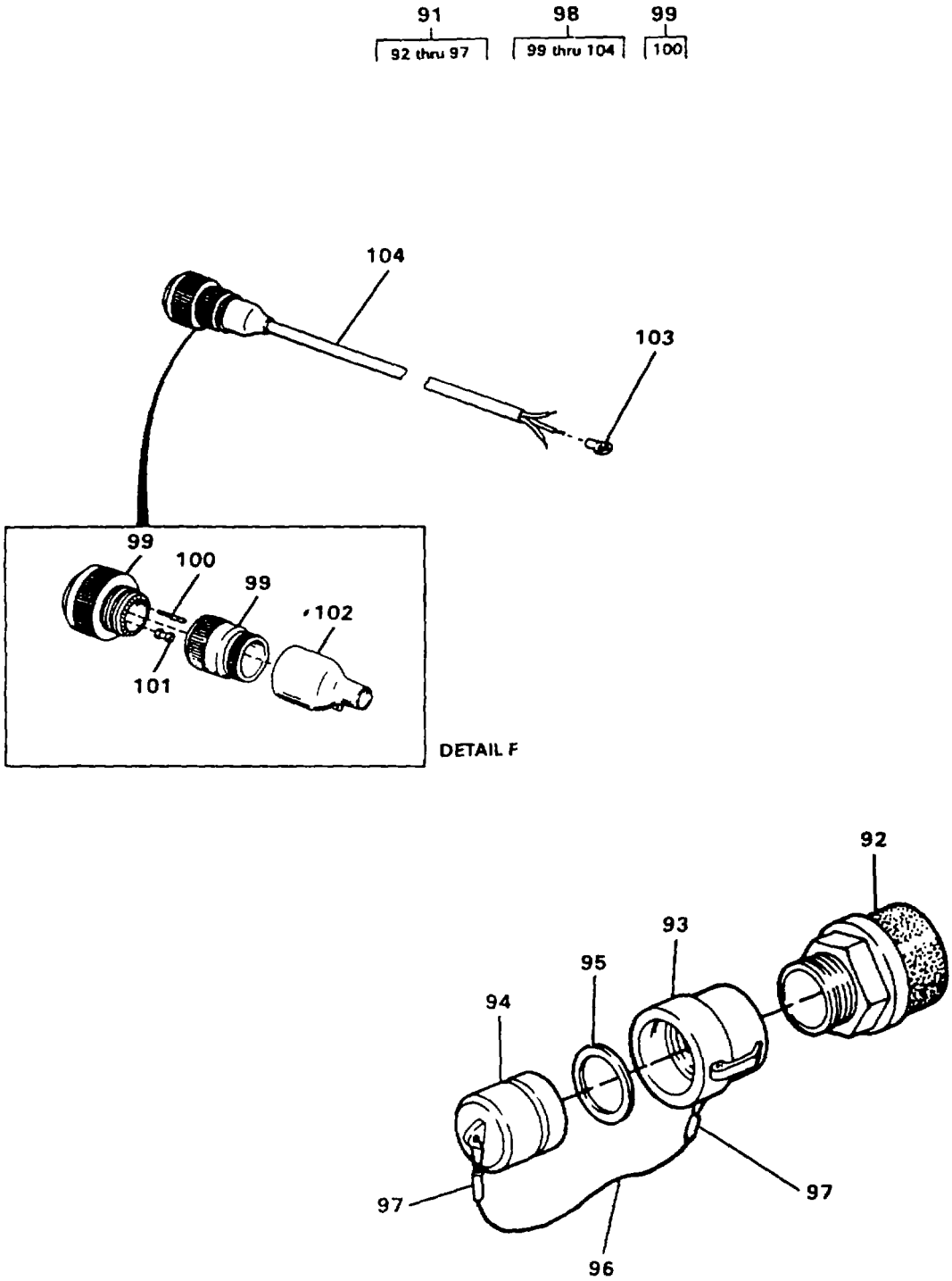

FIGURE 142. WINTER KIT (SHEET 5 OF 5)

(1) ITEM NO	(2) SMR CODE	(3) NSN	(4) CAGEC	(5) PART NUMBER	(6) DESCRIPTION AND USABLE ON CODES(UOC)	(7) QTY
					GROUP 04 WINTER KIT FIG. 142 WINTER KIT	
1	PAOFF	5340014662699	97403	13229E0031-1	.COVER ASSY RAW WATE PUMP, GREEN.....	1
1	PAOFF	5340014662743	97403	13229E0031-3	.COVER ASSY RAW WATE PUMP,TAN.....	1
2	PBFZZ	5340000576956	96906	MS51929-2	..BUCKLE.....	1
3	PBFZZ	5340000787029	96906	MS51926-3	..CLIP,END,STRAP.....	1
4	MFFZZ		97403	13229E0031-17 GREEN	..WEBBING CUT TO LENGTH FROM BULK, P/N MIL-W-4088, TYPE XVII, CLASS I, CONDITIONER R, NYLON, GREEN.....	V
4	MFFZZ		97403	13229E0031-17 TAN	..WEBBING CUT TO LENGTH FROM BULK, P/N MIL-W-4088, TYPE XVII, CLASS I, CONDITIONER R, NYLON, TAN.....	V
5	MFFZZ		97403	13229E0031-7	..CLOTH CUT TO LENGTH FROM BULK, P/N MIL-C-20696.....	V
6	MFFZZ		97403	13229E0031-14 GREEN	..FASTENER TAPE PILE CUT TO LENGTH FROM BULK, P/N MIL-F-21840, TYPE II, CLASS 1, NYLON, GREEN.....	V
6	MFFZZ		97403	13229E0031-14 TAN	..FASTENER TAPE PILE CUT TO LENGTH FROM BULK, P/N MIL-F-21840, TYPE II, CLASS 1 NYLON, TAN.....	V
7	MFFZZ		97403	13229E0031-9 GREEN	..FASTENER TAPE HOOK CUT TO LENGTH FROM BULK, P/N MIL-F-21840, TYPE II, CLASS 1 NYLON, GREEN.....	1
7	MFFZZ		97403	13229E0031-9 TAN	..FASTENER TAPE HOOK CUT TO LENGTH FROM BULK, P/N MIL-F-2184O, TYPE II, CLASS 1 NYLON, TAN.....	1
8	PBFZZ	5325012954768	96906	MS20230BPS1	..GROMMET,METALLIC.....	2
9	PBFZZ		81348	V-T-295E	..THREAD TYPE II,CLASS A, SIZE FF.....	V
10	PAOFF	5340014662753	97403	13229E0031-2	.COVER ASSEMBLY DIST PUMP, GREEN.....	1
10	PAOFF	5340014662758	97403	13229E0031-4	.COVER ASSEMBLY DIST PUMP, TAN TAN.....	1
11	PBFZZ	5340000576956	96906	MS51929-2	..BUCKLE.....	1
12	PBFZZ	5340000787029	96906	MS51926-3	..CLIP,END,STRAP.....	1
13	MFFZZ		97403	13229E0031-17 GREEN	..WEBBING CUT TO LENGTH FROM BULK, P/N MIL-W-4088, TYPE XVII, CLASS I, CONDITIONER R, NYLON, GREEN.....	V
13	MFFZZ		97403	13229E0031-17 TAN	..WEBBING CUT TO LENGTH FROM BULK, P/N MIL-W-4088, TYPE XVII, CLASS I, CONDITIONER R, NYLON, TAN.....	V
14	MFFZZ		97403	13229E0031-7	..CLOTH CUT TO LENGTH FROM BULK, P/N MIL-C-20696.....	V
15	MFFZZ		97403	13229E0031-14 GREEN	..FASTENER TAPE PILE CUT TO LENGTH FROM BULK, P/N MIL-F-21840, TYPE II, CLASS 1 NYLON, GREEN.....	V

(1) ITEM NO	(2) SMR CODE	(3) NSN	(4) CAGEC	(5) PART NUMBER	(6) DESCRIPTION AND USABLE ON CODES(UOC)	(7) QTY
15	MFFZZ		97403	13229E0031-14 TAN	..FASTENER TAPE PILE CUT TO LENGTH FROM BULK, P/N MIL-F-21840, TYPE II, CLASS 1 NYLON, TAN.....	V
16	MFFZZ		97403	13229E0031-9 GREEN	..FASTENER TAPE HOOK CUT TO LENGTH FROM BULK, P/N MIL-F-21840, TYPE II, CLASS 1 NYLON, GREEN.....	1
16	MFFZZ		97403	13229E0031-9 TAN	..FASTENER TAPE HOOK CUT TO LENGTH FROM BULK, P/N MIL-F-21840, TYPE II, CLASS 1 NYLON, TAN.....	1
17	PBFZZ	5325012954768	96906	MS20230BPS1	..GROMMET,METALLIC.....	2
18	PBFZZ		81348	V-T-295E	..THREAD TYPE II,CLASS A, SIZE FF.....	V
19	XDOZZ		97403	13229E0016-1	.SKID DISTRIBUTION PUMP.....	1
20	XDOZZ		97403	13229E0016-2	.SKID RAW WATER PUMP.....	1
21	AOOOO		97403	13229E0404	.HOSE ASSEMBLY DRAIN, RAW WATER PUMP.....	1
22	PAOZZ	4730014664466	97403	13229E0402-2	..ADAPTER.....	1
23	XDOZZ		97403	13229E0404-2	..CLAMP.....	1
24	PAOZZ	4720014664674	97403	13229E0404-3	..HOSE CUT TO LENGTH FROM BULK, P/N SAE 30R2.....	1
25	AOOOO		97403	13229E0403	.HOSE ASSEMBLY.....	1
26	PAOZZ	4730014664498	97403	13229E0402-1	..ADAPTER.....	1
27	XDOZZ		97403	13229E0403-2	..CLAMP.....	1
28	MOOZZ		97403	13229E0403-3	..HOSE CUT TO LENGTH FROM BULK, P/N 3284-0187.....	1
29	XDOZZ		97403	13229E0908	.HOSE ASSEMBLY FUEL.....	1
30	XDOFF		97403	13229E1271-1	.HEATER ASSEMBLY RAW WATER PUMP.....	1
31	PBOFF	6150013501387	97403	13229E1262-7	..CABLE ASSEMBLY,POWE W61.....	1
32	PBFFF	5935013538629	17549	CA3106E20-4PWB-02-57	...CONNECTOR,PLUG,ELEC P56.....	1
33	PAFZZ	5999013448759	71468	030-8588-000	....CONTACT,ELECTRICAL PART OF KIT P/N 120-02593-P.....	4
34	XDFZZ		17549	225-0018-000	...PLUG,WIRE PART OF KIT P/N 120-02593-P.....	1
35	PBFZZ	5970012268102	06090	202K163-3/42	...INSULATION SLEEVING HEAT SHRINK.....	1
36	MFFZZ		09647	120-07639-3	...CABLE CUT TO LENGTH FROM BULK, P/N 13229E0741-3.....	1
37	XDFZZ		7F654	NEMA L5-15R	...RECEPTACLE.....	1
38	PAOZZ	4030010225666	51489	700016	...HOOK,CHAIN,S.....	1
39	PBFZZ	5935013571806	97403	13229E1210-2	...COVER,ELECTRICAL CO.....	1
40	PBOZZ	5320013490932	97403	13229E0350-2	...RIVET,BLIND.....	1
41	PAOZZ	5905013924321	96906	MS15765-842	...RESISTOR,FIXED,WIRE.....	1
42	PAOZZ	5340011429987	96906	MS21919WCF10	...CLAMP,LOOP.....	1
43	PBOZZ	5340013506801	97403	13229E1000-2	...STRAP,WEBBING.....	1
44	PBFZZ	5970013488251	97403	13229E1213-4	..INSULATION SLEEVING.....	1
45	XDOOO		82832	1805	..HEAT LAMP,PORTABLE.....	1
46	XDOZZ		82832	1805-101	...NUT,WING.....	3
47	XDOZZ		82832	1805-RLLC	...COVER,LENS.....	
48	PBOZZ		08805	Q500PAR56MFL120V	...LAMP,INCANDESCENT 500 WATT,..... 120V PARQUARTZINE.....	1
49	XDOZZ		82832	P10	...CLIP,SPRING.....	1

(1) ITEM NO	(2) SMR CODE	(3) NSN	(4) CAGEC	(5) PART NUMBER	(6) DESCRIPTION AND USABLE ON CODES(UOC)	(7) QTY
50	XDOZZ		82832	PP	...SOCKET.....	
51	XDFZZ		82832	P-5G2	...PLUG,TWIST LOCK.....	1
52	XDOFF		97403	13229E1271-2	.HEATER ASSEMBLY DISTRIBUTION PUMP.....	1
53	PBOFF	6150013501386	97403	13229E1262-6	..CABLE ASSEMBLY,POWE W64.....	1
54	PAFFF	5935013538629	17549	CA3106E20-4PWB-02-57	...CONNECTOR,PLUG,ELEC P60.....	1
55	PAFZZ	5999013448759	71468	030-8588-000	....CONTACT,ELECTRICAL PART OF KIT P/N 120-02593-P.....	4
56	XDOZZ		17549	225-0018-000	...PLUG,WIRE.....	1
57	PBFZZ	5970013487360	97403	13229E1344-2	...INSULATION SLEEVING HEAT SHRINK.....	1
58	MFFZZ		09647	120-07639-3	...CABLE CUT TO LENGTH FROM BULK, P/N 13229E0741-3.....	1
59	XDFZZ		7F654	NEMA L5-15R	...RECEPTACLE.....	1
60	XDOZZ		51489	700016	...HOOK,CHAIN,S.....	1
61	PAFZZ	5935013571806	97403	13229E1210-2	...COVER,ELECTRICAL CO.....	1
62	PBOZZ	5320013490932	97403	13229E0350-2	...RIVET,BLIND.....	1
63	PAOZZ	5905013924321	96906	MS15765-842	...RESISTOR,FIXED,WIR.....	1
64	PAOZZ	5340011387808	96906	MS21919WCF12	...CLAMP,LOOP.....	1
65	PBOZZ	5340013506801	97403	13229E1000-2	...STRAP,WEBBING.....	1
66	PBFZZ	5970013488251	97403	13229E1213-4	..INSULATION SLEEVING.....	1
67	PBOOO	6240013494407	08998	164G/500Q	..HEAT LAMP,PORTABLE.....	1
68	XDOZZ		82832	1805-101	...NUT,WING.....	3
69	XDOZZ		82832	1805-RLLC	...COVER,LENS.....	1
70	PAOZZ		08805	Q500PAR56MFL120V	...LAMP,INCANDESCENT 500 WATT, 120V PARQUARTZINE.....	1
71	XDOZZ		82832	P10	...CLIP.....	1
72	XDFZZ		82832	P9	...SOCKET,CONNECTOR.....	1
73	XDFZZ		82832	P-5G2	...PLUG,CAP.....	1
74	PBOFF	6150013500183	97403	13229E1262-3	.CABLE ASSEMBLY,POWE W60.....	1
75	PBFFF	5935013538629	17549	CA3106E20-4PWB-02-57	..CONNECTOR,PLUG,ELEC P55.....	1
76	PAFZZ	5999013448759	71468	030-8588-000	...CONTACT,ELECTRICAL PART OF KIT P/N 120-02593-P.....	4
77	XDFZZ		17549	225-0018-000	..PLUG,WIRE PART OF KIT P/N 120-02593-P.....	1
78	PBFZZ	5970013487360	97403	13229E1344-2	..INSULATION SLEEVING HEAT SHRINK.....	1
79	MFFZZ		09647	120-07639-3	..CABLE CUT TO LENGTH FROM BULK, P/N 13229E0741-3.....	1
80	PAFFF	5935013538635	17549	CA3101E20-SWB-02-57	..CONNECTOR,RECEPTACL.....	1
81	PAFZZ	5999013438909	71468	031-8557-000	...CONTACT,ELECTRICAL PART OF KIT P/N 120-02593-P.....	4
82	XDFZZ		17549	225-0018-000	..PLUG,WIRE PART OF KIT P/N 120-02593-P.....	1
83	PBFZZ	5935013571806	97403	13229E1210-2	..COVER,ELECTRICAL CO.....	1
84	PBFZZ	5935013571807	97403	13229E1209-2	..COVER,ELECTRICAL CO.....	1
85	XDOZZ		51489	700016	..HOOK,CHAIN,S.....	2
86	PBFZZ	5970012268102	06090	202K163-3/42	..INSULATION SLEEVING HEAT SHRINK.....	1

(1) ITEM NO	(2) SMR CODE	(3) NSN	(4) CAGEC	(5) PART NUMBER	(6) DESCRIPTION AND USABLE ON CODES(UOC)	(7) QTY
87	PBOZZ	5320013490932	97403	13229E0350-2	..RIVET,BLIND.....	1
88	PAOZZ	5340011429987	96906	MS21919WCF100	..CLAMP,LOOP.....	1
89	PAOZZ	5905013924321	96906	MS15765-842	..RESISTOR,FIXED,WIR.....ETN	1
89	PAOZZ	5905013924321	96906	MS15765-808	..WASHER,FLAT.....FKD	1
90	PAOZZ	5340013506801	97403	13229E1000-2	..STRAP,WEBBING.....	1
91	AOOOO		97403	13229E1069	.STRAINER ASSEMBLY.....	1
92	PBOZZ	4730013520050	97403	13229E0626	..STRAINER,SUCTION.....	1
93	PAOZZ	4730013518178	96906	MS27024-16	..COUPLING,HALF,QUICK.....	1
94	PAOZZ	4730013476073	96906	MS27029-16	..PLUG,QUICK DISCONNE.....	1
95	PAOZZ	5330000889166	96906	MS27030-8	..GASKET.....	1
96	MOOZZ		09647	120-02177-1	..CABLE CUT TO LENGTH FROM BULK, P/N 13229E1147-1.....	1
97	PAOZZ	4030001455721	96906	MS51844-64	..SWAGING SLEEVE,WIRE.....	2
98	PAFFF	6150013519930	97403	13229E1260-6	.CABLE ASSEMBLY,POWE W2, DC POWER GENERATOR TO VAN.....	1
99	PAFFF	5935013528500	17549	CA3106E22-2S-B-0 2-57	..CONNECTOR BODY,PLUG P1.....	1
100	PAFZZ	5999013497668	17549	031-8519-000	...CONTACT,ELECTRICAL PART OF KIT P/N 120-02593-P.....	4
101	XDFZZ		17549	225-0019-000	..PLUG,WIRE.....	1
102	PBFZZ	5970012268102	06090	202K163-3/42	..INSULATION SLEEVING HEAT SHRINK.....	1
103	PBOZZ	5940001139826	96906	MS25036-114	..TERMINAL,LUG.....	2
104	MFFZZ		09647	120-07639-6	..CABLE CUT TO LENGTH FROM BULK P/N 120-07639-6.....	1
	AFFZZ		09647	120-02593-P	.PARTS,REPAIR,CONNEC THIS ITEM FOR... IDENTIFICATION OF REPAIR PARTS ONLY, SEE FIGURE 146 FOR ELECTRICAL CONNECTOR REPAIR KIT.....	1
					CONTACT, ELECTRICAL (4) 2-7	
					CONTACT, ELECTRICAL (4) 2-11	
					CONTACT, ELECTRICAL (4) 2-25	
					CONTACT, ELECTRICAL (4) 2-29	
					CONTACT, ELECTRICAL (4) 3-47	
					CONTACT, ELECTRICAL (5) 16-4	
					CONTACT, ELECTRICAL (73) 16-23	
					CONTACT, ELECTRICAL (16) 16-24	
					CONTACT, ELECTRICAL (30) 16-25	
					CONTACT, ELECTRICAL (22) 16-26	
					CONTACT, ELECTRICAL (9) 16-27	
					CONTACT, ELECTRICAL (4) 17-4	
					CONTACT, ELECTRICAL (8) 17-14	
					CONTACT, ELECTRICAL (8) 17-15	
					CONTACT, ELECTRICAL (5) 19-4	
					CONTACT, ELECTRICAL (5) 19-13	
					CONTACT, ELECTRICAL (48) 19-35	
					CONTACT, ELECTRICAL (15) 19-36	
					CONTACT, ELECTRICAL (6) 19-37	
					CONTACT, ELECTRICAL (48) 19-38	
					CONTACT, ELECTRICAL (17) 19-39	
					CONTACT, ELECTRICAL (4) 20-3	
					CONTACT, ELECTRICAL (4) 20-10	

(1) ITEM NO	(2) SMR CODE	(3) NSN	(4) CAGEC	(5) PART NUMBER	(6) DESCRIPTION AND USABLE ON CODES(UOC)	(7) QTY
					CONTACT, ELECTRICAL (4) 20-15	
					CONTACT, ELECTRICAL (4) 20-25	
					CONTACT, ELECTRICAL (4) 20-43	
					CONTACT, ELECTRICAL (3) 21-15	
					CONTACT, ELECTRICAL (3) 21-23	
					CONTACT, ELECTRICAL (2) 23-4	
					CONTACT, ELECTRICAL (8) 23-23	
					CONTACT, ELECTRICAL (8) 23-32	
					CONTACT, ELECTRICAL (2) 27-37	
					CONTACT, ELECTRICAL (121) 27-38	
					CONTACT, ELECTRICAL (51) 27-39	
					CONTACT, ELECTRICAL (12) 45-21	
					CONTACT, ELECTRICAL (18) 46-22	
					CONTACT, ELECTRICAL (4) 46-23	
					CONTACT, ELECTRICAL (18) 48-8	
					CONTACT, ELECTRICAL (4) 48-9	
					CONTACT, ELECTRICAL (6) 48-10	
					CONTACT, ELECTRICAL (14) 50-6	
					CONTACT, ELECTRICAL (3) 50-7	
					CONTACT, ELECTRICAL (4) 53-5	
					CONTACT, ELECTRICAL (3) 55-7	
					CONTACT, ELECTRICAL (8) 55-8	
					CONTACT, ELECTRICAL (3) 56-8	
					CONTACT, ELECTRICAL (3) 56-14	
					CONTACT, ELECTRICAL (3) 56-20	
					CONTACT, ELECTRICAL (3) 58-9	
					CONTACT, ELECTRICAL (3) 60-8	
					CONTACT, ELECTRICAL (4) 64-9	
					CONTACT, ELECTRICAL (4) 78-17	
					CONTACT, ELECTRICAL (3) 80-6	
					CONTACT, ELECTRICAL (3) 81-6	
					CONTACT, ELECTRICAL (9) 83-23	
					CONTACT, ELECTRICAL (3) 90-8	
					CONTACT, ELECTRICAL (4) 92-7	
					CONTACT, ELECTRICAL (3) 94-9	
					CONTACT, ELECTRICAL (3) 94-10	
					CONTACT, ELECTRICAL (3) 94-11	
					CONTACT, ELECTRICAL (3) 95-29	
					CONTACT, ELECTRICAL (3) 95-38	
					CONTACT, ELECTRICAL (3) 96-29	
					CONTACT, ELECTRICAL (3) 96-38	
					CONTACT, ELECTRICAL (3) 101-9	
					CONTACT, ELECTRICAL (3) 101-28	
					CONTACT, ELECTRICAL (3) 113-19	
					CONTACT, ELECTRICAL (3) 114-8	
					CONTACT, ELECTRICAL (3) 115-16	
					CONTACT, ELECTRICAL (8) 125-28	
					CONTACT, ELECTRICAL (4) 125-29	
					CONTACT, ELECTRICAL (4) 125-30	
					CONTACT, ELECTRICAL (4) 125-31	
					CONTACT, ELECTRICAL (4) 126-20	
					CONTACT, ELECTRICAL (4) 128-34	

(1) ITEM NO	(2) SMR CODE	(3) NSN	(4) CAGEC	(5) PART NUMBER	(6) DESCRIPTION AND USABLE ON CODES(UOC)	(7) QTY
					CONTACT, ELECTRICAL (7) 131-23	
					CONTACT, ELECTRICAL (4) 138-15	
					CONTACT, ELECTRICAL (3) 138-35	
					CONTACT, ELECTRICAL (4) 142-33	
					CONTACT, ELECTRICAL (4) 142-55	
					CONTACT, ELECTRICAL (4) 142-76	
					CONTACT, ELECTRICAL (4) 142-81	
					CONTACT, ELECTRICAL (4) 142-100	
					PLUG (1) 131-24	
					PLUG, WIRE (1) 96-30	
					PLUG, WIRE (1) 115-17	
					PLUG, WIRE (4) 138-17	
					PLUG, WIRE (1) 138-36	
					PLUG, WIRE (1) 142-34	
					PLUG, WIRE (1) 142-77	
					PLUG, WIRE (1) 142-82	

END OF FIGURE

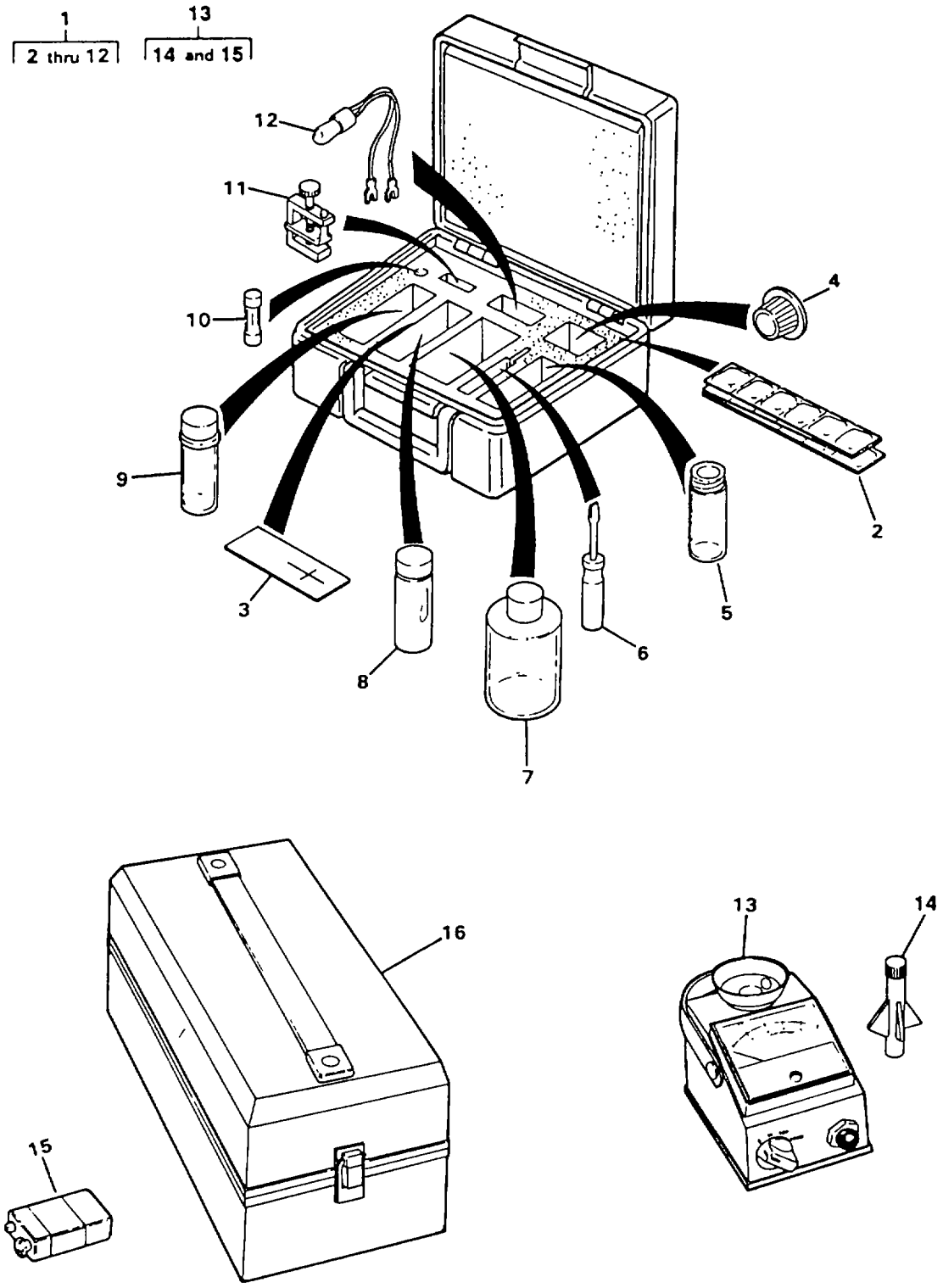

FIGURE 143. ACCESSORIES (SHEET 1 OF 10)

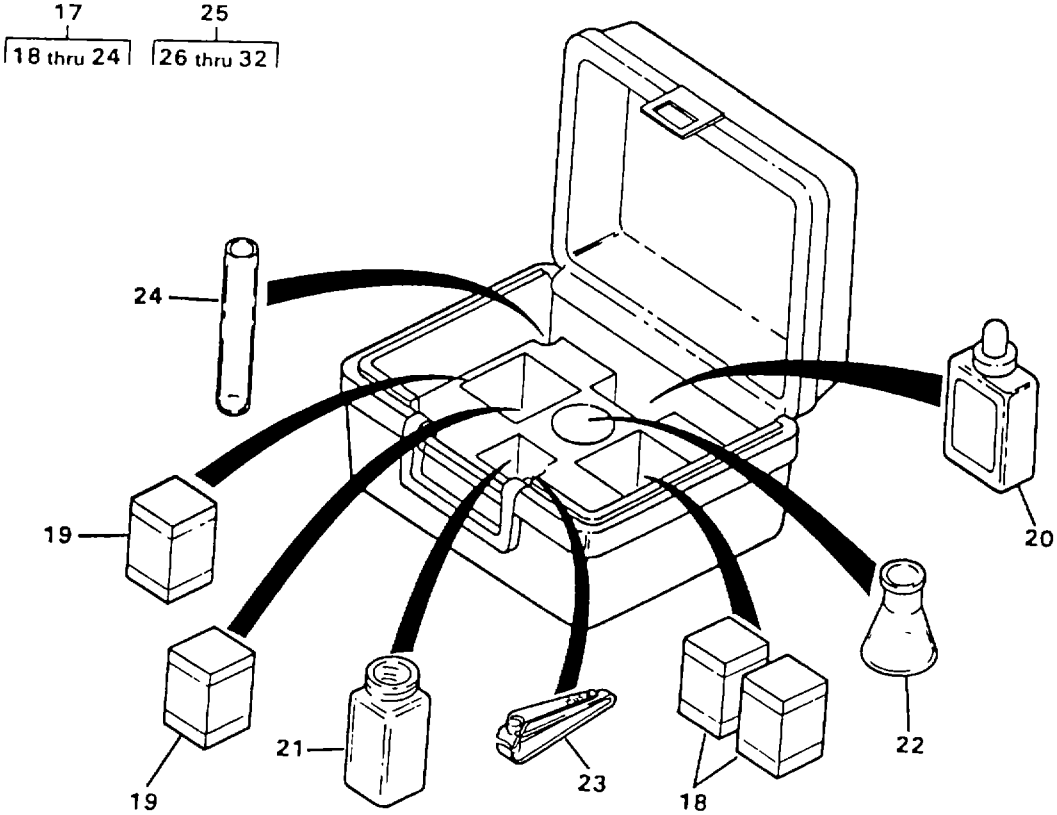

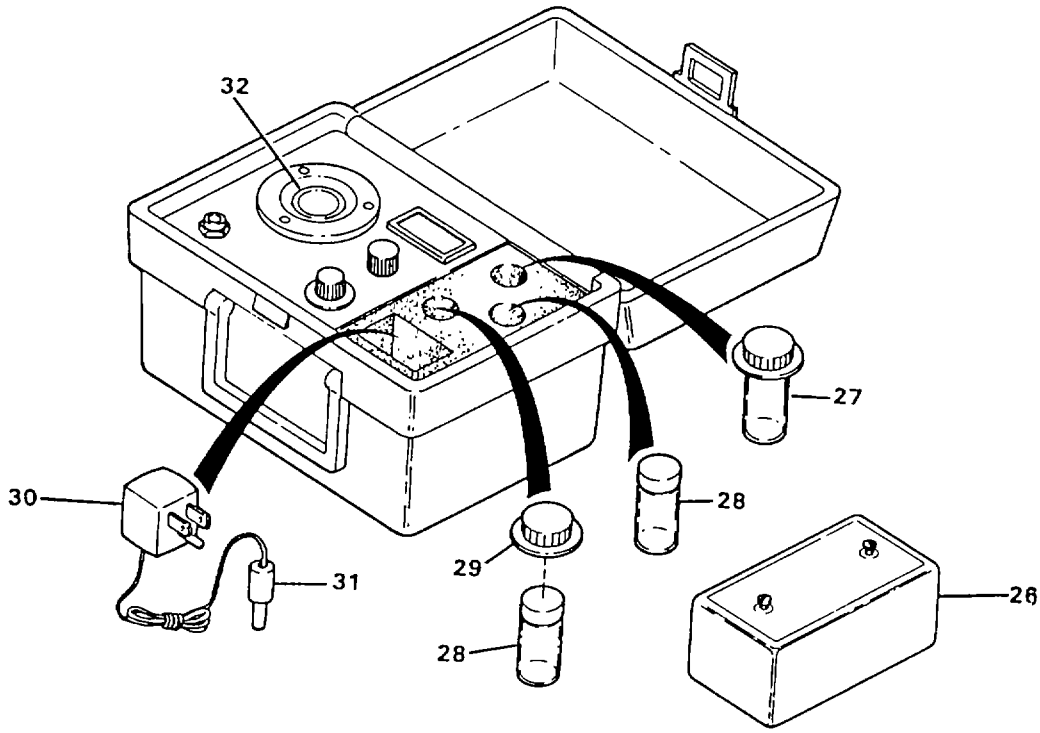

FIGURE 143. ACCESSORIES (SHEET 2 OF 10)

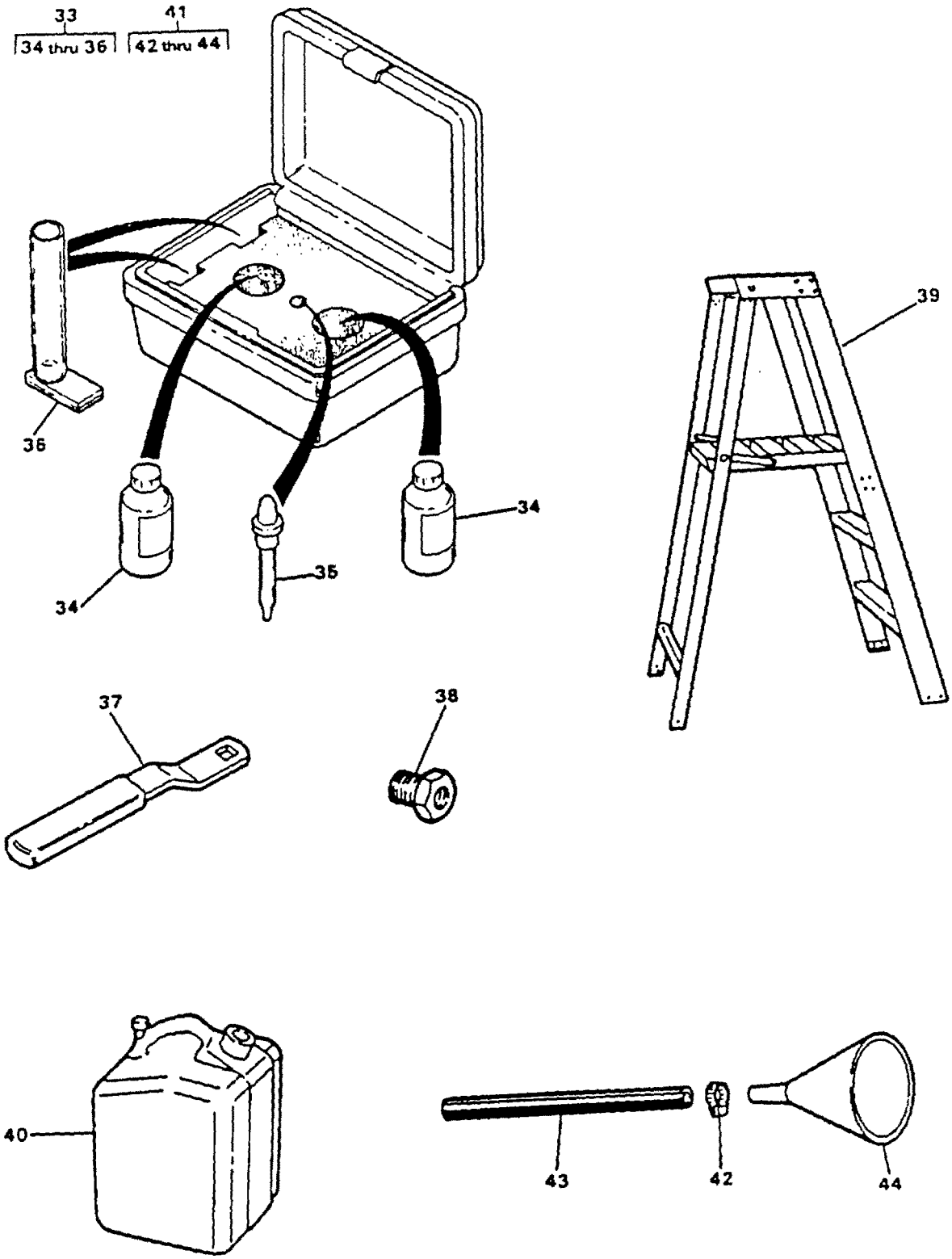

FIGURE 143. ACCESSORIES (SHEET 3 OF 10)

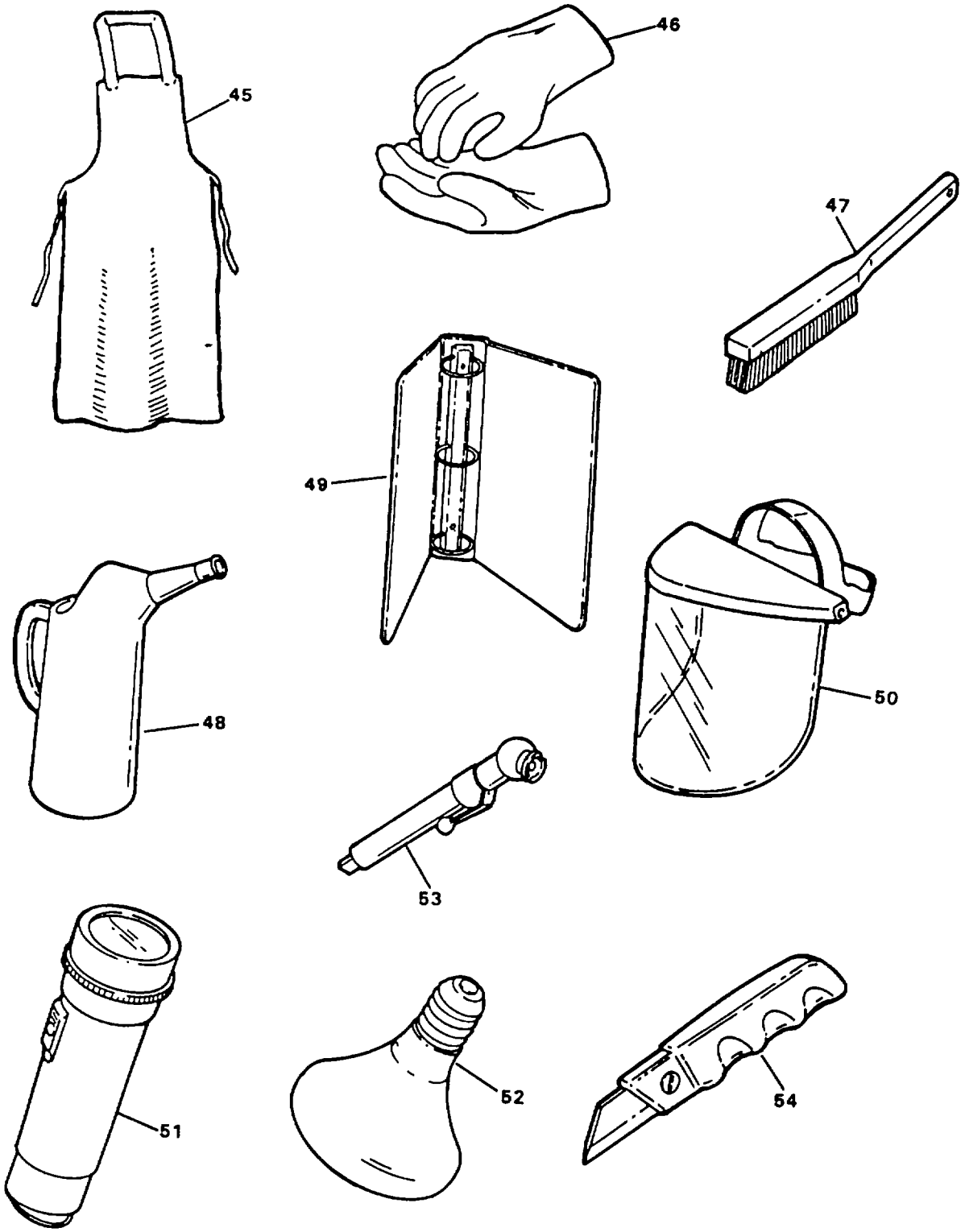

FIGURE 143. ACCESSORIES (SHEET 4 OF 10)

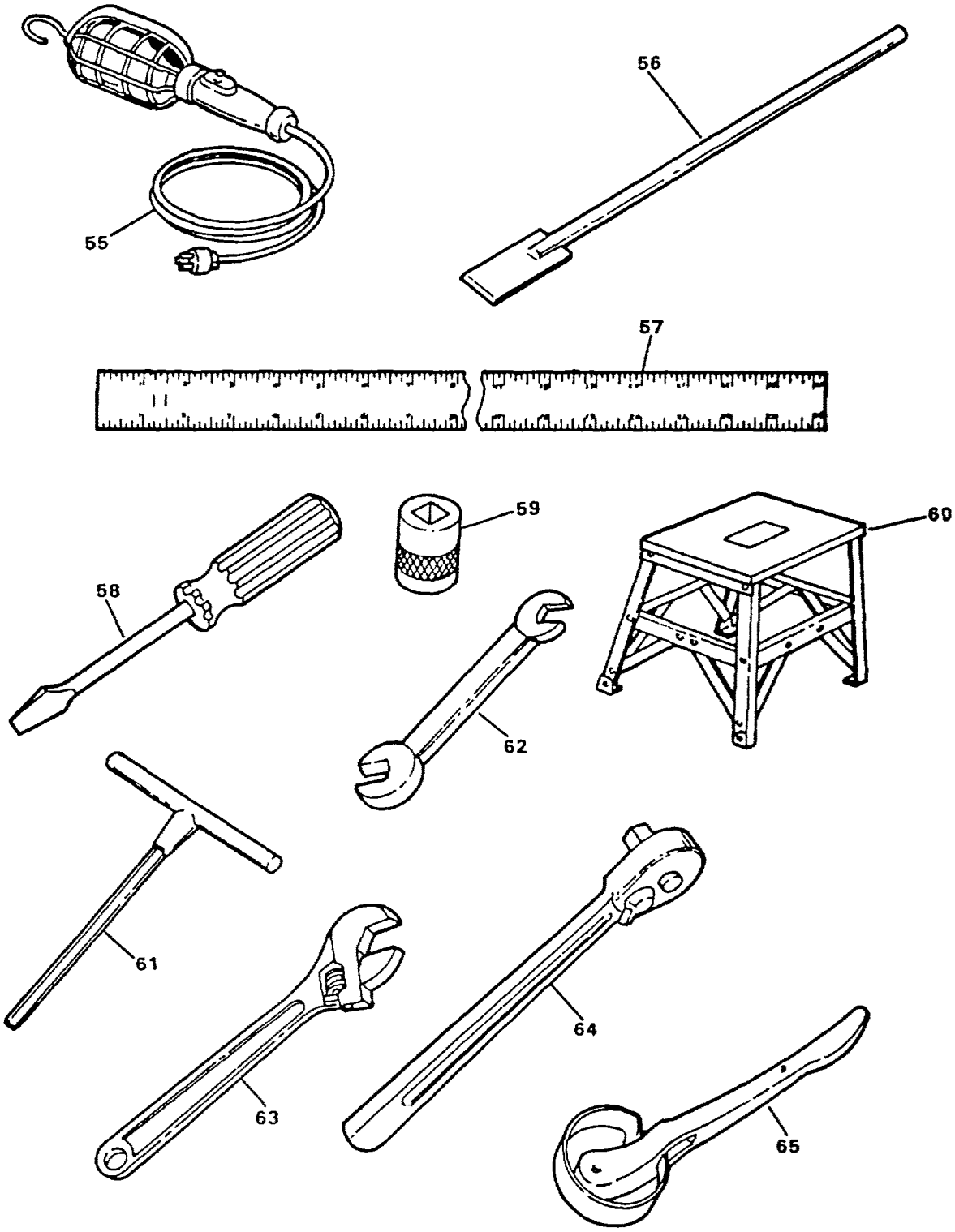

FIGURE 143. ACCESSORIES (SHEET 5 OF 10)

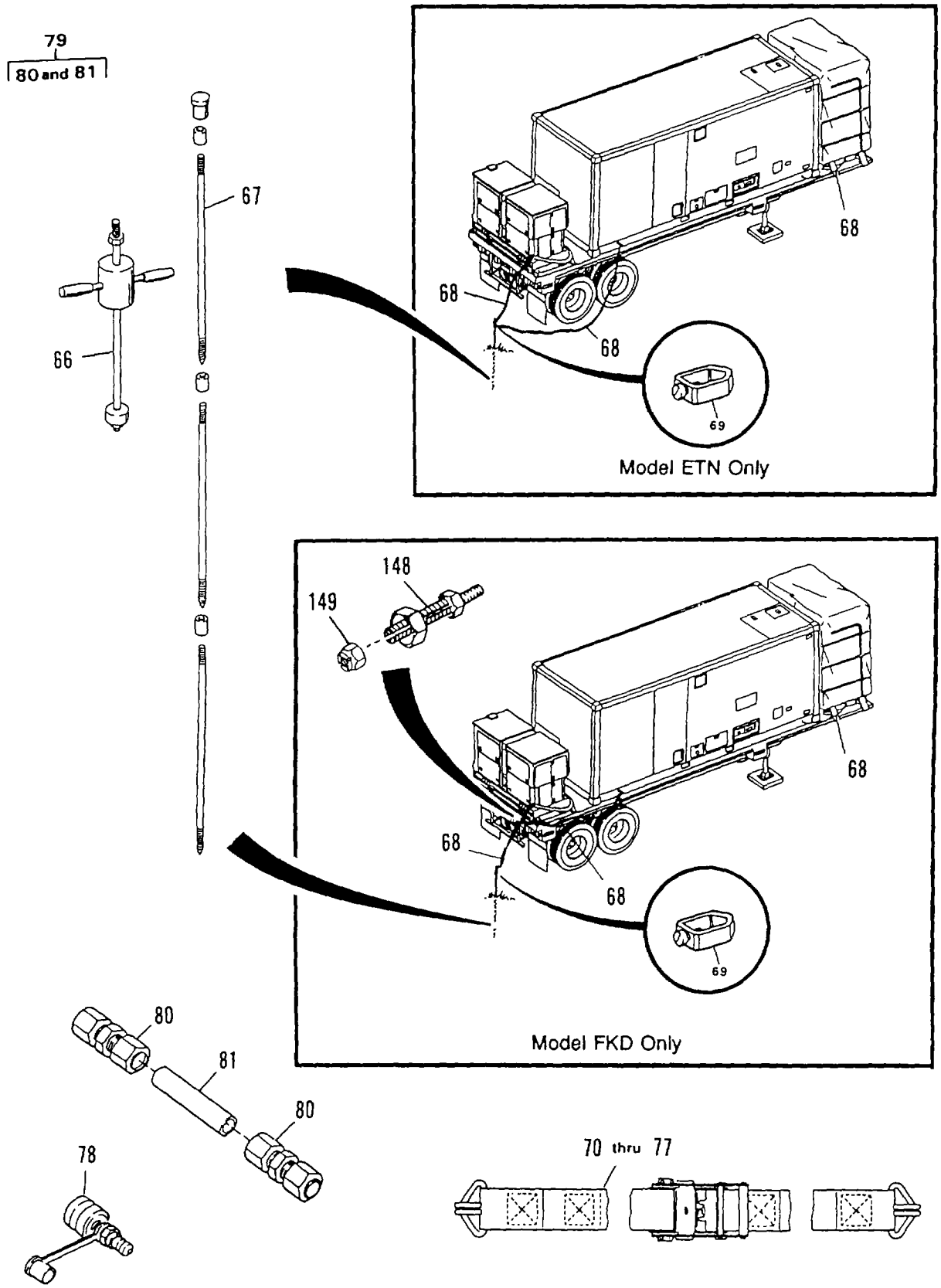

FIGURE 143. ACCESSORIES (SHEET 6 OF 10)

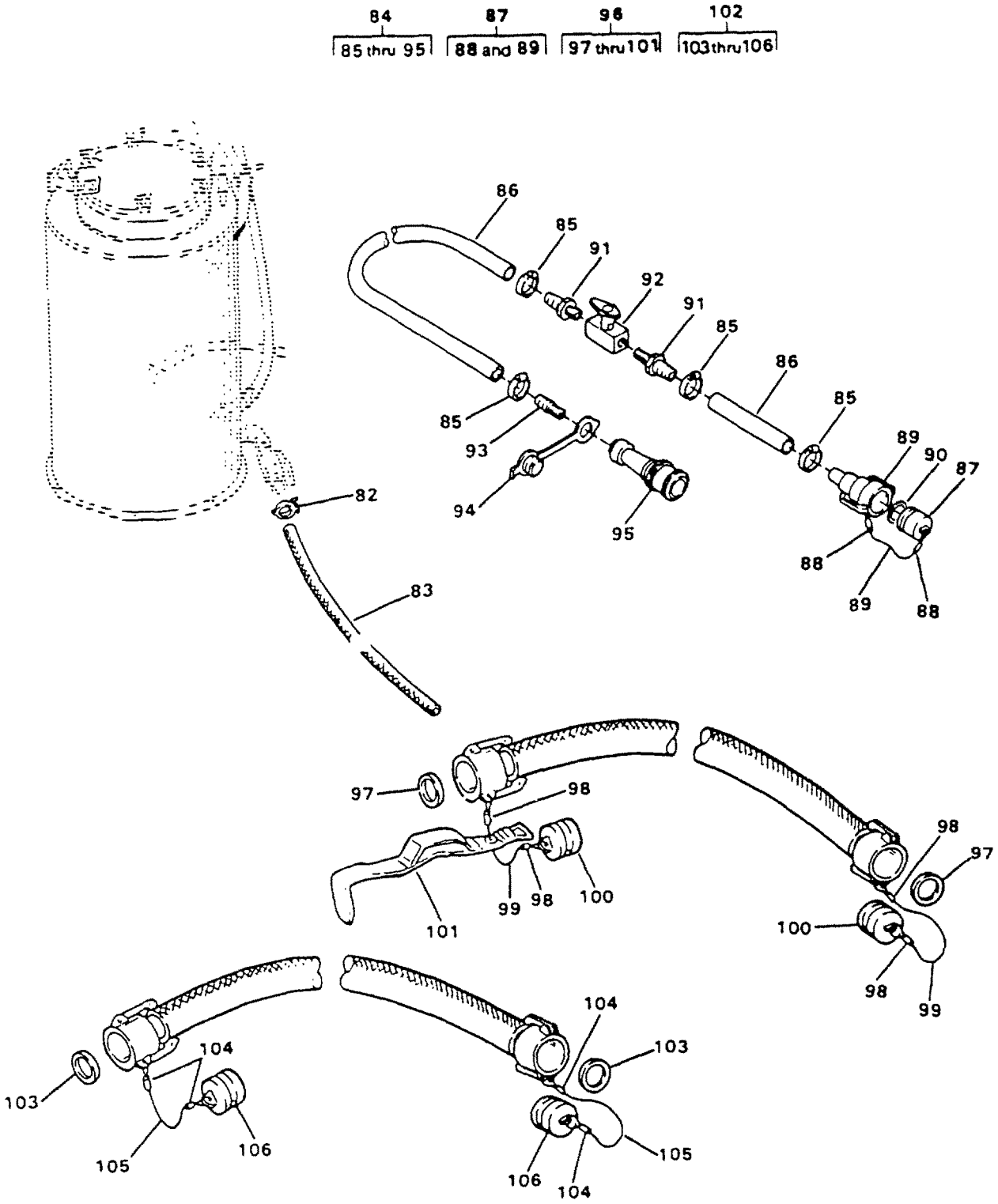

FIGURE 143. ACCESSORIES (SHEET 7 OF 10)

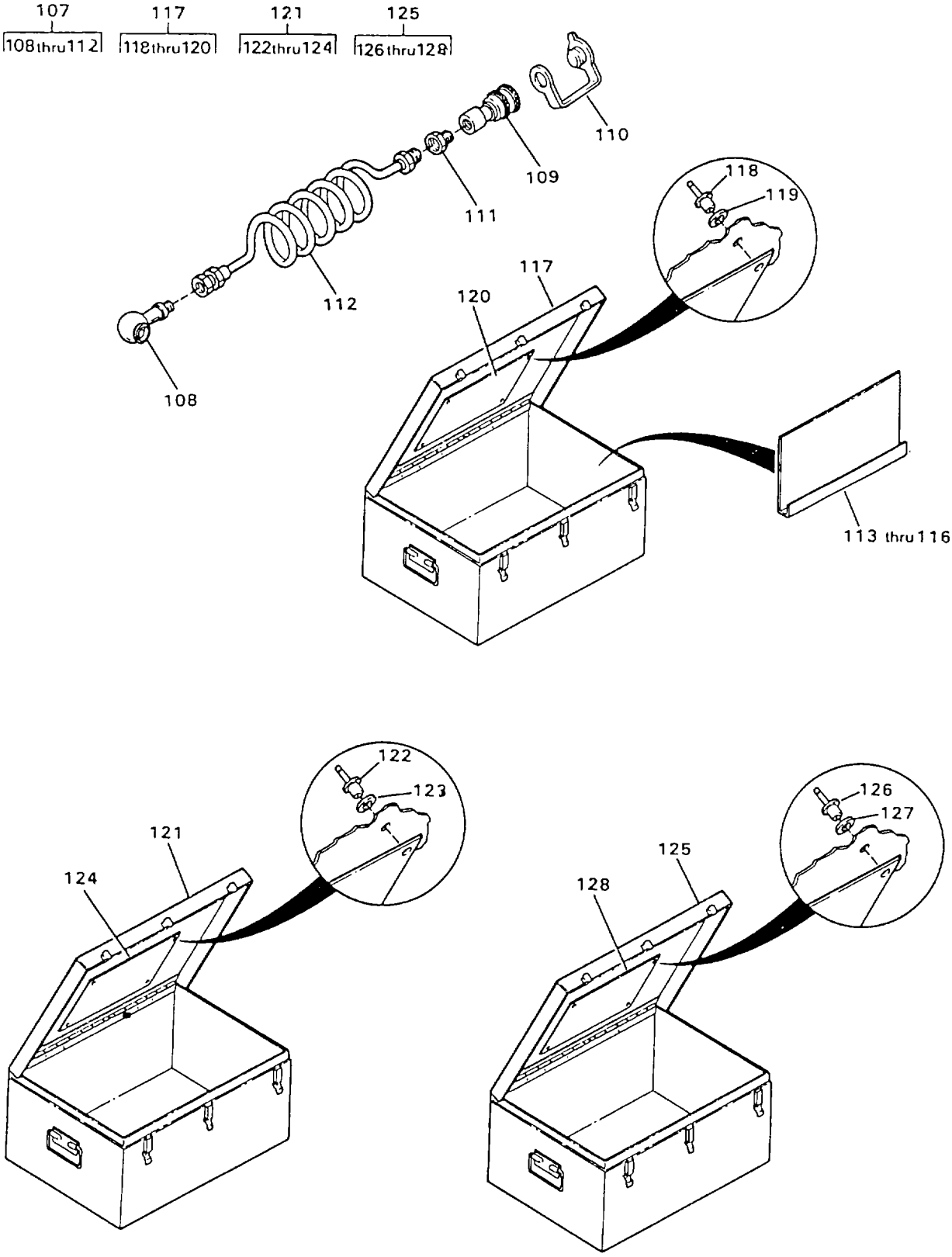

FIGURE 143. ACCESSORIES (SHEET 8 OF 10)

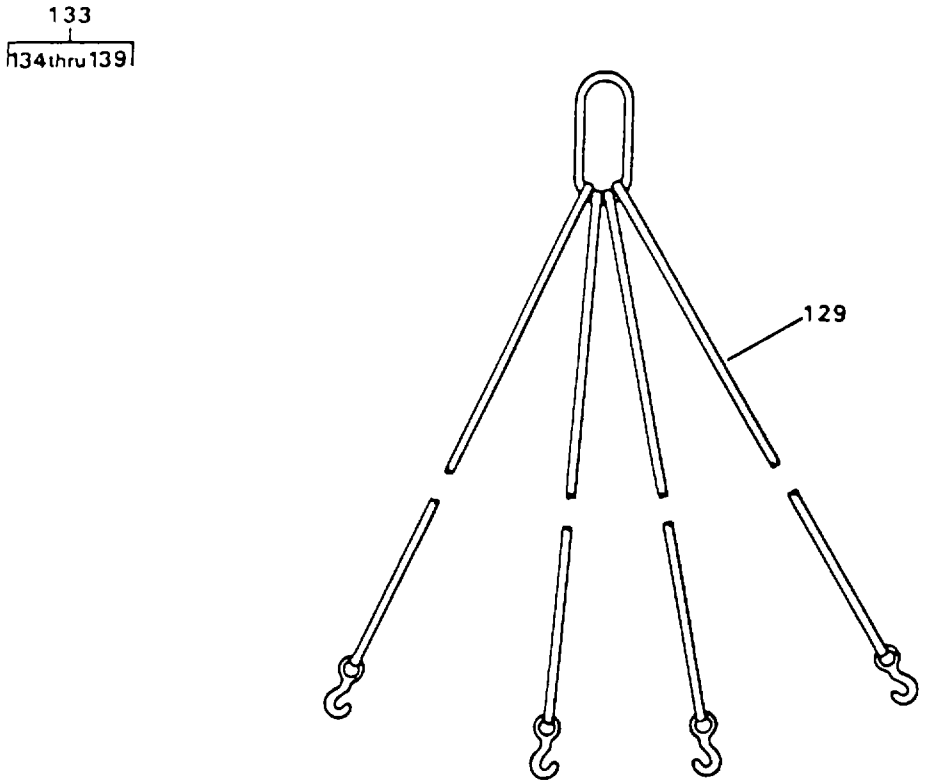

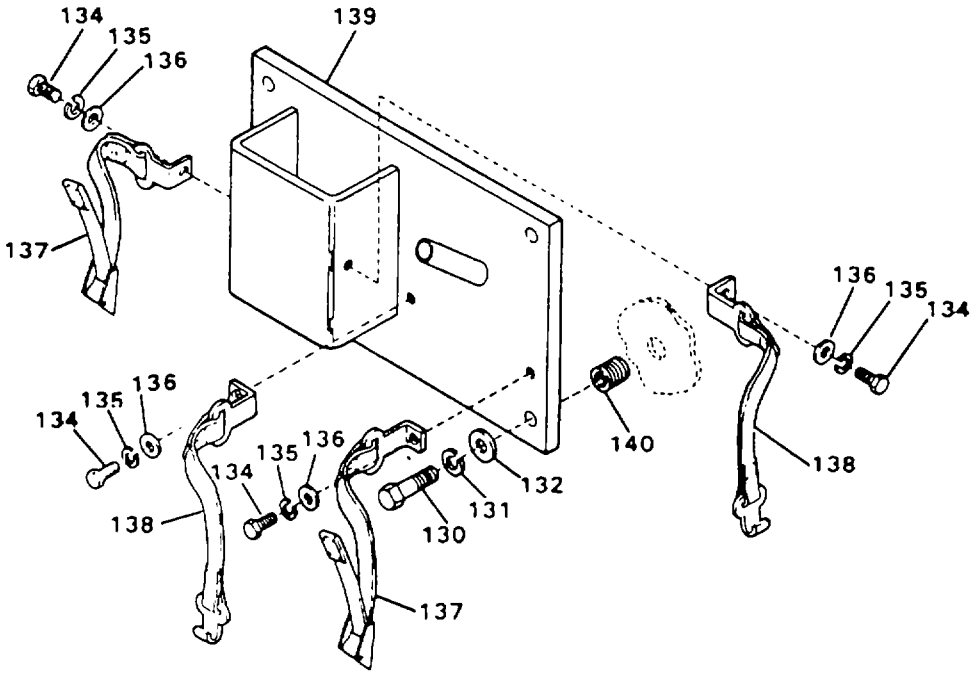

FIGURE 143. ACCESSORIES (SHEET 9 OF 10)

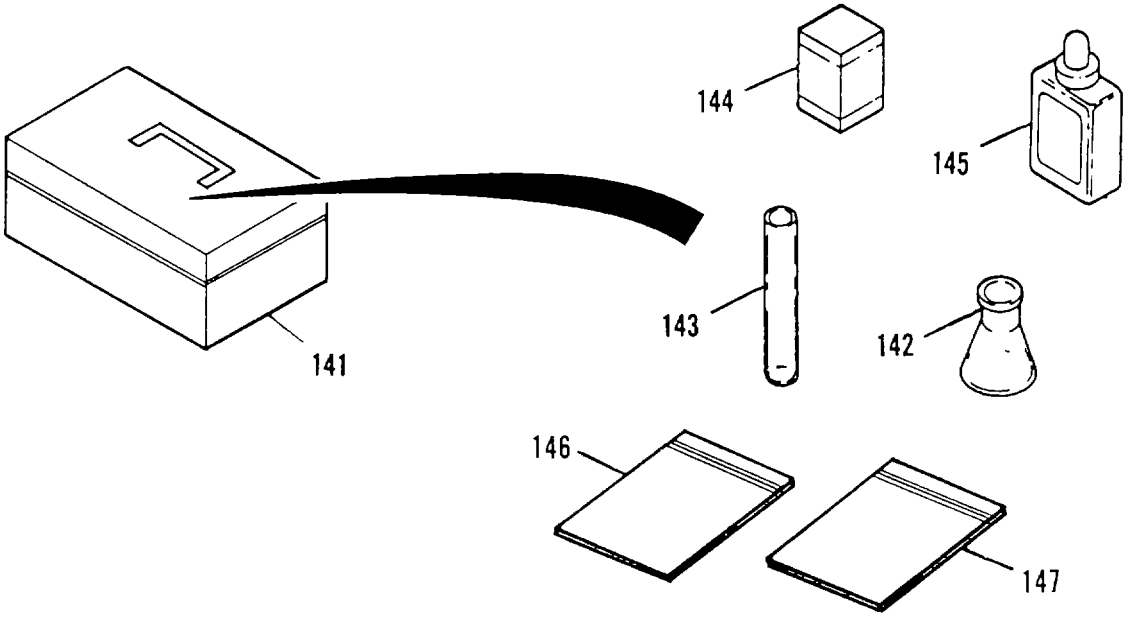

FIGURE 143. ACCESSORIES (SHEET 10 OF 10)

(1) ITEM NO	(2) SMR CODE	(3) NSN	(4) CAGEC	(5) PART NUMBER	(6) DESCRIPTION AND USABLE ON CODES(UOC)	(7) QTY
					GROUP 05 ACCESSORIES FIG. 143 ACCESSORIES	
1	PBOOO	4610013501450	97403	13229E0280-4	.KIT,TURBIDITY,ACCES MONITOR.....	1
2	PAOZZ	6850013622158	30646	256-10756472	..DESICCANT,ACTIVATED PACK CONTAINS 15.....	1
3	XDOZZ		30646	060-10758222	..CARD LAMP ALIGNMENT.....	1
4	PBOZZ		30646	337-10756477	..SHIELD,LIGHT.....	1
5	PBOZZ		30646	291-10756473	..BOTTLE,SCREW CAP PACK CONTAINS 3.....	1
6	PBOZZ	5120013550843	30646	303-10749946	..SCREWDRIVER,FLAT TI.....	1
7	PAOZZ	6850013574905	58177	70900	..CLEANING COMPOUND,S.....	1
8	PCOZZ		30646	905-10756470	..STANDARD 0.1 FTU.....	1
9	PBOZZ	6695013592756	30646	291-10756476	..VIAL,SAMPLE PACK CONTAINS 10.....	1
10	PAOZZ	5920001999498	81349	F02B250V1-2A	..FUSE,CARTRIDGE 5 AMP.....	1
11	XDOZZ		30646	338-807839	..CLAMP.....	1
12	PAOZZ	6240013687863	30646	824-10756471	..LAMP,INCANDESCENT.....	1
13	PBOOO	6630001274774	30053	532T1	.CONDUCTIVITY METER HAND HELD, PORTABLE.....	1
14	PBOZZ	6630011039007	30053	RE-10	..METER RANGE MULTIPL.....	1
15	PCOZZ	6135009718485	83740	216	..BATTERY,NONRECHARG.....	1
16	XDOZZ		30053	PORTA-PAK	CASE.....	1
17	PBOOO	6640013585340	91224	2254-01	WATER SAMPLING TEST CN-65.....	1
18	PCOZZ	6810012008010	91224	1055-99	..POWDER PILLOWS,SULF.....	2
19	PCOZZ	6810012008009	91224	2203-99	..POWDER PILLOWS,SULF.....	2
20	PCOZZ	6810013584381	91224	24085-37	..SODIUM THIOSULFATE STABILIZED BOTTLE.....	1
21	PAOZZ	8125013661609	91224	439-06	..BOTTLE,SCREW CAP 29 ML.....	1
22	PAOZZ	6640009354286	81348	NNNF00240	..FLASK 50 ML.....	1
23	XDOZZ	8530013909466	91224	936-00	..CLIPPER,NAIL.....	1
24	PAOZZ	6640001274779	91224	438-00	..TEST TUBE 4.83 ML.....	1
25	PBOFF	6630013500250	58177	DRT-15C	.TEST SET,WATER TURB PORTABLE.....	1
26	PCOZZ	6140013580143	58177	70006	..BATTERY,STORAGE 6V.....	1
27	PCOZZ	6810013577974	58177	60002	..REAGENT WATER,STAND 0.02 NTU.....	1
28	PAOZZ		58177	50051	..CUVETTE,TURBIDITY INS PACKAGE CONTAINS 3.....	2
29	PBOZZ		58177	50009	..SHIELD,LIGHT.....	1
30	XDOZZ		58177	70048	..CHARGER.....	1
31	XAOZZ		58177	70825	..PLUG.....	1
32	XDOZZ		58177	21084	..LAMP SOURCE.....	1
33	PBOOO	4610013498731	53390	8946	.TEST KIT,COLOR.....	1
34	PCOZZ	6810013628616	53390	F617318	..COLOR,REAGENT 2 OZ.....	2
35	PAOZZ	6640013576716	53390	0219-01-5	..PIPET,DROPPING 0.5 ML.....	1
36	PAOZZ		53390	6319-01-7	..TUBE,COLOR.....	2
37	PAOZZ	5340014304205	3Z033	BVP-86-10	.HANDLE,MANUAL CONTROL USED FOR EMERGENCY OPERATION OF AUTOMATED VALVES.....	6
38	PBOZZ	4730006847555	88044	AN815-5S	.NIPPLE,BOSS 1/2-20 UNC-2A MALE PIPE THREAD.....	1
39	PAOZZ	5440013533135	97403	13229E0242	.LADDER,SAFETY STEP.....	1
40	PAOZZ	7240013590910	97403	13229E1037	.CAN,WATER,MILITARY 5 GALLON.....	1
41	AOOOO		97403	13229E1049	.FUNNEL ASSEMBLY.....	6

(1) ITEM NO	(2) SMR CODE	(3) NSN	(4) CAGEC	(5) PART NUMBER	(6) DESCRIPTION AND USABLE ON CODES(UOC)	(7) QTY
42	PAOZZ	5120002782423	97403	13229E0511-4	..CLAMP,HOSE.....	6
43	MOOZZ		97403	13229E1049-2	..HOSE CUT TO LENGTH FROM BULK P/N 13229E0774-2.....	6
44	PBOZZ	7240002234482	58536	A-A-1066	..FUNNEL 1 GALLON CAPACITY.....	6
45	PAOZZ		97403	13229E0927	.APRON,LABORATORY.....	1
46	PAOZZ	8415002668677	81348	ZZ-G-381	.GLOVES,CHEMICAL AND.....	6
47	PAOZZ	7920002447431	97403	13229E1009	.BRUSH,PLATER'S,HAND.....	1
48	PAOZZ	7240013590893	97403	13229E1036	.CAN,DISPENSING,FUNN PRIMING PITCHER.....	1
49	PAOZZ		97403	13229E1054	.BINDER,LOOSE-LEAF.....	6
50	PAOZZ	4240012392349	77852	38110	.FACESHIELD,INDUSTRI.....	1
51	PAOZZ	6230002648261	1CSX9	MX-991/U	.FLASHLIGHT WITH BATTERIES.....	1
52	PBOZZ		08805	Q500PAR56MFL120V	.LAMP,INCANDESCENT 500 WATT, 120V PARQUARTZINE.....	6
53	PAOZZ	4910013533123	97403	13229E1383	.GAGE,TIRE PRESSURE, 20 TO 120 PSI (120 TO 820 KPA).....	6
54	PAOZZ		81348	GGG-K-494	.KNIFE,CRAFTSMAN'S WITH SPARE BLADES.....	1
55	PAOZZ		81348	W-L-661, TPF111	.LIGHT,TROUBLE CLASS 2, WITH 50 FEET OF CABLE.....	1
56	PAOZZ		97403	13229E0175	.PADDLE,FOOD STIRRIN.....	1
57	PBOZZ	5210013526612	97403	13229E1048	.RULE,STEEL,MACHINES 24 INCH.....	1
58	PBOZZ	5120013673745	55719	SDD6	.SCREWDRIVER 6 INCH, FLAT TIP.....	1
59	PAOZZ	5120013350883	55719	SFS181	.SOCKET,SOCKET WRENC 3/8 SQUARE DRIVE X 9/16 HEX.....	1
59	PAOZZ		59693	NBD-28	.SOCKET,SOCKET WRENC 3/8 SQUARE DRIVE X 7/8 HEX.....	1
60	PAOZZ	2590014661115	97403	13229E0241	.STOOL,STEP.....	1
61	PAOZZ		70276	78012	.WRENCH,HEX 1/4 INCH,TEE HANDLE.....	1
62	PAOZZ	5120001877126	55719	S1820B	.WRENCH,OPEN END 5/8 X 9/16, 6 INCHES LONG.....	6
63	PAOZZ	5120004498083	15073	5385A14	.WRENCH,ADJUSTABLE 10 INCHES..... LONG.....	1
64	PAOZZ	5120002405364	55719	GF720	.HANDLE,SOCKET WRENC 3/8 INCH DRIVE.....	1
65	PAOZZ	5120002628491	95683	41W1853	.WRENCH,PIPE 18 INCH STRAP.....	1
66	PAOZZ	5120010131676	45225	P74-144	.SLIDE HAMMER GROUND ROD.....	2
67	PAOZZ	5975008783791	82370	A104	.ROD,GROUND 9 FT., SECTIONAL, 3 PIECE.....	6
68	MOOZZ		97403	13229E0860-4	.LEAD ASSEMBLY GROUND CUT TO LENGTH FROM BULK, P/N M5086/2-4 -9.....	6
69	PAOZZ	5999001863912	04655	70-801074	.CLAMP,ELECTRICAL GROUND ROD.....	6
70	PAOZZ	5340013531961	97403	13229E1160-1	.STRAP,WEBBING 144 INCHES LONG, GREEN, USED TO SECURE ACCESS LADDERS AND CYCLONE SEPARATOR FRAME.....	2
70	PAOZZ	5340013531962	97403	13229E1160-2	.STRAP,WEBBING 144 INCHES LONG, TAN, USED TO SECURE ACCESS LADDERS AND CYCLONE SEPARATOR FRAME.....	2
71	PAOZZ	5340013533579	97403	13229E1001-1	.STRAP,WEBBING 95 INCHES LONG,	1

(1) ITEM NO	(2) SMR CODE	(3) NSN	(4) CAGEC	(5) PART NUMBER	(6) DESCRIPTION AND USABLE ON CODES(UOC)	(7) QTY
					GREEN, USED TO SECURE STORAGE BOX NO. 3 TO TABLE TOP.....	
71	PAOZZ	5340013536388	97403	1322931001-8	.STRAP,WEBBING 95 INCHES LONG, TAN, USED TO SECURE STORAGE BOX NO. 3 TO TABLE TOP.....	1
72	PAOZZ	5340013531307	97403	13229E1001-2	.STRAP,WEBBING 72 INCHES LONG, GREEN, USED TO SECURE HEAT LAMPS (PUMPHEATERS) TO STORAGE BOX NO. 4.....	1
72	PAOZZ	5340013538241	97403	13229E1001-9	.STRAP,WEBBING 72 INCHES LONG, TAN, USED TO SECURE HEAT LAMPS (PUMP HEATERS) TO STORAGE BOX NO. 4.....	1
73	PAOZZ	5340013522840	97403	13229E1001-6	.STRAP,WEBBING 80 INCHES LONG, GREEN, USED TO SECURE HOSE AND WOOD PUMP SKIDS TO TABLE TOP.....	2
73	PAOZZ	5340013528191	97403	13229E1001-13	.STRAP,WEBBING 80 INCHES LONG, TAN, USED TO SECURE HOSE AND WOOD PUMPSKIDS TO TABLE TOP.....	2
74	PAOZZ	5340013531308	97403	13229E1001-4	.STRAP,WEBBING 83 INCHES LONG, GREEN, USED TO SECURE DISTRIBUTION PUMP.....	1
74	PAOZZ	5340013531308	97403	13229E1001-11	.STRAP,WEBBING 83 INCHES LONG, TAN, USED TO SECURE DISTRIBUTION PUMP.....	1
75	PAOZZ	5340013526427	97403	13229E1001-5	.STRAP,WEBBING 104 INCHES LONG, GREEN, USED TO SECURE DISTRIBUTION AND TWO 3K WATER TANKS.....	1
75	PAOZZ	5340013543655	97403	13229E1001-12	.STRAP,WEBBING 104 INCHES LONG, TAN, USED TO SECURE DISTRIBUTION AND TWO 3K WATER TANKS.....	1
76	PAOZZ	5340013531960	97403	13229E1001-3	.STRAP,WEBBING 120 INCHES LONG, GREEN, USED TO SECURE RAW WATER PUMP, ONE 3K WATER TANK, AND HOSE TO FLOOR.....	4
76	PAOZZ	5340013539483	97403	13229E1001-10	.STRAP,WEBBING 120 INCHES LONG, TAN, USED TO SECURE RAW WATER PUMP, ONE 3K WATER TANK, AND HOSE TO FLOOR.....	4
77	PAOZZ	5340013526428	97403	13229E1001-7	.STRAP,WEBBING 38 INCHES LONG, GREEN, USED TO SECURE ACCESS LADDERS AND CYCLONE SEPARATOR FRAME.....	2
77	PAOZZ	5340013543657	97403	13229E1001-14	.STRAP,WEBBING 38 INCHES LONG, TAN, USED TO SECURE ACCESS LADDERS AND CYCLONE SEPARATOR FRAME.....	2
78	XDOZZ		97403	13229E0481	.ADAPTER ASSEMBLY WATER FLUSH.....	1
79	XDOOO		97403	13229E1052	.TUBING,ASSY,JUMPER.....	1
80	XDOZZ		97403	13229E1051	..UNION.....	2

(1) ITEM NO	(2) SMR CODE	(3) NSN	(4) CAGEC	(5) PART NUMBER	(6) DESCRIPTION AND USABLE ON CODES(UOC)	(7) QTY
81	MOOZZ		97403	13229E1052-2	..TUBING CUT TO LENGTH FROM BULK, P/N NB-8-062.....	1
82	PAOZZ	5340013555203	97403	13229E0809-6	.CLAMP,LOOP NBC MEDIA DRAIN HOSE.....	6
83	MOOZZ		97403	13229E1378-27	.HOSE NBC MEDIA FLUSH DISCHARGE, CUT TO LENGTH FROM BULK, P/N 13229E0774-5.....	6
84	AOOOO		97403	13229E0511	.HOSE ASSEMBLY UTILITY.....	1
85	PAOZZ	5120002782423	97403	13229E0511-4	..CLAMP,HOSE.....	4
86	MOOZZ		97403	13229E0511-7	..HOSE CUT TO LENGTH FROM BULK, P/N 13229E0774-3.....	1
87	XDOOO		97403	13229E1390	..ADAPTER ASSEMBLY.....	1
88	PAOZZ	4030001455721	96906	MS51844-64	...SWAGING SLEEVE,WIRE.....	2
89	MOOZZ		09647	120-02177-1	...CABLE CUT TO LENGTH FROM BULK, P/N 13229E1147-1.....	1
90	PAOZZ	5330013498922	97403	13229E0857-1	..GASKET.....	6
91	XDOZZ		97403	13229E0515-2	..ADAPTER,HOSE.....	2
92	PBOZZ	4820013073597	18034	SS-8P6T4	..VALVE,BLEEDER,HYDR.....	1
93	XDOZZ		97403	132290515-1	..ADAPTER,HOSE.....	1
94	PAOZZ		97403	13229E1252-2	..CAP,QUICK DISCONNEC.....	1
95	PAOZZ	4730013538496	97111	SSH3-62	..COUPLING HALF,QUICK.....	1
96	PAOOO	4210013497779	97403	13229E1155	.HOSE ASSEMBLY,NONME AUXILIARY, 2 INCH ID X 60 FEET LONG.....	6
97	PAOZZ	5330013498921	97403	13229E0857-4	..GASKET.....	2
98	PAOZZ	4030001455721	96906	MS51844-64	..SWAGING SLEEVE,WIRE.....	6
99	MOOZZ		09647	120-02177-1	..CABLE CUT TO LENGTH FROM BULK, PN 13229E1147-1.....	6
100	PAOZZ		96906	MS27029-12	..COUPLING,HALF QUICK.....	6
101	PAOZZ	5340013496290	97403	13229E1000-1	..STRAP,WEBBING.....	6
102	PAOOO	4210013497780	97403	13229E0524	.HOSE ASSEMBLY,NONME CLEANING HEAT-UP, 2 INCH ID X 7 FEET LONG.....	6
103	PAOZZ	5330013498921	97403	13229E0857-4	..GASKET.....	6
104	PAOZZ	4030001455721	96906	MS51844-64	..SWAGING SLEEVE,WIRE.....	6
105	MOOZZ		09647	120-02177-1	..CABLE CUT TO LENGTH FROM BULK, P/N 13229E1147-1.....	6
106	PAOZZ		96906	MS27029-12	..COUPLING,HALF QUICK.....	6
107	AOOOO		97403	13229E0856	HOSE ASSEMBLY AIR SUPPLY.....	6
108	PAOZZ	4730002703901	13841	5499	..CHUCK,AIR,INFLATING.....	6
109	PAOZZ	4730013538496	97111	SSH3-62	..COUPLING HALF,QUICK.....	6
110	PAOZZ		97403	13229E1252-2	..CAP,QUICK DISCONNEC.....	6
111	PAOZZ	4730002026491	93061	209P-6-4	..BUSHING,PIPE 3/8 MPT X 1/4 FPT.....	6
112	PAOZZ	4720004511008	61424	A0425-MC4-ML4	..TUBING ASSEMBLY,NON.....	6
113	XDOZZ		97403	13229E1140-1	.DIVIDER 11 X 27.83 INCHES.....	6
114	XDOZZ		97403	13229E1140-2	.DIVIDER 11 X 21.33 INCHES.....	6
115	XDOZZ		97403	13229E1140-3	.DIVIDER 7 X 18.33 INCHES.....	1
116	XDOZZ		97403	13229E1140-4	.DIVIDER 7 X 17.58 INCHES.....	1
117	XDOOO		97403	13229E0234-1	.BOX,STORAGE CHEMICAL.....	6
118	PAOZZ	5320013490933	97403	13229E0350-1	..RIVET,BLIND.....	2
119	PAOZZ	5310013512613	97403	13229E0557-1	..WASHER,SEAL.....	2
120	XDOZZ		97403	13229E1378-1	..PLATE,INFORMATION LOADING PLAN.....	2

(1) ITEM NO	(2) SMR CODE	(3) NSN	(4) CAGEC	(5) PART NUMBER	(6) DESCRIPTION AND USABLE ON CODES(UOC)	(7) QTY
121	XDOOO		97403	13229E0234-3	.BOX,STORAGE.....	100
122	PAOZZ	5320013490933	97403	13229E0350-1	..RIVET,BLIND.....	2
123	PAOZZ	5310013512613	97403	13229E0557-1	..WASHER,SEAL.....	2
124	XDOZZ		97403	13229E1378-3	..PLATE,INFORMATION.....	2
125	XDOOO		97403	13229E0234-4	.BOX,STORAGE.....	1
126	PAOZZ	5320013490933	97403	13229E0350-1	..RIVET,BLIND.....	6
127	PAOZZ	5310013512613	97403	13229E0557-1	..WASHER,SEAL.....	6
128	XDOZZ		97403	13229E1378-4	..PLATE,INFORMATION LOADING PLAN.....	6
129	PBFZZ	3940013570648	97403	13229E0224	.SLING,MULTIPLE LEG 52, 100 LBS WORKING LOAD.....	6
130	PAOZZ	5305000213806	96906	MS35307-413	.SCREW,CAP,HEXAGON H.....	4
131	PAOZZ	5310009338778	96906	MS35338-143	.WASHER,LOCK.....	4
132	PAOZZ	5310007679425	96906	MS15795-818	.WASHER,FLAT.....	4
133	XDOZZ		97403	13229E1149	.BRACKET ASSEMBLY LIFTING SLING.....	1
134	PAOZZ	5305000213616	96906	MS35307-305	..SCREW,CAP,HEXAGON H.....	4
135	PAOZZ	5310009338121	96906	MS35338-139	..WASHER,LOCK.....	4
136	PAOZZ	5310010911248	96906	MS15795-810	..WASHER,FLAT.....	4
137	PBOZZ	5340013531305	97403	13229E1003-1	..STRAP,WEBBING GREEN.....	2
137	PBOZZ	5340013531306	97403	13229E1003-2	..STRAP,WEBBING TAN.....	2
138	PBOZZ	5340013531309	97403	13229E1326	.STRAP,WEBBING GREEN.....	2
138	PBOZZ	5340013531959	97403	13229E1326-2	.STRAP,WEBBING TAN.....	2
139	XDOZZ		97403	13229E0378	.BRACKET LIFTING SLING.....	1
140	PBOZZ	5340009907158	96906	MS122165	.INSERT,SCREW THREAD.....	4
141	PBOZZ	6640013585340	91224	2254-01	.TEST KIT,CHLORINE.....FKD	1
142	PAOZZ	6640009354286	81348	NNNF00240	.FLASK.....FKD	1
143	PAOZZ	8125013661609	91224	439-06	.BOTTLE,SCREW CAP.....FKD	1
144	PAOZZ	6640001274779	91224	438-00	.TUBE,PLASTIC.....FKD	1
145	PAOZZ	6810013584381	91224	24085-37	.SODIUM THIOSULFATE.....FKD	1
146	PAOZZ	6810012008009	91224	2203-99	.POWDER PILLOWS,SULF.....FKD	1
147	PAOZZ	6810012008010	91224	1055-99	.SULFAMIC ACID.....FKD	1
148	PAOZZ	5940009787672	96906	MS39347-3	.TERMINAL POST.....FKD	1
149	PAOZZ		96906	MS51922-18	.NUT,SELF LOCKING,HE.....FKD	1

END OF FIGURE

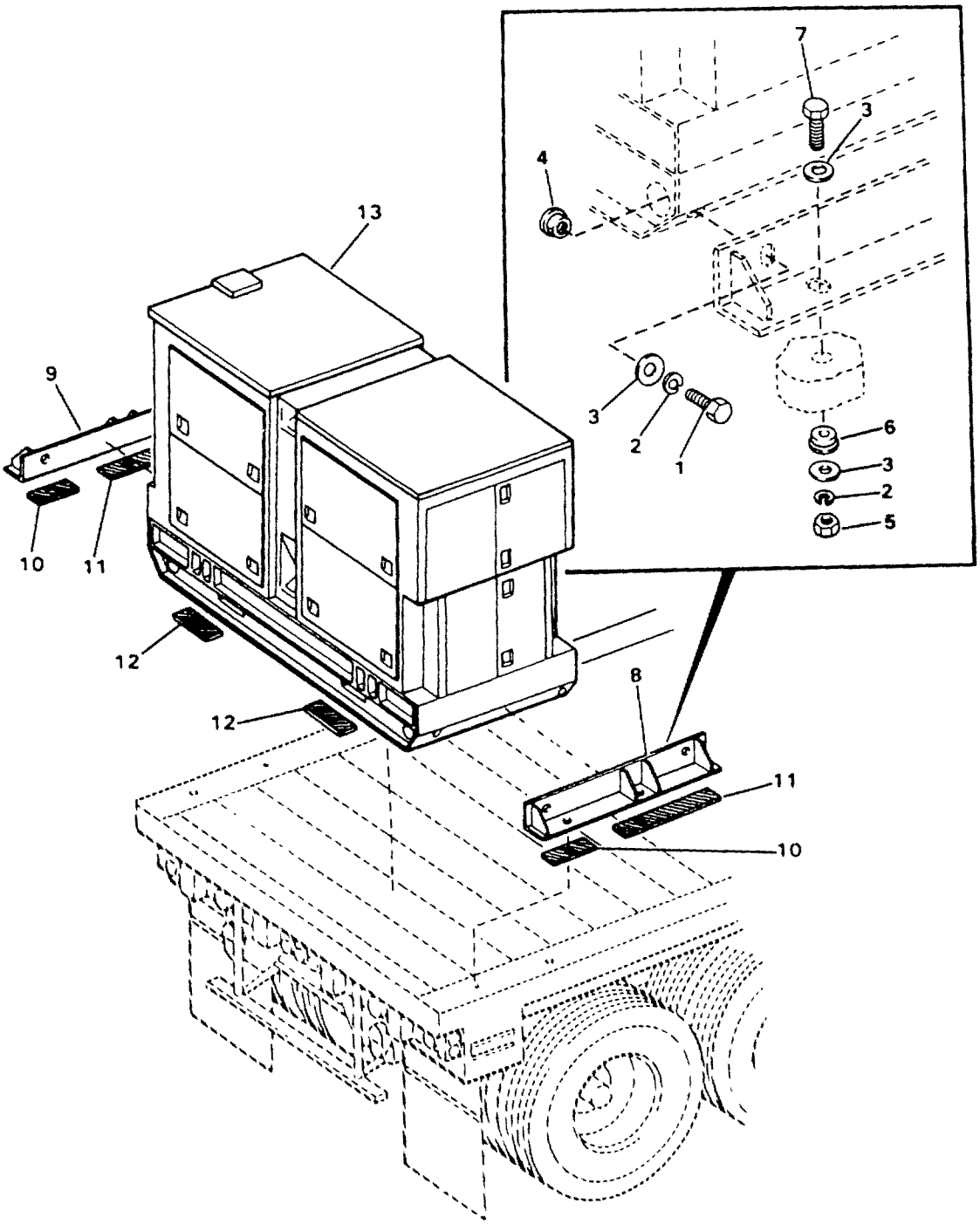

FIGURE 144. GENERATOR AND BRACKETS

(1) ITEM NO	(2) SMR CODE	(3) NSN	(4) CAGEC	(5) PART NUMBER	(6) DESCRIPTION AND USABLE ON CODES(UOC)	(7) QTY
					GROUP 06 GENERATOR, ENGINE 60 KW	
					FIG. 144 GENERATOR AND BRACKETS	
1	PAFZZ	5305007247221	80204	B1821BH063C175N	SCREW,CAP,HEXAGON H.....	4
2	PAFZZ	5310008206653	96906	MS35338-50	WASHER,LOCK.....	8
3	PAFZZ	5310006143505	96906	MS15795-820	WASHER,FLAT.....	12
4	XDFZZ		97403	13229E0579	NUT,INSERT.....	4
5	PAFZZ	5310009154891	96906	MS51967-21	NUT,PLAIN,HEXAGON.....	4
6	XDFZZ		97403	13229E0578	BUSHING.....	4
7	PAFZZ	5305007247223	80204	B1821BH063C225N	SCREW,CAP,HEXAGON H.....	4
8	XDFZZ		97403	13229E0595	SUPPORT,GEN.....	1
9	XDFZZ		97403	13229E0577	SUPPORT,GEN.....	1
10	PBFZZ	2590013531662	97403	13229E0826-2	PAD,CUSHIONING.....	2
11	PBFZZ	2590013527177	97403	13229E0826-3	PAD,CUSHIONING.....	2
12	PBFZZ	2590013527176	97403	13229E0826-4	PAD,CUSHIONING.....	4
13	PDOHD	6115001181243	30554	MEP-006A	GENERATOR SET,DIESE SEE TM 5-6615-545-24P FOR DETAILED BREAKDOWNN.....	1

END OF FIGURE

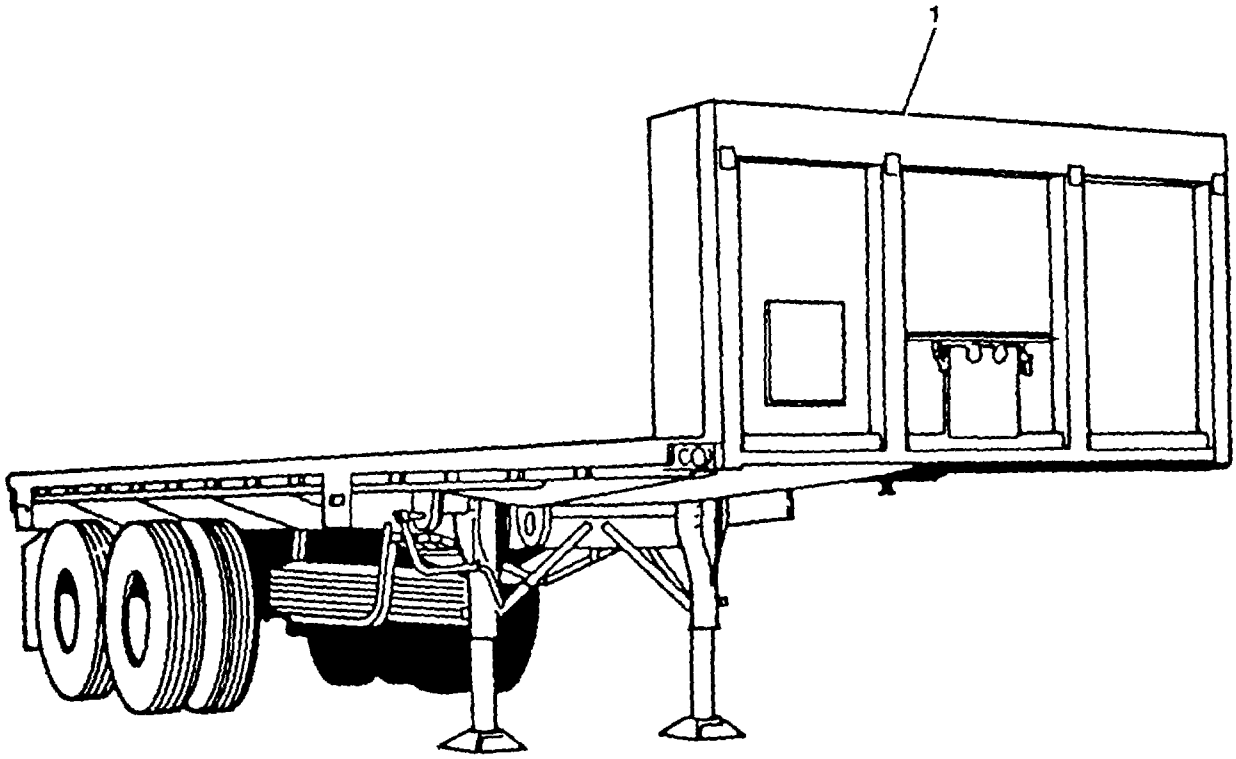

FIGURE 145. TRAILER

(1) ITEM NO	(2) SMR CODE	(3) NSN	(4) CAGEC	(5) PART NUMBER	(6) DESCRIPTION AND USABLE ON CODES(UOC)	(7) QTY
					GROUP 07 TRAILER, 30-FOOT FIG. 145 TRAILER	
1	PDOHH	2330012943367	8S867	M871A2	SEMITRAILER,STAKE SPECIAL ROWPU DESIGN (SEE TM 9-2330-386-24P FOR DETAIL BREAKDOWN), (SPECIFY FOR 3K ROWPU).....	1

END OF FIGURE

(1) ITEM NO	(2) SMR CODE	(3) NSN	(4) CAGEC	(5) PART NUMBER	(6) DESCRIPTION AND USABLE ON CODES(UOC)	(7) QTY
					GROUP 08 BULK MATERIAL FIG. BULK	
1	PAFZZ	6145013546717	97403	13229E0741-3	CABLE,POWER,ELECTRI.....	1
2	PAFZZ	6145013571800	09647	120-07639-6	CABLE,POWER,ELECTRI.....	1
3	PAFZZ	6145013571801	09647	120-07639-7	CABLE,POWER,ELECTRI.....	1
4	PAFZZ	6145013571802	09647	120-07639-8	CABLE,POWER,ELECTRI.....	1
5	PAFZZ	6145013578695	81774	81644	CABLE,POWER,ELECTRI.....	1
6	PAFZZ	6145013571803	81774	81384	CABLE,POWER,ELECTRI.....	1
7	PAFZZ	6145013571804	92194	45371	CABLE,POWER,ELECTRI.....	1
8	PAFZZ	6145013571096	97403	13229E0556	CABLE,POWER,ELECTRI.....	1
9	PAFZZ		97403	13229E0741-1	CABLE,SPECIAL PURPO.....	1
10	PAFZZ	6145013566377	97403	13229E0741-2	CABLE,POWER,ELECTRI.....	1
11	PAFZZ	8305012346771	81346	MIL-C-20696	CLOTH,COATED TYPE I, CLASS 2.....	1
12	PAOZZ	4010014466428	97403	13229E0195	CHAIN,WELDED.....	1
13	PAOZZ	9540013562574	96195	P-1000-EA	CHANNEL,STRUCTURAL.....	1
14	PAOZZ	8135013658859	96195	P-2600	CUSHIONING MATERIAL.....	1
15	PAFZZ		81349	MIL-F-21840	FASTENER TAPE HOOK TYPE II, CLASS 1, NYLON, GREEN.....	V
16	PAFZZ		81349	MIL-F-21840	FASTENER TAPE HOOK TYPE II, CLASS 1, NYLON, TAN.....	V
17	PAOZZ	5340010537128	96906	MS35823-7A	HINGE,BUTT.....	1
18	PAOZZ	4720011681546	81343	SAE 30R2	HOSE,NONMETALLIC 0.75 ID X 1.092 OD, 200 LB OP, TYPE 1.....	V
19	PAOZZ	4720012777559	24161	3284-0187	HOSE,NONMETALLIC 0.25 ID X 0.5 OD, 175 LB OP, TYPE 1.....	V
20	PAOZZ	4720013549025	81348	ZZ-H-561	HOSE,NONMETALLIC GRADE B, STYLE A, CLASS 2.....	1
21	PAOZZ	4720013002999	62782	028870	HOSE,NONMETALLIC.....	1
22	PAOZZ	4720013545332	97403	13229E0774-5	HOSE,NONMETALLIC.....	1
23	PAOZZ	4720013540365	24161	35W-2 7/8	HOSE,NONMETALLIC.....	1
24	PAOZZ	4720013537462	97403	13229E0775-2	HOSE,NONMETALLIC.....	1
25	PAOZZ		97403	13229E0302	HOSE,RUBBER.....FKD	1
26	PAOZZ	5970011631103	81349	M23053/4-304-0	INSULATION SLEEVING.....	1
27	PAOZZ		81343	MIL-STD-751	LUMBER,SOFTWOOD,DIM 2 INCH X 6 FKD 6 INCH X 8 FEET, TREATED.....	1
28	PAFZZ		81346	ASTMD2000 MLBC614	NEOPRENE 0.097 INCH THICK, WITH THREE PLY CLOTH INSERT.....	1
29	PAOZZ		81346	ASTM D2000 MLBC614	NEOPRENE 0.375 INCH THICK, WITH THREE PLY CLOTH INSERT.....	1
30	PAOZZ	9390013587870	97403	13229E1341	NONMETALLIC CHANNEL.....	1
31	PAFZZ	4710009908503	81346	ASTM D1785	PIPE,PLASTIC 2 INCHES, SCHEDULE 80 PVC.....	1
32	PAFZZ	9330013705263	97403	13229E0948	PLASTIC MATERIAL,CE.....	1
33	PAOZZ	5330014685373	97403	13229E0744	RUBBER STRIP PANEL SEAL MATERIAL....	1
34	PAOZZ	4020013542721	97403	13229E1153	ROPE,FIBROUS.....	1
35	PAOZZ	4010014214866	97403	13229E1147-1	ROPE,WIRE.....	1
36	PAOZZ	4010013565135	97403	13229E1147-2	ROPE,WIRE.....	1
37	PAOZZ	9520013561591	96195	P1001C	STRUCTURAL SECTION.....	1
38	PAOZZ	5970004194290	75037	17 1/2INBLACK	TAPE,INSULATION,ELE 1/2 INCH WIDE, BLACK.....	1
39	PAHZZ	7510013588770	97403	13229E1171	TAPE,PRESSURE SENSI.....	V

(1) ITEM NO	(2) SMR CODE	(3) NSN	(4) CAGEC	(5) PART NUMBER	(6) DESCRIPTION AND USABLE ON CODES(UOC)	(7) QTY
40	PAFZZ	4710009619292	81346	ASTMA269	TUBE,METALLIC 0.25 X 0.049 WALL THICKNESS.....	1
41	PAOZZ		81346	ASTM A269	TUBE,METALLIC 0.5 OD X 0.35 WALL THICKNESS.....	1
42	PAOZZ	4720013540367	97403	13229E0774-2	TUBING,NONMETALLIC.....	1
43	PAOZZ	4720013540366	97403	13229E0774-3	TUBING,NONMETALLIC.....	1
44	PAOZZ	4720013349212	62782	028810	TUBING,NONMETALLIC.....	1
45	PAOZZ	4720013545335	62782	028981	TUBING,NONMETALLIC.....	1
46	PAOZZ	4720004104288	61424	PV53-1	TUBING,NONMETALLIC.....	1
47	PAOZZ	4720013537464	97403	13229E0625-2	TUBING,NONMETALLIC.....	1
48	PAOZZ	4720002690045	03538	77C714976P006	TUBING,NONMETALLIC.....	1
49	PAOZZ	4720013537465	97403	13229E0691-2	TUBING,NONMETALLIC.....	1
50	PAOZZ	4720011411454	61424	NB-8-062	TUBING,NONMETALLIC.....	1
51	PAOZZ	4720013532957	97403	13229E1282-1	TUBING,NONMETALLIC.....	1
52	PAFZZ	4720013537463	97403	13229E1282-2	TUBING,NONMETALLIC.....	1
53	PAFZZ	4720013532956	97403	13229E1282-3	TUBING,NONMETALLIC.....	1
54	PAOZZ	5680013606565	97403	13229E0315	WEATHER STRIP.....	1
55	PAHZZ	5680013610177	97403	13229E1172	WEATHER STRIP.....	1
56	PAOZZ	5680013610178	97403	13229E1392	WEATHER STRIP.....	V
57	PAFZZ	8305002673009	81349	MIL-W-4088	WEBBING,TEXTILE TYPE XVII, CLASS I, CONDITIONER R, NYLON, GREEN.....	1
58	PAFZZ	8305002673009	81349	MIL-W-4088	WEBBING,TEXTILE TYPE XVII, CLASS I, CONDITIONER R, NYLON, TAN.....	1
59	PAOZZ	6145005786595	81349	M5086/2-4-9	WIRE,ELECTRICAL.....	1
60	PAFZZ	6145005787521	81349	M5086/1-12-9	WIRE,ELECTRICAL.....	1
61	PAFZZ	6145005787516	81349	M5086/1-14-9	WIRE,ELECTRICAL.....	1
62	PAFZZ	6145002484932	81349	M5086/1-16-0	WIRE,ELECTRICAL.....	1
63	PAFZZ	6145010998029	81349	M5086/1-16-2	WIRE,ELECTRICAL.....	1
64	PAFZZ	6145010998030	81349	M5086/1-16-3	WIRE,ELECTRICAL.....	1
65	PAFZZ	6145012376923	81349	M5086/1-16-4	WIRE,ELECTRICAL.....	1
66	PAFZZ	6145009461361	81349	M5086/1-16-6	WIRE,ELECTRICAL.....	1
67	PAFZZ	6145012359750	81349	M5086/1-16-8	WIRE,ELECTRICAL.....	1
68	PAFZZ	6145005786072	81349	M5086/1-16-9	WIRE,ELECTRICAL.....	V
69	PAFZZ	6145010994742	81349	M5086/1-16-90	WIRE,ELECTRICAL.....	1
70	PAFZZ	6145005787518	81349	M5086/1-18-9	WIRE,ELECTRICAL.....	1
71	PAFZZ	6145002840657	81349	M5086/2-8-9	WIRE,ELECTRICAL.....	1
72	PAFZZ	6145005787513	81349	M5086/2-10-9	WIRE,ELECTRICAL.....	1

END OF FIGURE

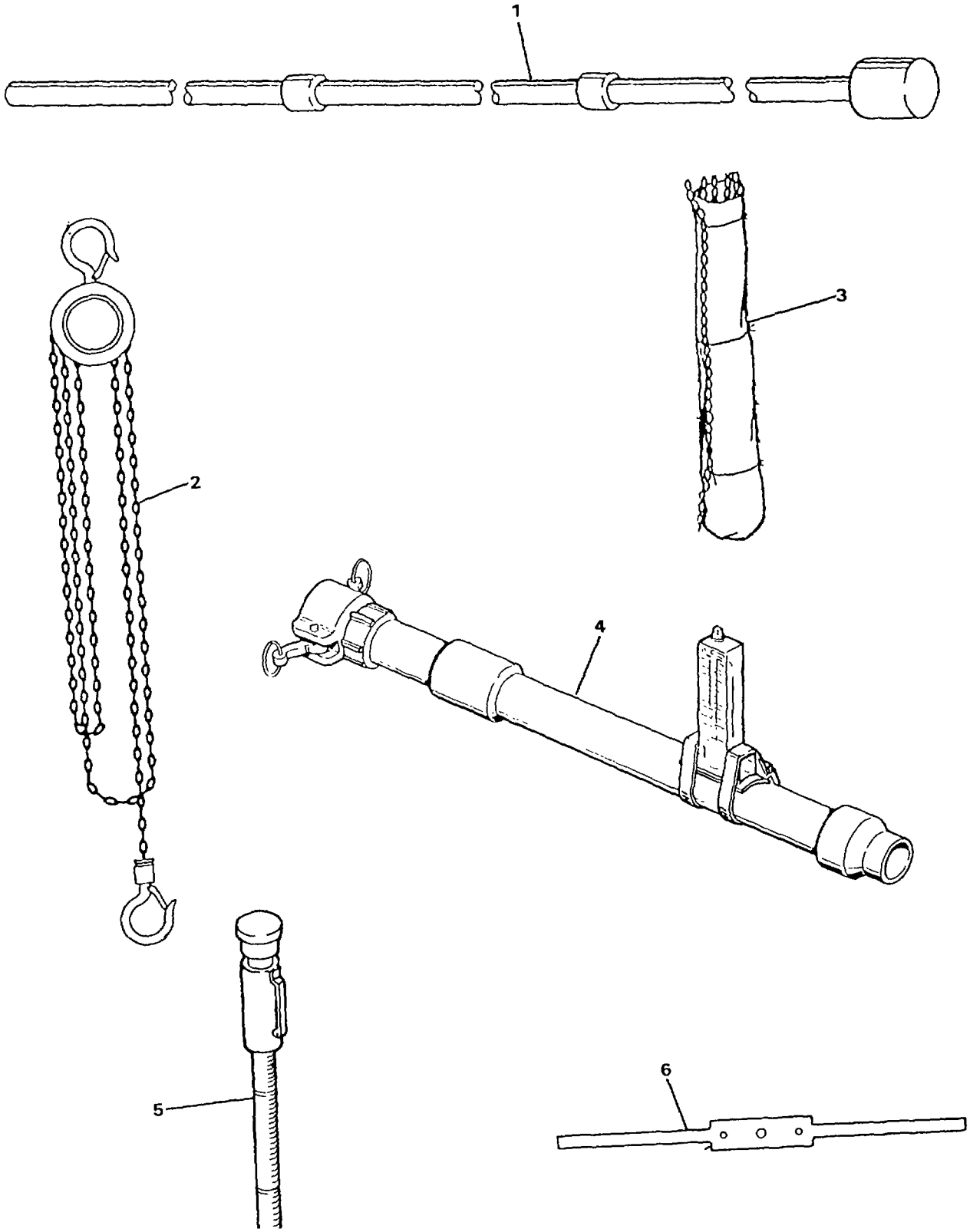

FIGURE 146. SPECIAL TOOLS (SHEET 1 OF 4)

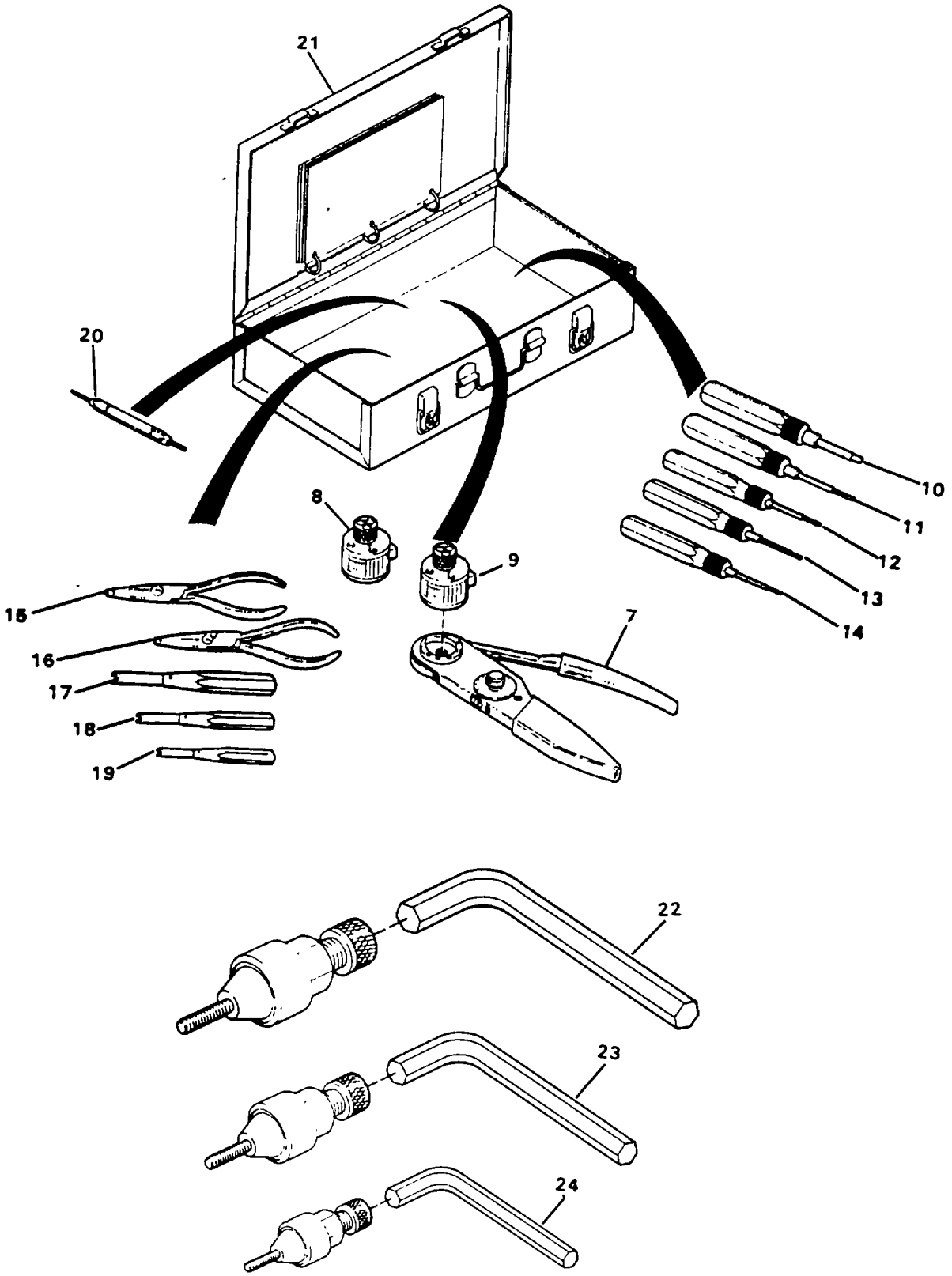

FIGURE 146. SPECIAL TOOLS (SHEET 2 OF 4)

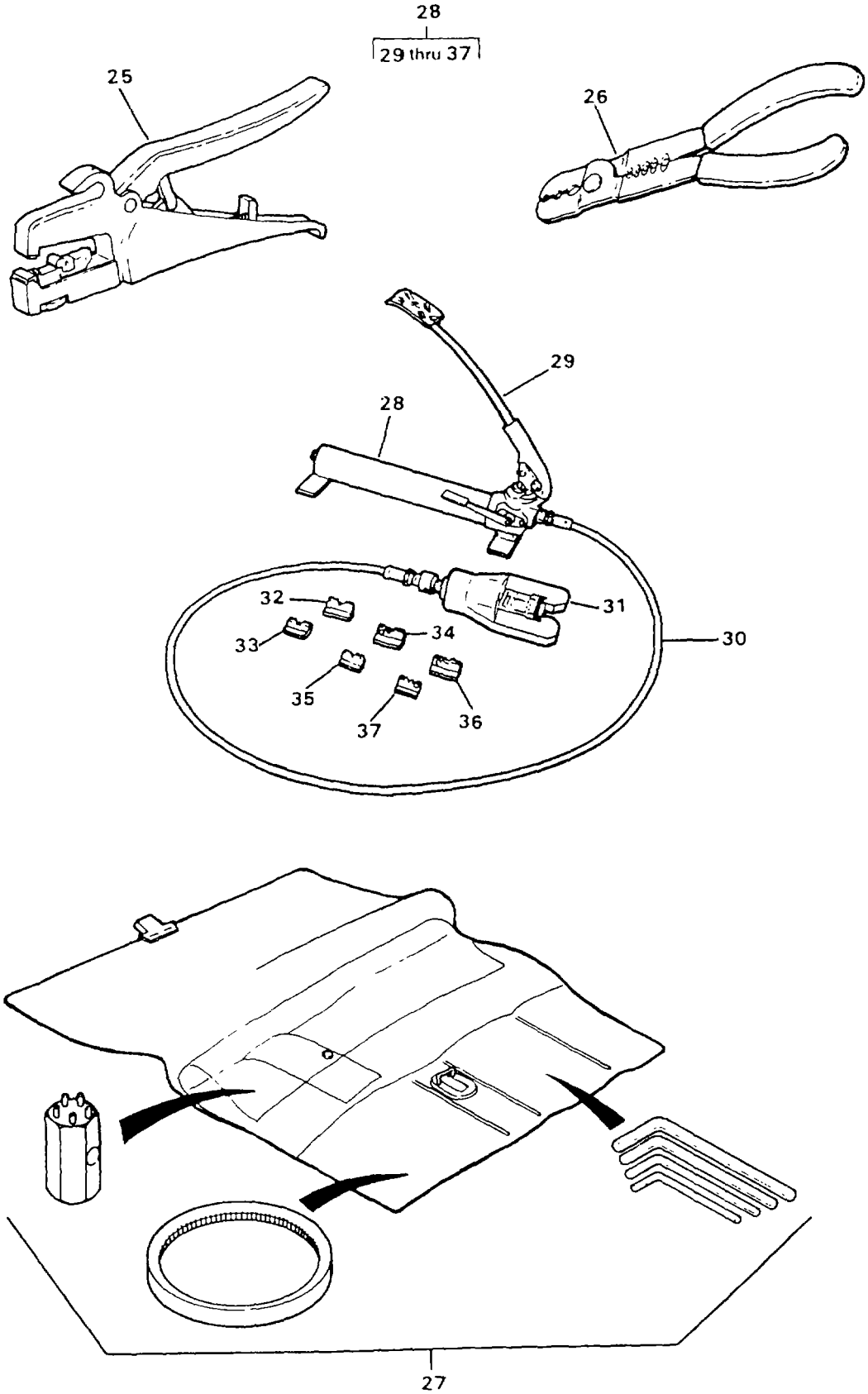

FIGURE 146. SPECIAL TOOLS (SHEET 3 OF 4)

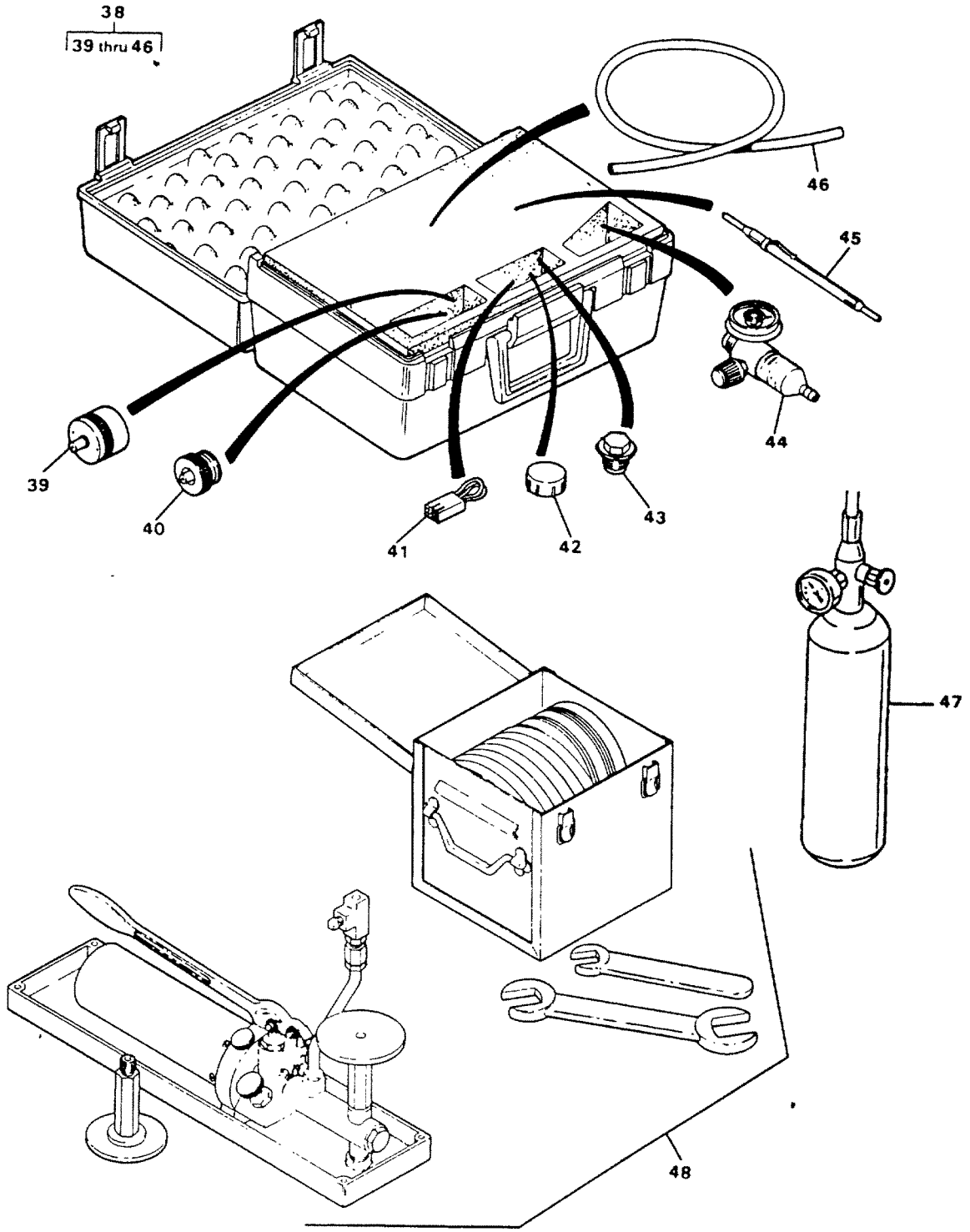

FIGURE 146. SPECIAL TOOLS (SHEET 4 OF 4)

(1) ITEM NO	(2) SMR CODE	(3) NSN	(4) CAGEC	(5) PART NUMBER	(6) DESCRIPTION AND USABLE ON CODES(UOC)	(7) QTY
					GROUP 09 SPECIAL TOOLS LIST FIG. 146 SPECIAL TOOLS	
1	XDOZZ		97403	13229E0120	DRIVER ASSEMBLY RO ELEMENTS.....	
2	PFOZZ	3950013541194	97403	13229E1377	HOIST,CHAIN.....	
3	PAOZZ	4610014665268	97403	13229E1345	BAG,CHAIN HOIST.....	
4	PFOZZ		97403	13229E0889	METER,FLOW RATE IND PRODUCTION FLOW.	
5	PFOZZ	6635009216255	24161	12998F	TENSIOMETER,V-BELT.....	
6	PFFZZ	5120013542321	3Z033	BVP-86-16	WRENCH,SPANNER VALVE ACTUATOR.....	
7	PFFZZ	5120001653912	17549	M22520/1-01	TERMINAL CRIMPING TOOL, PART OF KIT P/N 120-02593.....	
8	PFFZZ	5120013566002	17549	600 324	TURRET HEAD,CRIMPIN FOR PINS, PART OF KIT P/N 120-02593.....	
9	PFFZZ	5120013561773	17549	600 325	TURRET HEAD,CRIMPIN FOR SOCKETS PART OF KIT P/N 120-02593.....	
10	PFFZZ	5120013550846	71468	CET-F80-20	REMOVER,ELECTRICAL FOR CONTACT SIZE 10, PART OF KIT P/N120-02593....	
11	PFFZZ	5120011310139	71468	CET-F80-16	TOOL,CONTACT EXTRAC FOR CONTACT SIZE 15S/16S/15/16, PART OF KIT P/N 120-02593.....	
12	PFFZZ	5120013550847	71468	CET-F80-12	REMOVER,ELECTRICAL FOR CONTACT SIZE 25/12, PART OF KIT P/N 120-02593.....	
13	PFFZZ	5120004776375	71468	CET8	EXTRACTION TOOL FOR CONTACT SIZE 60/100/8, PART OF KIT P/N 120-02593..	
14	PFFZZ	5120004776379	71468	CET4	EXTRACTION TOOL FOR CONTACT SIZE 160/4, PART OF KIT P/N 120-02593.....	
15	PFFZZ	5120013550849	71468	CIT-F80-12	ELECTRICAL INSERTER, FOR CONTACT SIZE 25/12, PART OF KIT P/N 120-02593.....	
16	PFFZZ	5120011310140	71468	CIT16	INSERTER,ELECTRICAL FOR CONTACT SIZE 15S/16S/15/16, PART OF KIT P/N 120-02593.....	
17	PFFZZ	5120011580236	71468	CIT-20	INSERTER,ELECTRICAL FOR CONTACT SIZE 10, PART OF KIT P/N 120-02593.....	
18	PFFZZ	5120010441884	71468	CIT8	INSERTER,ELECTRICAL FOR CONTACT SIZE 60/100/8, PART OF KIT P/N 120-02593.....	
19	PFFZZ	5120004645908	71468	CIT4	INSERTER,ELECTRICAL FOR CONTACT SIZE 160/4, PART OF KIT P/N 120-02593.....	
20	PFFZZ	5220000906722	81349	M22520/3-1	GAGE,PLUG,PLAIN CYL DE PLUG GAGE “GO” 0.0329, “NO GO” 0.04, PART OF KIT P/N 120-02593.....	
21	XDFZZ		09647	120-02650	CASE FOR CONNECTOR KIT PART OF KIT P/N 120-02593.....	
22	PFFZZ	5120001776808	03481	C-845 8-32	RIVETER,BLIND,HAND #8-32 UNC-2A.....	
23	PFFZZ	5120001779839	5G589	C-845 1032	RIVETER,BLIND,HAND *10-32 UNC-2A.....	
24	PFFZZ		5G589	C845-2520	RIVETER,BLIND,HAND 1/4-20 UNC-2A.....	
25	PFOZZ	5110013548450	65996	206-101	STRIPPER,WIRE,HAND.....	
26	PFOZZ	5120002782423	00779	47100	CRIMPING TOOL,TERMI.....	
27	PFFZZ	4310013556344	57328	PURUS	REPAIR KIT,COMPRESSOR SERVICE TOOL; 1 EA FAN BELT, PTS LIST, POUCH.....	

(1) ITEM NO	(2) SMR CODE	(3) NSN	(4) CAGEC	(5) PART NUMBER	(6) DESCRIPTION AND USABLE ON CODES(UOC)	(7) QTY
28	PFFZZ		17549	4601.00000.330	CRIMPING TOOL,HYDRA HAND -OPERATED WITH SAFETY VALVE.....	
29	XDFZZ		17549	4601.51000.330	.DEVICE-FOOT-OPSD FOR CRIMP TOOL, ITEM 28.....	
30	PBFZZ	4720013537460	17549	4604.00000.020	.HOSE ASSEMBLY,NONME 2M LONG.....	
31	PBFZZ	5130013539313	17549	4632.00000.601	.CRIMP HEAD.....	
32	PFFZZ	5130013542286	17549	317-8531-000	.DIE,CRIMPING TOOL FOR CONTACT SIZE 6/100/8.....	
33	PFFZZ	5130013542287	17549	317-8531-001	.DIE,CRIMPING TOOL FOR CONTACT SIZE60/100/8.....	
34	PFFZZ	5130013542288	17549	317-8532-000	.DIE,CRIMPING TOOL FOR CONTACT SIZE 160/4.....	
35	PFFZZ	5130013542366	17549	317-8532-001	.DIE,CRIMPING TOOL FOR CONTACT SIZE 160/4.....	
36	PFFZZ	5130013538178	17549	317-8533-000	.DIE,CRIMPING TOOL FOR CONTACT SIZE 500/0.....	
37	PFFZZ	5130013542289	17549	317-8533-001	.DIE,CRIMPING TOOL FOR CONTACT SIZE 500/0.....	
38	PBOOO		97403	13229E1334-5	MAINTENANCE KIT,ELE CALIBRATION KIT FOR CO MONITOR.....	
39	XDOZZ		40912	D456673	.ADAPTER.....	
40	XDOZZ		40912	8473150	.CAP,CALIBRATION.....	
41	XDOZZ		40912	A492769	.CONNECTOR,SHORTING.....	
42	XDOZZ		40912	D69217	.CAP.....	
43	XDOZZ		40912	631570	.PLUG.....	
44	XDOZZ		40912	8478359	.CONTROL,FLOW.....	
45	XDOZZ		40912	327626	.TOOL,TRIMMER.....	
46	XDOZZ		40912	A485030	.HOSE.....	
47	PBOZZ		97403	13229E1334-6	CALIBRATING GAS MIX USED WITH CO MONITOR CALIBRATION KIT.....	
48	PFFFF	6685013497925	38056	TYPE 1305	TESTER,PRESSURE GAG.....	
	XDFZZ		09647	120-02593	KIT,REPAIR ELECTRICAL CONNECTORS,.... KIT ALSO CONTAINS CONNECTOR REPAIR... PARTS (SEE FIGURE 142).....	
					CASE (1) 146-21	
					CRIMPING TOOL, TERM (1) 146-7	
					CRIMPING TOOL, TERMI (1) 146-9	
					EXTRACTION TOOL (1) 146-3	
					EXTRACTION TOOL (1) 146-4	
					GAGE, PLUG, PLAIN CYL (1) 146-20	
					INSERTER, ELECTRICAL (1) 146-6	
					INSERTER, ELECTRICAL (1) 146-17	
					INSERTER, ELECTRICAL (1) 46-18	
					INSERTER, ELECTRICAL (1) 146-19	
					PLIERS (1) 146-15	
					REMOVER, ELECTRICAL (1) 146-10	
					REMOVER, ELECTRICAL (1) 146-12	
					TOOL,CONTACT EXTRAC (1) 146-11	
					TURRET HEAD,CRIMPIN (1) 146-8	

END OF FIGURE

CROSS-REFERENCE INDEXES

NATIONAL STOCK NUMBER INDEX

STOCK NUMBER	FIG.	ITEM
5945-00-009-7995	31	57
5305-00-012-0628	98	1
5305-00-021-3616	143	134
5305-00-021-3620	8	2
	24	1
	25	7
	26	15
	44	41
	44	102
	49	1
	62	5
	82	1
	88	10
	89	1
	92	1
	95	4
	96	4
	97	10
	99	15
	100	12
	102	4
	105	8
	108	8
	110	1
	118	4
	126	4
	128	2
	130	25
5305-00-021-3668	10	35
	44	40
	44	101
	67	70
	68	38
	80	1
	81	1
	99	6
	113	1
	130	22
5305-00-021-3740	7	34
	7	92
	13	11
	46	1
	58	12
	61	1
	93	1
	97	3
	118	6
	121	1
	122	1
	132	19
5305-00-021-3801	14	6
5305-00-021-3806	7	51
	44	1
	68	34
	88	12
	111	1
	143	130
9905-00-027-4577	43	23
	119	3
5325-00-045-2812	26	5
	65	31
	84	16
	85	38
	106	64
5305-00-050-9231	7	20
	118	19
5305-00-050-9233	138	55
6685-00-053-0493	67	23
5305-00-054-5651	33	26
	47	44
	49	8
	125	8
5305-00-054-5652	21	10
	27	1
5305-00-054-5653	3	42
	52	29
	54	38
5305-00-054-6651	34	22
5305-00-054-6652	85	35
5305-00-054-6654	31	48
	33	33
	46	7
	47	39
5305-00-054-6655	31	54
	44	130
	51	9
5305-00-054-6656	27	6
5305-00-054-6668	31	56
5305-00-054-6670	32	1
	35	37
	101	19
	101	38
5305-00-054-6671	31	13
	33	45
5305-00-054-6672	31	35
	46	16
	47	12
	51	16
	52	25
	79	10

CROSS-REFERENCE INDEXES

NATIONAL STOCK NUMBER INDEX

STOCK NUMBER	FIG.	ITEM
	125	12
5305-00-054-6674	52	17
	54	18
5305-00-054-6677	121	42
	120	32
5305-00-054-9315	120	32
5935-00-056-9628	46	17
	47	13
	51	17
	52	26
5340-00-057-6956	124	8
	142	2
	142	11
5310-00-058-3599	33	27
	49	10
	52	30
	54	37
	125	7
5305-00-059-3655	49	26
5305-00-059-3657	47	33
	77	8
	78	13
5305-00-059-3659	31	38
	34	18
	35	34
	35	67
	47	30
	49	21
	54	30
	101	1
	101	20
5305-00-059-3661	35	24
5305-00-059-3663	14	40
	26	19
	31	1
	35	43
	43	24
	132	23
5305-00-060-9831	110	4
5935-00-061-1962	46	15
	47	11
	51	15
	52	24
5330-00-065-3797	46	8
4730-00-071-1671	44	19
	44	80
5975-00-074-2072	31	10
	43	32
	119	3
5340-00-078-7029	124	6
	142	3
	142	12
4730-00-088-4338	44	8
	44	11
	44	69
	44	72
5330-00-088-9166	137	27
	137	32
	137	37
	137	56
	138	8
	142	95
5220-00-090-6722	146	20
5940-00-107-1481	95	16
	96	16
5975-00-111-3208	31	10
	35	21
	43	32
	48	2
	78	31
	119	3
5940-00-113-8183	28	12
5940-00-113-8184	128	29
	138	32
5940-00-113-9826	46	37
	53	10
	121	21
	122	21
	125	33
	142	103
5940-00-114-1305	28	14
	53	11
	55	12
	125	50
	28	15
5940-00-114-1311	20	59
4730-00-115-3740	7	44
	7	105
	67	38
	116	17
	137	7
	137	42
	137	63
	8	2
5940-00-115-5006	20	38
6115-00-118-1243	144	13
6630-00-127-4774	143	13
6640-00-127-4779	143	24
	143	144
4730-00-128-0196	3	61

CROSS-REFERENCE INDEXES

NATIONAL STOCK NUMBER INDEX

STOCK NUMBER	FIG.	ITEM
5310-00-138-4315	59	10
	86	3
	87	3
	87	19
6210-00-139-5072	30	4
	46	9
5940-00-143-4774	21	3
	26	24
	26	40
	28	18
	45	10
	82	6
	101	13
	101	32
	138	43
5940-00-143-4775	28	20
	46	30
	46	36
	48	12
	51	21
	53	12
	95	33
	96	33
5940-00-143-4777	3	51
	16	9
	17	9
	19	19
	20	47
	51	22
	53	13
	55	13
	64	12
	105	11
	125	32
	128	37
	131	25
	138	19
5940-00-143-4780	28	10
	60	4
	60	12
	78	22
	102	9
	113	8
	113	13
5940-00-143-4794	101	6
	101	25
	126	14
5940-00-143-5284	28	13
4030-00-145-5721	1	15
	1	21
	1	32
	1	43
	1	49
	1	58
	1	69
	4	34
	6	9
	7	12
	7	17
	7	48
	7	81
	7	100
	59	4
	66	31
	67	29
	67	34
	69	51
	86	13
	87	13
	106	11
	116	6
	116	13
	116	24
	136	8
	137	11
	137	13
	137	19
	137	24
	137	29
	137	34
	137	53
	137	73
	138	6
	142	97
	143	88
	143	98
	143	104
5930-00-162-1875	30	23
	46	13
5120-00-165-3912	146	7
5331-00-166-8396	129	69
5935-00-167-7775	95	18
	96	18
4730-00-175-9387	12	83
	13	43
	25	13
	25	46
	68	7
	90	5
5120-00-177-6808	146	22

CROSS-REFERENCE INDEXES

NATIONAL STOCK NUMBER INDEX

STOCK NUMBER	FIG.	ITEM
5120-00-177-9839	146	23
3110-00-180-7737	131	48
5310-00-184-8977	35	41
5999-00-186-3912	143	69
5120-00-187-7126	143	62
4730-00-188-8266	59	12
	86	39
	87	39
4730-00-193-2707	99	25
4730-00-193-2709	10	56
6210-00-194-3236	30	7
4730-00-196-1493	7	91
4730-00-196-1965	99	34
4730-00-196-1974	10	57
4730-00-196-1981	10	69
4730-00-196-1985	10	66
4730-00-196-2030	1	27
5920-00-199-9498	79	18
	143	10
5325-00-200-7224	67	74
	92	21
	118	34
	118	39
	121	45
	122	41
4730-00-202-6491	143	111
5940-00-204-8966	28	8
5305-00-207-2297	121	16
	122	16
	130	29
5305-00-207-8253	7	25
	11	24
	20	53
	29	3
	32	10
	44	20
	44	81
	62	43
	68	30
	78	34
	97	9
	108	4
	117	9
	120	2
	128	4
	128	22
	128	74
	130	1
	131	9
	136	4
	138	51
5305-00-208-1429	4	25
5305-00-208-8063	128	17
5310-00-209-0788	98	26
5310-00-209-0790	34	15
	131	13
5310-00-209-1239	31	39
	34	19
	35	35
	43	25
	47	31
	49	22
	54	28
	125	11
5310-00-213-4960	59	41
	86	19
4730-00-221-5012	97	15
7240-00-223-4482	143	44
5310-00-225-5328	32	2
	33	46
	35	11
6210-00-226-8798	30	1
5940-00-230-0515	3	58
	28	19
	55	14
	64	2
	94	14
4730-00-230-1996	99	32
4730-00-231-5650	7	90
5120-00-235-5809	143	59
5120-00-240-5364	143	64
5310-00-241-6604	131	7
5310-00-241-6606	66	18
	66	23
	67	53
	67	76
	67	94
	69	24
	69	29
	71	4
	71	8
	128	63
5320-00-242-1587	33	19A
7920-00-244-7431	143	47
5310-00-245-3615	13	74
6240-00-246-5052	24	5
	29	2
6145-00-248-4932	BULK	62
4730-00-249-3878	1	38
4730-00-249-3890	7	41

CROSS-REFERENCE INDEXES

NATIONAL STOCK NUMBER INDEX

STOCK NUMBER	FIG.	ITEM	STOCK NUMBER	FIG.	ITEM
4730-00-254-6211	99	17		58	18
5120-00-262-8491	143	65		61	6
6230-00-264-8261	143	51		62	33
8415-00-266-8677	143	46		67	61
8305-00-267-3009	BULK	57		69	48
4730-00-268-7479	7	40		71	36
4720-00-269-0045	BULK	48		77	26
4730-00-270-3901	143	108		78	4
4730-00-273-6709	4	22		93	23
5120-00-278-2423	146	26		97	20
	7	88		102	27
	12	16		105	19
	69	11		112	13
	69	18		118	4
	107	1		120	31
	143	42		121	55
	143	85		122	49
5940-00-283-5280	23	7	6210-00-295-2426	30	10
	23	12	5975-00-296-0014	46	6
	23	17	5920-00-296-0451	92	20
	28	9	4730-00-304-3552	89	7
	29	13	5331-00-338-1441	109	16
	48	11	5310-00-349-9529	35	40
	78	21	4540-00-406-7094	98	20
5940-00-283-5281	28	11	4720-00-410-4288	BULK	46
6145-00-284-0657	BULK	71	4730-00-410-9530	1	60
5920-00-284-6787	57	36		7	5
4730-00-288-9400	67	40		7	42
	137	45		7	79
	137	66		116	19
4730-00-289-5368	1	37		137	43
	1	63		138	2
	7	99	5970-00-419-4290	BULK	38
5340-00-290-4489	22	13	5310-00-421-9608	59	40
	24	10		86	4
	68	44		87	4
	89	12		87	20
	108	12	5940-00-432-2660	28	22
	110	9		95	34
	113	21		96	34
	114	12	5305-00-433-3711	24	8
	121	47		29	9
	121	54	5310-00-436-3290	25	73
	122	40	3110-00-435-7329	140	15
	122	48	5305-00-442-3217	62	22
	128	84	5120-00-449-8083	143	63
5325-00-290-4492	13	15	4720-00-451-1008	143	112
	20	58	5305-00-455-0315	7	37
	46	4	5120-00-464-5908	146	19
	47	4	5305-00-465-5481	35	10

CROSS-REFERENCE INDEXES

NATIONAL STOCK NUMBER INDEX

STOCK NUMBER	FIG.	ITEM
4730-00-471-3117	138	4
5120-00-477-6375	146	13
5120-00-477-6379	146	14
5305-00-478-0273	34	14
4730-00-489-0313	59	26
	86	41
	87	41
4730-00-490-6257	12	84
	13	17
	25	14
	25	47
	109	6
5310-00-502-0106	59	38
	86	8
	87	8
5340-00-522-0381	7	24
	118	20
	118	33
	118	38
	130	15
5310-00-527-3634	3	39
	3	56
	22	8
	34	17
	35	33
	52	11
	54	12
	64	3
	125	44
	128	27
4730-00-528-0223	10	73
	12	85
5306-00-543-4405	9	2
	67	78
	71	6
	71	10
	126	1
	128	61
	138	70
5310-00-545-8402	35	42
5325-00-551-8054	120	13
5940-00-557-1629	28	17
5940-00-557-4338	125	35
5940-00-557-4338	131	26
5940-00-557-4341	22	10
	28	16
	125	34
5940-00-557-4345	125	51
	131	77
5305-00-562-2685	132	14
5305-00-576-5417	13	70
	62	8
	65	7
	104	9
	106	36
	117	11
	120	27
	125	4
5305-00-576-5807	128	15
5305-00-576-6107	3	55
	64	1
6145-00-578-6072	BULK	68
6145-00-578-6595	BULK	59
6145-00-578-7513	BULK	72
6145-00-578-7516	BULK	61
6145-00-578-7518	BULK	70
6145-00-578-7521	BULK	60
5305-00-581-6488	59	42
	86	2
	87	2
5310-00-584-7799	26	3
	65	3
	84	7
	85	3
	106	3
	133	18
	135	2
4730-00-586-3847	10	54
5305-00-590-7863	99	5
4730-00-590-8083	1	29
	1	36
	1	64
	7	97
	66	33
5310-00-595-6057	31	7
	34	25
	35	3
5310-00-596-7691	98	8
5310-00-596-7693	98	29
5945-00-597-1458	31	53
5330-00-612-2414	137	9
	137	17
	137	22
	137	39
	137	51
	137	71
	138	7
5310-00-614-3505	66	3
	85	21
	131	70

CROSS-REFERENCE INDEXES

NATIONAL STOCK NUMBER INDEX

STOCK NUMBER	FIG.	ITEM
	131	76
	132	3
	144	3
5310-00-614-3552	31	14
	35	38
	52	15
	54	16
5310-00-616-3554	98	40
5305-00-616-5522	64	20
5305-00-616-6370	128	10
5310-00-619-1148	2	3
	2	21
	25	55
	25	70
	35	65
	44	117
	105	35
	142	89
5305-00-619-6050	131	2
5310-00-625-5756	9	4
	66	19
	66	24
	67	54
	67	77
	69	25
	69	30
	71	5
	71	9
	109	3
	126	3
	128	60
	132	11
	138	69
4730-00-629-0530	12	59
5305-00-632-2777	3	60
	31	5
	34	23
	35	1
	120	27
	131	14
	139	1
	139	4
5306-00-637-9674	13	25
	13	59
5306-00-637-9675	66	20
	66	25
	67	55
	69	26
	69	31
	126	1
5305-00-638-9837	26	11
5330-00-641-4336	27	13
	125	40
5330-00-641-4338	27	5
	47	45
	49	12
	54	41
4730-00-649-9103	116	23
5306-00-655-6170	7	64
5325-00-682-1453	62	34
	121	49
	122	43
5305-00-682-5973	134	28
5930-00-683-1633	26	48
4730-00-684-3796	44	7
	44	68
4730-00-684-7555	143	38
5305-00-685-8156	7	58
	67	87
	136	22
4320-00-689-2809	63	5
4320-00-689-2935	63	11
4730-00-691-5458	127	11
4730-00-691-5459	83	8
4730-00-691-5460	12	86
	62	39
	65	18
	68	26
4730-00-691-5461	10	24
4730-00-691-5464	10	25
5305-00-702-4523	14	15
	34	1
	35	4
	35	29
	51	5
	52	5
	52	13
	54	5
	54	10
	67	28
	78	26
	106	47
	128	1
	136	5
4730-00-702-6363	106	31
2910-00-710-6054	99	20
5305-00-717-5460	4	2
5305-00-717-5467	3	33
	14	1
	14	11

CROSS-REFERENCE INDEXES

NATIONAL STOCK NUMBER INDEX

STOCK NUMBER	FIG.	ITEM
	20	54
	47	1
	66	52
	67	57
	67	65
	67	83
	68	17
	69	41
	71	31
	77	1
	78	1
	83	4
	88	4
	102	1
	105	1
	118	29
5305-00-719-3997	22	7
	34	16
	52	9
	54	13
	125	46
	128	28
	138	29
5305-00-719-5064	33	31
5305-00-721-4782	119	2
5305-00-721-8005	3	37
	114	1
5325-00-721-8352	22	14
	25	9
	34	29
	35	8
5310-00-722-5998	21	9
	27	4
	47	43
	49	11
5925-00-724-5531	32	6
5305-00-724-5882	131	4
	133	5
5305-00-724-5903	134	16
5305-00-724-7221	144	1
5305-00-724-7223	144	7
5305-00-724-7878	44	128
4730-00-726-5859	127	13
5975-00-727-5153	119	3
5305-00-727-6804	7	55
	7	69
	67	86
5940-00-728-7593	18	3
	22	3
	22	6
4730-00-729-4930	10	28
	10	75
5305-00-732-0512	134	2
5315-00-732-0589	131	31
5310-00-763-8927	134	23
5310-00-764-6609	13	66
	66	1
	85	19
	131	68
	131	74
	132	1
5310-00-767-0445	34	28
	128	58
	138	67
5310-00-767-9425	3	7
	7	53
	14	8
	44	3
	67	89
	68	36
	88	14
	111	3
	136	24
	143	132
5310-00-768-0321	3	9
	7	57
	7	70
	138	61
5310-00-773-7618	3	35
	7	36
	13	13
	14	2
	20	56
	26	10
	47	3
	58	14
	61	3
	62	10
	65	6
	66	53
	67	59
	67	64
	67	82
	68	16
	69	43
	71	33
	77	3
	78	3
	83	3
	84	3

CROSS-REFERENCE INDEXES

NATIONAL STOCK NUMBER INDEX

STOCK NUMBER	FIG.	ITEM	STOCK NUMBER	FIG.	ITEM
	88	3		44	48
	93	3		44	109
	97	5		47	14
	102	3		51	10
	104	2		51	18
	105	3		52	27
	106	37		85	34
	112	3	6680-00-890-2920	31	58
	117	3	5110-00-892-5071	143	54
	118	8	4730-00-893-9547	12	81
	118	22	5310-00-903-5966	3	40
	120	29		7	28
	121	3		25	3
	122	3		26	12
	125	3		29	4
	132	21		32	13
4730-00-793-2660	10	31		34	27
	12	82		44	42
	68	28		44	103
4730-00-793-2665	10	78		54	11
	12	71		62	25
4730-00-793-2697	89	5		64	4
4730-00-793-2708	10	86		67	25
4730-00-793-2806	10	67		71	21
4730-00-793-2809	10	70		77	11
4730-00-793-2810	10	64		88	7
5315-00-800-5440	128	40		90	1
5310-00-802-4710	25	83		95	1
5310-00-807-4795	31	49		96	1
5325-00-812-1894	31	8		97	6
	34	30		99	3
	35	7		99	12
5310-00-820-6653	144	2		100	8
5330-00-823-7106	63	7		105	5
5305-00-824-0951	63	6		106	26
5305-00-827-7834	67	114		117	6
5330-00-827-2813	27	10		118	1
	44	112		125	43
5330-00-827-2815	125	41		127	1
6240-00-843-0692	142	48		128	26
	142	70		128	70
	143	52		130	28
5315-00-844-0342	71	41		136	1
4730-00-857-0866	106	46		138	31
5340-00-874-7964	11	21		138	48
5930-00-876-8493	98	27	5315-00-904-6874	3	31
5975-00-878-3791	143	67	4730-00-909-8627	116	21
5340-00-878-5257	44	127	5310-00-913-8881	3	36
5310-00-880-5976	27	9		7	38
	33	34		7	65

CROSS-REFERENCE INDEXES

NATIONAL STOCK NUMBER INDEX

STOCK NUMBER	FIG.	ITEM
	7	94
	10	33
	14	4
	14	12
	26	8
	65	4
	68	14
	83	1
	88	1
	104	7
	106	39
	112	1
	118	27
	125	1
	131	12
5310-00-914-6028	13	72
	67	63
	67	81
	68	19
	84	2
	104	1
	118	21
	143	149
5310-00-915-4891	144	5
5340-00-916-6532	124	7
4820-00-919-9860	71	42
6635-00-921-6255	146	5
5310-00-924-5897	26	6
	85	1
	133	19
	135	1
5305-00-925-7853	66	4
5940-00-926-0085	28	21
	95	42
	96	42
5310-00-926-5870	133	4
5310-00-929-1807	11	22
	20	51
	25	1
	99	1
	108	2
	121	8
	122	8
5310-00-929-6395	27	8
	33	35
	44	49
	44	110
	47	15
	47	38
	51	11
	52	28
6685-00-932-6301	78	12
5310-00-933-8118	21	8
	27	3
	47	42
5310-00-933-8119	32	3
	33	47
	35	12
	101	4
	101	23
	138	47
5310-00-933-8120	4	17
	7	22
	25	33
	25	69
	31	2
	33	42
	35	26
	44	55
	44	116
	47	34
	51	2
	52	2
	54	2
	56	2
	58	2
	60	2
	62	2
	62	37
	68	12
	77	9
	91	2
	105	15
	113	6
	115	2
	118	17
	120	36
	121	38
	130	12
	138	53
5310-00-933-8121	3	43
	7	27
	8	3
	14	16
	24	2
	25	8
	26	13
	29	5
	32	12
	34	2

CROSS-REFERENCE INDEXES

NATIONAL STOCK NUMBER INDEX

STOCK NUMBER	FIG.	ITEM	STOCK NUMBER	FIG.	ITEM
	35	5		136	2
	35	30		138	30
	44	21		138	49
	44	82		143	135
	44	132	5310-00-933-8778	3	8
	49	2		7	52
	51	6		14	7
	52	6		44	2
	52	10		67	88
	54	6		68	35
	54	14		88	13
5310-00-933-8121	62	6		111	2
	62	44		131	3
	67	26		136	23
	67	71		138	62
	68	31		143	131
	71	22	5310-00-934-9748	3	44
	77	12		21	7
	78	27		27	2
	80	2		33	28
	81	2		47	41
	82	2		49	9
	88	8		52	31
	89	2		54	36
	90	2		125	6
	92	2	5310-00-934-9757	98	28
	95	2	5310-00-934-9759	3	57
	96	2		32	4
	97	7		33	48
	99	4		34	11
	99	13		35	13
	100	9		101	3
	102	5		101	22
	105	6		125	10
	106	27	5310-00-934-9760	4	18
	108	9		7	23
	110	2		25	32
	113	2		25	68
	114	2		33	43
	117	7		44	54
	118	2		44	115
	120	3		56	1
	121	17		58	1
	122	17		60	1
	126	5		105	14
	127	2		113	7
	128	2		118	16
	128	16		130	11
	128	71		138	52
	130	2	5310-00-934-9761	27	7

CROSS-REFERENCE INDEXES

NATIONAL STOCK NUMBER INDEX

STOCK NUMBER	FIG.	ITEM	STOCK NUMBER	FIG.	ITEM
	33	36	5310-00-950-0440	125	45
	44	50	5306-00-961-3444	125	59
	44	111		125	60
	47	16	4710-00-961-9292	BULK	40
	47	37	4730-00-965-1235	44	10
	51	12		44	71
	85	33	5330-00-968-1753	27	12
5310-00-934-9765	35	27		49	13
4730-00-935-1528	10	83		52	33
	12	61		54	39
	12	79		125	42
6640-00-935-4286	143	22	5360-00-970-4237	90	23
	143	142	5120-00-970-6423	146	24
5310-00-937-0453	66	2	6135-00-971-8485	143	15
	85	20	5310-00-974-6623	9	3
	131	69		109	2
	131	75		126	2
	132	2		128	59
5310-00-937-0454	26	2		132	10
	65	2		138	68
	84	6	5310-00-974-6642	134	24
	85	2	4730-00-975-7569	13	1
	106	2		13	16
	133	17	5940-00-978-7672	136	17
5325-00-938-6702	43	28		143	148
5305-00-938-7827	121	24	5305-00-980-6871	121	10
	122	24		122	10
5305-00-941-3579	131	71	5310-00-984-3806	13	26
6240-00-941-8487	30	3		13	60
	30	6	5305-00-984-4686	51	1
	30	9		52	1
	30	12		54	1
	46	11		115	1
5305-00-943-2093	85	22		120	35
	132	4		121	37
5310-00-943-2139	54	27	5310-00-984-7042	3	34
4730-00-945-7154	68	6		7	35
6145-00-946-1361	BULK	66		7	93
4730-00-947-0364	116	1		13	12
5305-00-947-7051	26	7		14	3
	65	1		20	55
4730-00-947-7474	3	19		26	9
5305-00-948-0667	26	1		31	6
	84	5		34	24
	85	4		35	2
	106	1		46	2
5305-00-948-0669	133	16		47	2
5330-00-948-0704	27	11		58	13
	44	51		61	2
	47	40		62	9

CROSS-REFERENCE INDEXES

NATIONAL STOCK NUMBER INDEX

STOCK NUMBER	FIG.	ITEM
	65	5
	66	37
	67	58
	68	15
	69	42
	71	32
	77	2
	78	2
	83	2
	88	2
	93	2
	97	4
	102	2
	104	8
	105	2
	106	38
	112	2
	117	12
	118	7
	120	28
	121	2
	122	2
	125	2
	132	20
	139	2
5305-00-984-4993	96	49
5325-00-986-2929	51	26
	52	35
	54	8
	91	5
	121	48
5325-00-990-7157	66	51
5340-00-990-7158	14	10
	44	4
	68	43
	88	17
	111	8
	143	140
4710-00-990-8503	BULK	31
6210-00-990-9973	30	11
5310-00-995-2723	52	14
	54	15
6210-01-007-7972	30	5
	46	10
6210-01-007-7973	30	2
6685-01-012-4234	112	9
6685-01-012-4235	112	8
5310-01-012-7400	59	9
	86	20
5120-01-013-1676	143	66
6110-01-013-6482	35	59
	40	
5935-01-017-3290	33	77
5325-01-017-5623	124	5
4730-01-021-6346	66	35
5305-01-021-6824	98	30
5305-01-022-1950	98	22
4030-01-022-5666	2	15
	2	32
	20	18
	20	29
	23	35
	138	23
	138	42
	142	38
	142	60
	142	85
2920-01-024-3965	98	21
4730-01-027-0723	85	16
5975-01-029-7710	60	5
	85	25
	113	10
5340-01-030-6854	80	13
	81	13
	82	13
5930-01-036-0980	30	22
	46	12
3110-01-039-6476	134	12
3110-01-039-6477	134	8
5120-01-044-1884	146	18
5305-01-047-9435	93	20
5999-01-052-3522	37	8
5950-01-052-5951	37	6
	42	7
5340-01-053-7128	BULK	17
4730-01-057-0545	10	51
5305-01-062-5594	14	24
	14	28
	14	32
	14	36
4730-01-067-3926	85	9
5935-01-073-1638	51	14
4730-01-076-8903	10	85
	12	34
	78	7
5935-01-076-9456	95	14
	96	14
4730-01-078-9945	1	30
	1	39
	1	47

CROSS-REFERENCE INDEXES

NATIONAL STOCK NUMBER INDEX

STOCK NUMBER	FIG.	ITEM
	7	3
5975-01-084-0987	51	13
4730-01-086-6157	1	20
	1	48
	1	68
	7	14
	7	45
	7	103
	67	31
	67	36
	69	53
	116	10
	116	16
	116	18
	137	8
	137	16
	137	38
	137	64
	138	1
5930-01-086-7489	30	20
4820-01-087-6419	10	17
5330-01-087-8831	98	24
6210-01-088-7481	30	8
5330-01-089-0655	71	40
5340-01-089-9033	43	26
5310-01-091-1248	3	38
	7	26
	8	4
	10	34
	11	23
	14	17
	20	52
	24	3
	25	2
	26	14
	29	6
	32	11
	34	3
	35	6
	35	31
	44	22
	44	83
	44	133
	49	3
	51	7
	52	7
	54	7
	62	7
	62	45
	67	27
	67	72
	68	32
	71	23
	77	13
	78	28
	80	3
	81	3
	82	3
	88	9
	89	3
	90	3
	92	3
	95	3
	96	3
	97	8
	99	2
	99	14
	100	10
	102	6
	105	7
	106	28
	108	3
	108	10
	110	3
	113	3
	114	3
	117	8
	118	3
	120	4
	121	9
	121	18
	122	9
	122	18
	126	6
	127	3
	128	3
	128	21
	128	72
	130	3
	31	8
	136	3
	138	50
	143	136
5970-01-093-0413	16	30
	19	43
	20	5
	23	26
	126	18
	128	32
5970-01-093-1683	16	31

CROSS-REFERENCE INDEXES

NATIONAL STOCK NUMBER INDEX

STOCK NUMBER	FIG.	ITEM	STOCK NUMBER	FIG.	ITEM
	17	16		137	59
	19	42	5340-01-142-9987	33	49
	126	18		142	42
	128	32		142	88
6145-01-099-4742	BULK	69	5340-01-142-9988	11	20
6145-01-099-8029	BULK	63		32	5
6145-01-099-8030	BULK	64		33	50
5305-01-102-2665	59	37	5340-01-143-0638	138	44
	86	7	5905-01-143-2706	52	19
	87	7		54	20
6630-01-103-9007	143	14	4730-01-146-5901	7	49
4730-01-105-4065	10	82		66	11
	11	13	4730-01-148-6945	25	19
	12	62		25	31
	13	46		25	52
	83	9		25	67
5999-01-110-4623	37	3	5305-01-155-7201	63	15
	41	3	5310-01-156-9895	139	11
4320-01-111-6928	63	19	5120-01-158-0236	146	17
4320-01-116-3316	139	9	5999-01-158-8887	2	11
4730-01-116-9214	10	53		16	26
	12	60		16	26
	78	10		19	38
	85	18		27	38
4730-01-117-2791	12	74		27	38
5310-01-119-0460	8	7	4730-01-160-5762	10	63
	44	39		12	68
	44	100		78	9
	62	35		85	17
	62	47	5970-01-163-1103	BULK	26
	68	42	5340-01-163-5499	35	66
	78	42	4730-01-164-3365	100	6
4820-01-121-0846	12	78	5340-01-166-8694	31	4
4730-01-127-6274	133	15	5935-01-167-6148	95	15
5120-01-131-0139	146	11		96	15
5120-01-131-0140	146	16	4720-01-168-1546	BULK	18
4820-01-133-7860	25	17	5999-01-176-7106	41	9
	25	50	5935-01-180-8025	54	42
4730-01-135-5587	6	3	6110-01-184-7387	37	7
5340-01-138-7808	2	4		41	8
	2	22		42	6
	33	51	5331-01-186-9053	4	21
	138	27	5331-01-186-9054	139	8
	142	64	5330-01-187-8604	134	7
4730-01-140-0444	3	21	5999-01-188-4254	40	1
4720-01-141-1454	BULK	50	2910-01-188-8198	137	60
4730-01-141-4132	25	15	6350-01-196-0142	47	9
4030-01-142-0456	3	30	5340-01-196-8801	132	26
	13	27	5310-01-197-6252	9	6
	13	61	6810-01-200-8009	143	19

CROSS-REFERENCE INDEXES

NATIONAL STOCK NUMBER INDEX

STOCK NUMBER	FIG.	ITEM
	143	146
6810-01-200-8010	143	18
	143	147
5330-01-201-0237	4	13
5999-01-203-3814	41	1
5975-01-205-5379	119	3
4730-01-206-4814	66	13
	106	17
4931-01-208-5707	37	1
5305-01-210-4595	134	27
5975-01-210-9825	3	54
	138	28
5310-01-211-9838	26	21
	26	37
	101	39
	115	22
4730-01-221-1471	12	80
4010-01-225-2681	117	5
	136	15
5970-01-226-8102	2	16
	2	33
	3	49
	17	6
	17	17
	19	47
	20	12
	20	45
	21	18
	64	11
	94	25
	142	35
	142	86
	142	102
4730-01-231-2787	1	40
	1	46
6350-01-232-6245	47	8
6210-01-232-7683	24	4
4730-01-233-0796	6	2
5330-01-233-3247	129	13
5330-01-233-3248	129	15
5999-01-235-8936	36	2
	38	4
6145-01-235-9750	BULK	67
6145-01-237-6923	BULK	65
4520-01-237-8038	39	1
4240-01-239-2349	143	50
4730-01-240-4263	10	27
	106	8
4730-01-244-4673	11	11
5315-01-246-4000	5	2
5330-01-250-1498	67	46
6105-01-251-1491	60	28
4820-01-251-7616	12	75
	109	4
3040-01-252-5475	4	8
4610-01-253-4294	103	18
5365-01-254-2346	129	38
4730-01-255-1219	106	21
4330-01-257-0870	129	14
5305-01-258-8209	133	3
3010-01-259-2375	60	17
5315-01-260-5614	63	18
5330-01-264-1093	13	3
5330-01-264-5952	60	22
5310-01-265-8957	14	25
	14	29
	14	33
	14	37
6250-01-271-7504	24	9
	29	10
6110-01-273-7849	36	3
	41	4
4720-01-277-7559	BULK	19
5999-01-279-3055	16	4
	16	23
	19	4
	19	13
	19	35
	45	21
	46	22
	48	8
	50	6
	78	17
	92	7
4220-01-279-3927	129	93
5331-01-282-9268	129	67
4820-01-283-2992	83	6
4730-01-283-4927	85	10
4820-01-289-0996	106	7
	106	22
4730-01-289-6097	129	80
4730-01-289-9537	10	81
	12	63
	77	20
4730-01-293-2917	25	16
	25	49
2330-01-294-3367	145	1
4730-01-294-8140	12	57
5325-01-295-4768	142	8
	142	17

CROSS-REFERENCE INDEXES

NATIONAL STOCK NUMBER INDEX

STOCK NUMBER	FIG.	ITEM	STOCK NUMBER	FIG.	ITEM
4730-01-297-0172	15	37	4720-01-334-9212	BULK	44
4730-01-297-4659	59	7	3040-01-334-9258	135	21
	59	35	5330-01-334-9937	134	30
	86	16	4730-01-335-0114	134	37
	87	16	4730-01-335-0115	134	33
5305-01-299-6602	63	2	5120-01-335-0883	143	59
4720-01-300-2999	BULK	21	4320-01-337-7316	135	22
5330-01-302-7671	63	8	5330-01-338-7875	132	8
5940-01-303-7417	95	17	5999-01-343-8906	16	25
	96	17		19	37
5999-01-306-9577	36	9		27	37
	38	10		48	10
5340-01-307-2679	11	8		50	7
4820-01-307-3597	143	92		55	7
5340-01-307-4394	127	7		95	38
5340-01-307-4395	10	41		96	38
6645-01-316-2183	33	25	5999-01-343-8909	2	11
5905-01-318-0794	57	27		2	29
5330-01-318-8208	129	34		16	27
5430-01-318-9434	141	1		17	15
3110-01-321-1986	5	8		19	39
3110-01-321-7994	5	6		20	10
6110-01-322-6414	38	1		23	32
4730-01-323-5135	59	16		27	39
	86	26		53	5
	87	26		55	8
4820-01-323-7038	57	8		94	9
4820-01-323-7049	57	11		125	30
4820-01-323-7050	59	17		142	81
	86	27	5999-01-344-8758	23	4
	87	27		56	8
4820-01-323-7325	57	6		56	14
	57	13		56	20
	59	19		58	9
	86	29		60	8
	87	29		80	6
5330-01-323-8846	57	7		81	6
	57	12		83	23
	59	18		90	8
	86	28		101	9
	87	28		101	28
5305-01-325-8388	134	5		113	19
5330-01-326-0780	4	11		114	8
5330-01-326-0781	63	10		115	16
4320-01-326-2598	139	7		138	35
4820-01-326-7879	1	24	5999-01-344-8759	2	7
	1	51		2	25
4720-01-327-1606	98	6		3	47
4320-01-327-4582	63	14		16	24
5330-01-334-7177	134	31		17	4

CROSS-REFERENCE INDEXES

NATIONAL STOCK NUMBER INDEX

STOCK NUMBER	FIG.	ITEM
	17	14
	19	36
	20	3
	20	43
	23	23
	46	23
	48	9
	64	9
	94	11
	95	29
	96	29
	125	28
	126	20
	128	34
	138	15
	142	33
	142	55
	142	76
5330-01-345-0251	132	16
6150-01-345-5613	2	1
6150-01-345-5614	2	19
6150-01-345-5615	20	1
6150-01-345-5616	20	23
6150-01-345-5617	20	41
6150-01-345-5618	21	13
6150-01-345-5619	16	2
6150-01-345-5620	3	45
6150-01-345-5621	17	2
6150-01-345-5622	19	2
6150-01-345-5623	19	11
6150-01-345-5624	19	22
6150-01-345-5625	20	13
6150-01-345-5626	21	2
4720-01-345-5640	1	66
	7	13
4720-01-345-5641	1	10
4320-01-345-5681	4	1
4730-01-345-5781	1	8
5340-01-345-5783	13	50
	14	26
6150-01-345-6104	20	35
6150-01-345-6105	23	2
6150-01-345-6106	23	21
4320-01-345-6669	3	59
6105-01-345-6670	5	1
4610-01-345-6671	7	33
4610-01-345-6672	7	33
4730-01-345-7673	109	108
6150-01-346-1702	16	12
5342-01-346-1845	14	22
5342-01-346-1846	14	30
5342-01-346-1847	14	34
5340-01-346-1996	13	24
5935-01-346-4631	21	22
5935-01-346-4632	19	33
4820-01-346-4647	71	39
4810-01-346-4654	67	12
	76	
4820-01-346-4655	67	43
4820-01-346-4660	57	2
6150-01-346-4661	60	6
6150-01-346-4662	78	15
6150-01-346-4663	92	5
6150-01-346-4664	93	5
	94	1
6150-01-346-4665	93	7
	94	2
6150-01-346-4666	93	8
	94	3
6150-01-346-4667	93	10
	94	4
6150-01-346-4668	50	3
4320-01-346-4703	63	1
4320-01-346-4704	57	1
4810-01-346-4735	73	3
	74	6
	75	3
6130-01-346-4736	93	4
6130-01-346-4737	93	14
6680-01-346-4743	92	19
6110-01-346-4747	35	55
	36	
6110-01-346-4748	35	56
	37	
6110-01-346-4749	35	57
	38	
6110-01-346-4750	35	8
	39	
6110-01—346-4751	35	61
	42	
4440-01-346-4756	91	4
4730-01-346-5551	15	39
5935-01-346-7132	16	3
	19	3
5935-01-346-7133	16	13
5935-01-346-7134	16	14
5935-01-346-7135	16	15
5935-01-346-7136	16	16
	23	22
5935-01-346-7137	16	17

CROSS-REFERENCE INDEXES

NATIONAL STOCK NUMBER INDEX

STOCK NUMBER	FIG.	ITEM
5935-01-346-7138	16	19
5935-01-346-7139	27	34
5935-01-346-7140	16	21
	19	27
5935-01-346-7141	16	22
	19	30
5935-01-346-7143	17	12
	19	26
5935-01-346-7145	19	12
5935-01-346-7146	19	23
5935-01-346-7147	19	24
5935-01-346-7148	19	25
5935-01-346-7149	19	29
5935-01-346-7150	19	31
5935-01-346-7151	19	34
	56	13
	80	5
	83	21
5935-01-346-7152	20	2
	128	33
5935-01-346-7153	20	14
5935-01-346-7154	20	24
5935-01-346-7155	23	31
5935-01-346-7156	27	26
5935-01-346-7173	21	14
5342-01-346-7265	13	19
	71	11
5935-01-347-0023	23	3
5935-01-347-0024	27	27
5935-01-347-0025	27	28
	27	31
5935-01-347-0026	27	29
5935-01-347-0027	27	30
5935-01-347-0028	27	32
5935-01-347-0029	27	33
5935-01-347-0030	27	35
	53	4
	55	6
	125	25
5935-01-347-0031	3	46
5935-01-347-0032	45	20
5935-01-347-0033	48	6
5935-01-347-0034	48	7
	50	5
	55	5
5935-01-347-0035	50	4
5935-01-347-0036	53	3
	55	4
	125	24
5935-01-347-0037	94	6
4810-01-347-0038	67	21
4730-01-347-0056	10	38
4610-01-347-0064	56	11
	56	17
	56	23
5935-01-347-3655	19	28
5935-01-347-5398	16	18
4720-01-347-5480	1	28
4730-01-347-6070	1	17
	1	45
	137	70
4730-01-347-6073	1	13
	137	26
	138	3
	142	94
4810-01-347-6842	66	42
	73	2
4610-01-347-6847	67	13
	72	
4730-01-347-8543	7	2
4730-01-347-8544	1	18
	3	25
	137	2
	137	49
6210-01-348-3133	29	1
4520-01-348-4216	126	21
4820-01-348-4278	135	7
4320-01-348-4386	137	61
4320-01-348-4387	139	3
5970-01-348-4761	16	32
	19	46
	23	6
	56	9
	56	15
	56	21
	58	6
	60	9
	80	8
	81	8
	83	28
	90	11
	95	41
	96	41
	101	12
	101	31
	113	17
	114	6
	115	14
5970-01-348-4762	20	17
	20	28

CROSS-REFERENCE INDEXES

NATIONAL STOCK NUMBER INDEX

STOCK NUMBER	FIG.	ITEM
	131	22
5945-01-348-5038	33	44
5930-01-348-5049	26	29
	26	45
5940-01-348-5462	31	45
	35	53
	47	29
5945-01-348-5783	31	18
5945-01-348-5784	31	21
5945-01-348-5785	31	22
5945-01-348-5786	31	23
5930-01-348-5821	30	15
	33	30
	47	6
5930-01-348-5822	30	16
4730-01-348-6232	10	79
4730-01-348-6244	10	65
4730-01-348-6246	11	12
	12	73
	13	69
	44	16
	44	77
	69	6
	83	7
	109	5
	132	18
	133	14
4730-01-348-6247	11	15
4730-01-348-6248	13	45
	25	64
	25	81
	68	9
4320-01-348-6395	4	27
5940-01-348-6660	31	46
	35	52
	47	26
4710-01-348-7107	13	56
4710-01-348-7108	25	11
	25	45
5945-01-348-7142	31	15
5945-01-348-7143	31	16
5945-01-348-7144	31	17
5945-01-348-7145	31	24
5945-01-348-7146	31	29
5930-01-348-7197	30	21
	46	14
	47	7
5970-01-348-7360	2	17
	138	16
	142	57
	142	78
6645-01-348-7435	38	3
4730-01-348-7730	25	12
4730-01-348-7754	10	80
5925-01-348-7824	32	6
5925-01-348-7825	35	14
5925-01-348-7826	35	20
5945-01-348-7837	31	34
4820-01-348-7869	7	4
	7	85
4820-01-348-7870	10	37
4820-01-348-7871	10	74
4820-01-348-7874	10	23
4730-01-348-7920	15	38
	59	33
	86	35
	87	35
4730-01-348-7922	3	18
4730-01-348-7923	3	28
	137	46
	137	67
4730-01-348-8004	10	42
5940-01-348-8231	35	51
	47	28
5970-01-348-8251	19	45
	46	26
	142	44
	142	66
5305-01-348-8362	18	4
	22	15
5307-01-348-8396	4	9
5307-01-348-8397	4	16
5930-01-348-8590	30	17
5930-01-348-8591	30	19
5930-01-348-8592	30	18
4710-01-348-8926	13	18
4710-01-348-8927	13	29
4710-01-348-8928	13	49
4710-01-348-8929	13	63
4320-01-348-9529	4	3
4320-01-348-9615	4	14
4320-01-348-9616	4	20
5945-01-349-0037	31	50
5945-01-349-0038	31	51
5945-01-349-0039	31	52
5930-01-349-0117	30	14
2040-01-349-0496	1	2
4320-01-349-0641	124	3
4320-01-349-0642	124	3
5305-01-349-0799	4	4

CROSS-REFERENCE INDEXES

NATIONAL STOCK NUMBER INDEX

STOCK NUMBER	FIG.	ITEM
5305-01-349-0816	11	19
5310-01-349-0828	35	63
5925-01-349-0855	35	18
5945-01-349-0893	31	19
5945-01-349-0894	31	20
5945-01-349-0895	31	25
5945-01-349-0896	31	27
5945-01-349-0897	31	28
5320-01-349-0932	2	2
	2	20
	62	21
	62	22
	68	40
	118	32
	123	8
	128	76
	138	24
	142	40
	142	62
	142	87
5320-01-349-0933	3	13
	25	26
	25	41
	25	59
	25	77
	44	30
	44	91
	62	13
	66	46
	66	49
	69	49
	77	22
	78	36
	89	10
	97	1
	99	8
	119	4
	123	5
	128	6
	130	17
	136	18
	138	64
	143	118
	143	122
	143	126
6210-01-349-1005	57	21
5945-01-349-1770	31	31
5945-01-349-1771	31	32
5945-01-349-1772	31	33
4710-01-349-1784	13	64
5925-01-349-1799	35	19
4720-01-349-1945	12	56
4710-01-349-2433	4	28
5940-01-349-2716	31	44
	35	46
	44	60
	44	121
	49	18
	54	24
5310-01-349-2800	4	5
5310-01-349-2801	4	15
4720-01-349-3637	137	28
4730-01-349-3781	10	71
4730-01-349-3785	10	26
4820-01-349-3813	12	69
4820-01-349-3814	8	25
4820-01-349-3815	3	17
4820-01-349-3816	12	72
	13	44
	25	65
	25	82
	68	8
	69	5
	109	9
	127	9
	132	17
	133	13
4820-01-349-3819	10	55
4730-01-349-3866	7	7
4730-01-349-3884	15	4
4720-01-349-3898	11	1
4720-01-349-3899	11	3
4720-01-349-3900	11	5
4720-01-349-3901	11	7
4720-01-349-3902	13	6
4720-01-349-3903	13	42
4720-01-349-3904	13	54
6240-01-349-4407	142	67
4730-01-349-4435	7	63
5999-01-349-5096	36	4
	42	2
4710-01-349-5150	12	52
4710-01-349-5151	12	53
4710-01-349-5152	12	54
4710-01-349-5153	12	55
4710-01-349-5154	12	66
4710-01-349-5155	12	58
4710-01-349-5156	12	64
4710-01-349-5157	12	65
4710-01-349-5158	12	67

CROSS-REFERENCE INDEXES

NATIONAL STOCK NUMBER INDEX

STOCK NUMBER	FIG.	ITEM	STOCK NUMBER	FIG.	ITEM
4710-01-349-5159	13	9	4730-01-349-7634	79	6
4710-01-349-5160	13	10	4610-01-349-7641	7	67
4720-01-349-5226	137	55	4610-01-349-7642	7	68
5999-01-349-5272	38	5	4610-01-349-7643	7	72
5945-01-349-5445	31	26	4610-01-349-7644	7	74
5330-01-349-5541	7	76	4610-01-349-7645	7	77
5330-01-349-5542	8	27	5999-01-349-7667	21	15
	8	28		94	10
5330-01-349-5567	4		5999-01-349-7668	21	23
5925-01-349-5601	35	16		142	100
5925-01-349-5602	35	17	4730-01-349-7767	44	9
5330-01-349-5604	33	29		44	70
5340-01-349-5665	20	57	4720-01-349-7777	14	20
	69	46	4210-01-349-7779	143	96
5930-01-349-5677	44	24	4210-01-349-7780	143	102
5930-01-349-5678	44	25	4730-01-349-7814	11	17
5930-01-349-5679	44	26	6685-01-349-7925	146	48
5930-01-349-5680	44	27	4730-01-349-7958	10	76
5930-01-349-5681	44	28	4730-01-349-7972	79	3
5930-01-349-5682	44	29	5920-01-349-7981	52	18
5315-01-549-5783	4	19		54	19
5340-01-349-5910	13	47		125	53
	71	7	5999-01-349-8336	39	2
5340-01-349-5911	13	58	5940-01-349-8395	44	62
5340-01-349-5920	7	19		44	123
5340-01-349-5921	3	11		49	19
5310-01-349-6175	11	14		54	26
5310-01-349-6177	11	16	5970-01-349-8562	16	6
5330-01-349-6190	1	9		16	33
	1	12		19	6
	4	32		19	16
5330-01-349-6191	1	33		19	44
	1	41		78	20
	1	54		92	10
	1	65	5970-01-349-8562	94	24
	7	9		95	32
	7	98		96	32
	66	34	6620-01-349-8685	25	18
5340-01-349-6290	1	34		25	51
	116	8	4610-01-349-8731	143	33
	137	57	5330-01-349-8921	1	23
	143	101		1	53
6680-01-349-6669	83	13		1	57
4710-01-349-7173	44	12		1	67
4710-01-349-7174	44	13		3	27
4710-01-349-7175	44	14		7	8
4720-01-349-7312	13	2		7	15
4720-01-349-7313	13	4		7	46
4720-01-349-7314	13	55		7	80
4720-01-349-7320	79	5		7	104

CROSS-REFERENCE INDEXES

NATIONAL STOCK NUMBER INDEX

STOCK NUMBER	FIG.	ITEM	STOCK NUMBER	FIG.	ITEM
	67	32		95	28
	67	37		96	28
	69	54	5935-01-350-0159	2	6
	116	9		2	24
	116	15		17	3
	143	97		20	42
	143	103		64	8
5330-01-349-8922	3	22		138	14
	6	4	5935-01-350-0160	2	28
	59	3	5935-01-350-0161	125	21
	86	12	5935-01-350-0162	125	22
	87	12	5935-01-350-0163	125	23
	106	10	5935-01-350-0164	125	26
	143	90	5935-01-350-0165	125	27
5330-01-349-8925	47	10	5935-01-350-0166	2	10
5330-01-349-8926	52	4		17	13
5330-01-349-8928	13	22		20	9
	13	53	5935-01-350-0167	126	19
	71	14	5935-01-350-0168	131	20
5330-01-349-8929	14	23	4820-01-350-0179	135	14
	14	31	6150-01-350-0180	115	5
5330-01-349-8930	14	27	6150-01-350-0181	115	6
	14	35	6150-01-350-0182	115	7
	116	2	6150-01-350-0183	142	74
5935-01-349-9010	20	19	6150-01-350-0184	131	17
	20	30	4820-01-350-0213	78	11
5315-01-349-9055	4	6	6630-01-350-0250	143	25
5930-01-349-9378	95	53	5315-01-350-0384	3	4
	96	53	5925-01-350-0403	95	52
5930-01-3-9-9379	95	54		96	52
	96	54	5310-01-350-0420	57	5
5305-01-349-9586	30	27	5310-01-350-0421	79	1
	33	1	5315-01-350-0429	3	3
	43	3	5330-01-350-0466	44	44
	47	17		44	53
	49	6		44	105
	52	20		44	114
	54	32	5330-01-350-0467	79	12
	125	55	5S30-01-350-0486	24	7
5310-01-349-9615	49	4		29	8
	120	11	5305-01-350-0505	8	14
5310-01-349-9616	25	21	5325-01-350-0515	57	4
	25	54		57	10
5950-01-349-9862	90	29	5325-01-350-0516	67	45
4730-01-349-9893	12	77	5310-01-350-0540	13	71
4710-01-350-0126	67	2	5310-01-350-0558	67	44
5935-01-350-0156	78	16	5340-01-350-0567	79	4
	92	6	6130-01-350-0828	31	55
5935-01-350-0157	94	7	5340-01-350-0865	44	23
5935-01-350-0158	94	8		44	84

CROSS-REFERENCE INDEXES

NATIONAL STOCK NUMBER INDEX

STOCK NUMBER	FIG.	ITEM
4710-01-350-0923	13	30
5330-01-350-1351	46	3
5330-01-350-1352	52	16
	54	17
6150-01-350-1386	142	53
6150-01-350-1387	142	31
6350-01-350-1447	18	1
6350-01-350-1448	22	1
6350-01-350-1449	22	4
4610-01-350-1450	143	1
4810-01-350-1518	59	20
4820-01-350-1538	90	
4820-01-350-1559	89	6
4820-01-350-1564	66	14
	106	18
4730-01-350-1581	1	26
4730-01-350-1590	1	25
4440-01-350-1647	91	7
4440-01-350-1648	91	8
4440-01-350-1649	91	9
4730-01-350-1787	10	58
5925-01-350-1844	32	7
5925-01-350-1845	32	8
5925-01-350-1846	34	12
5945-01-350-1851	73	6
	74	9
	75	6
5930-01-350-1868	30	13
5935-01-350-1923	79	11
4710-01-350-2151	67	20
6625-01-350-2301	102	15
5330-01-350-2912	21	12
5330-01-350-2913	51	4
5935-01-350-3278	21	11
	125	9
4730-01-350-3731	59	6
4730-01-350-3733	77	18
4730-01-350-3742	67	39
	69	40
4730-01-350-3744	6	5
4730-01-350-3745	12	76
4730-01-350-3756	3	24
4730-01-350-3760	77	17
4730-01-350-3762	67	17
4730-01-350-3770	59	8
	59	36
	86	17
	87	17
4730-01-350-3777	77	5
4730-01-350-3778	77	16
4730-01-350-3782	67	7
4720-01-350-3787	137	23
4730-01-350-3825	59	2
	86	11
	87	11
	106	9
4730-01-350-4025	67	14
4730-01-350-4062	10	52
4730-01-350-4064	67	92
5935-01-350-4123	33	32
5930-01-350-4171	59	30
	85	28
	86	40
	87	40
6680-01-350-4912	83	16
6150-01-350-5439	128	30
4310-01-350-5466	128	13
	129	
5930-01-350-5602	102	16
4140-01-350-5618	64	19
4710-01-350-5639	67	9
4710-01-350-5640	67	1
4710-01-350-5641	67	16
4710-01-350-5642	67	15
4140-01-350-5753	98	9
4820-01-350-5777	77	21
4710-01-350-5831	67	6
5999-01-350-5851	43	27
5315-01-350-5962	4	7
4810-01-350-6039	73	8
	74	11
	75	8
5305-01-350-6058	57	14
5305-01-350-6059	57	17
4820-01-350-6175	15	1
4730-01-350-6203	15	35
4730-01-350-6205	59	14
	86	24
	87	24
4730-01-350-6213	59	13
4730-01-350-6214	10	39
4730-01-350-6219	15	25
4730-01-350-6281	85	7
4730-01-350-6290	1	11
	4	24
	137	31
	137	36
5945-01-350-6554	31	30
5999-01-350-6633	20	15
	20	25

CROSS-REFERENCE INDEXES

NATIONAL STOCK NUMBER INDEX

STOCK NUMBER	FIG.	ITEM
	125	31
5340-01-350-6801	2	5
	2	23
	138	26
	142	43
	142	65
	142	90
5306-01-350-6863	90	4
5975-01-350-6874	83	30
6685-01-350-6997	25	72
6665-01-350-7047	102	14
4010-01-350-7105	1	6
	136	12
4730-01-350-7163	62	42
4710-01-350-7319	67	10
4710-01-350-7320	68	24
4730-01-350-7441	13	68
	68	10
	69	7
	77	6
4730-01-350-7445	103	15
4730-01-350-7449	67	11
4730-01-350-7469	68	23
4710-01-350-7665	66	5
4710-01-350-7666	66	41
4710-01-350-7667	66	43
5930-01-350-7668	83	14
5930-01-350-7669	83	31
4730-01-350-7737	68	18
3940-01-350-7919	1	5
	136	14
66S0-01-350-7971	79	13
5945-01-350-8263	98	43
5310-01-350-8556	35	64
5305-01-350-8600	76	1
5340-01-350-8619	90	22
5920-01-350-8641	102	24
5999-01-350-8908	33	38
4730-01-350-8944	66	36
4810-01-350-8967	109	24
4820-01-350-9002	69	35
4820-01-350-9009	65	16
4810-01-350-9010	82	11
4820-01-350-9014	68	2
	69	22
4820-01-350-9016	10	68
4730-01-350-9026	106	24
4730-01-350-9027	106	25
4730-01-350-9028	59	23
	86	33
	87	33
4730-01-350-9030	65	15
4730-01-350-9033	11	10
	44	15
	44	76
4730-01-350-9058	67	33
4730-01-350-9096	72	5
4330-01-350-9101	109	17
4330-01-350-9102	65	27
4820-01-350-9171	74	54
	75	51
	76	9
4710-01-350-9187	68	39
4730-01-350-9193	59	25
	86	22
	87	22
4710-01-350-9801	67	18
4710-01-351-0156	69	4
4710-01-351-0157	69	10
4710-01-351-0158	69	16
4710-01-351-0159	69	33
4710-01-351-0160	69	34
2920-01-351-0185	98	19
5305-01-351-0821	31	11
	35	22
	43	21
	78	32
5305-01-351-0881	44	47
	44	108
4140-01-351-0964	64	18
5330-01-351-1247	99	23
5325-01-351-1287	73	31
	74	34
	75	31
5325-01-351-1288	73	34
	74	37
	75	34
5325-01-351-1290	73	28
	74	31
	75	28
4730-01-351-1536	106	52
4730-01-351-1566	106	20
4730-01-351-1567	100	3
4730-01-351-1569	86	23
	87	23
4730-01-351-1571	106	13
4320-01-351-1668	63	9
6110-01-351-1674	35	60
	41	
4730-01-351-1694	85	15

CROSS-REFERENCE INDEXES

NATIONAL STOCK NUMBER INDEX

STOCK NUMBER	FIG.	ITEM
5306-01-351-2083	67	95
4610-01-351-2092	83	12
5310-01-351-2598	79	2
5310-01-351-2613	26	20
	26	36
	33	40
	54	29
	143	119
	143	123
	143	127
5330-01-351-2757	67	100
5306-01-351-4304	71	13
	106	16
5305-01-351-4313	60	3
	113	5
4730-01-351-2812	109	33
5330-01-351-2818	59	
	86	
	87	
4820-01-351-2935	67	51
4820-01-351-2936	69	3
4810-01-351-2942	80	11
	81	11
4820-01-351-2948	3	23
	65	30
4820-01-351-2949	84	13
4730-01-351-2965	103	17
2910-01-351-3018	98	17
4730-01-351-3031	72	4
6830-01-351-3112	9	1
4730-01-351-3127	106	35
5340-01-351-3323	67	48
	69	1
	71	1
5340-01-351-3329	59	43
	86	5
	87	5
5340-01-351-3340	85	36
4820-01-351-3432	15	40
	59	34
5310-01-351-3476	65	22
5310-01-351-3532	65	23
4730-01-351-4005	106	43
4730-01-351-4007	59	24
	86	34
	87	34
4720-01-351-4011	137	18
6105-01-351-4040	128	39
6105-01-351-4069	140	1
4730-01-351-4083	12	46
5640-01-351-4186	70	1
5640-01-351-4187	70	2
5640-01-351-4188	70	4
5640-01-351-4189	70	5
5640-01-351-4190	70	6
5640-01-351-4191	70	9
5640-01-351-4192	70	10
5640-01-351-4193	70	12
5640-01-351-4194	70	14
5640-01-351-4195	70	17
5640-01-351-4196	70	18
5640-01-351-4197	70	19
5640-01-351-4198	70	20
5340-01-351-4233	3	2
3120-01-351-4284	73	50
5306-01-351-4304	13	20
	13	51
	71	13
5305-01-351-4310	62	36
	68	11
5305-01-351-4311	86	18
	87	18
5305-01-351-4312	101	5
	101	24
	138	46
5305-01-351-4313	60	3
	113	5
5305-01-351-4470	109	1
4710-01-351-4483	67	19
5430-01-351-4547	86	42
	87	42
6625-01-351-4899	35	39
5325-01-351-5143	103	4
5306-01-351-5167	64	15
	121	5
	122	5
5305-01-351-5177	59	11
5365-01-351-5213	93	21
4730-01-351-5230	106	45
5340-01-351-5442	14	18
5930-01-351-5664	138	58
4730-01-351-5847	67	41
4730-01-351-5853	77	7
4730-01-351-5866	68	4
	69	20
	84	12
4730-01-351-5872	67	22
4730-01-351-5879	67	98
4730-01-351-5880	67	42
4720-01-351-5891	137	12

CROSS-REFERENCE INDEXES

NATIONAL STOCK NUMBER INDEX

STOCK NUMBER	FIG.	ITEM	STOCK NUMBER	FIG.	ITEM
4730-91-351-5906	68	1	5330-01-351-7666	85	8
	69	21	5330-01-351-7667	85	23
4810-01-351-5925	86	30	5330-01-351-7679	72	3
	87	30	5330-01-351-7681	7	61
4820-01-351-6018	112	7	5330-01-351-7682	7	62
5305-01-351-6318	56	4	5330-01-351-7684	106	56
	58	4	5330-01-351-7685	109	25
	62	1	5306-01-351-7744	65	12
5330-01-351-6361	54	4	3120-01-351-7780	74	52
5330-01-351-6362	58	17		75	49
5330-01-351-6363	66	6		76	6
5330-01-351-6364	66	40	3120-01-351-7781	74	53
	67	102		75	50
	74	36		76	7
5330-01-351-6366	67	97	3120-01-351-7783	73	49
5330-01-351-6367	67	50	3120-01-351-7790	73	33
	69	2		75	33
	69	9	5310-01-351-7801	73	9
	71	2		74	12
4310-01-351-6568	129	144		75	9
6645-01-351-6900	31	36	5310-01-351-7806	73	38
5331-01-351-6993	109	21		74	41
5330-01-351-6999	69	14		75	38
	83	11	4730-01-351-8084	66	16
5330-01-351-7001	97	2	4730-01-351-8095	106	23
5330-01-351-7002	109	34	4730-01-351-8178	142	93
5330-01-351-7096	71	19	5315-01-351-8179	118	12
5330-01-351-7106	84	11		122	37
5935-01-351-7198	138	38	3030-01-351-8189	129	20
4030-01-351-7211	84	4	3030-01-351-8190	133	1
5905-01-351-7301	35	36	6105-01-351-8237	128	24
5306-01-351-7532	131	73	4710-01-351-8285	68	29
5330-01-351-7598	73	52	4330-01-351-8585	129	10
5331-01-351-7616	73	15	4320-01-351-8586	133	20
	74	18	5935-01-351-8740	16	56
	75	15		50	8
5331-01-351-7617	73	29	5320-01-351-8808	118	37
	74	32		120	7
	75	29		121	50
5331-01-351-7618	73	30		122	44
	74	33		123	1
	75	30		123	9
5331-01-351-7619	73	44	6150-01-351-8956	98	42
5330-01-351-7619	74	47	6685-01-351-9055	25	20
	75	44		25	53
5331-01-351-7620	73	39		77	15
	74	42	5340-01-351-9180	100	11
	75	39	5365-01-351-9409	134	9
5331-01-351-7623	109	26	5340-01-351-9560	67	75
5331-01-351-7624	109	28		71	3

CROSS-REFERENCE INDEXES

NATIONAL STOCK NUMBER INDEX

STOCK NUMBER	FIG.	ITEM
5340-01-351-9562	85	12
6150-01-351-9930	142	98
4820-01-351-9972	135	13
4820-01-351-9973	135	20
4730-01-351-9998	127	6
4730-01-352-0050	142	92
5975-01-352-0285	16	1
	19	1
	23	1
	93	6
	102	28
5975-01-352-0286	17	1
	20	40
	46	18
	64	6
5999-01-352-0898	125	29
	131	23
5330-01-352-1099	74	55
	75	52
	76	8
5330-01-352-1100	132	6
5305-01-352-1153	91	1
5305-01-352-1155	97	17
5330-01-352-1160	65	21
5330-01-352-1166	62	30
3030-01-352-1238	128	9
5305-01-352-1246	118	14
4710-01-352-1249	69	38
4730-01-352-1398	132	15
5330-01-352-1980	103	12
5331-01-352-1981	129	56
5331-01-352-1982	129	90
5330-01-352-1998	129	53
5330-01-352-1999	129	41
5330-01-352-2000	129	
5305-01-352-2009	126	59
3120-01-352-2024	64	26
3120-01-352-2039	64	27
5305-01-352-2047	140	18
5305-01-352-2117	118	28
5310-01-352-2195	14	19
5340-01-352-2604	68	3
5306-01-352-2735	8	5
	25	5
	121	15
	122	15
5320-01-352-2765	119	92
	136	34
5340-01-352-2840	143	73
5340-01-352-2841	143	74
6210-01-352-2900	95	55
	96	55
4820-01-352-3686	129	33
4820-01-352-3687	129	35
5935-01-352-3701	131	21
4820-01-352-3714	127	12
4820-01-352-3715	132	7
4820-01-352-3719	137	6
4820-01-352-3720	138	9
4820-01-352-3721	133	10
6105-01-352-3848	131	32
5640-01-352-4249	70	7
5640-01-352-4250	70	8
5640-01-352-4251	70	11
5640-01-352-4252	70	13
5640-01-352-4253	70	21
5330-01-352-4334	131	54
5330-01-352-4335	131	66
5330-01-352-4336	134	4
4710-01-352-5646	69	39
5935-01-352-5856	16	20
	19	32
	95	37
	96	37
4730-01-352-5945	71	15
4710-01-352-6035	73	5
	74	8
	75	5
5340-01-352-6427	143	75
5340-01-352-6428	143	77
5210-01-352-6612	143	57
2590-01-352-7176	144	12
2590-01-352-7177	144	11
5340-01-352-7262	65	25
5310-01-352-7426	103	8
5331-01-352-7478	103	14
5305-01-352-7538	95	46
	96	46
5342-01-352-7582	103	
5330-01-352-7745	134	32
5330-01-352-7756	134	10
5330-01-352-7776	134	29
5340-01-352-8169	66	39
	67	101
5340-01-352-8190	8	1
5340-01-352-8191	143	73
5340-01-352-8430	128	19
5935-01-352-8500	142	99
4810-01-352-8511	67	3
	74	5

CROSS-REFERENCE INDEXES

NATIONAL STOCK NUMBER INDEX

STOCK NUMBER	FIG.	ITEM
4810-01-352-8512	90	14
6150-01-352-8522	131	16
6150-01-352-8531	17	11
4730-01-352-8700	86	15
	87	15
5331-01-352-8710	135	6
5331-01-352-8711	135	31
5331-01-352-8712	135	34
5331-01-352-8713	135	38
4820-01-352-8944	3	23
4730-01-352-8964	116	20
4730-01-352-8985	71	37
4720-01-352-8999	116	5
4720-01-352-9039	73	17
	74	20
	75	17
5306-01-352-9741	68	20
5975-01-353-0829	26	30
	26	46
5975-01-353-0830	26	31
	26	47
5340-01-353-1305	143	137
5340-01-353-1306	143	137
5340-01-353-1307	143	72
5340-01-353-1308	143	74
5340-01-353-1309	143	138
4010-01-353-1476	121	11
	122	11
2590-01-353-1662	144	10
5340-01-353-1893	84	1
5340-01-353-1957	136	6
5340-01-353-1958	136	6
5340-01-353-1959	143	138
5340-01-353-1960	143	76
5340-01-353-1961	143	70
5340-01-353-1962	143	70
5306-01-353-2006	106	29
	128	73
5310-01-353-2044	128	12
	130	21
5310-01-353-2582	65	13
5330-01-353-2633	135	25
5310-01-353-2662	126	58
5342-01-353-2680	136	26
	136	28
4720-01-353-2956	BULK	53
4720-01-353-2957	BULK	51
4320-01-353-2974	6	7
4910-01-353-3123	143	53
5440-01-353-3135	143	39
5975-01-353-3190	29	11
	44	18
	44	79
	44	131
	92	14
	93	13
6680-01-353-3280	30	24
6680-01-353-3281	30	25
6680-01-353-3282	30	26
5342-01-353-3568	62	31
5340-01-353-3579	143	71
5340-01-353-3586	65	26
5340-01-353-3617	67	62
5310-01-353-3634	128	20
4710-01-353-3943	132	5
3120-01-353-4569	134	14
6630-01-353-5103	92	16
5920-01-353-5149	54	21
5305-01-353-5185	117	15
6680-01-353-5816	129	40
5305-01-353-6049	103	3
5340-01-353-6388	143	71
4720-01-353-7429	116	3
4720-01-353-7460	146	30
4720-01-353-7462	BULK	24
4720-01-353-7463	BULK	52
4720-01-353-7464	BULK	47
4720-01-353-7465	BULK	49
5130-01-353-8178	146	36
5340-01-353-8241	143	72
4610-01-353-8421	79	7
4320-01-353-8422	3	1
4730-01-353-8496	143	95
	143	109
4730-01-353-8590	67	99
	69	8
	106	14
5935-01-353-8629	142	32
	142	54
	142	75
5935-01-353-8635	142	80
5130-01-353-9313	146	31
5331-01-353-9383	103	20
5340-01-353-9483	143	76
6680-01-353-9775	78	14
5310-01-354-0077	57	3
	57	9
	59	21
	86	31
	87	31

CROSS-REFERENCE INDEXES

NATIONAL STOCK NUMBER INDEX

STOCK NUMBER	FIG.	ITEM
5310-01-354-0226	128	81
	130	20
4720-01-354-0365	BULK	23
4720-01-354-0366	BULK	43
4720-01-354-0367	BULK	42
6105-01-354-0723	64	16
3950-01-354-1194	146	2
5130-01-354-2286	146	32
5130-01-354-2287	146	33
5130-01-354-2288	146	34
5130-01-354-2289	146	37
5120-01-354-2321	146	6
5130-01-354-2366	146	35
4730-01-354-2717	83	15
	83	32
4020-01-354-2721	BULK	34
5340-01-354-3655	143	75
5340-01-354-3657	143	77
6680-01-354-4464	77	10
5935-01-354-5176	46	21
5935-01-354-5177	56	7
	83	20
5935-01-354-5178	56	19
	58	8
	60	7
	81	5
	83	22
	90	7
	101	8
	101	27
	113	18
	114	7
	115	15
	138	34
4720-01-354-5324	100	4
4720-01-354-5332	BULK	22
4720-01-354-5335	BULK	45
4940-01-354-5599	60	15
6350-01-354-5656	78	35
	79	
3110-01-354-6665	131	51
5930-01-354-6684	101	18
	101	37
6145-01-354-6717	BULK	1
6625-01-354-6830	78	29
	79	16
6680-01-354-7482	134	1
5110-01-354-8450	146	25
4720-01-354-9025	BULK	20
4730-01-354-9049	106	15
6695-01-355-0112	103	9
6695-01-355-0113	103	10
6695-01-355-0114	103	11
5310-01-355-0216	102	26
	120	12
	121	46
	122	42
	128	79
4730-01-355-0438	106	33
4730-01-355-0439	106	6
5120-01-355-0843	143	6
5120-01-355-0846	146	10
5120-01-355-0847	146	12
5120-01-355-0849	146	15
5325-01-355-1579	120	14
4540-01-355-3149	115	21
4720-01-355-3270	100	1
4720-01-355-3271	100	2
6695-01-355-4171	103	13
6695-01-355-4172	103	
5340-01-355-4834	93	15
5340-01-355-5203	67	4
	69	36
	107	6
	143	82
4310-01-355-6344	146	27
6640-01-355-6443	79	9
5975-01-355-7103	93	9
4140-01-355-7199	113	20
5975-01-355-7891	26	17
	26	28
	26	33
	26	44
	44	17
	44	78
	44	134
	47	46
	49	14
	59	27
	80	10
	81	10
	82	10
	86	36
	87	36
	90	13
	93	11
	102	13
5330-01-355-8804	120	41
5330-01-355-8805	120	43
9520-01-356-1591	BULK	37

CROSS-REFERENCE INDEXES

NATIONAL STOCK NUMBER INDEX

STOCK NUMBER	FIG.	ITEM
5120-01-356-1773	146	9
9540-01-356-2574	BULK	13
5330-01-356-3198	120	39
	121	41
4720-01-356-4562	14	21
4320-01-356-4579	58	10
4010-01-356-5135	BULK	36
5120-01-356-6002	146	8
6145-01-356-6377	BULK	10
6680-01-356-8003	91	10
5340-01-356-8369	124	1
3940-01-357-0648	143	129
5340-01-357-0800	121	14
	122	14
6145-01-357-1096	BULK	8
6145-01-357-1800	BULK	2
6145-01-357-1801	BULK	3
6145-01-357-1802	BULK	4
6145-01-357-1803	BULK	6
6145-01-357-1804	BULK	7
5935-01-357-1806	2	13
	2	31
	138	20
	142	39
	142	61
	142	83
5935-01-357-1807	2	14
	3	53
	52	32
	54	40
	142	84
6150-01-357-2954	73	13
	74	16
	75	13
5430-01-357-4180	59	31
6850-01-357-4905	143	7
4240-01-357-4912	8	8
4440-01-357-5445	108	6
6640-01-357-6716	143	35
6810-01-357-7974	143	27
6640-01-357-8532	142	28
6145-01-357-8695	BULK	5
6140-01-358-0143	143	26
5975-01-358-1058	126	11
	128	25
6810-01-358-4381	143	20
	143	145
6640-01-358-5340	143	17
	143	141
5975-01-358-5971	64	5
6240-01-368-7863	143	12
9390-01-358-7870	BULK	30
7510-01-358-8770	BULK	39
5975-01-358-9415	31	12
	35	23
	43	22
	48	1
	78	33
	119	1
6350-01-359-0408	102	18
7240-01-359-0893	143	48
7240-01-359-0910	143	40
6695-01-359-2756	143	9
5935-01-359-3326	125	13
5306-01-359-7990	85	5
5330-01-359-9350	18	6
	22	17
4730-01-359-9534	109	10
5970-01-360-1531	138	37
5680-01-360-6565	BULK	54
5680-01-361-0177	BULK	55
5680-01-361-0178	BULK	56
5940-01-361-4782	31	41
	35	49
	44	61
	44	122
	49	20
	54	25
5975-01-362-2110	21	1
	26	18
	26	34
	92	18
6850-01-362-2158	143	2
6810-01-362-8616	143	34
5640-01-363-3691	70	15
5640-01-363-3692	70	16
5640-01-363-5970	70	3
8135-01-365-8859	BULK	14
8125-01-366-1609	143	21
	143	143
5120-01-367-3745	143	58
4730-01-369-5874	129	47
5355-01-370-2456	59	8
	86	9
	87	9
9330-01-370-5263	BULK	32
5325-01-375-4241	57	25
5330-01-379-0587	128	85
8530-01-390-9466	143	23
5905-01-392-4321	72	21

CROSS-REFERENCE INDEXES

NATIONAL STOCK NUMBER INDEX

STOCK NUMBER	FIG.	ITEM	STOCK NUMBER	FIG.	ITEM
	7	21		122	35
	25	22	4010-01-421-4866	BULK	35
	25	34	4610-01-421-4870	121	36
	31	3		122	36
	33	41	4610-01-421-4881	108	1
	35	25	4610-01-421-4888	56	5
	44	56	4610-01-421-4891	59	1
	51	3	4210-01-421-7949	9	5
	52	3	4610-01-421-8533	110	8
	54	3	4610-01-421-8538	110	7
	56	3	4610-01-421-8539	121	34
	58	3		122	34
	62	3	4320-01-421-8559	57	35
	62	23	4320-01-421-8610	57	33
	62	38	4320-01-421-8620	57	34
	68	13	4610-01-422-3696	121	31
	69	50		122	31
	91	3	4610-01-422-3716	121	30
	115	3		122	30
	118	18	4610-01-422-3733	121	27
	120	37		122	27
	121	39	5950-01-423-1525	34	21
	130	13	5950-01-423-1526	34	26
	138	25	5950-01-426-3675	37	4
	138	54		41	5
	142	41		42	3
	142	63	5610-01-429-4402	67	106
	142	89	4720-01-429-5332	98	49
4730-01-393-0988	3	20	5340-01-430-4205	143	37
5360-01-393-2618	135	18	5930-01-430-8739	37	5
4730-01-395-0418	92	17		41	6
2590-01-395-0423	118	11		42	4
	126	8	4610-01-431-0645	121	12
4730-01-395-0424	67	8		122	12
5340-01-395-1398	66	29	4610-01-431-0653	121	33
5305-01-395-6271	60	16		122	33
4140-01-395-8275	114	13	4610-01-431-2068	120	38
4710-01-396-1373	71	30		121	40
5340-01-399-7465	124	1	5340-01-433-2742	121	14
4730-01-400-3112	103	2		122	14
5310-01-412-6024	95	57	6685-01-433-3415	25	36
	96	57	4730-01-433-8031	100	7
4730-01-415-8412	103	19	4610-01-436-8821	119	71
4610-01-421-3835	121	29	4610-01-439-7580	57	19
	122	29	4610-01-439-8815	57	23
4610-01-421-3842	121	28	5340-01-442-1695	120	34
	122	28	5340-01-442-1755	120	33
4610-01-421-3855	121	32		121	43
	122	32	5305-01-442-9834	126	43
4610-01-421-4865	121	35	5340-01-445-4508	14	38

CROSS-REFERENCE INDEXES

NATIONAL STOCK NUMBER INDEX

STOCK NUMBER	FIG.	ITEM
5975-01-445-6260	95	6
	96	6
	101	17
	101	36
4820-01-446-4090	67	3
	74	57
4820-01-446-4091	67	12
	76	10
4010-01-446-6428	BULK	12
4810-01-446-4089	67	21
	75	54
4820-01-446-4092	66	42
	73	54
4730-01-447-2084	63	15
5330-01-447-6696	73	73
	74	76
	75	73
5330-01-447-6713	73	59
	74	62
	75	59
5330-01-447-6715	73	60
	74	63
	75	60
5330-01-447-6729	73	67
	74	67
	75	64
5330-01-447-6731	67	109
5330-01-447-6732	67	113
4610-01-449-6771	109	11
4330-01-455-9202	84	8
4720-01-458-4100	136	31
4730-01-458-4131	136	32
4820-01-462-3094	13	40
2590-01-466-1115	143	60
5340-01-466-2699	142	1
5340-01-466-2743	142	1
5340-01-466-2753	142	10
5340-01-466-2758	142	10
4730-01-466-2790	1	19
	1	56
	3	26
	7	6
	7	43
	7	83
	116	1
	116	26
	137	3
	137	15
	137	21
	137	50
	138	1
	143	100
	143	106
4730-01-466-3844	137	40
4730-01-466-4466	142	22
4730-01-466-4498	142	26
4720-01-466-4674	142	24
4610-01-466-5268	146	3
4730-01-466-5288	137	4
4730-01-466-5290	137	5
4730-01-467-1501	84	9
4730-01-467-1526	69	13
	83	10
4810-01-467-1583	90	6
4810-01-467-1589	80	4
4810-01-467-1591	81	4
5330-01-467-1605	67	96
5999-01-467-1676	83	18
5999-01-467-1683	83	19
5999-01-467-1685	83	17
5340-01-468-4937	72	1
5340-01-468-4943	3	41
2540-01-468-5020	43	2
5330-01-468-5373	BULK	33
4730-01-468-5339	116	4
4610-01-622-2101	60	23
5330-12-145-1511	129	115
4820-12-166-2100	129	55
4310-12-166-2256	129	109
4310-12-166-2258	129	57
5330-12-170-8127	109	31
5340-12-186-0157	129	28
5340-12-305-9524	31	40
	35	45
	44	57
	44	118
	47	25
	49	17
	54	23

CROSS-REFERENCE INDEXES

PART NUMBER INDEX

CAGEC	PART NUMBER	STOCK NUMBER	FIG.	ITEM
58536	A-A-1066	7240-00-223-4482	143	44
93886	A-L31		102	23
93886	A-PWKES2		102	22
60173	A-0.2-3/4 IN NPT	4730-01-351-1536	106	52
60173	A-270 (0+4)		106	50
06581	AA67044-2K	4730-01-293-2917	25	16
			25	49
30647	AB-23		128	67
80204	ANSI B18.2.1	5306-00-961-3444	125	59
			125	60
80204	ANSI B18.2.2	5310-01-265-8957	14	25
			14	29
			14	33
			14	37
80205	ANSIB18.6.4	5305-01-442-9834	126	43
88044	AN815-5S	4730-00-684-7555	143	38
88044	AN912-7K	4730-00-071-1671	44	19
			44	80
88379	ARX 132-20	5120-00-224-2504	143	
81346	ASTMA269	4710-00-961-9292	BULK	40
81346	ASTM D1785	4710-00-990-8503	BULK	31
81346	ASTM D2000 MLBC614		BULK	29
81346	ASTM D2467	4730-01-351-4005	106	43
81346	ASTND2000 MLBC614		BULK	28
81343	ASTMD2464	4730-01-351-5847	67	41
61424	A0425-MC4-ML4	4720-00-451-1008	143	112
D8286	A10X15DIN7603AL	5330-12-170-8127	109	31
82370	A104	5975-00-878-3791	143	67
0D5S3	A20488		131	53
0D5S3	A20488-1-3MM NEOPRENE	5330-01-352-4334	131	54
0D5S3	A20497-3MM NEOPRENE		131	61
0D5S3	A20497F-7225.56N/5M		131	60
0D5S3	A21011A-P3646		131	36
0D5S3	A31729B-1-NEOPRENE		131	58
0D5S3	A317298-7225-80F		131	57
97403	A3229E1362	5640-01-351-4198	70	20
0D5S3	A4466		128	42
0D5S3	A4466-A		128	43
0D5S3	A6466-B		128	41
40912	A485030		146	46
40912	A492769		146	41
50492	A5054	4730-01-355-0115	134	33
57661	B-1307-06		13	36
57661	B-1583-00		13	33
01121	B-321HCPS.9-3336W		16	11
			17	10
			17	21
			19	9
			19	61
			20	6

CROSS-REFERENCE INDEXES

PART NUMBER INDEX

CAGEC	PART NUMBER	STOCK NUMBER	FIG.	ITEM
			20	48
			21	4
			23	8
			23	18
			23	27
			26	25
			26	41
			27	43
			28	24
			29	14
			45	11
			46	33
			46	38
			46	41
			48	15
			50	14
			51	23
			53	18
			55	20
			59	29
			60	13
			78	23
			82	7
			85	27
			86	38
			87	38
			92	12
			94	26
			101	14
			101	33
			102	10
			131	27
01121	B-321HCPS.9-5008W		20	36
01121	B-321HSCPS.9-5008W		21	19
			53	17
			55	19
			94	27
			126	15
			128	36
01121	B-321HSCPS.9-7508W		20	20
			20	31
			28	25
01121	B-321HSCPS.9-7508W		113	9
			113	12
98410	BB8141	5940-01-303-7417	95	17
			96	17
04049	BKD10V	4440-01-350-1647	91	7
3Z033	BVP-ACT-110V	4810-01-346-4735	73	3
			74	6
			75	3

CROSS-REFERENCE INDEXES

PART NUMBER INDEX

CAGEC	PART NUMBER	STOCK NUMBER	FIG.	ITEM
3Z033	BVP-ACT-86-1		73	45
			74	48
			75	45
3Z033	BVP-ACT-86-10	5331-01-351-7618	73	30
			74	33
			75	30
3Z033	BVP-ACT-86-11	5325-01-351-1290	73	28
			74	31
			75	28
3Z033	BVP-ACT-86-12		73	27
			74	30
			75	27
3Z033	BVP-ACT-86-16	5331-01-351-7617	73	29
			74	32
			75	29
3Z033	BVP-ACT-86-20		73	43
			74	46
			75	43
3Z033	BVP-ACT-86-21		73	41
			74	44
			75	41
3Z033	BVP-ACT-86-26	5310-01-351-7806	73	38
			74	41
			75	38
3Z033	BVP-ACT-86-28	5331-01-351-7620	73	39
			74	42
			75	39
3Z033	BVP-ACT-86-30	5325-01-351-1288	73	34
			74	37
			75	34
3Z033	BVP-ACT-86-31		73	42
			74	45
			75	42
3Z033	BVP-ACT-86-34	4720-01-352-9039	73	17
			74	20
			75	17
3Z033	BVP-ACT-86-36		73	35
			74	38
			75	35
3Z033	BVP-ACT-86-37		73	32
			74	35
			75	32
3Z033	BVP-ACT-86-38	5325-01-351-1287	73	31
			74	34
			75	31
3Z033	BVP-ACT-86-39	3120-01-351-7790	73	33
			74	36
			75	33
3Z033	BVP-ACT-86-40		73	26
			74	29

CROSS-REFERENCE INDEXES

PART NUMBER INDEX

CAGEC	PART NUMBER	STOCK NUMBER	FIG.	ITEM
			75	26
3Z033	BVP-ACT-86-41		73	37
			74	40
			75	37
3Z033	BVP-ACT-86-42		73	18
			74	21
			75	18
3Z033	BVP-ACT-86-43		73	36
			74	39
			75	36
3Z033	BVP-ACT-86-5		73	40
			74	43
			75	40
3Z033	BVP-ACT-86-6	5331-01-351-7619	73	44
			74	47
			75	44
3Z033	BVP-ACTUC-1		73	16
			74	19
			75	16
3Z033	BVP-ACTUC-11		73	11
			74	14
			75	11
3Z033	BVP-ACTUC-12		73	23
			74	26
			75	23
3Z033	BVP-ACTUC-13		73	14
			74	17
			75	14
3Z033	BVP-ACTUC-14		73	4
			74	7
			75	4
3Z033	BVP-ACTUC-15	4810-01-350-6039	73	8
			74	11
			75	8
3Z033	BVP-ACTUC-15-1	5945-01-350-1851	73	6
			74	9
			75	6
3Z033	BVP-ACTUC-16		73	21
			74	24
			75	21
3Z033	BVP-ACTUC-18	5331-01-351-7616	73	15
			74	18
			75	15
3Z033	BVP-ACTUC-19		73	22
			74	25
			75	22
3Z033	BVP-ACTUC-2		73	19
			74	22
3Z033	BVP-ACTUC-2A		73	20
			74	23

PART NUMBER INDEX

CAGEC	PART NUMBER	STOCK NUMBER	FIG.	ITEM
			75	19
			75	20
3Z033	BVP-ACTUC-2L	5935-01-351-8740	16	56
			50	8
3Z033	BVP-ACTUC-21		73	10
			74	13
			75	10
3Z033	BVP-ACTUC-22		73	7
			74	10
			75	7
3Z033	BVP-ACTUC-24	5310-01-351-7801	73	9
			74	12
			75	9
3Z033	BVP-ACTUC-3-4	6150-01-357-2954	73	13
			74	16
			75	13
3Z033	BVP-ACTUC-5		73	24
			74	27
			75	24
3Z033	BVP-ACTUC-6	4710-01-352-6035	73	5
			74	8
			75	5
3Z033	BVP-ACTUC-7		73	25
			74	28
			75	25
3Z033	BVP-ACTUC-8		73	12
			74	15
			75	12
3Z033	BVP-86-10	5340-01-430-4205	143	37
3Z033	BVP-86-10-2-1/2		76	2
3Z033	BVP-86-11-2-1/2	5305-01-350-8600	76	1
3Z033	BVP-86-12-2-1/2		76	3
3Z033	BVP-86-13-2-1/2		74	50
			75	47
3Z033	BVP-86-13-3.0		73	47
3Z033	BVP-86-14-2-1/2		74	51
			75	48
			76	4
3Z033	BVP-86-14-3.0		73	48
3Z033	BVP-86-16	5120-01-354-2321	146	6
3Z033	BVP-86-2-2-1/2		74	56
			75	53
			76	5
3Z033	BVP-86-2-3.0		73	53
3Z033	BVP-86-3-2-1/2	4820-01-350-9171	74	54
			75	51
			76	9
3Z033	BVP-86-3-3.0		73	51
3Z033	BVP-86-4-2-1/2	3120-01-351-7781	74	53
			75	50

CROSS-REFERENCE INDEXES

PART NUMBER INDEX

CAGEC	PART NUMBER	STOCK NUMBER	FIG.	ITEM
			76	7
3Z033	BVP-86-4-3.0		73	50
3Z033	BVP-86-5-2-1/2	3120-01-351-7780	74	52
			75	49
			76	6
3Z033	BVP-86-5-3.0	3120-01-351-7783	73	49
3Z033	BVP-86-7-2-1/2	5330-01-352-1099	74	55
			75	52
			76	8
3Z033	BVP-86-7-3.0	5330-01-351-7598	73	52
3Z033	BVP86-4-15-25	3120-01-351-4284	73	50
80204	B16.3	4730-00-945-7154	68	6
80204	B1821BH050C075N	5305-00-732-0512	134	2
80204	B1821BH063C175N	5305-00-724-7221	144	1
80204	B1821BH063C225N	5305-00-724-7223	144	7
01121	B321-HCPS.9-3336W		96	10
01121	B321-HSCPS.9-5008W		28	23
01121	B321HCPS.9-3336W		95	10
01121	B321HSCPS.9-3336W		125	36
01121	B321HSCPS.9-5008W		125	37
0UL89	B51-1-48-S		76	11
0LU89	B51-2-1/2-06		74	89
			75	86
			76	15
OLU89	B51-2-1/2-42-X		75	88
			76	17
0LU89	B51-3-01-316		73	85
0LU89	B51-3-06		73	86
0LU89	B51-3-08-316LSC		76	18
0LU89	B51-3-42-X		73	88
0LU89	B51-3-51-X-316L		73	82
0LU89	B53-1-09-S		74	82
0LU89	B53-1-10-SS		73	78
			74	81
			75	78
0LU89	B53-2-1/2-05-316L		74	90
			76	16
0LU89	B53-2-1/2-42-X		74	51
0LU89	B53-3-05-316L		73	87
0LU89	B53-3-09-S		73	79
			75	79
0LU89	B53-6000-1		73	77
			74	80
0LU89	B53-6000-1		75	77
0LU89	B53-6000-10		73	72
			74	75
			75	72
0LU89	B53-6000-10-S		75	57
0LU89	B53-6000-11		73	70
			74	73

CROSS-REFERENCE INDEXES

PART NUMBER INDEX

CAGEC	PART NUMBER	STOCK NUMBER	FIG.	ITEM
			75	70
0LU89	B53-6000-12		73	69
			74	72
			75	69
0LU89	B53-6000-14	5330-01-447-6696	73	73
			74	76
			75	73
0LU89	B53-6000-15		73	74
			74	77
			75	74
0LU89	B53-6000-17-1		74	78
			75	75
0LU89	B53-6000-17-3		73	75
0LU89	B53-6000-18		73	80
			74	83
			75	80
0LU89	B53-6000-19-S		73	57
			74	60
0LU89	B53-6000-2		73	71
			74	74
			75	71
0LU89	B53-6000-20-S		73	63
			74	66
			75	63
0LU89	B53-6000-23		73	76
			74	79
			75	76
0LU89	B53-6000-27		73	68
			74	71
			75	68
0LU89	B53-6000-3		73	65
0LU89	B53-6000-3A		74	68
			75	65
0LU89	B53-6000-4	5330-01-447-6715	73	60
			74	63
			75	60
0LU89	B53-6000-6		73	58
			74	61
			75	58
0LU89	B53-6000-7	5330-01-447-6713	73	59
			74	62
			75	59
0LU89	B53-6000-8		73	66
			74	69
0LU89	B53-6000-8		75	66
0LU89	B53-6000-9		73	67
			74	70
			75	67
0LU89	B53-6300T-3-X-316L-20-5-31	4820-01-446-4092	66	42

PART NUMBER INDEX

CAGEC	PART NUMBER	STOCK NUMBER	FIG.	ITEM
			73	54
57661	C-1686-00		13	32
57661	C-1706-00		13	34
03481	C-845 1/4-20		146	24
03481	C-845 8-32	5120-00-177-6808	146	22
5G589	C-845-1032	5120-00-177-9839	146	23
17549	CA3100E20-4P-B-02-05 -57		3	46
17549	CA3100E22-2P-B-02-05 -57	5935-01-346-7173	21	14
17549	CA3101E14S-7S-B-02-57	5935-01-352-5856	16	20
			19	32
			95	37
			96	37
17549	CA3101E14S-7SWB-02-57	5935-01-346-7138	16	19
17549	CA3101E14S-7SXB-02-57	5935-01-347-5398	16	18
17549	CA3101E16-10S-B-02-57	5935-01-347-3655	19	28
17549	CA3101E18-11S-B-02-57	5935-01-346-7141	16	22
			19	30
17549	CA3101E18-11SXB-02-57	5935-01-346-7150	19	31
17549	CA3101E18-4S-B-02-57	5935-01-346-7140	16	21
			19	27
17549	CA3101E20-4S-B-02-57	5935-01-350-0166	2	10
			17	13
			20	9
17549	CA3101E20-SWB-02-57	5935-01-353-8635	142	80
17549	CA3101E22-2S-B-02-57	5935-01-346-4631	21	22
17549	CA3101E28-11S-B-02-57	5935-01-346-4632	19	33
17549	CA3102E14S-7S-B-F80- 05-57	5935-01-347-0034	48	7
			50	5
			55	5
17549	CA3102E14S-9S-B-F80- 05-57		27	26
17549	CA3102E20-15S-B-F80- 05-57	5935-01-347-0029	27	33
17549	CA3102E20-27P-B-F80- 05-57	5935-01-347-0035	50	4
17549	CA3102E20-4S-B-F80- 05-57	5935-01-347-0030	27	35
			53	4
			55	6
			125	25
17549	CA3120E20-4SWB-05-F80 -05-57	5935-01-347-0036	53	3
			55	4
			125	24
17549	CA3102E22-23P-B-F80- 05-57	5935-01-350-0161	125	21
17549	CA3102E22-23S-B-F80- 05-57	5935-01-346-7139	27	34
17549	CA3102E22-23SWB-05-F8		27	36

PART NUMBER INDEX

CAGEC	PART NUMBER	STOCK NUMBER	FIG.	ITEM
	0-05-57			
17549	CA3102E24-19P-B-F80-	5935-01-347-0032	45	20
	05-57			
17549	CA3102E24-19S-B-F80-	5935-01-347-0024	27	27
	05-57			
17549	CA3102E28-11P-B-F80-	5935-01-347-0033	48	6
	05-57			
17549	CA3102E28-11SWB-F80-	5935-01-347-0025	27	28
	05-57		27	31
17549	CA3102E28-11SXB-05-F8	5935-01-347-0028	27	32
	0-05-57			
17549	CA3102E28-11SYB-05-F8	5935-01-347-0026	27	29
	0-05-57			
17549	CA3102E28-21S-B-F80-0	5935-01-347-0027	27	30
	5-57			
17549	CA3102E32-17P-B-F80-0	5935-01-350-0163	125	23
	5-57			
17549	CA3102E32-17PWB-05-F8	5935-01-350-0162	125	22
	0-05-57			
17549	CA3102E32-17S-B-F80-0	5935-01-350-0165	125	27
	5-57			
17549	CA3102E32-17SWB-05-F8	5935-01-350-0164	125	26
	0-05-57			
17549	CA3106E14-9P-B-02-57	5935-01-347-0023	23	3
17549	CA3106E14S-7P-B-02-57	5935-01-354-5178	56	19
			58	8
			60	7
			81	5
			83	22
			90	7
17549	CA3106E14S-7P-B-02-57	5935-01-354-5178	101	8
			101	27
			113	18
			114	7
			115	15
			138	34
17549	CA3106E14S-7PWB-02-57	5935-01-346-7151	19	34
			56	13
			80	5
			83	21
17549	CA3106E14S-7PXB-02-57	5935-01-354-5177	56	7
			83	20
17549	CA3106E16-1OP-B-02-57	5935-01-350-0158	94	8
			95	28
			96	28
17549	CA3106E16-10S-B-02-57	5935-01-347-0037	94	6
17549	CA3106E18-11P-B-02-57	5935-01-346-7132	16	3
			19	3
17549	CA3106E18-11PXB-02-57	5935-01-346-7145	19	12
17549	CA3106E18-4P-B-02-567	5935-01-350-0156	78	16

CROSS-REFERENCE INDEXES

PART NUMBER INDEX

CAGEC	PART NUMBER	STOCK NUMBER	FIG.	ITEM
			92	6
17549	CA3106E20-4P-B-02-57	5935-01-350-0159	2	6
			2	24
			17	3
			20	42
			64	8
			138	14
17549	CA3106E20-4PWB-02-57	5935-01-353-8629	142	32
			142	54
			142	75
17549	CA3106E20-4S-B-02-57	5935-01-350-0160	2	28
17549	CA3106E22-2P-B-02-57	5935-01-350-0157	94	7
17549	CA3106E22-2S-B-02-57	5935-01-352-8500	142	99
17549	CA3106E24-19S-B-02-57	5935-01-346-7149	19	29
17549	CA3106E28-11P-B-02-57	5935-01-354-5176	46	21
17549	CA3108F20-4P-B-15-57	5935-01-346-7152	20	2
17549	CA3108F20-4P-B-15-57	5935-01-346-7152	128	33
17549	CA3108F20-4PWB-15-57	5935-01-350-0167	126	19
17549	CA3108F22-23P-B-15-57	5935-01-346-7136	16	16
			23	22
17549	CA3108F22-23PWB-15-57	5935-01-346-7143	17	12
			19	26
17549	CA3108F22-23S-B-15-57	5935-01-346-7155	23	31
17549	CA3108F24-19P-B-15-57	5935-01-346-7148	19	25
17549	CA3108F28-11PWB-15-57	5935-01-346-7133	16	13
17549	CA3108F28-11PXB-15-57	5935-01-346-7135	16	15
17549	CA3108F28-11PYB-15-57	5935-01-346-7147	19	24
17549	CA3108F28-11S-B-15-57	5935-01-346-7137	16	17
17549	CA3108F28-21P-B-15-57	5935-01-346-7134	16	14
17549	CA3108F32-17P-8-15-57	5935-01-350-0168	131	20
17549	CA310BF32-17PWB-15-57	5935-01-352-3701	131	21
17549	CA3108F32-17S-B-15-57	5935-01-346-7153	20	14
17549	CA3108F32-17SW-15-57	5935-01-346-7154	20	24
30647	CB-1	5306-01-351-7532	131	73
01121	CB-236	5950-01-052-5951	37	6
01121	CB136		41	7
			42	5
15235	CC-192		79	25
15235	CC55	5935-00-056-9628	46	17
			47	13
			51	17
			52	26
01121	C0D23		36	7
			38	8
71468	CET-F80-12	5120-01-355-0847	146	12
71468	CET-F80-16	5120-01-131-0139	146	11
71468	CET-F80-20	5120-01-355-0846	146	10
71468	CET4	5120-00-477-6379	146	14
71468	CET8	5120-00-477-6375	146	13
15235	CGB114-SG	5975-01-362-2110	21	1

CROSS-REFERENCE INDEXES

PART NUMBER INDEX

CAGEC	PART NUMBER	STOCK NUMBER	FIG.	ITEM
15235	CGB114-SG	5975-01-362-2110	26	18
			26	34
			92	18
15235	CGB296SG	5975-01-210-9825	3	54
			138	28
15235	CGE5915-3G	5975-01-353-0830	26	31
			26	47
71468	CIT-F80-12	5120-01-355-0849	146	15
71468	CIT-20	5120-01-158-0236	146	17
71468	CIT16	5120-01-131-0140	146	16
71468	CIT4	5120-00-464-5908	146	19
71468	CIT8	5120-01-044-1884	146	18
16166	CO-1TW	5310-01-349-6177	11	16
30053	CS51	6630-01-353-5103	92	16
0D8P3	CV1-2 INCH		67	112
0D8P3	CV2-2 INCH		67	111
0D8P3	CV3-2 INCH		67	110
0D8P3	CV4V-2 INCH	5330-01-447-6732	67	113
0D8P3	CV6V-2 INCH	5330-01-447-6731	67	109
66295	C36PS	4730-00-909-8627	116	21
56735	C60486	5330-01-349-5541	7	76
56735	C6095G-RN	5330-01-351-7681	7	61
5G589	C845-2520	5120-00-970-6423	146	24
57661	D-1782-00	5330-01-264-1093	13	3
57661	D-2241-00		13	37
57661	D-2298-00	4820-01-462-3094	13	40
30646	D-564-757066		78	30
0D5S3	DPSM-7510010	5330-01-352-4335	131	66
58177	DRT-15C	6630-01-350-0250	143	25
15235	DS100	5975-00-296-0014	46	6
04049	DI0-04-V DN		91	6
0D5S3	D1400-0600		131	37
0D5S3	D1400-0750		131	47
40912	D456673		146	39
40912	D69217		146	42
3Z033	EG CC-A 2-1/2	4810-01-346-4654	67	12
			76	
3Z033	EG 13 MM 2-1/2		74	4
3Z033	EGPCCA2 1/2	4810-01-352-8511	67	3
			74	5
3Z033	EGPCCA3.0	4810-01-347-6842	66	42
			73	2
3Z033	EG13DM-2-1/2		75	46
3Z033	EG13MM-3		73	46
04049	EKD10	4440-01-350-1649	91	9
0LU89	EL-19170-0005		73	119
			74	122
			75	119
0LU89	EL-19760-0011		73	120
			74	123

CROSS-REFERENCE INDEXES

PART NUMBER INDEX

CAGEC	PART NUMBER	STOCK NUMBER	FIG.	ITEM
			75	120
0LU89	EL-19870-0037		73	116
			74	119
			75	116
0LU89	EL-20650-0001		73	123
			74	126
			75	123
0LU89	EL-20760-0001		73	124
			74	127
			75	124
0LU89	EL-79500-0013		73	113
			74	116
			75	113
0LU89	EL-96010-0022		73	118
			74	121
0LU89	EL-96750-0022		73	117
			74	120
			75	117
30327	E14A	4730-00-254-6211	99	17
0D5S3	E3721B-225-139-GP		131	44
0D5S3	E3722A-225-135/S		131	49
3J802	E5.5-150PSI	4440-01-357-5445	108	6
64382	E8S-3W-11B-HA		103	1
3J802	E9105NV		108	7
00843	F-44WGSS	5330-01-350-0466	44	44
			44	53
			44	105
			44	114
83750	F05102		126	22
81349	F02A250VI/8A	5920-00-296-0451	92	20
81349	F02A250V5A	5920-00-284-6787	57	36
81349	F02B250V1-2A	5920-00-199-9498	79	18
			143	10
0JR79	F4C19E-8E	4610-01-347-6847	67	13
			72	
53390	F617318	6810-01-362-8616	143	34
0D5S3	F90-C33			
0D5S3	F90-M4X1		128	44
0D5S3	F90-621U322		128	54
			128	55
0D5S3	F90-620522		128	54
0D5S3	F90AI4/9		128	50
			128	47
0D5S3	F90A3734/5		128	55
0D5S3	F90C43/3		128	47
0D5S3	F90C4513/2		128	56
0D5S3	F90C47f/F14N415/5		128	51
0D5S3	F90X45MM		128	49
0D5S3	F90659		128	57
55719	G-169	5110-01-192-3846	143	54

CROSS-REFERENCE INDEXES

PART NUMBER INDEX

CAGEC	PART NUMBER	STOCK NUMBER	FIG.	ITEM
57661	G-3465-06		13	39
15235	GASK91	5330-00-065-3797	46	8
55719	GF720	5120-00-240-5364	143	64
81348	GGG-K-275	5120-00-798-2133	143	61
81348	GGG-K-494	5110-00-892-5071	143	54
87327	G05-0461		8	9
87327	G24-0075		8	15
15235	G63	6210-01-232-7683	24	4
01343	H1VS-8-P-SP	4820-01-346-4647	71	39
29372	H111P363-130M	5310-01-211-9838	26	21
			26	37
			101	39
			115	22
70642	H186	5950-01-349-9862	90	29
97111	H2-65M	5340-01-307-2679	11	18
97111	H2-66M	5340-01-307-4394	127	7
0D5S3	H2105-D225-150/FC		131	46
0D5S3	H2105-225-153/SM		131	50
04845	JPKF8320G172	4810-01-350-9010	82	11
81343	J514	4730-01-067-3926	85	9
57661	K-3192-00		13	41
64233	K16-2.50	4730-01-354-9049	106	15
K6941	LMB-14S-TF	5935-01-180-8025	54	42
OLU89	LWA1300-SS		73	62
			73	104
			74	65
			74	107
			75	62
			75	104
30647	MB-200A		128	64
30554	MEP-006A	6115-00-118-1243	144	13
81349	MIL-C-20696	8305-01-234-6771	BULK	11
81349	MIL-F-21840		BULK	15
			BULK	16
81349	MIL-R-39008/4		35	47
81343	MIL-SlD-751		BULK	27
81349	MIL-W-4088	8305-00-267-3009	BULK	57
			BULK	58
0LU89	MS-105-58A-CP		73	111
			74	114
			75	111
96906	MS122081	5325-00-200-7224	67	74
			92	21
			118	34
			118	39
			121	45
			122	41
96906	MS122121	5340-01-030-6854	80	13
			81	13
96906	MS122121	5340-01-030-6854	82	13

CROSS-REFERENCE INDEXES

PART NUMBER INDEX

CAGEC	PART NUMBER	STOCK NUMBER	FIG.	ITEM
96906	MS122128	5325-00-045-2812	26	5
			65	31
			84	16
			85	38
			106	64
96906	MS122163	5325-00-990-7157	66	51
96906	MS122165	5340-00-990-7158	14	10
			44	4
			68	43
			88	17
			111	8
			143	140
96906	MS122203	5325-00-290-4492	13	15
			20	58
			46	4
			47	4
			58	18
			61	6
			62	33
			67	61
			69	48
			71	36
			77	26
			78	4
			93	23
			97	20
			102	27
			105	19
			112	13
			118	141
			120	31
			121	55
			122	49
96906	MS122241	5325-00-290-4489	22	13
			24	10
			68	44
			89	12
			108	12
			110	9
			113	21
			114	12
			121	47
			121	54
			122	40
			122	48
			128	84
96906	MS122243	5325-00-682-1453	62	34
			121	49
			122	43
96906	MS124655	5325-00-986-2929	51	26

PART NUMBER INDEX

CAGEC	PART NUMBER	STOCK NUMBER	FIG.	ITEM
			52	35
			54	8
			91	5
			121	48
96906	MS14304-7T0804	4730-00-893-9547	12	81
96906	MS14315-22X	4730-00-268-7479	7	40
96906	MS15765-842	5905-01-392-4321	72	21
			7	21
			25	22
			25	34
			31	3
			33	41
			35	25
			44	56
			51	3
			52	3
			54	3
			56	3
			58	3
			62	3
			62	23
			62	38
			68	13
			69	50
			91	3
			115	3
			118	18
			120	37
			121	39
			130	13
			138	25
			138	54
			142	41
			142	63
			142	89
96906	MS15795-409	5310-00-950-0440	125	45
96906	MS15795-805	5310-00-722-5998	21	9
			27	4
			47	43
			49	11
96906	MS15795-806	5310-00-880-5976	27	9
			33	34
			44	48
			44	109
			47	14
			51	10
			51	18
			52	27
			85	34
96906	MS15795-808	5310-00-619-1148	2	3

PART NUMBER INDEX

CAGEC	PART NUMBER	STOCK NUMBER	FIG.	ITEM
			2	21
			25	55
			25	70
			35	65
			44	117
			47	35
			105	16
			142	89
96906	MS15795-810	5310-01-091-1248	3	38
			7	26
			8	4
			10	34
			11	23
			14	17
			20	52
			24	3
			25	2
			26	14
			29	6
			32	11
			34	3
			35	6
			35	31
			44	22
			44	83
			44	133
			49	3
			51	7
			52	7
			54	7
			62	7
			62	45
			67	27
			67	72
			68	32
			71	23
			77	13
			78	28
			80	3
			81	3
			82	3
			88	9
			89	3
			90	3
			92	3
			95	3
			96	3
			97	8
			99	2
			99	14

CROSS-REFERENCE INDEXES

PART NUMBER INDEX

CAGEC	PART NUMBER	STOCK NUMBER	FIG.	ITEM
			100	10
			102	6
			105	7
			106	28
			108	3
			108	10
			110	3
96906	MS15795-810	5310-01-091-1248	113	3
			114	3
			117	8
			118	3
			120	4
			121	9
			121	18
			122	9
			122	18
			126	6
			127	3
			128	3
			128	21
			128	72
			130	3
			131	8
			136	3
			138	50
			143	136
96906	MS15795-812	5310-00-625-5756	9	4
			13	75
			66	19
			66	24
			67	54
			67	77
			69	25
			69	30
			71	5
			71	9
			109	3
			126	3
			128	60
			132	11
			138	69
96906	MS15795-813	5310-00-802-4710	25	83
96906	MS15795-814	5310-00-773-7618	3	35
			7	36
			13	13
			14	2
			20	56
			26	10
			47	3
			58	14

PART NUMBER INDEX

CAGEC	PART NUMBER	STOCK NUMBER	FIG.	ITEM
			61	3
			62	10
			65	6
			66	53
			67	59
			67	64
			67	82
			68	16
			69	43
			71	33
			77	3
			78	3
			83	3
			84	3
			88	3
			93	3
			97	5
			102	3
			104	2
			105	3
			106	37
			112	3
			117	13
			118	8
			118	22
			120	29
			121	3
			122	3
			125	3
			132	21
96906	MS15795-815	5310-00-595-6057	31	7
			34	25
			35	3
96906	MS15795-818	5310-00-767-9425	3	7
			7	53
			14	8
			44	3
			67	89
			68	36
			88	14
			111	3
			136	24
			143	132
96906	MS15795-820	5310-00-614-3505	66	3
			85	21
			131	70
			131	76
			132	3
			144	3
96906	MS15795-822	5310-00-584-7799	26	3

PART NUMBER INDEX

CAGEC	PART NUMBER	STOCK NUMBER	FIG.	ITEM
			65	3
			84	7
			85	3
			106	3
			133	18
			135	2
96906	MS15795-841	5310-00-225-5328	32	2
			33	46
			35	11
96906	MS16562-250	5315-00-844-0342	71	41
96906	MS17830-3C	5310-00-436-3290	25	73
96906	MS17830-4C	5310-00-241-6604	131	7
96906	MS17830-5C	5310-00-241-6606	66	18
			66	23
			67	53
			67	76
			67	94
			69	24
			69	29
			71	4
			71	8
			128	63
96906	MS17986C820	5315-00-904-6874	3	31
96906	MS18212-49	5305-00-581-6488	59	42
			86	2
			87	2
96906	MS18212-81	5305-01-102-2665	59	37
			86	7
			87	7
96906	MS20066-1	5315-00-800-5440	128	40
96906	MS20066-279	5315-01-246-4000	5	2
96906	MS20066-703	5315-00-732-0589	131	31
96906	MS20230BPS1	5325-01-295-4768	142	8
			142	17
96906	MS20470A5-12	5320-00-242-1587	33	19A
96906	MS20659-104	5940-00-107-1481	95	16
			96	16
96906	MS21044		14	41
			132	24
96906	MS21209C6-20	5325-00-812-1894	31	8
			34	30
			35	7
96906	MS21209C4-20	5325-00-721-8352	22	14
			25	9
			34	29
			35	8
			138	27
96906	MS21919WCF16	5340-01-166-8694	31	4
96906	MS21919WCF20	5340-01-089-9033	43	26
			33	50

CROSS-REFERENCE INDEXES

PART NUMBER INDEX

CAGEC	PART NUMBER	STOCK NUMBER	FIG.	ITEM
96906	MS21919WCF10	5340-01-142-9987	33	49
			142	42
			142	88
96906	MS21919WCF12	5340-01-138-7808	2	4
			2	22
			33	51
			138	27
			142	64
96906	MS21919WCF-24	5340-00-878-5257	44	127
96906	MS21919WCF4	5340-01-143-0638	138	44
96906	MS21919WCF6	5340-01-142-9988	11	20
			32	5
			33	50
96906	MS21919WCG32	5340-01-196-8801	132	26
96906	MS21919WCG43	5340-01-445-4508	14	38
96906	MS21919WCG48		14	39
96906	MS21919WCG56		132	25
96906	MS21919WCH20	5340-01-163-5499	35	66
96906	MS24523-27	5930-00-683-1633	26	48
96906	MS24628-34	5305-00-721-4782	119	2
96906	MS24629-66	5305-00-442-3217	62	22
96906	MS24671-31	5305-00-938-7827	121	24
			122	24
96906	MS24679-22	5310-00-995-2723	52	14
			54	15
96906	MS24679-83	5310-00-943-2139	54	27
96906	MS24693C94	5305-00-724-7878	44	128
96906	MS25036-102	5940-00-204-8966	28	8
96906	MS25036-106	5940-00-283-5280	23	7
			23	12
			23	17
			28	9
			29	13
			48	11
			78	21
96906	MS25036-108	5940-00-143-4780	28	10
			60	4
			60	12
			78	22
			102	9
			113	8
			113	13
96906	MS25036-109	5940-00-283-5281	28	11
96906	MS25036-112	5940-00-143-4794	101	6
			101	25
			126	14
96906	MS25036-113	5940-00-113-8183	28	12
96906	MS25036-114	5940-00-113-9826	46	37
			53	10
			121	21

PART NUMBER INDEX

CAGEC	PART NUMBER	STOCK NUMBER	FIG.	ITEM
			122	21
			125	33
			142	103
96906	MS25036-115	5940-00-143-5284	28	13
96906	MS25036-116	5940-00-114-1305	28	14
			53	11
			55	12
			125	50
96906	MS25036-117	5940-00-114-1306	28	15
96906	MS25036-118	5940-00-557-4345	125	51
			131	77
96906	MS25036-123	5940-00-557-4341	22	10
			28	16
			125	34
96906	MS25036-124	5940-00-114-1311	20	59
96906	MS25036-125	5940-00-557-4338	125	35
			131	26
96906	MS25036-133	5940-00-115-5006	20	38
96906	MS25036-149	5940-00-557-1629	28	17
96906	MS25036-150	5940-00-113-8184	128	29
			138	32
96906	MS25036-153	5940-00-143-4774	21	3
			26	24
			26	40
			28	18
			45	10
			82	6
			101	13
			101	32
			138	43
96906	MS25036-154	5940-00-230-0515	3	58
			28	19
			55	14
			64	2
			94	14
96906	MS25036-156	5940-00-143-4775	28	20
			46	30
			46	36
			48	12
			51	21
			53	12
			95	33
			96	33
96906	MS25036-157	5940-00-143-4777	3	51
			16	9
			17	9
			19	19
			20	47
			51	22
			53	13

PART NUMBER INDEX

CAGEC	PART NUMBER	STOCK NUMBER	FIG.	ITEM
			55	13
			64	12
			105	11
			125	32
			128	37
			131	25
			138	19
96906	MS27020-12	4730-01-347-6070	1	17
			1	45
			137	70
96906	MS27020-14	4730-01-021-6346	66	35
96906	MS27020-2	4730-01-135-5587	6	3
96906	MS27022-12	4730-00-115-3740	7	44
			7	105
			67	38
			116	17
			137	7
			137	42
			137	63
			138	2
96906	MS27022-14	4730-00-289-5368	1	37
			1	63
			7	99
96906	MS27024-11	4730-00-649-9103	116	23
96906	MS27024-12	4730-01-347-8544	1	18
			3	25
			137	2
			137	49
96906	MS27024-14	4730-01-347-8543	7	2
96906	MS27024-16	4730-01-351-8178	142	93
96906	MS27026-12	4730-00-410-9530	1	60
			7	5
			7	42
			7	79
			116	19
			137	43
			138	2
96906	MS27026-14	4730-01-231-2787	1	40
			1	46
96906	MS27026-16	4730-00-471-3117	138	4
96906	MS27026-2	4730-01-140-0444	3	21
96906	MS27028-12	4730-01-086-6157	1	20
			1	48
			1	68
			7	14
			7	45
			7	103
			67	31
			67	36
			69	53

PART NUMBER INDEX

CAGEC	PART NUMBER	STOCK NUMBER	FIG.	ITEM
			116	10
			116	16
			116	18
			137	8
			137	16
			137	38
			137	64
			138	1
96906	MS27028-14	4730-00-590-8083	1	29
			1	36
			1	64
			7	97
			66	33
96906	MS27028-16	4730-01-350-6290	1	11
			4	24
			137	31
			137	36
96906	MS27028-2	4730-01-233-0796	6	2
96906	MS27029-12	4730-01-466-2790	1	19
			1	56
			3	26
			7	6
			7	43
			7	83
			116	11
			116	26
			137	3
			137	15
			137	21
			137	50
			138	1
			143	100
			143	106
96906	MS27029-14	4730-01-078-9945	1	30
			1	39
			1	47
			7	3
96906	MS27029-16	4730-01-347-6073	1	13
			137	26
			138	3
			142	94
96906	MS27029-2	4730-01-393-0988	3	20
96906	MS27030-6	5330-00-612-2414	137	9
			137	17
			137	22
			137	39
			137	51
			137	71
			138	7
96906	MS27030-8	5330-00-088-9166	137	27

PART NUMBER INDEX

CAGEC	PART NUMBER	STOCK NUMBER	FIG.	ITEM
			137	32
			137	37
			137	56
			138	8
			142	95
96906	MS27144-1	5935-00-167-7775	95	18
			96	18
96906	MS3367-1-9	5975-00-074-2072	31	10
			43	32
			119	3
96906	MS3367-2	9905-00-027-4577	43	23
			119	3
96906	MS3367-4-9	5975-00-727-5153	119	3
96906	MS3367-5-9	5975-00-111-3208	31	10
			35	21
			43	32
			48	2
			78	31
			119	3
96906	MS3367-7	5975-01-205-5379	119	3
96906	MS3456W20-7S	5935-01-076-9456	95	14
			96	14
96906	MS35206-233	5305-00-984-4993	96	49
96906	MS35206-336	5305-00-465-5481	35	10
96906	MS35307-301	5305-00-576-6107	3	55
			64	1
96906	MS35307-303	5305-00-719-3997	22	7
			34	16
			52	9
			54	13
			125	46
			128	28
			138	29
96906	MS35307-305	5305-00-021-3616	143	134
96906	MS35307-306	5305-00-702-4523	14	15
			34	1
			35	4
			35	29
			51	5
			52	5
			52	13
			54	5
			54	10
			67	28
			78	26
			106	47
			128	1
			136	5
96906	MS35307-307	5305-00-021-3620	8	2
			24	1

PART NUMBER INDEX

CAGEC	PART NUMBER	STOCK NUMBER	FIG.	ITEM
			25	7
			26	15
			44	41
			44	102
			49	1
			62	5
			82	1
			88	10
			89	1
			92	1
			95	4
			96	4
			97	10
			99	15
			100	12
			102	4
			105	8
			108	8
			110	1
			118	4
			126	4
			128	2
			130	25
96906	MS35307-308	5305-00-207-8253	7	25
			11	24
			20	53
			29	3
			32	10
			44	20
			44	81
			62	5
			62	43
			68	30
			78	34
			88	10
			97	9
			108	4
			117	9
			120	2
			128	4
			128	22
			128	74
			130	1
			131	9
			136	4
			138	51
96906	MS35307-310	5305-00-021-3668	10	35
			44	40
			44	101
			67	70

PART NUMBER INDEX

CAGEC	PART NUMBER	STOCK NUMBER	FIG.	ITEM
			68	38
			80	1
			81	1
			99	6
			113	1
			130	22
96906	MS35307-311	5305-00-576-5807	128	15
96906	MS35307-312	5305-00-207-2297	121	16
			122	16
			130	29
96906	MS35307-313	5305-00-616-6370	128	10
96906	MS35307-316	5305-00-721-8005	3	37
			114	1
96906	MS35307-32		13	76
96906	MS35307-332	5306-00-637-9675	66	20
			66	25
			67	55
			69	26
			69	31
			126	1
96906	MS35307-334	5306-00-543-4405	9	2
			67	78
			71	6
			71	10
			126	1
			128	61
			138	70
96906	MS35307-336	5306-00-637-9674	13	25
			13	59
96906	MS35307-338	5306-00-655-6170	7	64
96906	MS35307-355	5305-00-478-0273	34	14
96906	MS35307-358	5305-00-632-2777	3	60
			31	5
			34	23
			35	1
			120	27
			131	14
			139	1
			139	4
96906	MS35307-359	5305-00-717-5460	4	2
96906	MS35307-360	5305-00-576-5417	13	70
			62	8
			65	7
			104	9
			106	36
			117	11
			120	27
			125	4
96906	MS35307-362	5305-00-717-5467	3	33
			14	1

PART NUMBER INDEX

CAGEC	PART NUMBER	STOCK NUMBER	FIG.	ITEM
			14	11
			20	54
			47	1
			66	52
			67	57
			67	65
			67	83
			68	17
			69	41
			71	31
			77	1
			78	1
			83	4
			88	4
			102	1
			105	1
			118	29
96906	MS35307-363	5305-00-208-1429	4	25
96906	MS35307-364	5305-00-021-3740	7	34
			7	92
			13	11
			46	1
			58	12
			61	1
			93	1
			97	3
			118	6
			121	1
			122	1
			132	19
96906	MS35307-366	5305-00-638-9837	26	11
96906	MS35307-367	5305-00-455-0315	7	37
96906	MS35307-404	5305-00-060-9831	110	4
			110	4
96906	MS35307-408	5305-00-827-7834	67	114
96906	MS35307-411	5305-00-021-3801	14	6
96906	MS35307-413	5305-00-021-3806	7	51
			44	1
			68	34
			88	12
			111	1
			143	130
96906	MS35307-414	5305-00-727-6804	7	55
			7	69
			67	86
96906	MS35307-416	5305-00-685-8156	7	58
			67	87
			136	22
96906	MS35307-418	5305-00-619-6050	131	2
96906	MS35307-443	5305-01-258-8209	133	3

CROSS-REFERENCE INDEXES

PART NUMBER INDEX

CAGEC	PART NUMBER	STOCK NUMBER	FIG.	ITEM
96906	MS35307-463	5305-00-941-3579	131	71
96906	MS35307-465	5305-00-925-7853	66	4
96906	MS35307-469	5305-00-943-2093	85	22
			132	4
96906	MS35307-471	5305-00-562-2685	132	14
96906	MS35307-485	5305-00-947-7051	26	7
			65	1
96906	MS35307-487	5305-00-948-0667	26	1
			84	5
			85	4
			106	1
96906	MS35307-490	5305-00-948-0669	133	16
96906	MS35308-308	5305-00-590-7863	99	5
96906	MS35333-37		95	48
			96	48
			98	16
96906	MS35335-18		98	33
96906	MS35335-32	5310-00-596-7691	98	8
96906	MS35335-42	5310-00-807-4795	31	49
96906	MS35335-57	5310-00-058-3599	33	27
			49	10
			52	30
			54	37
			125	7
96906	MS35335-59	5310-00-614-3552	31	14
			35	38
			52	15
			54	16
96906	MS35335-60	5310-00-209-1239	31	39
			34	19
			35	35
			43	25
			47	31
			49	22
			54	28
			125	11
96906	MS35335-61	5310-00-527-3634	3	39
			3	56
			22	8
			34	17
			35	33
			52	11
			54	12
			64	3
			125	44
			128	27
96906	MS35335-63	5310-00-209-0790	34	15
			131	13
96906	MS35338-135	5310-00-933-8118	21	8
			27	3

PART NUMBER INDEX

CAGEC	PART NUMBER	STOCK NUMBER	FIG.	ITEM
			47	42
96906	MS35338-136	5310-00-929-6395	27	8
			33	35
			44	49
			44	110
			47	15
			47	38
			51	11
			52	28
96906	MS35338-137	5310-00-933-8119	32	3
			33	47
			35	12
			101	4
96906	MS35338-137	5310-00-933-8119	101	23
			138	47
96906	MS35338-138	5310-00-933-8120	4	17
			7	22
			25	33
			25	69
			31	2
			33	42
			35	26
			44	55
			44	116
			47	34
			51	2
			52	2
			54	2
			56	2
			58	2
			60	2
			62	2
			62	37
			68	12
			77	9
			91	2
			105	15
			113	6
			115	2
			118	17
			120	36
			121	38
			130	12
			138	53
96906	MS35338-139	5310-00-933-8121	3	43
			7	27
			8	3
			14	16
			24	2
			25	8

PART NUMBER INDEX

CAGEC	PART NUMBER	STOCK NUMBER	FIG.	ITEM
			26	13
			29	5
			32	12
			34	2
			35	5
			35	30
			44	21
			44	82
			44	132
			49	2
			51	6
			52	6
			52	10
			54	6
			54	14
			62	6
			62	44
			67	26
			67	71
			68	31
			71	22
			77	12
			78	27
			80	2
			81	2
			82	2
			88	8
			89	2
			90	2
			92	2
			95	2
			96	2
			97	7
			99	4
			99	13
			100	9
			102	5
			105	6
			106	27
			108	9
			110	2
			113	2
			114	2
			117	7
			118	2
			120	3
			121	17
			122	17
			126	5
			127	2

PART NUMBER INDEX

CAGEC	PART NUMBER	STOCK NUMBER	FIG.	ITEM
			128	2
			128	16
			128	71
			130	2
			136	2
			138	30
			138	49
			143	135
96906	MS35338-140	5310-00-974-6623	9	3
			109	2
			126	2
			128	59
			132	10
			138	68
96906	MS35338-141	5310-00-984-7042	3	34
			7	35
			7	93
			13	12
			14	3
			20	55
			26	9
			31	6
			34	24
			35	2
			46	2
			47	2
			58	13
			61	2
			62	9
			65	5
			66	37
			67	58
			68	15
			69	42
			71	32
			77	2
			78	2
			83	2
			88	2
			93	2
			97	4
			102	2
			104	8
			105	2
			106	38
			112	2
			117	12
			118	7
			120	28
			121	2

CROSS-REFERENCE INDEXES

PART NUMBER INDEX

CAGEC	PART NUMBER	STOCK NUMBER	FIG.	ITEM
			122	2
			125	2
			132	20
			139	2
96906	MS35338-143	5310-00-933-8778	3	8
			7	52
			14	7
			44	2
			67	88
			68	35
			88	13
			111	2
			131	3
			136	23
			138	62
			143	131
96906	MS35338-144	5310-00-926-5870	133	4
96906	MS35338-145	5310-00-937-0453	66	2
			85	20
			131	69
			131	75
			132	2
96906	MS35338-146	5310-00-937-0454	26	2
			65	2
			84	6
			85	2
			106	2
			133	17
96906	MS35338-148	5310-00-974-6642	134	24
96906	MS35338-50	5310-00-820-6653	144	2
96906	MS35338-98	5310-00-184-8977	35	41
96906	MS35489-55	5325-00-938-6702	43	28
96906	MS35649-204	5310-00-934-9760	4	18
			7	23
			25	32
			25	68
			33	43
			44	54
			44	115
			56	1
			58	1
			60	1
			105	14
			113	7
			118	16
			130	11
			138	52
96906	MS35649-2314	5310-00-245-3615	13	74
96906	MS35649-244	5310-00-934-9748	3	44
			21	7

PART NUMBER INDEX

CAGEC	PART NUMBER	STOCK NUMBER	FIG.	ITEM
			27	2
			33	28
			47	41
			49	9
			52	31
			54	36
			125	6
96906	MS35649-264	5310-00-934-9761	27	7
			33	36
			44	50
			44	111
			47	16
			47	37
			51	12
			85	33
96906	MS35649-266	5310-00-349-9529	35	40
96906	MS35649-282	5310-00-934-9757	98	28
96906	MS35649-284	5310-00-934-9759	3	57
			32	4
			33	48
			34	11
			35	13
			101	3
			101	22
			125	10
96906	MS35650-304	5310-00-934-9765	35	27
96906	MS35756-12	5315-00-616-5522	64	20
96906	MS35823-7A	5340-01-053-7128	BULK	17
96906	MS39232-7	4730-00-231-5650	7	90
96906	MS39347-3	5940-00-978-7672	136	17
			143	148
96906	MS51021-72	5305-00-682-5973	134	28
96906	MS51023-74	5305-00-980-6871	121	10
			122	10
96906	MS51321-1-24N1	2910-00-710-6054	99	20
96906	MS51820-3SS	4730-00-965-1235	44	10
			47	71
96906	MS51824-5SS	4730-01-141-4132	25	15
96906	MS51844-63	4030-01-142-0456	3	30
			13	27
			13	61
			137	59
96906	MS51844-64	4030-00-145-5721	1	15
			1	21
			1	32
			1	43
			1	49
			1	58
			1	69
			4	34

PART NUMBER INDEX

CAGEC	PART NUMBER	STOCK NUMBER	FIG.	ITEM
			6	9
			7	12
			7	17
			7	48
			7	81
			7	100
			59	4
			66	31
			67	29
			67	34
			69	51
			86	13
			87	13
			106	11
			116	6
			116	13
			116	24
			136	8
			137	11
			137	13
			137	19
			137	24
			137	29
			137	34
			137	53
			137	73
			138	6
			142	97
			143	88
			143	98
			143	104
96906	MS51845-9	4730-00-249-3890	7	41
96906	MS51846-1	4730-00-230-1996	99	32
96906	MS51846-12	4730-00-196-1965	99	34
96906	MS51846-120		97	21
96906	MS51846-157	4730-00-196-2030	1	27
			137	48
96906	MS51846-24	4730-00-193-2709	10	56
96906	MS51846-30	4730-00-196-1974	10	57
96906	MS51846-45	4730-00-196-1981	10	69
96906	MS51846-50	4730-00-196-1985	10	66
96906	MS51846-6	4730-00-193-2707	99	25
96906	MS51858-4	5310-00-421-9608	59	40
			86	4
			87	4
			87	20
96906	MS51856-5	5310-01-012-7400	59	9
			86	20
96906	MS51858-5	5310-01-012-7400	59	9
			86	20

PART NUMBER INDEX

CAGEC	PART NUMBER	STOCK NUMBER	FIG.	ITEM
96906	MS51859-4	5310-00-213-4960	59	41
			86	19
96906	MS51859-5	5310-00-138-4315	59	10
			86	3
			87	3
			87	19
96906	MS51859-6	5310-00-502-0106	59	38
			86	8
			87	8
96906	MS51861-35C	5305-00-433-3711	24	8
			29	9
96906	MS51922-18	5310-00-914-6028	13	72
			67	63
			67	81
			68	19
			84	2
			104	1
			118	21
			143	149
96906	MS51922-2	5310-00-929-1807	11	22
			20	51
			25	1
			99	1
			108	2
			121	8
			122	8
96906	MS51922-9	5310-00-984-3806	13	26
			13	60
96906	MS51926-3	5340-00-078-7029	124	6
			142	3
			142	12
96906	MS51929-2	5340-00-057-6956	124	8
			142	2
			142	11
96906	MS51953-78	4730-00-196-1493	7	91
96906	MS51957-17	5305-00-054-5651	33	26
			47	44
			49	8
			125	8
96906	MS51957-18	5305-00-054-5652	21	10
			27	1
96906	MS51957-19	5305-00-054-5653	3	42
			52	29
			54	38
96906	MS51957-27	5305-00-054-6651	34	22
96906	MS51957-28	5305-00-054-6652	85	35
96906	MS51957-30	5305-00-054-6654	31	48
			33	33
			46	7
			47	39

CROSS-REFERENCE INDEXES

PART NUMBER INDEX

CAGEC	PART NUMBER	STOCK NUMBER	FIG.	ITEM
96906	MS51957-31	5305-00-054-6655	31	54
			44	130
			51	9
96906	MS51957-32	5305-00-054-6656	27	6
96906	MS51957-43	5305-00-054-6668	31	56
96906	MS51957-45	5305-00-054-6670	32	1
			35	37
			101	19
			101	38
96906	MS51957-46	5305-00-054-6671	31	13
			33	45
96906	MS51957-47	5305-00-054-6672	31	35
			46	16
			47	12
			51	16
			52	25
			79	10
			125	12
96906	MS51957-49	5305-00-054-6674	52	17
			54	18
96906	MS51957-52	5305-00-054-6677	120	32
			121	42
96906	MS51957-56	5305-00-054-9315	120	32
96906	MS51957-65	5305-00-050-9231	7	20
			118	19
96906	MS51957-67	5305-00-050-9233	138	55
96906	MS51958-59	5305-00-059-3655	49	26
96906	MS51958-61	5305-00-059-3657	47	33
			77	8
			78	13
96906	MS51958-63	5305-00-059-3659	31	38
			34	18
			35	34
			35	67
			47	30
			49	21
			54	30
			101	1
			101	20
96906	MS51958-65	5305-00-059-3661	35	24
96906	MS51958-67	5305-00-059-3663	14	40
			26	19
			31	1
			35	43
			43	24
			132	23
96906	MS51959-30	5305-00-719-5064	33	31
96906	MS51963-105	5305-00-724-5882	131	4
			133	5
96906	MS51963-85	5305-00-724-5903	134	16

PART NUMBER INDEX

CAGEC	PART NUMBER	STOCK NUMBER	FIG.	ITEM
96906	MS51967-21	5310-00-915-4891	144	5
96906	MS51971-1	5310-00-903-5966	3	40
			7	28
			25	3
			26	12
			29	4
			32	13
			34	27
			44	42
			44	103
			54	11
			62	25
			64	4
			67	25
			71	21
			77	11
			88	7
			90	1
			95	1
			96	1
			97	6
			99	3
			99	12
			100	8
			105	5
			106	26
			117	6
			118	1
			125	43
			127	1
			128	26
			128	70
			130	28
			136	1
			138	31
			138	48
96906	MS51971-10	5310-00-763-8927	134	23
96906	MS51971-2	5310-00-767-0445	34	28
			128	58
			138	67
96906	MS51971-3	5310-00-913-8881	3	36
			7	38
			7	65
			7	94
			10	33
			14	4
			14	12
			26	8
			65	4
			68	14

PART NUMBER INDEX

CAGEC	PART NUMBER	STOCK NUMBER	FIG.	ITEM
			83	1
			88	1
			104	7
			106	39
			112	1
			118	27
			125	1
			131	12
96906	MS51971-5	5310-00-768-0321	3	9
			7	57
			7	70
			138	61
96906	MS51971-7	5310-00-764-6609	13	66
			66	1
			85	19
			131	68
			131	74
			132	1
96906	MS51971-8	5310-00-924-5897	26	6
			85	1
			133	19
			135	1
96906	MS52000-10	5330-00-948-0704	27	11
			44	51
			47	40
96906	MS52000-12	5330-00-827-2815	125	41
96906	MS52000-4	5330-00-641-4338	27	5
			47	45
			49	12
			54	41
96906	MS52000-7	5330-00-968-1753	27	12
			49	13
			52	33
			54	39
			125	42
96906	MS52000-8	5330-00-641-4336	27	13
			125	40
96906	MS52000-9	5330-00-827-2813	27	10
			44	112
96906	MS90725-113	5305-01-325-8388	134	5
96906	MS90725-60	5305-01-210-4595	134	27
00624	MV86144-KJ-1316C		65	11
1CSX9	MX-991/U	6230-00-264-8261	143	51
0D5S3	M10 X 20 HX-HD		131	62
0D5S3	M12 X 50 HX-HD		131	45
17549	M22520/1-01	5120-00-165-3912	146	7
81349	M22520/3-1	5220-00-090-6722	146	20
81349	M23053/4-304-0	5970-01-163-1103	BULK	26
81349	M24716TY2CLA.000NPS60 0PSI	5330-01-345-0251	132	16

PART NUMBER INDEX

CAGEC	PART NUMBER	STOCK NUMBER	FIG.	ITEM
81349	M24716TY2CLA.750NPS60 0PSI	5330-01-338-7875	132	8
81349	M5086/1-12-9	6145-00-578-7521	BULK	60
81349	M5086/1-14-9	6145-00-578-7516	BULK	61
81349	M5086/1-16-0	6145-00-248-4932	BULK	62
81349	M5086/1-16-2	6145-01-099-8029	BULK	63
81349	M5086/1-16-3	6145-01-099-8030	BULK	64
81349	M5086/1-16-4	6145-01-237-6923	BULK	65
81349	M5086/1-16-6	6145-00-946-1361	BULK	66
81349	M5086/1-16-8	6145-01-235-9750	BULK	67
81349	M5086/1-16-9	6145-00-578-6072	BULK	68
81349	M5086/1-16-90	6145-01-099-4742	BULK	69
81349	M5086/1-18-9	6145-00-578-7518	BULK	70
81349	M5086/2-10-9	6145-00-578-7513	BULK	72
81349	M5086/2-4-9	6145-00-578-6595	BULK	59
81349	M5086/2-8-9	6145-00-284-0657	BULK	71
0D5S3	M6 X 20 HX-HD		131	59
0D5S3	M6 X 60 HX-HD		131	43
0D5S3	M8 X 12 HX-HD		131	33
0D5S3	M8 X 30 HX-HD		131	56
0D5S3	M8 X 45 HX-HD		131	55
0D5S3	M8X12HX.HD		128	52
0D5S3	M8X20 HX-HD		131	52
81349	M85049/41-12A	5935-01-167-6148	95	15
			96	15
8S867	M871A2	2330-01-294-3367	145	1
57328	N 101		129	6
57328	N 102		129	64
57328	N 1042		129	4
			129	23
			129	76
57328	N 108		129	2
			129	141
57328	N 1234		129	142
57328	N 1316		129	49
57328	N 1450		129	50
57328	N 1539	5331-01-352-1982	129	90
57328	N 15598		109	12
57328	N 15626		129	8
57328	N 158		129	42
57328	N 16553	5331-01-351-7624	109	28
57328	N 16554	5331-01-351-7623	109	26
57328	N16591	5331-01-351-6993	109	21
57328	N 2003	3030-01-351-8189	129	20
57328	N 2010		129	107
57328	N 2050	5330-01-352-1999	129	41
57328	N 2144		129	123
57328	N 2152		129	124
57328	N 2166		129	75
57328	N 2391		129	128

CROSS-REFERENCE INDEXES

PART NUMBER INDEX

CAGEC	PART NUMBER	STOCK NUMBER	FIG.	ITEM
57328	N 2393		129	39
57328	N2507	5331-01-282-9268	129	67
57328	N 2765		129	140
57328	N 2789	5331-01-352-1981	129	56
57328	N 2857		129	133
57328	N 2858		129	131
57328	N 2861		129	132
57328	N 2863		129	89
57328	N 287		129	63
57328	N 2915		129	26
57328	N 3026		129	43
57328	N 3111		129	58
57328	N 3313		129	5
			129	24
57328	N 3374		129	17
57328	N 3458	4730-01-345-7673	129	108
57328	N3459		109	30
			129	106
57328	N 3462		129	25
57328	N 3520		129	96
57328	N 3521		129	100
57328	N 3623		129	52
57328	N 3624		129	54
57328	N 3625	5330-01-352-1998	129	53
57328	N 370		129	18
57328	N 3707	5365-01-254-2346	129	38
57328	N 3712	5331-00-166-8396	129	69
57328	N 3783		129	121
57328	N 3784		129	65
57328	N 380		129	95
57328	N3811	4730-01-369-5874	129	47
57328	N 3848		129	27
57328	N 3859		129	126
57328	N 4205		129	86
57328	N 4206		129	119
57328	N 4247		129	122
57328	N 4451	5330-01-233-3247	129	13
57328	N 4602	5330-01-351-7685	109	25
57328	N 4615		129	88
57328	N 4640		129	77
57328	N 5681	5330-01-352-2000	129	
57328	N 5682		129	
57328	N 5688		129	
57328	N 58		129	19
57328	N638	5330-01-289-6097	129	80
57328	N 70	4330-01-257-0870	129	14
57328	N 7838		129	48
57328	N 84		129	94
57328	N 88		129	1
57328	N 8953-050		129	72

PART NUMBER INDEX

CAGEC	PART NUMBER	STOCK NUMBER	FIG.	ITEM
83750	NA-4804		126	24
80205	NAS1352C6-24	5305-01-047-9435	93	20
88044	NAS1382-4	5340-00-916-6532	124	7
0D5S3	NA7010		131	40
61424	NB-8-062	4720-01-141-1454	BULK	50
59693	NBD-28	5120-00-235-5809	143	59
15235	NCGB1232-SG	5975-01-352-0285	23	1
15235	NCGE2234-SG	5975-01-358-1058	126	11
			128	25
7F654	NEMA LS-15R		142	37
			142	59
81348	NNNF00240	6640-00-935-4286	143	22
			143	142
OLU89	NU130DE02-SS		73	61
			74	64
			75	61
OLU89	NU13001-SS		73	84
			74	87
			75	84
			76	13
57328	N04586	5331-00-338-1441	109	16
0D5S3	N215/C3	3110-01-354-6665	131	51
03514	N37P15057813		34	8
03514	N37P15060B13		34	7
61424	N4MC4	4730-01-116-9214	10	53
			12	60
			78	10
			85	18
03514	N405P38C		34	9
61424	N5ME2	4730-01-351-5853	77	7
61424	N6EU6	4730-01-349-3884	15	4
98441	N6MC8	4730-01-297-0172	15	37
98441	N6TU6-V	4730-01-350-6219	15	25
57328	N781		109	19
04816	ORE-125	5330-01-250-1498	67	46
96195	P-1000-EA	9540-01-356-2574	BULK	13
79172	P-17949		60	18
79172	P-19803		60	21
79172	P-22616		60	19
96195	P-2600	8135-01-365-8859	BULK	14
79172	P-40971		60	25
79172	P-46074		60	27
79172	P-46075		60	20
79172	P46099	3010-01-259-2375	60	17
79172	P-46370		60	26
79172	P-47486		60	24
82832	P-5G2		142	51
			142	73
79172	P-50219	5330-01-264-5952	60	22
30053	PORTA-PAK		143	16

PART NUMBER INDEX

CAGEC	PART NUMBER	STOCK NUMBER	FIG.	ITEM
82832	PP		142	50
30053	PPF	4730-01-395-0418	92	17
57328	PURUS	4310-01-355-6344	146	27
57328	PURUSP1-H	4310-01-350-5466	128	13
			129	
61424	PV53-1	4720-00-410-4288	BULK	46
82832	P10		142	49
			142	71
96195	P1001C	9520-01-356-1591	BULK	37
83750	P3P-05-OSHA-RT		126	26
83750	P3P-05-OSHA-WG		126	27
79172	P32368	5305-01-395-6271	60	16
16290	P52618	5330-01-359-9350	18	6
			22	17
16290	P58440 0-180GPM 2IN. SCH 5S	6680-01-353-3280	30	24
16290	P58440 0-80GPM 2IN SCH 5S	6680-01-353-3281	30	25
45225	P74-144	5120-01-013-1676	143	66
82832	P9		142	72
24161	QD-E 2.375 BORE		131	1
24161	QD-F 2.5 BORE		133	2
08805	Q500PAR56MFL120V	6240-00-843-0692	142	48
			142	70
			143	52
0D5S3	Q717B-D225-146/SM		131	39
0D5S3	Q717K-225		131	38
30053	RE-10	6630-01-103-9007	143	14
04049	RKD10	4440-01-350-1648	91	8
70642	RK14800	4820-01-350-1538	90	
87327	RPG04-0438		8	19
87327	RPG07-0008	5330-01-349-5542	8	27
			8	28
79172	RP684818		60	29
72661	RST-10	4730-01-351-5866	68	4
			69	20
			84	12
72661	RST-25	4730-01-255-1219	106	21
72661	RST-5	4730-01-206-4814	66	13
			106	17
81343	SAE J512-010302	4730-01-351-1567	100	3
81343	SAE J5142-2140238		99	33
81343	SAE J5144-4 140237		127	8
81343	SAE 140238		133	9
81343	SAE 140239		132	9
			133	12
81343	SAE 30R2	4720-01-168-1546	BULK	18
81343	SAEJ5134-7-010102B		100	7
81343	SAEJ514-070102		100	5
OLU89	SC107R-SS		73	105

PART NUMBER INDEX

CAGEC	PART NUMBER	STOCK NUMBER	FIG.	ITEM
			74	108
			75	105
OLU89	SC108R-SS		73	106
			74	109
			75	106
37942	SC110N	6350-01-196-0142	47	9
06124	SC110NJ	6350-01-232-6245	47	8
OLU89	SC1307H-SS		73	110
			74	113
			75	110
OLU89	SC1316E-SS		73	83
			74	86
			75	83
			76	12
OLU89	SC512F-SS		73	108
			74	111
			75	108
OLU89	SC707R-SS		73	107
			74	110
			75	107
55719	SDD6	5120-01-367-3745	143	58
87327	SE-591	4240-01-357-4912	8	8
55719	SFS181	5120-01-335-0883	143	59
15235	SG2	5330-01-379-0587	128	85
60173	SG6		106	51
60173	SG6-0.2-635 (0+4)		106	49
04049	SKD10	6680-01-356-8003	91	10
81860	SLM-12A	5342-01-353-2680	136	26
			136	28
62866	SP-30487	5330-01-351-2818	59	
			86	
			87	
16166	SS-CO-3S	4730-01-348-6247	11	15
02570	SS-1210-8-8	4730-00-793-2708	10	86
02570	SS-400-71-4	4730-00-304-3552	89	7
18034	SS-8P6T4	4820-01-307-3597	143	92
97111	SSH2-63Y	4730-01-351-9998	127	6
97111	SSH3-62	4730-01-353-8496	143	95
			143	109
OLU89	SS1307E-SS		73	109
			74	112
			75	109
82240	STR2-4-5	5325-00-551-8054	120	13
63624	SW30-8040	4610-01-253-4294	103	18
14726	S09718SF	5940-00-926-0085	28	21
			95	42
			96	42
55719	S1820B	5120-00-187-7126	143	62
0D5S3	S236		131	67
02295	TED134010WLFP		35	15

CROSS-REFERENCE INDEXES

PART NUMBER INDEX

CAGEC	PART NUMBER	STOCK NUMBER	FIG.	ITEM
03514	TEFOM 2		34	4
03497	THQC2115WL	5925-00-724-5531	32	6
38056	TYPE 1305	6685-01-349-7925	146	48
83750	T5100		126	37
79172	U21781	6105-01-251-1491	60	28
79172	UXA21720	4610-01-622-2101	60	23
81348	V-F-106	5325-01-017-5623	124	5
81348	V-T-295E		124	4
			124	4
			142	9
			142	18
63026	VTS450B-346-0781-4013	4820-01-351-6018	112	7
34371	V131DB40	5905-01-143-2706	52	19
			54	20
15235	V84	6250-01-271-7504	24	9
			29	10
81348	W-L-661, TPF111		143	55
30647	W-38		128	66
01121	W-39	4520-01-237-8038	39	1
01121	W-48	5999-01-203-3814	41	1
57661	W-5659-00		13	35
01121	W-74	6110-01-322-6414	38	1
81348	WC596/12-3	5935-01-017-3290	33	37
81348	WL101-77T	6240-00-246-5052	24	5
			29	2
15235	WLRS-1	5975-01-084-0987	51	13
81348	WWP460	4730-00-288-9400	67	40
			137	45
			137	66
81348	ZZ-G-381	8415-00-266-8677	143	46
81348	ZZ-H-561	4720-01-354-9025	BULK	20
87327	01-0632		8	13
14007	1013012	4730-00-702-6363	106	31
57328	010776-340	4820-01-352-3686	129	33
57328	011430-635		109	32
57328	011555-340	4820-01-352-3687	129	35
D9135	012841-080	4310-12-166-2256	129	109
57328	13283	5330-01-351-7002	109	34
57328	013758-400	4330-01-351-8585	129	10
57328	013764-864		129	9
57328	013984-070		129	92
D9135	014121-080	4820-12-166-2100	129	55
57328	014546-500		129	32
57328	014582-080	4220-01-279-3927	129	93
01343	02-6251-000	5330-01-089-0655	71	40
01343	02-6502-003	4820-00-919-9860	71	42
53390	0219-01-5	6640-01-357-6716	143	35
62782	28810	4720-01-334-9212	BULK	44
62782	28870	4720-01-300-2999	BULK	21
62782	28981	4720-01-354-5335	BULK	45

CROSS-REFERENCE INDEXES

PART NUMBER INDEX

CAGEC	PART NUMBER	STOCK NUMBER	FIG.	ITEM
17549	030-8519-000	5999-01-349-7668	21	23
			142	100
17549	030-8586-000	5999-01-344-8758	23	4
			56	8
			56	14
			56	20
			58	9
			60	8
			80	6
			81	6
			83	23
			90	8
			101	9
			101	28
			113	19
			114	8
			115	16
			138	35
71468	030-8587-000	5999-01-279-3055	16	4
			16	23
			19	4
			19	13
			19	35
			45	21
			46	22
			48	8
			50	6
			78	17
			92	7
71468	030-8588-000	5999-01-344-8759	2	7
			2	25
			3	47
			16	24
			17	4
			17	14
			19	36
			20	3
			20	43
			23	23
			46	23
			48	9
			64	9
			94	11
			95	29
			96	29
			125	28
			126	20
			128	34
			138	15
			142	33

PART NUMBER INDEX

CAGEC	PART NUMBER	STOCK NUMBER	FIG.	ITEM
			142	55
			142	76
17549	030-8612-000	5999-01-349-7667	21	15
			94	10
71468	030-8613-000	5999-01-352-0898	125	29
			131	23
17549	031-8520-000	5999-01-350-6633	20	15
			20	25
			125	31
17549	031-8555-000	5999-01-343-8906	16	25
			19	37
			27	37
			48	10
			50	7
			55	7
			95	38
			96	38
71468	031-8556-000	5999-01-158-8887	2	11
			16	26
			16	26
			19	38
			27	38
			27	38
71468	031-8557-000	5999-01-343-8909	2	11
			2	29
			16	27
			17	15
			19	39
			20	10
			23	32
			27	39
			53	5
			55	8
			94	9
			125	30
			142	81
87327	05-0478		8	22
87327	05-1668		8	22
87327	05-1669		8	26
87327	05-1670		8	29
87327	05-1671		8	23
57328	055581-635		129	74
57328	055888-635	4730-01-351-2812	109	33
57328	057056-070		129	46
57328	057154-050		129	66
57328	057679-410	4330-01-350-9101	109	17
57328	058037-341		109	23
57328	058050-410		109	36
57328	058135-080		129	82
57328	058136-080		129	81

PART NUMBER INDEX

CAGEC	PART NUMBER	STOCK NUMBER	FIG.	ITEM
57328	058137-70		129	73
57328	058141-010		129	139
57328	058172-010		129	134
30646	060-10758222		143	3
57328	061114-340		109	15
87327	07-0065		8	10
53918	070-11	4730-01-027-0723	85	16
92878	7759		99	29
92878	7765		99	28
92878	7772		99	27
D9135	07790-080	4310-12-166-2258	129	57
65586	087-872162-001	4540-01-355-3149	115	21
57328	09377-110		129	21
57328	09889-864		129	3
0D5S3	1-10000353	3110-00-436-7329	140	15
0D5S3	1-10909202		140	20
09647	1-12-9		53	15
09647	1-12-9-E0860		48	13
09647	1-12-9-GND-GND		55	16
09647	1-12-9-J12		27	42
09647	1-12-9-J55-J57		53	14
09647	1-12-9-J60-J62		55	15
09647	1-12-9-J65-J66-J67		125	38
09647	1-12-9-SR5GND		51	24
09647	1-12-9-W18		46	31
09647	1-12-9-W37		23	30
09647	1-12-9-W43		19	10
09647	1-12-9-W44		19	21
09647	1-12-9-W49		16	10
09647	1-12-9CP		28	3
0D5S3	1-13891001		140	3
09647	1-14-9CP		28	2
0D5S3	1-15742701		140	13
09647	1-16-9-E0860		48	14
09647	1-16-9-J10-J16		27	41
09647	1-16-9-J24		45	22
09647	1-16-9-J30-J32		50	10
09647	1-16-9-J61		55	17
09647	1-16-9-PBl-lB2		46	40
09647	1-16-9-PB20-lBi		46	39
09647	1-16-9-W18		46	32
09647	1-16-9CP		28	1
0D5S3	1-16236402		140	17
09647	1-18-9-J14		27	40
09647	1-18-9-W22		50	11
30780	1-2X1-8PTRS	4730-00-729-4930	10	28
			10	75
0D5S3	1-35945701	4140-01-350-5618	64	19
0LU89	1-37		73	90
			74	93

CROSS-REFERENCE INDEXES

PART NUMBER INDEX

CAGEC	PART NUMBER	STOCK NUMBER	FIG.	ITEM
			75	90
0LU89	1-39		73	114
			74	117
			75	114
30780	1/1HPSS		133	7
64382	1ER001-221	5342-01-352-7582	103	
64382	1ER001-225	6695-01-355-4172	103	
30780	1X3-4PTRSS	4730-00-128-0196	3	61
0D5S3	10MM BRASS		131	65
0D5S3	10MM INT TOOTH		131	63
0D5S3	10MM STEEL		131	64
0D5S3	10MM-BRASS		131	42
0D553	10MM-STEEL		131	41
44541	100003-51	3110-01-321-7994	5	6
44541	100005-12	3110-01-321-1986	5	8
13646	101.000.110	4320-01-116-3316	139	9
13646	101.000.312		4	12
62866	10113		57	15
62866	10123	4730-01-323-5135	59	16
			86	26
			87	26
13646	102.000.218	5315-01-350-5962	4	7
57328	1026-640		129	102
57328	10284-864	4310-01-351-6568	129	144
57328	10287-050		129	120
62866	10292	4820-01-323-7049	57	11
62866	10299	5310-01-354-0077	57	3
			57	9
			59	21
			86	31
			87	31
62866	10302		57	16
62866	10338	4820-01-323-7325	57	6
			57	13
			59	19
			86	29
			87	29
62866	10340	5305-01-350-6058	57	14
92878	1037	5310-00-596-7693	98	29
83750	1038		126	67
13646	104.000.107	4320-01-348-9529	4	3
13646	104.000.168	5310-01-156-9895	139	11
13646	104.000.171	4320-01-326-2598	139	7
13646	104.000.175	5330-01-201-0237	4	13
34895	104P014	4730-00-489-0313	59	26
			86	41
			87	41
62866	10403		57	31
62866	10407	5330-01-323-8846	57	7

PART NUMBER INDEX

CAGEC	PART NUMBER	STOCK NUMBER	FIG.	ITEM
			57	12
			59	18
			86	28
			87	28
62866	10422	5325-01-375-4241	57	25
62866	10465		57	20
92878	1047		98	39
13646	105.000.346	5307-01-348-8396	4	9
13646	105.000.347	5310-01-349-2801	4	15
13646	105.000.353	5315-01-349-9055	4	6
13646	105.000.465		139	12
13646	105.000.550	5305-01-349-0799	4	4
13646	105.000.557	5315-01-349-5783	4	19
13646	105.000.569	5310-01-349-2800	4	5
13646	105.000.570	5307-01-348-8397	4	16
62866	10501	4820-01-350-6175	15	1
92878	105161		98	10
57328	10528-640		129	12
92878	105459		98	46
91224	1055-99	6810-01-200-8010	143	18
			143	147
92878	105602		98	5
62866	10598		57	28
13646	106.000.327A		4	30
92878	106055		99	22
92878	106057	5330-01-351-1247	99	23
92878	106097		99	21
92878	10619-05	4720-01-429-5332	98	49
62866	10626	5905-01-318-0794	57	27
82423	10643	5310-00-545-8402	35	42
64382	107001-3		103	21
64382	107016-3		132	12
64382	107019-1	4730-01-400-3112	103	2
64382	107096-1	4730-01-350-7445	103	15
13646	108.000.109		139	6
13646	108.000.163		4	31
10001	12Z6000-5	4730-00-273-6709	4	22
57328	10936-110		129	129
57328	10944-100		129	127
62866	10978	4820-01-323-7050	59	17
			86	27
			87	27
43990	11-002-021-W/18-003-001	4820-01-350-0213	78	11
57328	1100-080		129	104
50492	1101090	5330-01-334-7177	134	31
50492	1113543		134	26
17773	11361966	6240-00-941-8487	30	3
			30	6
			30	9

CROSS-REFERENCE INDEXES

PART NUMBER INDEX

CAGEC	PART NUMBER	STOCK NUMBER	FIG.	ITEM
			30	12
			46	11
65504	114-0032	5999-01-188-4254	40	1
30646	115LU		79	19
13646	116.000.143	5331-01-186-9053	4	21
13646	116.000.146	5331-01-186-9054	139	8
13646	116.000.184	5330-01-326-0780	4	11
13646	118.000.393	5330-01-349-5567	4	
13646	118.000.422	4320-01-348-6395	4	27
13646	118.000.473	4710-01-349-2433	4	28
50492	1187048	4730-01-335-0114	134	37
50492	1187413		134	35
81343	12-4 140140S	4730-01-127-6274	133	15
09647	120-00355	5430-01-351-4547	86	42
			87	42
09647	120-00-356-000	5430-01-357-4180	59	31
09647	120-00553	4320-01-348-4387	139	3
09647	120-00931		136	10
09647	120-00975	5306-01-352-9741	68	20
09647	120-01-466-5	4730-01-355-0439	106	6
09647	120-01065-1	6625-01-354-6830	78	29
			79	16
09647	120-01369-10		119	70
09647	120-01411-2		3	12
09647	120-01459	5315-01-350-0429	3	3
09647	120-01617	6145-01-357-1096	94	31
09647	120-01617-W28		26	27
			26	43
09647	120-01617-W50		45	9
09647	120-01673	5306-01-351-2083	67	95
09647	120-01867	4520-01-348-4216	126	21
09647	120-02079-1		71	18
09647	120-02079-3	5306-01-351-4303	13	20
			13	51
			71	13
09647	120-02177-1	4010-01-421-4866	137	10
			137	52
			137	58
			137	72
			138	5
			142	96
			143	89
			143	99
			143	105
09647	120-02215		1	4
			136	13
09647	120-02312-2	5935-01-346-7156	27	26
09647	120-02313-1	5935-01-347-0031	3	46
09647	120-02316-7	5935-01-346-7146	19	23
09647	120-02328-6		131	10

CROSS-REFERENCE INDEXES

PART NUMBER INDEX

CAGEC	PART NUMBER	STOCK NUMBER	FIG.	ITEM
09647	120-02347		28	7
09647	120-02383	5310-01-353-3634	128	20
09647	120-02433-1		20	37
			29	15
09647	120-02433-10		95	43
09647	120-02433-100		92	9
09647	120-02433-101		19	5
09647	120-02433-102		19	15
09647	120-02433-103		90	10
09647	120-02433-104		46	27
09647	120-02433-105		19	60
09647	120-02433-106		115	9
09647	120-02433-107		115	10
09647	120-02433-108		73	1
09647	120-02433-109		20	44
09647	120-02433-11		96	43
09647	120-02433-110		83	27
09647	120-02433-111		83	26
09647	120-02433-112		83	25
09647	120-02433-113		74	1
09647	120-02433-114		75	1
09647	120-02433-115		74	2
09647	120-02433-116		74	3
09647	120-02433-117		115	8
09647	120-02433-118		16	5
09647	120-02433-119		78	19
09647	120-02433-12		101	15
09647	120-02433-120		58	7
09647	120-02433-121		80	7
09647	120-02433-122		81	7
09647	120-0.C33-123		74	4
09647	120-02433-124		56	22
09647	120-02433-125		56	16
09647	120-02433-126		56	10
09647	120-02433-127		16	38
09647	120-02433-128		113	16
			114	5
			114	10
09647	120-02433-129		60	10
09647	120-02433-13		101	34
09647	120-02433-132		2	8
09647	120-02433-133		2	26
09647	120-02433-134		2	30
09647	120-02433-136		138	40
09647	120-02433-137		138	21
09647	120-02433-138		20	16
09647	120-02433-139		20	27
09647	120-02433-14		95	9
09647	120-02433-140		23	34
09647	120-02433-141		126	17

PART NUMBER INDEX

CAGEC	PART NUMBER	STOCK NUMBER	FIG.	ITEM
09647	120-02433-142		128	31
09647	120-02433-143		131	19
09647	120-02433-144		131	18
09647	120-02433-145		21	17
09647	120-02433-146		21	25
09647	120-02433-147		19	53
09647	120-02433-148		94	17
09647	120-02433-149		94	15
09647	120-02433-15		96	9
09647	120-02433-150		95	40
09647	120-02433-151		96	40
09647	120-02433-152		95	8
09647	120-02433-153		96	8
09647	120-02433-154		17	19
09647	120-02433-155		17	20
09647	120-02433-156		19	52
09647	120-02433-157		19	55
09647	120-02433-158		19	56
09647	120-02433-159		19	58
09647	120-02433-16		92	11
09647	120-02433-160		19	59
09647	120-02433-161		19	57
09647	120-02433-162		50	12
09647	120-02433-163		20	11
09647	120-02433-164		16	50
09647	120-02433-165		16	49
09647	120-02433-166		16	48
09647	120-02433-167		16	52
09647	120-02433-168		16	53
09647	120-02433-169		16	54
09647	120-02433-17		92	15
09647	120-02433-170		16	55
09647	120-02433-171		16	46
09647	120-02433-172		16	47
09647	120-02433-173		16	45
09647	120-02633-174		16	44
09647	120-02433-175		16	43
09647	120-02433-176		16	42
09647	120-02433-177		16	51
09647	120-02433-178		16	41
09647	120-02433-179		16	40
09647	120-02433-18		46	28
09647	120-02433-180		16	39
09647	120-02433-182		2	12
09647	120-02433-183		3	48
09647	120-02633-184		102	11
09647	120-02433-185		94	23
09647	120-02433-19		3	52
09647	120-02433-20		115	12
09647	120-02433-21		115	13

PART NUMBER INDEX

CAGEC	PART NUMBER	STOCK NUMBER	FIG.	ITEM
09647	120-02433-22		50	13
09647	120-02433-23		23	9
09647	120-02433-24		23	14
09647	120-02433-25		23	19
09647	120-02433-27		82	8
09647	120-02433-28		26	26
			26	42
09647	120-02433-29		21	5
09647	120-02433-3		21	21
09647	120-02433-30		18	2
09647	120-02433-31		22	2
09647	120-02433-32		22	5
09647	120-02433-4		94	20
09647	120-02433-42		20	7
09647	120-02433-43		20	46
09647	120-02633-44		23	28
09647	120-02633-45		20	21
09647	120-02433-46		20	32
09647	120-02433-48		64	13
09647	120-02433-49		17	7
09647	120-02433-5		94	22
09647	120-02433-50		19	7
09647	120-02433-51		19	17
09647	120-02433-52		113	15
			114	9
09647	120-02433-53		60	11
09647	120-02433-54		78	24
09647	120-02433-55		115	11
09647	120-02433-56		16	7
09647	120-02433-57		45	12
09647	120-02433-58		45	13
09647	120-02433-59		45	14
09647	120-02433-6		94	18
09647	120-02433-60		45	15
09647	120-02433-61		45	16
09647	120-02433-62		45	17
09647	120-02433-63		45	18
09647	120-02433-64		2	18
09647	120-02433-65		2	34
09647	120-02433-69		138	22
09647	120-02433-7		94	16
09647	120-02433-70		138	41
09647	120-02433-72		131	28
09647	120-02433-73		128	35
			131	29
09647	120-02433-75		126	13
09647	120-02433-77		94	19
09647	120-02433-78		94	21
09647	120-02433-79		95	31
09647	120-02433-8		95	35

PART NUMBER INDEX

CAGEC	PART NUMBER	STOCK NUMBER	FIG.	ITEM
09647	120-02433-80		96	31
09647	120-02433-81		101	11
09647	120-02433-82		101	30
09647	120-02433-83		99	18
09647	120-02433-84		99	19
09647	120-02433-85		23	5
09647	120-02433-86		19	48
09647	120-02433-87		16	34
09647	120-02433-88		19	49
09647	120-02433-89		16	35
09647	120-02433-9		96	35
09647	120-02433-90		19	50
09647	120-02433-91		16	36
09647	120-02433-92		19	51
09647	120-02433-93		16	37
09647	120-02433-94		20	4
09647	120-02433-95		23	25
09647	120-02433-96		17	18
09647	120-02433-97		17	5
09647	120-02433-98		64	10
09647	120-02433-99		19	54
09647	120-02434-1		86	37
			87	37
09647	120-02434-2		114	37
09647	120-02435-2		11	2
09647	120-02456-10		10	22
09647	120-02456-11		10	29
09647	120-02456-12		12	33
09647	120-02456-13		10	49
09647	120-02456-14		10	48
09647	120-02456-15		10	47
09647	120-02456-16		10	46
09647	120-02456-17		10	45
09647	120-02456-18		10	44
09647	120-02456-19		10	59
09647	120-02456-2		11	4
09647	120-02456-20		15	34
09647	120-02456-22		15	30
09647	120-02456-23		15	31
09647	120-02456-24		15	32
09647	120-02456-25		10	30
09647	120-02456-26		15	36
09647	120-02456-27		15	33
09647	120-02456-28		15	27
09647	120-02456-29		15	26
09647	120-02456-3		11	6
			15	6
09647	120-02456-30		15	6
09647	120-02456-31		15	28
09647	120-02456-32		15	293

PART NUMBER INDEX

CAGEC	PART NUMBER	STOCK NUMBER	FIG.	ITEM
09647	120-02456-33		15	24
09647	120-02456-34		15	21
09647	120-02456-38		13	3
09647	120-02456-39		13	5
09647	120-02456-4		10	21
09647	120-02456-40		13	7
09647	120-02456-41		12	48
09647	120-02456-42		12	45
09647	120-02456-43		12	18
09647	120-02456-44		12	23
09647	120-02456-45		12	27
09647	120-02456-46		12	31
09647	120-02456-47		12	21
09647	120-02456-48		12	25
09647	120-02456-49		12	14
09647	120-02456-5		10	62
09647	120-02456-50		12	29
09647	120-02456-51		12	12
09647	120-02456-52		12	20
09647	120-02456-53		12	40
09647	120-02456-55		10	50
09647	120-02456-6		10	61
09647	120-02456-60		12	38
09647	120-02456-61		12	42
09647	120-02456-62		12	44
09647	120-02456-64		12	36
09647	120-02456-65		12	8
09647	120-02456-66		12	6
09647	120-02456-67		12	4
09647	120-02456-68		12	2
09647	120-02456-69		12	10
09647	120-02456-7		10	60
09647	120-02456-70		11	8
09647	120-02456-74		10	84
09647	120-02456-75		15	22
09647	120-02456-76		15	3
09647	120-02456-8		150	7
09647	120-02456-80		109	7
09647	120-02456-81		10	C3
09647	120-02456-9		10	77
09647	120-02590-3		19	20
			23	13
09647	120-02593		146	
09647	120-02593-P		142	
09647	120-02594	5340-01-442-1755	1	1
09647	120-02598-1		1	14
			7	10
			7	82
			7	101
09647	120-02598-2		1	22

PART NUMBER INDEX

CAGEC	PART NUMBER	STOCK NUMBER	FIG.	ITEM
			1	50
			1	70
09647	120-02598-21		1	42
09647	120-02598-3		1	31
			7	16
			116	7
			116	25
			3	32
09647	120-02598-4		3	3
09647	120-02598-5		3	29
			7	47
			59	5
09647	120-02598-6		59	5
			66	32
			67	30
			67	35
			69	52
			86	14
			87	14
			106	12
			4	33
09647	120-02598-61		4	3
			6	8
			7	11
09647	120-02598-8		13	28
			13	62
09647	120-02599-1		12	43
09647	120-02599-10		12	9
09647	120-02599-11		10	14
09647	120-02599-12		10	12
			12	24
09647	120-02599-13		12	19
09647	120-02599-14		12	22
09647	120-02599-15		10	11
09647	120-02599-16		10	13
09647	120-02599-17		10	15
09647	120-02599-18		12	1
09647	120-02599-19		12	3
09647	120-02599-2		12	17
09647	120-02599-20		12	5
09647	120-02599-21		12	7
09647	120-02599-22		10	10
09647	120-02599-23		10	13
09647	120-02599-24		12	13
09647	120-02599-25		10	9
09647	120-02599-26		12	26
09647	120-02599-27		12	32
09647	120-02599-28		12	28
09647	120-02599-29		12	30
09647	120-02599-3		10	18

PART NUMBER INDEX

CAGEC	PART NUMBER	STOCK NUMBER	FIG.	ITEM
09647	120-02599-30		15	2
09647	120-02599-32		12	35
09647	120-02599-33		15	19
09647	120-02599-34		10	3
09647	120-02599-35		12	51
09647	120-02599-36		12	37
09647	120-02599-37		10	5
09647	120-02599-38		10	4
09647	120-02599-39		15	21
09647	120-02599-4		12	39
09647	120-02599-40		12	41
			15	20
09647	120-02599-41		15	8
09647	120-02599-42		15	12
09647	120-02599-43		15	15
09647	120-02599-44		15	16
09647	120-02599-45		15	7
09647	120-02599-46		10	20
09647	120-02599-47		12	47
09647	120-02599-48		15	18
09647	120-02599-49		15	17
09647	120-02599-5		15	11
09647	120-02599-50		10	8
09647	120-02599-51		10	6
09647	120-02599-52		15	14
09647	120-02599-53		15	13
09647	120-02599-54		15	5
09647	120-02599-55		10	1
09647	120-02599-56		10	19
09647	120-02599-57		10	7
09647	120-02599-58		12	is
09647	120-02599-59		12	49
09647	120-02599-6		15	10
09647	120-02599-60		12	50
09647	120-02599-61		6	6
09647	120-02599-62		7	50
			7	89
09647	120-02599-63		85	13
09647	120-02599-64		85	14
09647	120-02599-65		86	32
			86	32
			87	32
09647	120-02599-66		86	25
			87	25
09647	120-02599-67		66	44
09647	120-02599-69		66	28
09647	120-02599-7		10	2
09647	120-02599-70		66	30
09647	120-02599-72		68	5
09647	120-02599-73		69	12

PART NUMBER INDEX

CAGEC	PART NUMBER	STOCK NUMBER	FIG.	ITEM
09647	120-02599-74		69	19
09647	120-02599-75		69	37
09647	120-02599-76		78	6
09647	120-02599-77		78	8
09647	120-02599-78		67	5
			67	5
09647	120-02599-79		67	47
09647	120-02599-8		15	9
09647	120-02599-83		129	37
09647	120-02599-84		129	61
09647	120-02599-9		12	11
09647	120-02602-1		80	9
			81	9
			90	12
09647	120-02602-10-W18		46	29
09647	120-02602-11-W22		46	29
			50	9
09647	120-02602-12		85	26
09647	120-02602-6		16	8
			19	18
09647	120-02602-7		19	8
09647	120-02602-8		83	29
09647	120-02602-9		23	29
09647	120-02605-10		21	20
09647	120-02605-11-W23		23	10
09647	120-02605-12-W24		23	15
09647	120-02605-13-W25		23	20
09647	120-02605-13-W26		29	16
09647	120-02605-14		101	35
09647	120-02605-15		101	16
09647	120-02605-16		92	13
09647	120-02605-16-W46		60	14
09647	120-02605-17		95	36
			96	36
09647	120-02605-18		95	44
			96	44
09647	120-02605-19		78	25
09647	120-02605-20		102	12
09647	120-02605-22		126	16
09647	120-02605-23		131	30
09647	120-02605-3		17	8
			20	8
			20	49
09647	120-02605-4		82	9
09647	120-02605-6		20	22
09647	120-02605-7		20	33
09647	120-02605-8		20	39
09647	120-02605-9		21	6
09647	120-02650		146	21
09647	120-07511-8	4730-00-691-5461	10	24

PART NUMBER INDEX

CAGEC	PART NUMBER	STOCK NUMBER	FIG.	ITEM
09647	120-07574	4730-01-351-5879	67	98
09647	120-07593-1		13	21
			13	52
			71	12
09647	120-07593-2		71	17
09647	120-07639		3	50
09647	120-07639-1		138	39
09647	120-07639-1-W52		45	8
09647	120-07639-2	6145-01-356-6377	2	9
			2	27
			138	18
09647	120-07639-2-W41		64	14
09647	120-07639-3	6145-01-354-6717	142	36
			142	58
			142	79
09647	120-07639-6	6145-01-357-1800	BULK	2
09647	120-07639-7	6145-01-357-1801	BULK	3
09647	120-07639-8	6145-01-357-1802	BULK	4
0K1P3	120-07881-1	4720-01-355-3271	100	2
0K1P3	120-07881-3	4720-01-355-3270	100	1
09647	120-50089-1	4710-01-349-5151	12	53
09647	120-50089-2	4710-01-349-5150	12	52
09647	120-50089-3		65	14
09647	120-50495-1	4710-01-349-5159	13	9
09647	120-50495-2	4710-01-349-5156	12	64
09647	120-50495-3	4710-01-349-5157	12	65
09647	120-50495-4	4710-01-349-5160	13	10
09647	120-50495-5	4710-01-349-5158	12	67
09647	120-50495-6	4710-01-349-5155	12	58
09647	120-50495-7		109	8
09647	120-50497	4710-01-369-5154	12	66
09647	120-51149	4710-01-349-5153	12	55
09647	120-51150	4710-01-349-5152	12	54
09647	120-51151-000	4710-01-348-7108	25	11
			25	45
09647	120-51243-1		68	27
09647	120-51244-1	4710-01-349-7174	44	13
09647	120-51244-2	4710-01-349-7173	44	12
09647	120-51245		62	41
09647	120-51258		11	9
09647	120-51259-1		65	17
09647	120-52328-1		10	36
			11	25
09647	120-52328-2		66	26
			67	56
			69	27
			69	32
09647	120-52328-3		67	84
09647	120-52328-4		14	14
09647			67	66

CROSS-REFERENCE INDEXES

PART NUMBER INDEX

CAGEC	PART NUMBER	STOCK NUMBER	FIG.	ITEM
09647	120-54095-8	4710-01-349-7175	44	14
09647	120-57645-1		43	5
09647	120-57645-2		43	6
09647	120-57645-3		43	10
09647	120-57645-4		43	11
09647	120-57645-5		43	31
09647	120-57645-6		43	30
09647	120-57645-7		43	29
09647	12001219	4730-01-351-5872	67	22
70642	12018		90	24
70642	12019		90	21
70642	12030		90	27
70642	120390		90	19
70642	12041	5340-01-350-8619	90	22
70642	12043		90	19
70642	12045L-116		90	15
70642	12082		90	30
70642	12097LKF		90	20
57328	12140-030		129	130
57328	12141-060		129	70
70642	12154		90	32
57328	12421-864		129	62
50492	1252143	3040-01-334-9258	135	21
57328	12559-635		129	44
57328	12560-090		129	45
19200	12618149-15	4931-01-208-5707	37	1
57328	12770-400		129	16
57328	12771-400		129	11
57328	12835-080		129	98
50492	1284709	3120-01-353-4569	134	14
24161	12998F	6635-00-921-6255	146	5
0LU89	13-169		73	121
			74	124
			75	121
15235	13B22-1139	5330-01-350-0486	24	7
			29	8
13646	130.000.339		139	13
13646	130.000.35		4	23
13646	131.000.754	4320-01-348-9615	4	14
13646	131.000.755	4320-01-348-9616	4	20
13646	131.000.773		139	10
13646	132.000.203A		139	5
13646	132.000.382		4	10
97403	13211E3106-2	5305-01-062-5594	14	24
			14	28
			14	32
			14	36
97403	13216E6191-3	5940-00-432-2660	28	22
			95	34
			96	34

PART NUMBER INDEX

CAGEC	PART NUMBER	STOCK NUMBER	FIG.	ITEM
97403	13220E0793		99	16
97403	13220E0844	5310-01-349-6175	11	14
97403	1322291159		58	16
97403	132229E0380-7	5340-01-349-5665	20	57
			69	46
97403	13229E0270-65		123	3
97403	13229E0782-157		30	36
97403	13229E0000-20		124	11
97403	13229E0002	4320-01-356-4579	58	10
97403	13229E0003		130	10
97403	13229E0004	5306-01-350-6863	90	4
97403	13229E0005		111	4
97403	13229E0006-1		44	86
97403	13229E0006-2		44	85
97403	13229E0007		32	14
97403	13229E0008		104	4
97403	13229E0009		59	32
97403	13229E0010-l		44	88
97403	13229E0010-2		44	87
			87	21
97403	13229E0014		65	24
97403	13229E0015	5340-01-352-7262	65	25
97403	13229E0016-1		142	19
97403	13229E0016-2		142	20
97403	13229E0017		104	11
97403	13229E0018		104	10
97403	13229E0019		59	44
97403	13229E0020		87	6
97403	13229E0021		86	6
97403	13229E0022		119	86
97403	13229E0023		136	19
97403	13229E0024		71	38
97403	13229E0025		119	85
97403	13229E0026		136	20
97403	13229E0029	4610-01-421-8533	110	8
97403	13229E0030		117	3
97403	13229E0030-6		117	10
97403	13229E0031-1	5430-01-466-2699	142	1
97403	13229E0031-14GREEN		142	6
			142	15
97403	13229E0031-14TAN		142	6
			142	15
97403	13229E0031-17GREEN		142	4
			142	13
97403	13229E0031-17TAN		142	4
			142	13
97403	13229E0031-2	5430-01-466-2753	142	10
97403	13229E0031-3	5430-01-466-2743	142	1
97403	13229E0031-4	5430-01-466-2758	142	10
97403	13229E0031-7		142	5

PART NUMBER INDEX

CAGEC	PART NUMBER	STOCK NUMBER	FIG.	ITEM
			142	14
97403	13229E0031-9GREEN		142	7
			142	16
97403	13229E0031-9TAN		142	7
			142	16
97403	13229E0033-1	4730-01-350-7737	68	18
97403	13229E0033-3		67	93
97403	13229E0034-1		68	21
97403	13229E0034-3	5330-01-467-1605	67	96
97403	13229E0035-1		68	22
97403	13229E0035-3	5330-01-351-6366	67	97
97403	13229E0036		137	41
97403	13229E0036-2		137	47
97403	13229E0037		65	10
97403	13229E0037-17	5310-01-351-3532	65	23
97403	13229E0037-4	5310-01-351-3476	65	22
97403	13229E0038	4330-01-455-9202	84	8
97403	13229E0039		84	15
97403	13229E0040		120	1
97403	13229E0041		44	90
97403	13229E0042		138	63
97403	13229E0043	4320-01-348-4386	137	61
97403	13229E0043-8		138	11
97403	13229E0044		44	89
97403	13229E0045-GREEN	4320-01-353-8422	3	1
97403	13229E0045-35	5305-00-054-5653	3	42
97403	13229E0046		44	99
97403	13229E0047		3	10
97403	13229E0048	4720-01-349-1945	12	56
97403	13229E0050		69	17
97403	13229E0051	4320-01-345-6669	3	59
97403	13229E0052		44	129
97403	13229E0053		138	71
97403	13229E0054		67	107
97403	13229E0055-1	4730-01-351-4083	12	46
97403	13229E0055-2	4730-01-351-1694	85	15
97403	13229E0056	4710-01-350-5639	67	9
97403	13229E0057	4730-01-350-4025	67	14
97403	13229E0058-1	4730-01-395-0424	67	8
97403	13229E0059	4710-01-350-5640	67	1
97403	13229E0060	4710-01-350-7319	67	10
97403	13229E0061	4710-01-350-2151	67	20
97403	13229E0062	4710-01-350-5641	67	16
97403	13229E0064	4710-01-351-4483	67	19
97403	13229E0065	4710-01-350-9801	67	18
97403	13229E0066	4710-01-351-0156	69	4
97403	13229E0067	4710-01-349-1784	13	64
97403	13229E0068	4710-01-348-8927	13	29
97403	13229E0069	4710-01-350-5831	67	6
97403	13229E0071		44	38

PART NUMBER INDEX

CAGEC	PART NUMBER	STOCK NUMBER	FIG.	ITEM
97403	13229E0072		44	5
97403	13229E0072-57	5305-01-351-0881	44	47
			44	108
97403	13229E0073	4820-01-121-0846	12	78
97403	13229E0074		85	37
97403	13229E0075		7	18
97403	13229E0076		67	14
97403	13229E0077		65	20
97403	13229E0078		65	29
97603	13229E0079		89	9
97403	13229E0082		26	16
97403	13229E0082-154	5305-01-351-0821	31	11
			35	22
			43	21
			78	32
97403	13229E0084		31	9
97403	13229E0085		67	104
97403	13229E0086-105	5310-01-350-0540	13	71
97403	13229E0086-107		107	2
97403	13229E0086-134	4730-01-351-5851	68	6
97403	13229E0086-191	4730-01-350-7441	13	68
			68	10
			69	7
97403	13229E0086-203		12	70
97403	13229E0086-207	5305-01-351-4310	62	36
			68	11
97403	13229E0086-27	4730-01-351-8084	66	16
97403	13229E0086-275		71	29
97403	13229E0086-279		71	25
97403	13229E0086-280		71	28
97403	13229E0086-30		66	12
98433	13229E0086-88		67	103
97403	13229E0086-9		66	21
97403	13229E0086-90	4730-01-350-7163	62	42
97403	13229E0089	3030-01-351-8190	133	1
97403	13229E0091-1		44	63
			44	124
			47	32
97403	13229E0091-2		35	50
			54	31
97403	13229E0091-3		31	47
97403	13229E0091-5		35	54
97403	13229E0091-6		47	32
			49	23
97403	13229E0092		7	95
97403	13229E0093-2	5940-01-348-8231	35	51
			47	28
97403	13229E0094-1	5940-01-349-8395	44	62
			44	123
			49	19

CROSS-REFERENCE INDEXES

PART NUMBER INDEX

CAGEC	PART NUMBER	STOCK NUMBER	FIG.	ITEM
			54	26
97403	13229E0094-2	5940-01-348-5462	31	45
			35	53
			47	29
97403	13229E0095-1	5940-01-349-2716	31	44
			35	46
			44	60
			44	121
			49	18
97403	13229E0095-1	5940-01-349-2716	54	24
97403	13229E0095-2	5940-01-348-6660	31	46
			35	52
			37	26
97403	13229E0097		31	43
			35	48
			44	58
			44	119
			47	27
			49	16
			54	22
97403	13229E0098		35	44
97403	13229E0102		31	37
97403	13229E0103-1		33	20
97403	13229E0103-2		33	24
97403	13229E0103-3		33	22
97403	13229E0103-4		33	23
97403	13229E0103-5		33	21
97403	13229E0104	5930-01-349-5682	44	29
97403	13229E0105-1	5930-01-349-5678	44	25
97403	13229E0105-2	5930-01-349-5677	44	24
97403	13229E0106-1	5930-01-349-5680	44	27
97403	13229E0106-2	5930-01-349-5679	44	26
97403	13229E0107	5930-01-349-5681	44	28
97403	13229E0108	5930-01-348-8592	30	18
97403	13229E0109	6645-01-351-6900	31	36
97403	13229E0110		86	42
			87	42
97403	13229E0112		85	32
97403	13229E0113		111	6
97403	13229E0114-2	5310-01-355-0216	102	26
			120	12
			121	46
			122	42
			128	79
97403	13229E0114-3	5310-01-349-9615	49	4
			120	11
97403	13229E0114-4	5310-01-119-0460	8	7
			44	39
			44	100
			62	35

PART NUMBER INDEX

CAGEC	PART NUMBER	STOCK NUMBER	FIG.	ITEM
			62	47
			68	42
			78	42
97403	13229E0114-5		44	135
97403	13229E0114-6	5310-01-349-0828	35	63
97403	13229E0114-7	5310-01-350-8556	35	64
97403	13229E0114-8	5310-01-197-6252	9	6
97403	13229E0116	5340-01-353-3586	65	26
97403	13229E0117	5330-01-352-1160	65	21
97403	13229E0118-1		112	5
97403	13229E0118-2		112	11
97403	13229E0120		146	1
97403	13229E0123	4820-01-351-2948	3	23
			65	30
97403	13229E0126-5	6150-01-345-5620	3	45
97403	13229E0127	4720-01-353-7429	116	3
97403	13229E0133		7	107
97403	13229E0135	4710-01-348-8929	13	63
97403	13229E0139-1	4820-01-326-7879	1	24
			1	51
97403	13229E0139-2	4820-01-348-7869	7	4
			7	85
97403	13229E0140		116	12
97403	13229E0140-2	4730-01-352-8964	116	20
97403	13229E0140-8		116	14
97403	13229E0141		7	78
97403	13229E0141-13		7	84
97403	13229E0141-3		7	86
97403	13229E0143		1	44
97403	13229E0143-16		1	52
97403	13229E0144	4820-01-133-7860	25	17
			25	50
97403	13229E0145		44	66
94833	13229E0145K10		44	73
94833	13229E0145K13		44	75
94833	13229E0145K16		44	74
97403	13229E0146		67	16
97403	13229E0147	6685-01-350-6997	25	72
97403	13229E0148	4730-01-349-7767	44	9
			44	70
97403	13229E0149		67	2
97403	13229E0150		16	12
97403	13229E0153		133	6
97403	13229E0154		131	5
97403	13229E0156-1		71	16
97403	13229E0156-2	5340-01-346-7265	13	19
			71	11
97403	13229E0156-3	5340-01-345-5783	13	50
			14	26
97403	13229E0056-4	5342-01-346-1845	14	22

PART NUMBER INDEX

CAGEC	PART NUMBER	STOCK NUMBER	FIG.	ITEM
97403	13229E0156-5	5342-01-346-1847	14	34
97403	13229E0156-6	5342-01-346-1846	14	30
97403	13229E0158		95	49
97403	13229E0158-1 ITEM M2		95	45
97403	13229E0158-1 ITEM M7		95	7
97403	13229E0158-2ITEM8		96	7
97403	13229E0158-2 ITEM 2		96	45
97403	13229E0161-112		111	5
97403	13229E0161-141	5305-01-352-1246	118	14
97403	13229E0161-149	5305-01-352-2117	118	28
97403	13229E0161-161	5305-01-351-4470	109	1
97403	13229E0161-166	5305-01-351-6318	56	4
			58	4
			62	1
97403	13229E0161-180	5306-01-352-2735	8	5
			25	5
			121	15
			122	15
97403	13229E0161-192	5305-01-352-1155	97	17
97403	13229E0161-197	5310-01-203-0253	25	4
97403	13229E0161-201	4730-00-221-5012	97	15
97403	13229E0161-203		112	12
97403	13229E0161-207		112	6
97403	13229E0161-22	5340-01-353-1893	84	1
97403	13229E0161-228		108	5
97403	13229E0161-239		104	5
97403	13229E0161-301	4730-01-359-9534	109	10
97403	13229E0161-314	5306-01-359-7990	85	5
97403	13229E0161-318		97	16
97403	13229E0161-322	5305-01-352-1153	91	1
97403	13229E0161-336		111	7
97403	13229E0161-354		115	1
97403	13229E0166	4730-01-345-5781	1	8
97403	13229E0167	2040-01-349-0496	1	2
97403	13229E0168	4720-01-345-5641	1	10
97403	13229E0170-2	4820-01-351-3432	15	40
			59	34
97403	13229E0174-1		9	1
97403	13229E0174-2	4210-01-421-7949	9	5
97403	13229E0175		143	56
97403	13229E0176		7	87
97403	13229E0176-12		7	106
97403	13229E0176-36		7	102
97403	13229E0179		65	28
97403	13229E0181	4330-01-350-9102	65	27
97403	13229E0188		116	3
97403	13229E0189	4730-01-350-9033	11	10
			44	15
			44	76
97403	13229E0190		137	61

PART NUMBER INDEX

CAGEC	PART NUMBER	STOCK NUMBER	FIG.	ITEM
97403	13229E0191		137	62
97403	13229E0191-2		137	68
97403	13229E0193	4720-01-349-5226	137	55
97403	13229E0194	4720-01-351-5891	137	12
97403	13229E0194-2C		137	14
97433	13229E0196	2910-01-188-8198	137	60
97403	13229E0197		117	5
97403	13229E0198-1	4720-01-349-3904	13	54
97403	13229E0198-2	4720-01-356-4562	14	21
97403	13229E0199-1	4720-01-349-7314	13	55
97403	13229E0199-2	4720-01-349-3903	13	42
97403	13229E0201	4720-01-349-3637	137	28
97403	13229E0201-2C		137	30
97403	13229E0202	4720-01-351-4011	137	18
97403	13229E0202-2C		137	20
97403	13229E0203	4720-01-350-3787	137	23
97403	13229E0203-2C		137	25
97403	13229E0204		120	5
97403	13229E0206	5355-01-370-2456	59	39
			86	9
			87	9
97403	13229E0207	5340-01-351-3329	59	43
			86	5
			87	5
97403	13229E0208		24	6
			29	7
97403	13229E0209		120	9
97403	13229E0210-1	6350-01-350-1447	18	1
97403	13229E0210-2	6350-01-350-1448	22	1
97403	13229E0210-3	6350-01-350-1449	22	4
97403	13229E0220		69	38
97403	13229E0221		19	22
97403	13229E0224	3940-01-357-0648	143	129
97403	13229E0226	4820-01-251-7616	12	75
			109	4
97403	13229E0227	4820-01-348-7874	10	23
97403	13229E0228	4820-01-352-3715	132	7
97403	13229E0232		118	9
97403	13229E0233		43	33
97403	13229E0234-1		143	117
97403	13229E0234-2		105	13
97403	13229E0234-2-4		105	17
97403	13229E0234-3		143	121
97403	13229E0234-4		143	125
97403	13229E0235	4610-01-436-8821	119	71
97403	13229E0239-1	4810-01-351-2942	80	11
			81	11
97403	13229E0239-2		80	12
			81	12
97403	13229E0241	2590-01-466-1115	143	60

PART NUMBER INDEX

CAGEC	PART NUMBER	STOCK NUMBER	FIG.	ITEM
97403	13229E0242	5440-01-353-3135	143	39
97403	13229E0243	6680-01-346-4743	92	19
97403	13229E0244		34	20
97403	13229E0246	5340-00-522-0381	118	20
			118	33
			118	38
			130	15
97403	13229E0260		26	32
97403	13229E0260-158		26	35
97403	13229E0260-8		26	49
97403	13229E0261-49		123	24
97403	13229E0261-50		123	25
97403	13229E0261-51		123	26
97403	13229E0261-52		123	27
97403	13229E0261-53		123	28
97403	13229E0261-54		123	29
97403	13229E0261-55		123	31
97403	13229E0261-56		123	30
97403	13229E0269		61	4
97403	13229E0270		120	44
97403	13229E0270-11		123	32
97403	13229E0270-21		123	7
97403	13229E0270-28		123	12
97403	13229E0270-29		123	14
97403	13229E0270-30		123	15
97403	13229E0270-31		123	16
97403	13229E0270-41		123	19
97403	13229E0270-42		123	20
97403	13229E0270-43		123	21
97403	13229E0270-44		123	22
97403	13229E0270-45		123	23
97403	13229E0270-46		123	11
97403	13229E0270-47		123	10
97403	13229E0270-52		123	18
97403	13229E0270-53		123	17
97403	13229E0270-67		123	13
97403	13229E0270-69		123	2
97403	13229E0270-85		123	4
97403	13229E0274		47	47
97403	13229E0275		47	5
97403	13229E0275-56		47	33
97403	13229E0277	5330-01-351-7001	97	2
97403	13229E0280-4	4610-01-350-1450	143	1
97403	13229E0280-5	6850-01-362-2158	143	2
97403	13229E0281	6680-01-353-9775	78	14
97403	13229E0282		47	36
97403	13229E0286		61	5
97403	13229E0288		78	41
97403	13229E0289		78	5
97403	13229E0290		120	44

PART NUMBER INDEX

CAGEC	PART NUMBER	STOCK NUMBER	FIG.	ITEM
97403	13229E0296	4610-01-421-8538	110	7
97403	13229E0302		BULK	25
97403	13229E0302-1R		116	22
97403	13229E0303		46	19
97403	13229E0304		99	7
97403	13229E0307	5610-01-429-4402	67	106
97403	13229E0308		67	105
97403	13229E0310	5930-01-350-4171	59	30
			85	28
			86	40
			87	40
97403	13229E0311	5330-01-352-1100	132	6
97403	13229E0312		88	16
97403	13229E0313		88	6
97403	13229E0315	5680-01-360-6565	BULK	54
97403	13229E0320		88	15
97403	13229E0321		88	5
97403	13229E0322		43	33
97403	13229E0323		31	59
97403	13229E0324		35	62
97403	13229E0325-1		9	1
97403	13229E0325-2		9	5
97403	13229E0326-1	5920-01-349-7981	52	18
			54	19
			125	53
97403	13229E0327		25	66
97403	13229E0328		25	44
97403	13229E0328-17		25	63
			25	80
97403	13229E0329		67	60
97403	13229E0332		67	85
97403	13229E0333		66	38
97403	13229E0334	4710-01-350-7665	66	5
97403	13229E0335	4730-01-350-8944	66	36
97403	13229E0336	4710-01-350-7666	66	41
97403	13229E0337	4710-01-350-7667	66	43
97403	13229E0338	4730-01-350-3762	67	17
97403	13229E0340		123	6
97403	13229E0341	4730-01-351-5906	68	1
			69	21
97403	13229E0343		67	90
97403	13229E0344		52	34
97403	13229E0347		54	43
97403	13229E0348		51	25
97403	13229E0349	4710-01-351-0158	69	16
97403	13229E0350-1	5320-01-349-0933	3	13
			25	26
			25	41
			25	59
			25	77

PART NUMBER INDEX

CAGEC	PART NUMBER	STOCK NUMBER	FIG.	ITEM
			44	30
			44	91
			62	13
			66	46
			66	49
			69	49
			77	22
			78	36
			89	10
			97	1
			99	8
			119	4
			123	5
			128	6
			130	17
			136	18
			138	64
			143	118
			143	122
			143	126
97403	13229E0350-2	5320-01-349-0932	2	2
			2	20
			62	21
			62	22
			68	40
			118	32
			123	8
			128	76
			138	24
			142	40
			142	62
			142	87
97403	13229E0350-3	5320-01-351-8808	118	37
			120	7
			121	50
			122	44
			123	1
			123	9
97403	13229E0350-5	5320-01-352-2765	119	92
			136	34
97403	13229E0350-6		44	45
			44	106
97403	13229E0351-1	4810-01-347-0038	67	21
97403	13229E0354		120	25
97403	13229E0355		120	23
97403	13229E0358		33	53
97403	13229E0359-1	4820-01-351-2935	67	51
97403	13229E0359-2	4820-01-351-2936	69	3
97403	13229E0360	5315-01-350-0384	3	4
97403	13229E0364	4610-01-421-3855	121	32

PART NUMBER INDEX

CAGEC	PART NUMBER	STOCK NUMBER	FIG.	ITEM
			122	32
97403	13229E0365		120	42
97403	13229E0366	5330-01-355-8805	120	43
97403	13229E0367		120	40
97403	13229E0368	5330-01-355-8804	120	41
97403	13229E0369		128	14
97403	13229E0371	4730-01-352-8985	71	37
97403	13229E0373		120	5
97403	13229E0374		120	9
97403	13229E0375-158		10	40
97403	13229E0375-169		13	8
97403	13229E0375-177	5305-01-349-0816	11	19
97403	13229E0375-34	4730-01-349-3785	10	26
97403	13229E0375-62	4730-01-349-3781	10	71
97403	13229E0375-66	4730-01-346-5551	15	39
97403	13229E0377	5340-01-350-0865	44	23
			44	84
97403	13229E0378		143	139
97403	13229E0380-1		108	11
97403	13229E0380-10		136	16
97403	13229E0380-2		69	44
97403	13229E0380-4		69	47
97403	13229E0380-5		69	45
97403	13229E0380-9		128	83
97403	13229E0382		44	6
			44	67
97403	13229E0383	4820-01-352-3714	127	12
97403	13229E0384		44	64
			44	125
97403	13229E0389		59	47
97403	13229E0390		59	46
97403	13229E0391		86	1
97403	13229E0391-25	5305-01-351-4311	86	18
			87	18
97403	13229E0395	4710-01-348-7107	13	56
97403	13229E0397-1		119	79
97403	13229E0397-2		120	8
97403	13229E0397-3		119	88
97403	13229E0397-5		120	10
97403	13229E0402-1	4730-01-466-4498	142	26
97403	13229E0402-2	4730-01-466-4466	142	22
97403	13229E0403		142	25
97403	13229E0403-2		142	27
97403	13229E0403-3		142	28
97403	13229E0404		142	21
97403	13229E0404-2		142	23
97403	13229E0404-3	4720-01-466-4674	142	24
97403	13229E0406	5340-01-468-4943	3	41
97403	13229E0408	4730-00-304-3552	89	7
97403	13229E0409		89	4

PART NUMBER INDEX

CAGEC	PART NUMBER	STOCK NUMBER	FIG.	ITEM
97403	13229E0409-5		89	8
97403	13229E0410		115	23
97403	13229E0411-1		130	18
97403	13229E0411-10		125	56
97403	13229E0411-11		119	18
97403	13229E0411-12		119	8
97403	13229E0411-13		136	36
97403	13229E0411-2		119	57
97403	13229E0411-3		3	15
97403	13229E0411-4		128	8
97403	13229E0411-5		119	59
			128	7
97403	13229E0411-6		119	33
97403	13229E0411-7		119	58
97403	13229E0411-8		33	2
97403	13229E0411-9		120	22
97403	13229E0413		92	4
97403	13229E0418-1	4820-01-348-7871	10	74
97403	13229E0418-2	4820-01-348-7870	10	37
97403	13229E0421		87	1
97403	13229E0421-14	4730-01-352-8700	86	15
			87	15
97403	13229E0423		25	30
97403	13229E0425		25	10
97403	13229E0425-15	5310-01-349-9616	25	21
			25	54
97403	13229E0427	533C-01-349-8926	52	4
97403	13229E0429	5330-01-350-2913	51	4
97403	13229E0430	5330-01-351-6361	54	4
97403	13229E0431	4730-01-350-3825	59	2
			86	11
			87	11
			106	9
97403	13229E0432	4730-01-351-1569	86	23
			87	23
97403	13229E0433	4820-01-349-3815	3	17
97403	13229E0433-2	4820-01-352-3720	138	9
97403	13229E0433-3	4820-01-352-3719	137	6
97403	13229E0433-4	4820-01-352-8944	3	23
97403	13229E0436		3	11
97403	13229E0037		3	6
			138	60
97403	13229E0438	4610-01-421-4891	59	1
97403	13229E0438-13	4730-01-350-3731	59	6
97403	13229E0438-16	5305-01-351-5177	59	11
97403	13229E0438-25		59	28
97403	13229E0438-5		59	22
97403	13229E0438-9		59	15
97403	13229E0442		3	5
97403	13229E0443		85	6

PART NUMBER INDEX

CAGEC	PART NUMBER	STOCK NUMBER	FIG.	ITEM
97403	13229E0443-2	4730-01-283-4927	85	10
97403	13229E0443-3		85	9
97403	13229E0445		82	4
97403	13229E0447	4940-01-354-5599	60	15
97403	13229E0447-2		60	30
97403	13229E0449-2	4730-01-350-6205	59	14
			86	24
			87	24
97403	13229E0450-1	4730-01-350-6213	59	13
97403	13229E0451		30	30
97403	13229E0452		30	39
97403	13229E0453		30	29
97403	13229E0454		30	28
97403	13229E0455		30	31
97403	13229E0456		30	32
97403	13229E0457		30	33
97403	13229E0458		30	37
97403	13229E0459		30	38
97403	13229E0460		43	7
97403	13229E0463	4730-01-348-7730	25	12
97403	13229E0464		7	32
97403	13229E0465		7	31
97403	13229E0466		25	40
			25	76
97403	13229E0467		25	25
			25	58
97403	13229E0468		138	59
97403	13229E0470		138	56
97403	13229E0472	5340-01-351-9562	85	12
97403	13229E0473		85	31
97403	13229E0474		85	24
97403	13229E0474-3		85	29
97403	13229E0477	5330-01-351-7667	85	23
97403	13229E0481		143	78
97403	13229E0484		6	1
97403	13229E0486	4320-01-353-2974	6	7
97403	13229E0489	5340-01-349-5920	7	19
97403	13229E0492		7	56
			7	96
97403	13229E0493		7	59
97403	13229E0494		7	39
97403	13229E0495		7	54
97403	13229E0496		7	60
97403	13229E0497	4610-01-345-6672	7	33
97403	13229E0499	4610-01-345-6671	7	33
97403	13229E0501		7	1
97403	13229E0501-2	4730-01-349-3866	7	7
97403	13229E0503	5930-01-351-5664	138	58
97403	13229E0505		138	57
97403	13229E0508		97	18

PART NUMBER INDEX

CAGEC	PART NUMBER	STOCK NUMBER	FIG.	ITEM
97403	13229E0511		143	84
97403	13229E0511-4	4730-00-278-2523	7	88
			12	16
			69	11
			69	18
			107	1
			143	42
			143	85
97403	13229E0511-7		143	86
97403	13229E0515-1		143	93
97403	13229E0515-2		143	91
97403	13229E0521-1		115	20
97403	13229E0521-2		115	19
97403	13229E0524	4210-01-349-7780	143	102
97403	13229E0530	5330-01-349-5604	33	29
97403	13229E0531	4810-01-350-9010	82	11
97403	13229E0536		35	9
97403	13229E0538		117	1
97403	13229E0539		117	2
97403	13229E0540		115	4
97403	13229E0541	4730-01-351-3127	106	35
97403	13229E0542	4730-01-351-5230	106	45
97403	13229E0545-1		44	43
			44	104
97403	13229E0546		44	52
			44	113
97403	13229E0550	4730-01-221-1471	12	80
97403	13229E0551	4820-01-350-5777	77	21
97403	13229E0552	6680-01-354-4464	77	10
97403	13229E0553		77	25
97403	13229E0554		77	4
97403	13229E0554-10	4730-01-350-3760	77	17
97403	13229E0554-4	4730-01-350-7441	77	6
97403	13229E0554-9	4730-01-350-3733	77	18
97403	13229E0556	6145-01-357-1096	BULK	8
97403	13229E0557-1	5310-01-351-2613	26	20
			26	36
			33	40
			54	29
			143	119
			143	123
			143	127
97403	13229E0557-2	5330-01-350-1351	46	3
97403	13229E0557-4	5330-01-350-1352	52	16
			54	17
97403	13229E0560-1		67	67
97403	13229E0560-2		67	73
97403	13229E0561		67	68
97403	13229E0564	4710-01-351-8285	68	29
97403	13229E0565	4710-01-350-7320	68	24

PART NUMBER INDEX

CAGEC	PART NUMBER	STOCK NUMBER	FIG.	ITEM
97403	13229E0566	5315-01-351-8179	118	12
			122	37
97403	13229E0567	4710-01-351-0160	69	34
97403	13229E0568	4730-01-352-5945	71	15
97403	13229E0569		71	20
97403	13229E0570	4710-01-350-0126	67	2
97403	13229E0571	4710-01-350-0923	13	30
97403	13229E0572	4710-01-348-8928	13	49
97403	13229E0573	4710-01-351-0157	69	10
97403	13229E0574	4710-01-351-0159	69	33
97403	13229E0575		121	6
			122	6
97403	13229E0576	4610-01-431-0654	121	12
			122	12
97403	13229E0577		144	9
97403	13229E0578		144	6
97403	13229E0579		144	4
97403	13229E0580	4710-01-352-1249	69	38
97403	13229E0581		121	7
			122	7
97403	13229E0582		121	13
			122	13
97403	13229E0584		43	1
97403	13229E0585		43	8
97403	13229E0586	4710-01-348-8926	13	18
97403	13229E0587		106	53
97403	13229E0589-3		105	10
97403	13229E0589-4		105	9
			121	23
			122	23
97403	13229E0589-5		22	11
97403	13229E0590		46	5
97403	13229E0595		144	8
97403	13229E0598		117	16
97403	13229E0599		54	9
97403	13229E0609		118	10
97403	13229E0613		14	5
97403	13229E0615		68	37
97403	13229E0616	4710-01-350-9187	68	39
97403	13229E0618-1		13	73
97403	13229E0618-2	5340-01-349-5910	13	47
			71	7
97403	13229E0618-3	5340-01-351-9560	67	75
			71	3
97403	13229E0619-1		71	35
97403	13229E0619-2		67	79
97403	13229E0619-3		13	48
97403	13229E0620		71	34
97403	13229E0621		52	8
97403	13229E0621-19	5305-01-349-9586	30	27

PART NUMBER INDEX

CAGEC	PART NUMBER	STOCK NUMBER	FIG.	ITEM
			33	1
			43	3
			47	17
			49	6
			52	20
			54	32
			125	55
97403	13229E0623		107	7
			107	11
97403	13229E0624-1		107	5
97403	13229E0624-1-1		107	8
97403	13229E0624-2		107	9
97403	13229E0624-2-1		107	12
97403	13229E0625-2	4720-01-353-7464	BULK	47
97403	13229E0626	4730-01-352-0050	142	92
97403	13229E0627	5975-01-350-6874	83	30
97403	13229E0630		137	1
97403	13229E0630-3	4730-01-466-5290	137	5
97403	13229E0632	4710-01-352-5646	69	39
97403	13229E0635		112	4
97403	13229E0637	4010-01-225-2681	117	5
			136	15
97403	13229E0638	5342-01-353-3568	62	31
97403	13229E0650		118	31
97403	13229E0651		118	13
97403	13229E0652	3030-01-352-1238	128	9
97403	13229E0653		128	18
97403	13229E0655	4730-01-350-3782	67	7
97403	13229E0656		106	4
97403	13229E0656-14	4730-00-857-0866	106	46
97403	13229E0656-21	4730-01-351-1571	106	13
97403	13229E0656-30	4730-01-351-1566	106	20
97403	13229E0656-34	4730-01-350-9026	106	24
97403	13229E0656-35	4730-01-350-9027	106	25
97403	13229E0656-5		106	40
97403	13229E0661	5330-01-352-1166	62	30
97403	13229E0662	5999-01-350-5851	43	27
97403	13229E0665		49	25
97403	13229E0668		49	24
97403	13229E0669		49	5
97403	13229E0671		113	4
97403	13229E0671-5	5305-01-351-4313	60	3
			113	5
97403	13229E0676	4730-01-350-3770	59	8
			59	36
			86	17
			87	17
97403	13229E0678	4820-01-349-3816	12	72
			13	44
			25	65

PART NUMBER INDEX

CAGEC	PART NUMBER	STOCK NUMBER	FIG.	ITEM
			25	82
			68	8
			69	5
			109	9
			127	9
			132	17
			133	13
97403	13229E0678-1	4820-01-352-3721	133	10
97403	13229E0679-1	4820-01-350-1559	89	6
97403	13229E0679-2	4820-01-350-9009	65	16
97403	13229E0680-1	4820-01-283-2992	83	6
97403	13229E0680-2		62	40
			68	25
97403	13229E0680-4	4820-01-350-9014	68	2
			69	22
97403	13229E0682-11	4730-00-691-5464	10	25
97403	13229E0682-2	4730-00-175-9387	12	83
			13	43
			25	13
			25	46
			68	7
97403	13229E0682-2	4730-00-175-9387	90	5
97403	13229E0682-5	4730-00-691-5459	83	8
97403	13229E0682-7	4730-00-691-5460	12	86
			62	39
			65	18
			68	26
97403	13229E0683-11	4730-00-793-2665	10	78
			12	71
97403	13229E0683-6	4730-00-793-2660	10	31
			12	82
			68	28
97403	13229E0683-7	4730-00-629-0530	12	59
97403	13229E0683-8	4730-00-528-0223	10	73
			12	85
97403	13229E0684-10	4730-01-350-3777	77	5
97403	13229E0684-3	4730-01-350-3745	12	76
97403	13229E0684-7	4730-01-350-3744	6	5
97403	13229E0684-9	4730-01-350-3778	77	16
97403	13229E0685-1		20	50
97403	13229E0685-10	5340-01-352-8430	128	19
97403	13229E0685-11		131	6
97403	13229E0685-3	4610-01-421-4881	108	1
97403	13229E0685-4		69	23
97403	13229E0685-5		10	32
			66	22
			67	52
			69	28
97403	13229E0685-6		66	17
97403	13229E0685-7	5340-01-353-3617	67	62

PART NUMBER INDEX

CAGEC	PART NUMBER	STOCK NUMBER	FIG.	ITEM
97403	13229E0685-8		14	13
			67	80
97403	13229E0685-9	5340-00-874-7964	11	21
97403	13229E0688-1	4730-01-350-9193	59	25
			86	22
			87	22
97403	13229E0688-3	4730-01-350-1787	10	58
97403	13229E0688-4	4730-00-188-8266	59	12
			86	39
			87	39
97403	13229E0688-5	4730-01-350-4062	10	52
97403	13229E0689-1	4730-01-076-8903	10	85
			12	34
			78	7
97403	13229E0689-2	4730-01-160-5762	10	63
			12	68
			78	9
			85	17
97403	13229E0689-3	4730-01-289-9537	10	81
			12	63
			77	20
97403	13229E0689-4	4730-01-350-6203	15	35
97403	13229E0689-5	4730-01-348-7920	15	38
			59	33
			86	35
			87	35
97403	13229E0690	4730-01-350-6281	85	7
97403	13229E0691-2	4720-01-353-7465	BULK	49
97403	13229E0692-1	4730-01-467-1526	69	13
			83	10
97403	13229E0692-2	5340-01-351-3323	67	48
			69	1
			71	1
97403	13229E0692-3	4730-01-353-8590	67	99
			69	8
			106	14
97403	13229E0692-4	5340-01-352-8169	66	39
			67	101
97403	13229E0692-5	4730-01-467-1501	84	9
97403	13229E0693-1	5330-01-351-6999	69	14
			83	11
97403	13229E0693-2	5330-01-351-6367	67	50
			69	2
			69	9
			71	2
97403	13229E0693-3	5330-01-351-2757	67	100
			106	16
97403	13229E0693-4	5330-01-351-6364	66	40
			67	102
97403	13229E0693-5	5330-01-351-7106	84	11

PART NUMBER INDEX

CAGEC	PART NUMBER	STOCK NUMBER	FIG.	ITEM
97403	13229E0694-18		77	19
97403	13229E0694-2	4730-01-297-4659	59	7
			59	35
			86	16
			87	16
97403	13229E0694-6	4730-01-351-4007	59	24
			86	34
			87	34
97403	13229E0696-2		84	10
97403	13229E0697-1		77	14
97403	13229E0697-2	5306-01-353-2006	106	29
			128	73
97403	13229E0697-3		127	5
97403	13229E0698	4820-01-350-9002	69	35
97403	13229E0699	4820-01-349-3813	12	69
97403	13229E0702	5330-01-351-6363	66	6
97403	13229E0703-1	4720-01-349-3902	13	6
97403	13229E0703-2	4720-01-349-7313	13	4
97403	13229E0703-3	4720-01-349-7312	13	2
97403	13229E0705-1		132	16
97403	13229E0708-1	4730-01-350-7469	68	23
97403	13229E0710	4730-01-148-6945	25	19
			25	31
			25	52
			25	67
97403	13229E0712	4730-01-350-4064	67	92
97403	13229E0713-3	4730-01-350-3742	67	39
			69	40
97403	13229E0717	5925-01-350-1844	32	7
97403	13229E0718-1	5925-01-348-7826	35	20
97403	13229E0718-2	5925-01-349-0855	35	18
97403	13229E0719-1	5945-01-348-7142	31	15
97403	13229E0719-2	5945-01-348-7143	31	16
97403	13229E0719-3	5945-01-348-7144	31	17
97403	13229E0719-4	5945-01-349-1770	31	31
97403	13229E0719-5	5945-01-349-1771	31	32
97403	13229E0719-6	5945-01-349-1772	31	33
97403	13229E0719-7	5945-01-348-7837	31	34
97403	13229E0720-1	5945-01-349-0039	31	52
97403	13229E0720-2	5945-01-349-0037	31	50
97403	13229E0720-3	5945-01-349-0038	31	51
97403	13229E0721		1	55
97403	13229E0721-2		1	61
97403	13229E0721-4		1	62
97403	13229E0721-8		1	59
97403	13229E0730	5905-01-351-7301	35	36
97403	13229E0732-1		30	24
97403	13229E0732-2	6680-01-353-3282	30	26
97403	13229E0732-3		30	25
97403	13229E0735	5930-01-348-7197	30	21

PART NUMBER INDEX

CAGEC	PART NUMBER	STOCK NUMBER	FIG.	ITEM
			46	14
			47	7
97403	13229E0736	5930-01-348-5821	30	15
			33	30
			47	6
97403	13229E0738-1	5975-01-352-0286	17	1
			20	40
			46	18
			64	6
97403	13229E0738-2	5975-01-355-7103	93	9
97403	13229E0738-3	5975-01-352-0285	16	1
			19	1
			23	1
			93	6
			102	28
97403	13229E0738-6	5975-01-355-7891	26	17
			26	28
			26	33
			26	44
			44	17
			44	78
			44	134
			47	46
			49	14
			59	27
			80	10
			81	10
			82	10
			86	36
			87	36
			90	13
			93	11
			102	13
97403	13229E0741-1		BULK	9
97403	13229E0741-2	6145-01-356-6377	BULK	10
97403	13229E0741-3	6145-01-354-6717	BULK	1
97403	13229E0742-2	6210-01-348-3133	29	1
97403	13229E0744	5330-01-468-5373	BULK	33
97403	13229E0745		33	19
97403	13229E0746-2	2540-01-468-5020	43	2
			43	20
97403	13229E0752		32	9
97403	13229E0753-1	5975-01-445-6260	95	6
			96	6
			101	17
			101	36
97403	13229E0753-4	5975-01-353-3190	29	11
			44	18
			44	79
			44	131

PART NUMBER INDEX

CAGEC	PART NUMBER	STOCK NUMBER	FIG.	ITEM
			92	14
			93	13
97403	13229E0754	6130-01-350-0828	31	55
97403	13229E0755		35	28
97403	13229E0756		35	32
97403	13229E0757	5935-01-350-4123	33	32
97403	13229E0758-1		128	62
97403	13229E0759-1	4720-01-349-3898	11	1
97403	13229E0759-2	4720-01-349-3899	11	3
97403	13229E0759-3	4720-01-349-3900	11	5
97403	13229E0759-4	4720-01-349-3901	11	7
97403	13229E0761	5930-01-350-7668	83	14
97403	13229E0763	4610-01-351-2092	83	12
97403	13229E0764	6680-01-350-4912	83	16
97403	13229E0765	4730-01-354-2717	83	15
			83	32
97403	13229E0767	6680-01-349-6669	83	13
97403	13229E0769		83	5
97403	13229E0771-2	4730-01-348-8004	10	42
97403	13229E0772-6	4730-01-348-6232	10	79
97403	13229E0772-7	4730-01-347-0056	10	38
97403	13229E0774-2	4720-01-354-0367	BULK	42
97403	13229E0774-3	4720-01-354-0366	BULK	43
97403	13229E0774-5	4720-01-354-5332	BULK	22
97403	13229E0775-2	4720-01-353-7462	BULK	24
97403	13229E0776-1	4730-01-349-7958	10	76
97403	13229E0776-2	4730-01-348-7754	10	80
97403	13229E0782-1		119	80
			136	35
97403	13229E0782-10		120	24
97403	13229E0782-100		43	16
97403	13229E0782-101		43	18
97403	13229E0782-102		43	12
97403	13229E0782-103		43	17
97403	13229E0782-104		43	15
97403	13229E0782-105		119	5
97403	13229E0782-106		43	14
97403	13229E0782-107		119	G
97403	13229E0782-108		119	12
97403	13229E0782-109		119	15
97403	13229E0782-11		119	91
97403	13229E0782-110		43	13
97403	13229E0782-111		119	90
97403	13229E0782-112		119	78
97403	13229E0782-113		43	9
97403	13229E0782-114		68	41
97403	13229E0782-115		128	80
97403	13229E0782-116		119	73
97403	13229E0782-117		119	16
97403	13229E0782-118		119	43

PART NUMBER INDEX

CAGEC	PART NUMBER	STOCK NUMBER	FIG.	ITEM
97403	13229E0782-119		33	17
97403	13229E0782-12		54	33
97403	13229E0782-120		33	15
97403	13229E0782-121		33	9
97403	13229E0782-122		119	7
97403	13229E0782-123		119	50
97403	13229E0782-125		119	61
97403	13229E0782-126		33	12
97403	13229E0782-127		33	11
97403	13229E0782-128		30	34
97403	13229E0782-129		30	35
97403	13229E0782-13		54	35
97403	13229E0782-130		44	31
			44	92
97403	13229E0782-131		44	33
			44	94
97403	13229E0782-132		44	32
			44	93
97403	13229E0782-133		44	37
			44	98
97403	13229E0782-134		44	35
			44	96
97403	13229E0782-135		44	34
			44	95
97403	13229E0782-136		44	36
			44	97
97403	13229E0782-137		47	18
97403	13229E0782-138		47	19
97403	13229E0782-139		47	23
97403	13229E0782-14		33	5
97403	13229E0782-140		47	22
97403	13229E0782-141		78	37
97403	13229E0782-142		78	38
97403	13229E0782-143		78	39
97403	13229E0782-144		78	40
97403	13229E0782-145		33	6
97403	13229E0782-146		43	4
97403	13229E0782-147		25	43
			25	79
97403	13229E0782-148		25	42
			25	78
97403	13229E0782-149		25	27
			25	60
97403	13229E0782-15		120	18
97403	13229E0782-150		25	28
			25	61
97403	13229E0782-151		25	29
			25	62
97403	13229E0782-152		66	50
97403	13229E0782-153		3	16

PART NUMBER INDEX

CAGEC	PART NUMBER	STOCK NUMBER	FIG.	ITEM
97403	13229E0782-154		138	65
97403	13229E0782-155		119	60
97403	13229E0782-156		119	77
97403	13229E0782-158		3	14
			138	66
97403	13229E0782-159		119	44
97403	13229E0782-16		120	19
97403	13229E0782-160		26	50
97403	13229E0782-17		33	8
97403	13229E0782-18		119	89
97403	13229E0782-19		33	7
97403	13229E0782-2		119	81
97403	13229E0782-20		120	20
97403	13229E0782-21		120	21
97403	13229E0782-22		119	9
97403	13229E0782-23		119	11
97403	13229E0782-24		119	19
97403	13229E0782-25		119	84
97403	13229E0782-26		119	41
97403	13229E0782-27		119	13
97403	13229E0782-28		119	14
97403	13229E0782-3		119	82
97403	13229E0782-30		99	9
97403	13229E0782-31		99	10
97403	13229E0782-32		119	10
97403	13229E0782-33		119	21
97403	13229E0782-34		119	17
97403	13229E0782-35		119	20
97403	13229E0782-36		119	27
97403	13229E0782-37		119	30
97403	13229E0782-38		119	32
97403	13229E0782-39		119	37
97403	13229E0782-4		120	16
97403	13229E0782-40		119	42
97403	13229E0782-41		119	52
97403	13229E0782-42		119	51
97403	13229E0782-43		119	63
97403	13229E0782-44		62	16
97403	13229E0782-45		62	17
97403	13229E0782-46		62	18
97403	13229E0782-47		33	3
97403	13229E0782-48		119	56
97403	13229E0782-49		33	16
97403	13229E0782-5		119	83
97403	13229E0782-50		62	20
97403	13229E0782-52		119	74
97403	13229E0782-53		128	77
97403	13229E0782-54		49	7
97403	13229E0782-55		77	23
97403	13229E0782-56		33	14

PART NUMBER INDEX

CAGEC	PART NUMBER	STOCK NUMBER	FIG.	ITEM
97403	13229E0782-57		33	13
97403	13229E0782-58		119	29
97403	13229E0782-59		119	22
97403	13229E0782-6		52	21
97403	13229E0782-60		119	26
97403	13229E0782-61		119	24
97403	13229E0782-62		119	25
97403	13229E0782-63		119	23
97403	13229E0782-64		119	28
97403	13229E0782-65		119	31
97403	13229E0782-66		119	35
97403	13229E0782-67		119	36
97403	13229E0782-68		119	39
97403	13229E0782-69		119	34
97403	13229E0782-7		119	38
97403	13229E0782-70		119	40
97403	13229E0782-71		33	10
			47	21
			52	22
97403	13229E0782-72		119	75
97403	13229E0782-73		33	4
97403	13229E0782-74		119	55
97403	13229E0782-76		119	62
97403	13229E0782-77		119	54
97403	13229E0782-78		119	46
97403	13229E0782-79		119	47
97403	13229E0782-8		52	23
97403	13229E0782-80		119	48
97403	13229E0782-81		77	24
97403	13229E0782-82		119	72
97403	13229E0782-83		119	45
97403	13229E0782-84		59	45
97403	13229E0782-85		62	19
97403	13229E0782-86		47	20
97403	13229E0782-87		66	47
97403	13229E0782-88		119	76
97403	13229E0782-89		119	68
97403	13229E0782-9		120	26
97403	13229E0782-90		119	67
97403	13229E0782-91		119	69
97403	13229E0782-92		119	66
97403	13229E0782-93		119	53
97403	13229E0782-94		119	64
97403	13229E0782-95		119	49
97403	13229E0782-96		119	65
97403	13229E0782-97		43	19
97403	13229E0782-98		54	34
97403	13229E0782-99		44	46
			44	107
97403	13229E0784		62	32

PART NUMBER INDEX

CAGEC	PART NUMBER	STOCK NUMBER	FIG.	ITEM
97403	13229E0784-3	5975-01-358-5971	64	5
97403	13229E0786-1		13	23
97403	13229E0786-2		13	57
97403	13229E0789		97	11
97403	13229E0791		99	11
97403	13229E0791-9		99	36
97403	13229E0794		97	14
97403	13229E0795		97	12
97403	13229E0796-1	5340-01-357-0800	121	14
			122	14
97403	13229E0796-2	5340-01-433-2742	121	14
			122	14
97403	13229E0797		121	44
97403	13229E0797-27		121	53
97403	13229E0797-28		121	52
97403	13229E0797-29		121	51
97403	13229E0798		122	39
97403	13229E0798-22		122	45
97403	13229E0798-23		122	46
97403	13229E0798-24		122	47
97403	13229E0804	5340-01-351-4233	3	2
97403	13229E0806	4140-01-355-7199	113	20
97403	13229E0809-3		107	3
97403	13229E0809-4		66	27
97403	13229E0809-5	5340-01-352-2604	68	3
97403	13229E0809-6	5340-01-355-5203	67	4
			69	36
			107	6
			107	10
			143	82
97403	13229E0809-7	5340-01-395-1398	66	29
97403	13229E0810		120	15
97403	13229E0811		120	17
97403	13229E0814		97	13
97403	13229E0317		121	26
			122	26
97403	13229E0818		121	25
			122	25
97403	13229E0819	4610-01-421-8539	121	34
			122	34
97403	13229E0826-1		26	4
			118	11
97403	13229E0826-2	2590-01-353-1662	144	10
97403	13229E0826-3	2590-01-352-7177	144	11
97403	13229E0826-4	2590-01-352-7176	144	12
97403	13229E0826-5	2590-01-395-0423	118	11
			126	8
97403	13229E0827-1		31	42
			44	59
			44	120

PART NUMBER INDEX

CAGEC	PART NUMBER	STOCK NUMBER	FIG.	ITEM
			49	15
97403	13229E0827-2		47	24
97403	13229E0828	4610-01-422-3733	121	27
			122	27
97403	13229E0829	4610-01-422-3716	121	30
			122	30
97403	13229E0830		121	19
			122	19
97403	13229E0831-2	4610-01-422-3696	121	31
			122	31
97403	13229E0831-3	4610-01-421-3842	121	28
			122	28
97403	13229E0832	4610-01-431-0653	121	33
			122	33
97403	13229E0833	4610-01-421-3835	121	29
			122	29
97403	13229E0835		86	10
97403	13229E0836-2	4720-01-354-5324	100	4
97403	13229E0844		11	14
97403	13229E0846		99	35
97403	13229E0849	4730-01-164-3365	100	6
97403	13229E0855-1	5330-01-351-7096	71	19
97403	13229E0855-2	5330-01-349-8928	13	22
			13	53
			71	14
97403	13229E0855-3	5330-01-349-8930	14	27
			14	35
			116	2
97403	13229E0855-4	5330-01-349-8929	14	23
97403	13229E0855-4	5330-01-349-8929	14	31
97403	13229E0856		143	107
97403	13229E0857-1	5330-01-349-8922	3	22
			6	4
			59	3
			86	12
			87	12
			106	10
			143	90
97403	13229E0857-2	5330-01-351-7666	85	8
97403	13229E0857-3	5330-01-349-6190	1	9
			1	12
			4	32
97403	13229E0857-4	5330-01-349-8921	1	23
			1	53
			1	57
			1	67
			3	27
			7	8
			7	15

PART NUMBER INDEX

CAGEC	PART NUMBER	STOCK NUMBER	FIG.	ITEM
			7	46
			7	80
			7	104
			67	32
			67	37
			69	54
			116	9
			116	15
			143	97
			143	103
97403	13229E0857-5	5330-01-349-6191	1	33
			1	41
			1	54
			1	65
			7	9
			7	98
			66	34
97403	13229E0858		1	7
97403	13229E0860-1		22	9
97403	13229E0860-16		46	34
97403	13229E0860-2		53	7
97403	13229E0860-2-1		46	35
97403	13229E0860-3		53	6
			55	9
97403	13229E0860-4		143	68
97403	13229E0860-6		105	9
97403	13229E0860-6-1		105	12
97403	13229E0860-8		121	20
			122	20
97403	13229E0860-8-1		121	22
			122	22
97403	13229E0860-93		51	19
97403	13229E0864	5340-01-349-5911	13	58
97403	13229E0864-2	5340-01-346-1996	13	24
97403	13229E0868		62	11
97403	13229E0868-2		62	12
97403	13229E0868-5		62	15
97403	13229E0868-9		62	14
97403	13229E0869		62	26
97403	13229E0869-2		62	27
97403	13229E0870		62	4
97403	13229E0871		62	28
97403	13229E0871-2		62	29
97403	13229E0872		126	7
97403	13229E0876		126	21
97403	13229E0878		125	54
97403	13229E0879		125	57
97403	13229E0880-1		11	15
97403	13229E0880-3		20	34
97403	13229E0884		125	5

PART NUMBER INDEX

CAGEC	PART NUMBER	STOCK NUMBER	FIG.	ITEM
97403	13229E0885 ITEM2		125	52
97403	13229E0885-1		53	8
			55	11
			125	47
97403	13229E0885-2		125	48
97403	13229E0885-3		125	49
97403	13229E0885-4		55	10
97403	13229E0885-5		53	9
97403	13229E0887-2	5340-01-307-4395	10	41
97403	13229E0889		146	4
97403	13229E0893		126	10
97403	13229E0894		131	11
97403	13229E0895	6105-01-351-8237	128	24
97403	13229E0900	4730-01-466-3844	137	40
97403	13229E0907	4730-00-726-5859	127	13
97403	13229E0908		142	29
97403	13229E0909		132	22
97403	13229E0914		126	9
97403	13229E0927		143	45
97403	13229E0936	4710-01-353-3943	132	5
97403	13229E0937	4730-01-352-1398	132	15
97403	13229E0941		118	25
97403	13229E0942		118	26
97403	13229E0943		118	15
97403	13229E0944		118	42
97403	13229E0945	5365-01-351-5213	93	21
97403	13229E0948	9330-01-370-5263	BULK	32
97403	13229E0952	4720-01-349-7777	14	20
97403	13229E0959		128	75
97403	13229E0964		136	21
97403	13229E0987	4710-01-350-5642	67	15
97403	13229E0988	4730-01-350-7449	67	11
97403	13229E0989	5330-01-349-8925	47	10
97403	13229E0990-1		69	15
97403	13229E0990-2		67	49
97403	13229E0991		118	30
97403	13229E1J059-6	4730-00-586-3847	10	54
97403	13229E1000-1	5340-01-349-6290	1	34
			116	8
			137	57
			143	101
97403	13229E1000-2	5340-01-350-6801	2	5
			2	23
			138	26
			142	43
			142	65
			142	90
97403	13229E1001-1	5340-01-353-3579	143	71
97403	13229E1001-10	5340-01-353-1960	143	76
97403	13229E1001-11	5340-01-352-2841	143	74

PART NUMBER INDEX

CAGEC	PART NUMBER	STOCK NUMBER	FIG.	ITEM
97403	13229E1001-12	5340-01-354-3655	143	75
97403	13229E1001-13	5340-01-352-8191	143	73
97403	13229E1001-14	5340-01-354-3657	143	77
97403	13229E1001-2	5340-01-353-8241	143	72
97403	13229E1001-3	5340-01-353-9483	143	76
97403	13229E1001-4	5340-01-353-1308	143	74
97403	13229E1001-5	5340-01-352-6427	143	75
97403	13229E1001-6	5340-01-352-2840	143	73
97403	13229E1001-7	5340-01-352-6428	143	77
97403	13229E1001-8	5340-01-353-6388	143	71
97403	13229E1001-9	5340-01-353-1307	143	72
97403	13229E1003-1	5340-01-353-1305	143	137
97403	13229E1003-2	5340-01-353-1306	143	137
97403	13229E1004	6150-01-345-6104	20	35
97403	13229E1009	7920-00-244-7431	143	47
97403	13229E1012		118	23
97403	13229E1016		128	5
97403	13229E1017		124	2
97403	13229E1017-27		130	23
97403	13229E1017-28		130	24
97403	13229E1017-80		128	23
97403	13229E1020		13	67
			66	9
97403	13229E1020-3		66	10
97403	13229E1021		13	65
			66	7
97403	13229E1021-1		66	8
97403	13229E1035-1	4320-01-349-0641	124	3
97403	13229E1035-10 GREEN		124	10
97403	13229E1035-10 TAN		124	10
97403	13229E1035-2	4320-01-349-0642	124	3
97403	13229E1035-9		124	9
97403	13229E1036	7240-01-359-0893	143	48
97403	13229E1037	7240-01-359-0910	143	40
97403	13229E1048	5210-01-352-6612	143	57
97403	13229E1049		143	41
97403	13229E1049-2		143	43
97403	13229E1051		143	80
97403	13229E1052		143	79
97403	13229E1052-2		143	81
97403	13229E1053		65	8
97403	13229E1054		143	49
97403	13229E1058	4820-01-349-3819	10	55
97403	13229E1058-2	4820-01-350-9016	10	68
97403	13229E1059-2	4730-00-793-2806	10	67
97403	13229E1059-3	4730-00-793-2809	10	70
97403	13229E1059-4	4730-01-057-0545	10	51
97403	13229E1059-5	4730-00-793-2810	10	64
97403	13229E1059-6		10	54
97403	13229E1063		117	14

PART NUMBER INDEX

CAGEC	PART NUMBER	STOCK NUMBER	FIG.	ITEM
97403	13229E1063-5	5305-01-353-5185	117	15
97403	13229E1064		62	46
			68	33
97403	13229E1069		142	91
97403	13229E1071		118	35
97403	13229E1072		118	40
97403	13229E1073		87	10
97403	13229E1074		67	69
97403	13229E1076		118	5
97403	13229E1077		13	14
97403	13229E1078	4730-01-350-9028	59	23
			86	33
			87	33
97403	13229E1081		7	30
97403	13229E1082		7	29
97403	13229E1091		65	9
97403	13229E1092		62	24
97403	13229E1115	5930-01-348-5049	26	29
			26	45
97403	13229E1120	4730-01-349-9893	12	77
19207	13229E1122	4730-00-947-0364	116	1
97403	13229E1123		26	22
			26	38
97403	13229E1124		1	16
97403	13229E1124-3	4730-01-350-1590	1	25
97403	13229E1124-4	4730-01-350-1581	1	26
97403	13229E1125	4720-01-345-5640	1	66
			7	13
97403	13229E1130		8	6
97403	13229E1131-1	5306-01-351-5167	64	15
			121	5
			122	5
97403	13229E1131-3		64	15
97403	13229E1132		121	4
			122	4
97403	13229E1133		137	33
97403	13229E1133-6		137	35
97403	13229E1136		105	4
97403	13229E1138		88	11
97403	13229E1139	5340-01-352-8190	8	1
97403	13229E1140-1		143	113
97403	13229E1140-2		143	114
97403	13229E1140-3		143	115
97403	13229E1140-4		143	116
97403	13229E1141	4730-01-468-5339	116	4
97403	13229E1142-1	5310-01-352-2195	14	19
97403	13229E1142-2	5310-01-354-0226	128	81
			130	20
97403	13229E1142-3	5310-01-353-2044	128	12
			130	21

PART NUMBER INDEX

CAGEC	PART NUMBER	STOCK NUMBER	FIG.	ITEM
97403	13229E1143-1	5340-01-351-5442	14	18
97403	13229E1143-2		128	11
97403	13229E1143-3		130	4
97403	13229E1146-1	4730-01-349-7814	11	17
97403	13229E1147-1	4010-01-421-4866	BULK	35
97403	13229E1147-2	4010-01-356-5135	BULK	36
97403	13229E1148		58	15
97403	13229E1149		143	133
97403	13229E1151	4010-01-350-7105	1	6
			136	12
97403	13229E1152	3940-01-350-7919	1	5
			136	14
97403	13229E1153	4020-01-354-2721	BULK	34
97403	13229E1154	4720-01-347-5480	1	28
97403	13229E1155	4210-01-349-7779	143	96
97403	13229E1156		137	54
97403	13229E1157	4720-01-352-8999	116	5
97403	13229E1160-1	5340-01-353-1961	143	70
97403	13229E1160-2	5340-01-353-1962	143	70
97403	13229E1161		1	3
97403	13229E1163	5330-01-351-6362	58	17
97403	13229E1171	7510-01-358-8770	BULK	39
97403	13229E1172	5680-01-361-0177	BULK	55
97403	13229E1172-WS		120	6
97403	13229E1175		118	36
97403	13229E1176	6130-01-346-4736	93	4
97403	13229E1180	5975-01-358-9415	31	12
			35	23
			43	22
			48	1
			78	33
			119	1
97403	13229E1187		101	2
97403	13229E1187-4	5305-01-351-4312	101	5
			101	24
			138	46
97403	13229E1188		95	5
97403	13229E1189		96	5
97403	13229E1190		122	38
97403	13229E1193-1	4610-01-421-4865	121	35
			122	35
97403	13229E1193-2	4610-01-421-4870	121	36
			122	36
97403	13229E1194		119	87
97403	13229E1195		110	5
97403	13229E1199		66	45
97403	13229E1200		66	48
97403	13229E1201-1	5975-01-353-0829	26	30
			26	46
97403	13229E1201-2		138	45

CROSS-REFERENCE INDEXES

PART NUMBER INDEX

CAGEC	PART NUMBER	STOCK NUMBER	FIG.	ITEM
97403	13229E1203		33	18
97403	13229E1209-2	5935-01-357-1807	2	14
			3	53
			52	32
			54	40
			142	84
97403	13229E1209-3	5935-01-350-3278	21	11
			125	9
97403	13229E1209-4	5935-01-359-3326	125	13
97403	13229E1210-1	5935-01-351-7198	138	38
97403	13229E1210-2	5935-01-357-1806	2	13
			2	31
			138	20
			142	39
			142	61
			142	83
97403	13229E1210-3		23	36
97403	13229E1210-4	5935-01-349-9010	20	19
			20	30
97403	13229E1211-2	5330-01-350-2912	21	12
97403	13229E1213-1	5970-01-348-4761	16	32
			19	46
			23	6
			56	9
			56	15
			56	21
			58	6
			60	9
			80	8
			81	8
			83	28
			90	11
			95	41
			96	41
			101	12
			101	31
			113	17
			114	6
			115	14
97403	13229E1213-2	5970-01-349-8562	16	6
			16	33
			19	6
			19	16
			19	44
			78	20
			92	10
			94	24
			95	32
			96	32
97403	13229E1213-4	5970-01-348-8251	19	45

PART NUMBER INDEX

CAGEC	PART NUMBER	STOCK NUMBER	FIG.	ITEM
			46	26
			142	44
			142	66
97403	13229E1217		33	52
97403	13229E1219	5945-01-348-5038	33	44
97403	13229E1220	6625-01-351-4899	35	39
97403	13229E1221	5920-01-353-5149	54	21
97403	13229E1224		34	13
97403	13229E1225		89	11
97403	13229E1226	4730-01-350-9058	67	33
97403	13229E1227		14	9
97403	13229E1230		106	48
97403	13229E1243	5930-01-348-8591	30	19
97403	13229E1244	5930-01-348-8590	30	17
97403	13229E1245	5930-01-350-1868	30	13
97403	13229E1246	5930-01-348-5822	30	16
97403	13229E1247	5930-01-349-0117	30	14
97403	13229E1248-1	5945-01-348-5783	31	18
97403	13229E1248-2	5945-01-348-5784	31	21
97403	13229E1248-3	5945-01-348-5785	31	22
97403	13229E1248-4	5945-01-348-5786	31	23
97403	13229E1248-5	5945-01-348-7145	31	24
97403	13229E1248-6	5945-01-349-0897	31	28
97403	13229E1248-7	5945-01-348-7146	31	29
97403	13229E1248-8	5945-01-350-6554	31	30
97403	13229E1249-1	5945-01-349-0893	31	19
97403	13229E1249-2	5945-01-349-0894	31	20
97403	13229E1249-3	5945-01-349-0895	31	25
97403	13229E1249-4	5945-01-349-5445	31	26
97403	13229E1249-5	5945-01-349-0896	31	27
97403	13229E1252-2		143	94
			143	110
97403	13229E1254		104	3
			118	24
97403	13229E1255-1	4730-01-348-6248	13	45
			25	64
			25	81
			68	9
97403	13229E1255-10	4730-01-240-4263	10	27
			106	8
97403	13229E1255-11		133	8
97403	13229E1255-12		85	30
97403	13229E1255-2	4730-01-348-6246	11	12
			12	73
			13	69
			44	16
			44	77
			69	6
			83	7
			109	5

PART NUMBER INDEX

CAGEC	PART NUMBER	STOCK NUMBER	FIG.	ITEM
			132	18
			133	14
97403	13229E1255-3		112	10
97403	13229E1255-5		127	10
97403	13229E1255-6		66	15
			106	19
97403	13229E1255-8		133	11
97403	13229E1255-9	4730-01-351-8095	106	23
97403	13229E1256-1	4730-01-348-7922	3	18
97403	13229E1256-2		137	44
			137	65
97403	13229E1256-3	4730-01-348-7923	3	28
			137	46
			137	67
97403	13229E1256-4		137	69
97403	13229E1256-5	4730-01-350-6214	10	39
97403	13229E1256-6		138	10
97403	13229E1256-7	4730-01-350-3756	3	24
97403	13229E1256-8	4730-01-466-5288	137	4
97403	13229E1256-9		138	12
97403	13229E1257-1		23	11
97403	13229E1257-10		45	5
97403	13229E1257-11		45	6
97403	13229E1257-12		45	7
97403	13229E1257-13	6150-01-345-5626	21	2
97403	13229E1257-18		102	8
97403	13229E1257-19		93	12
			94	5
97403	13229E1257-2		23	16
97403	13229E1257-3		29	12
97403	13229E1257-4		82	5
97403	13229E1257-5		26	23
97403	13229E1257-5		26	39
97403	13229E1257-6		45	1
97403	13229E1257-7		45	2
97403	13229E1257-8		45	3
97403	13229E1257-9		45	4
97403	13229E1258-1		27	14
97403	13229E1258-10		27	23
97403	13229E1258-11		27	24
97403	13229E1258-12		27	25
97403	13229E1258-13		44	65
			44	126
			45	19
97403	13229E1258-14		50	1
97403	13229E1258-15		50	2
97403	13229E1258-16		48	3
97403	13229E1258-17		48	4
97403	13229E1258-18		48	5
97403	13229E1258-19		53	1

PART NUMBER INDEX

CAGEC	PART NUMBER	STOCK NUMBER	FIG.	ITEM
97403	13229E1258-2		27	15
97403	13229E1258-20		53	2
97403	13229E1258-21		55	1
97403	13229E1258-22		55	2
97403	13229E1258-23		55	3
97403	13229E1258-24		125	16
97403	13229E1258-25		125	15
97403	13229E1258-26		125	14
97403	13229E1258-27		125	17
97403	13229E1258-28		125	18
97403	13229E1258-29		125	19
97403	13229E1258-3		27	16
97403	13229E1258-30		125	20
97403	13229E1258-4		27	17
97403	13229E1258-5		27	18
97403	13229E1258-6		27	19
97403	13229E1258-7		27	20
97403	13229E1258-8		27	21
97403	13229E1258-9		27	22
97403	13229E1259-1	6150-01-346-4668	50	3
97403	13229E1259-2	6150-01-345-5622	19	2
97403	13229E1259-3	6150-01-345-5623	19	11
97403	13229E1259-4		46	20
97403	13229E1259-5	6150-01-345-5619	16	2
97403	13229E1260 ITEM3		128	38
97403	13229E1260-1	6150-01-346-4665	93	7
			94	2
97403	13229E1260-10		96	12
97403	13229E1260-11		101	7
97403	13229E1260-12		101	26
97403	13229E1260-13	6150-01-345-6105	23	2
97403	13229E1260-14	6150-01-345-5621	17	2
97403	13229E1260-15		64	7
97403	13229E1260-16	6150-01-346-4663	92	5
97403	13229E1260-17	6150-01-345-5617	20	41
97403	13229E1260-18	6150-01-346-4662	78	15
97403	13229E1260-19		113	11
97403	13229E1260-19-3		113	14
97403	13229E1260-2	6150-01-346-4664	93	5
			94	1
97403	13229E1260-20	6150-01-346-4661	60	6
97403	13229E1260-21		138	33
97403	13229E1260-22		138	13
97403	13229E1260-23	6150-01-345-5625	20	13
97403	13229E1260-24	6150-01-345-5616	20	23
97403	13229E1260-25		126	12
97403	13229E1260-26	6150-01-350-5439	128	30
97403	13229E1260-27	6150-01-350-0184	131	17
97403	13229E1260-28	6150-01-352-8522	131	16
97403	13229E1260-3		95	13

PART NUMBER INDEX

CAGEC	PART NUMBER	STOCK NUMBER	FIG.	ITEM
97403	13229E1260-4		96	13
97403	13229E1260-6	6150-01-351-9930	142	98
97403	13229E1260-7	6150-01-346-4666	93	8
			94	3
97403	13229E1260-8	6150-01-346-4667	93	10
			94	4
97403	13229E1260-9		95	12
97403	13229E1261	6150-01-345-6106	23	21
97403	13229E1262-1	6150-01-345-5618	21	13
97403	13229E1262-2	6150-01-345-5615	20	1
97403	13229E1262-3	6150-01-350-0183	142	74
97403	13229E1262-4	6150-01-345-5613	2	1
97403	13229E1262-5	6150-01-345-5614	2	19
97403	13229E1262-6	6150-01-350-1386	142	53
97403	13229E1262-7	6150-01-350-1387	142	31
97403	13229E1263	6150-01-352-8531	17	11
97403	13229E1264	6150-01-345-5624	19	22
97403	13229E1265	6150-01-346-1702	16	12
97403	13229E1266-1		56	18
97403	13229E1266-2		56	12
97403	13229E1266-3		56	6
97403	13229E1267		58	5
97403	13229E1268-1	5999-01-467-1683	83	19
97403	13229E1268-2	5999-01-467-1676	83	18
97403	13229E1268-3	5999-01-467-1685	83	17
97403	13229E1269-1	4810-01-467-1583	90	6
97403	13229E1269-2	4810-01-467-1589	80	4
97403	13229E1269-3	4810-01-467-1591	81	4
97403	13229E1270 ITEM2		115	18
97403	13229E1270-1	6150-01-350-0181	115	6
97403	13229E1270-2	6150-01-350-0182	115	7
97403	13229E1270-3	6150-01-350-0180	115	5
97403	13229E1271-1		142	30
97403	13229E1271-2		142	52
97403	13229E1273		25	24
			25	39
			25	57
			25	75
97403	13229E1278	5325-01-355-1579	120	14
97403	13229E1281		67	24
97403	13229E1282-1	4720-01-353-2957	BULK	51
97403	13229E1282-2	4720-01-353-7463	BULK	52
97403	13229E1282-3	4720-01-353-2956	BULK	53
97403	13229E1286	4730-01-348-6244	10	65
97403	13229E1287		136	33
97403	13229E1288		128	78
97403	13229E1289	5930-01-354-6684	101	18
			101	37
97403	13229E1297		136	25
97403	13229E1298		127	4

PART NUMBER INDEX

CAGEC	PART NUMBER	STOCK NUMBER	FIG.	ITEM
97403	13229E1302	4010-01-353-1476	121	11
			122	11
97403	13229E1303-1	4820-01-350-1564	66	14
			106	18
97403	13229E1303-2	4820-01-351-2949	84	13
97403	13229E1305		130	27
97403	13229E1306		130	26
97403	13229E1308		130	19
97403	13229E1309		130	16
97403	13229E1310		130	5
97403	13229E1311		130	6
97403	13229E1312		130	9
97403	13229E1313 ITEM1	4730-01-458-4131	136	32
97403	13229E1313 ITEM2	4720-01-458-4100	136	31
97403	13229E1313 ITEM3		136	30
97403	13229E1313 ITEM4		136	29
97403	13229E1316	5925-01-350-1845	32	8
97403	13229E1317-2	5925-01-350-1846	34	12
97403	13229E1317-3	5925-01-349-1799	35	19
97403	13229E1317-4	5925-01-348-7825	35	14
97403	13229E1318-1	5925-01-349-5601	35	16
97403	13229E1318-2	5925-01-349-5602	35	17
97403	13229E1319	5999-01-350-8908	33	38
97403	13229E1320		101	21
97403	13229E1324 TAN	5340-01-399-7465	124	1
97403	13229E1324-1	5340-01-356-8369	124	1
97403	13229E1324-2	5340-01-399-7465	124	1
97403	13229E1325		136	11
97403	13229E1326	5340-01-353-1959	143	138
97403	13229E1326-2	5340-01-353-1309	143	138
97403	13229E1327		82	12
97403	13229E1329		34	5
97403	13229E1331		25	6
97403	13229E1333-1	5340-01-353-1958	136	6
97403	13229E1333-2	5340-01-353-1957	136	6
97403	13229E1334-1	6665-01-350-7047	102	14
97403	13229E1334-5		146	38
97403	13229E1334-6		146	47
97403	13229E1335-1		84	14
97403	13229E1335-2		85	11
97403	13229E1335-3		106	5
97403	13229E1335-4		65	19
97403	13229E1335-5		8	30
97403	13229E1336		136	7
97403	13229E1336-1		136	9
97403	13229E1338	5330-01-356-3198	120	39
			121	41
97403	13229E1339	4610-01-431-2068	120	38
			121	40
97403	13229E1341	9390-01-358-7870	BULK	30

CROSS-REFERENCE INDEXES

PART NUMBER INDEX

CAGEC	PART NUMBER	STOCK NUMBER	FIG.	ITEM
97403	13229E1341-PT		130	7
97403	13229E1342-3	5970-01-348-4762	20	17
			20	28
			131	22
97403	13229E1342-4		20	28
			131	22
97403	13229E1343	5340-01-351-9180	100	11
97403	13229E1344-1	5970-01-360-1531	138	37
97403	13229E1344-2	5970-01-348-7360	2	17
			138	16
			142	57
			142	78
97403	13229E1345	4610-01-466-5268	146	3
97403	13229E1351	4440-01-346-4756	91	4
97403	13229E1352		117	4
97403	13229E1356		102	25
97403	13229E1358		102	7
97403	13229E1359	5640-01-352-4253	70	21
97403	13229E1360	5640-01-363-3691	70	15
97403	13229E1361-1	5640-01-351-4194	70	14
97403	13229E1361-2	5640-01-351-4192	70	10
97403	13229E1361-3	5640-01-351-4186	70	1
97403	13229E1362		70	20
97403	13229E1363-1	5640-01-351-4195	70	17
97403	13229E1363-2	5640-01-351-4188	70	4
97403	13229E1364	5640-01-351-4197	70	19
97403	13229E1365	5640-01-351-4196	70	18
97403	13229E1366	5640-01-363-3692	70	16
97403	13229E1367	5640-01-352-4252	70	13
97403	13229E1368	5640-01-351-4193	70	12
97403	13229E1369	5640-01-363-5970	70	3
97403	13229E1370	5640-01-352-4251	70	11
97403	13229E1371	5640-01-351-4191	70	9
97403	13229E1372	5640-01-352-4250	70	8
97403	13229E1373	5640-01-352-4249	70	7
97403	13229E1374	5640-01-351-4190	70	6
97403	13229E1375	5640-01-351-4189	70	5
97403	13229E1376	5640-01-351-4187	70	2
97403	13229E1377	3950-01-354-1194	146	2
97403	13229E1378-1		143	120
97403	13229E1378-27		107	4
			143	83
97403	13229E1378-3		143	124
97403	13229E1378-4		143	128
97403	13229E1379-2		105	18
97403	13229E1380	5340-01-442-1755	120	33
			121	43
97403	13229E1381		106	30
97403	13229E1381-1		106	34
97403	13229E1381-2	4730-01-355-0438	106	33

PART NUMBER INDEX

CAGEC	PART NUMBER	STOCK NUMBER	FIG.	ITEM
97403	13229E1381-3		106	32
97403	13229E1382		106	41
97403	13229E1382-1		106	44
97403	13229E1382-3		106	42
97403	13229E1383	4910-01-353-3123	143	53
97403	13229E1388		110	6
97403	13229E1389	5340-01-442-1695	120	34
97403	13229E1390		143	87
97403	13229E1391		120	30
97403	13229E1392	5680-01-361-0178	BULK	56
97403	13229E1395	4030-01-351-7211	84	4
97403	13229E1397		67	91
97403	13229E1399		71	24
97403	13229E1400		71	26
97403	13229E1401		71	27
97403	13229E1402	4710-01-396-1373	71	30
97403	13229E1410		25	48
97403	13229E1416	4610-01-421-4888	56	5
97403	13229E1417	4140-01-395-8275	114	13
97403	13229E1418		114	4
97403	13329E1307		130	8
92878	134530		98	35
13646	135.000.205	3040-01-252-5475	4	8
13646	136.000.183		4	26
83750	1374		126	46
57328	13757-090	5330-01-233-3248	129	15
57328	13911-080		129	91
57328	13967-500		129	30
OLU89	14-124		73	91
			74	94
			75	91
57328	14027-635		129	36
70642	14046		90	16
57328	14117-070		129	59
57328	14118-070		129	60
57328	14124-080		129	97
63026	1424-0039	6685-01-012-4234	112	9
63026	1424-0057	6685-01-012-4235	112	8
57328	14259-080		129	51
57328	14332-080		129	99
D9135	14370-500	5340-12-186-0157	129	28
30647	145-1		128	69
30647	145-2		128	68
83750	1458		126	62
70642	14800-WP	4810-01-352-8512	90	14
70642	14801		90	18
83750	1486		126	34
57328	14875-060		129	68
57328	14929-070		129	116
57273	1528597	6685-01-351-9055	25	20

CROSS-REFERENCE INDEXES

PART NUMBER INDEX

CAGEC	PART NUMBER	STOCK NUMBER	FIG.	ITEM
			25	53
			77	15
57273	1558525	6620-01-349-8685	25	18
			25	51
92878	1578		98	41
0D5S3	159365	6105-01-351-4069	140	1
00724	16-01310-002	5935-01-073-1638	51	14
13646	160.000.329A		4	29
08998	164G/500Q	6240-01-349-4407	142	67
75037	17 1/2INBLACK	5970-00-419-4290	BULK	38
OLU89	17-109-U25		73	94
			74	97
			75	94
OLU89	17-139-U-90		73	95
			74	98
			75	95
OLU89	17-3378-E		73	97
			74	100
			75	97
OLU89	17-340B-E		73	98
			74	101
			75	98
OLU89	17-344-U		73	99
			74	102
			75	99
OLU89	17-347		73	122
			74	125
			75	122
OLU89	17-348		73	96
			74	99
			75	96
OLU89	17-35-U		73	92
			74	95
			75	92
OLU89	17-352	5330-01-447-6729	73	67
			74	67
			75	64
OLU89	17-63-U		73	93
			74	96
			75	93
OLU89	17-98		73	56
			75	56
92878	170308		98	48
83750	1742		126	44
13646	18.001.595		139	3
82832	1805	6240-01-349-4407	142	45
			142	67
82832	1805-RLLC		142	47
			142	69
82832	1805-101		142	46

CROSS-REFERENCE INDEXES

PART NUMBER INDEX

CAGEC	PART NUMBER	STOCK NUMBER	FIG.	ITEM
			142	68
0D5S3	18240 TC	6105-01-351-4040	128	39
01343	18660		71	40
01121	195-FA11	5999-01-349-8336	39	2
09647	2-10-9CP		28	4
0D5S3	2-13850251-.75 NPT		140	5
0D5S3	2-16236402		140	16
0D5S3	2-17585602		64	25
0D5S3	2-316388-01		64	25
0D5S3	2-33732401	4140-01-351-0964	64	18
0D5S3	2-3375001		62	12
09647	39848		22	12
09647	2-4-9-J63-J64-J68-J69		125	39
09647	2-4-9CP		28	46
09647	2-8-9-MOV		53	16
09647	2-8-9-MOV13-7-8		55	18
09647	2-8-9CP		28	5
03306	2X1-1/2ZC2	4320-01-346-4703	63	1
87327	20-0756		8	20
87327	20-0783	4820-01-349-3814	8	25
87327	20-083		8	1
58177	20130	6350-01-354-5656	78	35
			79	
1L965	20132-000		58	11
04034	20173	6680-00-890-2920	31	58
06090	202K163-3/42	5970-01-226-8102	2	16
			2	33
			3	49
			17	6
			17	17
			19	47
			20	12
			20	45
			21	18
			64	11
			94	25
			142	35
			142	86
			142	102
65996	206-101	5110-01-354-8450	146	25
58177	20763	6650-01-350-7971	79	13
D8969	209-101	5340-12-305-9524	31	40
			35	45
			44	57
			44	118
			47	25
			49	17
			54	23
93061	209P-6-4	4730-00-202-6491	143	111
30647	21NE066		128	65

CROSS-REFERENCE INDEXES

PART NUMBER INDEX

CAGEC	PART NUMBER	STOCK NUMBER	FIG.	ITEM
58177	21001		79	15
58177	21059		79	8
58177	21084		143	32
58177	21123	5935-01-350-1923	79	11
58177	21135	4730-01-349-7634	79	6
58177	21136	4730-01-349-7972	79	3
58177	21148	5310-01-351-2598	79	2
58177	21153	5310-01-350-0421	79	1
58177	21201	5330-01-350-0467	79	12
83740	216	6135-00-971-8485	143	15
98437	22M3-131M1	4820-01-087-6419	10	17
91224	2203-99	6810-01-200-8009	143	19
			143	146
06090	222A163-3/42	5970-01-093-0413	16	30
			19	43
			20	5
			23	26
			126	18
			128	32
06090	222A174-3/42	5970-01-093-1683	16	31
			17	16
			19	42
			126	18
			128	32
04034	22445	5945-00-597-1458	31	53
97084	225XL	5340-01-349-5921	3	11
17549	225-0017-000		16	28
			16	28
			19	40
			46	24
			78	18
			83	24
			90	9
			92	8
			95	39
			96	39
			101	10
			101	29
			115	17
			138	36
17549	225-0018-000		16	29
			19	14
			19	41
			23	24
			23	33
			46	25
			94	12
			95	30
			96	30
			138	17

PART NUMBER INDEX

CAGEC	PART NUMBER	STOCK NUMBER	FIG.	ITEM
			142	34
			142	56
			142	77
			142	82
17549	225-0019-000		21	16
			21	24
			94	13
			142	101
71468	225-8502-000		20	26
			131	24
91224	2254-01	6640-01-358-5340	143	17
			143	141
57328	228-080		129	101
92878	22821	5310-00-209-0788	98	26
72100	23C	6685-00-932-6301	78	12
57328	232-080		129	103
			129	112
57328	233-080		129	111
57328	2371-635		109	35
87327	24-0246		8	24
57328	240-090		129	105
			129	110
60969	240711AAAD	6645-01-316-2183	33	25
91224	24085-37	6810-01-358-4381	143	20
			143	145
OLU89	25-428-04		73	100
			74	103
			75	100
OLU89	25-428-05		73	55
			74	58
			75	55
62866	25050		57	26
62866	25232	4820-01-323-7038	57	8
62866	25506		57	22
30646	256-10756472	6850-01-362-2158	143	2
62866	25631	5310-01-350-0420	57	5
62866	25667		57	29
62866	25690	4820-01-346-4660	57	2
62866	25696	4320-01-346-4704	57	1
62866	25889	4610-01-439-8815	57	23
62866	25891	4610-01-439-8815	57	19
62866	25957	4320-01-421-8620	57	34
62866	26029	4810-01-350-1518	59	20
62866	26052	6210-01-349-1005	57	21
62866	26055		57	30
62866	26071		57	18
62866	26075		57	32
62866	26136	5325-01-350-0515	57	4
			57	10
62866	26220	4810-01-351-5925	86	30

CROSS-REFERENCE INDEXES

PART NUMBER INDEX

CAGEC	PART NUMBER	STOCK NUMBER	FIG.	ITEM
			87	30
62866	26293	4320-01-421-8559	57	35
56501	2632	5975-01-029-7710	60	5
			85	25
			113	10
57273	2650932	6685-01-433-3415	25	36
62866	26895	4320-01-421-8610	57	33
62866	27718		57	24
57328	279-640		129	113
65996	280-681	5940-01-361-4782	31	41
			35	49
			44	61
			44	122
			49	20
			54	25
04034	28196	5945-00-009-7995	31	57
30646	291-10756473		143	5
30646	291-10756476	6695-01-359-2756	143	9
70642	293V		90	31
60586	30040	6685-00-053-0493	67	23
16290	3007-3716	5305-01-348-8362	18	4
			22	15
30646	303-10749946	5120-01-355-0843	143	6
62866	30306	5305-01-350-6059	57	17
62866	30487	4610-01-347-0064	56	11
			56	17
			56	23
44541	308446-12		5	3
13226	3086SL		106	59
87327	31-0292		8	18
87327	31-0356		8	21
97403	313229E0094-1	5940-01-349-8395	44	62
			44	123
			49	19
			54	26
17549	317-8531-000	5130-01-354-2286	146	32
17549	317-8531-001	5130-01-354-2287	146	33
17549	317-8532-000	5130-01-354-2288	146	34
17549	317-8532-001	5130-01-354-2366	146	35
17549	317-8533-000	5130-01-353-8178	146	36
17549	317-8533-001	5130-01-354-2289	146	37
0JR79	3176-E0	5331-01-351-7615	72	6
57328	319-080		129	114
16290	3200-3700		18	5
			22	16
50492	320312	3110-01-039-6477	134	8
50492	320313	3110-01-039-6476	134	12
50492	320315	5331-01-352-8711	135	31
50492	320316	5331-01-352-8710	135	6
50492	320441		134	20

PART NUMBER INDEX

CAGEC	PART NUMBER	STOCK NUMBER	FIG.	ITEM
50492	320448	5331-01-352-8712	135	34
50492	320449	5331-01-352-8713	135	38
24161	32201	4730-01-294-8140	12	57
0D5S3	3224218	6105-01-352-3848	131	32
30646	325-816816		79	22
00779	326880	5940-00-728-7593	18	3
			22	3
			22	6
0JR79	3274-E0	5330-01-351-7679	72	3
40912	327626		146	45
24161	3284-0187	4720-01-277-7559	BULK	19
OLU89	33-169P		73	112
			74	115
			75	112
83750	3321		126	78
30646	337-10756477		143	4
30646	338-807839		143	11
92878	3414		98	32
44541	343449-01		5	4
92878	3463	5310-00-616-3554	98	40
10001	346454PC295	5305-00-208-8063	128	17
92878	3495	5305-00-012-0628	98	1
92878	3496		98	18
12204	3496557	5330-01-187-8604	134	7
92878	3497		98	44
24161	35W-2 7/8	4720-01-354-0365	BULK	23
13226	3513BN	5330-01-351-7684	106	56
44541	351759-01		5	5
0JR79	3525-48	5340-01-468-4937	72	1
44541	356414-01		5	7
13226	3575SL		106	61
13226	35765SL		106	62
OLU89	36-82A		73	101
			74	104
			75	101
83750	3602		126	31
44541	360501	6105-01-345-6670	5	1
83750	3624		126	49
92878	3626	5310-01-412-6024	95	57
			96	57
30647	364-B2		131	72
94222	37-20-071-20	5340-01-351-3340	85	36
83750	3740	5310-01-353-2662	126	58
13226	3765SL		106	63
92878	3772		98	36
87327	38-0234		8	12
83750	3807		126	65
77852	38110	4240-01-239-2349	143	50
83750	3813		126	73
92878	3816	5305-01-352-7538	95	46

CROSS-REFERENCE INDEXES

PART NUMBER INDEX

CAGEC	PART NUMBER	STOCK NUMBER	FIG.	ITEM
			96	46
0JR79	3818-87		72	7
13226	3818SL		106	55
83750	3895		126	57
83750	3904		126	70
92878	3922	5305-01-021-6824	98	30
83750	3939	5305-01-352-2009	126	59
83750	3984		126	32
83750	3985		126	23
			126	30
83750	3988		126	28
0D5S3	4-10000640	3120-01-352-2039	64	27
0D5S3	4-10006212		64	21
			128	46
0D5S3	4-10020501		140	19
0D5S3	4-10371801		140	14
0D5S3	4-11020802		140	21
0D5S3	4-13829302		140	10
0D5S3	4-157714-02		140	2
0D5S3	4-15771401		140	8
0D5S3	4-15771501		140	7
0D5S3	4-15775801		140	11
0D5S3	4-16285646		140	12
0D5S3	4-172155-01		140	6
0D5S3	4-17215501		140	4
0D5S3	4-17816301	5305-01-352-2047	140	18
0D5S3	4-20000446	3120-01-352-2024	64	26
0D5S3	4-34385401		64	22
54938	4-4 DBZ-SS	4730-00-793-2697	89	5
54938	4-4 EBZ-SS		44	10
			44	71
54938	4-4 T2HG-SS	4730-00-975-7569	13	1
			13	16
81343	4-4 080202SA	4730-00-490-6257	12	84
			13	17
			25	14
			25	47
			109	6
81343	4-4-4 140424S	4730-01-105-4065	10	82
			11	13
			12	62
			13	46
			83	9
81343	4-4-4 140425S	4730-01-117-2791	12	74
81343	4-4-4 140438S	4730-01-244-4673	11	11
54938	4-4-4JBZSS	4730-00-684-3796	44	7
			44	68
0D5S3	4-40114332		64	17
			64	24
81343	4-7010102B	4730-01-433-8031	100	7

PART NUMBER INDEX

CAGEC	PART NUMBER	STOCK NUMBER	FIG.	ITEM
54938	4TZSS	4730-00-088-4338	44	8
			44	11
			44	69
			44	72
70642	4019	5360-00-970-4237	90	23
64382	403010-1	6695-01-355-0113	103	10
01121	40410-331-51	5999-01-176-7106	41	9
01121	40410-331-52	5999-01-052-3522	37	8
			42	7
01121	40410-496-01	5950-01-426-3675	37	4
			41	5
			42	3
01121	40410-497-01	5930-01-430-8739	37	5
			41	6
			42	4
01121	40410-498-01	6110-01-184-7387	37	7
			41	8
			42	6
01121	40410-499-01		41	2
01121	40410-499-02		37	2
			42	1
01121	40430-300-51	5999-01-306-9577	36	9
			38	10
01121	40430-452-51		36	8
			38	9
01121	40430-454-31		38	6
01121	40430-454-51		36	5
01121	40430-455-51		36	6
			38	7
01121	40430-457-51		36	1
			38	2
64382	407001-1	6695-01-355-0112	103	9
64382	407002-1	6695-01-355-0114	103	11
64382	407003-1		103	6
64382	407004-1	6695-01-355-4171	103	13
64382	407005-1	5310-01-352-7426	103	8
64382	407006-1		103	5
64382	407007-1	5325-01-351-5143	103	4
64382	407008-1		104	6
64382	407052-1	4730-01-351-2965	103	17
0JR79	4080-67		72	2
83750	40881-004		126	56
95683	41W1853	5120-00-262-8491	143	65
83750	4104		126	39
0JR79	4135-8D	4730-01-351-3031	72	4
81860	41760-1		136	27
57328	4180-040		129	136
83750	4197		126	71
OLU89	42-15-78		73	81
			74	84

PART NUMBER INDEX

CAGEC	PART NUMBER	STOCK NUMBER	FIG.	ITEM
			75	81
56735	42AL		7	71
56735	42R-RG-1.2	4610-01-349-7642	7	68
92878	4203		98	45
56735	43R-RG	4610-01-349-7641	7	67
56735	43ST		7	66
92878	4347	5930-00-876-8493	98	27
83750	4364		126	74
83750	4365		126	72
91224	438-00	6640-00-127-4779	143	24
			143	144
91224	439-06	8125-01-366-1609	143	21
			143	143
56735	44-2-AL		7	75
OLU89	44-262		73	115
			74	118
			75	115
56735	44MF		7	73
56735	44R-12-RG	4610-01-349-7644	7	74
56735	44RB-RG	4610-01-349-7643	7	72
21450	444046	4730-00-947-7474	3	19
D9135	4466-090	5330-12-145-1511	129	115
87327	45-0626	5330-01-349-5542	8	28
56735	45C-CR-1 1/4	4730-01-349-4435	7	63
56735	45G-RN	5330-01-351-7682	7	62
0JR79	4509-87	4730-01-350-9096	72	5
92194	45371	6145-01-357-1804	BULK	7
17549	4601.00000.330		146	28
17549	4601.51000.330		146	29
17549	4604.00000.020	4720-01-353-7460	146	30
17549	4632.00000.601	5130-01-353-9313	146	31
70642	4670V		90	28
00779	47100	5120-00-278-2423	146	26
92878	47322		99	31
92878	47326		99	30
92878	47329		99	26
92878	47632		98	11
87327	48-0116		8	11
87327	48-0275	5305-01-350-0505	8	14
03306	48-1-0011-02	4320-00-689-2809	63	5
03306	48-1-0127-01	5305-00-824-0951	63	6
03306	48-1-0341	4320-01-111-6928	63	19
03306	48-1-0372-01	4320-00-689-2935	63	11
03306	48-2-0006-02	4320-01-351-1668	63	9
03306	48-3-0133-01		63	13
03306	48-3-0139-01		63	16
03306	48-4-0075-01		63	4
56735	48R-RG-3/8	4610-01-349-7645	7	77
55799	480595	6350-01-359-0408	102	18
76599	4812SS	4730-01-146-5901	7	49

PART NUMBER INDEX

CAGEC	PART NUMBER	STOCK NUMBER	FIG.	ITEM
			66	11
92878	48174-02	4540-00-406-7094	98	20
93886	483792		102	20
93886	485185		102	19
93886	486752		102	21
92878	48862-02	2920-01-024-3965	98	21
92878	49034		98	7
92878	49035		98	25
92878	49071	5930-01-349-9379	95	54
			96	54
92878	49093	5330-01-087-8831	98	24
92878	4914403		98	34
92878	49296		95	58
			96	58
92878	49302	5930-01-349-9378	95	53
			96	53
92878	49303	5925-01-350-0403	95	52
			96	52
92878	49304	6210-01-352-2900	95	55
			96	55
92878	49305		95	56
			96	56
92878	49306		95	50
			96	50
			98	38
92878	49309-001-2 ORANGE		95	22
92878	49309-01		95	11
92878	49309-01 WHITE		96	20
92878	49309-01-WHITE		95	20
92878	49309-01-1 WHITE/BLA CK STRIPE		95	21
			96	21
92878	49309-01-2 ORANGE		96	22
92878	49309-01-3 BLACK		95	23
			96	23
92878	49309-01-4 RED		95	24
			96	24
92878	49309-01-6 GREY		95	25
			96	25
92878	49309-01-7 BLUE		95	26
			96	26
92878	49309-01-8 YELLOW		95	27
			96	27
92878	49309-01N3		95	19
			96	19
92878	49309-02		96	19
92878	49310	2910-01-351-3018	98	17
92878	49320		98	23
92878	49325		98	14
92878	49326		98	13

PART NUMBER INDEX

CAGEC	PART NUMBER	STOCK NUMBER	FIG.	ITEM
92878	49330	6150-01-351-8956	98	42
92878	49341	5945-01-350-8263	98	43
92878	49342-01	4720-01-327-1606	98	6
92878	49350	2920-01-351-0185	98	19
92878	49360	4140-01-350-5753	98	9
92878	49367		98	2
92878	49386		95	51
			96	51
			98	37
92878	49391		95	47
			96	47
92878	4940001DIESEL150 00B TUS		97	19
30646	499-756358		79	17
02413	5-1211 W/M-B-4	6830-01-351-3112	9	1
70642	5H991		90	25
70642	5H993V		90	26
54938	5MSC4N-316	4730-00-691-5458	127	11
01121	500-BODX18	6110-01-346-4751	35	61
			42	
03306	500-405	5330-00-823-7106	63	7
03306	500-410	5330-01-302-7671	63	8
03306	500-423-1	4320-01-327-4582	63	14
03306	500-513	5315-01-260-5614	63	18
03306	500-771	5305-01-299-6602	63	2
03306	500-772		63	3
03306	500-774	5305-01-155-7201	63	15
03306	500-914		63	17
03306	500-974		63	12
03306	500-983	5330-01-326-0781	63	10
58177	50004	5340-01-350-0567	79	4
58177	50009		143	29
94833	5001K1843-2	4730-01-447-2084	10	87
58177	50010	4720-01-349-7320	79	5
58177	50028	4610-01-353-8421	79	7
58177	50036	6640-01-355-6443	79	9
58177	50051	6640-01-357-8532	143	28
58177	50096		79	14
83750	50378-016		126	47
92878	50585		98	31
01121	505-DODX16	6110-01-346-4749	35	57
			38	
01121	509-AOD-91	6110-01-351-1674	35	60
			41	
01121	509 BOD X22		35	56
			37	
01121	509BOD-90	6110-01-346-4748	35	56
			37	
01121	509-TODW-39	6110-01-013-6482	35	59
			40	

PART NUMBER INDEX

CAGEC	PART NUMBER	STOCK NUMBER	FIG.	ITEM
01121	509-TODX17	6110-01-346-4750	35	58
			39	
04816	521-M	5310-01-350-0558	67	44
04816	521-N	5325-01-350-0516	67	45
04816	521-P	4730-01-351-5880	67	42
04816	521DV	4820-01-346-4655	67	43
50492	5262836		134	15
50492	5262837		134	17
50492	5262846	5330-01-334-9937	134	30
50492	5262847	5330-01-352-4336	134	4
50492	5262848	5330-01-352-7756	134	10
50492	5262849	5365-01-351-9409	134	9
50492	5262851	4320-01-337-7316	135	22
50492	5262884		135	5
50492	5262886		135	44
50492	5262887		135	27
50492	5262907	4820-01-350-0179	135	14
50492	5263324		135	29
50492	5263964	4820-01-351-9972	135	13
50492	5263965	4820-01-351-9973	135	20
50492	5263968		135	12
50492	5263969		135	19
50492	5263970	5360-01-393-2618	135	18
50492	5263971		135	17
50492	5263973		135	8
			135	15
50492	5264602	5330-01-352-7745	134	32
50492	5265202	5330-01-353-2633	135	25
50492	5265204		135	28
50492	5265205		135	24
50492	5266187		135	36
50492	5266189		135	37
50492	5266255	5330-01-352-7776	134	29
			135	8
50492	5266327		135	23
50492	5266457		135	3
50492	5266462	6680-01-354-7482	134	1
50492	5266463		135	9
			135	16
50492	5266536		134	11
50492	5266543		134	34
50492	5266556		134	18
50492	5266557		135	32
50492	5266560		135	35
50492	5266571		134	6
50492	5266586		134	3
50492	5266588	4820-01-348-4278	135	7
50492	5266591		134	21
50492	5266592		134	25
50492	5266613	4320-01-351-8586	133	20

PART NUMBER INDEX

CAGEC	PART NUMBER	STOCK NUMBER	FIG.	ITEM
50492	5266617		135	
50492	5266814		134	13
50492	5266887		134	22
50492	5267472		135	11
50492	5267473		135	10
50492	5267474		135	30
50492	5268488		134	36
50492	5271591		135	33
50492	5271593		134	19
50492	5271595		135	26
30053	532T1	6630-00-127-4774	143	13
15073	5385A14	5120-00-449-8083	143	63
OLU89	54-100		73	102
			74	105
			75	102
OLU89	54-101		73	103
			74	106
			75	103
01121	540-PODX5	6110-01-346-4747	35	55
			36	
92878	5404		98	15
83750	54912-001		126	79
83750	54914-001		126	61
13841	5499	4730-00-270-3901	143	108
57328	55579-500		129	29
			129	31
57328	55589-500		129	31
98664	5587A32M		93	19
98664	5587A33M		93	18
98664	5587B19A		93	17
98664	5587B20A		93	16
98664	5587B21M	5340-01-355-4834	93	15
98664	5587C12M	6130-01-346-4737	93	14
83750	56036-008		126	69
83750	56120-001		126	38
00624	56541A6C-C	5310-01-353-2582	65	13
83750	56543-010		126	41
83750	56543-011		126	42
00624	56555AW125-500	5306-01-351-7744	65	12
83750	56562-018		126	75
57328	5662-000		129	143
03514	568B118G2		34	6
57328	56805-650	6680-01-353-5816	129	40
83750	56806-001		126	66
83750	56809-001		126	53
83750	56811-001		126	60
83750	56815-001		126	35
83750	56956-001		126	86
83750	56957-001		126	80
83750	56962-001		126	29

PART NUMBER INDEX

CAGEC	PART NUMBER	STOCK NUMBER	FIG.	ITEM
83750	56963-001		126	83
92878	5697		98	12
83750	56970-001		126	77
83750	56974-001		126	33
83750	56976-001		126	51
83750	56978-001		126	50
83750	56981-001		126	63
83750	56982-001		126	84
83750	56994-001		126	64
83750	57004-001		126	68
83750	57047-001		126	55
83750	57052-001		126	54
83750	57081-001		126	76
83750	57088-001		126	36
83750	57092-001		126	85
83750	57452-001		126	82
83750	57452-002		126	81
83750	57574-001		126	40
57328	57682-410		109	18
57328	57735-341		109	27
57328	57741-341	4810-01-350-8967	109	24
57328	57760-341		109	29
83750	57858-004		126	25
57328	57904-410		109	22
57328	57937-341		109	20
57328	58130-070		129	83
57328	58133-080		129	78
57328	58134-080		129	79
57328	58173-040		129	135
92878	5864		98	3
92878	5876		98	4
01121	595-A	5999-01-110-4623	37	3
			41	3
01121	595-AA	5999-01-349-5272	38	5
01121	595-AB	5999-01-235-8936	36	2
			38	4
01121	595-B	6110-01-273-7849	36	3
			41	4
01121	595-BL	5999-01-349-5096	36	4
			42	2
01121	596-TR32	6645-01-348-7435	38	3
11349	6-333519	6105-01-354-0723	64	16
81343	6-4 140140S	4730-00-935-1528	10	83
			12	61
			12	79
54938	6-6DBZ-SS	4730-01-350-9030	65	15
54938	6-6FBZ-SS	4730-00-691-5460	65	18
64382	6CF007-16		132	13
64382	6CF016-1	5305-01-353-6049	103	3
64382	6ER001-119		103	16

PART NUMBER INDEX

CAGEC	PART NUMBER	STOCK NUMBER	FIG.	ITEM
64382	6ER001-221	5331-01-352-7478	103	14
64382	6ER001-225		103	7
64382	6ER002-442	5330-01-352-1980	103	12
17549	600 324	5120-01-356-6002	146	8
17549	600 325	5120-01-356-1773	146	9
58177	60002	6810-01-357-7974	143	27
83750	60149-036		126	48
83750	60715-010		126	52
83750	60719-006		126	45
30646	613-867898		79	24
57328	61711-340		109	14
52676	6215C3	3110-00-180-7737	131	48
57328	62211410	4610-01-449-6771	109	11
57328	62503-635		129	7
55799	629432	5930-01-350-5602	102	16
55799	629693	6625-01-350-2301	102	15
03640	6301812	5310-00-595-6772	47	35
			105	16
40912	631570		146	43
53390	6319-01-7		143	36
57328	63438-410		109	13
13226	6381LC		106	57
19220	6411E	5340-00-522-0381	7	24
			118	20
			118	33
			118	38
			130	15
92878	65838		98	47
15235	664-10757066		79	26
55799	68315	5920-01-350-8641	102	24
55799	69217	5340-01-295-4719	102	17
04655	70-801074	5999-00-186-3912	143	69
51489	700016	4030-01-022-5666	2	15
			2	32
			20	18
			20	29
			23	35
			138	23
			138	42
			142	38
			142	60
			142	85
58177	70006	6140-01-358-0143	143	26
58177	70048		143	30
95321	702ELB0W45DEG	4730-00-249-3878	1	38
58177	70825		143	31
58177	70900	6850-01-357-4905	143	7
30646	711-806120		79	23
OLU89	74-100-X-Y-Z		73	89
			74	92

CROSS-REFERENCE INDEXES

PART NUMBER INDEX

CAGEC	PART NUMBER	STOCK NUMBER	FIG.	ITEM
OLU89	74-100-X-Y-Z		75	89
OLU89	7510-104-01-316L		76	14
OLU89	7510-104-316L	4820-01-446-4091	67	12
			76	10
OLU89	7510-105-01-316L		74	88
			75	85
OLU89	7510-105-316L	4820-01-446-4090	67	3
			74	57
OLU89	7510-105-51-316L		74	85
OLU89	7510-106-2-1/2-05-316 L		75	87
OLU89	7510-106-21/2-316L		75	82
OLU89	7510-106-316L	4810-01-446-4089	67	21
			75	54
92878	7520	5305-01-022-1950	98	22
72219	76-108-01	4820-01-289-0996	106	7
			106	22
03538	77C714976P006	4720-00-269-0045	BULK	48
03514	791A819P4		34	10
30646	792-892486		79	20
0D5S3	8-159365		140	1
0D5S3	8MM-INT TOOTH		131	34
0D5S3	8MM-STEEL		131	35
01121	800T-B1D1	5930-01-036-0980	30	22
			46	12
01121	800T-B2D1	5930-01-086-7489	30	20
01121	800T-B6D2	5930-00-162-1875	30	23
			46	13
01121	800T-N26A	6210-01-007-7972	30	5
			46	10
01121	800T-N26B	6210-01-088-7481	30	8
01121	800T-N26G	6210-01-007-7973	30	2
01121	800T-N26R	6210-00-990-9973	30	11
01121	800T-P1GB	6210-00-194-3236	30	7
01121	800T-P16A	6210-00-139-5072	30	4
			46	9
01121	800T-P16G	6210-00-226-8798	30	1
25573	800T-P16R	6210-00-295-2426	30	10
63624	80478	5331-01-353-9383	103	20
63624	81282	4730-01-415-8412	103	19
81774	81384	6145-01-357-1803	BULK	6
81774	81644	6145-01-357-8695	BULK	5
30646	817-10756392		79	21
			25	23
			25	35
			25	38
			25	56
			25	71
			25	74
02769	8200157-3		33	39

CROSS-REFERENCE INDEXES

PART NUMBER INDEX

CAGEC	PART NUMBER	STOCK NUMBER	FIG.	ITEM
			130	14
			138	72
30646	824-10756471	6240-01-358-7863	143	12
57328	8263-090	5330-01-318-8208	129	34
40912	8473150		146	40
40912	8478359		146	44
99974	8599621-312	5305-00-984-4686	51	1
			52	1
			54	1
			115	1
			120	35
			121	37
57661	86-507-01		13	31
13646	87F-17B	4320-01-345-5681	4	1
59042	8710A64-0357	5310-01-091-1248	71	23
			100	10
			114	3
04034	88802	5930-01-350-7669	83	31
57328	8931-060		129	84
57328	8933-060		129	117
57328	8940-040		129	138
57328	8941-040		129	137
53390	8946	4610-01-349-8731	143	33
57328	8952-050		129	87
13226	9Q4933		106	60
13226	9Q8592		106	58
13226	9Q8594		106	54
03512	9T22B4020G16	5950-01-423-1526	34	26
03512	9T58B3364G08	5950-01-423-1525	34	21
30646	905-10756470		143	8
05476	91038	5430-01-318-9434	141	1
00843	91307-400		125	58
92878	917001		99	24
57328	9284-090		129	71
			129	118
57328	9285-090		129	85
57328	9343-864		129	22
91224	936-00	8530-01-390-9466	143	23
57328	9796-864		129	125
18876	9995761	5935-00-061-1962	46	15

By Order of the Secretary of the Army:

ERIC K. SHINSEKI
General, United States Army
Chief of Staff

Official:

JOEL B. HUDSON
Administrative Assistant to the
Secretary of the Army
0010402

DISTRIBUTION: To be distributed in accordance with the Initial Distribution Number (IDN) 255909, requirements for TM 10-4610-232-24P.

RECOMMENDED CHANGES TO EQUIPMENT TECHNICAL PUBLICATIONS

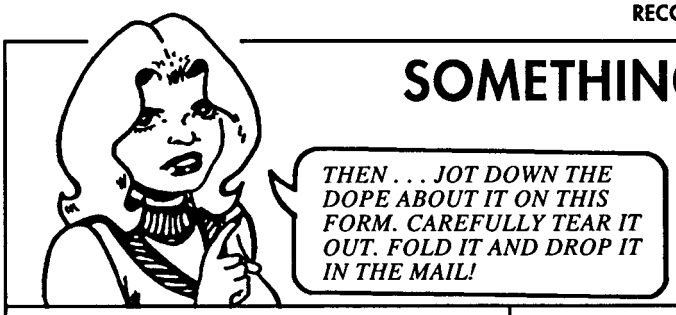

SOMETHING WRONG WITH THIS PUBLICATION?

FROM: (PRINT YOUR UNIT'S COMPLETE ADDRESS)
Your Mailing Address

DATE SENT Date you filled out this form

PUBLICATION NUMBER	PUBLICATION DATE	PUBLICATION TITLE
TM X-XXXX-XXX-XXX	Date of TM	Title of TM

BE EXACT. . .PIN-POINT WHERE IT IS

PAGE NO.	PARA-GRAPH	FIGURE NO.	TABLE NO.	IN THIS SPACE TELL WHAT IS WRONG AND WHAT SHOULD BE DONE ABOUT IT:
3-193		2		Step No. 1 says to connect LH 4 SPNSN Unit-8 hose from where to what? It is also not identified.
3-227				Procedure is continued from another page, but cap is not removed - add step to procedure.

SAMPLE

PRINTED NAME, GRADE OR TITLE, AND TELEPHONE NUMBERS
Doe, John, CPL 755-1313

SIGN HERE:
CPL John Doe

DA FORM 1 JUL 79 2028-2

PREVIOUS EDITIONS ARE OBSOLETE.

P.S.—IF YOUR OUTFIT WANTS TO KNOW ABOUT YOUR RECOMMENDATION MAKE A CARBON COPY OF THIS AND GIVE IT TO YOUR HEADQUARTERS.

REVERSE OF DA FORM 2028-2

SAMPLE

FILL IN YOUR UNIT'S ADDRESS

FOLD BACK

DEPARTMENT OF THE ARMY

CPL John Doe

APO NY

OFFICIAL BUSINESS
PENALTY FOR PRIVATE USE $300

POSTAGE AND FEES PAID
DEPARTMENT OF THE ARMY
DoD 314

TEAR ALONG PERFORATED LINE

Commander
U.S. Army Tank-automotive and Armaments Command
ATTN: AMSTA-AC-NML
Rock Island, IL 61299-7630

RECOMMENDED CHANGES TO EQUIPMENT TECHNICAL PUBLICATIONS

SOMETHING WRONG WITH THIS PUBLICATION?

THEN . . . JOT DOWN THE DOPE ABOUT IT ON THIS FORM. CAREFULLY TEAR IT OUT. FOLD IT AND DROP IT IN THE MAIL!

FROM: (PRINT YOUR UNIT'S COMPLETE ADDRESS)

DATE SENT

PUBLICATION NUMBER	PUBLICATION DATE	PUBLICATION TITLE
TM 10-4610-232-24P	31 January 00	WATER PURIFICATION UNIT, REVERSE OSMOSIS, 3,000 GPH

BE EXACT. . .PIN-POINT WHERE IT IS

PAGE NO.	PARA-GRAPH	FIGURE NO.	TABLE NO.

IN THIS SPACE TELL WHAT IS WRONG AND WHAT SHOULD BE DONE ABOUT IT:

PRINTED NAME, GRADE OR TITLE, AND TELEPHONE NUMBERS

SIGN HERE:

DA FORM 1 JUL 79 2028-2

PREVIOUS EDITIONS ARE OBSOLETE.

P.S.—IF YOUR OUTFIT WANTS TO KNOW ABOUT YOUR RECOMMENDATION MAKE A CARBON COPY OF THIS AND GIVE IT TO YOUR HEADQUARTERS.

REVERSE OF DA FORM 2028-2

FILL IN YOUR UNIT'S ADDRESS

FOLD BACK

DEPARTMENT OF THE ARMY

PLACE POSTAGE HERE

TEAR ALONG PERFORATED LINE

Commander
U.S. Army Tank-automotive and Armaments Command
ATTN: AMSTA-AC-NML
Rock Island, IL 61299-7630

RECOMMENDED CHANGES TO EQUIPMENT TECHNICAL PUBLICATIONS

SOMETHING WRONG WITH THIS PUBLICATION?

THEN . . . JOT DOWN THE DOPE ABOUT IT ON THIS FORM. CAREFULLY TEAR IT OUT. FOLD IT AND DROP IT IN THE MAIL!

FROM: (PRINT YOUR UNIT'S COMPLETE ADDRESS)

DATE SENT

PUBLICATION NUMBER	PUBLICATION DATE	PUBLICATION TITLE
TM 10-4610-232-24P	31 January 00	WATER PURIFICATION UNIT, REVERSE OSMOSIS, 3,000 GPH

BE EXACT. . .PIN-POINT WHERE IT IS

PAGE NO.	PARA-GRAPH	FIGURE NO.	TABLE NO.

IN THIS SPACE TELL WHAT IS WRONG AND WHAT SHOULD BE DONE ABOUT IT:

PRINTED NAME, GRADE OR TITLE, AND TELEPHONE NUMBERS

SIGN HERE:

DA FORM 1 JUL 79 2028-2

PREVIOUS EDITIONS ARE OBSOLETE.

P.S.—IF YOUR OUTFIT WANTS TO KNOW ABOUT YOUR RECOMMENDATION MAKE A CARBON COPY OF THIS AND GIVE IT TO YOUR HEADQUARTERS.

REVERSE OF DA FORM 2028-2

FILL IN YOUR UNIT'S ADDRESS

FOLD BACK

DEPARTMENT OF THE ARMY

PLACE POSTAGE HERE

TEAR ALONG PERFORATED LINE

Commander
U.S. Army Tank-automotive and Armaments Command
ATTN: AMSTA-AC-NML
Rock Island, IL 61299-7630

RECOMMENDED CHANGES TO EQUIPMENT TECHNICAL PUBLICATIONS

SOMETHING WRONG WITH THIS PUBLICATION?

THEN . . . JOT DOWN THE DOPE ABOUT IT ON THIS FORM. CAREFULLY TEAR IT OUT. FOLD IT AND DROP IT IN THE MAIL!

FROM: (PRINT YOUR UNIT'S COMPLETE ADDRESS)

DATE SENT

PUBLICATION NUMBER	PUBLICATION DATE	PUBLICATION TITLE
TM 10-4610-232-24P	31 January 00	WATER PURIFICATION UNIT, REVERSE OSMOSIS, 3,000 GPH

BE EXACT. . .PIN-POINT WHERE IT IS

PAGE NO.	PARA-GRAPH	FIGURE NO.	TABLE NO.

IN THIS SPACE TELL WHAT IS WRONG AND WHAT SHOULD BE DONE ABOUT IT:

PRINTED NAME, GRADE OR TITLE, AND TELEPHONE NUMBERS

SIGN HERE:

DA FORM 1 JUL 79 2028-2

PREVIOUS EDITIONS ARE OBSOLETE.

P.S.—IF YOUR OUTFIT WANTS TO KNOW ABOUT YOUR RECOMMENDATION MAKE A CARBON COPY OF THIS AND GIVE IT TO YOUR HEADQUARTERS.

REVERSE OF DA FORM 2028-2

FILL IN YOUR UNIT'S ADDRESS

FOLD BACK

DEPARTMENT OF THE ARMY

PLACE POSTAGE HERE

TEAR ALONG PERFORATED LINE

Commander
U.S. Army Tank-automotive and Armaments Command
ATTN: AMSTA-AC-NML
Rock Island, IL 61299-7630

THE METRIC SYSTEM AND EQUIVALENTS

LINEAR MEASURE
1 Centimeter = 10 Millimeters = 0.01 Meters = 0.3937 Inches
1 Meter = 100 Centimeters = 1,000 Millimeters = 39.37 Inches
1 Kilometer = 1,000 Meters = 0.621 Miles

WEIGHTS
1 Gram = 0.001 Kilograms = 1,000 Milligrams = 0.035 Ounces
1 Kilogram = 1,000 Grams = 2.2 Lb
1 Metric Ton = 1,000 Kilograms = 1 Megagram = 1.1 Short Tons

LIQUID MEASURE
1 Milliliter = 0.001 Liters = 0.0338 Fluid Ounces
1 Lilter = 1,000 Millimeters = 33.82 Fluid Ounces

SQUARE MEASURE
1 Sq Centimeter = 100 Sq Millimeters = 0.155 Sq Inches
1 Sq Meter = 10,000 Sq Centimeters = 10.76 Sq Feet
1 Sq Kilometer = 1,000,000 Sq Meters = 0.386 Sq Miles

CUBIC MEASURE
1 Cu Centimeter = 1,000 Cu Millimeters = 0.06 Cu Inches
1 Cu Meter = 1,000,000 Cu Centimeters = 35.31 Cu Feet

TEMPERATURE
5/9 (°F - 32) = °C
212° Fahrenheit is equivalent to 100° Celsius
90° Fahrenheit is equivalent to 32.2° Celsius
32° Fahrenheit is equivalent to 0° Celsius
9/5 °C + 32 = °F

APPROXIMATE CONVERSION FACTORS

TO CHANGE	TO	MULTIPLY BY
Inches	Centimeters	2.540
Feet	Meters	0.305
Yards	Meters	0.914
Miles	Kilometers	1.609
Square Inches	Square Centimeters	6.451
Square Feet	Square Meters	0.093
Square Yards	Square Meters	0.836
Square Miles	Square Kilometers	2.590
Acres	Square Hectometers	0.405
Cubic Feet	Cubic Meters	0.028
Cubic Yards	Cubic Meters	0.765
Fluid Ounces	Milliliters	29.573
Pints	Liters	0.473
Quarts	Liters	0.946
Gallons	Liters	3.785
Ounces	Grams	28.349
Pounds	Kilograms	0.454
Short Tons	Metric Tons	0.907
Pound-Feet	Newton•Meters	1.356
Pounds Per Square Inch	Kilopascals	6.895
Miles Per Gallon	Kilometers Per Liter	0.425
Miles Per Hour	Kilometers Per Hour	1.609

TO CHANGE	TO	MULTIPLY BY
Centimeters	Inches	0.394
Meters	Feet	3.280
Meters	Yards	1.094
Kilometers	Miles	0.621
Square Centimeters	Square Inches	0.155
Square Meters	Square Feet	10.764
Square Meters	Square Yards	1.196
Square Kilometers	Square Miles	0.386
Square Hectometers	Acres	2.471
Cubic Meters	Cubic Feet	35.315
Cubic Meters	Cubic Yards	1.308
Milliliters	Fluid Ounces	0.034
Liters	Pints	2.113
Liters	Quarts	1.057
Liters	Gallons	0.264
Grams	Ounces	0.035
Kilograms	Pounds	2.205
Metric Tons	Short Tons	1.102
Newton•Meters	Pound-Feet	0.738
Kilopascals	Pounds Per Square Inch	0.145
Kilometers Per Liter	Miles Per Gallon	2.354
Kilometers Per Hour	Miles Per Hour	0.621

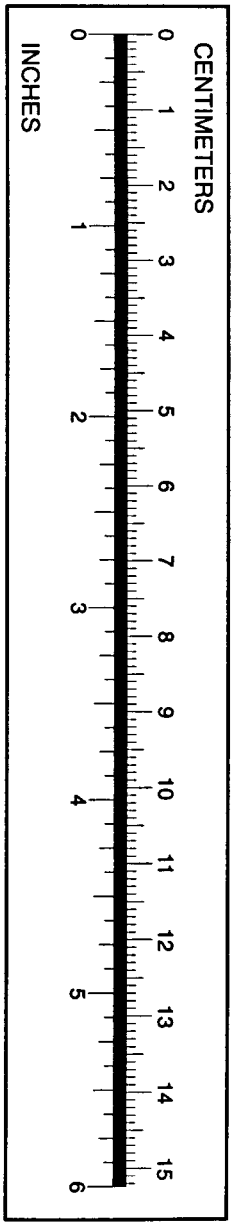

PIN: 070249