TECHNICAL MANUAL

ARMY AVIATION MAINTENANCE ENGINEERING MANUAL

WEIGHT AND BALANCE

This publication supersedes TM 55-405-9, 25 August 1966, including all changes.

HEADQUARTERS, DEPARTMENT OF THE ARMY
29 AUGUST 1986

CHANGE

NO. 9

HEADQUARTERS
DEPARTMENT OF THE ARMY
WASHINGTON, D.C., 25 March 2004

Army Aviation Maintenance Engineering Manual

WEIGHT AND BALANCE

ENVIRONMENTAL/HAZARDOUS MATERIAL INFORMATION

This document has been reviewed for the presence of Class 1 Ozone Depleting Chemicals. As of change 8, dated 17 September 1996, all references to Class 1 Ozone Depleting Chemicals have been removed from this document by substitution with chemicals that do not cause atmospheric ozone depletion.

DISTRIBUTION STATEMENT A: Approved for public release; distribution is unlimited.

TM 55-1500-342-23, 29 August 1986, is changed as follows:

1. Remove and insert pages as indicated below. New or changed text material is indicated by a vertical bar in the margin. An illustration change is indicated by a miniature pointing hand.

Remove pages	Insert pages
---	A/(B blank)
i and ii	i and ii
3-1 and 3-2	3-1 and 3-2
4-1 and 4-2	4-1 and 4-2
4-5 through 4-10	4-5 through 4-10
4-11 through 4-20	4-11 through 4-20

2. Retain this sheet in front of manual for reference purposes.

By Order of the Secretary of the Army:

PETER J. SCHOOMAKER
General, United States Army
Chief of Staff

Official:

JOEL B. HUDSON
Administrative Assistant to the Secretary of the Army
0402701

DISTRIBUTION:

To be distributed in accordance with Initial Distribution Number (IDN) 311335, requirements for, TM 55-1500-342-23.

CHANGE

NO. 8

HEADQUARTERS
DEPARTMENT OF THE ARMY
WASHINGTON, D.C., 17 September 1996

**Army Aviation Maintenance
Engineering Manual**

WEIGHT AND BALANCE

DISTRIBUTION STATEMENT A: Approved for public release; distribution is unlimited.

TM 55-1500-342-23, 29 August 1986, is changed as follows:

1. Remove and insert pages as indicated below. New or changed text material is indicated by a vertical bar in the margin. An illustration change is indicated by a miniature pointing hand.

Remove pages	Insert pages
i and ii	i and ii
4-9 and 4-10	4-9 and 4-10
4-10.1/(4-10.2 blank)	4-10.1/(4-10.2 blank)

2. Retain this sheet in front of manual for reference purposes.

By Order of the Secretary of the Army:

Official

JOEL B. HUDSON
*Administrative Assistant to the
Secretary of the Army*
02420

DENNIS J. REIMER
*General, United States Army
Chief of Staff*

DISTRIBUTION:
To be distributed in accordance with DA Form 12-31-E, block no. 1335, requirements for TM 55-1500-342-23.

CHANGE

NO. 7

HEADQUARTERS
DEPARTMENT OF THE ARMY
WASHINGTON, D.C., 4 APRIL 1994

Army Aviation Maintenance
Engineering Manual

WEIGHT AND BALANCE

DISTRIBUTION STATEMENT A: Approved for public release; distribution is unlimited.

TM 55-1500-342-23, 29 August 1986, is changed as follows:

1. Remove and insert pages as indicated below. New or changed text material is indicated by a vertical bar in the margin. An illustration change is indicated by a miniature pointing hand.

Remove pages	Insert pages
4-9 and 4-10	4-9 and 4-10
4-10.1/(4-10.2 blank)	4-10.1/(4-10.2 blank)
4-15 through 4-18	4-15 through 4-18

2. Retain this sheet in front of manual for reference purposes.

By Order of the Secretary of the Army:

GORDON R. SULLIVAN
General, United States Army
Chief of Staff

Official:

MILTON H. HAMILTON
Administrative Assistant to the
Secretary of the Army
06559

DISTRIBUTION:
To be distributed in accordance with DA Form 12-31-E, block no. 1335, requirements for TM 55-1500-342-23.

CHANGE

NO. 6

HEADQUARTERS
DEPARTMENT OF THE ARMY
WASHINGTON, D.C., 28 May 1993

Army Aviation Maintenance
Engineering Manual

WEIGHT AND BALANCE

DISTRIBUTION STATEMENT A: Approved for public release; distribution is unlimited

TM 55-1500-342-23, 29 August 1986, is changed as follows:

1. Remove and insert pages as indicated below. New or changed text material is indicated by a vertical bar in the margin. An illustration change is indicated by a miniature pointing hand.

Remove pages	Insert pages
i and ii	i and ii
4-1 through 4-6	4-1 through 4-6
4-10.1/(4-10.2 blank)	4-10.1/(4-10.2 blank)

2. Retain this sheet in front of manual for reference purposes.

By Order of the Secretary of the Army:

GORDON R. SULLIVAN
General, United States Army
Chief of Staff

Official:

MILTON H. HAMILTON
Administrative Assistant to the
Secretary of the Army
04206

DISTRIBUTION:
To be distributed in accordance with DA Form 12-31-E, block no. 1335, requirements for TM 55-1500342-23.

CHANGE
NO. 5

HEADQUARTERS
DEPARTMENT OF THE ARMY
WASHINGTON, D.C., 31 July 1992

Army Aviation Maintenance
Engineering Manual

WEIGHT AND BALANCE

TM 55-1500-342-23, 29 August 1986, is changed as follows:

1. Remove and insert pages as indicated below. New or changed text material is indicated by a vertical bar in the margin. An illustration change is indicated by a miniature pointing hand.

Remove pages	Insert pages
1-1/1-2	1-1/1-2
2-1 and 2-2	2-1 and 2-2
3-1 and 3-2	3-1 and 3-2
4-1 and 4-2	4-1 and 4-2
4-13 and 4-14	4-13 and 4-14
2028's and Envelopes	2028's and Envelopes

2. Retain this sheet in front of manual for reference purposes.

By Order of the Secretary of the Army:

GORDON R. SULLIVAN
General, United States Army
Chief of Staff

Official:

MILTON H. HAMILTON
Administrative Assistant to the
Secretary of the Army
02398

DISTRIBUTION:
To be distributed in accordance with DA Form 12-31-E, block no. 1335, AVUM and AVIM maintenance requirements for TM 55-1500-342-23.

DISTRIBUTION STATEMENT A: Approved for public release; distribution is unlimited.

CHANGE
NO. 4

HEADQUARTERS
DEPARTMENT OF THE ARMY
WASHINGTON, D.C., 2 October 1990

Army Aviation Maintenance
Engineering Manual

WEIGHT AND BALANCE

TM 55-1500-342-23, 29 August 1986, is changed as follows:

1. Remove and insert pages as indicated below. New or changed text material is indicated by a vertical bar in the margin. An illustration change is indicated by a miniature pointing hand.

Remove pages	Insert pages
i and ii	i and ii
4-9 and 4-10	4-9 and 4-10
- - - -	4-10.1/4-10.2

2. Retain this sheet in front of manual for reference purposes.

By Order of the Secretary of the Army:

CARL E. VUONO
General, United States Army
Chief of Staff

Official:

THOMAS F. SIKORA
Brigadier General, United States Army
The Adjutant General

DISTRIBUTION:
To be distributed in accordance with DA Form 12-31, AVUM and AVDM Maintenance requirements for all Fixed and Rotary Wing Aircraft.

CHANGE
NO. 3

HEADQUARTERS
DEPARTMENT OF THE ARMY
WASHINGTON, D.C., 13 November 1989

Army Aviation Maintenance
Engineering Manual

WEIGHT AND BALANCE

TM 55-1500-342-23, 29 August 1986, is changed as follows:

1. Remove and insert pages as indicated below. New or changed text material is indicated by a vertical bar in the margin. An illustration change is indicated by a miniature pointing hand.

Remove pages	Insert pages
4-3 through 4-8	4-3 through 4-8
4-17 through 4-20	4-17 through 4-20

2. Retain this sheet in front of manual for reference purposes.

By Order of the Secretary of the Army:

CARL E. VUONO
General, United States Army
Chief of Staff

Official:

WILLIAM J. MEEHAN II
Brigadier General, United States Army
The Adjutant General

DISTRIBUTION:
To be distributed in accordance with DA Form 12-31, AVIM AND AVUM Maintenance requirements for all Fixed and Rotary Wing Aircraft.

This is a **reprint** of change 2.

CHANGE
NO. 2

HEADQUARTERS
DEPARTMENT OF THE ARMY
WASHINGTON, D.C., 11 October 1988

Army Aviation Maintenance
Engineering Manual

WEIGHT AND BALANCE

TM 55-1500-342-23, 29 August 1986, is changed as follows:

1. Remove and insert pages as indicated below. New or changed text material is indicated by a vertical bar in the margin. An illustration change is indicated by a miniature pointing hand.

Remove pages	Insert pages
i and ii	i and ii
4-3 through 4-18	4-3 through 4-18
4-23 and 4-24	4-23 and 4-24

2. Retain this sheet in front of manual for reference purposes.

By Order of the Secretary of the Army:

CARL E. VUONO
General, United States Army
Chief of Staff

Official:

WILLIAM J. MEEHAN II
Brigadier General, United States Army
The Adjutant General

DISTRIBUTION:
To be distributed in accordance with DA Form 12-31, AVIM and AVUM Maintenance requirements for all Fixed and Rotary Wing Aircraft.

CHANGE
NO. 1

HEADQUARTERS
DEPARTMENT OF THE ARMY
WASHINGTON, D.C., 16 September 1987

Army Aviation Maintenance
Engineering Manual

WEIGHT AND BALANCE

TM 55-1500-342-23, 29 August.1986, is changed as follows:

1. Remove and insert pages as indicated below. New or changed text material is indicated by a vertical bar in the margin. An illustration change is indicated by a miniature pointing hand.

Remove pages	Insert pages
3-3 through 3-6	3-3 through 3-6
4-1 through 4-4	4-1 through 4-4
4-7 and 4-8	4-7 and 4-8
4-9 through 4-12	4-9 through 4-12
4-17 through 4-20	4-17 through 4-20

2. Retain this sheet in front of manual for reference purposes.

By Order of the Secretary of the Army:

CARL E. VUONO
General, United States Army
Chief of Staff

Official:

R. L. DILWORTH
Brigadier General, United States Army
The Adjutant General

DISTRIBUTION:
To be distributed in accordance with DA Form 12-31, AVIM and AVUM Maintenance requirements for All Fixed and Rotary Wing Aircraft.

LIST OF EFFECTIVE PAGES

Insert latest changed pages; dispose of superseded pages in accordance with regulations.

NOTE: On a changed page, the portion of the text affected by the latest change is indicated by a vertical line, or other change symbol, in the outer margin of the page. Changes to illustrations are indicated by miniature pointing hands. Changes to wiring diagrams are indicated by shaded areas.

Dates of issue for original and changed pages are:

Original	0	29 August 1986
Change	1	16 September 1987
Change	2	11 October 1988
Change	3	13 November 1989
Change	4	2 October 1990
Change	5	31 July 1992
Change	6	28 May 1993
Change	7	4 April 1994
Change	8	17 September 1996
Change	9	5 March 2004

Page No.	*Change No.
Cover	0
A	9
B blank	9
i-ii	9
1-1	5
1-2 blank	0
2-1	5
2-2 – 2-6	0
3-1	9
3-2	0
3-3 – 3-5	1
3-6	0
4-1 – 4-2	9
4-3	6
4-4	2
4-5	6
4-6 – 4-10	9
4-10.1	8
4-10.2 blank	4
4-11 – 4-13	9
4-14	2
4-15	7
4-16	9
4-17	7
4-18 – 4-20	9
4-21 – 4-23	0
4-24	2
4-25 – 4-54	0

*Zero in this column indicates an original page.

TECHNICAL MANUAL

NO. 55-1500-342-23

HEADQUARTERS
DEPARTMENT OF THE ARMY
WASHINGTON, D.C., 29 August 1986

ARMY AVIATION MAINTENANCE ENGINEERING MANUAL

WEIGHT AND BALANCE

REPORTING ERRORS AND RECOMMENDING IMPROVEMENTS

You can improve this manual. If you find any mistakes or if you know of a way to improve these procedures, please let us know. Mail your letter or DA Form 2028 (Recommended Changes to Publications and Blank Forms) located in the back of this manual, directly to: Commander, U.S. Army Aviation and Missile Command, ATTN: AMSAM-MMC-MA-NP, Redstone Arsenal, AL 35898-5000. A reply will be furnished to you. You may also provide DA Form 2028 information to AMCOM via e-mail, fax, or the World Wide Web. Our fax number is: DSN 788-6546 or Commercial 256-842-6546. Our e-mail address is: 2028@redstone.army.mil. Instructions for sending an electronic 2028 may be found at the back of this manual immediately preceding the hard copy 2028. For the World Wide Web use: https://amcom2028.redstone.army.mil.

ENVIRONMENTAL/HAZARDOUS MATERIAL INFORMATION

This document has been reviewed for the presence of Class I Ozone Depleting Chemicals. As of change 08, dated 17 September 1996, all references to Class I Ozone Depleting Chemicals have been removed from this document by substitution with chemicals that do not cause atmospheric ozone depletion.

TABLE OF CONTENTS

			Paragraph	Page
CHAPTER	1.	INTRODUCTION		
		Purpose	1-1	1-1
		Scope	1-2	1-1
		Reasons for Weight and Balance Control	1-3	1-1
		Responsibilities	1-4	1-1
CHAPTER	2.	PRINCIPLES OF WEIGHT AND BALANCE		
Section	I.	Weight		
		General	2-1	2-1
		Weight Definitions	2-2	2-1
		Weight Versus Aircraft Performance	2-3	2-1
		Floor Loading	2-4	2-2
		Ballast	2-5	2-2
Section	II.	Balance		
		General	2-6	2-2
		Principle of Moments	2-7	2-3
		Balance Definitions	2-8	2-3
		Effects of Moment on Aircraft	2-9	2-4
		Determination of Balance Condition (Location of Aircraft Center of Gravity)	2-10	2-4
		Effects of Unbalanced Loading	2-11	2-5
		Determining Center of Gravity for a Group of Items	2-12	2-5
		Center of Gravity Limits	2-13	2-5
		Expressing Center of Gravity	2-14	2-6

TABLE OF CONTENTS (Continued)

			Paragraph	Page
CHAPTER	3.	WEIGHING AIRCRAFT		
Section	I.	Weighing Equipment		
		General	3-1	3-1
		Electronic Weighing Kit	3-2	3-1
		Associated Items, Terms, and Fixtures	3-3	3-1
Section	II.	Weighing Practices and Procedures		
		Preparation of Aircraft for Weighing	3-4	3-3
		Aircraft Weighing Area	3-5	3-5
CHAPTER	4.	WEIGHT AND BALANCE RECORDS		
Section	I.	Types of Forms		
		General	4-1	4-1
		Responsibility for DD Form 365 Series and Chart E Forms	4-2	4-1
		Disposition of Weight and Balance Forms	4-3	4-1
		Related Publications	4-4	4-2
Section	II.	Instructions For Use of DD Form 365 Series AND CHART E		
		DD Form 365 (Record of Weight and Balance Personnel	4-5	4-3
		DD Form 365-1 (Basic Weight Check List)	4-6	4-3
		DD Form 365-2 (Aircraft Weighing Record)	4-7	4-4
		DD Form 365-3 (Basic Weight and Balance Records)	4-8	4-10
		DD Form 365-4 (Weight and Balance Clearance Form F)	4-9	4-13
		Chart E (Loading Tables, Graphs, and Diagrams)	4-10	4-21

LIST OF ILLUSTRATIONS

Figure	Title	Page
2-1	Aircraft Balance Point	2-4
2-2	Locating Aircraft Center of Gravity	2-5
3-1	Electronic Weighting Kit (Typical)	3-2
3-2	Lowest Point of Meniscus	3-3
4-1	DD Form 365	4-6
4-2	DD Form 365-1	4-7
4-3	DD Form 365-2	4-8
4-4	DD Form 365-3	4-11
4-5	DD Form 365-4	4-19
4-6	Chart E	4-22

CHAPTER 1

INTRODUCTION

1-1. Purpose. The purpose of this manual is to provide information necessary for the control of weight and balance of Army aircraft. Much of the information contained herein is general in nature since it is applicable to all aircraft. Refer to the appropriate -10 operator's and -23 maintenance manuals when specific weight and balance data is required for a particular aircraft.

1-2. Scope. Material presented in this manual applies to all activities that operate and/or maintain Department of the Army aircraft. Sufficient explanation of principles, definitions, and procedural data are given to provide weight and balance personnel with a general information manual pertinent to their particular function. Also included is a complete description of related equipment and instructions for its use and operation.

1-3. Reasons For Weight And Balance Control. Flight characteristics of aircraft are directly dependent upon conditions of weight and balance. Gross weight and center of gravity (cg) have a bearing on performance, stability, and control of the aircraft For example, cargo placed too far aft in an already critically loaded aircraft will move the center of gravity out of the permissible balance limits. This could easily cause the pilot to lose control of the aircraft. Hazardous flight conditions and accidents resulting from these conditions can be prevented by adherence to the principles of weight and balance set forth in this manual.

1-4. Responsibilities. Basic weight and balance data is delivered with the aircraft. Once aircraft are delivered, however, it becomes the responsibility of maintenance and operating units to maintain accurate weight and balance data. Maintenance activities are required to weigh specific aircraft periodically in accordance with the provisions of AR 95-3 to insure that basic weight and balance data is correct. It is the pilot's responsibility to insure that the weight and balance conditions of the aircraft are within safe limits, in accordance with the provisions of AR 95-1.

CHAPTER 2

PRINCIPLES OF WEIGHT AND BALANCE

Section I. WEIGHT

2-1. General. Weight is one of the most important factors to be considered from the time the aircraft is designed until it is removed from service. It is of prime importance to the manufacturer through all phases of production and must remain foremost in the pilot's mind when planning and carrying out missions. Changes in the basic aircraft design weight, either in initial production by the manufacturer, or in subsequent modifications by maintenance activities, will have to direct bearing on aircraft performance. Cargo/troop loading and the aircraft gross weight should be examined closely by the pilot as these factors may determine the safety and success of a mission. Gross weight limitations have been established and are in the applicable -10 operator's manual for individual aircraft to insure successful and efficient tactical operation.

2-2. Weight Definitions. Definitions of the more important terms pertaining to weight and its relationship to aircraft configurations and equipment are as follows:

a. Empty Weight. Empty weight includes the weight of the aircraft structure plus power plant, instrument systems, control systems, hydraulic systems, electrical systems, communication systems, armament provisions, furnishings, anti-icing equipment, auxiliary power plant, anchor and towing provisions, and flotation landing gear. This term is used for design purposes and usually does not affect service activities.

b. Basic Weight. Basic weight of an aircraft is that weight which includes all hydraulic systems and oil systems full, trapped and unusable fuel, and all fixed equipment, to which it is only necessary to add the crew, fuel, cargo, and ammunition (if carried) to determine the gross weight for the aircraft. The basic weight varies with structural modifications and changes of fixed aircraft equipment.

c. Operating Weight. Operating weight includes the basic weight plus aircrew, the aircrew's baggage, steward's equipment and emergency and other equipment that may be required. Operating weight does not include the weight of fuel, ammunition, bombs, cargo, or external auxiliary fuel tanks if such tanks are to be disposed of during flight.

d. Gross Weight. Gross weight is the total weight of an aircraft and its contents.

e. Takeoff Gross Weight. Takeoff gross weight includes the operating weight plus fuel, cargo, ammunition, bombs, auxiliary fuel tanks, etc.

f. Landing Gross Weight. Landing gross weight is the takeoff gross weight minus items expended during flight.

g. Useful Load. Useful load is the difference between empty weight and gross weight and includes fuel, oil, crew, passengers, cargo, and other material carried.

h. Service Weight Pickup. Service weight pickup is the weight, accounted for and unaccounted for, which is picked up by an aircraft during its service life. Service weight pickup is due to repairs, modifications (known pickup). Known pickup covers the actual parts installed during repair, overhaul, and modification. These parts should be weighed or, if weighing is impractical, the weight must be calculated. Unknown pickup results from changes in temperature and humidity, moisture absorption by sound proofing, accumulation of dirt, grease, etc., and can only be determined by periodic and accurate weighing of the aircraft.

i. Total Aircraft Weight. The sum of operating weight, weight of take off fuel and weight of water injection fluid, if applicable.

2-3. Weight Versus Aircraft Performance. An aircraft is designed for specific weight limitations which cannot be exceeded without compromising safety. Overloading an aircraft may cause structural failure or result in reduced engine and airframe life. An increase in gross weight will have the following effects on aircraft performance:

a. Increase takeoff distance.

b. Reduce hover performance.

c. Reduce rate of climb.

d. Reduce cruising speed.

e. Increase stalling speed.

f. Reduce maneuverability.

g. Reduce ceiling.

h. Reduce range.

i. Increase landing distances.

j. Instability.

2-4. Floor Loading. Floor loading is the weight of a load ill pounds divided by the area of floor space which the load occupies. [For example. the floor loading for a 100-pound container is determined as follows:

Base of container = 20 in x 20 in = 400 sq in

$$\text{Floor loading} = \frac{100 \text{ lb}}{400 \text{ sq in}} = 0.2 \text{ lb per sq in}$$

or 0.25 lb sq in x 144 = 36 Ib/sq ft.

Floor loading limits or a plan view of the cargo floor showing variations in floor strength and weight concentration limitations for various compartments are specified in the applicable -10 operator's manual.

2-5. Ballast. Ballast is some form of weight placed in a specific location in an aircraft to insure stability of flight by compensating for unfavorable weight and balance conditions. Two types of ballast are permanent ballast and temporary ballast.

a. Permanent Ballast. In certain instances modification work orders will call for the removal or addition of equipment which will have a marked effect on aircraft weight and balance conditions When this is the case, it is necessary to install ballast weights to maintain the center of gravity position within the center of gravity limits. The agency responsible for preparing the modification work order will consider effects of the modification on weight and balance conditions and will specify requirements for installation of permanent ballast weights when required. Maintenance activities that install permanent ballast weights are responsible for making the proper entries on DD Form 365-1, Basic Weight Check List. and DD Form 363-3. Basic Weight and Balance Record.

b. Temporary Ballast. Temporary ballast consists of such weights as may be necessary to compensate for missing crewmembers, weapons systems, ammunition, and equipment in order to maintain center of gravity positions within the center of gravity limits. Shot bags or other similar items may be used for temporary ballast provided they are properly secured. The amount and location of temporary ballast required to maintain safe flight will be determined by the pilot or weight and balance technician.

Section II. BALANCE

2-6. General. The purpose of this section is to outline the method for determining the cg position of a loaded aircraft. Although location of the cg is very important to safety of flight. it can be easily controlled by proper loading of the aircraft. Balance. or the location of the aircraft center of gravity. is of primary importance to aircraft stability. A pilot should never fly an aircraft if he is not personally satisfied with its loading and balance condition. The center of gravity (cg) is the point about which an aircraft would balance if it were possible to support the aircraft at that point. It is the mass center of the aircraft. or the theoretical point at which the entire weight of an aircraft is assumed to be concentrated.

a. The prime concern of balancing is longitudinal balance. or the location of the cg along the longitudinal axis. Location of the cg with reference to the lateral axis. however. is also important. The design of an aircraft is such that symmetry' is assumed to exist about a vertical plane through the longitudinal axis. In other words. for each item of weight existing to the left of the fuselage centerline there is generally an equal weight existing at a corresponding location on the right. This lateral mass symmetry. however. may be easily upset due to unbalanced lateral loading. Location of the lateral cg is not only important from the aspect of loading rotary wing aircraft. but is also extremely important when considering fixed wing exterior drop loads. The position of the lateral cg is not computed. but the operating crew must be aware that adverse effects will certainly arise as a result of a laterally unbalanced condition.

b. The cg (henceforth, reference to cg will mean the longitudinal center of gravity) is not necessarily a fixed point; its location depends on the distribution of items loaded in the aircraft, and as variable load items are shifted or expended, there is a resultant shift in cg location. It should be realized that if mass center of an aircraft is displaced too far forward on the longitudinal axis, a nose heavy condition will result. Conversely, if the mass center is displaced too far aft on the longitudinal axis, a tail heavy condition will result. It is possible that an unfavorable location of the cg could produce such an unstable condition that the pilot could lose control of the aircraft.

2-7. Principle of Moments. To understand balance, it is necessary to have a working knowledge of the principle of moments. For those unfamiliar with weight and balance terms, the word moment is the product of a force or weight, times a distance. The distance used in calculating a moment is referred to as the arm or moment arm, and is usually expressed in inches. To calculate a moment, a force (or weight) and a distance must be known. The distance is measured from some desired known point (reference point or reference datum) to the point through which the force acts. A moment is meaningless unless the reference point about which the moment was calculated is specified.

a. For the purpose of illustration, an aircraft may be compared to a seesaw. Like the seesaw, in order for an aircraft to be in balance, or equilibrium, the sum of the moments on each side of the balance point must be equal in magnitude.

For example, referring to figure 2-1, the moment produced about the fulcrum (reference point) by the 200 pound weight is 200 lb x 50 in = 10,000 in lb counterclockwise. The moment produced about the same reference point by the 100 pound weight is 100 lb x 100 in = 10,000 in lb clockwise. In this case, the clockwise moment counterbalances the counterclockwise moment, and the system is in equilibrium. This example illustrates the principle of moments which is as follows: For a system to be in static equilibrium, the sum of the moments about any point must equal zero.

b. As illustrated in figure 2-1, the clockwise moment is arbitrarily given a positive (+) sign while the counterclockwise moment is given a negative (-) sign. Therefore, the sum of the moments about the fulcrum = + 10,000 in lb (clockwise) -10,000 in lb (counterclockwise) -0, and the system is in equilibrium. In determining balance of an aircraft, the fulcrum is the unknown, and the problem is one of determining the location of the fulcrum, or longitudinal center of gravity.

2-8. Balance Definitions. Definitions of the more important terms pertaining to balance and its relationship to aircraft weight distribution are as follows:

a. Gross Weight Moment. Gross weight moment is the sum of moments of all items making up the aircraft in the gross weight condition. The gross weight moment is the product of gross weight times the gross weight arm.

b. Basic Arm. Basic arm is the distance from the reference datum to the center of gravity of an aircraft in basic condition. It is obtained by dividing the basic moment by the basic weight.

c. Gross Weight Arm. Gross weight arm is the distance from the reference datum to the cg of an aircraft in its gross weight condition. The relationship between the gross weight, gross weight arm, and gross weight moment is as follow:

$$\text{gross weight arm (in)} = \frac{\text{gross weight moments (in lb)}}{\text{gross weight (lb)}}$$

d. Reference Datum. Reference datum is an imaginary plane perpendicular to the longitudinal axis of the aircraft and is usually located at or near the nose of the aircraft to eliminate arms with a minus value. If a negative arm is encountered, the corresponding moment will also be negative. Simplified moment is one which has been reduced in magnitude through division by a constant. For example, 3201 in lb/ 1000 is the simplified expression of 3,200,893 divided by 1000 and rounded off to the nearest whole number. The advantage of simplification will be seen in application when a column of moments is added. Inaccuracies resulting from rounding off figures tend to cancel.

e. Aircraft Station. An aircraft station is a position defined by a plane perpendicular to the longitudinal aircraft axis. The number designation of this station signifies its distance from the reference datum. A station forward of the reference datum is negative (-) while a station aft of the reference datum is positive (+).

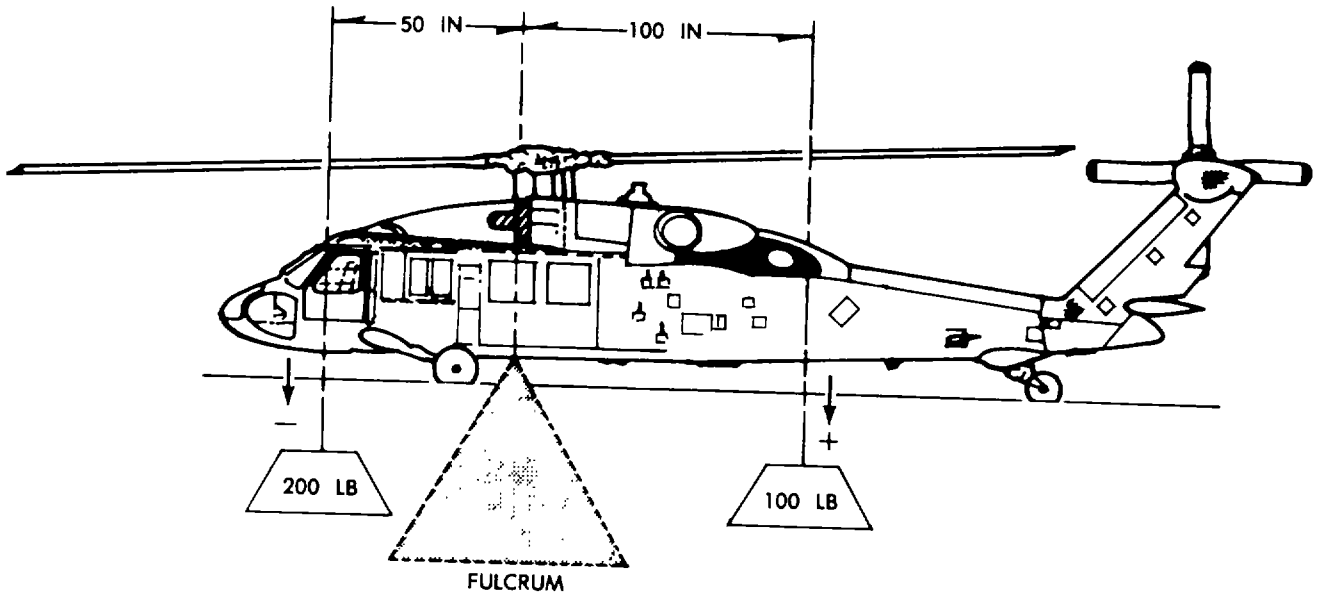

Figure 2-1. Aircraft Balance Point

f. Average Arm. The average arm is the distance from the reference datum to the cg of a group of objects.

2-9. Effects of Moment on Aircraft. As in the case of the seesaw, which can be balanced about its fulcrum, an aircraft may be considered to be in balance about its cg. Loads placed forward of the aircraft cg can be balanced by placing loads aft of the cg. Loads located forward of the cg of an aircraft produce moments which tend to make the nose go down, whereas loads located aft of the cg produce moments which tend to make the tail go down. If any item is added forward of the cg or removed aft of the cg, a nose-heavy condition will result. Conversely, any item added aft of the cg or removed forward of the cg will produce a tail-heavy condition. It should be realized that a moment can be changed without adding or removing a weight simply by shifting weight forward or aft.

2-10. Determination of Balance Condition (Location of Aircraft Center of Gravity). To determine the cg location of a loaded aircraft, it is first necessary to obtain the basic weight and moment of the aircraft from DD Form 365-3. Add the weight of the items to be loaded to the aircraft basic weight to obtain the gross weight. Compute the moment of each load item by multiplying its weight by its arm. Find the gross weight moment by adding the basic aircraft moment and the moments of the load items. Determine the cg location by dividing the gross weight moment by the gross weight. Figure 2-2 illustrates the method for determining the cg location of a loaded aircraft.

NOTE

In computations, any item of weight added to the aircraft either side of the datum is a plus weight. Any weight item removed is a minus weight. When multiplying weights by arms, the moment is plus if the signs are alike and minus if the signs are unlike. The following combinations are possible:

Items added forward of the datum -
(+)weight X(-)arm = (-)moment.

Items added aft of the datum -
(+) weight X (+) arm = (+) moment.

Items removed forward of the datum -
(-) weight X(-)arm = (+)moment.

Items removed aft of the datum-
(-)weight X(+)arm = (-)moment.

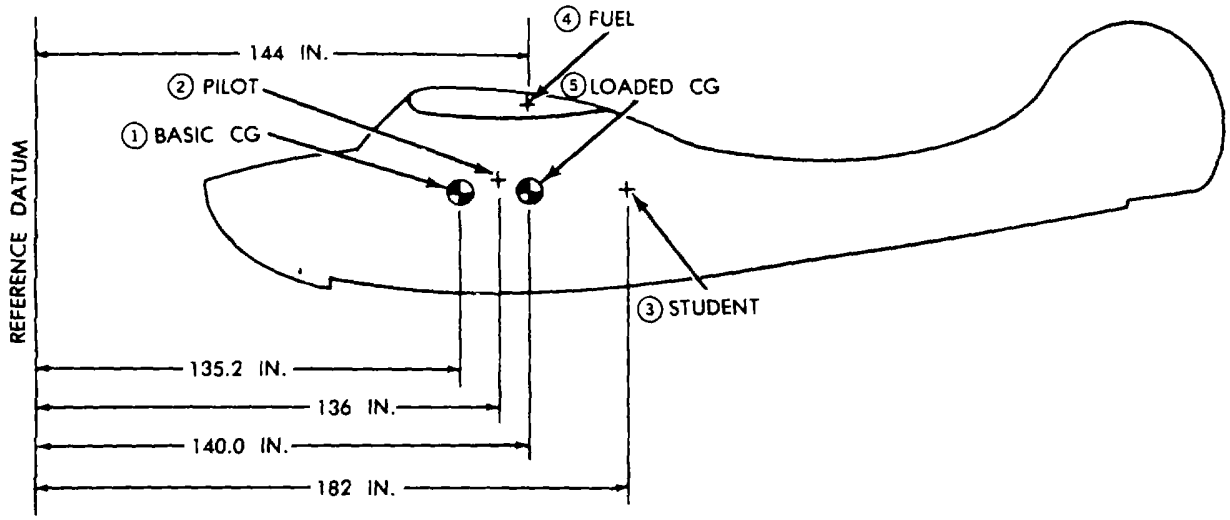

	WT	ARM	MOMENT
① BASIC AIRCRAFT	1707	135.2	230786
② PILOT	200	136.0	27200
③ STUDENT	200	182.0	36400
④ FUEL	252	144.0	36288
GROSS AIRCRAFT	2359		330674

$$⑤\ CG = \frac{330674}{2359} = 140.0\ IN.$$

Figure 2-2. Locating Aircraft Center of Gravity

2-11. Effects of Unbalanced Loading. When the aircraft is nose heavy (cg too far forward), the pilot will experience difficulty in getting the tail down during landing. Other unfavorable conditions which may result are loss of aircraft maneuverability, overstress of the nose wheel structure in landing, and increase in pilot fatigue. When a tailheavy condition exists (cg too far aft), the aircraft may become unstable. This condition increases pilot fatigue, and may lead to structural failure and spins.

2-12. Determining Center of Gravity for a Group of Items. It is sometimes desirable to find the average arm or cg for a group of objects in an aircraft. This is accomplished by finding the individual moment of each object in the group, adding these moments, and dividing this sum by the total weight of all the objects in the group. It is expressed by the formula:

$$\text{Average arm (in)} = \frac{\text{total moment (in lb)}}{\text{Total weight (lb)}}$$

It should be noted that the basic aircraft weight and moment are excluded from this calculation.

2-13. Center of Gravity Limits. After the cg position of a loaded aircraft has been calculated, it is necessary to insure that the cg falls within allowable limits. All aircraft have specific limits between which the cg must lie. These limits are specified in Chart E data covering the particular aircraft. If, after loading the aircraft, the cg does not fall within the allowable limits, it will be necessary to shift loads.

a. The forward cg limit may vary with the gross weight of an aircraft and is often restricted to control landing conditions. It may be possible for aircraft to maintain stable and safe flight with the cg

ahead of the forward limit as prescribed by landing conditions, but since landing is one of the most critical phases of flight, the forward cg limit is restricted to avoid damage to the aircraft structure when landing, and to insure that sufficient elevator deflection is available at minimum airspeed. When structural limitations or large stick forces do not limit the forward cg position, this point is determined as that cg position at which full up elevator is required to obtain a high angle of attack for landing.

b. The aft cg limit is the most rearward position at which the cg can be located for the most critical maneuver or operation. As the cg moves aft, a less stable condition occurs which decreases the ability of the aircraft to right itself after maneuvering or after disturbances by gusts. The allowable aft cg limit may also vary with the aircraft gross weight.

2-14. Expressing Center of Gravity. The cg position is expressed in terms of inches from a known reference datum.

CHAPTER 3
WEIGHING AIRCRAFT

Section I. WEIGHING EQUIPMENT

3-1. **General.** Weighing aircraft with accurately calibrated scales is the only sure method of obtaining an accurate basic weight and cg location. The use of DD Form 365-1 and 365-3 in accounting for correcting the aircraft basic weight and cg is reliable over certain periods of time. Over extended intervals, however, unknown service weight pickup and other factors will render the basic weight and cg data inaccurate. For this reason, aircraft weighings are required periodically as outlined in AR-95-1 . Besides those times designated in the regulations, aircraft will be weighed when major modifications or repairs are made when the pilot reports unsatisfactory flight characteristics, such as nose or tail heaviness, and when basic weight data reflected by DD Form 365-3 is suspected to be in error. In AR-95-1, aircraft are classified for the purpose of weight and balance control. Reference should be made to the regulations since weighing requirements vary for the different classes. An aircraft is weighed for the purpose of determining its basic weight and balance. This means that the aircraft should be weighed in its basic condition; that is, with fixed normal equipment which is actually present in the aircraft, less fuel and other expendable load items. This does not preclude weighing the aircraft with expendable load items, if specific weight of the items is available and proper computations are accomplished to determine basic weight. Supplied with the basic weight and balance data, the pilot is able to compute the gross weight and balance of his mission-ready aircraft to insure safety of flight and mission accomplishment.

3-2. **Weighing Systems.** Portable-type electronic weighing kits (figure 3-1) are normally used by those activities which weigh Army aircraft. Portable roll on type scales, stationary pit type scales or other devices may be used as authorized for particular aircraft models or acitivities. To insure accurate results in determining aircraft weight, the instructions provided in the technical manuals for the specified weighing system must be followed and the system must be properly calibrated. For calibration requirements see TB 43-180.

3-3. **Associated Items, Terms, and Fixtures.** The description and definition of several of the more important terms and fixtures are provided as follows:

a. Jacks of sufficient capacity and extension height must be used when weighing aircraft with the electronic weighing kit. Only jacks suitable for use with either the ring- or plug-type jack adapters will be used with the kit weighing cell assemblies.

b. Jig points are established during construction of an aircraft and are used as a reference for taking measurements during weighing. The jig point may be a hole, fitting, or any other conveniently fixed station on the aircraft. Jig point locations are specified in Chart E data.

c. Jack pads are fittings attached to the aircraft structure which are used for reaction or jack points. A rounded or conical extension protrudes from the base of the jack pad and serves as the weighing cell assembly or jack point of contact. A spherical-type adapter is used to mate the conical protrusion and weighing cell assembly.

d. Reaction points are those points upon which the entire weight of the aircraft is supported when scale indicator readings are taken. Most aircraft are supported on three reaction points; however, four reaction points are required for weighing some helicopters. Typical reaction points used for weighing aircraft are wheel, landing gear, fuselage, and wing jack pads.

e. Leveling lugs are located on the aircraft to facilitate use of the spirit level in leveling aircraft.

f. Jig-located brackets and plates are used with the plumb bob for leveling certain aircraft.

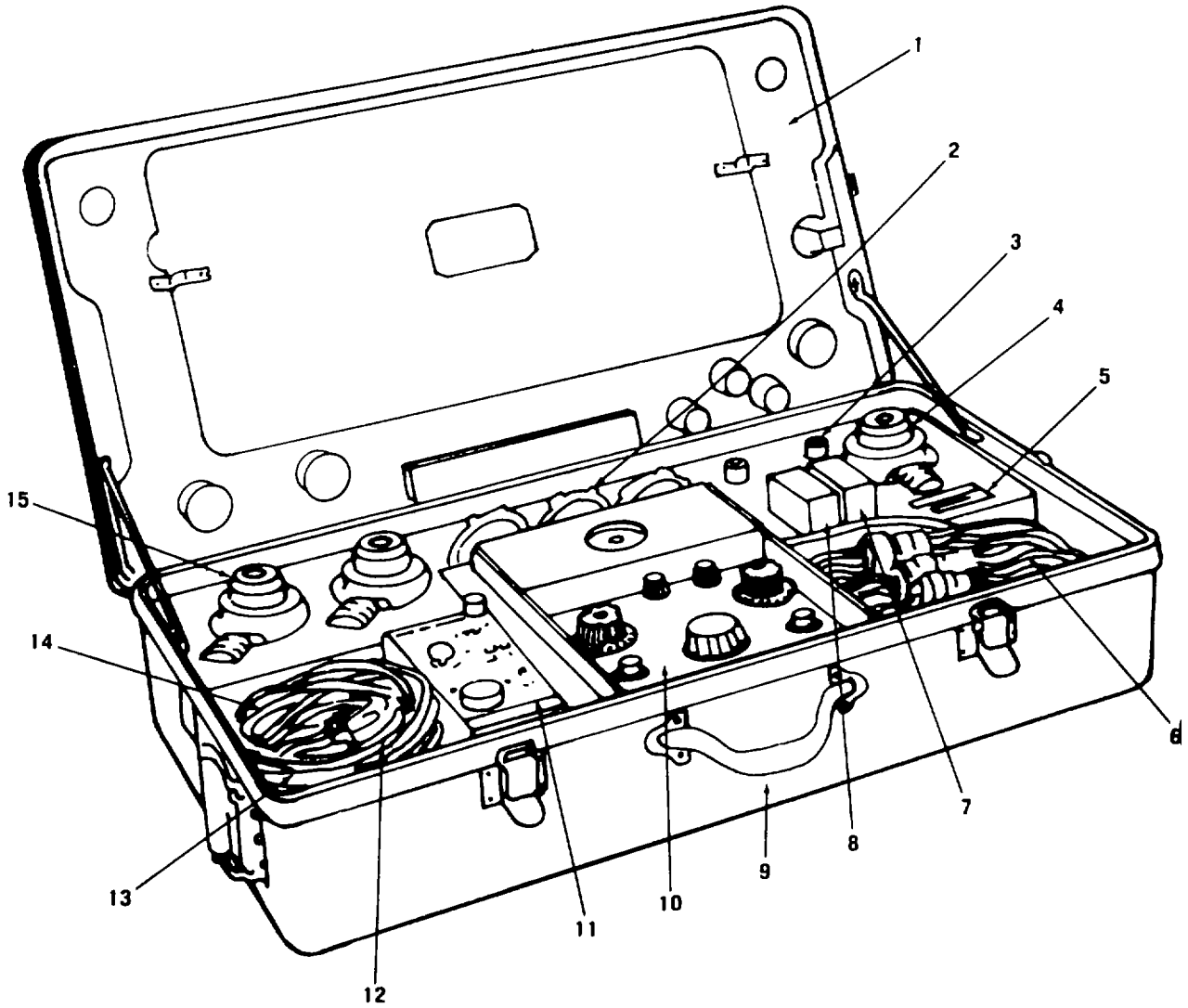

1. ACCESSORY KIT ASSEMBLY
2. RING ADAPTER ASSEMBLY
3. PLUG ADAPTER
4 SPHERICAL ADAPTER
5. ALLEN WRENCH
6. REEL ASSEMBLY
7. SPARE TUBE KIT
8. SPARE TUBE KIT
9. CASE ASSEMBLY
10. INDICATOR ASSEMBLY
11. POWER SUPPLY ASSEMBLY
12. EXTENSION CABLE ASSEMBLY
13. CABLE ASSEMBLY
14. BATTERY CABLE ASSEMBLY
15. CELL ASSEMBLY

Figure 3-1. Electronic Weighing Kit (Typical)

Section II. WEIGHING PRACTICES AND PROCEDURES

3-4. Preparation of Aircraft for Weighing. The following general procedures are outlined as an aid to preparing the aircraft for weighing. Preliminary weighing instructions for a specific type of aircraft are contained in the applicable maintenance manual for that aircraft.

a. Clean aircraft inside and out.

b. Remove expendable load items such as bombs, ammunition, cargo, and equipment not having a fixed position. These items are not included as DD Form 365-1 items and should not be in aircraft when weighed.

c. Check aircraft equipment against DD Form 365-1 and correct form as necessary to itemize accurately all items of fixed operating equipment that will be included in basic weight to be determined by weighing. DD Form 365-1 serves as a check list for this operation and is necessary to accomplish the inventory. When such a list does not accompany the aircraft, it is the duty of the weight and balance supervisor to prepare one before weighing. The date on which inventory is accomplished will be entered at the top of the check column of DD Form 365-1; this should correspond with that date entered on DD Form 365-2 and final entry posted on DD Form 365-3. Upon completing inventory, make proper entries in columns I and II of DD Form 365-2.

d. Fill or drain fuel tanks in accordance with Chart E instructions. All other engines and transmissions, reservoirs, and/or tanks should be full unless otherwise specified in aircraft weighing instructions. Weights of fluids that are included on DD Form 365-1 shall not be entered on DD Form 365-2. In certain instances it may not be feasible to drain fuel tanks; if this is so, fill tanks to capacity.

Weights of full tanks may be found by use of Chart E data. The density (pounds per gallon) of fuel, however, varies with temperature and it is often necessary to determine fuel density by using a hydrometer. (See figure 3-2.)

NOTE

Float hydrometer in a sample of fuel and record the weight per gallon; read this value at the lowest point of the meniscus.

Fuel densities listed in Chart E are usually based on a standard atmospheric temperature of 59°F (15°C). When large deviations from this standard temperature occur, fuel samples must be drawn from a tank and density determined by use of a hydrometer. The total weight of fuel aboard may then be calculated by multiplying the total number of gallons aboard by fuel density. The weight of fuel must be entered under column I of DD Form 365-2, as it is considered as item weighed but not part of basic weight.

NOTE

It is not the intention herein to give detailed instructions on methods used to level aircraft, since methods vary with the type of aircraft and the reaction points to be used. Normally aircraft are weighed in a level position, which is defined as that aircraft attitude in which the longitudinal and lateral axes are essentially to the hangar floor. Leveling devices such as leveling lugs and jig-located brackets and plates have been accurately installed on the aircraft by the manufacturer to facilitate leveling procedure.

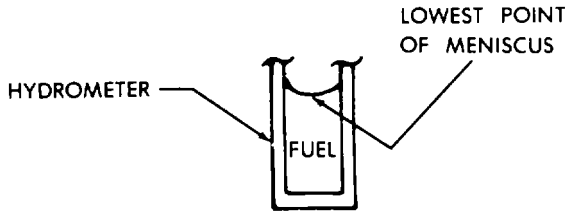

Figure 3-2. Lowest Point of Meniscus

NOTE

Before attempting to raise an aircraft, relative heights of main and nose or tail landing wheels in both three-point and level attitudes should be considered in order to determine the proper blocking, lifting, and/or jacking equipment required. Raising a tail wheel to level an aircraft may be quite a problem unless adequate lifting, hoisting, and supporting equipment is available. Jacks should never be employed at any place on the aircraft other than specified jacking points.

CAUTION

Excessive side loads may cause cell breakage and incorrect readings. If wing and fuselage jacks are used to level the aircraft, shock struts must be restrained to prevent them from extending when aircraft is raised.

CAUTION

During leveling procedure, extreme care should be exercised to avoid side loads which may cause the aircraft to slip off jacks. For example, when wing jacks are in place while tail is lifted to the level position, it is likely that side loads caused by rotation of the fuselage will cause jacks to slip off the jack points causing severe damage to the wing. Correct procedure requires that the tail be lifted while the aircraft is supported on main gear with brakes unlocked. When raising the aircraft with two wing or two main landing gear jacks be sure that the two jacks are actuated simultaneously in order to maintain the aircraft in a lateral level attitude.

e. Level aircraft in accordance with aircraft maintenance manuals.

f. Measure and record dimensions once aircraft is in a level position. Three horizontal dimensions must be either measured or otherwise known to determine the horizontal location of the center of gravity of the aircraft as weighed. When landing gear are used as reaction points, dimensions to be determined are as follows:

(1) The horizontal distance from the reference datum to some known jig point. It is not necessary to measure this distance as it is given in Chart E data and will remain fixed.

(2) The distance from the jig point to a lateral line passing through the main reaction points. This measurement must be made along a line which is parallel to the longitudinal axis of the aircraft.

(3) The wheel base or distance between the main and forward or aft reaction points.

g. Measure dimension in steps f(2) and (3) above by projecting required points to hangar floor. Project jig point to hangar floor by suspending a plumb bob from center of jig point so that plumb bob is approximately 1/2 inch above floor. Wait until swing of plumb bob stops, and make a cross mark on floor directly under tip of plumb bob. Print words JIG POINT near cross on floor to distinguish it from other projected points. Main reaction points are projected in the same manner as described above for the jig point. After marking crosses for the two main reaction points, stretch a chalked string between them and draw taut. Snap string against floor, leaving a clear straight chalk line between main reaction points. Nose or tail reaction point is projected in a similar manner to plumb bob method.

h. Move plumb bob line a short distance fore or aft (in a direction parallel to longitudinal axis of aircraft) when jacks or other obstructions interfere with free fall of plumb bob. Plumb bob will then swing free of obstructions. Drop plumb bob and mark floor contact point. Measure distance necessary to move plumb line; be sure to correct for this transferred distance when recording measurements on DD Form 365-2.

i. Measure required dimensions after these points are projected to floor. Dimensions to be measured are listed as B and D on DD Form 365-2. Distance B is the same dimension as discussed in step f(2) above. It is the perpendicular distance from the projected jig point to the chalk line between the main reaction points. Distance D is the same dimension as referred to in step f(3) above. It is the wheel base, or distance from the centerline of the main reaction points to the nose or tail

reaction points. When measuring these distances, it is necessary that the tape be parallel to aircraft centerline. Measurements made from the main reaction points are taken perpendicularly to the chalk line joining these two points. These measurements may be made quickly by placing one end of the tape on the point in question and swinging the other end of the tape across the line in a small arc. Notice the point at which the tape crosses the chalk line which shows a shorter distance than any other along the line. This is the shortest distance between the line and the point in question and, therefore, is the perpendicular distance from the point to the line. When fuselage and wing jack points are used as reaction points in weighing the aircraft, it is unnecessary to measure dimension. These points will remain fixed with respect to the reference datum and their moment arms may be found in Chart E data. When measuring is necessary, the required dimensions should be recorded on DD Form 365-2 as soon as the measurements are taken.

3-5. Aircraft Weighing Area. Procedures outlined herein are general in nature, since methods of weighing vary with each type aircraft.

a. Weigh aircraft in closed hangars to avoid aircraft vibrations which would otherwise be caused by air currents flowing over lifting surfaces. This vibration would result in fluctuating scale readings and increase the possibility of error.

b. Insure that aircraft is thoroughly dry before it is weighed. Never weigh aircraft immediately after it has been washed.

c. Set electronic weighing cells oil their respective jacks, using proper jack and jack pad adapters. Be sure that jack adapter is fully threaded into cell assembly. If a ring-type adapter is used, see that it is centered flush on ram applying a partial load to it before tightening setscrews.

CAUTION

Use proper adapters to prevent jacks from slipping or buckling. Damage to aircraft or inaccurate weight readings may result if improper adapters are used. Never apply loads to the rim of a weighing cell.

d. Prepare electronic weighing kit for use by following instructions furnished with kit. Warm up cells mounted on jacks to be used for jacking.

e. Actuate all jacks simultaneously until weighing cells are in contact with aircraft jack pads. Continue to jack aircraft, insuring that aircraft is kept level. When aircraft is supported at weighing reaction points only, and is in level position, scale readings may be obtained. Weight and balance personnel must be alert for possible errors in scale readings (e.g., side loads or misaligned jack and cell, etc.). To insure accuracy of results, take several independent readings (e.g., for beam scales by upsetting the beams of all scales between readings or completely unloading the electronic load cells and rejacking). A minimum of two weighings shall be made. If the first two weighings are within one quarter of one percent in weight i.e. (divide the less weight reading by the greater reading, subtract the results from 1.00 to obtain the percentage) and 0.1 inch in c.g., additional weighings are unnecessary. If these constraints are not met, additional weighings shall be made until they are satisfied. Enter average weight and c.g. of the two suitable weighings on aircraft weighing form (DD 365-2). If variations in scale indications for any reaction point are greater than that prescribed in the technical manual covering the kit, reweigh aircraft with another weighing kit.

f. Before final lowering of the aircraft, make certain that all necessary measurements and scale readings have been obtained and recorded.

g. Rotary wing aircraft are weighed in the same manner as conventional aircraft, except that four reaction points are frequently used instead of three. When four reaction points are employed, it will be necessary to use two weighing kits, since each kit contains only three cell assemblies. If a second kit is not available, it is permissible to weigh the aircraft using three reaction points. The cell assemblies will be placed on the two front jacks and the right rear jack. The left rear jack is used while raising the aircraft to weighing position to maintain proper attitude. When the full aircraft weight is bearing on the jacks, and the aircraft is level, stop jacking and activate locking devices on the two front jacks and right rear jack. Slowly lower the left rear jack/reaction point by ½ inch, at which time the aircraft's weight can be recorded. Raise the fourth jack to again bear the weight of the aircraft, then lower all four jacks simultaneously to return the aircraft to rest on the hangar floor.

h. When data for comparison is available, an attempt should be made to verify the results obtained from each weighing. Verification may be made by comparing results with a previous weighing of an aircraft of the same type model series which has identical equipment.

CHAPTER 4
WEIGHT AND BALANCE RECORDS

Section I. TYPES OF FORMS

4-1. General. Specific weight and balance data is contained in the -10 operator's manual and the applicable maintenance manual for each Army aircraft. Standard forms are used in conjunction with this data to provide an effective system for weight and balance control. Information to be inserted on the charts or forms is applicable only to the individual aircraft, the serial number of which appears on the various charts and forms. The weight and balance data and related forms for aircraft are maintained in accordance with AR 95-1. Entries on DD Form 365, 365-1, 365-2, and 365-3 will be made using a pen, typewriter, or a rubber stamp. Felt tip pens or grease pencils will not be used. Pencils may be used on DD Form 365-4. The forms referred to herein may differ from time to time, but the general principles behind their use will remain the same. Weight and balance of aircraft is controlled and standardized through the use of the following charts and forms:

a. DD Form 365 (Record of Weight and Balance Personnel).

b. DD Form 365-1 (Chart A Basic Weight Check List Record).

c. DD Form 365-2 (Form B Aircraft Weight Record).

d. DD Form 365-3 (Chart C Basic Weight and Balance Record).

e. DD Form 365-4 (Form F Weight and Balance Clearance).

f. Chart E (Loading Data and Special Weighing Instructions).

4-2. Responsibility for DD Form 365 Series and Chart E. Before delivery of an aircraft, the manufacturer is responsible for inserting all aircraft identifying data on the various charts and forms. The manufacturer completes all forms. All DD Form 365 series charts and any other pertinent weight and balance data relating to an aircraft will be maintained in a permanent binder for the aircraft. The binder and all forms contained therein will bear the aircraft designation and serial number. Any change that affects aircraft weight and balance will be reflected in these forms.

4-3. Disposition of Weight and Balance Forms. Weight and balance forms are to be safeguarded and maintained with the same degree of importance as other records maintained for each aircraft.

a. The individual weight and balance forms serve various purposes. Therefore, the retention period of the forms will vary, as follows:

(1) The DD Form 365 (Record of Weight and Balance Personnel) is a semi-permanent form. It will be retained in the aircraft's weight and balance data file until space for additional entries has been exhausted and a new replacement form started. At the time, the replaced form may be destroyed locally.

(2) The DD Form 365-1 (Basic Weight Check List) and the DD Form 365-3 (Basic Weight and Balance Record) are permanent forms. These forms will be retained in the aircraft's weight and balance data file for the life of the aircraft. As new forms are started because of exhausting entry space, the new forms will be stapled to the original form.

(3) The DD Form 365-2 (Aircraft Weighing Record) is a semi-permanent form. The current completed form will be retained in the aircraft's weight and balance data file until the aircraft has been reweighed, a new form started, computations verified, and necessary entries made on the DD Form 365-3. Upon completetion of the above, the old DD Form 365-2 may be destroyed locally.

(4) The DD Form 365-4 (Weight and Balance Clearance Form F) which has been used to compute standard loads, utilizing the aircraft's current basic weight, is considered a current work form as long as the load weights and locations remain current and until the basic aircraft weight has been recomputed/changed. A copy of the current form will be retained in the aircraft's weight and balance data file until the entries require revision, at which time the old form will be destroyed locally or marked void.

(5) CHART E (Loading Data and Special Weighing Instructions). The CHART E is considered a semi-permanent chart and is to be retained in the aircraft's weight and balance file until a revised CHART E is published in the aircraft maintenance manual. Following publication of the CHART E in the maintenance manual, the CHART E in the aircraft file is no longer required and shall be removed and destroyed locally.

b. The weight and balance file shall be maintained and kept curent for each aircraft from the time of delivery of an aircraft to the Army until salvage or retirement of the aircraft. Upon transfer of an aircraft, the commanding officer of the transferring activity is responsible for insuring the weight and balance file accompanies the aircraft.

c. Any of the DD Form 365 series can be duplicated for reason of replacing lost, mutilated, or illegible forms. When the action is taken, each form duplicated shall contain a statement to the effect that the entries are certified true and accurate, followed by signature of certifying individual, date, and organizational identity. Duplication of lost or illegible forms requires a physical inventory for DD Form 365-1 and weighing the aircraft for DD Form 365-2.

d. The aircraft weight and balance file for aircraft stricken from the Army inventory is to be disposed of as follows:

(1) ***Destroyed/damaged aircraft.*** Destroy file locally, after necessary investigation and reporting, provided the aircraft does not fall into any of the following categories.

(a) Weight and balance records of aircraft that have been involved in accident(s) resulting in death or injury to any person, and/or damage to other than Government property, are to be retained by the operating activity for a period of one year (the defense in litigation action) and then forwarded to Commander, U.S. Army Aviation and Troop Command, ATTN: AMSAT-I-MP, 4300 Goodfellow Boulevard, St. Louis, Missouri 63120-1798, with a statement that aircraft may be subject to litigation.

(b) Damaged aircraft which are uneconomically repairable (by Army standards), under disposal conditions, may be transferred or offered for sale to other than an Army custodian. The weight and balance file for such aircraft shall accompany the aircraft to the acquiring agency/individual(s).

(2) ***Excessed aircraft.*** For aircraft whether in a serviceable or repairable condition which are to be transferred or offered for sale to other than Army custody, the weight and balance file will accompany the aircraft to the acquiring agency/individual(s).

4-4. Related Publications.

a. AR 95-1 General Provisions, Training, Standardization, and Resource Management.

b. MIL-W-25140, Weight and Balance Control Data.

c. DA PAM 738-751, Functional users manual for the Army Maintenance Management System-Aviation (TAMMS-A).

d. AR 95-1, General Provision and Flight Regulations.

Section II. INSTRUCTIONS FOR USE OF DD FORM 365 SERIES AND CHART E

4-4.1 All illustrations for the DD Form 365 series are samples, follow written instructions that apply to each form to initiate and maintain weight and balance records.

4-5. DD Form 365 (Record of Weight and Balance Personnel). DD Form 365 (figure 4-1) provides a record of weight and balance technician who is responsible for maintenance of weight and balance records for a specific aircraft. The form has spaces for model/design, serial number, name, grade, station, date assigned and date relieved from duty of weight and balance personnel. The "where and when" block is not required to be completed on this form.

4-6. DD Form 365-1 (Chart A-Basic Weight Check List Record).

NOTE
All references to check marks for the Chart A will denote the use of the following symbols.

(X) Item is in the aircraft.
(0) Item is out of the aircraft.

a. The Basic Weight Check List Record is a list of all equipment that is or may be installed and for which provisions or fixed stowage has been made in a definite location in the aircraft. All items weighing two pounds or more shall be listed for aircraft whose initial basic weight is under 25,000 pounds. AH items weighing five pounds or more shall be listed for all other aircraft (further guidance may be found in MILW-25140, Weight and Balance Control System). The weight, arm, and moment or simplified moment of the individual items must be listed for use in correcting the aircraft basic weight and moment on the CHART C (DD Form 365-3) as changes are made in these items. All entries shall be typed or clearly written in ink. When check marks (X) and zeros (0) are entered in the IN AIRCRAFT column, the CHART A serves as a record of equipment included in the basic weight of the aircraft at the last inventory. When a check mark is entered in CHART C ENTRY column, the check mark is an indication that an entry has been made in the CHART C as a result of a change in the status (in or out of the aircraft) of an item since the previous inventory.

b. The CHART A shall be checked by an aircraft inventory and updated whenever: (1) The aircraft is received at a new unit, and weight and balance authority changes.

(2) The aircraft is weighed.

(3) At time intervals required by regulation.

c. The initial CHART A for each aircraft is established by the manufacturer as follows:

(1) At the time of delivery, the manufacturer inserts the designation of the AIRCRAFT MODEL (MODEL/DESIGN) and SERIAL NUMBER in the spaces provided at the top of the CHART A.

(2) Each CHART A item shall be assigned an alphanumeric number. These numbers shall run consecutively and indicate the alphabetical designation of the compartment; for example, items A-1. then A-2, then A-3 and so on listed for compartment A. These item numbers shall be listed in the column titled COMPARTMENT AND ITEM NUMBER.

(3) The alphabetical and descriptive designations for each aircraft compartment (in capital letters, such as A-NOSE) shall be shown in the ITEMS AND LOCATION column at the top of each compartment's equipment list. The compartment designation shall be underlined and separated from the equipment list by one blank line. The dimensional limits of each compartment shall be stated in terms of inches from the reference datum, such as A-NOSE (5-64 inches) and B-PILOTS (64-104 inches), and shall agree with those compartment limits shown in the CHART E LOADING DATA. Compartment equipment lists documented in the ITEMS AND LOCATION column shall present individual operating equipment items by description and part number (such as, PreamplifierAPR-25/AM2348). The description and part number presented in this column shall be common with that shown on the equipment item identification plate. Equipment within each compartment should be listed such that the arms (in the column titled "ARM") progress numerically from the forward to the aft limit of the compartment. If a compartment is divided into an upper and lower section, all items within one section should be listed before continuing to the next section.

NOTE
Serial numbers for CHART A items, (Engines, Blades, Etc.) are only required for the items which reflect serial numbers already identified on CHART A, by the manufacturer of the aircraft when delivered. All subsequent replacements of these items will require entry of the new serial number, weight and moment of CHART A.

(4) The weight, arm, and moment of each item shall be listed in the appropriate columns. A constant may be used to simplify the moment. If a constant is used, it will be listed at the top of the MOMENT column.

(5) The manufacturer of the aircraft places check marks or zeros in the first IN AIRCRAFT column under the RECORD OF CHECKING section of the CHART A. This is done at the time of delivery of the aircraft to indicate its delivery condition. This delivery inventory shows the equipment that is included in the aircraft's initial basic weight and moment as listed on the CHART C, DD Form 365-3.

d. ALL CHART A inventories subsequent to the manufacturers delivery inventory shall be completed as follows:

(1) Inspect the aircraft for equipment actually installed. Place the date on which the inventory was made at the top of the next unused RECORD OF CHECKING column. If all columns have been used, complete a new DD Form 365-1 and mark the entries in column 1. Place a check in the IN AIRCRAFT COLUMN if in the aircraft or a zero to indicate its absence. When missing basic weight items are added to column II on the reverse side of FORM B, they should be checked on CHART A as IN AIRCRAFT.

NOTE

Marks in the IN AIRCRAFT and CHART C ENTRY columns are made only at the time of a complete inventory. Never change the marks or add new ones under a previously accomplished inventory.

(2) Compare this new inventory with the last completed inventory under the RECORD OF CHECKING column, noting any changes in the items installed in the aircraft. Refer to CHART C to ascertain whether the necessary weight and moment corrections have been made. If so, place check marks opposite such items in the CHART C ENTRY column of CHART A. If not, correct the calculated basic weight and moment data on CHART C and then enter the CHART C ENTRY column check marks. A check mark in the CHART C ENTRY column indicates that the appropriate weight and moment change has been recorded on the CHART C. Make sure that the inventory date is entered in the RECORD OF CHECKING column on the CHART A. Enter the same date in the DATE column of the CHART C for the corresponding weight and moment calculations.

e. When a new item of equipment which is not listed on the CHART A is added to the aircraft, determine its weight, arm and moment from the applicable MWO or by actual measurement and calculation. Enter an item number, the name or description, weight arm and simplified moment on an open line under the proper compartment on the CHART A. Also, make required entry on CHART C. When a new CHART A is initiated, the entries should be rearranged so that the equipment within each compartment is listed such that the arms (in the column titled "ARM') progress numerically from the forward to the aft limit of each compartment. Then numerically rearrange item numbers in sequence.

f. CHART A is used primarily as a record of all items installed at the time the aircraft is weighted. When equipment is permanently removed, refer to the instructions for CHART C form entries. When a complete inventory is made, line completely through the removed items from the compartment and item number column through the check column on the CHART A. When all the check column blocks have been filled, it will not be necessary to include those items lined out when initiating new forms.

4-7. DD Form 365-2 (Aircraft Weighing Record). The actual weighing data is listed on DD Form 365-2 (figure 4-3) with comments denoting the type of scales. reactions, and other pertinent information. Diagrams of the aircraft are shown to illustrate dimensions required during weighing process. Form entries are made as follows:

a. Fill in identifying data and enter actual scale reading in first column.

b. Record measurements taken at time of weighing. Only dimensions B and D need actually be measured. Distance I, from the reference datum to jig point, is obtained from CHART E data. Dimension E is determined by addition or subtraction.

c. Tare is the weight of supports, such as jacks, that may be placed on a platform scale to raise the aircraft. The term ordinarily pertains to the use of mechanical type scales. The TARE column shall be used to record tare or correction factors. Follow the instructions provided in the Technical Manuals for the specific weighing system being used to arrive at net weight.

d. Record weight and moment of all items in aircraft when weighed that are not a part of basic weight (COLUMN I, reverse side of aircraft weighing record form).

e. Record weight and moment of all basic items that were not in aircraft when weighed (COLUMN II, reverse side of aircraft weighing record form). Items listed in this column must be checked on CHART A as IN AIRCRAFT to indicate their inclusion in basic weight.

f. Multiply subtotal net weight of reaction (jack points) by their respective arms (dimensions E and F) to obtain their moments.

g. Add net weights and moments of reaction (jack points).

h. Divide total moment by total net weight to obtain as weighted cg location in inches from reference datum. Enter this distance in Total block under ARM column.

i. Transfer total (as weighed) weight, arm, and moment to the reverse side of form.

j. Make no entries in OIL IN AIRPLANE line.

k. Subract total weight and moment of items entered in COLUMN I.

l. Add total weight and moment of items listed in COLUMN II to obtain basic aircraft weight and moment respectively.

m. Divide basic moment by basic weight to obtain basic arm. Transfer basic weight and moment to DD Form 365-3.

n. Fill in reactions and type of scales used. Include under REMARKS information as to attitude of aircraft when weighed, method of support, etc.

RECORD OF WEIGHT AND BALANCE PERSONNEL	FOR USE WITH T.O. 1-18-40, NAVAIR 01-1B-40, AND TM-55-1500-342-23	Form Approved OMB No. 0704-0188

The public reporting burden for this collection of information is estimated to average 10 minutes per response, including the time for reviewing instructions, searching existing data sources, gathering and maintaining the data needed, and completing and reviewing the collection of information. Send comments regarding this burden estimate or any other aspect of this collection of information, including suggestions for reducing the burden, to Department of Defense, Washington Headquarters Services, Directorate for Information Operations and Reports (0704-0188), 1215 Jefferson Davis Highway, Suite 1204, Arlington, VA 22202-4302. Respondents should be aware that notwithstanding any other provision of law, no person shall be subject to any penalty for failing to comply with a collection of information if it does not display a currently valid OMB control number.
PLEASE DO NOT RETURN YOUR FORM TO THE ABOVE ADDRESS.

MODEL/DESIGN	SERIAL NUMBER

NAME *(Last, First, Middle Initial)*	GRADE, RATE, OR RANK	WHERE AND WHEN QUALIFIED	STATION	DATE ASSIGNED *(YYYYMMDD)*	DATE RELIEVED *(YYYYMMDD)*

DD FORM 365, AUG 96 (EG) PREVIOUS EDITION MAY BE USED. Designed using Perform Pro, WHS/DIOR, Aug 96

Figure 4-1. DD Form 365

Form Approved. OMB No. 0704-0188

FOR USE WITH T.O. 1-1B-40, NAVAIR 01-1B-40, AND TM-55-1500-342-23

CHART A - BASIC WEIGHT CHECKLIST RECORD

The public reporting burden for this collection of information is estimated to average 10 minutes per response, including the time for reviewing instructions, searching existing data sources, gathering and maintaining the data needed, and completing and reviewing the collection of information. Send comments regarding this burden estimate or any other aspect of this collection of information, including suggestions for reducing the burden, to Department of Defense, Washington Headquarters Services, Directorate for Information Operations and Reports (0704-0188), 1215 Jefferson Davis Highway, Suite 1204, Arlington, VA 22202-4302. Respondents should be aware that notwithstanding any other provision of law, no person shall be subject to any penalty for failing to comply with a collection of information if it does not display a currently valid OMB control number. **PLEASE DO NOT RETURN YOUR FORM TO THE ABOVE ADDRESS.**

PAGE OF PAGES | **MODEL/DESIGN/SERIES** | **SERIAL NUMBER**

RECORD OF CHECKING *(Enter Date) (YYYYMMDD)*

COMPARTMENT AND ITEM NUMBER	ITEMS AND LOCATION *(Grouped by compartment)*	WEIGHT	ARM	MOMENT *(Enter constant used below line)*	1 IN AIRCRAFT	1 CHART C ENTRY	2 IN AIRCRAFT	2 CHART C ENTRY	3 IN AIRCRAFT	3 CHART C ENTRY	4 IN AIRCRAFT	4 CHART C ENTRY	5 IN AIRCRAFT	5 CHART C ENTRY	6 IN AIRCRAFT	6 CHART C ENTRY	7 IN AIRCRAFT	7 CHART C ENTRY	8 IN AIRCRAFT	8 CHART C ENTRY	9 IN AIRCRAFT	9 CHART C ENTRY

DD FORM 365-1, AUG 96 (EG) PREVIOUS EDITION MAY BE USED. Designed using Perform Pro, WHS/DIOR, Aug 96

Figure 4-2. DD Form 365-1

FORM B - AIRCRAFT WEIGHING RECORD	FOR USE WITH T.O. 1-1B-40, NAVAIR 01-1B-40 AND TM-55-1500-342-23	Form Approved OMB No. 0704-0188

The public reporting burden for this collection of information is estimated to average 10 minutes per response, including the time for reviewing instructions, searching existing data sources, gathering and maintaining the data needed, and completing and reviewing the collection of information. Send comments regarding this burden estimate or any other aspect of this collection of information, including suggestions for reducing the burden, to Department of Defense, Washington Headquarters Services, Directorate for Information Operations and Reports (0704-0188), 1215 Jefferson Davis Highway, Suite 1204, Arlington, VA 22202-4302. Respondents should be aware that notwithstanding any other provision of law, no person shall be subject to any penalty for failing to comply with a collection of information if it does not display a currently valid OMB control number. **PLEASE DO NOT RETURN YOUR FORM TO THIS ADDRESS.**

DATE WEIGHED *(YYYYMMDD)*	MODEL/DESIGN/SERIES	SERIAL NUMBER

PLACE WEIGHED	WEIGHT AND BALANCE TECHNICIAN *(Last, First, M.I.)*	DUTY PHONE NO.

REACTION *(Wheels, jackpoints, etc.)*	SCALE READING	CORRECTIONS	NET WEIGHT	ARM	MOMENT
LEFT MAIN					
RIGHT MAIN					
SUB-TOTAL *(Both main)*				E	
NOSE OR TAIL				F	
TOTAL *(as weighed)* *Not to be posted on Chart C*					

MEASUREMENTS

B=_____ the distance from the jig point, to the center line of the main reactions. Obtain by measurement.

I=_____ the distance from the reference datum to the jig point of the aircraft, from which a plumb bob can be dropped to the ground. Obtain from the aircraft diagram in Chart E.

E=_____ 1 the distance from the reference datum to the center line of the main reactions.
E = I+B
E = I - B (If the jig point is aft of the center line of the main reactions.)

D=_____ the distance between the main and nose or tail reaction. Obtain by measurement.

F=_____ 1 the distance from the reference datum to the center line of the nose or tail reaction.
F = E - D (for nose reaction)
F = E+D (for tail reaction)

CORRECTIONS	LEFT MAIN	RIGHT MAIN	NOSE OR TAIL
CALB CORR			
SCALE CORR			
TEMP _____ 2			
EQUIP			
OTHER			
TOTAL			

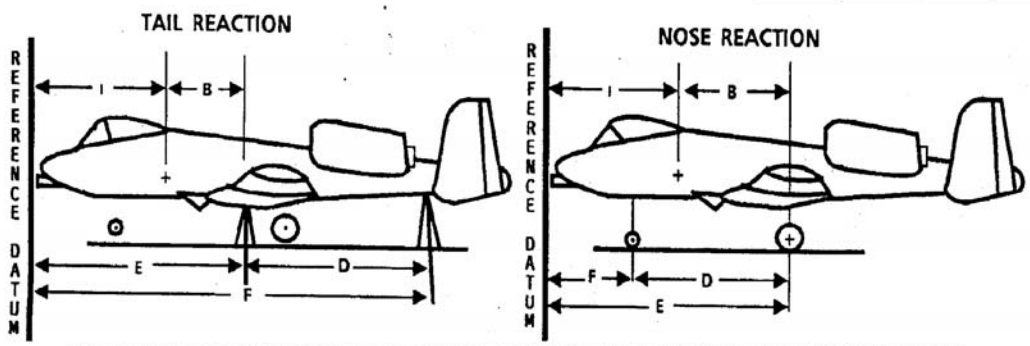

DIAGRAMS FOR MEASURING VARIOUS TYPES OF REACTIONS TO DETERMINE ARM OF SUPPORT POINTS.
See Aircraft Chart E's for specific weighing instructions.

1 Check dimensions E and F against approximate dimensions listed on Chart E.
2 Enter temperature at time of weighing.

DD FORM 365-2, AUG 96 PREVIOUS EDITION MAY BE USED.

Figure 4-3. DD Form 365-2 (Front) (Sheet 1 of 2)

DESCRIPTION	NET WEIGHT	ARM	MOMENT	↑ INDEX OR MOM/
TOTAL *(As weighed)* *(From front side)*				
TOTAL OF ITEMS WEIGHED BUT NOT PART OF BASIC WEIGHED *(From Column I below)*	–		–	
TOTAL OF BASIC WEIGHT ITEMS NOT IN AIRCRAFT WHEN WEIGHED *(From Column II below)*	+		+	
BASIC AIRCRAFT *(Post to Chart C)*				

COLUMN I				COLUMN II			
ITEMS WEIGHED BUT NOT PART OF BASIC WEIGHT	WEIGHT	ARM	MOMENT	BASIC WEIGHT ITEMS NOT IN AIRCRAFT WHEN WEIGHED	WEIGHT	ARM	MOMENT
TOTAL				**TOTAL**			

REACTIONS USED	TYPE SCALE SERIAL NUMBER CALIBRATION DATE *(YYYYMMDD)* CALIBRATED ACCURACY

REMARKS

↑ Enter constant used

DD FORM 365-2 (BACK), AUG 96

Figure 4-3. DD Form 365-2 (Reverse) (Sheet 2 of 2)

4-8. DD Form 365-3 (Chart C - Basic Weight and Balance Record).

a. The CHART C is a continuous and permanent history of the aircraft weight, moment/index and center of gravity position. All permanent changes to the aircraft basic weight and moment, regardless of size, shall be recorded (typed or clearly written in ink) on the CHART C to keep it correct and up-to-date. The last basic aircraft weight, moment, and c.g. or index shall be considered the most current data and the baseline for all subsequently dated aircraft loading calculations.

b. At the time of delivery of a new aircraft, the manufacturer enters the aircraft basic weight, moment, and c.g. or index on the CHART C. The itemized list of the equipment which is included in the aircraft basic weight is shown in the first IN AIRCRAFT column under the RECORD OF CHECKING section of the CHART A.

c. Additions and/or subtractions to the basic weight and moment/index on CHART C will be accomplished as follows:

(1) Whenever equipment is added to or removed from the aircraft, an entry must be made on this chart. If the item is listed on the CHART A, enter the identical item number, description and applicable weight, arm, and moment data on the CHART C. If the item is not listed on the CHART A, determine its weight and arm by actual measurement or obtain this data from the applicable MWO and record it, and the moment, on both the CHART C and CHART A. Any change which is caused by a specific MWO will carry a reference to the MWO number. Do not enter check marks on the CHART A for these items until a complete inventory is made.

(2) Subsystem modifications or structural changes shall be recorded in the same manner with the change in weight and moment added to or subtracted from the current total. Whenever such changes are provisions for equipment such as structural mounts, electrical wiring, or air conditioning, they will be listed as separate line items.

(3) Whenever a CHART A inventory reveals equipment changes, subsystem modifications, or structural changes not already recorded in the CHART C, the change in weight and moment shall be posted as required in the preceeding paragraphs. The newly calculated basic weight, moment and index shall be dated to agree with the inventroy date enter on the CHART A.

(4) Whenever an aircraft is weighed, the CHART C will be updated to: (1) reflect any changes resulting from the CHART A inventory and (2) show the new basic weight, simplified moment, and index or c.g. from the FORM B - AIRCRAFT WEIGHING RECORD (DD Form 365-2). The date entered on the CHART C shall agree with the inventory date entered on the CHART A and the weighing date entered on FORM B.

d. Whenever the CHART C basic weight is changed by ±3/10 of 1% and/or basic C.G. is changed by ±0.3 inches, a new FORM F which reflects this change, must be prepared. The requirement for originating new FORM F's when aircraft equipment, which is part of the aircraft basic weight, is temporarily added to, removed from, or relocated within the aircraft because of maintenance, specific mission requirments, etc., may be eliminated by making the following entries on the Aircraft Inspection and Maintenance Record (DA Form 2408-13-1/2408-13-1-E).

(1) In block 16 enter a Red Dash (-).

(2) In block 17 enter a description of the aircraft equipment temporarily added, removed, or relocated. The resulting increase or decrease in aircraft weight and moment will be included in this entry. This entry shall conclude with the following statement: "CHANGE NOT ENTERED ON CHART C."

(3) Continue to prepetuate the entry on DD Form 2408-13 or transfer to the Uncorrected Fault Record (DA Form 2408-14) in accordance with current technical manual procedures until the aircraft is returned to the previous configuration or the CHART C is updated to reflect the change.

(4) Temporary changes in basic weight may be reflected on DA Form 2408-13-1/2408-13-1-E or DA Form 2408-14/2408-14-E for a period not-to-exceed 90 days. If not accomplished sooner, the DD Form 365-3 will be updated to reflect the temporary change at the expiration of this 90 day period.

e. The temporary equipment changes listed on DA Form 2408-13-1/2408-13-1-E will be considered changes in aircraft loading. These changes will be accounted for on the DD Form 365-4 by entering the notation, "equipment changes" near the top of the corrections table. A brief description, weights, and moments of the equipment change will be entered in the columns below this notation. Aircraft equipment changes are treated the same as any other variation in loading. If there are enough completed DD Forms 365-4 in the aircraft weight and balance file to verify that weight and center-of-gravity will remain within limits for anticipated flight in the changes configuration, it is not necessary to prepare these forms for the specific configuration.

☆U.S. GOVERNMENT PRINTING OFFICE: 1996 - 755-025/40258

CHART C - BASIC WEIGHT AND BALANCE RECORD	FOR USE WITH T. 0. 1 - 1 B-40, NAVAIR 01-1B-40, AND TM-55-1500-342-23	Form Approved OMB No. 0704-0188

The public reporting burden for this collection of information is estimated to average 10 minutes per response, including the time for reviewing instructions, searching existing data sources, gathering and maintaining the data needed, and completing and reviewing the collection of information. Send comments regarding this burden estimate or any other aspect of this collection of information, including suggestions for reducing the burden to Department of Defense, Washington Headquarters Services, Directorate for Information Operations and Reports (0704-0188), 1215 Jefferson Davis Highway, Suite 1204, Arlington, VA 22202-4302. Respondents should be aware that notwithstanding any other provision of law no person shall be subject to any penalty for failing to comply with a collection of information if it does not display a currently valid OMB control number. **PLEASE DO NOT RETURN YOUR FORM TO THE ABOVE ADDRESS.**

MODEL/DESIGN /SERIES	SERIAL NUMBER	PAGE NUMBER

DATE (YYYYMMDD)	ITEM NUMBER		DESCRIPTION OF ARTICLE OR MODIFICATION	WEIGHT CHANGE						CURRENT TOTAL BASIC AIRCRAFT		
				ADDED (+)			REMOVED (-)					
	IN	OUT		WEIGHT	ARM	MOMENT1	WEIGHT	ARM	MOMENT1	WEIGHT	MOMENT1	ARM OR INDEX2

1 *Enter constant used below line.* 2 *Load adjuster index.*

DD FORM 365-3, AUG 96 (EG) PREVIOUS EDITION MAY BE USED. Designed using Perform Pro, WHS/DIOR, Aug 96

Figure 4-4. DD Form 365-3 (Front) (Sheet 1 of 2)

MODEL/DESIGN /SERIES	SERIAL NUMBER	PAGE NUMBER

DATE (YYYYMMDD)	ITEM NUMBER		DESCRIPTION OF ARTICLE OR MODIFICATION	WEIGHT CHANGE						CURRENT TOTAL BASIC AIRCRAFT		
				ADDED (+)			REMOVED H					
	IN	OUT		WEIGHT	ARM	MOMENT1	WEIGHT	ARM	MOMENT1	WEIGHT	MOMENT1	ARM OR INDEX2

1 *Enter constant used below line.* 2 *Load adjuster index.*

DD FORM 365-3 (BACK), AUG 96

Figure 4-4. DD Form 365-3 (Reverse) (Sheet 2 of 2)

4-9. DD Form 365-4. (Weight and Balance Clearance Form F).

(1) This form, referred to as the Form F, is used to derive the gross weight and c.g. of an aircraft. The Form F furnishes a record of the aircraft weight and balance status at each step of the loading process. It serves as a worksheet on which to record weight and balance calculations and any corrections that must be made to insure that the aircraft will be within weight and c.g. limits. Sufficient completed FORMS F must be onboard the aircraft to verify that the weight and center-of-gravity will remain within allowable limits for the entire flight. Sufficient forms can be one (for the specific flight) or it can be several. Several FORMS F for various loading of crew, passengers; stores, cargo, fuel, slingloads, etc., which result in extreme forward and extreme aft c.g. locations and variations in gross weight, but which remain within allowable limits may be used to verify that a particular loading which is clearly between these extremes would remain within limits.

(2) The basic weight and moment obtained from the CHART C serve as the basis for the calculations on the FORM F. AR 95-1 provides for some minor exceptions to this rule. Small changes in Basic Weight and Moment due to removal or installation of aircraft equipment or other actions may be allowed to accumulate on the CHART C without changing the FORMS F. (A basic weight difference of ±3/10 of 1 percent and/or a c.g. difference of 0.3 inch at the basic weight are the maximum differences allowed by AR 95-3 when comparing the Form F and the last entry on the Chart C). Also, the FORM F can be utilized to record certain items of aircraft equipment which is part of Aircraft Basic Weight when it is temporarily added to, removed from, or relocated within the aircraft because of maintenance, specific mission requirements, etc. Procedures for this situation are described in the CHART C discussion.

(3) There are two versions of this form, transport and tactical. Instructions for completing both versions of the form are as follows:

a. Transport.

(1) Insert necessary identifying information at top of form.

(2) Reference 1. Enter aircraft basic weight and moment/constant (or index). Obtain this information from last entry on Chart C.

NOTE

If a load adjuster is used in loading the aircraft, enter opposite Reference 1 the index figure obtained from Chart C and use index figures throughout the form. Enter plate number of load adjuster (located on the left end of base) on the Form F. If Chart E or -10 operator manual data are used instead of a load adjuster, enter moment/constant values throughout the form.

(3) Reference 2. Leave blank (oil is included in basic weight).

(4) Reference 3. Enter number, weight and moment of flight crew (pilot, co-pilot, observer).

(5) Reference 4. Enter weight and moment of crew's baggage.

(6) Reference 5. Enter weight and moment of steward's equipment, if applicable.

(7) Reference 6. Enter weight and moment of emergency equipment not included in basic weight.

(8) Reference 7 and 8. Enter weight and moment of any extra equipment not included in basic weight.

(9) Reference 9. Enter sum of weights and moments for Reference 1 through Reference 8, inclusive, to obtain OPERATING WEIGHT.

(10) Reference 10. Enter the number of gallons, weight and moment of the fuel on board at takeoff. List under REMARKS the fuel tanks involved and the amount of fuel in each tank (as required).

(11) Reference 11. Enter the number of gallons, weight and moment of water injection fluid, if applicable.

(12) Reference 12. Enter sum of weights and moments for Reference 9 through Reference 11, inclusive, to obtain TOTAL AIRCRAFT WEIGHT.

(13) LIMITATIONS. The maximum ALLOWABLE LOAD is based on takeoff, landing, and limiting fuel restrictions determined from the -10 operator's manual or Chart E loading data. (In

of most helicopters, the takeoff and landing gross weight limitations are the same, and there is no "zero fuel" restrictions). These values are computed in the LIMITATIONS table on the lower left-hand comer of the Form F as follows: (a) Enter the ALLOWABLE GROSS WEIGHT for TAKEOFF and LANDING. If the aircraft can have a gross weight restriction above which all weights must be fuel in the wings (zero wing fuel gross weight), enter the ALLOWABLE GROSS WEIGHT for LIMITING WING FUEL in the last column of the LIMITATIONS table.

(b) If the aircraft's ALLOWABLE GROSS WEIGHT can be limited by a taxiing and/or ground handling gross weight, use the REMARKS section for subtracting the warm up and/or taxi fuel from the maximum permissible ground handling gross weight. The resulting value will be entered in the ALLOWABLE GROSS WEIGHT FOR TAKEOFF block of the LIMITATIONS table and a statement similar to the following will be noted in the REMARKS section: ALLOWABLE GROSS WEIGHT FOR TAKEOFF LIMITED BY MAXIMUM TAXI GROSS WEIGHT.

(c) Determine the ALLOWABLE LOAD for TAKEOFF by subtracting the TOTAL AIRCRAFT WEIGHT (reference 12) from the TAKEOFF ALLOWABLE GROSS WEIGHT. (For most helicopters, this is the only ALLOWABLE LOAD calculation required). Determine the ALLOWABLE LOAD for LANDING by subtracting the OPERATING WEIGHT (Reference 9) PLUS ESTIMATED LANDING FUEL WEIGHT (Reference 23) from the LANDING ALLOWABLE GROSS WEIGHT. Determine the LIMITING WING FUEL ALLOWABLE LOAD by subtracting the OPERATING WEIGHT (Reference 9) from the LIMITING WING FUEL ALLOWABLE GROSS WEIGHT.

(14) Reference 13. Using same compartment letter designation as shown in Chart E (aircraft diagram) or on load adjuster, enter the number, weight, compartment, and total weight and total moment of passengers. Then enter weight, compartment, total weight, and total moment of cargo.

(15) Reference 14 and 15. Not applicable unless specifically required by command policy.

(16) The area to the right of the reference 13 is provided for aircraft requiring Zero Fuel Weight. Zero Fuel Weight Moment, and Zero Fuel c.g. computations. For helicopters, these blocks are not used. The required values are determined as follows:

(a) Add the weights and moments of OPERATING WEIGHT, (reference 9) and DISTRIBUTION OF ALLOWABLE LOAD (PAYLOAD), (reference 13). Enter the calculated total weight in the ZERO FUEL WEIGHT block. Enter the corresponding moment in the ZERO FUEL WEIGHT MOMENT block.

(b) Compute Zero Fuel c.g. for that weight and enter in the ZERO FUEL % MAC block. (Cross out % MAC and enter value in IN.).

(c) Enter on the LIMITATIONS table in the ALLOWABLE GROSS WEIGHT (FUEL) block any Zero Fuel or Limiting Wing Fuel limitation set forth in the -10 operator's manual or Chart E loading data. This figure must be compared with the calculated value in the ZERO FUEL WEIGHT block. If the calculated weight exceeds the limits adjust the load accordingly.

(d) The Zero Fuel c.g. cannot exceed the forward and aft c.g. limits at the Zero Fuel Weight. These may be found in the -10 operator's manual or Chart E loading data. If it is within limits, enter the PERMISSIBLE C.G. ZERO FUEL WEIGHT forward and aft limits at the Zero Fuel Weight in the LIMITATIONS table. If it is not, adjust the load accordingly, and repeat the process.

(e) Enter the Zero Fuel weight and moment in reference 21.

(17) Reference 16. Enter sum of reference 12 and the compartment totals under reference 13 opposite TAKEOFF CONDITION (Uncorrected).

(18) Reference 17. Enter the TAKEOFF C.G. (Uncorrected) as determined from weight and moment values of reference 16.

(19) The weight value from reference 16 must be compared with the allowable GROSS WEIGHT TAKEOFF as shown in the LIMITATIONS table to ensure it is within limits. Use the reference 17 TAKEOFF CONDITION (Uncorrected) gross weight to determine the PERMISSIBLE C.G. TAKEOFF forward and aft c.g. limits from the -10 operator's manual or Chart E loading data If the takeoff c.g. of reference 17 is within these PERMISSIBLE C.G. TAKEOFF limits, and no other corrections are necessary, (i.e. temporary equipment changes), enter the permissible limits in the

space provided in the limitations table. Enter the uncorrected weight and c.g. values from reference 16 and reference 17 into the blocks at reference 19 and reference 20 respectively.

NOTE

The c.g. charts and tables in the Chart E and -10 operator's manual are not accurate enough to use near the forward and aft c.g. limits. In those instances when the actual c.g. is very close to the aircraft limits, the c.g. must be arithmetically calculated to ensure the necessary accuracy.

(20) Reference 18. When the takeoff weight of reference 16 and/or the takeoff c.g. of reference 17 are not within permissible takeoff weight and/or c.g. limits, changes in the amount or distribution of load (reference 13) are required. The necessary load adjustments must be noted in the CORRECTIONS columns on the left-hand portion of the Form F. Enter a brief description of the necessary load adjustment in the left-hand column with the weight and moment listed in the columns provided. Sum all the weight and moment increases and/or decreases to obtain the net change (+ or -) in the amount or distribution of the load. Transfer the total weight and moment adjustment to the spaces provided for CORRECTIONS (if required) at references 18.

NOTE

If there are any temporary equipment changes listed on DA Form 2408-13-1/2408-13-1-E or DA Form 2408-1412408-14-E, they should be considered changes in aircraft loading. These changes should be entered with the notation "EQUIPMENT CHANGES" near the top of the CORRECTIONS table. A brief description, weight and moments should be entered in the columns below this notation. These entries should be treated as a variation in loading and applied to the total entered in reference 18.

(21) Reference 19. In the space provided for TAKEOFF CONDITION (corrected), enter the sum of reference 16 and reference 18. (Add if reference 18 is positive. If it is negative, subtract reference 18 from reference 16).

(22) Reference 20. Enter the TAKEOFF C.G. (Corrected), as determined from the weight and moment values of reference 19.

(23) The weight value from reference 19 must again be compared with the allowable GROSS WEIGHT TAKEOFF as shown in the LIMITATIONS table to ensure compatibility. At the reference 19 TAKEOFF CONDITION (Corrected) gross weight, again determine the PERMISSIBLE C.G. TAKEOFF forward and aft c.g. limits from the -10 operator's manual or Chart E loading date. Re-check the takeoff c.g. of reference 20 to ensure it is within the PERMISSIBLE C.G. TAKEOFF limits. Enter these limits in the space provided in the LIMITATIONS table.

(24) Reference 21. Enter Zero Fuel Weight and moment. This is normally calculated by subtracting TAKEOFF FUEL (Reference 10) from corrected TAKEOFF CONDITION (reference 19). If "Zero Fuel weight limitations apply, this figure will match the values appearing to the right of reference 13.

(25) Reference 22. Enter weight and moment of any aerial supply load(s) to be dropped before landing.

NOTE

If the aircraft has no Zero Fuel Weight limitations, but it appears that c.g. at the Zero Fuel Weight may exceed the aircraft's forward or aft c.g. limits, a further check must be made. The procedures are described in paragraph (16) above. This procedure must be applied to any analogous situation not already taken into consideration. Examples might include the unanticipated jettisoning of external stores, relocation of passengers, etc. Enter the results of this Zero Fuel (or similar) c.g. calculations in the REMARKS section. It should include a notation such as "Center-of-gravity at the Zero fuel Weight (or with the auxiliary fuel tanks released, or whatever) has to be checked and the c.g. is (is not) within limits." Amplify the remarks if the c.g. is not within limits.

(26) Reference 23. Determine the ESTIMATED LANDING FUEL weight and moment and enter it in the space provided.

(27) Reference 24. Determine the ESTIMATED LANDING CONDITION by subtracting the weights and moments of Reference 22 from Reference 21 and adding reference 23.

(28) Reference 25. Enter the ESTIMATED LANDING C.G. as determined from the weight and simplified moment values of reference 24.

(29) The weight value from Reference 24 must be compared with the allowable GROSS WEIGHT LANDING as shown in the LIMITATIONS table to ensure compatability. Use the Reference 24 ESTIMATED LANDING CONDTION gross weight to determine the PERMISSIBLE C.G. LANDING forward and aft. c.g. limits from the -10 operator's manual or Chart E loading data. If the ESTIMATED LANDING C.G. LANDING limits, enter them in the space provided in the LIMITATIONS table.

(30) When the ESTIMATED LANDING CONDITION of Reference 24 and/or the ESTIMATED LANDING C.G. of Reference 25 are not within permissible landing weight and/or c.g. limits, changes in the amount of distribution of load and/or fuel are required. A new Form F will be completed.

(31) Enter signature or Technical Inspector stamp of the person computing this form in the computed by signature block.

NOTE

If local requirements exist for the use of the WEIGHT AND BALANCE AUTHORITY SIGNATURE block the Commander will establish policies and procedures.

b. Tactical.

(1) Insert necessary identifying information at top of form.

(2) Reference 1. Enter aircraft basic weight and moment/constant (or index). Obtain this information from last entry on Chart C.

NOTE

If a load adjuster is used in loading the aircraft, enter opposite Reference 1 the index figure obtained from Chart C and use index figures throughout the form. Enter plate number of load adjuster (located on the left end of base) on the Form F. If Chart E or -10 operator manual data are used instead of a load adjuster, enter moment/constant values throughout the form.

(3) Reference 2. Leave blank (oil is included in basic weight).

(4) Reference 3. This section takes into account all nonexpendable items not in the basic weight (and not otherwise accounted for). Using the same compartment letter designation as shown on Chart E (aircraft diagram) or on load adjuster enter item description, weight and moment for crew, baggage, cargo, emergency equipment, racks, etc.

(5) Reference 4. Enter sum of weights and moments for Reference 1 through Reference 3 to obtain OPERATING WEIGHT.

(6) Reference 5. Enter by compartment the item description (type, number of rounds), weight and moment of all ammunition.

(7) Reference 6. Enter item description, weight and moment of all other expandable ordnance such as bombs and rockets.

(8) Reference 7. Enter number of gallons, weight and moment of fuel. If auxiliary fuel is carried, make appropriate entries in space provided.

(9) Reference 8. Enter item description weight and moment of miscellaneous variables (such as water injection fluid).

(10) Reference 9. Enter sum of weights and moments for reference 4 through reference 9 opposite TAKEOFF CONDITION (Uncorrected).

(11) Reference 10. Enter TAKEOFF C.G. (Uncorrected) as determined from weight and moment values of reference 9.

(12) Enter the allowable GROSS WEIGHT TAKEOFF and GROSS WEIGHT LANDING in the LIMITATIONS table at the lower left-hand corner of the Form F. These data are found in the -10 operator's manual and also in the Chart E loading data.

(13) The weight value from referenece 9 must be compared with the allowable GROSS WEIGHT TAKEOFF as shown in the LIMITATIONS table

to ensure it is within limits. Use the reference 9 TAKEOFF CONDITION (Uncorrected) gross weight to determine the PERMISSIBLE C.G. TAKEOFF forward and aft c.g limits from the -10 operator's manual or Chart E loading data. If the takeoff c.g. of reference 10 is within these PERMISSIBLE C.G. TAKEOFF limits, and no other corrections are necessary, (i.e. temporary equipment changes), enter the permissible limits in the space provided in the limitations table. Enter the uncorrected weight and c.g. values from reference 9 and reference 10 into the blocks at reference 12 and reference 13 respectively.

NOTE

The c.g. charts and tables in the Chart E and -10 operator's manual are not accurate enough to use near the forward and aft c.g. limits. In those instances when the actual c.g. is very close to the aircraft limits, the c.g. must be arithmetically calculated to ensure the necessary accuracy.

(14) Reference 11. When the takeoff weight of reference 9 and/or the takeoff c.g. of reference 10 are not within permissible takeoff weight and/or c.g. Limits, changes in the amount or distribution of load (reference 3 through reference 8) are required. The necessary load adjustments must be noted in the CORRECTIONS columns on the left-hand portion of the Form F. Enter a brief description of the necessary load adjustment in the left-hand column with the weight and moment listed in the columns provided. Sum all the weight and moment increases and/or decreases to obtain the net change (+ or-) in the amount or distribution of the load. Transfer the total weight and moment adjustment to the spaces provided for CORRECTIONS (If required) at reference 11.

NOTE

If there are any temporary equipment changes listed on DA Form 2408-13-12408-13-1-E or DA Form 2408-1412408-14-E, they shall be considered changes in aircraft loading. These changes shall be entered with the notation "EQUIPMENT CHANGES" near the top of the CORRECTIONS table. A brief description, weights and moments shall be entered in the columns below this notation. These entries shall be treated as a variation in loading and applied to the total entered in reference 11.

(15) Reference 12. In the space provided for TAKEOFF CONDITION (corrected), enter the sum of reference 9 and reference 11. (Add if reference 11 is positive. If it is negative, subtract reference 11 from reference 9).

(16) Reference 13. Enter the TAKEOFF C.G. (Corrected), as determined from the weight and moment values of reference 12.

(17) The weight value from reference 12 must again be compared with the allowable GROSS WEIGHT TAKEOFF as shown in the LIMITATIONS table to ensure compatibility. At the reference 12 TAKEOFF CONDITION (Corrected) gross weight, again determine the PERMISSIBLE C.G. TAKEOFF forward and aft c.g. limits from the -10 operator's manual or Chart E loading data. Recheck the takeoff c.g. of reference 13 to ensure it is within the PERMISSIBLE C.G. TAKEOFF limits. Enter these limits in the space provided in the LIMITATIONS table.

(18) Reference 14. Determine total TAKEOFF FUEL weight and moment from reference 7 and enter in reference 14. List weight and moment of expendable items such as ammunition (not including the weight of cases and links if retained), bombs, rockets, and external fuel tanks that are to be dropped during flight. Explain under REMARKS, if necessary. These items listed as LESS EXPENDABLES are considered part of reference 14.

(19) Reference 15. Determine the ESTIMATED LANDING FUEL weight and moment and enter it in the space provided.

(20) Reference 16. Determine the ESTIMATED LANDING CONDITION by subtracting all of the expendable weights and moments of reference 14 from the reference 12 weight and moment and adding the weight and moment of reference 15. The use of a minus sign (-) before the reference 14 entries and a plus sign (+) before the reference 15 entry helps prevent errors in completing this step.

(21) Reference 17. Enter the ESTIMATED LANDING C.G. as determined from the weight and simplified moment values of reference 16.

(22) The weight value from reference 16 must be compared with the allowable GROSS WEIGHT LANDING as shown in the LIMITATIONS table to ensure compatibility. Use the reference 16 ESTIMATED LANDING CONDITION gross weight to determine the PERMISSIBLE C.G. LANDING forward and aft c.g. limits the -10 operator's manual or Chart E loading data. If the ESTIMATED LANDING C.G. of the reference 17 is within these PERMISSIBLE C.G. landing limits, enter them in the spaces provided in the LIMITATIONS table.

(23) When the ESTIMATED LANDING CONDITION or the reference 16 and/or the ESTIMATED LANDING C.G. of reference 17 are not within permissible landing weight and/or c.g. limits, changes in the amount or distribution of load and/or fuel are required. A new FORM F will be completed.

(24) Enter signature of person computing the form or stamp if it is the weight and balance technician. This should also be included in the Commander's SOP.

NOTE

If local requirements exist for the use of the WEIGHT AND BALANCE AUTHORITY SIGNATURE block the Commander will establish policies and procedures.

WEIGHT AND BALANCE CLEARANCE FORM F - TRANSPORT
(Use reverse for tactical missions)

FOR USE WITH T.O. 1-1B-40, NAVAIR 01-1B-40, AND TM-55-1500-342-23

Form Approved OMB No. 0704-0188

The public reporting burden for this collection of information is estimated to average 10 minutes per response, including the time for reviewing instructions, searching existing data sources, gathering and maintaining the data needed, and completing and reviewing the collection of information. Send comments regarding this burden estimate or any other aspect of this collection of information, including suggestions for reducing the burden, to Department of Defense, Washington Headquarters Services, Directorate for Information Operations and Reports (0704-0188), 1215 Jefferson Davis Highway, Suite 1204, Arlington, VA 22202-4302. Respondents should be aware that notwithstanding any other provision of law, no person shall be subject to any penalty for failing to comply with a collection of information if it does not display a currently valid OMB control number.
PLEASE DO NOT RETURN YOUR FORM TO THE ABOVE ADDRESS.

DATE *(YYYYMMDD)*	AIRCRAFT TYPE	FROM	HOME STATION
MISSION	SERIAL NO.	TO	PILOT

REMARKS

REF	ITEM	WEIGHT	INDEX OR MOM/
1	BASIC AIRCRAFT *(From Chart C)*		
2			
3	CREW *(No.)*		
4	CREW'S BAGGAGE		
5	STEWARD'S EQUIPMENT		
6	EMERGENCY EQUIPMENT		
7	EXTRA EQUIPMENT		
8			
9	OPERATING WEIGHT		
10	TAKEOFF FUEL (Gal.)		
11	WATER INJ.		
12	TOTAL AIRCRAFT WEIGHT		

LOAD ADJUSTER NUMBER

CORRECTION/MOST FWD/MOST AFT

13 DISTRIBUTION OF ALLOWABLE LOAD *(PAYLOAD)*

14 ZERO FUEL WT

COMPT OR ARM	ITEM	CHANGES *(+ or -)* WEIGHT	CHANGES *(+ or -)* INDEX OR MOM/	PASSENGERS NO.	PASSENGERS WEIGHT	COMPT OR ARM	CARGO	CARGO	COMPT OR ARM	ZERO FUEL WT / INDEX OR MOM / ZERO FUEL % M.A.C.
TOTAL WEIGHT REMOVED										
TOTAL WEIGHT ADDED										
NET DIFFERENCE										

LIMITATIONS

CONDITION	TAKEOFF	LANDING	7 FUEL
ALLOWABLE GROSS WEIGHT			
TOTAL AIRCRAFT WT. (Ref. 12)			
(Ref. 9) + (Ref. 23)			
OPERATING WT. *(Ref. 9)*			
ALLOWABLE LOAD *(Ref. 13) (use smallest figure)*			

7 Zero Fuel or Limiting Wing Fuel

PERMISSIBLE C.G. TAKEOFF	FORWARD	AFT
PERMISSIBLE C.G. LANDING	FORWARD	AFT
PERMISSIBLE C.G. ZERO FUEL WT.	FORWARD	AFT

COMPUTED BY

SIGNATURE

WEIGHT AND BALANCE AUTHORITY SIGNATURE

PILOT SIGNATURE

15		
16	TAKEOFF CONDITION *(Uncorrected)*	
17	TAKEOFF C.G. IN % M.A.C. OR IN	
18	CORRECTIONS *(If required)*	
19	TAKEOFF CONDITION *(Corrected)*	
20	TAKEOFF C.G. IN % M.A.C. OR IN	
21	ZERO FUEL WT *(Ref. 14)*	
22	LESS AIR DROP LOAD	
23	ESTIMATED LANDING FUEL	
24	ESTIMATED LANDING CONDITION	
25	ESTIMATED LANDING C.G. IN % M.A.C. OR IN	

DD FORM 365-4, AUG 96 (EG) PREVIOUS EDITION MAY BE USED.

Figure 4-5. DD Form 365-4 (Front) (Sheet 1 of 2)

WEIGHT AND BALANCE CLEARANCE FORM F - TACTICAL
(Use reverse for transport missions)

FOR USE WITH T.O. 1-1B-40, NAVAIR 01-1B-40, AND TM-55-1500-342-23

DATE *(YYYYMMDD)*	AIRCRAFT TYPE	FROM	HOME STATION
MISSION	SERIAL NO.	TO	PILOT

CORRECTION/MOST FWD/MOST AFT *(Ref. 11)*

COMPT	ITEM	CHANGES *(+ or -)* WEIGHT	CHANGES *(+ or -)* INDEX OR MOM/

4-10. Chart E. Loading Data and Special Weighing Instructions). The purpose of the loading data contained in Chart E, (figure 4-6} is to provide the information necessary to compute the gross weight and balance of a loaded aircraft. The load adjuster, it furnished, may be used for the same purpose. From the loading graphs or tables weights and moments are obtained for all variable load items and are added to the current basic weight and moment from Chart C) to obtain gross weight and moment. If the aircraft is loaded within the forward and aft cg limits. the resultant moment will fall numerically between the limiting moments given in the cg table of Chart E. The effect on the cg of the expenditure in flight of such items as fuel and bombs may be checked by subtracting the weights and moments of such items from the takeoff gross weight and moment and checking the resultant moment with the cg table.

12/2/82

SPECIAL WEIGHING INSTRUCTIONS

SAMPLE

AIRCRAFT CONDITION

The Basic Weight condition is established with:

- Pilots access doors closed
- Cargo doors closed
- Gunners' windows closed
- All main rotor pylon panels closed
- Engine cowl closed
- Nose compartment door closed
- Main and tail rotor blades in flight position and equally spaced
- Vertical tail in flight position
- Horizontal tails in flight position (level)
- Unusable & trapped fuel and oil
- Usable engine oil

If the aircraft is weighed with dry fuel and oil systems, usable oil and unusable and trapped fuel and oil as listed in Chart A shall be added to the "As Weighed" condition.

CHART - E
SHEET 1 of 33
MODEL - UH-60A
CHART DATE - 2 Dec. 1982

Figure 4-6. Chart E (Sheet 1 of 33)

11/14/80

SAMPLE

FUEL DRAINING

I. Suction Equipment Method

Defueling is accomplished as follows:

A. If required, prime fuel system including APU line to insure that fuel lines contain fuel.

B. Attach suction hose to the pressure fuel adapter located on the right side of the aircraft at Sta. 431.

C. Defuel with power equipment. Suction equipment will remove all but a small amount of residual fuel.

D. Drain residual fuel from each cell in the following manner:

(1) Turn all electrical power off.

(2) Open the sump drain valves at the lower fuselage at Sta. 421 and WL 203 and drain residual fuel.

Fuel remaining aboard after these defuel procedures is trapped fuel and is included in the aircraft basic weight (See Chart A).

II. Sump Drain Method

A. Fuel can also be drained through the sump drain valves at Sta. 421 and WL 203 by attaching a 1.25 in. diameter hose to the sump drain valve probe (SS No. 70307-03018-102). Open drain valve and direct fuel into a suitable container.

OIL DRAINING

Engine oil is part of Basic Weight on the UH-60A. Consequently, the aircraft should be weighed with full engine oil. However, if it is desired to drain the oil, provisions have been made for draining while the engine is in a horizontal position, 15 degrees nose up, and 20 degrees nose down. The integral oil tank drain plug is located on the forward lower side of the tank.

CHART - E
SHEET 2 of 33
MODEL - UH-60A
CHART DATE-SEE PAGE 1

Figure 4-6. Chart E (Sheet 2 of 33)

11/14/80

LEVELING DEVICE

The plumb bob suspension point is located just inside the left hand cargo door at Sta. 309.62, WL 258.5; at BL 35.0. The plumb bob target (leveling plate) is located on the cabin floor WL 206.815 directly below the suspension point (See Sheet 5 of 33 for illustration).

FORWARD REACTION LOCATION (Electronic Weighing Kit)

The forward jack points are located under the forward fuselage at Sta.247.0 and BL 43.7 (right and left hand). Place the weighing cells on the jacks and place under the forward jack points. Extend jack (simultaneously with aft jack) until plumb bob reaches the level datum on the target.

AFT REACTION LOCATION (Electronic Weighing Kit)

The aft jack point is located under the aft fuselage at Sta. 605.3 and BL 0.0. Proceed in the same manner as with the forward reactions.

AIRCRAFT LEVELING (Electronic Weighing Kit)

Raise the helicopter to the level position by extending all jacks simultaneously until all tires are clear of the ground. Adjust jacks as necessary to attain a level attitude in fore and aft and lateral directions.

After weighing, lower jacks simultaneously until all tires contact the ground in the static position.

ALTERNATE WEIGHING (Wheel Weighing on Mechanical Scales)

When weighing on wheels, measure dimension B and D during weighing and after leveling. Using these actual dimensions, and the forward jack point dimension I (Sta. 247.0), determine dimension E and F. For checking purposes, approximate dimensions for E and F are given below:

Dimension E - Reference Datum to Center Line of Main Wheels 297.4 inches
Dimension F - Reference Datum to Center Line of Tail Wheel 644.6 inches

SAMPLE

CHART - E
SHEET 3 of 33
MODEL - UH-60A
CHART DATE-SEE PAGE 1

Figure 4-6. Chart E (Sheet 3 of 33)

11/14/80

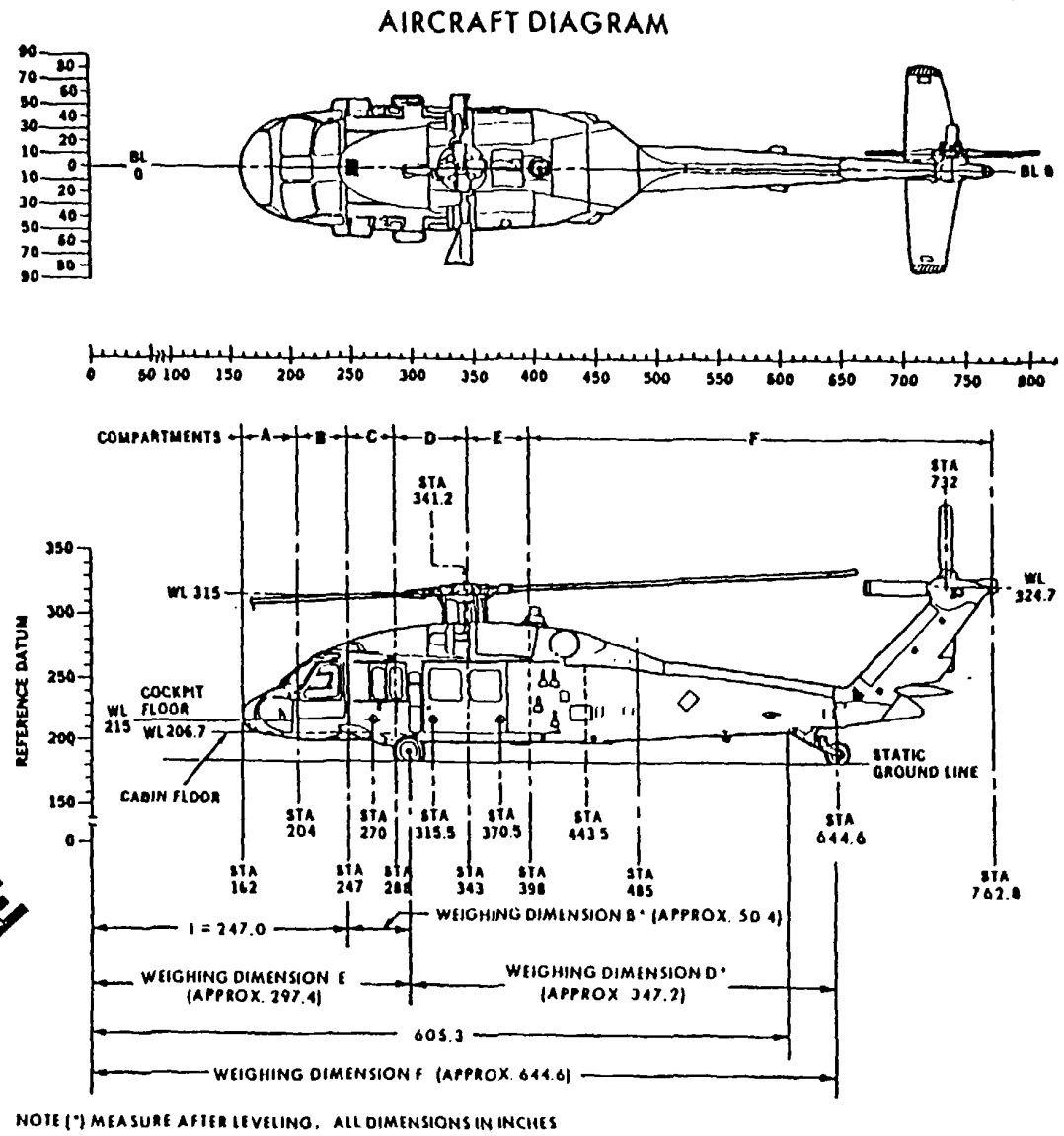

SAMPLE

CHART - E
SHEET 4 of 33
MODEL - UH-60A
CHART DATE-SEE PAGE 1

Figure 4-6. Chart E (Sheet 4 of 33)

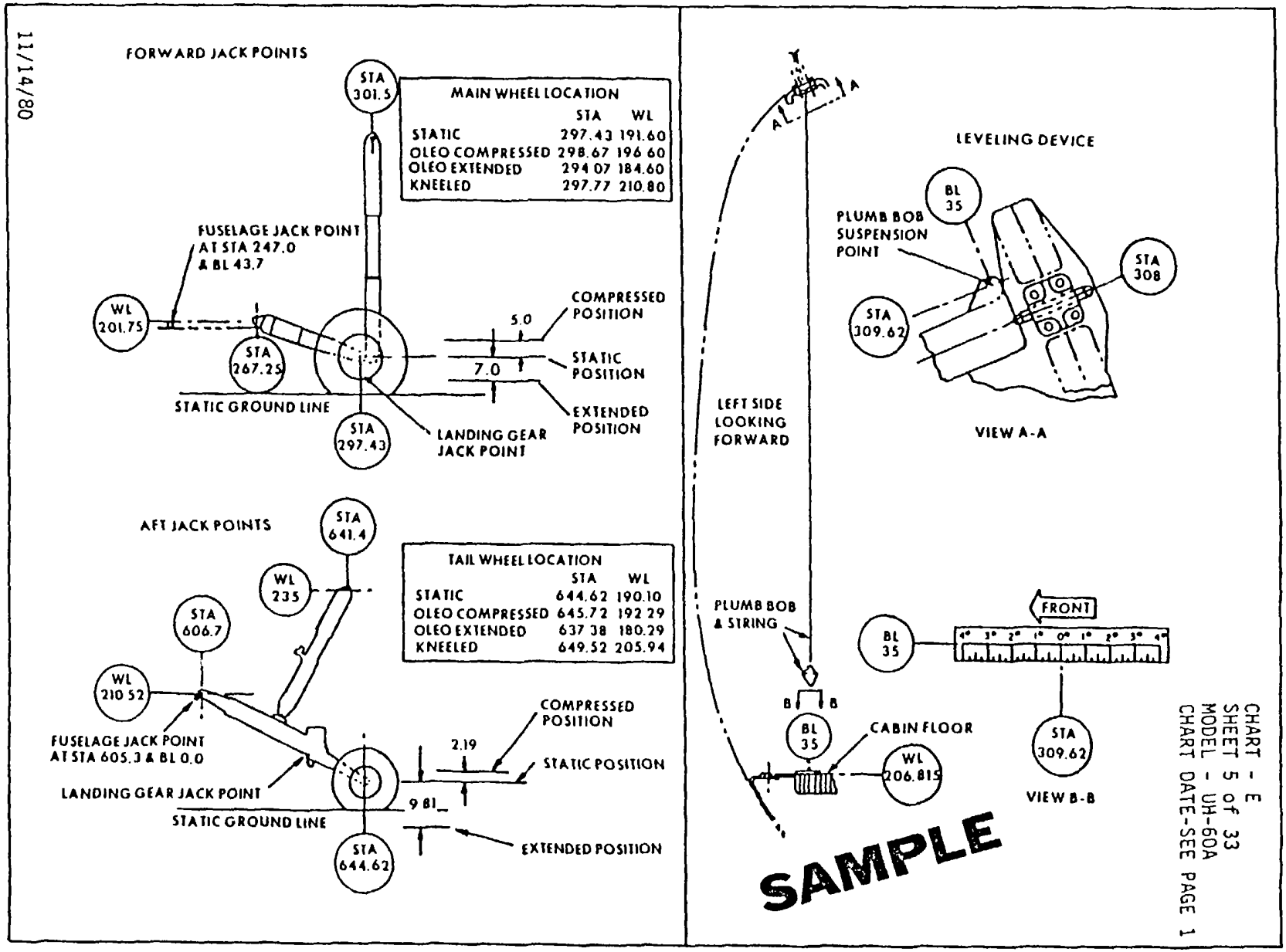

Figure 4-6. Chart E (Sheet 5 of 33)

FUEL LOADING DATA
MAIN FUEL TANKS

CHART - E
SHEET 6 of 33
MODEL - UH-60A
CHART DATE - SEE PAGE 1

FUEL LOADING DATA

FUEL SYSTEM - 2 TANKS

ARM = 420.8 ARM = 420.8

CAP = 359.7 GAL. (2 TANKS)

WEIGHT (LB)	MOM/1000	WEIGHT (LB)	MOM/1000
50	21.0	1250	526.0
100	42.1	1300	547.0
150	63.1	1350	568.1
200	84.2	1400	589.1
250	105.2	1450	610.2
300	126.2	1500	613.2
350	147.3	1550	652.2
400	168.3	1600	673.3
450	189.4	1650	694.3
500	210.4	1700	715.4
550	231.4	1750	736.4
600	252.5	1800	757.4
650	273.5	1850	778.5
700	294.6	1900	799.5
750	315.6	1950	820.6
800	336.6	2000	841.6
850	357.7	2050	862.6
900	378.7	2100	883.7
950	399.8	2150	904.7
1000	420.8	2200	925.8
1050	441.8	2250	946.8
1100	462.9	2300	967.3
1150	483.9	*2338	983.8
1200	505.0	2350	988.9
		2400	1009.9
		**2446	1029.3

NOTES:

1. (*) The single asterisk indicates the approximate weight and moment for full fuel tanks using JP-4 fuel at 6.5 lb per gallon.

2. (**) The double asterisk indicates the approximate weight and moment for full fuel tanks using JP-5 fuel at 6.8 lb. per gallon.

3. The total usage fuel capacity of 359.7 gal. (179.8 gal. per tank) is estimated pending test verification.

4. Total weight of fuel is dependent upon specific gravity and temperature. Therefore, the notation "FULL" does not appear on the fuel quantity gauges. Variation should be expected in gauge readings when tanks are full.

SAMPLE

12/2/82

Figure 4-6. Chart E (Sheet 6 of 33)

11/14/80

EXTENDED RANGE KIT FUEL LOADING DATA

EXTENDED RANGE FUEL SYSTEM - 2 TANKS

SAMPLE

FORWARD TANK ARM = 294.1 CAP = 381.0 GAL.			
WEIGHT LB	MOM/1000	WEIGHT LB	MOM/1000
50	14.7	1250	367.6
100	29.4	1300	382.3
150	44.1	1350	397.0
200	58.8	1400	411.7
250	73.5	1450	426.4
300	88.2	1500	441.1
350	102.9	1550	455.9
400	117.6	1600	470.6
450	132.3	1650	485.3
500	147.0	1700	500.0
550	161.8	1750	514.7
600	176.5	1800	529.4
650	191.2	1850	544.1
700	205.9	1900	558.8
750	220.6	1950	573.5
800	235.3	2000	588.2
850	250.0	2050	602.9
900	264.7	2100	617.6
950	279.4	2150	632.3
1000	294.1	2200	647.0
1050	308.8	2250	661.7
1100	323.5	2300	676.4
1150	338.2	2350	691.1
1200	352.9	2400	705.8
		2450	720.5
		*2477	728.5
		2500	735.2
		2550	750.0
		**2591	762.0

AFT TANK ARM = 350.7 CAP = 381.0 GAL.			
WEIGHT LB	MOM/1000	WEIGHT LB	MOM/1000
50	17.5	1250	438.4
100	35.1	1300	455.9
150	52.6	1350	473.4
200	70.1	1400	491.0
250	87.7	1450	508.5
300	105.2	1500	526.0
350	122.7	1550	543.6
400	140.3	1600	561.1
450	157.8	1650	578.6
500	175.3	1700	596.2
550	192.9	1750	613.7
600	210.4	1800	631.3
650	227.9	1850	648.8
700	245.5	1900	666.3
750	263.0	1950	683.9
800	280.6	2000	701.4
850	298.1	2050	718.9
900	315.6	2100	736.5
950	333.2	2150	754.0
1000	350.7	2200	771.5
1050	368.2	2250	789.1
1100	385.5	2300	806.6
1150	403.3	2350	824.1
1200	420.8	2400	841.7
		2450	859.2
		*2477	868.7
		2500	876.6
		2550	894.3
		**2591	908.7

NOTES:

1. (*) The single asterisk indicates the approximate weight and moment for full fuel tanks using JP-4 fuel at 6.5 lb per gallon.
2. (**) The double asterisk indicates the approximate weight and moment for full fuel tanks using JP-5 fuel at 6.8 lb per gallon.
3. The total usage fuel capacity of 381.0 gal. per tank is estimated pending test verification.
4. Total weight of fuel is dependent upon specific gravity and temperature. Therefore the notation "full" does not appear on the fuel quantity gauges. Variation should be expected in gauge readings when tanks are full.
5. Full transfer is done automatically or manually. Fuel transfer flow is about 300 pounds per minute. Normal transfer operation should be in the AUTO mode. Reference the operator's manual TM 55-1520-237-10 page 2-26 thru 2-28 for fuel transfer operation.

Chart E
Sheet 7 of 33
Model:UH-60A
Chart Date-
See Page 1

Figure 4-6. Chart E (Sheet 7 of 33)

12/2/82

ARMAMENT LOADING DATA

SAMPLE

AMMUNITION TABLE

LIVE ROUNDS	LIVE AMMO (7 62 MM) ARM - 247.0	
	WEIGHT - LB	MOM/1000
100	7	2
200	13	3
300	20	5
400	26	6
500	32	8
600	39	10
700	46	11
800	52	13
ARM - 279 8		
100	7	2
200	13	4
300	20	5
400	26	7

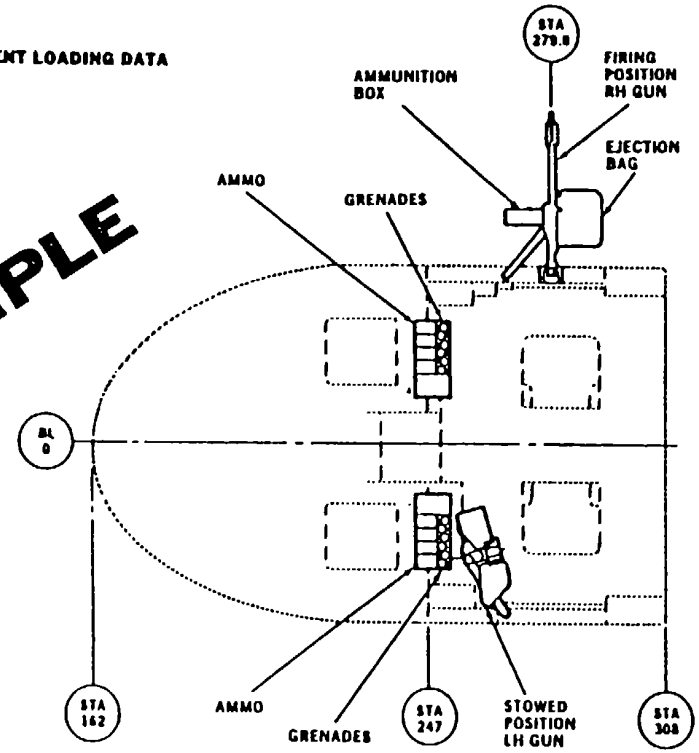

CHAFF

CHAFF DISPENSED XM-130,30 RDS ARM-505.0	
WEIGHT - LB	MOM/1000
10	5

GRENADE TABLE

QUANTITY	STOWED			
	GRENADE AN-M8 ARM - 251.0		GRENADE M18 ARM - 251.0	
	WEIGHT - LB	MOM/1000	WEIGHT - LB	MOM/1000
2	3	1	2	1
4	6	2	5	1
6	9	2	7	2
8	12	3	10	2
10	15	4	12	3
12	18	5	14	4

M-60D TABLE

ITEM	WEIGHT	MOM/1000	
		STOWED	FIRING POSITION
M-60D (2)	45.4	12	13
EJECTION BAG (2)	9.0	2	3
AMMO BOX (2)	3 4	1	1
SUPPORT (2)	20.2	5	6
BIPOD (2)	4.0	1	1
TOTAL	82.0	21	24

CHART - E
SHEET 8 of 33
MODEL - UH-60A
CHART DATE-SEE PAGE 1

Figure 4-6. Chart E (Sheet 8 of 33)

12/2/82

COMPARTMENT DATA

COMPARTMENT DESIGNATION	A	B	C	D	E	F	G
	AVIONICS	COCKPIT	FWD CABIN	CENTER CABIN	AFT CABIN	AFT SECTION	UPPER DECK
CENTROID STATION (1)	183	225.5	270 (3)	315.5	370.5	420.8 (2)	363
FORWARD STATION (1)	162	204	252 (3)	288	343	398	241
AFT STATION (1)	204	247	288	343	398	762.8	485
MAXIMUM CAPACITY (5) (LB)			5460	8370	8370	250 (4)	
FLOOR CAPACITY (LBS PER SQ. FT.)			300	300	300	75	
FLOOR AREA (SQ. FT.)			18.2 (3)	27.9	27.9	12.1 (2)	
VOLUME (CU. FT.)		93	108	144	144	21 (2)	

NOTES:
(1) Inches from reference datum. Centroid stations are mid-compartment stations unless otherwise noted.
(2) Equipment stowage compartments above fuel cells, stations 398-443.5
(3) For the purpose of this chart, the forward cabin limit is taken at station 252.0 instead of station 247.0 to compensate for miscellaneous equipment mounted on the floor.
(4) Equipment stowage compartments above fuel cells, 125 pounds per compartment.
(5) Do not exceed gross weight limitations, see page 29 of 33.

SAMPLE

CHART - E
SHEET 9 of 33
MODEL - UH-60A
CHART DATE-SEE PAGE 1

Figure 4-6. Chart E (Sheet 9 of 33)

11/14/80

CARGO COMPARTMENT TABLE

	C	D	E	F
COMPARTMENT	FWD. CABIN	CENTER CABIN	AFT. CABIN	AFT. SECTION
CENTROID (1)	270.0	315.5	370.5	420.8
WEIGHT	MOMENT/1000			
5	1	2	2	2
10	3	3	4	4
20	5	6	7	8
30	8	9	11	13
40	11	13	15	17
50	14	16	19	21
60	16	19	22	25
70	19	22	26	29
80	22	25	30	34
90	24	28	33	38
100	27	32	37	42
200	54	63	74	84
250	68	79	93	105
300	81	95	111	
400	108	126	148	
500	135	158	185	
600	162	189	222	
700	189	221	259	
800	216	252	296	
900	243	284	333	
1000	270	316	370	
1100	297	347	408	
1200	324	379	445	
1300	351	410	482	
1400	379	442	519	
1500	405	473	556	

NOTE: (1) Inches from reference datum.

SAMPLE

CHART - E
SHEET 10 of 33
MODEL - UH-60A
CHART DATE-SEE PAGE 1

Figure 4-6. Chart E (Sheet 10 of 33)

11/14/80

CARGO COMPARTMENT TABLE

	C	D	E	F
COMPARTMENT	FWD. CABIN	CENTER CABIN	AFT. CABIN	AFT. SECTION
CENTROID (1)	270.0	315.5	370.5	420.8
WEIGHT	MOMENT/1000			
1600	432	505	593	
1700	459	536	630	
1800	486	568	667	
1900	513	599	704	
2000	540	631	741	
2100	567	663	778	
2200	594	694	815	
2300	621	726	852	
2400	648	757	889	
2500	675	789	926	
2600	702	820	963	
2700	729	852	1000	
2800	756	883	1037	
2900	783	915	1074	
3000	810	947	1112	
3100	837	978	1149	
3200	864	1010	1186	
3300	891	1041	1223	
3400	918	1073	1260	
3500	945	1104	1297	
3600	972	1136	1334	
3700	999	1167	1371	
3800	1026	1199	1408	
3900	1053	1230	1445	
4000	1080	1262	1482	

SAMPLE

CHART - E
SHEET 11 of 33
MODEL - UH-60A
CHART DATE-SEE PAGE 1

Figure 4-6. Chart E (Sheet 11 of 33)

11/14/80

CARGO COMPARTMENT TABLE

	C	D	E	F
COMPARTMENT	FWD. CABIN	CENTER CABIN	AFT CABIN	AFT SECTION
CENTROID (1)	270.0	315.5	370.5	420.8
WEIGHT	MOMENT/1000			
4100	1107	1294	1519	
4200	1134	1325	1556	
4300	1161	1357	1593	
4400	1188	1388	1630	
4500	1215	1420	1667	
4600	1242	1451	1704	
4700	1269	1483	1741	
4800	1296	1514	1778	
4900	1323	1546	1815	
5000	1350	1578	1853	
5100	1377	1609	1890	
5200	1404	1641	1927	
5300	1431	1672	1964	
5400	1458	1704	2001	
5460	1474	1723	2023	
5500		1735	2038	
5600		1767	2075	
5700		1798	2112	
5800		1830	2149	
5900		1861	2186	
6000		1893	2223	
6100		1925	2260	
6200		1956	2297	
6300		1988	2334	
6400		2019	2371	
6500		2051	2408	
6600		2082	2445	
6700		2114	2482	
6800		2145	2519	
6900		2177	2556	

CHART - E
SHEET 12 of 33
MODEL - UH-60A
CHART DATE-SEE PAGE 1

SAMPLE

Figure 4-6. Chart E (Sheet 12 of 33)

11/14/80

SAMPLE

CARGO COMPARTMENT TABLE

	C	D	E	F
COMPARTMENT	FWD. CABIN	CENTER CABIN	AFT. CABIN	AFT. SECTION
CENTROID (1)	270.0	315.5	370.5	420.8
WEIGHT	MOMENT/1000			
7000		2209	2594	
7100		2240	2631	
7200		2272	2668	
7300		2303	2705	
7400		2335	2742	
7500		2366	2779	
7600		2398	2816	
7700		2429	2853	
7800		2461	2890	
7900		2492	2927	
8000		2524	2964	
8100		2556	3001	
8200		2587	3038	
8300		2619	3075	
8370		2641	3101	

CHART - E
SHEET 13 of 33
MODEL - UH-60A
CHART DATE-SEE PAGE 1

Figure 4-6. Chart E (Sheet 13 of 33)

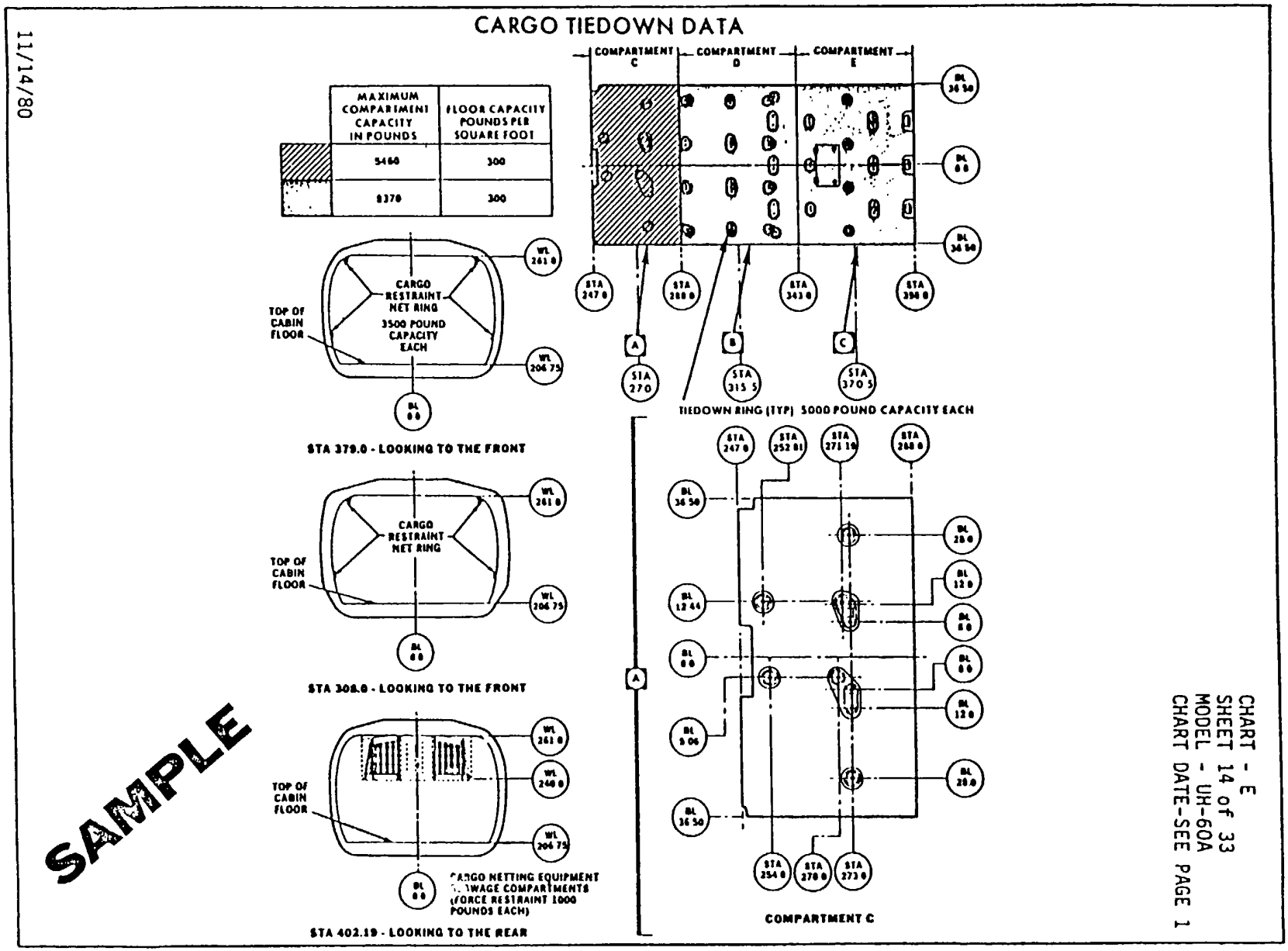

Figure 4-6. Chart E (Sheet 14 of 33)

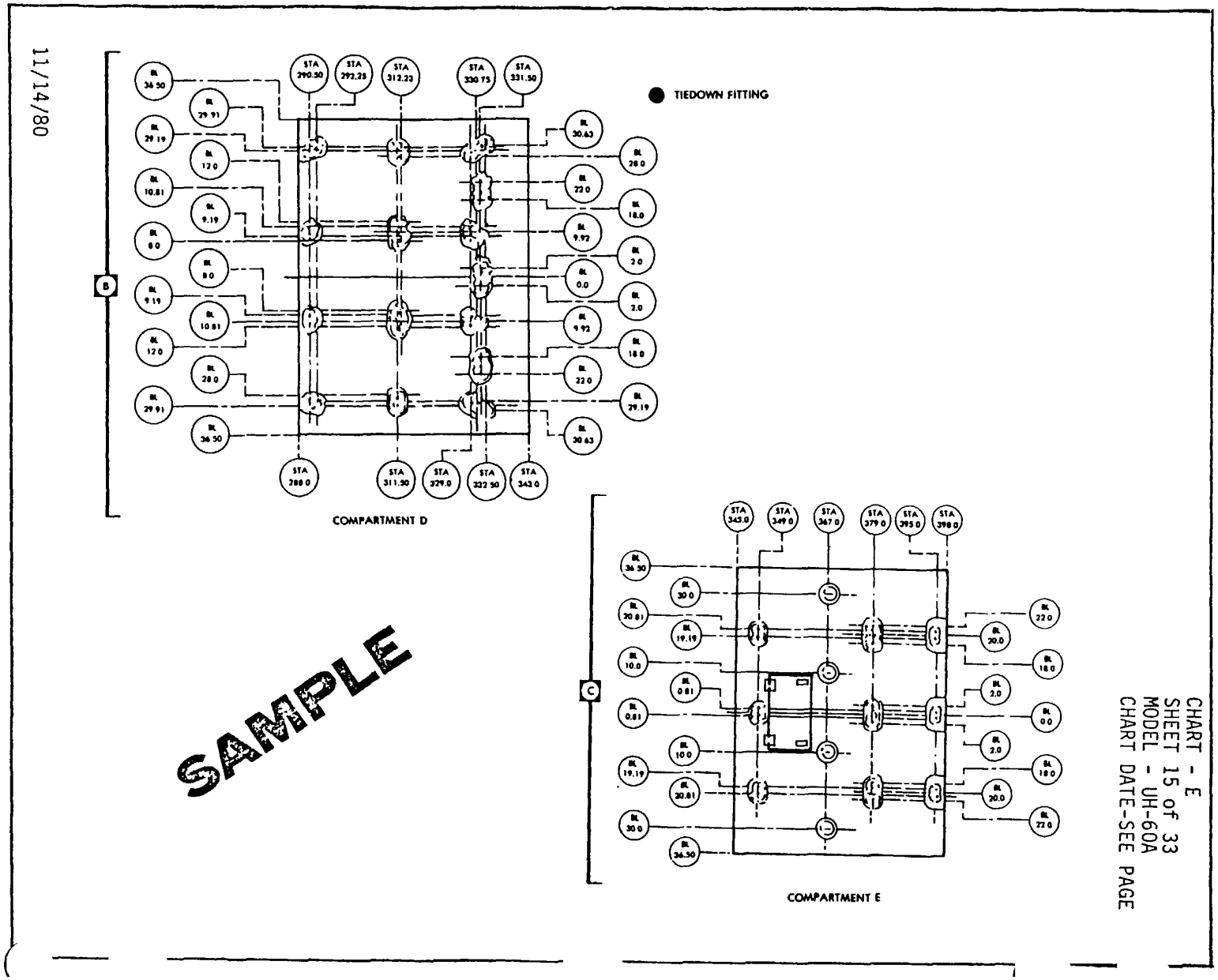

Figure 4-6. Chart E (Sheet 15 of 33)

11/14/80

PERSONNEL DATA - CREW/TROOPS

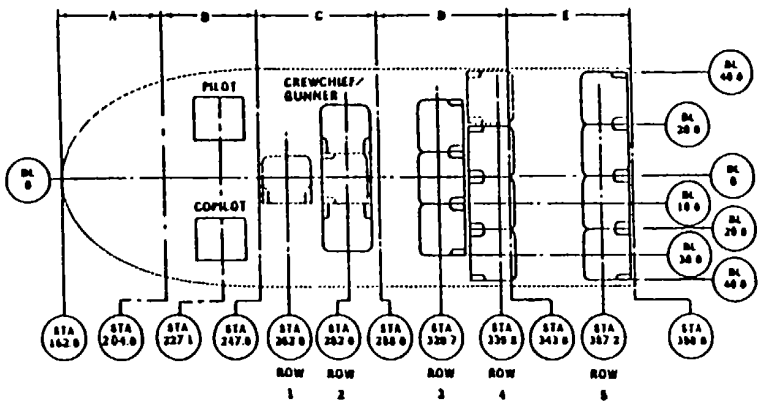

PERSONNEL WEIGHTS AND MOMENTS

PERSONNEL	PILOT OR COPILOT	ROW 1	ROW 2	ROW 3	ROW 4	ROW 5
COMPARTMENT ARM (1)	B 227.1	C 262.0	C 282.0	D 320.7	D 339.8	E 387.2
WEIGHT (2) (POUNDS)	MOMENT/1000 (3)					
180	41	47	51	58	61	70
185	42	48	52	59	63	72
190	43	50	54	61	66	74
200	45	52	56	64	68	77
210	48	55	59	67	71	81
220	50	58	62	71	75	85
230	52	60	65	74	78	89
235	53	62	66	75	80	91
240	55	63	68	77	82	93
250	57	66	71	80	85	97
255	58	67	72	82	87	99

NOTE: (1) ARMS shown are in inches from reference datum.

(2) Weights used should include personnel equipment such as clothing, helmet, first aid packet, exposure suit, weapon, holster, ammunition, knife, and armor vest.

(3) Moments shown are per man.

POSITIONED SEAT TABLE

Item	Row	Weight	MOM/1000
Gunner/Crew Chief(2)	2	43	12
Troops (3)	3	48	15
Troops (3)	4	48	16
Troops (4)	5	63	25
TOTAL - 12 SEATS		202	68
Alternate Seat (Broken Lines)	1	16	4
Alternate Seat (Broken Lines)	2	16	5
Alternate Seat (Broken Lines)	4	16	6
TOTAL - 15 SEATS		250	83

SAMPLE

CHART - E
SHEET 16 of 33
MODEL - UH-60A
CHART DATE-SEE PAGE 1

Figure 4-6. Chart E (Sheet 16 of 33)

12/2/82

PERSONNEL DATA - LITTER PATIENTS

PERSONNEL WEIGHTS AND MOMENTS			
PERSONNEL	PILOT OR COPILOT	ROW 6	ROW 7
COMPARTMENT ARM (1)	B 227.1	C 270.8	D/E 343.6
WEIGHT (2) (LB.)	MOMENT/1000 (3)		
180	41	49	62
185	42	50	64
190	43	51	65
200	45	54	69
210	48	57	72
220	50	60	76
230	52	62	79
235	53	64	81
240	55	65	82
250	57	68	86
255	58	69	88
260	59	70	89
265	60	72	91

NOTE: (1) ARMS shown are in inches from references datum.

(2) Weight used should include personnel equipment. Litter weight to include 25 pounds for litter, splints, and blankets.

(3) Moments shown are per man.

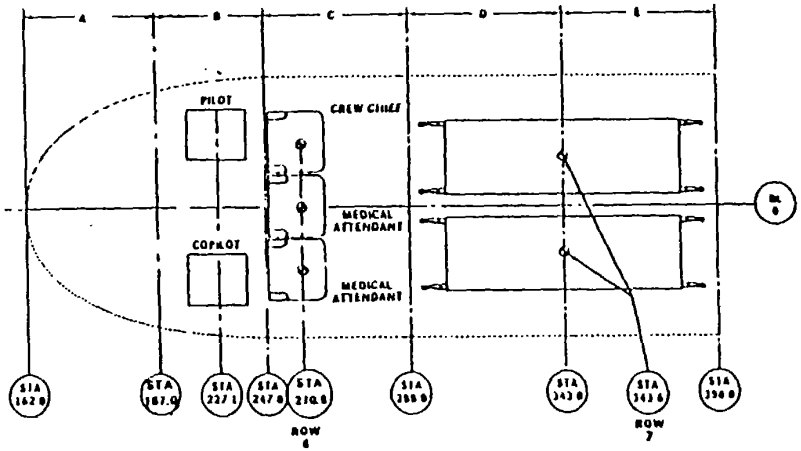

SAMPLE

CHART - E
SHEET 17 of 33
MODEL - UH-60A
CHART DATE - SEE PAGE 1

Figure 4-6. Chart E (Sheet 17 of 33)

12/2/82

STOWAGE COMPARTMENT DATA

STOWED SEAT TABLE

Item	Row	Weight	MON/1000
Gunner/Crew Chief (2)	2	43	18
Troops (3)	3	48	20
Troops (3)	4	48	20
Troops (4)	5	63	27
TOTAL - 12 SEATS		202	85
Alternate (1)	1	16	7
Alternate (1)	2	16	7
Alternate (1)	4	16	7
TOTAL - 15 SEATS		250	106

NOTE: See Page 16 of 33 for Row Designation.

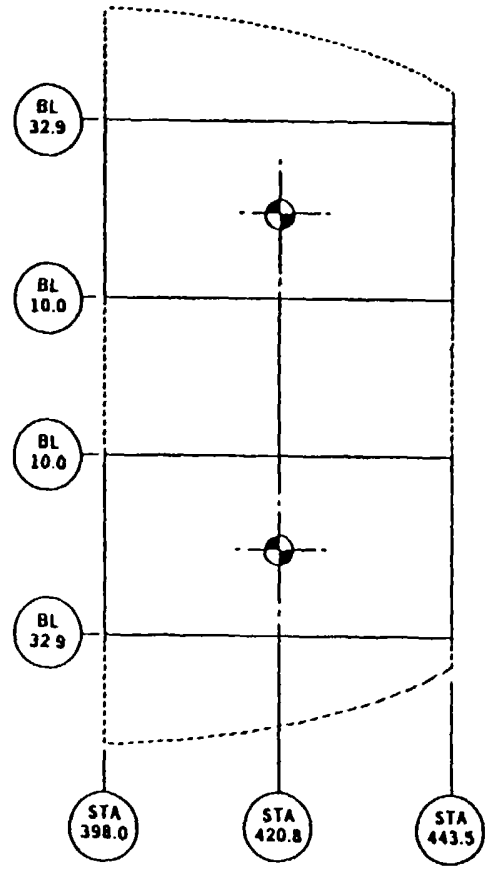

CHART - E
SHEET 18 of 33
MODEL - UH-60A
CHART DATE-SEE PAGE 1

SAMPLE

Figure 4-6. Chart E (Sheet 18 of 33)

12/2/82

TABLE OF MOMENTS FOR PERSONNEL MOVEMENT
FOR TROOP ASSAULT AND MEDEVAC MISSIONS
180 POUNDS PER PASSENGER

COMPARTMENT	B	C	C	D	D	E	C	D/E
ROW	PILOT OR COPILOT	ROW 1	ROW 2	ROW 3	ROW 4	ROW 5	ROW 6 (MEDEVAC)	ROW 7 (LITTERS)
ARM (INCHES)	227.1	262.0	282.0	320.7	339.8	387.2	270.8	343.6
MOMENT/1000 FOR ONE 180 LB. MAN	41	47	51	58	61	70	49	62
ROW	CHANGE IN MOMENT/1000							
ROW 7 (LITTERS)	21						13	
ROW 6 (MEDEVAC)	8							
ROW 5	29	23	19	12	9			
ROW 4	20	14	10	3				
ROW 3	17	11	7					
ROW 2	10	4						
ROW 1	6							

SAMPLE

NOTE: Add Moment change, plus (+) sign, for passenger movement Aft.
Subtract moment change, minus (-) sign, for movement forward.

Example 1 - Passenger moves from Row 1 to Row 5:
Intersect column "Row 1" with line "Row 5" and read change in Moment/1000 of 23. (Use plus (+) sign since this is a movement aft).

Example 2 - Passenger moves from Row 4 to Row 3:
Intersect line "Row 4" with column "Row 3" and read change in Moment/1000 of 3. (Use minus (-) sign since this is a movement forward).

CHART - E
SHEET 19 of 33
MODEL - UH-60A
CHART DATE-SEE PAGE 1

Figure 4-6. Chart E (Sheet 19 of 33)

12/2/82

TABLE OF MOMENTS FOR PERSONNEL MOVEMENT
FOR TROOP ASSAULT AND MEDEVAC MISSIONS
200 POUNDS PER PASSENGER

COMPARTMENT	B	C	C	D	D	E	C	D/E
ROW	PILOT OR COPILOT	ROW 1	ROW 2	ROW 3	ROW 4	ROW 5	ROW 6 (MEDEVAC)	ROW 7 (LITTERS)
ARM (INCHES)	227.1	262.0	282.0	320.7	339.8	387.2	270.8	343.6
MOMENT/1000 FOR ONE 200 LB. MAN	45	52	56	64	68	77	54	69
ROW	CHANGE IN MOMENT/1000							
ROW 7 (LITTERS)	24						15	
ROW 6 (MEDEVAC)	9							
ROW 5	32	25	21	13	9			
ROW 4	23	16	12	4				
ROW 3	19	12	8					
ROW 2	11	4						
ROW 1	7							

SAMPLE

NOTE: Add moment change, plus (+) sign, for passenger movement Aft.
Subtract moment change, minus(-) sign, for movement forward.

Example 1 - Passenger moves from Row 1 to Row 5:
Intersect column "Row 1" with line "Row 5" and read change in Moment/1000 of 25. (Use plus (+) sign since this is a movement aft.)

Example 2 - Passenger moves from Row 4 to Row 3:
Intersect line "Row 4" with column "Row 3" and read change in Moment/1000 of 4. (Use minus (-) sign since this is a movement forward.)

CHART - E
SHEET 20 of 33
MODEL - UH-60A
CHART DATE - SEE PAGE 1

Figure 4-6. Chart E (Sheet 20 of 33)

12/2/82

TABLE OF MOMENTS FOR PERSONNEL MOVEMENT
FOR TROOP ASSAULT AND MEDEVAC MISSIONS
220 POUNDS PER PASSEMGER

COMPARTMENT	B	C	C	D	D	E	C	D/E
ROW	PILOT OR COPILOT	ROW 1	ROW 2	ROW 3	ROW 4	ROW 5	ROW 6 (MEDEVAC)	ROW 7 (LITTERS)
ARM (INCHES)	227.1	262.0	282.0	320.7	339.8	387.2	270.8	343.6
MOMENT/1000 FOR ONE 220 LB. MAN	50	58	62	71	75	85	60	76
ROW	CHANGE IN MOMENT/1000							
ROW 7 (LITTERS)	26						16	
ROW 6 (MEDEVAC)	10							
ROW 5	35	27	23	14	10			
ROW 4	25	17	13	4				
ROW 3	21	13	9					
ROW 2	12	4						
ROW 1	8							

SAMPLE

NOTE: Add moment change, plus (+) sign, for passenger movement Aft.
Subtract moment change, minus (-) sign, for movement forward.

Example 1 - Passenger moves from Row 1 to Row 5:
Intersect column "Row 1" with line "Row 5" and read change in Moment/1000 of 27. (Use plus (+) sign since this is a movement aft.)

Example 2 - Passenger moves from Row 4 to Row 3:
Intersect line "Row 4" with column "Row 3" and read change in Moment/1000 of 4. (Use minus (-) sign since this is a movement forward.)

CHART - E
SHEET 21 of 33
MODEL - UH-60A
CHART DATE - SEE PAGE 1

Figure 4-6. Chart E (Sheet 21 of 33)

12/2/82

TABLE OF MOMENTS FOR PERSONNEL MOVEMENT
FOR TROOP ASSAULT AND MEDEVAC MISSIONS

240 POUNDS PER PASSENGER

COMPARTMENT	B	C	C	D	D	E	C	D/E
ROW	PILOT OR COPILOT	ROW 1	ROW 2	ROW 3	ROW 4	ROW 5	ROW 6 (MEDEVAC)	ROW 7 (LITTERS)
ARM (INCHES)	227.1	262.0	282.0	320.7	339.8	387.2	270.8	343.6
MOMENT/1000 FOR ONE 240 LB. MAN	55	63	68	77	82	93	65	82
ROW	CHANGE IN MOMENT/1000							
ROW 7 (LITTERS)	27						17	
ROW 6 (MEDEVAC)	10							
ROW 5	38	30	25	16	11			
ROW 4	27	19	14	5				
ROW 3	22	14	9					
ROW 2	13	5						
ROW 1	8							

SAMPLE

NOTE: Add moment change, plus (+) sign, for passenger movement Aft.
Subtract moment change, minus (-) sign, for movement forward.

Example 1 - Passenger moves from Row 1 to Row 5:
Intersect column "Row 1" with line "Row 5" and read change in Moment/1000 of 30. (Use plus (+) sign since this is a movement aft.)

Example 2 - Passenger moves from Row 4 to Row 3:
Intersect line "Row 4" with column "Row 3" and read change in Moment/1000 of 5. (Use minus (-) sign since this is a movement forward.)

CHART - E
SHEET 22 of 33
MODEL - UH-60A
CHART DATE - SEE PAGE 1

Figure 4-6. Chart E (Sheet 22 of 33)

11/14/80

SAMPLE

MISCELLANEOUS EQUIPMENT DATA

CARGO HOOK LOAD

ARM = 353.0 (1)

WEIGHT LBS	MOMENT / 1000	WEIGHT LBS	MOMENT / 1000	WEIGHT LBS	MOMENT / 1000
5	2	1200	424	5200	1836
10	4	1400	494	5400	1906
20	7	1600	565	5600	1977
30	11	1800	635	5800	2047
40	14	2000	706	6000	2118
50	18	2200	777	6200	2189
60	21	2400	847	6400	2259
70	25	2600	918	6600	2330
80	28	2800	988	6800	2400
90	32	3000	1059	7000	2471
100	35	3200	1130	7200	2542
200	71	3400	1200	7400	2612
300	106	3600	1271	7600	2683
400	141	3800	1341	7800	2753
500	176	4000	1412	8000	2824
600	212	4200	1483		
700	247	4400	1553		
800	282	4600	1624		
900	318	4800	1694		
1000	353	5000	1765		

NOTE: (1) Inches from reference datum.

CHART - E
SHEET 23 of 33
MODEL - UH-60A
CHART DATE-SEE PAGE 1

Figure 4-6. Chart E (Sheet 23 of 33)

11/14/80

MISCELLANEOUS EQUIPMENT DATA

RESCUE HOIST LOAD

ARM = 367.5 (1)

WEIGHT LBS	MOMENT 1000		WEIGHT LBS	MOMENT 1000
5	2		300	110
10	4		320	118
20	7		340	125
30	11		360	132
40	15		380	140
50	18		400	147
60	22		420	154
70	26		440	162
80	29		460	169
90	33		480	176
100	37		500	184
120	44		520	191
140	51		540	198
160	59		560	206
180	66		580	213
200	74		600	221
220	81			
240	88			
260	96			
280	103			

NOTE: (1) Inches from reference datum.

SAMPLE

CHART - E
SHEET 24 of 33
MODEL - UH-60A
CHART DATE-SEE PAGE 1

Figure 4-6. Chart E (Sheet 24 of 33)

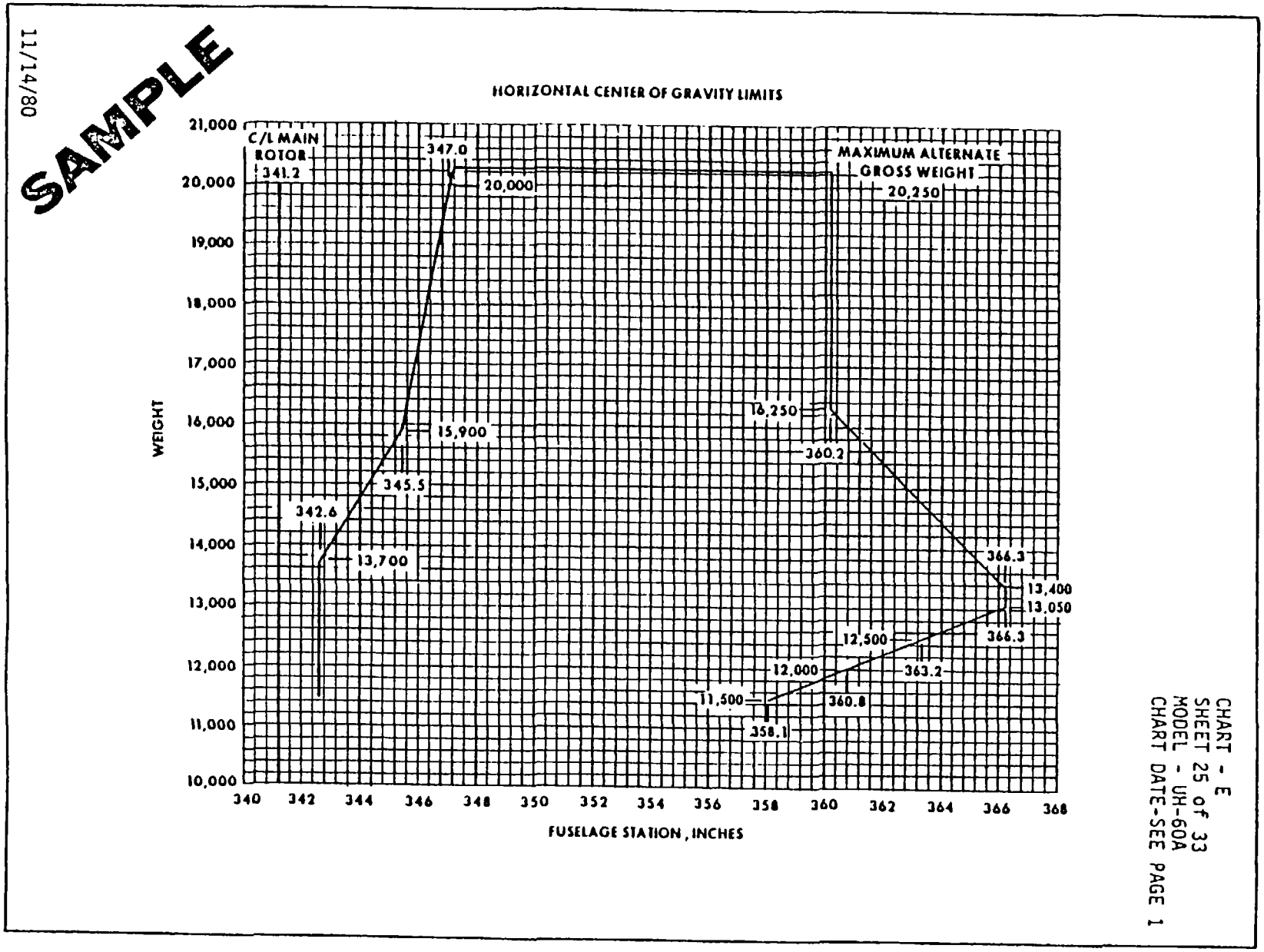

Figure 4-6. Chart E (Sheet 25 of 33)

CHART - E
SHEET 26 of 33
MODEL - UH-60A
CHART DATE-SEE PAGE 1

CENTER OF GRAVITY TABLE

GROSS WEIGHT (POUNDS)	FORWARD LIMIT (SEE NOTE)	FUSELAGE STATION										AFT LIMITS (SEE NOTE)
		344	346	348	350	352	354	356	358	360	362	
MOMENT/1000												
11500	3940	3956	3979	4002	4025	4048	4071	4094				4118
11550	3957	3973	3996	4019	4043	4066	4089	4112				4137
11600	3974	3990	4014	4037	4060	4083	4106	4130				4160
11650	3991	4008	4031	4054	4078	4101	4124	4147				4181
11700	4008	4025	4048	4072	4095	4118	4142	4165	4189			4200
11750	4026	4042	4066	4009	4113	4136	4160	4183	4207			4221
11800	4043	4059	4083	4106	4130	4154	4177	4201	4224			4243
11850	4060	4076	4100	4124	4148	4171	4195	4219	4242			4266
11900	4077	4094	4117	4141	4165	4189	4213	4236	4260			4288
11950	4094	4111	4135	4159	4183	4206	4230	4254	4278			4309
12000	4111	4128	4152	4176	4200	4224	4248	4272	4296			4330
12050	4128	4145	4169	4193	4218	4242	4266	4290	4314	4338		4350
12100	4145	4162	4187	4211	4235	4259	4283	4308	4332	4356		4371
12150	4163	4180	4204	4228	4253	4277	4301	4325	4350	4374		4392
12200	4180	4197	4221	4246	4270	4294	4319	4343	4368	4392		4409
12250	4197	4214	4239	4263	4288	4312	4337	4361	4386	4410		4435
12300	4214	4231	4256	4280	4305	4330	4354	4379	4403	4428		4458
12350	4231	4248	4273	4298	4323	4347	4372	4397	4421	4446		4478
12400	4248	4266	4290	4315	4340	4365	4390	4414	4439	4464		4499
12450	4265	4283	4308	4333	4358	4382	4407	4432	4457	4482		4518
12500	4283	4300	4325	4350	4375	4400	4425	4450	4475	4500	4525	4540
12550	4300	4317	4342	4367	4393	4418	4443	4468	4493	4518	4543	4563
12600	4317	4334	4360	4385	4410	4435	4460	4486	4511	4536	4561	4584

NOTE: FORWARD AND AFT LIMITS
SEE PAGE 25 OF 33 FOR FUSELAGE STATIONS

SAMPLE

12/2/82

Figure 4-6. Chart E (Sheet 26 of 33)

SAMPLE

CHART - E
SHEET 27 of 33
MODEL - UH-60A
CHART DATE-SEE PAGE 1

CENTER OF GRAVITY TABLE

GROSS WEIGHT (POUNDS)	FORWARD LIMIT (SEE NOTE)	FUSELAGE STATION										AFT LIMITS (SEE NOTE)
		344	346	348	350	352	354	356	358	360	362	
		MOMENT/1000										
12650	4334	4352	4377	4402	4428	4453	4478	4503	4529	4554	4579	4604
12700	4351	4369	4394	4420	4445	4470	4496	4521	4547	4572	4597	4625
12750	4368	4386	4412	4437	4463	4488	4514	4539	4565	4590	4616	4649
12800	4385	4403	4429	4454	4480	4506	4531	4557	4582	4608	4634	4672
12850	4402	4420	4446	4472	4498	4523	4549	4575	4600	4626	4652	4693
12900	4420	4438	4463	4489	4515	4541	4567	4592	4618	4644	4670	4716
12950	4437	4455	4481	4507	4533	4558	4584	4610	4636	4662	4688	4736
13000	4454	4472	4498	4524	4550	4576	4602	4628	4654	4680	4706	4759
13050	4471	4489	4515	4541	4568	4594	4620	4646	4672	4698	4724	4780
13100	4488	4506	4533	4559	4585	4611	4637	4664	4690	4716	4742	4799
13150	4505	4524	4550	4576	4603	4629	4655	4681	4708	4734	4760	4817
13200	4522	4541	4567	4594	4620	4646	4673	4699	4726	4752	4778	4835
13250	4539	4558	4585	4611	4638	4664	4691	4717	4744	4770	4797	4853
13300	4557	4575	4602	4628	4655	4682	4708	4735	4761	4788	4815	4872
13350	4574	4592	4619	4646	4673	4699	4726	4753	4779	4806	4833	4890
13400	4591	4610	4636	4663	4690	4717	4744	4770	4797	4824	4851	4908
13450	4608	4627	4654	4681	4707	4734	4761	4788	4815	4842	4869	4925
13500	4625	4644	4671	4698	4725	4752	4779	4806	4833	4860	4887	4942
13550	4642	4661	4688	4715	4743	4770	4797	4824	4851	4878	4905	4959
13600	4659	4678	4706	4733	4760	4787	4814	4842	4869	4896	4923	4976
13650	4676	4696	4723	4750	4778	4805	4832	4859	4887	4914	4941	4992
13700	4694	4713	4740	4768	4795	4822	4850	4877	4905	4932	4959	5009
13750	4712	4730	4758	4785	4813	4840	4868	4895	4923	4950	4978	5027
13800	4730	4747	4775	4802	4830	4858	4885	4913	4940	4958	4996	5042
13850	4748	4764	4792	4820	4848	4875	4903	4931	4958	4986	5014	5061
13900	4766	4782	4809	4837	4865	4893	4921	4948	4976	5007	5032	5076
13950	4784	4799	4827	4855	4883	4910	4938	4966	4994	5022	5050	5092
14000	4802	4816	4844	4872	4900	4928	4956	4984	5012	5040	5068	5109
14050	4820	4833	4861	4889	4918	4946	4974	5002	5030	5058	5086	5126
14100	4838	4850	4879	4907	4935	4963	4991	5020	5048	5076	5104	5143
14150	4856	4868	4896	4924	4953	4981	5009	5037	5066	5094	5122	5160
14200	4874	4885	4913	4942	4970	4998	5027	5055	5084	5112	5140	5176
14250	4892	4902	4931	4959	4988	5016	5045	5073	5102	5130	5159	5193
14300	4910	4919	4948	4976	5005	5034	5062	5091	5119	5148	5177	5210
14350	4929	4936	4965	4994	5023	5051	5080	5109	5137	5166	5195	5226
14400	4947	4954	4982	5011	5040	5069	5098	5126	5155	5184	5213	5243
14450	4965	4971	5000	5029	5058	5086	5115	5144	5173	5202	5231	5260
14500	4983	4988	5017	5046	5075	5104	5133	5162	5191	5220	5249	5276
14550	5001	5005	5034	5063	5093	5122	5151	5180	5209	5238	5267	5293
14600	5019	5022	5052	5081	5110	5139	5168	5198	5227	5256	5285	5310
14650	5037	5040	5069	5098	5128	5157	5186	5215	5245	5274	5303	5326
14700	5056	5057	5086	5116	5145	5174	5204	5233	5263	5292	5321	5343
14750	5074	5074	5104	5133	5163	5192	5222	5251	5281	5310		5360
14800	5091	5091	5121	5150	5180	5210	5239	5269	5298	5328		5376
14850	5110		5138	5168	5198	5227	5257	5287	5316	5346		5393
14900	5128		5155	5185	5215	5245	5275	5304	5334	5364		5409
14950	5147		5173	5203	5233	5262	5292	5322	5352	5382		5426
15000	5165		5190	5220	5250	5280	5310	5340	5370	5400		5443
15050	5183		5207	5237	5268	5298	5328	5358	5388	5418		5459
15100	5201		5225	5255	5285	5315	5345	5376	5406	5436		5476
15150	5219		5242	5272	5303	5333	5363	5393	5424	5454		5492
15200	5238		5259	5290	5320	5350	5381	5411	5442	5472		5509
15250	5256		5277	5307	5338	5368	5399	5429	5460	5490		5525
15300	5274		5294	5324	5355	5386	5416	5447	5477	5508		5542

NOTE. FORWARD AND AFT LIMITS
SEE PAGE 25 OF 33 FOR FUSELAGE STATIONS

12/2/82

Figure 4-6. Chart E (Sheet 27 of 33)

CHART - E
SHEET 28 of 33
MODEL - UH-60A
CHART DATE-SEE PAGE 1

SAMPLE

CENTER OF GRAVITY TABLE

GROSS WEIGHT (POUNDS)	FORWARD LIMIT (SEE NOTE)	FUSELAGE STATION										AFT LIMITS (SEE NOTE)
		344	346	348	350	352	354	356	358	360	362	
MOMENT/1000												
15350	5292		5311	5342	5373	5403	5434	5465	5495	5526		5558
15400	5310		5328	5359	5390	5421	5452	5482	5513	5544		5575
15450	5329		5346	5377	5408	5438	5469	5500	5531	5562		5591
15500	5347		5363	5394	5425	5456	5487	5518	5549	5580		5608
15550	5365		5380	5411	5443	5474	5505	5536	5567	5598		5624
15600	5384		5398	5429	5460	5491	5522	5554	5585	5616		5641
15650	5402		5415	5446	5478	5509	5540	5571	5603	5634		5657
15700	5420		5432	5464	5495	5526	5558	5589	5621	5652		5673
15750	5438		5450	5481	5513	5544	5576	5607	5639	5670		5690
15800	5457		5467	5498	5530	5562	5593	5625	5656	5688		5706
15850	5475		5484	5516	5548	5579	5611	5643	5674	5706		5723
15900	5493		5501	5533	5565	5597	5629	5660	5692	5724		5739
15950	5511		5519	5551	5583	5614	5646	5678	5710	5742		5755
16000	5529		5536	5568	5600	5622	5664	5696	5728	5760		5772
16050	5546		5553	5585	5618	5650	5682	5714	5746	5778		5788
16100	5564		5571	5603	5635	5667	5699	5732	5764	5796		5804
16150	5581		5588	5620	5653	5685	5717	5749	5782	5814		5821
16200	5599		5605	5638	5670	5702	5735	5767	5800	5832		5837
16250	5617		5623	5655	5688	5720	5753	5785	5818	5850		5853
16300	5634		5640	5672	5705	5738	5770	5803	5835	5868		5871
16350	5652		5657	5690	5723	5755	5750	5821	5853	5886		5889
16400	5669		5674	5707	5740	5773	5806	5838	5871	5904		5907
16450	5687		5692	5725	5758	5790	5823	5856	5889	5922		5925
16500	5704		5709	5742	5775	5808	5841	5874	5907	5940		5943
16550	5722		5726	5759	5793	5826	5859	5892	5925	5958		5961
16600	5740		5744	5777	5810	5843	5876	5910	5943	5976		5979
16650	5757		5761	5794	5828	5861	5894	5927	5961	5994		5997
16700	5775		5778	5812	5845	5878	5912	5945	5979	6012		6015
16750	5792		5796	5829	5863	5896	5930	5963	5997	6030		6033
16800	5810		5813	5846	5880	5914	5947	5981	6014	6048		6051
16850	5828		5830	5864	5898	5931	5965	[illegible]	6032	6066		6069
16900	5845		5847	5881	5915	5949	5983	6016	6050	6084		6087
16950	5863		5865	5899	5933	5966	6000	6034	6068	6102		6105
17000	5880		5882	5916	5950	5984	6018	6052	6086	6120		6123
17050	5898		5899	5933	5968	6002	6036	6070	6104	6138		6141
17100	5916		5917	5951	5985	6019	6053	6088	6122	6156		6159
17150	5933		5934	5968	6003	6037	6071	6105	6140	6174		6177
17200	5951		5951	5986	6020	6054	6089	6123	6158	6192		6195
17250	5968		5969	6003	6038	6072	6107	6141	6176	6210		6213
17300	5986			6020	6055	6090	6124	6159	6193	6228		6231
17350	6004			6038	6073	6107	6142	6177	6211	6246		6249
17400	6021			6055	6090	6125	6160	6194	6229	6264		6267
17450	6039			6073	6108	6142	6177	6212	6247	6282		6285
17500	6057			6090	6125	6160	6195	6230	6265	6300		6304
17550	6074			6107	6143	6178	6213	6248	6283	6318		6322
17600	6092			6125	6160	6195	6230	6266	6301	6335		6340
17650	6109			6142	6178	6213	6248	6283	6319	6353		6358
17700	6127			6160	6195	6230	6266	6301	6337	6372		6376
17750	6145			6177	6213	6248	6284	6319	6355	6390		6394
17800	6162			6194	6230	6266	6301	6337	6372	6408		6412

NOTE: FORWARD AND AFT LIMITS
SEE PAGE 25 OF 33 FOR FUSELAGE STATIONS

12/2/82

Figure 4-6. Chart E (Sheet 28 of 33)

CHART - E
SHEET 29 of 33
MODEL - UH-60A
CHART DATE-SEE PAGE 1

SAMPLE

CENTER OF GRAVITY TABLE

GROSS WEIGHT (POUNDS)	FORWARD LIMIT (SEE NOTE)	FUSELAGE STATION										AFT LIMITS (SEE NOTE)
		344	346	348	350	352	354	356	358	360	362	
MOMENT/1000												
17850	6180			6212	6248	6283	6319	6355	6390	6426		6430
17900	6198			6229	6265	6301	6337	6372	6408	6444		6448
17950	6215			6247	6283	6318	6354	6390	6426	6462		6466
18000	6233			6264	6300	6336	6372	6408	6444	6480		6484
18050	6251			6281	6318	6354	6390	6426	6462	6498		6502
18100	6268			6299	6335	6371	6407	6444	6480	6516		6520
18150	6286			6316	6353	6389	6425	6451	6498	6534		6538
18200	6303			6334	6370	6406	6443	6479	6516	6552		6556
18250	6321			6351	6388	6424	6461	6497	6534	6570		6574
18300	6339			6368	6405	6442	6478	6515	6551	6588		6592
18350	6356			6386	6423	6459	6496	6533	6569	6606		6610
18400	6374			6403	6440	6477	6514	6550	6587	6624		6628
18450	6392			6421	6458	6494	6531	6568	6605	6642		6646
18500	6409			6438	6475	6512	6549	6586	6623	6660		6664
18550	6427			6455	6493	6530	6567	6604	6641	6678		6682
18600	6445			6473	6510	6547	6584	6622	6659	6696		6700
18650	6462			6490	6528	6565	6602	6639	6677	6714		6718
18700	6480			6508	6545	6582	6620	6657	6695	6732		6736
18750	6498			6525	6563	6600	6638	6675	6713	6750		6754
18800	6515			6542	6580	6618	6655	6693	6730	6768		6772
18850	6533			6560	6598	6635	6673	6711	6748	6786		6790
18900	6551			6577	6615	6653	6691	6728	6766	6804		6808
18950	6568			6595	6633	6670	6708	6746	6784	6822		6826
19000	6586			6612	6650	6688	6726	6764	6802	6840		6844
19050	6604			6629	6668	6706	6744	6782	6820	5858		6862
19100	6621			6647	6685	6723	6761	6800	6838	6876		6880
19150	6639			6664	6703	6741	6779	6817	6856	6894		6898
19200	6657			6682	6720	6758	6797	6835	6874	6912		6916
19250	6674			6699	6738	6776	6815	6853	6892	6930		6934
19300	6692			6716	6755	6794	6832	6871	6909	6948		6952
19350	6710			6734	6773	6811	6850	6889	6927	6966		6970
19400	6728			6751	6790	6829	6868	6906	6945	6984		6988
19450	6745			6769	6808	6846	6885	6924	6963	7002		7006
19500	6763			6786	6825	6864	6903	6942	6981	7020		7024
19550	6781			6803	6843	6882	6921	6960	6999	7038		7042
19600	6798			6821	6860	6899	6938	6978	7017	7056		7060
19650	6816			6838	6878	6917	6956	6995	7035	7074		7078
19700	6834			6856	6895	6934	6974	7013	7053	7092		7096
19750	6851			6873	6913	6952	6992	7031	7071	7110		7114
19800	6869			6890	6930	6970	7009	7049	7088	7128		7132
19850	6887			6908	6948	6987	7027	7067	7106	7146		7150
19900	6905			6925	6965	7005	7046	7084	7124	7164		7168
19950	6922			6943	6983	7022	7062	7102	7142	7182		7186
20000	6940			6960	7000	7040	7080	7120	7160	7200		7204
20050	6958			6977	7018	7058	7098	7138	7178	7218		7222
20100	6975			6995	7035	7075	7115	7156	7196	7236		7240
20150	6993			7012	7053	7093	7133	7173	7214	7254		7258
20200	7011			7030	7070	7110	7151	7191	7232	7272		7276
20250	7029			7047	7088	7128	7169	7209	7250	7290		7294

NOTE: FORWARD AND AFT LIMITS
SEE PAGE 25 OF 33 FOR FUSELAGE STATIONS

GROSS WEIGHT LIMITATIONS

TAKE OFF Pounds*

LANDING Pounds*

*SERVICE ACTIVITIES SHALL INSERT, OR SUBSTITUTE, CURRENT FIGURES FROM THE LATEST APPLICABLE FLIGHT HANDBOOK

12/2/82

Figure 4-6. Chart E (Sheet 29 of 33)

11/14/80

MAXIMUM PACKAGE SIZE TABLE
CABIN DOORS

WIDTH INCHES	HEIGHT - INCHES				
	50 & UNDER	51	52		
	MAXIMUM LENGTH - INCHES				
46	102	102	102		
48	102	102	102		
50	101	101	101		
52	100	100	100		
54	99	99	99		
56	98	98	98		
58	97	97	97		
60	96	96	96		
62	93	93	93		
64	91	91	91		
66	86	86	86		
68	80	80	80		

NOTE

IF GUNNERS AREA NOT USED, LENGTHS ARE APPROXIMATELY 90% OF TABLE VALUES

SAMPLE

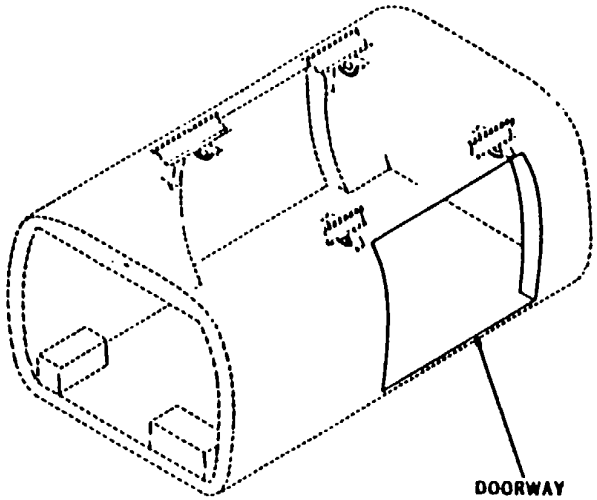

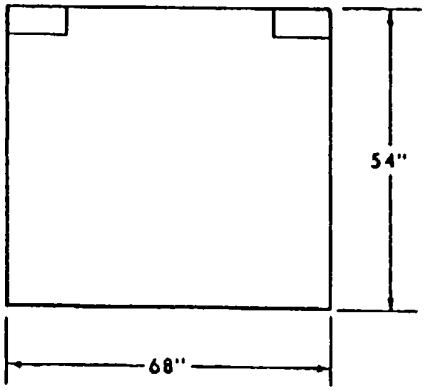

CABIN DOOR - BOTH SIDES

CHART - E
SHEET 30 of 33
MODEL - UH-60A
CHART DATE-SEE PAGE 1

Figure 4-6. Chart E (Sheet 30 of 33)

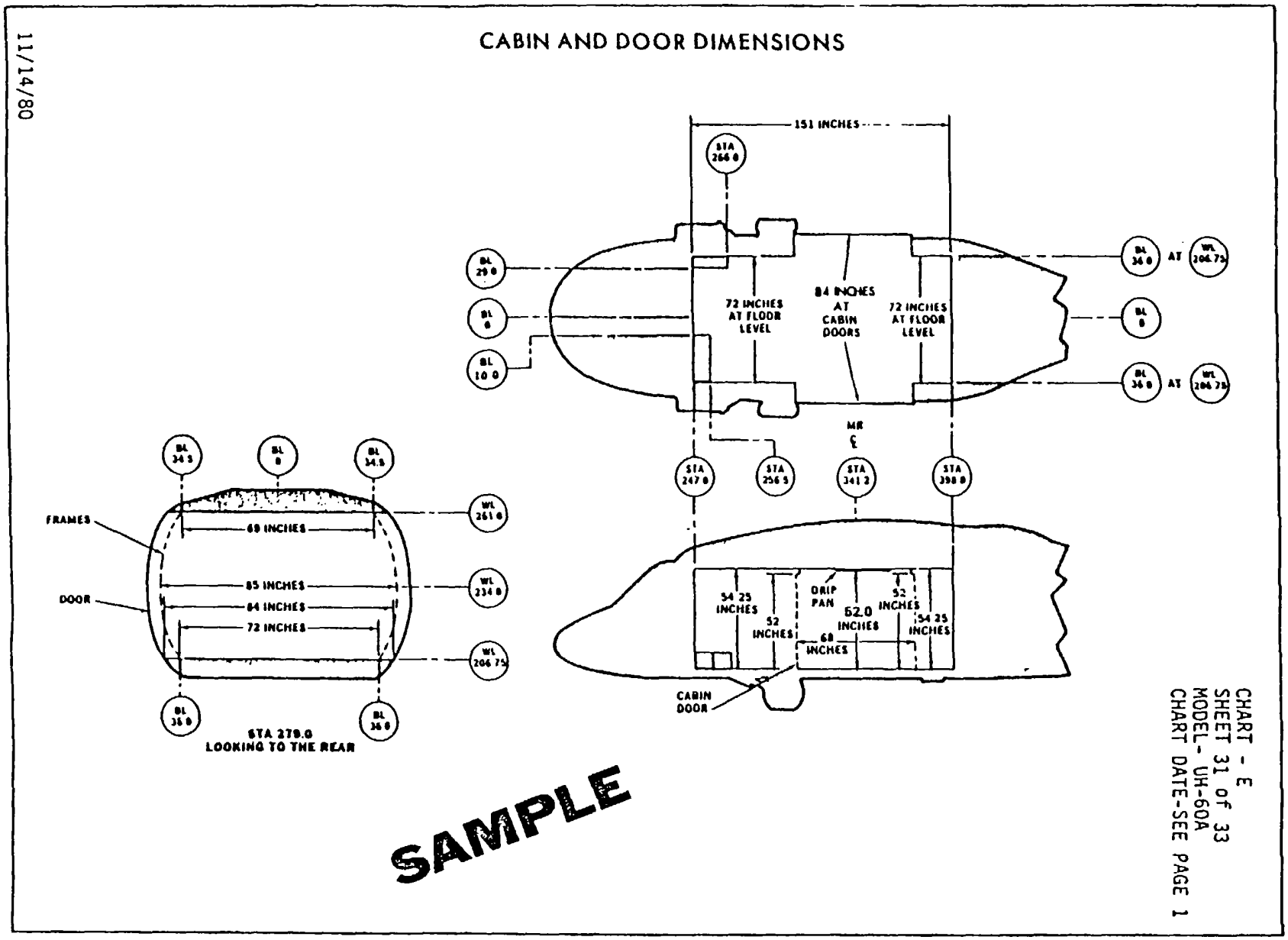

Figure 4-6. Chart E (Sheet 31 of 33)

11/14/80

MISCELLANEOUS DATA

GENERAL AIRCRAFT DIMENSIONS

MAIN ROTOR DIAMETER	53 FT. 8 IN.
TAIL ROTOR DIAMETER	11 FT. 0 IN.
LENGTH - MAXIMUM (ROTORS AND VERTICAL TAIL UNFOLDED)	64 FT. 10 IN.
- ROTORS AND VERTICAL TAIL FOLDED (AIR TRANSPORTABILITY)	41 FT. 4 IN.
- FUSELAGE	50 FT. .75 IN.
WIDTH - MAXIMUM - AT HORIZONTAL TAILS	14 FT. 4 IN.
- AT MAIN WHEELS (AIR TRANSPORTABILITY)	9 FT. 8.1 IN.
- FUSELAGE	7 FT. 9 IN.
HEIGHT - MAXIMUM - AT TAIL ROTOR (TAIL WHEEL STATIC POSITION)	16 FT. 10 IN.
- AT MAIN ROTOR STATION (MAIN WHEELS STATIC POSITION)	11 FT. 9 IN.
- FUSELAGE	5 FT. 9 IN.
- FOR AIR TRANSPORTABILITY	8 FT. 9.0 IN.
WHEEL BASE	28 FT. 11.75 IN.
MAIN LANDING GEAR TREAD	8 FT. 10.2 IN.

SAMPLE

CHART - E
SHEET 32 of 33
MODEL - UH-60A
CHART DATE-SEE PAGE 1

Figure 4-6. Chart E (Sheet 32 of 33)

12/2/82

TYPICAL SERVICE LOAD CONDITIONS

ITEM	ARM (NOTE 1)	TROOP ASSAULT MISSION		AEROMEDICAL EVACUATION MISSION		AERIAL RECOVERY MISSION		EXTENDED RANGE MISSION		CARGO MISSION		14 TROOP MISSION	
		WEIGHT LBS	MOMENT 1000	WEIGHT LBS	MOMENT 1000	WEIGHT LBS	MOMENT 1000	WEIGHT LBS	MOMENT 1000	WEIGHT LBS	MOMENT 1000	WEIGHT LBS	MOMENT 1000
PILOT	227.1	235	53	235	53	235	53	235	53	235	53	235	53
CO PILOT	227.1	235	53	235	53	235	53	235	53	235	53	235	53
CREW CHIEF/GUNNER	282.0	255	72	0	0	255	72	255	72	255	72	255	72
MEDICAL ATTENDANT (2)	270.8			400	108								
TROOPS (11)	346.6	2640	915										
TROOPS (14)	335.4											3360	1127
LITTER PATIENTS (4)	343.6			1060	364								
FUEL – INTERNAL	420.8	2064	868	2338	984	2338	984	2338	984	2338	984	2338	984
– AUXILIARY	322.4							4953	1597				
CARGO – INTERNAL	343.0									2797	959		
– CARGO HOOK	353.0					6479	2287						
GUNS	276.4	85	26	85	25							85	25
AMMUNITION (1100 ROUNDS)	256.1	72	18	72	18							72	18
ADD 3 TROOP SEATS	294.6											48	14
STOW TROOP SEATS (NOTE 2)				18 SEATS	11			12 SEATS	17	12 SEATS	17		
TOTALS		6686	2004	4425	1616	9542	3449	8016	2776	6860	2138	6628	2346

SAMPLE

NOTES

1 INCHES FROM REFERENCE DATUM.
2 STOW TROOP SEATS IN COMPARTMENT F, ABOVE FUEL CELLS.

CHART - E
SHEET 33 of 33
MODEL - UH-60A
CHART DATE-SEE PAGE 1

Figure 4-6. Chart E (Sheet 33 of 33)

By Order of the Secretary of the Army:

JOHN A. WICKHAM, JR.
General, United States Army
Chief of Staff

Official:

R. L. DILWORTH
Brigadier General, United States Army
The Adjutant General

DISTRIBUTION:
To be distributed in accordance with DA Form 12-31, AVUM and AVIM requirements for All Fixed and Rotary Wing Aircraft.

☆U.S. GOVERNMENT PRINTING OFFICE: 1994-342-421/81480

These are the instructions for sending an electronic 2028

The following format must be used if submitting an electronic 2028. The subject line must be exactly the same and all fields must be included; however only the following fields are mandatory: 1, 3, 4, 5, 6, 7, 8, 9, 10, 13, 15, 16, 17, and 27.

From: “Whomever” <whomever@wherever.army.mil>
To: 2028@redstone.army.mil

Subject: DA Form 2028

1. ***From:*** Joe Smith
2. *Unit:* home
3. ***Address:*** 4300 Park
4. ***City:*** Hometown
5. ***St:*** MO
6. ***Zip:*** 77777
7. ***Date Sent:*** 19–OCT–93
8. ***Pub no:*** 55–2840–229–23
9. ***Pub Title:*** TM
10. ***Publication Date:*** 04–JUL–85
11. *Change Number:* 7
12. *Submitter Rank:* MSG
13. ***Submitter FName:*** Joe
14. *Submitter MName:* T
15. ***Submitter LName:*** Smith
16. ***Submitter Phone:*** 123–123–1234
17. ***Problem:*** **1**
18. *Page:* 2
19. *Paragraph:* 3
20. *Line:* 4
21. *NSN:* 5
22. *Reference:* 6
23. *Figure:* 7
24. *Table:* 8
25. *Item:* 9
26. *Total:* 123
27. ***Text:***

This is the text for the problem below line 27.

RECOMMENDED CHANGES TO PUBLICATIONS AND BLANK FORMS For use of this form, see AR 25–30; the proponent agency is ODISC4.	Use Part II (*reverse)* for Repair Parts and Special Tool Lists (RPSTL) and Supply Catalogs/ Supply Manuals (SC/SM)	DATE 8/30/02

TO: (*Forward to proponent of publication or form)(Include ZIP Code)*	FROM: (*Activity and location)(Include ZIP Code)*
Commander, U.S. Army Aviation and Missile Command ATTN: AMSAM–MMC–MA–NP R eds t one A r s enal, AL 35898	MSG, Jane Q. Doe 1234 Any Street Nowhere Town, AL 34565

PART 1 – ALL PUBLICATIONS (EXCEPT RPSTL AND SC/SM) AND BLANK FORMS

PUBLICATION/FORM NUMBER	DATE	TITLE
TM 9–1005–433–24	16 Sep 2002	Organizational, Direct Support, And General Support Maintenance Manual for Machine Gun, .50 Caliber M3P and M3P Machine Gun Electrical Test Set Used On Avenger Air Defense Weapon System

ITEM NO.	PAGE NO.	PARA–GRAPH	LINE NO. *	FIGURE NO.	TABLE NO.	RECOMMENDED CHANGES AND REASON
1	WP0005 PG 3		2			Test or Corrective Action column should identify a different WP number.

** Reference to line numbers within the paragraph or subparagraph.*

TYPED NAME, GRADE OR TITLE	TELEPHONE EXCHANGE/ AUTOVON, PLUS EXTENSION	SIGNATURE
MSG, Jane Q. Doe, SFC	788–1234	

EXAMPLE

TO: (*Forward direct to addressee listed in publication*)	**FROM:** (*Activity and location*) (*Include ZIP Code*)	**DATE**
Commander, U.S. Army Aviation and Missile Command ATTN: AMSAM–MMC–MA–NP R eds t one A r s enal, AL 35898	MSG, Jane Q. Doe 1234 Any Street Nowhere Town, AL 34565	8/30/02

PART II – REPAIR PARTS AND SPECIAL TOOL LISTS AND SUPPLY CATALOGS/SUPPLY MANUALS

PUBLICATION NUMBER	DATE	TITLE

PAGE NO.	COLM NO.	LINE NO.	NATIONAL STOCK NUMBER	REFERENCE NO.	FIGURE NO.	ITEM NO.	TOTAL NO. OF MAJOR ITEMS SUPPORTED	RECOMMENDED ACTION

PART III – REMARKS (*Any general remarks or recommendations, or suggestions for improvement of publications and blank forms. Additional blank sheets may be used if more space is needed.*)

EXAMPLE

TYPED NAME, GRADE OR TITLE	TELEPHONE EXCHANGE/AUTOVON, PLUS EXTENSION	SIGNATURE
MSG, Jane Q. Doe, SFC	788–1234	

RECOMMENDED CHANGES TO PUBLICATIONS AND BLANK FORMS For use of this form, see AR 25-30; the proponent agency is ODISC4.	Use Part II (*reverse)* for Repair Parts and Special Tool Lists (RPSTL) and Supply Catalogs/ Supply Manuals (SC/SM)	DATE
TO: (*Forward to proponent of publication or form)(Include ZIP Code)* Commander, U.S. Army Aviation and Missile Command ATTN: AMSAM-MMC-MA-NP Redstone Arsenal, AL 35898	FROM: (*Activity and location)(Include ZIP Code)*	

PART 1 - ALL PUBLICATIONS (EXCEPT RPSTL AND SC/SM) AND BLANK FORMS

PUBLICATION/FORM NUMBER	DATE	TITLE
TM 55-1500-342-23	29 August 1986	Army Aviation Maintenance Engineering Manual Weight and Balance

ITEM NO.	PAGE NO.	PARA-GRAPH	LINE NO. *	FIGURE NO.	TABLE NO.	RECOMMENDED CHANGES AND REASON

** Reference to line numbers within the paragraph or subparagraph.*

TYPED NAME, GRADE OR TITLE	TELEPHONE EXCHANGE/ AUTOVON, PLUS EXTENSION	SIGNATURE

TO: (*Forward direct to addressee listed in publication*)	**FROM:** (*Activity and location*) (*Include ZIP Code*)	**DATE**
Commander, U.S. Army Aviation and Missile Command ATTN: AMSAM-MMC-MA-NP Redstone Arsenal, AL 35898		

PART II - REPAIR PARTS AND SPECIAL TOOL LISTS AND SUPPLY CATALOGS/SUPPLY MANUALS

PUBLICATION NUMBER	DATE	TITLE
TM 55-1500-342-23	29 August 1986	Army Aviation Maintenance Engineering Manual Weight and Balance

PAGE NO.	COLM NO.	LINE NO.	NATIONAL STOCK NUMBER	REFERENCE NO.	FIGURE NO.	ITEM NO.	TOTAL NO. OF MAJOR ITEMS SUPPORTED	RECOMMENDED ACTION

PART III - REMARKS (*Any general remarks or recommendations, or suggestions for improvement of publications and blank forms. Additional blank sheets may be used if more space is needed.*)

TYPED NAME, GRADE OR TITLE	TELEPHONE EXCHANGE/AUTOVON, PLUS EXTENSION	SIGNATURE

The Metric System and Equivalents

Linear Measure

1 centimeter = 10 millimeters = .39 inch
1 decimeter = 10 centimeters = 3.94 inches
1 meter = 10 decimeters = 39.37 inches
1 dekameter = 10 meters = 32.8 feet
1 hectometer = 10 dekameters = 328.08 feet
1 kilometer = 10 hectometers = 3,280.8 feet

Weights

1 centigram = 10 milligrams = .15 grain
1 decigram = 10 centigrams = 1.54 grains
1 gram = 10 decigram = .035 ounce
1 decagram = 10 grams = .35 ounce
1 hectogram = 10 decagrams = 3.52 ounces
1 kilogram = 10 hectograms = 2.2 pounds
1 quintal = 100 kilograms = 220.46 pounds
1 metric ton = 10 quintals = 1.1 short tons

Liquid Measure

1 centiliter = 10 milliters = .34 fl. ounce
1 deciliter = 10 centiliters = 3.38 fl. ounces
1 liter = 10 deciliters = 33.81 fl. ounces
1 dekaliter = 10 liters = 2.64 gallons
1 hectoliter = 10 dekaliters = 26.42 gallons
1 kiloliter = 10 hectoliters = 264.18 gallons

Square Measure

1 sq. centimeter = 100 sq. millimeters = .155 sq. inch
1 sq. decimeter = 100 sq. centimeters = 15.5 sq. inches
1 sq. meter (centare) = 100 sq. decimeters = 10.76 sq. feet
1 sq. dekameter (are) = 100 sq. meters = 1,076.4 sq. feet
1 sq. hectometer (hectare) = 100 sq. dekameters = 2.47 acres
1 sq. kilometer = 100 sq. hectometers = .386 sq. mile

Cubic Measure

1 cu. centimeter = 1000 cu. millimeters = .06 cu. inch
1 cu. decimeter = 1000 cu. centimeters = 61.02 cu. inches
1 cu. meter = 1000 cu. decimeters = 35.31 cu. feet

Approximate Conversion Factors

To change	*To*	*Multiply by*	*To change*	*To*	*Multiply by*
inches	centimeters	2.540	ounce-inches	Newton-meters	.007062
feet	meters	.305	centimeters	inches	.394
yards	meters	.914	meters	feet	3.280
miles	kilometers	1.609	meters	yards	1.094
square inches	square centimeters	6.451	kilometers	miles	.621
square feet	square meters	.093	square centimeters	square inches	.155
square yards	square meters	.836	square meters	square feet	10.764
square miles	square kilometers	2.590	square meters	square yards	1.196
acres	square hectometers	.405	square kilometers	square miles	.386
cubic feet	cubic meters	.028	square hectometers	acres	2.471
cubic yards	cubic meters	.765	cubic meters	cubic feet	35.315
fluid ounces	milliliters	29,573	cubic meters	cubic yards	1.308
pints	liters	.473	milliliters	fluid ounces	.034
quarts	liters	.946	liters	pints	2.113
gallons	liters	3.785	liters	quarts	1.057
ounces	grams	28.349	liters	gallons	.264
pounds	kilograms	.454	grams	ounces	.035
short tons	metric tons	.907	kilograms	pounds	2.205
pound-feet	Newton-meters	1.356	metric tons	short tons	1.102
pound-inches	Newton-meters	.11296			

Temperature (Exact)

°F	Fahrenheit temperature	5/9 (after subtracting 32)	Celsius temperature	°C

PIN: 060247-000