TM 9-2330-267-14&P

TECHNICAL MANUAL

OPERATOR'S, ORGANIZATIONAL, DIRECT SUPPORT, AND GENERAL SUPPORT MAINTENANCE MANUAL (INCLUDING REPAIR PARTS AND SPECIAL TOOLS LISTS)

FOR

TRAILER, TANK, WATER: 400 GALLON, 1-1/2 TON, 2 WHEEL M149 (NSN 2330-00-542-2039) M149A1 (NSN 2330-00-832-8801) M149A2 (NSN 2330-01-108-7367)

Operating Instructions 2-1

Operator/Crew PMCS 2-4

Lubrication Instructions 3-1

Operator/Crew Troubleshooting Procedures 3-7

Organizational PMCS 4-3

Organizational Troubleshooting Procedures 4-8

Maintenance Allocation Chart (MAC) B-1

Repair Parts and Special Tools Lists (RPSTL) F-1

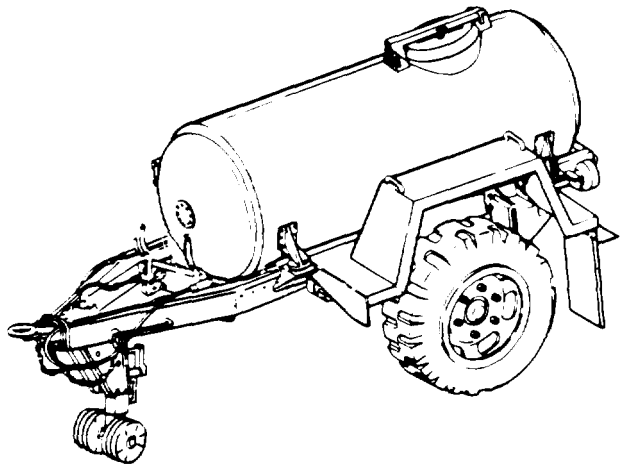

M149A2

This manual supersedes TM9-2330-267-14&P, dated February 1981, and all changes.

Approved for public release; distribution is unlimited.

HEADQUARTERS, DEPARTMENT OF THE ARMY

JULY 1991

FOR INFORMATION ON FIRST AID, REFER TO FM 21-11.

WARNING

CYANIDE GAS HAZARD

DO NOT weld or allow stainless steel tank temperature to exceed 212°F (100°C). Cyanide gases may be released when foam is heated above this temperature. Failure to follow this warning may cause toxic gases to escape and cause serious injury or death to personnel.

WARNING

ASBESTOS HAZARD

DO NOT handle brakeshoes, brakedrums, or other brake components unless area has been properly cleaned. There may be asbestos dust on these components which can be dangerous if you touch it or breathe it. Wear an approved filter mask and gloves. Never use compressed air or a dry brush to clean brake components, Dust may be removed using an industrial-type vacuum cleaner. Clean dust or mud away from brake components with water and a wet, soft brush or cloth. Failure to follow this warning may result in serious illness or death to personnel.

WARNING

COMPRESSED AIR

Compressed air used for cleaning or drying purposes, or for clearing restrictions, should never exceed 30 psi (207 kPa). Wear protective clothing (goggles/shield, gloves, etc.) and use caution to avoid injury to personnel.

WARNING

COUPLING AND UNCOUPLING TRAILER

All personnel must stand clear of towing vehicle and trailer during coupling and uncoupling operations. Failure to follow this warning may result in serious injury or death.

WARNING

DRY CLEANING SOLVENT

Dry cleaning solvent P-D-680 is toxic and flammable. Always wear protective goggles and gloves, and use only in a well-ventilated area. Avoid contact with skin, eyes, and clothes, and DO NOT breathe vapors. DO NOT use near open flame or excessive heat. The solvent's flash point is 100°F-138°F (38°C-59°C). If you become dizzy while using cleaning solvent, immediately get fresh air and medical help. If solvent contacts eyes, immediately wash your eyes and get medical aid.

WARNING

ELECTRICAL SYSTEM

When troubleshooting an electrical malfunction or performing electrical maintenance, ALWAYS disconnect intervehicular electrical cable from towing vehicle. Failure to do so may result in injury or death due to electric shock.

WARNING

HANDLING HEAVY COMPONENTS

All personnel must stand clear of lifting device when raising or lowering water tank body. Failure to follow this warning may result in injury or death to personnel.

WARNING

MAINTENANCE INSIDE WATER TANK

- NEVER WORK ALONE INSIDE WATER TANK. A safety rope must be secured around chest and underarms of person entering water tank. Opposite end of safety rope must be held by a person stationed at the manhole opening. This will allow for quick removal of a person from water tank in the event of an accident or personal injury.
- An adequate air evacuation system must be used to quickly exhaust fumes from inside water tank. Failure to follow this warning may result in serious injury or death to personnel.
- Personnel must wear rubber gloves, canvas sleeves, safety shoes, rubberized apron or jacket, and protective mask while performing abrasive cleaning operation. A portable air filter must also be used. Failure to follow this warning may result in injury to personnel.

WARNING

SECURING TRAILER

If trailer is not coupled to towing vehicle, ensure that wheels are securely chocked. Failure to do so may cause trailer to roll, resulting in serious injury or death to personnel and damage to equipment.

WARNING

USING UNAUTHORIZED CLEANING METHODS

Improper cleaning methods and use of unauthorized cleaning liquids or solvents can injure personnel and damage equipment. To prevent this, refer to TM 9-247 for further instructions.

WARNING

WATER SANITATION

- Use extreme care to ensure that no foreign material enters the water tank. The highest sanitary practices must be followed when handling drinking water. Serious illness may result from impure, contaminated drinking water.
- When water tank is used for NONPOTABLE WATER, water tank must be so marked.
- If water tank was filled with nonpotable water, water tank must be flushed out with clean potable water and drained. DO NOT allow water tank to sit for extended periods of time with any amount of liquid in it. Standing water will result in contamination and food poisoning. KEEP WATER TANK CLEAN AT ALL TIMES. Failure to follow this warning may result in serious illness or death to personnel.

TECHNICAL MANUAL

TM 9-2330-267-14&P

HEADQUARTERS
DEPARTMENT OF THE ARMY
Washington D.C., 30 July 1991

OPERATOR'S, ORGANIZATIONAL, DIRECT SUPPORT, AND GENERAL SUPPORT MAINTENANCE MANUAL (INCLUDING REPAIR PARTS AND SPECIAL TOOLS LISTS)

FOR

TRAILER, TANK, WATER: 400 GALLON, 1-1/2 TON, 2 WHEEL

M149 (NSN 2330-00-542-2039)

M149A1 (NSN 2330-00-832-8801)

M149A2 (NSN 2330-01-108-7367)

Current as of 5 March 1991

REPORTING ERRORS AND RECOMMENDING IMPROVEMENTS

You can help improve this manual. If you find any mistakes or if you know of a way to improve the procedures, please let us know, Mail your letter, DA Form 2028 (Recommended Changes to Publications and Blank Forms), or DA Form 2028-2, located in the back of this manual, direct to: Commander, U.S. Army Tank-Automotive Command, ATTN: AMSTA-MB, Warren, MI 48397-5000. A reply will be furnished to you.

TABLE OF CONTENTS

Page

CHAPTER 1 INTRODUCTION

Section I. General Information 1-1
Section II. Equipment Description and Data. 1-2

CHAPTER 2 **OPERATING INSTRUCTIONS**

Section I. Description and Use of Operator's Controls and Indicators 2-1
Section II. Operator/Crew Preventive Maintenance Checks and Services (PMCS) 2-4
Section III. Operation Under Usual Conditions 2-12
Section IV. Operation Under Unusual Conditions 2-18

CHAPTER 3 OPERATOR MAINTENANCE

Section I. Lubrication instructions 3-1
Section II. Operator/Crew Troubleshooting Procedures 3-7
Section III. Operator Maintenance 3-11

* This manual supersedes TM9-2330-267-14&P, dated February 1981, and all changes.

TABLE OF CONTENTS (Con't)

		Page
CHAPTER 4	**ORGANIZATIONAL MAINTENANCE**	
Section I.	Repair Parts; Special Tools; Test, Measurement, and Diagnostic Equipment (TMDE); and Support Equipment	4-1
Section II.	Service Upon Receipt	4-2
Section III.	Organizational Preventive Maintenance Checks and Services (PMCS)	4-3
Section IV.	Organizational Troubleshooting Procedures	4-8
Section V.	General Maintenance Instructions	4-23
Section VI.	Electrical System Maintenance	4-26
Section VII.	Axle Maintenance	4-45
Section VIII.	Brake System Maintenance	4-48
Section IX.	Wheel Maintenance	4-80
Section X.	Frame and Towing Attachments Maintenance	4-85
Section XI.	Springs and Shock Absorber Maintenance	4-95
Section XII.	Body Maintenance	4-102
Section XIII.	Accessory Items Maintenance	4-118
Section XIV.	Preparation for Storage or Shipment	4-122
CHAPTER 5	**DIRECT SUPPORT AND GENERAL SUPPORT MAINTENANCE**	
Section I.	Wheel Maintenance	5-1
Section II.	Body Maintenance	5-13
APPENDIX A	REFERENCES	A-1
APPENDIX B	MAINTENANCE ALLOCATION CHART	B-1
APPENDIX C	COMPONENTS OF END ITEM AND BASIC ISSUE ITEMS LISTS	C-1
APPENDIX D	ADDITIONAL AUTHORIZATION LIST	D-1
APPENDIX E	EXPENDABLE/DURABLE SUPPLIES AND MATERIALS LIST	E-1
APPENDIX F	REPAIR PARTS AND SPECIAL TOOLS LISTS	F-1
Section I.	Introduction	F-1
Section II.	Repair Parts List	1-1

	Illus Fig	Page
GROUP 06 ELECTRICAL SYSTEM		
0609 - LIGHTS		1-1
BLACKOUT LIGHTS (M149)	1	1-1
STOPLIGHT-TAILLIGHT (M149)	2	2-1
COMPOSITE STOPLIGHT-TAILLIGHT (M149A1 AND M149A2)	3	3-1

TABLE OF CONTENTS (Con't)

	Illus Fig	Page
0613 - CHASSIS WIRING HARNESS		4-1
CHASSIS WIRING HARNESS (M149)	4	4-1
CHASSIS WIRING HARNESS (M149A1 AND M149A2)	5	5-1
INTERVEHICULAR CABLE (M149A1 AND M149A2)	6	6-1
GROUP 11 REAR AXLE		
1100 - REAR AXLE		7-1
REAR AXLE	7	7-1
GROUP 12 BRAKES		
1201 - HANDBRAKES		8-1
HANDBRAKES, CONTROLS AND LINKAGE	8	8-1
1202 - SERVICE BRAKES		9-1
SERVICE BRAKES	9	9-1
1204 - HYDRAULIC BRAKE SYSTEM		10-1
HYDRAULIC LINES AND FITTINGS (M149)	10	10-1
HYDRAULIC LINES AND FITTINGS (M149A1 AND M149A2)	11	11-1
BRAKE CHAMBER AND MASTER CYLINDER ASSEMBLY	12	12-1
1208 - AIRBRAKE SYSTEM		13-1
AIRBRAKE SYSTEM (M149)	13	13-1
GLADHAND/AIR HOSE ASSEMBLY COMPONENTS (M149)	14	14-1
AIRBRAKE SYSTEM (M149A1 AND M149A2)	15	15-1
AIRLINE FILTER ASSEMBLY	16	16-1
GROUP 13 WHEELS		
1311 - WHEEL ASSEMBLY		17-1
WHEEL ASSEMBLY AND HUB COMPONENTS	17	17-1
1313 - TIRES AND TUBES		18-1
TIRE AND TUBE	18	18-1
GROUP 15 FRAME, TOWING ATTACHMENTS, DRAWBARS, AND ARTICULATION SYSTEMS		
1501 - FRAME ASSEMBLY		19-1
FRAME ASSEMBLY (M149)	19	19-1
FRAME ASSEMBLY (M149A1 AND M149A2)	20	20-1
FAUCET BOX ASSEMBLY	21	21-1
1507 - LANDING GEAR, LEVELING JACKS		22-1
CASTER ASSEMBLY, FOLDING ADJUSTABLE	22	22-1
GROUP 16 SPRINGS AND SHOCK ABSORBERS		
1601 - SPRINGS		23-1
SPRINGS	23	23-1
1604 - SHOCK ABSORBER EQUIPMENT		24-1
SHOCK ABSORBERS	24	24-1
1605 - TORQUE, RADIUS, AND STABILIZER RODS		25-1
RADIUS RODS	25	25-1
GROUP 18 BODY, CAB, AND HOOD		
1811 - TANK BODIES		26-1
TANK BODY (M149 AND M149A1)	26	26-1

TABLE OF CONTENTS (Con't)

	Illus Fig	Page
1811 - TANK BODIES (Con't)		
TANK BODY (M149A2)	27	27-1
TANK PLUMBING,	28	28-1
TANK PLUMBING (M149A2)	29	29-1
GROUP 22 BODY AND CHASSIS ACCESSORY ITEMS		
2202 -ACCESSORY ITEMS		30-1
REFLECTORS	30	30-1
2210-DATA PLATES AND INSTRUCTION HOLDERS		31-1
DATA PLATES,	31	31-1
GROUP 94 REPAIR KITS		
9401 -R EPAIR KITS.		KITS-1
REPAIR KITS.	KITS	KITS-1
GROUP 95 GENERAL USE STANDARDIZED PARTS		
9501 - BULK MATERIEL		BULK-1
BULK MATERIEL	BULK	BULK-1
Section Ill. Special Tools List (Not Applicable)		
Section IV. Cross-reference Indexes		
NATIONAL STOCK NUMBER INDEX		I-1
PART NUMBER INDEX.		I-6
FIGURE AND ITEM NUMBER INDEX		I-18
APPENDIX G. ILLUSTRATED LIST OF MANUFACTURED ITEMS		G-1
APPENDIX H. TORQUE LIMITS		H-1
INDEX		Index 1

CHAPTER 1
INTRODUCTION

Section I. GENERAL INFORMATION

Paragraph Title	Page Number
Destruction of Army Materiel to Prevent Enemy Use	1-1
Maintenance Forms, Records, and Reports	1-1
Preparation for Storage or Shipment	1-1
Reporting Equipment Improvement Recommendations (EARs)	1-1
Scope	1-1

1-1. SCOPE.

a. This manual describes the operation and organizational, direct support, and general support maintenance, including repair parts and special tools lists for:

- Trailer, Tank, Water: 1½ Ton, 2 Wheel, 400 Gallon, M149, with fiberglass tank body.
- Trailer, Tank, Water: 1½ Ton, 2 Wheel, 400 Gallon, M149Al, with fiberglass tank body.
- Trailer, Tank, Water: 1½ Ton, 2 Wheel, 400 Gallon, M149A2, with stainless steel tank body.

b. Throughout the manual, the terms "tight" and "left" are used to describe views of the trailers, as viewed from the rear.

1-2. MAINTENANCE FORMS, RECORDS, AND REPORTS.

Department of the Army forms and procedures used for equipment maintenance will be those prescribed by DA Pam 738-750, The Army Maintenance Management System (TAMMS).

1-3. DESTRUCTION OF ARMY MATERIEL TO PREVENT ENEMY USE.

For destruction of Army materiel to prevent enemy use, refer to TM 750-244-6.

1-4. PREPARATION FOR STORAGE OR SHIPMENT.

For information on preparing the trailers for storage or shipment, refer to Chapter 4, Section XIII.

1-5. REPORTING EQUIPMENT IMPROVEMENT RECOMMENDATIONS (EIRs).

If your water tank trailer needs improvement, let us know. Send us an EIR. You, the user, are the only one who can tell us what you don't like about your equipment. Let us know why you don't like the design. Put it on an SF 368 (Quality Deficiency Report). Mail it to us at: Commander, U.S. Tank-Automotive Command, ATTN: AMSTA-MP, Warren, MI 48397-5000. We will send you a reply.

Section II. EQUIPMENT DESCRIPTION AND DATA

Paragraph Title	Page Number
Differences Between Models	1-6
Equipment Characteristics, Capabilities, and Features	1-2
Equipment Data	1-7
Location and Contents of Data Plates	1-4
Location and Description of Major Components	1-3

1-6. EQUIPMENT CHARACTERISTICS, CAPABILITIES, AND FEATURES.

a. The M149, M149A1, and M149A2 Water Tank Trailers are designed to carry 400 gal. (15141) of potable or nonpotable water either highway or cross-country.

b. The trailers are designed to be towed by an M35 Series 2½ Ton Truck. Maximum allowable speed is 50 mi/h (80 km/h) highway and 30 mi/h (48 km/h) cross-country.

c. The trailers are equipped with:

(1) A 24-volt electrical system capable of operating under standard and blackout modes.

(2) An adjustable caster assembly to support the front of the trailer when not coupled to the towing vehicle.

(3) Manually operated parking brakes used to secure the trailer when stopped or parked.

(4) Two wheel single axle with leaf spring suspension to absorb road shock.

(5) Dual-line air/hydraulic brake system which receives air pressure from towing vehicle.

1-7. LOCATION AND DESCRIPTION OF MAJOR COMPONENTS.

a. M149, M149A1, and M149A2 Trailer Chassis.

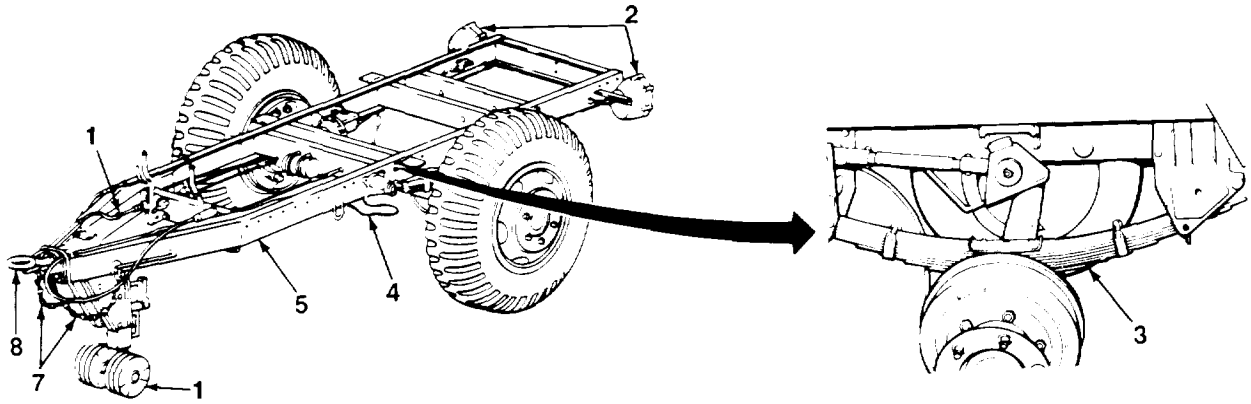

Key	Component	Description
1	Intervehicular Cable	Connects trailer electrical system to the towing vehicle.
2	Light Assemblies	Consist of blackout, stop and tail, and composite. (Blackout light is separate stoplight assembly on the M149.) Indicate presence of trailer to vehicles traveling behind.
3	Suspension	Consists of two nine-piece leaf springs and two shock absorbers mounted on one axle. Restrains sudden and rapid vertical movement.
4	Handbrake Levers	Activate the handbrakes when the trailer is stopped or parked.
5	Frame Assembly	Composed of two pressed-steel siderails and six pressed-steel crossmembers. Supports the trailer load.
6	Adjustable Caster Assembly	Supports front of trailer when not coupled to towing vehicle.
7	Safety Chains	Prevent trailer from breaking away from towing vehicle.
8	Drawbar Ring	Attaches trailer to towing vehicle.

TA506965

1-7. LOCATION AND DESCRIPTION OF MAJOR COMPONENTS (Con't).

b. M149, M149A1, and M149A2 Water Tank Body and Accessories.

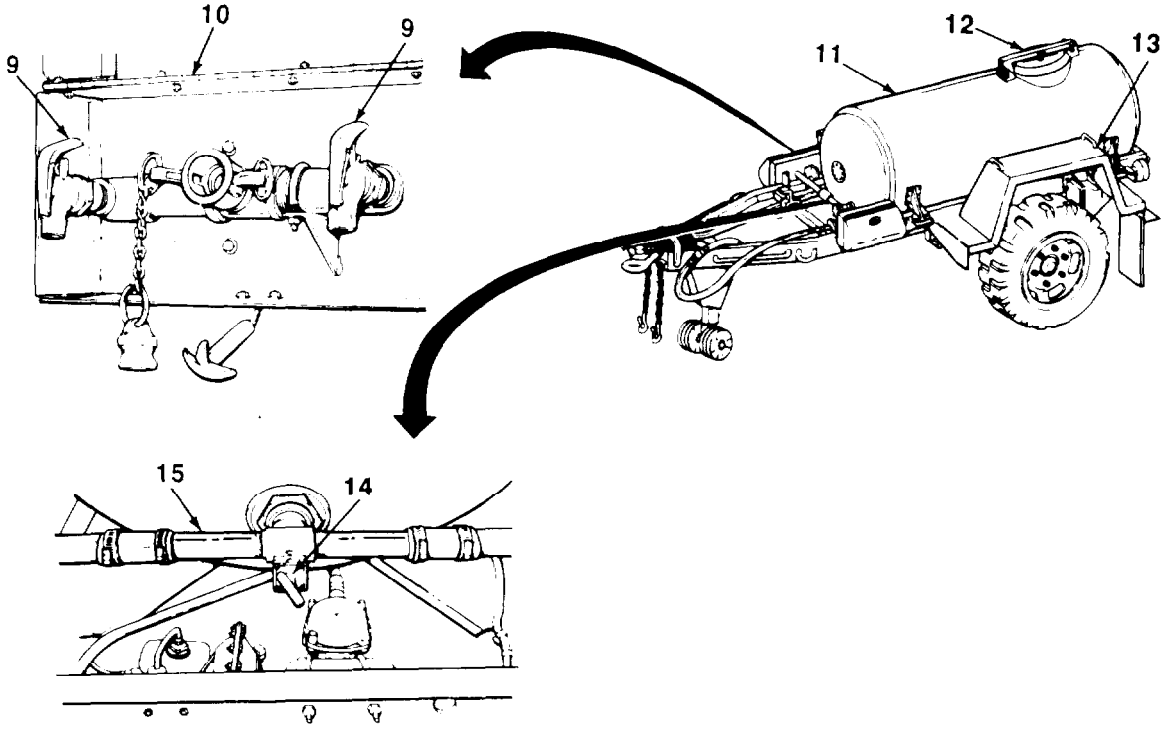

Key	Component	Description
9	Faucets	Allow for the dispensing of water from the tank.
10	Faucet Box Assemblies	Protect faucets from weather or incidental damage.
11	Tank	Holds 400 gal. (1,514 l) of potable water or nonpotable water, if so marked, for transport.
12	Manhole	Provides access to interior of tank for filling, inspection, and cleaning.
13	Fender	Protects tires, tank, and vehicles traveling behind from thrown dirt or stones.
14	Manifold Valve	Directs flow of water to faucets.
15	Piping	Provides passageway for water from tank to the faucets.

1-8. LOCATION AND CONTENTS OF DATA PLATES.

a. The following illustrations show the location and contents of all data plates.

b. Maintain all data plates so that all information remains legible. If any data plate is missing or no longer legible, notify organizational maintenance.

TA506966

1-8. LOCATION AND CONTENTS OF DATA PLATES (Con't).

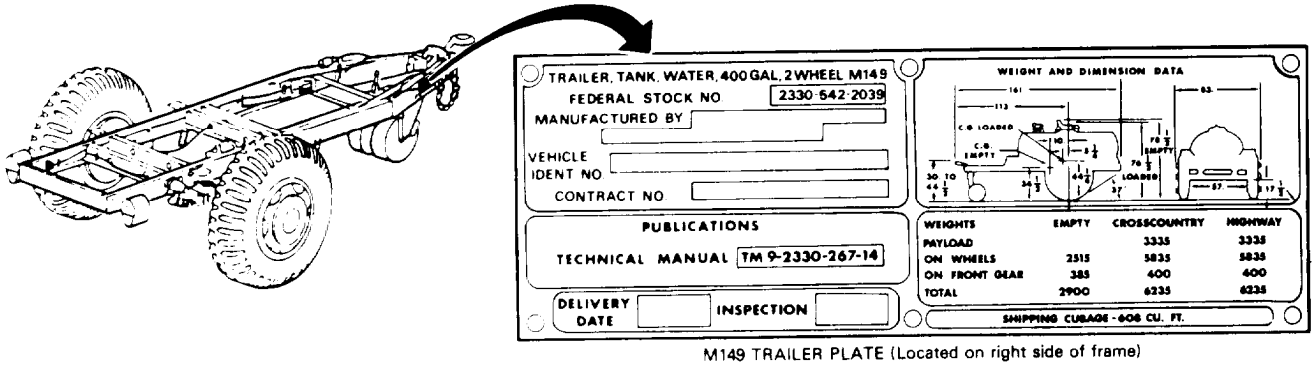

M149 TRAILER PLATE (Located on right side of frame)

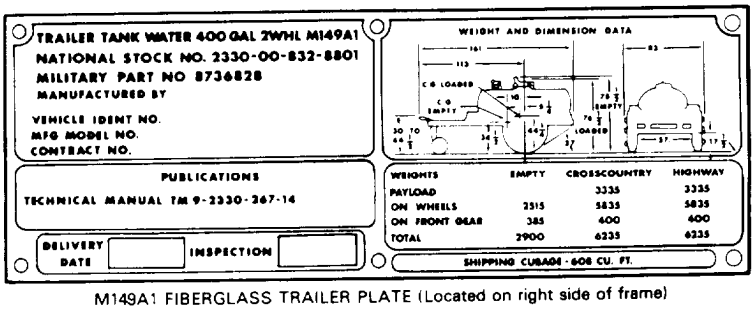

M149A1 FIBERGLASS TRAILER PLATE (Located on right side of frame)

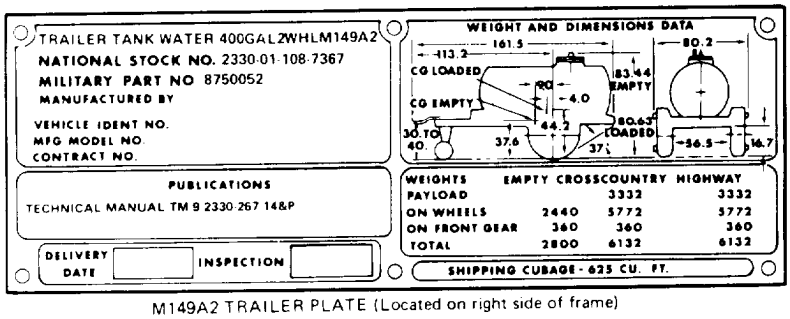

M149A2 TRAILER PLATE (Located on right side of frame)

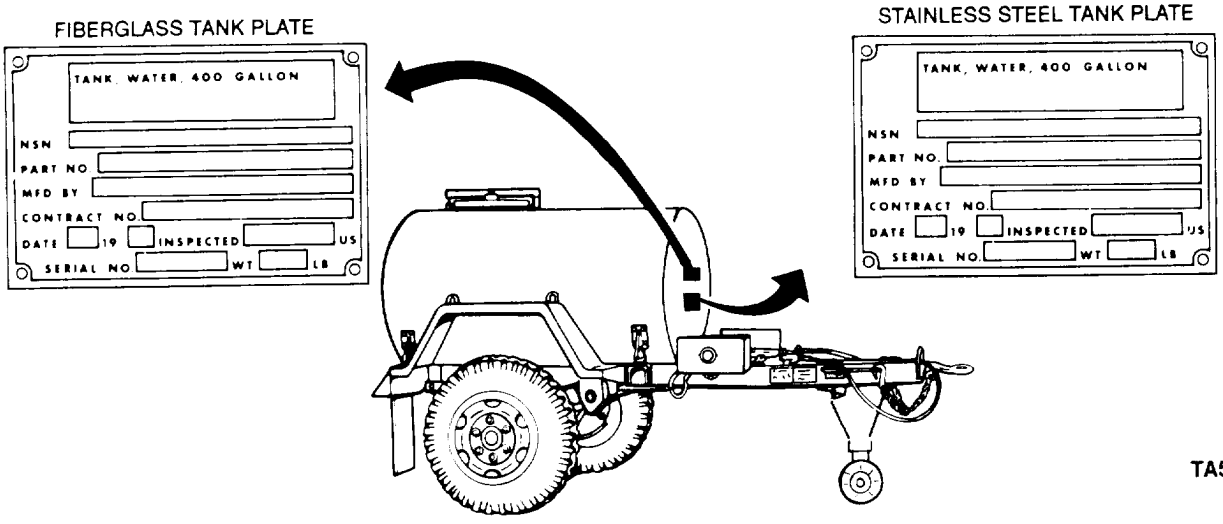

TA506967

1-8. LOCATION AND CONTENTS OF DATA PLATES (Con't)

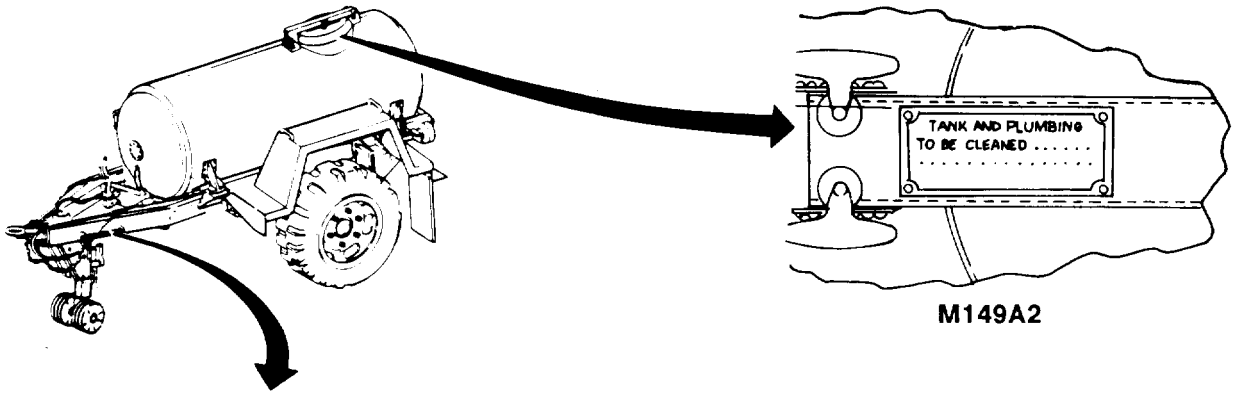

M149A2

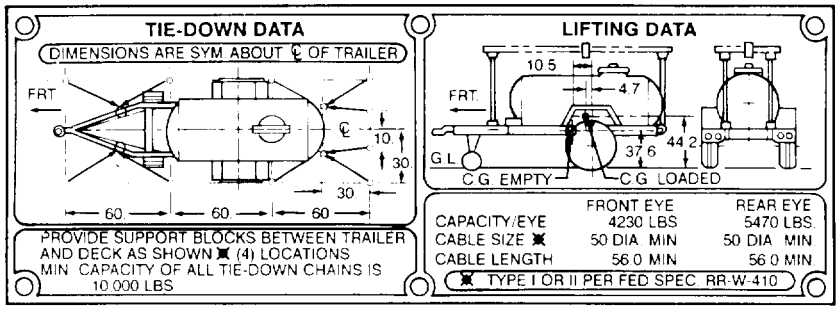

M149A2

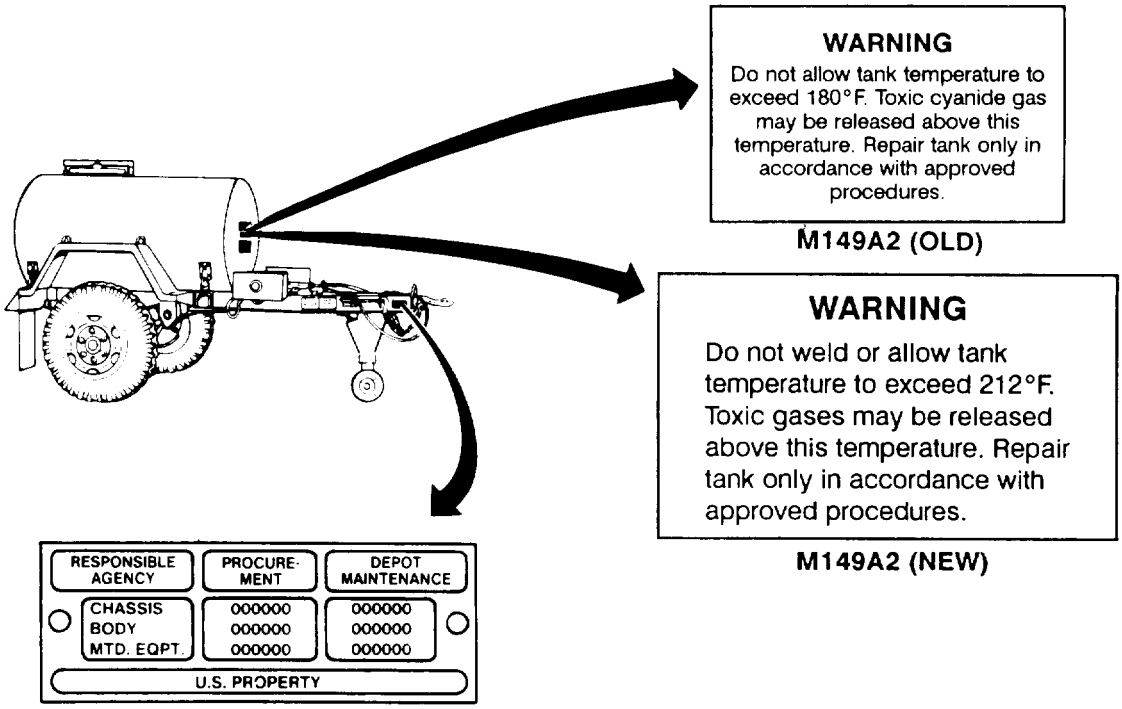

M149

1-9. DIFFERENCES BETWEEN MODELS.

Component	M149	M149A1	M149A2
Lights:			
Composite Light Assembly (Includes Taillight, Stoplight, Blackout Marker Lights, and Blackout Stoplight)		x	x
Taillight, Blackout Marker Light, and Stoplight	x		
Blackout Stoplight	x		
Tank Body:			
Stainless Steel			x
Fiberglass	x	x	

1-10. EQUIPMENT DATA.

M149 Water Tank Trailer	
Tank Capacity	400 gal. (1,514 l)
Dimensions (Overall):	
Height (to Top of Manhole Cover):	
Full	72.8 in. (184.8 cm)
Empty	76.5 in. (194.3 cm)
Length	161 in. (409 cm)
Width	80 in. (203 cm)
Drawbar Ring (Adjustable)	36-40 in. (91-102 cm)
Ground Clearance	17 in. (43 cm)
Weights:	
Payload Maximum:	
Highway	3,335 lb (1,514 kg)
Cross-country	3,335 lb (1,514 kg)
Empty Net Weight	2,900 lb (1,317 kg)
M149A1 and M149A2 Water Tank Trailers	
Tank Capacity	400 gal. (1,514 l)
Dimensions (Overall):	
Height (to Top of Manhole Cover):	
Full	76.5 in. (194.3 cm)
Empty	79.3 in. (201.4 cm)
Length	161. 5 in. (410.2 cm)
Width	80.3 in. (204 cm)
Drawbar Ring (Adjustable)	36-40 in. (91-102 cm)
Ground Clearance	17 in. (43 cm)

1-10. EQUIPMENT DATA (Con't).

Weights:	
Payload Maximum:	
Highway (M149A1)	3,335 lb (1,514 kg)
Cross-country (M149A1)	3,335 lb (1,514 kg)
Highway (M149A2)	3,332 lb (1,513 kg)
Cross-country (M149A2)	3,332 lb (1,513 kg)
Empty Net Weight	2,440 lb (1,108 kg)
M149, M149A1, and M149A2 Water Tank Trailers	
Wheels and Tires:	
Wheels:	
Rim Size	7.5 x 20 in. (19 x 51 cm)
Type	Military Offset Disk
Tire Retention	Split-type Retaining Side Ring
Tires:	
Inflation Pressure	40 psi (276 kPa)
Rating	8 Ply
Size	9 x 20 in. (23 x 51 cm)
Axle Assembly:	
Capacity	10,000 lb (4,540 kg)
Tube Diameter	4.5 in. (11.4 cm)
Spindle:	
Brake Flanges	7.75 in. (19.69 cm)
Dimension at Bearing	2.6245 in. (6.67 cm)
Service Brakes:	
Air Operating Pressure	100 psi (690 kPa)
Diameter	15 in. (38.1 cm)
Width	3 in. (7.6 cm)
Adjustable Caster Assembly:	
Gear Ratio	3:1
Lifting Capacity	6,000 lb (2,724 kg)
Maximum Extension	10.5 in. (26.7 cm)
Towing Vehicle	M35
Electrical System	24-volt

CHAPTER 2
OPERATING INSTRUCTIONS

Section I. DESCRIPTION AND USE OF OPERATOR'S CONTROLS AND INDICATORS

Paragraph Title	Page Number
Controls and indicators	2-1
General	2-1

2-1. GENERAL.

This section shows the location and function of all water tank trailer controls and indicators. Review this section thoroughly before operating the trailer.

2-2. CONTROLS AND INDICATORS.

a. M149, M149A1, and M149A2 Trailer Chassis.

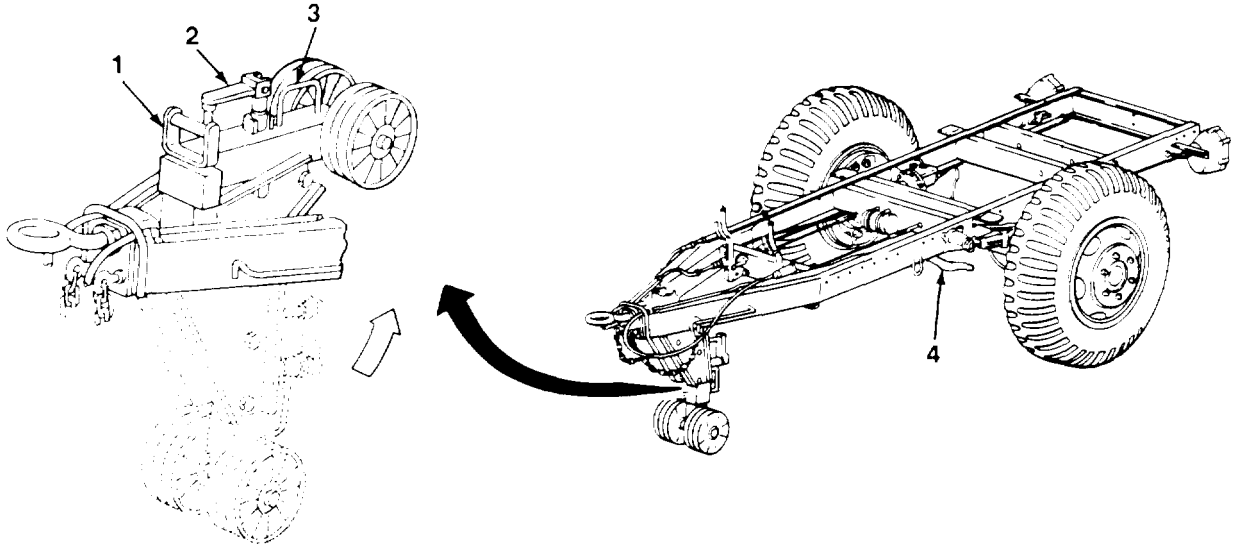

Key	Control or Indicator	Description
1	Release Handle	Secures the adjustable caster assembly in up or down position.
2	Handcrank	Operates the gearbox to raise or lower the adjustable caster assembly.
3	Ground Pad Handle	Raises or lowers the adjustable caster assembly.
4	Handbrake Levers	Activate handbrakes when the trailer is stopped or parked.

TA506969

2-2. CONTROLS AND INDICATORS (Con't).

b. M149 and M149A1 Water Tank Body - Fiberglass.

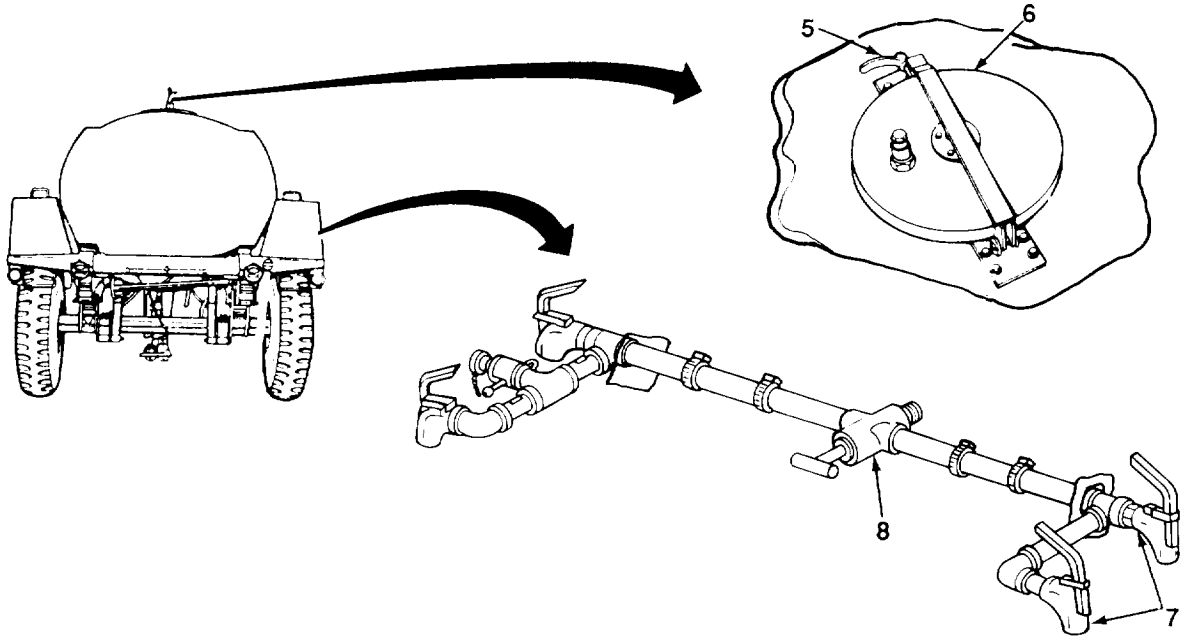

Key	Control or Indicator	Description
5	Latch	Secures the manhole cover closed.
6	Manhole Cover	Provides access to the tank for filling, cleaning, and inspection.
7	Faucets	Used to draw water from the tank.
8	Manifold Valve	Directs water to the faucets.

TA506970

2-2. CONTROLS AND INDICATORS (Con't).

c. M149A2 Water Tank Body - Stainless Steel.

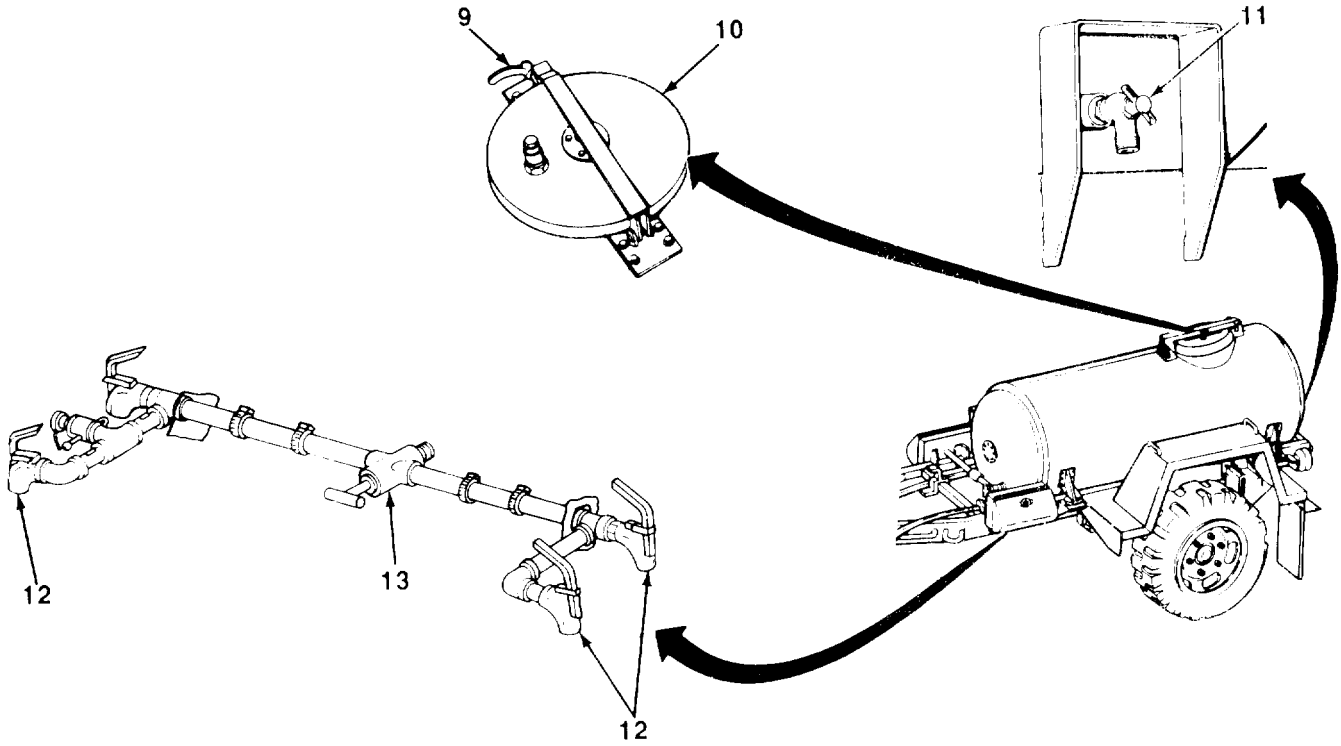

Key	Control or indicator	Description
9	Latch	Secures the manhole cover closed.
10	Manhole Cover	Provides access to the tank for filling, cleaning, and inspection.
11	Rear Faucet	Used to dispense water from the tank when the temperature is below freezing.
12	Faucets	Used to draw water from the tank.
13	Manifold Valve	Directs water to the faucets.

TA506971

Section II. OPERATOR/CREW PREVENTIVE MAINTENANCE CHECKS AND SERVICES (PMCS)

Paragraph Title	Page Number
General	2-4
General PMCS Procedures	2-4
Leakage Definitions	2-5
Operator/Crew Preventative Maintenance Checks and Services (PMCS), Table 2-1	2-6
Reporting Repairs	2-4
Service Intervals	2-4
Specific PMCS Procedures	2-5

2-3. GENERAL.

a. To ensure that the water tank trailers are ready for operation at all times, they must be inspected on a regular basis so that defects may be found before they result in serious damage, equipment failure, or injury to personnel. This section contains systematic instructions on inspections, adjustments, and corrections to be performed by the operator/crew.

b. While performing PMCS, read and follow all safety instructions found in the Warning Summary at the front of this manual. Keep in mind all WARNINGs and CAUTIONS.

2-4. SERVICE INTERVALS.

Perform PMCS, found in Table 2-1, at the following intervals:

(1) Perform Before (B) PMCS just before operating the trailer.

(2) Perform During (D) PMCS while operating the trailer.

(3) Perform After (A) PMCS right after operating the trailer.

(4) Perform Weekly (W) PMCS once each week.

2-5. REPORTING REPAIRS.

All defects which the operator cannot fix must be reported on a DA Form 2404, Equipment Inspection and Maintenance Worksheet, immediately after completing PMCS. If a serious problem is found, IMMEDIATELY report it to your supervisor.

2-6. GENERAL PMCS PROCEDURES.

WARNING

Dry cleaning solvent P-D-680 is toxic and flammable. Always wear protective goggles and gloves, and use only in a well-ventilated area. Avoid contact with skin, eyes, and clothes, and DO NOT breathe vapors. DO NOT use near open flame or excessive heat. The solvent's flash point is 100°F-138°F (38°C-59°C). If you become dizzy while using cleaning solvent, immediately get fresh air and medical help. If solvent contacts eyes, immediately wash your eyes and get medical aid.

a. Keep Equipment Clean. Dirt, oil, and debris may cover up a serious problem. Clean as you work and as needed. Use dry cleaning solvent (Item 9, Appendix E) on all metal surfaces. Use soap (Item 8, Appendix E) and water on rubber, plastic, and painted surfaces.

2-6. GENERAL PMCS PROCEDURES (Con't).

b. While performing specific PMCS procedures, inspect the following components:

(1) Bolts, Nuts, and Screws. Ensure that they are not loose, missing, bent, or broken. Report loose or missing bolts, nuts, and screws to organizational maintenance.

(2) Welds. Inspect for gaps where parts are welded together. Check for loose or chipped paint, rust, and cracks. Report bad welds to organizational maintenance.

(3) Electric Conduit, Wires, or Connectors. Inspect for cracked or broken conduit insulation, bare wires, and loose or broken connectors. Report loose connections and faulty wiring to organizational maintenance.

(4) Hoses, Lines, and Fittings. inspect for wear, damage, and leaks. Ensure that clamps and fittings are tight. Report any damage, leaks, or loose fittings to organizational maintenance.

c. Check that components are adequately lubricated in accordance with Chapter 3, Section I.

2-7. SPECIFIC PMCS PROCEDURES.

a. Operator/Crew PMCS is provided in Table 2-1. Always perform PMCS in the order listed. Once the PMCS becomes routine, spotting problems will become much easier.

b. Before performing PMCS, read all the checks required for the applicable interval and prepare all tools needed for the task. Have several clean rags (Item 18, Appendix E) ready for use. Perform ALL inspections at the applicable interval.

c. if any problems are discovered through PMCS, perform the appropriate troubleshooting task in Chapter 3, Section Ii. If any component or system is not serviceable, or if any service does not correct the problem, notify your supervisor.

d. The columns in Table 2-1 are defined as follows:

(1) Item No. Provides a logical sequence for PMCS to be performed and is used as a source of item numbers for the "TM ITEM NO" column when recording PMCS results on DA Form 2404.

(2) interval. Specifies the interval at which the PMCS is to performed.

(3) Item To Be Inspected. Lists the system and common name of items that are to be inspected. Included in this column are specific servicing, inspection, replacement, or adjustment procedures to be followed.

NOTE

The terms "ready/available" and "mission-capable" refer to the same status: Equipment is on hand and is able to perform its combat missions (AR 700-138).

(4) Equipment is Not Ready/Available if. Explains when and why trailer cannot be used.

2-8. LEAKAGE DEFINITIONS.

a. it is important to know how fluid leakage affects the status of the trailer. The following are types/classes of leakage an operator must know to determine whether the trailer is mission-capable. Learn these leakage definitions. When in doubt notify your supervisor.

Leakage Definitions for Operator/Crew PMCS

Class I	Seepage of fluid (as indicated by wetness or discoloration) not great enough to form drops.
Class II	Leakage great enough to form drops, but not great enough to cause drops to drip from item being inspected.
Class III	Leakage of fluid great enough to form drops that fail from the item being inspected.

2-8. LEAKAGE DEFINITIONS (Con't).

CAUTION

When operating with Class I or II leaks, continue to check fluid levels in addition to that required in PMCS. Parts without fluid will stop working or may be damaged.

b. Equipment operation is allowed with minor (Class I or II) leakage. Fluid levels in an item/system affected with such leakage must be checked more frequently than required in PMCS. When in doubt notify your supervisor.

c. Report Class III leaks IMMEDIATELY to your supervisor.

Table 2-1. Operator/Crew Preventive Maintenance Checks and Services (PMCS).

B - Before D - During A - After W - Weekly

ITEM NO.	INTERVAL B	D	A	W	ITEM TO BE INSPECTED PROCEDURE: Cheek for and have repaired, filled, or adjusted as needed.	Equipment is Not Ready/Available if:
					NOTE **Perform Weekly as well as Before PMCS if:** **a. You are the assigned operator but have not operated the trailer since the last weekly.** **b. You are operating the trailer for the first time.**	
1					**TIRES**	
				●	a. Check tire pressure [40 psi (276 kPa)] when tires are cool.	
	●				b. Check tires for cuts, foreign objects, or unusual tread wear. Remove any stones or other debris from treads.	One tire is flat, missing, or unserviceable.
2					**WHEELS**	
					NOTE **Left wheel nuts are turned counter-clockwise to tighten. Right wheel nuts are turned clockwise to tighten.**	
	●				Check wheels for damage and wheel nuts for presence and tightness.	
3					**DRAWBAR RING, INTERVEHICULAR AIR HOSES, AND SAFETY CHAINS**	
	●				a. Check drawbar ring (4) for secure mounting and obvious damage.	Drawbar ring is loose or bent.
	●				b. Check intervehicular air hoses (1) and intervehicu-lar cable (2) for cuts and breaks.	Intervehicular air hoses or intervehicular cable are broken or missing.
					c. Check safety chains (3) for secure mounting and obvious damage.	Safety chains are missing or unsecured.

Table 2-1. Operator/Crew Preventive Maintenance Checks and Services (PMCS) (Con't).

B - Before D - During A - After W - Weekly

ITEM NO.	INTERVAL B	D	A	W	ITEM TO BE INSPECTED PROCEDURE: Check for and have repaired, filled, or adjusted as needed.	Equipment Is Not Ready/Available If:
					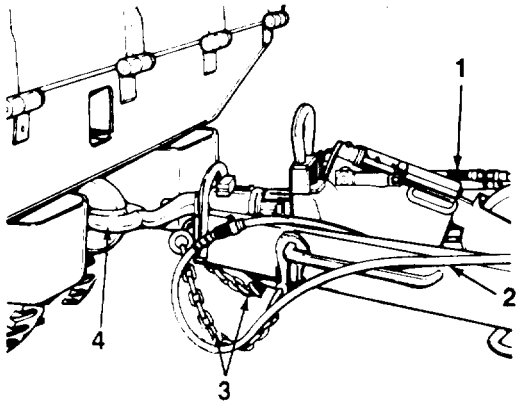	
4					**BRAKE SYSTEM**	
	•				a. Check for fluid leaks at brakedrums (6), backing plate assembly (7), master cylinder (8), and hydraulic brake lines (5).	Class III leaks are found.
		•			b. Test brake system by coupling trailer to towing vehicle. Check hose connections and ensure that towing vehicle air valves are turned on. Actuate the service brakes.	Service brakes fail to operate.

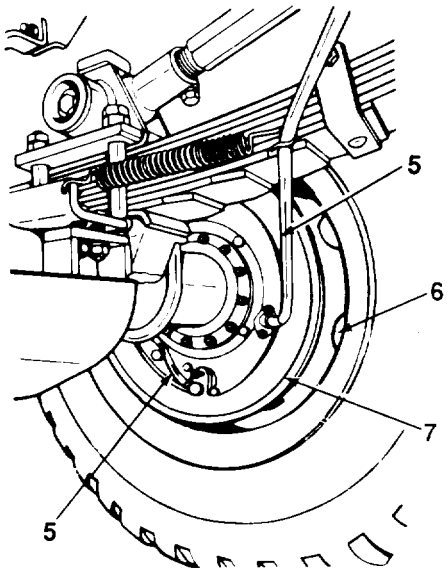

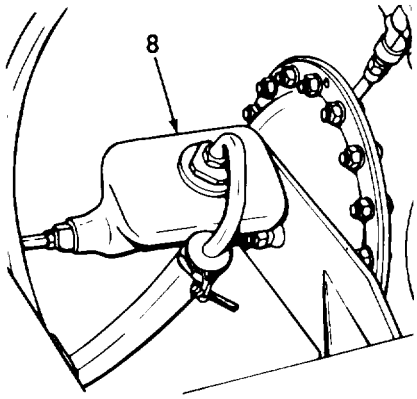

TA506972

Table 2-1. Operator/Crew Preventive Maintenance Checks and Services (PMCS) (Con't).

B - Before D - During A - After W - Weekly

ITEM NO.	INTERVAL B	D	A	W	ITEM TO BE INSPECTED PROCEDURE: Check for and have repaired, filled, or adjusted as needed.	Equipment Is Not Ready/Available If:
		●			c. With trailer coupled to the towing vehicle, have an assistant actuate the service brakes. Listen for air leaks at the intervehicular air hoses (1), relay valve (9), and air reservoir (10).	Air leaks are found.
		●			d. Be alert for unusual difficulty in stopping that would indicate that the trailer service brakes are not working properly.	
					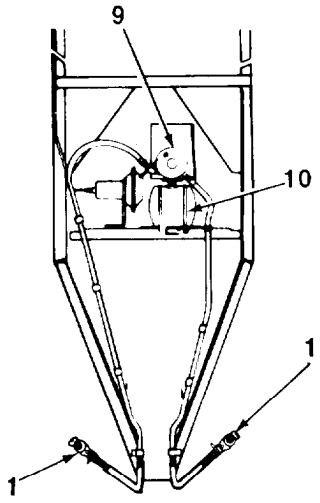	
5					LIGHTS AND REFLECTORS NOTE **An assistant is required when checking operation of lights.**	
		●			a. If tactical situation permits, connect the intervehicular cable (2) to the towing vehicle.	
		●			b. Operate the towing vehicle light switch through all settings and check the lights (12).	
				●	c. Check for presence and damage to reflectors (11).	

TA506973

Table 2-1. Operator/Crew Preventive Maintenance Checks and Services (PMCS) (Con't).

B - Before D - During A - After W - Weekly

ITEM NO.	INTERVAL B	D	A	W	ITEM TO BE INSPECTED PROCEDURE: Check for and have repaired, filled, or adjusted as needed.	Equipment Is Not Ready/Available If:
					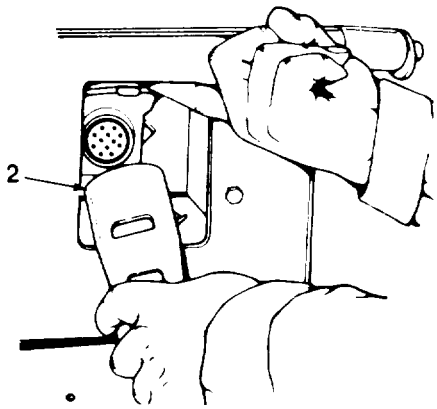 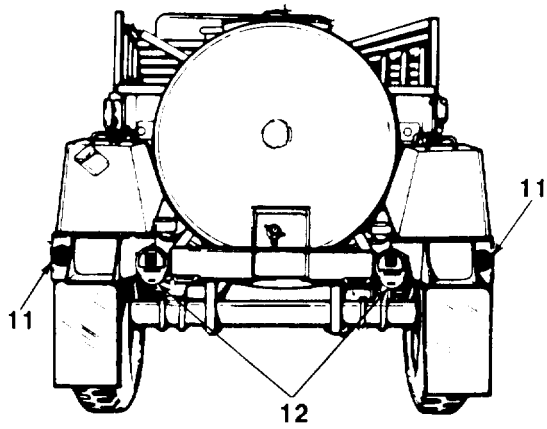	
6				•	**HANDBRAKES** With the trailer coupled to the towing vehicle, disconnect intervehicular air hoses from towing vehicle and set handbrakes (14). Move trailer slightly to see if the handbrakes hold the wheels. Adjust the handbrakes by rotating spring-loaded adjusting knob (13) clockwise to tighten and counterclockwise to loosen. 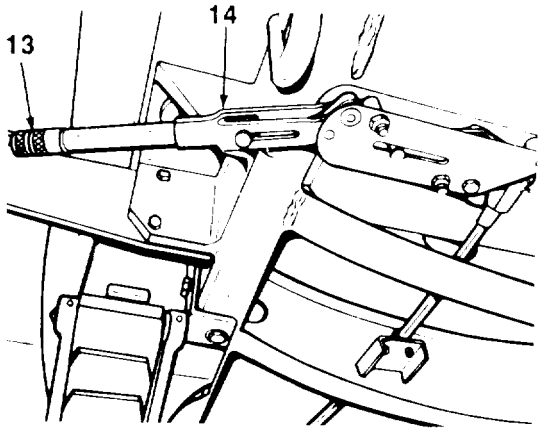	

TA506974

Table 2-1. Operator/Crew Preventive Maintenance Checks and Services (PMCS) (Con't).

B - Before D - During A - After W - Weekly

ITEM NO.	INTERVAL B	D	A	W	ITEM TO BE INSPECTED PROCEDURE: Check for and have repaired, filled, or adjusted as needed.	Equipment Is Not Ready/Available If:
7					**AIR TANK AND AIR FILTER**	
			●		a. Apply handbrakes and open draincock (15) on air reservoir (10) to drain condensation. Close draincock.	
				●	b. Unscrew pipe plug (17) on air filter (16) (M149 only), and drain condensation from air filter. Clean pipe plug with lint-free rag (Item 18, Appendix E) before installing.	
8					**ADJUSTABLE CASTER ASSEMBLY**	
		●			a. Check adjustable caster assembly (18) for proper mounting, alinement, and general condition.	Adjustable caster assembly will not secure in stored position or will not support trailer.

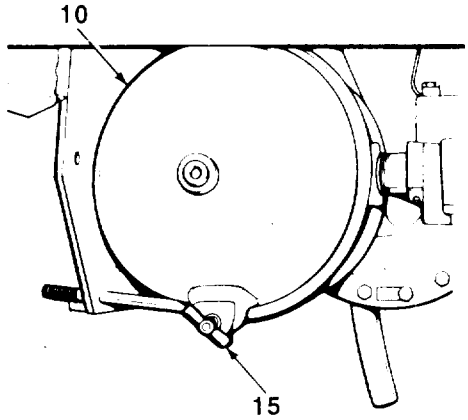

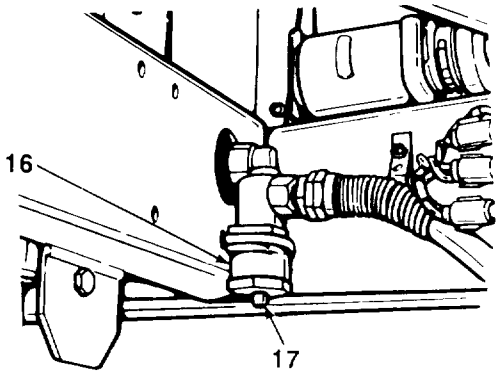

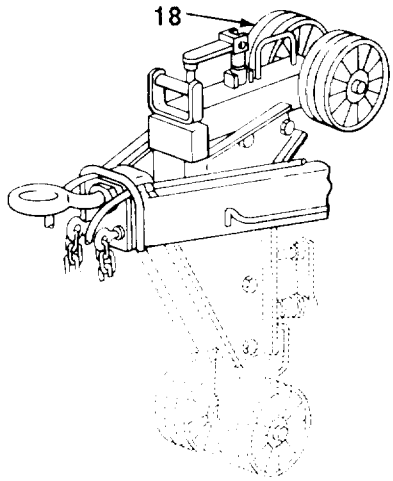

TA506975

Table 2-1. Operator/Crew Preventive Maintenance Checks and Services (PMCS) (Con't).

B - Before D - During A - After W - Weekly

ITEM NO.	INTERVAL B	D	A	W	ITEM TO BE INSPECTED PROCEDURE: Check for and have repaired, filled, or adjusted as needed.	Equipment Is Not Ready/Available If:
9					**TRAILER**	
		●			a. Be alert for any unusual noises when towing trailer. Stop and investigate any unusual noises.	
		●			b. Ensure that trailer is tracking/following correctly behind towing vehicle with no side pull.	
	●				c. Inspect entire chassis frame for obvious damage, cracks or broken welds.	Frame is cracked or has damage which would weaken stability in tow or at rest.
10					**WATER TANK**	
					CAUTION **Do not use steam to clean the interior of fiberglass water tanks.**	
		●			a. When filling, check manhole cover (19), seal, and latch for damage.	
		●			b. Check rear faucet (21) and forward faucets (20) for leakage and proper operation.	One or more faucets are damaged or missing.
				●	c. Check tank interior for contamination (dirt, rust, paint chips).	Contamination is found in tank interior.
				●	d. Check tank (22) mounting screws and bushings for obvious looseness.	Tank mounting screws and bushings are missing or loose.

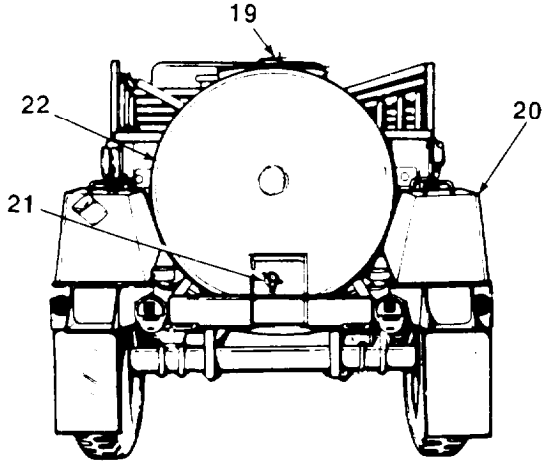

TA506976

Section III. OPERATION UNDER USUAL CONDITIONS

Paragraph Title	Page Number
Coupling Trailer to Towing Vehicle	2-12
General	2-12
Operating Water Tank	2-15
Towing Instructions	2-13
Uncoupling Trailer from Towing Vehicle	2-13

2-9. GENERAL.

a. This section contains instructions for safely operating the water tank trailers under usual conditions. Unusual conditions are defined and described in Section IV of this chapter.

b. Perform all Before (B) PMCS in Table 2-1 before operating the trailers.

c. Review all towing vehicle operating instructions to prepare for coupling and uncoupling operations.

2-10. COUPLING TRAILER TOTOWING VEHICLE.

WARNING

All personnel must stand clear of towing vehicle and trailer during coupling operation. Failure to follow this warning may result in serious injury or death.

CAUTION

Have assistant direct you during backing operations. Damage to equipment may occur incaution is not followed.

a. Remove lockpin (4) and open towing vehicle pintle (5).

b. Crank adjustable caster assembly (10) down, using handcrank (11), until drawbar ring (6) is above divided portion of towing vehicle pintle (5).

c. Aline towing vehicle with trailer and slowly back towing vehicle up until drawbar ring (6) is centered in towing vehicle pintle (5).

d. Use handcrank (11) to lower adjustable caster assembly (10) until weight of trailer is supported by towing vehicle.

e. Close pintle (5) and install lockpin (4).

f. Remove safety chains (8) from lifting handles (9). Cross safety chains under drawbar ring (6) and attach to towing vehicle eyebolts (7).

g. Connect intervehicular cable (13) to towing vehicle receptacle (3).

h. Remove two dummy covers (14) from lowing vehicle air couplings (2). Connect intervehicular air hoses (1) to towing vehicle air couplings. Turn towing vehicle air valves on to supply pressure to trailer service air system.

i. Pull release handle (12) and raise adjustable caster assembly (10) into locked position. Ensure that release handle is fully engaged.

2-10. COUPLING TRAILER TO TOWING VEHICLE (Con't).

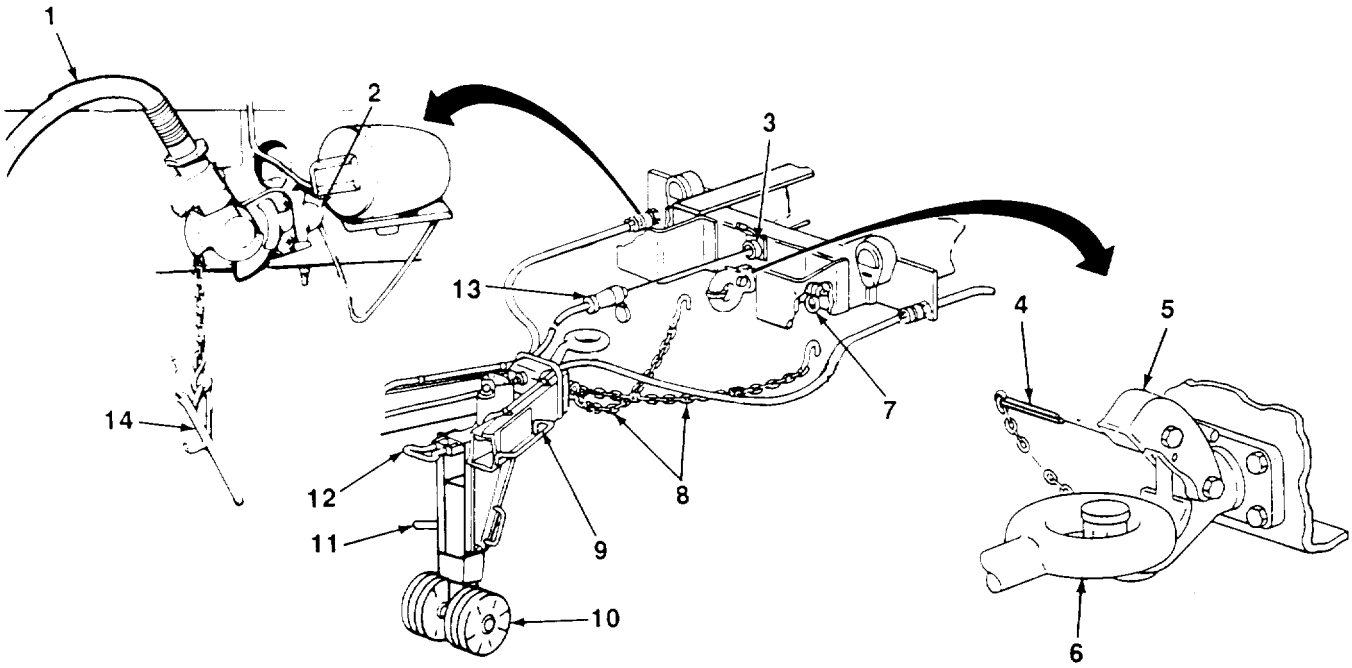

2-11. TOWING INSTRUCTIONS.

a. Perform all During (D) PMCS in Table 2-1 while operating the trailer.

b. When towing the trailer, the overall length of the unit must be kept in mind when passing other vehicles and when turning.

c. Turning and backing operations will be affected because the towing vehicle and trailer act as a hinged unit.

d. Follow prescribed speeds at all times (para 1-6).

e. When parking for extended periods, set the handbrakes on both towing vehicle and trailer.

f. If trailer or trailer and towing vehicle are parked on a hill, chock wheels.

g. Refer to FM 21-305 for further information on proper driving practices.

2-12. UNCOUPLING TRAILER FROM TOWING VEHICLE.

WARNING

All personnel must stand clear of towing vehicle and trailer during uncoupling operation. Failure to follow this warning may result in serious injury or death.

TA506977

2-12. UNCOUPLING TRAILER FROM TOWING VEHICLE (Con't).

NOTE

Adjustable caster assembly is heavy. Hold ground pad handle firmly to support adjustable caster assembly while lowering.

a. Pull release handle (13) and use ground pad handle (10) to lower adjustable caster assembly into down and locked position.

b. Use handcrank (12) to raise trailer until weight of trailer is on adjustable caster assembly (11) and drawbar ring (6) is centered in towing vehicle pintle (5).

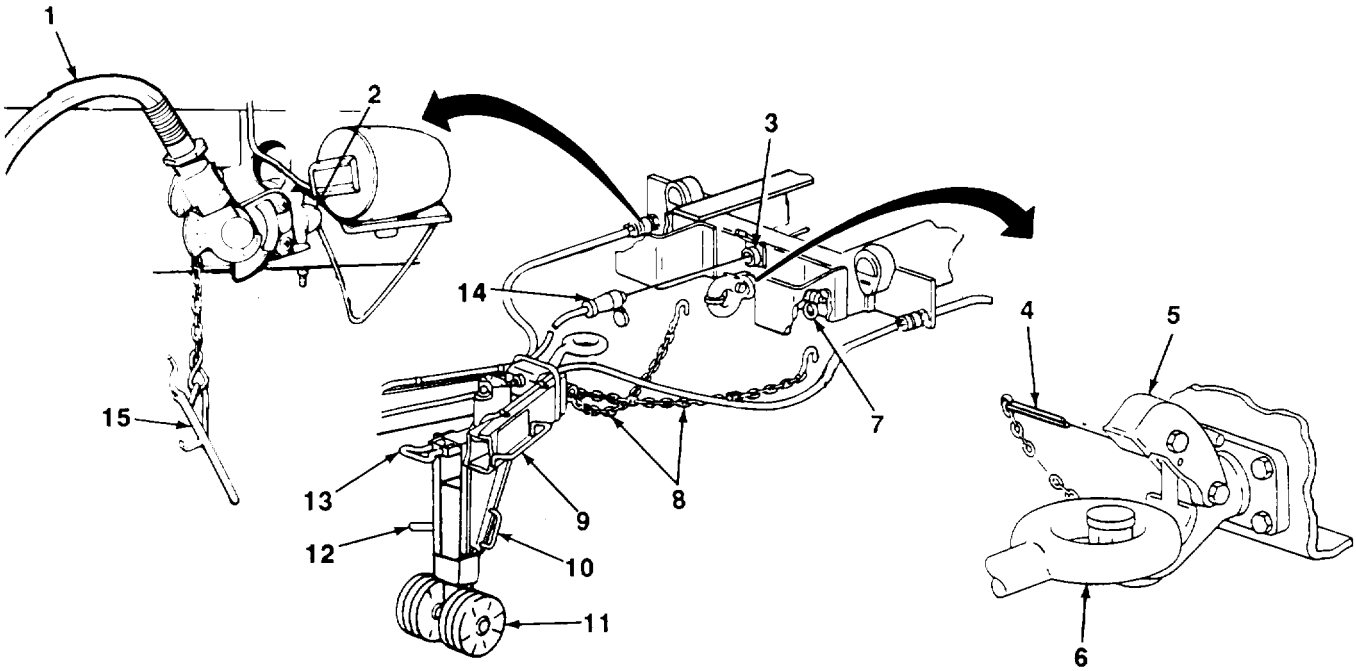

c. Apply left and right handbrakes on trailer by pulling handbrake levers (16) forward until they are at a 90° angle to the frame assembly (17).

d. Remove intervehicular cable (14) from towing vehicle receptacle (3) and attach to cable brackets on trailer.

e. Turn off trailer service air system by turning air valves on towing vehicle off.

f. Rotate and release the intervehicular air hoses (1) from towing vehicle air couplings (2).

g. Install dummy covers (15) in towing vehicle air couplings (2). Stow intervehicular air hoses (1) on trailer brackets.

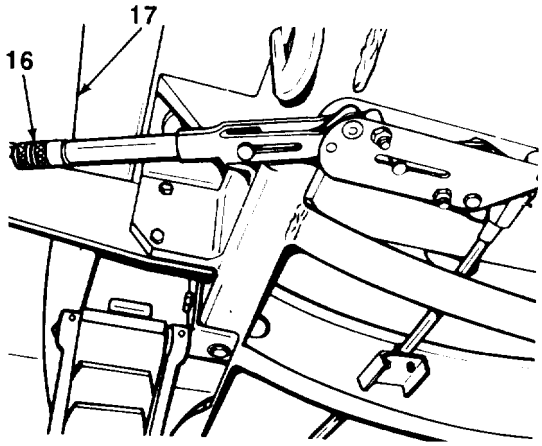

TA506978

2-12. UNCOUPLING TRAILER FROM TOWING VEHICLE (Con't).

h. Remove lockpin (4) and open towing vehicle pintle (5).

i. Remove safety chains (8) from towing vehicle eyebolts (7) and stow on lifting handles (9).

j. Use handcrank (12) to raise trailer until weight of trailer is clear of towing vehicle pintle (5).

k. Remove towing vehicle a safe distance away from trailer.

l. Perform all After (A) PMCS in Table 2-1.

2-13. OPERATING WATER TANK.

a. General. Operate the water tank in accordance with standard operating procedures. Be sure to perform the During (D) PMCS listed in Table 2-1.

b. Filling Fiberglass Water Tank (M149 and M149A1).

WARNING

- **Use extreme care to ensure that no foreign material enters the water tank. The highest sanitary standards must be followed when handling drinking water. Serious Illness may result from Impure, contaminated drinking water.**
- **When water tank is used for NON POTABLE WATER, water tank must be so marked.**

(1) Loosen wingnut (2) by turning counterclockwise and push hinged eyebolt (1) out of slot on clamp assembly (4).

(2) Lift clamp assembly (4) until manhole cover (3) is completely open and will stay open without assistance.

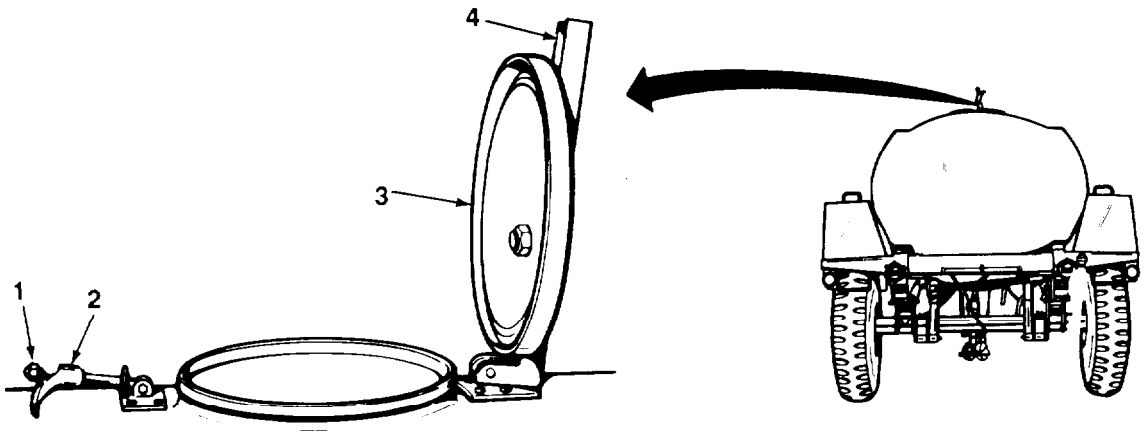

NOTE

Water tank must be filled by an overhead, free-flowing source, or by a pressure pump.

(3) Fill water tank through manhole opening.

(4) Close manhole cover (3). Swing hinged eyebolt (1) and wingnut (2) into slot on clamp assembly (4). Tighten wingnut by turning clockwise.

TA506979

2-13. OPERATING WATER TANK (Con't).

c. Filling Stainless Steel Water Tank (M149A2).

WARNING

- **Use extreme care to ensure that no foreign material enters the water tank. The highest sanitary standards must be followed when handling drinking water. Serious illness may result from impure, contaminated drinking water.**
- **When water tank is used for NONPOTABLE WATER, water tank must be so marked.**

(1) Open manhole cover (9) by pulling up and out on two fasteners (8) and laying them on tank surface. Pull looped end of J-bolt (5) and lift manhole cover until holes on bracket (6) and manhole cover aline. Release J-bolt.

(2) Fill water tank through manhole opening.

(3) Pull looped end of J-bolt (5) and close manhole cover (9) until holes on bracket (6) and manhole cover aline. Release J-bolt into holes.

(4) Pull out on two fasteners (8) and release into holes (7).

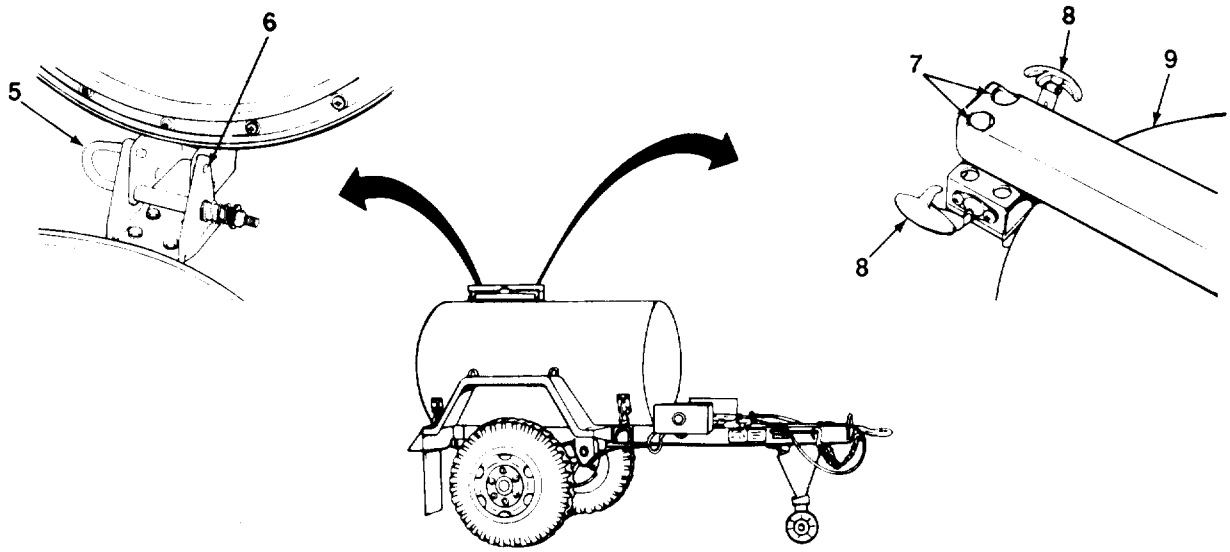

d. Draining Water Tank.

WARNING

if water tank was filled with nonpotable water, water tank must be flushed out with clean potable water and drained. Do not allow water tank to sit for extended periods of time with any amount of liquid in it. Standing water will result in contamination and food poisoning. KEEP WATER TANK CLEAN AT ALL TIMES. Failure to follow this warning may result in serious illness or death to personnel.

(1) Close manifold valve (16) by pushing in.

(2) Press down on levers (10) and drain remaining water from piping (15).

TA506980

2-13. OPERATING WATER TANK (Con't).

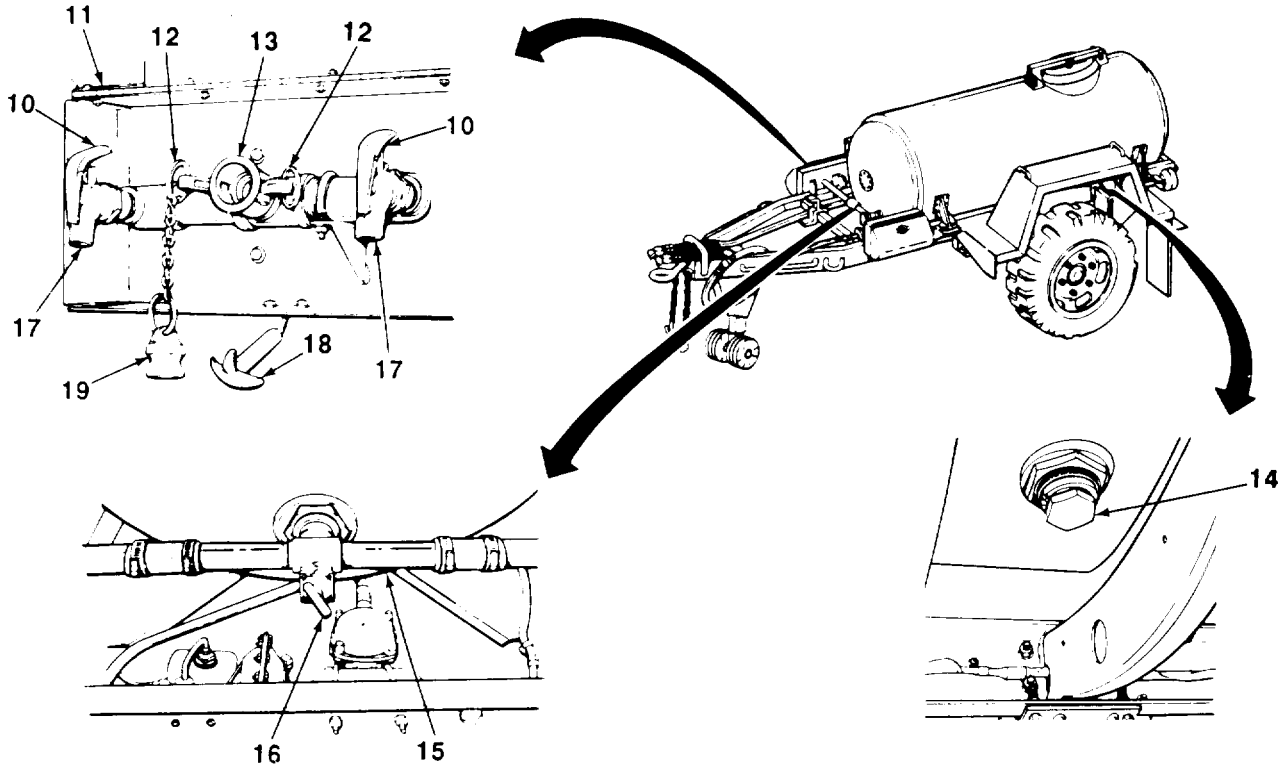

(3) Remove drain plug (14) and drain liquid from water tank.

(4) Install drain plug (14).

e. Dispensing Consumable Liquids from Forward Faucets.

(1) Pull out and release fasteners (18) and lift faucet box cover (11) until open.

(2) Pull out on handle of manifold valve (16) to release liquid to faucets (17).

(3) Press down on levers (10) to allow liquid to flow from faucets (17). Release levers to stop flow.

(4) Water tanks are equipped with a quick-disconnect coupling (13) for use with field kitchens. To use, pull out coupling rings (12) and remove dust plug (19).

TA506981

Section IV. OPERATION UNDER UNUSUAL CONDITIONS

Paragraph Title	Page Number
Fording	2-21
General	2-18
Operation in Dusty or Sandy Areas	2-21
Operation in Extreme Cold	2-18
Operation in Extreme Heat	2-20
Operation in High Humidity and Saltwater Areas	2-20
Operation in Mud and Snow	2-20

2-14. GENERAL.

a. This section contains special instructions for operating and servicing the equipment under unusual conditions.

b. Special care must be taken in cleaning and lubrication when extremes in temperature, humidity, and terrain conditions are present or anticipated, in addition to performing all normal PMCS. Proper cleaning, lubrication, storage, and handling ensures proper operation and function, and also guards against excessive wear.

2-15. OPERATION IN EXTREME COLD.

CAUTION

To ensure that water tank trailer is not damaged, approved practices and precautions must be followed. FM 9-207 contains general cold weather Information applicable to water tank trailers.

a. Extensive preparation of material scheduled for operation in extreme cold is necessary. Refer to FM 9-207 and FM 21-305.

b. Refer to Chapter 3, Section l for proper lubrication during extreme cold weather conditions.

CAUTION

Exercise care when removing accumulations of ice, mud, and snow from trailer and water tank. Fiberglass water tanks are easilydamaged by chipping or scraping. This is especially true in extreme cold.

c. To prevent damage to water tank trailer in extreme cold, use the following procedures:

(1) In areas where temperatures fall below 32°F (0°C), the manhole cover should be kept tightly closed.

(2) After each succeeding use, drain piping. Close manifold valve (1) by pushing in and then depress faucet levers (2) to drain water from piping.

(3) If operating M1429A2 stainless steel water tank, use self-draining rear faucet (3) to dispense water when the temperature is below freezing. Open by turning counterclockwise, Close by turning clockwise.

(4) If the temperature is expected to fall below 0°F (-18°C), the trailer should be placed in a shelter if possible.

2-15. OPERATION IN EXTREME COLD (Con't).

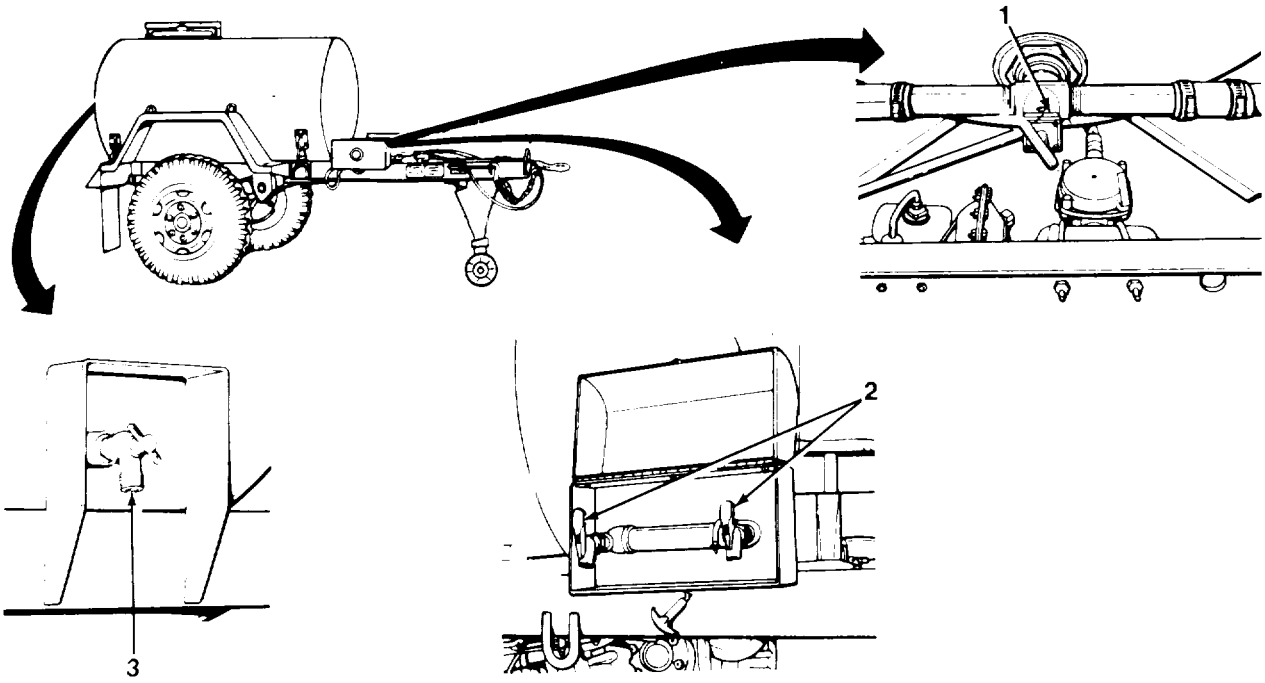

CAUTION

Trailers equipped with fiberglass water tanks may not use the M67 immersion heater to prevent them from freezing. The heat generated by the M67 immersion heater will melt or otherwise damage the fiberglass water tanks.

d. Trailers equipped with a stainless steel water tank may use the M67 immersion heater to prevent contents from freezing. Refer to TM 5-4540-202-12&P for operation and maintenance of the M67 immersion heater. Below are general mounting instructions for M67 immersion heater use:

(1) Remove nut (4), washer (6), and heater bracket (5) from trailer front frame assembly (7).

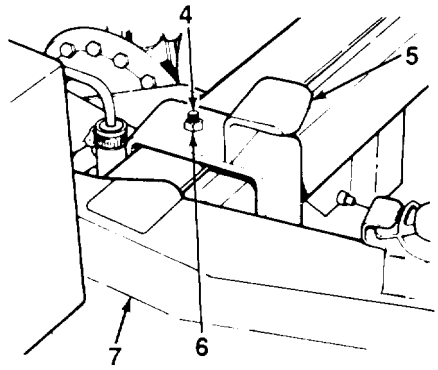

TA506982

2-15. OPERATION IN EXTREME COLD (Con't).

(2) Loosen two L-bolts (8) on immersion heater (9) and slide heater bracket (5) between flat metal surfaces (10) located on immersion heater.

(3) Tighten two L-bolts (8) and ensure that heater bracket (5) and immersion heater (9) are secure.

(4) Open manhole cover (12) (para 2-13). Position immersion heater (9) in manhole opening with heater bracket (5) opposite manhole cover. Tilt forward until heater bracket reaches lower lip of manhole rim.

(5) Tilt immersion heater (9) back, and engage fasteners (11) on heater bracket (5).

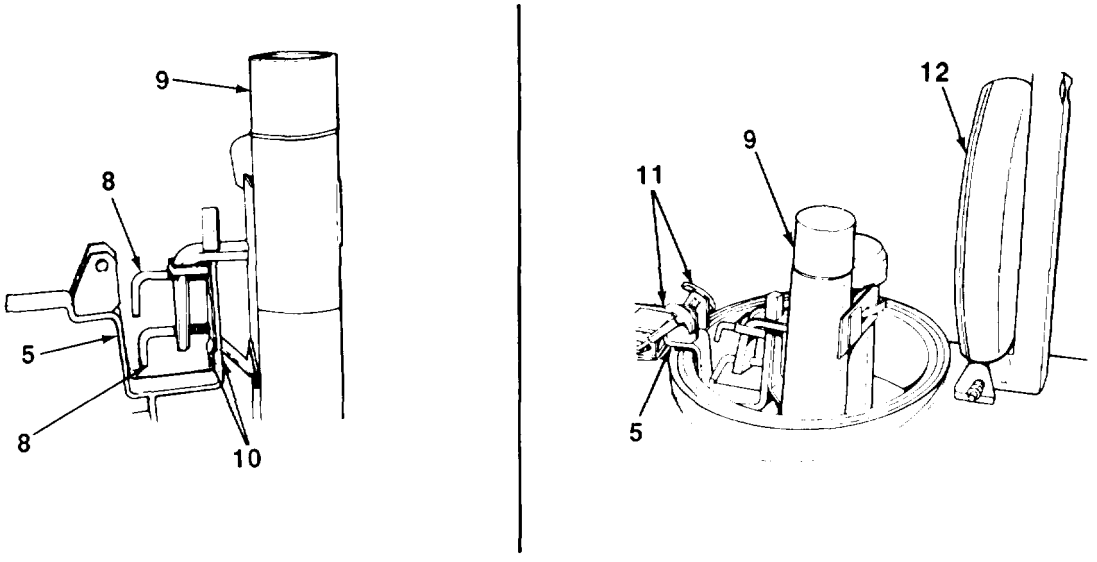

2-16. OPERATION IN EXTREME HEAT.

a. Refer to Chapter 3, Section I for proper lubrication during extreme heat conditions. Adequate lubrication is essential. Extreme heat will cause oil films to dissipate.

b. Keep tires covered from direct sunlight to prevent increased air pressure and deterioration of rubber.

2-17. OPERATIONS IN HIGH HUMIDITY AND SALTWATER AREAS.

a. Moist and salty areas can destroy the rust preventative qualities of oils and greases. When equipment is active, exposed surfaces should be cleaned and lubricated daily. Refer to Chapter 3, Section I for proper lubrication in high humidity and saltwater areas.

b. When equipment is inactive, unpainted parts should be coated with lubricating oil (Item 14, Appendix E). All covers and caps should be in place.

2-18. OPERATION IN MUD AND SNOW.

a. Immediately after operation in mud or snow, thoroughly clean, inspect, and lubricate if tactical situation permits. Refer to Chapter 3, Section I for proper lubrication instructions.

b. Pack wheel bearings as required (Chapter 3, Section I).

c. Refer to FM 21-305 for special instructions on driving hazards in snow. Reduce air pressure to 25 psi (172 kPa).

TA506983

2-19. OPERATION IN DUSTY OR SANDY AREAS.

a. Inspect, clean, and lubricate frequently when operating in dusty or sandy areas. Refer to Chapter 3, Section I for proper lubrication instructions.

b. Ensure that no dust or sand enters exposed mechanisms or lubrication fittings during Inspections and repair operations. Cover exposed parts with tarpaulins or other suitable cover during disassembly and assembly.

c. When beginning operations in dusty or sandy areas, remove lubricants from exposed components such as landing gear, if tactical situation permits. Grease and oil will cause dust and sand to accumulate. This will cause grease and sand to act as an abrasive which will cause rapid wear.

2-20. FORDING.

a. Refer to towing vehicle operating instructions for information on fording operations. Towing vehicle instructions are also applicable to the trailer.

b. Refer to TM 9-238 for instruction on deepwater fording and deepwater fording kits.

c. Fording depth of water tank trailer is limited to manhole cover. If properly sealed, fording depth limit is to the towing vehicle depth.

d. Immediately after trailer is towed from water, if tactical situation permits, perform the following services:

(1) Notify organizational maintenance to remove wheel and rim assemblies and thoroughly clean with cleaning compound (Item 5, Appendix E). Dry all working components of the handbrakes and wheel bearings. Lubricate handbrakes and underbody (Chapter 3, Section l).

(2) Saltwater immersion greatly increases rusting and corrosion, especially on unpainted surfaces. Remove all traces of saltwater and salt deposits from all areas of the trailer. Apply lubricating oil (Item 14, Appendix E). Notify organizational maintenance that complete disassembly and assembly may be needed.

CHAPTER 3
OPERATOR MAINTENANCE

Section I. LUBRICATION INSTRUCTIONS

Paragraph Title	Page Number
General	3-1
Lubrication Chart	3-2
Specific Lubrication Instructions	3-1

3-1. GENERAL.

NOTE

These instructions are MANDATORY.

a. The water tank trailers must receive lubrication with approved lubricants at recommended intervals in order to be mission-ready at all times.

b. The KEY lists lubricants to be used in all temperature ranges and shows the intervals.

c. The Lubrication Chart shows lubrication points, names items to be lubricated, there quired lubricant, and recommended intervals for lubrication. Any special lubricating instructions required for specific components are contained in the NOTES section of the chart.

d. Recommended intervals are based on normal conditions of operation, temperature, and humidity. When operating under extreme conditions, lubricants should always be changed more frequently. When in doubt, notify your supervisor.

3-2. SPECIFIC LUBRICATION INSTRUCTIONS.

a. Keep all lubricants in a closed container and store in a clean, dry place away from extreme heat. Keep container covers clean and do not allow dust, dirt, or other foreign material to mix with lubricants. Keep all lubrication equipment clean and ready for use.

b. Maintain a record of lubrication performed and report any problems noted during lubrication. Refer to DA Pam 738-750 for maintenance forms and procedures to record and report any findings.

WARNING

Wipe excess lubricant from the area of brakeshoe linings to avoid grease soaking the linings. If brakeshoe linings become soaked, have unit maintenance replace them. Failure to follow this warning may cause brakes to malfunction, resulting in serious Injury or death to personnel.

c. Keep all external parts not requiring lubrication free of lubricants. After lubrication, wipe off excess oil or grease to prevent accumulation of foreign matter.

d. Refer to FM 9-207 for lubrication instructions in cold weather.

e. Refer to TM 9-238 for lubrication instructions before and after fording operations.

f. After operation in mud, sandy, or dusty conditions, clean and inspect all points of lubrication for fouled lubricants Change lubricants as required.

LUBRICATION CHART

TRAILER, TANK, WATER: 1-1/2 TON, 2 WHEEL, 400 GALLON

M149 (NSN 2330-00-542-2039)

M149A1 (NSN 2330-00-832-8801)

M149A2 (NSN 2330-01-108-7367)

Intervals (on-condition or hard time) and related man-hour times are based on normal operation. The man-hour time specified is the time you need to do all services prescribed for a particular interval. Decrease the intervals if your lubricants are contaminated, or if you are operating equipment under adverse conditions, including longer-than-usuail opcrating hours. The intervals may be extended during periods of low activity. if extended, adequate preservation precautions must be taken.

Dotted leader lines indicate lubrication is required on both sides of the equipment.

WARNING

Dry cleaning solvent P-D-680 is toxic and flammable. Always wear protective goggles and gloves, and use only in a well-ventilated area. Avoid contact with skin, eyes, and clothes, and DO NOT breathe vapors. DO NOT use near open flame or excessive heat. The solvent's flash point is 100°F-138°F (38°C-59°C). If you become dizzy while using cleaning solvent, immediately get fresh air and medical help. If solvent contacts eyes, immediately wash your eyes and get medical aid.

Clean all fittings and area around lubrication points with dry cleaning solvent (Item 9, Appendix E) or equivalent before lubricating equipment. After lubrication, wipe off excess oil or grease to prevent accumulation of foreign matter.

The lowest level of maintenance authorized to lubricate a point is indicated in parentheses by use of the following: (C) Operator/Crew; or (O) Organizational Maintenance.

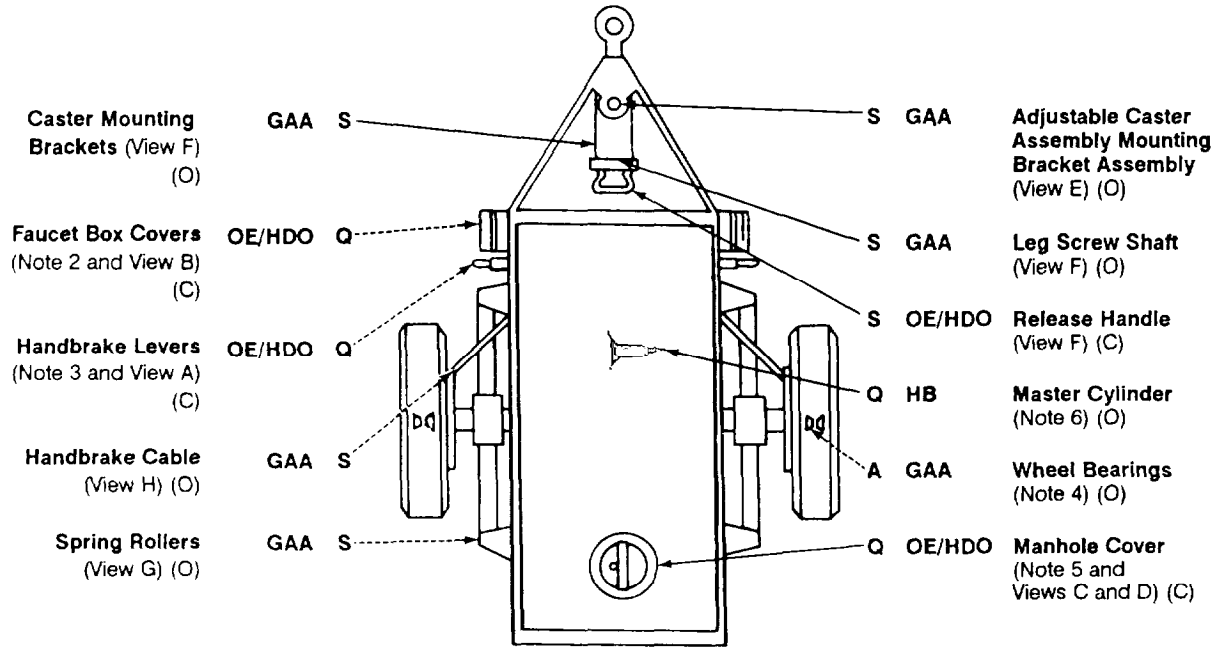

TOTAL MAN-HOURS*

INTERVAL	MAN-HOUR
Q	0.2
S	0.5
A	1.5

* The man-hour time specified is the time you need to do all services prescribed for a particular interval.

TA506984

– KEY –

LUBRICANTS	EXPECTED TEMPERATURES			FOR ARCTIC OPERATIONS, REFER TO FM 9-207.	INTERVALS
	ABOVE +32°F (ABOVE 0°C)	+40°F to -10°F (+4°C to -23°C)	0°F to -65°F (-18°C to -54°C)		
OE/HDO (MIL-L-2104) Lubricating Oil, Internal Combustion Engine, Tactical Service	OE/HDO-30	OE/HDO-10	—		Q - Quarterly S - Semiannual A - Annual
OEA (MIL-L-46167) Lubricating Oil, Internal Combustion, Arctic	—	—	OEA		
HB (MIL-B-46176) Brake Fluid Silicone, Automotive	All Temperatures				
GAA (MIL-G-10924) Grease, Automotive and Artillery	All Temperatures				

(A) HANDBRAKE LEVERS

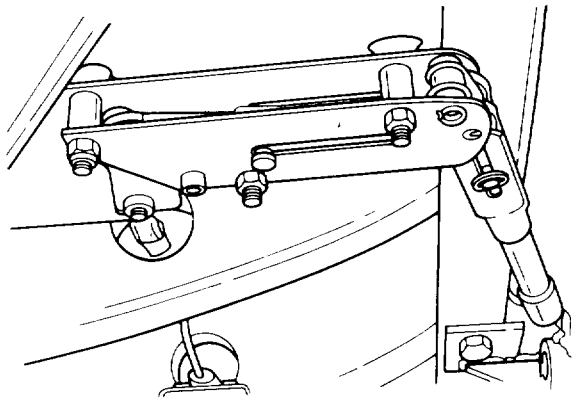

(B) FAUCET BOX COVERS

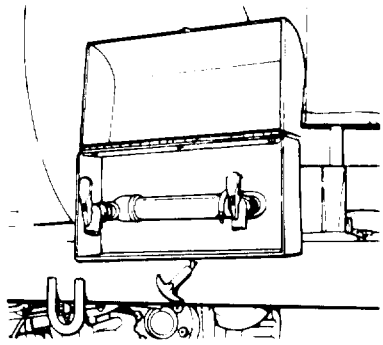

TA506985

Ⓒ MANHOLE COVER - STAINLESS STEEL TANK

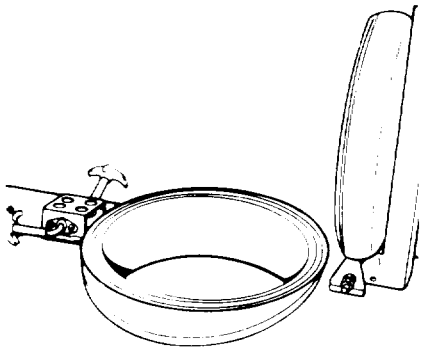

Ⓓ MANHOLE COVER - FIBERGLASS TANK

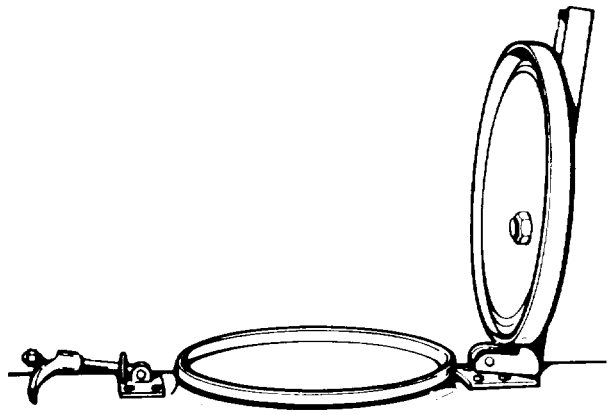

Ⓔ ADJUSTABLE CASTER ASSEMBLY MOUNTING BRACKET ASSEMBLY

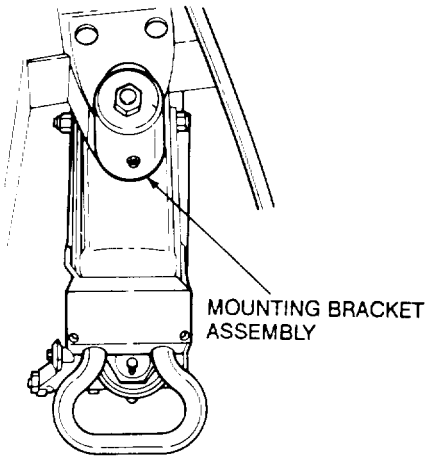

Ⓕ CASTER MOUNTING BRACKETS, RELEASE HANDLE, AND LEG SCREW SHAFT

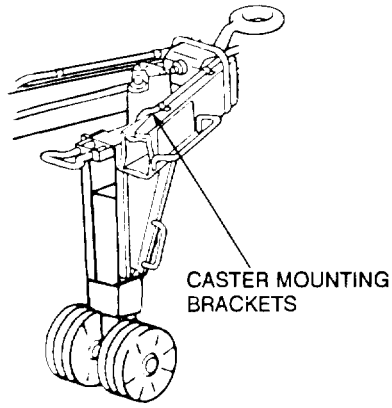

TA506986

(G) SPRING ROLLERS

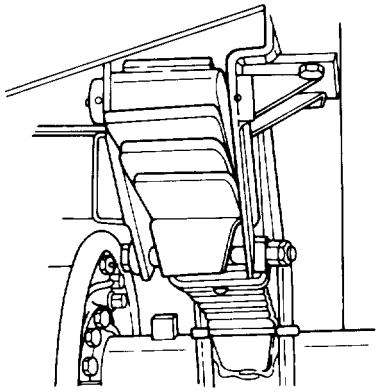

CAUTION

DO NOT lubricate springs.

(H) HANDBRAKE CABLE

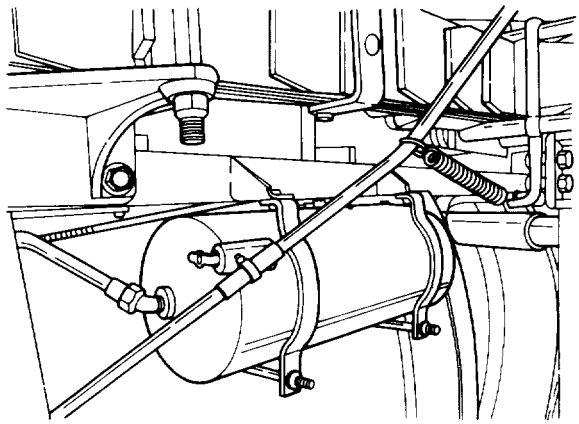

NOTES:

1. Lubricate after washing or fording.

2. FAUCET BOX COVERS. Lubricate hinges and swivel bases of faucet box cover latch sparingly with OE/HDO.

3. HANDBRAKE LEVERS. Lubricate all linkage, hinges, and latches with OE/HDO.

4. WHEEL BEARINGS. Every 12 months, remove, clean, and pack with GAA. Refer to TM 9-214, Inspection, Care, and Maintenance of Antifriction Bearings.

5. MANHOLE COVER. Lubricate hinges sparingly with OE/HDO.

6. MASTER CYLINDER. Every three months, check fluid level. Add fluid to within ½ in. (13 mm) from top.

TA506987

Section II. OPERATOR/CREW TROUBLESHOOTING PROCEDURES

Paragraph Title	Page Number
Explanation of Columns	3-7
General	3-7
Operator/Crew Troubleshooting, Table 3-1	3-8
Troubleshooting Symptom Index	3-8

3-3. GENERAL.

a. This section provides information for identifying and correcting malfunctions which may develop while operating your trailer.

b. The Troubleshooting Symptom Index in paragraph 3-5 lists common malfunctions which may occur, and refers you to the proper page in Table 3-1 for a troubleshooting procedure.

c. If you are unsure of the location of an item mentioned in troubleshooting, refer to paragraph 1-7 or to the maintenance task where the item is replaced.

d. Before performing troubleshooting, read and follow all safety instructions found in the Warning Summary at the front of this manual.

e. This section cannot list all malfunctions that may occur, nor all tests or inspections and corrective actions. If a malfunction is not listed, or is not corrected by the listed corrective actions, notify your supervisor.

f. When troubleshooting a malfunction:

(1) Locate the symptom or symptoms in the Troubleshooting Symptom Index in paragraph 3-5 that best describe the malfunction.

(2) Turn to the page in Table 3-1 where the troubleshooting procedures for the malfunction in question are described. Headings at the top of each page show how each troubleshooting procedure is organized: MALFUNCTION, TEST OR INSPECTION (in step number order), and CORRECTIVE ACTION.

(3) Perform each step in the order listed until the malfunction is corrected. DO NOT perform any maintenance task unless the troubleshooting procedure tells you to do so.

3-4. EXPLANATION OF COLUMNS.

The columns in Table 3-1 are defined as follows:

(1) MALFUNCTION. A visual or operational indication that something is wrong with the trailer.

(2) TEST OR INSPECTION. A procedure to isolate the problem in a component or system.

(3) CORRECTIVE ACTION. A procedure to correct the problem.

3-5. TROUBLESHOOTING SYMPTOM INDEX.

	Troubleshooting Procedure Page
BRAKES	
Air is leaking when intervehicular air hoses are connected	3-9
Brakes are locked; wheels will not turn	3-9
Brakes drag when trailer is towed	3-9
Brakes will not hold when service brakes are applied	3-9
Fluid is leaking around master cylinder or wheel cylinder	3-9
Jerking action in trailer when service brakes are applied	3-10
Trailer service brakes lockup when towing vehicle brakes are applied	3-10
ELECTRICAL SYSTEM	
All lamps fail to night	3-8
One stoplight lamp or taillight lamp does net work	3-8
FRAME ASSEMBLY AND WATER TANK	
Frame assembly components broken or damaged	3-10
Leaks are found around water tank fittings or weld joints	3-10
TIRES AND WHEELS	
Tires wearing unevenly	3-10
Wheels wobble during movement	3-10

Table 3-1. 0perator/Crew Troubleshooting.

MALFUNCTION	TEST OR INSPECTION	CORRECTIVE ACTION

ELECTRICAL SYSTEM

1. ALL LAMPS FAIL TO LIGHT.

Check to ensure that intervehicular cable is properly connected and secured.

Remove, then insert intervehicular cable plug to ensure a good connection.

If still inoperative, notify organizational maintenance.

2. ONE STOPLIGHT LAMP OR TAILLIGHT LAMP DOES NOT LIGHT

Step 1. Check for loose plug connectors at affected light.

Connect loose plug connectors.

Step 2. Check for burned out or damaged lamp.

Notify organizational maintenance.

Step 3. Check for broken wires and stripped insulation.

Notify organizational maintenance.

Table 3-1. Operator/Crew Troubleshooting (Con't).

MALFUNCTION TEST OR INSPECTION CORRECTIVE ACTION

Step 4. Check for moisture inside composite light assembly.

Notify organizational maintenance.

BRAKES

3. BRAKES DRAG WHEN TRAILER IS TOWED.

Check to ensure that handbrake levers have been disengaged.

Disengage handbrake.

Notify organizational maintenance if brakes still drag.

4. BRAKES ARE LOCKED; WHEELS WILL NOT TURN.

Step 1. Check for closed air valve on towing vehicle.

Open air valve. Refer to towing vehicle technical manual for instructions.

Step 2. Drain air from air reservoir. If brakes do not free, perform step 3.

Step 3. Ensure that service brake intervehicular air hose is connected to the proper air coupling on towing vehicle.

Connect intervehicular air hoses to proper towing vehicle air couplings.

5. BRAKES WILL NOT HOLD WHEN SERVICE BRAKES ARE APPLIED.

Step 1. Check for presence of brake fluid in master cylinder.

Notify organizational maintenance if brake fluid level is low.

Step 2. Ensure that towing vehicle air valves are turned on.

Turn on towing vehicle air valves. Refer to towing vehicle operator's manual.

Step 3. Check for evidence of leaking brake fluid or water around disk and rim assembly, and backing plate assembly, which would indicate saturated brake linings.

Notify organizational maintenance if brake fluid leaks are found.

Dry service brakes by applying while trailer is in motion.

6. AIR IS LEAKING WHEN INTERVEHICULAR AIR HOSES ARE CONNECTED.

No further test or inspection is required.

Notify organizational maintenance.

7. FLUID IS LEAKING AROUND MASTER CYLINDER OR WHEEL CYLINDER.

No further test or inspection required.

Notify organizational maintenance.

Table 3-1. Operator/Crew Troubleshooting (Con't).

MALFUNCTION TEST OR INSPECTION	CORRECTIVE ACTION
8. JERKING ACTION IN TRAILER WHEN SERVICE BRAKES ARE APPLIED.	
No further test or inspection is required.	Notify organizational maintenance.
9. TRAILER SERVICE BRAKES LOCK UP WHEN TOWING VEHICLE BRAKES ARE APPLIED.	
No further test or inspection is required.	Notify organizational maintenance.
TIRES AND WHEELS	
10. WHEELS WOBBLE DURING MOVEMENT.	
Step 1. Check to ensure that wheel nuts are tight.	Tighten wheel nuts. Notify organizational maintenance to apply proper torque.
Step 2. Have organizational maintenance check for loose wheel bearings and bent wheels.	
11. TIRES WEARING UNEVENLY.	
Step 1. Check for proper tire pressure.	Inflate tires to 40 psi (276 kPa).
Step 2. Check to ensure wheel nuts are tight.	Tighten wheel nuts. Notify organizational maintenance to apply proper torque.
Step 3. Have organizational maintenance check brake adjustment, suspension system, and axle assembly alinement.	
FRAME ASSEMBLY AND WATER TANK	
12. FRAME ASSEMBLY COMPONENTS BROKEN OR DAMAGED.	
No further test or inspection is necessary.	Notify organizational maintenance.
13. LEAKS ARE FOUND AROUND WATER TANK FITTINGS OR WELD JOINTS.	
No further test or inspection is necessary.	Notify organizational maintenance.

Section III. OPERATOR MAINTENANCE

Paragraph Title	Page Number
Handbrake Lever Adjustment..	3-11
Operational Air Leak Check	3-12

3-6. HANDBRAKE LEVER ADJUSTMENT.

WARNING

If trailer is not coupled to towing vehicle, ensure that wheels are securely chocked. Failure to do so may cause trailer to roll, resulting inserious injury or death to personnel and damage to equipment lever.

NOTE

- When handbrake lever is properly adjusted, handbrake lever should require only one-third of its full travel to apply handbrake lever.
- Both handbrake levers are adjusted the same way. This procedure covers one handbrake lever.

a. Release handbrake lever (1).

b. Turn adjustment knob (2) clockwise to tighten or counterclockwise to loosen.

c. Apply handbrake lever (1) and check adjustment. Repeat steps a and b as required.

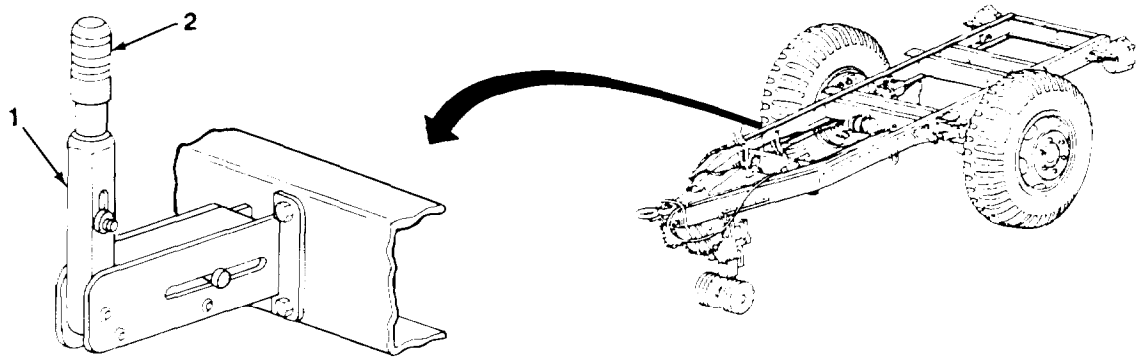

TA506988

3-7. OPERATIONAL AIR LEAK CHECK.

a. Couple trailer to towing vehicle and connect all intervehicular air hoses (para 2-10).

b. Start towing vehicle and watch air pressure gage (1) for normal reading. Refer to towing vehicle technical manual for instructions.

c. Push brake pedal down to applied position and hold.

d. Shut down towing vehicle engine.

e. Watch air pressure gage (1) for two minutes. If pressure drops more than 10% within two minutes, notify organizational maintenance.

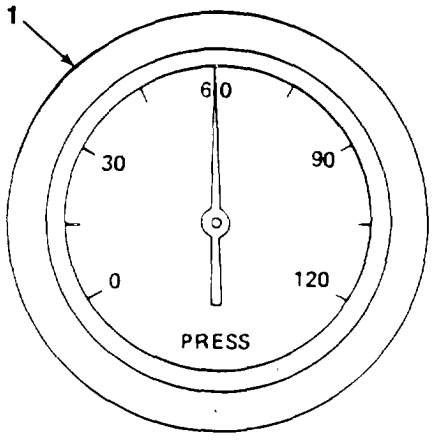

TA506989

CHAPTER 4
ORGANIZATIONAL MAINTENANCE

Section I. REPAIR PARTS; SPECIAL TOOLS; TEST, MEASUREMENT, AND DIAGNOSTIC EQUIPMENT (TMDE); AND SUPPORT EQUIPMENT

Paragraph Title	Page Number
Common Tools and Equipment	4-1
Repair Parts	4-1
Special Tools; Test, Measurement, and Diagnostic Equipment (TMDE); and Support Equipment	4-1

4-1. COMMON TOOLS AND EQUIPMENT.

Refer to the Modified Table of Organization and Equipment (MTOE) for authorized common tools and equipment applicable to your unit.

4-2. SPECIAL TOOLS; TEST, MEASUREMENT, AND DIAGNOSTIC EQUIPMENT (TMDE); AND SUPPORT EQUIPMENT.

There are no special tools or TMDE authorized for the water tank trailer. Support equipment needed to operate this equipment is limited to the towing vehicle.

4-3. REPAIR PARTS.

Repair parts are listed and illustrated in Appendix F of this manual.

Section II. SERVICE UPON RECEIPT

Paragraph Title	Page Number
General	4-2
Inspection Instructions	4-2
Servicing Instruction	4-2

4-4. GENERAL.

When anew, used, or reconditioned water tank trailer is received, determine whether it has been properly prepared for service and is capable of performing its mission. Follow the inspection instructions in paragraph4-5and servicing instructions in paragraph 4-6.

4-5, INSPECTION INSTRUCTIONS.

a. Refer to DD Form 1397 for procedures on unpacking the water tank trailer.

b. Remove all straps, plywood, tape, seals, and wrappings.

WARNING

Dry cleaning solvent P-D-680 is toxic and flammable. Always wear protective goggles and gloves, and use only in a well-ventilated area. Avoid contact with skin, eyes, and clothes, and DO NOT breathe vapors. DO NOT use near open flame or excessive heat. The solvent's flash point is 100°F-138°F (38°C-59°C). If you become dizzy while using cleaning solvent, immediately get fresh air and medical help. If solvent contacts eyes, immediately wash your eyes and get medical aid.

c. Remove rust preventive compound from coated exterior parts of the water trailer using dry cleaning solvent (Item 9, Appendix E) and rags (Item 18, Appendix E).

d. Inspect water tank trailer for damage incurred during shipment. Check also to see if the equipment has been modified.

e. Check the equipment against the packing list to ensure that the shipment is complete. Report any discrepancies in accordance with instructions in DA Pam 738-750.

4-6. SERVICING INSTRUCTIONS.

a. Perform all Operator/Crew and Organizational PMCS. Schedule the next PMCS on DD Form 314.

b. Lubricate all lubrication points as described in Chapter 3, Section I, regardless of interval.

c. Report any problems on DA Form 2407.

d. Perform a break-in road test of 25 mi (40 km) at a maximum speed of 50 mi/h (80 km/h).

Section III. ORGANIZATIONAL PREVENTIVE MAINTENANCE CHECKS AND SERVICES (PMCS)

Paragraph Title	Page Number
General	4-3
General PMCS Procedures	4-3
Organizational Preventive Maintenance Checks and Services (PMCS), Table 4-1	4-4
Reporting Repairs	4-3
Service Intervals	4-3
Specific PMCS Procedures	4-4

4-7. GENERAL.

To ensure that the water tank trailer is ready for operation at all times,it must be inspected systematically so that defects can be detected and corrected before they result unserious damage or failure. Table 4-1 contains a tabulated listing of Preventive Maintenance Checks And Services (PMCS) to be performed by organizational maintenance personnel.

4-8. SERVICE INTERVALS.

Perform PMCS, found in Table 4-1, at the following intervals:

(1) Perform Quarferly (Q) PMCS once every three months.

(2) Perform Semiannual (S) PMCS once every six months.

(3) Perform Annual (A) PMCS once each year.

4-9. REPORTING REPAIRS.

Report all defects and corrective actions on DA Form 2404. If a serious problem is found, report it to your supervisor immediately.

4-10. GENERAL PMCS PROCEDURES.

WARNING

Dry cleaning solvent P-D-680 is toxic and flammable. Always wear protective goggles and gloves, and use only in a well-ventilated area. Avoid contact with skin, eyes, and clothes, and DO NOT breathe vapors. DO NOT use near open flame or excessive heat, The solvent's flash point is 100°F-138°F (38°C-59°C). If you become dizzy while using cleaning solvent, immediately get fresh air and medical help. If solvent contacts eyes, immediately wash your eyes and get medical aid.

a. Keep equipment clean. Dirt, oil, and debris may cover up a serious problem. Clean as you work and as needed. Use dry cleaning solvent (Item 9, Appendix E) on all metal surfaces. Use soap (Item 8, Appendix E) and water on rubber, plastic, and painted surfaces.

b. While performing PMCS, inspect the following components:

(1) Bolt, Nuts, and Screws. Ensure that they are not loose, missing, bent, or broken. Tighten any that are loose.

4-10. GENERAL PMCS PROCEDURES (Con't).

(2) Welds. Inspect for gaps where parts are welded together. Report bad welds to your supervisor.

(3) Electric Wires or Connectors. Inspect for cracked or broken insulation, bare wires, and loose or broken connectors. Make repairs or replace as required.

(4) Hoses, Lines, and Fittings. Inspect for wear, damage, and leaks. Ensure that clamps and fittings are tight. If a leak originates from a loose fitting or connector, tighten it. If a component is broken or worn out, correct problem if authorized by the Maintenance Allocation Chart (MAC) (Appendix B). If not authorized, report it to your supervisor.

4-11. SPECIFIC PMCS PROCEDURES.

a. Organizational PMCS are provided in Table 4-1. Always perform PMCS in the order listed. Once it becomes a habit, anything that is not right can be spotted in a minute. If anything wrong is discovered through PMCS, perform the appropriate troubleshooting task in Section IV of this chapter. If any component or system is not serviceable or if given service does not correct problem, notify your supervisor.

b. The PMCS procedures in Table 4-1 are performed at three intervals. Before performing preventive maintenance, read all checks required for applicable interval and prepare tools needed to make all checks. Have several clean rags (item 18, Appendix E) handy. Perform ALL inspections at applicable interval.

c. The columns in PMCS are defined as follows:

(1) Item No. Provides a logical sequence for PMCS to be performed and is used as a source number when recording PMCS results on DA Form 2404.

(2) Interval. Specifies interval at which PMCS is to be performed.

(3) Item to be Inspected. Lists system and common name of items that are to be inspected.

(4) Procedures. Included in this column are specific servicing, inspection, replacement, or adjustment procedures to be followed.

Table 4-1. Organizational Preventive Maintenance Checks and Services (PMCS).

Q - Quarterly S - Semiannual A - Annual

ITEM NO.	INTERVAL			ITEM TO BE INSPECTED	PROCEDURES
	Q	S	A		
					NOTE Perform Operator/Crew PMCS prior to or along with Organizational PMCS.
1				LIGHTS	
		●			Replace any broken or cracked lenses or unserviceable lights (para 4-22,4-23, or 4-24).
2				INTERVEHICULAR CABLE	
		●			Check intervehicular cable for cuts, breaks, and frayed wires or damaged plug (para 4-27).

Table 4-1. Organizational Preventive Maintenance Checks and Services (PMCS) (Con't).

Q - Quarterly S - Semiannual A - Annual

ITEM NO.	INTERVAL			ITEM TO BE INSPECTED	PROCEDURES
	Q	S	A		
3				BRAKES	
		●			a. Check brake adjustment for ½ in. (12.7 mm) minimum and ¾ in. (19.1 mm) maximum pushrod travel in master cylinder and air-brake chamber (para 4-39).
		●			b. Check master cylinder fluid level. Fill to within ½ in. (12.7 mm) from top (Chapter 3, Section l).
		●			c. Clean, inspect, and repair or replace internal service brake parts as required (para 4-32).
		●			d. Adjust brakeshoes (para 4-32).
		●			e. Check handbrake cable adjustment. Adjust as required (para 4-31).
		●			f. Remove and clean air filter element. Replace if unserviceable (para 4-41).
4				INTERVEHICULAR AIR HOSES	
		●			Check intervehiclar air hoses for cuts, breaks, and damaged air couplings. Replace if defective (para 4-37 or 4-38).
5				AIR RESERVOIR	
		●			Check air reservoir and lines for damage and ensure that fittings are tight. Replace air reservoir if it is damaged (para 4-40).
6				WHEEL BEARINGS	
					Remove wheel hubs and wheel bearings. Clean, inspect, and pack wheel bearings (para 4-45).
7				WHEELS AND TIRES	
	●				a. Inspect tires for wear and damage. Check tread depth (TM 9-2610-200-24),
	●				b. Torque wheel nuts to 340-370 Ib.-ft. (461-502 NŽm) (para 4-43).
8				FRAME	
			●		Inspect for cracks, bent members, and broken welds.

Table 4-1. Organizational Preventive Maintenance Checks and Services (PMCS) (Con't).

Q - Quarterly S - Semiannual A - Annual

ITEM NO.	INTERVAL Q	S	A	ITEM TO BE INSPECTED	PROCEDURES
9				ADJUSTABLE CASTER ASSEMBLY	
	●				a. Inspect for bent and broken components (para 4-49).
	●				b. Inspect release handle for proper operation (para 4-49).
10				SUSPENSION	
		●			a. inspect suspension for bent or cracked leaves, loose mounting, and worn components.
		●			b. Inspect shock absorbers for damage or leaks (para 4-52).
11				WATER TANK	
					WARNING If contents of water tank was other than potable water, the water tank must be flushed out with clean potable water and drained. Do not allow trailer to sit for extended periods of time with any amount of liquid in it. Standing water will result In contamination and food poisoning. KEEP WATER TANK CLEAN AT ALL TIMES. Failure to follow this warning may result in serious Injury or death to personnel. **CAUTION** ● Do not use steam to clean the exteriors or Interiors of trailers equipped with fiberglass water tanks. Failure to follow this caution will result In damage to water tank. ● Do not use immersion heaters in trailers equipped with fiberglass water tanks. Failure to follow this caution will result in damage to water tank.
	●				Check for contamination. If tank is contaminated, flush with fresh water before use (para 2-13).
12				REFLECTORS	
		●			Replace any cracked or broken reflectors (para 4-60).

Table 4-1. Organizational Preventive Maintenance Checks and Services (PMCS) (Con't).

O - Quarterly S - Semiannual A - Annual

ITEM NO.	INTERVAL			ITEM TO BE INSPECTED	PROCEDURES
	Q	S	A		
13				DATA PLATES, DECALS, AND STENCIL MARKINGS	
		●			a. Ensure legibility and condition of data plates. Replace damaged and disfigured plates (para 4-61).
		●			b. Ensure that the following CAUTION is legibly stenciled on manhole cover of trailers with fiberglass water tanks: **CAUTION** DO NOT USE IMMERSION HEATER IN THIS WATER TANK.

Section IV. ORGANIZATIONAL TROUBLESHOOTING PROCEDURES

Paragraph Title	Page Number
Explanation of Columns	4-8
General	4-8
Organizational Troubleshooting, Table 4-2	4-10
Troubleshooting Symptom Index	4-9

4-12. GENERAL.

a. This section provides information for identifying and correcting malfunctions which may develop when operating or maintaining your trailer.

b. The Troubleshooting Symptom Index in paragraph 4-14 lists common malfunctions which may occur.The symptom index refers you to the proper page in Table 4-2 for a troubleshooting procedure.

c. This section cannot list all malfunctions that may occur, nor all tests or inspection and corrective actions. If a malfunction is not listed or is not corrected by listed corrective actions, notify your supervisor.

d. When troubleshooting a malfunction:

(1) Question operator to obtain any information that might help determine cause of problem. Before continuing, ensure that all applicable operator troubleshooting was performed.

(2) Locate symptom(s) in paragraph 4-14 that best describes the malfunction. If the appropriate symptom is not listed, notify your supervisor.

(3) Turn to the page in Table 4-2 where the troubleshooting procedures for the malfunction in question are described. Headings at the top of each page show how each troubleshooting procedure is organized: MALFUNCTION, TEST OR INSPECTION (in step number order), and CORRECTIVE ACTION.

(4) Perform each step in order listed until malfunction is corrected. DO NOT perform any maintenance task unless the troubleshooting procedure tells you to do so.

4-13. EXPLANATION OF COLUMNS.

The columns in Table 4-2 are defined as follows:

(1) MALFUNCTION. A visual or operational indication that something is wrong with the trailer.

(2) TEST OR INSPECTION. A procedure to isolate a problem in a component or system.

(3) CORRECTIVE ACTION. A procedure to correct the problem.

4-14. TROUBLESHOOTING SYMPTOM INDEX.

	Troubleshooting Procedure Page
BRAKES	
Handbrakes drag when trailer is moved	4-20
Handbrake will not hold when applied	4-20
Service brakes are dragging, uneven, or grabbing (one or both brakedrums running hot)	4-21
Service brakes are locked	4-21
Service brakes are weak.....	4-20
ELECTRICAL SYSTEM	
All lamps fail to night,	4-10
Blackout stoplight will not light..	4-15
Left (stoplight) brake light, left signal, right (stoplight) brake light, and right signal light will not light	4-12
Lights are dim or flickering	4-19
Right or left blackout marker light will not light	4-17
Taillight will not light	4-10
SUSPENSION	
No springing action in suspension system	4-22
TIRES	
Tires are cupped or wearing unevenly	4-22

Table 4-2. Organizational Troubleshooting.

MALFUNCTION TEST OR INSPECTION CORRECTIVE ACTION

ELECTRICAL SYSTEM

NOTE

For all lamps which will not light, check continuity of lamp filament. Replace lamp If check shows a burned-out filament. If lamp Is good, continue troubleshooting.

1. ALL LAMPS FAIL TO LIGHT.

Step 1. Check to see if intervehicular cable (2) is properly connected to towing vehicle socket (3).

If intervehicular cable (2) is not connected or loose, plug intervehicular cable into towing vehicle socket (3) and secure with latch (1).

Step 2. Using towing vehicle technical maintenance manual, troubleshoot towing vehicle electrical system to ensure that correct voltage is present in towing vehicle socket (3).

Correct towing vehicle wiring (see towing vehicle technical maintenance manual).

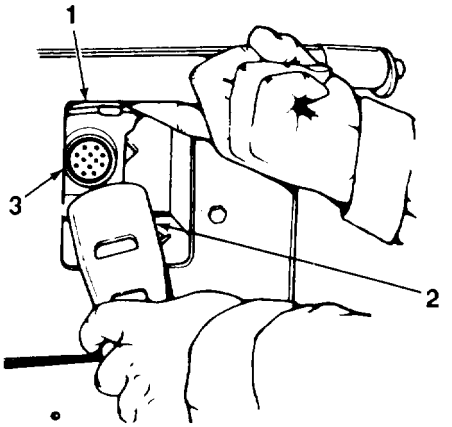

2. TAILLIGHT WILL NOT LIGHT.

Step 1. Using troubleshooting procedures in towing vehicle technical manual, perform tests to ensure 24 volts are present in towing vehicle socket (3).

Correct towing vehicle wiring, (see towing vehicle technical maintenance manual).

Step 2. Check intervehicular cable (2) for corrosion or frayed spots, cuts, and proper connection.

Clean all contact pins (4) with abrasive cloth (Item 6, Appendix E); plug intervehicular cable (2) into towing vehicle socket (3), ensuring that it is secure. Replace intervehicular cable if needed (para 4-27).

If taillight does not light, go to step 3.

TA506990

Table 4-2. Organizational Troubleshooting (Con't).

MALFUNCTION TEST OR INSPECTION CORRECTIVE ACTION

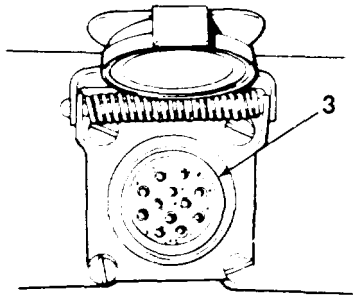

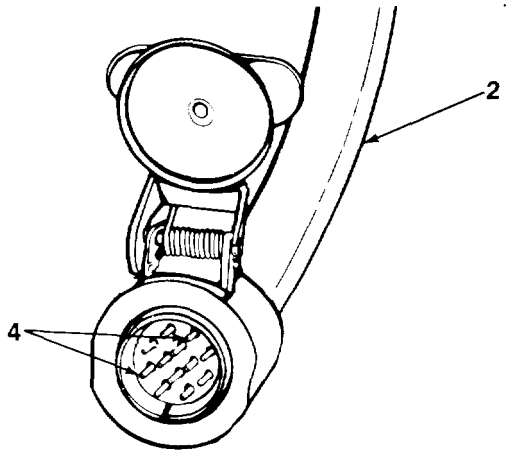

Step 3. Loosen six retaining screws (5), remove door assembly (6), and check for broken or frayed wires (7), broken lamps (8), and corrosion.

Replace lamps that do not light and damaged parts (para 4-23) or clean with rag (Item 18, Appendix E) and cleaning compound (Item 5, Appendix E) as necessary.

Remove lamp that does not light and clean socket with rag (Item 18, Appendix E) and cleaning compound (Item 5, Appendix E) as necessary.

If new lamp (8) still does not light, go to step 4.

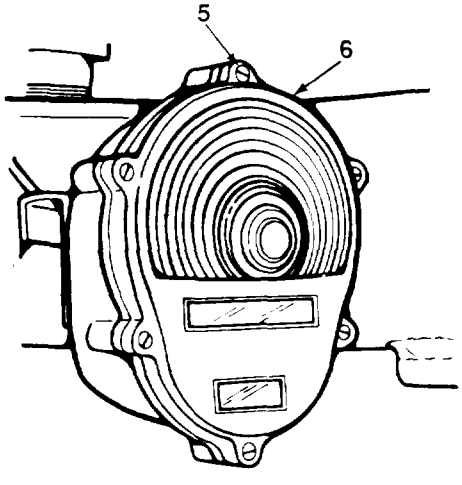

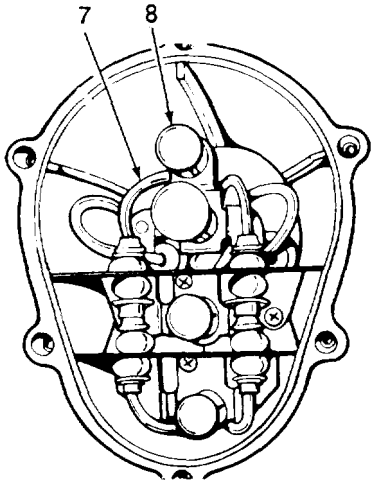

TA506991

Table 4-2. Organizational Troubleshooting (Con't).

MALFUNCTION
TEST OR INSPECTION
CORRECTIVE ACTION

Step 4. Set multimeter for voltage check. Place red lead (9) in lamp socket, black lead to ground, and check for 24 volts,

If voltage is not present, go to step 5.

If voltage is present, install new tamp (8).

Step 5. Disconnect wire 489 (10), place red lead (9) in wire, black lead to ground, and check for 24 volts.

If no voltage is present, go to step 6.

if voltage is present, connect wiring and go to step 7.

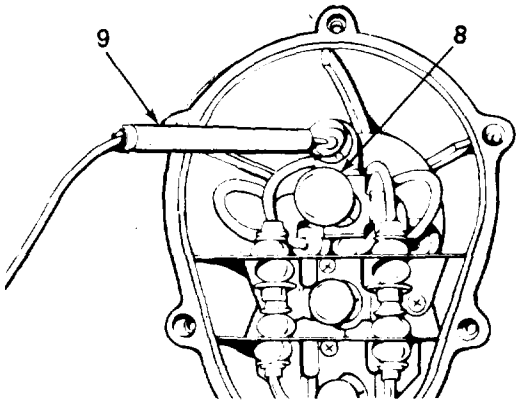

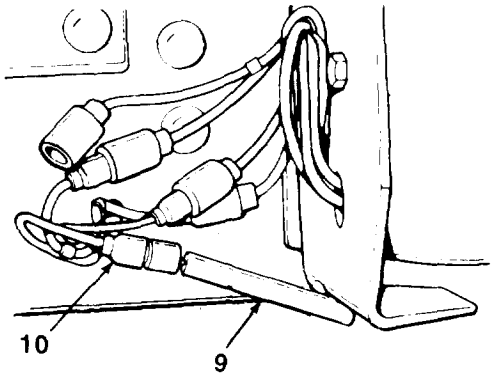

Step 6. Connect wire 489 (10) at the rear harness connector and disconnect wire 489 from wire 21 at the intervehicular connector. Place the red lead (9) in wire 21 and check for 24 volts.

If voltage is present, replace chassis wiring harness (para 4-25).

If voltage is not present, replace intervehicular cable (2) (para 4-27).

Step 7. Remove composite light assembly (para 4-24), and check mounting surface for cleanness.

Clean mounting surface with rag (item 18, Appendix E) and cleaning compound (Item 5, Appendix E) as required. Install composite light assembly (para 4-24). If lamp does not light, replace composite light assembly.

3. LEFT (STOPLIGHT) BRAKE LIGHT LEFT SIGNAL, RIGHT (STOPLIGHT) BRAKE LIGHT AND RIGHT SIGNAL LIGHT WILL NOT LIGHT

Step 1. Using troubleshooting procedures from towing vehicle technical manual, perform test to ensure 24 volts are present in towing vehicle socket (3).

Correct towing vehicle wiring, (see towing vehicle technical maintenance manual).

TA506992

Table 4-2. Organizational Troubleshooting (Con't).

MALFUNCTION
TEST OR INSPECTION
CORRECTIVE ACTION

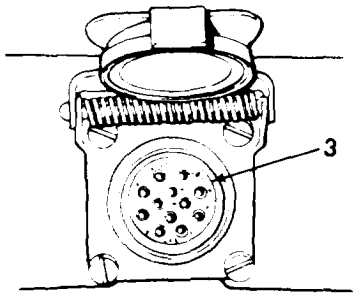

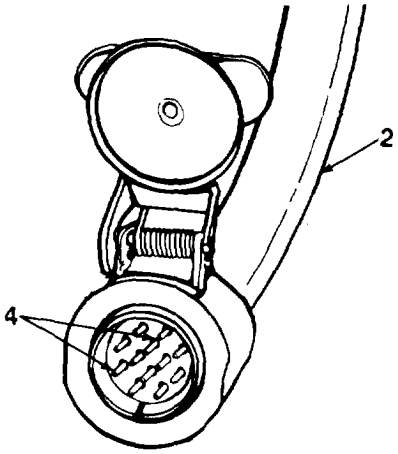

Step 2. Check intervehicular cable (2) for corrosion or frayed spots, cuts, and proper connection.

Clean all contact pins (4) with abrasive cloth (Item 6, Appendix E); plug intervehicular cable (2) into towing vehicle socket (3), ensuring that it is secure. Replace intervehicular cable if needed (para 4-27).

If lamp does not light, go to step 3.

Step 3. Loosen six retaining screws (5), remove door assembly (6), and check for broken or frayed wires (7), broken lamps (8), and corrosion.

Replace lamp that does not light and damaged parts (para 4-24) or clean with rag (Item 18, Appendix E) and cleaning compound (Item 5, Appendix E) as necessary.

Remove lamp that does not light and clean socket with rag (Item 18, Appendix E) and cleaning compound (Item 5, Appendix E) as necessary.

If new lamp (8) still does not light, go to step 4.

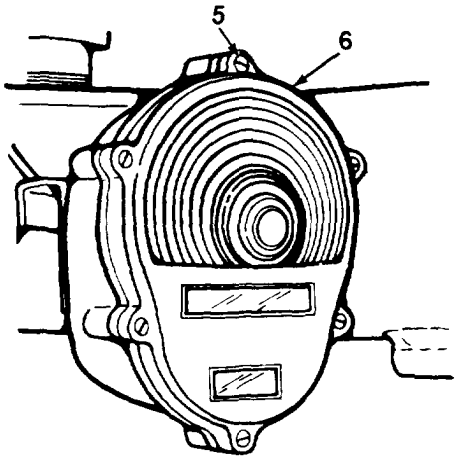

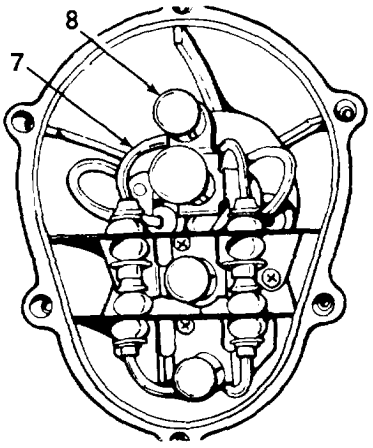

TA506993

Table 4-2. Organizational Troubleshooting (Con't).

MALFUNCTION	TEST OR INSPECTION	CORRECTIVE ACTION

Step 4. Set multimeter for voltage check. Place red lead (9) in lamp socket, black lead to ground, and check for 24 volts.

If voltage is not present, go to step 5.

If voltage is present, install new lamp (8).

Step 5. Disconnect wire 461 (left side) or wire 460 (right side) (11), piace red lead (9) in wire, black lead to ground, and check for 24 volts.

If no voltage is present, go to step 6.

If voltage is present, connect wiring and go to step 7.

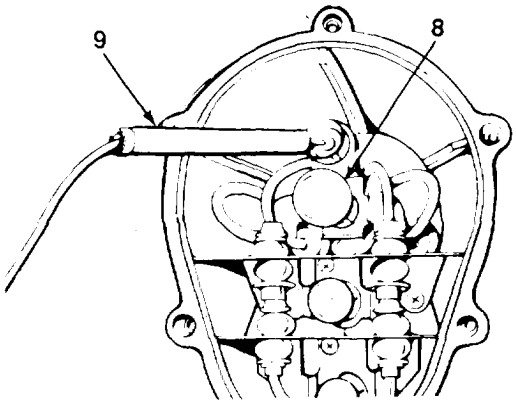

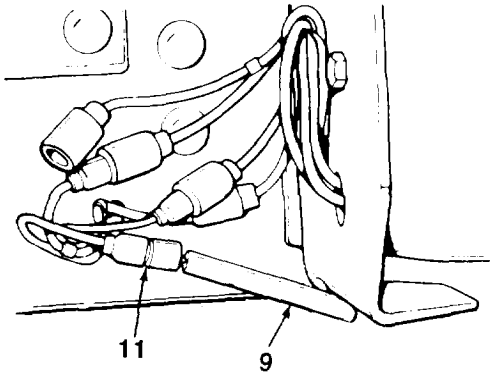

Step 6. Connect wire 461 or 460 (11) at the rear harness connector and disconnect 461 or 460 wire from wire 22 at the intervehicular connector. Place the red lead (9) in wire 22 and check for 24 volts.

If voltage is present, replace chassis wiring harness (para 4-25).

If voltage is not present, replace intervehicular cable (para 4-27).

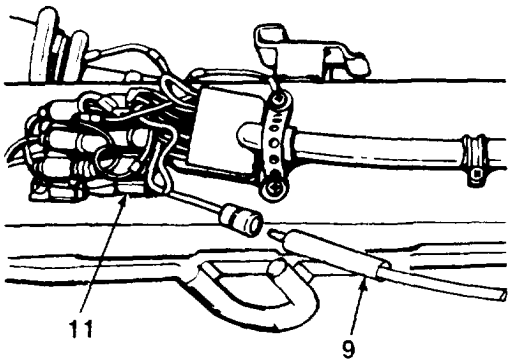

TA506994

Table 4-2. Organizational Troubleshooting (Con't).

MALFUNCTION TEST OR INSPECTION CORRECTIVE ACTION

Step 7. Remove composite light assembly (para 4-24), and check mounting surface for cleanness.

Clean mounting surface with rag (Item 18, Appendix E) and cleaning compound (Item 5, Appendix E) as required. Install composite light assembly (para 4-24). If lamp does not light, replace composite light assembly.

4. BLACKOUT STOPLIGHT WILL NOT LIGHT.

Step 1. Using troubleshooting procedures from towing vehicle technical manual, perform test to ensure that 24 volts are present in towing vehicle socket (3).

Correct towing vehicle wiring (see towing vehicle technical maintenance manual).

Step 2. Check intervehicular cable (2) for corrosion or frayed spots, cuts, and proper connection.

Clean all contact pins (4) with abrasive cloth (Item 6, Appendix E); plug intervehicular cable (2) into towing vehicle socket (3), ensuring that it is secure. Replace intervehicular cable if needed (para 4-27).

If lamp does not light, go to step 3.

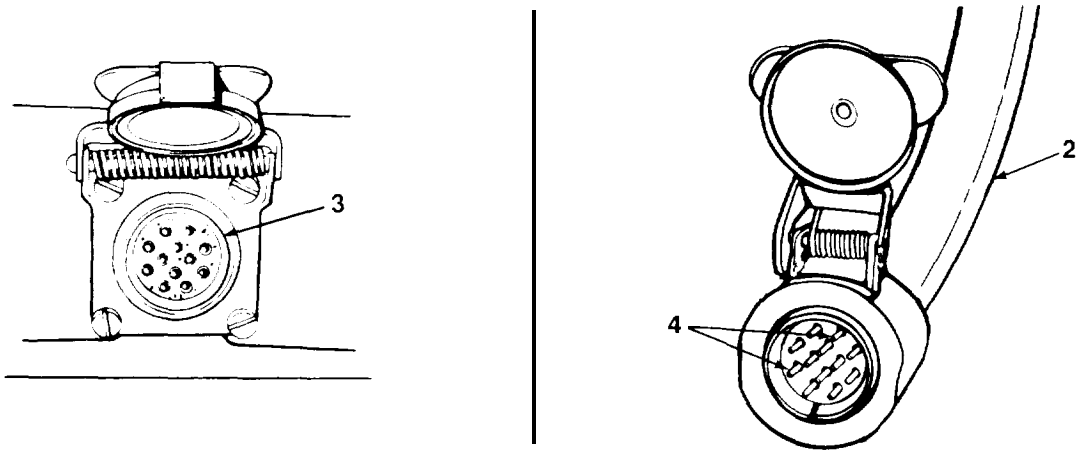

TA506995

Table 4-2. Organizational Troubleshooting (Con't).

MALFUNCTION TEST OR INSPECTION CORRECTIVE ACTION

Step 3. Loosen six retaining screws (5), remove door assembly (6), and check for broken or frayed wires (7), broken lamps (8), and corrosion.

Replace lamp that does not light and damaged parts (para 4-24) or clean with rag (Item 18, Appendix E) and cleaning compound (Item 5, Appendix E) as necessary.

Remove lamp that does not light and clean socket with rag (Item 18, Appendix E) and cleaning compound (Item 5, Appendix E) as necessary.

If new lamp (8) does not light, go to step 4.

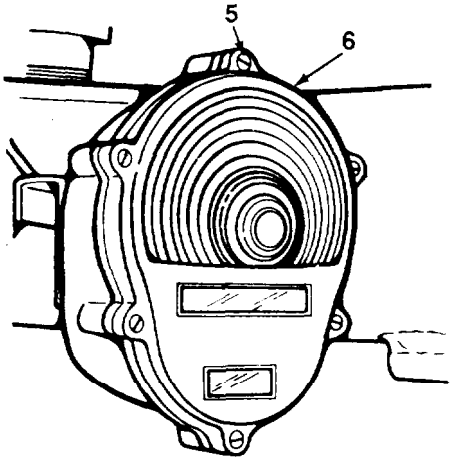

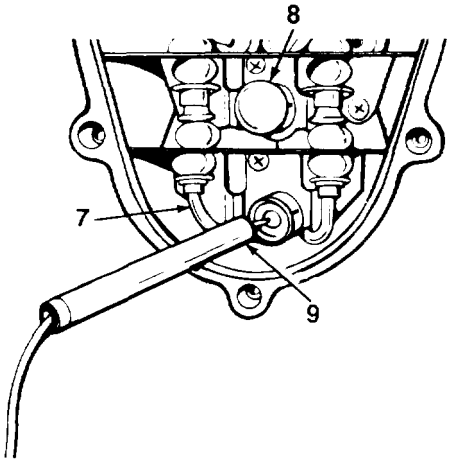

Step 4. Set multimeter for voltage check. Place red lead (9) in lamp socket, black lead to ground, and check for 24 volts.

If voltage is not present, go to step 5.

If voltage is present, install new lamp (8).

Step 5. Disconnect wire 23 (12), place red lead (9) in wire, black lead to ground, and check for 24 volts.

If no voltage is present, go to step 6.

If voltage is present, connect wiring and go to step 7.

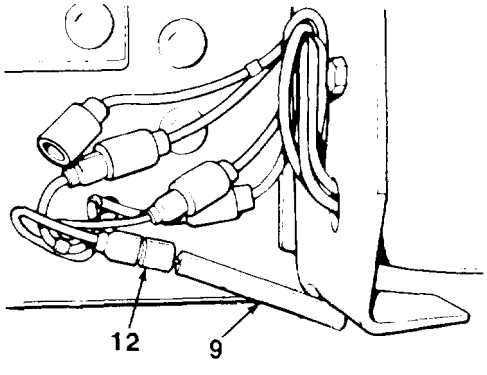

TA506996

Table 4-2. Organizational Troubleshooting (Con't).

MALFUNCTION
TEST OR INSPECTION
CORRECTIVE ACTION

Step 6. Connect wire 23(1 2) at the intervehicular connector, Place the red lead (9) in wire 23 and check for 24 volts.

If voltage is present, replace chassis wiring harness (para 4-25).

If voltage is not present, replace intervehicular cable (para 4-27).

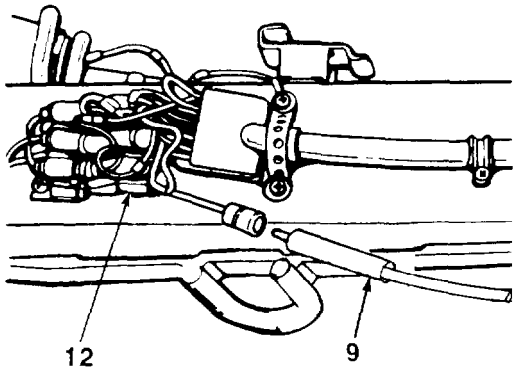

Step 7. Remove composite light assembly (para 4-24), and check mounting surface for cleanness,

Clean mounting surface with rag (Item 18, Appendix E) and cleaning compound (Item 5, Appendix E) as required. Install composite light assembly (para 4-24). If lamp does not light, replace composite light assembly,

5. RIGHT OR LEFT BLACKOUT MARKER LIGHT WILL NOT LIGHT.

Step 1. Using troubleshooting procedures from towing vehicle technical manual, perform test to ensure that 24 volts are present in towing vehicle socket (3).

Correct towing vehicle wiring (see towing vehicle maintenance manaul).

Step 2. Check intervehicular cable (2) for corrosion or frayed spots, cuts, and proper connection.

Clean all contact pins (4) with abrasive cloth (Item 6, Appendix E); plug intervehicular cable (2) into towing vehicle socket (3), ensuring that it is secure. Replace intervehicular cable if needed (para 4-27).

If lamp does not light, go to step 3

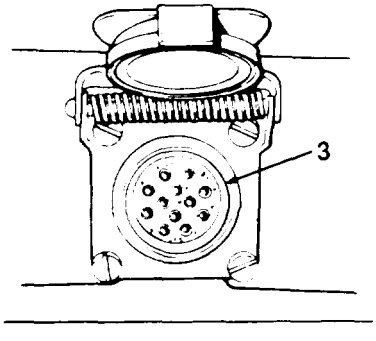

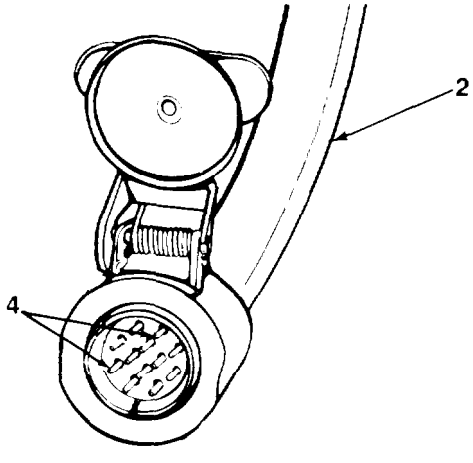

TA506997

Table 4-2. Organizational Troubleshooting (Con't).

MALFUNCTION TEST OR INSPECTION CORRECTIVE ACTION
Step 3. Loosen six retaining screws (5), remove door assembly (6), and check for broken or frayed wires (7), broken lamps (8), and corrosion. Replace lamp that does not light and damaged parts (para 4-24) or clean with rag (Item 18, Appendix E) and cleaning compound (Item 5, Appendix E) as necessary. Remove lamp that does not light and clean socket with rag (Item 18, Appendix E) and cleaning compound (Item 6, Appendix E) as necessary. If new lamp still does not light, go to step 4.

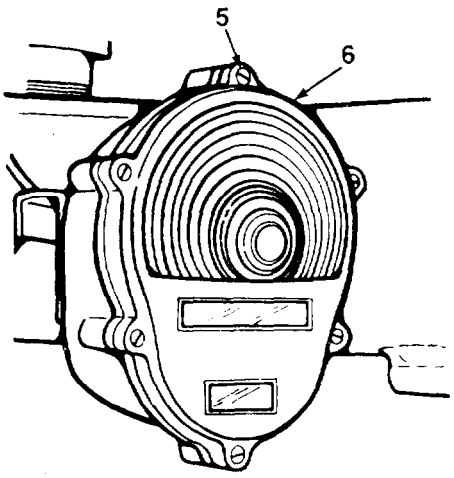

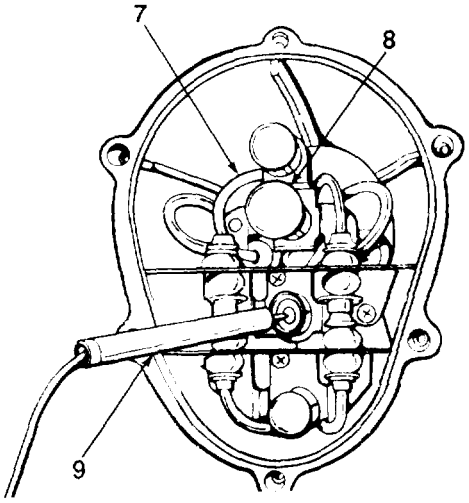

Step 4. Set multimeter for voltage check. Place red lead (9) in lamp socket, black lead to ground, and check for 24 volts.

If voltage is not present, go to step 5.

If voltage is present, install new lamp

Step 5. Disconnect wire 484 (left side) or 483 (right side) (13), place red lead (9) in wire, black lead to ground, and check for 24 volts.

If no voltage is present, go to step 6.

If voltage is present, connect wiring and go to step 7.

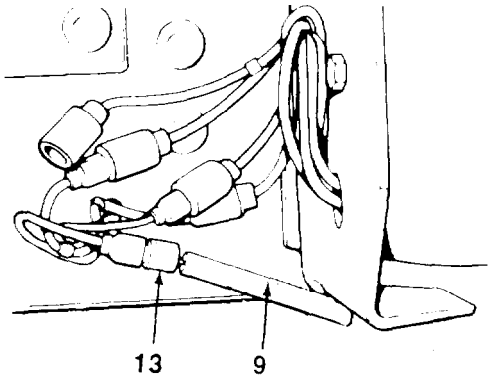

TA506998

Table 4-2. Organizational Troubleshooting (Con't).

MALFUNCTION
TEST OR INSPECTION
CORRECTIVE ACTION

Step 6. Connect wire 483 or 484 (13) as applicable to the rear harness connector and disconnect wire 24 from wire 483 or 484 at the intervehicular connector. Place the red lead (9) in wire 24 and check for 24 volts.

If voltage is present, replace chassis wiring harness (para 4-25).

If voltage is not present, replace intervehicular cable (2) (para 4-27).

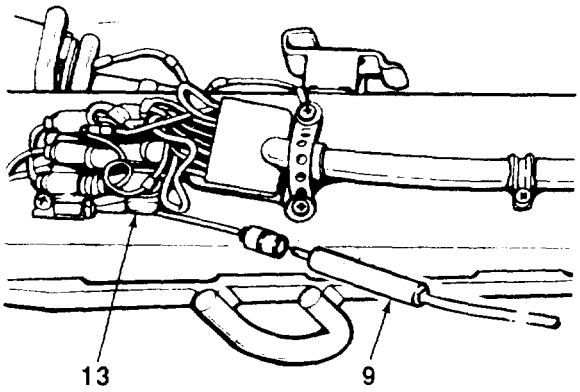

Step 7. Remove composite light assembly (para 4-24), and check mounting surface for cleanness.

Clean mounting surface with rag (Item 18, Appendix E) and cleaning compound (Item 5, Appendix E) as required. Install composite light assembly (para 4-24). If lamp does not light, replace composite light assembly.

6. LIGHTS ARE DIM OR FLICKERING.

Step 1. Check to see if intervehicular cable (2) is properly plugged into towing vehicle socket (3).

Plug intervehicular cable (2) firmly into towing vehicle socket (3), and secure with latch (1).

Step 2. Check for dirty or corroded contact pins (4) in intervehicular cable plug and towing vehicle socket (3).

Clean as required with abrasive cloth (Item 6, Appendix E).

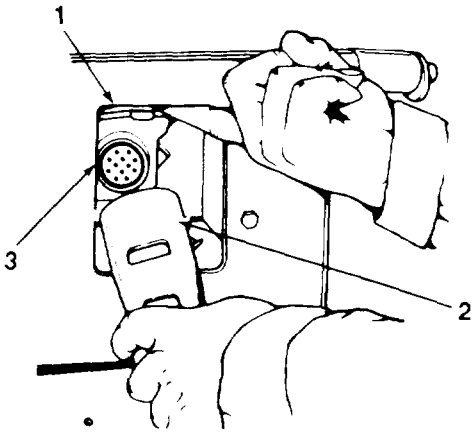

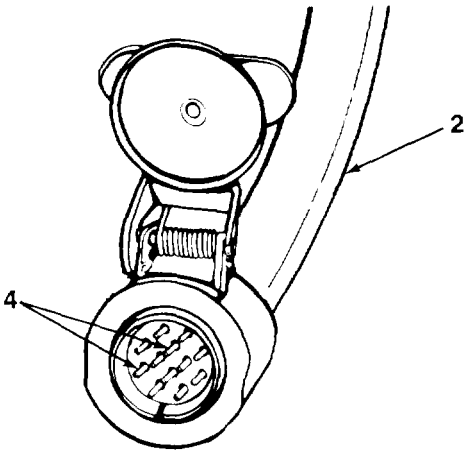

TA506999

Table 4-2. Organizational Troubleshooting (Con't).

MALFUNCTION
TEST OR INSPECTION
CORRECTIVE ACTION

Step 3. Check for poor or loose ground connections on trailer.

Clean and tighten ground connections.

BRAKES

7. HANDBRAKES DRAG WHEN TRAILER IS MOVED.

Step 1. Check for improperly adjusted handbrake levers.

Adjust handbrake levers (para 3-6).

Step 2. Check for improperly installed or broken brakeshoe return springs.

Correctly install brakeshoe return springs or replace handbrake cable assembly as required (para 4-32 or 4-31).

8. HANDBRAKE WILL NOT HOLD WHEN APPLIED.

Step 1. Check for improperly adjusted handbrake levers.

Adjust handbrake levers (para 3-6).

Step 2. Check movement of handbrake cable assembly when handbrake is applied.

If no movement is observed, replace handbrake cable assembly (para 4-31).

9. SERVICE BRAKES ARE WEAK.

Step 1. Check for low brake fluid level at the master cylinder.

Add brake fluid (Item 3, Appendix E) (Chapter 3, Section I).

Step 2. Check for air leaks in intervehicular air hoses (Table 2-1, 4c).

Bleed brakes (para 4-36).

NOTE

Remove parts needed to gain access to brakeshoe linings (para 4-32).

Step 3. Check for worn brakeshoe linings.

Adjust service brakes (para 4-32).

Step 4. Check for grease or water on brakeshoe linings.

Notify direct support maintenance to replace brakeshoe linings if coated with grease

Table 4-2. Organizational Troubleshooting (Con't).

MALFUNCTION
TEST OR INSPECTION
CORRECTIVE ACTION

Step 5. Perform pushrod travel test (para 4-39).

Notify direct support maintenance if problem is not corrected.

Step 6. Check to ensure that towing vehicle air valves are turned on.

Turn on towing vehicle air valves as directed in towing vehicle technical manual.

10. SERVICE BRAKES ARE LOCKED.

Step 1. Check to see if intervehicular air hoses are properly connected.

Connect intervehicular air hoses to towing vehicle correctly (para 2-10).

Step 2. Check to ensure that towing vehicle air valves are turned on

Turn on towing vehicle air valves as directed in towing vehicle technical manual.

Step 3. Check to ensure that handbrakes are released.

Release handbrakes.

Step 4. Check for damaged or missing preformed packing in intervehicular air coupling.

Replace damaged or missing preformed packing (para 4-37).

Step 5. Check for air leaks in intervehicular air hoses.

Tighten loose fittings or connectors.

NOTE

Remove parts as needed to gain access to brakeshoe return springs (para 4-32).

Step 6. Check for weak or broken brakeshoe return springs.

Replace weak or broken brakeshoe return springs (para 4-32).

11. SERVICE BRAKES ARE DRAGGING, UNEVEN, OR GRABBING (ONE OR BOTH BRAKEDRUMS RUNNING HOT).

Step 1. Ensure that service brakes are not out of adjustment or adjusted too tight.

Adjust service brakes (para 4-32).

NOTE

Remove parts needed to gain access to brakedrums, wheel bearings, and brakeshoe linings (para 4-32).

Step 2. Check for cracked, scored, or deformed brakedrums.

Replace brakedrum (para 4-45). Notify direct support maintenance to repair brakedrums as needed.

Table 4-2. Organizational Troubleshooting (Con't).

MALFUNCTION TEST OR INSPECTION	CORRECTIVE ACTION
Step 3. Check for loose wheel bearings.	Adjust wheel bearings (para 4-45).
Step 4. Check for loose or worn out brakeshoe linings.	Replace brakeshoes (para 4-32).
TIRES	
12. TIRES ARE CUPPED OR WEARING UNEVENLY	
Step 1. Check for correct tire pressure of 40 psi (276 kPa).	Adjust tire pressure as needed.
Step 2. Check for loose wheel nuts.	Torque wheel nuts to 340-370 Ib.-ft. (461-502 NŽm).
Step 3. Check for loose wheel bearings.	Adjust wheel bearings (para 4-45).
Step 4. Check for bent wheel or rim.	Replace defective wheel (para 4-43).
SUSPENSION	
13. NO SPRINGING ACTION IN SUSPENSION SYSTEM.	
Step 1. Check for loose or broken spring leaves.	Notify direct support maintenance to replace springs as needed.
Step 2. Check for loose or worn out shock absorbers.	Tighten or replace shock absorbers as required (para 4-52).

Section V. GENERAL MAINTENANCE INSTRUCTIONS

Paragraph Title	Page Number
Cleaning Instructions	4-23
General	4-23
Inspection Instructions	4-24
Repair Instructions	4-25
Tagging Wires and Hoses,	4-25
Work Safety	4-23

4-15. GENERAL.

a. These general maintenance instructions contain generalship practices and specific methods you must be familiar with to properly maintain your trailer. You should read and understand these practicesand methods before performing any organizational maintenance tasks.

b. Before beginning a task, find out how much repair, modification, or replacement is needed to fix the equipment as described in this manual. Sometimes the reason for equipment failure can be seen right away, and complete teardown is not necessary. Disassemble equipment only as far as necessary to repair or replace damaged or broken parts.

c. The following “Initial Setup” information applies to all procedures:

(1) Resources are not listed unless they apply to the procedure.

(2) Personnel are listed only if more than one technician is required to complete task. If "Personnel Required” is not listed, one technician can complete task.

d. All tags and forms attached to equipment must be checked to learn reason for removal from service. Modification Work Orders (MWO) and Technical Bulletins (TB) must also rechecked for equipment changes and updates.

e. In some cases, a part may be damaged by removal, If the part appears to be good, and other parts behind it are not defective, leave it on and continue with the procedure. Here are a few simple rules:

(1) Do not remove dowel pins or studs unless loose, bent, broken, or otherwise damaged.

(2) Do not remove bearings or bushings unless damaged. If you need to remove to access parts behind them, pull bearings and bushings out carefully.

(3) Replace all gaskets, seals, and preformed packings.

4-16. WORK SAFETY.

a. Observe all WARNINGS and CAUTIONS. Always use power tools carefully.

b. Protect yourself against injury. Wear protective gear such as safety goggles or lenses, safety shoes, rubber apron, or gloves.

c. When lifting heavy parts., have someone help you. Ensure that lifting/jacking equipment is working properly, is suitable for assigned task, and is secure against slipping.

4-17. CLEANING INSTRUCTIONS.

WARNING

Improper cleaning methods and use of unauthorized cleaning liquids or solvents can injure personnel and damage equipment. To prevent this, refer to TM 9-247 for further instructions.

a. General. Cleaning instructions will be the same for a majority of parts and components which makeup the trailer. The following should apply to all cleaning, inspection, repair, and assembly operations:

4-17. CLEANING INSTRUCTIONS (Con't).

(1) Clean all parts before inspection, after repair, and before assembly.

(2) Keep hands free of grease which can collect dust, dirt, and grit.

(3) After cleaning, all parts should be covered or wrapped to protect them from dust and dirt. Parts that are subject to rust should be lightly oiled.

b. Steam Cleaning.

(1) Before steam cleaning exterior of trailer, protect all electrical equipment which could be damaged by steam or moisture.

(2) Place disassembled parts in a suitable container to steam clean. Parts that are subject to rust should be dried and lightly oiled after cleaning.

c. Castings, Forgings, and Machined Metal Parts.

WARNING

Dry cleaning solvent P-D-680 is toxic and flammable. Always wear protective goggles and gloves, and use only in a well-ventilated area. Avoid contact with skin, eyes, and clothes, and DO NOT breathe vapors. DO NOT use near open flame or excessive heat. The solvent's flash point is 100°F-138°F (38°C-59°C). If you become dizzy while using cleaning solvent, immediately get fresh air and medical help. If solvent contacts eyes, immediately wash your eyes and get medical aid.

(1) Clean inner and outer surfaces with dry cleaning solvent (Item 9, Appendix E).

(2) Remove grease and accumulated deposits with a stiff bristle brush.

WARNING

Compressed air used for cleaning or drying purposes, or for clearing restrictions, should never exceed 30 psi (207 kPa). Wear protective clothing (goggles/shield, gloves, etc.) and use caution to avoid injury to personnel.

(3) Clear out all threaded holes with compressed air to remove dirt and cleaning fluids.

CAUTION

Do not wash oil seals, electrical cables, and flexible hoses with dry cleaning solvent or mineral spirits. Serious damage or destruction of material would result.

d. Oil Seals, Electrical Cables, and Flexible Hoses. Wash electrical cables and flexible hoses with water and solution of soap (Item 8, Appendix E) and wipe dry.

e. Bearings. Clean bearings in accordance with TM 9-214.

4-18. INSPECTION INSTRUCTIONS.

NOTE

All damaged areas should be marked for repair or replacement.

a. All components and parts must be carefully checked to determine if they are serviceable for reuse, can be repaired, or must be scrapped.

4-18. INSPECTION INSTRUCTIONS (Con't).

b. Inspect drilled and tapped (threaded) holes for the following:

(1) Wear, distortion, cracks, and any other damage in or around holes.

(2) Threaded areas for wear distortion (stretching) and evidence of cross-threading.

c. Inspect metal lines flexible lines (hoses), and metal fittings for the following:

(1) Metal lines for sharp kinks, cracks, bad bends, and dents

(2) Flexible lines for fraying, evidence of leakage, and loose metal fittings or connectors

(3) Metal fittings and connectors for thread damage and worn or rounded hex heads.

d. Inspect castings, forgings, and machined metal parts for the following:

(1) Machined surfaces for nicks, burrs, raised metal, wear, and other damage.

(2) Inner and outer surfaces for breaks and cracks.

e. Inspect air lines, fittings, and connectors for leaks by coating fittings and connections with solution of soap (Item 8, Appendix E). No leakage is permissible,

f. Inspect bearings in accordance with TM 9-214.

4-19. REPAIR INSTRUCTIONS.

a. Any repair procedure peculiar to a specific part or component is covered in the section or paragraph relating to that item. After repair, clean all parts thoroughly to prevent dirt, metal chips, or other foreign material from entering any working parts.

b. Repair casting, forgings, and machined metal parts using the following instructions:

(1) Refer to TM 9-237 for instructions on repairing minor cracked casting or forgings,

(2) Repair minor damage to machined surfaces with a fine mill file or abrasive cloth (Item 6, Appendix E) dipped in dry cleaning solvent (Item 9, Appendix E).

(3) Replace any deeply nicked machined surface that could affect the assemble operation.

(4) Repair minor damage to threaded capscrew holes with thread tap of same size to prevent cutting oversize.

c. Refer to paragraph 4-37 or 4-38 for maintenance on metal lines, flexible lines (hoses), and metal fittings,

4-20. TAGGING WIRES AND HOSES.

a. As soon as first wire or hose is disconnected, write number 1 on two tags. Secure one tag to wire or hose and other tag to terminal, nipple, or fitting. After disconnecting second wire or hose, write number 2 on two tags. Secure one tag to wire or hose, and second tag to terminal, nipple, or fitting. Do the same for all wires and hoses.

b. Note which numbers you used, in pencil, on art in manual. This will help you re-tag properly when you remove tags from some parts to perform cleaning and maintenance work.

c. Remove all tags when finished.

Section VI. ELECTRICAL SYSTEM MAINTENANCE

Paragraph Title	Page Number
Blackout Light Maintenance (M149)	4-29
Chassis Wiring Harness Replacement	4-36
Chassis Wiring Harness Repair	4-40
Composite Stoplight-Taillight Maintenance (M1 49A1 and M149A2)	4-33
Intervehicular Cable Maintenance	4-42
Lamp Replacement	4-26
Stoplight-Taillight Maintenance (M149)	4-31
Wiring Diagrams	4-44

4-21. LAMP REPLACEMENT.

This Task Covers:

a. Removal (M149A1 and M149A2)
b. installation (M149A1 and M149A2)
c. Removal (M149)
d. Installation (M149)

Initial Setup:

Equipment Conditions:

- Intervehicular cable disconnected from towing vehicle (para 2-12).

Tools/Test Equipment:

- General mechanic's tool kit

a. REMOVAL (M149A1 AND M149A2)

1. Loosen six screws (2) and remove lens assembly (1) and preformed packing (3) from body assembly (6).
2. Remove lamp (4) by pushing in and turning counterclockwise until it releases. Discard lamp.
3. Repeat step 2 for blackout light lamps (7) and taillight lamp (5).

b. INSTALLATION (M149A1 AND M149A2)

1. Install new lamp (4) in socket by pressing in and turning clockwise until lamp locks.
2. Repeat step 1 for two blackout light lamps (7) and taillight lamp (5).
3. Position preformed packing (3) and lens assembly (1) on body assembly (6).
4. Tighten six screws (2).

4-21. LAMP REPLACEMENT (Con't).

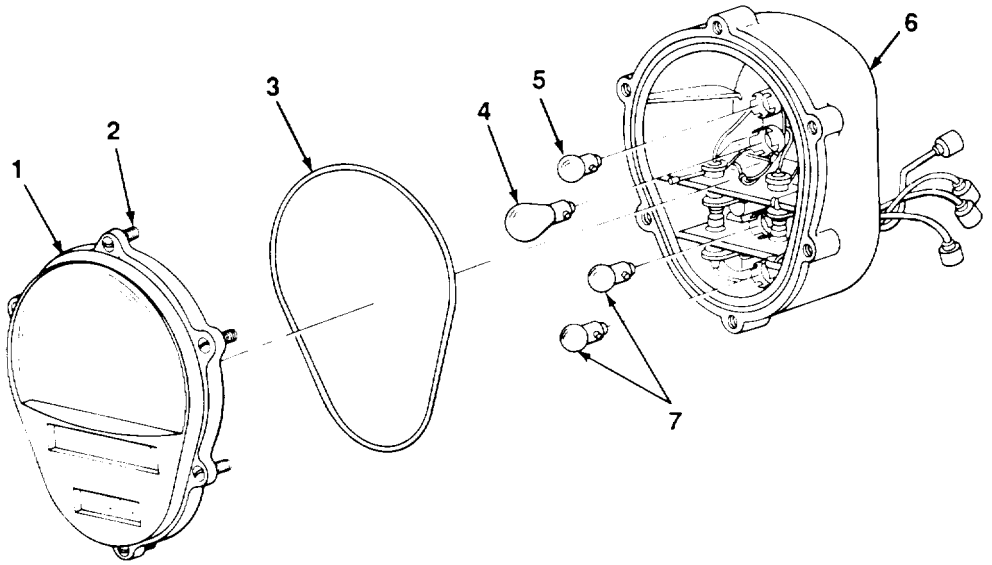

c. REMOVAL (M149)

1. Remove two screws (12), door assembly (11), and gasket (10) from body (8).
2. Remove lamp (9) from body (8) by pushing lamp in and turning counterclockwise. Discard lamp.
3. Loosen six screws (16) and remove door assembly (17) and preformed packing (15) from housing (13).
4. Remove three lamps (14) from housing (13). Discard lamps.

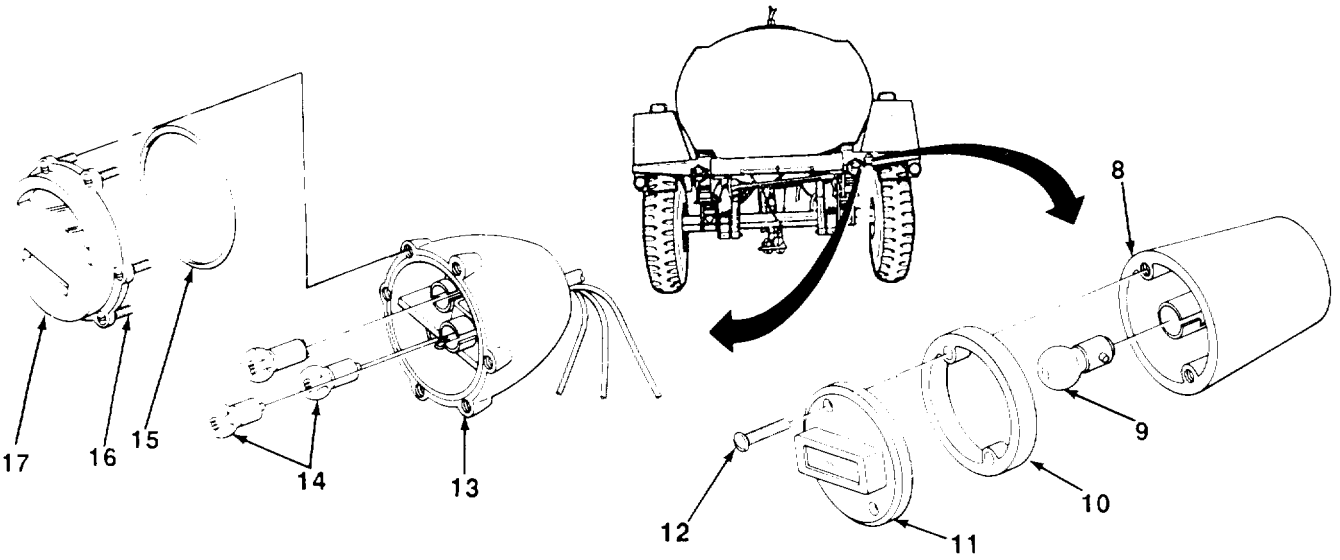

TA507000

4-21. LAMP REPLACEMENT (Con't).

d. INSTALLATION (M149)

1. Install three new lamps (14) in housing (13).
2. Install preformed packing (15), door assembly (17), and tighten six screws (16) in housing (13).
3. Install new lamp (9) in body (8).
4. Install gasket (10), door assembly (11), and two screws (12) in body (8).

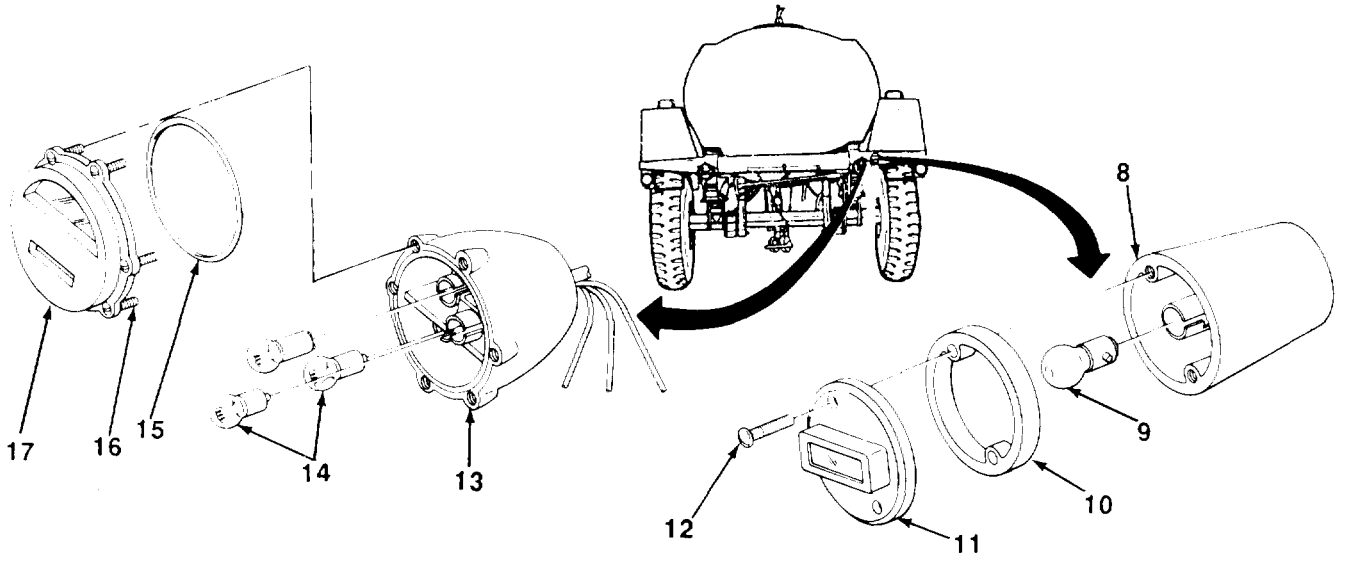

TA507001

4-22. BLACKOUT LIGHT MAINTENANCE (M149).

This Task Covers:

a. Removal
b. Disassembly
c. Assembly
d. Installation

Initial Setup:

Equipment Conditions:

- Intervehicular cable disconnected from towing vehicle (para 2-12).

Tools/Test Equipment:

- General mechanic's tool kit

Materials/Parts:

- One lockwasher

a. REMOVAL

1. Disconnect plug connector (5) from blackout light wire.
2. Remove bolt (7), lockwasher (8), and housing (4) from bracket (6). Discard lockwasher.

b. DISASSEMBLY

1. Remove two screws (1), lens retainer (2), and gasket (3) from housing (4).
2. Inspect gasket (3) for damage. If damaged, discard and replace.
3. Replace lamp as required (para 4-21).

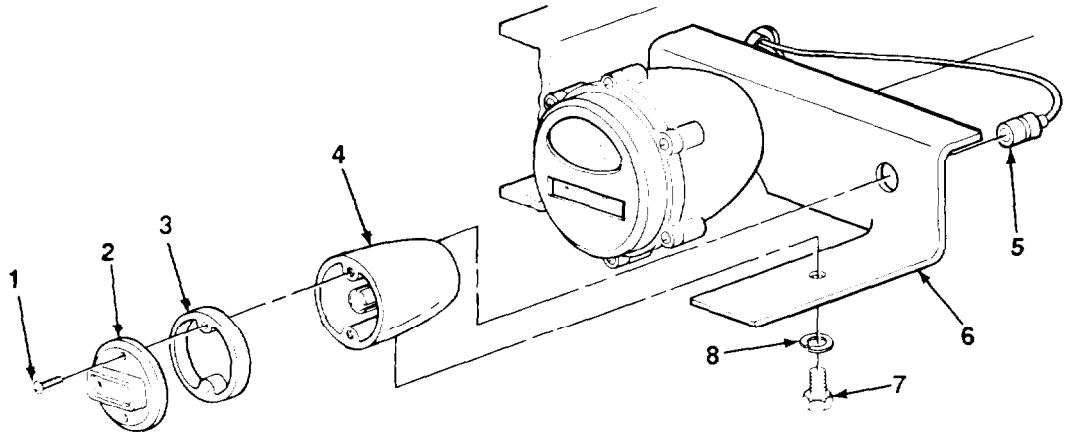

TA507002

4-22. BLACKOUT LIGHT MAINTENANCE (M149) (Con't).

c. ASSEMBLY

1. Install new lamp as required (para 4-21)
2. Position gasket (3) and lens retainer (2) on housing (4).
3. Install two screws (1) in lens retainer (2), gasket (3), and housing (4).

d. INSTALLATION

1. Position housing (4) on bracket (6) and install new lockwasher (8) and bolt (7).
2. Connect plug connector (5) to blackout light wire.

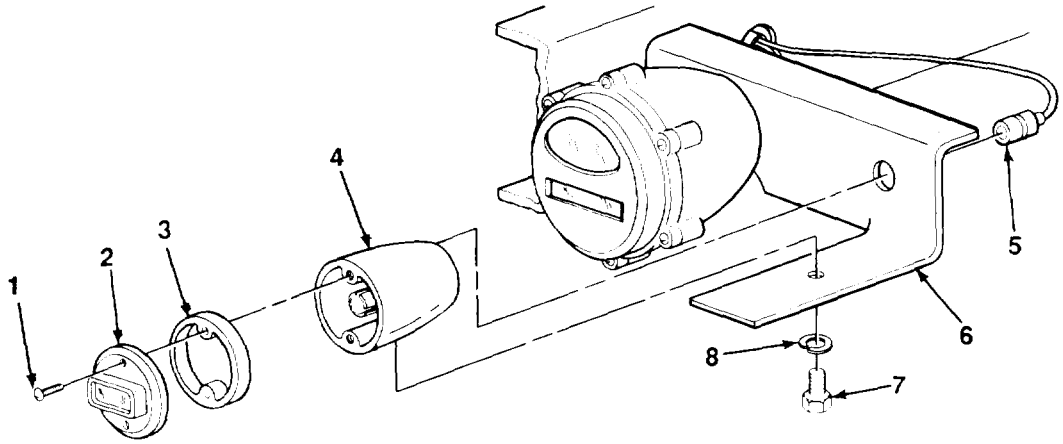

TA507003

FOLLOW-ON TASKS:

- Connect intervehicular cable to towing vehicle (para 2-10).
- Check operation of light.

4-23. STOPLIGHT-TAILLIGHT MAINTENANCE (M149).

This Task Covers:

a. Removal
b. Disassembly
c. Assembly
d. Installation

Initial Setup:

Equipment Conditions:

- Intervehicular cable disconnected from towing vehicle (para 2-12).

Tools/Test Equipment:

- General mechanic's tool kit

Materials/Parts:

- Marker tags (as required) (Item 25, Appendix E)
- Two lockwashers

a. REMOVAL

1. Tag wires for installation if identification bands are missing or not legible (para 4-20).
2. Disconnect three plug connectors (8) from chassis wiring harness and remove through hole (4) in frame assembly.
3. Remove two screws (5), lockwashers (6), and housing (3) from bracket (7). Discard lockwashers.

b. DISASSEMBLY

1. Loosen six screws (2) and remove lens retainer (1) from housing (3).
2. Inspect preformed packing (9) for damage. If damaged, discard and replace.
3. Replace lamps as required (para 4-21).

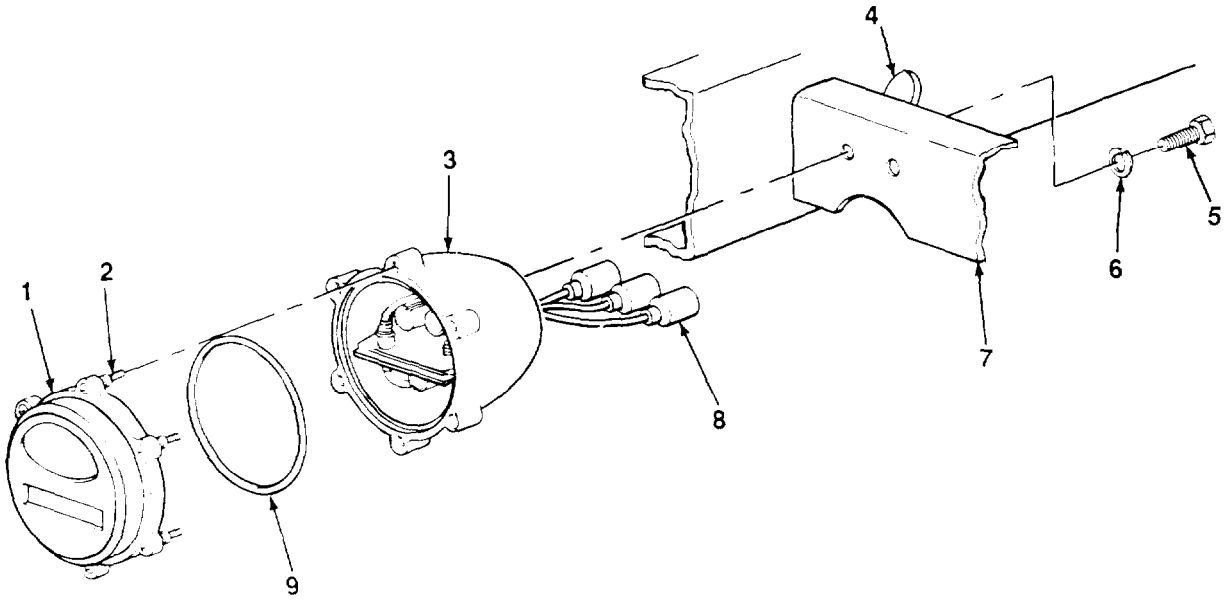

TA507004

4-23. STOPLIGHT-TAILLIGHT MAINTENANCE (M149) (Con't).

c. ASSEMBLY

1. Install new lamps as required (para 4-21).
2. Position preformed packing (9) and lens retainer (1) on housing (3) and tighten six screws (2).

d. INSTALLATION

1. Position housing (3) on bracket (7) and install two new lockwashers (6) and screws (5).
2. Insert three plug connectors (8) through hole (4) in frame assembly.
3. Connect three plug connectors (8) to chassis wiring harness.

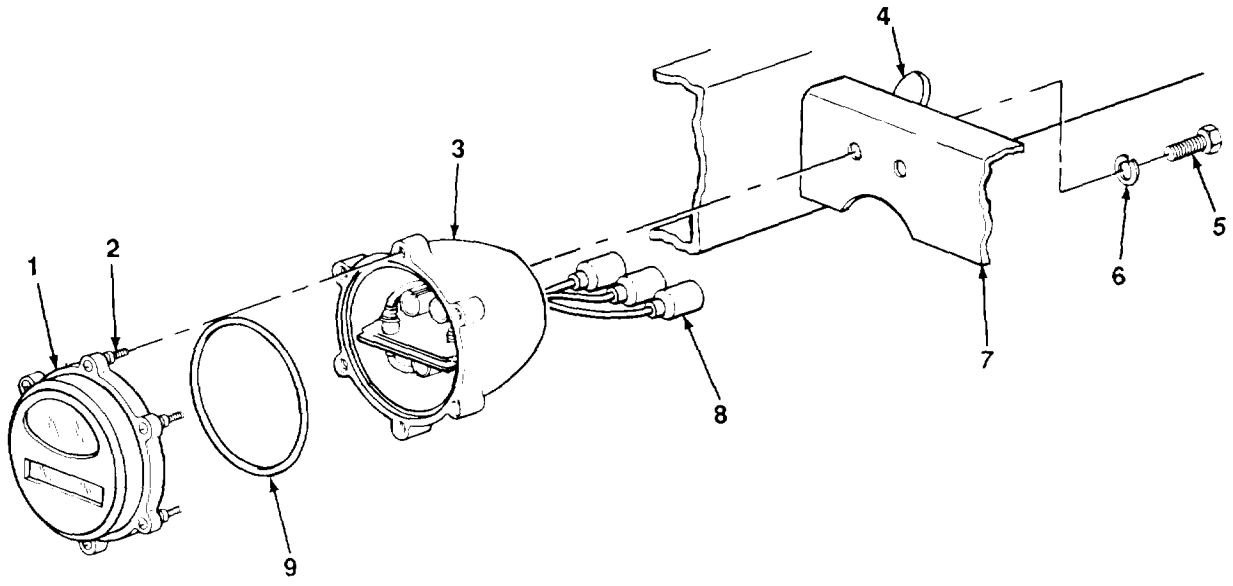

FOLLOW-ON TASKS:

- Connect intervehicular cable to towing vehicle (para 2-10).
- Check operation of light.

TA507005

4-24. COMPOSITE STOPLIGHT-TAILLIGHT MAINTENANCE (M149A1 AND M149A2).

This Task Covers:

a. Removal
b. Disassembly
c. Assembly
d. Installation

Initial Setup:

Equipment Conditions:

- Intervehicular cable disconnected from towing vehicle (para 2-12).

Tools/Test Equipment:

- General mechanic's tool kit

Materials/Parts:

- Marker tags (as required) (Item 25, Appendix E)
- Two lockwashers

a. REMOVAL

1. Tag wires for installation if identification bands are missing or not legible (para 4-20).
2. Remove four plug connectors (5) from clip assembly (6) and disconnect from chassis wiring harness.
3. Remove grommet (4) and four plug connectors (5) from hole in frame assembly.
4. Remove two screws (1), lockwashers (2), and body assembly (7) from bracket (3). Discard lockwashers.

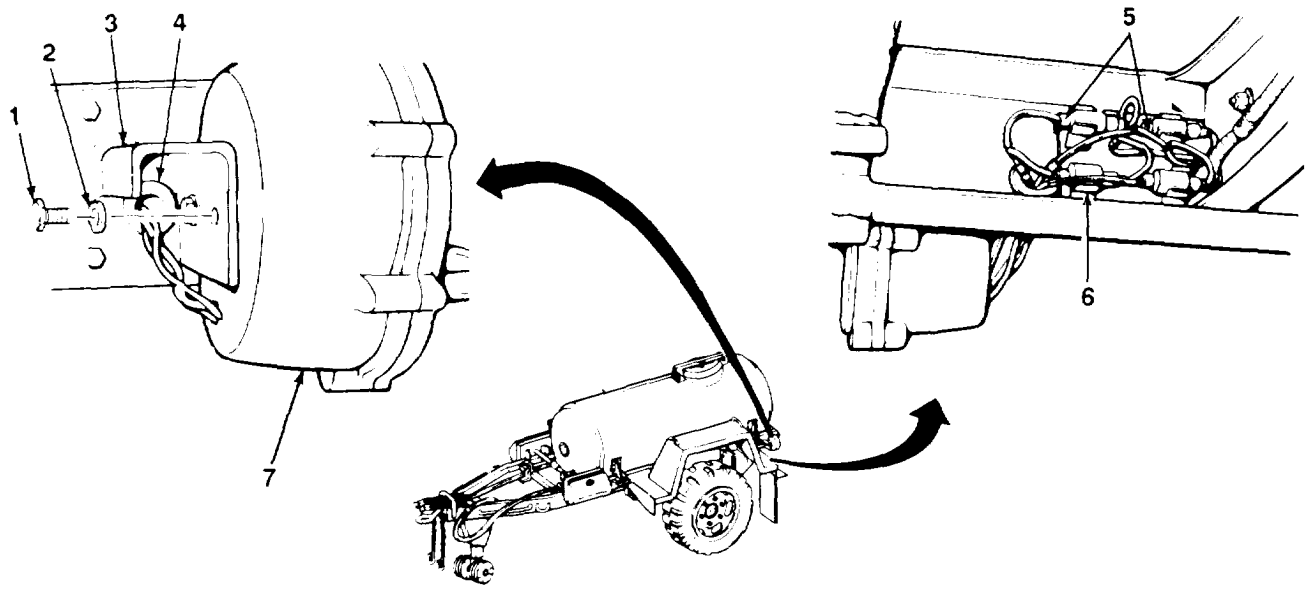

TA507006

4-24. COMPOSITE STOPLIGHT-TAILLIGHT MAINTENANCE (M149A1 AND M149A2) (Con't).

b. DISASSEMBLY

1. Loosen six screws (10) and remove lens (9) from body assembly (7).
2. Remove preformed packing (8) from lens (9). Inspect preformed packing for damage. If damaged, discard and replace.
3. Replace lamps as required (para 4-21).

c. ASSEMBLY

1. Install new lamps as required (para 4-21).
2. Install preformed packing (8) in lens (9).
3. Position lens (9) on body assembly (7) and tighten six screws (10).

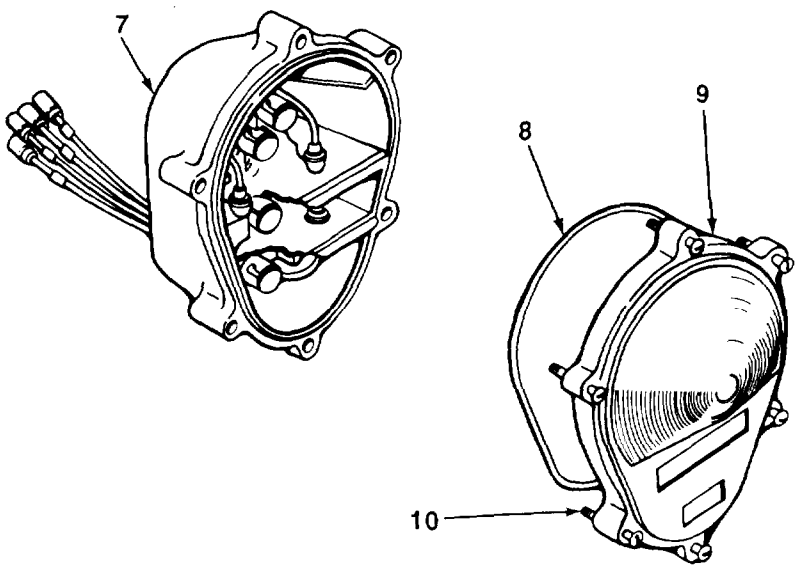

d. INSTALLATION

1. Position body assembly (7) on bracket (3) and install two new lockwashers (2) and screws (1)
2. Install four plug connectors (5) and grommet (4) in hole on frame assembly.
3. Connect four plug connectors (5) to chassis wiring harness.
4. Install four plug connectors (5) in clip assembly (6).

TA507007

4-24. COMPOSITE STOPLIGHT-TAILLIGHT MAINTENANCE (M149A1 AND M149A2) (Con't).

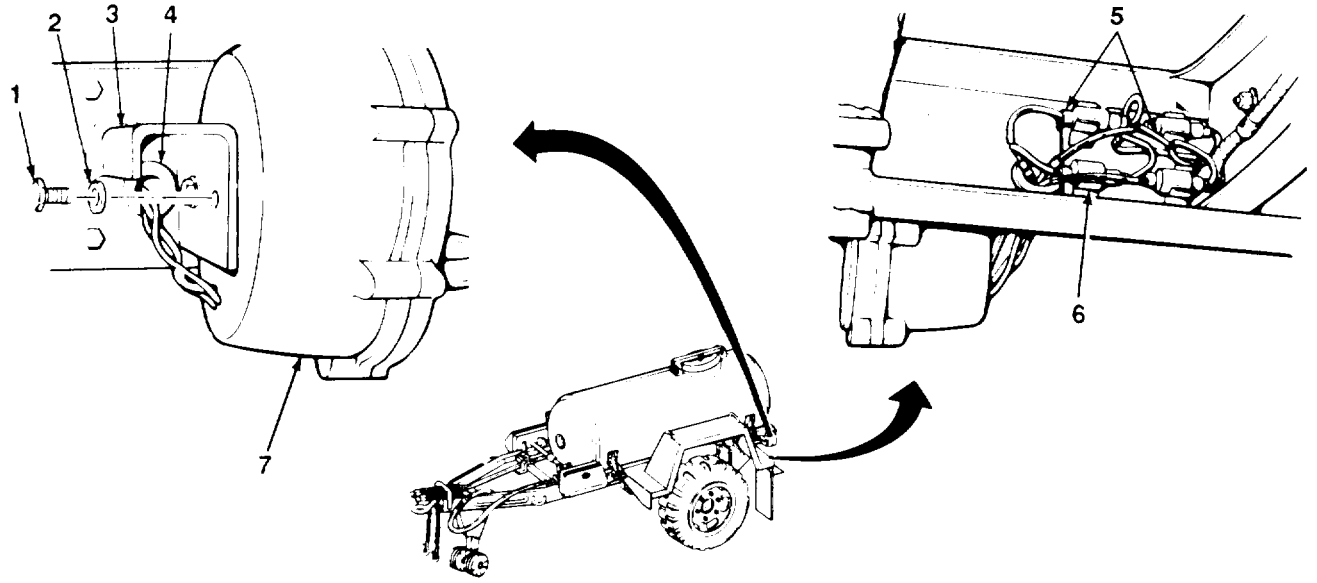

FOLLOW-ON TASKS:

- Connect intervehicular cable to towing vehicle (para 2-10).
- Check operation of light.

TA507008

4-25. CHASSIS WIRING HARNESS REPLACEMENT.

This Task Covers:

a. Test
b. Removal
c. Installation

Initial Setup:

Equipment Conditions:

- Intervehicular cable disconnected from towing vehicle (para 2-12).

Tools/Test Equipment:

- General mechanic's tool kit
- Multi meter

Materials/Parts:

- Marker tags (as required) (Item 25, Appendix E)
- Ten lockwashers

a. TEST

NOTE

Testing the chassis wiring harness consists of a continuity check of the individual wires contained in the harness assembly. Refer to paragraph 4-28 for wire function and identification. Before disconnecting any wires, ensure that identification bands are present.

1. Remove six front plug connectors (1) from clip assembly (3) and disconnect front plug connectors from intervehicular cable (2).
2. Remove rear plug connectors (5) from right and left rear clip assemblies (4).
3. Disconnect rear plug connectors (5) from right and left light assemblies (6).
4. Place red lead from multimeter in one of six front plug connectors (1) and place black lead in corresponding rear plug connector (5). Check for continuity.
5. Repeat step 4 for all front plug connectors (1) and rear plug connectors (5).

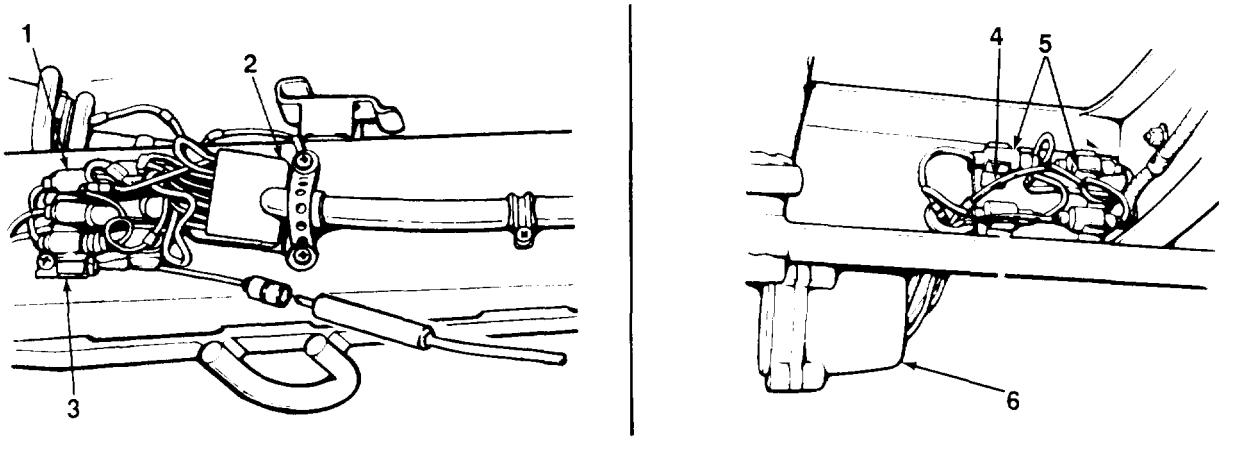

TA507009

4-25. CHASSIS WIRING HARNESS REPLACEMENT (Con't).

6. If continuity is not present in one or more wires, remove and replace chassis wiring harness (14).

7. Connect front plug connectors (1) to intervehicular cable (2) and place in clip assembly (3).

8. Connect rear plug connectors (5) to light assemblies (6) and place in clip assemblies (4).

b. REMOVAL

1. Tag wires for installation if identification bands are missing or not legible (para 4-20).

2. Disconnect six front plug connectors (1) from intervehicular cable (2). Disconnect rear plug connectors (5) from right and left light assemblies (6).

NOTE

The quantity of tie-down straps, clips, and mounting hardware will vary among the M149, M149A, and M149A2 trailers. Steps 3 and 4 are typical for the M149.

3. Remove three screws (17), lockwashers (16), tie-down straps (15), and nuts (20) from chassis wiring harness (14) and frame assembly. Discard lockwashers.

4. Remove three screws (21), tie-down straps (22), flatwashers (11), lockwashers (1 2), and nuts (1 3) from chassis wiring harness (14) and frame assembly. Discard lockwashers.

5. Remove chassis wiring harness (14) and grommet (9) from frame assembly.

6. Remove four screws (19), clip assembly (3), and four lockwashers (18) from frame assembly. Discard lockwashers.

NOTE

There are two rear clip assemblies for plug connectors. Only one is shown here.

7. Remove four screws (7), rear clip assembly (4), four flatwashers (8), and nuts (10) from frame assembly.

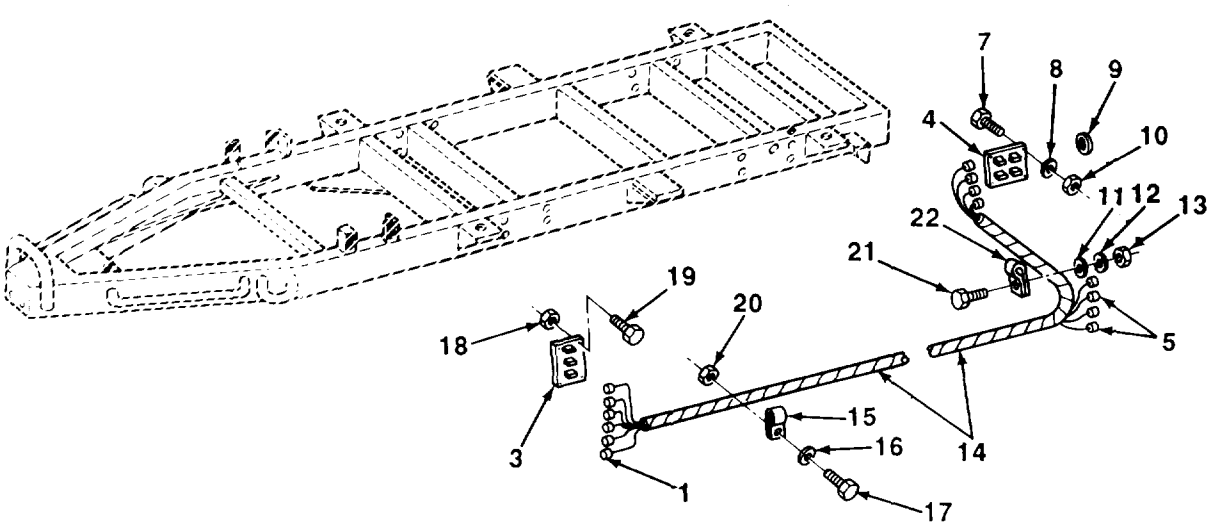

TA507010

4-25. CHASSIS WIRING HARNESS REPLACEMENT (Con't).

c. INSTALLATION

1. Position rear clip assembly (4) on frame assembly and install four flatwashers (8), nuts (10), and screws (7).

2. Position clip assembly (3) on frame assembly and install four new lockwashers (18) and screws (19).

3. Position chassis wiring harness (14) on frame assembly and install grommet (9).

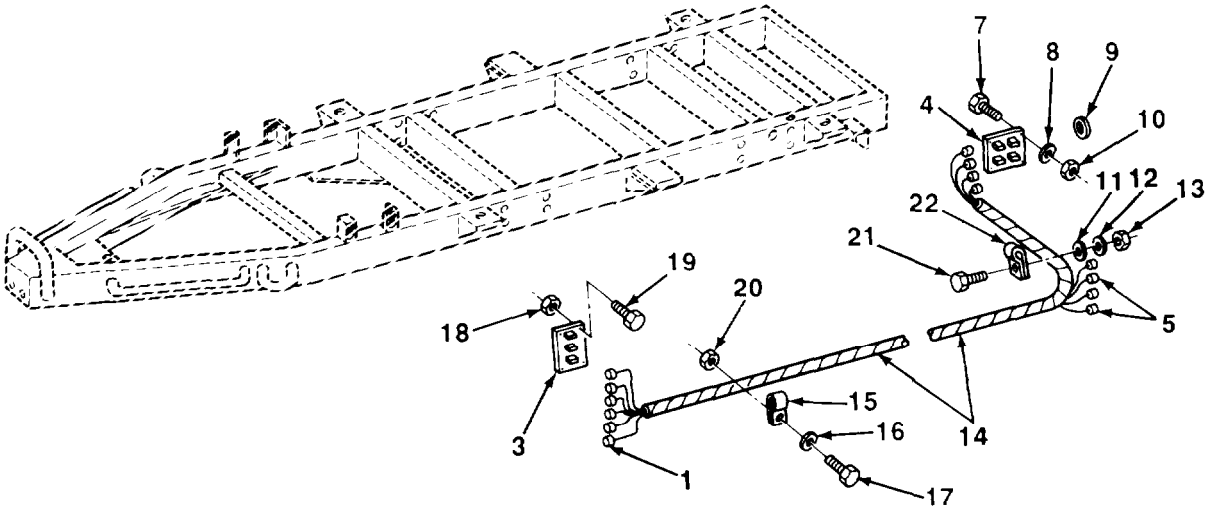

NOTE

The quantity of tie-down straps, clips, and mounting hardware will vary among the M149, M149A1, and M149A2 trailers. Steps 4 and 5 are typical for the M149.

4. Install three screws (17), new lockwashers (16), tie-down straps (15), and nuts (20) on chassis wiring harness (14) and frame assembly.

5. Install three screws (21), tie-down straps (22), flatwashers (11), new lockwashers (12), and nuts (13) on chassis wiring harness (14) and frame assembly.

6. Connect six front plug connectors (1) to intervehicular cable (2). Connect rear plug connectors (5) to right and left light assemblies (6).

TA507011

4-25. CHASSIS WIRING HARNESS REPLACEMENT (Con't).

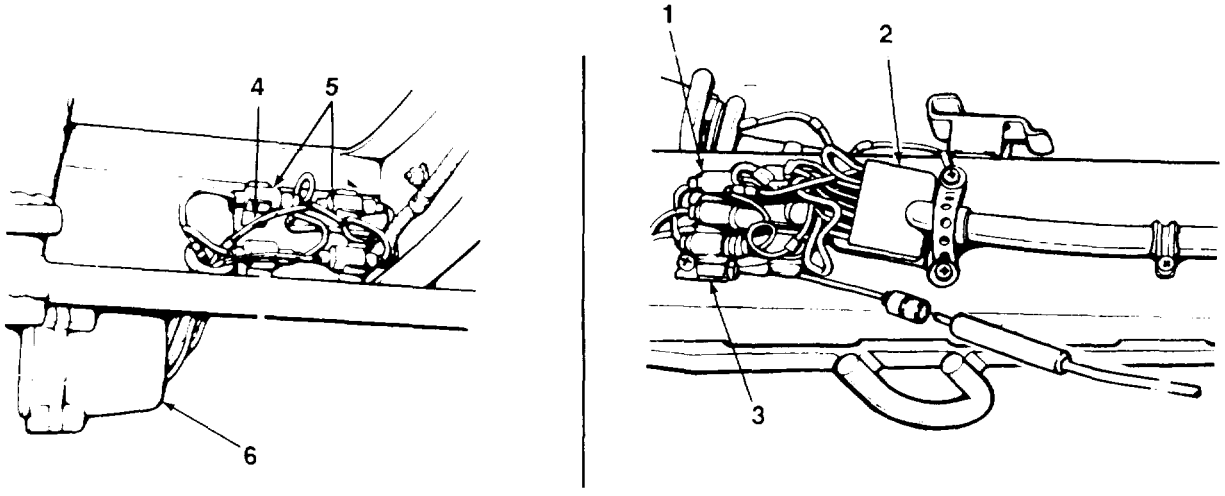

FOLLOW-ON TASKS:

- Connect intervehicular cable to towing vehicle (para 2-10).
- Check operation of lights.

TA507012

4-26. CHASSIS WIRING HARNESS REPAIR.

This Task Covers:

a. Identification Band Replacement
b. Terminal Replacement
c. Male Connector Repair
d. Female Connector Repair

Initial Setup:

Equipment Conditions:

- Intervehicular cable disconnected from towing vehicle (para 2-12).

Tools/Test Equipment:

- General mechanic's tool kit
- Electric etcher

Materials/Parts:

- Marker tags (as required) (Item 25, Appendix E)
- Contacts (as required)
- Identification bands (as required)
- Terminals (as required)

a. IDENTIFICATION BAND REPLACEMENT

1. Remove identification band (2) from wire lead (1) and discard.
2. Mark new identification band (2) with proper identification number.
3. Position new identification band (2) on wire lead (1) and bend tabs over wire lead.

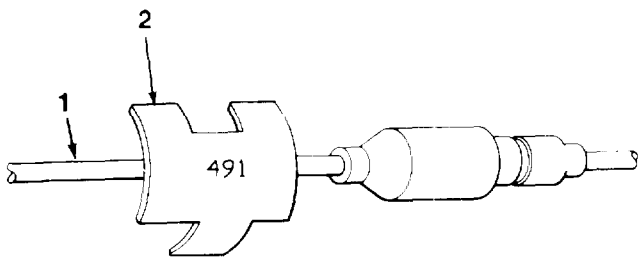

b. TERMINAL REPLACEMENT

1. Cut terminal (3) off wire lead (4) and discard.
2. Strip insulation off wire lead (4) equal to depth of new terminal (3).
3. Position new terminal (3) on wire lead (4) and crimp terminal.

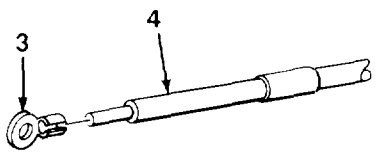

c. MALE CONNECTOR REPAIR

1. Slide shell (7) back and remove washer (8) from wire lead (6). Cut contact (5) from wire lead and discard. Remove shell.
2. Strip insulation off wire lead (6) equal to depth of new contact (5).

TA507013

4-26. CHASSIS WIRING HARNESS REPAIR (Con't).

3. Slide shell (7) on wire lead (6).

4. Position new contact (5) on wire lead (6) and crimp,

5. Position washer (8) on wire lead (6) and slide shell (7) over washer and contact (5).

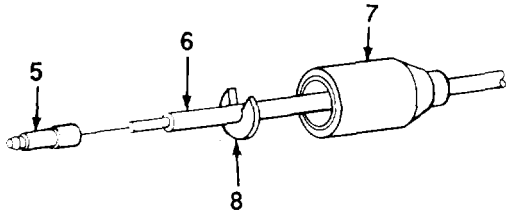

d. FEMALE CONNECTOR REPAIR

1. Slide connector (12) and insulator (11) back and cut terminal (9) from wire lead (10) and discard.

2. Remove insulator (11) and connector (12) from wire lead (10),

3. Strip insulation off wire lead (10) equal to depth of new terminal (9),

4. Slide connector (12) and insulator (11) on wire lead (10).

5. Position new terminal (9) on wire lead (10) and crimp.

6. Slide insulator (11) and connector (12) over terminal (9).

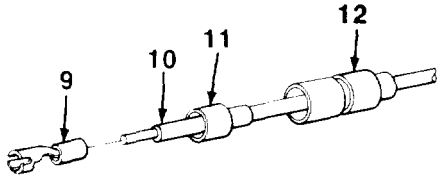

FOLLOW-ON TASKS:

- Connect intervehicular cable to towing vehicle (para 2-10).
- Check operation of lights.

TA507014

4-27. INTERVEHICULAR CABLE MAINTENANCE.

This Task Covers:

a. Test
b. Removal
c. Installation
d. Repair

Initial Setup:

Equipment Conditions:

- Intervehicular cable disconnected from towing vehicle (para 2-12).

Tools/Test Equipment:

- General mechanic's tool kit
- Multimeter

Materials/Parts:

- Marker tags (as required) (Item 25, Appendix E)
- Five lockwashers

a. TEST

NOTE

Testing the intervehicular cable consists of a continuity check of the individual wires that make up the intervehicular cable. Refer to paragraph 4-28 for wire function and identification. Before disconnecting any wires, ensure that identification bands are present.

1. Disconnect six plug connectors (1) of intervehicular cable (2) from chassis wiring harness.
2. Place red lead from multimeter in one of six plug connectors (1) and black on corresponding pin (8). Check for continuity.
3. Repeat step 2 for all plug connectors (1) and pins (8).
4. If no continuity is found in one or more wires, remove and replace intervehicular cable (2).
5. If continuity is found, connect plug connectors (1).

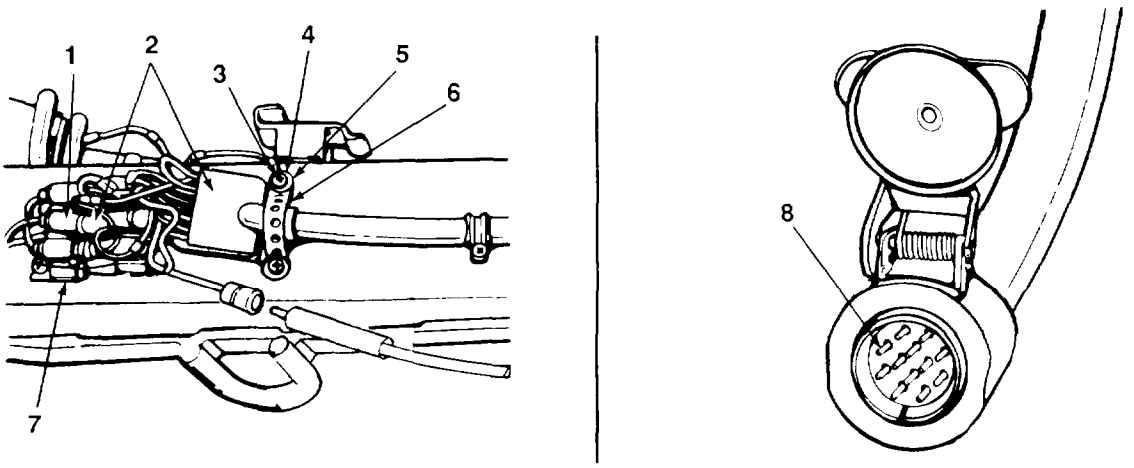

TA507015

4-27. INTERVEHICULAR CABLE MAINTENANCE (Con't).

b. REMOVAL

1. Tag wires for installation if identification bands are missing or not legible (para 4-20).
2. Remove six plug connectors (1) from clip assembly (7) and disconnect from chassis wiring harness.
3. Remove two screws (3), lockwashers (4), flatwashers (5), and securing strap (6). Discard lockwashers.
4. Remove three screws (12), flatwashers (11), lockwashers (10), and looped clamps (9) from frame assembly. Discard lockwashers.
5. Remove intervehicular cable (2) from trailer.

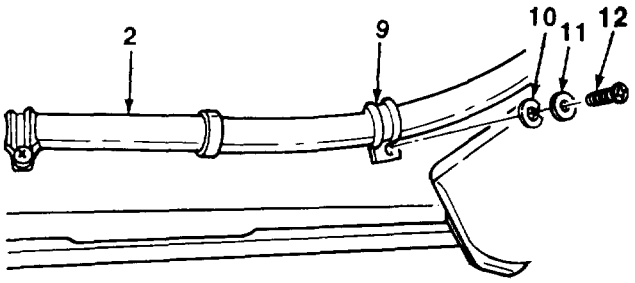

c. INSTALLATION

1. Position intervehicular cable (2) on frame assembly and install three looped clamps (9), new lockwashers (10), flatwashers (11), and screws (12).
2. Position intervehicular cable (2) and install securing strap (6), two flatwashers (5), new lockwashers (4), and screws (3).
3. Connect six plug connectors (1) of intervehicular cable (2) to chassis wiring harness and place in clip assembly (7).

d. REPAIR

NOTE

Repair of intervehicular cable consists of replacement of wire identification bands and repair of plug connectors.

Refer to paragraph 4-26 for repair instructions.

FOLLOW-ON TASKS:

- Connect intervehicular cable to towing vehicle (para 2-10).
- Check operation of lights.

TA507016

4-28. WIRING DIAGRAMS.

NOTE

This paragraph contains the trailer wiring diagrams. Refer to these diagrams when performing electrical troubleshooting and when performing electrical repair and maintenance.

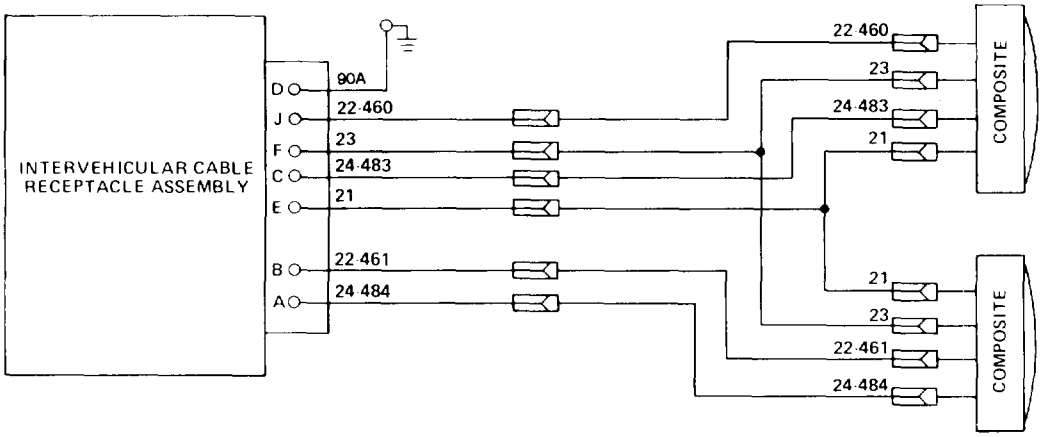

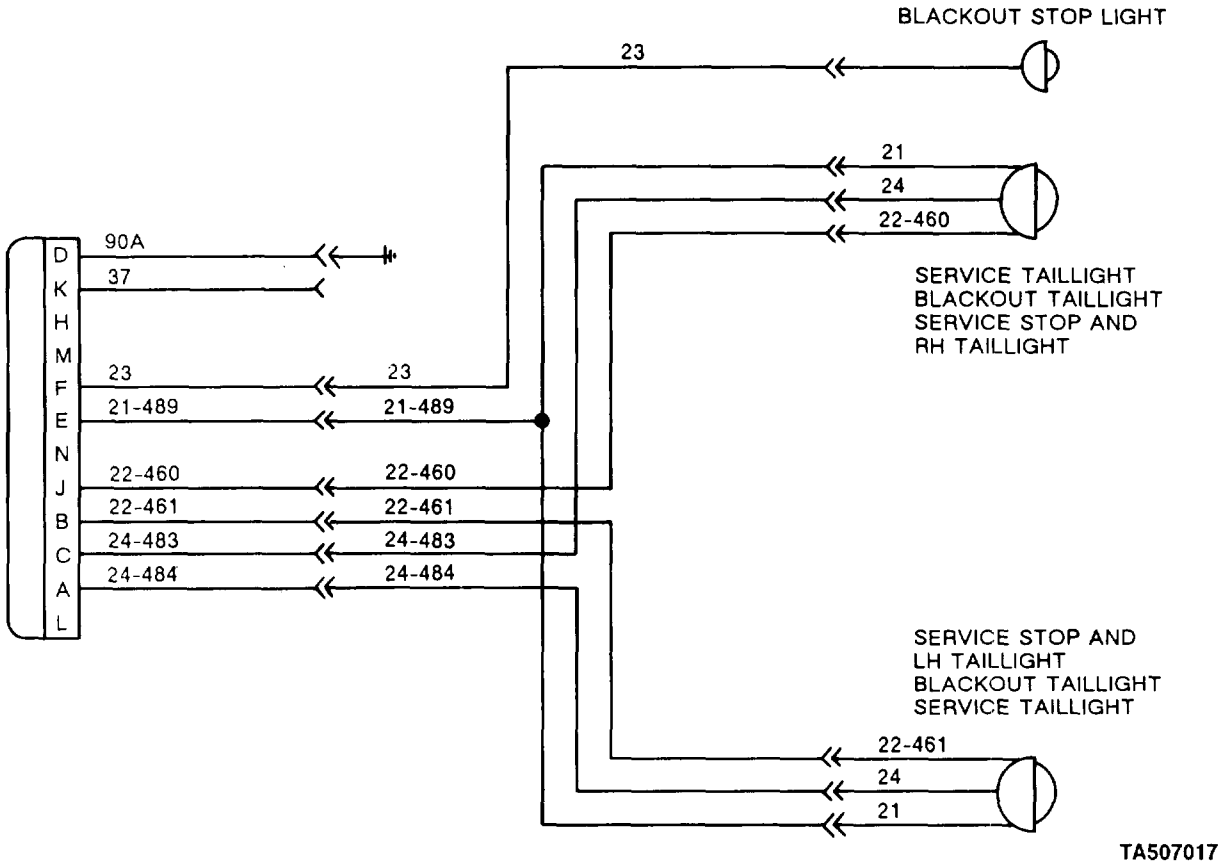

Section VII. AXLE MAINTENANCE

4-29. AXLE REPLACEMENT.

This Task Covers:

a. Removal

b. Installation

Initial Setup:

Equipment Conditions:

- Shock absorbers removed (para 4-52).
- Hub and brakedrum removed (para 4-45).
- Hydraulic lines removed (para 4-35).
- Hand brake cable disconnected (para 4-31).

Personnel Required: Two

Materials/Parts:

- Thirty-two lockwashers

Tools/Test Equipment:

- General mechanic's tool kit
- Two jackstands

a. REMOVAL

WARNING

Axle is heavy and awkward to handle. Use caution, provide adequate support, and use assistance during removal. Failure to follow this warning may result in serious injury to personnel.

1. Raise axle (5) and place two jackstands under framerails at each corner of rear crossmember.

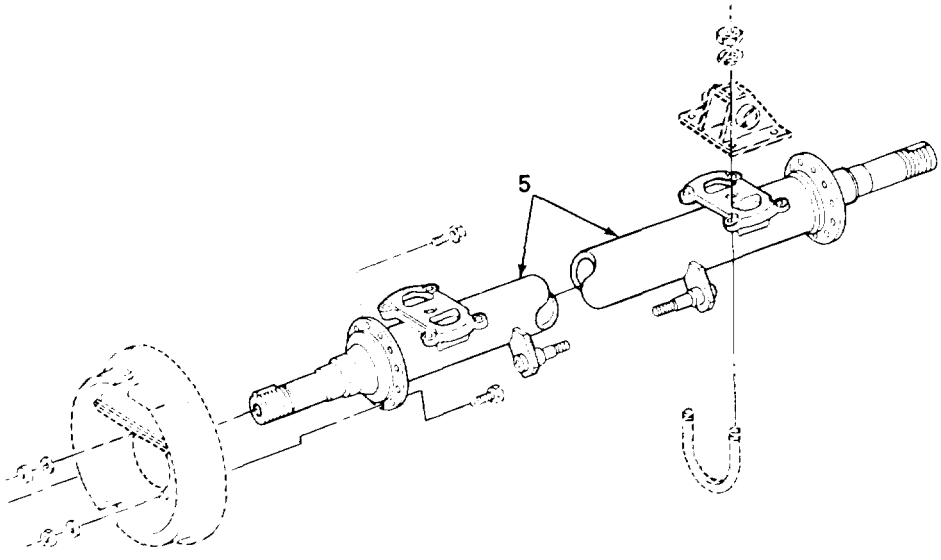

TA507018

4-29. AXLE REPLACEMENT (Con't).

2. Remove 12 nuts (1), lockwashers (2), eight screws (4), and four screws (9) from backing plate (3) and axle (5). Discard lockwashers.

3. Remove backing plate (3) from axle (5).

4. Repeat steps 2 and 3 for other backing plate (3).

5. Raise and support axle (5) at both ends. Remove eight nuts (7), lockwashers (6), and four U-bolts (8) from axle (5) and springs. Discard lockwashers.

6. Carefully lower and remove axle (5) from springs

b . INSTALLATION

WARNING

Axle Is heavy and awkward to handle. Use caution, provide adequate support, and use assistance when raising. Failure to follow this warning may result In serious injury to personnel.

1. Carefully raise and position axle (5) on springs. Support axle at both ends.

2. Install four U-bolts (8), eight new lockwashers (6), and nuts (7) on axle (5) and springs.

3. Install backing plate (3) on axle (5) with eight screws (4), four screws (9), 12 new lockwashers (2), and nuts (1).

4. Repeat step 3 to install backing plate (3) on opposite end of axle (5).

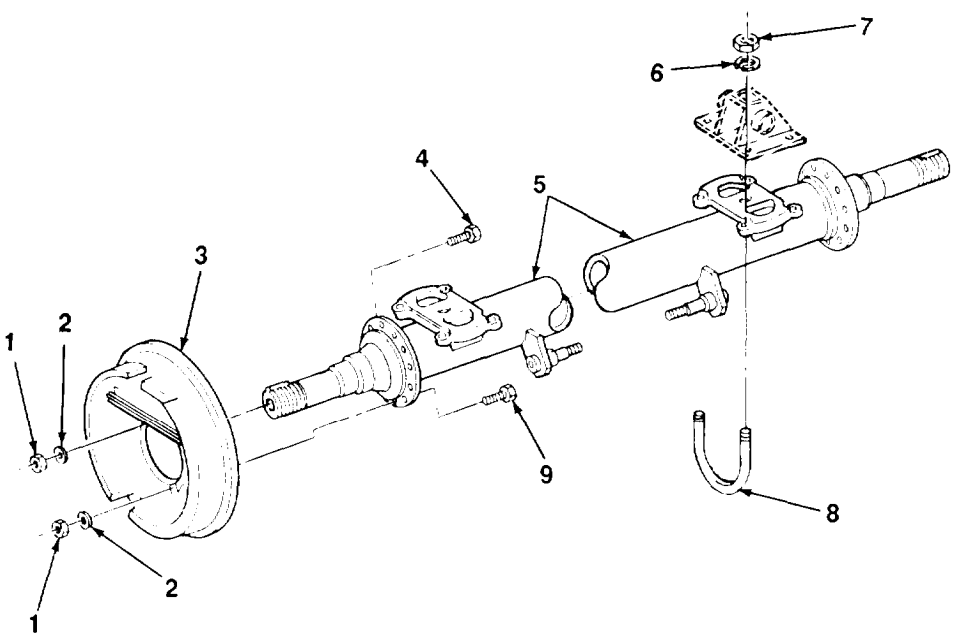

TA507019

4-29. AXLE REPLACEMENT (Con't).

FOLLOW-ON TASKS:

- Connect handbrake cable (para 4-31).
- Install hydraulic lines (para 4-35).
- Install hub and brakedrum (para 4-45).
- Install shock absorbers (para 4-52).
- Bleed brakes (para 4-36).

Section VIII. BRAKE SYSTEM MAINTENANCE

Paragraph Title	Page Number
Airbrake Chamber Replacement	4-72
Air Filter Maintenance (M149)	4-76
Air Lines, Hoses, and Fittings Maintenance (M149)	4-66
Air Lines, Hoses, and Fittings Maintenance (M149A1 and M149A2)	4-69
Air Reservoir and Bracket Assembly Replacement	4-74
Bleeding Hydraulic Brake System	4-64
Handbrake Cable Replacement	4-50
Handbrake Lever Replacement	4-48
Hydraulic Lines, Hoses, and Fittings Replacement	4-62
Master Cylinder Replacement	4-57
Relay Valve Replacement	4-78
Service Brake Maintenance	4-53
Wheel Cylinder Replacement	4-60

4-30. HANDBRAKE LEVER REPLACEMENT.

This Task Covers:

a. Removal

b. Installation

Initial Setup:

Materials/Parts:

- One cotter pin
- 0ne Iockwasher
- Three self-locking nuts

Tools/Test Equipment:

- General mechanic's tool kit

WARNING

If trailer is not coupled to towing vehicle, ensure that wheels are securely chocked. Failure to do so may cause traller to roll, resulting in serious injury or death to personnel or damage to equipment.

NOTE

There are two handbrake Ievers on the trailers. Only the right side is shown here.

a. REMOVAL

1. Remove cotter pin (5), lockwasher (4), and straight-headed pin (2), and disconnect clevis (3) from handbrake lever (7). Discard cotter pin and lockwasher.

2. Remove three self-locking nuts (6), screws (1), and handbrake lever (7) from frame crossmember. Discard self-locking nuts.

4-30. HANDBRAKE LEVER REPLACEMENT (Con't).

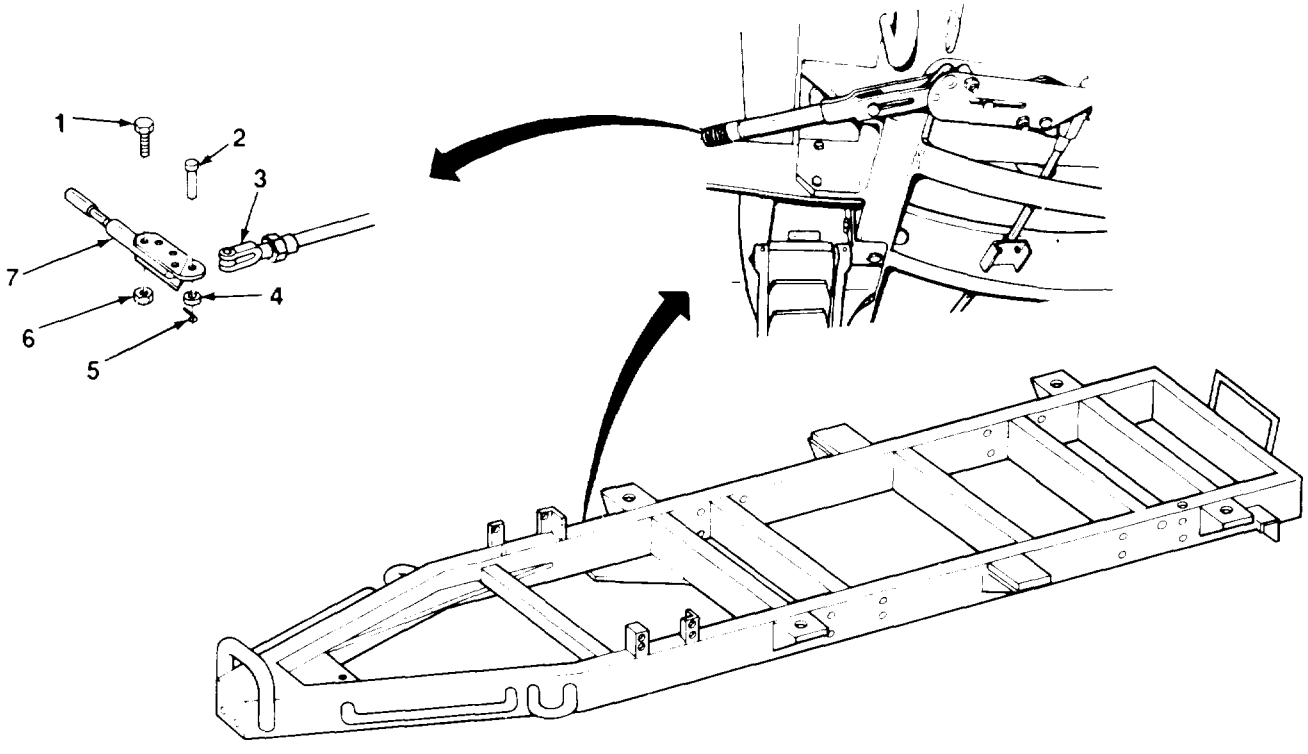

b. INSTALLATION

1. Install handbrake lever (7) on frame crossmember with three screws (1) and new self-locking nuts (6).
2. Connect clevis (3) to handbrake lever (7) with straight-headed pin (2), new lockwasher (4), and new cotter pin (5).

FOLLOW-ON TASKS:

- Adjust handbrake lever (para 3-6).

TA507020

4-31. HANDBRAKE CABLE REPLACEMENT.

This Task Covers:

a. Removal
b. Installation
c. Adjustment

Initial Setup:

Equipment Conditions:

- Hub and brakedrum removed (para 4-45).

Tools/Test Equipment:

- General mechanic's tool kit

Materials/Parts:

- One cotter pin
- Five lockwashers

WARNING

If trailer Is not coupled to towing vehicle, ensure that wheels are securely chocked. Failure to do so may cause trailer to roll, resulting In injury to personnel or damage to equipment.

NOTE

There are two handbrake cables on the trailers. Only the left side is shown here.

a. REMOVAL

1. Disconnect handbrake cable (3) from brake lever (2).
2. Remove two nuts (4), lockwashers (5), access cover (7), and guide bracket (6) from backing plate (l). Discard lockwashers.
3. Pull handbrake cable (3) out from backing plat (1).

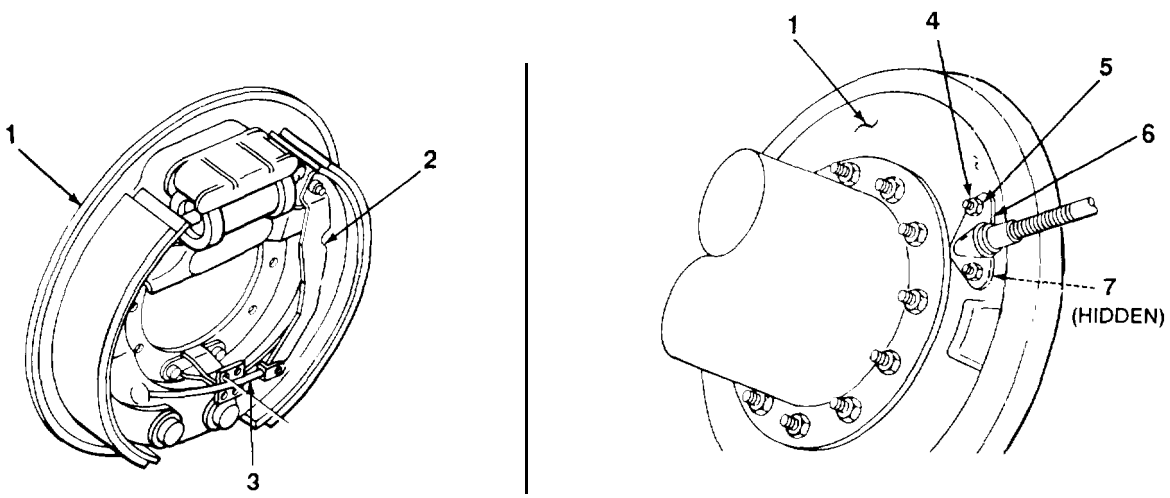

TA507021

4-31. HANDBRAKE CABLE REPLACEMENT (Con't).

4. Remove cotter pin (13), lockwasher (14), straight-headed pin (15), and disconnect clevis (11) from handbrake lever (12). Discard cotter pin and lockwasher.

5. Remove two bolts (18), lockwashers (16), nuts (9), and bracket (17) from frame crossmember. Discard lockwashers.

6. Remove spring (8) from handbrake cables (3).

7. Remove handbrake cable (3) from trailer

8. Remove clevis (11) and nut (10) from handbrake cable (3).

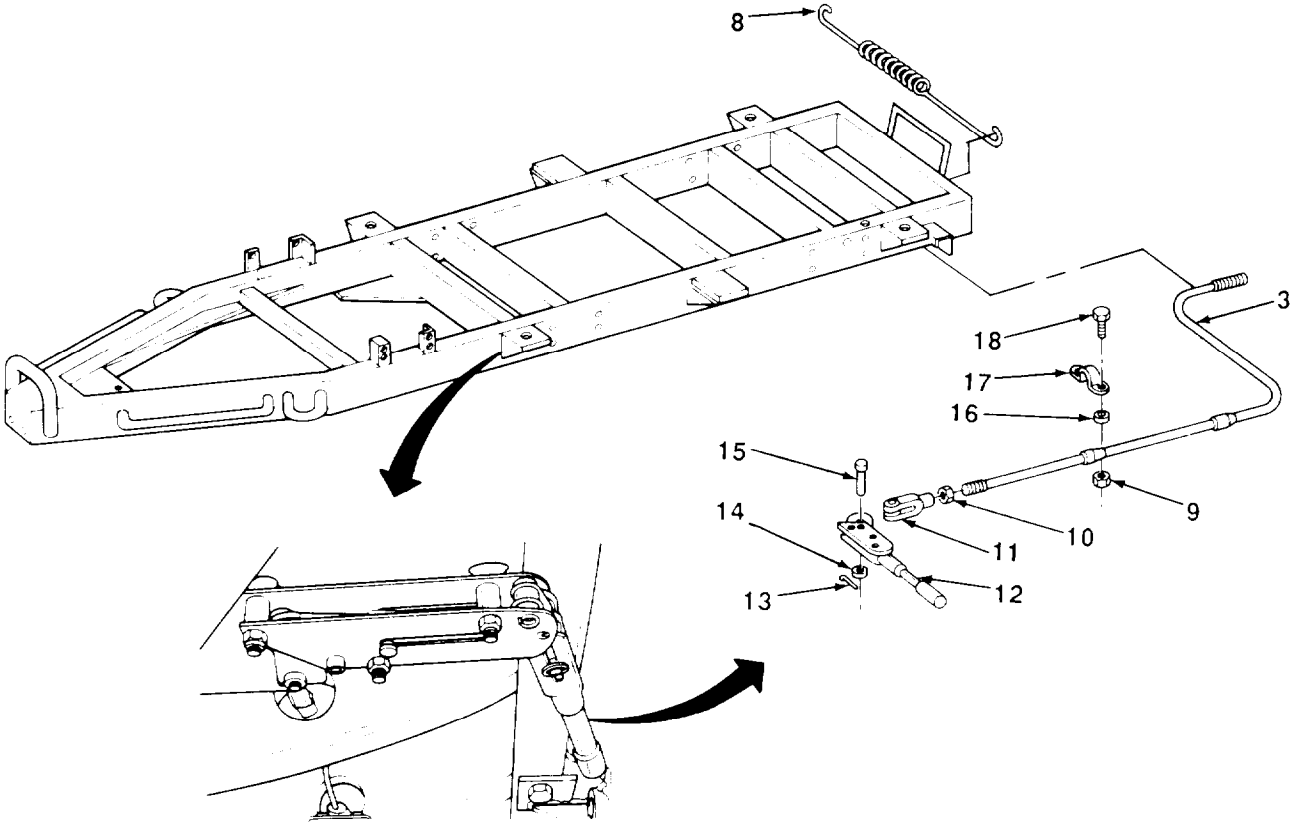

b . INSTALLATION

1. Install nut (10) and clevis (11) on handbrake cable (3).

2. Position handbrake cable (3) on trailer frame assembly. Install spring (8) on handbrake cables (3).

3. Position handbrake cable (3) on frame crossmember and install two bolts (18), bracket (17), two new lockwashers (16), and nuts (9).

4. Connect clevis (11) to handbrake lever (12) with straight-headed pin (15), new lockwasher (14), and new cotter pin (13).

5. Insert handbrake cable (3) in backing plate (1).

6. Install two nuts (4), new lockwashers (5), access cover (7), and guide bracket (6) on backing plate (1).

7. Connect handbrake cable (3) to brake lever (2).

TA507022

4-31. HANDBRAKE CABLE REPLACEMENT (Con't).

c. ADJUSTMENT

NOTE

When handbrake cable Is properly adjusted, handbrake lever should require only one-third of its full travel to apply handbrake.

Adjust handbrake cable by tightening or loosening nut (10) while handbrake lever (12) is in the released position.

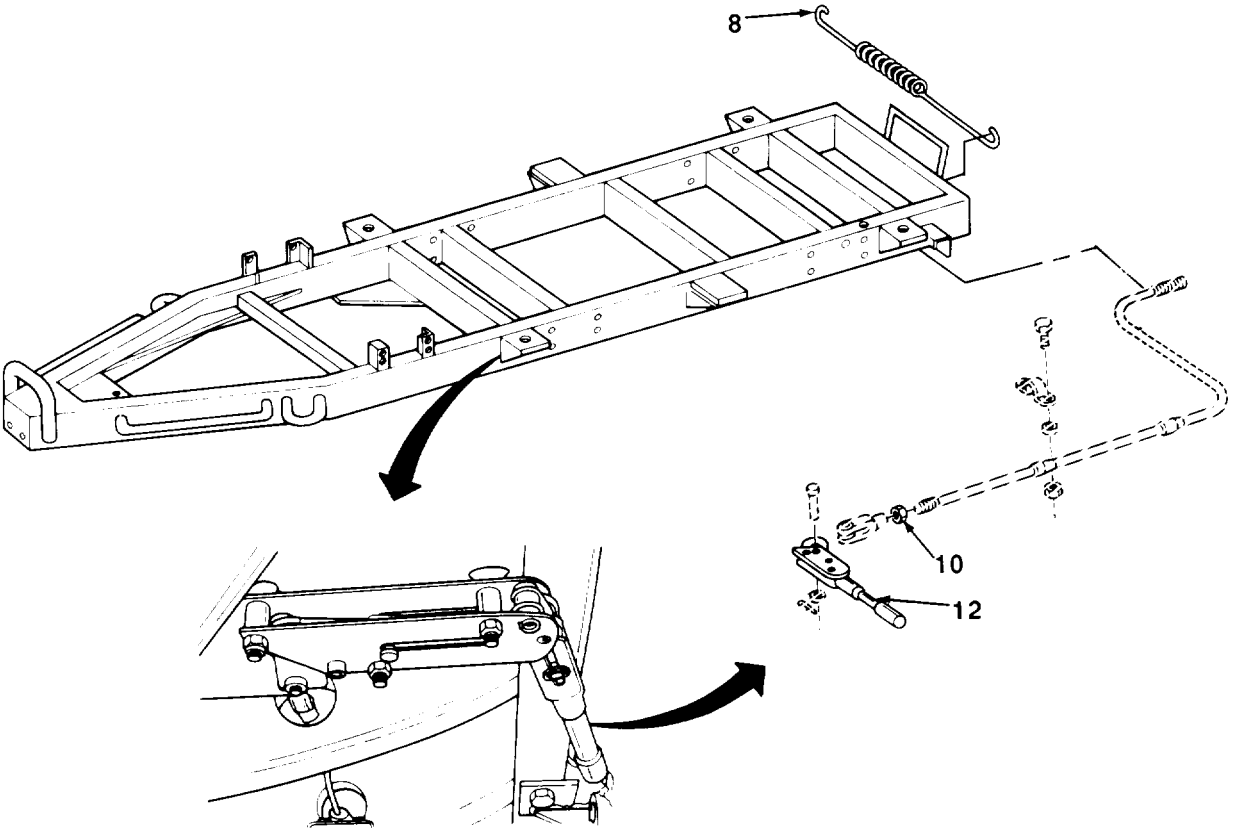

FOLLOW-ON TASKS:

- Install hub and brakedrum (para 4-45).

TA507023

4-32. SERVICE BRAKE MAINTENANCE.

This Task Covers:

a. Disassembly
b. Cleaning and Inspection
c. Assembly
d. Minor Adjustment

Initial Setup:

Equipment Conditions:

- Hub and brakedrum removed (para 4-45).
- Backing plate hydraulic lines disconnected from backing plate, if removing backing plate (para 4-35)
- Hand brake cable disconnected from backing plate (para 4-31).

Tools/Test Equipment:

- General mechanic's tool kit
- Floor jack
- Jackstand
- One quart (0.95 l) container

Materials/Parts:

- Brake fluid (Item 3, Appendix E)
- Dry cleaning solvent (Item 9, Appendix E)
- Rags (Item 18, Appendix E)
- Fourteen lockwashers

a. DISASSEMBLY

WARNING

DO NOT handle brakeshoes, brakedrums, or other brake components unless area has been properly cleaned. There may be asbestos dust on these components which can be dangerous if you touch It or breathe it. Wear an approved filter mask and gloves. Never use compressed air or a dry brush to clean brake components. Dust may be removed using an industrial-type vacuum cleaner. Clean dust or mud away from brake components with water and a wet, soft brush or cloth. Failure to follow this warning may result in serious illness or death to personnel.

4-32. SERVICE BRAKE MAINTENANCE (Con't).

1. Remove top and bottom brakeshoe return springs (18) from brakeshoes (1).
2. Remove slotted washer (15), flatwasher (14), tension spring washer (13), and lever (12).
3. Remove slotted washer (26), flatwasher (25), tension spring washer (24), and connecting link (23) from brakeshoe (1).
4. Remove four nuts (3), washers (2), and service brake pins (11).
5. Remove cap screw (19), lockwasher (17), and flatwasher (16) from right brakeshoe (1). Discard lockwasher.
6. Remove nut (20), lockwasher (21), flatwasher (22), spacer (4), and screw (5) from left brakeshoe (1). Discard lockwasher.

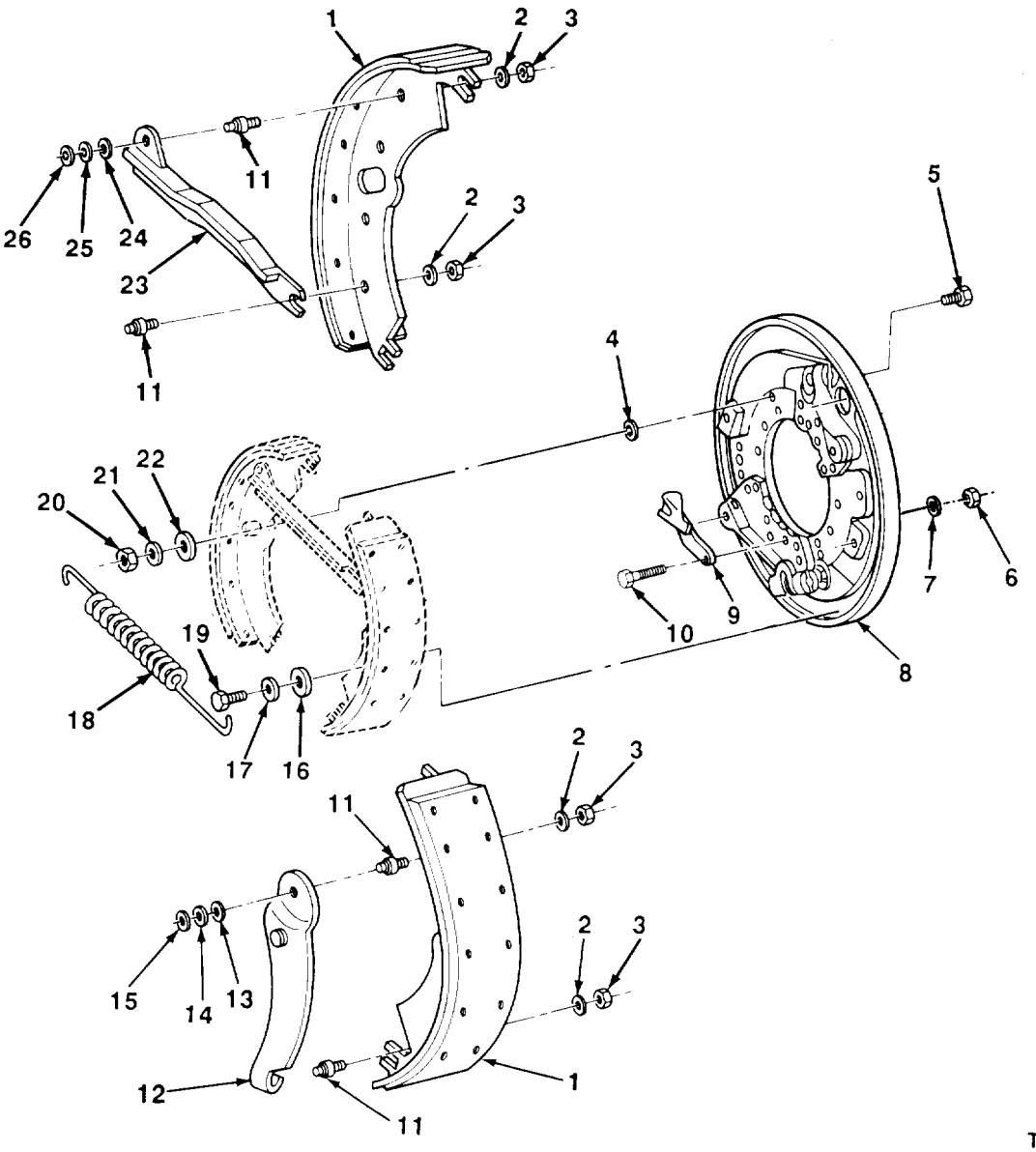

4-32. SERVICE BRAKE MAINTENANCE (Con't).

NOTE

Perform step 7 only if backing plate needs to be replaced.

7. Remove twelve screws (10), lockwashers (7), nuts (6), cable ramp (9), and backing plate (8) from axle assembly. Discard lockwashers.

b. CLEANING AND INSPECTION

WARNING

- **Dry cleaning solvent P-D-680 is toxic and flammable. Always wear protective goggles and gloves, and use only in a well-ventilated area. Avoid contact with skin, eyes, and clothes, and DO NOT breathe vapors. DO NOT use near open flame or excessive heat. The solvent's flash point is 100°F-138°F (38°C-59°C). If you become dizzy while using cleaning solvent, immediately get fresh air and medical help. If solvent contacts eyes, immediately wash your eyes and get medical aid.**
- **DO NOT handle brakeshoes, brakedrums, or other brake components unless area has been properly cleaned. There maybe asbestos dust on these components which can be dangerous if you touch It or breathe it. Wear an approved filter mask and gloves. Never use compressed air or a dry brush to clean brake components. Dust may be removed using an industrial-type vacuum cleaner. Clean dust or mud away from brake components with water and a wet, ft brush or cloth. Failure to follow this warning may result In serious illness or death to personnel.**

1. Clean all parts with dry cleaning solvent.
2. Inspect all parts for damage. Replace any damaged parts.
3. Inspect brakeshoe surfaces for cracks, distortion, and excessive wear. Brakeshoe linings should have a minimum thickness of ⅛ in. (3.2 mm). Replace brakeshoes if cracked or if lining thickness is less than ⅛ in. (3.2 mm).

c. ASSEMBLY

NOTE

Perform step 1 only if backing plate was removed.

1. Install twelve screws (10), nuts (6), new lockwashers (7), cable ramp (9), and new backing plate (8) on axle assembly,
2. Install four service brake pins (11) on two brakeshoes (1) with four washers (2) and nuts (3).
3. Install screw (5), spacer (4), flatwasher (22), new lockwasher (21), and nut (20) on left brakeshoe (1).
4. Install capscrew (19), new lockwasher (17), and flatwasher (16) on right brakeshoe (1).
5. Install connecting link (23), tension spring washer (24), flatwasher (25), and slotted washer (26), on service brake pin (11).
6. Install lever (12), tension spring washer (13), flatwasher (14), and slotted washer (15) on service brake pin (11).
7. Install top and bottom brakeshoe return springs (18).

4-32. SERVICE BRAKE MAINTENANCE (Con't).

d. MINOR ADJUSTMENT

CAUTION

To avoid damage to axle assembly, ensure that floor jack Is placed as close as possible to suspension springs when lifting trailer.

NOTE

Perform this task for each wheel to compensate for normal brakeshoe lining wear.

1. Using floor jack, raise axle enough to allow wheel to spin freely. Support axle with a suitable jackstand.
2. Adjust service brakes by turning two adjusting studs (27) on backing plate (8) until a slight drag is felt when wheel is spun.
3. Back off adjustment so wheel spins freely.
4. Remove jackstand and lower axle.

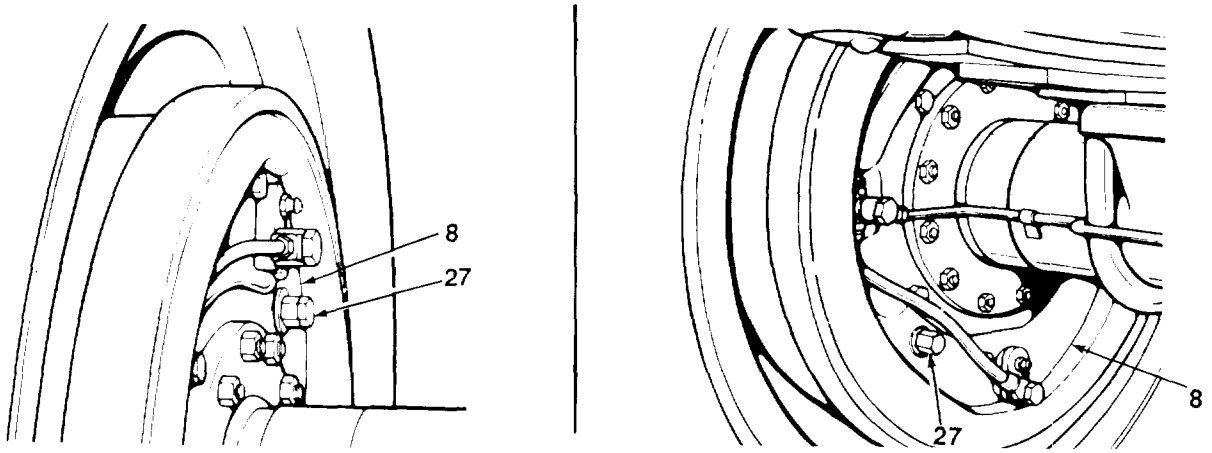

FOLLOW-ON TASKS:

- Connect handbrake cable to backing plate (para 4-31).
- Connect backing plate hydraulic lines to backing plate, if removed (para 4-35).
- Install hub and brakedrum (para 4-45).
- Bleed brakes, if backing plate hydraulic lines were disconnected from backing plate (para 4-36).

TA507025

4-33. MASTER CYLINDER REPLACEMENT.

This Task Covers:

a. Service
b. Removal
c. Installation

Initial Setup:

Materials/Parts:
- Brake fluid (Item 3, Appendix E)
- Rags (Item 18, Appendix E)
- Six lockwashers

Tools/Test Equipment:
- General mechanic's tool kit
- Drain pan

NOTE

Use a suitable container or drain pan to catch brake fluid. Clean up all spills.

a. SERVICE

1. Remove vent tube (5), filler cap (11), and spacer ring (10) from master cylinder (12).
2. Fill master cylinder (12) with brake fluid to within ½ in. (13 mm) of top of master cylinder.
3. Install spacer ring (10), filler cap (11), and vent tube (5) in master cylinder (12).

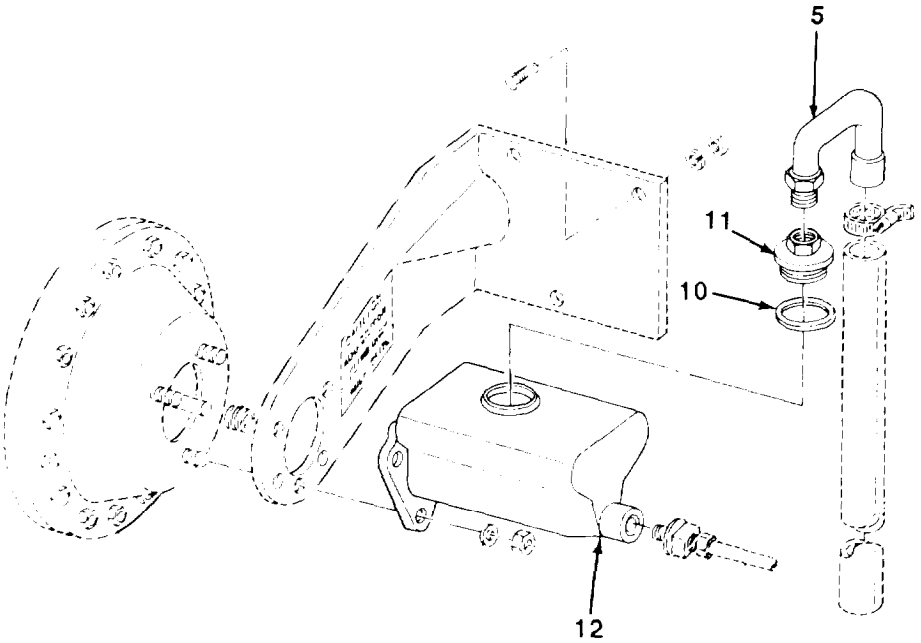

TA507026

4-33. MASTER CYLINDER REPLACEMENT (Con't).

b. REMOVAL

1. Remove tube assembly (8) and adapter (9) from master cylinder (12) and drain brake fluid into drain pan.

2. Remove three nuts (13), lockwashers (14), master cylinder (12), and airbrake chamber(15) from bracket (2). Discard lockwashers.

3. Remove boot (16) from master cylinder (12).

NOTE

- M149A1 and M149A2 trailers have an additional bracket which attaches to bracket and frame assembly. It Is not shown here. Refer to Figure 11, Appendix F.
- Lockwashers are found on M149A1 and M149A2 trailers only.

4. Remove three nuts (4), lockwashers (3), screws (1), and bracket (2) from frame crossmember. Discard lockwashers.

5. Loosen clamp (6) and remove hose (7) from vent tube (5).

6. Remove vent tube (5), filler cap (11), and spacer ring (10) from master cylinder (12).

7. Remove identification plate (17) if damaged.

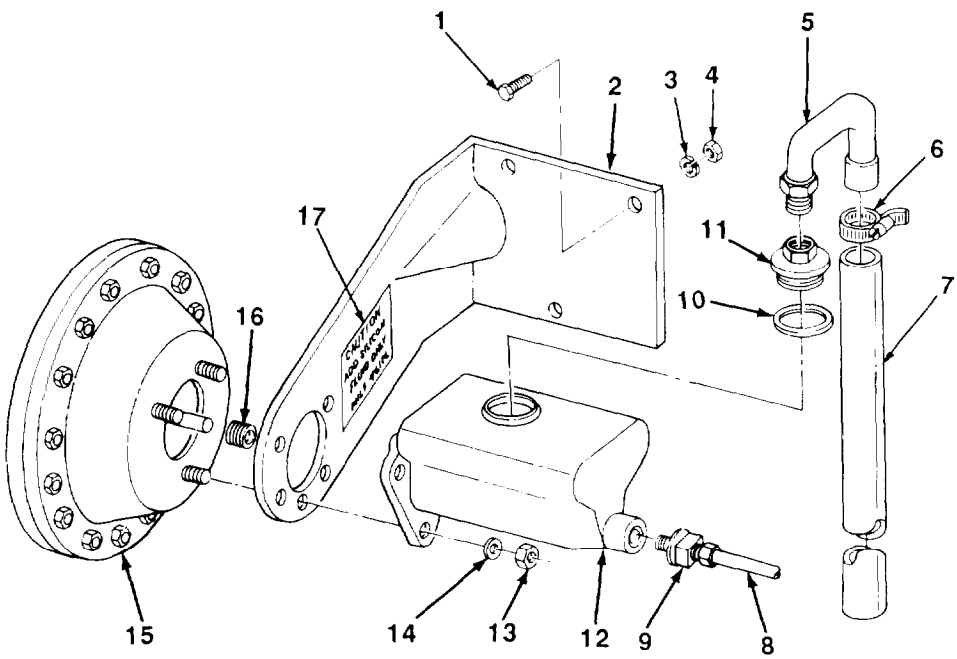

TA507027

4-33. MASTER CYLINDER REPLACEMENT (Con't).

c. INSTALLATION

1. Replace identification plate (17) if damaged or missing.
2. Install spacer ring (10), filler cap (11), and vent tube (5) on master cylinder (12).
3. Install hose (7) on vent tube (5) with clamp (6).

NOTE

Lockwashers are not used when installing bracket on M149.

4. Position bracket (2) on frame crossmember and install three screws (1), new lockwashers (3), and nuts (4).
5. Install boot (16) on master cylinder (12).
6. Position airbrake chamber (15) and master cylinder (12) on bracket (2) and install three new lockwashers(14) and nuts (13).
7. Install adapter (9) and tube assembly (8) on master cylinder (12).

FOLLOW-ON TASKS:

- Service master cylinder according to Lubrication Instructions (Chapter 3, Section l).
- Bleed brakes (para 4-36).

4-34. WHEEL CYLINDER REPLACEMENT.

This Task Covers:

a. Removal

b. Installation

Initial Setup:

Equipment Conditions:

- Service brakes disassembled (para 4-32).

Tools/Test Equipment:

- General mechanic's tool kit
- Drain pan

Materials/Parts:

- Rags (Item 18, Appendix E)
- Two lockwashers

NOTE

Top and bottom wheel cylinders are replaced the same way. Top wheel cylinder is shown.

a. REMOVAL

1. Remove bolt (10), flatwasher (7), spacer (9), and hydraulic line (8) from backing plate (4) and wheel cylinder (1).
2. Remove two screws (6), lockwashers (5), shield (3), and wheel cylinder (1) from backing plate (4). Discard lockwashers.
3. Remove bleeder valve (2) from wheel cylinder (1).

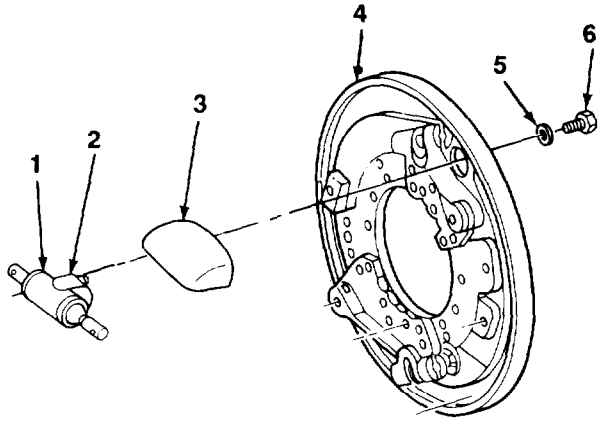

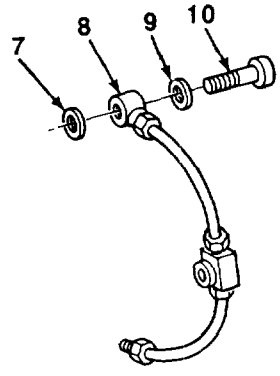

b. INSTALLATION

1. Install bleeder valve (2) in wheel cylinder (1).
2. Position shield (3) and wheel cylinder (1) on backing plate (4) and install two screws (6) and new lockwashers (5).
3. Install spacer (9), flatwasher (7), bolt (10), and hydraulic line (8) on backing plate (4) and wheel cylinder (1).

TA507028

4-34. WHEEL CYLINDER REPLACEMENT (Con't).

FOLLOW-ON TASKS:

- Assemble service brakes (para 4-32).
- Bleed brakes (para 4-36).

4-35. HYDRAULIC LINES, HOSES, AND FITTINGS REPLACEMENT.

This Task Covers:

a. Removal
b. Installation
c. Backing Plate Line Removal
d. Backing Plate Line Installation

Initial Setup:

Materials/Parts:

- Rags (Item 18, Appendix E)
- Three lockwashers

Tools/Test Equipment:

- General mechanic's tool kit
- Drain pan

a. REMOVAL

NOTE

The M149 does not use lockwashers or nuts on loop clamps.

1. Remove three screws (14), loop clamps (15), lockwashers (2), and nuts (1) from frame assembly. Discard lockwashers.

NOTE

Use a suitable container or drain pan to catch brake fluid. Clean up all spills.

2. Disconnect each end of tube assemblies (19 and 21) and remove union (20).
3. Remove master cylinder adapter (18) and washer (17) from master cylinder (16).

NOTE

M149A1 and M149A2 trailers have a washer which Is located between nut and hose assembly. It is not shown here.

4. Remove nut (3) from hose assembly (4), and remove hose assembly from multiple connector (11).
5. Disconnect tube assemblies (6 and 12) at each end and remove from multiple connector (11) and five clips (13).
6. Remove bolts (7), washers (8), multiple connectors (9), and spacer rings (10) from each wheel.
7. Remove nut (5) and multiple connector (11).

b. INSTALLATION

1. Install multiple connector (11) and nut (5).
2. Install spacer rings (10), multiple connectors (9), washers (8), and bolts (7) on each wheel.
3. Install tube assemblies (6 and 12) in five clips (13). Connect tube assemblies at each end and to multiple connector (11).
4. Install hose assembly (4) on multiple connector (11) and install nut (3) on hose assembly.

NOTE

M149 loop clamps are installed with self-tapping screws and do not use lockwashers and nuts.

5. Position tube assembly (19) on frame assembly and install three screws (14), loop clamps (15), new lockwashers (2), and nuts (1).

4-35. HYDRAULIC LINES, HOSES, AND FITTINGS REPLACEMENT (Con't).

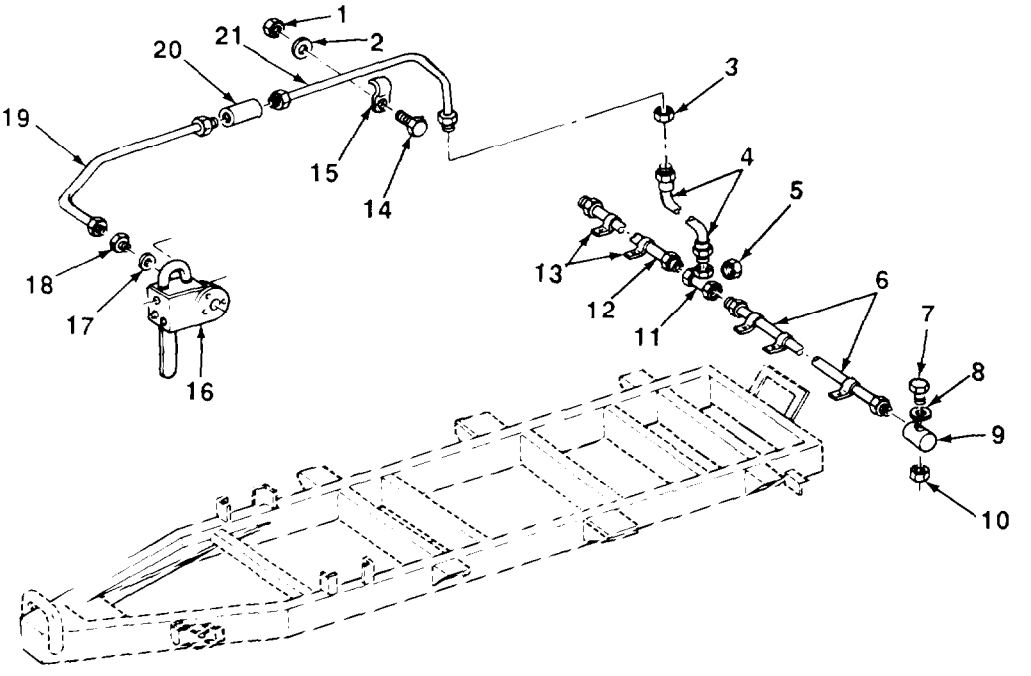

6. Install washer (17) and master cylinder adapter (18) on master cylinder (16).

7. Connect each end of tube assemblies (19 and 21) and install union (20).

c. BACKING PLATE LINE REMOVAL

NOTE

This procedure covers right and left sides of the trailer.

Remove backing plate lines (23 and 25) from connectors (22 and 26) and multiple connector (24).

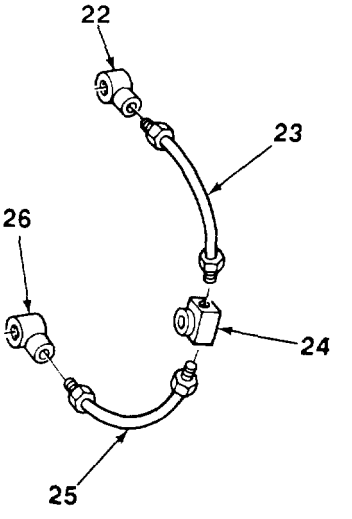

d. BACKING PLATE LINE INSTALLATION

Install backing plate lines (23 and 25) on multiple connector (24) and connectors (22 and 26).

FOLLOW-ON TASKS:

- Bleed brakes (para 4-36).

TA507029

4-36. BLEEDING HYDRAULIC BRAKE SYSTEM.

This Task Covers:

a. Manual Bleeding

b. Pressure Feed Filler Bleeding

Initial Setup:

Equipment Conditions:

- Trailer connected to towing vehicle.
- Master cylinder serviced (para 4-33).

Tools/Test Equipment:

- General mechanic's tool kit
- Pressure bleeder
- One quart (0.951) container

Materials/Parts:

- Brake fluid (Item 3, Appendix E)
- Dry cleaning solvent (Item 9, Appendix E)
- Rags (Item 18, Appendix E)
- Plastic tube

Personnel Required: Two

a. MANUAL BLEEDING

WARNING

Dry cleaning solvent P-D-680 is toxic and flammable. Always wear protective goggles and gloves, and use only in a well-ventilated area. Avoid contact with skin, eyes, and clothes, and DO NOT breathe vapors. DO NOT use near open flame or excessive heat. The solvent's flash point is 100°F-138°F (38°C-59°C). If you become dizzy while using cleaning solvent, immediately get fresh air and medical help. If solvent contacts eyes, immediately wash your eyes and get medical aid.

NOTE

- **Ensure that fluid level in master cylinder Is within ½ in. (13 mm) from top of master cylinder at all times during task to avoid allowing air to enter hydraulic brake system.**
- **Plastic tube should be approximately 18 in. (46 cm) long.**

1. Clean bleeder valve (1), using dry cleaning solvent and rag.
2. Attach plastic tube (3) to bleeder valve (1) and place other end of plastic tube in jar (2).
3. Add 1 in. (2.5 cm) of brake fluid to jar (2).
4. Open bleeder valve (1) by turning ¾ turn counter-clockwise. Have assistant depress brake pedal until air bubbles no longer appear in jar (2).
5. Close bleeder valve (1) and release brake pedal.

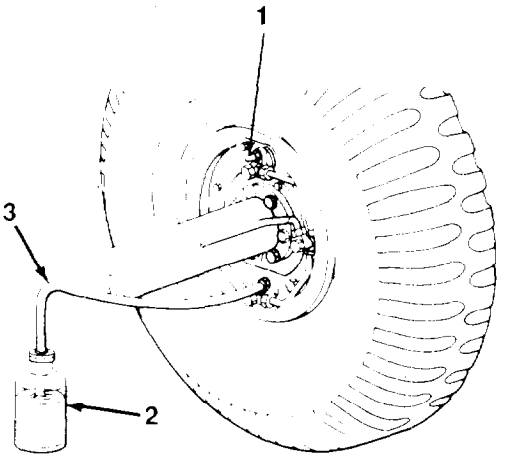

TA507030

4-36. BLEEDING HYDRAULIC BRAKE SYSTEM (Con't).

6 Remove filler plug (5) and vent tube assembly (6) from master cylinder (4).

7. Refill master cylinder (4) and repeat steps 4 and 5 until no air bubbles appear and fluid stream is clear.

8. Repeat steps 1 through 7 on opposite wheel.

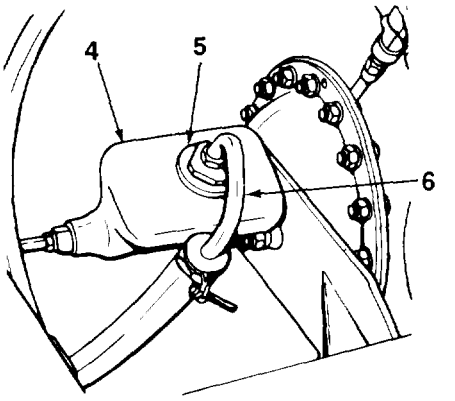

b. PRESSURE FEED FILLER BLEEDING

1. Remove filler plug (5) and vent tube assembly (6) from master cylinder (4). Install pressure feed adapter.

NOTE

Filler should contain 10-20 psi (69-138 kPa) air pressure and sufficient fluid to maintain constant level In master cylinder.

2. Bleed system as in manual bleeding except for manual filling of master cylinder and manual operation of brake pedal are not required.

3. Remove pressure feed filler hose and pressure feed adapter from master cylinder (4).

4. Install filler plug (5) and vent tube assembly (6) in master cylinder (4).

FOLLOW-ON TASKS:

- Service master cylinder (para 4-33).

TA507031

4-37. AIR LINES, HOSES, AND FITTINGS MAINTENANCE (M149).

This Task Covers."

a. Removal
b. Disassembly
c. Assembly
d. Installation

Initial Setup:

Materials/Parts:

- One preformed packing

Tools/Test Equipment:

- General mechanic's tool kit

a. REMOVAL

1. Remove five self-tapping screws (20), two retaining straps (17), and three retaining straps (18) from frame assembly.
2. Disconnect two intervehicular air hoses (19) from air filters (2) and remove from frame assembly.
3. Remove tube assemblies (4 and 21) from air filters (2).
4. Remove two elbows (3) from air filters (2) and adapter (11) from relay valve (10).
5. Remove two fittings (1) from air filters (2).
6. Remove elbow (8) from relay valve (10).
7. Remove hose assembly (7) from elbows (6) and (9).
8. Remove elbow (6) from air chamber (5) and elbow (9) from relay valve (10).

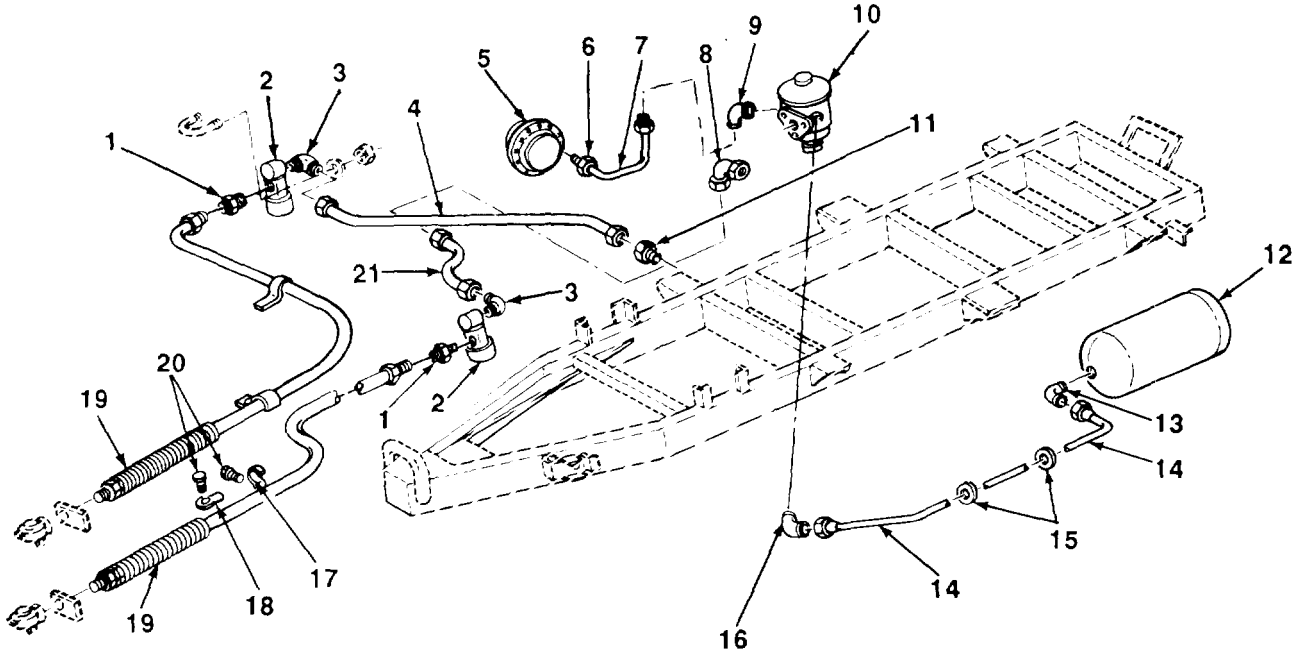

TA507032

4-37. AIR LINES, HOSES, AND FITTINGS MAINTENANCE (M149) (Con't).

9. Disconnect tube assembly (14) from elbow (16) and elbow (13).
10. Remove two grommets (15) from tube assembly (14).
11. Remove elbow (13) from air reservoir (12) and elbow (16) from relay valve (10).

b. DISASSEMBLY

1. Remove air coupling (22) and plate (24) from hose connector (25).
2. Remove preformed packing (23) from air coupling (22). Discard preformed packing.
3. Remove rubber hose (26) from hose connectors (27 and 25).

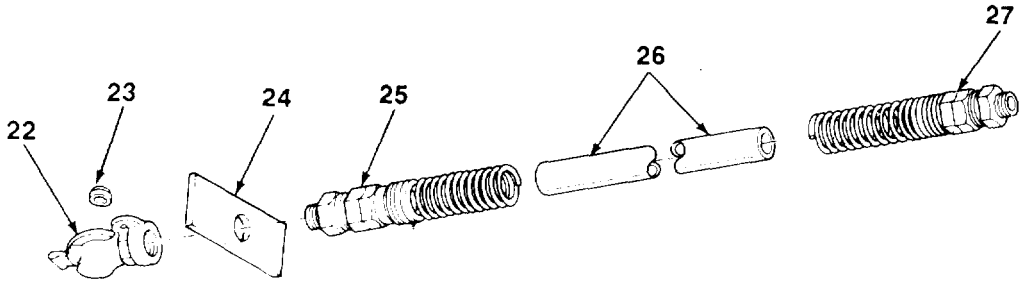

c. ASSEMBLY

1. Install rubber hose (26) in hose connectors (27 and 25).
2. Install new preformed packing (23) in air coupling (22).
3. Install plate (24) and air coupling (22) on hose connector (25)

d. INSTALLATION

1. Install elbow (13) in air reservoir (12) and elbow (16) in relay valve (10).
2. Position two grommets (15) on tube assembly (14) and install on frame assembly.
3. Connect tube assembly (14) to elbows (13 and 16).

NOTE

Instructions for manufacture of lines can be found in Appendix G.

4. Install elbow (9) in relay valve (10) and elbow (6) in airbrake chamber (5).
5. Install hose assembly (7) on elbows (6) and (9).
6. Install elbow (8) in relay valve (10)

TA507033

4-37. AIR LINES, HOSES, AND FITTINGS MAINTENANCE (M149) (Con't).

7. Install two fittings (1) in air filters (2).
8. Install adapter (11) in relay valve (10) and two elbows (3) in air filters (2).
9. Install tube assemblies (4 and 21) on air filters (2).
10. Position two intervehicular air hoses (19) on frame assembly and connect to air filters (2).
11. Install two retaining straps (17), three retaining straps (18), and five self-tapping screws (20) on frame assembly.

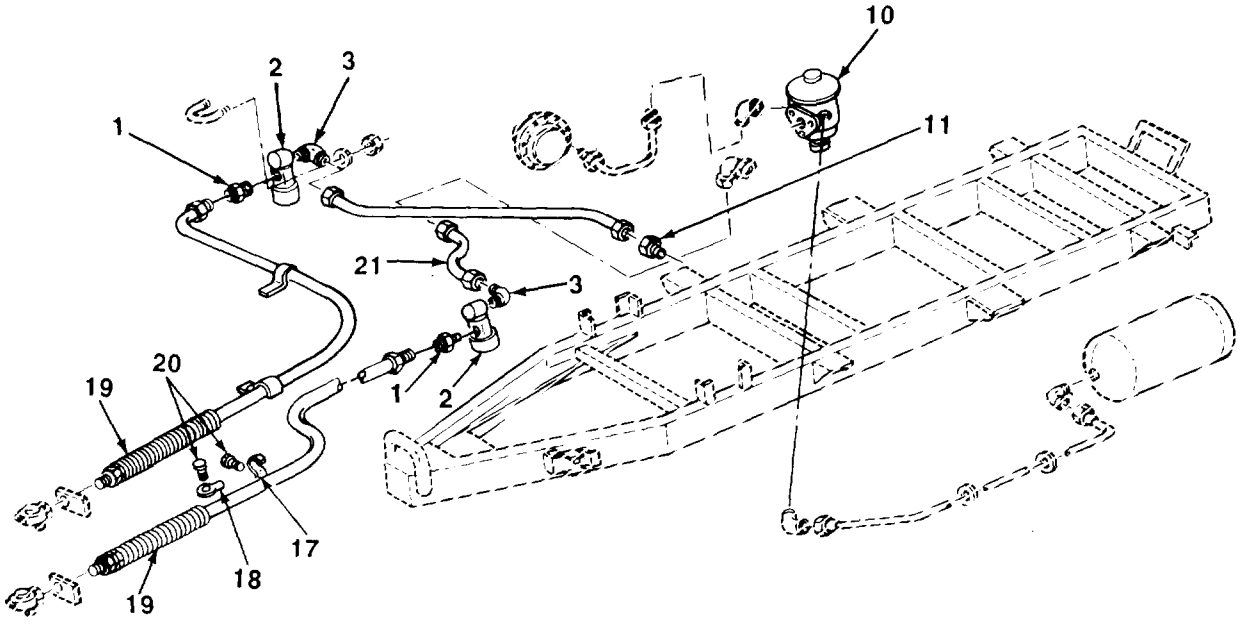

TA507034

4-38. AIR LINES, HOSES, AND FITTINGS MAINTENANCE (M149A1 AND M149A2).

This Task Covers:

a. Removal
b. Disassembly
c. Assembly
d. Installation

Initial Setup:

Materials/Parts:

- One preformed packing

Tools/Test Equipment:

- General mechanic's tool kit

a. REMOVAL

1. Remove five self-tapping screws (10), two retaining straps (8), and three retaining straps (7) from frame assembly.
2. Disconnect two intervehicular air hoses (1 and 9) from relay valve (6) and elbow (5). Remove intervehicular air hoses from frame assembly.
3. Remove grommet (11) from intervehicular air hose (9).
4. Disconnect tube assembly (3) from airbrake chamber and adapter (4),
5. Remove adapter (4) from relay valve (6).
6. Remove elbow (2) from airbrake chamber.

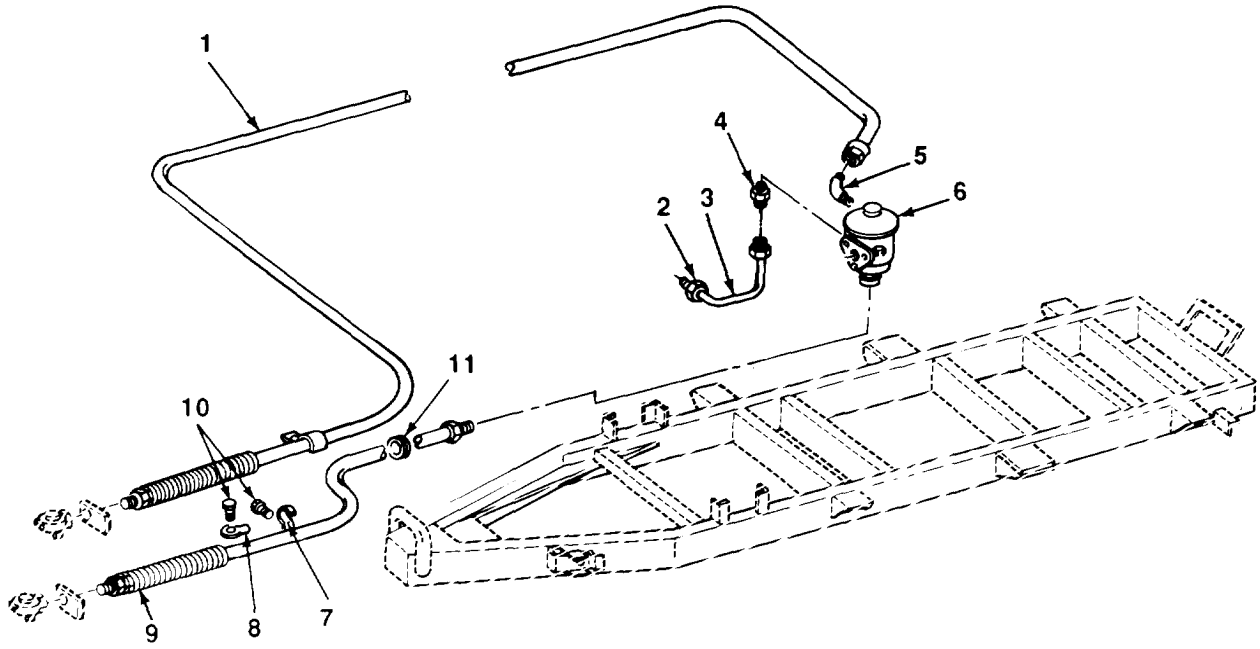

TA507035

4-38. AIR LINES, HOSES, AND FITTINGS MAINTENANCE (M149A1 AND M149A2) (Con't).

b. DISASSEMBLY

1. Remove air coupling (12) and plate (14) from hose connector (15).
2. Remove preformed packing (13) from air coupling (12). Discard preformed packing.
3. Remove rubber hose (16) from hose connectors (15 and 17).

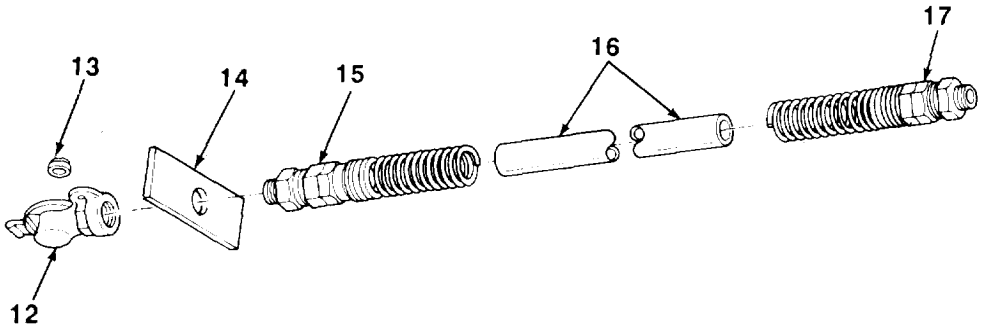

c. ASSEMBLY

1. Install rubber hose (16) in hose connectors (15 and 17).
2. Install new preformed packing (13) in air coupling (12).
3. Install plate (14) and air coupling (12) on hose connector (15).

d. INSTALLATION

1. Install adapter (4) in relay valve (6) and elbow (2) in airbrake chamber.
2. Install tube assembly (3) to adapter (4) and elbow (2).
3. install elbow (5) in relay valve (6).
4. Install grommet (11) on intervehicular air hose (9).
5. Position two intervehicular air hoses (1 and 9) on frame assembly and connect to relay valve (6) and elbow (5).
6. Install two retaining straps (8), three retaining straps (7), and five self-tapping screws (10) to secure intervehicular air hoses (1 and 9) to frame assembly.

TA507036

4-38. AIR LINES, HOSES, AND FITTINGS MAINTENANCE (M149A1 AND M149A2) (Con't).

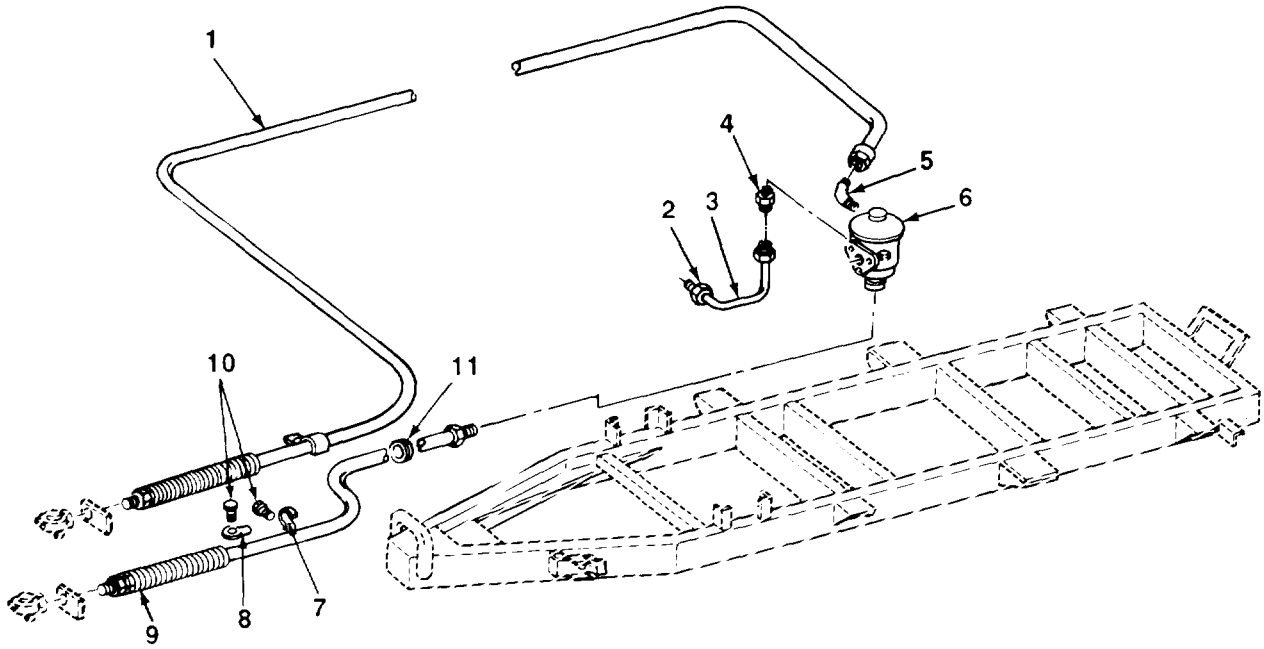

TA507037

4-39. AIRBRAKE CHAMBER REPLACEMENT.

This Task Covers:

a. Test
b. Removal
c. Installation

Initial Setup:

Materials/Parts:

- Three lockwashers

Personnel Required: Two

Tools/Test Equipment:

- General mechanic's tool kit

a. TEST

1. With service brake released, insert small rod (2) through one of two inspection holes (3) in airbrake chamber (1).
2. Mark rod (2) at surface of support when rod contacts pushrod return spring in airbrake chamber (1).
3. Apply service brake and mark rod (2) again at surface of support when rod contacts pushrod return spring in airbrake chamber (1).
4. Withdraw rod (2), and measure distance between two marks. Distance between two marks indicates distance of pushrod travel.

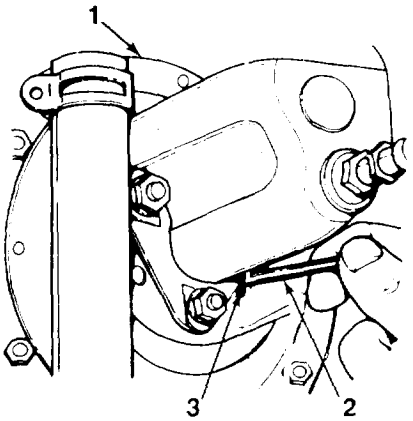

5. Adjust service brakes to permit a minimum of ½ in. (12.7 mm) and a maximum of ¾ in. (19.1 mm) pushrod travel (para 4-32).
6. Disconnect intervehicular air hoses from towing vehicle and see if brakes apply automatically.

b. REMOVAL

1. Remove tube (5) and elbow (4) from airbrake chamber (1).

CAUTION

Master cylinder must be supported when airbrake chamber is removed. Damage to hydraulic brake line may result if master cylinder is not supported.

2. Remove three nuts (9), lockwashers (8), and airbrake chamber (1) from master cylinder (7) and mounting bracket (10). Discard lockwashers.
3. Remove identification plate (6) if damaged.

TA507038

4-39. AIRBRAKE CHAMBER REPLACEMENT (Con't).

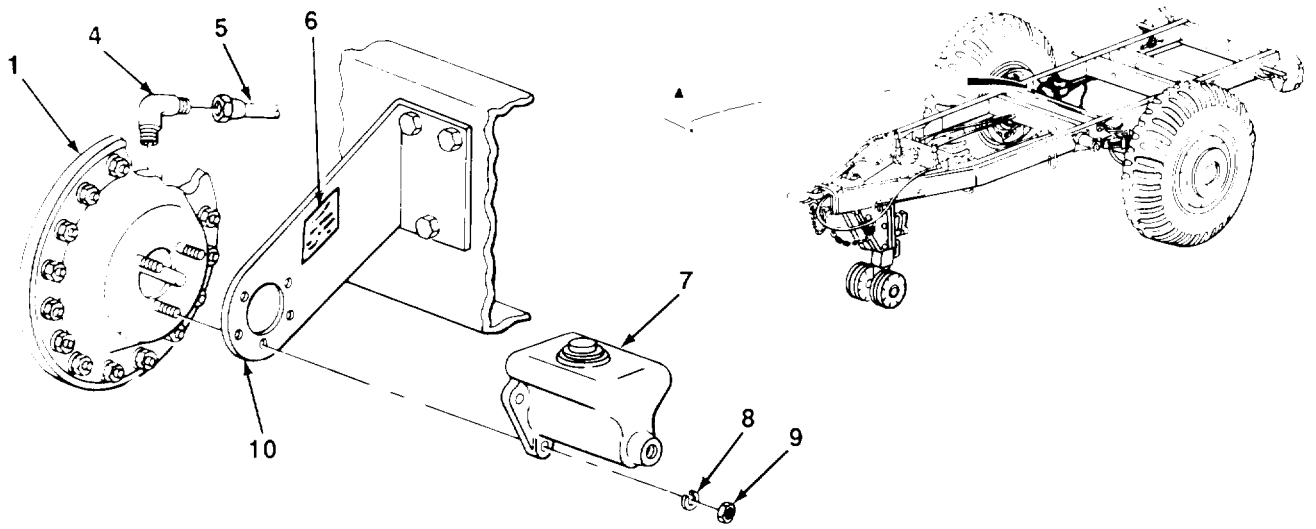

b. INSTALLATION

1. Install identification plate (6) if previously removed.
2. Position airbrake chamber (1) on mounting bracket (10). Install airbrake chamber to mounting bracket and master cylinder (7) with three new lockwashers (8) and nuts (9).
3. Install elbow (4) and tube (5) on airbrake chamber (1).

TA507039

4-40. AIR RESERVOIR AND BRACKET ASSEMBLY REPLACEMENT.

This Task Covers:

a. Removal (M149A1 and M149A2)
b. Installation (M149A1 and M149A2)
c. Removal (M149)
d. Installation (M149)

Equipment Conditions:

- Relay valve removed (para 4-42).

Tools/Test Equipment:

- General mechanic's tool kit

Materials/Parts:

- Antiseize tape (Item 26, Appendix E)
- Four lockwashers

a. REMOVAL (M149A1 AND M149A2)

1. Remove nipple (4), pipe plug (6), and draincock (5) from air reservoir (7).
2. Remove four nuts (1), lockwashers (2), two U-bolts (3), and air reservoir (7) from mount (8). Discard lockwashers.

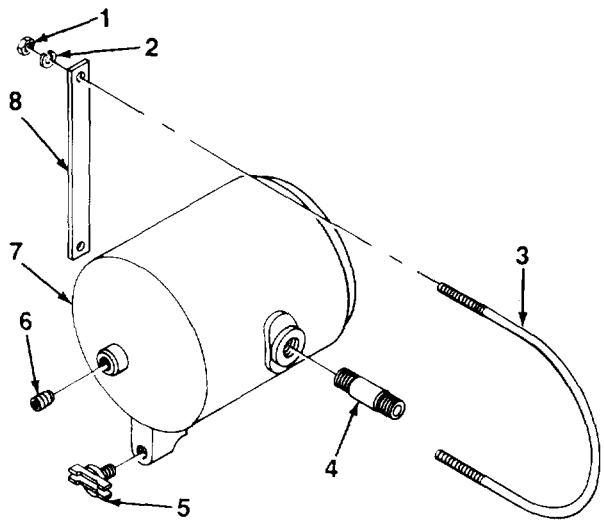

b. INSTALLATION (M149A1 AND M149A2)

1. Position air reservoir (7) on mount (8) and install two U-bolts (3), four new lockwashers (2), and nuts (1).
2. Apply antiseize tape to draincock (5), pipe plug (6), and nipple (4) and install on air reservoir (7).

c. REMOVAL (M149)

1. Disconnect tubing connector (15) from elbow (14).
2. Loosen two nuts (13) and washers (12).

TA507040

4-40. AIR RESERVOIR AND BRACKET ASSEMBLY REPLACEMENT (Con't).

WARNING

To prevent damage to equipment and injury to personnel, support air reservoir when removing.

3. Remove air reservior (7) from two bracket assemblies (11).
4. Remove four capscrews (10), nuts (9), and two bracket assemblies (11).
5. Remove draincock (16) and elbow (14) from air reservoir (7).

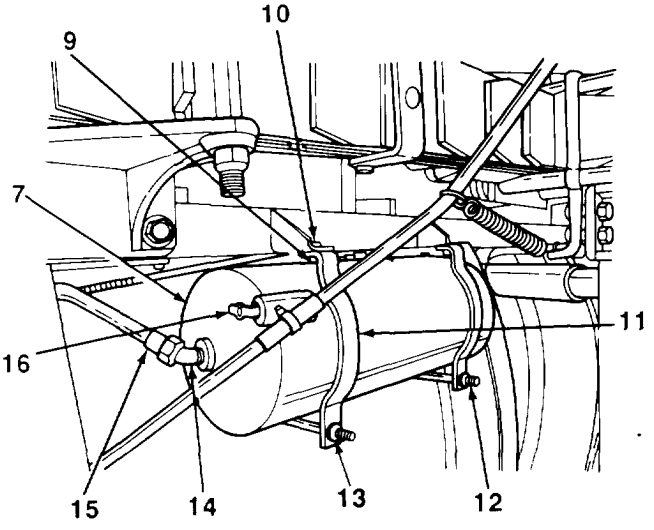

d. INSTALLATION (M149)

1. Install elbow (14) and draincock (16) in air reservoir (7).
2. Install two bracket assemblies (11) on frame with four capscrews (10) and nuts (9).
3. Position air reservoir (7) in bracket assemblies (11).
4. Tighten two nuts (13) and washers (12).
5. Connect tubing connector (15) to elbow (14).

FOLLOW-ON TASKS:

- Install relay valve (para 4-42).

TA507041

4-41. AIR FILTER MAINTENANCE (M149).

This Task Covers:

a. Removal
b. Disassembly
c. Cleaning and Inspection
d. Assembly
e. Installation

Initial Setup:

Materials/Parts:

- Dry cleaning solvent (Item 9, Appendix E)
- One filter element
- One gasket
- Two lockwashers

Tools/Test Equipment:

- General mechanic's tool kit

a. REMOVAL

1. Disconnect two tubes (2) from air filter (4).
2. Remove two nuts (5), lockwashers (6), U-bolt (1), and air filter (4) from crossmember (7). Discard lockwashers.
3. Remove two fittings (3) from air filter (4).

b. DISASSEMBLY

Remove plug (10), adapter (11), gasket (12), spring (13), spring washer (14), and filter element (8) from body (9). Discard gasket and filter element.

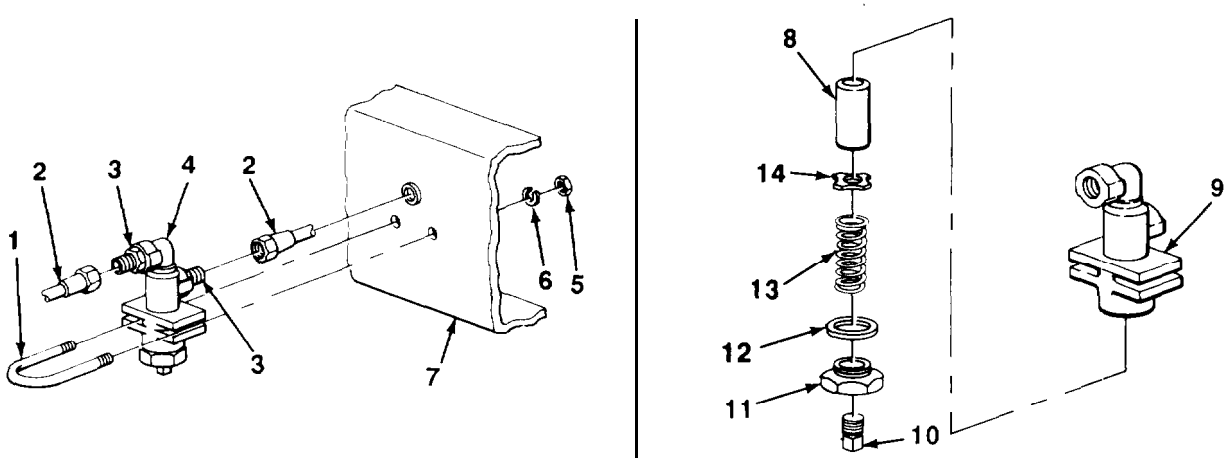

TA507042

4-41. AIR FILTER MAINTENANCE (M149) (Con't).

c. CLEANING AND INSPECTION

WARNING

Dry cleaning solvent P-D-680 is toxic and flammable. Always wear protective goggles and gloves, and use only in a well-ventilated area. Avoid contact with skin, eyes, and clothes, and DO NOT breathe vapors. DO NOT use near open flame or excessive heat. The solvent's flash point is 100°F-138°F (38°C-59°C). If you become dizzy while using cleaning solvent, immediately get fresh air and medical help. If solvent contacts eyes, immediately wash your eyes and get medical aid.

1. Clean all components with dry cleaning solvent and inspect for damage.
2. Replace any damaged components.

d. ASSEMBLY

Install new filter element (8), spring washer (14), spring (13), new gasket (12), adapter (11), and plug (10) in body (9).

e. INSTALLATION

1. Install two fittings (3) in air filter (4).
2. Position air filter (4) on crossmember (7) and install U-bolt (1), two new lockwashers (6), and nuts (5).
3. Connect two tubes (2) to air filter (4).

4-42. RELAY VALVE REPLACEMENT.

This Task Covers:

a. Removal

b. Installation

Initial Setup:

Equipment Conditions:

- Air lines and fittings disconnected from relay valve (para 4-37 or 4-38).

Tools/Test Equipment:

- General mechanic's tool kit

Materials/Parts:

- Marker tags (Item 25, Appendix E)
- Antiseize tape (Item 26, Appendix E)

a. REMOVAL

NOTE

The M149 relay valve is Installed on frame with three screws and nuts. The M149A1 or M149A2 is installed directly on air reservoir. Step 1 is for M149A1 or M149A2 only.

1. Remove relay valve (2) and nipple (3) from air reservoir (4).
2. Remove two elbows (1) from relay valve (2).
3. Remove nipple (3) from relay valve (2).

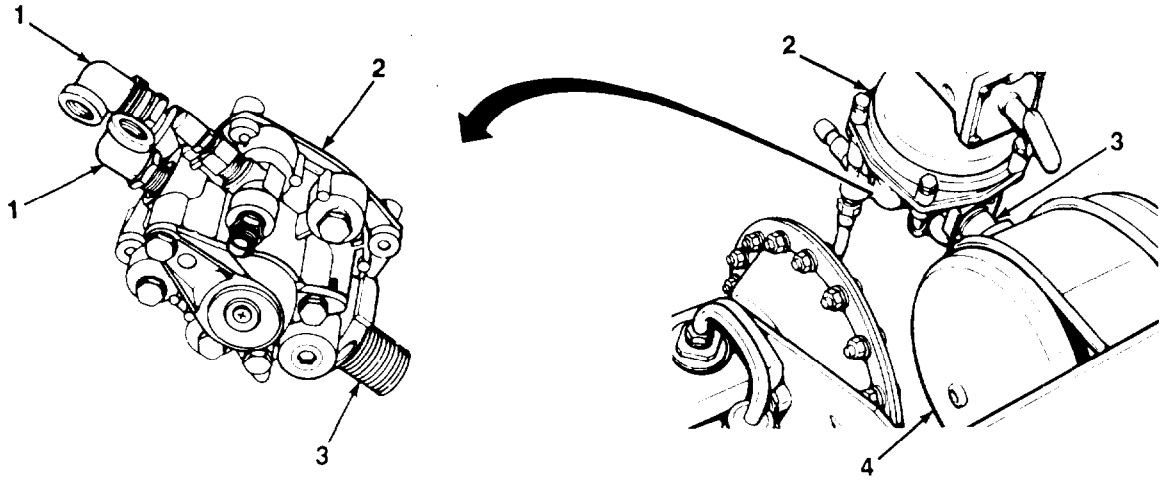

TA507043

4-42. RELAY VALVE REPLACEMENT (Con't).

b. INSTALLATION

NOTE

The M149 relay valve is installed on frame using three screws and nuts. Steps 2 and 3 are for M149A1 or M149A2 only.

1. Install two elbows (1) on relay valve (2).
2. Using antiseize tape, install nipple (3) in relay valve (2).
3. Install relay valve (2) and nipple (3) on air reservoir (4).

FOLLOW-ON TASKS:

- Connect air lines and fittings to relay valve (para 4-37 or 4-38).

Section IX. WHEEL MAINTENANCE

Paragraph Title	Page Number
Hub, Wheel Bearing, and Brakedrum Maintenance	4-81
Tire and Tube Maintenance	4-81
Wheel Replacement	4-80

4-43. WHEEL REPLACEMENT.

This Task Covers:

a. Removal

b. Installation

Initial Setup:

Tools/Test Equipment:

- General Mechanic' s Tool Kit
- Jack, 10,000 lb (4540 Kg) capacity

a. REMOVAL]

1. Apply handbrakes (para 2-12).
2. Using suitable lifting device, raise up trailer until weight of trailer is on lifting device.

NOTE

Studs are marked R on right wheel and L on left wheel. Nuts must be turned in opposite direction of normal forward rotation of wheel to be loosened or removed.

3. Loosen, but do not remove, six nuts (1) on wheel (2).
4. Raise up trailer until wheel (2) is completely off ground. Remove six nuts (1).
5. Remove wheel (2) from studs (3).

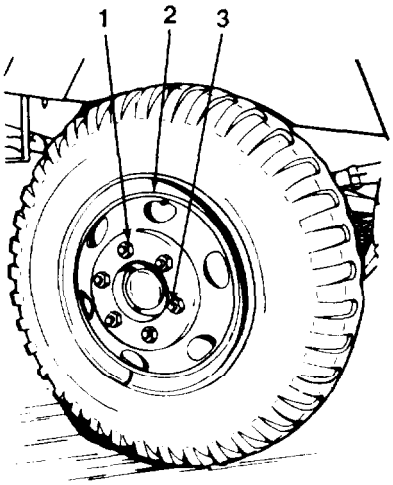

b. INSTALLATION

1. Position wheel (2) on studs (3) and loosely install six nuts (1).
2. Lower trailer until full weight is on wheels.
3. Torque six nuts (1) evenly to 340-370 lb.-ft. (461-502 N•m).

TA507044

4-44. TIRE AND TUBE MAINTENANCE.

Refer to TM 9-2610-200-24 for instructions on tire and tube maintenance.

4-45. HUB, WHEEL BEARING, AND BRAKEDRUM MAINTENANCE.

This Task Covers:

a. Removal
b. Disassembly
c. Assembly
d. Installation
e. Wheel Bearing Adjustment

Initial Setup:

Equipment Conditions:

- Wheel removed (para 4-43).

Tools/Test Equipment:

- General mechanic's tool kit
- Jackstand
- Wheel bearing socket, ¾ in. drive, 3 in.

Materials/Parts:

- Dry cleaning solvent (Item 9, Appendix E)
- Grease (Item 13, Appendix E)
- One gasket
- One oil seal
- Six lockwashers
- Eighteen self-locking nuts

4-45. HUB, WHEEL BEARING, AND BRAKEDRUM MAINTENANCE (Con't).

a. REMOVAL

1. Position jackstand under axle (16) and remove floor jack.
2. Remove six screws (1), lockwashers (2), hubcap (3), and gasket (4) from hub (10). Discard lockwashers and gasket.
3. Remove outer adjusting nut (5), keywasher (6), and inner adjusting nut (7) from hub (10) and axle (16).
4. Pull hub (10) out slightly on axle (16) to loosen outer wheel bearing cone (8). Remove outer wheel bearing cone from hub and axle.

WARNING

DO NOT handle brakeshoes, brakedrums, or other brake components unless area has been properly cleaned. There may be asbestos dust on these components which can be dangerous if you touch it or breathe it. Wear an approved filter mask and gloves. Never use compressed air or a dry brush to clean brake components. Dust may be removed using an industrial-type vacuum cleaner. Clean dust or mud away from brake components with water and a wet, soft brush or cloth. Failure to follow this warning may result in serious illness or death to personnel.

5. Remove hub (10) and drum (12) from axle (16) and backing plate (19).
6. Tap inner wheel bearing cone (21), oil seal (20), and spacer sleeve (17) out of hub (10) or from axle (16). Discard oil seal.

WARNING

Dry cleaning solvent P-D-680 is toxic and flammable. Always wear protective goggles and gloves, and use only in a well-ventilated area, Avoid contact with skin, eyes, and clothes, and DO NOT breathe vapors, DO NOT use near open flame or excessive heat. The solvent's flash point is 100°F-138°F (38°C-59°C), If you become dizzy while using cleaning solvent, immediately get fresh air and medical help. if solvent contacts eyes, immediately wash your eyes and get medical aid.

NOTE

If inner and outer wheel bearing cones need to be replaced, wheel bearing cones and races are replaced as a set.

7. Clean and inspect inner and outer wheel bearing cones in accordance with TM 9-214. Discard if damaged.

b. DISASSEMBLY

WARNING

DO NOT handle brakeshoes, brakedrums, or other brake components unless area has been properiy cleaned. There may be asbestos dust on these components which can be dangerous if you touch it or breathe it. Wear an approved filter mask and gloves. Never use compressed air or a dry brush to clean brake components. Dust may be removed using an industrial-type vacuum cleaner. Clean dust or mud away from brake components with water and a wet, soft brush or cloth. Failure to follow this warning may result in serious illness or death to personnel.

4-45. HUB, WHEEL BEARING, AND BRAKEDRUM MAINTENANCE (Con't).

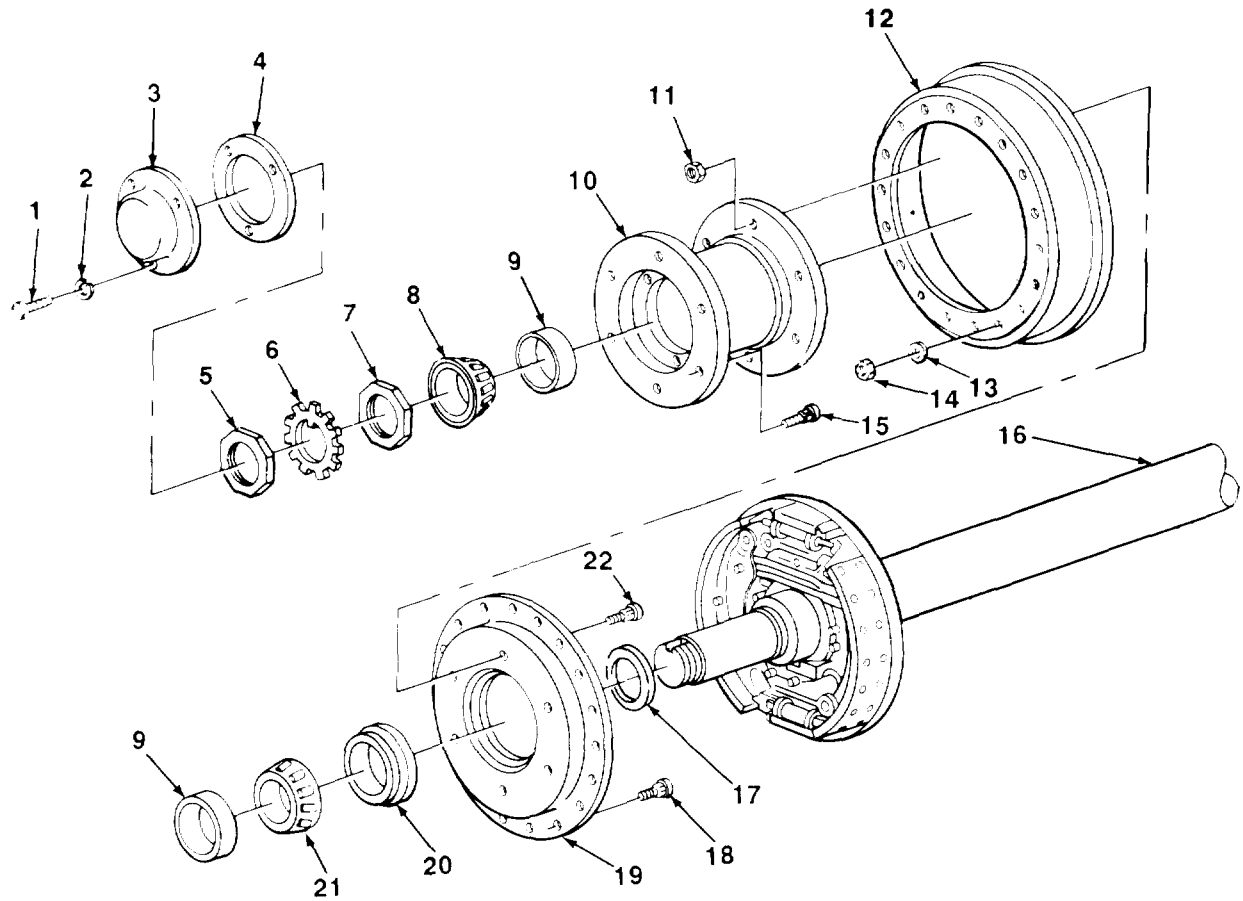

NOTE

Hub, brakedrum, and backing plate maybe removed as an assembly. Disassemble only if replacement of a part Is required.

1. Remove six nuts (11) and bolts (22), and remove backing plate (19) and brakedrum (12) from hub (10).
2. Remove eighteen screws (18), flatwashers (13), and self-locking nuts (14). Remove backing plate (19) from brakedrum (12). Discard self-locking nuts.
3. Remove six bolts (15) and two wheel bearing races (9) from hub (10).

c. ASSEMBLY

1. Tap two wheel bearing races (9) into position inside hub (10). Install six bolts (15).
2. Position backing plate (19) on brakedrum (12) and install eighteen screws (18), flatwashers (13), and new self-locking nuts (14).
3. Position backing plate (19) and brakedrum (12) on hub (10) and install six bolts (22) and nuts (11).

NOTE

Instructions on packing wheel bearing cones can be found in TM 9-214.

4. Pack inner wheel bearing cone (21) with grease, position in hub (10), and install new oil seal (20) and spacer sleeve (17).

TA507045

4-45. HUB, WHEEL BEARING, AND BRAKEDRUM MAINTENANCE (Con't).

d. INSTALLATION

1. Position brakedrum (12) and hub (10) on axle (16).
2. Pack outer wheel bearing cone (8), position in hub (10) and on axle (16), and install inner adjusting nut (7).

e. WHEEL BEARING ADJUSTMENT

1. Tighten inner adjusting nut (7) while turning hub (10) and brakedrum (12) until drag is felt.
2. Rotate hub (10) and brakedrum (12) one turn and loosen inner adjusting nut (7) while rocking hub back and forth until looseness is felt.
3. Tighten inner adjusting nut (7) until looseness is no longer felt.
4. Install keywasher (6) and outer adjusting nut (5) on axle (16). Bend one tab of keywasher over flat of outer adjusting nut.
5. Position new gasket (4) and hubcap (3) on hub (10) and install six new lockwashers (2) and screws (1).
6. Position floor jack under axle (16) and raise enough to remove jackstand.

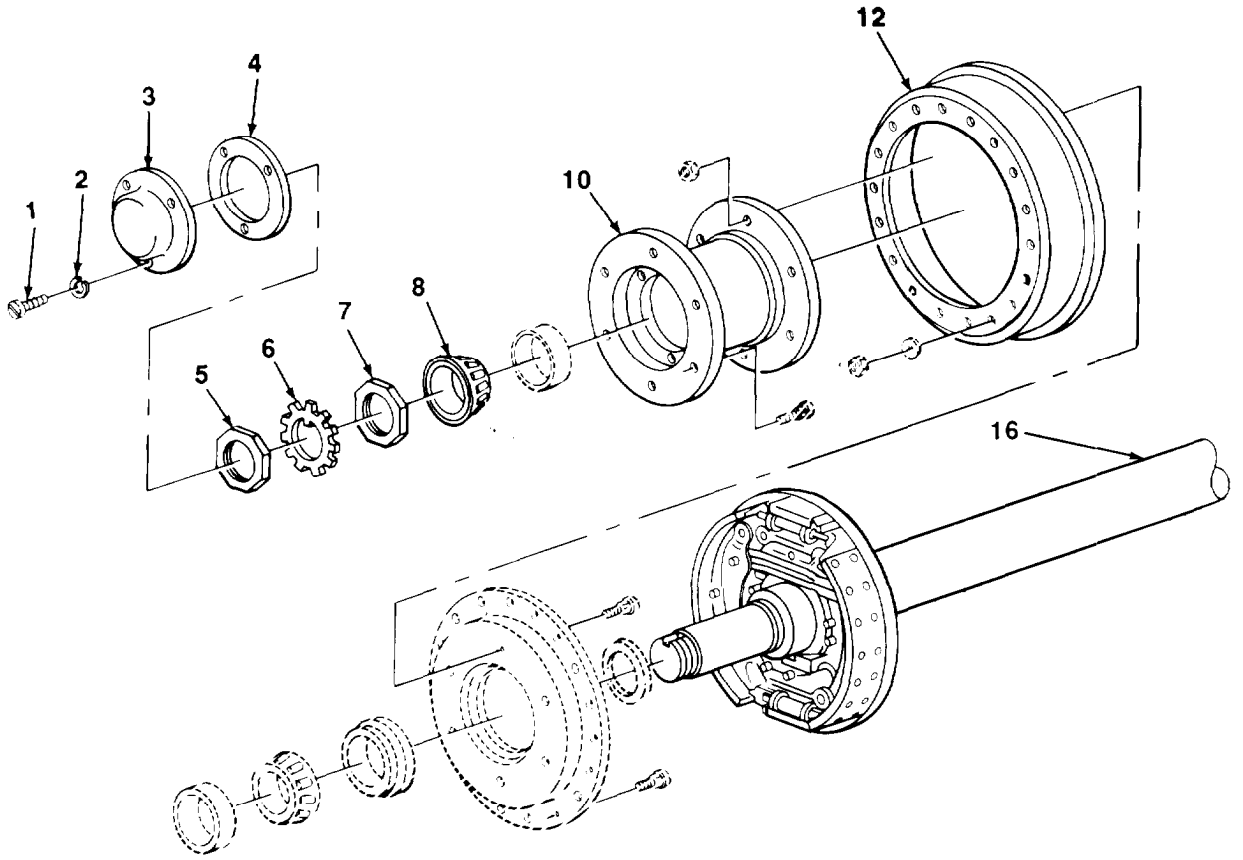

FOLLOW-ON TASKS:

- Install wheel (para 4-43).
- Adjust service brakes (para 4-32).

TA507046

Section X. FRAME AND TOWING ATTACHMENTS MAINTENANCE

Paragraph Title	Page Number
Adjustable Caster Assembly Maintenance	4-90
Drawbar Ring and Safety Chain Replacement	4-85
Faucet Box Assembly Maintenance	4-88
Fender Assembly Replacement	4-86
Suspension Bracket Replacement	4-94

4-46. DRAWBAR RING AND SAFETY CHAIN REPLACEMENT

This Task Covers:

a. Removal

b. Installation

Initial Setup:

Materials/Parts:

- One cotter pin
- Two lockwashers

Tools/Test Equipment:

- General mechanic's tool kit
- Torque Torque wrench

a. REMOVAL

1. Remove cotter pin (1), nut (2), flatwasher (3), and drawbar ring (4). Discard cotter pin.

2. Remove two nuts (9), lockwashers (8), and safely chains (5) from frame assembly (6) and lifting handles (7). Discard lockwashers.

b. INSTALLATION

1. Hook safety chains (5) on lifting handles (7).

2. Install safety chains (5), two new lockwashers (8), and nuts (9) to frame assembly (6).

3. Position drawbar ring (4) on frame assembly (6) and install flatwasher (3) and nut (2). Torque nut to 450-5001 b. ft. (610-678 N•m).

4. Install new cotter pin (1).

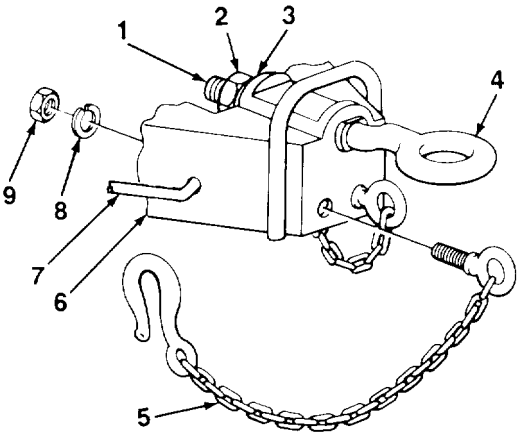

TA507047

4-47. FENDER ASSEMBLY REPLACEMENT.

This Task Covers:

a. Removal

b. Installation

Initial Setup:

Materials/Parts:

- Sixteen lockwashers

Tools/Test Equipment:

- General mechanic's tool kit

NOTE

Right and left fenders and fender supports are replaced the same way. This procedure covers one side.

a. REMOVAL

NOTE

The M149 has no splashguard. If working on an M149, skip step 1.

1. Remove four nuts (12), lockwashers (11), screws (4), retainer (13), and splashguard (7) from fender support (2). Discard lockwashers.
2. Remove six screws (8), flatwashers (9), lockwashers (5), nuts (6), and fender (10) from fender supports (2 and 16). Discard lockwashers.

NOTE

The M149 has lockwashers located between screws (3) and fender supports (2 and 16).

3. Remove six screws (3), lockwashers (14), nuts (15), and fender supports (2 and 16) from frame assembly (1).

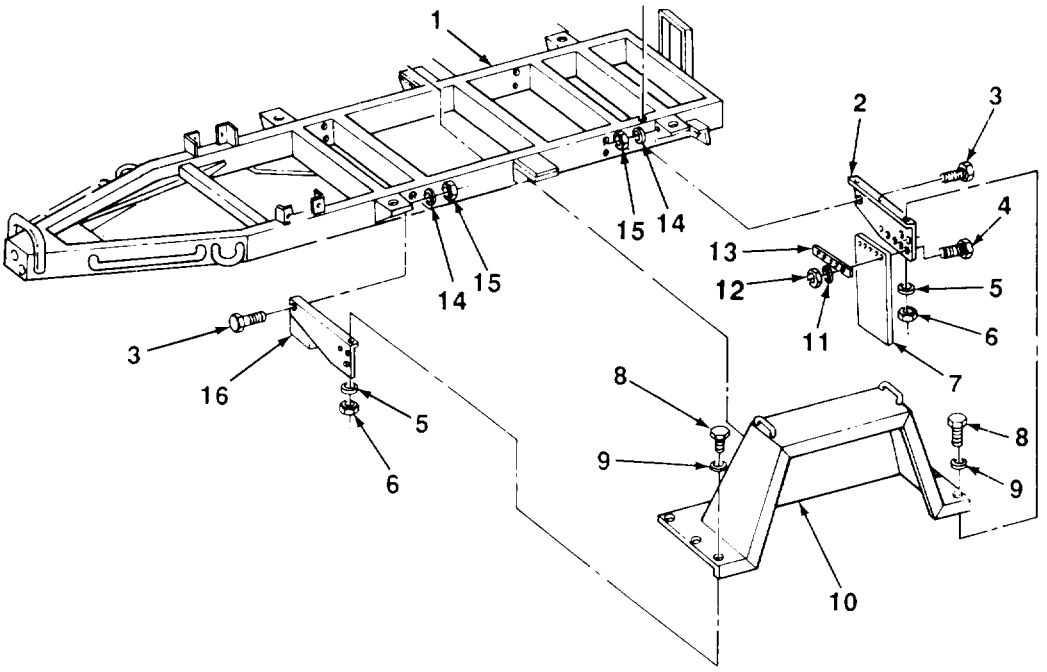

TA507048

4-47. FENDER ASSEMBLY REPLACEMENT (Con't).

b. INSTALLATION

NOTE

The M149 has lockwashers located between screws (3) and fender supports (2 and 16).

1. Position fender supports (2 and 16) on frame assembly (1) and install six screws (3), new lockwashers (14), and nuts (15).

2. Position fender (10) on fender supports (2 and 16) and install six screws (8), flatwashers (9), new lockwashers (5), and nuts (6).

NOTE

The Ml 49 has no splashguard. Steps 3 and 4 are for the M149A1 and M149A2 only.

3. Position splashguard (7) and retainer (13) on inside portion of fender support (2).

4. Install four screws (4), new lockwashers (11), and nuts (12) on fender support (2).

4-48. FAUCET BOX ASSEMBLY MAINTENANCE.

This Task Covers:

a. Removal
b. Disassembly
c. Assembly
d. Installation

Initial Setup:

Equipment Conditions:

- Piping and faucets removed (para 4-58).

Tools/Test Equipment:

- General mechanic's tool kit

Materials/Parts:

- Fourteen lockwashers

a. REMOVAL

1. Remove four nuts (4), lockwashers (3), and bolts (2) from faucet box assembly (1). Discard lockwashers.
2. Remove faucet box assembly (1) from frame assembly.

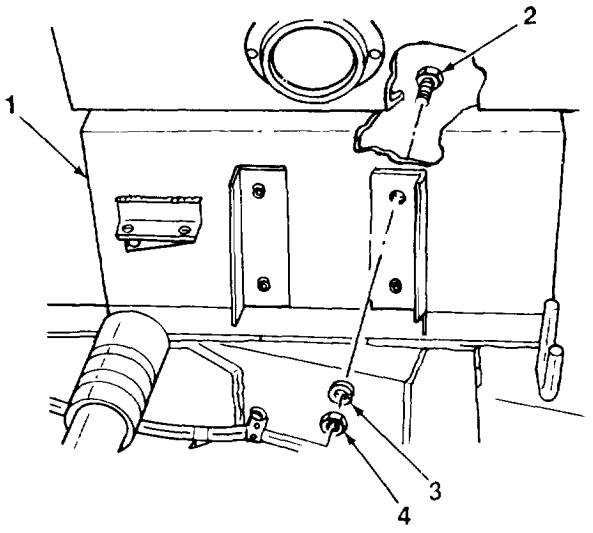

b. DISASSEMBLY

1. Release fastener (14) from bracket (11).
2. Remove three screws (5), lockwashers (1 8), nuts (1 7), and access cover (10) with hinge (6) from box (7). Discard lockwashers.
3. Remove three screws (5), lockwashers (18), nuts (17), and hinge (6) from access cover (10). Discard lockwashers.
4. Remove two nuts (8), lockwashers (9), screws (12), and bracket (11) from access cover (10).
5. Remove two screws (13), lockwashers (15), nuts (16), and fastener (14) from box (7). Discard lockwashers.

TA507049

4-48. FAUCET BOX ASSEMBLY MAINTENANCE (Con't).

c. ASSEMBLY

1. Position fastener (14) on box (7) and install two screws (13), new lockwashers (15), and nuts (16).
2. Position bracket (11) on access cover (10) and install two screws (12), new lockwashers (9), and nuts (8).
3. Position hinge (6) on access cover (10) and install three screws (5), new lockwashers (18), and nuts (17).
4. Position access cover (10) and hinge (6) on box (7) and install three screws (5), new lockwashers (18), and nuts (17).
5. Secure fastener (14) in bracket (11).

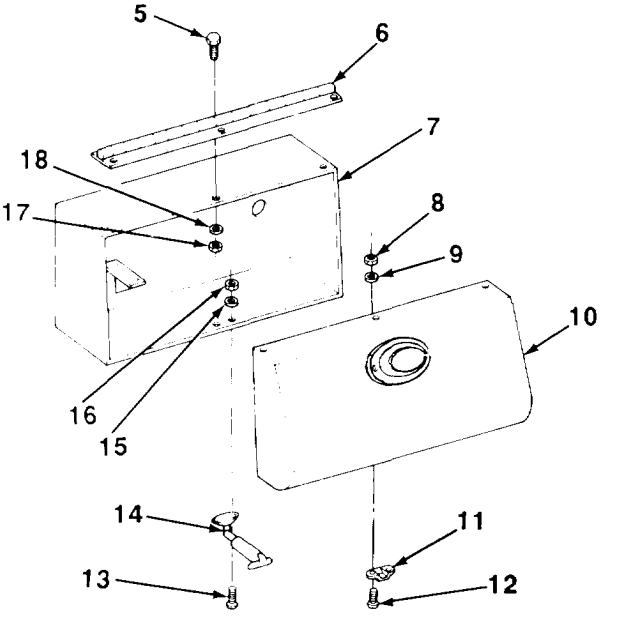

d. INSTALLATION

1. Position faucet box assembly (1) on frame assembly.
2. Install four bolts (4), new lockwashers (3), and nuts (4).

FOLLOW-ON TASKS:

- Install piping and faucets (para 4-58).

TA507050

4-49. ADJUSTABLE CASTER ASSEMBLY MAINTENANCE.

This Task Covers:

a. Removal
b. Disassembly
c. Cleaning and Inspection
d. Assembly
e. Installation

Initial Setup:

Materials/Parts:

- Dry cleaning solvent (Item 9, Appendix E)
- Two cotter pins
- Two self-locking nuts
- Six lockwashers

Tools/Test Equipment:

- General mechanic's tool kit
- Two jackstands

Personnel Required: Two

a. REMOVAL

NOTE

Assistance is required for step 1.

1. Raise front of trailer and position two jackstands under frame (1).
2. Remove nut (6), washer (7), and washer (8) from mounting stud (9) and frame.
3. Remove adjustable caster assembly (2) from frame.

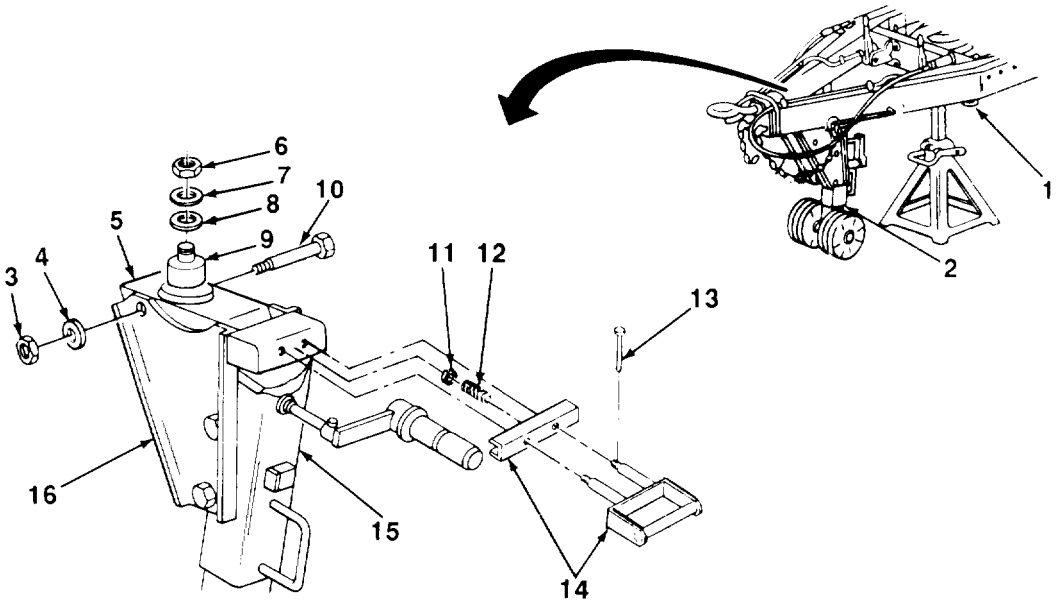

TA507051

4-49. ADJUSTABLE CASTER ASSEMBLY MAINTENANCE (Con't).

b. DISASSEMBLY

1. Remove self-locking nut (3), washer (4), and bolt (10) from retainer (16) and spindle and bracket (5). Discard self-locking nut.
2. Remove spindle and bracket (5) from leg assembly (15).
3. Remove two pins (13), release handle (14), springs (12), and lockwashers (11) from spindle and bracket (5). Discard lockwashers.
4. Remove four bolts (31), lockwashers (30), and retainer (16) from leg (17). Discard lockwashers.
5. Remove self-locking nut (24), bolt (26), and handle (25) from handcrank (23). Discard self-locking nut.
6. Remove nut (22), bolt (27), and handcrank (23) from leg (17).
7. Remove two cotter pins (21), wheels (20), and axle (28) from leg (17). Discard cotter pins.
8. Remove nut (19), screw (29), and clip (18) from leg (17).

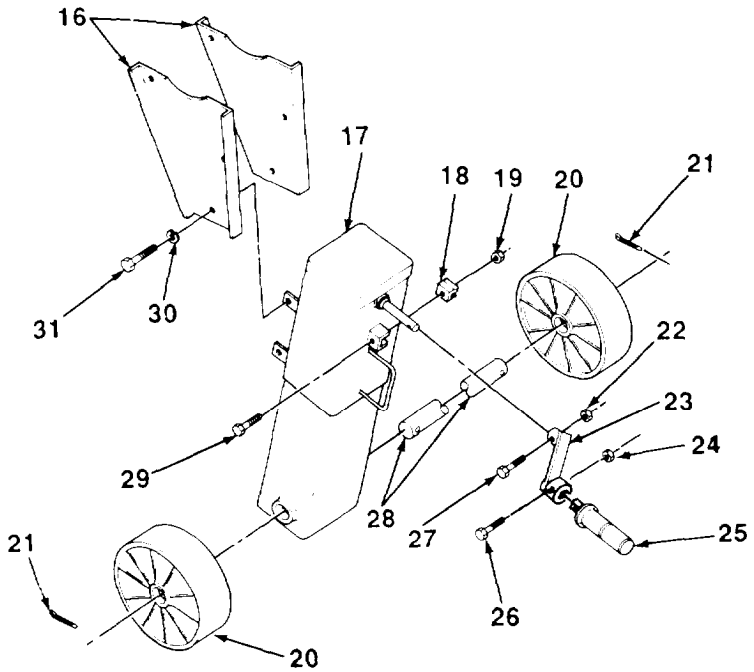

TA507052

4-49. ADJUSTABLE CASTER ASSEMBLY MAINTENANCE (Con't).

c. CLEANING AND INSPECTION

WARNING

Dry cleaning solvent P-D-680 is toxic and flammable, Always wear protective goggles and gloves, and use only in a well-ventilated area. Avoid contact with skin, eyes, and clothes, and DO NOT breathe vapors. DO NOT use near open flame or excessive heat. The solvent's flash point is 100°F-138°F (38°C-59°C). If you become dizzy while using cleaning solvent, immediately get fresh air and medical help. If solvent contacts eyes, immediately wash your eyes and get medical aid.

1. Clean all parts in dry cleaning solvent. Dry thoroughly.
2. Inspect all parts for damage. Replace any damaged parts.

d. ASSEMBLY

1. Install clip (18) on leg (17) with screw (29) and nut (19).
2. Position axle (28) and two wheels (20) on leg (17) and install two new cotter pins (21).
3. Install handcrank (23) to leg (17) with bolt (27) and nut (22).
4. Install handle (25) to handcrank (23) with bolt (26) and new self-locking nut (24).
5. Install retainer (16) to leg (17) with four new lockwashers (30) and bolts (31).

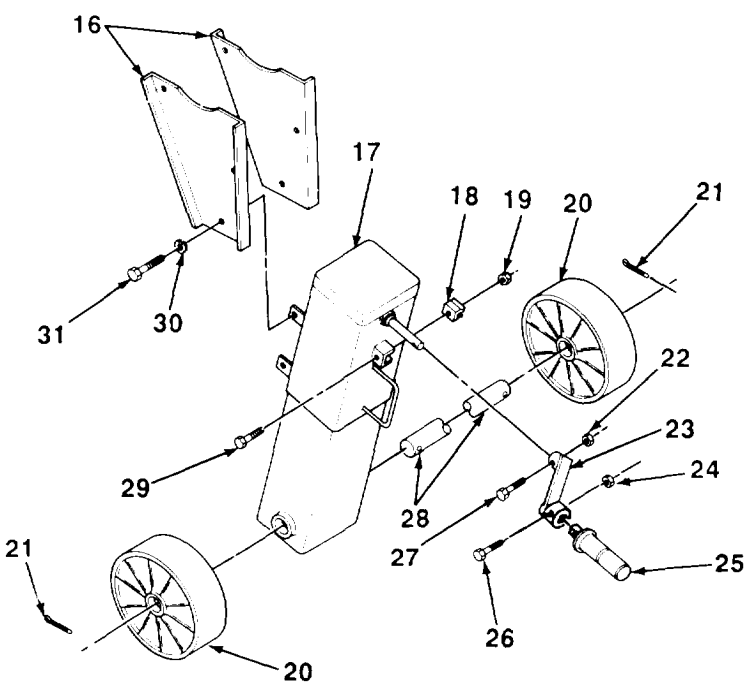

TA507053

4-49. ADJUSTABLE CASTER ASSEMBLY MAINTENANCE (Con't).

6. Position two new lockwashers (11), springs (12), release handle (14), and two pins (13) on spindle and bracket (5).

7. Position leg assembly (15) and retainer (16) on spindle and bracket (5).

8. Install bolt (10), washer (4) and new self-locking nut (3) on retainer (16) and spindle and bracket (5).

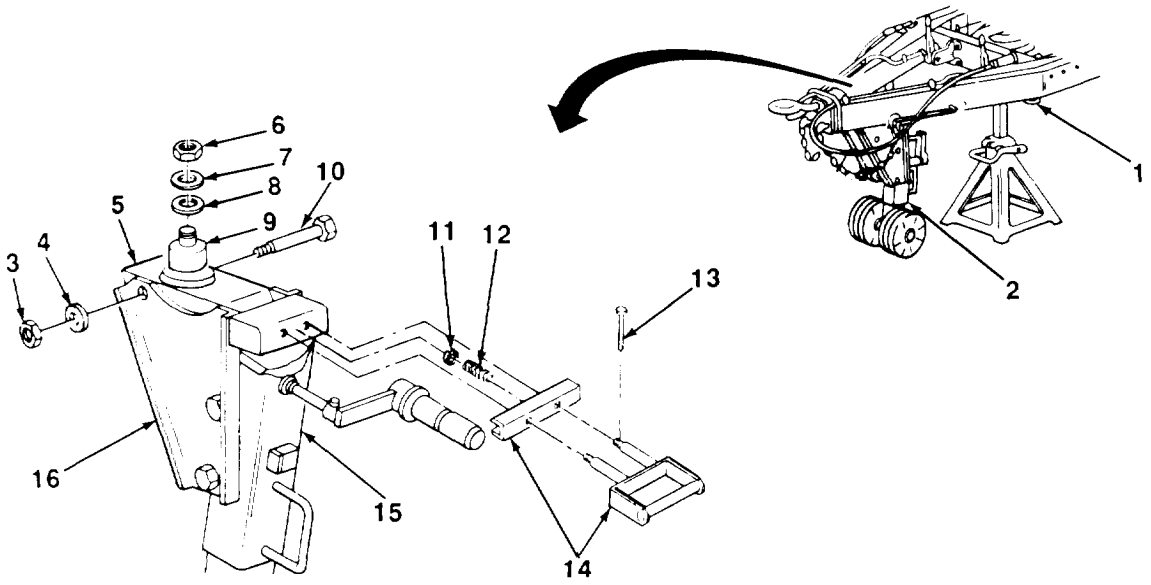

e. INSTALLATION

NOTE

Assistance is required for step 1.

1. Aline adjustable caster assembly (2) with frame (1) and install with washer (8), washer (7), and nut (6) on mounting stud (9).

2. Remove two jackstands.

FOLLOW-ON TASKS:

- Lubricate adjustable caster assembly (Chapter 3, Section I).

TA507054

4-50. SUSPENSION BRACKET REPLACEMENT.

This Task Covers:

a. Removal

b. Installation

Initial Setup:

Equipment Conditions:

- Spring removed (para 4-51).
- Radius rod removed (para 4-53).

Tools/Test Equipment:

- General mechanic's tool kit

Materials/Parts:

- Seven lockwashers

NOTE

There are four suspension brackets. All four are replaced the same way. This procedure describes replacement of one suspension bracket.

a. REMOVAL

Remove seven screws (1), lockwashers (2), nuts (3), and suspension bracket (4) from frame assembly (5). Discard lockwashers.

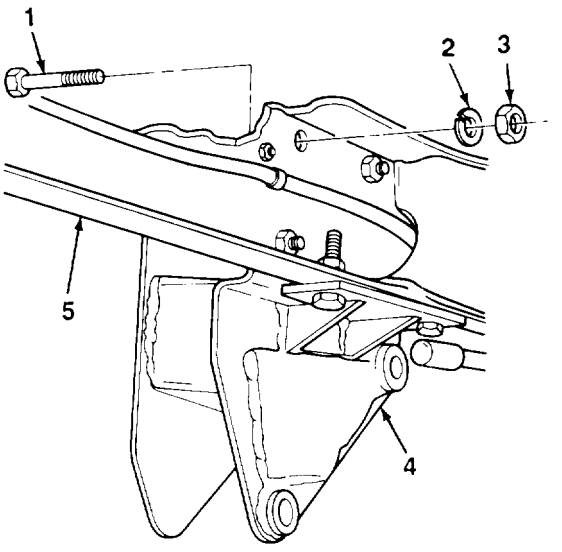

b. INSTALLATION

Position suspension bracket (4) on frame assembly (5) and install seven screws (1), new lockwashers (2), and nuts (3).

FOLLOW-ON TASKS:

- Install spring (para 4-51).
- Install radius rod (para 4-53).

TA507055

Section XI. SPRINGS AND SHOCK ABSORBER MAINTENANCE

Paragraph Title	Page Number
Radius Rod Replacement	4-99
Spring Assembly Replacement	4-95
Shock Absorber Replacement	4-98

4-51. SPRING ASSEMBLY REPLACEMENT.

This Task Covers:

a. Removal

b. Installation

Initial Setup:

Equipment Conditions:

"Axle removed (para 4-29).

Personnel Required: Two

Tools/Test Equipment:

- General mechanic's tool kit

a. REMOVAL

WARNING

Radius rod and bracket will swing freely. Radius rod and bracket must be tied to frame assembly to prevent injury to personnel and damage to equipment.

NOTE

Right and left spring assemblies are removed the same way. This procedure covers one spring assembly.

1. Move radius rod (2) and bracket (3) clear of spring assembly (4) and tie to frame assembly.

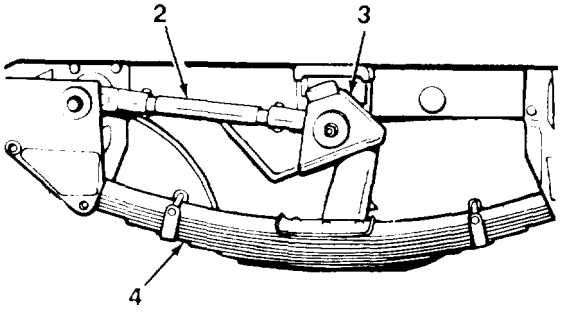

TA507056

4-51. SPRING ASSEMBLY REPLACEMENT (Con't).

NOTE

Two people are required to remove spring assembly from brackets.

2. Remove two bolts (6) and nuts (5) from two brackets (1) and spring assembly (4) at each end of spring assembly.

3. Remove spring assembly (4) from two brackets (1).

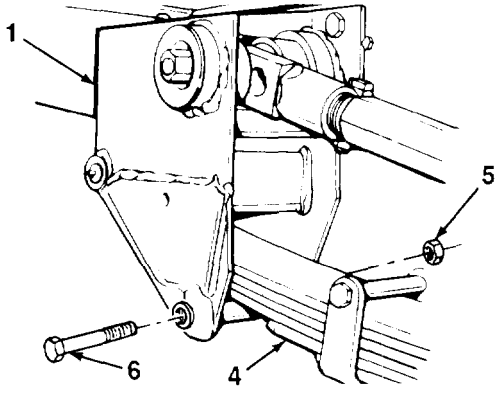

4. Loosen two set screws (7) and tap pin (8) free of bracket (1).

5. Remove two bushings (11) and roller assembly (10) from bracket (1).

6. Remove grease fitting (9) from pin (8).

7. Repeat steps 4 through 6 for remaining bracket (1).

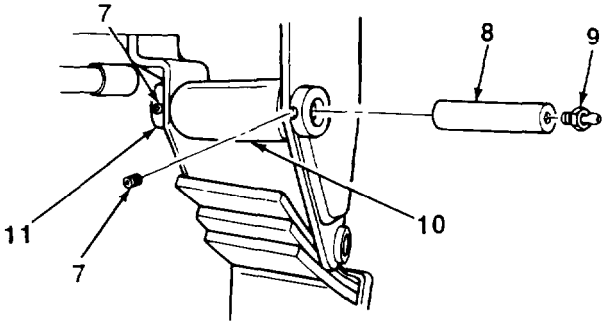

b. INSTALLATION

1. Install grease fitting (9) in pin (8).

2. Position two bushings (11) and roller assembly (10) in bracket (1).

3. Tap pin (8) into position and tighten two set screws (7).

NOTE

Two people are required to install spring assembly.

4. Repeat steps 1 through 3 for remaining bracket (1).

5. Position and support spring assembly (4) in two brackets (1).

6. Install two bolts (6) and nuts (5) in two brackets (1).

TA507057

4-51. SPRING ASSEMBLY REPLACEMENT (Con't).

7 Untie radius rod (2) arid bracket (3) from frame assembly. Swing down into position at top of spring assembly (4).

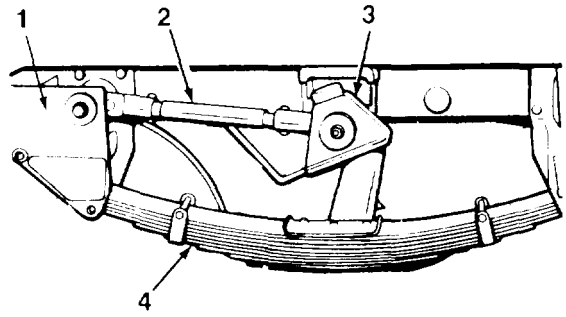

TA507058

FOLLOW-ON TASKS:

- Install axle (para 4-29)

4-52. SHOCK ABSORBER REPLACEMENT.

This Task Covers:

a. Removal

b. Installation

Initial Setup:

Materials/Parts:

- Two lockwashers

Tools/Test Equipment:

- General mechanic's tool kit

NOTE

There are two shock absorbers on the water tank trailers. Replacement of one shock absorber is covered in this task.

a. REMOVAL

1. Remove two nuts (6), lockwashers (5), recessed washers (4), and shock absorber (3) from frame stud (1) and axle stud (7). Discard lockwashers.

2. Remove four rubber bushings (2) from shock absorber (3). Replace rubber bushings if damaged.

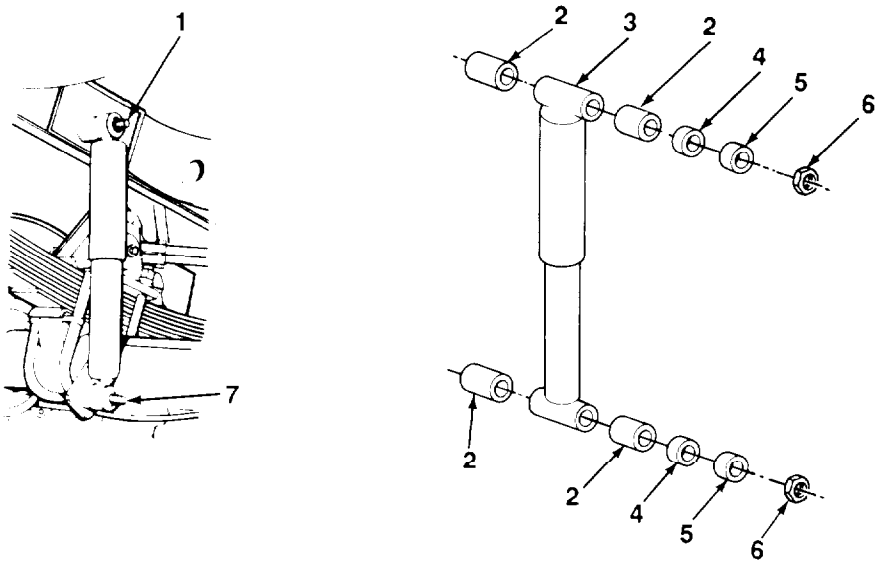

b. INSTALLATION

1. Install four rubber bushings (2) in shock absorber (3). Position shock absorber on frame stud (1) and axle stud (7).

2. Install two recessed washers (4), new lockwashers (5), and nuts (6) on frame stud (1). Ensure that nuts are fully tightened.

TA507059

4-53. RADIUS ROD MAINTENANCE.

This Task Covers:

a. Removal
b. Disassembly
c. Assembly
d. Installation
e. Adjustment

Initial Setup:

Equipment Conditions:

- Spring assembly removed (para 4-51).

Tools/Test Equipment:

- General mechanic's tool kit

Materials/Parts:

- Two locknuts
- Three lockwashers

NOTE

There are two radius rods. This procedure covers replacement for one radius rod.

a. REMOVAL

1. Remove locknut (7), nut (6), and capscrew (1) from radius rod (4). Discard locknut.
2. Remove two shouldered washers (2), bushings (9), sleeve bearing (3), and two flatwashers (8) from bracket (5). Inspect bushings for damage, replace if required.
3. Remove radius rod (4) from bracket (5)

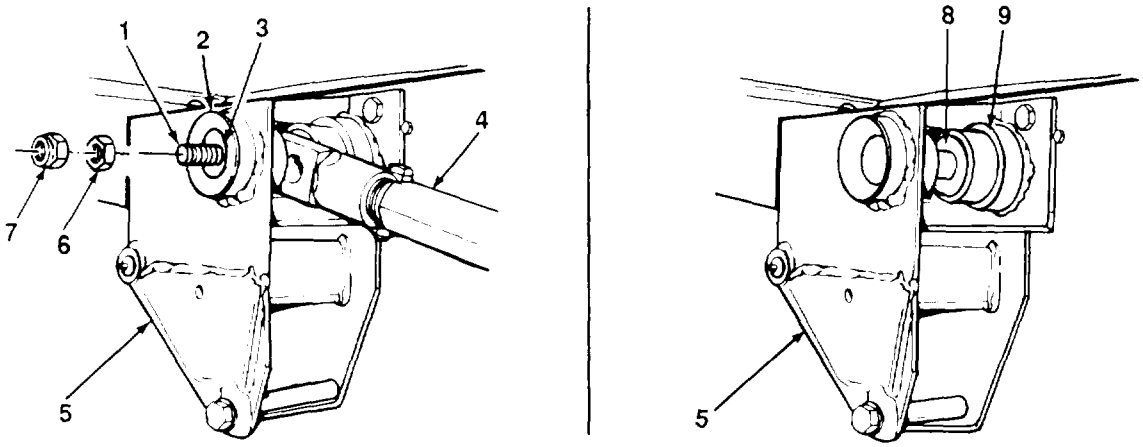

TA507060

4-53. RADIUS ROD MAINTENANCE (Con't).

4. Remove screw (10), lockwasher (11), flatwasher (12), and bumper (13) from bracket (20). Discard lockwasher.

NOTE

Remove screw (14) only if replacement of screw is required.

5. Loosen screw (14) on radius rod (4).

6. Remove locknut (15), nut (16), and capscrew (22) from bracket (20). Discard locknut.

7. Remove two shouldered washers (17) and bushings (18) from bracket (20).

NOTE

Measure and record distance (A) between connectors before removing radius rod.

8. Remove sleeve bearing (21), two flatwashers (19), and radius rod (4) from bracket (20).

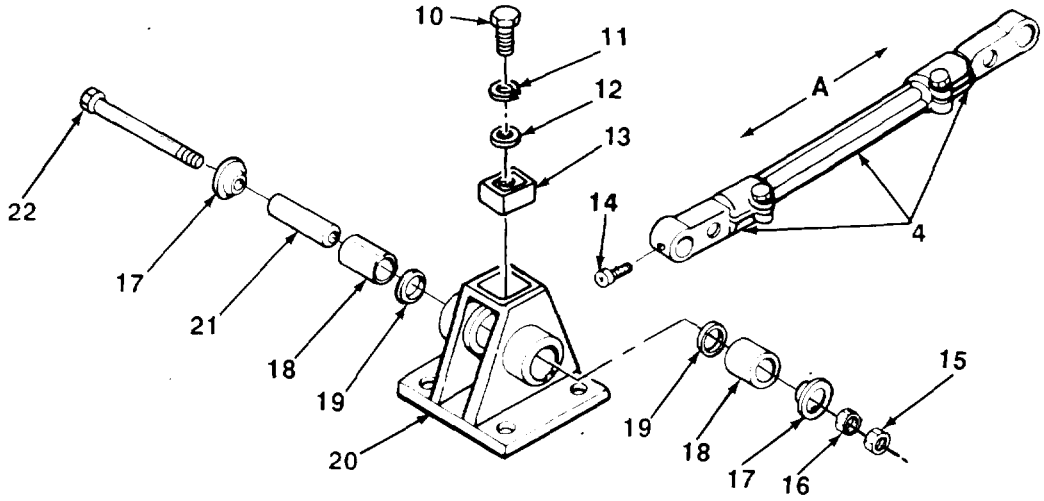

b. DISASSEMBLY

Remove two screws (24), nuts (27), lockwashers (26), and connectors (23) from rod (25). Discard lockwashers.

c. ASSEMBLY

Install two connectors (23) on rod (25) with two screws (24), new lockwashers (26), and nuts (27).

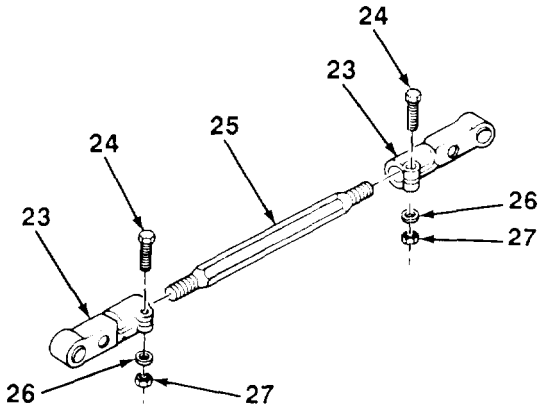

TA507061

4-53. RADIUS ROD MAINTENANCE (Con't).

d. INSTALLATION

1. Aline radius rod (4) and two flatwashers (19) in bracket (20) and install sleeve bearing (21).
2. Install two bushings (18) and shouldered washers (17) in bracket (20).
3. Install cap screw (22), nut (16), and new locknut (15) in bracket (20).
4. Tighten screw (14) on radius rod (4).
5. Install bumper (13), flatwasher (12), new lockwasher (11), and screw (10) in bracket (20).
6. Install two bushings (9) and flatwashers (8) in bracket (5).
7. Install radius rod (4) and sleeve bearing (3) in bracket (5).
8. Install two shouldered washers (2), capscrew (1), nut (6), and new locknut (7).

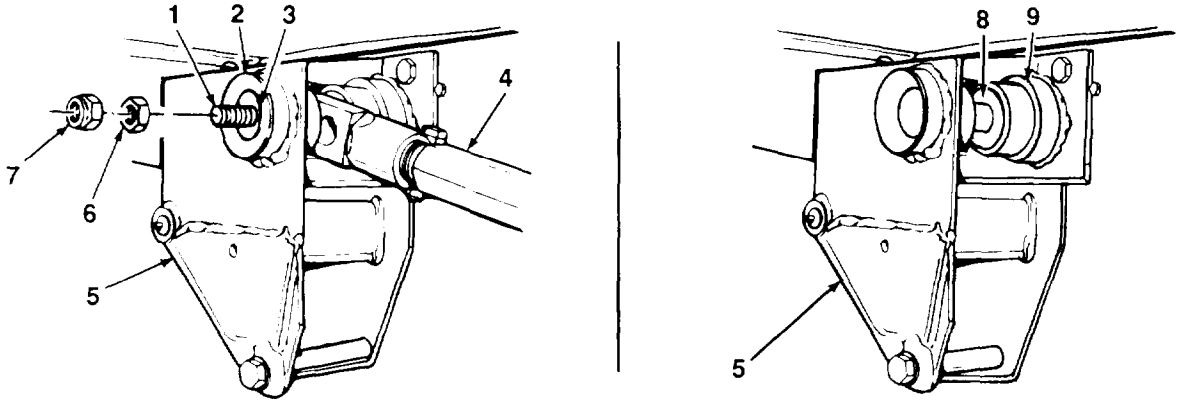

e. ADJUSTMENT]

NOTE

Ensure that distance between connectors is the same as that recorded when radius rod was removed.

1. Measure distance between connectors (23). If measurement is the same as measurement recorded during removal of radius rod, adjustment is correct. If adjustment is not correct, go to step 2.
2. Loosen screws (24) and turn rod (25) clockwise to shorten and counterclockwise to lengthen distance between connectors (23).
3. When measurement between connectors (23) is same as that recorded during removal of radius rod, tighten screws (24).

FOLLOW-ON TASKS:

- Install spring assembly (para 4-51).

TA507062

Section XII. BODY MAINTENANCE

Paragraph Title	Page Number
Manhole Cover Maintenance (Fiberglass Tank)	4-102
Manhole Cover Maintenance (Stainless Steel Tank)	4-104
Piping and Faucet Replacement	4-114
Rear Faucet Maintenance	4-116
Water Tank Body Maintenance (Fiberglass)	4-106
Water Tank Body Maintenance (Stainless Steel)	4-110

4-54. MANHOLE COVER MAINTENANCE (FIBERGLASS TANK).

This Task Covers:

a. Removal
b. Disassembly
c. Assembly
d. Installation

Initial Setup:

Materials/Parts:

- Three cotter pins
- Twelve lockwashers

Tools/Test Equipment:

- General mechanic's tool kit

a. REMOVAL

1. Turn wingnut (7) counterclockwise to release bracket (9). Swing eyebolt (10) away from bracket.
2. Remove four screws (2), lockwashers (1), and hinge assembly (32) from tank assembly. Discard lockwashers.
3. Remove four screws (11), lockwashers 12), and hinge plate (13) and eyebolt (10) from tank assembly. Discard lockwashers.

b. DISASSEMBLY

1. Remove cotter pin (15), straight pin (14), and eyebolt (10) from hinge plate (13). Discard cotter pin.
2. Remove nut (8) and wingnut (7) from eyebolt (10).
3. Remove cotter pin (3), straight pin (31), and hinge assembly (32) from bracket (9). Discard cotter pin.
4. Remove cotter pin (4), flatwashers (5 and 16), spacers (6 and 17), straight pin (18), and bracket (9) from pivot assembly (28). Discard cotter pin.
5. Remove four screws (30), lockwashers (29), and pivot assembly (28) from cover (27). Discard lockwashers.
6. Remove nut (21) and adapter (20) from cover (27). Remove valve (19) from adapter.
7. Remove seal (25), inner cover (24), insulation (23), bushing (22), and plate (26) from cover (27).

4-54. MANHOLE COVER MAINTENANCE (FIBERGLASS TANK) (Con't).

c. ASSEMBLY

1. Install plate (26), bushing (22), insulation (23), inner cover (24), and seal (25) in cover (27).

2. Install adapter (20) and nut (21) on cover (27). Install valve (19) in adapter.

3. Position pivot assembly (28) on cover (27) and install four screws (30) and new lockwashers (29).

4. Install bracket (9), spacers (6 and 17), flatwashers (5 and 16), straight pin (18), and new cotter pin (4) in pivot assembly (28).

5. Install hinge assembly (32), straight pin (31), and new cotter pin (3) on bracket (9).

6. Install eyebolt (10), straight pin (14), and new cotter pin (15) in hinge plate (13).

7. Install wingnut (7) and nut (8) on eyebolt (10).

d. INSTALLATION

1. Position hinge plate (13) on tank assembly and install four screws (11) and new lockwashers (12).

2. Position hinge assembly (32) on tank assembly and install four screws (2) and new lockwashers (1).

3. Swing eyebolt (10) into position and tighten wingnut (7) by turning clockwise. Tighten nut (8).

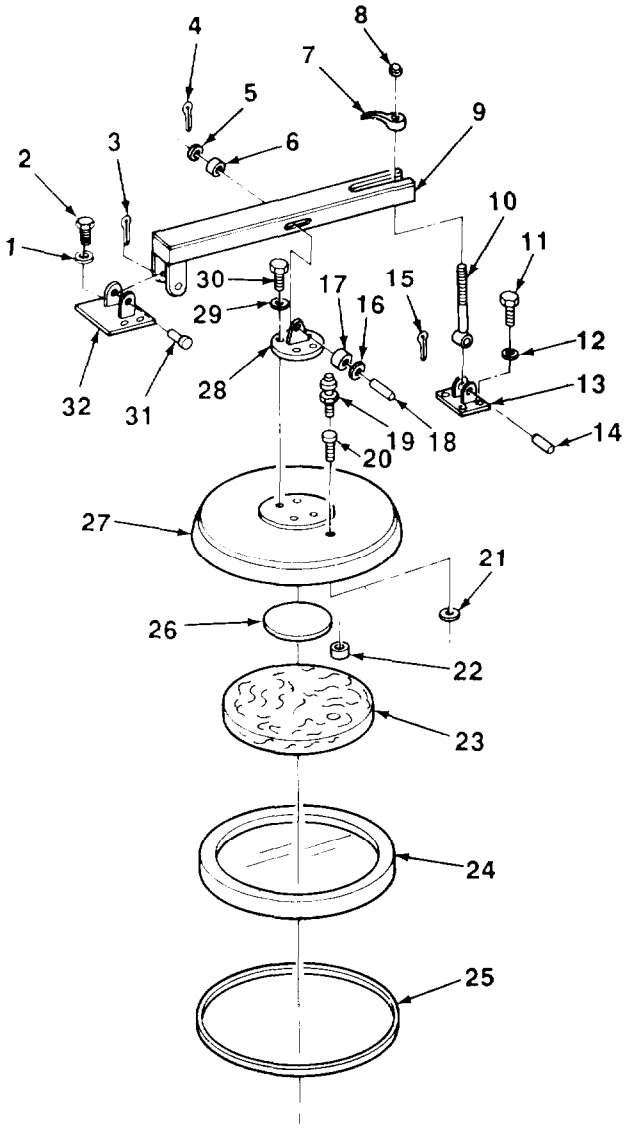

TA507063

4-55. MANHOLE COVER MAINTENANCE (STAINLESS STEEL TANK).

This Task Covers:

a. Removal
b. Disassembly
c. Assembly
d. Installation

Initial Setup:

Materials/Parts:

- One cotter pin
- Five self-locking nuts
- Eight lockwashers

Tools/Test Equipment:

- General mechanic's tool kit

a. REMOVAL

1. Lift and remove two latches (13) from holes in bracket (4).
2. Remove four screws (22), lockwashers (21), spacers (18), and hinge assembly (19) from tank assembly (17). Discard lockwashers.
3. Remove four screws (10), lockwashers (11), spacers (15), and hinge plate (12) from tank assembly (17). Discard lockwashers.

b. DISASSEMBLY

1. Remove four screws (14), self-locking nuts (16), and two latches (13) from hinge plate (12). Discard self-locking nuts.
2. Remove cotter pin (6), straight pin (5), and bracket (4) from manhole cover (9). Discard cotter pin
3. Remove self-locking nut (1), washer (2), spring (3), spacer (20), hook bolt (7), and hinge assembly (19) from bracket (4). Discard self-locking nut.
4. Remove vacuum valve (8) from manhole cover (9).
5. Remove eighteen screws (25), flatwashers (24), and gasket (23) from manhole cover (9). Replace gasket if damaged.

c. ASSEMBLY

1. Position gasket (23) on manhole cover (9) and install eighteen flatwashers (24) and screws (25).

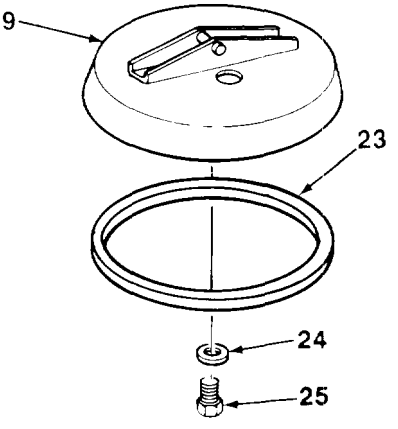

TA507064

4-55. MANHOLE COVER MAINTENANCE (STAINLESS STEEL TANK) (Con't).

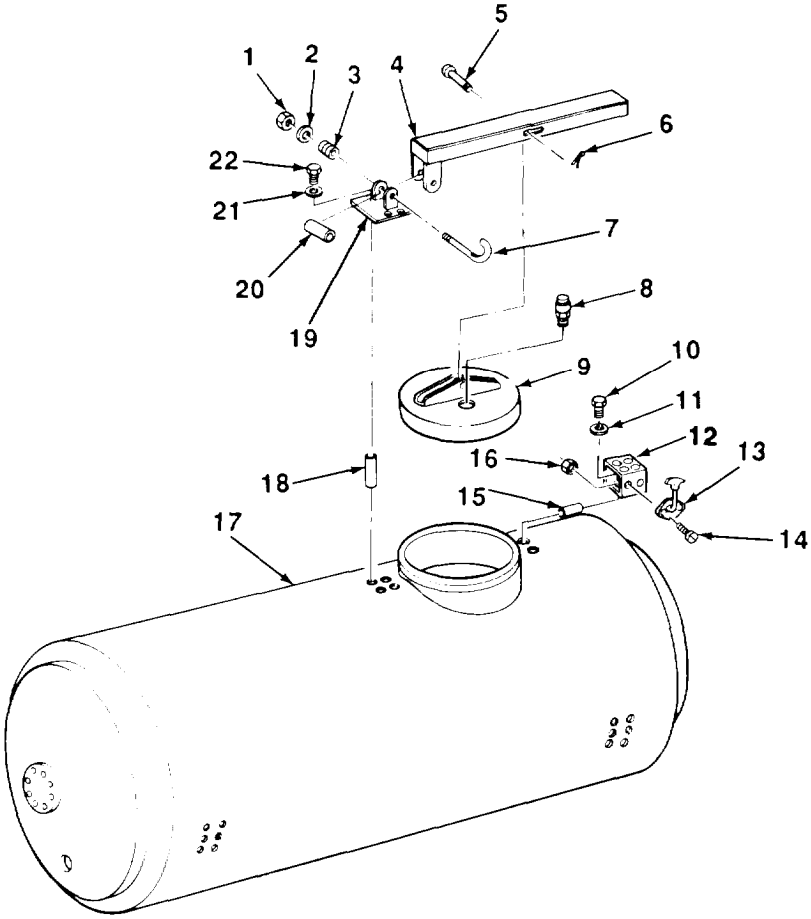

2. Install vacuum valve (8) on manhole cover (9).
3. Position hinge assembly (19) on bracket (4) and install spacer (20), hook bolt (7), spring (3), washer (2), and new self-locking nut (1) in bracket.
4. Position bracket (4) on manhole cover (9) and install straight pin (5) and new cotter pin (6).
5. Position two latches (13) on hinge plate (12) and install four screws (14) and new self-locking nuts (16).

d. INSTALLATION

1. Install four spacers (15) in tank assembly (17).
2. Position hinge plate (12) on tank assembly (17) and install four new lockwashers (11) and screws (10).
3. Position four spacers (18) in tank assembly (17).
4. Position hinge assembly (19) on tank assembly (17) and install four new lockwashers (21) and screws (22).
5. Lift and extend two latches (13) then release into holes in bracket (4).

TA507065

4-56. WATER TANK BODY MAINTENANCE (FIBERGLASS).

This Task Covers:

a. Removal
b. Cleaning and Refinishing Interior
c. Installation

Initial Setup:

Equipment Conditions:

- Piping and faucets removed (para 4-58)

Tools/Test Equipment:

- General mechanic's tool kit
- Abrasive mask
- Air filter
- Apron
- Blower
- Canvas sleeves
- Fresh air mask
- Overhead hoist and sling, 10 ton
- Rubber gloves
- Safety rope
- Safety shoes

Materials/Parts:

- Adhesive (Item 1, Appendix E)
- Scrub brush (Item 4, Appendix E)
- Cleaning compound (Item 5, Appendix E)
- Abrasive cloth (Item 6, Appendix E)
- Rags (Item 18, Appendix E)
- Sandblast sand (Item 20, Appendix E)
- Soap (Item 22, Appendix E)
- Bleach (Item 23, Appendix E)
- Lockwire (Item 29, Appendix E)
- One gasket set repair kit
- Four mounts

Personnel Required: Two

References:

- FM 21-10

a. REMOVAL

1. Remove nut (12), washer (13), and gasket (14) from spacer sleeve (11). Discard washer and gasket.

WARNING

- **NEVER WORK ALONE INSIDE tank assembly. A safety rope must be secured around chest and under arms of person entering tank assembly; opposite end of safety rope must be held by a person stationed at the manhole opening. This will allow for quick removal of a person in tank assembly in the event of accident or personal injury.**
- **Personnel must wear rubber gloves, canvas sleeves, safety shoes, rubberized apron or jacket, and protective mask while performing abrasive cleaning operation. A portable air filter also must be used. Failure to follow this warning may result In injury to personnel.**
- **An adequate air evacuation system must be used to quickly exhaust fumes from inside tank assembly. Failure to follow this warning may result in injury to personnel.**
- **Nozzle pressure must not exceed 35 psi (241 kPa); do not hold spray nozzle on any one area for extended periods of time. Failure to do so may result in tank rupture or damage and possible injury to personnel.**

2. Remove gasket (10) and spacer sleeve (11) from inside water tank body (1). Discard gasket.

3. Remove drain plug (20), nut (19), washer (18), and gasket (17) from sleeve (15). Discard washer and gasket.

4-56. WATER TANK BODY MAINTENANCE (FIBERGLASS) (Con't).

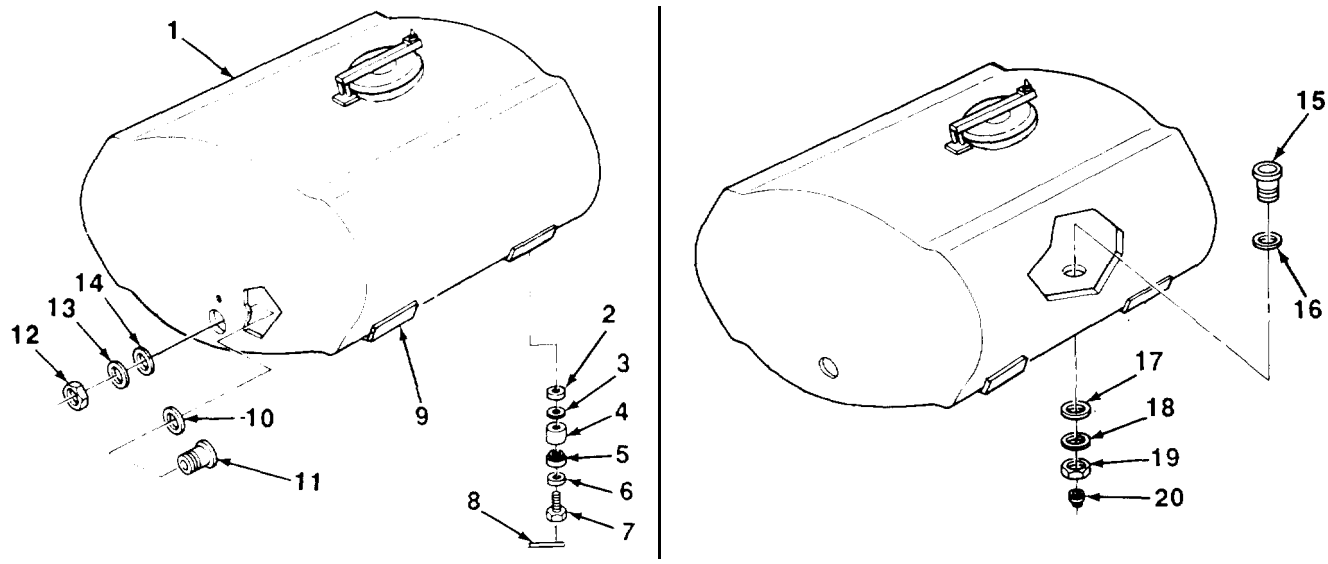

4. Remove gasket (16) and sleeve (15) from water tank body (1). Discard gasket.
5. Install slings on water tank body (1) and connect to suitable lifting device.
6. Cut and remove lockwire (8) from four capscrews (7). Discard lockwire.

NOTE

Washers (6) are used on MI 49 only.

7. Remove four cap screws (7), washers (6), mounts (5), spacers (4), washers (3), and spacers (2) from brackets , (9). Discard mounts.

WARNING

All personnel must stand clear of hoist when raising or lowering water tank body. Failure to follow this warning may result in serious Injury or death to personnel.

8. Carefully remove water tank body (1) from frame.

b. CLEANING AND REFINISHING INTERIOR

NOTE

Refer to FM 21-10 for further Information on cleaning and disinfecting procedures.

1. Open manhole cover on water tank body.
2. Remove drain plug from water tank body.

TA507066

4-56. WATER TANK BODY MAINTENANCE (FIBERGLASS) (Con't).

WARNING

- **NEVER WORK ALONE INSIDE tank assembly. A safety rope must be secured around chest and under arms of person entering tank assembly; opposite end of safety rope must be held by a person stationed at the manhole opening. This will allow for quick removal of a person in tank assembly in the event of accident or personal Injury.**
- **Personnel must wear rubber gloves, canvas sleeves, safety shoes, rubberized apron or jacket, and protective mask while performing abrasive cleaning operation. A portable air filter also must be used. Failure to follow this warning may result in injury to personnel.**
- **An adequate air evacuation system must be used to quickly exhaust fumes from inside tank assembly. Failure to follow this warning may result in injury to personnel.**
- **Nozzle pressure must not exceed 35 psi (241 kPa); do not hold spray nozzle on any one area for extended periods of time. Failure to do so may result in-tank rupture or damage and possible injury to personnel.**

3. Clean ail interior surfaces including baffle plates, corners, seams, drains, and outlets, with sandblast sand to remove all traces of corrosion and old coatings.
4. Remove dust, dirt, and blasting material from inside water tank body with vacuum cleaner or other suitable equipment.
5. Scrub interior with brush and water and scouring powder solution.
6. Rinse interior repeatedly with warm water, approximately 120 'F (49 "C), to remove soapy solution.
7. Install drain plug in water tank body.
8. Fill water tank body with water and add 4 gal. (151) of liquid laundry bleach. Let stand eight hours to complete sanitation process.
9. Remove drain plug from water tank body.
10. Rinse interior repeatedly with warm water, approximately 120°F (49°C), to remove bleach solution.
11. Dry interior completely with forced air heater.
12. Install drain plug in water tank body.
13. Close and secure manhole cover on water tank body.

c. INSTALLATION

WARNING

All personnel must stand clear of hoist when raising or lowering water tank body. Failure to follow this warning may result in serious Injury or death to personnel.

1. Position water tank body (1) on frame assembly.

4-56. WATER TANK BODY MAINTENANCE (FIBERGLASS) (Con't).

NOTE

Washers (6) are used on M149 only.

2. Install four spacers (2), washers (3), spacers (4), mounts (5), washers (6), and capscrews (7).

3. Install new lockwire (8) on four capscrews (7).

4. Remove lifting device and slings from water tank body (1).

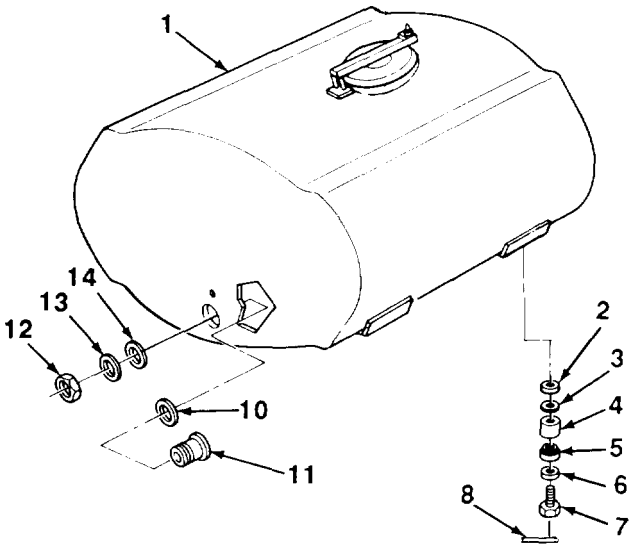

5. Apply adhesive to hole that mates with gasket (16). Install new gasket and sleeve (15) on water tank body (1).

6. Install new gasket (17), new washer (18), nut (19), and drain plug (20) on sleeve (15).

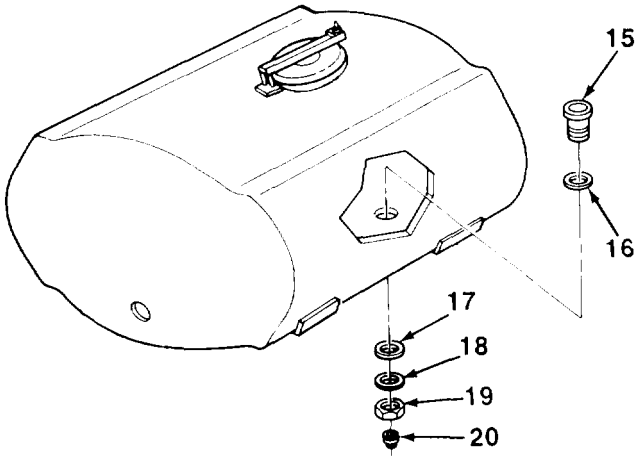

7. Install new gasket (10) and spacer sleeve (11) in water tank body (1).

8. Install nut (12), new washer (13), and new gasket (14) on spacer sleeve (11).

TA507067

4-57. WATER TANK BODY MAINTENANCE (STAINLESS STEEL).

This Task Covers:

a. Removal
b. Cleaning and Refinishing Interior
c. Installation

Initial Setup;

Equipment Conditions:

- Piping and faucets removed (para 4-58).
- Rear faucet removed (para 4-59).

Tools/Test Equipment:

- General mechanic's tool kit
- Abrasive mask
- Air filter
- Apron
- Blower
- Canvas sleeves
- Fresh air mask
- Overhead hoist and sling, 10 ton
- Rubber gloves
- Safety rope
- Safety shoes

Materials/Parts:

- Cleaning compound (Item 5, Appendix E)
- Dry cleaning solvent (Item 9, Appendix E)
- Rags (Item 18, Appendix E)
- Soap (item 22, Appendix E)
- Bleach (Item 23, Appendix E)
- Lockwire (Item 29, Appendix E)
- Four packings

Personnel Required: Two

References:

- FM 21-10

a. REMOVAL

WARNING

All personnel must stand clear of hoist when raising or lowering water tank body. Failure to follow this warning may result in serious injury or death to personnel.

1. Install sling on water tank body (3) and connect to suitable lifting device.

NOTE

There are four mounts. Two mounts are located on each side of tank body.

2. Cut and remove lockwire (1) from four capscrews (2). Discard lockwire.

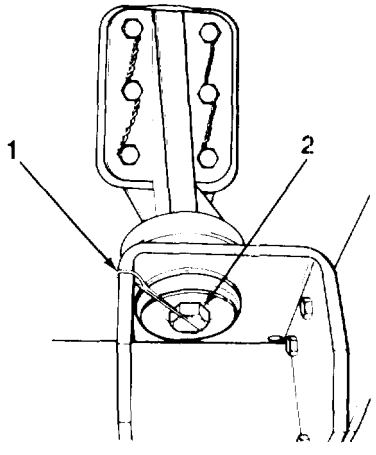

TA507068

4-57. WATER TANK BODY MAINTENANCE (STAINLESS STEEL) (Con't).

3. Remove plug (4) from water tank body (3).
4. Remove four capscrews (2), packings (5), mounts (6), and spacer rings (7) from brackets (8). Discard packings.
5. Remove water tank body (3) from frame assembly (9).

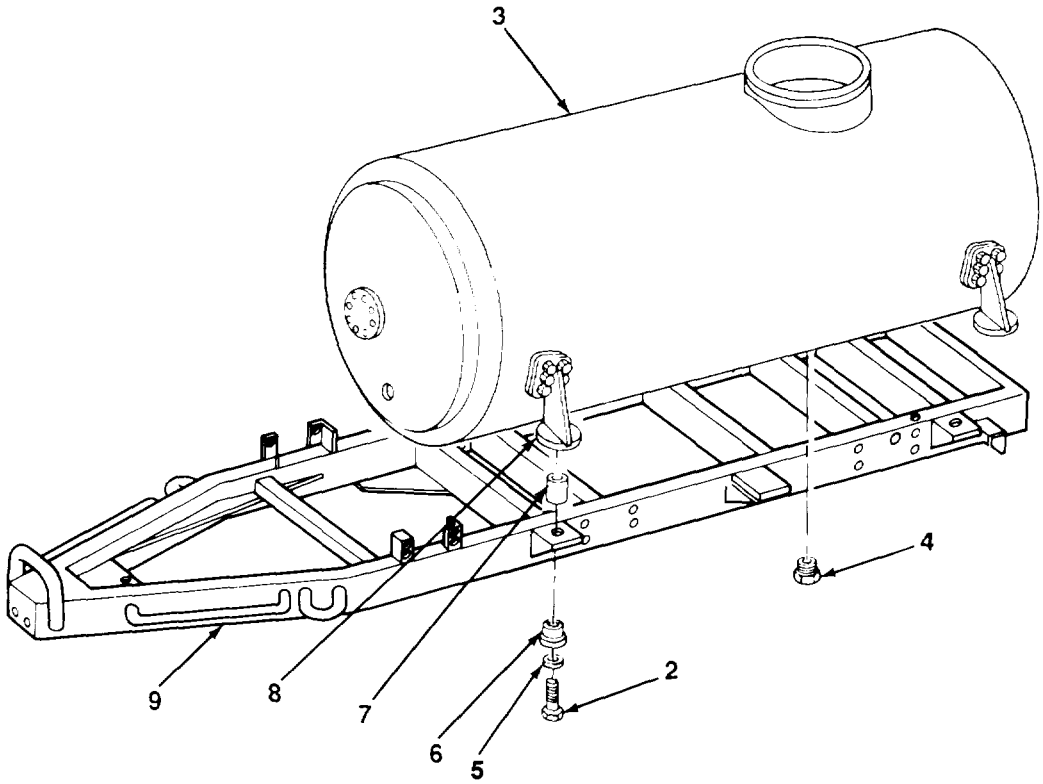

b. CLEANING AND REFINISHING INTERIOR

NOTE

Refer to FM 21-10 for further information on cleaning and disinfecting procedures.

1. Open manhole cover on water tank body.
2. Remove drain plug from water tank body.

TA507069

4-57. WATER TANK BODY MAINTENANCE (STAINLESS STEEL) (Con't).

WARNING

- **NEVER WORK ALONE INSIDE tank assembly. A safety rope must be secured around chest and under arms of person entering water tank. Opposite end of safety rope must be held by a person stationed at the manhole opening. This will allow for quick removal of a person from water tank in the event of accident or personal Injury.**
- **Personnel must wear rubber gloves, canvas sleeves, safety shoes, rubberized apron or jacket, and protective mask while performing abrasive cleaning operation. A portable air filter must also be used. Failure to follow this warning may result in injury to personnel.**
- **An adequate air evacuation system must be used to quickly exhaust fumes from inside tank assembly. Failure to follow this warning may result in injury to personnel.**
- **Nozzle pressure must not exceed 35 psi (241 kPa); do not hold spray nozzle on any one area for extended periods of time. Failure to do so may result in tank rupture or damage and possible Injury to personnel.**

3. Clean all interior surfaces, including baffle plates, corners, seams, drains, and outlets, with sandblast sand to remove all traces of corrosion and old coatings.
4. Insert blasting nozzle and hose a long distance into piping to remove all corrosion and scale.
5. Remove dust, dirt, and blasting material from inside water tank body with vacuum cleaner or other suitable equipment.
6. Scrub interior with brush and water and scouring powder solution.
7. Rinse interior repeatedly with warm water, approximately 120°'F (49°'C), to remove soapy solution.
8. Install drain plug in water tank body.

c. INSTALLATION

1. Using suitable lifting device, position water tank body (3) on frame assembly (9).
2. Install four capscrews (2), new packings (5), mounts (6), and spacer rings (7) on brackets (8) and frame assembly.
3. Install plug (4) in water tank body (3).
4. Install new lockwire (1) on four capscrews (2).
5. Remove lifting device from water tank body (3).

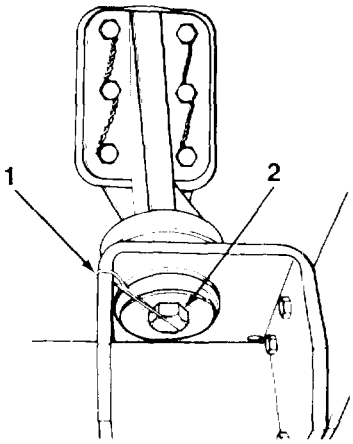

TA507070

4-57. WATER TANK BODY MAINTENANCE (STAINLESS STEEL) (Con't).

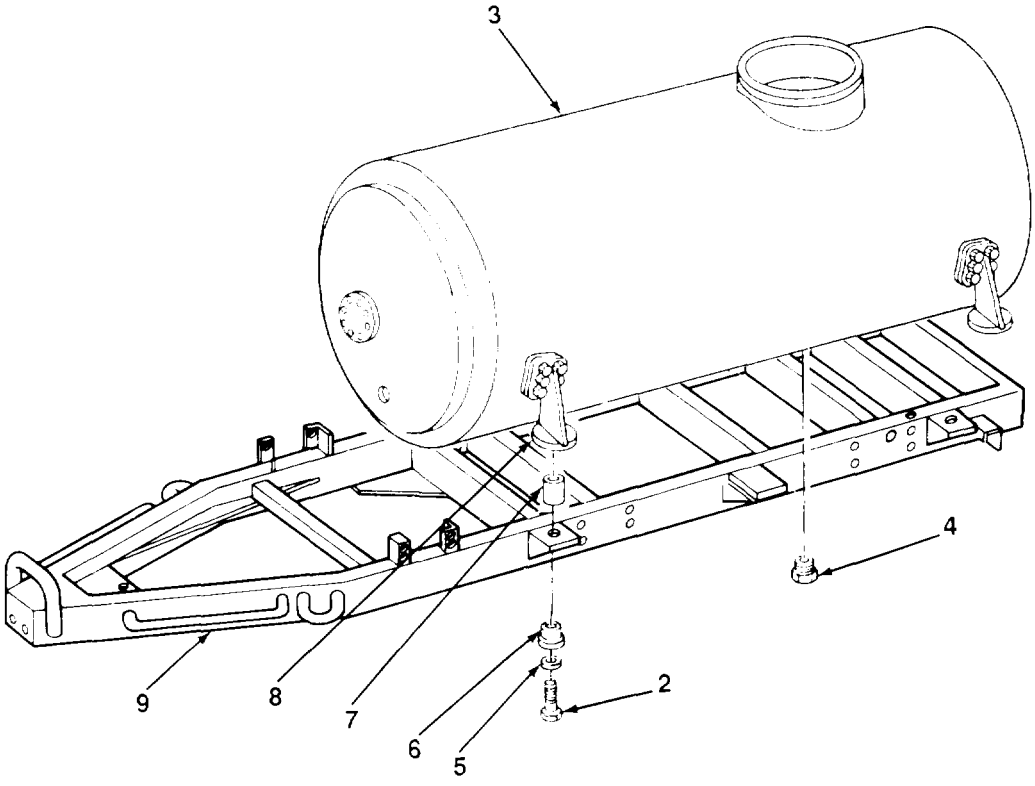

FOLLOW-ON TASKS:

- Install piping and faucets (para 4-58).
- Install rear faucet (para 4-59).

TA507071

4-58. PIPING AND FAUCET REPLACEMENT.

This Task Covers:

a. Removal
b. Cleaning and Inspection
c. Installation

Initial Setup:

Equipment Conditions:

- Manifold valve in OFF position.

Tools/Test Equipment:

- General mechanic's tool kit

Materials/Parts:

- Eight lockwashers

a. REMOVAL

WARNING

If removing manifold valve, drain watertank of contents. Failure to follow this warning may cause serious injury to personnel or damage to equipment.

1. Remove four hose clamps (19) and two hoses (11) from straight adapters (10, 12, 14, and 15).
2. Remove straight adapters (12 and 14) from manifold valve (13).
3. Remove manifold valve (13) from water tank.
4. Remove eight nuts (7), washers (8), lockwashers (9), and four U-bolts (18) from faucet boxes. Discard lockwashers.
5. Remove four faucets (1) and attached parts from faucet boxes.
6. Remove two faucets (1) from two pipe tees (6) and two faucets (1) from two elbows (17).
7. Remove two elbows (17) from straight adapter (16) and nipple (21).
8. Remove straight adapters (10 and 15) from two pipe tees (6).
9. Remove pipe tee (6), nipples (20 and 21), and pipe tee (5) from coupling (4).
10. Remove plug (2) and washer (3) from coupling (4).
11. Remove straight adapter (16) from pipe tee (6).

b. CLEANING AND inspection

1. Clean all parts and inspect for cracks, damaged threads, and evidence of leakage.
2. Replace any damaged parts.

c. INSTALLATION

1. Install straight adapters (15 and 16) in pipe tee (6).

4-58. PIPING AND FAUCET REPLACEMENT (Con't).

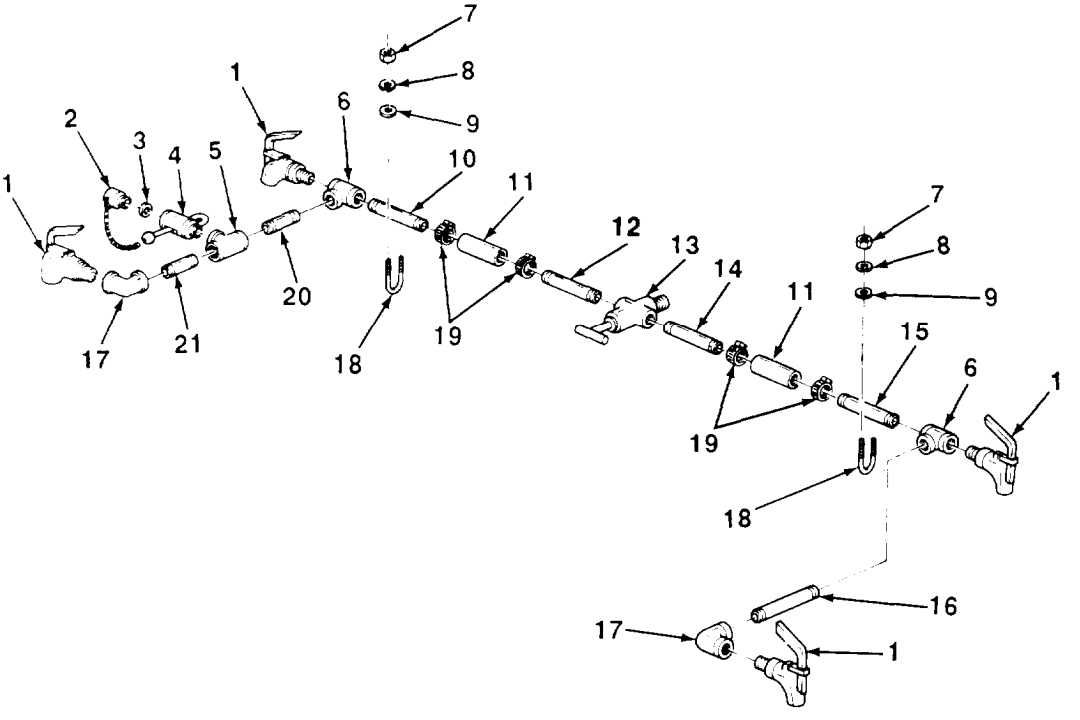

2. Install nipples (20 and 21) in pipe tee (5)
3. Install washer (3), plug (2), and coupling (4) in pipe tee (5).
4. Install nipple (20) and straight adapter (10) in pipe tee (6).
5. Install elbows (17) on straight adapter (16) and nipple (21).
6. Install four faucets (1) in two pipe tees (6) and two elbows (17).
7. Position faucets (1) and attached hardware in faucet boxes and install four U-bolts (18), eight new lockwashers (9), washers (8), and nuts (7).
8. Install manifold valve (13) in water tank. Connect straight adapters (12 and 14) to manifold valve.
9. Position two hoses (11) and four hose clamps (19) on straight adapters (10, 12, 14, and 15). Tighten hose clamp.

TA507072

4-59. REAR FAUCET MAINTENANCE.

This Task Covers:

Removal
Disassembly
c. Assembly
d. Installation

Initial Setup:

Equipment Conditions:

- Water tank drained (para 2-13).

Tools/Test Equipment:

- General mechanic's tool kit

Materials/Parts:

- Two preformed packings

a. REMOVAL

1. Open faucet (1) and ensure that water tank is drained.
2. Remove faucet (1) by turning counterclockwise and pulling out straight.

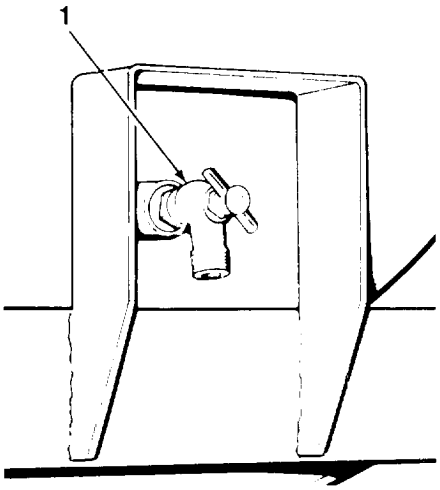

b. DISASSEMBLY

1. Remove handle (2) and packing nut (3) with stem (7) from body (10) by turning packing nut counterclockwise.
2. Remove pin (12) from handle (2) and separate stem (7) from handle.
3. Remove packing nut (3), spacer ring (4), preformed packing (5), two washers (6), and pin (11) from stem (7). Discard preformed packing.
4. Remove valve seat (9) and preformed packing (8) from stem (7). Discard preformed packing.

TA507073

4-59. REAR FAUCET MAINTENANCE (Con't).

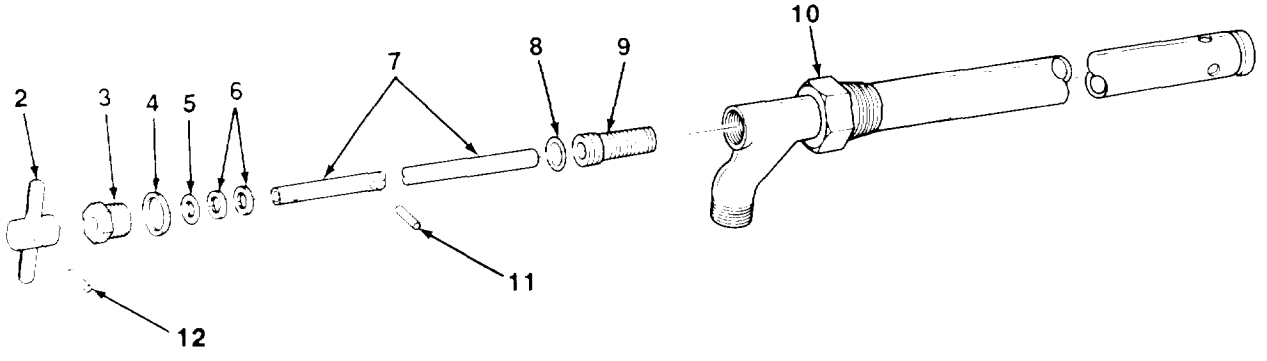

c. ASSEMBLY

1. Install new preformed packing (8) and valve seat (9) on stem (7).
2. Install two washers (6), new preformed packing (5), spacer ring (4), packing nut (3), and pin (11) in stem (7).
3. Install stem (7) in handle (2). Install pin (12).
4. Slide stem (7) into body (10) and tighten packing nut (3).

d. INSTALLATION

1. Install faucet (1) by inserting in hole in water tank and turning clockwise.
2. Ensure that faucet (1) is closed.

TA507074

Section XIII. ACCESSORY ITEMS MAINTENANCE

Paragraph Title	Page Number
Data Plates Replacement,	4-120
Reflectors Replacement	4-118

4-60. REFLECTORS REPLACEMENT.

This Task Covers:

a. Removal

b. Installation

Initial Setup:

Materials/Parts:

- Two lockwashers

Tools/Test Equipment:

- General mechanic's tool kit

a. REMOVAL

NOTE

There are eight reflectors, two on faucet box covers, four on frame and fenders, and two on fender supports. All reflectors are removed in the same manner.

1. Remove two nuts (1), lockwashers (2), screws (5), and reflector (4) from faucet box cover (3). Discard lockwashers.
2. Remove two screws (8) and reflector (9) from frame and fender.
3. Remove two screws (6) and reflector (7) from fender support.

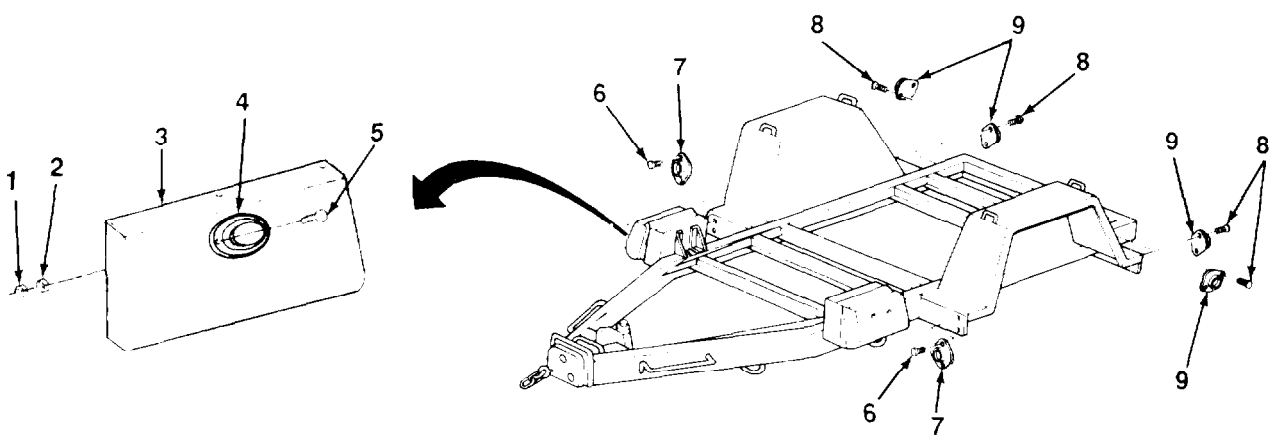

TA507075

4-60. REFLECTORS REPLACEMENT (Con't).

b. INSTALLATION

NOTE

There are eight reflectors, two on faucet box covers, four on frame and fenders, and two on fender supports. All reflectors are installed in the same manner.

1. Install reflector (7) on fender support with two screws (6).
2. Install reflector (9) on frame and fender with two screws (8).
3. Install reflector (4) on faucet box cover (3) with two screws (5), new lockwashers (2), and nuts (1).

4-61. DATA PLATES AND DECAL REPLACEMENT.

This Task Covers:

a. Removal

b. Installation

Initial Setup:

Tools/Test Equipment:

- General mechanic's tool kit

NOTE

All data plates are replaced the same way except quantity of screws may vary. Refer to para 1-8 for location of data plates and decal.

a. REMOVAL

1. Remove six screws (1) and data plate (2) from frame assembly.
2. Remove four screws (4) and data plate (3) from frame assembly.
3. Remove four screws (5) and data plate (6) from water tank assembly.
4. Remove four screws (8) and instruction plate (9) from manhole cover.
5. Remove warning decal (7) from water tank assembly.

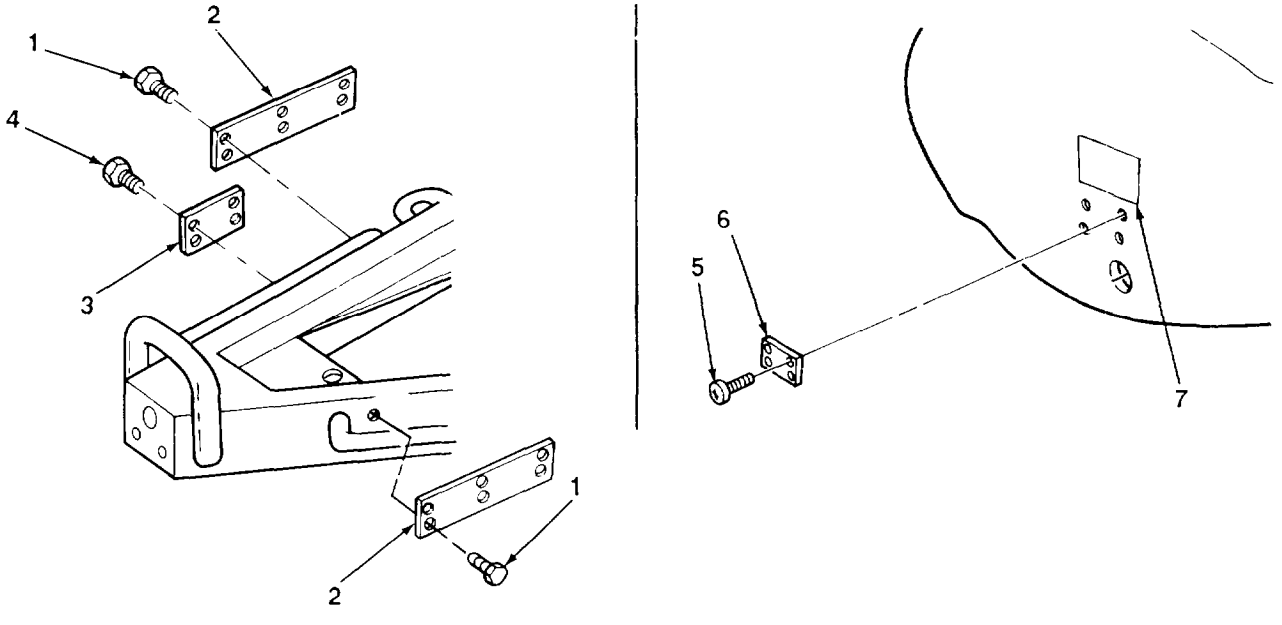

TA507076

4-61. DATA PLATES AND DECAL REPLACEMENT (CON'T).

b. INSTALLATION

NOTE

When replacing warning decal, ensure that new warning decal reads as follows:

WARNING

Do not weld or allow tank temperature to exceed 212°F. Toxic gases may be released above this temperature, Repair tank only in accordance with approved procedures.

1. Peel off backing of new warning decal (7) and install where old decal was removed.
2. Install instruction plate (9) on manhole cover with four screws (8).
3. Install data plate (6) on tank assembly with four screws (5).
4. Install data plate (3) on frame assembly with four screws (4).
5. Install data plate (2) on frame assembly with six screws (1).

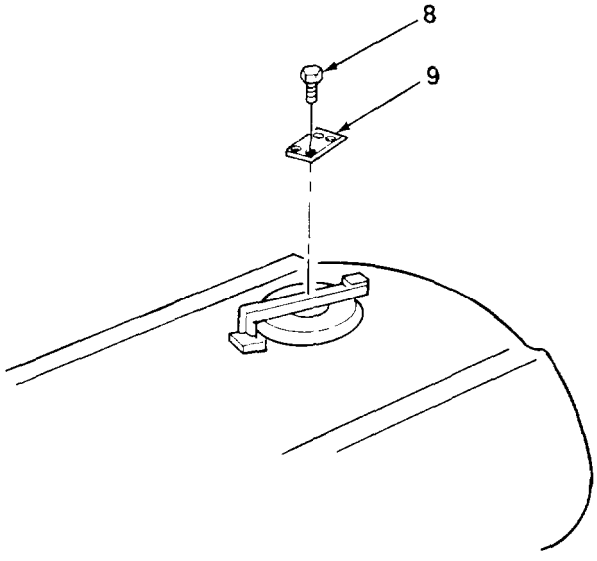

TA507077

Section IX. PREPARATION FOR STORAGE OR SHIPMENT

Paragraph Title	Page Number
Care of Equipmerrt in Administrative Storage	4-124
Definition of Administrative Storage	4-122
Exercise Schedule, Table 4-3.....	4-124
General	4-122
Preparation of Equipment for Administrative Storage	4-122
Preparation of Equipment for Shipment	4-125
Procedures for Common Components and Miscellaneous items	4-124
Removal of Equipment from Administrative Storage	4-125

4-62. GENERAL.

a. This section contains requirements and procedures for administrative storage of equipment that is issued to and in use by Army activities worldwide.

b. The requirements specified herein are necessary to maintain equipment in administrative storage in such a way as to achieve the maximum readiness condition.

c. Equipment that is placed in administrative storage should be capable of being readied to perform its mission within a 24 hour period, eras otherwise maybe prescribed by the approving authority. Before equipments placed in administrative storage, a current PMCS should be completed and deficiencies corrected.

d. Report equipment in administrative storage as prescribed for all reportable equipment.

e. Perform inspections, maintenance services, and lubrication as specified herein.

f. Records and reports to be maintained for equipment in administrative storage are those prescribed by DA Pam 738-750 for equipment in use.

g. A 10% variance is acceptable on time, running hours, or mileage used to determine maintenance actions,

h. Accomplishment of applicable PMCS, as mentioned throughout this section, will be on a quarterly basis.

4-63. DEFINITION OF ADMINISTRATIVE STORAGE.

The placement of equipment in administrative storage can be for short periods of time when a shortage of maintenance effort exists. Items should be ready for use within the time factors as determined by the directing authority. During the storage period appropriate maintenance records will be kept.

4-64. PREPARATION OF EQUIPMENT FOR ADMINISTRATIVE STORAGE.

a. Storage Site.

(1) Select the best available site for administrative storage. Separate stored equipment from equipment in use. Conspicuously mark the area “Administrative Storage”.

(2) Covered space is preferred.

(3) Open site should be improved hardstand, if available. Unimproved sites should be firm, well drained, and free of excessive vegetation.

4-64. PREPARATION OF EQUIPMENT FOR ADMINISTRATIVE STORAGE (Con't).

b. Storage Plan.

(1) Store equipment so as to provide maximum protection from the elements and to provide access for inspection, maintenance, and exercising. Anticipate removal or deployment problems and take suitable precautions.

(2) Take into consideration environmental conditions such as extreme heat or cold; high humidity; blowing sand, dust, or loose debris; soft ground; mud; heavy snows; or any combination thereof, and take adequate precautions.

(3) Establish a fire plan and provide for adequate fire fighting equipment and personnel.

c. Maintenance Service and Inspection.

(1) Maintenance Service. Prior to storage, perform the next scheduled organizational PMCS.

(2) Inspection. Inspect and approve the equipment prior to storage, Do not place equipment that is nonmission-capable in storage.

d. Auxiliary Equipment and Basic Issue Items.

(1) Process auxiliary equipment and Basic Issue Items simultaneously with the major item to which they are assigned.

(2) If possible, store auxiliary equipment and Basic Issue Items with the major item,

(3) If stored apart from the major item, mark auxiliary equipment and Basic Issue Items with tags indicating the major item, its registration or serial number and location, and store in protective type closures. In addition, place a tag or list indicating the location of the removed items in a conspicuous place on the major item.

e. Correction of Shortcomings and Deficiencies. Correct all shortcomings and deficiencies prior to storage, or obtain a deferment from the approving authority.

f. Lubrication. Lubricate equipment in accordance with instructions in Chapter 3, Section 1.

g. General Cleaning, Painting, and Preservation.

CAUTION

Do not direct water or steam, under pressure, against unsealed electrical systems, or any exterior opening. Failure to follow this caution may result in damage to equipment.

(1) Cleaning. Clean the equipment of dirt, grease, and other contaminants but do not use vapor decreasing.

(2) Painting. Remove rust and damaged paint by scraping, wire brushing, sanding, or buffing. Sand to a smooth finish and spot paint as necessary (TB 43-0209).

(3) Preservation. After cleaning and drying, immediately coat unpainted metal surfaces with oil or grease, as appropriate (Chapter 3, Section I).

CAUTION

Place a piece of barrier material between desiccant bags and metal surfaces to prevent corrosion.

NOTE

Air circulation under draped covers reduces deterioration from moisture and heat.

(4) Weatherproofing. Sunlight, heat, moisture (humidity), and dirt tend to accelerate deterioration. Install all covers (including vehicle protective closures) authorized for the equipment. Close and secure all openings except those required for venting and draining. Seal openings to prevent the entry of rain, snow, or dust. Insert desiccant when complete seal is required. Place equipment and provide blocking or framing to allow for ventilation and water drainage. Support cover away from item surfaces that may rust, rot, or mildew.

4-65. CARE OF EQUIPMENT IN ADMINISTRATIVE STORAGE.

a. Maintenance Services. After equipment has been placed in administrative storage, inspect, service, and exercise as specified herein.

b. Inspection. Inspection will usually be visual and must consist of at least a walk-around examination of all equipment to detect any deficiencies. Inspect equipment in open storage weekly and equipment in covered storage monthly. Inspect all equipment immediately after any severe storm or environmental change. The following are examples of things to look for during a visual inspection:

(1) Low or flat tires.

(2) Condition of preservatives, seals, and wraps.

(3) Torn, frayed, or split canvas covers and tops.

(4) Corrosion or other deterioration.

(5) Missing or damaged parts.

(6) Water in compartments.

(7) Any other readily recognizable shortcomings or deficiencies.

c. Repair During Administrative Storage. Keep equipment in an optimum state of readiness. Accomplish the required services and repairs as expeditiously as possible. Whenever possible, perform all maintenance on-site.

d. Exercising. Exercise equipment in accordance with Table 4-3 and the following instructions:

(1) Vehicle Major Exercise. Depreserve equipment by removing only that material restricting exercise, Close all drains, remove blocks, and perform all before-operation checks. Couple trailer to towing vehicle and drive for _ at least 25 mi (40 km). Make several right and left 90° turns. Make several hard braking stops without skidding. Perform the following during exercising when it is convenient; operate all other functional components and perform all during- and after-operation checks.

(2) Scheduled Service. Scheduled services will include inspection per subparagraph b above and will be conducted in accordance with Table 4-3. Lubricate in accordance with instructions in Chapter 3, Section 1.

(3) Corrective Action. Immediately take action to correct shortcomings and deficiencies noted. Record inspection and exercise results on DA Form 2404. Record and report all maintenance actions on DA Form 2407. After exercising, restore the preservation to the original condition. Replenish lubricants used during exercising and note the amount on DA Form 2408.

Table 4-3. Exercise Schedule.

Weeks	2	4	6	8	10	12	14	16	18	20	22	24
PMCS						x						x
Scheduled Services		x		x		x		x		x		
Major Exercise												x

e. Rotation. Rotate items in accordance with any rotational plan that will keep equipment in an operational condition and reduce the maintenance effort.

4-66. PROCEDURES FOR COMMON COMPONENTS AND MISCELLANEOUS ITEMS.

a. Tires. Visually inspect tires during each walk-around inspection. This inspection includes checking with a tire gage. Inflate repair, or replace as necessary those tires found to be low, damaged, or excessively worn. Mark inflated and repaired tires with chalk for checking at the next inspection.

4-66. PROCEDURES FOR COMMON COMPONENTS AND MISCELLANEOUS ITEMS (Con't).

b. Air Lines and Air Reservoir. Drain air lines and air reservoir of condensation and leave draincock open. Attach a caution tag, annotated to provide for closing of draincock when equipment is exercised. Place tag in a conspicuous location.

c. Seals. Seals may develop leaks during storage, or shortly thereafter. If leaking persists, refer to the applicable maintenance section in this manual for corrective maintenance procedures.

4-67. REMOVAL OF EQUIPMENT FROM ADMINISTRATIVE STORAGE.

a Activation. Restore the equipment to normal operating condition in accordance with the instructions contained in Chapter 4, Section II.

b. Servicing. Resume the maintenance service schedule in effect at the commencement of storage, or service the equipment before the scheduled dates in order to produce a staggered maintenance workload.

4-68. PREPARATION OF EQUIPMENT FOR SHIPMENT.

a Refer to TM 55-200, TM 55-601, and TM 743-200-1 for additional instructions on processing, storage, and shipment of materiel.

b. Trailers that have been removed from storage for shipment do not have to be reprocessed if they will reach treir destination within the administrative storage period. Reprocess only if inspection reveals any corrosion, or if anticipated in-transit weather conditions make it necessary

c. When a trailer is received and has already been processed for domestic shipment, as indicated on DD Form 1397, the trailer does not have to be reprocessed for storage unless corrosion and deterioration are found during the inspection upon receipt, List on SF 364 all discrepancies found because of poor preservation, packaging, packing. marking, handling, loading, storage, or excessive preservation. Repairs that cannot be handled by the receiving unit must have tags attached listing the needed repairs. A report of these conditions will be submitted by the unit commander for action by an ordnance maintenance unit.

CHAPTER 5
DIRECT SUPPORT AND GENERAL SUPPORT MAINTENANCE

Section I. WHEEL MAINTENANCE

5-1. BRAKEDRUM REPAIR.

This Task Covers:

a. Inspection

b. Repair

Initial Setup:

Equipment Conditions:

- Hub and brakedrum removed (para 4-45),

Tools/Test Equipment:

- Brakedrum lathe
- Dial indicator
- Inside micrometer, with extension

a. INSPECTION

WARNING

DO NOT handle brakeshoes, brakedrums, or other brake components unless area has been properly cleaned. There may be asbestos dust on these components which can be dangerous if you touch it or breathe it. Wear an approved filter mask and gloves. Never use compressed air or a dry brush to clean brake components. Dust may be removed using an industrial-type vacuum cleaner. Clean dust or mud away from brake components with water and a wet, soft brush or cloth. Failure to follow this warning may result in serious illness or death to personnel.

5-1. BRAKEDRUM REPAIR (Con't).

1. Inspect stud holes (2) for cracks. Discard brakedrum (1) if cracks are present.

WARNING

DO NOT reuse a brakedrum that exceeds maximum wear specifications. Failure to follow this warning may result in brake failure and serious injury or death to personnel.

2. Inspect braking surface (6) for cracks (3), heat checking (4), and scoring (5). Reface braking surface if damaged. Discard brakedrum if inside diameter exceeds 15.23 in. (38.68 cm).

3. Inspect braking surface (6) for out-of-round condition at 45° intervals. Out-of-round should not exceed 0.006 in. (0.1524 mm). If runout exceeds 0.006 in. (0.1524 mm), reface braking surface. Discard brakedrum (1) if inside diameter exceeds 15.23 in. (38.68 cm).

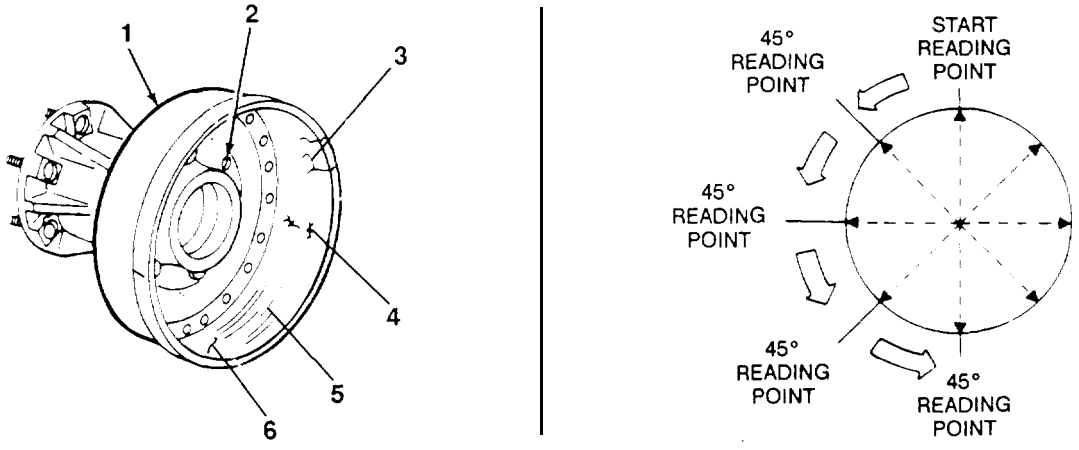

b. REPAIR

WARNING

DO NOT reuse a brakedrum that exceeds maximum wear specifications. Failure to follow this warning may result in brake failure and serious injury or death to personnel.

1. Reface braking surface (6) with brakedrum lathe, removing a maximum of 0.01 in. (0.254 mm) per cut.

2. Discard brakedrum if inside diameter exceeds 15.23 in. (38.68 cm) after repair

FOLLOW-ON TASKS:

- Install hub and brakedrum (para 4-45).

TA507078

Section II. BODY MAINTENANCE

Paragraph Title	Page Number
Water Tank Body Brackets Replacement (Stainless Steel)	5-8
Water Tank Body Repair (Fiberglass)	5-3
Water Tank Body Repair (Stainless Steel),	5-7

5-2. WATER TANK BODY REPAIR (FIBERGLASS).

This Task Covers."

a. Preparation of Damaged Areas
b. Repair of Cracks or Wrinkles
c. Repair of Holes or Punctures
d. Replacement of Brackets

Initial Setup:

Equipment Conditions:

- Water drained from water tank (para 2-13).
- Water tank body removed if necessary for access to damaged area (para 4-56).
- Interior of water tank body cleaned (para 4-56).

Tools/Test Equipment:

- General mechanic's tool kit
- Abrasive mask
- Disk grinder
- Plastic gloves

Materials/Parts:

- Adhesive (Item 1, Appendix E)
- Cleaning compound (Item 5, Appendix E)
- Abrasive cloth (Item 6, Appendix E)
- Dishwashing compound (Item 8, Appendix E)
- Epoxy repair kit (Item 19, Appendix E)
- Paint thinner (Item 27, Appendix E)

References:

- TM 43-0139

a. PREPARATION OF DAMAGED AREAS

NOTE

Minimum ambient temperature required for performing repair is 60°F (16°C)

1. Clean area 10 be repaired with paint thinner or dishwashing compound.

5-2. WATER TANK BODY REPAIR (FIBERGLASS) (Con't).

2. Roughen area to be repaired with abrasive cloth. Roughen a 2½ in. (6.4 cm) band surrounding area being repaired.

NOTE

For repair over 1 in. (2.5 cm) In diameter, follow the repair procedure as outlined below. For repairs smaller than 1 in. (2.5 cm) in diameter, skip step 3 and go to step 4.

3. Bevel edges ½ in. (12.7 mm) around damaged area.

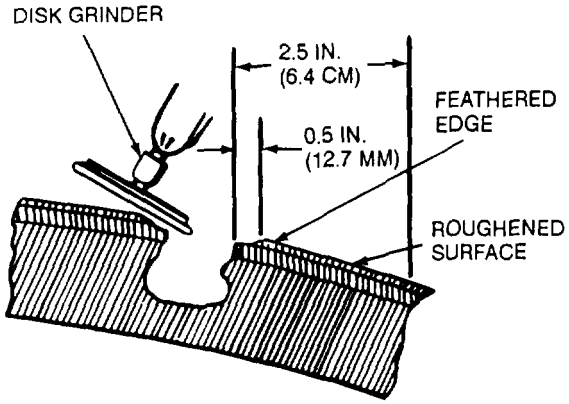

4. Replace foam with flexible polyurethane foam (2).

WARNING

- **Resin and hardener contained in epoxy repair kit may cause irritation to skin. Protect skin with plastic gloves and by keeping sleeves rolled down. If materials come in contact with skin, wash with soap and water.**
- **Resin and hardener can give off harmful fumes when mixed. Use in a well-ventilated area and wear air filter respirator for protection. Failure to follow this warning may cause fumes that may seriously injure or cause death to personnel.**

5. Cut wire screening (1) to required size and attach as shown with resin (3).

NOTE

Repair interior surface first when repairing a puncture.

6. To establish contour, fill damaged area with resin (3). Allow to cure three hours and sand excess.

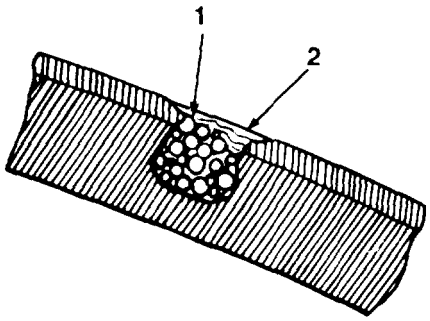

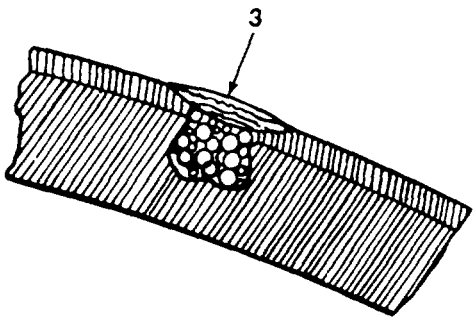

TA507079

5-2. WATER TANK BODY REPAIR (FIBERGLASS) (Con't).

b. REPAIR OF CRACKS OR WRINKLES

1. Cut a piece of fiberglass cloth that will overlap the damaged area at least ½ in. (12.7 mm).

WARNING

- **Resin and hardener contained in epoxy repair kit may cause Irritation to skin. Protect skin with plastic gloves and by keeping sleeves rolled down. If materials come in contact with skin, wash with soap and water.**
- **Resin and hardener can give off harmful fumes when mixed. Use in a well-ventilated area and wear air filter respirator for protection. Failure to follow this warning may cause fumes that may seriously Injure or cause death to personnel.**

2. Brush resin into fiberglass cloth until all air bubbles (white areas) are eliminated and fiberglass cloth is saturated.

3. Place fiberglass cloth over damaged area and add thick coating of resin (this coat is outer gel coat). Allow three hours to cure.

4. Sand to a smooth contour using body filler compound if necessary to feather edges.

c. REPAIR OF HOLES OR PUNCTURES

1. Cut five pieces of fiberglass cloth (4). The first piece should overlap the damaged area by ½ in. (12.7 mm). Remaining pieces must be ½ in. (12.7 mm) larger than preceding pieces. This will allow the final piece to overlap damaged area by 2½ in. (6.4 cm).

2. Brush resin into the smallest piece fiberglass cloth (4) until all air bubbles (white areas) are eliminated and fiberglass cloth is saturated.

3. Center the smallest piece of fiberglass cloth (4), with a ½ in. (12.7 mm) overlap, over damaged area. Smooth out fiberglass cloth with brush and resin until all air bubbles are removed.

4. Repeat steps 2 and 3 for remaining pieces of fiberglass cloth (4).

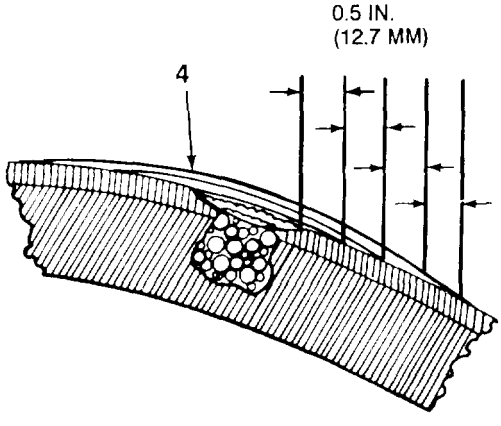

5. Brush on final thick layer of resin (this coat is the outer gel coat).

CAUTION

Avoid sanding down to fiberglass cloth layers when sanding outer gel coat to contour.

6. Allow to cure at least three hours before sanding to smooth contour. Use resin if necessary to feather edges.

TA507080

5-2. WATER TANK BODY REPAIR (FIBERGLASS) (Con't).

d. REPLACEMENT OF BRACKETS

NOTE

- **Water tank body must be removed from trailer to replace brackets (para 4-56). Replace only damaged bracket.**
- **There are four brackets. One bracket is located on each corner of trailer.**

1. Remove bracket (6) from water tank body (5).
2. Clean water tank bracket mounting surface with abrasive cloth and cleaning compound.
3. Apply adhesive and install bracket (6) on water tank body (5).

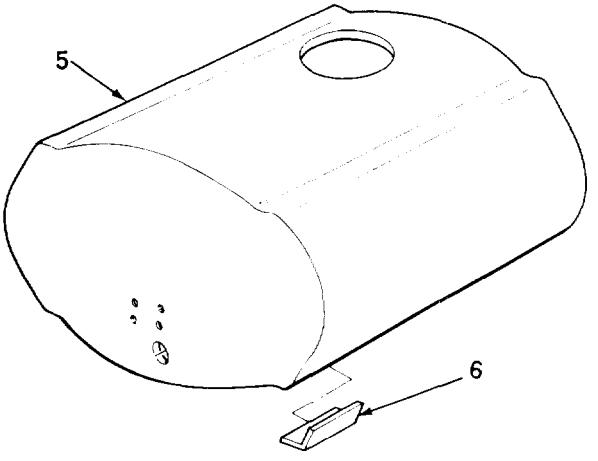

FOLLOW-ON TASKS:

- Repaint water tank body as required (TM 43-0139).
- Install water tank body if removed (para 4-56).

TA507081

5-3. WATER TANK BODY REPAIR (STAINLESS STEEL).

This Task Covers: Repair

Initial Setup:

Equipment Conditions:

- Water tank body removed (para 4-57).
- Water tank body suitably supported.

References:

- TM 9-237

Tools/Test Equipment:

- Welder's tool kit
- Welding shop equipment

REPAIR

WARNING

Do not weld or allow stainless steel tank temperature to exceed 212°F (100°C). Cyanide gases may be released when foam is heated above this temperature. Failure to follow this warning may cause toxic gases to escape and cause serious injury or death to personnel.

For instructions on how to repair water tank body, refer to TM 9-237.

FOLLOW-ON TASKS:

- Install water tank body on trailer (para. 4-57).

5-4. WATER TANK BODY BRACKETS REPLACEMENT (STAINLESS STEEL).

This Task Covers:

a. Removal

b. Installation

Initial Setup:

Equipment Conditions:

- Water tank body suitably supported (if removing one bracket).
- Water tank body removed (if removing 2 or more brackets).

Materials/Parts:

- Lockwire (Item 28, Appendix E).

Tools/Test Equipment:

- General mechanic's tool kit

a. REMOVAL

NOTE

There are four brackets. One bracket is located on each corner of water tank body.

1. Remove lockwire, capscrew, packing, mount, and spacer ring from bracket (3) (para 4-57).

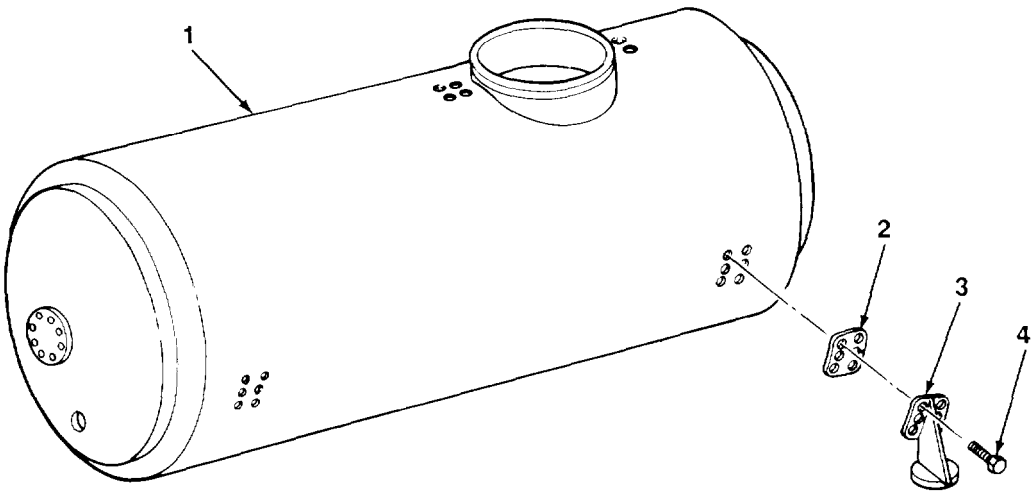

2. Cut and remove lockwire (5) from six capscrews (4). Discard lockwire.
3. Remove six capscrews (4), bracket (3), and plate (2) from water tank body (1).

TA507082

5-4. WATER TANK BODY BRACKETS REPLACEMENT (STAINLESS STEEL) (CON'T).

b. INSTALLATION

1. Install plate (2) and bracket (3) on water tank body (1) with six capscrews (4).
2. Install new lockwire (5) on capscrews (4).

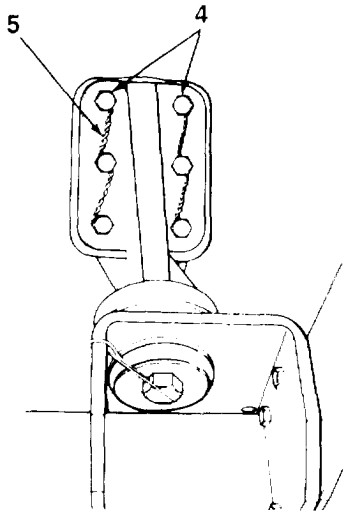

NOTE

If only one bracket was replaced, perform step 3, If more than one bracket was removed, perform step 4.

3. Install spacer ring, mount, packing, capscrew, and lockwire (para 4-57).
4. Install water tank body on trailer (para 4-57).

TA507083

APPENDIX A
REFERENCES

A-1. SCOPE.

This appendix lists all forms, field manuals, technical manuals, and other publications referenced in this manual and which apply to the operation, organizational, direct support, and general support maintenance of the M149 Series Water Tank Trailers.

A-2. PUBLICATION INDEX.

DA Pam 25-30, Consolidated Index of Army Publications and Blank forms, should be consulted frequently for latest changes or revisions and for new publications relating to materiel covered in this technical manual.

A-3. FORMS.

Refer to DA Pam 738-750, The Army Maintenance Management System (TAMMS), for instructions on the use of maintenance forms.

Equipment Inspection and Maintenance Worksheet . . . . . DA Form 2404
Equipment Log Assembly (Records) . . . . . DA Form 2408
Maintenance Request . . . . . DA Form 2407
Organizational Control Record for Equipment . . . . . DA Form 2401
Preventive Maintenance Schedule and Record . . . . . DD Form 314
Processing and Reprocessing Record for Shipment, Storage,
and Issue of Vehicles and Spare Engines . . . . . DD Form 1397
Product Quality Deficiency Report. . . . . SF 368
Recommended Changes to Equipment Technical Publications . . . . . DA Form 2028-2
Recommended Changes to Publications and Blank Forms . . . . . DA Form 2028
Report of Discrepancy (ROD)..... . . . . SF 364

A-4. FIELD MANUALS.

Field Hygiene and Sanitation . . . . . FM 21-10
First Aid for Soldiers . . . . . FM 21-11
Manual for the Wheeled Vehicle Driver . . . . . FM 21-305
NBC Contamination Avoidance . . . . . FM 3-3
NBC Decontamination . . . . . FM 3-5
NBC Protection . . . . . FM 3-4
Operation and Maintenance of Ordnance Materiel in Cold Weather (0° to -65°F) . . . . . FM 9-207

A-5. SUPPLY BULLETINS.

Storage Serviceability Standard: Tracked Vehicles, Wheeled Vehicles,
and Component Parts .... SB 740-98-1

A-6. TECHNICAL BULLETINS.

Color, Marking, and Camouflage Painting of Military Vehicles,
Construction Equipment, and Materiels Handling Equipment . . . . . TB 43-0209
Equipment improvement Report and Maintenance Digest
(U.S. Army Tank-Automotive Command) Tank-Automotive Equipment . . . . . TB 43-0001-39 Series
Tactical Wheeled Vehicles: Repair of Frames . . . . . TB 9-2300-247-40

A-7. TECHNICAL MANUALS.

Deepwater Fording of Ordnance Materiel . . . . TM 9-238
inspection, Care, and Maintenance of Antifriction Bearings . . . . . TM 9-214
Materials Used for Cleaning, Preserving, Abrading, and Cementing
Ordnance Materiel and Related Items Including Chemicals . . . . . TM 9-247
Operator's and Organizational Maintenance Manual (Including Repair Parts
and Special Tools Lists) for Heater, Immersion, Liquid Fuel Fired: 35000 BTU
Output for Corrugated Cans (Military Model M67) . . . . . TM 5-4540-202-12&P
Operator's Manual for Welding Theory and Application . . . . . TM 9-237
Organizational, Direct Support and General Support Care,
Maintenance, and Repair of Pneumatic Tires and Inner Tubes . . . . . TM 9-2610-200-24
Painting instructions for Field Use . . . . TM 43-0139
Procedures for Destruction of Tank-Automotive Equipment to Prevent
Enemy Use, ...24456-244-6
Railcar Loading Procedures . . . . TM 55-601
Railway Operating and Safety Rules . . . . TM 55-200
Storage and Materials Handling . . . . TM 743-200-1

A-8. OTHER PUBLICATIONS.

Army Logistics Readiness and Sustainability . . . . AR 700-138
Army Medical Department Expendable/Durable Items . . . . . CTA 8-100
Expendable/Durable Items (Except Medical, Class V Repair Parts, and Heraldic items) . . . . . CTA 50-970
Index of Storage and Outloading Drawings for Ammunition . . . . . DA Pam 75-5

APPENDIX B
MAINTENANCE ALLOCATION CHART

Section I. INTRODUCTION

B-1. GENERAL.

a. This section provides a general explanation of all maintenance and repair functions authorized at the various maintenance levels.

b. The Maintenance Allocation Chart (MAC) in Section II designates overall authority and responsibility for the performance of maintenance functions on the identified end item or component. The application of the maintenance functions to the end item or component will be consistent with the capacities and capabilities of the designated maintenance levels.

c. Section Ill lists the tools and test equipment (both special tools and common tool sets) required for each maintenance function as referenced from Section II.

d. Section IV contains supplemental instructions and explanatory notes for a particular maintenance function.

B-2. MAINTENANCE FUNCTIONS,

Maintenance functions will be limited to and defined as follows:

a. Inspect. To determine the serviceability of an item by comparing its physical, mechanical, and/or electrical characteristics with established standards through examination (e. g., by sight, sound, or feel).

b. Test. To verify serviceability by measuring the mechanical, pneumatic, hydraulic, or electrical characteristics of an Item and comparing those characteristics with prescribed standards.

c. Service. Operations required periodically to keep an item in proper operating condition, i.e., to clean (includes decontaminate, when required), to preserve, to drain, to paint, or to replenish fuel, lubricants, chemical fluids, or gases.

d. Adjust, To maintain or regulate, within prescribed limits, by bringing into proper or exact position, or by setting the operating characteristics to specified parameters.

e. Aline. To adjust specified variable elements of an item to bring about optimum or desired performance.

f. Calibrate. To determine and cause corrections to be made or to be adjusted on instruments or test, measuring, and diagnostic equipments used in precision measurement. Consists of comparisons of two instruments, one of which is a certified standard of known accuracy, to detect and adjust any discrepancy in the accuracy of the instrument being compared.

g. Remove/Install. To remove and install the same item when required to perform service or other maintenance functions. Install may be the act of emplacing, seating, or fixing into position a spare, repair part, or module (component or assembly) in a manner to allow the proper functioning of an equipment or system.

h. Replace, To remove an unserviceable item and install a serviceable counterpart in its place. “Replace” is authorized by the MAC and is shown as the third position of the SMR code.

i. Repair. The application of maintenance services, including fault location/troubleshooting, removal/installation, and disassembly/assembly procedures, and maintenance actions to identify troubles and restore serviceability to an item by correcting specific damage, fault, malfunction, or failure in a part, subassembly, module (component or assembly), end item, or system.

B-2. MAINTENANCE FUNCTIONS (Con't).

j. Overhaul. That maintenance effort (service/action) prescribed to restore an item to a completely serviceable/operational condition as required by maintenance standards in appropriate technical publications (i.e., DMWR). Overhaul is normally the highest degree of maintenance performed by the Army. Overhaul does not normally return an item to like new condition.

k. Rebuild. Consists of those services/actions necessary for the restoration of unserviceable equipment to a like new condition in accordance with original manufacturing standards. Rebuild is the highest degree of materiel maintenance applied to Army equipment. The rebuild operation includes the act of returning to zero those age measurements (hours/miles, etc.) considered in classifying Army equipment/components.

B-3. EXPLANATION OF COLUMNS IN THE MAC, SECTION II.

a. Column 1, Group Number. Column 1 lists functional group code numbers, the purpose of which is to identify maintenance signifcant components, assemblies, subassemblies, and modules with the next higher assembly. End item group number shall be "00."

b. Column 2, Component/Assembly. Column 2 contains the names of components, assemblies, subassemblies, and modules for which maintenance is authorized.

c. Column 3, Maintenance Function. Column 3 lists the functions to be performed on the item listed in Column 2. (For a detailed explanation of these functions, refer to paragraph B-2.)

d. Column 4, Maintenance Level. Column 4 specifies, by the listing of a work time figure in the appropriate subcolumn(s), the level of maintenance authorized to perform the function listed in Column 3. This figure represents the active time required to perform that maintenance function at the indicated level of maintenance. If the number or complexity of the tasks within the listed maintenance function vary at different maintenance levels, appropriate work time figures will be shown for each level. The work time figure represents the average time required to restore an item (assembly, subassembly, component, module, end item, or system) to a serviceable condition under typical field operating conditions. This time includes preparation time (including any necessary disassembly/assembly time), troubleshooting/fault location time, and quality assurance/quality control time in addition to the time required to perform the specific tasks identified for the maintenance functions authorized in the Maintenance Allocation Chart. The symbol designations for the various maintenance levels are as follows:

C . . . . Operator/Crew
O . . . . Organizational Maintenance
F . . . . . Direct Support Maintenance
H . . . . General Support Maintenance
D. . . . . Depot Maintenance

e. Column 5, Tools and Equipment. Column 5 specifies, by code, those common tool sets (not individual tools) and special tools, TMDE, and support equipment required to perform the designated function.

f. Column 6, Remarks. This column shall, when applicable, contain a letter code, in alphabetical order, which shall be keyed to the remarks contained in Section IV,

B-4. EXPLANATION OF COLUMNS IN TOOL AND TEST EQUIPMENT REQUIREMENTS, SECTION III.

a. Column 1, Tool or Test Equipment Reference Code. The tool and test equipment reference code correlates with a code used in the MAC , Section II, Column 5.

b. Column 2, Maintenance Level. The lowest level of maintenance authorized to use the tool or test equipment.

c. Column 3, Nomenclature. Name or identification of the tool or test equipment.

B-4. EXPLANATION OF COLUMNS IN TOOL AND TEST EQUIPMENT REQUIREMENTS, SECTION III (Con't).

d. Column 4, National/NATO Stock Number. The National or NATO Stock Number of the tool or test equipment.

e. Column 5, Tool Number. The manufacturer's part number.

B-5. EXPLANATION OF COLUMNS IN REMARKS, SECTION IV.

a. Column 1, Reference Code. The code recorded in Column 6, Section II.

b. Column 2, Remarks. This column lists information pertinent to the maintenance function being performed as indicated in the MAC, Section II.

Section II. MAINTENANCE ALLOCATION CHART

(1)	(2)	(3)	(4) Maintenance Level					(5)	(6)
			Unit		DS	GS	Depot		
Group Number	Component/Assembly	Maintenance Function	C	O	F	H	D	Tools and Equipment	Remarks
06	ELECTRICAL SYSTEM								
0609	Lights	Replace		0.3					
		Repair		0.2					
	Lamps	Replace		0.2					
0613	Chassis Wiring Harness								
	Chassis Wiring Harness	Test		0.3					
		Replace		0.5					
		Repair		0.5					
	Intervehicular Cable	Test		0.5					
		Replace		1.0					
11	REAR AXLE								
1100	Rear Axle Assembly								
	Axle Assembly	Replace		10.0					
12	BRAKES								
1201	Handbrakes								
	Hand brakes, Control and Linkage	Adjust	0.1						
		Replace		2.0					
1202	Service Brakes	Adjust		0.5					
		Repair		1.5					
	Brakeshoes	Replace		1.0					

Section II. MAINTENANCE ALLOCATION CHART (Con't)

(1)	(2)	(3)	(4) Maintenance Level					(5)	(6)
			Unit		DS	GS	Depot		
Group Number	Component/Assembly	Maintenance Function	C	O	F	H	D	Tools and Equipment	Remarks
1204	Hydraulic Brake System								
	Wheel Cylinder Assembly	Replace		1.5					
	Airbrake Chamber	Test		0.5					
		Replace		0.8					
	Master Cylinder	Service		0.1					
		Replace		1.0					
	Hydraulic Brake Lines	Inspect	0.2						
		Replace	1.5						
1208	Airbrake System								
	Air Hoses	Replace		0.5					
	Air Reservoir	Service	0.1						
		Replace		1.5					
	Air Filter	Replace		0.5					
		Repair		0.5					
	Relay Valve	Replace		0.5					
	Airbrake Chambers	Replace		1.0					
		Repair		1.0					
13	WHEELS								
1311	Wheel Assembly	Replace		1.0					
1313	Tires and Tubes								
	Brakedrum	Replace		1.0					
		Repair			1.0				
	Tires	Replace		2.0					
		Repair			2.0				
	Tubes	Replace		2.0					
		Repair		0.5					
15	FRAME, TOWING ATTACHMENTS, DRAWBARS, AND ARTICULATION SYSTEMS								
1501	Frame Assembly								
	Drawbar Coupler	Replace		0.5					

Section II. MAINTENANCE ALLOCATION CHART (Con't)

(1)	(2)	(3)	(4) Maintenance Level					(5)	(6)
			Unit		DS	GS	Depot		
Group Number	Component/Assembly	Maintenance Function	C	O	F	H	D	Tools and Equipment	Remarks
1507	*Landing Gear, Leveling Jacks*								
	Adjustable Caster Assembly	Service	0.2						
		Replace		1.0					
		Repair		1.5					
16	**SPRINGS AND SHOCK ABSORBERS**								
1601	*Springs*	Replace		2.5					
1604	*Shock Absorber Equipment*								
	Shock Absorbers	Replace		0.5					
1605	*Torque, Radius, and Stabilizer Rods*								
	Radius Rods	Adjust		2.0					
		Replace		2.5					
		Repair		0.5					
18	**BODY, CAB, AND HOOD**								
1811	*Tank Bodies*								
	Tank Bodies	Inspect	0.1						
		Service		2.0					
		Replace		2.5					
		Repair			4.0				
	Manhole Cover	Replace		0.7					
		Repair		1.5					
	Piping and Faucets	Replace		1.0					
22	**BODY AND CHASSIS ACCESSORY ITEMS**								
2202	*Accessory Items*								
	Reflectors	Replace		0.5					
2210	*Data Plates and Instruction Holders*								
	Data Plates	Replace		1.0					

SECTION III. TOOL AND TEST EQUIPMENT REQUIREMENTS

(1) REFERENCE CODE	(2) TOOL OR TEST EQUIPMENT MAINTENANCE LEVEL	(3) NOMENCLATURE	(4) NATIONAL/NATO STOCK NUMBER	(5) TOOL NUMBER
1	O	TOOL KIT, GENERAL MECHANIC'S, AUTOMOTIVE	5180-00-177-7033	
2	O	SHOP EQUIPMENT,AUTOMOTIVE MAINTENANCE AND REPAIR: ORGANIZATIONAL MAINTENANCE, COMMON NO. 1, LESS POWER	4910-00-754-0654	
3	F	SHOP EQUIPMENT, AUTOMOTIVE MAINTENANCE AND REPAIR: FIELD MAINTENANCE, SUPPLEMENTAL NO. 1	4910-00-754-0706	
4	F	TOOL,KIT WELDER'S	5180-00-754-0661	
5	F	SHOP EQUIPMENT, WELDING, FIELD MAINTENANCE	3470-00-357-7268	

SECTION IV. REMARKS

NOT APPLICABLE.

APPENDIX C
COMPONENTS OF END ITEM AND BASIC ISSUE ITEMS LISTS

The water tank trailers currently do not have any Components of End Item or Basic Issue Hems assigned.

APPENDIX D
ADDITIONAL AUTHORIZATION LIST

There is currently no Additional Authorization List assigned to the water tank trailers.

APPENDIX E
EXPENDABLE/DURABLE SUPPLIES AND MATERIALS LIST

Section I. INTRODUCTION

E-1. SCOPE.

This appendix lists expendable/durable supplies and materials you will need to operate and maintain the water tank trailers. This listing is for informational purposes only and is not authority to requisition the listed items. These items are authorized to you by CTA 50-970, Expendable/Durable Items (Except Medics/, Class V, Repair Parts, and Heraldic /terns), or CTA 8-100, Army Medical Department Expendable/Durable Items.

E-2. EXPLANATION OF COLUMNS.

a. Column (1) – Item Number. This number is assigned to the entry in the listing and is referenced in the "Initial Setup" of maintenance paragraphs or narrative instructions to identify the material needed (e.g., Dry cleaning solvent, Item 9, Appendix E).

b. Column (2) – Level. This column identifies the lowest level of maintenance that requires the listed item.

C - Operator/Crew
O - Organizational Maintenance
F - Direct Support Maintenance
H - General Support Maintenance

c. Column (3) – National Stock Number. This is the National Stock Number assigned to the item; use it to request or requisition the item.

d. Column (4) – Description. indicates the Federal item Name and, if required, a description to identify the item. The last line for each item indicates the Commercial and Government Entity (CAGE) Code in parentheses followed by the part number, if applicable.

e. Column (5) – Unit of Measure (U/M). Indicates the measure used in performing the actual maintenance function. This measure is expressed by a two-character alphabetical abbreviation (e.g., ea, in., pr). if the unit of measure differs from the unit of issue, requisition the lowest unit of issue that will satisfy your requirements.

SECTION II. EXPENDABLE/DURABLE SUPPLIES AND MATERIALS LIST

(1)	(2)	(3)	(4)	(5)
ITEM NUMBER	LEVEL	NATIONAL STOCK NUMBER	DESCRIPTION	U/M
1	O		ADHESIVE (81348)MMM-A-134	
		8040-00-157-8677		EA
2	O		ADHESIVE (81348)MMM-A-1617	
		8040-00-865-8991	12 OUNCE TUBE	OZ
		8040-00-262-9031	1 QUART CAN	QT
3	O		BRAKE FLUID, AUTOMOTIVE (81349)MIL-B-46176	
		9150-01-102-9455	1 GALLON CAN	GL
		9150-01-123-3152	5 GALLON CAN	GL
		9150-01-072-8379	55 GALLON DRUM	GL
4	O		BRUSH,SCRUB (81348)H-B-1490	
		7920-00-061-0038		EA
5	O		CLEANING COMPOUND, SOLVENT (81349)MIL-C-18718	
		6850-00-597-9765	1 GALLON CAN	GL
6	O		CLOTH,ADHESIVE (58536)A-A-1206	
		5350-00-221-0872	50 SHEETS	EA
7	F		CUSHIONING MATERIAL (81349)MIL-P-26514	
		8135-00-309-1574		SH
8	O		DISHWASHING COMPOUND, HAND (81348)P-D-410	
		7930-00-899-9534	5 GALLON CAN	GL

SECTION II. EXPENDABLE/DURABLE SUPPLIES AND MATERIALS LIST(CON'T)

(1)	(2)	(3)	(4)	(5)
ITEM NUMBER	LEVEL	NATIONAL STOCK NUMBER	DESCRIPTION	U/M
9	O		DRY CLEANING SOLVENT (81348)P-D-680,TYPE II	
		6850-00-664-5685	1 QUART CAN	QT
		6850-00-281-1985	1 GALLON CAN	GL
		6850-00-285-8011	5 GALLON DRUM	GL
10	F		ELECTRODE WELDING: 308 STAINLESS STEEL WELDING ROD (81348)MIL-E-22200/2	
		3439-00-245-6630		LB
11	F		EPOXY COATING KIT: WHITE EPOXY ENAMEL (13178)R100G	
		8010-00-118-2456	2 GALLON KIT	GL
12	F		EPOXY THINNER (13178)AT333	
		8010-00-118-2455	1 GALLON CAN	GL
13	O		GREASE,AUTOMOTIVE AND ARTILLERY (81349)MIL-G-10924	
		9150-00-935-1017	14 OUNCE CAN	OZ
		9150-00-190-0904	1.75 POUND CAN	LB
		9150-00-190-0905	6.50 POUND CAN	LB
14	O		LUBRICATING OIL ENGINE, OE/HDO-10 (81349)MIL-L-2104	
		9150-00-189-6727	1 QUART CAN	QT
		9150-00-186-6668	5 GALLON CAN	GL
		9150-00-191-2772	55 GALLON DRUM	GL
15	O		LUBRICATING OIL, ENGINE OE/HDO-30 (81349)MIL-L-2104	
		9150-00-186-6681	1 QUART CAN	QT
		9150-00-188-9858	5 GALLON CAN	GL
		9150-00-189-6729	55 GALLON DRUM	GL

SECTION II. EXPENDABLE/DURABLE SUPPLIES AND MATERIALS LIST (CON'T)

(1)	(2)	(3)	(4)	(5)
ITEM NUMBER	LEVEL	NATIONAL STOCK NUMBER	DESCRIPTION	U/M
16	O		LUBRICATING OIL, ENGINE, OEA (18349)MIL-L-46167	
		9150-00-402-4478	1 QUART CAN	QT
		9150-00-402-2372	5 GALLON CAN	GL
		9150-00-491-7197	55 GALLON DRUM	GL
17	C		LUBRICATING OIL, GENERAL PURPOSE,PL-S (81349)W-L-800	
		9150-00-231-6689	1 QUART CAN	QT
		9150-00-231-9062	5 GALLON CAN	GL
18	O		RAG, WIPING (58536)A-A-531	
		7920-00-205-1711	50 POUND BALE	LB
19	F		REPAIR KIT,EPOXY (19207)12259529	
		8010-01-060-7176		EA
20	O		SAND,SANDBLAST	
		5350-00-638-8138	50 POUND DRUM	LB
21	O		SEALING COMPOUND (81349)MIL-S-22473	
		8030-00-081-2329	10 CUBIC CM BOTTLE	BT
22	C		SOAP, TOILET (81349)P-S-624	
		8520-00-228-0598	6 GALLON CAN	GL
23	C		SODIUM HYPOCHLORITE: LIQUID LANDRY BLEACH (81348)O-S-602	
		6810-00-900-6276	5 GALLON CAN	GL

SECTION II. EXPENDABLE/DURABLE SUPPLIES AND MATERIALS LIST (CON'T)

(1)	(2)	(3)	(4)	(5)
ITEM NUMBER	LEVEL	NATIONAL STOCK NUMBER	DESCRIPTION	U/M
24	O		SOLDER,LEAD (09185)44RE	
		3439-00-824-9856	1 POUND BAR	LB
25	O		TAG,MARKER (81349)MIL-T-12755	
		9905-00-537-8954	50 EACH	EA
26	O		TAPE,ANTISEIZE:	
			1/4 INCH WIDE (71643)TEMPRTH	
		8030-00-067-7368	54 FEET LONG	FT
			1/2 INCH WIDE, (76381)4B	
		8030-00-889-3535	260 INCHES LONG	IN
27	F		THINNER,PAINT,MINERAL SPIRITS (81349)TT-T-291	
		8010-00-558-7026	5 GALLON CAN	GL
28	F		WIRE,NONELECTRICAL (96906)MS20995C47-14	
		9505-00-555-8648		LB
29	O		WIRE,STEEL,CARBON (96906)MS20995F47-12	
		9505-00-248-9850		LB

APPENDIX F
REPAIR PARTS AND SPECIAL TOOLS LISTS

Section I. INTRODUCTION

F-1. SCOPE.

This RPSTL lists and authorizes spares and repair parts; special tools; special test, measurement, and diagnostic equipment (TMDE); and other special support equipment required for performance of organizational, direct support, and general support maintenance of the water tank trailer. It authorizes the requisitioning, issue, and disposition of spares, repair parts and special tools as indicated by the source, maintenance and recoverability (SMR) codes.

F-2. GENERAL,

In addition to Section I, Introcduction, this Repair Parts and Special Tools List is divided into the following sections:

a. **Section II. Repair Parts List.** A list of spares and repair parts authorized by this RPSTL for use in the performance of maintenance, The list also includes parts which must be removed for replacement of the authorized parts. Parts lists are composed of functional groups in ascending alphanumeric sequence, with the parts in each group listed in ascending figure and item number sequence. Bulk materiels are listed in item name sequence. Repair parts kits are listed separately in their own functional group within Section II. Repair parts for reparable special tools are also listed in this section. Items listed are shown on the associated illustration(s)/figure(s).

b. **Section Ill. Special Tools List.** A list of special tools, special TMDE, and other special support equipment authorized by this RPSTL [as indicated by Basis of Issue (BOI) information in the DESCRIPTION AND USABLE ON CODE column] for the performance of maintenance.

c. **Section IV. National Stock Number and Part Number Index.** A list, in National Item Identification Number (NIIN) sequence, of all National stock numbered items appearing in the listing, followed by a list in alphanumeric sequence of all part numbers appearing in the listings. National stock numbers and part numbers are cross-referenced to each illustration/figure and item number appearance. The figure and item number index lists figure and item numbers in alphanumeric sequence and cross-references NSN, CAGE, and part numbers.

F-3. EXPLANATION OF COLUMNS (SECTIONS II AND III).

a. **ITEM NO. [Column (1)].** Indicates the number used to identify items called out in the illustration.

b. **SMR CODE [Column (2)].** The Source, Maintenance, and Recoverability (SMR) code is a 5-position code containing supply/requisitioning information, maintenance category authorization criteria, and disposition instruction, as shown in the following breakout:

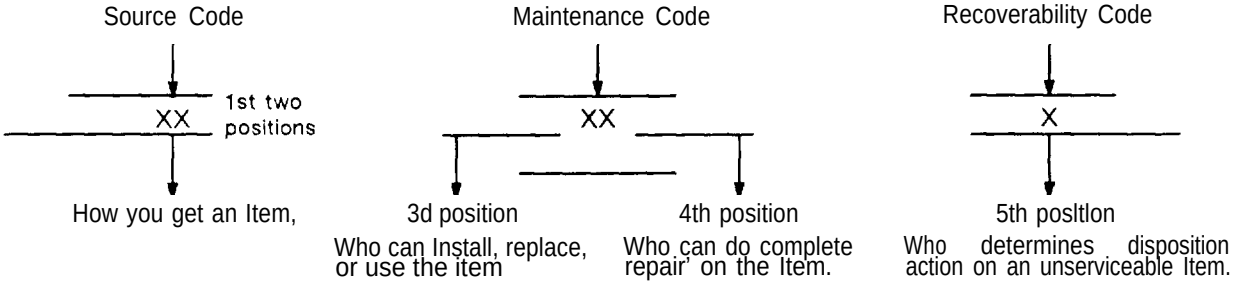

* *Complete Repair:* Maintenance capacity, capability, and authority to perform all corrective maintenance tasks of the "Repair" function In a use/user environment in order to restore serviceability to a failed Item.

F-3. EXPLANATION OF COLUMNS (SECTIONS II AND III) (Con't).

(1) **Source Code.** The source code tells you how to get an item needed for maintenance, repair, or overhaul of an end item/equipment. Explanations of source codes follow:

Code	*Application/Explanation*
PA PB PC** PD PE PF PG	Stocked items; use the applicable NSN to request/requisition items with these source codes. They are authorized to the category indicated by the code entered in the 3d position of the SMR code. *** Items coded PC are subiect to deterioration.*
KD KF KB	Items with these codes are not to be requested/requisitioned individually. They are part of a kit which is authorized to the maintenance category indicated in the 3d position of the SMR code. The complete kit must be requisitioned and applied.
MO - Made at ORG/ A VUM Level MF - Made at DS/AVUM Level MH - Made at GS Level MD - Made at Depot	Items with these codes are not to be requested/requisitioned individually. They must be made from bulk materiel which is identified by the part number in the *DESCRIPTION AND USABLE ON CODE (UOC)* column and listed in the bulk materiel group of the repair parts list in this RPSTL. If the item is authorized to you by the 3d position code of the SMR code, but the source code indicates it is made at a higher level, order the item from the higher level of maintenance.
AO - Assembled by OR G/AVUM Level AF - Assembled by DS/ A VUM Level AH - Assembled by GS Level AD - Assembled at De-pot	Items with these codes are not to be requested/requisitioned individually. The parts that make up the assembled item must be requisitioned or fabricated and assembled at the level of maintenance indicted by the source code. If the 3d position code of the SMR code authorizes you to replace the item, but the source code indicates that the item is assembled at a higher level, order the item from the higher level of maintenance.

NOTE

Cannibalization or controlled exchange, when authorized, may be used as a source of supply for items with the above source codes, except for those source coded "XA."

XA - DO NOT requisition an "XA''-coded item. Order its next higher assembly.

XB - If an "XB" item is not available from salvage, order it using the CAGE and part number given.

F-3. EXPLANATION OF COLUMNS (SECTIONS II AND III) (Con't).

XC - Installation drawing, diagram, instruction sheet, field service drawing, that is identified by manufacturer's part number.

XD - Item is not stocked, Order an " XD''-coded item through normal supply channels using the CAGE and part number given, if no NSN is available.

(2) Maintenance Code, Maintenance codes tell you the level(s) of maintenance authorized to use and repair support items. The maintenance codes are entered in the third and fourth positions of the SMR code as follows:

(a) The maintenance code entered in the third position tells you the lowest maintenance level authorized to remove, replace, and use an item. The maintenance code entered in the third position will indicate authorization to one of the following levels of maintenance.

Code	Application/Explanation
C	— Crew or operator maintenance done within unit maintenance or aviation unit maintenance.
0	— Organizational maintenance or aviation unit can remove, replace, and use the item.
F	— Direct support or aviation intermediate level can remove, replace, and use the item.
H	General support level can remove, replace, and use the item.
L	Specialized repair activity can remove, replace, and use the item.
D	— Depot level can remove, replace, and use the item.

NOTE

Some limited repair may be done on the item at a lower level of maintenance, if authorized by the Maintenance Allocation Chart (MAC) and SMR codes.

(b) The maintenance code entered in the fourth position tells whether or not the item is to be repaired and identifies the lowest maintenance level with the capability to do complete repair (i.e., perform all authorized "Repair" functions). This position will contain one of the following maintenance codes:

Code	Application/Explanation
O	- Organizational maintenance or aviation unit is the lowest level that can do complete repair of the item.
F	- Direct support or aviation intermediate is the lowest level than can do complete repair of the item.
H	- General support is the lowest level that can do complete repair of the item.
L	- Specialized repair activity is the lowest level that can do complete repair of the item.
D	- Depot is the lowest level that can do complete repair of the item.
Z	- Nonreparable. No repair is authorized.
B	- No repair is authorized. (No parts or special tools are authorized for the maintenance of a " B"-coded item.) However, the item may be reconditioned by adjusting, lubricating, etc., at the user level.

F-3. EXPLANATION OF COLUMNS (SECTIONS II AND III) (Con't).

(3) **Recoverability Code.** Recoverability codes are assigned to items to indicate the disposition action on unserviceable items. The recoverability code is entered in the fifth position of the SMR code as follows:

Code	Application/Explanation
Z	- Nonreparable item. When unserviceable, condemn and dispose of the item at the level of maintenance shown in the 3d position of the SMR code.
O	- Reparable item. When uneconomically reparable, condemn and dispose of the item at unit maintenance or aviation unit level.
F	- Reparable item. When uneconomically reparable, condemn and dispose of the item at the direct support or aviation intermediate level.
H	- Reparable item. When uneconomically reparable, condemn and dispose of the item at the general support level.
D	- Reparable item. When beyond lower level repair capability, return to depot. Condemnation and disposal of item not authorized below depot level.
L	- Reparable item. Condemnation and disposal of item not authorized below specialized repair activity (SRA).
A	- Item requires special handling or condemnation procedures because of specific reasons (e. g., precious metal content, high dollar value, critical material, or hazardous material). Refer to appropriate manuals/directives for specific instructions.

c. **CAGEC [Column (3)].** The Commercial and Government Entity (CAGE) CODE (C) is a 5-digit alphanumeric code which is used to identify the manufacturer, distributor, or Government agency, etc., that supplies the item.

NOTE

When you use an NSN to requisition an item, the item you receive may have a different part number from the part ordered.

d. **PART NUMBER [Column (4)].** Indicates the primary number used by the manufacturer (individual, company, firm, corporation, or Government activity), which controls the design and characteristics of the item by means of its engineering drawings, specifications standards, and inspection requirements to identify an item or range of items.

e. **DESCRIPTION AND USABLE ON CODE (UOC) [Column (5)].** This column includes the following information:

(1) The Federal item name and, when required, a minimum description to identify the item.

(2) Physical security classification. Not Applicable.

(3) Items that are included in kits and sets are listed below the name of the kit or set on Figure KIT.

(4) Spare/repair parts that make up an assembled item are listed immediately following the assembled item line entry.

(5) Part numbers for bulk materials are referenced in this column in the line item entry for the item to be manufactured/fabricated.

(6) When the item is not used with all serial numbers of the same model, the effective serial numbers are shown on the last line(s) of the description (before UOC).

(7) The usable on code, when applicable. (See paragraph F-5, Special Information)

(8) In the Special Tools List section, the Basis of Issue (BOI) appears as the last line(s) in the entry for each special tool, special TMDE, and other special support equipment. When density of equipments supported exceeds density spread indicated in the Basis of Issue, the total authorization is increased proportionately.

F-3. EXPLANATION OF COLUMNS (SECTIONS II AND III) (Con't).

(9) The statement "END OF FIGURE" appears just below the last item description in Column 5 for a given figure in both Section II and Section Ill.

f. **QTY [Column (6)].** The QTY (quantity per figure) column indicates the quantity of the item used in the breakout shown on the illustration/figure, which is prepared for a functional group, subfunctional group, or an assembly. A "V" appearing in this column in lieu of a quantity indicates that the quantity is variable and the quantity may vary from application to application.

F-4. EXPLANATION OF COLUMNS (SECTION IV).

a. **National Stock Number (NSN) Index.**

(1) *STOCK NUMBER* **Column.** This column lists the NSN by National Item Identification Number (NIIN) sequence. The NIIN consists of the last nine digits of the NSN (i. e., 5305-01-674-1467 (NSN; NIIN)). When using this column to locate an item, ignore the first 4 digits of the NSN. However, the complete NSN should be used when ordering items by stock number.

(2) *FIG.* **Column.** This column lists the number of the figure where the item is identified/located. The figures are in numerical order in Section II and Section Ill.

(3) *ITEM* **Column.** The item number identifies the item associated with the figure listed in the adjacent FIG. column. This item is also identified by the NSN listed on the same line.

b. **Part Number Index.** Part numbers in this index are listed by part number in ascending alphanumeric sequence (i. e., vertical arrangement of letter and number combination which places the first letter or digit of each group in order A through Z, followed by the numbers O through 9 and each following letter or digit in like order).

(1) *CAGEC* **Column.** The Commercial and Government Entity (CAGE) Code (C) is a 5-digit alphanumeric code used to identify the manufacturer, distributor, or Government agency, etc. , that supplies the item.

(2) *PART NUMBER* **Column.** Indicates the primary number used by the manufacturer (individual, firm, corporation, or Government activity), which controls the design and characteristics of the item by means of its engineering drawings, specifications standards and inspection requirements to identify an item or range of items.

(3) *STOCK NUMBER* **Column,** This column lists the NSN for the associated part number and manufacturer identified in the PART NUMBER and CAGE columns to the left.

(4) *FIG.* **Column.** This column lists the number of the figure where the item is identified/located in Section II and Section Ill.

(5) *ITEM* **Column.** The item number is that number assigned to the item as it appears in the figure referenced in the adjacent figure number column.

c. **Figure And Item Number Index.**

(1) *FIG.* **Column.** This column lists the number of the figure where the item is identified/located in Sections II and Ill.

(2) *ITEM* **Column.** The item number is that number assigned to the item as it appears in the figure referenced in the adjacent figure number column.

(3) *STOCK NUMBER* **Column,** This column lists the NSN for the item.

(4) *STOCK NUMBER* **Column,** This column lists the NSN for the item,

(5) *CAGE* **Column.** The Commercial and Government Entity (CAGE) is a 5-digit numeric code used to Identify the manufacturer, distributor, or Government agency, etc., that supplies the item.

F-4. EXPLANATION OF COLUMNS (SECTION IV) (Con't).

(6) *PART NUMBER* **Column.** Indicates the primary number used by the manufacturer (individual, firm, corporation, or Government activity), which controls the design and characteristics of the item by means of its engineering drawings, specifications standards and inspection requirements to identify an item or range of items.

F-5. SPECIAL INFORMATION.

a. **Usable On Code.** The usable on code appears in the lower left corner of the Description column heading, Usable on codes are shown as "UOC: . . . . . " in the Description column (justified left) on the first line applicable item description/nomenclature. Uncoded items are applicable to all models. Identification of the usable on codes used in this RPSTL are:

Code	*Used On*
292	Model 149
997	Model 149A1
STL	Model 149A2

b. **Fabrication Instructions.** Bulk materiels required to manufacture items are listed in the Bulk Materiel Functional Group of this RPSTL. Part numbers for bulk materiels are also referenced in the DESCRIPTION column of the line item entry for the item to be manufactured/fabricated. Detailed fabrication instructions for items source coded to be manufactured or fabricated are found in Appendix G of this manual.

c. **Assembly Instructions.** Detailed assembly instructions for items source coded to be assembled from component spare/repair parts are found in Chapters 4 and 5. Items that make up the assembly are listed immediately following the assembly item entry or reference is made to an applicable figure.

d. **Kits.** Line item entries for repair parts kits appear in group 9401 in Section II.

e. **Index Numbers.** Items which have the word BULK in the FIG. column will have an index number shown in the item column. This index number is a cross-reference between the National Stock Number/Part Number Index and the bulk materiel list in Section II.

f. **Associated Publications.** Not Applicable.

F-6. HOW TO LOCATE REPAIR PARTS.

a. **When National Stock Number or Part Number is Not Known:**

(1) **First.** Using the Table of Contents, determine the assembly group or subassembly group to which the item belongs. This is necessary since figures are prepared for assembly groups and subassembly groups, and listings are divided into the same groups.

(2) **Second.** Find the figure covering the assembly group or subassembly group to which the item belongs.

(3) **Third.** Identify the item on the figure and use the Figure and Item Number Index to find the NSN.

b. **When National Stock Number or Part Number is Known:**

(1) **First.** Using the National Stock Number or Part Number Index, find the pertinent National Stock Number or Part Number. The NSN Index is in National Item Identification Number (NIIN) sequence [see paragraph F-4.a(1)]. The part numbers in the Part Number Index are listed in ascending alphanumeric sequence (see paragraph F-4.b) . Both indexes cross-reference you to the illustration/figure and item number of the item you are looking for.

(2) **Second.** Turn to the figure and item number, verify that the item is the one you're looking for, then locate the item number in the repair parts list for the figure.

F-7. ABBREVIATIONS,

For standard abbreviations see MIL-STD-12D, *Military Standard Abbreviations for Use on Drawings, Specifications, Standards, and in Technical Documents.*

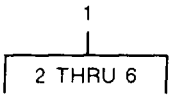

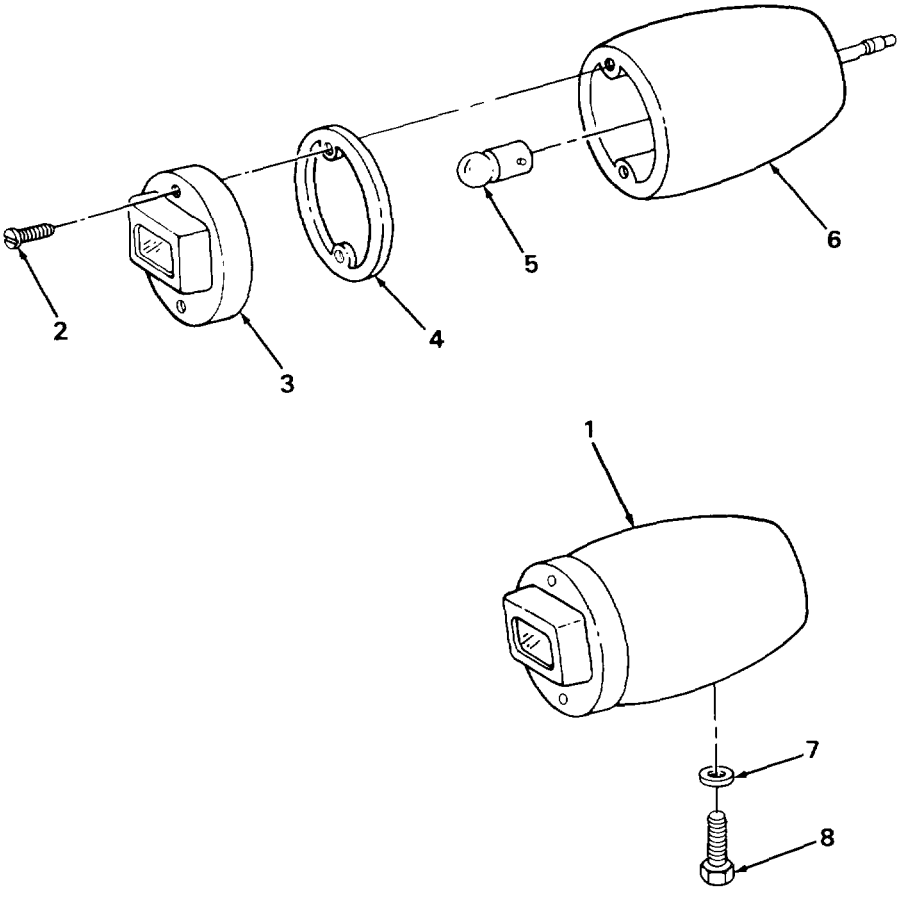

TA506223

FIGURE 1. BLACKOUT LIGHTS (M149).

(1) ITEM NO	(2) SMR CODE	(3) CAGEC	(4) PART NUMBER	(5) DESCRIPTION AND USABLE ON CODES (UOC)	(6) QTY
				GROUP 06 ELECTRICAL SYSTEM	
				GROUP 0609 LIGHTS	
				FIG. 1 BLACKOUT LIGHTS (M149)	
1	PDOOO	19207	8741645	STOP LIGHT,VEHICULA UOC:292	1
2	PDOZZ	19207	7320691	.SCREW,MACHINE UOC:292	2
3	PDOZZ	19207	8741646	.RETAINER,LENS UOC:292	1
4	PAOZZ	19207	8694464	.GASKET UOC:292	1
5	PAOZZ	96906	MS15570-1251	.LAMP,INCANDESCENT UOC:292	1
6	XAOZZ	96906	MS53047-1	.LIGHT,PARKING BODY UOC:292	1
7	PAOZZ	96906	MS35333-41	WASHER,LOCK UOC:292	1
8	PAOZZ	96906	MS90726-28	BOLT,MACHINE UOC:292	1
				END OF FIGURE	

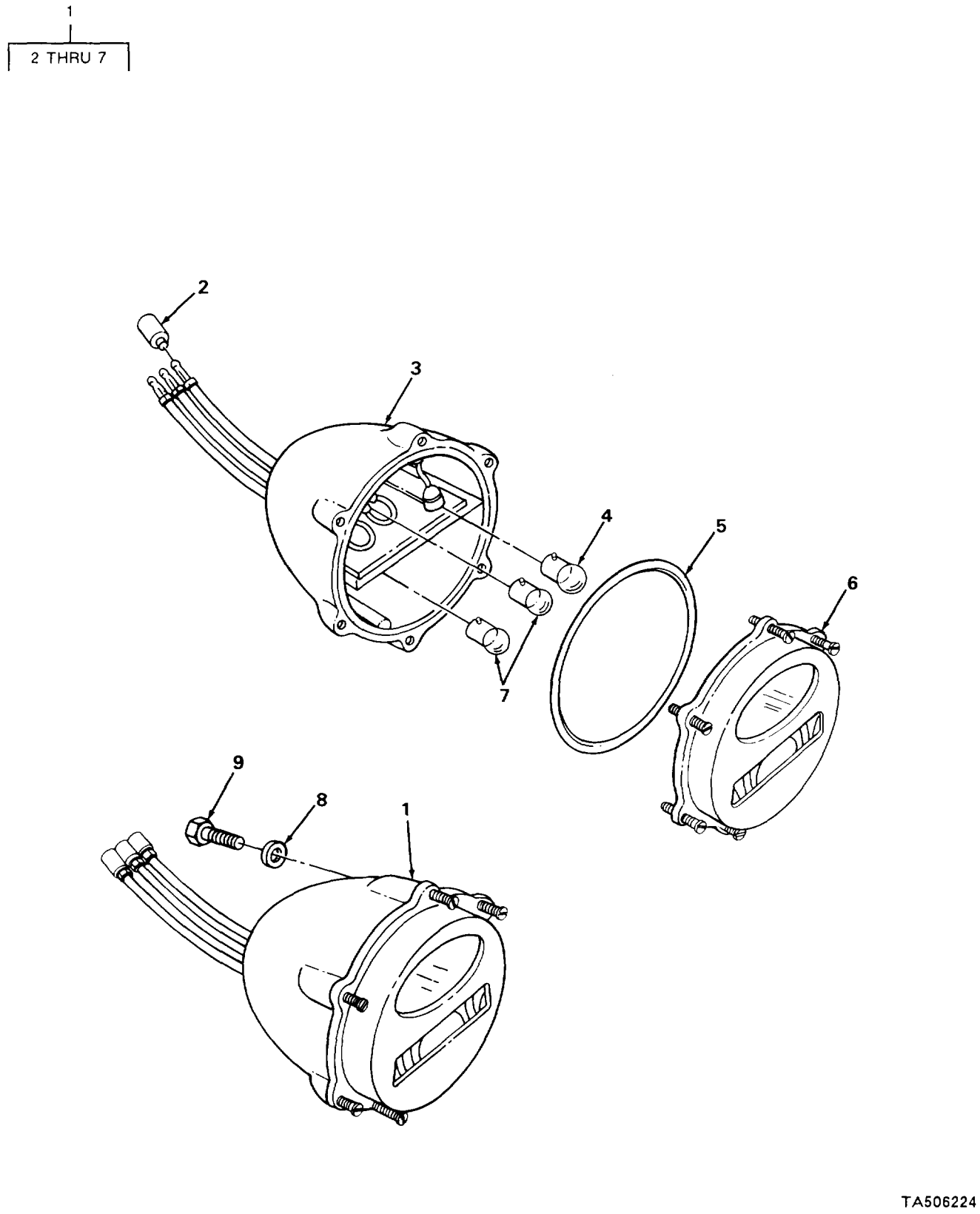

FIGURE 2. STOPLIGHT-TAILLIGHT (M149).

(1) ITEM NO	(2) SMR CODE	(3) CAGEC	(4) PART NUMBER	(5) DESCRIPTION AND USABLE ON CODES (UOC)	(6) QTY
				GROUP 0609 LIGHTS	
				FIG. 2 STOPLIGHT-TAILLIGHT (M149)	
1	PAOOO	96906	MS51329-1	STOP LIGHT-TAILLIGH UOC:292	2
2	PAOZZ	19207	8338566	.SHELL,ELECTRICAL CO UOC:292	3
3	XAOZZ	19207	8741650	.HOUSING,LIGHT UOC:292	1
4	PAOZZ	96906	MS35478-1683	.LAMP,INCANDESCENT UOC:292	1
5	PAOZZ	19207	7320658	.PACKING,PREFORMED UOC:292	1
6	PAOZZ	19207	7526020	.RETAINER,LENS UOC:292	1
7	PAOZZ	96906	MS15570-1251	.LAMP,INCANDESCENT UOC:292	2
8	PAOZZ	96906	MS35333-25	WASHER,LOCK UOC:292	4
9	PAOZZ	96906	MS18154-58	SCREW,CAP,HEXAGON H UOC:292	4
				END OF FIGURE	

2 THRU 7

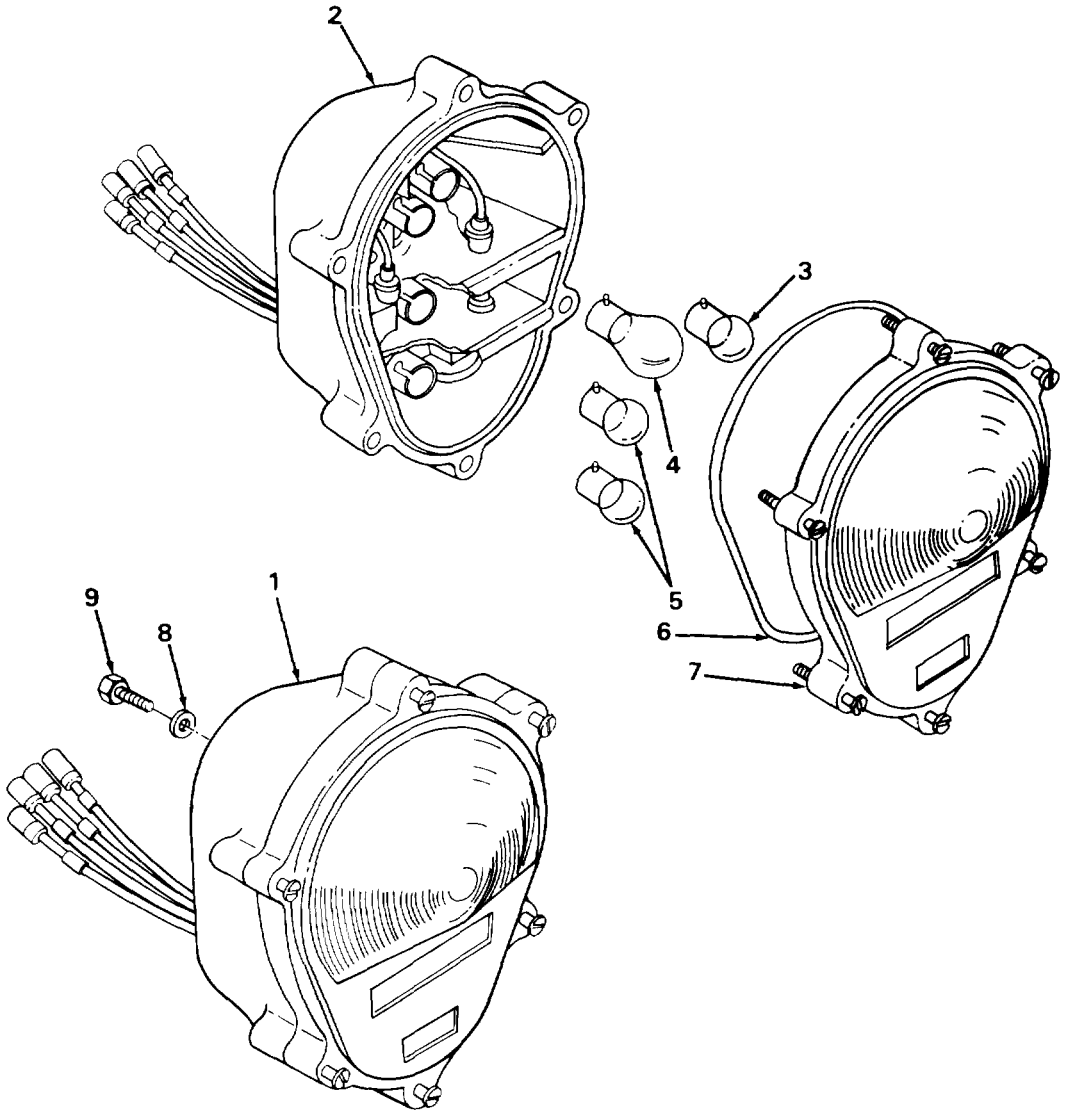

TA506225

FIGURE 3. COMPOSITE STOPLIGHT-TAILLIGHT (M149A1 AND M149A2).

(1) ITEM NO	(2) SMR CODE	(3) CAGEC	(4) PART NUMBER	(5) DESCRIPTION AND USABLE ON CODES (UOC)	(6) QTY
				GROUP 0609 LIGHTS	
				FIG. 3 COMPOSITE STOPLIGHT-TAILLIGHT (M149A1 AND M149A2)	
1	PAOOO	96906	MS52125-2	STOP LIGHT-TAILLIGH UOC:STL,997	2
2	XAOZZ	19207	11639520	.BODY ASSEMBLY UOC:STL,997	1
3	PAOZZ	96906	MS15570-623	.LAMP,INCANDESCENT UOC:STL,997	1
4	PAOZZ	96906	MS35478-1683	.LAMP,INCANDESCENT UOC:STL,997	1
5	PAOZZ	96906	MS15570-1251	.LAMP,INCANDESCENT UOC:STL,997	2
6	PAOZZ	19207	11639519-2	.PACKING,PREFORMED UOC:STL,997	1
7	PAOZZ	19207	11639535	.LENS,LIGHT UOC:STL,997	1
8	PAOZZ	96906	MS35338-46	WASHER,LOCK UOC:STL,997	4
9	PAOZZ	96906	MS18154-58	SCREW,CAP,HEXAGON H UOC:STL,997	4
				END OF FIGURE	

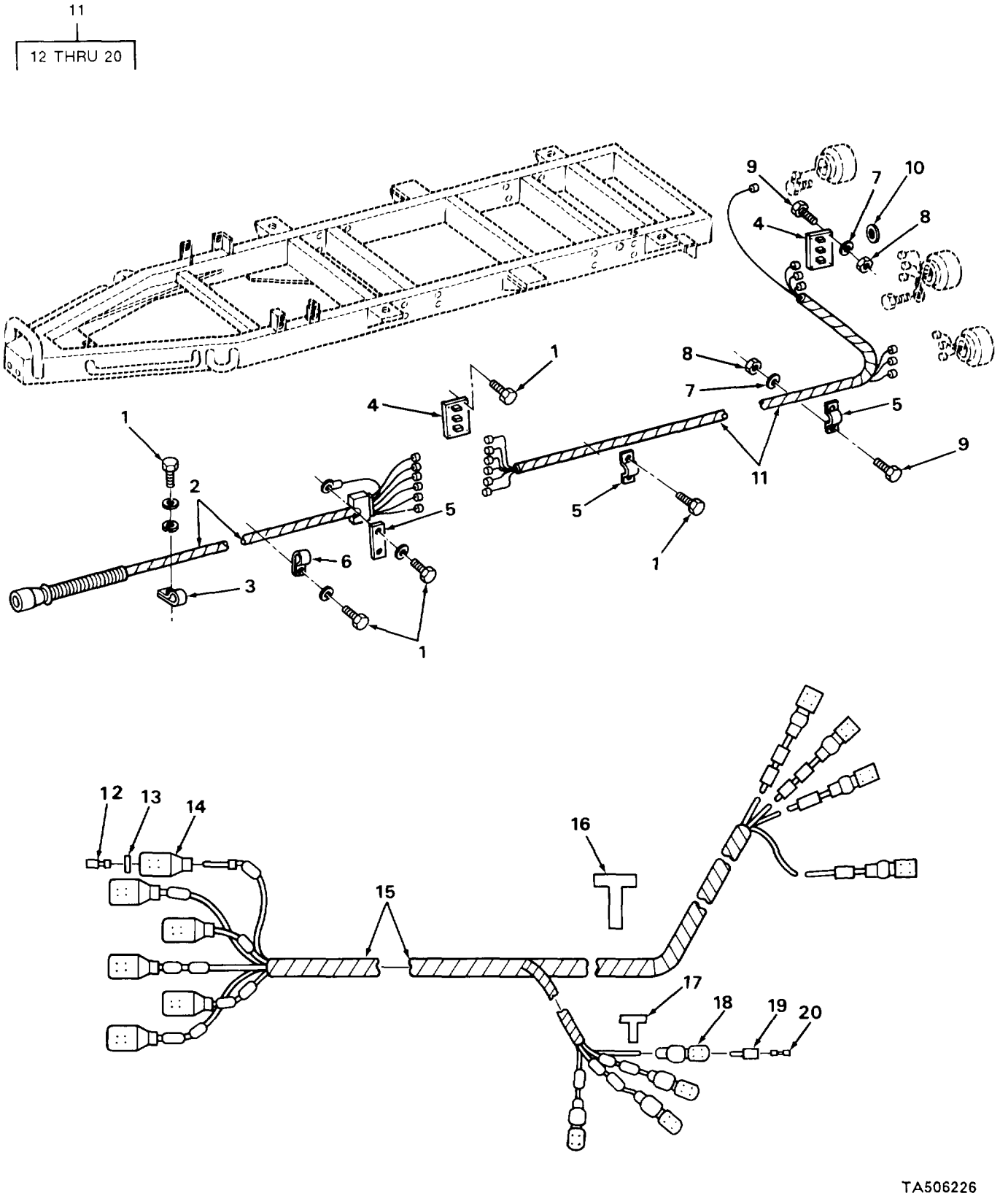

FIGURE 4. CHASSIS WIRING HARNESS (M149).

(1) ITEM NO	(2) SMR CODE	(3) CAGEC	(4) PART NUMBER	(5) DESCRIPTION AND USABLE ON CODES (UOC)	(6) QTY
				GROUP 0613 CHASSIS WIRING HARNESS	
				FIG. 4 CHASSIS WIRING HARNESS (M149)	
1	PAOZZ	21450	172439	SCREW,TAPPING,THREA UOC:292	18
2	PAOZZ	19207	7055100	CABLE ASSEMBLY POWE UOC:292	1
3	PAOZZ	96906	MS21333-43	CLAMP,LOOP UOC:292	1
4	PAOZZ	19207	8747908	CLIP ASSY,SPRING TE UOC:292	4
5	PAOZZ	19207	8724501	STRAP,TIEDOWN,ELECT UOC:292	V
6	PAOZZ	96906	MS21333-104	CLAMP LOOP UOC:292	1
7	PAOZZ	96906	MS27183-11	WASHER,FLAT UOC:292	5
8	XDOZZ	96906	MS35490-404	NUT,PLAIN,HEXAGON UOC:292	5
9	PAOZZ	96906	MS90725-5	SCREW,CAP,HEXAGON H UOC:292	5
10	PAOZZ	96906	MS35489-78	GROMMET,NONMETALLIC UOC:292	3
11	PAOOO	19207	7055112	WIRING HARNESS,BRAN UOC:292	1
12	PAOZZ	96906	MS27148-2	.CONTACT,ELECTRICAL UOC:292	6
13	PAOZZ	19207	8338567	.WASHER,SLOTTED UOC:292	6
14	PAOZZ	19207	8338566	.SHELL,ELECTRICAL CO UOC:292	6
15	MOOZZ	19207	M13486/1-5-1	.WIRE,ELECTRICAL MAKE FROM WIRE P/N M13486/1-5 UOC:292	V
16	PAOZZ	19207	7392224	.MARKER,CONDUIT UOC:292	1
17	PAOZZ	96906	MS39020-1	.BAND,MARKER UOC:292	21
18	PAOZZ	19207	8338561	.SHELL,ELECTRICAL CO UOC:292	7
19	PAOZZ	19207	8338562	.INSULATOR,BUSHING UOC:292	7
20	PAOZZ	19207	8338564	.TERMINAL ASSEMBLY UOC:292	7
				END OF FIGURE	

12

13 THRU 21

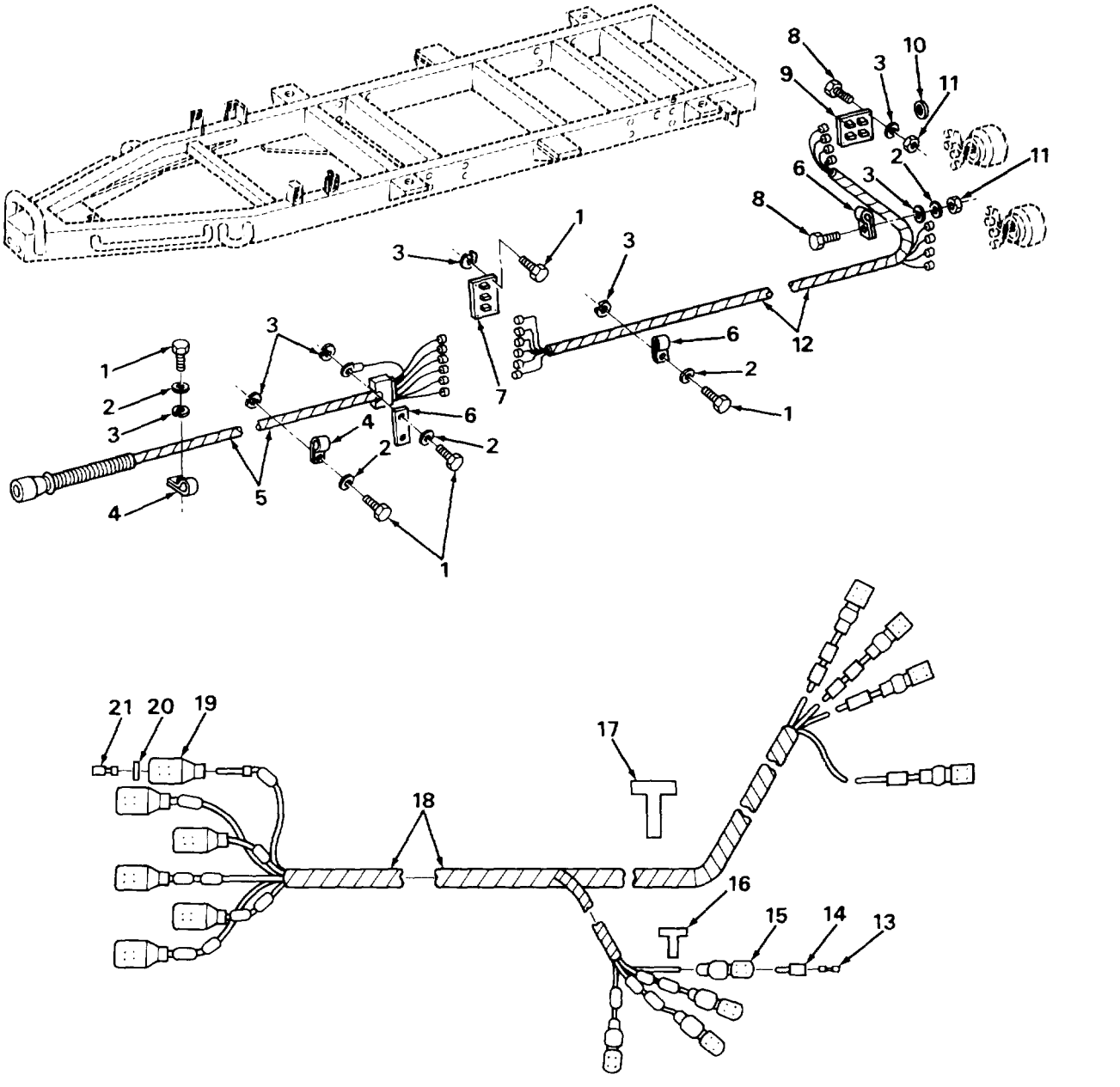

FIGURE 5. CHASSIS WIRING HARNESS (M149A1 AND M149A2).

(1) ITEM NO	(2) SMR CODE	(3) CAGEC	(4) PART NUMBER	(5) DESCRIPTION AND USABLE ON CODES (UOC)	(6) QTY
				GROUP 0613 CHASSIS WIRING HARNESS	
				FIG. 5 CHASSIS WIRING HARNESS (M149A1 AND M149A2)	
1	PAOZZ	96906	MS24629-58	SCREW,TAPPING,THREA UOC:STL,997	12
2	PAOZZ	96906	MS27183-11	WASHER,FLAT UOC:STL,997	14
3	PAOZZ	96906	MS35338-44	WASHER,LOCK UOC:STL,997	26
4	PAOZZ	96906	MS21333-104	CLAMP,LOOP UOC:STL,997	2
5	PAOOO	19207	7055100	CABLE ASSEMBLY,POWE UOC:STL,997	1
6	PAOZZ	19207	8724501	STRAP,TIEDOWN,ELECT UOC:STL,997	V
7	PAOZZ	19207	8747908	CLIP ASSY,SPRING,TE UOC:STL,997	2
8	PAOZZ	96906	MS90726-6	SCREW,CAP,HEXAGON H UOC:STL,997	14
9	PAOZZ	19207	10935126	BRACKET,MOUNTING UOC:STL,997	2
10	PAOZZ	96906	MS35489-78	GROMMET,NONMETALLIC UOC:STL,997	2
11	PAOZZ	96906	MS51968-2	NUT,PLAIN,HEXAGON UOC:STL,997	14
12	PAOOO	19207	11597762	WIRING HARNESS,BRAN UOC:STL,997	1
13	PAOZZ	19207	8338564	.TERMINAL ASSEMBLY UOC:STL,997	8
14	PAOZZ	19207	8338562	.INSULATOR,BUSHING UOC:STL,997	8
15	PAOZZ	19207	8338561	.SHELL,ELECTRICAL CO UOC:STL,997	8
16	PAOZZ	96906	MS39020-1	.BAND,MARKER UOC:STL,997	22
17	PAOZZ	96906	MS39020-2	.BAND,MARKER UOC:STL,997	1
18	MOOZZ	19207	M13486/1-5-2	.WIRE,ELECTRICAL MAKE FROM WIRE P/N M13486/1-5 UOC:STL,997	V
19	PAOZZ	19207	8338566	.SHELL,ELECTRICAL CO UOC:STL,997	6
20	PAOZZ	19207	8338567	.WASHER,SLOTTED UOC:STL,997	6
21	PAOZZ	96906	MS27148-2	.CONTACT,ELECTRICAL UOC:STL,997	6
				END OF FIGURE	

1

2 THRU 8

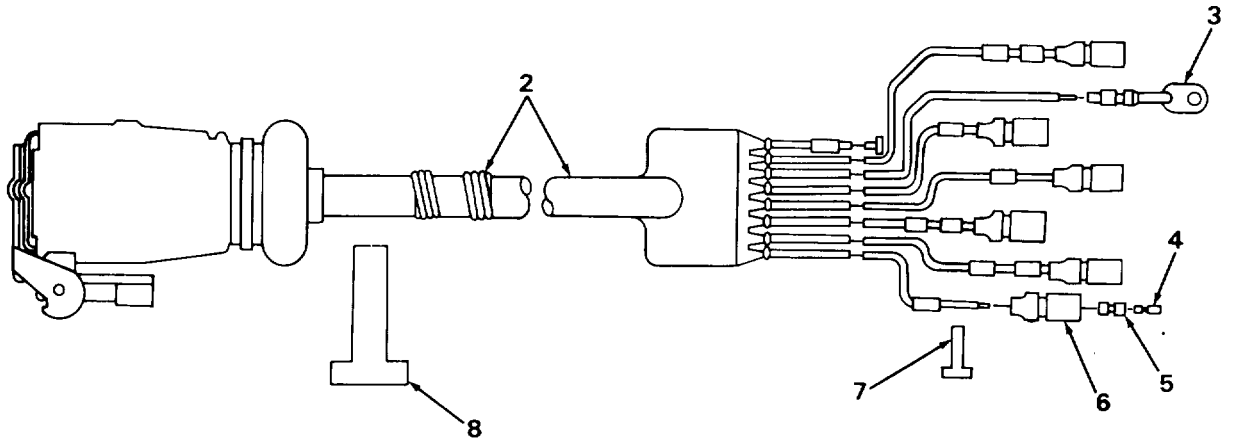

TA506228

FIGURE 6. INTERVEHICULAR CABLE (M149A1 AND M149A2).

(1) ITEM NO	(2) SMR CODE	(3) CAGEC	(4) PART NUMBER	(5) DESCRIPTION AND USABLE ON CODES (UOC)	(6) QTY
				GROUP 0613 CHASSIS WIRING HARNESS	
				FIG. 6 INTERVEHICULAR CABLE (M149A1 AND M149A2)	
1	PAOOO	19207	7055100	WIRING HARNESS UOC:STL,997	1
2	MOOZZ	19207	M13486/10-1-1	.CABLE,SPECIAL PURPO MAKE FROM WIRE P/N M13486/10-1 UOC:STL,997	V
3	PAOZZ	96906	MS25036-154	.TERMINAL,LUG UOC:STL,997	1
4	PAOZZ	19207	8338564	.TERMINAL ASSEMBLY UOC:STL,997	6
5	PAOZZ	19207	8338562	.INSULATOR,BUSHING UOC:STL,997	6
6	PAOZZ	19207	8338561	.SHELL,ELECTRICAL CO UOC:STL,997	6
7	PAOZZ	96906	MS39020-1	.BAND,MARKER UOC:STL,997	12
8	PAOZZ	81349	M43436/1-3	.BAND,MARKER UOC:STL,997	1
				END OF FIGURE	

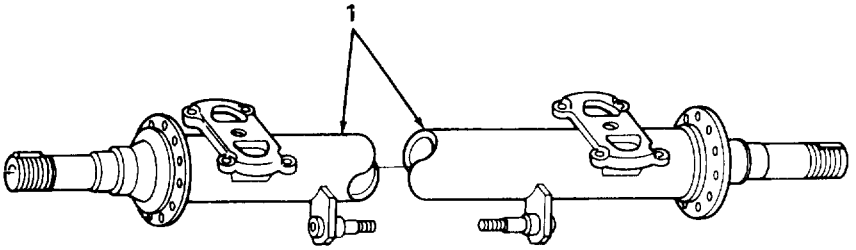

TA506229

FIGURE 7, REAR AXLE.

(1) ITEM NO	(2) SMR CODE	(3) CAGEC	(4) PART NUMBER	(5) DESCRIPTION AND USABLE ON CODES (UOC)	(6) QTY
				GROUP 11 REAR AXLE	
				GROUP 1100 REAR AXLE	
				FIG. 7 REAR AXLE	
1	PAOZZ	19207	7059176	AXLE,VEHICULAR,NOND	1
				END OF FIGURE	

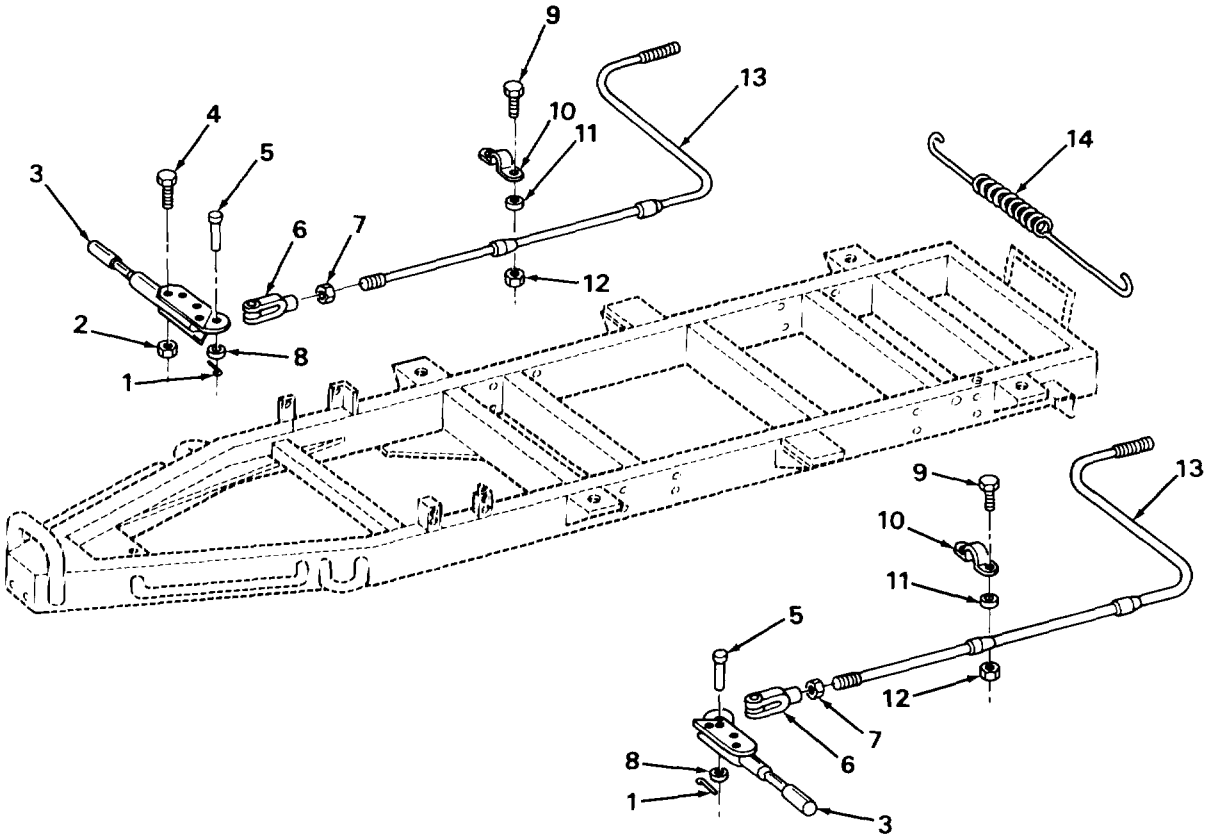

TA506230

FIGURE 8. HANDBRAKES, CONTROLS AND LINKAGE.

(1) ITEM NO	(2) SMR CODE	(3) CAGEC	(4) PART NUMBER	(5) DESCRIPTION AND USABLE ON CODES (UOC)	(6) QTY
				GROUP 12 BRAKES	
				GROUP 1201 HANDBRAKES	
				FIG. 8 HANDBRAKES, CONTROLS AND LINKAGE	
1	PAOZZ	96906	MS24665-283	PIN,COTTER	2
2	PAOZZ	96906	MS51922-17	NUT,SELF-LOCKING,HE	6
3	PAOZZ	19207	7392815	LEVER ASSY,PACKING	2
4	PAOZZ	96906	MS90728-67	SCREW,CAP,HEXAGON H	6
5	PAOZZ	96906	MS35810-4	PIN,STRAIGHT,HEADED	2
6	PAOZZ	96906	MS35812-4	CLEVIS,ROD END	2
7	PAOZZ	96906	MS35691-21	NUT,PLAIN,HEXAGON	2
8	PAOZZ	96906	MS35338-46	WASHER,LOCK	2
9	PAOZZ	96906	MS90727-32	BOLT,MACHINE	4
10	PAOZZ	19207	5303461	BRACKET,BRAKE CABLE	2
11	PAOZZ	96906	MS35338-45	WASHER,LOCK	4
12	PAOZZ	96906	MS51968-5	NUT,PLAIN,HEXAGON	4
13	PAOZZ	96906	MS53060-6	CABLE ASSEMBLY,PARK	2
14	PAOZZ	19207	11597761	SPRING,HELICAL,EXTE	1
				END OF FIGURE	

21
22 THRU 28

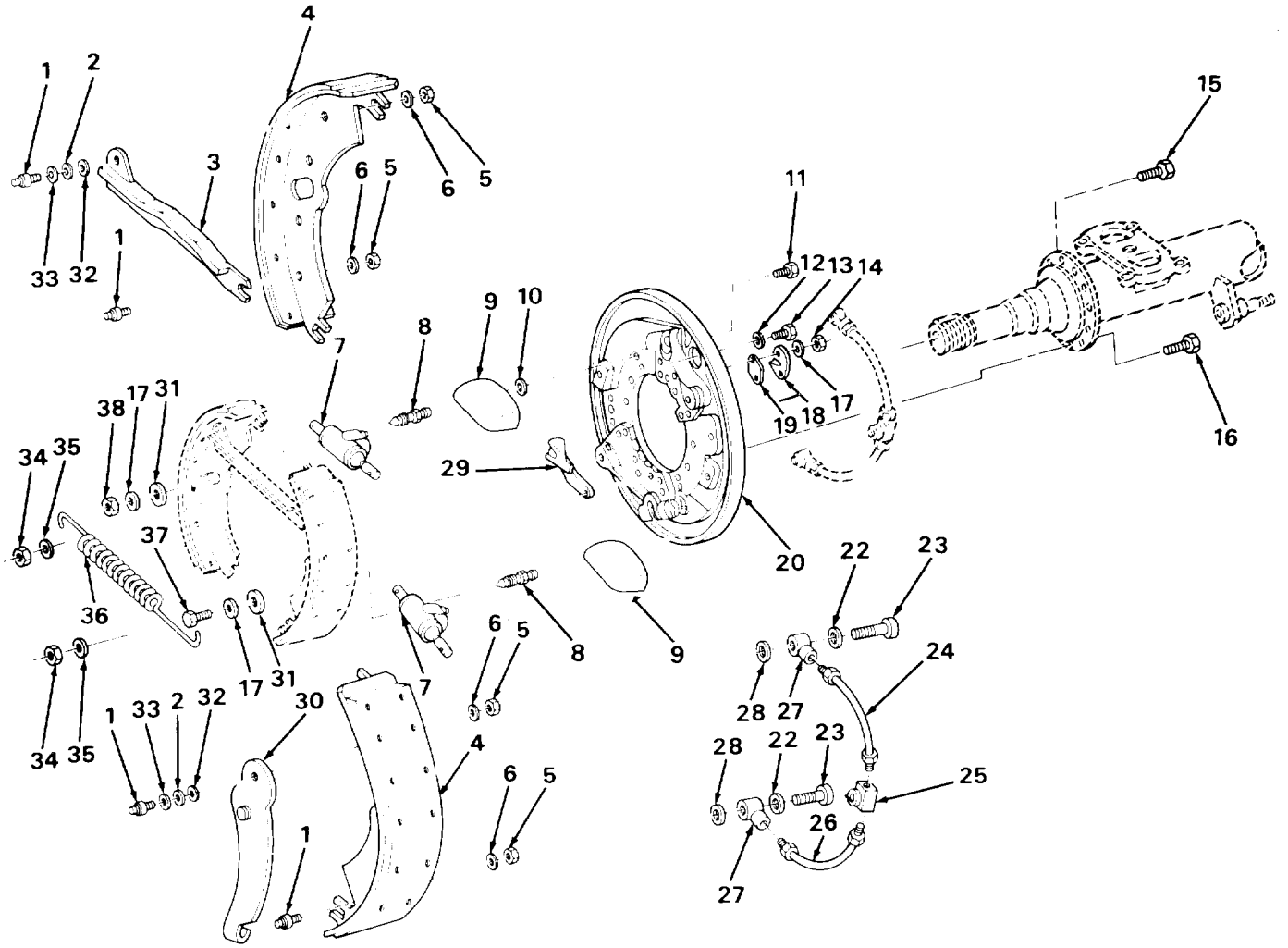

FIGURE 9. SERVICE BRAKES.

(1) ITEM NO	(2) SMR CODE	(3) CAGEC	(4) PART NUMBER	(5) DESCRIPTION AND USABLE ON CODES (UOC)	(6) QTY
				GROUP 1202 SERVICE BRAKES	
				FIG. 9 SERVICE BRAKES	
1	PAOZZ	19207	8733938	PIN,SERVICE BRAKE	8
2	PAOZZ	19207	8733936	WASHER,FLAT	4
3	PAOZZ	19207	8733926	CONNECTING LINK,RIG LEFT HAND	1
3	PAOZZ	19207	8733927	LINK EMERGENCY BRAK RIGHT HAND	1
4	PAOZZ	19207	7064978	BRAKE SHOE	4
5	PAOZZ	96906	MS35335-36	WASHER,LOCK	8
6	PAOZZ	96906	MS51970-4	NUT,PLAIN,HEXAGON	8
7	PAOZZ	19207	7412065	CYLINDER ASSEMBLY,H	4
8	PAOZZ	19207	7373260	BLEEDER VALVE,HYDRA	2
9	PAOZZ	19207	7412068	SHIELD,BRAKE DISK L.H. SIDE	2
9	PAOZZ	19207	7412050	SHIELD,BRAKE DISK R.H. SIDE	2
10	PAOZZ	19207	7412103	SPACER,SLEEVE	2
11	PAOZZ	19207	7411760	BOLT,SQUARE NECK	1
12	PAOZZ	96906	MS35338-45	WASHER,LOCK	4
13	PAOZZ	96906	MS90725-31	BOLT,MACHINE	4
14	PAOZZ	96906	MS51967-2	NUT,PLAIN,HEXAGON	4
15	PAOZZ	96906	MS90726-64	SCREW,CAP,HEXAGON H	16
16	PAOZZ	96906	MS90726-60	SCREW,CAP,HEXAGON H	8
17	PAOZZ	96906	MS35338-44	WASHER,LOCK	4
18	PAOZZ	19207	8733890	BRACKET,LEFT HAND	1
18	PAOZZ	19207	8733891	BRACKET,RIGHT HAND	1
19	PAOZZ	19207	8735729	COVER,ACCESS	2
20	PAOZZ	19207	8733901	PLATE,BACKING,BRAKE LEFT HAND	1
20	PAOZZ	19207	8733902	PLATE,BACKING,BRAKE RIGHT HAND	1
21	PAOOO	19207	8733898	TUBE ASSEMBLY,METAL LEFT HAND	1
21	PAOOO	19207	8733899	TUBE ASSEMBLY,METAL RIGHT HAND	1
22	PAOZZ	19207	5298653	.SPACER,RING	2
23	PAOZZ	19207	7412079	.BOLT,FLUID PASSAGE	2
24	PAOZZ	19207	8733920	.TUBE ASSEMBLY,METAL LEFT HAND	1
24	PAOZZ	19207	8733916	.TUBE ASSEMBLY,METAL RIGHT HAND	1
25	PAOZZ	19207	7411903	.CONNECTOR,MULTIPLE	1
26	PAOZZ	19207	8733922	.TUBE ASSEMBLY,METAL LEFT HAND	1
26	PAOZZ	19207	8733918	.TUBE ASSEMBLY,METAL RIGHT HAND	1
27	PAOZZ	19207	7745464	.TEE,TUBE	2
28	PAOZZ	19207	7412088	.WASHER,SHOULDERED A	2
29	PAOZZ	19207	8733892	RAMP,CABLE LEFT HAND	1
29	PAOZZ	21450	8733893	RAMP,BRAKE CABLE RIGHT HAND	1
30	PAOZZ	19207	8733911	LEVER,LEFT HAND BRA	1
30	PAOZZ	19207	8733912	LEVER,RIGHT HAND BR	1
31	PAOZZ	19207	5323088	WASHER,FLAT	2
32	PAOZZ	19207	8733935	WASHER,SPRING TENSI	4
33	PAOZZ	19207	8733937	WASHER,SLOTTED	4
34	PAOZZ	96906	MS51968-8	NUT,PLAIN,HEXAGON	24
35	PAOZZ	96906	MS35335-35	WASHER,LOCK	24
36	PAOZZ	19207	8720515	SPRING,HELICAL,EXTE	2
37	PAOZZ	96906	MS90727-8	SCREW,CAP,HEXAGON H	1
38	PAOZZ	96906	MS51970-1	NUT,PLAIN,HEXAGON	1
				END OF FIGURE	

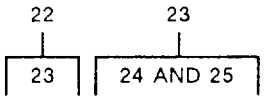

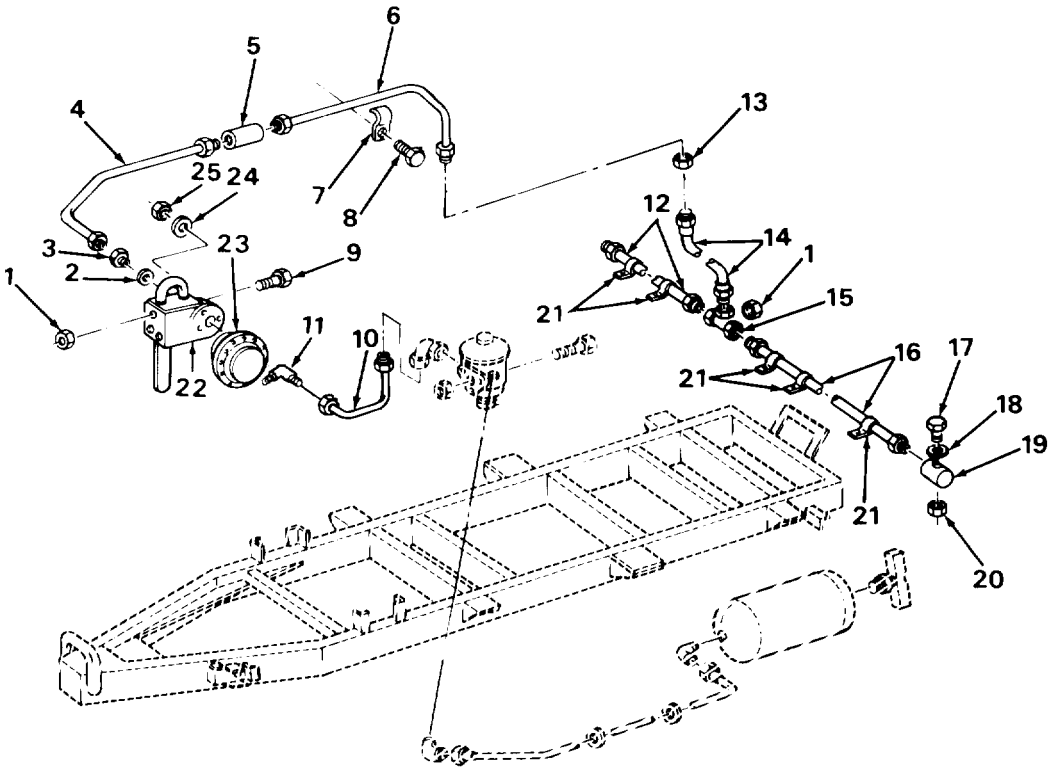

TA506232

FIGURE 10. HYDRAULIC LINES AND FITTINGS (M149).

(1) ITEM NO	(2) SMR CODE	(3) CAGEC	(4) PART NUMBER	(5) DESCRIPTION AND USABLE ON CODES (UOC)	(6) QTY
				GROUP 1204 HYDRAULIC BRAKE SYSTEM	
				FIG. 10 HYDRAULIC LINES AND FITTINGS (M149)	
1	PAOZZ	96906	MS51922-21	NUT,SELF-LOCKING,HE UOC:292	1
2	PAOZZ	19207	5160323	WASHER,FLAT UOC:292	1
3	PAOZZ	63477	FC2832	ADAPTER,MASTER CYLI UOC:292	1
4	MOOZZ	19207	12296591	TUBE ASSEMBLY (22.75" LG.) MAKE FROM P/N MIL-T-3520 UOC:292	1
5	XDOZZ	19207	9018094	UNION UOC:292	1
6	MOOZZ	19207	12296592	TUBE ASSEMBLY (27.30" LG.) MAKE FROM P/N MIL-T-3520 UOC:292	1
7	PAOZZ	96906	MS21333-98	CLAMP,LOOP UOC:292	2
8	PAOZZ	21450	172439	SCREW,TAPPING,THREA UOC:292	2
9	PAOZZ	96906	MS90727-62	SCREW,CAP,HEXAGON H UOC:292	3
10	MOOZZ	19207	10929810	TUBE (6.0" LG.) MAKE FROM P/N MS14300AAB UOC:292	1
11	PAOZZ	81343	6-4 120202BA(LONG NUT)	ELBOW,PIPE TO TUBE UOC:292	2
12	PAOZZ	19207	7058998	TUBE ASSEMBLY,METAL UOC:292	1
13	PAOZZ	96906	MS35691-1022	NUT,PLAIN,HEXAGON UOC:292	1
14	PAOZZ	63477	F6222	HOSE ASSEMBLY,NONME UOC:292	1
15	PAOZZ	19207	7745464	TEE,TUBE UOC:292	1
16	PAOZZ	19207	7058999	TUBE ASSEMBLY,METAL UOC:292	1
17	PAOZZ	19207	7412079	BOLT,FLUID PASSAGE UOC:292	2
18	PAOZZ	19207	5298653	SPACER,RING UOC:292	2
19	PAOZZ	19207	5167679	CONNECTOR,MULTIPLE, UOC:292	2
20	PAOZZ	19207	7412088	WASHER,SHOULDERED A UOC:292	2
21	XDOZZ	19207	8365413	CLIP UOC:292	5
22	PAOFF	23703	A298318	CYLINDER ASSY WBOOS UOC:292	1

(1) ITEM NO	(2) SMR CODE	(3) CAGEC	(4) PART NUMBER	(5) DESCRIPTION AND USABLE ON CODES (UOC)	(6) QTY
23	PAOOO	40342	GN20069	.CHAMBER,AIR BRAKE UOC:292	1
24	PAOZZ	96906	MS35338-46	..WASHER,LOCK UOC:292	3
25	PAOZZ	24617	9411382	..NUT,PLAIN HEXAGON UOC:292	3

END OF FIGURE

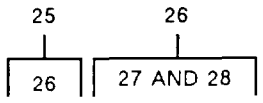

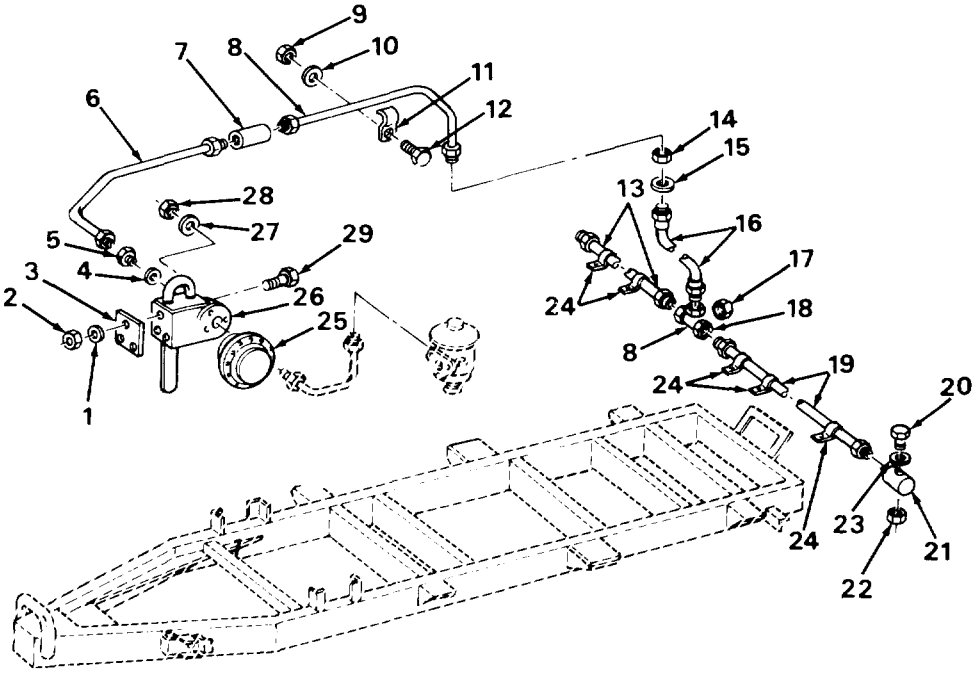

TA506233

FIGURE 11. HYDRAULIC LINES AND FITTINGS (M149A1 AND M149A2).

(1) ITEM NO	(2) SMR CODE	(3) CAGEC	(4) PART NUMBER	(5) DESCRIPTION AND USABLE ON CODES (UOC)	(6) QTY
				GROUP 1204 HYDRAULIC BRAKE SYSTEM	
				FIG. 11 HYDRAULIC LINES AND FITTINGS (M149A1 AND M149A2)	
1	PAOZZ	96906	MS35338-46	WASHER,LOCK UOC:STL,997	6
2	PAOZZ	96906	MS51968-8	NUT,PLAIN,HEXAGON UOC:STL,997	3
3	XBOZZ	19207	11625093	BRACKET UOC:STL,997	1
4	PAOZZ	19207	5160323	WASHER,FLAT UOC:STL,997	1
5	PAOZZ	63477	FC2832	ADAPTER,MASTER CYLI UOC:STL,997	1
6	MOOZZ	19207	12296591	TUBE ASSEMBLY (22.75" LG.) MAKE FROM P/N MIL-T-3520 UOC:STL,997	1
7	XDOZZ	19207	9018094	UNION UOC:STL,997	1
8	MOOZZ	19207	12296592	TUBE ASSEMBLY (27.30" LG.) MAKE FROM P/N MIL-T-3520 UOC:STL,997	1
9	PAOZZ	96906	MS51968-2	NUT,PLAIN,HEXAGON UOC:STL,997	3
10	PAOZZ	96906	MS35338-44	WASHER,LOCK UOC:STL,997	3
11	PAOZZ	96906	MS21333-98	CLAMP,LOOP UOC:STL,997	3
12	PAOZZ	96906	MS90726-6	SCREW,CAP,HEXAGON H UOC:STL,997	3
13	PAOZZ	19207	7058998	TUBE ASSEMBLY,METAL UOC:STL,997	1
14	PAOZZ	96906,	MS35691-53	NUT,PLAIN,HEXAGON UOC:STL,997	1
15	PAOZZ	96906	MS35333-46	WASHER,LOCK UOC:STL,997	1
16	PAOZZ	63477	F6222	HOSE ASSEMBLY,NONME UOC:STL,997	1
17	PAOZZ	96906	MS51922-21	NUT,SELF-LOCKING,HE UOC:STL,997	1
18	PAOZZ	19207	7745464	TEE,TUBE UOC:STL,997	1
19	PAOZZ	19207	7058999	TUBE ASSEMBLY,METAL UOC:STL,997	1
20	PAOZZ	19207	7412079	BOLT,FLUID PASSAGE UOC:STL,997	2
21	PAOZZ	19207	5167679	CONNECTOR,MULTIPLE, UOC:STL,997	2
22	PAOZZ	19207	7412088	WASHER,SHOULDERED A UOC:STL,997	2
23	PAOZZ	19207	5298653	SPACER,RING	2

(1) ITEM NO	(2) SMR CODE	(3) CAGEC	(4) PART NUMBER	(5) DESCRIPTION AND USABLE ON CODES (UOC)	(6) QTY
				UOC:STL,997	
24	XDOZZ	19207	8365413	CLIP	5
				UOC:STL,997	
25	PAOFF	23703	A298318	CYLINDER ASSY WBOOS	1
				UOC:STL,997	
26	PAOOO	40342	GN20069	.CHAMBER AIR BRAKE	1
				UOC:STL,997	
27	PAOZZ	96906	MS35338-46	..WASHER,LOCK	3
				UOC:STL,997	
28	PAOZZ	24617	9411382	..NUT,PLAIN HEXAGON	3
				UOC:STL,997	
29	PAOZZ	96906	MS90726-62	SCREW,CAP,HEXAGON H	3
				UOC:STL,997	

END OF FIGURE

7
8 AND 9

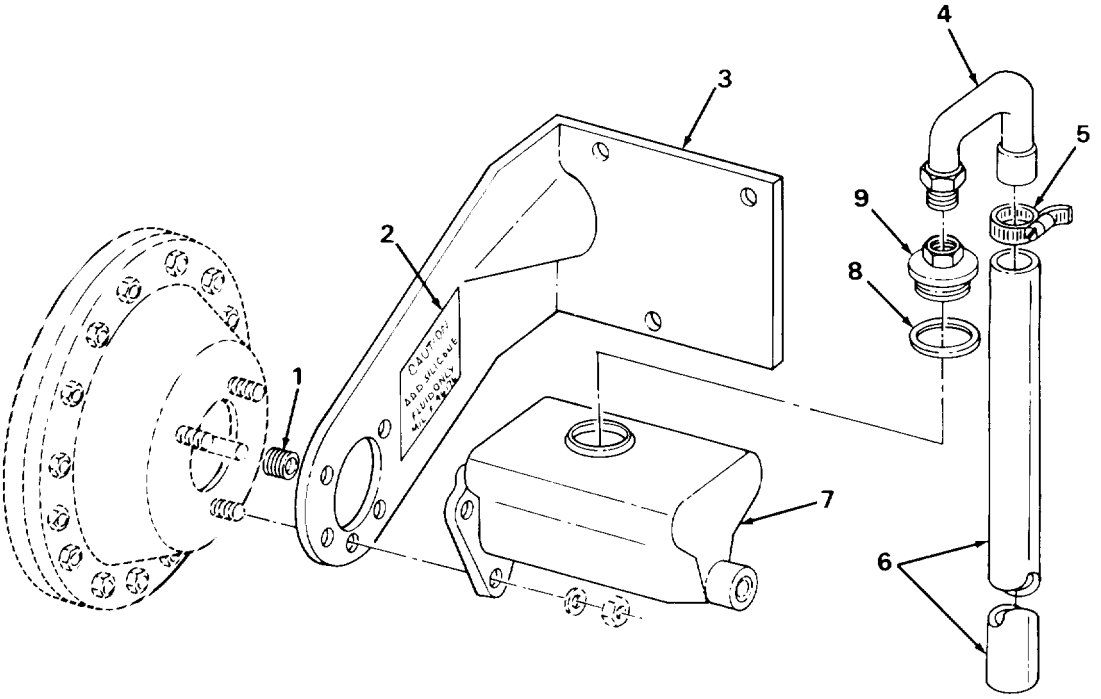

TA506234

FIGURE 12. BRAKE CHAMBER AND MASTER CYLINDER ASSEMBLY.

(1) ITEM NO	(2) SMR CODE	(3) CAGEC	(4) PART NUMBER	(5) DESCRIPTION AND USABLE ON CODES (UOC)	(6) QTY
				GROUP 1204 HYDRAULIC BRAKE SYSTEM	
				FIG. 12 BRAKE CHAMBER AND MASTER CYLINDER ASSEMBLY	
1	PAOZZ	19207	8365427	COLLAR,AIR CHAMBER	1
2	PAOZZ	19207	12302516	PLATE IDENTIFICATIO	1
3	PAOZZ	19207	8357982	BRACKET,ANGLE	1
4	PAOZZ	19207	8365426	TUBE ASSEMBLY,METAL	1
5	PAOZZ	96906	MS35842-12	CLAMP,HOSE	1
6	PAOZZ	96906	MS521301A204120	HOSE,NONMETALLIC	1
7	PAOOO	19207	8357980	CYLINDER ASSEMBLY,H	1
8	PAOZZ	19207	7373354	.SPACER,RING	1
9	PAOZZ	63477	7979691	.CAP,FILLER OPENING	1
				END OF FIGURE	

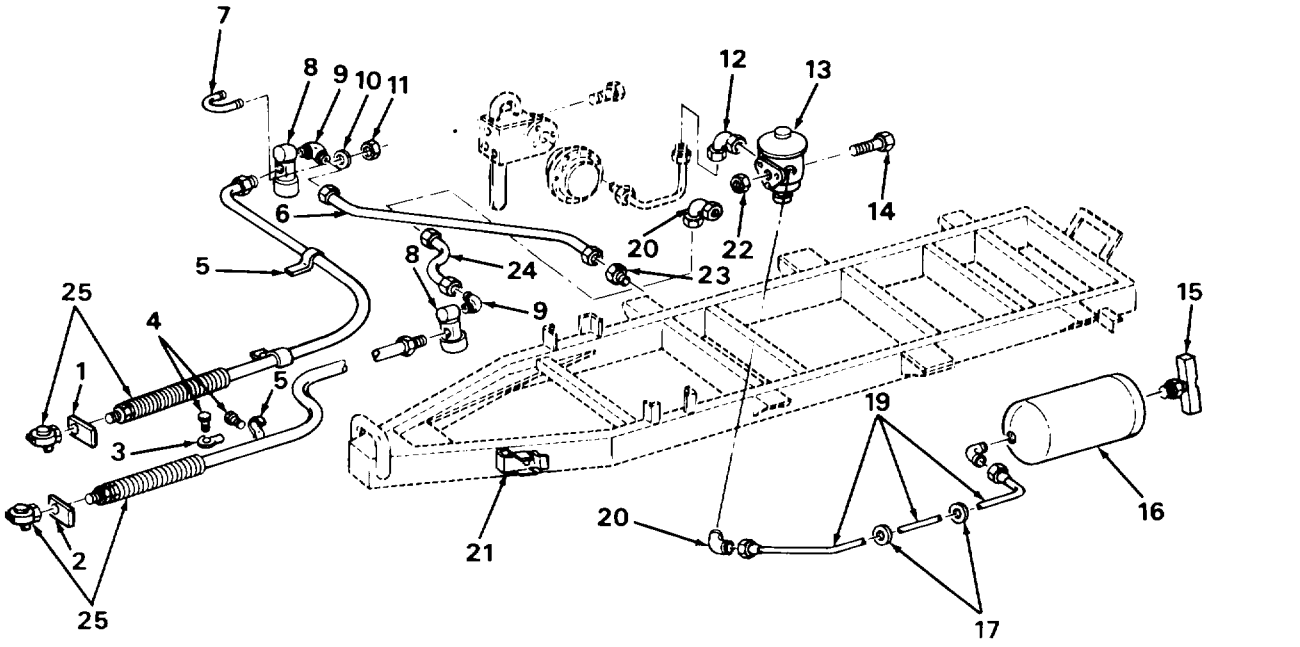

TA506235

FIGURE 13. AIRBRAKE SYSTEM (M149) .

(1) ITEM NO	(2) SMR CODE	(3) CAGEC	(4) PART NUMBER	(5) DESCRIPTION AND USABLE ON CODES (UOC)	(6) QTY
				GROUP 1208 AIRBRAKE SYSTEM	
				FIG. 13 AIRBRAKE SYSTEM (M 149)	
1	PAOZZ	96906	MS53007-1	PLATE,IDENTIFCATIO UOC:292	1
2	PAOZZ	96906	MS53007-2	PLATE,IDENTIFICATIO UOC:292	1
3	PAOZZ	19207	8331537	STRAP,RETAINING UOC:292	2
4	PAOZZ	21450	172439	SCREW,TAPPING,THREA UOC:292	5
5	PAOZZ	19207	8331536	STRAP,RETAINING UOC:292	3
6	MOOZZ	19207	10929850	TUBE ASSEMBLY (13.875" LG.) MAKE FROM P/N MS14300 AAB UOC:292	1
7	PAOZZ	19207	7979296	BOLT,U UOC:292	2
8	PAOOO	19207	7411022	AIR FILTER,BRAKE LI UOC:292	2
9	PAOZZ	81343	6-4 120202BA(LON G NUT)	ELBOW,PIPE TO TUBE UOC:292	1
10	PAOZZ	96906	MS35337-25	WASHER,LOCK UOC:292	4
11	PAOZZ	96906	MS35690-405	NUT,PLAIN,HEXAGON UOC:292	4
12	PAOZZ	81343	6-4 120202BA(LON G NUT)	ELBOW,PIPE TO TUBE UOC:292	1
13	PAOZZ	96906	MS53004-2	PARTS KIT,RELAY VAL UOC:292	1
14	PAOZZ	96906	MS35298-60	SCREW,CAP,HEXAGON H UOC:292	3
15	PAOZZ	96906	MS35782-5	COCK,DRAIN UOC:292	1
16	PAOZZ	19207	7411078	RESERVOIR AIR UOC:292	1
17	PAOZZ	96906	MS35489-78	GROMMET,NONMETALLIC UOC:292	2
18	PAOZZ	96906	MS39182-6	ELBOW,PIPE TO TUBE UOC:292	1
19	MOOZZ	19207	10944275	TUBE ASSEMBLY (29.19" LG.) MAKE FROM P/N WW-T-779 UOC:292	1
20	PAOZZ	96906	MS39182-5	ELBOW,PIPE TO TUBE UOC:292	2
21	PAOZZ	19207	8331782	BRACKET,MOUNTING UOC:292	2
22	PAOZZ	96906	MS51922-21	NUT,SELF-LOCKING,HE UOC:292	3
23	PAOZZ	81343	6-4 120102BA	ADAPTER,STRAIGHT,PI UOC:292	1

(1) ITEM NO	(2) SMR CODE	(3) CAGEC	(4) PART NUMBER	(5) DESCRIPTION AND USABLE ON CODES (UOC)	(6) QTY
24	MOOZZ	19207	10944276	TUBE ASSEMBLY (8.03125" LG.) MAKE FROM P/N MS14300 AAB UOC:292	1
25	PFOOO	19207	8718996	HOSE ASSEMBLY,NONME UOC:292	2

END OF FIGURE

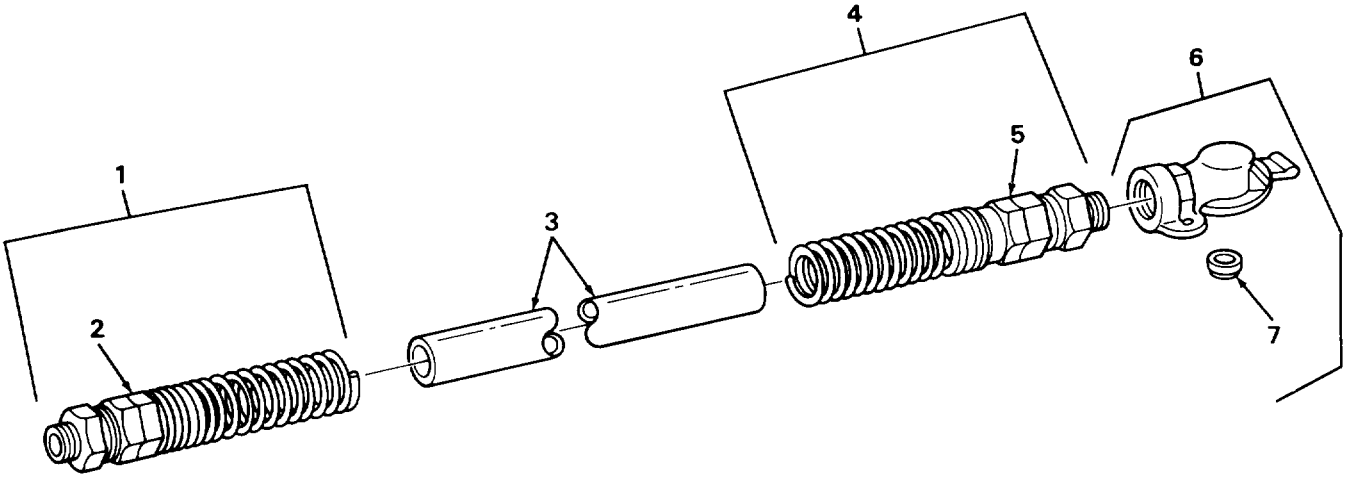

TA506236

FIGURE 14. GLADHAND/AIR HOSE ASSEMBLY COMPONENTS (M149).

(1) ITEM NO	(2) SMR CODE	(3) CAGEC	(4) PART NUMBER	(5) DESCRIPTION AND USABLE ON CODES (UOC)	(6) QTY
				GROUP 1208 AIRBRAKE SYSTEM	
				FIG. 14 GLADHAND/AIR HOSE ASSEMBLY COMPONENTS (M149)	
1	PAOZZ	79470	MS39133-1	.ADAPTER STRAIGHT,PI UOC:292	1
2	XDOZZ	19207	MS39136-1B	..SLEEVE,COMPRESSION UOC:292	1
3	MOOZZ	19207	11625142-1-110	.HOSE,RUBBER (110.00" LG. IS MEASURED FROM CENTER OF COUPLING TO OTHER END ADAPTER. MAKE FROM HOSE P/N MIL-H-3992) UOC:292	1
3	MOOZZ	19207	11625142-2-128	.HOSE,RUBBER 128.00" LG. IS MEASURED FORM CENTER OF COUPLING TO OTHER END ADAPTER. MAKE FROM HOSE P/N MIL-H-3992) UOC:292	1
4	PAOZZ	79470	MS39133-2B	.ADAPTER STRAIGHT,PI UOC:292	1
5	XDOZZ	19207	MS39136-1B	..SLEEVE,COMPRESSION UOC:292	1
6	PAOZZ	96906	MS35746-1	.COUPLING HALF,QUICK UOC:292	1
7	PAOZZ	96906	MS35748-1	.PACKING,PREFORMED UOC:292	1
				END OF FIGURE	

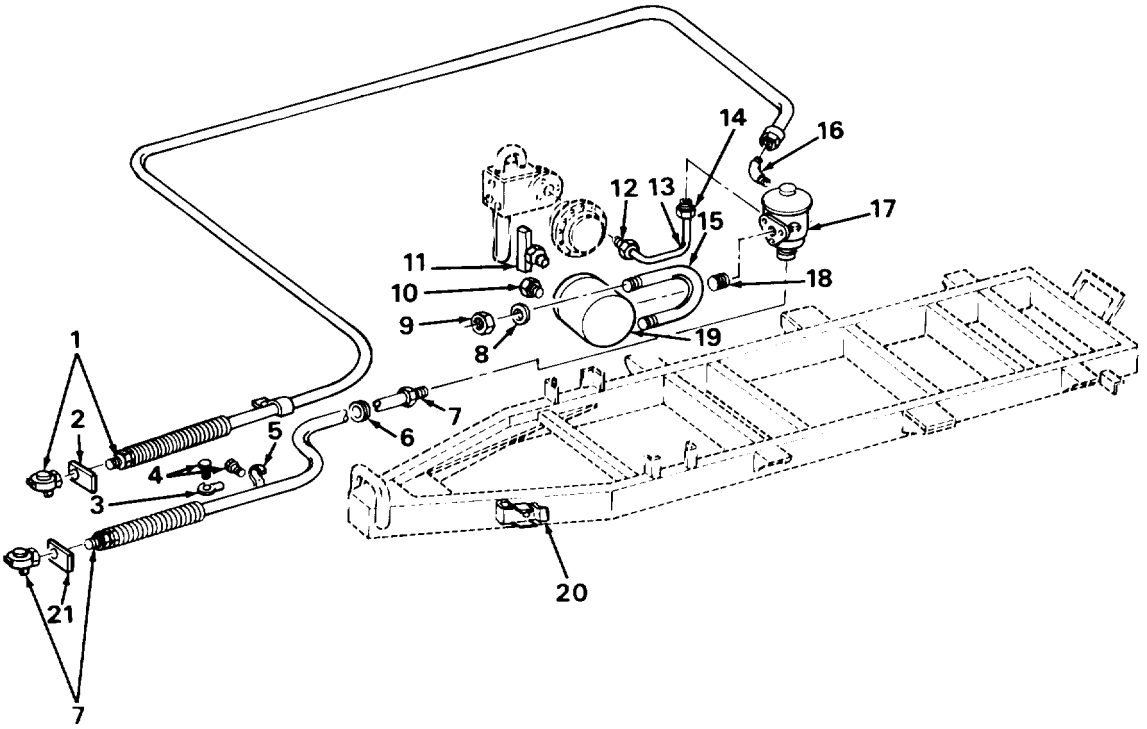

FIGURE 15. AIRBRAKE SYSTEM (M149A1 AND M149A2).

(1) ITEM NO	(2) SMR CODE	(3) CAGEC	(4) PART NUMBER	(5) DESCRIPTION AND USABLE ON CODES (UOC)	(6) QTY
				GROUP 1208 AIRBRAKE SYSTEM	
				FIG. 15 AIRBRAKE SYSTEM (M 149A1 AND M149A2)	
1	PAOZZ	19207	11625142-2	HOSE ASSEMBLY,NONME RIGHT HAND UOC:STL,997	1
2	PAOZZ	96906	MS53007-1	PLATE,IDENTIFICATIO UOC:STL,997	1
3	PAOZZ	19207	8331537	STRAP,RETAINING UOC:STL,997	2
4	PAOZZ	96906	MS24629-58	SCREW,TAPPING,THREA UOC:STL,997	7
5	PAOZZ	19207	8331536	STRAP,RETAINING UOC:STL,997	5
6	PAOZZ	96906	MS35489-81	GROMMET,NONMETALLIC UOC:STL,997	1
7	PAOZZ	19207	11625142-1	HOSE ASSEMBLY,NONME LEFT HAND UOC:STL,997	1
8	PAOZZ	96906	MS35338-45	WASHER,LOCK UOC:STL,997	4
9	PAOZZ	96906	MS51968-5	NUT,PLAIN,HEXAGON UOC:STL,997	4
10	PAOZZ	96906	MS49005-6	PLUG,PIPE UOC:STL997	1
11	PAOZZ	96906	MS35782-5	COCK,DRAIN UOC:STL,997	1
12	PAOZZ	81343	6-4 120202BA(LONG NUT)	ELBOW,PIPE TO TUBE UOC:STL,997	1
13	PAOZZ	19207	11625109	TUBE,BENT,METALLIC UOC:STL,997	1
14	PAOZZ	81343	6-4 120102BA	ADAPTER,STRAIGNT,PI UOC:STL,997	1
15	PAOZZ	19207	11625105	BOLT U UOC:STL,997	2
16	PAOZZ	96906	MS39231-2	ELBOW,PIPE UOC:STL,997	1
17	PAOFF	96906	MS53004-2	PARTS KIT,RELAY VAL UOC:STL,997	1
18	PAOZZ	96906	MS51953-97	NIPPLE,PIPE UOC:STL,997	1
19	PAOZZ	19207	11625104	TANK,PRESSURE UOC:STL,997	1
20	PAOZZ	19207	8331782	BRACKET,MOUNTING UOC:STL,997	2
21	PAOZZ	96906	MS53007-2	PLATE,IDENTIFICATIO UOC:STL,997	1
				END OF FIGURE	

2 THRU 8

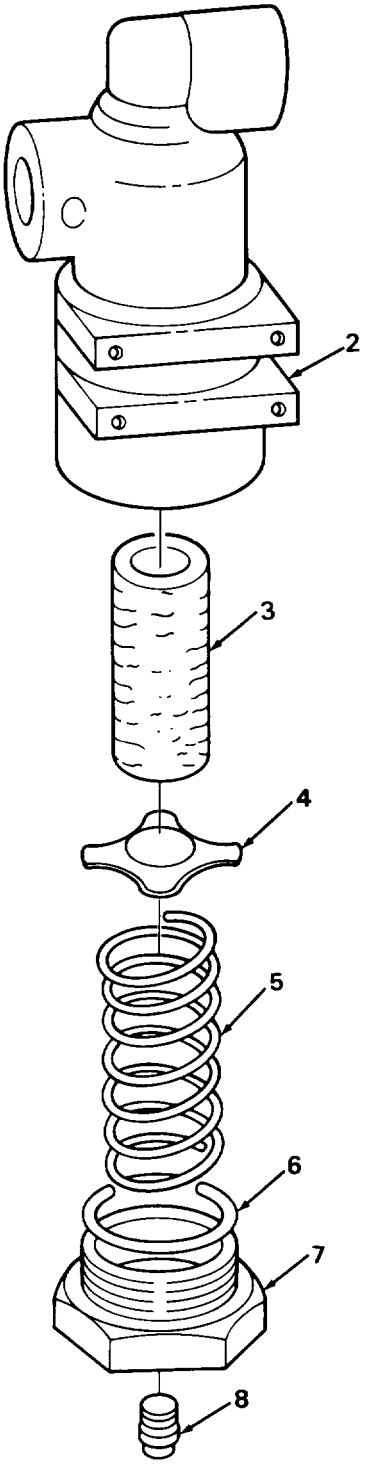

TA506238

FIGURE 16. AIRLINE FILTER ASSEMBLY.

(1) ITEM NO	(2) SMR CODE	(3) CAGEC	(4) PART NUMBER	(5) DESCRIPTION AND USABLE ON CODES (UOC)	(6) QTY
				GROUP 1208 AIRBRAKE SYSTEM	
				FIG. 16 AIR LINE FILTER ASSEMBLY	
1	PAOOO	19207	7411022	AIR FILTER,BRAKE LI UOC:292	1
2	PAOZZ	19207	7415748	.ELBOW BODY,AIR LINE UOC:292	1
3	PAOZZ	19207	7411081	.FILTER ELEMENT,FLUI UOC:292	1
4	PAOZZ	19207	7979614	.WASHER,SPRING TENSI UOC:292	1
5	PAOZZ	19207	7979612	.SPRING,HELEICAL,COMP UOC:292	1
6	PAOZZ	19207	8329823	.GASKET UOC:292	1
7	PAOZZ	19207	7979613	.ADAPTER BUSHING UOC:292	1
8	PAOZZ	96906	MS20913-1S	.PLUG,PIPE UOC:292	1
				END OF FIGURE	

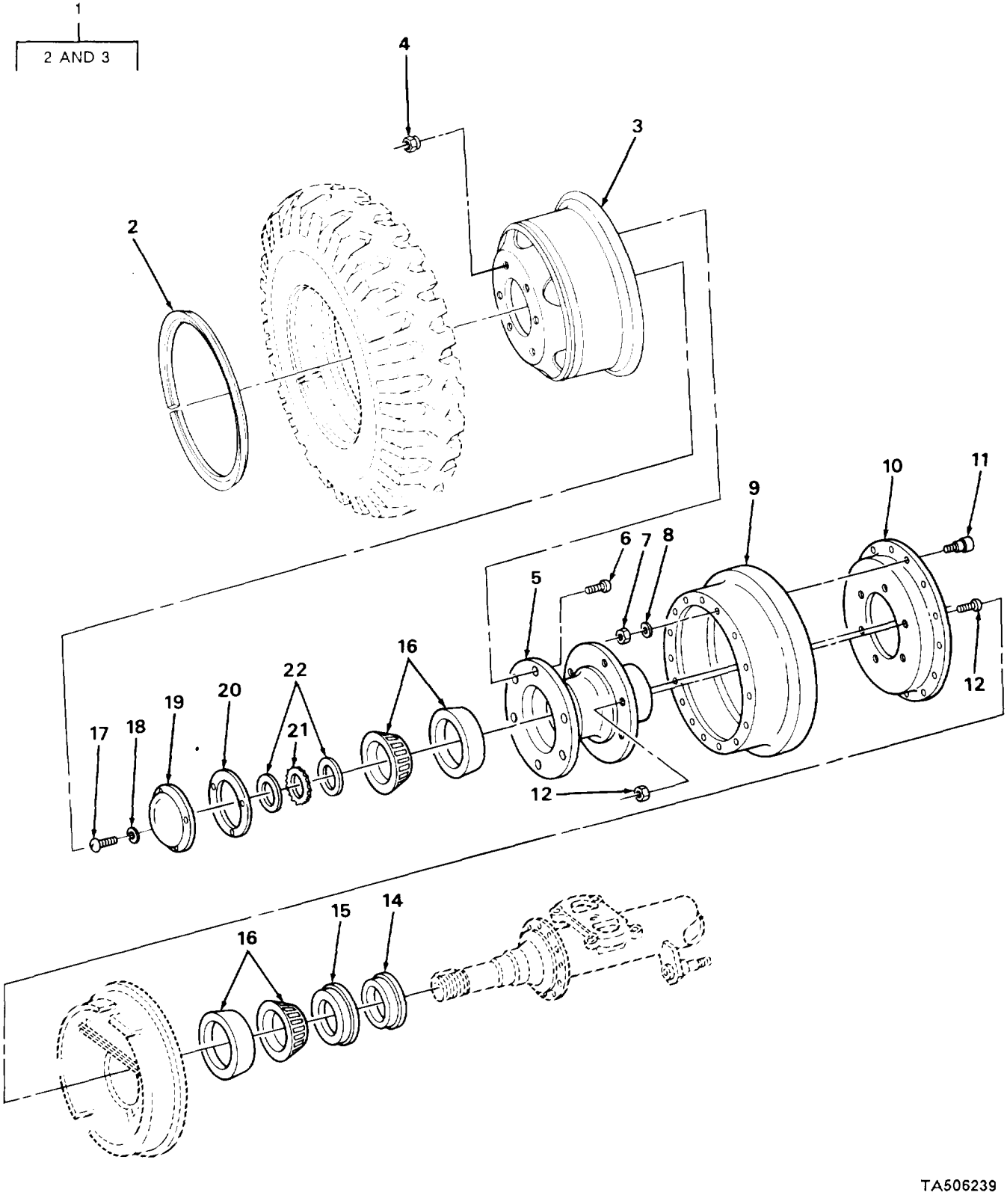

FIGURE 17. WHEEL ASSEMBLY AND HUB COMPONENTS.

(1) ITEM NO	(2) SMR CODE	(3) CAGEC	(4) PART NUMBER	(5) DESCRIPTION AND USABLE ON CODES (UOC)	(6) QTY
				GROUP 13 WHEELS	
				GROUP 1311 WHEEL ASSEMBLY	
				FIG. 17 WHEEL ASSEMBLY AND HUB COMPONENTS	
1	AOOOO	96906	MS53044-5	WHEEL,PNEUMATIC TIR UOC:292,997	2
2	PAOZZ	19207	7389061	.RING,SIDE,AUTOMOTIV WHEEL	1
3	XAOZZ	19207	7389620	.WHEEL,PNEUMATIC TIR	1
4	PAOZZ	96906	MS51983-1	NUT,PLAIN,SINGLE BA LEFT HAND	6
4	PAOZZ	96906	MS51983-2	NUT,PLAIN,SINGLE BA RIGHT HAND	6
5	PAFZZ	19207	8719915	HUB	2
6	PAOZZ	96906	MS51946-1	BOLT,RIBBED SHOULDE LEFT HAND	6
6	PAOZZ	96906	MS51946-2	BOLT,RIBBED SHOULDE RIGHT HAND	6
7	PAFZZ	96906	MS21045-6	NUT,SELF-LOCKING,HE	36
8	PAFZZ	96906	MS27183-14	WASHER,FLAT	36
9	PAFZZ	19207	7411425	BRAKE DRUM	2
10	PAFZZ	19207	7413231	PLATE,BACKING,BRAKE	2
11	PAFZZ	18876	8720025	BOLT,RIBBED NECK	36
12	PAFZZ	19207	8333780	BOLT,RIBBED SHOULDE	12
13	PAFZZ	96906	MS35692-61	NUT,PLAIN,SLOTTED,H	12
14	PAOZZ	19207	7411433	SPACER,SLEEVE	2
15	PAOZZ	19207	7411429	SEAL,PLAIN ENCASED	2
16	PAOZZ	08162	3984	BEARING,ROLLER,TAPE	4
17	PAOZZ	96906	MS35206-279	SCREW,MACHINE	6
18	PAOZZ	96906	MS35338-63	WASHER,LOCK	6
19	PAOZZ	19200	6144454	HUB CAP,WHEEL	2
20	PAOZZ	78500	6144356	GASKET	1
21	PAOZZ	19207	7411378	WASHER,KEY	2
22	PAOZZ	19207	7411379	NUT,PLAIN,OCTAGON	4
				END OF FIGURE	

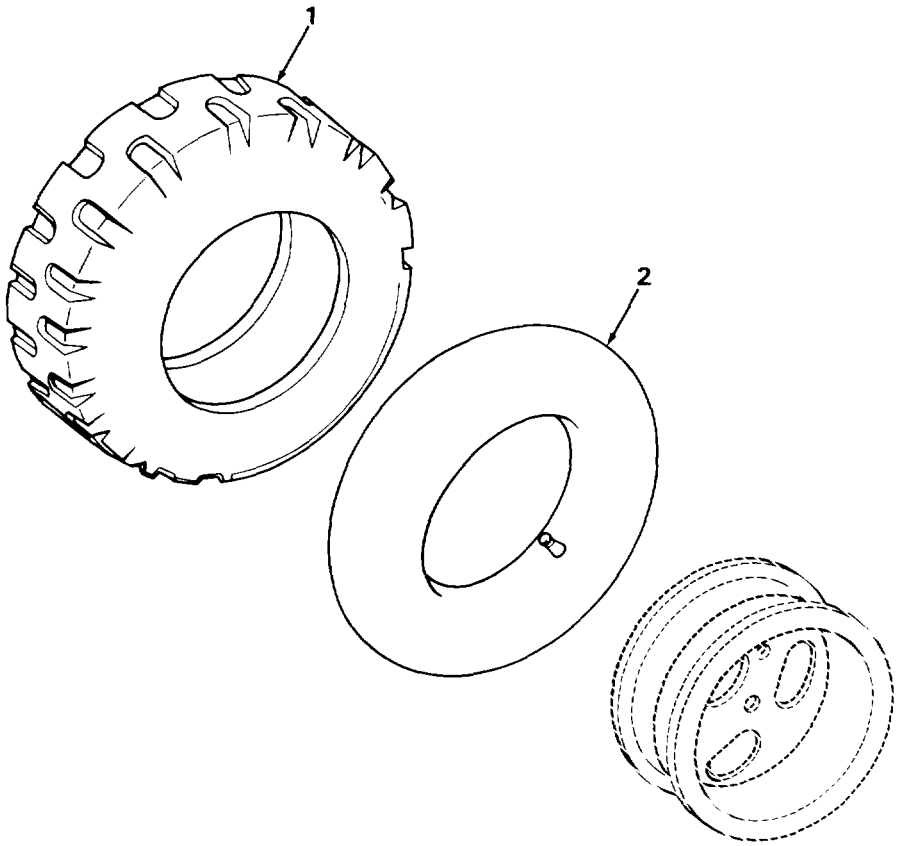

TA506240

FIGURE 18. TIRE AND TUBE.

(1) ITEM NO	(2) SMR CODE	(3) CAGEC	(4) PART NUMBER	(5) DESCRIPTION AND USABLE ON CODES (UOC)	(6) QTY
				GROUP 1313 TIRES AND TUBES	
				FIG. 18 TIRE AND TUBE	
1	PAOFF	81348	ZZ-T-381M/GROUP3 /9.00-20/D/TBCC	TIRE,PNEUMATIC	2
2	PAOOO	24617	2289994	INNER TUBE,PNEUMATI	2
				END OF FIGURE	

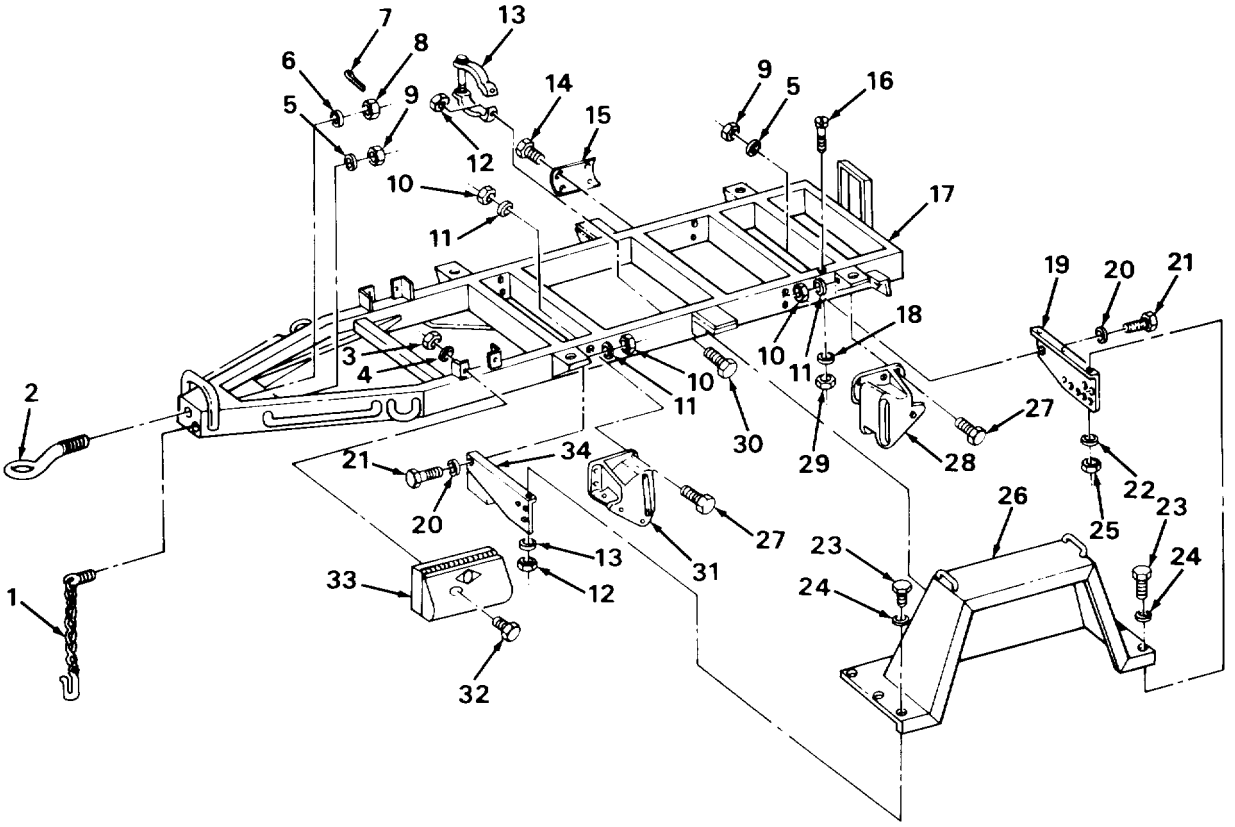

FIGURE 19. FRAME ASSEMBLY (M149).

(1) ITEM NO	(2) SMR CODE	(3) CAGEC	(4) PART NUMBER	(5) DESCRIPTION AND USABLE ON CODES (UOC)	(6) QTY
				GROUP 15 FRAME, TOWING ATTACHMENTS, DRAWBARS, AND ARTICULATION SYSTEMS	
				GROUP 1501 FRAME ASSEMBLY	
				FIG. 19 FRAME ASSEMBLY (M149)	
1	PAOZZ	19207	7411027	CHAIN ASSEMBLY,SING UOC:292	2
2	PAOZZ	96906	MS51339-3	COUPLER,DRAWBAR,RIN UOC:292	1
2	PAOZZ	96906	MS51339-3	COUPLER,DRAWBAR,RIN UOC:292	1
3	PAOZZ	96906	MS51967-2	NUT,PLAIN,HEXAGON UOC:292	8
4	PAOZZ	96906	MS35337-25	WASHER,LOCK UOC:292	8
5	PAOZZ	96906	MS35338-50	WASHER,LOCK UOC:292	2
6	XDOZZ	19207	8384073	WASHER,FLAT UOC:292	1
7	PAOZZ	96906	MS24665-495	PIN,COTTER UOC:292	1
8	PAOZZ	19207	7411028	NUT,PLAIN,SLOTTED,H UOC:292	1
9	PAOZZ	96906	MS51967-20	NUT,PLAIN,HEXAGON UOC:292	2
10	PAOZZ	96906	MS35691-21	NUT,PLAIN,HEXAGON UOC:292	20
11	PAOZZ	96906	MS15795-215	WASHER,FLAT UOC:292	20
12	PAOZZ	96906	MS51922-21	NUT,SELF-LOCKING,HE UOC:292	4
13	PAOZZ	96606	205267	BRACKET ASSEMBLY,RE UOC:292	2
14	PAOZZ	21450	172439	SCREW,TAPPING,THREA UOC:292	4
15	XBOZZ	19207	7059265-1	COVER UOC:292	4
16	PAOZZ	96906	MS90726-114	SCREW,CAP,HEXAGON H UOC:292	8
17	XAFZZ	19207	10944279	FRAME ASSEMBLY UOC:292	1
18	PAOZZ	96906	MS35333-44	WASHER,LOCK UOC:292	28
19	PAOZZ	19207	7035152	BRACE,FENDER UOC:292	2
20	PAOZZ	96906	MS35333-42	WASHER,LOCK UOC:292	20
21	PAOZZ	96906	MS51096-359	SCREW,CAP,HEXAGON H	12
22	PAOZZ	96906	MS35338-46	WASHER,LOCK UOC:STL,997	24

(1) ITEM NO	(2) SMR CODE	(3) CAGEC	(4) PART NUMBER	(5) DESCRIPTION AND USABLE ON CODES (UOC)	(6) QTY
23	PAOZZ	96906	MS90726-60	SCREW,CAP,HEXAGON H UOC:292	20
24	PAOZZ	96906	MS27183-15	WASHER,FLAT UOC:292	10
25	PAOZZ	96906	MS51968-8	NUT,PLAIN,HEXAGON UOC:292	
26	PAOZZ	19207	7055109	FENDER,VEHICULAR UOC:292	2
27	PAOZZ	96906	MS90726-112	SCREW,CAP,HEXAGON UOC:292	20
28	XBOZZ	19207	7059565	BRACKET UOC:292	2
29	PAOZZ	96906	MS51968-14	NUT,PLAIN,HEXAGON UOC:292	28
30	PAOZZ	96906	MS90726-59	SCREW,CAP,HEXAGON UOC:292	4
31	XBOZZ	19207	7059533	BRACKET UOC:292	2
32	PAOZZ	21450	431953	BOLT,ASSEMBLED WASH UOC:292	8
33	PAOZZ	19207	7035486	BOX ASSEMBLY,LH UOC:292	1
33	XDOZZ	19207	7035487	BOX ASSEMBLY,RH UOC:292	1
34	PAOZZ	19207	7035153	SUPPORT,FENDER,LEFT UOC:292	

END OF FIGURE

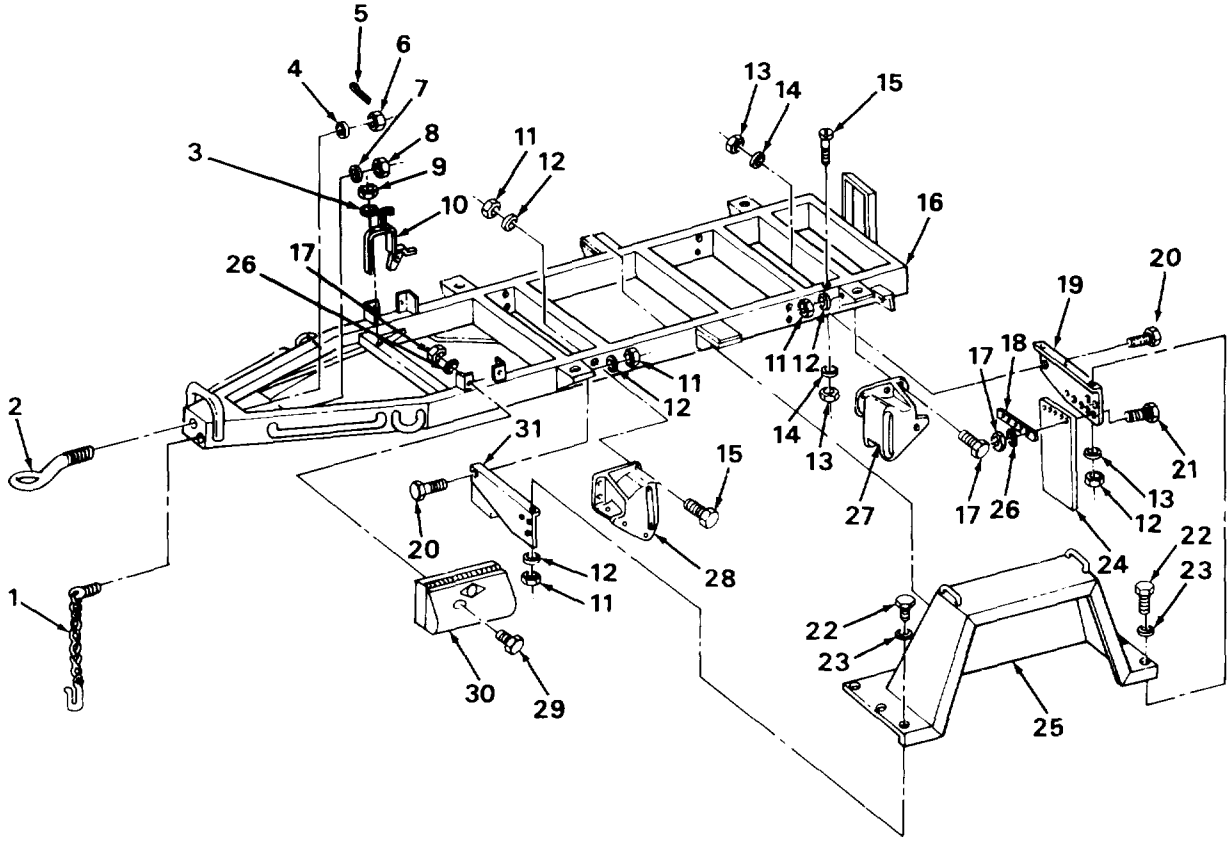

FIGURE 20. FRAME ASSEMBLY (M149A1 AND M149A2).

(1) ITEM NO	(2) SMR CODE	(3) CAGEC	(4) PART NUMBER	(5) DESCRIPTION AND USABLE ON CODES (UOC)	(6) QTY
				GROUP 1501 FRAME ASSEMBLY	
				FIG. 20 FRAME ASSEMBLY (M149A1 AND M149A2)	
1	PAOZZ	19207	7411027	CHAIN ASSEMBLY,SING UOC:STL,997	2
2	PAOZZ	96906	MS51339-3	COUPLER,DRAWBAR,PIN UOC:STL,997	1
2	PAOZZ	96906	MS51339-3	COUPLER,DRAWBAR,RIN UOC:STL,997	1
3	PAOZZ	96906	MS27183-14	WASHER,FLAT UOC:STL,997	1
4	PAOZZ	19207	8384073	WASHER,FLAT UOC:292,997	1
5	PAOZZ	96906	MS24665-495	PIN,COTTER UOC:STL,997	1
6	PAOZZ	19207	7411028	NUT,PLAIN,SLOTTED,H UOC:STL,997	1
7	PAOZZ	96906	MS35338-50	WASHER,LOCK UOC:STL,997	2
8	PAOZZ	96906	MS51967-20	NUT,PLAIN,HEXAGON UOC:ST,997	2
9	PAOZZ	96906	MS51922-17	NUT,SELF-LOCKING,HE UOC:STL,997	1
10	PAOZZ	19207	12296244	BRACKET,HEATER,ARTI UOC:997	1
10	PAOZZ	19207	12355820	BRACKET,HEATER,ARTI UOC:STL	1
11	PAFZZ	96906	MS51968-8	NUT,PLAIN,HEXAGON UOC:STL,997	24
12	PAOZZ	96906	MS35338-46	WASHER,LOCK UOC:STL,997	24
13	PAOZZ	96906	MS51968-14	NUT,PLAIN,HEXAGON UOC:STL,997	28
14	PAOZZ	96906	MS35338-48	WASHER,LOCK	28
15	PAOZZ	96906	MS90726-112	SCREW,CAP,HEXAGON H UOC:STL,997	28
16	XDFZZ	19207	11625110	FRAME ASSEMBLY UOC:STL,997	1
17	PAOZZ	96906	MS51968-2	NUT,PLAIN,HEXAGON UOC:STL,9997	16
18	XBOZZ	19207	11597745	RETAINER UOC:STL,997	2
19	PAOZZ	19207	11597732	BRACE,FENDER LEFT UOC:STL,997	1
19	PAOZZ	19207	11597732-1	SUPPORT,FENDER,RIGH UOC:STL,997	1
20	PAOZZ	96906	MS51096-359	SCREW,CAP,HEXAGON H	12
21	PAOZZ	96906	MS90727-8	SCREW,CAP,HEXAGON H UOC:STL,997	8
22	PAOZZ	96906	MS90726-60	SCREW,CAP,HEXAGON H	12

(1) ITEM NO	(2) SMR CODE	(3) CAGEC	(4) PART NUMBER	(5) DESCRIPTION AND USABLE ON CODES (UOC)	(6) QTY
				UOC:STL,997	
23	PAOZZ	96906	MS27183-15	WASHER,FLAT	12
				UOC:STL,997	
24	PAOZZ	19207	11597666-1	GUARD,SPLASH,VEHICU	2
				UOC:STL,997	
25	PAOZZ	19207	7055109	FENDER	2
				UOC:STL,997	
26	PAOZZ	96906	MS35338-44	WASHER,LOCK	16
				UOC:STL,997	
27	XBOZZ	19207	7059533	BRACKET	2
				UOC:STL,997	
28	XBOZZ	19207	7059565	BRACKET	2
				UOC:STL,997	
29	PAOZZ	96906	MS90726-5	SCREW,CAP,HEXAGON H	8
				UOC:STL,997	
30	PAOZZ	19207	7035486	BOX ASSEMBLY,LEFT	1
				UOC:STL,997	
30	XDOZZ	19207	7035487	BOX ASSEMBLY,RIGHT	1
				UOC:STL,997	
31	PAOZZ	19207	7035152	BRACE,FENDER,RIGHT	1
				UOC:STL,997	
31	PAOZZ	19207	7035153	SUPPORT,FENDER,LEFT	2
				UOC:STL,997	

END OF FIGURE

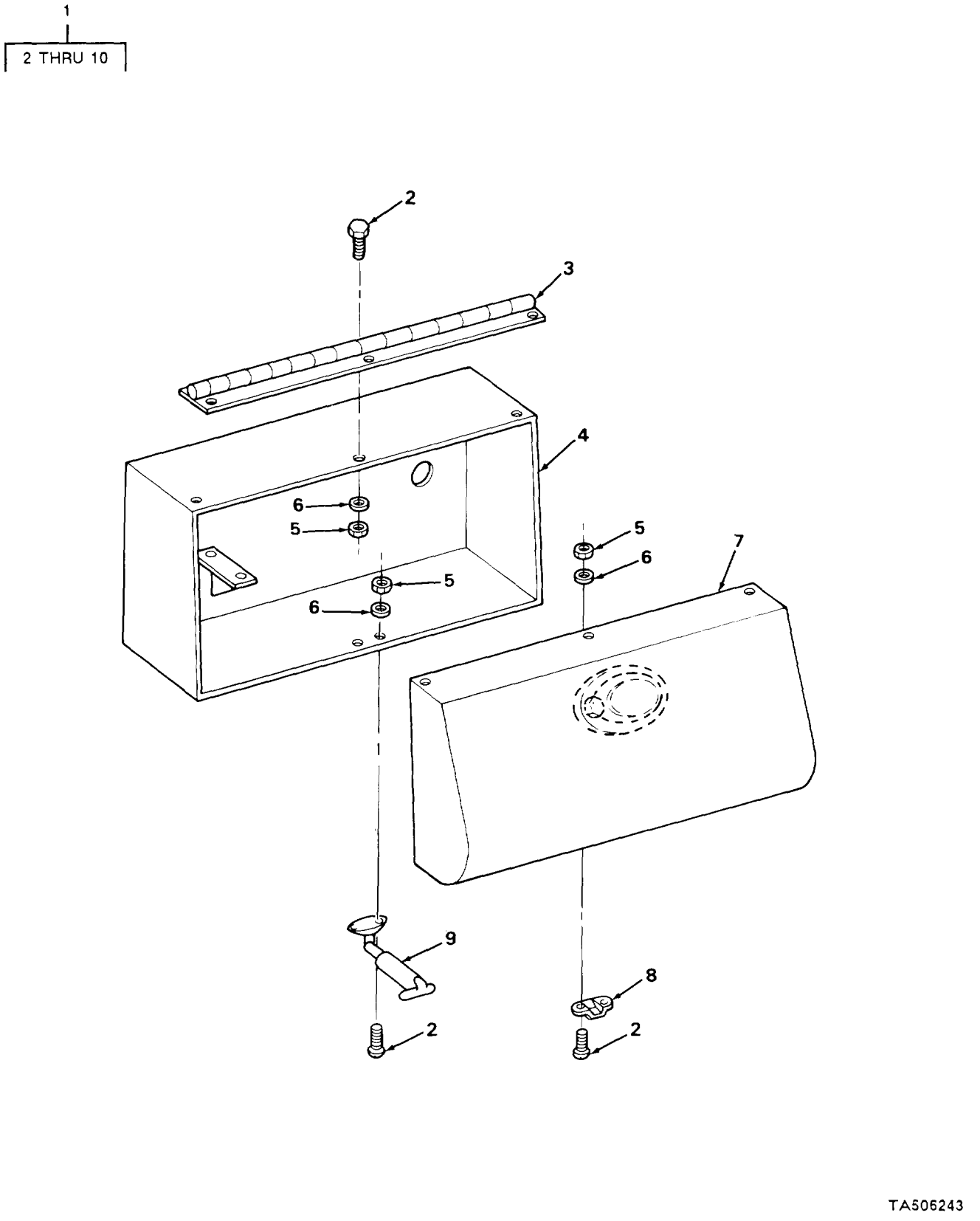

FIGURE 21. FAUCET BOX ASSEMBLY.

(1) ITEM NO	(2) SMR CODE	(3) CAGEC	(4) PART NUMBER	(5) DESCRIPTION AND USABLE ON CODES (UOC)	(6) QTY
				GROUP 1501 FRAME ASSEMBLY	
				FIG. 21 FAUCET BOX ASSEMBLY	
1	PAOOO	19207	7035486	BOX,ACCESSORIES STO LEFT HAND	1
1	PAOOO	19207	7035487	BOX ASSEMBLY,RH	1
2	PAOZZ	03538	N22P21006C6	.SCREW,CAP,HEXAGON H	10
3	PAOZZ	19207	7037002	.HINGE,BUTT	1
4	PAOZZ	19207	7035451	.BOX,SMALL PARTS LEFT HAND	1
4	PAOZZ	19207	7035452	.BOX,SMALL PARTS RIGHT HAND	1
5	PAOZZ	96906	MS51967-2	.NUT,PLAIN,HEXAGON	10
6	PAOZZ	96906	MS35338-44	.WASHER,LOCK	10
7	PAOZZ	19207	7034748	.COVER,ACCESS	1
8	PAOZZ	19207	7697483	.BRACKET HOOD CATCH	1
9	PAOZZ	19207	7539197	.FASTENER,CYLINDER,S	1
				END OF FIGURE	

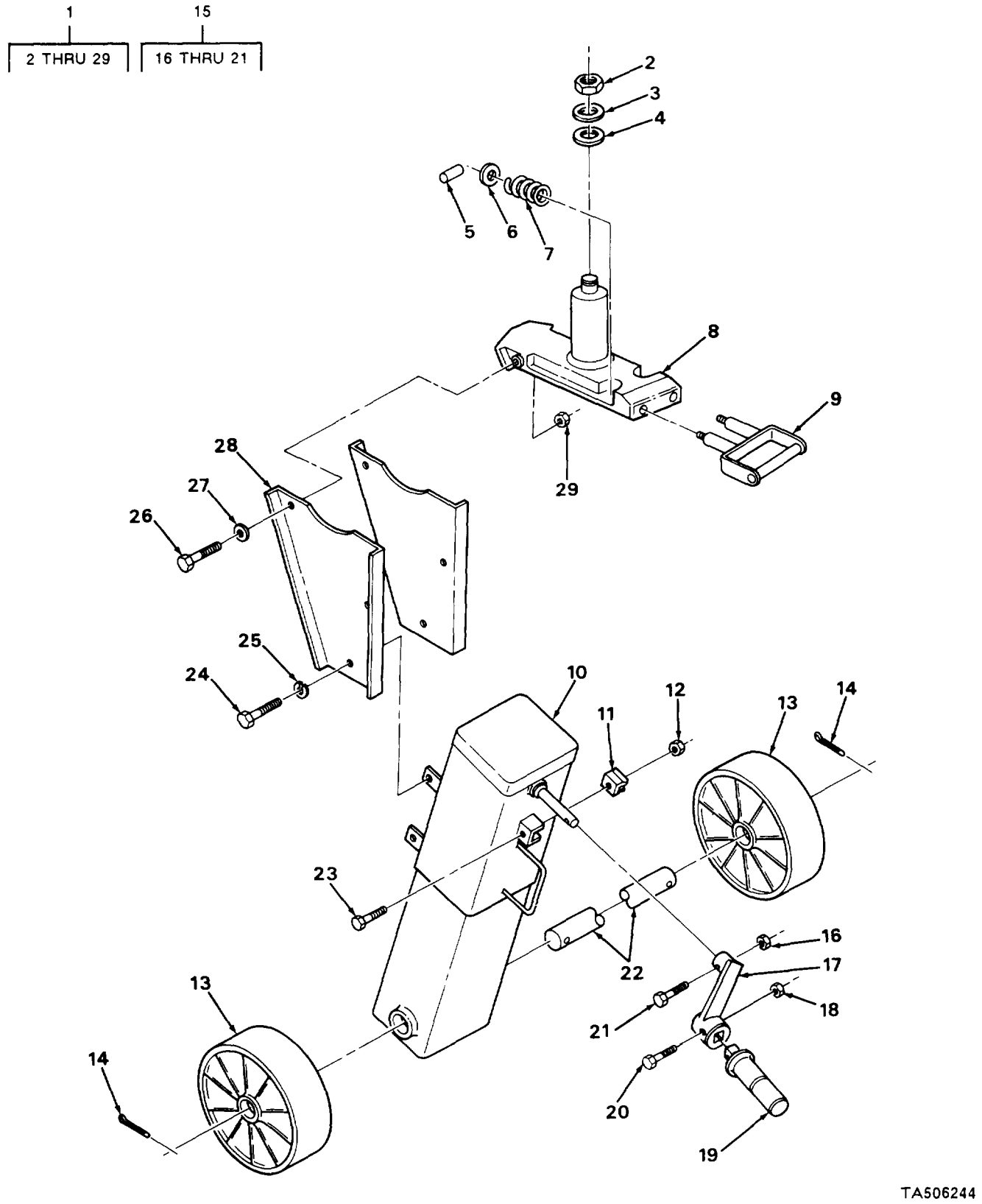

FIGURE 22. CASTER ASSEMBLY, FOLDING ADJUSTABLE.

(1) ITEM NO	(2) SMR CODE	(3) CAGEC	(4) PART NUMBER	(5) DESCRIPTION AND USABLE ON CODES (UOC)	(6) QTY
				GROUP 1507 LANDING GEAR,LEVELING JACKS	
				FIG. 22 CASTER ASSEMBLY,FOLDING AJUSTABLE	
1	PAOOO	19207	12259830	SUPPORT,RETRACTABLE	1
2	PAOZZ	96906	MS21044-N12	.NUT,SELF-LOCKING,HE	1
3	PAOZZ	19207	8330821	.WASHER,FLAT	1
4	PAOZZ	19207	8330813	.WASHER,FLAT	1
5	PAOZZ	96906	MS16556-844	.PIN,STRAIGHT,HEADLE	2
6	PAOZZ	19207	8331542	.WASHER,LOCK	2
7	PAOZZ	19207	8331541	.SPRING,HELICAL,COMP	2
8	PAOZZ	19207	324420	.SPINDLE AND BRACKET	1
9	PAOZZ	19207	12259844	.HANDLE,DRAW BAR	1
10	XAOZZ	19207	12259830-1	.LEG ASSY	1
11	PAOZZ	19207	12312996	.CLIP,SPRING TENSION	1
12	PAOZZ	96906	MS51922-1	.NUT,SELF-LOCKING,HE	1
13	PAOZZ	19207	12259845	.WHEEL,METAL TIRE	2
14	PAOZZ	96906	MS16562-65	.PIN,SPRING	2
15	PAOOO	19207	12259835	.CRANK,HAND	1
16	PAOZZ	96906	MS21083-N5	..NUT,PLAIN,HEXAGON	1
17	PAOZZ	19207	12259840	..ARM	1
18	PAOZZ	96906	MS17829-4C	..NUT,SELF-LOCKING,HE	1
19	PAOZZ	19207	12259837	..HANDLE	1
20	PAOZZ	96906	MS90725-10	..SCREW,CAP,HEXAGON H	1
21	PAOZZ	96906	MS90726-38	..SCREW	1
22	PAOZZ	19207	12259831	.SHAFT,STRAIGHT	1
23	PAOZZ	96906	MS90725-5	.SCREW,CAP,HEXAGON H	1
24	PAOZZ	96906	MS90728-109	.SCREW,CAP,HEXAGON H	1
25	PAOZZ	96906	MS35338-48	.WASHER,LOCK	1
26	PAOZZ	19207	7979972	.BOLT,SHOULDER	1
27	PAOZZ	96906	MS27183-20	.WASHER,FLAT	1
28	PAOZZ	19207	12259839	.LEG,SEMITRAILER RET	1
29	PAOZZ	96906	MS21044-N9	.NUT,SELF-LOCKING,HE	1

END OF FIGURE

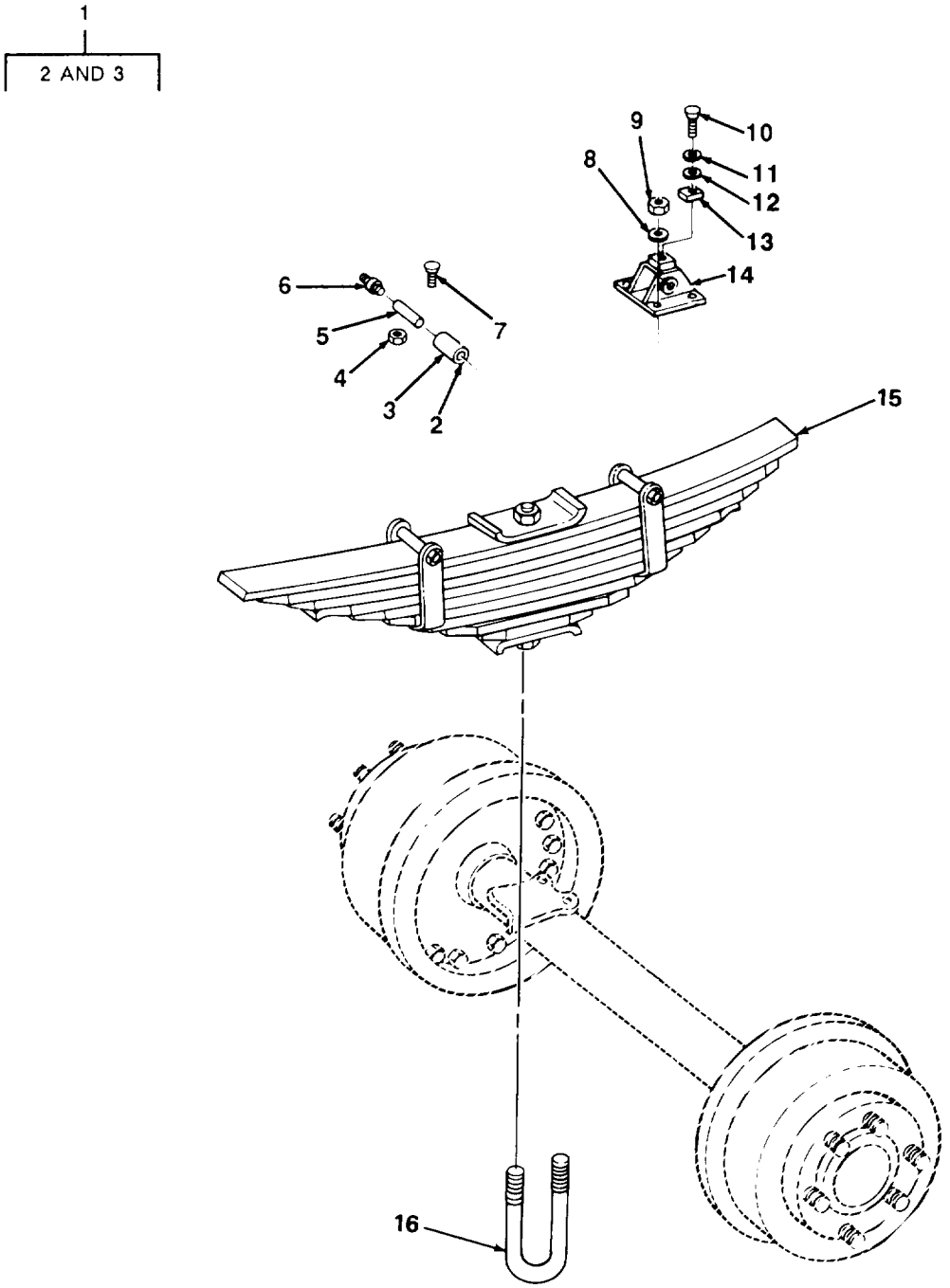

TA506245

FIGURE 23. SPRINGS.

(1) ITEM NO	(2) SMR CODE	(3) CAGEC	(4) PART NUMBER	(5) DESCRIPTION AND USABLE ON CODES (UOC)	(6) QTY
				GROUP 16 SPRINGS AND SHOCK ABSORBERS	
				GROUP 1601 SPRINGS	
				FIG. 23 SPRINGS	
1	PAOFF	19207	10929946	ROLLER ASSEMBLY, HAN	4
2	PAOZZ	19207	8389733	.BUSHING SLEEVE	2
3	PAOZZ	19207	8389734	.BEARING,SLEEVE	1
4	PAOZZ	96906	MS51922-53	NUT,SELF-LOCKING,HE	4
5	PAOZZ	19207	8389735	PIN,VEHICULAR LEAF	4
6	PAOZZ	96906	MS15001-1	FITTING,LUBRICATION	4
7	PAOZZ	96906	MS51973-54	SETSCREW	8
8	PAOZZ	96906	MS35340-51	WASHER,LOCK	8
9	PAOZZ	19207	7411041	NUT,PLAIN,HEXAGON	8
10	PAOZZ	96906	MS90726-62	SCREW,CAP,HEXAGON H	2
11	PAOZZ	96906	MS35333-42	WASHER,LOCK	2
12	PAOZZ	96906	MS27183-15	WASHER,FLAT	2
13	PAOZZ	19207	7522436	BUMPER,NONMETALLIC	2
14	PAOZZ	19207	7350779	BRACKET,EYE,ROTATIN	2
15	PAOZZ	19207	8389626	SPRING ASSEMBLY,LEA	2
16	PAOZZ	19207	8389628	BOLT,U	4
				END OF FIGURE	

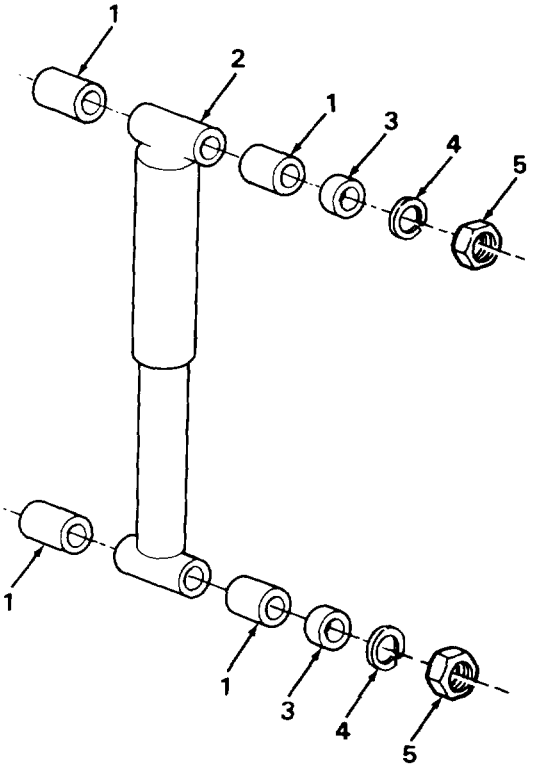

TA506246

FIGURE 24. SHOCK ABSORBERS.

(1) ITEM NO	(2) SMR CODE	(3) CAGEC	(4) PART NUMBER	(5) DESCRIPTION AND USABLE ON CODES (UOC)	(6) QTY
				GROUP 1604 SHOCK ABSORBER EQUIPMENT	
				FIG. 24 SHOCK ABSORBERS	
1	PAOZZ	19207	7339466	BUSHING,RUBBER	8
2	PAOZZ	19207	8716992	SHOCK ABSORBER,DIRE	2
3	PAOZZ	19207	7339465	WASHER,RECESSED	4
4	PAOZZ	80045	MS35338-50	WASHER,LOCK	4
5	PAOZZ	96906	MS51968-20	NUT,PLAIN,HEXAGON	4
				END OF FIGURE	

10

11 THRU 16

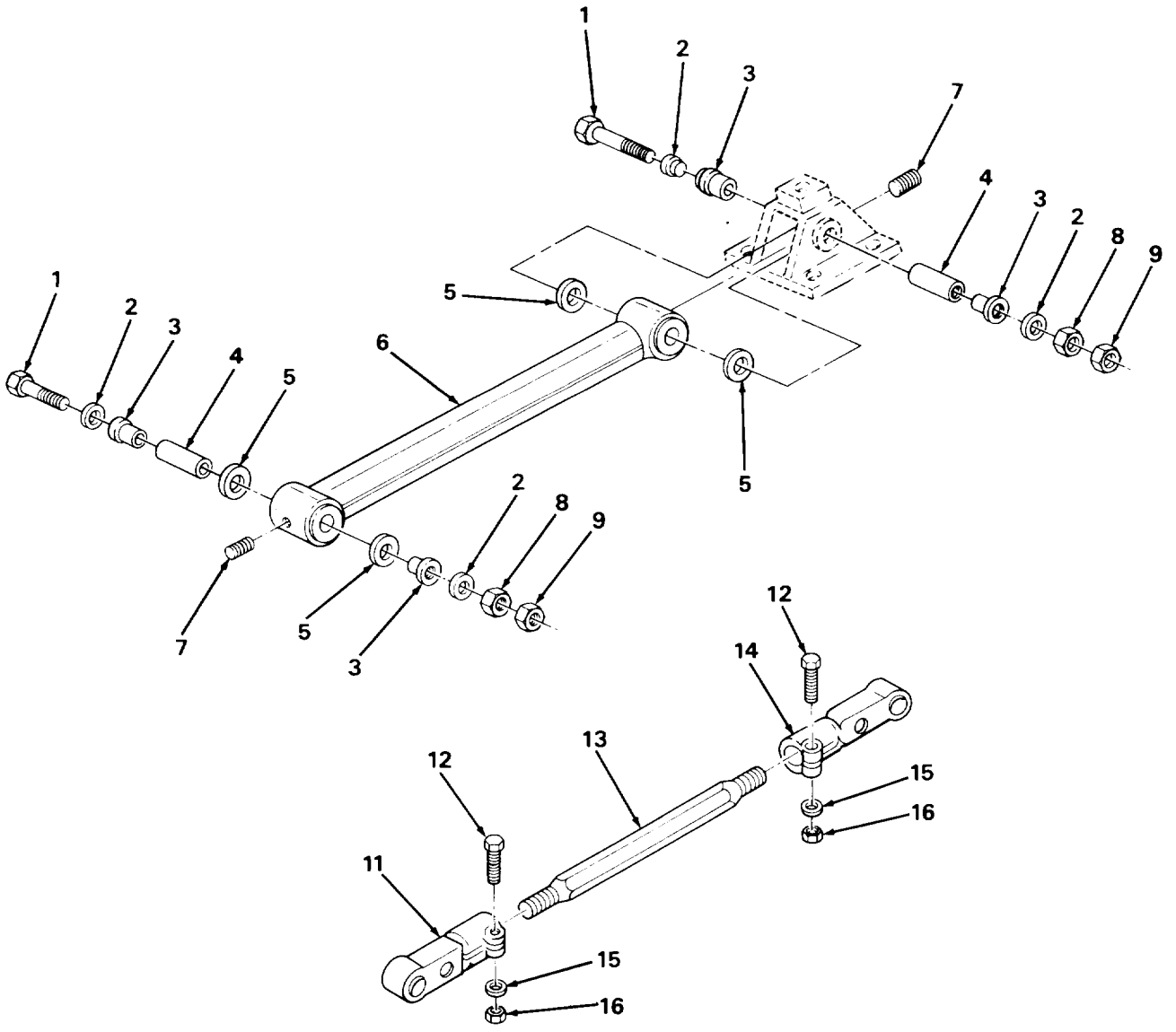

TA506247

FIGURE 25. RADIUS RODS

(1) ITEM NO	(2) SMR CODE	(3) CAGEC	(4) PART NUMBER	(5) DESCRIPTION AND USABLE ON CODES (UOC)	(6) QTY
				GROUP 1605 TORQUE,RADIUS,AND STABILIZER RODS	
				FIG. 25 RADIUS RODS	
1	XDOZZ	96906	MS90726-178	SCREW,CAP,HEXAGON H	8
2	PAOZZ	19207	7349028	WASHER,SHOULDERED	8
3	PAOZZ	19207	7974916	BUSHING,RUBBER	8
4	PAOZZ	19207	7974917	BEARING,SLEEVE	4
5	PAOZZ	19207	7349029	WASHER,FLAT	8
6	PAOZZ	19207	11625147	ROD ASSEMBLY,RADIUS	1
7	XDOZZ	19207	139855	SCREW	4
8	PAOZZ	96906	MS35691-53	NUT,PLAIN,HEXAGON	4
9	PAOZZ	96906	MS51968-20	NUT,PLAIN,HEXAGON	4
10	PAOOO	19207	7366478-1	ROD ASSEMBLY,RADIUS	1
11	PAOZZ	19207	7349017	.CONNECTOR,ROD END RIGHT HAND	1
12	PAOZZ	96906	MS90726-116	.SCREW,CAP,HEXAGON H	2
13	PAOZZ	19207	7366480-1	.ROD,ALIGNING,VEHICU	1
14	PAOZZ	19207	7349016	.CONNECTOR,TORQUE RO LEFT HAND	1
15	PAOZZ	96906	MS35338-48	.WASHER,LOCK	2
16	PAOZZ	96906	MS51968-14	.NUT,PLAIN,HEXAGON	2
				END OF FIGURE	

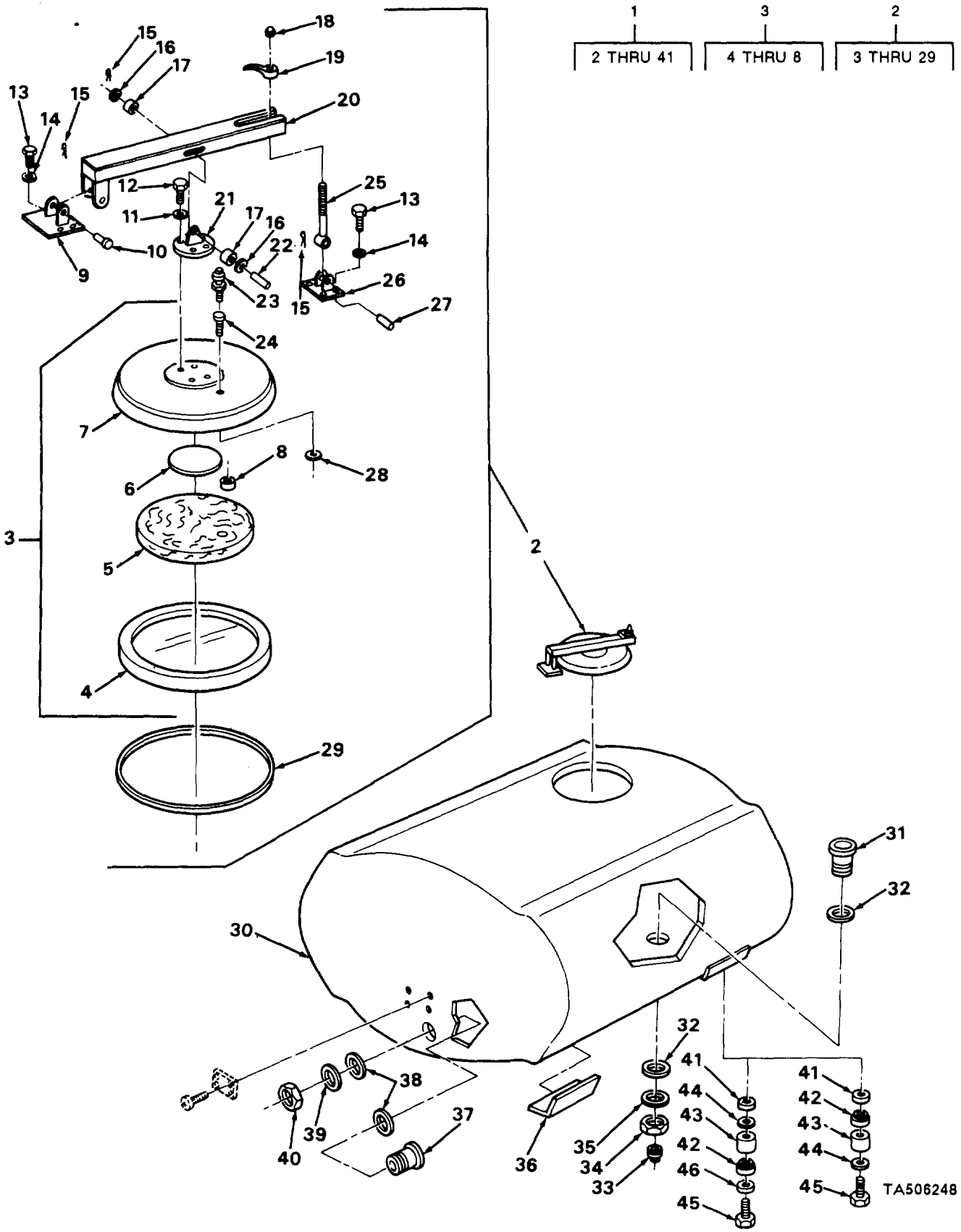

FIGURE 26. TANK BODY (M149 AND MI49A1).

(1) ITEM NO	(2) SMR CODE	(3) CAGEC	(4) PART NUMBER	(5) DESCRIPTION AND USABLE ON CODES (UOC)	(6) QTY
				GROUP 18 BODY,CAB,AND HOOD	
				GROUP 1811 TANK BODIES	
				FIG. 26 TNAK BODY (M149 AND M149A1)	
1	PFOFF	19207	7034967	TANK,WATER IF FIBERGLASS TANK IS NOT ECONOMICAL TO REPAIR USING EPOXY REPAIR KIT (APPENDIX E,ITEM 21) ORDER P/N 12269886 UOC:292,997	1
2	PAOOO	19207	11597741	.COVER,MANHOLE UOC:292,997	1
3	PAOOO	19207	11597742	..COVER,MANHOLE UOC:292,997	1
4	PAOZZ	19207	11597765	...COVER,MANHOLE UOC:292,997	1
5	XAOZZ	19207	11597763	...INSULATOR,DISK UOC:292,997	1
6	XAOZZ	19207	7034940	...PLATE UOC:292,997	1
7	XAOZZ	19207	11597766	...COVER UOC:292,997	1
8	XAOZZ	19207	11597764	...BUSHING UOC:292,997	1
9	PAOZZ	19207	7035188-1	..HINGE ASSEMBLY UOC:292,997	1
10	XBOZZ	19207	7039172-1	..PIN UOC:292,997	1
11	PAOZZ	96906	MS35333-40	..WASHER,LOCK UOC:292,997	4
12	PAOZZ	96906	MS90725-6	..SCREW,CAP,HEXAGON H UOC:292,997	4
13	PAOZZ	96906	MS18154-58	..SCREW,CAP,HEXAGON H UOC:292,997	8
14	PAOZZ	96906	MS35333-42	..WASHER,LOCK UOC:292,997	8
15	PAOZZ	96906	MS24665-353	..PIN,COTTER UOC:292,997	3
16	PAOZZ	96906	MS27183-18	..WASHER,FLAT UOC:292,997	2
17	XBOZZ	19207	11597736	..SPACER UOC:292,997	2
18	PAOZZ	96906	MS24679-9	..NUT,PLAIN,CAP UOC:292,997	1
19	PAOZZ	19207	7034885	..NUT,PLAIN,WING UOC:292,997	1
20	PAOZZ	19207	11597737	..BRACKET,DOUKBLE ANGL UOC:292,997	1
21	XBOZZ	19207	11597735	..PIVOT ASSEMBLY UOC:292,997	1
22	PAOZZ	19207	7039172-2	..PIN,STRAIGHT,HEADED	1

(1) ITEM NO	(2) SMR CODE	(3) CAGEC	(4) PART NUMBER	(5) DESCRIPTION AND USABLE ON CODES (UOC)	(6) QTY
				UOC:292,997	
23	PAOZZ	19207	7034882	..VALVE,VACUUM BREAKI	1
				UOC:292,997	
24	PAOZZ	19207	8741778	..ADPAPTER,STRAIGHT,PI	1
				UOC:292,997	
25	PAOZZ	19207	7039041-1	..BOLT,EYE	1
				UOC:292,997	
26	PAOZZ	19207	7035204	..HINGE,PLATE COVER	1
				UOC:292,997	
27	PAOZZ	19207	7039178	..PIN,STRAIGHT,HEADED	1
				UOC:292,997	
28	XDOZZ	96906	MS35691-80	..NUT,PLAIN,HEXAGON	1
				UOC:292,997	
29	PAOZZ	19207	8330046	..SEAL,NONMETALLIC SP	1
				UOC:292,997	
30	XBOFF	19207	7034951	.TANK FIBERGLASS	1
				UOC:292,997	
31	PAOZZ	19207	10944795	.BEARING,SLEEVE	1
				UOC:292,997	
32	DFOZZ	19207	10944794-2	.GASKET PART OF KIT P/N 10944918	2
				UOC:292,997	
33	PAOZZ	19207	8741782	.PLUG,PIPE	1
				UOC:292,997	
34	PAOZZ	19207	7034938	.NUT,PLAIN,HEXAGON	1
				UOC:292,997	
35	KFOZZ	19207	10944862-2	.WASHER PART OF KIT P/N 10944918	1
				UOC:292,997	
36	XDFZZ	19207	7035043	.BRACKET	4
				UOC:292,997	
37	PAOZZ	19207	10944796	.SPACER,SLEEVE	1
				UOC:292,997	
38	KFOZZ	19207	10944794-1	.GASKET PART OF KIT P/N 10944918	2
				UOC:292,997	
39	KFOZZ	19207	10944862-1	.WASHER PART OF KIT P/N 10944918	1
				UOC:292,997	
40	XBOZZ	19207	7034976	NUT	1
				UOC:292,997	
41	PAOZZ	19207	7711369	SPACER,SLEEVE	4
				UOC:292,997	
42	PAOZZ	19207	8331543	MOUNT,RESILIENT	4
				UOC:292,997	
43	PAOZZ	19207	11597768	SPACER,RING	4
				UOC:292,997	
44	PAOZZ	19207	8331544	PACKING WITH RETAIN	4
				UOC:292,997	
45	PAOZZ	96906	MS90726-170	SCREW,CAP,HEXAGON H	4
				UOC:292,997	
46	PAOZZ	96906	MS27183-21	WASHER,FLAT	4
				UOC:292	

END OF FIGURE

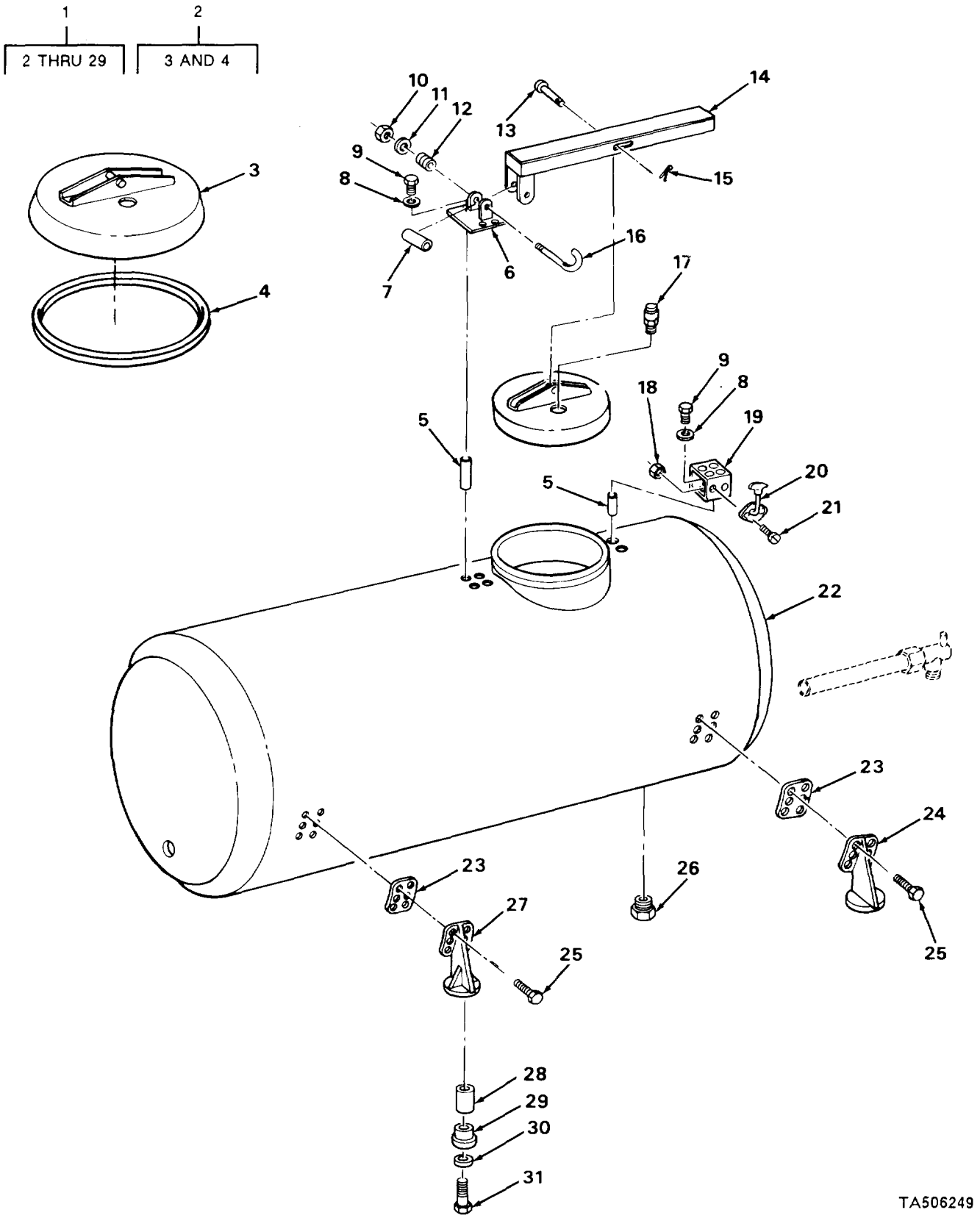

FIGURE 27. TANK BODY (M149A2).

(1) ITEM NO	(2) SMR CODE	(3) CAGEC	(4) PART NUMBER	(5) DESCRIPTION AND USABLE ON CODES (UOC)	(6) QTY
				GROUP 1811 TANK BODIES	
				FIG. 27 TANK BODY (M149A2)	
1	PAOFF	19207	12269886	TANK,WATER,TRLR MTD UOC:STL	1
2	PAOOO	19207	12269951	.COVER,MANHOLE UOC:STL	1
3	XAOZZ	19207	12269958	..COVER UOC:STL	1
4	PAOZZ	19207	12354242	..GASKET,MANHOLE COVE UOC:STL	1
5	XDOZZ	19207	12296261	.SPACER	8
6	PAOZZ	19207	12296219	.BRACKET	1
7	XDOZZ	19207	12269972	.PIVOT	1
8	PAOZZ	96906	MS35338-139	.WASHER,LOCK UOC:STL	8
9	PAOZZ	96906	MS353-7-312	.SCREW,CAP,HEXAGON H UOC:STL	8
10	PAOZZ	96906	MS51922-13	.NUT,SELF-LOCKING,HE UOC:STL	1
11	PAOZZ	96906	MS27183-13	.WASHER,FLAT UOC:STL	1
12	PAOZZ	96906	MS24585C507	.SPRING,HELICAL,COMP UOC:STL	1
13	PAOZZ	96906	MS20392-7C75	.PIN,STRAIGHT,HEADED UOC:STL	1
14	PAOZZ	19207	12269960	.BAR,MATALLIC UOC:STL	1
15	PAOZZ	96906	MS24665-285	.PIN,COTTER UOC:STL	1
16	PAOZZ	19207	12269970	.BOLT,HOOK UOC:STL	1
17	PAOZZ	19207	7034882	.VALVE,VACUUM BREAKI UOC:STL,997	1
18	PAOZZ	96906	MS51922-5	.NUT,SELF-LOCKING,HE UOC:STL	4
19	PAOZZ	19207	12296217	.BRACKET,CATCH UOC:STL	1
20	PAOZZ	19207	7539197	.FASTENER,CYLINDER,S UOC:STL	2
21	PAOZZ	96906	MS35207-280	.SCREW,MACHINE UOC:STL	4
22	PFOFF	19207	12269860	.TANK,WATER,INSULATE	1
23	PAFZZ	19207	12269895	.SPACER,SUPPORT BRAC UOC:STL	4
24	PAFZZ	19207	12269894-1	.BRACKET,SUPPORT TAN UOC:STL	2
25	PAFZZ	96906	MS51096-361	.SCREW,CAP,HEXAGON H UOC:STL	24
26	PAOZZ	19207	8741782-1	.PLUG,PIPE UOC:STL	1

(1) ITEM NO	(2) SMR CODE	(3) CAGEC	(4) PART NUMBER	(5) DESCRIPTION AND USABLE ON CODES (UOC)	(6) QTY
27	PAFZZ	19207	12269894-2	.BRACKET,SUPPORT,TAN UOC:STL	2
28	PAOZZ	19207	11597768	SPACER,RING UOC:STL,997	4
29	PAOZZ	19207	8331543	MOUNT,RESILIENT UOC:STL,997	4
30	PAOZZ	19207	8331544	PACKING WITH RETAIN UOC:STL,997	4
31	PAOZZ	96906	MS18153-141	SCREW,CAP,HEXAGON H UOC:STL,997	4

END OF FIGURE

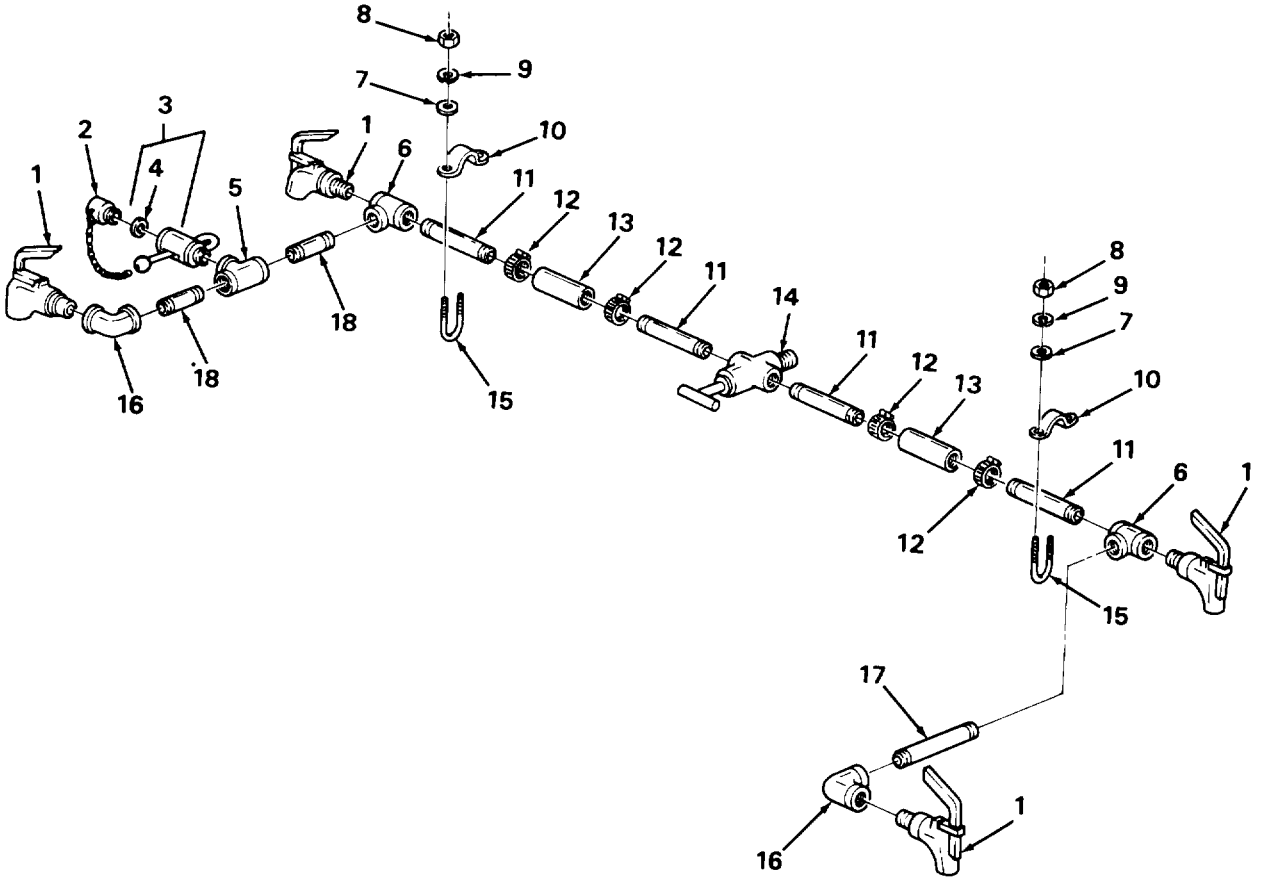

FIGURE 28. TANK PLUMBING.

(1) ITEM NO	(2) SMR CODE	(3) CAGEC	(4) PART NUMBER	(5) DESCRIPTION AND USABLE ON CODES (UOC)	(6) QTY
				GROUP 1811 TANK BODIES	
				FIG. 28 TANK PLUMBING	
1	PAOZZ	30327	261G	FAUCET,SINGLE	2
2	PAOZZ	96906	MS27029-6	PLUG,QUICK DISCONNE	1
3	PAOZZ	96906	MS27026-6	COUPLING HALF,QUICK	1
4	PAOZZ	96906	MS27030-3	WASHER,FLAT	1
5	PAOZZ	96906	MS14309-24A	TEE	1
6	PAOZZ	96906	MS14309-30A	TEE,PIPE	2
7	PAOZZ	96906	MS35333-40	WASHER,LOCK	8
8	PAOZZ	96906	MS51971-1	NUT,PLAIN,HEXAGON	8
9	PAOZZ	96906	MS27183-10	WASHER,FLAT	8
10	PAOZZ	19207	8724501	STRAP,TIEDOWN,ELECT	2
11	PAOZZ	19207	7065947	ADAPTER,STRAIGHT,PI	4
12	PAOZZ	96906	MS35842-13	CLAMP,HOSE	4
13	PAOZZ	19207	8724753	HOSE,NONMETALLIC	2
14	PAOZZ	19207	7039673	VALVE ASSEMBLY,TANK	1
15	PAOZZ	19207	8724754	BOLT,U	4
16	PAOZZ	96906	MS143056XA	ELBOW,PIPE	2
17	PAOZZ	19207	7035450	NIPPLE,PIPE	1
18	PAOZZ	96906	MS51846-122	NIPPLE,PIPE	2
				END OF FIGURE	

1
2 THRU 13

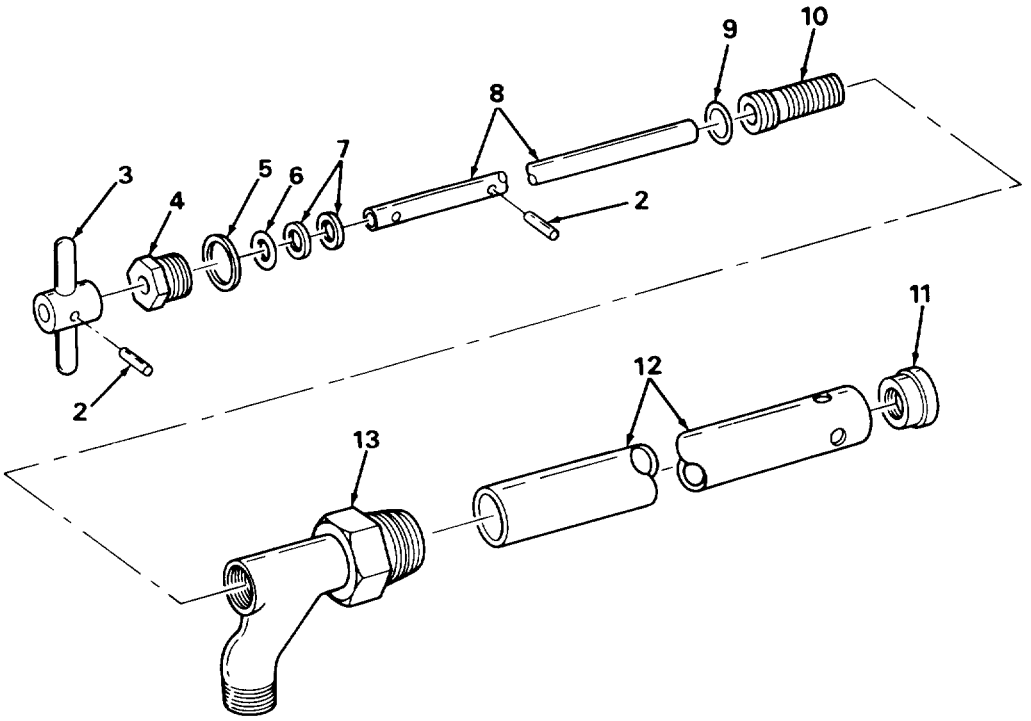

TA506251

FIGURE 29. TANK PLUMBING (M149A2).

(1) ITEM NO	(2) SMR CODE	(3) CAGEC	(4) PART NUMBER	(5) DESCRIPTION AND USABLE ON CODES (UOC)	(6) QTY
				GROUP 1811 TANK BODIES	
				FIG. 29 TANK PLUMBING (M149A2)	
1	PAOZZ	19207	12296243	FAUCET,SINGLE UOC:STL	1
2	PAOZZ	96906	MS16562-224	.PIN,SPRING UOC:STL	2
3	PAOZZ	4J828	A19-7-7	.HANDLE,FAUCET UOC:STL	1
4	PAOZZ	96594	A19-17-11-5	.PACKING NUT ASSEMBL UOC:STL	1
5	XBOZZ	02697	6723	.RING,SPACER UOC:STL	1
6	PAOZZ	96906	MS28775-110	.PACKING,PREFORMED UOC:STL	1
7	PAOZZ	86594	A19-17-11-6	.WASHER,FLAT UOC:STL	2
8	XAOZZ	86594	A19-17-9	.VALVE,GATE UOC:STL	1
9	PAOZZ	96906	MS28775-113	.PACKING,PREFORMED UOC:STL	1
10	XAOZZ	86594	A19-17-12	.SEAT,VALVE UOC:STL	1
11	XAOZZ	86594	A19-17-13	.SEAT NUT UOC:STL	1
12	XAOZZ	86594	A19-17-10	.TUBE UOC:STL	1
13	XAOZZ	86594	A19-17-8	.BODY UOC:STL	1
				END OF FIGURE	

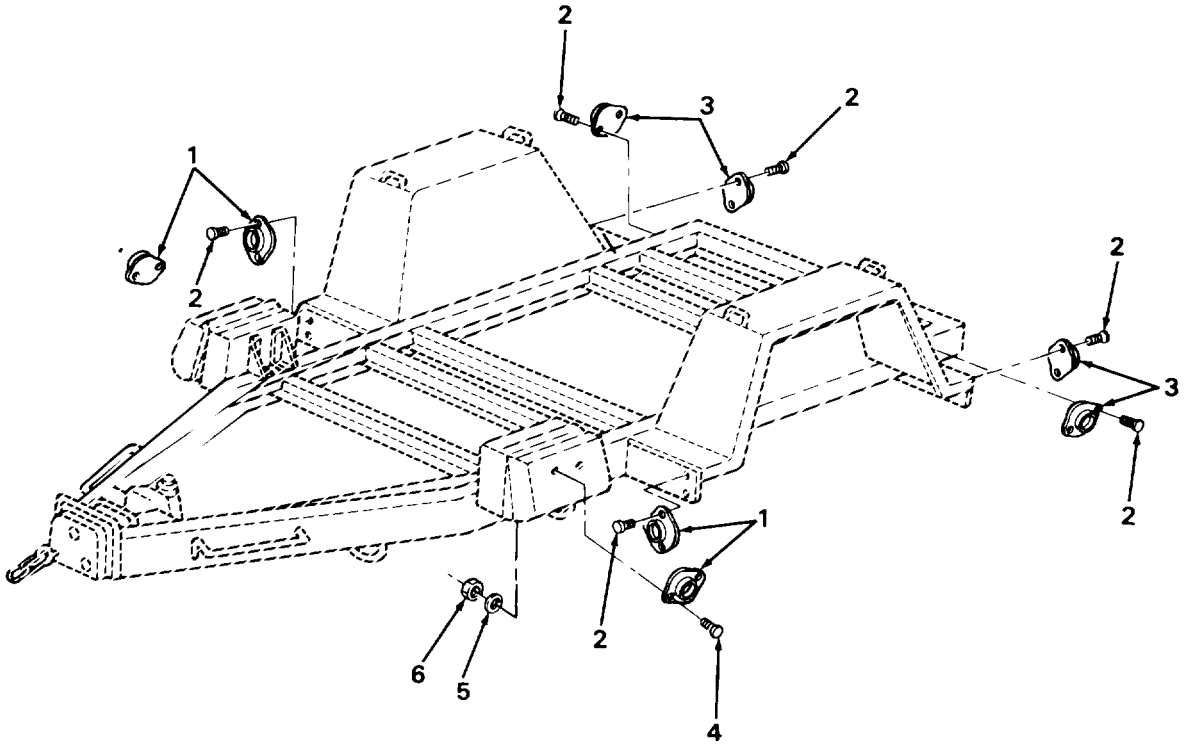

TA506252

FIGURE 30. REFLECTORS.

(1) ITEM NO	(2) SMR CODE	(3) CAGEC	(4) PART NUMBER	(5) DESCRIPTION AND USABLE ON CODES (UOC)	(6) QTY
				GROUP 22 BODY AND CHASSIS ACCESSORY ITEMS	
				GROUP 2202 ACCESSORY ITEMS	
				FIG. 30 REFLECTORS	
1	PAOZZ	96906	MS35387-2	REFLECTOR,INDICATIN AMBER	4
2	PAOZZ	96906	MS24629-57	SCREW,TAPPING,THREA	8
3	PAOZZ	96906	MS35387-1	REFLECTOR,INDICATIN RED	2
4	PAOZZ	24617	431953	BOLT,ASSEMBLED WASH	4
5	PAOZZ	96906	MS35338-44	WASHER,LOCK	4
6	PAOZZ	96906	MS51967-2	NUT,PLAIN,HEXAGON	4
				END OF FIGURE	

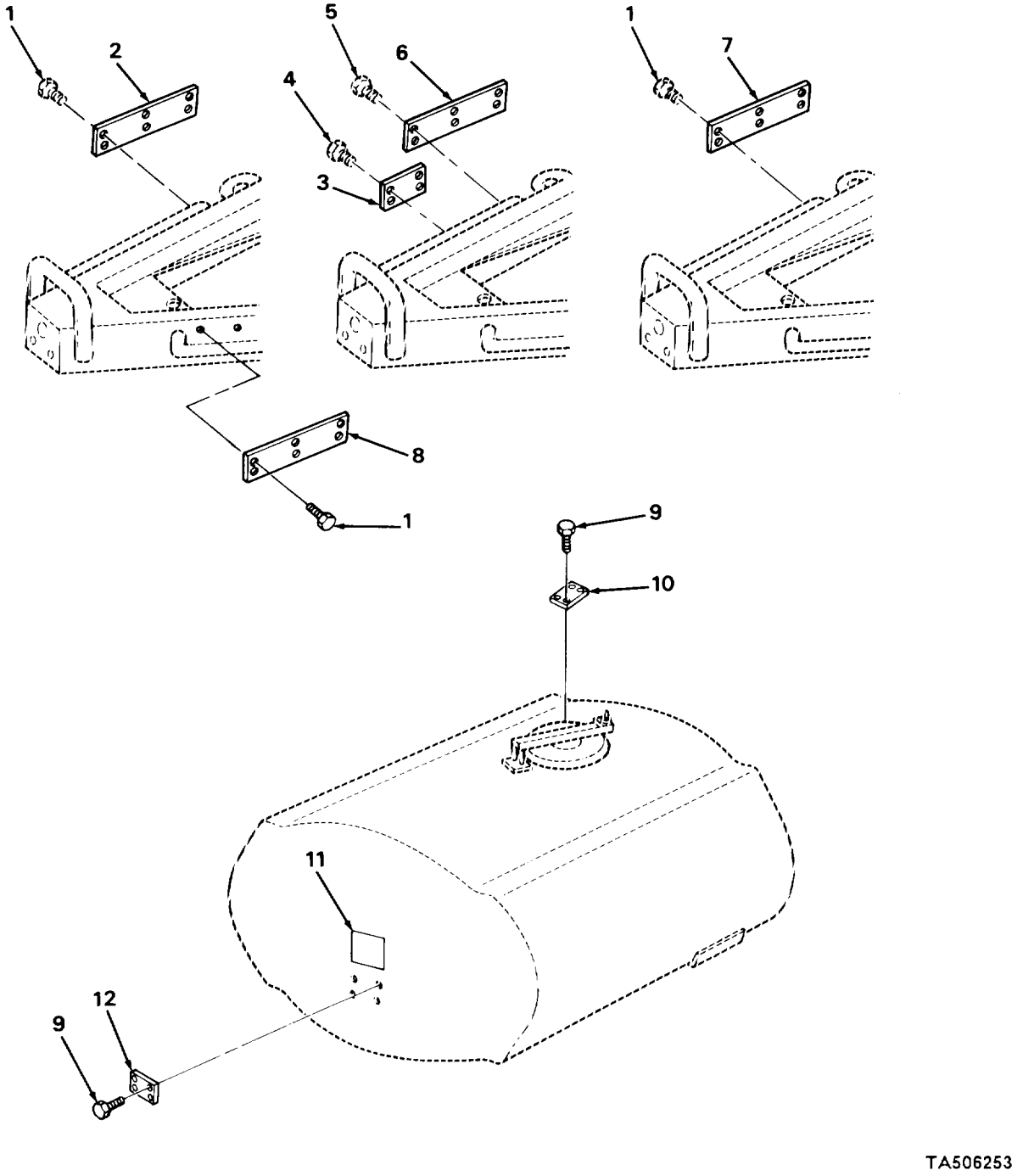

FIGURE 31. DATA PLATES.

(1) ITEM NO	(2) SMR CODE	(3) CAGEC	(4) PART NUMBER	(5) DESCRIPTION AND USABLE ON CODES (UOC)	(6) QTY
				GROUP 2210 DATA PLATES AND INSTRUCTION HOLDERS	
				FIG. 31 DATA PLATES	
1	PAOZZ	96906	MS24629-57	SCREW,TAPPING,THREA UOC:STL,997	18
2	PAOZZ	19207	12269949	PLATE,IDENTIFICATIO UOC:STL	1
3	PAOZZ	19207	7979373	PLATE,IDENTIFICATIO UOC:292	1
4	PAOZZ	96906	MS24629-46	SCREW,TAPPING,THREA UOC:292	4
5	PAOZZ	19207	172439	SCREW,TAPPING,THREA UOC:292	6
6	PAOZZ	19207	7043974	PLATE,IDENTIFICATIO UOC:292	1
7	PAOZZ	19207	11625044	PLATE,IDENTIFICATIO UOC:997	1
8	PAOZZ	19207	12331771	PLATE,TRANSP UOC:STL	1
9	PAOZZ	96906	MS21318-37	SCREW,DRIVE UOC:292,997	8
10	XDOZZ	19207	12355946	PLATE,INSTRUCTION UOC:STL	1
11	XDOZZ	19207	12362734	DECAL,WARNING UOC:STL	1
12	PAOZZ	19207	10929816-1	PLATE,IDENTIFICATIO UOC:STL	1
12	PAOZZ	19207	10929816	PLATE,IDENTIFICATIO UOC:997	1
				END OF FIGURE	

(1) ITEM NO	(2) SMR CODE	(3) CAGEC	(4) PART NUMBER	(5) DESCRIPTION AND USABLE ON CODES (UOC)	(6) QTY
				GROUP 94 REPAIR KITS	
				GROUP 9401 REPAIR KITS	
				FIG. KITS	
	PAOZZ	19207	10944918	KIT,WATER TANK UOC:292,997 GASKET (2) 26-32 GASKET (2) 26-38 WASHER (1) 26-39 WASHER (1) 26-35	V
				END OF FIGURE	

(1) ITEM NO	(2) SMR CODE	(3) CAGEC	(4) PART NUMBER	(5) DESCRIPTION AND USABLE ON CODES (UOC)	(6) QTY
				GROUP 95 GENERAL USE STANDARDIZED PARTS	
				GROUP 9501 BULK MATERIEL	
				FIG. BULK	
1	PAOZZ	81349	M13486/10-1	CABLE,SPECIAL PURPO UOC:STL,997	V
2	PAOZZ	81349	MIL-H-3992	HOSE,NONMETALLIC	V
3	PAOZZ	81349	WW-T-779	TUBING,COPPER,0.50 O.D. UOC:292	V
4	PAOZZ	81349	MIL-T-3520	TUBE,METALLIC	V
5	PAOZZ	96906	MS14300AAB	TUBE,METALLIC	V
6	PAOZZ	81349	M13486/1-5	WIRE,ELECTRICAL UOC:292	V
				END OF FIGURE	

CROSS-REFERENCE INDEXES

NATIONAL STOCK NUMBER INDEX

STOCK NUMBER	FIG	ITEM	STOCK NUMBER	FIG	ITEM
5315-00-005-0442	27	15	5310-00-088-1251	22	12
2510-00-017-9588	23	1	5340-00-088-1254	4	6
6240-00-019-0877	1	5		5	4
	2	7	5330-00-088-9167	28	4
	3	5	5330-00-090-2128	14	7
6240-00-019-3093	3	3	3110-00-100-3095	17	16
2530-00-021-2366	13	13	2510-00-106-8933	26	3
	15	17	5305-00-115-9430	4	1
2530-00-026-0200	12	1		10	8
2590-00-040-2075	21	9		13	4
	27	20		19	14
5306-00-043-1953	30	4		31	5
6240-00-044-6914	2	4	5305-00-115-9526	2	9
	3	4		3	9
5306-00-050-1238	8	9		26	13
4730-00-050-4203	23	6	5310-00-127-3634	26	18
5310-00-052-6454	23	8	3040-00-150-7127	9	3
5305-00-052-6921	30	2	6145-00-152-6499	BULK	6
	31	1	5310-00-167-0721	1	7
5305-00-052-6922	5	1	4730-00-168-2073	26	24
	15	4	4730-00-168-2074	28	17
5306-00-053-0512	23	16	4730-00-168-2075	28	11
3120-00-056-2173	23	3	5306-00-174-4246	22	26
2510-00-056-2174	23	15	6220-00-179-4324	3	7
2510-00-056-4799	23	5	5310-00-194-1483	19	18
5999-00-057-2929	4	12	4730-00-196-1468	15	18
	5	21	4730-00-196-2017	28	18
4730-00-057-5555	15	10	4710-00-200-0277	BULK	4
5305-00-068-0498	21	2	9905-00-202-3639	30	1
5305-00-068-0501	4	9	2530-00-204-4800	12	7
	22	23	9905-00-205-2795	30	3
5305-00-068-0502	26	12	5306-00-206-1560	17	12
5305-00-068-0505	20	29	5310-00-209-1761	10	2
5305-00-068-0506	5	8		11	4
	11	12	4730-00-221-2136	16	8
5305-00-068-0515	9	37	4730-00-221-4997	28	16
	20	21	9905-00-223-7082	31	12
5310-00-068-5285	22	27	5310-00-225-6408	23	4
4730-00-069-1186	13	23	5306-00-225-8496	9	13
	15	14	5306-00-225-9083	1	8
4720-00-069-9338	13	25	5306-00-225-9093	22	21
5305-00-071-2066	22	24	5940-00-230-0515	6	3
5305-00-071-2241	22	20	5315-00-234-1664	19	7
3040-00-074-2357	9	3		20	5
5310-00-080-6004	17	8	4720-00-238-8304	BULK	2
	20	3	4730-00-247-3206	28	6
4730-00-084-7436	28	3	2610-00-262-8677	18	1
5310-00-087-4652	8	2	5305-00-269-2802	19	30
	20	9	5305-00-269-2803	9	16
5310-00-087-7493	27	11		19	23

CROSS-REFERENCE INDEXES

NATIONAL STOCK NUMBER INDEX

STOCK NUMBER	FIG	ITEM	STOCK NUMBER	FIG	ITEM
5305-00-269-2803	20	22	5310-00-424-1456	25	5
5305-00-269-2805	11	29	5310-00-427-0043	23	9
	23	10	5340-00-427-0080	25	14
5305-00-269-2807	9	15	5330-00-462-0907	3	6
5305-00-269-3238	10	9	4730-00-463-1588	10	19
2610-00-269-7383	18	2		11	21
5310-00-270-8832	22	3	5975-00-483-5756	4	5
5310-00-270-8834	22	4		5	6
5325-00-270-8889	15	6		28	10
5365-00-274-4544	9	22	5310-00-483-8792	22	18
	10	18	2510-00-502-4543	26	1
	11	23	4710-00-511-1692	12	4
5310-00-274-8715	17	18	5310-00-518-5566	17	4
5365-00-275-4519	24	1	2530-00-522-1157	9	29
5325-00-276-6098	4	10	5340-00-537-2212	26	42
	5	10		27	29
	13	17	5310-00-543-4385	11	15
4730-00-278-4290	15	16	5310-00-550-1130	26	11
4730-00-278-8257	14	1		28	7
5340-00-281-1444	13	3	5310-00-550-3503	9	5
	15	3	2530-00-563-8316	10	3
5340-00-281-1446	13	5		11	5
	15	5	4710-00-566-7133	9	24
9905-00-282-7489	31	3	4710-00-566-7134	9	26
5330-00-285-5123	16	6	5935-00-572-9180	2	2
4730-00-289-0051	13	18		4	14
4730-00-289-0155	13	20		5	19
5330-00-297-7106	2	5	5340-00-574-8356	12	3
5330-00-298-0078	26	29	5330-00-575-9791	26	44
5310-00-314-0764	9	32		27	30
5310-00-314-0765	9	2	4730-00-580-8457	16	7
5310-00-322-7260	9	33	5330-00-582-2855	29	9
5315-00-322-7261	9	1	5310-00-582-5965	5	3
3040-00-330-3262	8	3		9	17
5306-00-335-4768	17	11		11	10
5365-00-350-0155	25	3		20	26
5306-00-383-4957	17	6		21	6
5940-00-399-6676	4	20		30	5
	5	13	5310-00-584-5005	13	11
	6	4	5310-00-584-5272	20	14
5310-00-407-9566	8	11		22	25
	9	12		25	15
	15	8	5330-00-585-6663	29	6
5340-00-408-9177	8	10	5310-00-594-8038	17	4
4730-00-419-9425	9	27	4730-00-595-0083	14	6
	10	15	4510-00-595-1785	28	1
	11	18	5310-00-595-7237	19	20
5340-00-421-7242	25	11		23	11
2590-00-424-0891	19	13		26	14
5310-00-424-1452	25	2	5340-00-611-7883	4	4

CROSS-REFERENCE INDEXES

NATIONAL STOCK NUMBER INDEX

STOCK NUMBER	FIG	ITEM	STOCK NUMBER	FIG	ITEM
5340-00-611-7883	5	7	4010-00-741-1027	19	1
5330-00-614-4356	17	20		20	1
2530-00-614-4454	17	19	5310-00-741-1028	19	8
5365-00-624-0255	25	4		20	6
5310-00-627-6128	9	35	2530-00-741-1078	13	16
4710-00-630-9928	9	26	2940-00-741-1081	16	3
5310-00-637-9541	3	8	5310-00-741-1378	17	21
	8	8	5310-00-741-1379	17	22
	10	24	2530-00-741-1425	17	9
	11	1	5330-00-741-1429	17	15
	11	27	5365-00-741-1433	17	14
	19	22	5306-00-741-1760	9	11
	20	12	4730-00-741-1903	9	25
5305-00-638-8920	8	4	4710-00-741-1907	9	24
5310-00-641-9939	9	31	2530-00-741-2050	9	9
5340-00-656-3638	23	13	2530-00-741-2065	9	7
5310-00-660-3381	22	16	2530-00-741-2068	9	9
6220-00-669-5623	2	1	5310-00-741-2088	9	28
2530-00-677-0202	17	5		10	20
5330-00-678-9047	1	4		11	22
5310-00-679-3606	16	4	5365-00-741-2103	9	10
5310-00-693-0738	22	6	2530-00-741-3231	17	10
2530-00-693-1007	9	4	2530-00-741-5748	16	2
5360-00-699-8489	22	7	9905-00-752-4649	4	17
5340-00-699-8490	13	21		5	16
	15	20		6	7
5360-00-699-9018	9	36	6220-00-752-6020	2	6
6145-00-705-6684	BULK	1	5310-00-761-6882	9	14
5360-00-706-9054	16	5		19	3
5305-00-716-8183	25	12		21	5
5305-00-716-8184	19	27		30	6
	20	15	5310-00-763-8905	24	5
5305-00-725-4138	26	45		25	9
5305-00-725-4187	19	16	5310-00-763-8920	19	9
5305-00-728-6281	23	7		20	8
4730-00-729-6437	9	23	5310-00-768-0319	5	11
	10	17		11	9
	11	20		20	17
5310-00-732-0559	9	34	2510-00-769-7483	21	8
	11	2	4730-00-773-2163	12	9
	19	25	4720-00-774-4040	10	14
	20	11		11	16
5310-00-732-0560	19	29	6220-00-775-2384	1	3
	20	13	5340-00-776-3264	9	19
	25	16	6150-00-777-3068	4	2
5306-00-733-9239	17	6		5	5
5310-00-733-9465	24	3		6	1
2530-00-737-3260	9	8	2530-00-791-0110	9	20
5330-00-737-3354	12	8	2530-00-791-3259	9	20
2530-00-738-9061	17	2	4710-00-791-8077	9	21

CROSS-REFERENCE INDEXES

NATIONAL STOCK NUMBER INDEX

STOCK NUMBER	FIG	ITEM	STOCK NUMBER	FIG	ITEM
4710-00-791-8078	9	21	5310-00-880-7746	15	9
2530-00-794-9763	9	29	4730-00-883-2620	26	33
2530-00-797-9295	13	8	2510-00-886-8061	24	2
	16	1	9905-00-893-3570	6	8
5306-00-797-9296	13	7	5310-00-903-3993	9	6
5340-00-809-1490	10	7	5310-00-903-5966	28	8
	11	11	5315-00-904-1643	27	13
4720-00-809-2750	12	6	4730-00-908-3193	12	5
5310-00-809-3078	4	7	4730-00-909-8627	28	12
	5	2	5305-00-912-5113	19	21
5310-00-809-4058	28	9		20	20
5310-00-809-4061	19	24	5340-00-912-8871	4	3
	20	23	5305-00-914-9001	27	25
	23	12	5310-00-924-4218	9	38
5310-00-809-5998	26	16	5330-00-930-8233	KITS	
5315-00-815-8840	8	5	5310-00-933-8121	27	8
5310-00-820-6653	19	5	5306-00-937-1312	28	15
	20	7	5305-00-943-7087	27	31
5310-00-823-8803	26	46	5310-00-959-1488	10	1
4710-00-827-5847	BULK	5		11	17
5935-00-833-8561	4	18		13	22
	5	15		19	12
	6	6	5310-00-959-7600	27	18
5970-00-833-8562	4	19	2530-00-973-2355	9	30
	5	14	2530-00-973-2356	9	30
	6	5	5310-00-975-2075	8	7
5310-00-833-8567	4	13		19	10
	5	20	5310-00-982-4908	17	7
5310-00-835-2037	11	14	5310-00-982-6808	22	29
	25	8	5310-00-982-6810	22	2
5315-00-839-5822	26	15	5310-00-984-3807	27	10
5315-00-841-4442	29	2	5340-00-985-0823	8	6
5315-00-842-3044	8	1	5340-00-987-2565	9	18
5315-00-844-5836	22	14	5305-00-988-1723	17	17
6220-00-846-9745	1	1	5340-00-991-4342	9	18
4820-00-849-1220	13	15	5305-00-993-2738	27	21
	15	11	5310-00-998-0608	17	13
5305-00-850-5841	31	9	2540-00-999-5584	19	2
4720-00-851-8969	28	13		19	2
5305-00-855-0957	31	4		20	2
4820-00-856-1722	26	23		20	2
	27	17	9905-00-999-7369	13	2
4820-00-863-5592	28	14		15	21
4710-00-863-5594	10	12	9905-00-999-7370	13	1
	11	13		15	2
4710-00-863-5595	10	16	5365-01-004-2901	26	41
	11	19	5340-01-008-6088	21	7
5995-00-863-5596	8	13	2540-01-025-5344	20	24
9905-00-865-8352	31	6	5340-01-029-7885	21	3
5310-00-880-7746	8	12	4720-01-031-4386	15	7

CROSS-REFERENCE INDEXES

NATIONAL STOCK NUMBER INDEX

STOCK NUMBER	FIG	ITEM
4720-01-031-4387	15	1
4730-01-036-7498	28	2
2530-01-038-2047	7	1
5306-01-038-3059	19	32
2530-01-042-0683	15	19
5306-01-043-5702	15	15
5340-01-048-2239	5	9
2590-01-051-1711	4	11
5360-01-078-5574	27	12
5340-01-084-5990	27	24
5330-01-084-5991	27	23
5340-01-084-5992	27	27
5360-01-085-5570	8	14
4710-01-085-5635	15	13
9905-01-086-1580	31	2
4730-01-086-1620	27	26
8115-01-086-1666	21	4
2540-01-086-1667	21	4
2530-01-087-1003	25	6
9540-01-087-3068	27	14
5306-01-088-1962	27	16
2510-01-091-5167	27	1
4510-01-092-4045	29	1
2510-01-092-9228	27	22
5340-01-092-9229	20	10
6220-01-093-4439	3	1
2530-01-093-8270	25	10
2530-01-093-8271	25	13
3120-01-093-8325	23	2
2510-01-095-2422	27	2
5340-01-096-5019	27	19
9905-01-097-7047	31	12
4510-01-100-9349	29	3
4730-01-101-2709	29	4
5310-01-101-4848	29	7
7690-01-111-2265	12	2
5310-01-130-1226	26	43
	27	28
4730-01-134-6995	28	5
3120-01-141-6304	26	31
5310-01-144-1646	26	34
2510-01-151-7821	26	4
5340-01-160-9637	26	20
2510-01-163-1346	20	19
2510-01-163-1347	20	19
5340-01-164-1981	26	9
2540-01-168-9876	19	33
	20	30
	21	1
5340-01-169-2329	26	26
5340-01-171-0967	26	19
2510-01-176-4657	19	34
	20	31
5315-01-177-9862	26	22
2590-01-178-7374	5	12
2590-01-183-6816	22	1
4730-01-186-9411	26	37
5306-01-196-0436	26	25
2510-01-198-4495	19	19
	20	31
9905-01-204-9996	31	7
5340-01-209-0475	22	15
3040-01-209-0497	22	22
5340-01-209-0500	22	19
5340-01-209-0503	22	17
2590-01-210-8843	22	28
2540-01-215-1617	22	9
2530-01-215-3389	22	13
5315-01-221-4325	26	27
5340-01-222-5247	22	11
3040-01-245-2522	23	14
3040-01-254-5369	27	6
2510-01-254-6578	19	26
	20	25
2510-01-257-3898	26	2
5330-01-317-9640	27	4
9905-01-333-0796	31	8
5340-01-333-5752	20	10

CROSS-REFERENCE INDEXES

PART NUMBER INDEX

CAGEC	PART NUMBER	STOCK NUMBER	FIG	ITEM
86594	A19-17-10		29	12
86594	A19-17-11-5	4730-01-101-2709	29	4
86594	A19-17-11-6	5310-01-101-4848	29	7
86594	A19-17-12		29	10
86594	A19-17-13		29	11
86594	A19-17-8		29	13
86594	A19-17-9		29	8
4J828	A19-7-7	4510-01-100-9349	29	3
23703	A298318		10	22
			11	25
63477	FC2832	2530-00-563-8316	10	3
			11	5
63477	F6222	4720-00-774-4040	10	14
			11	16
40342	GN20069		10	23
			11	26
81349	MIL-H-3992	4720-00-238-8304	BULK	2
81349	MIL-T-3520	4710-00-200-0277	BULK	4
96906	MS14300AAB	4710-00-827-5847	BULK	5
96906	MS143056XA	4730-00-221-4997	28	16
96906	MS14309-24A	4730-01-134-6995	28	5
96906	MS14309-30A	4730-00-247-3206	28	6
96906	MS15001-1	4730-00-050-4203	23	6
96906	MS15570-1251	6240-00-019-0877	1	5
			2	7
			3	5
96906	MS15570-623	6240-00-019-3093	3	3
96906	MS15795-215		19	11
96906	MS16556-844		22	5
96906	MS16562-224	5315-00-841-4442	29	2
96906	MS16562-65	5315-00-844-5836	22	14
96906	MS17829-40	5310-00-483-8792	22	18
96906	MS18153-141	5305-00-943-7087	27	31
96906	MS18154-58	5305-00-115-9526	2	9
			3	9
			26	13
96906	MS20392-7C75	5315-00-904-1643	27	13
96906	MS20913-1S	4730-00-221-2136	16	8
96906	MS21044-N12	5310-00-982-6810	22	2
96906	MS21044-N9	5310-00-982-6808	22	29
96906	MS21045-6	5310-00-982-4908	17	7
96906	MS21083-N5	5310-00-660-3381	22	16
96906	MS21318-37	5305-00-850-5841	31	9
96906	MS21333-104	5340-00-088-1254	4	6
			5	4
96906	MS21333-43	5340-00-912-8871	4	3
96906	MS21333-98	5340-00-809-1490	10	7
			11	11
96906	MS24585C507	5360-01-078-5574	27	12
96906	MS24629-46	5305-00-855-0957	31	4
96906	MS24629-57	5305-00-052-6921	30	2

CROSS-REFERENCE INDEXES

PART NUMBER INDEX

CAGEC	PART NUMBER	STOCK NUMBER	FIG	ITEM
96906	MS24629-57	5305-00-052-6921	31	1
96906	MS24629-58	5305-00-052-6922	5	1
			15	4
96906	MS24665-283	5315-00-842-3044	8	1
96906	MS24665-285	5315-00-005-0442	27	15
96906	MS24665-353	5315-00-839-5822	26	15
96906	MS24665-495	5315-00-234-1664	19	7
			20	5
96906	MS24679-9	5310-00-127-3634	26	18
96906	MS25036-154	5940-00-230-0515	6	3
96906	MS27026-6	4730-00-084-7436	28	3
96906	MS27029-6	4730-01-036-7498	28	2
96906	MS27030-3	5330-00-088-9167	28	4
96906	MS27148-2	5999-00-057-2929	4	12
			5	21
96906	MS27183-10	5310-00-809-4058	28	9
96906	MS27183-11	5310-00-809-3078	4	7
			5	2
96906	MS27183-13	5310-00-087-7493	27	11
96906	MS27183-14	5310-00-080-6004	17	8
			20	3
96906	MS27183-15	5310-00-809-4061	19	24
			20	23
			23	12
96906	MS27183-18	5310-00-809-5998	26	16
96906	MS27183-20	5310-00-068-5285	22	27
96906	MS27183-21	5310-00-823-8803	26	46
96906	MS28775-110	5330-00-585-6663	29	6
96906	MS28775-113	5330-00-582-2855	29	9
96906	MS35206-279	5305-00-988-1723	17	17
96906	MS35207-280	5305-00-993-2738	27	21
96906	MS35298-60		13	14
96906	MS353-7-312		27	9
96906	MS35333-25		2	8
96906	MS35333-40	5310-00-550-1130	26	11
			28	7
96906	MS35333-41	5310-00-167-0721	1	7
96906	MS35333-42	5310-00-595-7237	19	20
			23	11
			26	14
96906	MS35333-44	5310-00-194-1483	19	18
96906	MS35333-46	5310-00-543-4385	11	15
96906	MS35335-35	5310-00-627-6128	9	35
96906	MS35335-36	5310-00-550-3503	9	5
96906	MS35337-25		13	10
			19	4
96906	MS35338-139	5310-00-933-8121	27	8
96906	MS35338-44	5310-00-582-5965	5	3
			9	17
			11	10
			20	26

CROSS-REFERENCE INDEXES

PART NUMBER INDEX

CAGEC	PART NUMBER	STOCK NUMBER	FIG	ITEM
96906	MS35338-44	5310-00-582-5965	21	6
			30	5
96906	MS35338-45	5310-00-407-9566	8	11
			9	12
			15	8
96906	MS35338-46	5310-00-637-9541	3	8
			8	8
			10	24
			11	1
			11	27
			19	22
			20	12
96906	MS35338-48	5310-00-584-5272	20	14
			22	25
			25	15
96906	MS35338-50	5310-00-820-6653	19	5
			20	7
			24	4
96906	MS35338-63	5310-00-274-8715	17	18
96906	MS35340-51	5310-00-052-6454	23	8
96906	MS35387-1	9905-00-205-2795	30	3
96906	MS35387-2	9905-00-202-3639	30	1
96906	MS35478-1683	6240-00-044-6914	2	4
			3	4
96906	MS35489-78	5325-00-276-6098	4	10
			5	10
			13	17
96906	MS35489-81	5325-00-270-8889	15	6
96906	MS35490-404		4	8
96906	MS35690-405	5310-00-584-5005	13	11
96906	MS35691-1022		10	13
96906	MS35691-21	5310-00-975-2075	8	7
			19	10
96906	MS35691-53	5310-00-835-2037	11	14
			25	8
96906	MS35691-80		26	28
96906	MS35692-61	5310-00-998-0608	17	13
96906	MS35746-1	4730-00-595-0083	14	6
96906	MS35748-1	5330-00-090-2128	14	7
96906	MS35782-5	4820-00-849-1220	13	15
			15	11
96906	MS35810-4	5315-00-815-8840	8	5
96906	MS35812-4	5340-00-985-0823	8	6
96906	MS35842-12	4730-00-908-3193	12	5
96906	MS35842-13	4730-00-909-8627	28	12
96906	MS39020-1	9905-00-752-4649	4	17
			5	16
			6	7
96906	MS39020-2		5	17
79470	MS39133-1	4730-00-278-8257	14	1
79470	MS39133-2B		14	4

CROSS-REFERENCE INDEXES

PART NUMBER INDEX

CAGEC	PART NUMBER	STOCK NUMBER	FIG	ITEM
19207	MS39136-1B		14	2
			14	5
96906	MS39182-5	4730-00-289-0155	13	20
96906	MS39182-6	4730-00-289-0051	13	18
96906	MS39231-2	4730-00-278-4290	15	16
96906	MS49005-6	4730-00-057-5555	15	10
96906	MS51096-359	5305-00-912-5113	19	21
			20	20
96906	MS51096-361	5305-00-914-9001	27	25
96906	MS51329-1	6220-00-669-5623	2	1
96906	MS51339-3	2540-00-999-5584	19	2
			19	2
			20	2
			20	2
96906	MS51846-122	4730-00-196-2017	28	18
96906	MS51922-1	5310-00-088-1251	22	12
96906	MS51922-13	5310-00-984-3807	27	10
96906	MS51922-17	5310-00-087-4652	8	2
			20	9
96906	MS51922-21	5310-00-959-1488	10	1
			11	17
			13	22
			19	12
96906	MS51922-5	5310-00-959-7600	27	18
96906	MS51922-53	5310-00-225-6408	23	4
96906	MS51946-1	5306-00-733-9239	17	6
96906	MS51946-2	5306-00-383-4957	17	6
96906	MS51953-97	4730-00-196-1468	15	18
96906	MS51967-2	5310-00-761-6882	9	14
			19	3
			21	5
			30	6
96906	MS51967-20	5310-00-763-8920	19	9
			20	8
96906	MS51968-14	5310-00-732-0560	19	29
			20	13
			25	16
96906	MS51968-2	5310-00-768-0319	5	11
			11	9
			20	17
96906	MS51968-20	5310-00-763-8905	24	5
			25	9
96906	MS51968-5	5310-00-880-7746	8	12
			15	9
96906	MS51968-8	5310-00-732-0559	9	34
			11	2
			19	25
			20	11
96906	MS51970-1	5310-00-924-4218	9	38
96906	MS51970-4	5310-00-903-3993	9	6
96906	MS51971-1	5310-00-903-5966	28	8

CROSS-REFERENCE INDEXES

PART NUMBER INDEX

CAGEC	PART NUMBER	STOCK NUMBER	FIG	ITEM
96906	MS51973-54	5305-00-728-6281	23	7
96906	MS51983-1	5310-00-518-5566	17	4
96906	MS51983-2	5310-00-594-8038	17	4
96906	MS52125-2	6220-01-093-4439	3	1
96906	MS521301A204120	4720-00-809-2750	12	6
96906	MS53004-2	2530-00-021-2366	13	13
			15	17
96906	MS53007-1	9905-00-999-7370	13	1
			15	2
96906	MS53007-2	9905-00-999-7369	13	2
			15	21
96906	MS53044-5		17	1
96906	MS53047-1		1	6
96906	MS53060-6	5995-00-863-5596	8	13
96906	MS90725-10	5305-00-071-2241	22	20
96906	MS90725-31	5306-00-225-8496	9	13
96906	MS90725-5	5305-00-068-0501	4	9
			22	23
96906	MS90725-6	5305-00-068-0502	26	12
96906	MS90726-112	5305-00-716-8184	19	27
			20	15
96906	MS90726-114	5305-00-725-4187	19	16
96906	MS90726-116	5305-00-716-8183	25	12
96906	MS90726-170	5305-00-725-4138	26	45
96906	MS90726-28	5306-00-225-9083	1	8
96906	MS90726-38	5306-00-225-9093	22	21
96906	MS90726-5	5305-00-068-0505	20	29
96906	MS90726-59	5305-00-269-2802	19	30
96906	MS90726-6	5305-00-068-0506	5	8
			11	12
96906	MS90726-60	5305-00-269-2803	9	16
			19	23
			20	22
96906	MS90726-62	5305-00-269-2805	11	29
			23	10
96906	MS90726-64	5305-00-269-2807	9	15
96906	MS90727-32	5306-00-050-1238	8	9
96906	MS90727-62	5305-00-269-3238	10	9
96906	MS90727-8	5305-00-068-0515	9	37
			20	21
96906	MS90728-109	5305-00-071-2066	22	24
96906	MS90728-67	5305-00-638-8920	8	4
81349	M13486/1-5	6145-00-152-6499	BULK	6
19207	M13486/1-5-1		4	15
19207	M13486/1-5-2		5	18
81349	M13486/10-1	6145-00-705-6684	BULK	1
19207	M13486/10-1-1		6	2
81349	M43436/1-3	9905-00-893-3570	6	8
03538	N22P21006C6	5305-00-068-0498	21	2
81349	WW-T-779		BULK	3

CROSS-REFERENCE INDEXES

PART NUMBER INDEX

CAGEC	PART NUMBER	STOCK NUMBER	FIG	ITEM
81348	ZZ-T-381M/GROUP3 /9.00-20/D/TBCC	2610-00-262-8677	18	1
19207	10929810		10	10
19207	10929816	9905-00-223-7082	31	12
19207	10929816-1	9905-01-097-7047	31	12
19207	10929850		13	6
19207	10929946	2510-00-017-9588	23	1
19207	10935126	5340-01-048-2239	5	9
19207	10944275		13	19
19207	10944276		13	24
19207	10944279		19	17
19207	10944794-1		26	38
19207	10944794-2		26	32
19207	10944795	3120-01-141-6304	26	31
19207	10944796	4730-01-186-9411	26	37
19207	10944862-1		26	39
19207	10944862-2		26	35
19207	10944918	5330-00-930-8233	KITS	
19207	11597666-1	2540-01-025-5344	20	24
19207	11597732	2510-01-163-1346	20	19
19207	11597732-1	2510-01-163-1347	20	19
19207	11597735		26	21
19207	11597736		26	17
19207	11597737	5340-01-160-9637	26	20
19207	11597741	2510-01-257-3898	26	2
19207	11597742	2510-00-106-8933	26	3
19207	11597745		20	18
19207	11597761	5360-01-085-5570	8	14
19207	11597762	2590-01-178-7374	5	12
19207	11597763		26	5
19207	11597764		26	8
19207	11597765	2510-01-151-7821	26	4
19207	11597766		26	7
19207	11597768	5310-01-130-1226	26	43
			27	28
19207	11625044	9905-01-204-9996	31	7
19207	11625093		11	3
19207	11625104	2530-01-042-0683	15	19
19207	11625105	5306-01-043-5702	15	15
19207	11625109	4710-01-085-5635	15	13
19207	11625110		20	16
19207	11625142-1	4720-01-031-4386	15	7
19207	11625142-1-110		14	3
19207	11625142-2	4720-01-031-4387	15	1
19207	11625142-2-128		14	3
19207	11625147	2530-01-087-1003	25	6
19207	11639519-2	5330-00-462-0907	3	6
19207	11639520		3	2
19207	11639535	6220-00-179-4324	3	7
19207	12259830	2590-01-183-6816	22	1
19207	12259830-1		22	10

CROSS-REFERENCE INDEXES

PART NUMBER INDEX

CAGEC	PART NUMBER	STOCK NUMBER	FIG	ITEM
19207	12259831	3040-01-209-0497	22	22
19207	12259835	5340-01-209-0475	22	15
19207	12259837	5340-01-209-0500	22	19
19207	12259839	2590-01-210-8843	22	28
19207	12259840	5340-01-209-0503	22	17
19207	12259844	2540-01-215-1617	22	9
19207	12259845	2530-01-215-3389	22	13
19207	12269860	2510-01-092-9228	27	22
19207	12269886	2510-01-091-5167	27	1
19207	12269894-1	5340-01-084-5990	27	24
19207	12269894-2	5340-01-084-5992	27	27
19207	12269895	5330-01-084-5991	27	23
19207	12269949	9905-01-086-1580	31	2
19207	12269951	2510-01-095-2422	27	2
19207	12269958		27	3
19207	12269960	9540-01-087-3068	27	14
19207	12269970	5306-01-088-1962	27	16
19207	12269972		27	7
19207	12296217	5340-01-096-5019	27	19
19207	12296219	3040-01-254-5369	27	6
19207	12296243	4510-01-092-4045	29	1
19207	12296244	5340-01-092-9229	20	10
19207	12296261		27	5
19207	12296591		10	4
			11	6
19207	12296592		10	6
			11	8
19207	12302516	7690-01-111-2265	12	2
19207	12312996	5340-01-222-5247	22	11
19207	12331771	9905-01-333-0796	31	8
19207	12354242	5330-01-317-9640	27	4
19207	12355820	5340-01-333-5752	20	10
19207	12355946		31	10
19207	12362734		31	11
19207	139855		25	7
21450	172439	5305-00-115-9430	4	1
			10	8
			13	4
			19	14
			31	5
96606	205267	2590-00-424-0891	19	13
24617	2289994	2610-00-269-7383	18	2
30327	261G	4510-00-595-1785	28	1
19207	324420		22	8
08162	3984	3110-00-100-3095	17	16
21450	431953	5306-01-038-3059	19	32
		5306-00-043-1953	30	4
19207	5160323	5310-00-209-1761	10	2
			11	4
19207	5167679	4730-00-463-1588	10	19
			11	21

CROSS-REFERENCE INDEXES

PART NUMBER INDEX

CAGEC	PART NUMBER	STOCK NUMBER	FIG	ITEM
19207	5298653	5365-00-274-4544	9	22
			10	18
			11	23
19207	5303461	5340-00-408-9177	8	10
19207	5323088	5310-00-641-9939	9	31
81343	6-4 120102BA	4730-00-069-1186	13	23
			15	14
81343	6-4 120202BA(LONG NUT)		10	11
			13	9
			13	12
			15	12
78500	6144356	5330-00-614-4356	17	20
19200	6144454	2530-00-614-4454	17	19
02697	6723		29	5
19207	7034748	5340-01-008-6088	21	7
19207	7034882	4820-00-856-1722	26	23
			27	17
19207	7034885	5340-01-171-0967	26	19
19207	7034938	5310-01-144-1646	26	34
19207	7034940		26	6
19207	7034951		26	30
19207	7034967	2510-00-502-4543	26	1
19207	7034976		26	40
19207	7035043		26	36
19207	7035152	2510-01-198-4495	19	19
			20	31
19207	7035153	2510-01-176-4657	19	34
			20	31
19207	7035188-1	5340-01-164-1981	26	9
19207	7035204	5340-01-169-2329	26	26
19207	7035450	4730-00-168-2074	28	17
19207	7035451	2540-01-086-1667	21	4
19207	7035452	8115-01-086-1666	21	4
19207	7035486	2540-01-168-9876	19	33
			20	30
			21	1
19207	7035487		19	33
			20	30
			21	1
19207	7037002	5340-01-029-7885	21	3
19207	7039041-1	5306-01-196-0436	26	25
19207	7039172-1		26	10
19207	7039172-2	5315-01-177-9862	26	22
19207	7039178	5315-01-221-4325	26	27
19207	7039673	4820-00-863-5592	28	14
19207	7043974	9905-00-865-8352	31	6
19207	7055100	6150-00-777-3068	4	2
			5	5
			6	1
19207	7055109	2510-01-254-6578	19	26

CROSS-REFERENCE INDEXES

PART NUMBER INDEX

CAGEC	PART NUMBER	STOCK NUMBER	FIG	ITEM
19207	7055109	2510-01-254-6578	20	25
19207	7055112	2590-01-051-1711	4	11
19207	7058998	4710-00-863-5594	10	12
			11	13
19207	7058999	4710-00-863-5595	10	16
			11	19
19207	7059176	2530-01-038-2047	7	1
19207	7059265-1		19	15
19207	7059533		19	31
			20	28
19207	7059565		19	28
			20	27
19207	7064978	2530-00-693-1007	9	4
19207	7065947	4730-00-168-2075	28	11
19207	7320658	5330-00-297-7106	2	5
19207	7320691		1	2
19207	7339465	5310-00-733-9465	24	3
19207	7339466	5365-00-275-4519	24	1
19207	7349016	5340-00-427-0080	25	14
19207	7349017	5340-00-421-7242	25	11
19207	7349028	5310-00-424-1452	25	2
19207	7349029	5310-00-424-1456	25	5
19207	7350779	3040-01-245-2522	23	14
19207	7366478-1	2530-01-093-8270	25	10
19207	7366480-1	2530-01-093-8271	25	13
19207	7373260	2530-00-737-3260	9	8
19207	7373354	5330-00-737-3354	12	8
19207	7389061	2530-00-738-9061	17	2
19207	7389620		17	3
19207	7392224		4	16
19207	7392815	3040-00-330-3262	8	3
19207	7411022	2530-00-797-9295	13	8
			16	1
19207	7411027	4010-00-741-1027	19	1
			20	1
19207	7411028	5310-00-741-1028	19	8
			20	6
19207	7411041	5310-00-427-0043	23	9
19207	7411078	2530-00-741-1078	13	16
19207	7411081	2940-00-741-1081	16	3
19207	7411378	5310-00-741-1378	17	21
19207	7411379	5310-00-741-1379	17	22
19207	7411425	2530-00-741-1425	17	9
19207	7411429	5330-00-741-1429	17	15
19207	7411433	5365-00-741-1433	17	14
19207	7411760	5306-00-741-1760	9	11
19207	7411903	4730-00-741-1903	9	25
19207	7412050	2530-00-741-2050	9	9
19207	7412065	2530-00-741-2065	9	7
19207	7412068	2530-00-741-2068	9	9
19207	7412079	4730-00-729-6437	9	23

CROSS-REFERENCE INDEXES

PART NUMBER INDEX

CAGEC	PART NUMBER	STOCK NUMBER	FIG	ITEM
19207	7412079	4730-00-729-6437	10	17
			11	20
19207	7412088	5310-00-741-2088	9	28
			10	20
			11	22
19207	7412103	5365-00-741-2103	9	10
19207	7413231	2530-00-741-3231	17	10
19207	7415748	2530-00-741-5748	16	2
19207	7522436	5340-00-656-3638	23	13
19207	7526020	6220-00-752-6020	2	6
19207	7539197	2590-00-040-2075	21	9
			27	20
19207	7697483	2510-00-769-7483	21	8
19207	7711369	5365-01-004-2901	26	41
19207	7745464	4730-00-419-9425	9	27
			10	15
			11	18
19207	7974916	5365-00-350-0155	25	3
19207	7974917	5365-00-624-0255	25	4
19207	7979296	5306-00-797-9296	13	7
19207	7979373	9905-00-282-7489	31	3
19207	7979612	5360-00-706-9054	16	5
19207	7979613	4730-00-580-8457	16	7
19207	7979614	5310-00-679-3606	16	4
63477	7979691	4730-00-773-2163	12	9
19207	7979972	5306-00-174-4246	22	26
19207	8329823	5330-00-285-5123	16	6
19207	8330046	5330-00-298-0078	26	29
19207	8330813	5310-00-270-8834	22	4
19207	8330821	5310-00-270-8832	22	3
19207	8331536	5340-00-281-1446	13	5
			15	5
19207	8331537	5340-00-281-1444	13	3
			15	3
19207	8331541	5360-00-699-8489	22	7
19207	8331542	5310-00-693-0738	22	6
19207	8331543	5340-00-537-2212	26	42
			27	29
19207	8331544	5330-00-575-9791	26	44
			27	30
19207	8331782	5340-00-699-8490	13	21
			15	20
19207	8333780	5306-00-206-1560	17	12
19207	8338561	5935-00-833-8561	4	18
			5	15
			6	6
19207	8338562	5970-00-833-8562	4	19
			5	14
			6	5
19207	8338564	5940-00-399-6676	4	20
			5	13

CROSS-REFERENCE INDEXES

PART NUMBER INDEX

CAGEC	PART NUMBER	STOCK NUMBER	FIG	ITEM
19207	8338564	5940-00-399-6676	6	4
19207	8338566	5935-00-572-9180	2	2
			4	14
			5	19
19207	8338567	5310-00-833-8567	4	13
			5	20
19207	8357980	2530-00-204-4800	12	7
19207	8357982	5340-00-574-8356	12	3
19207	8365413		10	21
			11	24
19207	8365426	4710-00-511-1692	12	4
19207	8365427	2530-00-026-0200	12	1
19207	8384073		19	6
			20	4
19207	8389626	2510-00-056-2174	23	15
19207	8389628	5306-00-053-0512	23	16
19207	8389733	3120-01-093-8325	23	2
19207	8389734	3120-00-056-2173	23	3
19207	8389735	2510-00-056-4799	23	5
19207	8694464	5330-00-678-9047	1	4
19207	8716992	2510-00-886-8061	24	2
19207	8718996	4720-00-069-9338	13	25
19207	8719915	2530-00-677-0202	17	5
18876	8720025	5306-00-335-4768	17	11
19207	8720515	5360-00-699-9018	9	36
19207	8724501	5975-00-483-5756	4	5
			5	6
			28	10
19207	8724753	4720-00-851-8969	28	13
19207	8724754	5306-00-937-1312	28	15
19207	8733890	5340-00-991-4342	9	18
19207	8733891	5340-00-987-2565	9	18
19207	8733892	2530-00-522-1157	9	29
21450	8733893	2530-00-794-9763	9	29
19207	8733898	4710-00-791-8078	9	21
19207	8733899	4710-00-791-8077	9	21
19207	8733901	2530-00-791-3259	9	20
19207	8733902	2530-00-791-0110	9	20
19207	8733911	2530-00-973-2355	9	30
19207	8733912	2530-00-973-2356	9	30
19207	8733916	4710-00-741-1907	9	24
19207	8733918	4710-00-630-9928	9	26
19207	8733920	4710-00-566-7133	9	24
19207	8733922	4710-00-566-7134	9	26
19207	8733926	3040-00-150-7127	9	3
19207	8733927	3040-00-074-2357	9	3
19207	8733935	5310-00-314-0764	9	32
19207	8733936	5310-00-314-0765	9	2
19207	8733937	5310-00-322-7260	9	33
19207	8733938	5315-00-322-7261	9	1
19207	8735729	5340-00-776-3264	9	19

CROSS-REFERENCE INDEXES

PART NUMBER INDEX

CAGEC	PART NUMBER	STOCK NUMBER	FIG	ITEM
19207	8741645	6220-00-846-9745	1	1
19207	8741646	6220-00-775-2384	1	3
19207	8741650		2	3
19207	8741778	4730-00-168-2073	26	24
19207	8741782	4730-00-883-2620	26	33
19207	8741782-1	4730-01-086-1620	27	26
19207	8747908	5340-00-611-7883	4	4
			5	7
19207	9018094		10	5
			11	7
24617	9411382		10	25
			11	28

CROSS-REFERENCE INDEXES

FIGURE AND ITEM NUMBER INDEX

FIG	ITEM	STOCK NUMBER	CAGEC	PART NUMBER
BULK	1	6145-00-705-6684	81349	M13486/10-1
BULK	2	4720-00-238-8304	81349	MIL-H-3992
BULK	3		81349	WW-T-779
BULK	4	4710-00-200-0277	81349	MIL-T-3520
BULK	5	4710-00-827-5847	96906	MS14300AAB
BULK	6	6145-00-152-6499	81349	M13486/1-5
KITS		5330-00-930-8233	19207	10944918
1	1	6220-00-846-9745	19207	8741645
1	2		19207	7320691
1	3	6220-00-775-2384	19207	8741646
1	4	5330-00-678-9047	19207	8694464
1	5	6240-00-019-0877	96906	MS15570-1251
1	6		96906	MS53047-1
1	7	5310-00-167-0721	96906	MS35333-41
1	8	5306-00-225-9083	96906	MS90726-28
2	1	6220-00-669-5623	96906	MS51329-1
2	2	5935-00-572-9180	19207	8338566
2	3		19207	8741650
2	4	6240-00-044-6914	96906	MS35478-1683
2	5	5330-00-297-7106	207	7320658
2	6	6220-00-752-6020	19207	7526020
2	7	6240-00-019-0877	96906	MS15570-1251
2	8		96906	MS35333-25
2	9	5305-00-115-9526	96906	MS18154-58
3	1	6220-01-093-4439	96906	MS52125-2
3	2		19207	11639520
3	3	6240-00-019-3093	96906	MS15570-623
3	4	6240-00-044-6914	96906	MS35478-1683
3	5	6240-00-019-0877	96906	MS15570-1251
3	6	5330-00-462-0907	19207	11639519-2
3	7	6220-00-179-4324	19207	11639535
3	8	5310-00-637-9541	96906	MS35338-46
3	9	5305-00-115-9526	96906	MS18154-58
4	1	5305-00-115-9430	21450	172439
4	2	6150-00-777-3068	19207	7055100
4	3	5340-00-912-8871	96906	MS21333-43
4	4	5340-00-611-7883	19207	8747908
4	5	5975-00-483-5756	19207	8724501
4	6	5340-00-088-1254	96906	MS21333-104
4	7	5310-00-809-3078	96906	MS27183-11
4	8		96906	MS35490-404
4	9	5305-00-068-0501	96906	MS90725-5
4	10	5325-00-276-6098	96906	MS35489-78
4	11	2590-01-051-1711	19207	7055112
4	12	5999-00-057-2929	96906	MS27148-2
4	13	5310-00-833-8567	19207	8338567
4	14	5935-00-572-9180	19207	8338566
4	15		19207	M13486/1-5-1
4	16		19207	7392224
4	17	9905-00-752-4649	96906	MS39020-1
4	18	5935-00-833-8561	19207	8338561

CROSS-REFERENCE INDEXES

FIGURE AND ITEM NUMBER INDEX

FIG	ITEM	STOCK NUMBER	CAGEC	PART NUMBER
4	19	5970-00-833-8562	19207	8338562
4	20	5940-00-399-6676	19207	8338564
5	1	5305-00-052-6922	96906	MS24629-58
5	2	5310-00-809-3078	96906	MS27183-11
5	3	5310-00-582-5965	96906	MS35338-44
5	4	5340-00-088-1254	96906	MS21333-104
5	5	6150-00-777-3068	19207	7055100
5	6	5975-00-483-5756	19207	8724501
5	7	5340-00-611-7883	19207	8747908
5	8	5305-00-068-0506	96906	MS90726-6
5	9	5340-01-048-2239	19207	10935126
5	10	5325-00-276-6098	96906	MS35489-78
5	11	5310-00-768-0319	96906	MS51968-2
5	12	2590-01-178-7374	19207	11597762
5	13	5940-00-399-6676	19207	8338564
5	14	5970-00-833-8562	19207	8338562
5	15	5935-00-833-8561	19207	8338561
5	16	9905-00-752-4649	96906	MS39020-1
5	17		96906	MS39020-2
5	18		19207	M13486/1-5-2
5	19	5935-00-572-9180	19207	8338566
5	20	5310-00-833-8567	19207	8338567
5	21	5999-00-057-2929	96906	MS27148-2
6	1	6150-00-777-3068	19207	7055100
6	2		19207	M13486/10-1-1
6	3	5940-00-230-0515	96906	MS25036-154
6	4	5940-00-399-6676	19207	8338564
6	5	5970-00-833-8562	19207	8338562
6	6	5935-00-833-8561	19207	8338561
6	7	9905-00-752-4649	96906	MS39020-1
6	8	9905-00-893-3570	81349	M43436/1-3
7	1	2530-01-038-2047	19207	7059176
8	1	5315-00-842-3044	96906	MS24665-283
8	2	5310-00-087-4652	96906	MS51922-17
8	3	3040-00-330-3262	19207	7392815
8	4	5305-00-638-8920	96906	MS90728-67
8	5	5315-00-815-8840	96906	MS35810-4
8	6	5340-00-985-0823	96906	MS35812-4
8	7	5310-00-975-2075	96906	MS35691-21
8	8	5310-00-637-9541	96906	MS35338-46
8	9	5306-00-050-1238	96906	MS90727-32
8	10	5340-00-408-9177	19207	5303461
8	11	5310-00-407-9566	96906	MS35338-45
8	12	5310-00-880-7746	96906	MS51968-5
8	13	5995-00-863-5596	96906	MS53060-6
8	14	5360-01-085-5570	19207	11597761
9	1	5315-00-322-7261	19207	8733938
9	2	5310-00-314-0765	19207	8733936
9	3	3040-00-074-2357	19207	8733927
9	3	3040-00-150-7127	19207	8733926
9	4	2530-00-693-1007	19207	7064978

CROSS-REFERENCE INDEXES

FIGURE AND ITEM NUMBER INDEX

FIG	ITEM	STOCK NUMBER	CAGEC	PART NUMBER
9	5	5310-00-550-3503	96906	MS35335-36
9	6	5310-00-903-3993	96906	MS51970-4
9	7	2530-00-741-2065	19207	7412065
9	8	2530-00-737-3260	19207	7373260
9	9	2530-00-741-2050	19207	7412050
9	9	2530-00-741-2068	19207	7412068
9	10	5365-00-741-2103	19207	7412103
9	11	5306-00-741-1760	19207	7411760
9	12	5310-00-407-9566	96906	MS35338-45
9	13	5306-00-225-8496	96906	MS90725-31
9	14	5310-00-761-6882	96906	MS51967-2
9	15	5305-00-269-2807	96906	MS90726-64
9	16	5305-00-269-2803	96906	MS90726-60
9	17	5310-00-582-5965	96906	MS35338-44
9	18	5340-00-987-2565	19207	8733891
9	18	5340-00-991-4342	19207	8733890
9	19	5340-00-776-3264	19207	8735729
9	20	2530-00-791-0110	19207	8733902
9	20	2530-00-791-3259	19207	8733901
9	21	4710-00-791-8077	19207	8733899
9	21	4710-00-791-8078	19207	8733898
9	22	5365-00-274-4544	19207	5298653
9	23	4730-00-729-6437	19207	7412079
9	24	4710-00-566-7133	19207	8733920
9	24	4710-00-741-1907	19207	8733916
9	25	4730-00-741-1903	19207	7411903
9	26	4710-00-566-7134	19207	8733922
9	26	4710-00-630-9928	19207	8733918
9	27	4730-00-419-9425	19207	7745464
9	28	5310-00-741-2088	19207	7412088
9	29	2530-00-522-1157	19207	8733892
9	29	2530-00-794-9763	21450	8733893
9	30	2530-00-973-2355	19207	8733911
9	30	2530-00-973-2356	19207	8733912
9	31	5310-00-641-9939	19207	5323088
9	32	5310-00-314-0764	19207	8733935
9	33	5310-00-322-7260	19207	8733937
9	34	5310-00-732-0559	96906	MS51968-8
9	35	5310-00-627-6128	96906	MS35335-35
9	36	5360-00-699-9018	19207	8720515
9	37	5305-00-068-0515	96906	MS90727-8
9	38	5310-00-924-4218	96906	MS51970-1
10	1	5310-00-959-1488	96906	MS51922-21
10	2	5310-00-209-1761	19207	5160323
10	3	2530-00-563-8316	63477	FC2832
10	4		19207	12296591
10	5		19207	9018094
10	6		19207	12296592
10	7	5340-00-809-1490	96906	MS21333-98
10	8	5305-00-115-9430	21450	172439
10	9	5305-00-269-3238	96906	MS90727-62

CROSS-REFERENCE INDEXES

FIGURE AND ITEM NUMBER INDEX

FIG	ITEM	STOCK NUMBER	CAGEC	PART NUMBER
10	10		19207	10929810
10	11		81343	6-4 120202BA(LONG NUT)
10	12	4710-00-863-5594	19207	7058998
10	13		96906	MS35691-1022
10	14	4720-00-774-4040	63477	F6222
10	15	4730-00-419-9425	19207	7745464
10	16	4710-00-863-5595	19207	7058999
10	17	4730-00-729-6437	19207	7412079
10	18	5365-00-274-4544	19207	5298653
10	19	4730-00-463-1588	19207	5167679
10	20	5310-00-741-2088	19207	7412088
10	21		19207	8365413
10	22		23703	A298318
10	23		40342	GN20069
10	24	5310-00-637-9541	6906	MS35338-46
10	25		24617	9411382
11	1	5310-00-637-9541	96906	MS35338-46
11	2	5310-00-732-0559	96906	MS51968-8
11	3		19207	11625093
11	4	5310-00-209-1761	19207	5160323
11	5	2530-00-563-8316	63477	FC2832
11	6		19207	12296591
11	7		19207	9018094
11	8		19207	12296592
11	9	5310-00-768-0319	96906	MS51968-2
11	10	5310-00-582-5965	96906	MS35338-44
11	11	5340-00-809-1490	96906	MS21333-98
11	12	5305-00-068-0506	96906	MS90726-6
11	13	4710-00-863-5594	19207	7058998
11	14	5310-00-835-2037	96906	MS35691-53
11	15	5310-00-543-4385	96906	MS35333-46
11	16	4720-00-774-4040	63477	F6222
11	17	5310-00-959-1488	96906	MS51922-21
11	18	4730-00-419-9425	19207	7745464
11	19	4710-00-863-5595	19207	7058999
11	20	4730-00-729-6437	19207	7412079
11	21	4730-00-463-1588	19207	5167679
11	22	5310-00-741-2088	19207	7412088
11	23	5365-00-274-4544	19207	5298653
11	24		19207	8365413
11	25		23703	A298318
11	26		40342	GN20069
11	27	5310-00-637-9541	96906	MS35338-46
11	28		24617	9411382
11	29	5305-00-269-2805	96906	MS90726-62
12	1	2530-00-026-0200	19207	8365427
12	2	7690-01-111-2265	19207	12302516
12	3	5340-00-574-8356	19207	8357982
12	4	4710-00-511-1692	19207	8365426
12	5	4730-00-908-3193	96906	MS35842-12

CROSS-REFERENCE INDEXES

FIGURE AND ITEM NUMBER INDEX

FIG	ITEM	STOCK NUMBER	CAGEC	PART NUMBER
12	6	4720-00-809-2750	96906	MS521301A204120
12	7	2530-00-204-4800	19207	8357980
12	8	5330-00-737-3354	19207	7373354
12	9	4730-00-773-2163	63477	7979691
13	1	9905-00-999-7370	96906	MS53007-1
13	2	9905-00-999-7369	96906	MS53007-2
13	3	5340-00-281-1444	19207	8331537
13	4	5305-00-115-9430	21450	172439
13	5	5340-00-281-1446	19207	8331536
13	6		19207	10929850
13	7	5306-00-797-9296	19207	7979296
13	8	2530-00-797-9295	19207	7411022
13	9		81343	6-4 120202BA(LONG NUT)
13	10		96906	MS35337-25
13	11	5310-00-584-5005	96906	MS35690-405
13	12		81343	6-4 120202BA(LONG NUT)
13	13	2530-00-021-2366	96906	MS53004-2
13	14		96906	MS35298-60
13	15	4820-00-849-1220	96906	MS35782-5
13	16	2530-00-741-1078	19207	7411078
13	17	5325-00-276-6098	96906	MS35489-78
13	18	4730-00-289-0051	96906	MS39182-6
13	19		19207	10944275
13	20	4730-00-289-0155	96906	MS39182-5
13	21	5340-00-699-8490	19207	8331782
13	22	5310-00-959-1488	96906	MS51922-21
13	23	4730-00-069-1186	81343	6-4 120102BA
13	24		19207	10944276
13	25	4720-00-069-9338	19207	8718996
14	1	4730-00-278-8257	79470	MS39133-1
14	2		19207	MS39136-1B
14	3		19207	11625142-1-110
14	3		19207	11625142-2-128
14	4		79470	MS39133-2B
14	5		19207	MS39136-1B
14	6	4730-00-595-0083	96906	MS35746-1
14	7	5330-00-090-2128	96906	MS35748-1
15	1	4720-01-031-4387	19207	11625142-2
15	2	9905-00-999-7370	96906	MS53007-1
15	3	5340-00-281-1444	19207	8331537
15	4	5305-00-052-6922	96906	MS24629-58
15	5	5340-00-281-1446	19207	8331536
15	6	5325-00-270-8889	96906	MS35489-81
15	7	4720-01-031-4386	19207	11625142-1
15	8	5310-00-407-9566	96906	MS35338-45
15	9	5310-00-880-7746	96906	MS51968-5
15	10	4730-00-057-5555	96906	MS49005-6
15	11	4820-00-849-1220	96906	MS35782-5
15	12		81343	6-4 120202BA(LONG NUT)

CROSS-REFERENCE INDEXES

FIGURE AND ITEM NUMBER INDEX

FIG	ITEM	STOCK NUMBER	CAGEC	PART NUMBER
15	13	4710-01-085-5635	19207	11625109
15	14	4730-00-069-1186	81343	6-4 120102BA
15	15	5306-01-043-5702	19207	11625105
15	16	4730-00-278-4290	96906	MS39231-2
15	17	2530-00-021-2366	96906	MS53004-2
15	18	4730-00-196-1468	96906	MS51953-97
15	19	2530-01-042-0683	19207	11625104
15	20	5340-00-699-8490	19207	8331782
15	21	9905-00-999-7369	96906	MS53007-2
16	1	2530-00-797-9295	19207	7411022
16	2	2530-00-741-5748	19207	7415748
16	3	2940-00-741-1081	19207	7411081
16	4	5310-00-679-3606	19207	7979614
16	5	5360-00-706-9054	19207	7979612
16	6	5330-00-285-5123	19207	8329823
16	7	4730-00-580-8457	19207	7979613
16	8	4730-00-221-2136	96906	MS20913-1S
17	1		96906	MS53044-5
17	2	2530-00-738-9061	19207	7389061
17	3		19207	7389620
17	4	5310-00-518-5566	96906	MS51983-1
17	4	5310-00-594-8038	96906	MS51983-2
17	5	2530-00-677-0202	19207	8719915
17	6	5306-00-383-4957	96906	MS51946-2
17	6	5306-00-733-9239	96906	MS51946-1
17	7	5310-00-982-4908	96906	MS21045-6
17	8	5310-00-080-6004	96906	MS27183-14
17	9	2530-00-741-1425	19207	7411425
17	10	2530-00-741-3231	19207	7413231
17	11	5306-00-335-4768	18876	8720025
17	12	5306-00-206-1560	19207	8333780
17	13	5310-00-998-0608	96906	MS35692-61
17	14	5365-00-741-1433	19207	7411433
17	15	5330-00-741-1429	19207	7411429
17	16	3110-00-100-3095	08162	3984
17	17	5305-00-988-1723	96906	MS35206-279
17	18	5310-00-274-8715	96906	MS35338-63
17	19	2530-00-614-4454	19200	6144454
17	20	5330-00-614-4356	78500	6144356
17	21	5310-00-741-1378	19207	7411378
17	22	5310-00-741-1379	19207	7411379
18	1	2610-00-262-8677	81348	ZZ-T-381M/GROUP3 /9.00-20/D/TBCC
18	2	2610-00-269-7383	24617	2289994
19	1	4010-00-741-1027	19207	7411027
19	2	2540-00-999-5584	96906	MS51339-3
19	2	2540-00-999-5584	96906	MS51339-3
19	3	5310-00-761-6882	96906	MS51967-2
19	4		96906	MS35337-25
19	5	5310-00-820-6653	96906	MS35338-50
19	6		19207	8384073

CROSS-REFERENCE INDEXES

FIGURE AND ITEM NUMBER INDEX

FIG	ITEM	STOCK NUMBER	CAGEC	PART NUMBER
19	7	5315-00-234-1664	96906	MS24665-495
19	8	5310-00-741-1028	19207	7411028
19	9	5310-00-763-8920	96906	MS51967-20
19	10	5310-00-975-2075	96906	MS35691-21
19	11		96906	MS15795-215
19	12	5310-00-959-1488	96906	MS51922-21
19	13	2590-00-424-0891	96906	205267
19	14	5305-00-115-9430	21450	172439
19	15		19207	7059265-1
19	16	5305-00-725-4187	96906	MS90726-114
19	17		19207	10944279
19	18	5310-00-194-1483	96906	MS35333-44
19	19	2510-01-198-4495	19207	7035152
19	20	5310-00-595-7237	96906	MS35333-42
19	21	5305-00-912-5113	96906	MS51096-359
19	22	5310-00-637-9541	96906	MS35338-46
19	23	5305-00-269-2803	96906	MS90726-60
19	24	5310-00-809-4061	96906	MS27183-15
19	25	5310-00-732-0559	96906	MS51968-8
19	26	2510-01-254-6578	19207	7055109
19	27	5305-00-716-8184	96906	MS90726-112
19	28		19207	7059565
19	29	5310-00-732-0560	96906	MS51968-14
19	30	5305-00-269-2802	96906	MS90726-59
19	31		19207	7059533
19	32	5306-01-038-3059	21450	431953
19	33		19207	7035487
19	33	2540-01-168-9876	19207	7035486
19	34	2510-01-176-4657	19207	7035153
20	1	4010-00-741-1027	19207	7411027
20	2	2540-00-999-5584	96906	MS51339-3
20	2	2540-00-999-5584	96906	MS51339-3
20	3	5310-00-080-6004	96906	MS27183-14
20	4		19207	8384073
20	5	5315-00-234-1664	96906	MS24665-495
20	6	5310-00-741-1028	19207	7411028
20	7	5310-00-820-6653	96906	MS35338-50
20	8	5310-00-763-8920	96906	MS51967-20
20	9	5310-00-087-4652	96906	MS51922-17
20	10	5340-01-092-9229	19207	12296244
20	10	5340-01-333-5752	19207	12355820
20	11	5310-00-732-0559	96906	MS51968-8
20	12	5310-00-637-9541	96906	MS35338-46
20	13	5310-00-732-0560	96906	MS51968-14
20	14	5310-00-584-5272	96906	MS35338-48
20	15	5305-00-716-8184	96906	MS90726-112
20	16		19207	11625110
20	17	5310-00-768-0319	96906	MS51968-2
20	18		19207	11597745
20	19	2510-01-163-1346	19207	11597732
20	19	2510-01-163-1347	19207	11597732-1

CROSS-REFERENCE INDEXES

FIGURE AND ITEM NUMBER INDEX

FIG	ITEM	STOCK NUMBER	CAGEC	PART NUMBER
20	20	5305-00-912-5113	96906	MS51096-359
20	21	5305-00-068-0515	96906	MS90727-8
20	22	5305-00-269-2803	96906	MS90726-60
20	23	5310-00-809-4061	96906	MS27183-15
20	24	2540-01-025-5344	19207	11597666-1
20	25	2510-01-254-6578	19207	7055109
20	26	5310-00-582-5965	96906	MS35338-44
20	27		19207	7059565
20	28		19207	7059533
20	29	5305-00-068-0505	96906	MS90726-5
20	30		19207	7035487
20	30	2540-01-168-9876	19207	7035486
20	31	2510-01-176-4657	19207	7035153
20	31	2510-01-198-4495	19207	7035152
21	1		19207	7035487
21	1	2540-01-168-9876	19207	7035486
21	2	5305-00-068-0498	03538	N22P21006C6
21	3	5340-01-029-7885	19207	7037002
21	4	2540-01-086-1667	19207	7035451
21	4	8115-01-086-1666	19207	7035452
21	5	5310-00-761-6882	96906	MS51967-2
21	6	5310-00-582-5965	96906	MS35338-44
21	7	5340-01-008-6088	19207	7034748
21	8	2510-00-769-7483	19207	7697483
21	9	2590-00-040-2075	19207	7539197
22	1	2590-01-183-6816	19207	12259830
22	2	5310-00-982-6810	96906	MS21044-N12
22	3	5310-00-270-8832	19207	8330821
22	4	5310-00-270-8834	19207	8330813
22	5		96906	MS16556-844
22	6	5310-00-693-0738	19207	8331542
22	7	5360-00-699-8489	19207	8331541
22	8		19207	324420
22	9	2540-01-215-1617	19207	12259844
22	10		19207	12259830-1
22	11	5340-01-222-5247	19207	12312996
22	12	5310-00-088-1251	96906	MS51922-1
22	13	2530-01-215-3389	19207	12259845
22	14	5315-00-844-5836	96906	MS16562-65
22	15	5340-01-209-0475	19207	12259835
22	16	5310-00-660-3381	96906	MS21083-N5
22	17	5340-01-209-0503	19207	12259840
22	18	5310-00-483-8792	96906	MS17829-4C
22	19	5340-01-209-0500	19207	12259837
22	20	5305-00-071-2241	96906	MS90725-10
22	21	5306-00-225-9093	96906	MS90726-38
22	22	3040-01-209-0497	19207	12259831
22	23	5305-00-068-0501	96906	MS90725-5
22	24	5305-00-071-2066	96906	MS90728-109
22	25	5310-00-584-5272	96906	MS35338-48
22	26	5306-00-174-4246	19207	7979972

CROSS-REFERENCE INDEXES

FIGURE AND ITEM NUMBER INDEX

FIG	ITEM	STOCK NUMBER	CAGEC	PART NUMBER
22	27	5310-00-068-5285	96906	MS27183-20
22	28	2590-01-210-8843	19207	12259839
22	29	5310-00-982-6808	96906	MS21044-N9
23	1	2510-00-017-9588	19207	10929946
23	2	3120-01-093-8325	19207	8389733
23	3	3120-00-056-2173	19207	8389734
23	4	5310-00-225-6408	96906	MS51922-53
23	5	2510-00-056-4799	19207	8389735
23	6	4730-00-050-4203	96906	MS15001-1
23	7	5305-00-728-6281	96906	MS51973-54
23	8	5310-00-052-6454	96906	MS35340-51
23	9	5310-00-427-0043	19207	7411041
23	10	5305-00-269-2805	96906	MS90726-62
23	11	5310-00-595-7237	96906	MS35333-42
23	12	5310-00-809-4061	96906	MS27183-15
23	13	5340-00-656-3638	19207	7522436
23	14	3040-01-245-2522	19207	7350779
23	15	2510-00-056-2174	19207	8389626
23	16	5306-00-053-0512	19207	8389628
24	1	5365-00-275-4519	19207	7339466
24	2	2510-00-886-8061	19207	8716992
24	3	5310-00-733-9465	19207	7339465
24	4		80045	MS35338-50
24	5	5310-00-763-8905	96906	MS51968-20
25	1		96906	MS90726-178
25	2	5310-00-424-1452	19207	7349028
25	3	5365-00-350-0155	19207	7974916
25	4	5365-00-624-0255	19207	7974917
25	5	5310-00-424-1456	19207	7349029
25	6	2530-01-087-1003	19207	11625147
25	7		19207	139855
25	8	5310-00-835-2037	96906	MS35691-53
25	9	5310-00-763-8905	96906	MS51968-20
25	10	2530-01-093-8270	19207	7366478-1
25	11	5340-00-421-7242	19207	7349017
25	12	5305-00-716-8183	96906	MS90726-116
25	13	2530-01-093-8271	19207	7366480-1
25	14	5340-00-427-0080	19207	7349016
25	15	5310-00-584-5272	96906	MS35338-48
25	16	5310-00-732-0560	96906	MS51968-14
26	1	2510-00-502-4543	19207	7034967
26	2	2510-01-257-3898	19207	11597741
26	3	2510-00-106-8933	19207	11597742
26	4	2510-01-151-7821	19207	11597765
26	5		19207	11597763
26	6		19207	7034940
26	7		19207	11597766
26	8		19207	11597764
26	9	5340-01-164-1981	19207	7035188-1
26	10		19207	7039172-1
26	11	5310-00-550-1130	96906	MS35333-40

CROSS-REFERENCE INDEXES

FIGURE AND ITEM NUMBER INDEX

FIG	ITEM	STOCK NUMBER	CAGEC	PART NUMBER
26	12	5305-00-068-0502	96906	MS90725-6
26	13	5305-00-115-9526	96906	MS18154-58
26	14	5310-00-595-7237	96906	MS35333-42
26	15	5315-00-839-5822	96906	MS24665-353
26	16	5310-00-809-5998	96906	MS27183-18
26	17		19207	11597736
26	18	5310-00-127-3634	96906	MS24679-9
26	19	5340-01-171-0967	19207	7034885
26	20	5340-01-160-9637	19207	11597737
26	21		19207	11597735
26	22	5315-01-177-9862	19207	7039172-2
26	23	4820-00-856-1722	19207	7034882
26	24	4730-00-168-2073	19207	8741778
26	25	5306-01-196-0436	19207	7039041-1
26	26	5340-01-169-2329	19207	7035204
26	27	5315-01-221-4325	19207	7039178
26	28		96906	MS35691-80
26	29	5330-00-298-0078	19207	8330046
26	30		19207	7034951
26	31	3120-01-141-6304	19207	10944795
26	32		19207	10944794-2
26	33	4730-00-883-2620	19207	8741782
26	34	5310-01-144-1646	19207	7034938
26	35		19207	10944862-2
26	36		19207	7035043
26	37	4730-01-186-9411	19207	10944796
26	38		19207	10944794-1
26	39		19207	10944862-1
26	40		19207	7034976
26	41	5365-01-004-2901	19207	7711369
26	42	5340-00-537-2212	19207	8331543
26	43	5310-01-130-1226	19207	11597768
26	44	5330-00-575-9791	19207	8331544
26	45	5305-00-725-4138	96906	MS90726-170
26	46	5310-00-823-8803	96906	MS27183-21
27	1	2510-01-091-5167	19207	12269886
27	2	2510-01-095-2422	19207	12269951
27	3		19207	12269958
27	4	5330-01-317-9640	19207	12354242
27	5		19207	12296261
27	6	3040-01-254-5369	19207	12296219
27	7		19207	12269972
27	8	5310-00-933-8121	96906	MS35338-139
27	9		96906	MS353-7-312
27	10	5310-00-984-3807	96906	MS51922-13
27	11	5310-00-087-7493	96906	MS27183-13
27	12	5360-01-078-5574	96906	MS24585C507
27	13	5315-00-904-1643	96906	MS20392-7C75
27	14	9540-01-087-3068	19207	12269960
27	15	5315-00-005-0442	96906	MS24665-285
27	16	5306-01-088-1962	19207	12269970

CROSS-REFERENCE INDEXES

FIGURE AND ITEM NUMBER INDEX

FIG	ITEM	STOCK NUMBER	CAGEC	PART NUMBER
27	17	4820-00-856-1722	19207	7034882
27	18	5310-00-959-7600	96906	MS51922-5
27	19	5340-01-096-5019	19207	12296217
27	20	2590-00-040-2075	19207	7539197
27	21	5305-00-993-2738	96906	MS35207-280
27	22	2510-01-092-9228	19207	12269860
27	23	5330-01-084-5991	19207	12269895
27	24	5340-01-084-5990	19207	12269894-1
27	25	5305-00-914-9001	96906	MS51096-361
27	26	4730-01-086-1620	19207	8741782-1
27	27	5340-01-084-5992	19207	12269894-2
27	28	5310-01-130-1226	19207	11597768
27	29	5340-00-537-2212	19207	8331543
27	30	5330-00-575-9791	19207	8331544
27	31	5305-00-943-7087	96906	MS18153-141
28	1	4510-00-595-1785	30327	261G
28	2	4730-01-036-7498	96906	MS27029-6
28	3	4730-00-084-7436	96906	MS27026-6
28	4	5330-00-088-9167	96906	MS27030-3
28	5	4730-01-134-6995	96906	MS14309-24A
28	6	4730-00-247-3206	96906	MS14309-30A
28	7	5310-00-550-1130	96906	MS35333-40
28	8	5310-00-903-5966	96906	MS51971-1
28	9	5310-00-809-4058	96906	MS27183-10
28	10	5975-00-483-5756	19207	8724501
28	11	4730-00-168-2075	19207	7065947
28	12	4730-00-909-8627	96906	MS35842-13
28	13	4720-00-851-8969	19207	8724753
28	14	4820-00-863-5592	19207	7039673
28	15	5306-00-937-1312	19207	8724754
28	16	4730-00-221-4997	96906	MS143056XA
28	17	4730-00-168-2074	19207	7035450
28	18	4730-00-196-2017	96906	MS51846-122
29	1	4510-01-092-4045	19207	12296243
29	2	5315-00-841-4442	96906	MS16562-224
29	3	4510-01-100-9349	4J828	A19-7-7
29	4	4730-01-101-2709	86594	A19-17-11-5
29	5		02697	6723
29	6	5330-00-585-6663	96906	MS28775-110
29	7	5310-01-101-4848	86594	A19-17-11-6
29	8		86594	A19-17-9
29	9	5330-00-582-2855	96906	MS28775-113
29	10		86594	A19-17-12
29	11		86594	A19-17-13
29	12		86594	A19-17-10
29	13		86594	A19-17-8
30	1	9905-00-202-3639	96906	MS35387-2
30	2	5305-00-052-6921	96906	MS24629-57
30	3	9905-00-205-2795	96906	MS35387-1
30	4	5306-00-043-1953	24617	431953
30	5	5310-00-582-5965	96906	MS35338-44

CROSS-REFERENCE INDEXES

FIGURE AND ITEM NUMBER INDEX

FIG	ITEM	STOCK NUMBER	CAGEC	PART NUMBER
30	6	5310-00-761-6882	96906	MS51967-2
31	1	5305-00-052-6921	96906	MS24629-57
31	2	9905-01-086-1580	19207	12269949
31	3	9905-00-282-7489	19207	7979373
31	4	5305-00-855-0957	96906	MS24629-46
31	5	5305-00-115-9430	19207	172439
31	6	9905-00-865-8352	19207	7043974
31	7	9905-01-204-9996	19207	11625044
31	8	9905-01-333-0796	19207	12331771
31	9	5305-00-850-5841	96906	MS21318-37
31	10		19207	12355946
31	11		19207	12362734
31	12	9905-00-223-7082	19207	10929816
31	12	9905-01-097-7047	19207	10929816-1

APPENDIX G
ILLUSTRATED LIST OF MANUFACTURED ITEMS

Section I. INTRODUCTION

G-1. SCOPE.

a. This appendix includes complete instructions for the making of items authorized for fabrication.

b. A part number index in alphanumeric order is provided in Table G-1 for cross-referencing the part number of the item to be manufactured to the figure which covers the fabrication criteria. Figures G-9 and G-10 cover fabrication instructions for single and double flare tubes and are not included in Table G-1.

c. All bulk materials needed for manufacture of an item are listed by part number or specification number in the manufacturing instructions.

d. When manufacturing items, ensure that the appropriate tools are used to cut and shape materials. Bend tubes to configurations shown and be careful not to kink tubing. Reuse old connectors and fittings whenever possible. Ensure that tubing is clean before installing after fabrication.

e. All dimensions given in Section II, Manufacturing Instructions, are in standard units.

Table G-1. Manufactured Items Part Number Cross-reference Index.

Part Number	Figure Number
10929810	G-2
10929850	G-1
10944275	G-3
10944276	G-4
11625142-1-110	G-5
11625142-2-128	G-6
12296591	G-7
12296592	G-8

Section II. MANUFACTURING INSTRUCTIONS

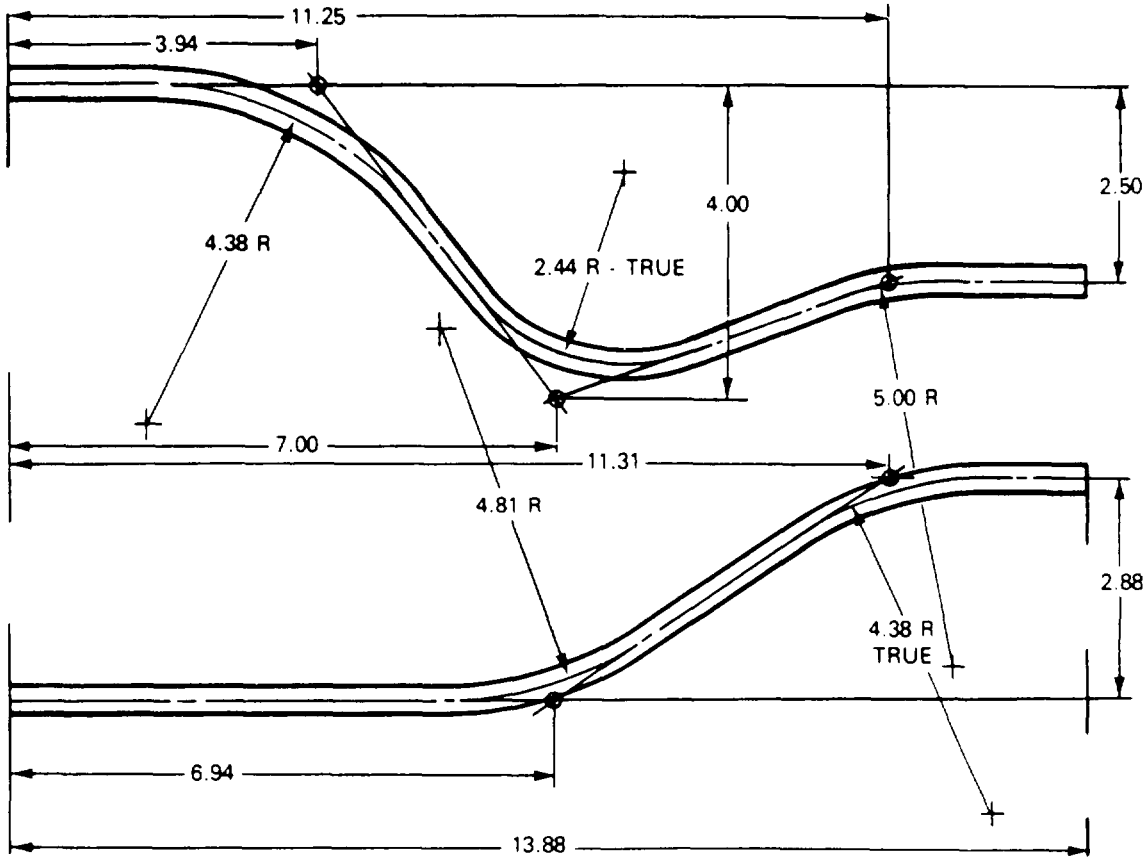

NOTES:

1. Make from NSN 4710-00-827-5847, Part NumberMS14300AB seamless copper tubing, type K, W-T-799, size 0.38 OD x 0.049 wall thickness.

2. Tolerance is + 0.06 in.

Figure G-1. Tube.

TA507084

Section II. MANUFACTURING INSTRUCTIONS (Con't)

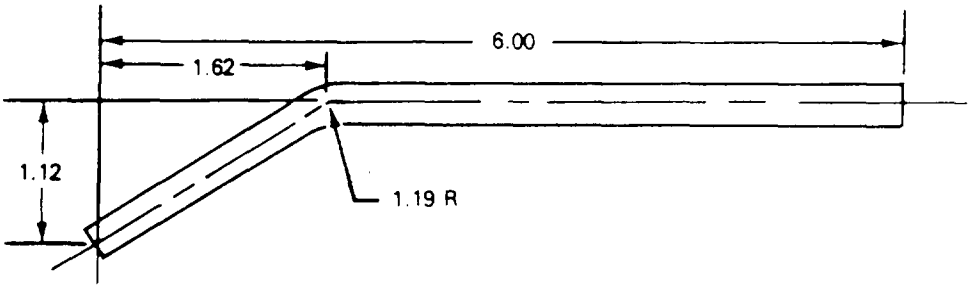

NOTES:

1. Make from NSN 4710-00-827-5847, Part Number MS14300AB seamless copper tubing, type K, WW-T-799, size 0.38 OD x 0.049 wall thickness.

2. Tolerance is + 0.06 in.

Figure G-2. Tube.

TA507085

Section II. MANUFACTURING INSTRUCTIONS (Con't)

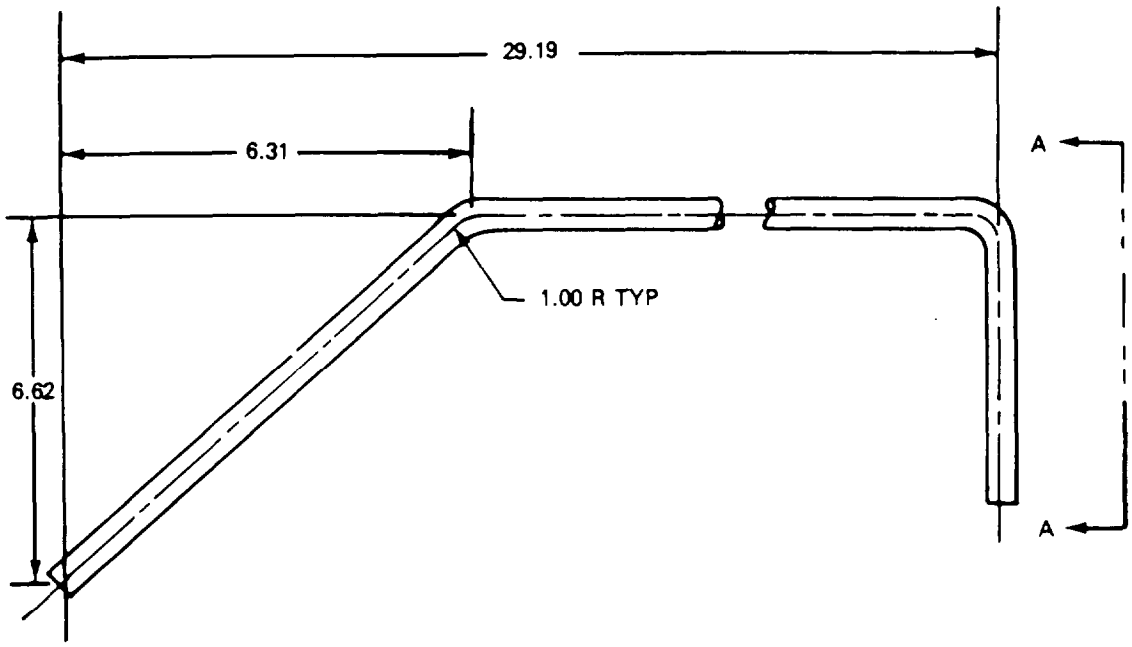

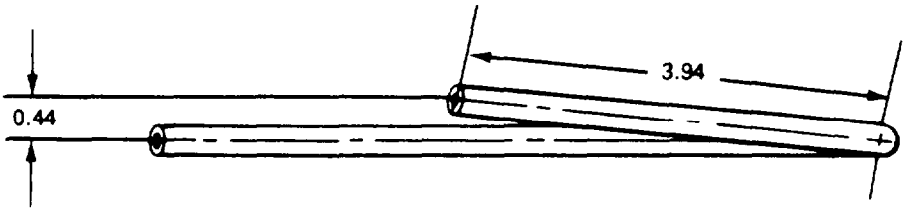

VIEW A-A

NOTES:

1. Make from NSN 4710-00-277-6113, seamless copper tubing, type K, W-T-799, size 0.50 OD x 0.049 wall thickness.

2. Tolerance is + 0.06 in. for length and + 10 for angles.

Figure G-3. Tube Assembly.

TA507086

Section II. MANUFACTURING INSTRUCTIONS (Con't)

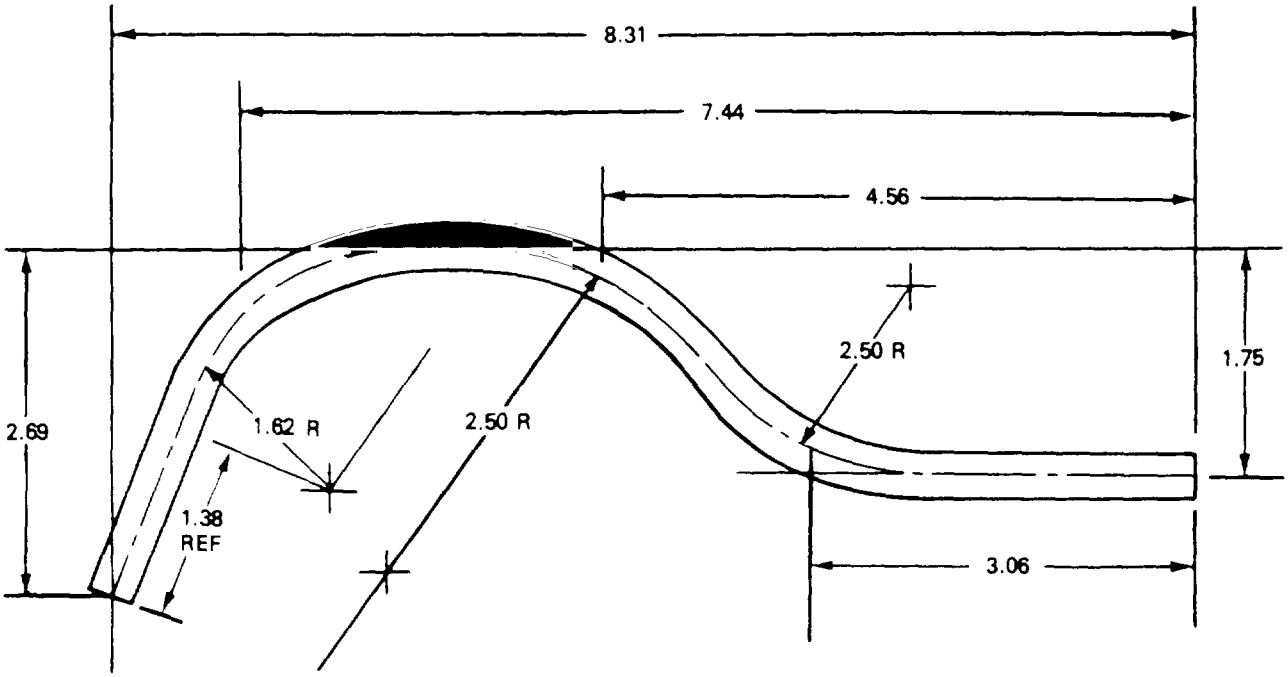

NOTES:

1. Make from NSN 4710-00-827-5847, Part Number MS14300AB seamless copper tubing, type K, W-T-799, size 0.38 OD x 0.049 wall thickness x 10.31 in. long.

2. Tolerance is + 0.06 in.

Figure G-4. Tube Assembly.

TA507087

Section II. MANUFACTURING INSTRUCTIONS (Con't)

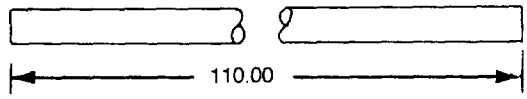

NOTES:

1. Make from Hose, MIL-H-3992.
2. Cut ends of hose square.

Figure G-5. Hose.

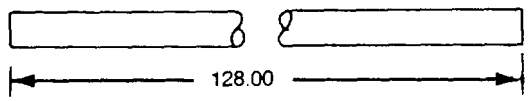

NOTES:

1. Make from Hose, MIL-H-3992.
2. Cut ends of hose square.

Figure G-6. Hose.

TA507088

Section II. MANUFACTURING INSTRUCTIONS

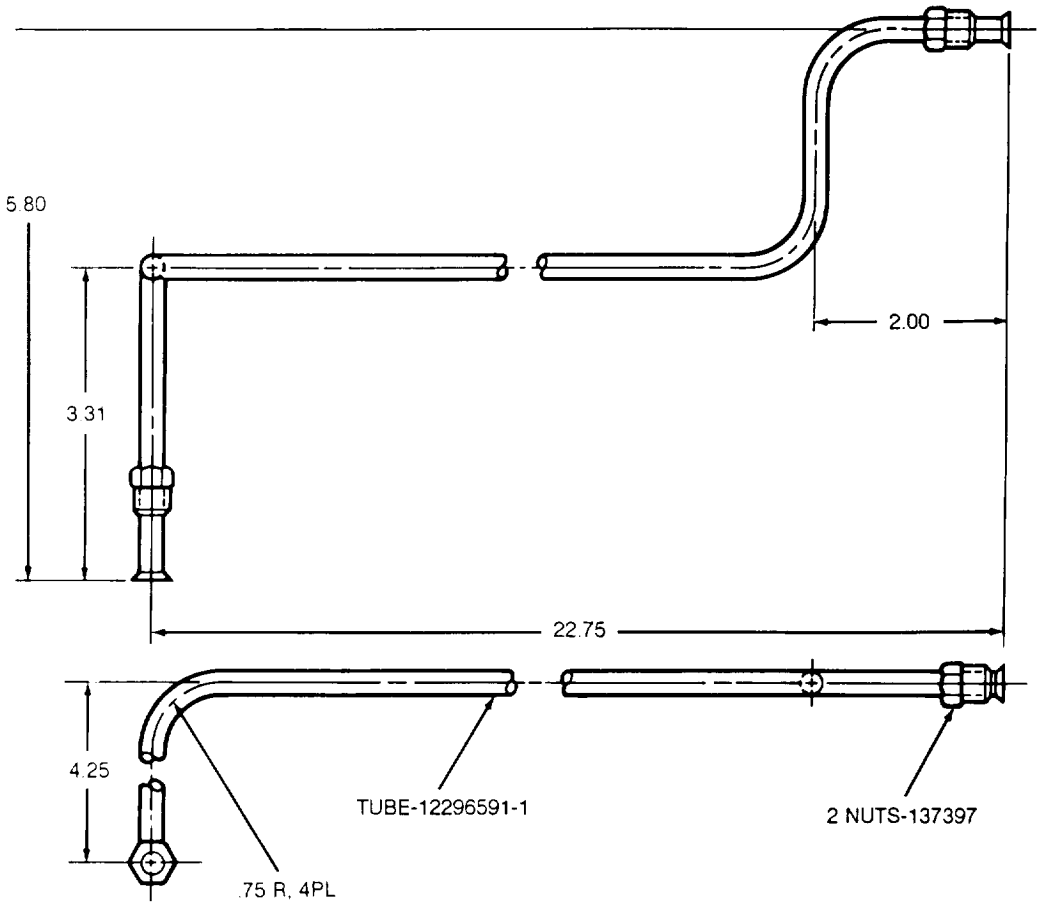

NOTES:

1. Make from NSN 4710-00-200-0277, carbon steel tube, W.D. 1010 or 1015, type I or ll, MIL-T-3520, size 0.25 OD x 0.028 wall thickness.
2. Double flare tube at each end in accordance with figure G-10, after nuts are installed.
3. Tolerances are + 0.06 in. in length and + 2° for angles.

Figure G-7. Tube Assembly.

TA507089

Section II. MANUFACTURING INSTRUCTIONS (Con't)

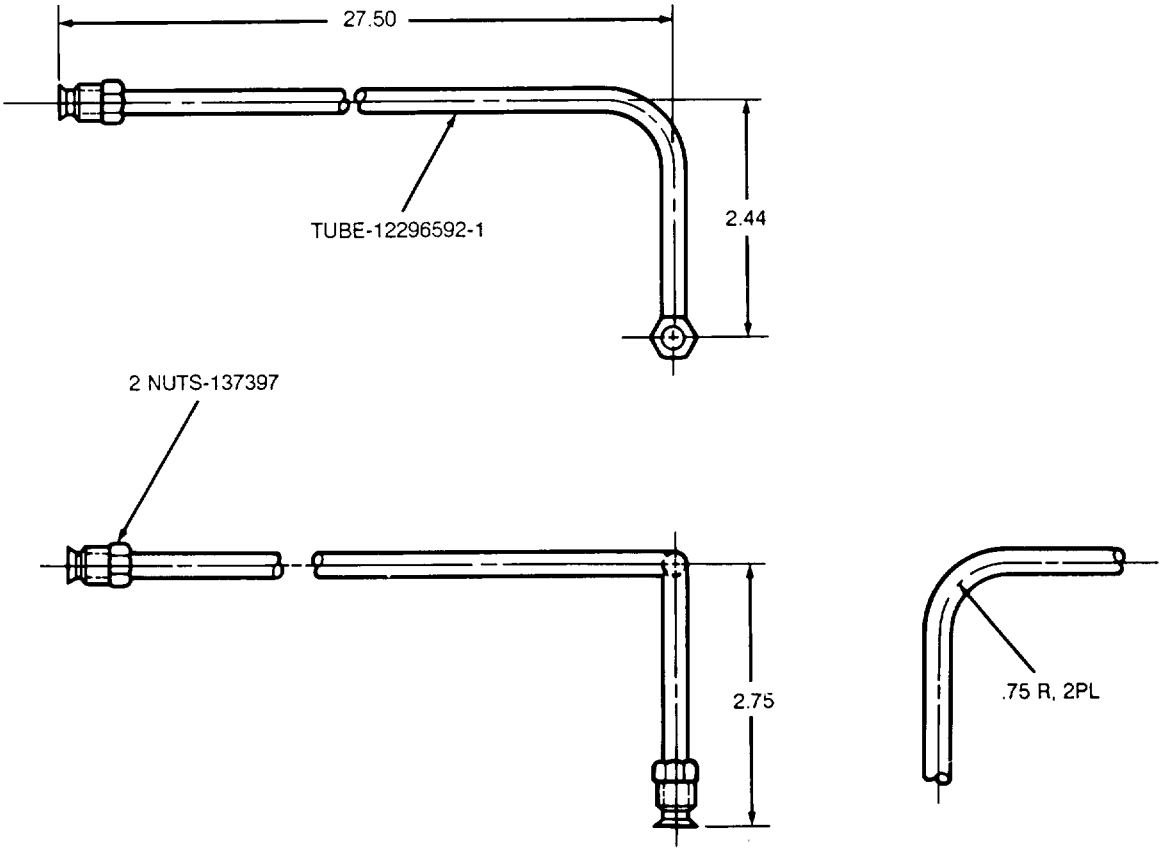

NOTES:

1. Make from NSN 4710-00-200-0277, carbon steel tube, W.D. 1010 or 1015, type I or II, MIL-T-3520, size 0.25 OD x 0.028 wall thickness.

2. Double flare tube at each end in accordance with figure G-10, after nuts are installed.

3. Tolerances are + 0.06 in. in length and + 2° for angles.

Figure G-8. Tube Assembly.

TA507090

Section II. MANUFACTURING INSTRUCTIONS (Con't)

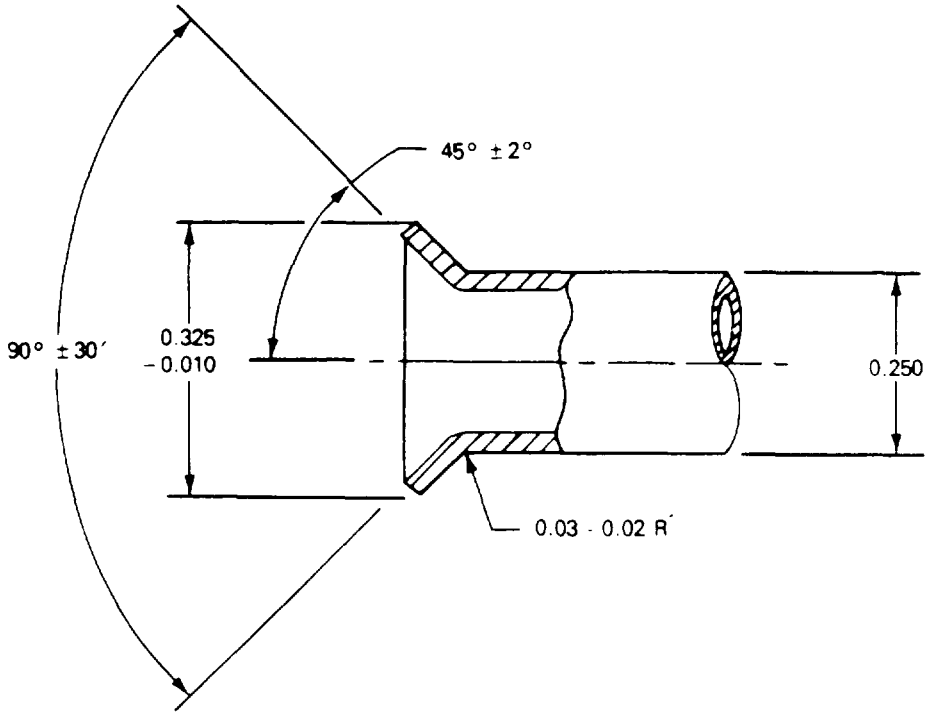

Figure G-9. Flared SAE Standard Single Flare Tube.

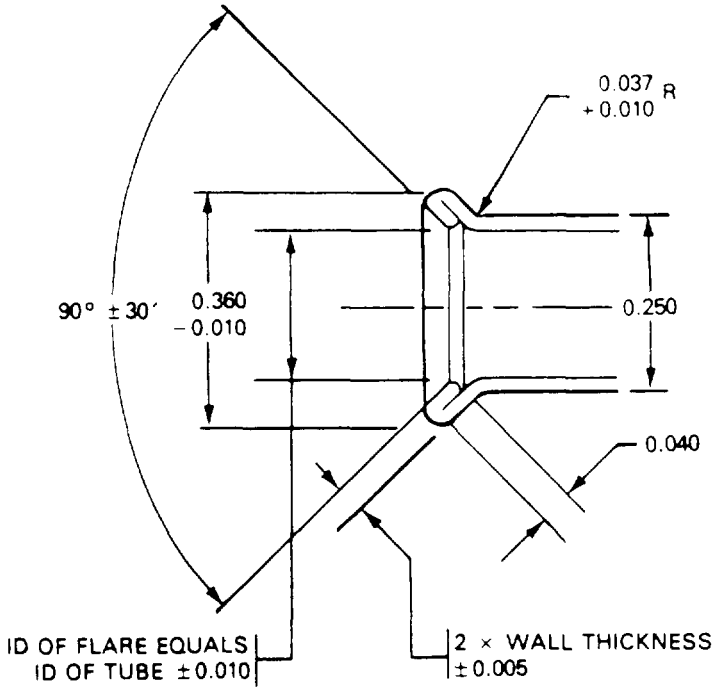

Figure G-10. Flared SAE Standard Double Flare Tube.

TA507091

APPENDIX H
TORQUE LIMITS

H-1. SCOPE.

This appendix lists standard torque values, as shown in Table H-1, and provides general information for applying torque. Special torque values and tightening sequences are indicated in the maintenance procedures for applicable components.

H-2. GENERAL.

a. Always use the torque values listed in Table H-1 when the maintenance procedure does not give a specific torque value.

b. Unless otherwise indicated, standard torque tolerance shall be + 10%.

c. Torque values listed are based on clean, dry threads. Reduce torque by 10% when engine oil is used as a lubricant. Reduce torque by 20% if new plated capscrews are used.

d. Capscrews threaded into aluminum may require reductions in torque of 30% or more of Grade 5 capscrews torque and must attain two capscrew diameters of thread engagement.

CAUTION

If replacement capscrews are of a higher grade than originally supplied, use torque specifications for the original. Failure to do so may result in equipment damage from overtorquing.

Table H-1. Standard Torque Specifications.

Current Usage		Much Used		Much Used		Used at Times		Used at Times	
Quality of Material		Indeterminate		Minimum Commercial		Medium Commercial		Best Commercial	
SAE Grade Number		1 or 2		5		6 or 7		8	
Capscrew Head Markings Manufacturer's marks may vary These are all SAE Grade 5 (3 line)		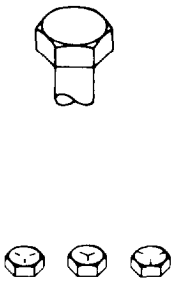		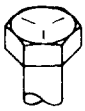				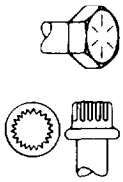	
Capscrew Body Size Inches - Thread		Torque lb.-ft. (N•m)		Torque lb.-ft. (N•m)		Torque lb.-ft. (N•m)		Torque lb.-ft. (N•m)	
¼	20	5	(7)	8	(11)	10	(14)	12	(16)
	28	6	(8)	10	(14)			14	(19)
5/16	18	11	(15)	17	(23)	19	(26)	24	(33)
	24	13	(18)	19	(26)			27	(37)
⅜	16	18	(24)	31	(42)	34	(46)	44	(60)
	24	20	(27)	35	(47)			49	(66)
7/16	14	28	(38)	49	(66)	55	(75)	70	(95)
	20	30	(41)	55	(75)			78	(106)
½	13	39	(53)	75	(102)	85	(115)	105	(142)
	20	41	(56)	85	(115)			120	(163)
9/16	12	51	(69)	110	(149)	120	(163)	155	(210)
	18	55	(75)	120	(163)			170	(231)
⅝	11	83	(113)	150	(203)	167	(226)	210	(285)
	18	95	(129)	170	(231)			240	(325)
¾	10	105	(142)	270	(366)	280	(380)	375	(508)
	16	115	(156)	295	(400)			420	(570)
⅞	9	160	(217)	395	(536)	440	(597)	605	(820)
	14	175	(237)	435	(590)			675	(915)
1	8	235	(319)	590	(800)	660	(895)	910	(1234)
	14	250	(339)	660	(895)			990	(1342)

TA507092

INDEX

Subject	Paragraph	Page
A		
Absorber, Shock	4-52	4-98
Adjustable Caster Assembly	4-49	4-90
Administrative Storage:		
Care of Equipment in	4-65	4-124
Preparation of Equipment for	4-64	4-122
Removal of Equipment from	4-67	4-125
Air:		
Filter (M149)	4-41	4-76
Leak Check, Operational	3-7	3-12
Lines, Hoses, and Fittings:		
M149	4-37	4-66
M149A1 and M149A2	4-38	4-69
Reservoir	4-40	4-74
Airbrake Chamber	4-39	4-72
Axle	4-29	4-45
B		
Bearing, Wheel, Hub, and Brakedrum	4-45	4-81
Blackout Light (M149)	4-22	4-29
Bleeding Hydraulic Brake System	4-36	4-64
Box Assembly, Faucet	4-48	4-88
Brackets Replacement, Water Tank Body	5-4	5-8
Bracket, Suspension	4-50	4-94
Brake:		
Bleeding Hydraulic System	4-36	4-64
Service	4-32	4-53
Brakedrum:		
Maintenance	4-45	4-81
Repair	5-1	5-1
C		
Cable:		
Handbrake	4-31	4-50
Intervehicular	4-27	4-42
Caster Assembly, Adjustable	4-49	4-90
Chain, Drawbar Ring and Safety	4-46	4-85

INDEX

Subject	Paragraph	Page
Chamber, Airbrake	4-39	4-72
Characteristics, Capabilities, and Features, Equipment	1-6	1-2
Chassis Wiring Harness:		
Repair	4-26	4-40
Replacement	4-25	4-36
Cleaning Instructions	4-17	4-23
Common Tools and Equipment	4-1	4-1
Components, Major	1-7	1-3
Composite Stoplight-Taillight (M149A1 and M149A2)	4-24	4-33
Controls and Indicators	2-2	2-1
Coupling Trailer to Towing Vehicle	2-10	2-12
Cover, Manhole:		
Fiberglass Tank	4-54	4-102
Stainless Steel Tank	4-55	4-104
Cylinder:		
Master	4-33	4-57
Wheel	4-34	4-60

D

Data Plates:		
Location and Contents of	1-8	1-4
Replacement	4-61	4-120
Data, Equipment	1-10	1-7
Decal	4-61	4-120
Destruction of Army Materiel to Prevent Enemy Use	1-3	1-1
Diagrams, Wiring	4-28	4-44
Differences Between Models	1-9	1-7
Drawbar Ring and Safety Chain	4-46	4-85
Drum, Brake:		
Maintenance	4-45	4-81
Repair	5-1	5-1

E

Enemy Use, Destruction of Army Materiel to Prevent	1-3	1-1
Equipment:		
Care of in Administrative Storage	4-65	4-124
Common Tools and	4-1	4-1

INDEX

Subject	Paragraph	Page
Equipment (Con't):		
Data	1-10	1-7
Improvement Recommendations (EIRs)	1-5	1-1

F

Faucet Box Assembly	4-48	4-88
Faucet:		
Piping and	4-58	4-114
Rear	4-59	4-116
Fender Assembly	4-47	4-86
Fiberglass:		
Tank, Manhole Cover	4-54	4-102
Water Tank Body:		
Maintenance	4-56	4-106
Repair	5-2	5-3
Fittings:		
Air Lines, Hoses, and:		
M149	4-37	4-66
M149A1 and M149A2	4-38	4-69
Hydraulic Lines, Hoses, and	4-35	4-62
Fording	2-20	2-21

G

General PMCS, Organizational	4-10	4-3

H

Handbrake:		
Cable	4-31	4-50
Lever:		
Adjustment	3-6	3-11
Replacement	4-30	4-48
Harness, Chassis Wiring:		
Repair	4-26	4-40
Replacement	4-25	4-36

INDEX

Subject	Paragraph	Page
Heater, M67 Immersion	2-15	2-18
Hoses:		
Air Lines, and Fittings:		
M149	4-37	4-66
M149A1 and M149A2	4-38	4-69
Fittings, Hydraulic Lines, and	4-35	4-62
Tagging Wires and	4-20	4-25
Hub, Wheel Bearing, and Brakedrum	4-45	4-81
Hydraulic:		
Brake System, Bleeding	4-36	4-64
Lines, Hoses, and Fittings	4-35	4-62

I

Immersion Heater, M67	2-15	2-18
Indicators and Controls	2-2	2-1
Inspection Instructions:		
General	4-18	4-24
Service Upon Receipt	4-5	4-2
Intervals, Service:		
Operator/Crew	2-4	2-4
Organizational	4-8	4-3
Intervehicular Cable	4-27	4-42

L

Lamp Replacement	4-21	4-26
Leak Check, Operational Air	3-7	3-12
Leakage Definitions	2-8	2-5
Lever:		
Adjustment, Handbrake	3-6	3-11
Handbrake	4-30	4-48
Lights:		
Blackout (M149)	4-22	4-29
Composite Stoplight-Taillight (M149A1 and M149A2)	4-24	4-33
Stoplight-Taillight (M149)	4-23	4-31

INDEX

Subject	Paragraph	Page
Lines:		
Hoses, and Fittings, Air:		
M149	4-37	4-66
M149A1 and M149A2	4-38	4-69
Hoses, and Fittings, Hydraulic	4-35	4-62
Lubrication Chart	3-2	3-2

M

M67 Immersion Heater	2-15	2-18
Maintenance Forms, Records, and Reports	1-2	1-1
Major Components	1-7	1-3
Manhole Cover:		
Fiberglass Tank	4-54	4-102
Stainless Steel Tank	4-55	4-104
Master Cylinder	4-33	4-57
Models, Differences Between	1-9	1-7

O

Operational Air Leak Check	3-7	3-12
Operator/Crew:		
Preventive Maintenance Checks and Services (PMCS)	Table 2-1	2-6
Troubleshooting	Table 3-1	3-8
Organizational:		
Preventive Maintenance Checks and Services (PMCS)	Table 4-1	4-4
Troubleshooting	Table 4-2	4-10

P

Piping and Faucet	4-58	4-114
Plates, Data:		
Location and Contents of	1-8	1-4
Replacement	4-61	4-120
PMCS, Operator/Crew:		
General Procedures	2-6	2-4
Specific Procedures	2-7	2-5

INDEX

Subject	Paragraph	Page
PMCS, Organizational:		
General Procedures	4-10	4-3
Specific Procedures	4-11	4-4

R

Radius Rod	4-53	4-99
Rear Faucet	4-59	4-116
Records, Reports, and Maintenance Forms	1-2	1-1
Reflectors	4-60	4-118
Relay Valve	4-42	4-78
Repair Instructions	4-19	4-25
Reservoir, Air	4-40	4-74
Rod, Radius	4-53	4-99

S

Safety Chain and Drawbar Ring	4-46	4-85
Service Brake	4-32	4-53
Service Intervals:		
Operator/Crew	2-4	2-4
Organizational	4-8	4-3
Servicing Instructions	4-6	4-2
Shipment, Preparation of Equipment for	4-68	4-125
Shock Absorber	4-52	4-98
Special Tools; Test, Measurement, and Diagnostic Equipment (TMDE); and Support Equipment	4-2	4-1
Specific Lubrication Instructions	3-2	3-1
Specific PMCS Procedures, Organizational	4-11	4-4
Spring Assembly	4-51	4-95
Stainless Steel:		
Tank, Manhole Cover	4-55	4-104
Water Tank Body:		
Maintenance	4-57	4-110
Repair	5-3	5-7
Stoplight-Taillight:		
Composite (M149A1 and M149A2)	4-23	4-33
Maintenance (M149)	4-22	4-31

INDEX

Subject	Paragraph	Page
Storage, Administrative:		
Care of Equipment in	4-65	4-124
Preparation of Equipment for	4-64	4-122
Removal of Equipment From	4-67	4-125
Suspension Bracket	4-50	4-94
Symptom Index, Troubleshooting:		
Operator/Crew	3-5	3-8
Organizational	4-14	4-9

T

Tagging Wires and Hoses	4-20	4-25
Taillight, Stoplight:		
Composite (M149A1 and M149A2)	4-23	4-33
Maintenance (M149)	4-22	4-31
Tank Body, Water:		
Fiberglass:		
Maintenance	4-56	4-106
Repair	5-2	5-3
Stainless Steel:		
Maintenance	4-57	4-110
Repair	5-3	5-7
Tank:		
Fiberglass, Manhole Cover	4-54	4-102
Stainless Steel, Manhole Cover	4-55	4-104
Tire and Tube	4-44	4-81
Tools and Equipment, Common	4-1	4-1
Towing:		
Instructions	2-11	2-13
Vehicle:		
Coupling Trailer to	2-10	2-12
Uncoupling Trailer From	2-12	2-13
Trailer:		
Coupling to Towing Vehicle	2-10	2-12
Uncoupling From Towing Vehicle	2-12	2-13
Troubleshooting:		
Operator/Crew	Table 3-1	3-8
Organizational	Table 4-2	4-10

INDEX

Subject	Paragraph	Page
Troubleshooting (Con't):		
Symptom Index:		
Operator/Crew	3-5	3-8
Organizational	4-14	4-9
Tube and Tire	4-44	4-81

V

Valve, Relay	4-42	4-78

W

Water Tank Body:		
Fiberglass:		
Maintenance	4-56	4-106
Repair	5-2	5-3
Stainless Steel:		
Brackets	5-4	5-8
Maintenance	4-57	4-110
Repair	5-3	5-7
Wheel Bearing, Hub, and Brakedrum	4-45	4-81
Wheel Replacement	4-43	4-80
Wheel, Cylinder	4-34	4-60
Wires and Hoses, Tagging	4-20	4-25
Wiring Diagrams	4-28	4-44
Wiring Harness, Chassis:		
Repair	4-26	4-40
Replacement	4-25	4-36

By Order of the Secretary of the Army:

GORDON R. SULLIVAN
General, United States Army
Chief of Staff

Official:

PATRICIA P. HICKERSON
Brigadier General, United States Army
The Adjutant General

Distribution:

To be distributed IAW DA Form 12–39–E (Block No. 0676) Operator, Unit, Direct Support and General Support maintenance requirements for TM 9–2330-267-14&P.

RECOMMENDED CHANGES TO EQUIPMENT TECHNICAL PUBLICATIONS

THEN... JOT DOWN THE DOPE ABOUT IT ON THIS FORM. CAREFULLY TEAR IT OUT, FOLD IT AND DROP IT IN THE MAIL!

SOMETHING WRONG WITH THIS PUBLICATION?

FROM: (PRINT YOUR UNIT'S COMPLETE ADDRESS)
C.O.B, 1st Bn. 2nd Bde
Ft. Hood, TX 76544

DATE SENT: 15 January 1992

PUBLICATION NUMBER	PUBLICATION DATE	PUBLICATION TITLE
TM 9-2330-267-14&P	30 July 1991	Opr's, Org, DS/GS Maint. Manual Including RPSTL for Trailer, Tank, Water: 400 Gal., 1-1/2 Ton, 2 Wheel, M149 Series

BE EXACT PIN-POINT WHERE IT IS

PAGE NO	PARA-GRAPH	FIGURE NO	TABLE NO
4-57	4-33	–	–
4-61	4-35	–	–

IN THIS SPACE TELL WHAT IS WRONG AND WHAT SHOULD BE DONE ABOUT IT:

Step 7, change Install 4 screws (14) to read: Install 3 screws (14).

Step 1, change Remove five self-tapping screws (17), five retaining straps (14), to read: Remove five self-tapping screws (17), two retaining straps (14).

SAMPLE

PRINTED NAME, GRADE OR TITLE, AND TELEPHONE NUMBER: John Doe, Sp4 632-0693

SIGN HERE: John Doe

DA FORM 1 JUL 79 2028-2 PREVIOUS EDITIONS ARE OBSOLETE.

P.S.--IF YOUR OUTFIT WANTS TO KNOW ABOUT YOUR RECOMMENDATION MAKE A CARBON COPY OF THIS AND GIVE IT TO YOUR HEADQUARTERS

REVERSE OF DA FORM 2028-2

FILL IN YOUR UNIT'S ADDRESS

FOLD BACK

DEPARTMENT OF THE ARMY

C.O.B., 1st Bn. 2nd Bde
Ft. Hood, TX 76544

TEAR ALONG PERFORATED LINE

Commander
US Army Tank-Automotive Command
ATTN: AMSTA-MB
Warren, Michigan 48397-5000

SAMPLE

☆ U.S. GOVERNMENT PRINTING OFFICE 1991 — 543-025 40079

RECOMMENDED CHANGES TO EQUIPMENT TECHNICAL PUBLICATIONS

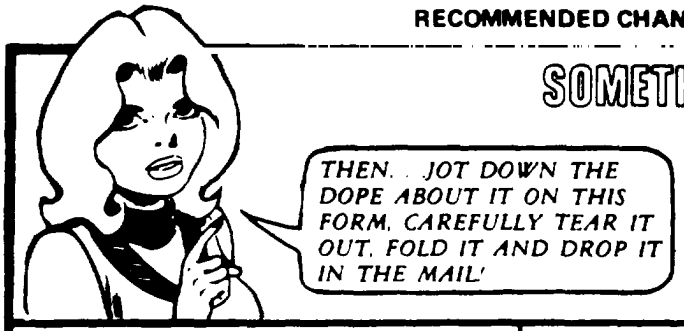

SOMETHING WRONG WITH THIS PUBLICATION?

FROM: (PRINT YOUR UNIT'S COMPLETE ADDRESS)

DATE SENT

PUBLICATION NUMBER	PUBLICATION DATE	PUBLICATION TITLE
TM 9-2330-267-14&P	30 July 1991	Opr's, Org, DS/GS Maint. Manual Including RPSTL for Trailer, Tank, Water: 400 Gal., 1-1/2 Ton, 2 Wheel, M149 Series

BE EXACT. PIN-POINT WHERE IT IS

PAGE NO	PARA-GRAPH	FIGURE NO	TABLE NO

IN THIS SPACE TELL WHAT IS WRONG AND WHAT SHOULD BE DONE ABOUT IT:

PRINTED NAME, GRADE OR TITLE, AND TELEPHONE NUMBER

SIGN HERE

DA FORM 1 JUL 79 2028-2

PREVIOUS EDITIONS ARE OBSOLETE.

P.S.--IF YOUR OUTFIT WANTS TO KNOW ABOUT YOUR RECOMMENDATION MAKE A CARBON COPY OF THIS AND GIVE IT TO YOUR HEADQUARTERS.

REVERSE OF DA FORM 2028-2

FILL IN YOUR UNIT'S ADDRESS

FOLD BACK

DEPARTMENT OF THE ARMY

TEAR ALONG PERFORATED LINE

Commander
US Army Tank-Automotive Command
ATTN: AMSTA-MB
Warren, Michigan 48397-5000

RECOMMENDED CHANGES TO EQUIPMENT TECHNICAL PUBLICATIONS

THEN. . JOT DOWN THE DOPE ABOUT IT ON THIS FORM. CAREFULLY TEAR IT OUT. FOLD IT AND DROP IT IN THE MAIL!

SOMETHING WRONG WITH THIS PUBLICATION?

FROM: (PRINT YOUR UNIT'S COMPLETE ADDRESS)

DATE SENT

PUBLICATION NUMBER	PUBLICATION DATE	PUBLICATION TITLE
TM 9-2330-267-14&P	30 July 1991	Opr's, Org, DS/GS Maint. Manual including RPSTL for Trailer, Tank, Water: 400 Gal., 1-1/2 Ton, 2 Wheel, M149 Series

BE EXACT. PIN-POINT WHERE IT IS

PAGE NO	PARA-GRAPH	FIGURE NO	TABLE NO

IN THIS SPACE TELL WHAT IS WRONG AND WHAT SHOULD BE DONE ABOUT IT:

PRINTED NAME, GRADE OR TITLE, AND TELEPHONE NUMBER

SIGN HERE

DA FORM 1 JUL 79 2028-2

PREVIOUS EDITIONS ARE OBSOLETE.

P.S.--IF YOUR OUTFIT WANTS TO KNOW ABOUT YOUR RECOMMENDATION MAKE A CARBON COPY OF THIS AND GIVE IT TO YOUR HEADQUARTERS.

REVERSE OF DA FORM 2028-2

FILL IN YOUR UNIT'S ADDRESS

FOLD BACK

DEPARTMENT OF THE ARMY

_____

_____

TEAR ALONG PERFORATED LINE

Commander
US Army Tank-Automotive Command
ATTN: AMSTA-MB
Warren, Michigan 48397-5000

RECOMMENDED CHANGES TO EQUIPMENT TECHNICAL PUBLICATIONS

THEN. . JOT DOWN THE DOPE ABOUT IT ON THIS FORM, CAREFULLY TEAR IT OUT, FOLD IT AND DROP IT IN THE MAIL!

SOMETHING WRONG WITH THIS PUBLICATION?

FROM: (PRINT YOUR UNIT'S COMPLETE ADDRESS)

DATE SENT

PUBLICATION NUMBER	PUBLICATION DATE	PUBLICATION TITLE
TM 9-2330-267-14&P	30 July 1991	Opr's, Org, DS/GS Maint. Manual Including RPSTL for Trailer, Tank, Water: 400 Gal., 1-1/2 Ton, 2 Wheel, M149 Series

BE EXACT. PIN-POINT WHERE IT IS

PAGE NO	PARA-GRAPH	FIGURE NO	TABLE NO

IN THIS SPACE TELL WHAT IS WRONG AND WHAT SHOULD BE DONE ABOUT IT:

PRINTED NAME, GRADE OR TITLE, AND TELEPHONE NUMBER

SIGN HERE

DA FORM 1 JUL 79 2028-2

PREVIOUS EDITIONS ARE OBSOLETE.

P.S.--IF YOUR OUTFIT WANTS TO KNOW ABOUT YOUR RECOMMENDATION MAKE A CARBON COPY OF THIS AND GIVE IT TO YOUR HEADQUARTERS.

REVERSE OF DA FORM 2028-2

FILL IN YOUR UNIT'S ADDRESS

FOLD BACK

DEPARTMENT OF THE ARMY

Commander
US Army Tank-Automotive Command
ATTN: AMSTA-MB
Warren, Michigan 48397-5000

TEAR ALONG PERFORATED LINE

THE METRIC SYSTEM AND EQUIVALENTS

LINEAR MEASURE

1 Centimeter=10 Millimeters=0.01 Meters=0.3937 Inches
1 Meter=100 Centimeters=1000 Millimeters=39.37 Inches
1 Kilometer=1000 Meters=0.621 Miles

WEIGHTS

1 Gram=0.001 Kilograms=1000 Milligrams=0.035 Ounces
1 Kilogram=1000 Grams=2.2 Lb
1 Metric Ton=1000 Kilograms=1 Megagram=1.1 Short Tons

LIQUID MEASURE

1 Milliliter=0.001 Liters=0.0338 Fluid Ounces
1 Liter=1000 Milliliters=33.82 Fluid Ounces

SQUARE MEASURE

1 Sq Centimeter=100 Sq Millimeters=0.155 Sq Inches
1 Sq Meter=10,000 Sq Centimeters=10.76 Sq Feet
1 Sq Kilometer=1,000,000 Sq Meters=0.0386 Sq Miles

CUBIC MEASURE

1 Cu Centimeter=1000 Cu Millimeters=0.06 Cu Inches
1 Cu Meter=1,000,000 Cu Centimeters=35.31 Cu Feet

TEMPERATURE

5/9 (°F - 32) = °C
212° Fahrenheit is equivalent to 100° Celsius
90° Fahrenheit is equivalent to 32.2° Celsius
32° Fahrenheit is equivalent to 0° Celsius
9/5 C° +32=F°

APPROXIMATE CONVERSION FACTORS

TO CHANGE	TO	MULTIPLY BY
Inches	Centimeters	2.540
Feet	Meters	0.305
Yards	Meters	0.914
Miles	Kilometers	1.609
Square Inches	Square Centimeters	6.451
Square Feet	Square Meters	0.093
Square Yards	Square Meters	0.836
Square Miles	Square Kilometers	2.590
Acres	Square Hectometers	0.405
Cubic Feet	Cubic Meters	0.028
Cubic Yards	Cubic Meters	0.765
Fluid Ounces	Milliliters	29.573
Pints	Liters	0.473
Quarts	Liters	0.946
Gallons	Liters	3.785
Ounces	Grams	28.349
Pounds	Kilograms	0.454
Short Tons	Metric Tons	0.907
Pound-Feet	Newton-Meters	1.356
Pounds per Square Inch	Kilopascals	6.895
Miles per Gallon	Kilometers per Liter	0.425
Miles per Hour	Kilometers per Hour	1.609

TO CHANGE	TO	MULTIPLY BY
Centimeters	Inches	0.394
Meters	Feet	3.280
Meters	Yards	1.094
Kilometers	Miles	0.621
Square Centimeters	Square Inches	0.155
Square Meters	Square Feet	10.764
Square Meters	Square Yards	1.196
Square Kilometers	Square Miles	0.386
Square Hectometers	Acres	2.471
Cubic Meters	Cubic Feet	35.315
Cubic Meters	Cubic Yards	1.308
Milliliters	Fluid Ounces	0.034
Liters	Pints	2.113
Liters	Quarts	1.057
Liters	Gallons	0.264
Grams	Ounces	0.035
Kilograms	Pounds	2.205
Metric Tons	Short Tons	1.102
Newton-Meters	Pound-Feet	0.738
Kilopascals	Pounds per Square Inch	0.145
Kilometers per Liter	Miles per Gallon	2.354
Kilometers per Hour	Miles per Hour	0.621

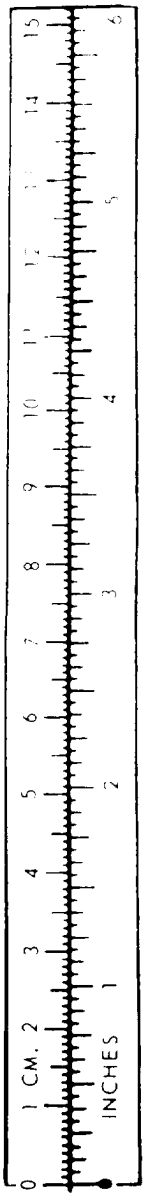

(FOR REFERENCE ONLY)

TAO89991