AVIATION UNIT AND AVIATION INTERMEDIATE MAINTENANCE MANUAL WITH REPAIR PARTS AND SPECIAL TOOLS LIST

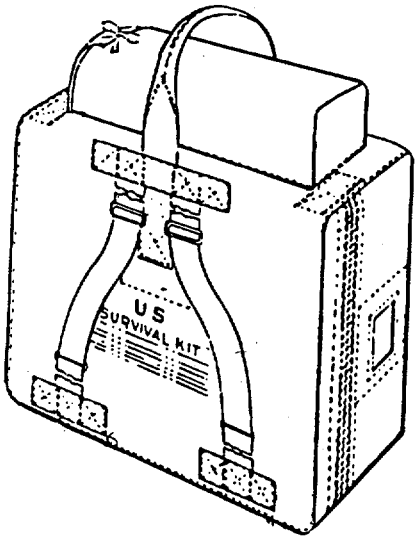

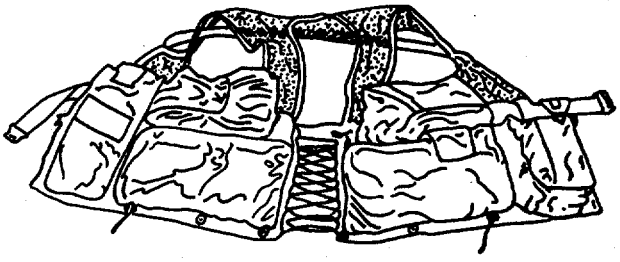

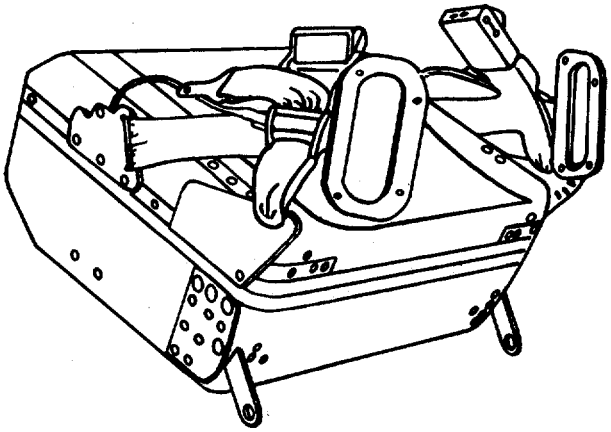

This copy is a reprint which includes current pages from Changes 1 through 7.

ARMY AIRCRAFT SURVIVAL KITS

"Approved for public release; distribution is unlimited."

*This manual supersedes TM55-1680-317-23&P, dated August 1975, including all changes.

HEADQUARTERS, DEPARTMENT OF THE ARMY
26 MARCH 1987

CHANGE

NO. 9

HEADQUARTERS
DEPARTMENT OF THE ARMY
WASHINGTON, D.C., 19 July 2002

AVIATION UNIT AND AVIATION INTERMEDIATE
MAINTENANCE MANUAL WITH REPAIR PARTS AND
SPECIAL TOOLS LIST
ARMY AIRCRAFT SURVIVAL KITS

DISTRIBUTION STATEMFNT A: Approved for public release; distribution is unlimited.

OZONE DEPLETING CHEMICAL INFORMATION

This document has been reviewed for the presence of Class I Ozone Depleting Chemicals. As of the Base through change 08, dated 1 April 1997, All references to Class I Ozone Depleting Chemicals have been removed from this document by substitution with chemicals that do not cause Atmospheric Ozone Depletion. Engineering, Environment, and Logistics Oversight Office.

HAZARDOUS MATERIAL INFORMATION

This document has been reviewed for the presence of solvents containing Hazardous Materials as defined by the EPCRA 302 and 313 lists. As of the base through change 08, dated 1 April 1997, all reference to solvents containing Hazardous Materials have been removed from this document by subtitution with Non-Hazardous or less Hazardous Materials where possible. Engineering, Environment, and Logistics Oversight Office.

TM 55-1680-317-23&P, 26 March 1987, is changed as follows:

1. Remove and insert pages as indicated below. New or changed text material is indicated by a vertical bar in the margin. An illustration change is indicated by a miniature pointing hand.

Remove pages	Insert pages
———	A and B
i and ii	i and ii
iii/(iv blank)	iii/(iv blank)
1-1 and 1-2	1-1 and 1-2
1-9 and 1-10	1-9 and 1-10
2-1 and 2-2	2-1 and 2-2
2-71 and 2-72	2-71 and 2-72
2-103/(2-104 blank)	2-103/(2-104 blank)
C-1 and C-2	C-1 and C-2
C-7 and C-8	C-7 and C-8
C-9 and C-10	C-9 and C-10
C-26.1 and C-26.2	C-26.1 and C-26.2

2. Retain this sheet in front of manual for reference purposes.

By Order of the Secretary of the Army:

ERIC K. SHINSEKI
General, United States Army
Chief of Staff

Official:

JOEL B. HUDSON
Administrative Assistant to the
Secretary of the Army
0214106

DISTRIBUTION:

To be distributed in accordance with Initial Distribution Number (IDN) 311339 requirements for TM 55-1680-317-23 & P.

CHANGE

NO. 8

HEADQUARTERS
DEPARTMENT OF THE ARMY
WASHINGTON, D.C.,1 April 1997

AVIATION UNIT AND AVIATION INTERMEDIATE
MAINTENANCE MANUAL WITH REPAIR PARTS AND
SPECIAL TOOLS LIST
ARMY AIRCRAFT SURVIVAL KITS

DISTRIBUTION STATEMFNT A: Approved for public release; distribution is unlimited.

TM 55-1680-317-23&P, 26 March 1987, is changed as follows:

1. Remove and insert pages as indicated below. New or changed text material is indicated by a vertical bar in the margin. An illustration change is indicated by a miniature pointing hand.

Remove pages	Insert pages
i and ii	i and ii
iii/(iv blank)	iii/(iv blank)
1-1 and 1-2	1-1 and 1-2
1-5 and 1-6	1-5 and 1-6
- - - -	1-6.1/(1-6.2 blank)
1-7 and 1-8	1-7 and 1-8
- - - -	1-8.1/(1-8.2 blank)
1-9 through 1-12	1-9 through 1-12
2-1 and 2-2	2-1 and 2-2
- - - -	2-24.1 and 2-24.2
- - - -	2-30.1/(2-30.2 blank)
2-50.1/(2-50.2 blank)	2-50.1/(2-50.2 blank)
2-53 and 2-54	2-53 and 2-54
2-61 and 2-62	2-61 and 2-62
- - - -	2-97 through 2-103/(2-104 blank)
A-1 and A-2	A-1 and A-2
B-13 and B-14	B-13 through B-15/(B-16 blank)
C-7 and C-8	C-7 and C-8
C-11 and C-12	C-11 and C-12
C-19 through C-22	C-19 through C-22
C-25 and C-26	C-25 and C-26
- - - -	C-26.1 through C-26.3/(C-26.4 blank)
C-29 and C-30	C-29 and C-30

2. Retain this sheet in front of manual for reference purposes.

By Order of the Secretary of the Army:

DENNIS J. REIMER
General, United States Army
Chief of Staff

Official:

JOEL B. HUDSON
Administrative Assistant to the
Secretary of the Army
03357

DISTRIBUTION:

To be distributed in accordance with DA Form 12-31-e, block no. 1339 requirements for TM 55-1680-317-23&P.

TM 55-1680-317-23&P
C 7

CHANGE

NO. 7

HEADQUARTERS
DEPARTMENT OF THE ARMY
WASHINGTON, D.C., 1 February 1994

AVIATION UNIT AND AVIATION INTERMEDIATE
MAINTENANCE MANUAL WITH REPAIR PARTS AND
SPECIAL TOOLS LIST
ARMY AIRCRAFT SURVIVAL KITS

DISTRIBUTION STATEMENT A: Approved for public release; distribution is unlimited.

TM 55-1680-317-23&P, 26 March 1987, is changed as follows:

1. Remove and insert pages as indicated below. New or changed text material is indicated by a vertical bar in the margin. An illustration change is indicated by a miniature pointing hand.

Remove pages	Insert pages
i and ii	i and ii
1-1 and 1-2	1-1 and 1-2
1-7 and 1-8	1-7 and 1-8
C-7 and C-8	C-7 and C-8

By Order of the Secretary of the Army:

Official:

MILTON H. HAMILTON
Administrative Assistant to the
Secretary of the Army

GORDON R. SULLIVAN
General, United States Army
Chief of Staff

06169

DISTRIBUTION:

To be distributed in accordance with DA Form 12-31-E, block no. 1339, requirements for TM 55-1680-317-23&P.

TM 55-1680-317-23&P
C 6

CHANGE

NO. 6

HEADQUARTERS
DEPARTMENT OF THE ARMY
WASHINGTON, D.C., 30 APRIL 1993

AVIATION UNIT AND AVIATION INTERMEDIATE
MAINTENANCE MANUAL WITH REPAIR PARTS AND
SPECIAL TOOLS LIST
ARMY AIRCRAFT SURVIVAL KITS

DISTRIBUTION STATEMENT A: Approved for public release; distribution is unlimited.

TM 55-1680-317-23&P, 26 March 1987, is changed as follows:

1. Remove and insert pages as indicated below. New or changed text material is indicated by a vertical bar in the margin. An illustration change is indicated by a miniature pointing hand.

Remove pages	Insert pages
1-7 and 1-8	1-7 and 1-8
2-1 and 2-2	2-1 and 2-2
2-11 and 2-12	2-11 and 2-12
2-17 and 2-18	2-17 and 2-18
2-71 and 2-72	2-71 and 2-72
A-1 and A-2	A-1 and A-2
C-19 and C-20	C-19 and C-20

2. Retain this sheet in front of manual for reference purposes.

By Order of the Secretary of the Army:

Official:

MILTON H. HAMILTON
Administrative Assistant to the
Secretary of the Army
04099

GORDON R. SULLIVAN
General, United States Army
Chief of Staff

DISTRIBUTION:

To be distributed in accordance with DA Form 12-31-E, block no. 1339, requirements for TM 55-1680-317-23&P.

TM 55-1680-317-23&P
C 5
HEADQUARTERS
DEPARTMENT OF THE ARMY
WASHINGTON, D.C., 30 JANUARY 1992

CHANGE
NO. 5

AVIATION UNIT AND AVIATION INTERMEDIATE
MAINTENANCE MANUAL WITH REPAIR PARTS AND
SPECIAL TOOLS LIST
ARMY AIRCRAFT SURVIVAL KITS

TM 55-1680-317-23&P, 26 March 1987, is changed as follows:

1. Remove and insert pages as indicated below. New or changed text material is indicated by a vertical bar in the margin. An illustration change is indicated by a miniature pointing hand.

Remove pages	Insert pages
i and ii	i and ii
1-1 and 1-2	1-1 and 1-2
1-5 and 1-6	1-5 and 1-6
1-11 / 1-12	1-11 / 1-12
- - -	1-2.1 / 1-12.2
2-5 through 2-10	2-5 through 2-10
- - -	2-10.1 / 2-10.2
2-11 through 2-14	2-11 through 2-14
2-17 through 2-24	2-17 through 2-24
2-45 and 2-46	2-45 and 2-46
2-49 and 2-50	2-49 and 2-50
2-50.1 / 2-50.2	2-50.1 / 2-50.2
2-61 and 2-62	2-61 and 2-62
2-75 and 2-76	2-75 and 2-76
2-93 through 2-96	2-93 through 2-96
C-7 through C-20	C-7 through C-20
C-29 through C-32	C-29 through C-32

2. Retain this sheet in front of manual for reference purposes.

By Order of the Secretary of the Army:

GORDON R. SULLIVAN
General, United States Army
Chief of Staff

Official:

MILTON H. HAMILTON
Administrative Assistant to the
Secretary of the Army
00637

DISTRIBUTION:

To be distributed in accordance with DA Form 12-31-E, block no. 1339, AVUM and AVIM maintenance requirements for TM 55-1680-317-23&P.

CHANGE
NO. 4

HEADQUARTERS
DEPARTMENT OF THE ARMY
WASHINGTON, D.C., 1 March 1991

AVIATION UNIT AND AVIATION INTERMEDIATE
MAINTENANCE MANUAL WITH REPAIR PARTS AND
SPECIAL TOOLS LIST
ARMY AIRCRAFT SURVIVAL KITS

TM 55-1680-317-23&P, 26 March 1987, is changed as follows:

1. Remove and insert pages as indicated below. New or changed text material is indicated by a vertical bar in the margin. An illustration change is indicated by a miniature pointing hand.

Remove pages	Insert pages
i and ii	i and ii
1-1 and 1-2	1-1 and 1-2
1-7 through 1-10	1-7 through 1-10
2-5 through 2-16	2-5 through 2-16
2-53 and 2-54	2-53 and 2-54
2-65 and 2-66	2-65 and 2-66
2-71 and 2-72	2-71 and 2-72
C-7 through C-12	C-7 through C-12
C-21 and C-22	C-21 and C-22
C-29 through C-32	C-29 through C-32
2028's / envelopes	2028's / envelopes

2. Retain this sheet in front of manual for references purposes.

By Order of the Secretary of the Army:

CARL E. VUONO
General, United States Army
Chief of State

Official:

THOMAS F. SIKORA
Brigadier General, United States Army
The Adjutant General

DISTRIBUTION:
To be distributed in accordance with DA Form 12-31-E, block no. 1339, AVUM and AVIM maintenance requirements for TM 55-1680-317-23&P.

CHANGE
NO. 3

HEADQUARTERS
DEPARTMENT OF THE ARMY
WASHINGTON, D.C., 11 December 1989

AVIATION UNIT AND AVIATION INTERMEDIATE
MAINTENANCE MANUAL WITH REPAIR PARTS AND
SPECIAL TOOLS LIST
ARMY AIRCRAFT SURVIVAL KITS

TM 55-1680-317-23&P, 26 March 1987, is changed as follows:

1. Remove and insert pages as indicated below. New or changed text material is indicated by a vertical bar in the margin. An illustration change is indicated by a miniature pointing hand.

Remove pages	Insert pages
1-5 through 1-10	1-5 through 1-10
2-5 and 2-6	2-5 and 2-6
2-9 through 2-12	2-9 through 2-12
2-21 through 2-24	2-21 through 2-24
2-49 and 2-50	2-49 and 2-50
2-50.1/2-50.2	2-50.1/2-50.2
2-53 and 2-54	2-53 and 2-54
2-61 and 2-62	2-61 and 2-62
2-71 and 2-72	2-71 and 2-72
2-83 and 2-84	2-83 and 2-84
2-95 and 2-96	2-95 and 2-96
A-1 and A-2	A-1 and A-2
C-7 through C-12	C-7 through C-12
C-17 through C-20	C-17 through C-20
2028s/envelopes	2028s/envelopes

2. Retain this sheet in front of manual for references purposes.

By Order of the Secretary of the Army:

CARL E. VUONO
General, United States Army
Chief of Staff

Official:

WILLIAM J. MEEHAN II
Brigadier General, United States Army
The Adjutant General

DISTRIBUTION:

To be distributed in accordance with DA Form 12-31, AVUM and AVIM Maintenance requirements for All Fixed and Rotary Wing Aircraft.

CHANGES
No. 2

HEADQUARTERS
DEPARTMENT OF THE ARMY
WASHINGTON, D.C., 7 July 1989

AVIATION UNIT AND AVIATION INTERMEDIATE
MAINTENANCE MANUAL WITH REPAIR PARTS AND
SPECIAL TOOLS LIST
ARMY AIRCRAFT SURVIVAL KITS

TM 55-1680-317-23&P, 26 March 1987, is changed as follows:

1. Remove and insert pages as indicated below. New or changed text material is indicated by a vertical bar in the margin. An illustration change is indicated by a miniature pointing hand.

Remove pages	Insert pages
1-9 and 1-10	1-9 and 1-10
2-1 and 2-2	2-1 and 2-2
2-5 and 2-6	2-5 and 2-6
2-9 through 2-16	2-9 through 2-16
2-19 and 2-20	2-19 and 2-20
2-51 and 2-52	2-51 and 2-52
2-71 and 2-72	2-71 and 2-72
2-81 and 2-82	2-81 and 2-82
A-1 and A-2	A-1 and A-2
C-13 and C-14	C-13 and C-14
C-17 through C-20	C-17 through C-20
C-29 through C-32	C-29 through C-32

2. Retain this sheet in front of manual for reference purposes.

By Order of the Secretary of the Army:

CARL E. VUONO
General, United States Army
Chief of Staff

Official:

WILLIAM J. MEEHAN II
Brigadier General, United States Army
The Adjutant General

DISTRIBUTION:

To be distributed in accordance with DA Form 12-31, AVUM and AVIM Maintenance requirements for All Fixed and Rotary Wing Aircraft.

CHANGE No. 1

HEADQUARTERS
DEPARTMENT OF THE ARMY
WASHINGTON, D.C., 20 September 1988

AVIATION UNIT AND AVIATION INTERMEDIATE
MAINTENANCE MANUAL WITH REPAIR PARTS AND
SPECIAL TOOLS LIST

ARMY AIRCRAFT SURVIVAL KITS
TM 55-1680-317-23&P, 26 March 1987, is changed as follows:

1. Remove and insert pages as indicated below. 'New or changed text material is indicated by a vertical bar in the margin. An illustration change is indicated by a miniature pointing hand.

Remove pages	Insert pages
a/b	a/b
i through iii/vi	i through iii/vi
1-1 through 1-11/1-12	1-1 through 1-11/1-12
2-1 through 2-6	2-1 through 2-6
2-9 through 2-16	2-9 through 2-16
2-19 through 2-26	2-19 through 2-26
2-45 through 2-50	2-45 through 2-50
- - - - -	2-50.1/2-50.2
2-51 through 2-54	2-51 through 2-54
2-59 through 2-64	2-59 through 2-64
2-71 through 2-74	2-71 through 2-74
- - - - -	2-74.1/2-74.2
2-75 through 2-78	2-79 through 2-78
- - - - -	2-78.1/2-78.2
2-79 through 2-82	2-79 through 2-82
- - - - -	2-82.1/2-82.2
2-83 and 2-84	2-83 and 2-84
2-87 and 2-88	2-87 and 2-88
2-93 through 2-96	2-93 through 2-96
A-1 and A-2	A-1 and A-2
B-9 and B-10	B-9 and B-10
C-1 through C-4	C-1 through C-4
C-7 through C-28	C-7 through C-28
C-31 through C-34	C-31 through C-34

2. Retain this sheet in front of manual for reference purpose.

By Order of the Secretary of the Army:

CARL E. VUONO
General, United States Army
Chief of Staff

Official:

R. L. DILWORTH
Brigadier General, United States Army
The Adjutant General

DISTRIBUTION:

To be distributed in accordance with DA Form 12-31, AVUM and AVIM Maintenance requirements for All Fixed and Rotary Wing Aircraft.

WARNING

CAUTION

NOTE

Personnel, performing operations, procedures and practices which are Included or implied in this technical manual, shall observe all WARNINGS, CAUTIONS and NOTES. Disregard of these instructions may result in injury or death of aircrew or support personnel.

WARNING

- Additional items placed in survival kits/vests must not create an undue hazard, impair crewmembers in flight duties, or replace mandatory items.
- Inspect all matches to ensure that match heads ore not joined together. Do not use any matches that are joined together.
- If trioxane fuel is ingested do not induce vomiting; drink milk, eat bread or any high protein food. Seek medical attention immediately.
- Compasses that are components of survival kits, possessing luminous markings on the dial face, contain radioactive material. Insure direct contact with the dial face is avoided in the event the face cover is cracked or broken. Under these conditions, handling and disposal procedures shall be implemented as prescribed by TB 55-1500-314-25 and the local Radiological Protection Officer.
- GAS UNDER PRESSURE. Do not loosen or attempt to remove carbon dioxide cylinder from valve assembly.
- Final dimensions of valve actuating line is critical. Finished length shall not exceed five Inches.

CAUTION

When flying on commercial airlines with any survival kit REMOVE ALL PYROTECHNICS FROM ALL survival kits prior to leaving military base or aviation flight facility. Pyrotechnics cannot be put on board ANY commercial airline per Federal Aviation Regulations.

LIST OF EFFECTIVE PAGES

Insert latest changed pages; dispose of superseded pages in accordance with regulations.

NOTE: On a changed page, the portion of the text affected by the latest change is indicated by a vertical line, or other change symbol, in the outer margin of the page. Changes to illustrations are indicated by miniature pointing hands. Changes to wiring diagrams are indicated by shaded areas.

Dates of issue for original and changed pages are:

Original …….. 0 …….. 26 March 1987
Change …….. 1 …….. 20 September 1988
Change …….. 2 …….. 7 July 1989
Change …….. 3 …….. 11 December 1989
Change …….. 4 …….. 1 March 1991
Change …….. 5 …….. 30 January 1992
Change …….. 6 …….. 30 April 1993
Change …….. 7 …….. 1 February 1994
Change …….. 8 …….. 1 April 1997
Change …….. 9 …….. 19 July 2002

Total number of pages in this publication is 205 consisting of the following:

Page No.	*Change No.
Cover	0
a	1
b blank	0
i – iii	9
iv blank	8
1-1 and 1-2	9
1-3	0
1-4	1
1-5 – 1-6.1	1
1-6.2 blank	8
1-7 – 1-8.1	8
1-8.2 blank	8
1-9	9
1-10 – 1-12	8
1-12.1	5
1-12.2 blank	5
2-1	2
2-2	9
2-3	1
2-4	0
2-5 and 2-6	5
2-7	4
2-8 – 2-10.1	5
2-10.2 blank	5
2-11	6
2-12	4
2-13 and 2-14	5
2-15 and 2-16	4
2-17	5
2-18	6
2-19	5
2-20	2
2-21 and 2-22	5
2-23	3
2-24	5
2-24.1 and 2-24.2	8
2-25	1
2-26 – 2-30	0
2-30.1	8
2-30.2 blank	8
2-31 – 2-45	0
2-46	5
2-47 and 2-48	1
2-49	5
2-50	1
2-50.1	8

*Zero in this column indicates an original page.

LIST OF EFFECTIVE PAGES (CON'T)

Page. No.	*Change No.
2-50.2 blank	3
2-51	1
2-52	2
2-53	8
2-54 – 2-58	0
2-59 and 2-60	1
2-61	8
2-62	3
2-63	0
2-64	1
2-65	0
2-66	4
2-67 – 2-70	0
2-71	4
2-72	9
2-73	0
2-74 and 2-74.1	1
2-74.2 blank	1
2-75	5
2-76 – 2-78	1
2-78.1	1
2-78.2 blank	1
2-79	1
2-80 and 2-81	0
2-82	2
2-82.1	1
2-82.2 blank	1
2-83 and 2-84	3
2-85 and 2-86	0
2-87	1
2-88 – 2-93	0
2-94	5
2-95	3
2-96	5
2-97 – 2-102	8
2-103	9
2-104 blank	9
3-1 and 3-2	0
A-1 and A-2	8

Page. No.	*Change No.
B-1 – B-8	0
B-9	1
B-10 – B-13	0
B-14 and B-15	0
B-16 blank	8
C-1	0
C-2	9
C-3	1
C-4 – C-6	0
C-7	9
C-8	0
C-9	9
C-10	0
C-11	8
C-12	0
C-13	5
C-14	0
C-15	5
C-16	0
C-17 and C-18	5
C-19	8
C-20	5
C-21	8
C-22	0
C-23	1
C-24	0
C-25	1
C-26	8
C-26.1	9
C-26.2 and C-26.3	8
C-26.4 blank	8
C-27	0
C-28	1
C-29	8
C-30 and C-31	5
C-32	4
C-33 and C-34	0
I-1 – I-5	0
I-6 blank	0

*Zero in this column indicates an original page.

TECHNICAL MANUAL

NO. 55-1680-317-23&P

HEADQUARTERS
DEPARTMENT OF THE ARMY
WASHINGTON, D.C., 26 March 1987

AVIATION UNIT AND AVIATION INTERMEDIATE MAINTENANCE MANUAL
with
Repair Parts and Special Tools List
for
ARMY AIRCRAFT SURVIVAL KITS

REPORTING ERRORS AND RECOMMENDING IMPROVEMENTS

You can improve this manual. If you find any mistakes, or if you know of a way to improve these procedures, please let us know. Mail your letter, DA Form 2028 (Recommended Changes to Publications and Blank Forms), or DA Form 2028-2 located in the back of this manual, directly to: Commander, US Army Aviation and Missile Command, ATTN: AMSAM-MMC-MA-NP, Redstone Arsenal, AL 35898-5000. A reply will be furnished to you. You may also provide DA 2028 information to AMCOM via e-mail, fax, or the World Wide Web. Our fax number is DSN 788-6546 or Commercial 256-842-6546. Our e-mail address is: 2028@redstone.army.mil. Instructions for sending an electronic 2028 may be found at the back of this manual immediately preceding the hard copy 2028. For the World Wide Web use: http://amcom2028.redstone.army.mil.

DISTRIBUTION STATEMENT A: Approved for public release; distribution is unlimited.

WARNING

OZONE DEPLETING CHEMICAL INFORMATION

This document has been reviewed for the presence of Class I Ozone Depleting Chemicals. As of the base through change 08, dated 1 April 1997, all references to Class I Ozone Depleting Chemicals have been removed from this document by substitution with Chemicals that do not cause atmospheric Ozone Depletion. Engineering, Environment, and Logistics Oversight Office.

HAZARDOUS MATERIAL INFORMATION

This document has been reviewed for the presence of solvents containing Hazardous Materials as defined by the EPCRA 302 and 313 lists. As of the base through change 08, dated 1 April 1997, all references to solvents containing Hazardous Materials have been removed from this document by substitution with Non-Hazardous or lesss Hazardous materials where possible. Engineering, Environment, and Logistics Oversight Office.

NOTE

The following Supply Catalogs have been superseded by the change: SC 1680-97-CL-A02, 29 Feb 80; SC 1680-97-CL-A03, 29 Feb 80; SC 1680-97-CL-08, 21 Aug 81; SC 1680-99-CL-A04, 20 Aug 74; and SC 8465-90-CL-P02, 29 Mar 85. All pertinent information has been incorporated.

TABLE OF CONTENTS

			Page
CHAPTER	**1.**	**INTRODUCTION**	
Section	I.	General Information	1-1
	II.	Equipment Description	1-2
	III.	Technical Principles of Operation	1-2
CHAPTER	**2.**	**MAINTENANCE INSTRUCTIONS**	
Section	I.	Service Upon Receipt of Material	2-1
	II.	Preventive Maintenance Checks and Services (PMCS)	2-2
	III.	General Repair Instructions	2-25
	IV.	Specific Repair and Packing Instructions	2-36
		2-12. Individual Hot Climate Survival Kit	2-36
		2-13. Individual Cold Climate Survival Kit	2-51
		2-14. Individual Overwater Survival Kit	2-54
		2-15. SRU-21P Survival Vest - Kit	2-66
		2-16. OV-1 Aircraft Survival Vest	2-74
		2-17. Modification of Radio Pocket	2-76
		2-18. OV-1 Aircraft Rigid Seat Survival Kit (RSSK)	2-79
		2-19. Aircrew Survival Armor Recovery Vest, Insert, and Packets (SARVIP)	2-97
CHAPTER	**3.**	**A.L.S.E WORK, STORAGE AND FITTING AREAS**	3-1
APPENDIX	A.	Reference	A-1
	B.	Maintenance Allocation Chart	B-1
	C.	Repair Parts and Special Tools List	C-1

LIST OF ILLUSTRATIONS

Number	Title	Page
1-1.	The individual survival kit for all Army aircraft, except OV-1, typical	1-3
1-2.	The OV-1 aircraft individual survival kit	1-4
1-3.	The SRU-21/P survival vest, typical	1-5
1-4.	OV-1 aircraft (rigid seat survival kit) RSSK	1-5
1-4a.	Aircraft Survival Armor Recovery Vest, Insert, and Packets (SARVIP)	1-6
1-5.	Individual Survival Kit Components	1-12
2-1.	General patching details	2-27
2-2.	Installing an eyelet-type grommet, typical	2-32
2-3.	Seating a snap fastener, typical	2-33
2-4.	Knots used in survival kit maintenance	2-35
2-5.	The individual survival kit outer case, typical	2-36
2-6.	Kit outer case carrying handle construction details	2-38
2-7.	Individual survival kit (packed) (Sheet 1 of 3)	2-40
2-7.	Individual survival kit (packed) (Sheet 2 of 3)	2-41
2-7.	Individual survival kit (packed) (Sheet 3 of 3)	2-42
2-8.	Attaching strap replacement details, typical	2-44
2-9.	Strap assembly construction details, typical	2-45
2-9a.	Securing slide fastener thong	2-50

LIST OF ILLUSTRATIONS - Continued

Number	Title	Page
2-10.	Packing details for survival components of the individual hot climate survival kit	2-50.1
2-11.	Tarpaulin folding details	2-51
2-12.	Packing details for survival components of the individual cold climate survival kit	2-53
2-13.	Connector loop construction and attaching details	2-55
2-14.	Thong replacement details	2-57
2-15.	Ring chape construction details	2-58
2-16.	Ring chape installed on kit outer case slide interlocking fastener	2-58
2-17.	Connector web construction details	2-60
2-18.	Inner case packing details for survival components of the individual overwater survival kit	2-61
2-19.	One-man life raft packed in kit outer case upper section with connector web stowed	2-62
2-20.	Individual overwater survival kit packed and kit closure completed	2-63
2-21.	One-man life raft folding details	2-64
2-22.	Connecting the raft inflation assembly and kit closing details	2-65
2-23.	The SRU-21/P survival vest construction details	2-66
2-24.	Removing the SRU-21/P survival vest inside panel	2-70
2-25.	Assembly and stowage details for survival components of the SRU-21/P survival vest	2-72
2-26.	Radio with antenna stowed properly for SRU-21/P vest	2-73
2-27.	OV-1 aircraft individual survival vest components assembly and stowage details	2-75
2-27a.	Alternate method of attaching LPU-10 flotation equipment to the OV-1 survival vest	2-76
2-28.	SRU-31/P packet 1 and 2	2-77
2-29.	Radio pocket flap alterations for OV-1 vest	2-78
2-30.	Radio with antenna stowed properly in OV-1 vest	2-78.1
2-31.	OV-1 aircraft rigid seat survival kit with seat pad and thigh support pads	2-79
2-32.	RSSK 1 man life raft folding details	2-80
2-33.	Attaching dropline around neck of valve	2-82
2-34.	Passing actuating line through pull-cable loop	2-82
2-34a.	Raft retaining line OV-1 RSSK	2-82.1
2-35.	OV-1 aircraft RSSK, equipment bag, and drop line (Sheet 1 of 3)	2-84
2-35.	OV-1 aircraft RSSK, equipment bag, and drop line (Sheet 2 of 3)	2-85
2-35.	OV-1 aircraft RSSK, equipment bag, and drop line (Sheet 3 of 3)	2-86
2-36.	OV-1 aircraft rigid seat survival kit with harness assembly (Sheet 1 of 3)	2-87
2-36.	OV-1 aircraft rigid seat survival kit with harness assembly (Sheet 2 of 3)	2-88
2-36.	OV-1 aircraft rigid seat survival kit with harness assembly (Sheet 3 of 3)	2-89
2-37.	OV-1 aircraft RSSK canopy release and quick release handle	2-91
2-38.	OV-1 aircraft RSSK stiffener and housing latch assembly	2-92
2-39.	Packing details for survival components of the OV-1 aircraft RSSK hot climate survival kit	2-94
2-40.	Packing details for survival components of the OV-1 aircraft RSSK cold climate survival kit	2-95
2-41.	Packing details for survival components of the OV-1 aircraft RSSK overwater survival kit	2-96
2-42.	SARVIP	2-97
2-43.	Assembly of SARVIP components	2-103
C-1.	Survival kit, individual, hot climate	C-6
C-2.	Survival kit, individual, cold climate	C-8
C-3.	Survival kit, individual, overwater	C-10
C-4.	Rigid seat survival kit, hot climate	C-12
C-5.	Rigid seat survival kit, cold climate	C-14
C-6.	Rigid seat survival kit, overwater	C-16
C-7.	Individual survival kit vest-type SRU-21/P	C-18
C-8.	Individual survival kit vest - OV-1 aircraft	C-20
C-9.	Rigid seat survival kit	C-22
C-10.	Survival kit lid assembly	C-24
C-11.	SARVIP	C-25.1

CHAPTER 1

INTRODUCTION

Section 1. GENERAL INFORMATION

1-1. SCOPE

a. Type of Manual ..... Aviation Unit and Aviation Intermediate Maintenance Manual (including Repair Parts and Special Tools List)

b. Model Number and Equipment Name ..... Army Aircraft Survival Kits

c. Purpose of Equipment .....Used to aid flying personnel in survival situations.

1-2. MAINTENANCE FORMS, RECORDS AND REPORTS

a. Maintenance forms and records used by Army personnel are prescribed by DA PAM 738-751.

1-3. DESTRUCTION OF ARMY MATERIALTO PREVENT ENEMY USE

a. Authority. The equipment will be destroyed if it is in danger of being captured and used by the enemy. Refer to TM 750-244-1-2.

1-4. REPORTING OF EQUIPMENT IMPROVEMENT RECOMMENDATIONS (EIR)

If your survival equipment needs improvement, let us know. Send us an EIR. You, the user, are the only one who can tell us what you don't like about your equipment. Let us know why you don't like the design or performance.

a. Army-EIR will be prepared using DA Form 2407, Maintenance Request. Instructions for preparing EIRs are provided in DA PAM 738-751. Functional users manual for the Army Maintenance Management System Aviation (TAMMS-A). EIRs should be mailed directly to Commander, U. S. Army Aviation and Missile Command, ATTN: AMSAM-MMC-MA-NP, Redstone Arsenal, AL. 35898-5230. A reply will be furnished directly to you.

Section II. EQUIPMENT DESCRIPTION

1-5. EQUIPMENT CHARACTERISTICS, CAPABILITIES, AND FEATURES

* Completely self-contained.
* Provides downed aircrew member with essential items needed in survival situations.
* Lightweight and portable for transporting to other locations.
* Provides a means of communication to downed aircrewmen.

1-6. LOCATION OF MAJOR COMPONENTS

For location of major components see the following sections describing the various kits.

1-7. EQUIPMENT DATA

The kits are as light and compact as possible, and are carried aboard all Army aircraft and are easily transported in emergency situations. Any item used for training will not be used for service in any survival kit, and shall be marked, "For Training Only".

Section III. TECHNICAL PRINCIPLES OF OPERATION

1-8. EQUIPMENT DESCRIPTION

a. The Individual Hot Climate, Cold Climate, and Overwater Survival Kits. The individual hot climate, cold climate, and overwater survival kits (figure 1-1) are complete survival packages which are carried aboard all Army aircraft, except OV-1 aircraft, according to the survival environment along the routes of flight. Components of each of the survival kits are contained within a canvas or nylon case which is equipped with a web carrying handle and two parachute attaching straps. The straps permit the applicable kit to be connected to an emergency-type personnel parachute harness in the event of emergency bailout during flight. The contents of each individual survival kit shall vary according to the kit type as outlined in chapter 2. However, of the three kit types, the overwater kit is the only kit which contains one-man life raft and a carbon dioxide cylinder for raft inflation.

NOTE

For economic reasons, hot/cold climate survival kits may be converted from one configuration to another by adding or subtracting the appropriate components required. (Fig. 1-5) when hot/ cold climate survival kits are converted, place tape, NSN 7510-00-266-5006, over hot/cold identification. Using a black marker, write the appropriate configuration on the tape.

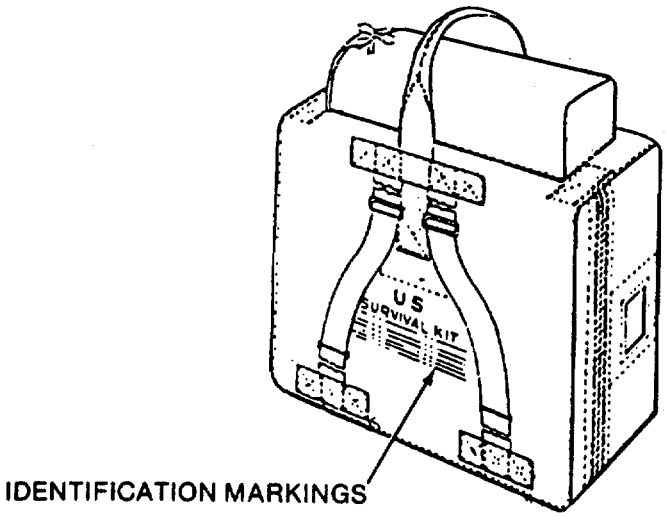

Figure 1-1. The individual survival kit for all Army aircraft, except OV-1, typical

1.8. EQUIPMENT DESCRIPTION - Continued

b. The OV-1 Aircraft Rigid Seat Survival Kits (RSSK). The rigid seat survival kits are similar to those * described above, except that kit container is made of rigid fiberglass. The rigid seat survival kit (RSSK) also includes a retention assembly for the seat occupant. The survival kit assembly fits in the seat pan and is secured by two lower attachment lugs, which are released only when the time release mechanism or the manual override handle is actuated. An occupant retention assembly is attached to both sides of the survival container and clips to a floating lap belt which Is attached to the personnel harness. To gain access to an equipment bag containing the survival gear, squeeze and pull the special grip handles to release the assembly which locks the container bottom to the lid assembly. Use only a normal handshake to squeeze. Pull until the small steel ball is visible. The seat pan provides the occupant with proper support for the lower portion of the torso and consists of a seat cushion and a rigid seat survival kit.

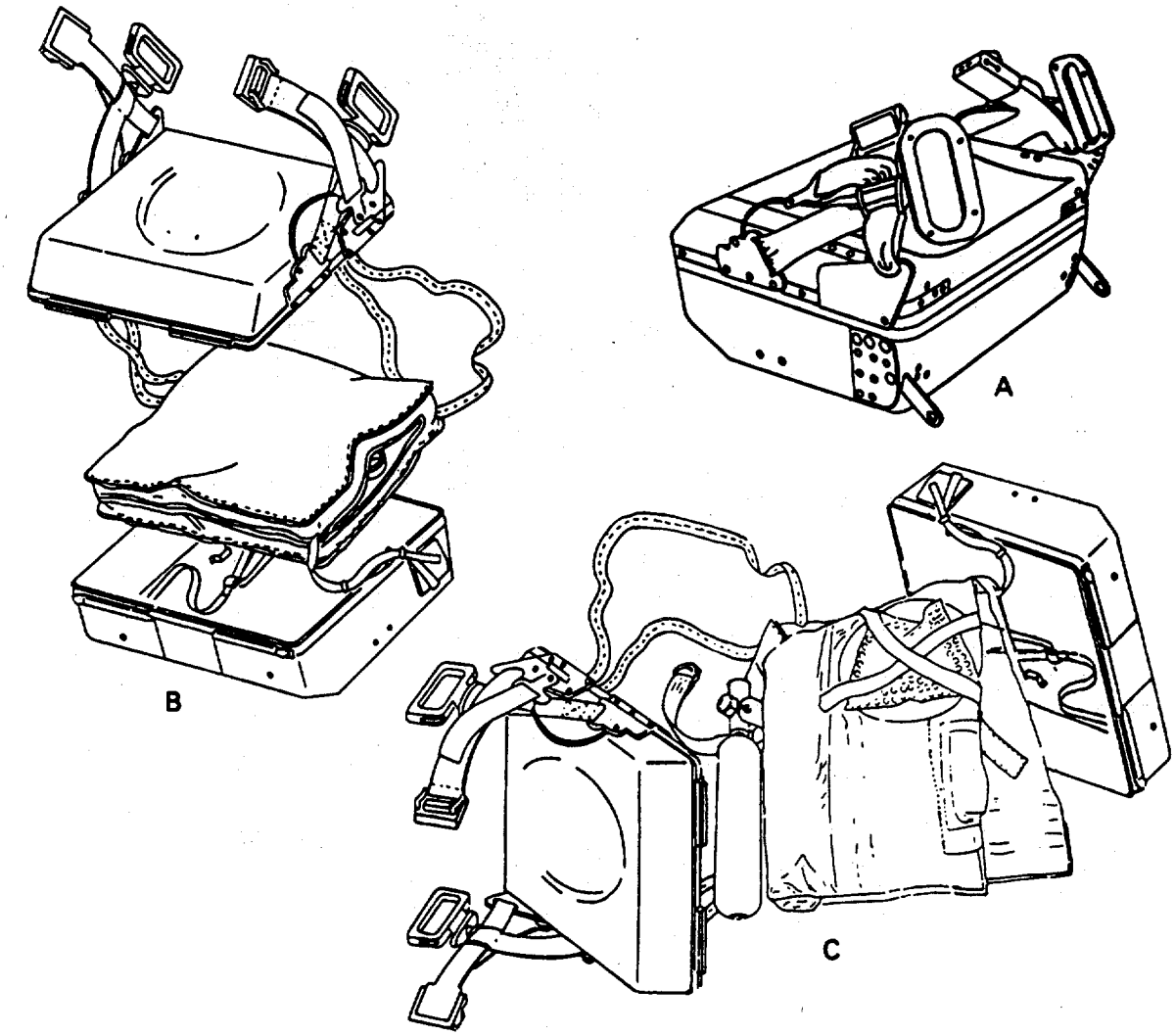

Figure 1-2. OV-1 Aircraft Individual Survival Kit.
A. Rigid Seat Survival Kit (RSSK) Seat Container
B. The Hot or Cold Climate Kit, Typical
C. The Overwater Kit

1-8-. EQUIPMENT DESCRIPTION -Continued

c. **SRU-21/P Survival Vest.** The SRU-21/P survival vest (figure 1-3) is E complete survival package which is worn by personnel on all types of Army aircraft, except OV-1. The vest is constructed of lightweight raschel knit nylon cloth with pockets attached to contain the prescribed survival components. The vest may also accommodate a . 38 caliber or 9mm pistol holster which can be handtacked into position on the lower left side of the vest when required.

Figure 1-3. The SRU-21/P Survival Vest, Typical

d. **The OV-1 AIRCREWMEMBERS SURVIVAL VEST**. The vest is designed for the OV-1 aircrew and is to be used in conjunction with the Rigid Seat Survival Kit (RSSK). ft is furnished in two sizes, large and small, and is made of raschel knit nylon cloth. The pockets contain the survival components. The SRU-31 /P kit consists of two packets, a mandatory medical packet found in the left side vest pocket, and a mandatory general packet found in the right side vest pocket The kit is designed to supplement the RSSK If used properly the SRU-31/P will help maintain physical and mental health until rescued. Each pocket has additional storage for items which the crewmember might deem necessary for rescue or survival.

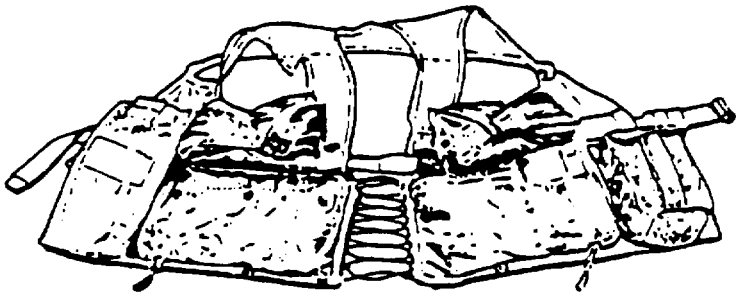

Figure 1-4. OV-1 Aircrewmembers Survival Vest

1-8. EQUIPMENT DESCRIPTION - Continued

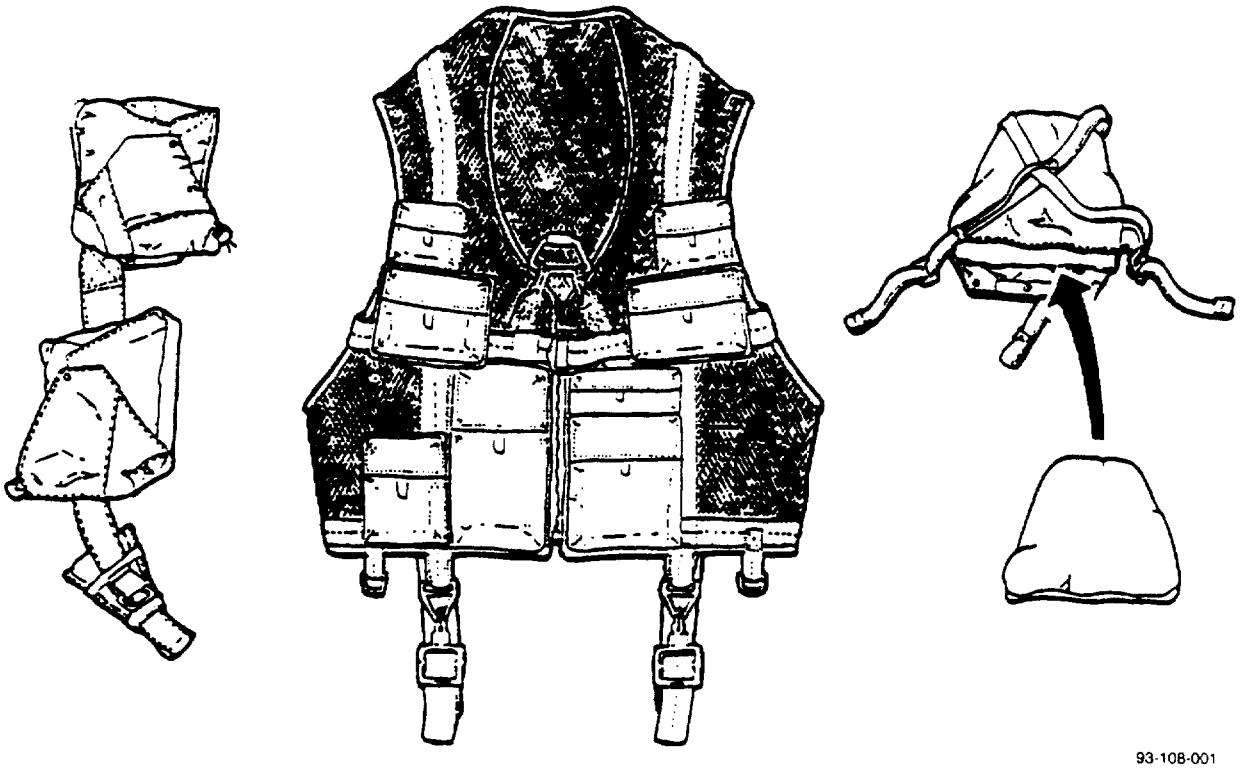

Figure 1-4a. Aircraft Survival Armor Recovery Vest, Insert, and Packets (SARVIP)

CAUTION

Do not use SARVIP as helicopter restraint equipment. This will stop soldier from modifying SARVIP.

e. **Aircraft Survival Armor Recovery Vest, Insert, and Packets (SARVIP). (Figure 1-4a.)** SARVIP consists of an armor insert and carriers, survival vest with integral lifting harness, survival packets (basic and medical); and other survival/signal/communication devices. SARVIP also accommodates the Radio Set AN/PRC-90 or AN/PRC-112 and the LPU-10/P water life preserver. When fielded, the SARVIP vest, packets, and other survival/signal/communication devices replace the SRU-21/P vest. The SARVIP insert and carrier, when fielded, replace the .30 caliber aircrew body armor currently utilized.

1-9. COMPONENTS DESCRIPTIONS

Kit Components (Typical)

a. The components listed in repair parts, Appendix C for each kit/vest are the mandatory minimum and shall be included in the kit/vests. Unit commanders may authorize additional items to be included in kits/vests as space allows.

WARNING

Additional items placed in survival kits/vests must not create an undue hazard, impair crewmembers in flight duties, or replace mandatory items.

b. Certain signaling devices are of primary importance to a downed crewman during search and rescue operations. In addition, certain other items are considered essential in a survival situation. These are mandatory and will be so noted in listing of items for each type kit. EACH INDIVIDUAL OR AIRCREW MEMBER ASSOCIATED WITH THESE COMPONENTS SHALL BE COMPLETELY INSTRUCTED IN THE USE AND OPERATION OF THIS EQUIPMENT TO OBTAIN MAXIMUM BENEFIT.

c. Water, drinking, canned or flex-pack, is intended for use in emergencies when no clean water is available. Each can contains 10 ounces of water and each flex-pack packet contains .125 mL of water which will support the immediate need of a survivor. Flex-pack pack water may be substituted directly for canned water at a ration of 2:1.

d. Bag, water storage, is a plastic bag used for storage of up to 5 quarts of fresh water. The bag comes complete with a buckle strap fastener, and carrying strap for easy attachment to personnel or equipment.

e. Blankets, combat casualty, are used to provide aircrew with warmth and protection against the elements and as a signaling aid for rescue purposes. The blankets consist of two types. Type I heavyweight is 84 inches long by 56 inches wide. Type II, lightweight is 96 inches long by 56 inches wide. One blanket is olive drab/silver, the other is orange/silver and made of aluminized plastic.

f. Dye marker, is used to attract rescue craft. The dye is exhausted in 20 to 30 minutes and has a fluorescent green color, which ceases to be a good target after an hour. The dye marker is contained within a yellow, vinyl resin coated cloth pouch with an attaching tape.

g. Knife, pocket, is a general purpose survival tool which has many uses. The knife is constructed of stainless steel and consists of one blade, can opener, bottle opener, screwdriver, and leather punch blade.

h. Knife, survival, has a five inch steel blade, one side of the blade is honed while the other side is serrated. The knife sheath is constructed of leather with a pocket to carry the sharpening stone. There is a metal tip on the sheath to protect from injury.

i. Light, distress marker, type SDU-5/E emits a high intensity flashing light, visible for great distances and used to aid in rescue operations. A flash guard is used during combat.

1-9. COMPONENTS DESCRIPTIONS - Continued

j. Whistle, Ball, plastic, is used for attracting attention of rescue personnel. The whistle is made of plastic with a lanyard attached for easy access and to prevent loss.

k. Tool kit, survival, aids a downed aircrew to sustain life in adverse environments. The tool kit contains an axe, burning lens, sharpening stone, and cotton duck case.

l. The knife-saw-shovel assembly, consists of a handle that can be used with each of these pieces. Care must be taken as the blade of the knife/saw is very sharp and is not to be used as an axe or hatchet during extreme cold weather, as the blade will shatter.

m. Candles are now being issued in cans. Loose candles should be packed 1 or 2 to a ziplok bag, this stops the candles from melting into one unusable blob.

n. Food packets are in pull top cans and contain two corn flake bars, one rice/corn flake bar, one natural granola bar, four sugar packs, one chicken broth packet, and one coffee packet.

o. Individual first aid kit has a soft cover and a hard plastic container that houses all but the eye first aid kit and two first aid cards.

p. Survival compass is a 1 1/2 inch diameter compass, Type MC-1, packed in the inner case with instructions, and does not have radioactive fluorescent material.

q. 20 feet of snare wire to be used in snaring small game.

r. Fishing kit consists of fish hooks, lures, flies, fishing line, leaders, colored cloth, safety pins, and assorted needles, with instructions on knot tying and fishing.

s. Insect headnet with loops for attaching to pockets.

t. Sun hat reversible to be used in the hot climate and overwater kits.

u. Paddles for use in the overwater kit, reflector tape on one side may be used for signaling.

v. Sponge, bailer and sea anchor for use in the overwater kit.

w. One man life raft with CO_2 cartridge for automatic inflation or an oral inflation tube in case the CO_2 malfunctions.

x. Sunscreen lotion for use in the hot climate and overwater kits to prevent sunburn.

y. Emergency signaling mirror can be used during overcast days and moonlit nights, as well as clear days.

z. Seawater desalter kit to make potable drinking water from salt water, used in overwater kits.

1-9. COMPONENTS DESCRIPTIONS - Continued

aa. Handsaw, finger grip two rings with thumb screws to retain round saw blade.

ab. Pan, frying, aluminum, rectangular in shape is located in bottom of inner case.

ac. Plastic spoon in sealed plastic bag.

ad. Poncho used for shelter, to keep dry during raining periods and to be used as makeshift stretcher and to collect rain water.

ae. Tarpaulin used for shelter, signaling panel and to collect rain water.

af. Net, gill fishing, used for fishing, hammock, stretcher, carrying equipment/collected food and hanging cache.

ag. Survival kit, individual, tropical tactical aircrewman, is combination first aid kit and has limited survival equipment components.

ah. "MATCHES, NONSAFETY". Are packed in a large plastic round container with a screw top cap that makes a water tight seal. The container holds four boxes of 30-40 matches each. A rough surface on the outside bottom of the container is for striking the match to cause ignition.

ai. Radio Set, AN/PRC-90 Series survival radio has 2 frequency 282.8 and 243.0 MHz capable of voice or beacon, AN/PRC-112 has 3 frequencies 121.5 MHz, 243.0 MHz, 282.8 in beacon, voice and transponder mode and two programmable frequency channels in transponder or voice.

aj. Sleeping Bag, either SRU-15/P or Arctic Survival. Both sleeping bags are vacuum-pressure packed and sealed at the factory and cannot be repacked. If opened, they cannot be resealed and used again in the survival kit. They can either be used for training or turned in for disposal as required.

ak. Survival vest. Two types are used. The standard type is used by all aircrew members, except OV-1 crews; this comes in two sizes, small and large. The older type did not have a radio pocket for the PRC-90 survival radio. It is made of nylon raschel and has pockets for survival equipment. The newer OV-1 type vest is similar except it has openings in the upper portion of the vest for parachute harness release. It has two special soft pack survival kits; one is general purpose and the second is a first aid kit.

al. Three types of survival kits are in the system. First is a soft pack type survival kit, soft pack being defined as an outer case made of heavy canvas and an inner case made of heavy canvas or nylon. The second type is the rigid seat survival kit (RSSK). This type is used only in the OV-1 aircraft and is a part of the ejection seat system. The soft pack type is used on all other types of aircraft. The third is the Aircraft Modular Survival System (AMSS).

am. Firestarter, aviation survival, sparklite, used to start fires.

1-9. COMPONENTS DESCRIPTIONS - Continued

an. SARVIP. The aircrew survival armor recovery vest, insert, and packets (SARVIP) is a three part system: The survival vest is fabricated from raschel knit and oxford fire-resistant fabric. It contains 12 external pockets, both front, side and inside, for storage of survival, signal, and communications components. All pockets have fastener tape closures. Located just above the center slide fastener is a carabiner attached to the harness for rescue lift capability. Internal loops are provided for securing the LPU-10/P to the vest.

The armor insert consists of an oxford carrier with seven layers of ballistic Kevlar attached, and a ceramic/ fiberglass armor insert with a 3/4-inch-thick foam padding. The armor insert provides .50 cal AP protection, and the Kevlar provides spall fragmentation protection when the armor is hit with a round. The foam padding located closest to the chest provides blunt trauma protection when the armor insert is hit.

The survival packets are designed to provide essential, world wide, climatically oriented survival components for immediate self-aid in all basic/temperate, hot, cold, or overwater survival environments. There are two types of survival packets: medical related and basic survival which are carried in the front pockets.

ao. SARVIP includes the vest, compass, dye marker, SDU-5/E distress marker light, emergency signaling mirror, smoke and illumination signals, life preserver LPU-10/P, a foliage penetration signal kit, and a pocket for carrying an AN/PRC-90 or an AN/PRC-112 radio.

ap. Signal smoke and illumination (MK-13 or MK-124) is a hand actuated combination day or night distress signal. One end of the signal device contains orange smoke for daytime use and the opposite end contains a pyrotechnic composition for illumination during nighttime use. The end is marked by a series of embossed projections located 1/4-inch below end cap.

aq. Technical manual, TM 1-1680-359-10, covers use and care of the SARVIP and other survival items included with it.

ar. Life preserver LPU-1 0/P consists of gas-actuated water wings which are secured to the SARVIP armhole openings with snap dot fasteners.

as. The signal kit uses slide-in flares (gyro-jet type) that are held in the launcher by collets.

1-10. HAZARDOUS COMPONENTS

a. Hazardous components as referred to in this technical manual consist of ammunition items (cartridges and shells), pyrotechnics (signals, distress), flammables (fire starter and matches), compass lensatic, MIL-C-10436 and trioxane fuel packets.

b. As option, lot numbers of ammunitions items and distress signals will be checked for serviceability in accordance with TB 9-1300-385, T.O. 11A-1-1, NAVSEA OD 17190. As option, use lot numbers that will be entered on the reverse side of serviceable tag, (DD Form 1574), to facilitate checking lot numbers between periodic kit inspection.

c. Operation of Signal, MK13, MODO. All personnel who may be required to operate these signals in emergencies shall be given instructions in their use.

WARNING

Inspect all matches to ensure that match heads are not joined together. Do not use any matches that are joined together.

WARNING

Inspect all matches to insure the match heads are not placed in such a way that the head could ignite by rubbing against an adjacent match. Do not use any matches that are joined together.

d. "MATCHES, NON-SAFETY". Are packed in a large round plastic container with a screw top cap that makes a water tight seal. The container holds four boxes of 30-40 matches each. A rough surface on the outside bottom of the container is for striking the match to cause ignition.

e. Trioxane Fuel Tablets. Trioxane fuel tablets are considered good indefinitely. Trioxane fuel is primarily composed of metaformaldehyde, which is highly toxic. Ingestion constitutes a medical emergency. Wash hands immediately after handling opened or leaking packages.

WARNING

If trioxane fuel is ingested do not induce vomiting; drink milk, eat bread or any high protein food. Seek medical attention immediately.

f. The Signal Kit Personnel Distress, is a hand launched distress signal. The flare is composed of two cylindrical sections. The candle composition is in the front section. The rear sections consist of a rocket motor and nozzle plate with a centrally located primer, propellant and delay column.

1-10. HAZARDOUS COMPONENTS - Continued

The nozzle plate has two canned gas exit holes which provide axial thrust and impart a high spin rate to stabilize flight. The primer, initiated by the firing pin, lights the igniter, which in turn ignites the propellant. The exhaust gases are expelled through the nozzle holes and propel the flare out of the launcher, in a spin stabilized flight. After approximately 1100 feet of travel (3.0 sec.), the delay column burns through and ignites the payload. Ignition of the payload causes separation from the rocket motor section. The display burns in upward flight, through maximum altitude and in downward flight. The signal duration is approximately 10 seconds and provides a 10,000 candle power illumination, visible for 15 to 20 miles. The flare is approximately 2.0 inches long, 0.5 inches in diameter, and weighs approximately 1/2 ounce. The flares are available in green, red, and white. The launcher consists of a black anodized aluminum housing, spring, firing pin release knob, and a flare holder. All internal parts are corrosion-resistant steel. The overall dimensions are 5. 5 inches long, 0. 8 inches in diameter and the launcher weighs approximately 2-1/2 ounces.

1-11. TABULATED DATA

TYPE SURVIVAL EQUIPMENT:	PACKED WEIGHT	HEIGHT	LENGTH	WIDTH
OVERWATER KIT (in ML-4 container)	29 lbs.	5.5"	19"	15"
COLD CLIMATE KIT (in ML-4 container)	28 lbs.	5.5"	19"	15"
HOT CLIMATE KIT (in ML-4 container)	29 lbs.	5.5"	19"	15"
SRU-21 P SURVIVAL VEST (packed)	7.5 lbs.			
SARVIP				
X-Small Small Medium Large X-Large	8.5 to 9.00 lbs. (w/o ballistic insert)			
OV-1 AIRCREW SURVIVAL VEST (packed)	7.5 lbs.			
OV-1 AIRCRAFT-RIGID SEAT SURVIVAL KIT (RSSK)				
COLD CLIMATE CONFIGURATION	33.2 lbs.	9"	14.5"	15"
HOT CLIMATE CONFIGURATION	33.2 lbs.	9"	14.5"	15"
OVERWATER CONFIGURATION	44.0 lbs.	9"	14.5"	15"

1-11. TABULATED DATA- Continued

TYPE SURVIVAL EQUIPMENT:	PACKED WEIGHT	HEIGHT	LENGTH
BALLISTIC INSERT			
Small	9.2 lbs.	13.00"	10.75"
Medium	10.9 lbs.	14.25"	11.10"
Large	13.5 lbs.	14.50"	12.10"
X-Large	13.9 lbs.	14.25"	11.00"
TYPE FLOTATION EQUIPMENT:			
INDIVIDUAL LIFE RAFT			
UNDERARM FLOTATION (Waterwings)			
ONE-MAN LIFE RAFT			
UNDERARM FLOTATION (Waterwings)			

NOTE

The Cold Climate Survival Kit cases manufactured after July 1985 are two inches greater in depth to accommodate the new sleeping bag.

1-12. TRAINING

a. Periodic training programs should be established at unit level to ensure that each individual aircrew member is thoroughly familiar with the type of kit and components he is using and how to use and operate this equipment in times of emergency. The importance of a familiarization program cannot be overemphasized.

CAUTION

The individual type survival kits and containers described in this manual are items of primary survival equipment and every precaution shall be taken to assure proper handling. Care must be exercised to preclude damage to the kits or component parts. Kits shall not be thrown in or out of aircraft or vehicles.

b. The components of survival kits are vital in providing downed personnel with essential life sustaining items and rescue aids. The containers are designed to accommodate a maximum number of survival items in the lease possible space. Compact packing of survival kits will depend upon proper training of personnel selected to assemble kits. Personnel engaged in the packing and inspection of survival kits shall be a life support school graduate. A list identifying those personnel will be conspicuously located in the area where kit packing is performed.

INDIVIDUAL SURVIVAL KITS
(HOT/COLD CLIMATE AND OVER-WATER)

OUTER CASE

NSN 1 680-00-082-2511 (over-water)
NSN 1680 00-082-2512 (cold-climate)
NSN 1680-00-082-251 3 (hot-climate)

COMPONENTS COMMON TO ALL KITS

ITEM	NSN
Inner Case	1680-00-082-2514
Compass, Magnetic	6605-00-515-5637
Net, Hat & Mosquito	8415-00-935-3130
First Aid Kit	6545-01-094-8412
Survival Manual	AFM 64-5 or FM21-76
Smoke and Illumination Signal	1370-00-309-5028
Mirror, Signaling Emergency	6350-00-261-9772
Food Packets, Survival	8970-00-082-5665
Bag, Water Storage	8465-00-485-3034
Knife, Pocket	5110-00-162-2205
Matches, Non-Safety W/Container	9920-01-154-7199
Net, Multi-Purpose	8465-00-300-2138
Fishing Kit	4220-00-244-0764
Fuel, Compressed, Trioxane	9110-00-263-9865
Spoon, Plastic, Picnic	7340-00-170-8374
Pan, Frying	7330-00-082-2398
Whistle, Plastic	8465-00-254-8803
Blanket Combat Casualty	7120-00-935-6667
Fire-Starter, Aviation Survival, Sparklite	1680-01-233-0061
Sharpener, General Purpose	5345-01-214-1050
Saw, Hand, Finger Grip	5110-00-570-6896
Fire-Starter, Aviation Survival, Magnesium	1680-01-160-5618
Packing List— Hot Kit: TM 55-1680-317-CL-1; Overwater Kit: TM 55-1680-317-CL-3	
Cold Kit: TM 55-1680-317-CL-2; SRU 21/P: TM 55-1680-317-CL-4	

ADD THE FOLLOWING COMPONENTS FOR HOT CLIMATE KIT

Snare Wire	9525-00-596-3498
Hat, Reversible, Cotton	8415-00-270-0229
Tool Kit, Survival	8465-00-973-4807
Water, Drinking, Flex-Pack	8960-01-319-4703
Sunburn Preventive, Sunscreen Lotion	6505-01-121-2335
Tarpaulin	8340-00-485-3012
TM 55-1680-349-10, Operator's Manual, Survival Kit, Hot Climate	N/A

ADD THE FOLLOWING COMPONENTS FOR COLD CLIMATE KIT

Snare Wire	9525-00-596-3498
Saw-Knife-Shovel Assembly	5110-00-733-7129
Poncho, Wet Weather Nylon, Camo	8405-01-100-0976
Candle, Illuminating	6260-00-840-5578
Sleeping Bag	8465-01-131-7921
TM 55-1680-348-10, Operator's Manual, Survival Kit, Cold Climate	N/A

Figure 1-5. Individual Survival Kit Components (Sheet 1 of 2)

INDIVIDUAL SURVIVAL KITS
(HOT/COLD CLIMATE AND OVER-WATER) (Cont)

ADD THE FOLLOWING COMPONENTS FOR OVER-WATER KIT

NOTE: The over-water outer case must be used for this kit.

ITEM	NSN
Bailer, Boat	2090-00-277-6583
Desalter Kit, Seawater	4610-00-372-0592
Hat, Reversible, Cotton	8415-00-270-0229
Life Raft, Inflatable	4220-01-056-8667
Paddle, Boat	2040-00-485-3018
Repair Kit, Inflatable Raft	4220-00-763-3766
Sea Marker, Flourescein	6850-00-270-9986
Sponge, Cellulose	7920-00-240-2555
Sunburn Preventive, Sunscreen Lotion	6505-01-121-2335
TM 55-1680-350-10, Operator's Manual, Survival Kit, Over-water	N/A

Figure 1-5. Individual Survival Kit Components (Sheet 2 of 2)

CHAPTER 2

MAINTENANCE INSTRUCTIONS

Section I. SERVICE UPON RECEIPT OF MATERIAL

2-1. INITIAL RECEIPT

Each survivor kit or survivor kit, component initially received from A specific supply source will be inspected as prescribed in paragraph 2-4 prior to being placed into service, Usaually when a new survivor kit with all respective components is received from the supply source, on illustrated pocking list will be furnished with the kit. This list will be used to insure that all kit components ore present upon kit receipt. Upon completion of the initial inspection, the survivor kit may be pocked for service using the applicable kit pocking specifics outlined in this chapter and the applicable kit pocking list. Once pocked, the kit stroll be identified with a a condition tog according the procedured in paragraphs 2-3 and 2-4. The kit may then be placed into limited storage or issued for use. Individual survivor kits, after being inspected, will be identified with a material condition tog according to DA PAM 738-751 and, may then be placed in limited storage or issued, as required.

"After initial inventory place a DD Form 1577-2 (Green tag Unserviceable Repairable) on the kit. The kit (and ALL components) ore still considered to be in a STORAGE condition. As soon as a DD Form 1574 (yellow tog Serviceable) is placed on on inspected kit, it (and ALL of the components) then become IN SERVICE and will comply with all serviceability rules. "

2 2. RECEIPT OF PREVIOUS ISSUE ITEM

WARNING

Compasses that are components of survival kits, possessing luminous markings on the dial face, contain radioactive material. Ensure direct contact with the dial face is avoided in the event the face cover is cracked or broken. Under these conditions, handling and disposal procedures shall be implemented as prescribed by TB 55-1500-314-25 and the local Radiolog. deal Protection Officer.

a. **General**. Upon receipt of a survival kit previously issued for use, the kit exterior shall be visually inspected for contamination by petroleum products or saltwater, and indications of tampering which may be reflected by irregular shape of the kit, a noticeable change in kit weight, or partially opened kit closing devices. In addition, the attached DD Form 1574 (Serviceable Tag-Material) shall be checked to ascertain the next periodic inspection due date. If any doubt exists regarding the serviceability of a survival kit, an inspection of the kit and its contents shall be performed. Any survival kit case which shows fabric deterioration, or which is incapable of withstanding bail-out forces, shall be replaced. Unserviceable survival kits or components, except webbing items, will be disposed of in accordance with DOD 4160-21-M and AR 755-2. Webbing components for which no repair procedures exist or which are beyond repair shall be destroyed.

2-2. RECEIPT OF PREVIOUS ISSUE ITEM - Continued

NOTE

Unserviceable containers of canned water shall be punctured and the contents emptied to prevent any possible further use of the canned water.

b. **Service Life.** Survival kits and most survival kit components do not have a prescribed service life, except for the following:

(1) The service life of smoke and illumination signals is indefinite. The period of serviceability of these type signal devices will only be ascertained by an inspection of individual items to determine the condition and potential of each device.

(2) The survival vest distress signals have a service life the same as the smoke and illumination flares.

(3) For service life of carbon dioxide cylinders used with one man life raft assemblies, refer to TM 5-4220-202-14, or T.O. 14S-1-102, as indicated by the date marked on the neck of the cylinder, below the inflation valve assembly.

(4) Batteries used with the various types of survival receiver-transmitters have a service life which is computed from the date of manufacture stamped on each battery. Refer to the appropriate radio set manual for battery shelf/service life.

(5) The service life of the first aid kit medical items will be ascertained by checking each item for an expiration date. The ALSE person performing the inspection should check DOD MEDCAT and AR 702-18.

(6) Food Packets. Shelf life 5 years, service 3 years. Neither shall be exceeded, i. e. , packet has 2 year shelf life left, it can be put into service for only two years. This time is not extendable.

(7) Emergency drinking water has a shelf life of 5 years, which is computed from the date of manufacture stamped on each packet.

With an indeliable marker write "DOI-" for date of installation and due date (MM/YR) if known. If the DOI is not known mark the container date "UNK", i.e., DOI UNK. Under the DOI entry mark the expiration date as "EXP 12/88". This will ensure prompt identification of a time change item and it replacement.

Section II. PREVENTIVE MAINTENANCE CHECKS AND SERVICES (PMCS)

2-3. GENERAL

Each survival kit must be inspected at prescribed intervals to ascertain the serviceability of the kit and kit components. All discrepancies or defects discovered during the applicable inspection, the corrective action taken, the inspection accomplishment, and the next inspection due date, will be recorded as prescribed in DA PAM 738-751.

NOTE

Survival kits which are installed in the OV-1 aircraft ejection seat should be inspected during the same period in which the ejection seat is scheduled for inspection to preclude unnecessary kit removal and installation/action.

2.4. SERVICES

CAUTION

Prior to inspection of an overwater survival kit containing a life raft assembly, ensure the activation device is disconnected from the raft inflation assembly to prevent inadvertent Inflation of the raft.

CAUTION

Do not attempt to remove the SRU-15/P sleeping bag from the vacuum packed container for inspection.

a. **General.** This paragraph contains a tabulated listing (table 2-1) of preventive maintenance checks and services which must be performed by ALSE qualified personnel. The survival kits and related survival components are listed consecutively and the numbers indicate the sequence of minimum inspection requirements. The intervals of inspection required for survival kit types are as follows:

(1) Prior to issue, then every 120 days, prior to and after repairs or modification, then every 120 days.

(2) Prior to issue and every 180 days, in conjunction with the OV-1 seat inspection, for flotation equipment refer to TM 5-4220-202-14 or T.O. 14S-1-102.

b. **Attaching a Serviceable Material Condition Tag (DO Form 1574).** On survival kits which have been determined to be serviceable, a completed DD Form 1574 (Serviceable Tag - Material) will be attached to each kit as follows:

(1) **Individual hot climate, cold climate, and overwater survival kits**. Using one turn single, type I nylon cord, secure the material condition tag to the outer case pocket flap grommet and put in top pocket.

(2) **OV-1 aircraft hot climate, cold climate, and overwater survival kits**. Due to the method of installing survival kits in the OV-1 aircraft ejection seat, the material condition tag shall not be affixed to the exterior of the applicable survival kit case. Instead, the tag will be positioned on the inside of the kit, lying on top of the survival components. Form 1574-1 (Serviceable Label-Material) will be attached to the top of the lid between the hook and pile seat pad attaching strips.

(3) **SRU-21/P survival vest.** Place the material condition tag into the inside pocket of the vest, if no other method is used to keep a permanent record to whom vest is assigned, date of last inspection, date of next inspection, and name of ALSE inspector.

Table 2-1. Preventive Maintenance Checks and Services

KEY: Intervals of Inspection

X - Prior to issue, and every 120 days.

Y - Prior to issue, and every 180 days.

Interval and sequence no.		Item to be inspected	Procedures (inspect for)	Work time (M/H)	Para ref
x	Y	**Section I- Individual Hot Climate Survival Kit** **Man-hours required: 3.3**			**2-12**
1		Kit outer case	Holes, cuts, frays, tears, burns; loose or broken stitching; defective or broken slide fastener; missing or broken pocket tie tape; broken carrying handle; grommet seating; operator's manual in pocket.	0.3	2-12
2		Kit inner case	Holes, cuts, frays, tears, burns; loose or broken stitching; defective slide fastener; defective ejector snaps and adapters; cut or broken stitching on adjuster straps and connecting strap.	0.3	2-12
3		Tarpaulin	Holes, cuts, frays, tears, burns; loose or broken stitching; damaged grommets.	0.1	2-5 2-12
4		MC-1 magnetic compass	Cracked or broken dial face cover; operation; original stowed position; missing operations instructions	0.1	2-2 2-5 2-12
5		Insect headnet	Holes or tears in netting; broken or loose stitching; missing or broken elastic headband; loose or missing grommets; missing or broken drawstring and elastic pocket attaching loops; insect repellent on elastic; missing or illegible instruction ticket.	0.1	2-5 2-12

Table 2-1. Preventive Maintenance Checks and Services Continued

Interval and sequence no. X	Interval and sequence no. Y	Item to be inspected	Procedures (inspect for)	Work time (M/H)	Para ref
6		Plastic spoon	Wrapping missing or torn; previous use; evidence of finger marks, dirt, or grease; cracked or broken.	0.1	2-5 2-12
7		Reversible sun hat	Cuts, frays or tears; broken or loose stitching.	0.1	2-5 2-12
8		First aid kit	Cuts, tears, loose or broken stitching on case; exposure of kit to water; serviceability of inner plastic case; expiration dates of medical items; evidence of anti-chap lipstick leaking; eye pad envelope opened, punc- tured, or torn; plastic bag containing camouflage compress gauze air tight; crushed water purification tab- lets or cracked tablet container; opened containers of muslin band- age or adhesive strips.	0.2	2-5 2-12
8a		Firestarter, Aviation Survival, Sparklite	Serviceability, Container Condition and Illegible Instructions.	0.1	2-5 2-12
9		Survival manual (AFM64-5) or (FM 21-76)	Torn; pages missing; dampness; legibility.	0.1	2-5 2-12
10		Matches (non-safety)	Serviceability and container condition.	0.1	2-5 2-15
11		Fishing gill net	Evidence of package damage or opened	0.1	2-5 2-12
12		Food packet	Severe dent or a dent causing a sharp ridge; rust which cannot be removed by wiping with a soft cloth; packet punc- tured or leaking; can opener missing; illegible printed instructions. The pop-top can will not include a can opener or key.	0.1	2-5 2-12
13		Tool kit	Corrosion or damage to axe cutting edge; cracks or chips in burning lens or sharpening stone; broken or loose stitching on the tool kit carrier.	0.1	2-5 2-12
14		Compressed trioxane fuel	Container not sealed on four sides; instructions on container missing or illegible; crushed fuel bar.	0.1	2-5 2-12

Table 2-1. Preventive Maintenance Checks and Services Continued

Interval and sequence no. X	Interval and sequence no. Y	Item to be inspected	Procedures (inspect for)	Work time (M/H)	Para ref
15		Fishing tackle kit	Broken seal around perimeter of contrainer; corrosion of kit contents; broken or cracked container; missing instruction booklet; evidence of tampering.	0.1	2-5 2-12
16		Plastic water bag	Tears, cuts, holes, cracks, breaks, or abrasions; sharp creases or wrinkles; attaching components loose or missing; foreign material on bag inside which may damage container or injure user.		
17		Emergency drinking water	Can: Corroded or rusty; severe dents; punctures; vacuum retention test (slap test). Packets: punctures or other evidence of damage to packets; expiration date of packet.	0.3	2-5 2-12
18		Frying pan	Dents, cracks, corrosion, sharp edges, burrs, slivers; cleanliness.	0.1	2-5 2-12
19		Sunburn-preventive preparation	Breaks or dents in container; evidence of seepage or leakage; illegible instructions.	0.1	2-5 2-12
20		Smoke and illumination signal	Damage, severe dents, or deformity; broken seals; labeling on day and night ends; embossed projections on night end available.	0.1	2-2 2-5 2-12
21		Pocket knife	Rust or corrosion; missing rivets; loose clevis; burrs or rough projections on handle; blades hard to open; nicks or burrs on blades; cutting edge dull; punch blade dull and point is blunt, spring bars not broken.	0.1	2-5 2-12
22		Snare wire (20-foot-long)	Kinks, twists, cracks, slivers.	0.1	2-5 2-12
23		Signaling mirror	Scratches, chips, cracks, distortion; illegible operating instructions; broken or missing lanyard.	0.1	2-5 2-12
24		Plastic ball whistle	Cork ball, eyelet rivet, or helical split ring missing; body cracked or broken; cracks, chips, or broken edges on mouthpiece; evidence of dirt or foreign material; lanyard torn, cut, or missing.	0.1	2-5 2-12
25		Packing list	Torn or missing; legibility.	0.1	2-5 2-12

Table 2-1. Preventive Maintenance Checks and Services - Continued

Interval and sequence no.	Item to be inspected	Procedures (inspect for)	Work time (M/H)	Para ref
26	Operator's manual	Torn; pages missing; legibility; dampness.	0.1	2-5 2-12 2-13
	Section 11 - Individual Cold Climate Survival Kit Man-hours required: 2.9			
27	Kit outer case	Holes, cuts, frays, tears, burns; loose or broken stitching; defective or broken slide fastener; missing or broken pocket tie tape; broken carrying handle; grommet seating; operator's manual in pocket.	0.3	2-13
28	Kitinnercase	Holes, cuts, frays, tears, burns; loose or broken stitching; defective or broken slide fastener; defective ejector snaps and adapters; cut or broken stitching on adjuster straps and connecting strap.	0.3	2-13
29	Lightweight poncho w/hood	Rips, holes, scuffs, or burns; loose or broken stitching; defective grommets or snap fasteners; missing or broken hood and waist drawcords.	0.1	2-5 2-13
30	Knife-Saw-Shovel assembly	Nicks, dents; broken saw teeth; blade sharpness.	0.1	2-5 2-13
31	Illuminating candle	Wick missing or not extending beyond candle tip; dirt, dust, or other foreign material imbedded in candle body; broken, warped, or fused together with another candle; burned; not white in color.	0.1	2-5 2-13
32	Sleeping bag or Artic Survival (type SRU-15/P) VISUAL INSPECTION:	Evidence of container having been opened; center sealing tape loose by more than 1/4 inch; threaded pin loose; missing wingnut; missing washers; instruction label illegible; cracks in container.	0.1	2-5 2-13
33	First aid kit	Cuts, tears, loose or broken stitching on outer case; exposure of kit to water; serviceability of snap fasteners; expiration dates of medical items; evidence of anti-chap lipstick leaking; eye pad envelope opened,	0.2	2-5 2-13

Table2-1. Preventive Maintenance Checks and Services-Continued

Interval and sequence no. X	Interval and sequence no. Y	Item to be inspected	Procedures (inspect for)	Work time (M/H)	Para ref
			punctured, or torn; plastic bag contain- ing camouflage compress gauze airtight; water purification tablets or tablet container cracked; opened containers of muslin bandage or adhesive strips.		
34		MC-1 magnetic compass	Cracked or broken dial face cover; operation; original stowed position; missing operation instructions.	0.1	2-2 2-5 2-12 2-13
35		Matches (non-safety)	Serviceability and container condition.	0.1	2-5 2-13
36		Plastic water bag	Tears, cuts, holes, cracks, break, or abrasions; sharp creases or wrin- kles; attaching components loose or missing; foreign material on bag inside which may damage container or injure user.	0.1	2-5 2-13
37		Plastic spoon	Wrapping missing or torn; previous use; evidence of finger marks, dirt, or grease; cracked or broken	0.1	2-5 2-13
38		Survival manual (AFM 64-5)or (FM 21-76)	Torn; pages missing; dampness; iegi bility.	0.1	2-5 2-13
39		Food packet	Severe dent or dent causing a sharp ridge; rust which cannot be removed by wiping with a soft cloth; packet punctured or leaking; can opener missing; illegible printed instruc- tions.	0.1	2-5 2-13
40		Smoke and illumination signal	Damage, severe dents, or deformity; broken seals, labeling on day and night ends; embossed projections on night end available.	0.1	2-2 2-5 2-13
41		insect headnet	Holes or tears in netting; broken or loose stitching; missing or broken elastic headband; missing or broken drawstring and elastic pocket attaching loops; insect repellent on elastic; missing or illegible instruc- tion ticket.	0.1	2-5 2-13
42		Compressed trioxane fuel	Container not sealed on four sides; instructions on container missing or illegible; crushed fuel bar.	0.1	2-5 2-13

Table 2-1. Preventive Maintenance Checks and Services--Continued

Interval and sequence no. X	Interval and sequence no. Y	Item to be inspected	Procedures (inspect for)	Work time (M/H)	Para ref
43		Signaling mirror	Scratches, chips, cracks, distortion; illegible operating instructions; broken or missing lanyard.	0.1	2-5 2-13
44		Frying pan	Dents, cracks, corrosion; sharp edges, burrs, slivers, cleanliness.	0.1	2-5 2-13
45		Fishing gill net	Evidence of package damaged or opened.	0.1	2-5 2-15
46		Snare wire (204oot-long)	Kinks, twists, cracks, slivers.	0.1	2-5 2-13
47		Fishing tackle kit	Broken seal around perimeter of container; corrosion of kit contents; broken or cracked container; missing instruction booklet; evidence of tampering.	0.1	2-5 2-13
48		Pocket knife	Rust or corrosion; missing rivets; loose clevis; burrs or rough projections on handle; blades hard to open; nicks or burrs on blades; cutting edge dull; punch blade dull and point is blunt, spring bars not broken.	0.1	2-5 2-13
49		Packing list	Torn or missing; legibility.	0.1	2-5 2-13
50		Operator's manual	Torn; pages missing; legibility; dampness.	0.1	2-5 2-13 2-14
50a		Fire starter, Aviation Survival, Sparklite	Serviceability, Container Condition and illegible instructions.	0.1	2-5 2-13
50b		Distress signals	Damage or Corrosion.	0.1	2-2 2-5
50c		Finger saw assembly	Blade bent, kinked, or broken; blade mounting screws missing; ring bent and will not rotate in blade holder.	0.1	2-5 2-13
50d		Plastic ball whistle	Cork ball, eyelet rivet, or helical split ring missing; body cracked or broon mouthpiece; evidence of dirt or other foreign material; lanyard torn, cut, or missing.	0.1	2-5 2-13
50e		Fire starter, magnesium bar	Breaks or dents in container; illegible instructions.	0.1	2-5 2-13
		Section III-individual Overwater Survival Kit Man-hours required: 4.3			

Table 2-1. Preventive Maintenance Checks and Services--Continued

Interval and sequence no. X	Interval and sequence no. Y	Item to be inspected	Procedures (inspect for)	Work time (M/H)	Para ref
51		Kit outer case	Holes, cuts, frays, tears, burns; loose or broken stitching; defective or bro- ken slide fastener; missing or broken pocket tie tape; broken carrying handle; grommet seating; operators manual in pocket; broken or missing thong; defective or missing duro-dot fastener on thong; missing or dam- aged chape; damaged connector loop on case inside.	0.3	2-14

Table 2-1. Preventive Maintenance Checks and Services - Continued

Interval and sequence no. X	Interval and sequence no. Y	Item to be inspected	Procedures (inspect for)	Work time (M/H)	Para ref
52		Connector web	Broken or loose stitching; cuts, frays, burns.	0.1	2-14
53		Increase	Holes, cuts, frays, tears, burns; loose or broken stitching; detective slide fastener; defective ejector snaps and adapters; cut or broken stitching on adjuster straps and connecting strap.	0.3	2-14
54		Fishing tackle kit	Broken seal around perimeter of container; corrosion of kit contents; broken or cracked container; missing instruction booklet; evidence of tampering.	0.1	2-5 2-14
55		Pocket knife	Rust or corrosion; missing rivets; loose clevis; burrs or rough projections on handle; blades hard to open; nicks or burrs on blades; cutting edge dull; punch blade dull and point is blunt, spring blades not broken.	0.1	2-5 2-14
56		First aid kit	Cuts, tears, loose or broken stitching on outer case; exposure of kit to water; serviceability of snap fasteners; expiration dates of medical items; evidence of anti-chap lipstick leaking; eye pad envelope opened, punctured, or torn; plastic bag containing camouflage compress gauze air tight; water purification tablets or tablet container cracked; opened containers of muslin bandage or adhesive strips.	0.2	2-5 2-14
57		Matches (non-safety)	Serviceability and container condition.	0.1	2-5 2-14
58		Sunburn-preventive preparation	Breaks or dents in container; evidence of seepage or leakage,, illegible instructions.	0.1	2-5 2-14
59		Hat and mosquito net	Holes or tears in netting; broken or loose stitching; missing or broken elastic headband; missing or broken drawstring and elastic pocket attaching loops; insect repellent on elastic; missing or illegible instruction ticket.	0.1	2-5 2-14

Table 2- 1. Preventive Maintenance Checks and ServicesContinued

Interval and sequence no. X	Interval and sequence no. Y	Item to be inspected	Procedures (inspect for)	Work time (M/H)	Para ref
60		Reversible sun hat	Cuts, frays, or tears; broken or loose stitching.	0.1	2-5 2-14
61		Smoke and illumination signal	Damage, severe dents or deformity; broken seals; labeling on day and night ends; embossed projections on night end available.	0.1	2-2 2-5 2-14
62		Seawater desalter kit (MK 2)	Seals missing from container seams; missing rivets; cracks, nicks, or burrs on container; broken or missing lanyard; instructions and markings on container missing or illegible. (Inspect for) IAW TM 55-1680- 321-12/T0 14S1-4-22	0.1	2-5 2-14
63		Food packet	Severe dent or dent causing a sharp ridge; rust which cannot be removed by wiping with a soft cloth; packet punctured or leaking; can opener missing; illegible printed instructions.	0.1	2-5 2-14 2-2
64		Plastic water bag	Tears, cuts, holes, cracks, breaks, and abrasions; sharp creases or wrin kles; attaching components loose or missing; foreign material on bag inside which may damage container or injure user.	0.1	2-5 2-14
65		Plastic spoon	Wrapping missing or torn; previous use; evidence of finger marks, dirt, or grease; cracked or broken.	0.1	2-5 2-14
66		Boat bailer	Cuts, tears, holes: missing or broken lanyard.	0.1	2-5 2-14
67		Boat paddle	Cracks, dents, rough edges; damage to reflecturized sides; broken or missing handle strap.	0.1	2-5 2-14
68		Sponge	Foreign material imbedded in sponge structure; tears, cuts; material deterioration; pliable.	0.1	2-5 2-14
69		Survival manual (AFM 64-5) or (FM21-76)	Torn; pages missing; dampness; legibility.	0.1	2-5 2-14
70		Compressed trioxane fuel	Container not sealed on four sides; instructions on container missing or Illegible; crushed fuel bar.	0.1	2-5 2-14

Table 2-1. Preventive Maintenance Checks and Services - Continued

Interval and sequence no. X	Interval and sequence no. Y	Item to be inspected	Procedures (inspect for)	Work time (M/H)	Para ref
71		Frying pan	Dents, cracks, corrosion, sharp edges, burrs, silvers; cleanliness.	0.1	2-5 2-14
72		Signaling mirror	Scratches, chips, cracks, distortion; illegible operating instructions; broken or missing lanyard.	0.1	2-5 2-14
73		Inflatable craft repair kit	Stripped threads on plug bottom plate center screw; missing plates; mlssing wing nut; missing or illegible instructions.	0.1	2-5 2-14
74		MC-1 magnetic compass	Original stowed position; cracked or broken dial face cover; missing operating instructions; operation.	0.1	2-2 2-5 2-12
75		Fishing gill net	Evidence of package damaged or opened.	0.1	2-5 2-15
		Fluorescein sea marker	Holes, cuts, or tears in packet; pack opening tape not sealed completely; broken or missing retainer tape;	0.1	2-5 2-14
76			Instruction markings missing or illegible.		
77		Life raft	PROCEDURES I.A.W. TM 5-4220-202-14/T.O 14S-1-102. or NAVAIR 13-1-6.1	0.6	2-5 2-14
77a		Firestarter, Aviation Survival, Sparklite	Serviceability, Container Condition and Illegible Instructions.	0.1	2-5 2-14
78		Packing list	Torn or missing; legibility.	0.1	2-5
79		Operator's manual Section IV - OV-1 Aircraft Hot Climate Survival Kit Man-hour required: 2.7	Torn; pages missing, legibility; dampness.	0.1	2-5 2-14 2-18

Table 2- 1. Preventive Maintenance Checks and ServicesContinued

Interval and sequence no. X	Interval and sequence no. Y	Item to be inspected	Procedures (inspect for)	Work time (M/H)	Para ref
			NOTE **180-day inspection to coincide with OV-1 ejection seat inspection. This is only for OV-1 aircraft.**		
	80	Case (Inside Seat)	Holes, cuts, frays, tears; loose or broken stitching; defective or broken slide fastener; cut, frayed, or broken carrying strap; missing or illegible kit marking; dampness or mildew; defective snap fasteners.	0.3	2-18
	81	MC-1 magnetic compass	Cracked or broken dial face cover; operation; original stowed position; missing operating instructions.	0.1	2-2 2-5 2-12
	82	Insect headnet	Holes or tears in netting; broken or loose stitching; missing or broken elastic headband; loose or missing grommets; missing or broken drawstring and elastic pocket attaching loops; insect repellent on elastic; missing or illegible instruction ticket.	0.1	2-5 2-18
	83	Plastic spoon	Wrapping missing or torn; previous use; evidenced of finger marks, dirt or grease; cracked or broken.	0.1	2-5 2-18
	84	Survival manual (AFM 64-5) or (FM 21-76)	Torn; pages missing; dampness; legibility.	0.1	2-5 2-18
	85	Matches (non-safety)	Serviceability and container condition.	0.1	2-5 2-15
	86	Food packet	Severe dent or a dent causing a sharp ridge; rust which cannot be removed by wiping with a soft cloth; packet punctured or leaking; can opener missing; illegible printed instructions. The pop-top can will not include a can opener or key.	0.1	2-5 2-18
	87	Compressed Trioxane fuel	Container not sealed on four sides; instructions on container missing or illegible; crushed fuel bar.	0.1	2-5 2-15
	88	Fishing tackle kit	Broken seal around perimeter of container; corrosion of kit contents; broken or cracked container; missing instruction booklet; evidence of tampering.	0.1	2-5 2-13

Table 2-1. Preventive Maintenance Checks and ServicesContinued

Interval and sequence no. X	Interval and sequence no. Y	Item to be inspected	Procedures (inspect for)	Work time (M/H)	Para ref
	89	Plastic water bag	Tears, cuts, holes, cracks, breaks, or abrasions; sharp crease or wrinkle; attaching components loose or missing; foreign material on bag inside which may damage container or injure user.	0.1	2-5 2-18
	90	Emergency drinking water	Can: corroded or rusty; severe dents; punctures; vacuum retention test (slap test). Packets: punctures or other evidence of damage to packets; expiration date of packet.	0.3	2-5 2-12 2-18
	91	Frying pan	Dents, cracks, corrosion; sharp edges, burrs, or slivers; cleanliness.	0.1	2-5 2-18
	92	Sunburn-preventive preparation	Breaks or dents in container; evidence of seepage or leakage; illegible instructions.	0.1	2-5 2-18
	93	Smoke and illumination signal	Damage, severe dent, or deformity; broken seals; labeling on day and night ends; embossed projections on night end available.	0.1	2-2 2-5 2-18
	94	Pocket knife	Rust or corrosion; missing fivets; loose clevis; burrs or rough protrusions on handle; blades hard to open; nicks or burrs on blades; cutting edge dull; punch blade dull and point is blunt; the spring blades not broken.	0.1	2-5 2-18
	95	Signaling mirror	Scratches, chips, cracks, distortion; illegible operating instructions; broken or missing lanyard.	0.1	2-5 2-18
	96	Fishing gill net	Evidence of package damaged or opened.	0.1	2-5 2-15
	97	Snare wire (20-foot-long)	Kinks, twists, cracks, slivers.	0.1	2-5 2-18
	98	Plastic ball whistle	Cork ball, eyelet rivet, or helical split ring missing; body cracked or broken; cracks, chips, or broken edges on mouthpiece; evidence of dirt or other foreign material; lanyard torn, cut, or missing.	0.1	2-5 2-18

Table 2-1. Preventive Maintenance Checks and Services - Continued

Interval and sequence no. X	Interval and sequence no. Y	Item to be inspected	Procedures (inspect for)	Work time (M/H)	Para ref
	99	Tarpaulin	Holes, cuts, frays, tears, burns; loose or broken stitching; damaged grommets.	0.1	2-5 2-18
	100	Finger saw assembly	Blade bent, kinked, or broken; blade mounting screws missing; ring bent and will not rotate in blade holder.	0.1	2-5 2-18
	401	Packing list	Torn or missing; legibility.	0.1	2-5 2-18
	102	Operator's manual	Torn; pages missing; legibility; dampness.	0.1	2-5
		Section V- OV-1 **Aircraft Cold Climate Survival Kit** **Man-hours required: 2.6**			**2-18**
			NOTE **180-day inspection cycle to coincide with ejectlon seat cycle. This applies only to OV-1 aircraft.**		**2-18**
	103	Case (Inside Seat)	Holes, cuts, frays, tears; loose or broken stitching; defective or broken slide fastener; cut, frayed, or broken carrying strap; missing or illegible kit marking; dampness or mildew.	0.3	2-18
	104	Fishing gill net	Evidence of package damaged or opened.	0.1	2-5 2-15
	105	Plastic water bag	Tears, cuts, holes, cracks, breaks, or abrasions; sharp creases or wrinkles; attaching components loose or missing; foreign material on bag inside which may damage container or injure user.	0.1	2-5 2-18
	106	MC-1 magnetic compass	Cracked or broken dial face cover; operation; original stowed position; missing operations instructions.	0.1	2-2 2-5 2-12 2-18

Table 2-1. Preventive Maintenance Checks and Services - Continued

Interval and sequence no. X	Interval and sequence no. Y	Item to be inspected	Procedures (inspect for)	Work time (M/H)	Para ref
	107	Illuminating candle	Wick missing or not extending beyond candle tip; dirt, dust, or other foreign material imbedded in candle body; broken, warped, or fused together with another candle; burned; not white in color.	0.1	2-5 2-18
	108	Fishing tackle kit	Broken seal around perimeter of container; corrosion of kit contents; broken or cracked container; missing instruction booklet; evidence of tampering.	0.1	2-5 2-18
	109	Food packet	Severe dent or dent causing a sharp ridge; rust which cannot be removed by wiping with a soft cloth; packet punctured or leaking; can opener missing; illegible printed instructions. The pop-top can will not include a can opener or key.	0.1	2-5 2-14 2-2
	110	Compressed trioxane fuel	Container not sealed on four sides; instructions on container missing or illegible; crushed fuel bar.	0.1	2-5 2-18
	111	Insect headnet	Holes or tears in netting; broken or loose stitching; missing or broken elastic headband; missing or broken drawstring and elastic pocket attaching loops; insect repellent on elastic; missing or illegible instruction ticket.	0.1	2-5 2-18
	112	Signaling mirror	Scratches, chips, cracks, distortion; illegible operating instructions; broken or missing lanyard.	0.1	2-5 2-18
	113	Pocket knife	Rust or corrosion; missing rivets; loose clevis; burrs or rough projections on handle; blades hard to open; nicks or burrs on blades; cutting edge dull; punch blade dull or point is blunt; spring blade broken.	0.1	2-5 2-18 2-5
	114	Matches (non-safety)	Serviceability and container condition.	0.1	2-18 2-5
	115	Frying pan	Dents, cracks, corrosion; sharp edges, burrs, or slivers; cleanliness.	0.1	2-18
	116	Finger saw assembly	Blade bent, kinked, or broken; blade mounting screws missing; ring bent and will not rotate in blade holder.	0.1	2-2 2-5 2-18
	117	Smoke and illumination signal	Damage, severe dent or deformity; broken seals; labeling on day and night ends; embossed projections on night end available.	0.1	

Table 2-1. Preventive Maintenance Checks and ServicesContinued

Interval and sequence no. X	Interval and sequence no. Y	Item to be inspected	Procedures (inspect for)	Work time (M/H)	Para ref
	118	Sleeping bag	Evidence of container having been opened; center sealing tape loose by more than 1/4 inch; threaded pin loose; missing wing-nut; missing washers; instruction label illegible; cracks in container.	0.1	2-5 2-18
	119	Plastic spoon	Wrapping missing or torn; previous use; evidence of fingermarks, dirt, or grease; cracked or broken.	0.1	2-5 2-18
	120	Sunburn-preventive preparation	Breaks or dents in container; evidence of seepage or leakage; illegible instructions.	0.1	2-5 2-18
	121	Plastic ball whistle	Cork ball, eyelet rivet, or helical split ring missing; body cracked or broken; cracks, chips, or broken edges on mouthpiece; evidence of dirt or foreign material; lanyard torn, cut, or missing.	0.1	2-5 2-18
	122	Snare wire (20-foot-long	Twists, kinks, cracks, slivers.	0.1	2-5 2-18
	123	Survival manual (TM 10-1670-1)	Torn; pages missing; dampness; legibility.	0.1	2-5 2-18
	124	Survival manual (AFM 64-5) or (FM 21-76)	Torn; pages missing; dampness; legibility.	0.1	2-5 2-18
	125	Operator's manual	Torn; pages missing; dampness; legibility.	0.1	2-5 2-16
	126	Packing list	Torn or missing; legibility.	0.1	2-5 2-16
		Section VI-OV-1 Aircraft Overwater Survival Kit Man-hours required: 3.1			**2-18**
			NOTE **180day inspection cycle to coincide with ejection seat cycle. This applies only to OV-1 aircraft.**		
	127	Case (inside Seat)	Holes, cuts, frays, tears; dirt or foreign material on case; loose or broken stitching; defective or broken slide.	0.3	2-18

Table 2-1. Preventive Maintenance Checks and Services-Continued

Interval and sequence no. X	Interval and sequence no. Y	Item to be inspected	Procedures (inspect for)	Work time (M/H)	Para ref
			fastener; cut, frayed, or broken carrying straps or case handle; miss ing or illegible kit marking; dampness or mildew; defective snap fasteners; damaged case securing line; damaged case grornmet; torn, cut, or missing slot reinforcement; defective carrying strap slide; damaged loop on case exterior.		
	128	Life raft and components	I.A.W. TM5-4220-202-14 or T.O. 14S-1-102.		
	129	Fishing Kit	Broken seal around perimeter of container; corrosion of kit contents: broken or cracked container; missing instruction booklet; evidence of tampering.	0.1	2-5 2-18
	130	Pocket knife	Rust or corrosion; missing rivets; loose clevis; burrs or rough protrusions on handle: blades hard to open; nicks or burrs on blades; cutting edge dull; punch blade dull and point is blunt, spring bars broken.	0.1	2-5 2-18
	131	Sunburn-prevenlive preparation	Breaks or dents in container, evidence of seepage or leakage: illegible instructions.	0.1	2-5 2-18
	132	Reversible sun hat	Cuts, frays, or tears: broken or loose stitching.	0.1	2-5 2-18
	133	Smoke and illumination signal	Damage, severe dent or deformity, broken seals, labeling on day and night ends, embossed projections on night end available.	0.1	2-2 2-5 2-18
	134	Seawater desalter kit	Seals missing from container seams; missing rivets; cracks, nicks, or burrs on container; broken or missing lanyard; instructions and markings on container missing or illegible. (Inspect for) IAW TM55-1680- 321-1 21T01 4S1 -4-22	0.1	2-5 2-18

Table 2-1. Preventive Maintenance Checks and ServicesContinued

Interval and sequence no. X	Interval and sequence no. Y	Item to be inspected	Procedures (inspect for)	Work time (M/H)	Para ref
	135	Food packet	Severe dent or dent causing a sharp ridge; rust which cannot be removed with a soft cloth; packet punctured or leaking; can openers missing; illegible printed instructions.	0.1	2-5 2-18
	136	Plastic water bag	Tears, cuts, holes, cracks, breaks, and abrasions; sharp creases or wrinkles; attaching components loose or missing; foreign material on bag inside which may damage container or injure user.	0.1	2-5 2-18
	137	Sponge	Foreign material imbedded in sponge structure; tears, cuts, material deterioration; pliable.	0.1	2-5 2-18
	138	Signaling mirror	Scratches, chips, cracks, distortion; illegible operating instructions; broken or missing lanyard.	0.1	2-5 2-18
	139	MC-1 magnetic compass	Original stowed position; cracked or dial face cover; missing oper- instructions; operation.	0.1	2-5 2-18
	140	Fluorescein sea marker	Holes, cuts, or tears in packet; pack tab not sealed completely; broken or missing retainer tape; instruction markings missing or	0.1	2-5 2-18
	141	Deleted			
	142	Packing list	Torn or missing; legibility.	0.1	2-5 2-18
	143	Operator's manual and Survival manual (AFM64-5) or (FM 21-76)	Torn; pages missing; legibility; dampness.	0.1	2-5 2-18
		Section VII-SRU-21/P Survival Vest Man-hours required: 1.9			**2-15**
144		Vest	Holes, cuts, tears, burns; broken or loose stitching; defective slide and snap fasteners; torn or missing fastener tape; loops missing from loop	0.3	2-5 2-15

Table 2.1. Preventive Maintenance Checks and Services - Continued

Interval and sequence no. X	Y	Item to be inspected	Procedures (inspect for)	Work time (M/H)	Para ref
			adjustment webbing; loop tape cord broken or missing; edge and seam bindings torn or cut; broken or missing thong on slide fastener.		
145		SDU-5E distress marker light and flash guard	I.A.W. TM 55-1680-322-12, T.O. 14S-10-2-2.	0.1	2-5 2-15
146		Lensatic compass	Cracked or broken dial face cover; operation.	0.1	2-5 2-15
147		Deleted			
148		Pocket knife	Rust or corrosion; missing rivets; loose clevis; burrs or rough projections on handle; blades hard to open; nicks or burrs on blades; cutting edge dull; punch blade dull and point is blunt, spring blades not broken.	0.1	2-5 2-15
149		Plastic water bag	Tears, cuts, holes, cracks, breaks, or abrasions; sharp creases or wrinkles; attaching components loose or missing; foreign material on bag inside which may damage container or Injure user.	0.1	2-5 2-15
150		Signaling mirror	Scratches, chips, cracks, distortion; illegible operating instructions; broken or missing lanyard.	0.1	2-5 2-15
151		Fire starter, magnesium bar	Check plastic container for holes, or container broken Into, replace if either condition exists.	0.1	2-5 2-15
152		Launcher, personnel distress kit	Damage; rust, dirt, corrosion, or other foreign material; operation of trigger screw; damaged or missing retaining cord.	0.1	2-5 2-15
153		Distress signals	Damage or Corrosion.	0.1	2-2 2-5
154		Survival kit	Case damaged; kit inspection date; expiration medical items; eye ointment leaking; broken case or face on compass.	0.2	2-5 2-15
155		Tourniquet	Cuts, abrasions, or deterioration.	0.1	2-5 2-15
156		Holster	Loose or broken stitching; defective snap fastener on retainer; dirt or other foreign material.	0.1	2-5 2-15

Table 2-1. Preventive Maintenance Checks and Services-Continued

Interval and sequence no. X	Interval and sequence no. Y	Item to be inspected	Procedures (inspect for)	Work time (M/H)	Para ref
157		Packing list	Torn or missing; legibility.	0.1	2-5 2-15
158		Operator's manual dampness.	Torn; pages missing; legibility;	0.1	2-5 2-15
158a		Firestarter, Aviation Survival, Sparklite	Serviceability, Container Condition and Illegible Instructions.	0.1	2-5 2-15
158b		Plastic bail whistle	Cork ball, eyelet rivet, or helical split ring missing; body cracked or broken; cracks, chips, or broken edges on mouthpiece; evidence of dirt or other foreign material; lanyard torn, cut, or missing.	0.1	2-5 2-15
158c		Knife, sheathed	Rust or corrosion; burrs or rough protrusions on handle; nicks or burrs on blades; cutting edge dull; sharpening stone missing.	0.1	2-5 2-15
		Section VIII-OV-1 Air craft Rigid Survival Seat Man-hours required: 1.7	**NOTE** **180-day inspection cycle to coincide with ejection seat inspection cycle. For inspection of individual components of the RSSK (hot, cold, and overwater), refer to items 83 through 151. Additional components of the RSSK which are not listed in items 83 through 151 are listed as follows:** **RSSK Hot Climate Compo- nents, RSSK Cold Climate Components, and RSSK Over- water Components. RSSK kits have a 180-day inspection cycle to coincide with ejection seat inspections.**		**2-18**
	159	Cushion assembly	Check cover assembly for fabric damage and loose, frayed, or broken stitching; secure attachment of slide fasteners and trouble-free operation; secureness of snap fastener; proper attachment of tape hook fastener; firmness and shape of cushion filler.	0.2	2-5 2-18
	160	Personnel lowering line	Check line for fabric damage and loose, frayed, or broken stitching; secure attachment of fasteners.	0.1	2-5 2-18

Table 2-1. Preventive Maintenance Checks and Service-Continued

Interval and sequence no. X	Y	Item to be inspected	Procedures (inspect for)	Work time (M/H)	Para ref
	161	Equipment container bag	Check bag assembly for fabric damage and loose, frayed, or broken stitching; secure attachment of slide fasteners and trouble-free operation; secureness of snap fasteners; good condition of thong.	0.1	2-5 2-18
	162	Deleted			
	163	Laced dropline assembly strands.	Check dropline for frayed or broken	0.1	2-5 2-18
			RSSK Cold Climate Components:		
	164	Survival use of parachute	Pages torn; missing, dampness; legibility. manual	0.1	2-18
			RSSK Overwater Components:		
	165	Delete			
	166	Container, lower	Cracked or damaged fiberglass; secureness of rivets and screws on attaching parts (missing rivets is cause for replacement).	0.1	2-5 2-18
	167	Tiedown straps	Damage or distortion to buckles, clip, and dee ring; wear or damage to webbing; loose, frayed, or broken stitching.	0.1	2-5 2-18
	168	Inner lowering line for bottom container	Check line for fabric damage and loose, frayed, or broken stitching; secure attachment of fasteners.	0.1	2-5 2-18
	169	Inspection hole cover for lid locks	Legibility and secureness of hole cover.	0.1	2-5 2-18
	170	Lugs	Damage, corrosion; proper operation.	0.1	2-5 2-18
	171	Hinges	Proper alignment and seal of kit.	0.1	2-5 2-18
	172	Container, upper	Cracked or damaged fiberglass; secureness of rivets and screws on attaching parts; missing rivets is cause for replacement.	0.1	2-5 2-18
	173	Fastener hook tape	Proper attachment of hook tape to lid of RSSK.	0.1	2-5 2-18
	174	Harness assembly	Damage or distortion to buckles, clip, and dee ring; wear or damage to webbing; loose, frayed, or broken stitching.	0.1	2-5 2-18

Table 2-1. Preventive Maintenance Checks and Services - Continued

Interval and sequence no. X	Interval and sequence no. Y	Item to be inspected	Procedures (inspect for)	Work time (M/H)	Para ref
	175	Lid locks	Proper adjustment and alignment; corrosion.	0.1	2-5 2-18
	176	Cable and conduit	Proper alignment and operation; distortion; corrosion.	0.1	2-5 2-18
	177	Canopy releases	Proper operation; damage, corrosion.	0.1	2-5 2-18
	178	Handle assembly	Proper adjustment; distortion; corrosion.	0.1	2-5 2-18
	179	Grip release assembly	Check for normal squeeze and pull of grip release handle and opening of kit. If kit does not open with a normal squeeze and pull on the handle, check cable adjustments and lid locks. Release handles should operate under a pull force of 20 lb., F,.5 lb. This force can be checked with a spring scale. Kit can be operated with either handle.	0.1	2-5 2-18
		Section IX - OV-1 Aircraft Survival Vest Man-hours required: 1.6			
180		Vest	Holes, cuts, tears, burns; broken or loose stitching; defective slide and snap fasteners; torn or missing fastener tape; loops missing torn loop adjustment webbing; loop tape cord broken or missing; edge and seam bindings torn or cut; broken or missing thong on slide fastener.	0.3	2-5 2-16 2-15
181		SDU-SE distress marker light and flash guard	I.A.W. TM 55-1680-322-12, T.O. 14S-10-2-2.	0.1	2-5 2-15
182		Signaling mirror	Scratches, chips, cracks, distortion; illegible operating instructions; broken or missing lanyard.	0.1	2-5 2-15
183		Distress signals	Damage; corrosion; service life	0.1	2-2 2-5 2-15
184		Survival Kit	Case damaged; Kit issue or inspection date; Individual medical item container seal broken; Eye ointment leaking; Broken case or face on compass. (See figure 2-28, SRU-31 P, Packets 1 and 2.)	0.2	2 -5 2-15

Table 2-1. Preventive Maintenance Checks and ServicesContinued

Interval and sequence no. X	Interval and sequence no. Y	Item to be inspected	Procedures (inspect for)	Work time (M/H)	Para ref
185		Pocket knife, hook blade	Check operation of switchblade, safety catch and opening button. Blade must open fully and lock when button is pushed (safety off). Blade must not open when safety is on (slide pushed forward).	0.1	2-5 2-15
186		Sheath	Loose or broken stitching; dirt or other foreign material.	0.1	2-5 2-15
187		Knife, sheathed	Rust or corrosion; burrs or rough protrusions on handle; nicks or burrs on blades; cutting edge dull; sharp-ening stone missing.	0.1	2-5 2-15
188		Plastic ball whistle	Cork ball, eyelet rivet, or helical split ring missing; body cracked or bro-ken; cracks, chips, or broken edges on mouthpiece; evidence of dirt or other foreign material; lanyard torn, cut, or missing.	0.1	2-5 2-15
189		Packing list	Torn or missing; legibility.	0.1	2-5 2-15
190		Medical packet	Inspect inner and outer case for tears, all medical items for expiration dates.	0.1	2-5 2-15
191		Life preserver	Corrosion, damage to exposed metal parts; cuts, tears, abrasions, security of stitching, or other damage to con-tainer; safety tie on release pins; stains, dirt, and general cleanliness; test and repack every 120 days, IAW TM 54220-202-14 or T.O. 14Si-102.	0.2	2-5 2-16
192		Firestarter, Aviation Survival, Sparklite	Serviceability, Container Condition and Illegible Instructions.	0.1	2-5 2-16
193		Fire Starter, Magnesium Bar	Breaks or dents in container; illegible instructions.	0.1	2-5 2-16

Table 2-1. Preventive Maintenance Checks and Services - Continued

Interval and sequence no.		Item to be inspected	Procedures (inspect for)	Work time (M/H)	Para ref.
X	Y				
		Section X - Aircrew Survival Armor Recovery Vest, Insert and Packets (SARVIP) Man-hours required: 1.6			
194		Vest	Holes, cuts, tears, burns, broken or loose stitching; defective slide and snap fasteners; torn or missing fastener tape; missing thong, damaged harness webbing; damaged waist adjustment strap.	0.3	2-5 2-19
195		Basic and medical packets	Sealed plastic cover. Tears, cuts, worn or abrasive spots, separation of sealed edges, leaking, deteriorated or damaged items, condensation on inside of plastic. Outer cloth bag for tears, loose or broken stitching, defective slide fastener, dirt or other foreign material. Items which have reached an expired potency data.	0.1	2-6 2-7 2-19
196		Ballistic inserts and carrier	Ballistic inserts for dirt or other foreign material, tears, breaks, abrasions, sharp creases or wrinkles, hard or deteriorated spots. Carrier for dirt or foreign material, tears, loose or broken stitching, defective back straps or reversible quick fit adapter.	0.1	

Table 2-1. Preventive Maintenance Checks and Services - Continued

Interval and sequence no. X	Interval and sequence no. Y	Item to be inspected	Procedures (inspect for)	Work time (M/H)	Para ref.
197		Distress marker light and flash guard	IAW TM 55-1680-322-12, TO. 145-10-2-2	0.1	
198		Signaling mirror	Scratches, chips, cracks, distortion; illegible operating instructions; broken or missing lanyard.	0.1	2-2 2-19
199		Distress signal kit	Damage, corrosion, service life.	0.1	2-2 2-5
200		Lensatic compass	Original stowed position, cracked or broken dial face cover, missing operating instructions, broken or missing lanyard, operation.	0.1	2-5 2-19
201		Smoke and illumination signal (MK13)	Damage, severe dents or deformity; broken seals, labeling on day and night ends; embossed projections on night end.	0.1	2-2 2-5 2-19
202		Radio transmitter	Structural damage; perforated seals; presence of salt, sand or oil accumulations; condition of earphone and case; leaking or corroded battery; operation. IAW the appropriate Radio Manual.	0.2	2-19
203		LPU/10 life preserver	IAW TM 5-4220-202-14/ T.O. 14S-1-102	0.2	2-5
204		Operation's manual	Torn/missing pages, legibility, dampness.	0.1	

Section III. GENERAL REPAIR INSTRUCTIONS

2.5. REPAIR LIMITATIONS

Survival equipment not in the medical, avionics, or ordnance categories that has sustained damage or developed deficits similar to those listed in table 2-1 will be repaired only to the extent which this publication prescribes. Damaged or defective survival kits or kit components which exceed the capability for being returned to a serviceable condition, or for which there are no specific repair procedures in this manual, will be considered unserviceable are replaced with a serviceable item from stock according to individual survival kit authorization outlined in the repair parts listed in Appendix C. Unserviceable survival equipment will be disposed of as stipulated in paragraph 2-2a.

2.6. CLEANING

a. **Webbing and Cloth Items**. Remove all dirt, dust, or mud from webbing and cloth duck items by dry brushing with a soft-bristle brush. Grease or oil will be removed by spot cleaning with aromatic naphtha and by rubbing with a soft-bristle brush or a clean cloth. Soiled survival kit containers will be cleaned by scrubbing with a hand brush using a laundry soap and hot water solution which hos been allowed to cool down to worm prior to application. When the scrubbing has been completed, rinse the scrubbed area with clear, lukewarm water. Wet webbing and cloth duck shall be thoroughly dried before further used or storage. Drying shall be accomplished by suspending or elevating wet webbing or cloth duck items in a well-ventilated room or in a heated drying room. Drying time may be reduced by the use of fans. When heat is used, it should never exceed 200° F and must not be applied for more than three consecutive hours.

b. **Metal Items**. Remove ail grease, oil, rust, corrosion, or other foreign matter from metal items by wiping with a cloth, by buffing with a fine emery cloth, or by use of compressed air from an air- hose. Remove all burrs or sharp edges by filing with a metal file or by buffing with a crocus cloth.

2.7. SEWING REPAIRS

a. **General**. All sewing repairs shall be performed using the procedures specified in this chapter for the applicable textile components. Table 2-2 specifies the sewing machines prescribed for per- forming sewing repairs of survival kit components and provides a code symbol which is further used in table 2-3. Table 2-3 specifies the type sewing machine required for repair of a particular item, the stitch range to be used when sewing, and the type thread which is to be used. All original stitching that has been cut in order to perform a repair shall be removed prior to performing any sewing. Upon completion of sewing, trim excess thread ends as close as possible to the material being sewed.

b. **Stitching and Restitching**. Stitching and restitching of survival kit components should be done with thread that matches the color of the original stitching, when possible. All straight stitching should be locked by backstitching each end by at least 1/2 inch. Restitching should be locked by overstitching each end 1/2 inch. Restitching should be made directly over the original stitching, following the original stitch pattern as closely as possible.

2.7. SEWING REPAIRS - Continued

c. Darning. Holes or tears in survival kit textile components that do not exceed one inch in length may be darned as follows:

(1) Mark a square or circle around the area to be darned. Ensure the marking clears all edges of the damaged area by 1/4 inch.

(2) Using the applicable sewing machine, move the material back and forth under the machine needle in a manner which will allow the stitches to run with the warp or filling of the fabric until darning of the hole or tear is completed.

d. Patching. A hole or tear in a textile component of a survival kit that exceeds one inch in length or one inch in diameter shall be patched. However, the affected area must not extend into a seam and must be located at a point which will allow the finished patch to be square or rectangular in shape. The patch shall be applied on the outside of the applicable item only. Apply a patch as follows:

(1) Place the reparable item on a repair table, smooth the fabric around the damaged area, and secure the item to the table with pushpins. Do not pin the damaged area.

(2) Mark a square or rectangle around the area to be patched and ensure that one side of the marked square or rectangle is parallel to the warp or filling of the fabric.

(3) Cut the damaged area fabric along the lines made in (2) above. Further cut the fabric diagonally at each corner to allow a 1/2-inch foldback in the raw edges.

(4) Make a 1/2-inch foldback on each raw edge, pin, and baste to complete the prepared hole.

(5) Mark and cut a patch 2-1/2-inches wider and longer than the inside measurements of the prepared hole. Ensure that one side of the patch material is marked and cut along the warp or filling of the fabric.

(6) Center the cut patch material on the prepared hole and ensure the warp or filling of the patch material matches the warp or filling of the fabric being patched. Pin the patch material in position.

(7) Make a 1/2-inch fold under on each edge of the patch material and baste the patch material to the prepared area.

(8) Remove the pushpins securing the reparable item to the repair table and secure the patch by stitching, using the applicable details in figure 2-1. Make the first row of stitching completely around the patch. Turn the item over and make a second row of stitching around the prepared hole.

2.7. SEWING REPAIRS - Continued

e. Slide Fastener Interlocking Repair.

(1) Repair a slide fastener interlocking defective slider by removing the top end stops of the slide fastener with diagonal cutters. Remove the defective slider; replace with a like item from stock or a salvaged slide fastener. Replace the end stops.

(2) Missing end stops will be replaced with a serviceable like item from stock or salvage.

(3) Missing teeth in the slide fastener chain cannot be repaired. The complete slide fastener shall be replaced.

f. Alterations.

A slide fastener interlocking that is too long, but suitable for a particular application may be shortened as follows:

(1) Mark the slide fastener tape at the correct finished length.

(2) Using a diagonal cutter cut across the chain one inch longer than the finished length marked, complete the tape cutting with shears.

(3) Remove end stops and retain, discard scrap bits of slide fastener.

(4) Holding the diagonal cutter at a 90 degree angle to the slide fastener chain. Cut the teeth from the chain even with the slide fastener tape. Remove (1) inch of the teeth on each side of the tape, one at a time.

(5) Replace the end stops.

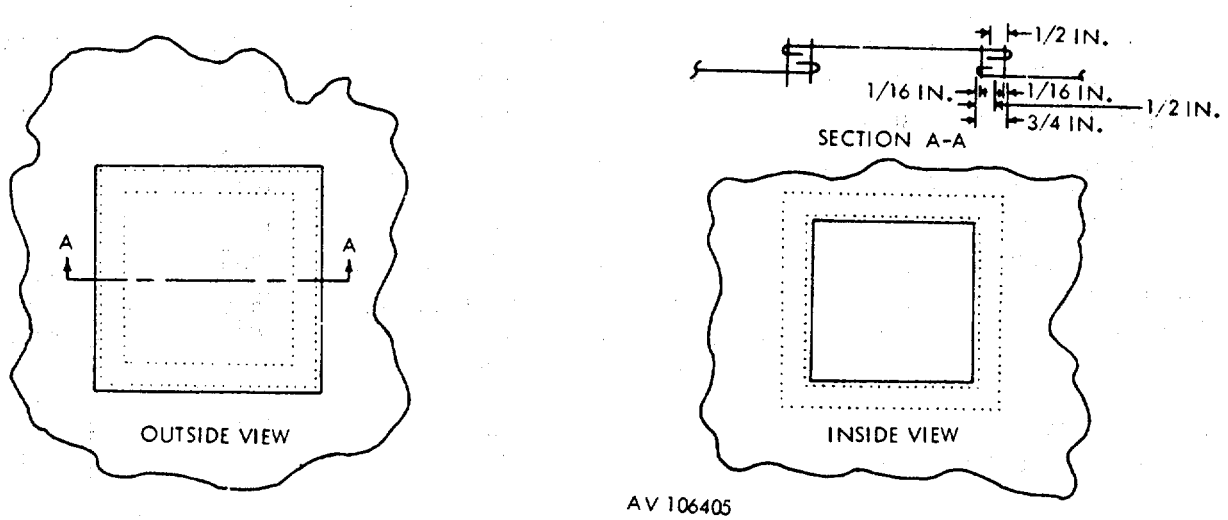

Figure 2-1. General patching details.

2-7. SEWING REPAIRS- Continued

Table 2-2. Sewing Machine Code Symbols

Code symbol	Sewing Machine
LD	SEWING MACHINE, INDUSTRIAL (Light Duty): General sewing; power driven; lock stitch; single needle; flat bed; with rigid table stand; 10- to 13-inches depth of throat; 31-15 or any equivalent model
MD	SEWING MACHINE, INDUSTRIAL (Medium Duty): General sewing; power driven; lock stitch; single needle; flat bed; with rigid table stand; 111W155 or any equivalent model.
DN	SEWING MACHINE, INDUSTRIAL (Light to Medium Darning): Darning; power driven; lock stitch; single needle; 6-7/8-inches depth of throat; cylinder bed; with rigid table stand; 47W70 or any equivalent model.
BT	SEWING MACHINE, INDUSTRIAL(Light Duty): Bar tacking; with rigid table stand; 69-8 or any equivalent model.

Table 2-3. Stitching Specifications.

Component	Recommended sewing machine (code symbol)	Stitches per Inch	Thread size
Individual Hot Climate Survival Kit			
Outer Case	MD	7-9	FF
	DN	Darn	FF
Grommet reinforcement	MD	7-9	FF
	DN	Darn	FF
Pocket tie tape	MD	7-9	FF
Carrying handle	MD	7-9	FF
Slide interlocking fastener	MD	7-9	FF
Inner Case	MD	8-11	E
Slide interlocking fastener	MD	8-11	E
Attaching strap	MD	8-11	E
Connecting strap	MD	8-11	E
Connecting strap reinforcement	MD	8-11	E
Tarpaulin	LD	7-11	E
First Aid Kit Case	MD	8-11	E
	DN	Darn	E
Tool Kit Carrier	MD	7-11	FF
Canned Drinking Water Test Pad	LD	7-11	FF

2-7. SEWING REPAIRS - Continued

Table 2-3. Stitching Specifications - Continued

Component	Recommended sewing machine (code symbol)	Stitches per Inch	Thread size
Individual Cold Climate Survival Kit			
Outer Case	MD	7-9	FF
	DN	Darn	FF
Grommet reinforcement	MD	7-9	FF
	DN	Darn	FF
Pocket tie tape	MD	7-9	FF
Carrying handle	MD	7-9	FF
Slide interlocking fastener	MD	7-9	FF
Inner Case	MD	8-11	E
Slide interlocking fastener	MD	8-11	E
Attaching strap	MD	8-11	E
Connecting strap	MD	8-11	E
Connecting strap reinforcement	MD	8-11	E
First Aid Kit Case	MD	8-11	E
	DN	Darn	E
Individual Overwater Survival Kit			
Outer Case	MD	7-9	FF
	DN	Darn	FF
Grommet reinforcement	MD	7-9	FF
	DN	Darn	FF
Pocket tie tape	MD	7-9	FF
Carrying handle	MD	7-9	FF
Slide interlocking fastener	MD	7-9	FF
Connector loop	MD	7-9	FF
Thong	LD	7-9	FF
Ring chape	LD	7-9	FF
Iinner Case	MD	8-11	E
	DN	Darn	E
Slide interlocking fastener	MD	8-11	E
Attaching strap	MD	8-11	E
Connecting strap	MD	8-11	E
Connecting strap reinforcement	MD	8-11	E
Connector Web	MD	7-9	FF
First Aid Kit Case	MD	8-11	E
	DN	Darn	E
OV-1 Aircraft Hot Climate Survival Kit			
Case	MD	7-12	E
	DN	Darn	E
Carrying strap	MD	7-12	E
Slide interlocking fastener	MD	7-12	E
Tarpaulin	LD	7-11	E
	DN	Darn	E

2-7. SEWING REPAIRS - Continued

Table 2-3. Stitching Specifications-Continued

Component	Recommended sewing machine (code symbol)	Stitches per inch	Thread size
OV-1 Aircraft Cold Climate Survival Kit			
Case	MD	7-12	E
	DN	Darn	E
Carrying strap	MD	7-12	E
Slide interlocking fastener	MD	7-12	E
OV-1 Aircraft Overwater Survival Kit			
Outer Case	M D	7-9	E
	DN	Darn	E
Carrying handle	MD	7-9	E
Strap reinforcement	MD	7-9	E
Grommet reinforcement	MD	7-9	E
Inflation knob retaining strap	MD	7-9	E
Loop strap	MD	7-9	E
Slide interlocking fastener	MD	7-9	E
Inner Case	MD	7-9	E
	DN	Darn	E
Fastener tape	MD	7-9	E
Retaining line attaching loop	LD	7-9	E
Life Raft Retaining Line	LD	7-9	E
SRU-211P Survival Vest			
Vest	LD	8-10	E
Edge binding	LD	8-10	E
Expansion panel	LD	8-10	E
Fastener Tape	LD	8-10	E
Loop adjustment webbing	LD	8-10	E
Seam binding	LD	8-10	E
Thong	BT	Bar-tack	E
Slide interlocking fastener	MD	8-10	E
	BT	Bar-tack	E
Receiver-transmitter antenna cover	MD	8-10	E
Survival Components			
Distress marker attaching line	BT	Bar-tack	E
Component Pockets	MD	8-10	E

2-7. SEWING REPAIRS - Continued

Table 2-3. Stitching Specifications - Continued

Component	Recommended sewing machine (code symbol)	Stitches per inch	Thread size
SARVIP			
VEST	LD	10-12	E
WEBBING	MD	10-12	FF
EDGE BINDING	LD	10-12	E
FASTENER TAPE	LD	10-12	E
THONG	BT	Bar-Tack	E
SLIDE INTERLOCKING FASTENER	MD	10-12	E
CARRIER, PLATE	LD	8-10	E
DISTRESS MARKER ATTACHING LINE	BT	Bar-Tack	E
COMPONENT POCKETS	MD	8-10	E
DN	Darn	E	

2-8. SEARING AND WAXING

Cord, textile tape, or webbing which has been cut for use in performing maintenance will be seared or dipped in wax to prevent fraying unless otherwise specified. Searing and waxing of textile items shall be performed as follows:

a. Searing. Ends of nylon textile tape, webbing, or cord may be seared by pressing each exposed end against a hot, metal surface until the cut nylon material has melted sufficiently to prevent fraying. Avoid forming a sharp edge or a lump of melted material. Cotton textile tape, webbing, and cord will not be seared.

b. Waxing. Ends of cotton or nylon textile tape, webbing, and cord may be waxed by dipping 1/2 inch of each end in a thoroughly melted mixture of half beeswax and half paraffin to prevent fray- ing. Wax temperature should be to a point which will ensure a thorough penetration of the dipped material rather than just applying a coating on the material.

2-9. EYELET GROMMET REPAIR AND REPLACEMENT

a. Repair. To repair an eyelet type grommet, use a mallet, punch, and an applicable size die, and reseat the grommet in the original location by hammering until the grommet becomes firmly seated and cannot be turned by hand.

b. Replacement. Replace a defective eyelet grommet and washer with serviceable items of the same size from stock and the following procedures:

(1) Cut the crimped edge of the original grommet at three or four points using diagonal nippers. Pry the cut crimped edges back and remove the original grommet and washer.

(2) If the fabric area around the original grommet has been damaged, repair the area by darning as outlined in paragraph 2-7, using the specifics in table 2-3. However, if darning does not provide a satisfactory repair, construct a suitable sized reinforcement of the same type material as that in the original grommet location and secure the reinforcement to the inside of the damaged area using the specifics in table 2-3 and patching procedures outlined in paragraph 2-7. After the reinforcement has been secured in place, darn over the reinforced area using the specifics in table 2-3.

(3) Using a grommet hole cutter, cut a suitable sized hole in the reinforcement material to accommodate the applicable size grommet. Ensure the hole is cut with a slightly smaller diameter than the diameter of the replacement grommet barrel.

(4) Insert the barrel of the replacement grommet through the hole cut in (3) above, and ensure the grommet flange is located on the same side of the material as the original grommet.

(5) Position the grommet on a comparable sized die with the barrel facing up and place the washer over the grommet barrel.

2-9. GROMMET REPAIR - Continued

(6) Using a punch and mallet (figure 2-2), spread the grommet barrel by hammering until the barrel collar is flattened and rolled down smooth on the washer.

(7) Check the seating of the grommet and if the grommet can be turned by hand, repeat the procedure in (6) above until the grommet is firmly seated.

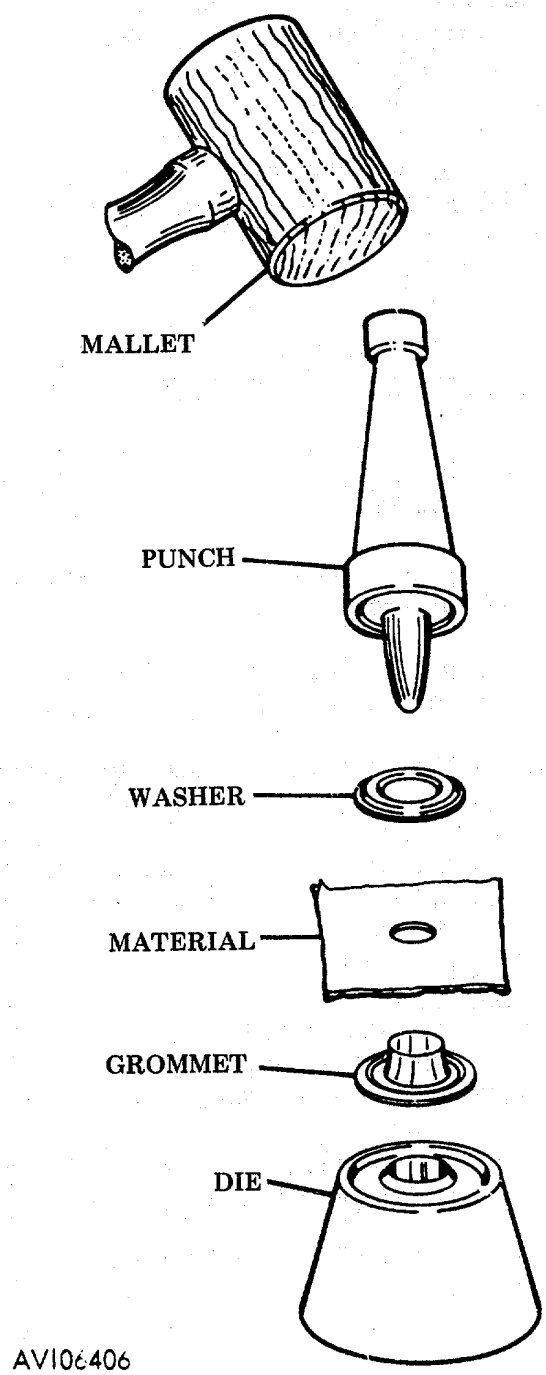

Figure 2-2. Installing an eyelet-type grommet, typical

2.10. SNAP FASTENER REPAIR AND REPLACEMENT

a. Repair. Repair a loose snap fastener by reseating the fastener on a hand- or foot-operated press (figure 2-3) as follows:

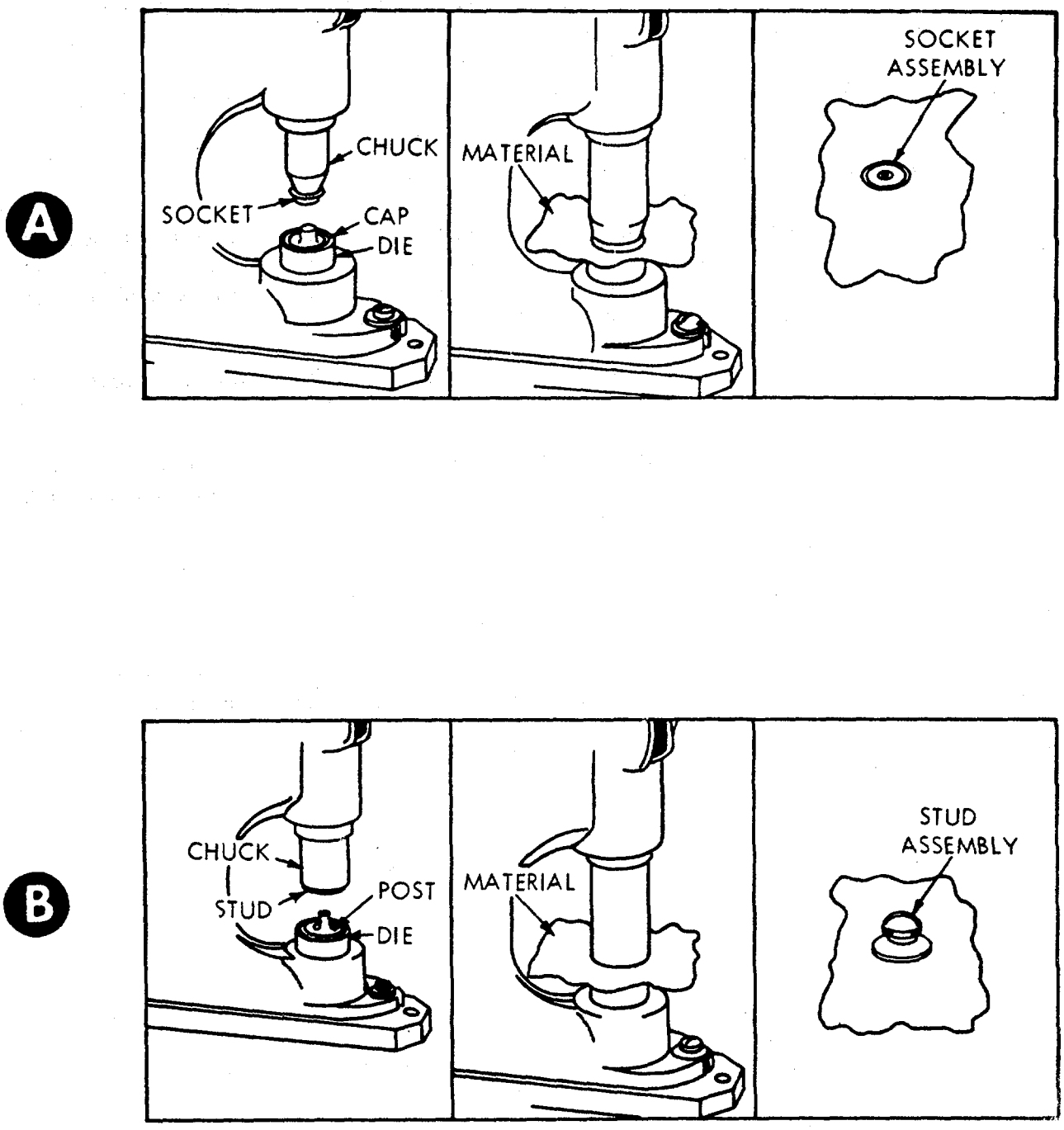

Figure 2-3. Seating a snap fastener, typical
A.. Socket assembly.
B. Stud assembly.

2-10. SNAP FASTENER REPAIR AND REPLACEMENT.-Continued

(1) Install an applicable size chuck and die on the press.

(2) Snap the fastener socket (A) or stud (B), as applicable, in the chuck. Position the fastener cap or post, as applicable on the die.

(3) Depress the press handle or lever to seat the socket and cap or stud and post, as applicable.

(4) Check the fastener for firm seating. If required, repeat the procedure in (3) above. Ensure the socket snaps on and off the stud without hindrance.

b. Replacement. A snap, fastener which is defective or cannot be reseated shall be replaced with a serviceable item from stock. However, if only one part of the fastener is defective, such as the socket assembly or the stud assembly, just that particular assembly will necessitate replace- ment. Remove and replace a damaged snap fastener as follows:

(1) Remove the original snap fastener and, if applicable, repair the fabric area around the fastener using the procedures in paragraphs 2-9b (1) through (3).

(2) install the replacement fastener or fastener part assembly using the procedures in para- graph a. above. Ensure that prior to actuating the press, the sole cut in the fabric is placed over the stem of the cap or the stud, as applicable.

2-11. MAKING KNOTS

During the performance of the various maintenance functions on survival kits, the making of certain type knots is prescribed. Details for the forming of knots specified in this publication are shown in figure 2-4.

2.11. MAKING KNOTS-Continued

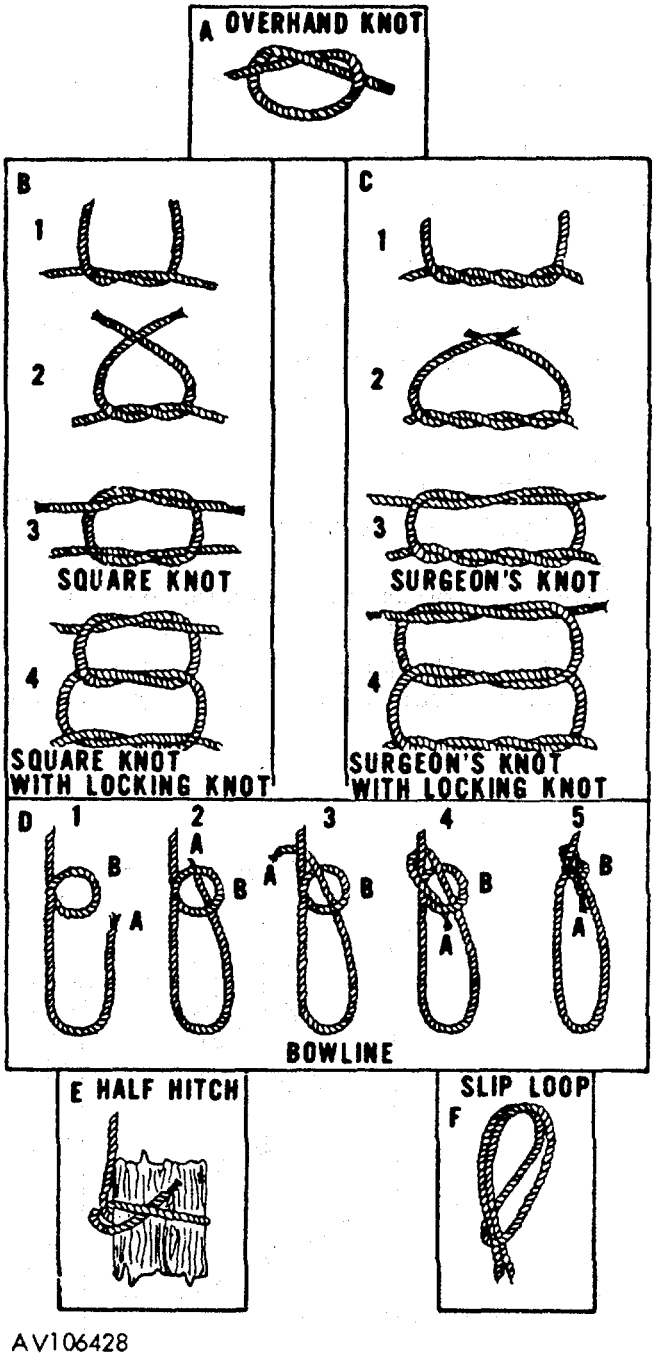

Figure 2-4. Knots used in survival kit maintenance

Section IV. SPECIFIC REPAIR AND PACKING INSTRUCTIONS

2-12. INDIVIDUAL HOT CLIMATE SURVIVAL KIT

a. Kit Outer Case.

(1) **Inspection**. Inspect the kit outer case (figure 1-1) using the procedures in table 2-1.

(2) **Service**. To service the kit outer case, clean and dry the case, as required, using the procedures prescribed in paragraph 2-6.

(3) **Repair**.

(a) **Restitching**. Restitch broken or loose stitching on a kit outer case according to original construction details, using the procedures described in paragraph 2-7 and the specifics in table 2-3.

(b) **Darning and patching**. As applicable, darn or patch a kit outer case using the procedures in paragraph 2-7 and the specifics in table 2-3. Patching will be performed using olive drab colored type I cotton duck cloth.

(c) **Restencil**. As required, Restencil the kit information data on or as near as possible to the original location on the kit outer case (figure 2-5). The Restencil lettering should conform to the original ,lettering size, type, and spacing, and will be made using a stenciling brush, oiled stencil board, and black stencil-marking ink.

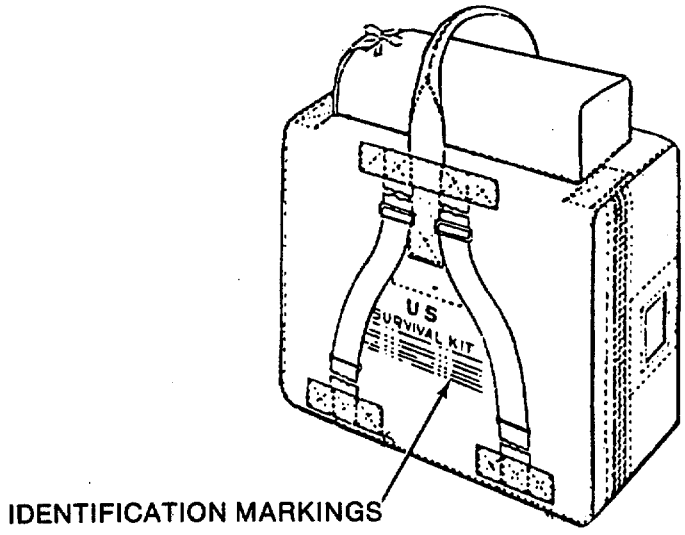

Figure 2-5. The individual survival kit outer case, typical

2-12. INDIVIDUAL HOT CLIMATE SURVIVAL KIT-Continued

(d) **Reseating a pocket grommet.** Reseat a pocket grommet according to procedures in paragraph 2-9.

(e) **Replacing a pocket grommet.** Replace a damaged grommet on the kit outer case pocket with a serviceable size O metallic grommet using the procedures prescribed in paragraph 2-9.

(f) **Replacing the pocket tie tape**. Replace an unserviceable tie tape on the pocket of the kit outer case by fabricating as follows.

1. Cut the stitching which secures the original tie tape to the pocket body and remove the tape.

2. Cut a 15-inch length of 112-inch-wide, type I cotton tape and .wax the ends.

3. Center the tape length over the original tie tape location and secure the replace- ment tape with four rows of stitching or bar-tack according to original construc- tion details and paragraph 2-7, using the specifics in table 2-3.

(g) **Replacing a carrying handle.** Replace a damaged carrying handle on the kit outer case by fabricating as follows:

1. Cut the stitching on both sides of the outer case which secures the original carry- ing handle to the case.

2. Cut a 22-inch length of 1-23/32-inch-wide, type VIII nylon webbing and sear the ends.

3. At a point 5 inches from each end of the webbing length, make a contrasting colored mark.

2-12. INDIVIDUAL HOT CLIMATE SURVIVAL KIT-Continued

4. Between the two marks made in 3 above, roll each edge of the webbing in one-half the width of the webbing (figure 2-6) and secure each rolled webbing edge with a single row of stitching located 1/8 inch out from the webbing edge, using the specifics in table 2-3. Stitching will be made in accordance with paragraph 2-7.

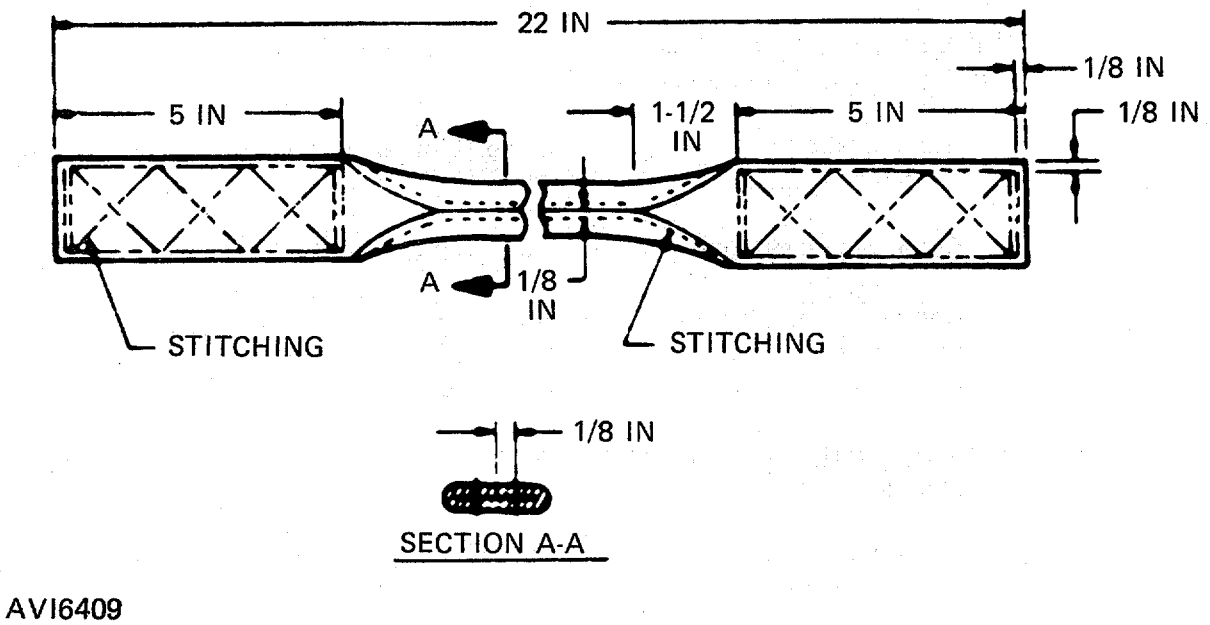

Figure 2-6. Kit outer case carrying handle construction details

5. Position the webbing length in the original carrying handle location and secure each end of the webbing by making a 4-7/8-inch-long, triple-X-box-stitch formation with two double ends according to original construction details, using the specifics in table 2-3. Stitching will be made in accordance with paragraph 2-7.

(h) Replacing nylon straps and handles.

1. Outer case:

   a. Strap, reinforcing, webbing, nylon, 1-1/2 inch wide, orange-yellow, 6-1/2 inches long, 1 piece. Sear ends to prevent fraying.

   b. Strap, reinforcing, webbing, nylon, 1-1/2 inches wide, orange-yellow, 42 inches long, 2 pieces. Sear ends to prevent fraying.

2. Loop one end of the carrying strap over and then under the center bar of the slide. See figure 2-7(Sheet 2 of 3). Make a 3-1/2 inch loop, 1/8 inch from the seared end. Stitch across the double thickness webbing 1 inch from the cross-stitch toward

2-12. INDIVIDUAL HOT CLIMATE SURVIVAL KIT-Continued

the slider or loop end. Sew across the double thickness webbing. From the bottom cross-stitch make a 1 x 1-1/4 box stitch. Do this to both 42 inch straps. After the loop is on the center bar of the slide, take the webbing and put the metal loop on and snake the webbing under, over and back thru the slide (figure 2-7(Sheet 2 of 3). Take the reinforcement strap, measure down from the pocket seam 3/4 inch and sew the seared end of the carrying strap underneath (figure 2-7) using a boxed x stitch, figure 2-7. Do this to both carrying straps.

3. Bottom attaching points.

a. For the loop strap, figure 2-7, cut 2 pieces of webbing, 1-1/2 inch wide orange- yellow 10-112 inches long, sear both ends to prevent fraying. Cut 2 pieces of 1-112 inch wide webbing orange-yellow, 3-1/2 inches long, sear both ends to prevent fraying. Feed one end of the 10-112 inch long webbing thru the metal loop of the carrying strap, figure 2-7(Sheet 2 of 3); 3/4 inch from the bottom seam of the case, sew the loop strap underneath the loop strap reinforce- ment webbing, the 3-1/2 inch piece. Figure 2-7. This is to be sewn on the same side as the carrying strap. DO NOT CROSS THE CASE with the loop strap.

b. The thread used for this is nylon, type I or 11, class 1, color O.D., shade S-1, size FF MI L SPEC V-T-295.

(i) Replacing a connecting strap. Replace a damaged connecting strap on the outside of the kit inner case by fabricating as follows:

1. Cut the stitching which secures the strap assembly connecting strap to the kit inner case body, and remove the strap assembly from the case body. Further remove the attaching strap and quick fit adapter from each end of the connecting strap by cutting the stitching on the strap ends.

2. Inspect each of the quick fit adapters for serviceability and replace a quick fit adapter, as required, with a serviceable item from stock.

3. Cut a 23-3/8-inch length of 1-23/32-inch-wide, type VIII nylon webbing and sear the ends.

4. Make a contrasting colored mark at a point 5-1/8 inches from each end of the webbing length.

5. Using original construction details and the details in figure 2-9, pass one of the strap ends from the top, down and around the attaching bar of a serviceable quick fit adapter and aline the strap end with the nearest 5-1/8-inch mark made in 4 above. Beginning 1/8 inch back from the stitching a 3-inch-long, double-X-box- stitch formation with one double end in accordance with paragraph 2-7, using the specifics in table 2-3. Make the stitching 118 inch in from each webbing edge.

2-12. INDIVIDUAL HOT CLIMATE SURVIVAL KIT-Continued

6. Using the procedures in 5 above and the specifics in table 2-3, attach the opposite strap end to a serviceable quick fit adapter.

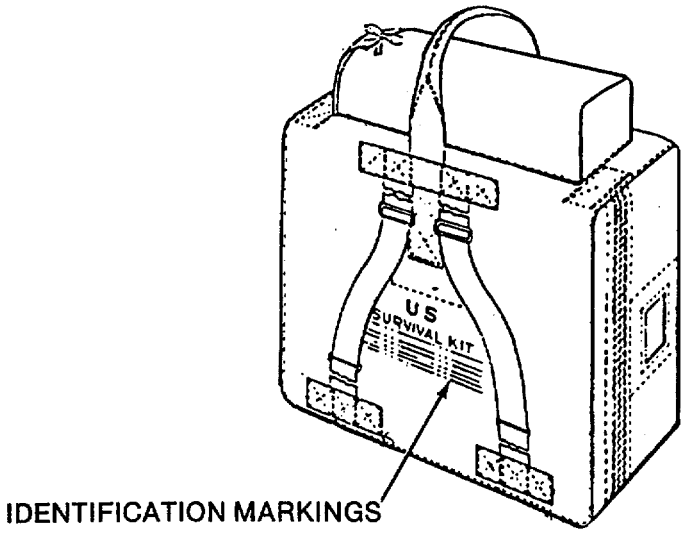

Figure 2-7. individual Survival Kit (Packed) (Sheet 1 of 3)

2-12. INDIVIDUAL HOT CLIMATE SURVIVAL KIT-Continued

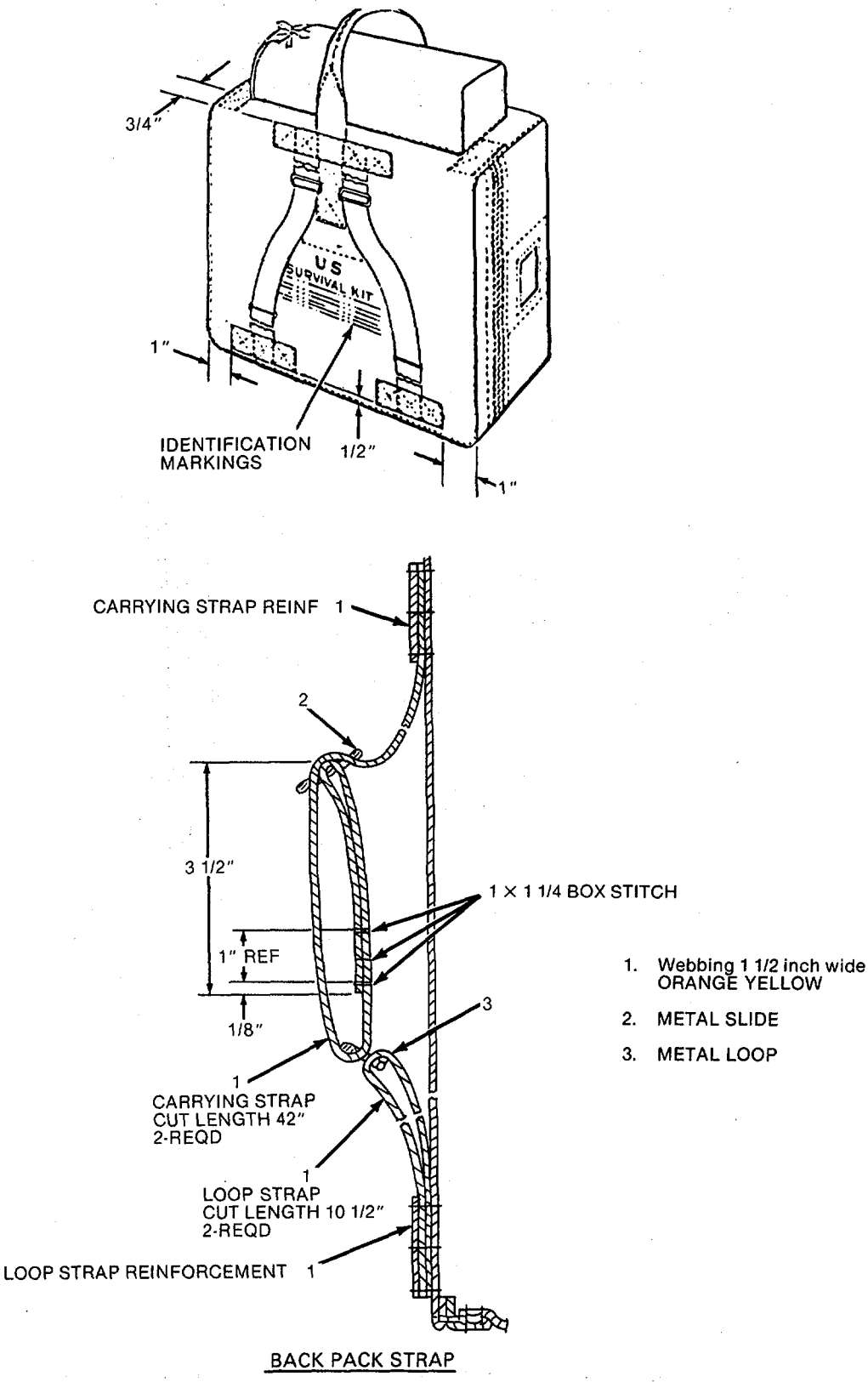

Figure 2-7. Individual Survival Kit (Packed) (Sheet 2 of 3)

-2-12. INDIVIDUAL HOT CLIMATE SURVIVAL KIT-Continued

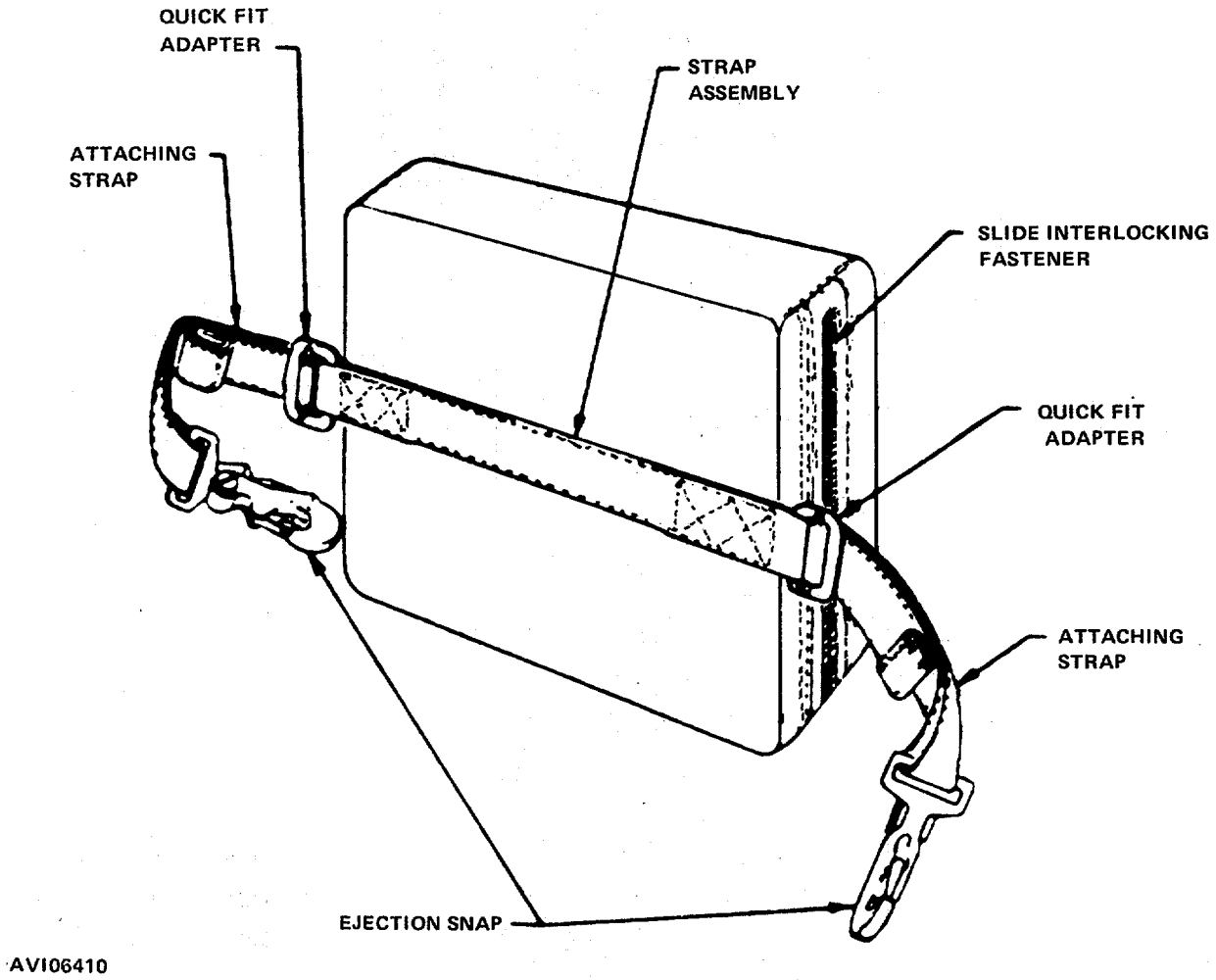

INNER CASE

Figure 2-7. Individual Survival Kit (Packed) (Sheet 3 of 3)

2-12. INDIVIDUAL HOT CLIMATE SURVIVAL KIT-Continued

b. Kit Inner Case.

(1) Inspection. Inspect the kit inner case using the procedures in table 2-1.

(2) Service. To service the kit inner case, clean and dry the case, as required, using the procedures prescribed in paragraph 2-6.

(3) Repair.

(a) Restitching. Restitch broken or loose stitching on a kit inner case (figure 2-7), except the connecting strap, according to original construction details, using the procedures in paragraph 2-7 and the specifics in table 2-3. The connecting strap shall be restitched using a reinforcement as outlined in paragraph (g) below.

(b) Darning and patching. As applicable, darn or patch a kit inner case using the procedures in paragraph 2-7 and the specifics in table 2-3. Patching shall be performed using type 1 cotton duck cloth.

(c) Replacing the slide interlocking fastener. A slide interlocking fastener (zipper) on the kit inner case which is broken or hard to manipulate shall be replaced with a serviceable 44-1/2-inch-long, type 1, style 2, size MS, slide interlocking fastener from stock using the procedures outlined in paragraph *a*. (3) (*h)* above and the specifics in table 2-3. A slide interlocking fastener on the kit outer case which is defective in any way shall be replaced using the following procedures:

1. Cut the stitching which secures the original slide interlocking fastener to the kit outer case and remove the defective fastener.

2. Install a serviceable 44-1/2-inch-long, type 1, style 2, size MHS, slide interlocking fastener in the original fastener location and secure the replacement fastener by stitching according to original installation details, using the specifics in table 2-3. Stitching will be made in accordance with paragraph 2-7.

(d) Replacing an attaching strap. Replace an unserviceable attaching strap (figure 2-8) on either end of the kit inner case strap assembly by fabricating as follows:

1. Cut the end loop on the attaching strap and remove the ejector snap from the loop. Further remove the cut strap from the applicable strap assembly quick fit adapter.

2. Inspect the original ejector snap for serviceability. If the snap is defective, replace with a serviceable item from stock.

3. Cut a 28-inch length of 1-23/32-inch-wide, type VIII nylon webbing and sear the ends.

2-12. INDIVIDUAL HOT CLIMATE SURVIVAL KIT-Continued

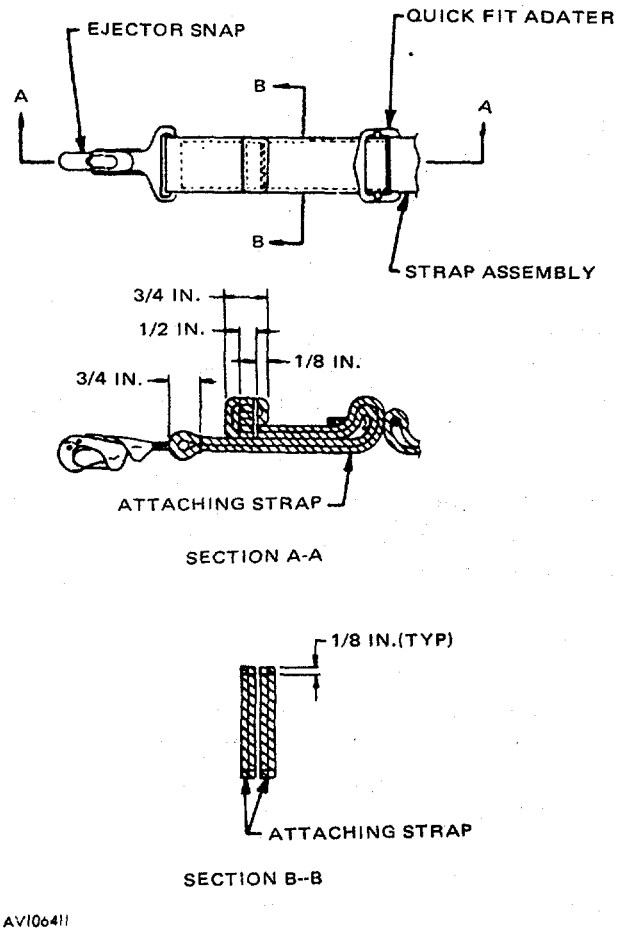

Figure 2-8. Attaching strap replacement details, typical

4. Pass one end of the webbing length around the snap attaching bar to form a loop on the snap bottom end and aline the webbing ends. Secure the doubled webbing by stitching a box-stitch formation along the full length of the webbing to a point 3/4 inch from the formed loop on the snap. Make the stitching 1/8 inch in from the webbing edges in accordance with paragraph 2-7, using the specifics in table 2-3.

5. With the face of the ejector snap facing down, pass the running end of the replacement attaching strap around the raised part of the quick fit adapter center sliding bar and back toward the ejector snap as shown in figure 2-8.

6. Make a double 3/4-inch foldback on the strap running end and secure the foldback on the strap running end with two rows of stitching using the details in figure 2-8 and the specifics in table 2-3. Stitching will be made in accordance with paragraph 2-7.

2.12. INDIVIDUAL HOT CLIMATE SURVIVAL KIT-Continued

7. Install the replacement strap assembly in the original location on the outside of the kit Inner case with a 14-1/8-inch-long box-stitch formation according to original construction details and the details shown in figure 2-9, using the specifics in table 2-3. Stitching will be made in accordance with paragraph 2-7.

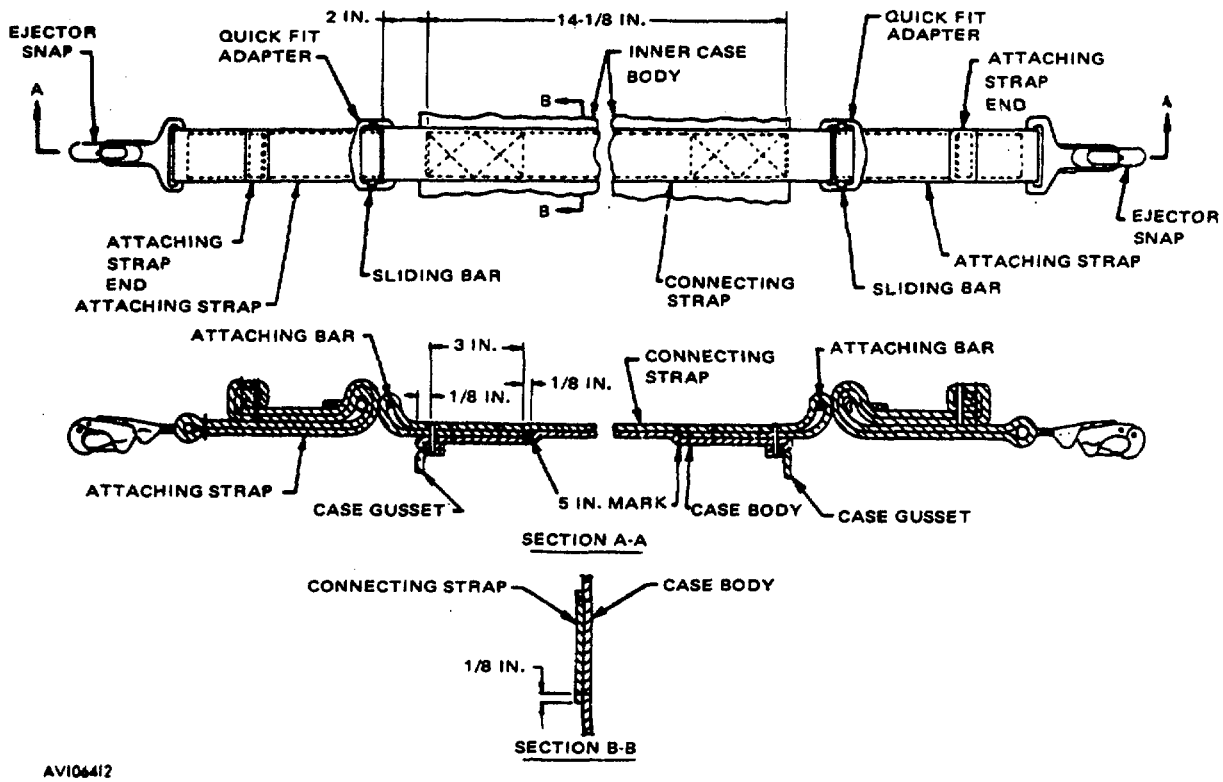

Figure 2-9. Strap assembly construction details, typical

2-12. INDIVIDUAL HOT CLIMATE SURVIVAL KIT-Continued

(e) Replacing an ejector snap. Replace a defective ejector snap with a serviceable item from stock using the procedures prescribed in paragraph (d) above.

(f) Replacing a quick fit adapter. Replace a defective quick fit adapter with a serviceable item from stock as follows:

1. Cut and remove the stitching on the attaching strap running end doubled, 3/4-inch foldback and remove the attaching strap from the applicable quick fit adapter. Further, cut 4 inches of the stitch formation on the applicable end of the connecting strap and remove the original quick fit adapter from the connecting strap end.

2. Install a replacement adapter on the applicable connecting strap end and restitch the connecting strap in the original location according to original construction details, using the specifics in table 2-3. Stitching will be made in accordance with paragraph 2-7.

3. Install the running end of the applicable attaching strap removed in 1 above on the replacement adapter and secure the attaching strap running end as prescribed in paragraph (d) above, using the specifics in table 2-3.

(g) Installing the connecting strap reinforcement. When the inner case strap assembly connecting strap has broken or loose stitching, a connecting strap reinforcement shall be fabricated and installed as follows:

1. Cut a 14-3/8 inch length of 1-23/32-inch-wide, type VIII nylon webbing and sear the ends.

2. Position the webbing length on the inside of the inner case, alined with the connecting strap. Secure the reinforcement by stitching over the original connecting strap stitch formations on the outside of the kit inner case using the specifics in table 2-3. Stitching will be made in accordance with paragraph 2-7.

(h) Replacement. Replace an unserviceable kit inner case which is beyond repair with a serviceable item from stock in accordance with Appendix C.

(4) Replacement. Replace an unserviceable kit outer case which is beyond repair with a serviceable item from stock in accordance with Appendix C.

c. Survival Components.

(1) Inspection. Inspect the survival components of the individual hot climate survival kit using the procedures in table 2-1. First aid kit medical items which are considered serviceable but do not have an expiration date available will be marked with the date of the shortest expiration dated item in the kit. Survival rations have a shelf life of 5 years and a service life of 3 years. Neither shall be exceeded, i.e., packet has 2 years shelf life remaining; it can be put in service for only 2 years.

2.12. INDIVIDUAL HOT CLIMATE SURVIVAL KIT-Continued

(2) Repair.

(a) Tarpaulin.

1. Darning and patching. As required, darn or patch a lightweight tarpaulin in accordance with paragraph 2-7, using the specifics in table 2-3. Patching will be performed using laminated yellow/blue rubber coated cloth.

NOTE

When patching the tarpaulin, ensure the yellow blue colors of the patch material are alined with the orlglnal colors of the tarpaulin accordingly.

2. Restitching. Restitch broken or loose stitching on a lightweight tarpaulin according to original construction details, using the procedures in paragraph 2-7 and the specifics in table 2-3.

(b) First aid kit case.

1. Darning and patching. As required, darn or patch a first aid kit case in accordance with paragraph 2-7, using the specifics in table 2-3. Patching will be performed using 8.25-ounce cotton duck cloth.

2. Restitching. Restitch broken or loose stitching on a first aid kit case according to original construction details and paragraph 2-7, using the specifics in table 2-3.

(c) Tool kit carrier.

1. **Darning**. Darn a tool kit carrier in accordance with paragraph 2-7, using the specifics in table 2-3.

2. Restitching. Restitch broken or loose stitching on a tool kit carrier according to original construction details and paragraph 2-7, using the specifics in table 2-3.

(3) Test. To check the vacuum retention of a conned drinking water container, a water hammer (slop) test shall be applied by striking each individual can of water against a firm, but well padded fabricated test pad or the palm of the hand. The intent of the test pad is to deaden and impact noise other than the slap of water which will occur if the required vacuum is present in the can being tested. The water slap is distinguished by sharp, audible, metallic click which results from the lack of internal air to cushion the impact of the water contents against the inside of the con. The test pod, which is used as an aid in performing the water hammer test, may be fabricated as follows;

NOTE

A can of water which falls to produce the metallic click during the water hammer test shall be considered unserviceable and replaced in accordance with Appendix C.

(a) Cut two 10-inch-square pieces of type 1 cotton duck cloth.

2-12. INDIVIDUAL HOT CLIMATE SURVIVAL KIT-Continued

(b) Place one piece of cut cloth on top of the other piece and aline all edges. Using the specifics in table 2-3, secure the two pieces of cloth together on three sides with two rows of stitching made 1/4 inch in from the outside edge and 1/4 inch apart. Stitching will be made in accordance with paragraph 2-7.

(c) Invert the formed bag to position the stitched seams on the inside and fill the bag with sand or other similar filling material.

(d) Turn in 1/2 inch of each of the bag open side edges and close the bag by making two rows of stitching 1/4 inch in from the alined cloth folds and 1/4 inch apart, using the specifics in table 2-3. Stitching will be made in accordance with paragraph 2-7.

(4) Replacement. Replace a damaged, missing or otherwise unserviceable survival component with a serviceable item from stock as prescribed in paragraph 2-5 and in accordance with repair parts, Appendix C. First aid kit medical items which are unserviceable will be replaced.

NOTE

Prior to repacklng the survival kit, ensure the parachute attaching straps extending from each end of the kit inner case are pulled completely through the cutouts located in the outer case end gussets to permit access to each of the quick fit adapters when the kit is placed into use. Also ensure the ejector snaps face down as shown in figure 2-8.

NOTE

In some instances, the local commander may require a survival receiver- transmitter and dry battery to be packed in the survival kit. When this situation occurs, the receiver-transmitter and battery will be stowed and secured inside the pocket located on the exterior of the kit outer case.

2-12. INDIVIDUAL HOT CLIMATE SURVIVAL KIT-Continued

d. Repacking the Survival Kit.

CAUTION

When packing the MC-1 magnetic compass in the survival kit inner case, ensure the compass is placed in a face-down position to prevent unnecessary wear on the compass pivot and jewel.

Upon completion of inspection, repair, and replacement, as applicable, repack the components of the individual hot climate survival kit within the kit outer and inner cases according to original kit packing details, the individual 9- by 12-inch kit packing list, and the details shown in figure 2-10. Ensure the kit operator's manual, TM 55-1680-349-10, is stowed and secured inside the pocket located on the exterior of the kit outer case.

NOTE

Prior to repacklng the survival manual (AFM 64-5, or FM 21-76) and the operator's manual (TM 55-1680-349-10) in the kit, place each of the publications in an individual compatible sized plastic polyethylene bag with interlocking closure to prevent exposure of the printed matter to moisture.

NOTE

After repacking has been completed, secure the outer case slide fastener thong to the side of the case, over the teeth of the slide fastener, figure 2-9a. Tac sew the bottom end of the thong to the side of the case, use one stitch. Midway up the thong, tac sew one side of the thong to the side of the case. Use one stitch. Tac sew the opposite side of the thong to the opposite side of the case. Secure the closure end of the slide fastener to the top of the case with the thread using four stitches. Using one turn single, type I nylon cord, secure the material condition tag to the outer case pocket flap grommet and stow the DD Form 1574 in the pocket. By securing the thong to the outer case in this manner, a quick check can be made to see if the kit has been broken into. If the thong has been unsecured, check the kit for possible pilferage, Figure 2-9A.

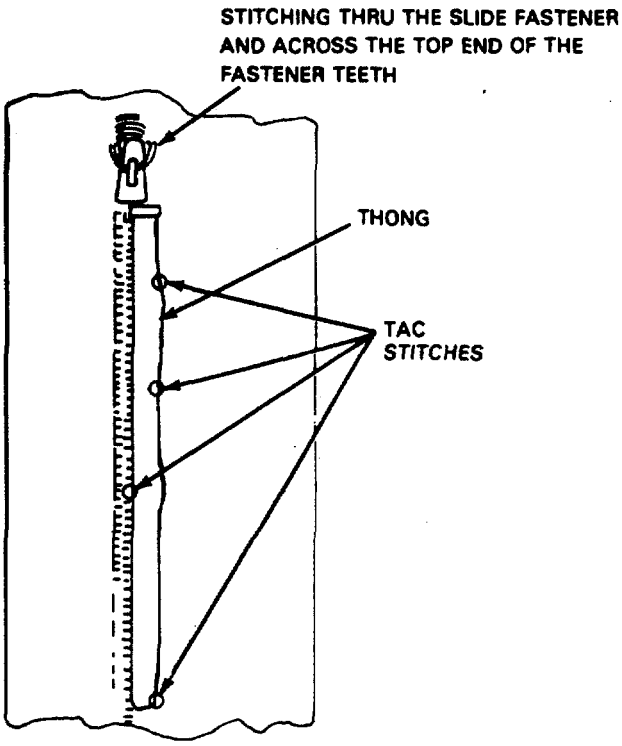

Figure 2-9a. Securing Slide Fastener Thong

2.12. INDIVIDUAL HOT CLIMATE SURVIVAL KIT-Continued

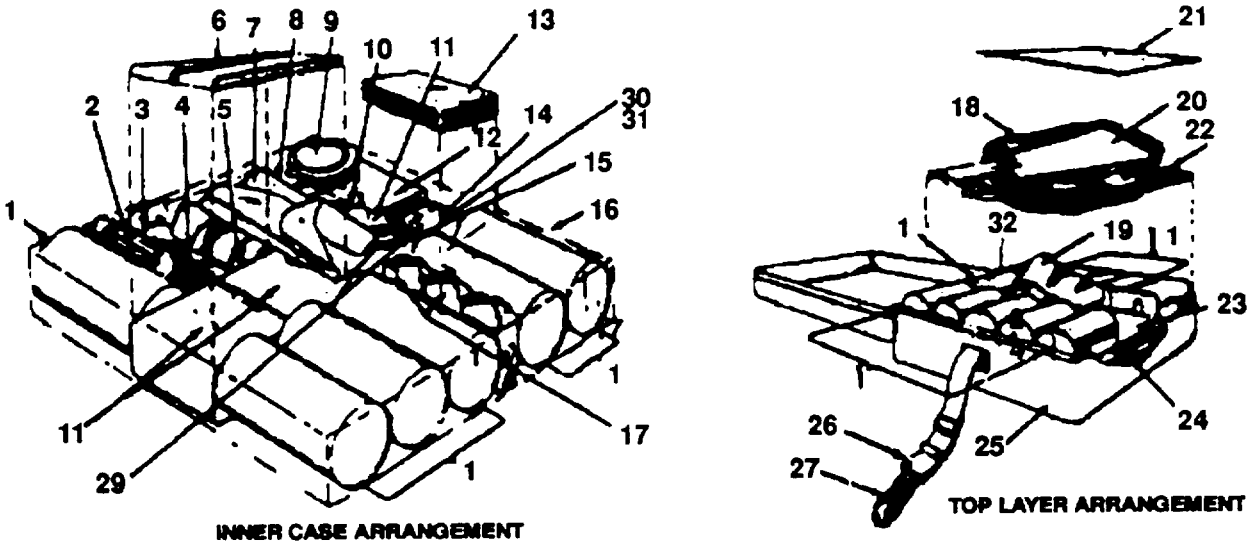

Figure 2-10. Packing details for survival components of the individual hot climate survival kit. Unless noted, all units are one each.

1. Emergency drinking water
2. Knife sharpener
3. Plastic whistle
4. Smoke and illumination 2 ea.
5. Pocket knife
6. Signaling mirror container
7. Plastic water bag
8. First aid kit
9. Sunbum-preventive preparation
10. Plastic spoon
11. Food packets-6 ea.
12. Compressed trioxane fuel
13. Fishing tackle kit
14. MC-magnetic compass
15. Snare wire
16. Frying pan
17. Wood matches-1
18. Insect headnet
19. Reversible sun hat
20. Tool Kit
21. Kit packing list
*22. Tarpaulin
23. Survival manual (AFM64-5) (FM 21-76)
24. Kit inner case
25. Kit outer case
26. Attaching strap
27. Ejector snap
***28. Blanket combat
29. Fire starter, magnesium
30. Saw, finger grip
31. Fire starter, spark lite
**32. Net, multipurpose (net, gill fishing)

*See figure 2-11 for tarpaulin folding details.
**Net, multipurpose can be placed anywhere in top layer.
***Blanket combat can be placed anywhere it will fit within the survival kit.

2-12. INDIVIDUAL HOT CLIMATE SURVIVAL KIT-Continued

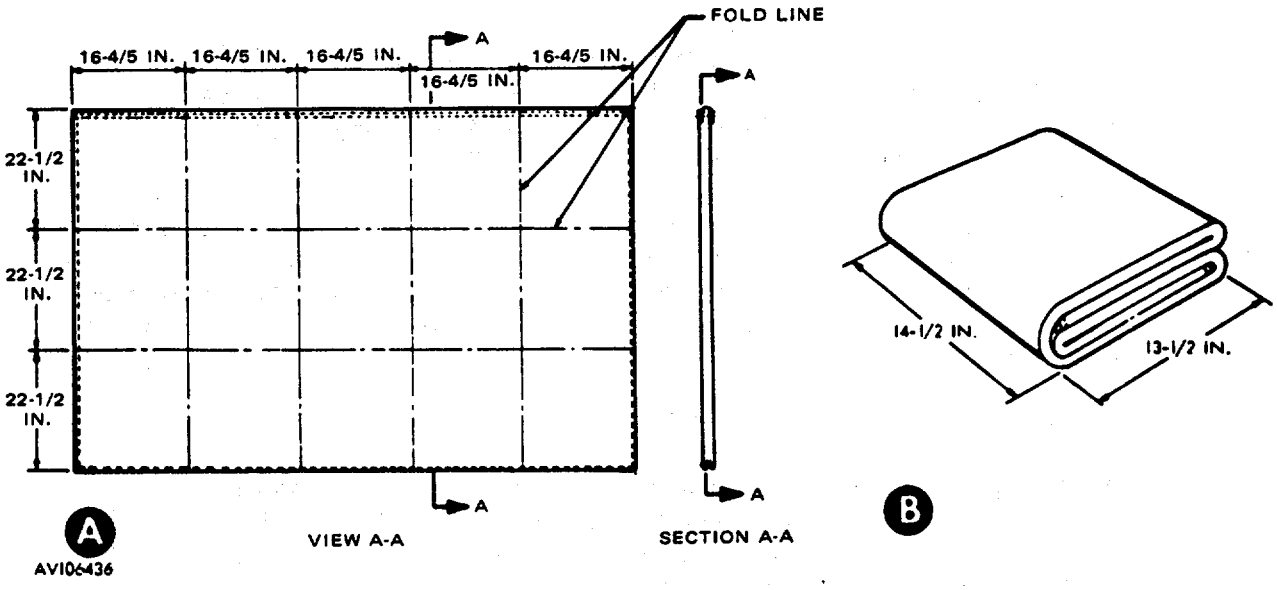

Figure 2-11. Tarpaulin folding details

A. Tarpaulin laid out with fold lines indicated.
B. Tarpaulin folding completed.

2.13. INDIVIDUAL COLD CLIMATE SURVIVAL KIT

a. Inspection. Inspect the individual cold climate survival kit and the related survival components using the procedures in table 2-1.

b. Service. Service the individual cold climate survival kit by cleaning and drying the kit outer and inner case, as required, using the procedures in paragraph 2-6.

c. Repair. As required, repair the first aid kit case and the outer and inner cases of the individual cold climate survival kit using the procedures in paragraph 2-12 and the specifics in table 2-3.

d. Replacement. Replace an unserviceable or missing component of the individual cold climate survival kit with a serviceable item from stock as prescribed in paragraph 2-5 and in accordance with repair parts, Appendix C. First aid kit medical items which are unserviceable will be replaced.

2-13. INDIVIDUAL COLD CLIMATE SURVIVAL KIT-Continued

NOTE

If the center sealing tape, which effects the vacuum pack seal of the SRU-15/P sleeping bag container, has been broken or removed for any reason, DO NOT attempt to repack the bag In the container or to reseal the container. Replace the complete SRU-15/P sleeping bag with a new unit.

e. Repacking the Survival Kit. Repack the components of the individual cold climate survival kit within the kit outer and inner cases using applicable procedures cited in paragraph 2-12d, the original kit packing details, the individual 9- by 12-inch kit packing list, and the details shown in figure 2-12. Ensure the kit operator's manual, TM 55-1680-348-10, is stowed and secured within the kit outer case exterior pocket.

NOTE

Prior to repacking the survival manual (AFM 64-5 or FM 21-76) and the operator's manual (M 55-1680-348-10) In the kit, place each of the publications in an Individual compatible sized plastic polyethylene bag with interlocking closure to prevent exposure of the printed matter to moisture.

NOTE

Give serviceable poncho a light dusting of Talc, Technical: Powder, NSN 6810-00-270-9989 before repacking to prevent the poncho's plastic materiel from sticking together.

2-13. INDIVIDUAL COLD CLIMATE SURVIVAL KIT—Continued

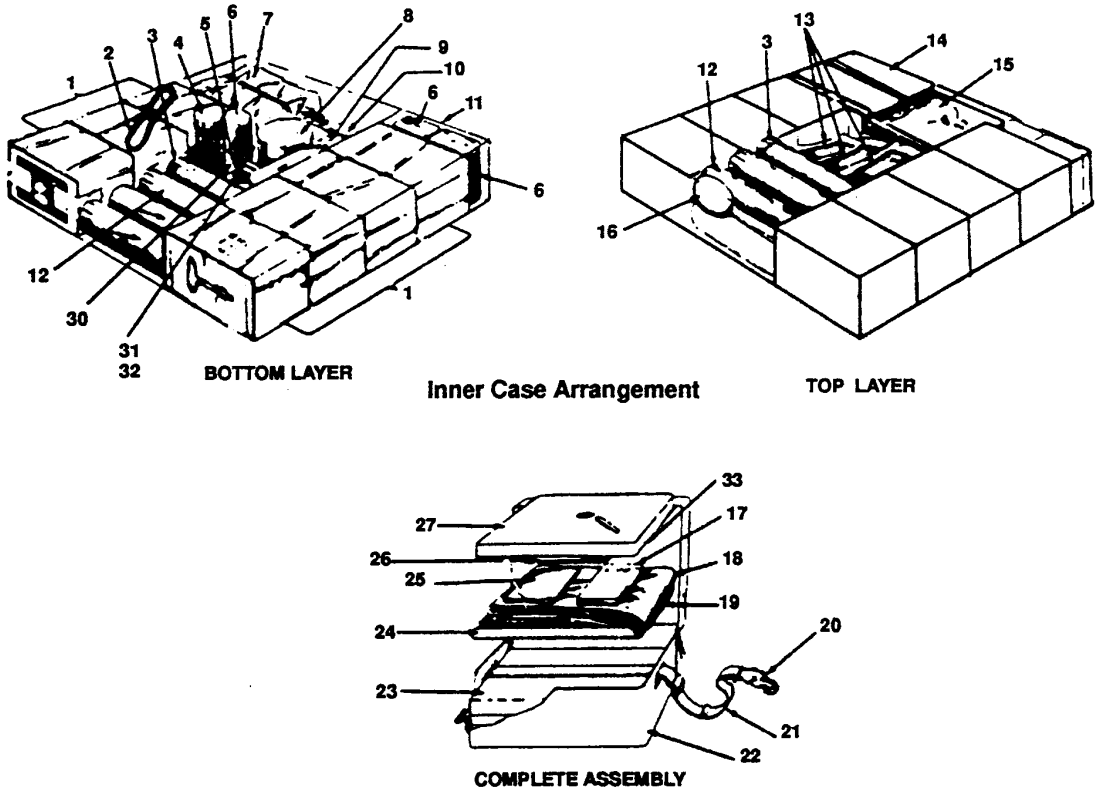

Figure 2-12. Packing details for survival components of the individual cold climate survival kit. Unless other wise we noted an units are one each.

1.	Food packets-7	8.	MC-1 magnetic compass	14.	Signaling mirror	21.	Attaching strap	**29.	Blanket, combat
2.	Snare wire	9.	Pocket knife	15.	Survival fishing kit	22.	Kit outer case	30.	Fire starter, magnesium
3.	Smoke area Illumination signals-2	10.	Saw-knife shovel handle	16.	Plastic spoon	23.	Kit inner case	31.	finger grip
4.	Knife sharpener	11.	Frying pan	17.	Survival manual (AFM 64-5) (FM 21 -76)	24.	Shovel lite	32.	Fire starter, spark
5.	Saw/knife blade	12.	Illuminating candles-5	18.	Poncho	25.	Water bag	*33.	Net, multipurpose (net, fishing)
6.	Wood matches 1 container	13.	Compressed trioxane fuel-3 pks.	19.	Insect headnet	26.	Packing list		
7.	First aid kit			20.	Ejector snap	27.	Sleeping bag		
						28.	Whistle, plastic		

*Net, multipupose can be placed anywhere in top layer.
**Blanket combat can be placed anywhere it will fit within the survival kit.

2-14. INDIVIDUAL OVERWATER SURVIVAL KIT

CAUTION

Prior to performing any maintenance function on the individual overwater survival kit, ensure the outer case ring chape tape material is removed from the split key ring located on one end of the life raft Inflation system pull-cable.

a. Kit Outer Case.

(1) **Inspection.** Inspect the kit outer case using the procedures in table 2-1.

(2) **Service.** As required, service the kit outer case by cleaning and drying the case using the procedures in paragraph 2-6.

(3) **Repair.** The individual overwater survival kit outer case shall be repaired using the applicable procedures in paragraph 2-12a (3), except for replacing the slide interlocking fastener (zipper). Replacement of the slide fastener and repair of additional outer case items will be performed using the following procedures.

(a) **Replacing the slide interlocking fastener.** A slide interlocking fastener on the kit outer case which is defective in any way shall be replaced as follows:

1. Cut the stitching which secures the original slide interlocking fastener to the kit outer case and remove the defective fastener.

2. Remove the thong and ring chape from the wire stirrup on the slider of the original fastener and retain for further use, if serviceable.

3. Using a suitable tool on a serviceable 47-inch-long, type I, style 2, size MHS slide interlocking fastener, remove the top stops and chain scoops on both stringers to allow the fastener tape to extend 2 inches beyond the last chain scoop.

4. Position the replacement fastener in the original fastener location and secure the fastener by stitching according to original construction details, using the specifics in table 2-3. Stitching will be made in accordance with paragraph 2-7.

5. Attach a serviceable thong and ring chape to the fastener slider wire stirrup according to original attachment details and the procedures in (e) and (f) below.

(b) **Replacing a connector loop.** Replace a damaged connector loop on the inside of the kit outer case by fabricating as follows:

1. Cut the stitching which secures the original connector loop to the case inside and remove the loop.

2. Cut an 8-3/4-inch length of 1/2-inch-wide natural color tubular nylon webbing (A, figure 2-13) and sear the ends.

2.14. INDIVIDUAL OVERWATER SURVIVAL KIT-Continued

3. Double the webbing length and spread the webbing ends to a width of 2 inches (B).

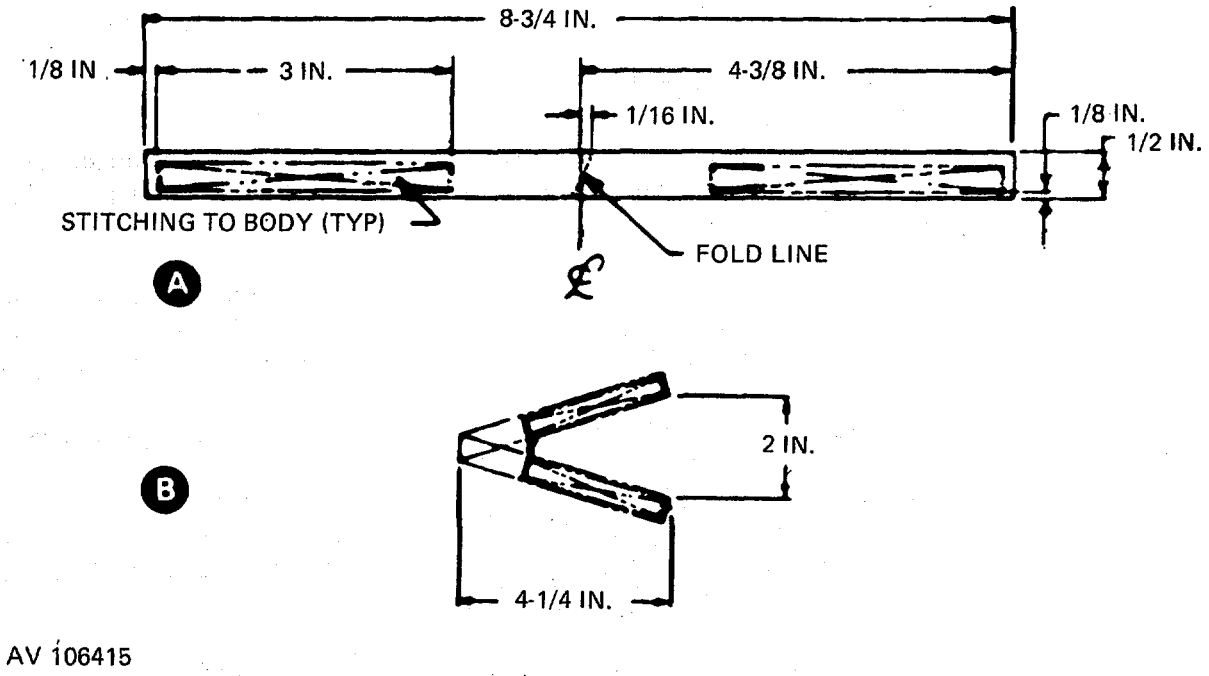

Figure 2-13. Connector loop construction and attaching details.

A. Fabrication and stitching specifics.
B. Forming and positioning the loop.

4. Position the folded webbing in the original location and stitch each webbing end with a 3-inch-long, single-X-box-stitch formation with two double ends, using original stitching details and the specifics in table 2-3. Stitching will be made in accordance with paragraph 2-7.

(c) Reseating a snap fastener. As required, reseat the snap fastener located on one end gusset of the kit outer case or the snap fastener located on the thong using the procedures in paragraph 2-10 a.

(d) Replacing a snap fastener. A defective snap fastener which may be located on the kit outer case end gusset or on the thong shall be replaced using the procedures in paragraph 2-10 b and the following criteria:

1. On the kit outer case gusset replace the original snap fastener with a serviceable 7/64-inch-diameter post and a stud with a 1/2-inch-diameter base.

2. On the slide interlocking fastener thong, replace the original snap fastener with a serviceable 7/32-inch-diameter shank cap and a 5/16-inch-diameter socket.

2-14. INDIVIDUAL OVERWATER SURVIVAL KIT-Continued

(**e) Replacing a thong**. Replace a damaged thong by fabricating as follows:

1. Cut and remove the original thong from the kit outer case slide interlocking fastener outside slider wire stirrup.

2. Cut a 16-inch length of 1/2-inch-wide, type 1 cotton tape and wax the ends.

3. Double the tape length and aline the ends.

4. At a point 2-1/2 inches from the folded end of the tape, install a serviceable snap fastener (A, figure 2-14) which is described in (d) 2 above, using the procedures in paragraph 2-10 b.

5. Pass the tape folded end through the slide interlocking fastener wire stirrup and secure the fabricated thong to the stirrup with a clove hitch drawn tight. Aline the thong loose ends and make an overhand knot near the bottom of the thong (B).

(f) Replacing a ring chape. Replace a damaged ring chape by fabricating as follows:

1. Cut and remove the original ring chape from the inside wire stirrup on the kit outer case slide interlocking fastener. On the opposite end of the chape, remove the life raft inflation assembly pull-cable from the 3/4-inch-diameter split key ring. Further, remove the ring from the chape end.

2. Inspect the split key ring for serviceability and, if serviceable, retain the ring for further use.

3. Cut a 12-1/2-inch length of 1/2-inch-wide, type I cotton tape and mark the tape length at points 9-3/4 and 12-1/4 inches from one end.

4. Pass the unmarked end of the tape length down through the slider wire stirrup to which the original chape was attached, and aline the tape end with the 9-3/4-inch mark (figure 2-15).

5. Pass the marked end of the tape length through a serviceable 3/4-inch-diameter split key ring and back below the webbing end alined in 4 above to form a 3/4-inch- long ring attaching loop on the chape end. At the 12-1/4-inch mark, make a 1/4- inch foldback against the bottom of the tape plies.

6. Secure the 1/4-inch foldback by stitching two rows, 3/8-inch-long, 7/16 inch apart, across the tape width, using the specifics in table 2-3. Stitching will be made in accordance with paragraph 2-7.

2-14. INDIVIDUAL OVERWATER SURVIVAL KIT-Continued

7 Beginning at a point 1 inch back from the end of the chape which passes around the wire stirrup, complete the ring chape construction (figure 2-16) by stitching a 3-3/4-inch-long box stitch formation 1/16 inch in from each of the tape edges. Stitching will be made in accordance with paragraph 2-7, using the specifics in table 2-3.

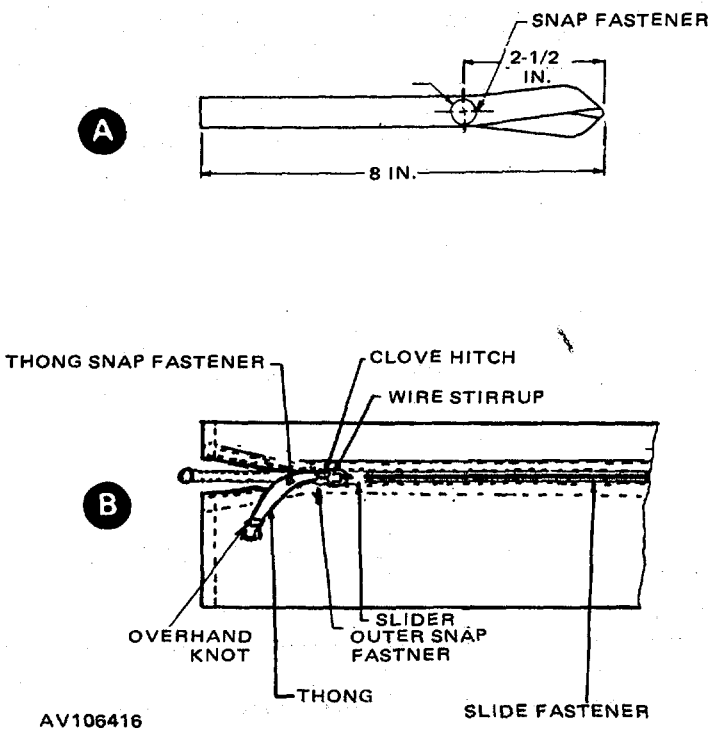

Figure 2-14. Thong replacement details

A. Construction details.
B. Thong attachment completed.

2-14. INDIVIDUAL OVERWATER SURVIVAL KIT-Continued

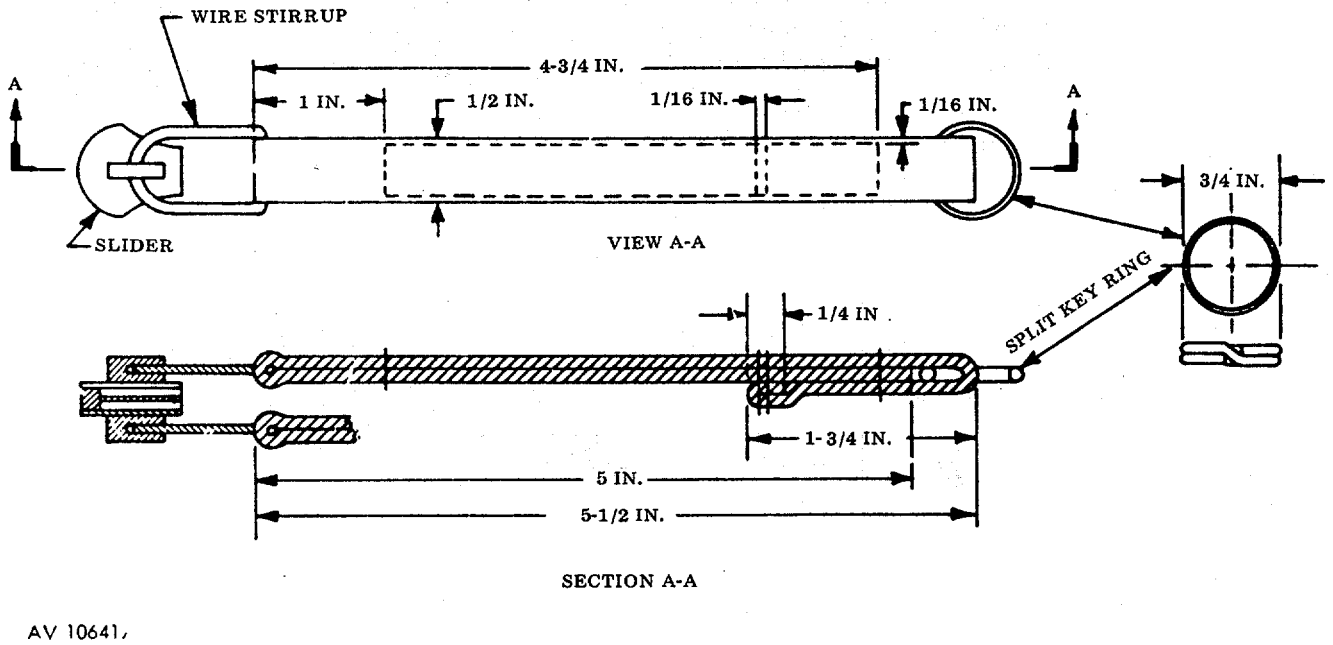

Figure 2-15. Ring chape construction details

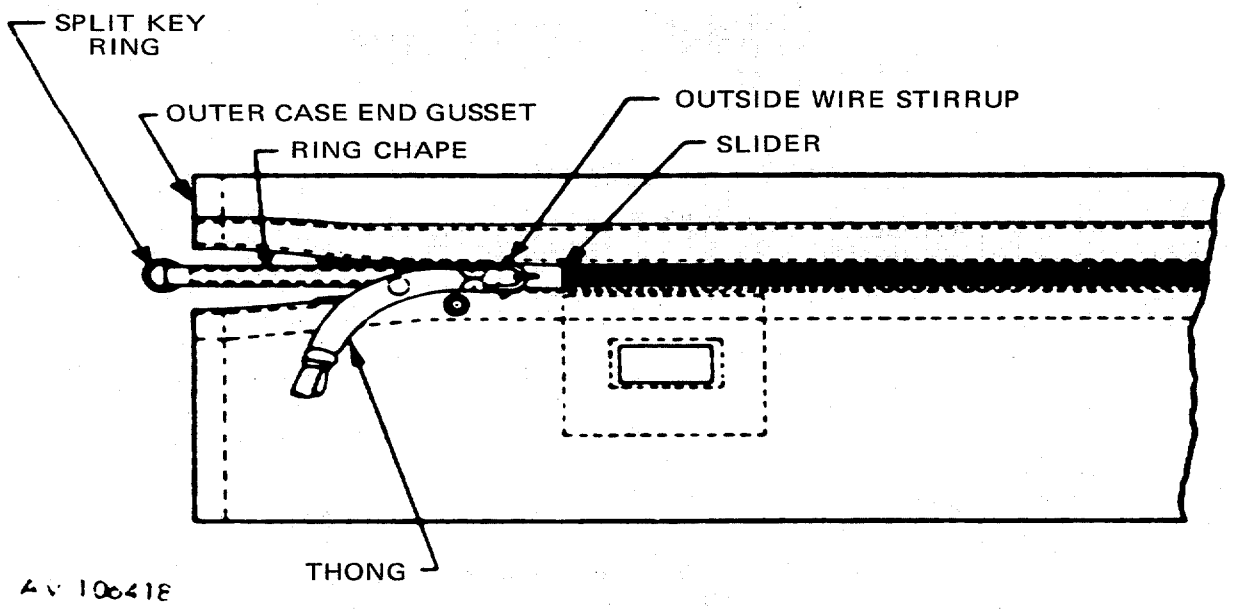

Figure 2-16. Ring chape installed on kit outer case slide interlocking fastener

2.14. INDIVIDUAL OVERWATER SURVIVAL KIT - Continued

8. If applicable, connect the life raft inflation assembly pull-cable to the chape split key ring.

(4) Replacement. Replace an unserviceable kit outer case which is beyond repair with a serviceable item from stock in accordance with repair ports, Appendix C.

b. Kit Inner Case.

(1) Inspection. Inspect the kit inner case using the procedures in table 2-1.

(2) Service. To service the kit inner case, clean and dry the case, as required, using the procedures in paragraph 2-6.

(3) Repair. As required, repair the inner case of the individual overwater survival kit using the procedures prescribed in paragraph 2-12b (3) and the specifics in table 2-3.

(4) Replacement. Replace an unserviceable kit inner case which is beyond repair with a serviceable item from stock in accordance with repair parts, Appendix C.

c. Connector Web.

(1) General. The connector web is a 173-inch length of webbing which is used to connect the survival kit to the packed individual LR-1 life raft assembly.

(2) Repair. Repair the connector web by restitching the loop end of the webbing length according to original construction details and paragraph 2-7, using the specifics in table 2-3. However, to perform the repair, the connector web must be removed from the survival kit as follows:

(a) Web removal.

1. Remove the bowline knot made in the webbing end of the outer case connector loop.

2. Remove the slipknot which secures the connector web to the neck of the carbon dioxide cylinder and remove the web from the survival kit.

(b) Web installation. Reinstall a repaired connector web within the survival kit by reversing the procedures in (a) above. Ensure the web running end does not exceed 2-1/2 inches in length after the web has been secured to the connector loop with a bowline knot. Also ensure the web length is S-folded under the life raft and across the top of the kit inner cage.

(3) Replacement. Replace an unserviceable connector web by fabricating as follows:

(a) Remove the original connector web according to the procedures in (2) (a) above.

2-14. INDIVIDUAL OVERWATER SURVIVAL KIT-Continued

(b) Cut a 178-3/4-inch length of 1/2-inch-wide tubular nylon webbing and sear the ends.

(c) On one end of the webbing length, make a 5-3/4-inch-long foldback (figure 2-17). Secure the foldback by stitching a 2-3/4-inch-long single-X-box-stitch formation with two double ends, 1/8 inch in from each webbing edge, using the specifics in table 2-3. Stitching will be made in accordance with paragraph 2-7.

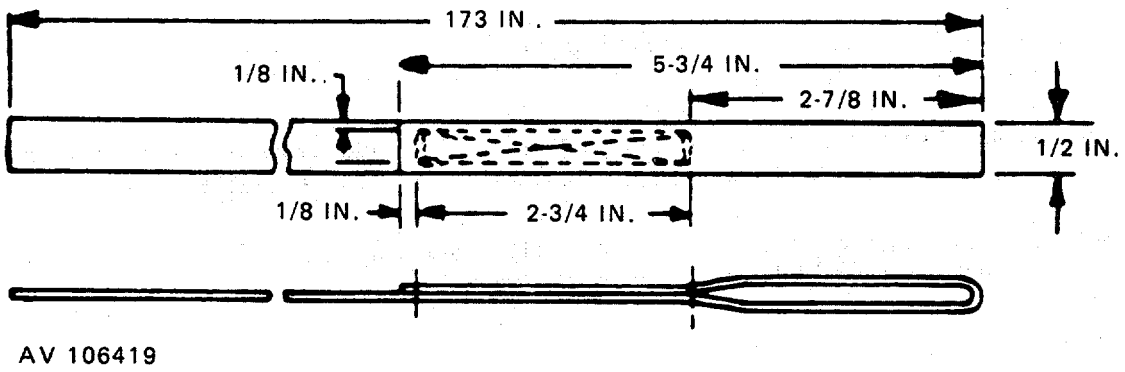

Figure2-17. Connector web construction details

(d) Install the replacement connector web in the survival kit as prescribed in (2) (b) above.

(e) Life raft assembly will be inspected I.A.W. TM 5-4220-202-14, T.O. 14S-1-102, Maintenance Instructions with Parts Breakdown, USAF Flotation Equipment.

d. Survival Components.

(1) Inspection. Inspect the survival components of the individual overwater survival kit using the procedures in table 2-1. Components which are damaged or defective shall be replaced. If required, mark the first aid kit medical items as outlined in paragraph 2-12 a.

(2) Repair. Repair the first aid kit case using the applicable procedures outlined in paragraph 2-12c (2) (b).

(3) Replacement. Replace a damaged, missing or otherwise unserviceable survival component with a serviceable item from stock as prescribed in paragraph 2-5 and in accordance with repair parts, Appendix C. First aid kit medical items which are unserviceable will be replaced.

e. Repacking the Survival Kit. Repacking of the individual overwater survival kit constitutes packing of the kit survival components in the kit inner case, folding of the life raft and packing the raft in the kit outer case, and closing of the kit outer case, with all kit components intact.

2-14. INDIVIDUAL OVERWATER SURVIVAL KIT--Continued

(1) Repacking the survival components. Repack the survival components of the individual overwater survival kit, except the life raft, within the kit inner case using the applicable procedures cited in paragraph 2-12d, the original kit packing details, the individual 9-by 12-inch kit packing list, and the details shown in figure 2-18. Ensure the kit operator's manual, TM 55-1680-350-10, is stowed and secured inside the pocket located on the exterior of the kit outer case.

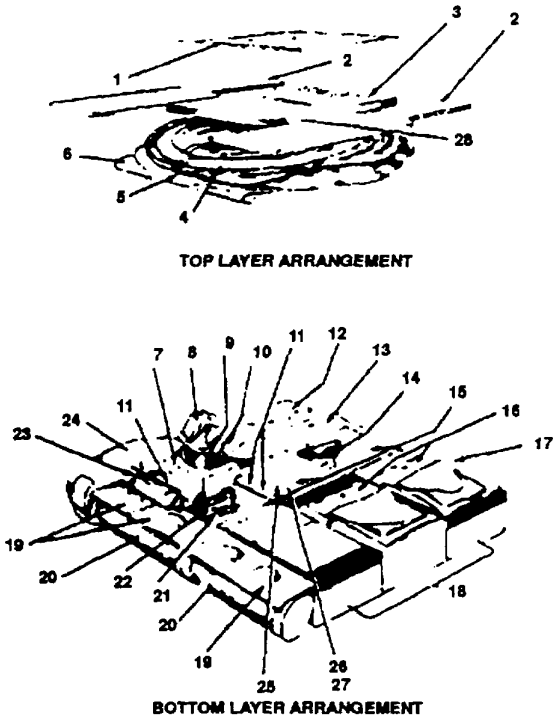

Figure 2-18. Inner case packing details for survival components of the Individual overwater survival kit.

1. KR packing lit
2. Raft boat paddle
3. Survival manual (ARM164) (FM21-76)
4. Insect headnet
5. Reversible sun hat
6. Water storage bag
7. MC-1 magnetic compass
8. Boat baler
9. Sponge
10. Sunbur-prevention preparation
11. Wood malcfh1 container
12. First aid kit
13. Plastic spoon
14. Pocket knife
15. Food packets
16. Fluorescent a marker
17. Frying pan
18. Seawater desalter kit
19. Compressed trioxane fuel
20. Smoke and Illumination signals
21. Signaling mirror
22. Fishing tackle kit
23. Knife sharpener
24. Raft repair kit
25. Fire starter, magnesium
26. Saw, finger grip
27. Firestarter, *park lite

*28. Not, multipurpose (net, gill fishing)

**29. Blanket combat casualty (not shown)

*Net, multipurpose (net, gill fishing) can be placed anywhere in top cover
**Blanket combat can be placed anywhere it will fit within the survival kit

2.14. INDIVIDUALOVERWATER SURVIVAL KIT - Continued

(2) Secure the running end of the 173-inch-long connector web, which is attached to the neck of the carbon dioxide cylinder, to the outer case connector loop with a bowline knot. Ensure the web running end beyond the bowline knot does not exceed 2-1/2 inches in length.

(3) Invert the folded life raft and place the raft into the upper section of the kit outer case with the carbon dioxide cylinder located on the side of the case where the top stops and chain scoops have been removed from the slide interlocking fastener (zipper) end (figure 2-19).

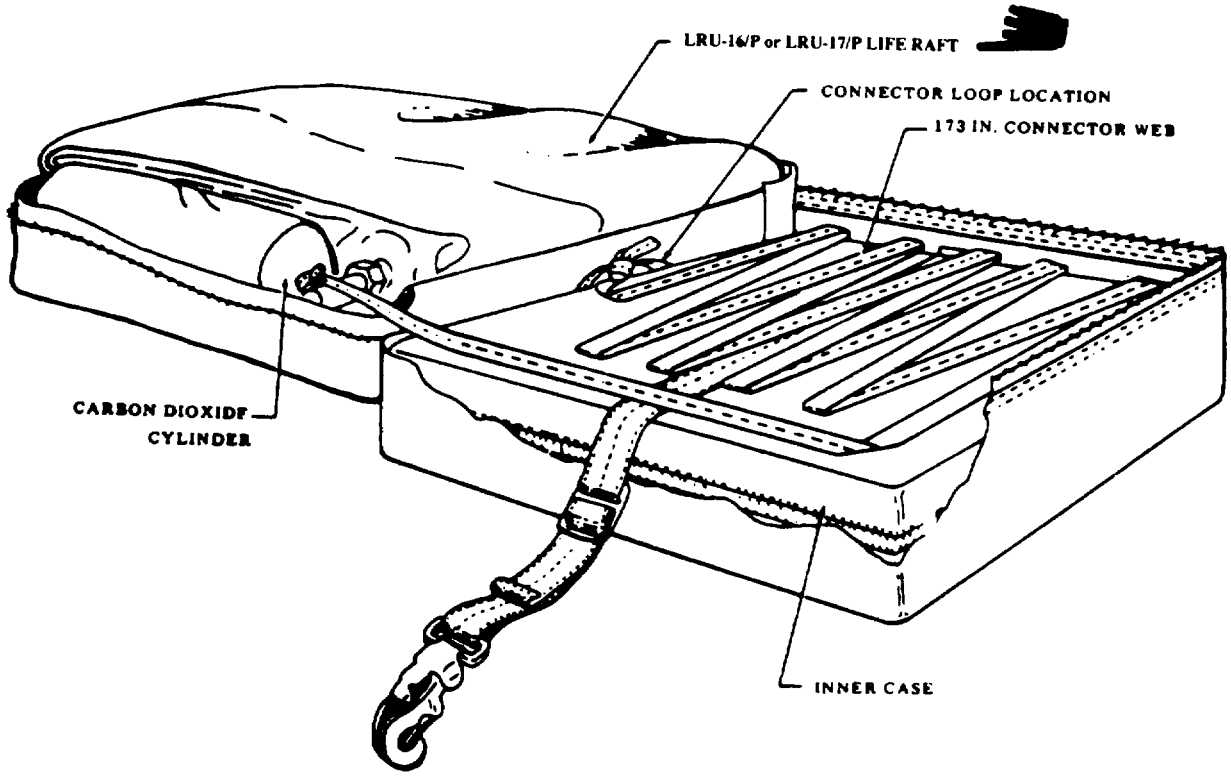

Figure 2-19. One-man life raft pocked in kit outer case upper section with connector web stowed

2-14. INDIVIDUAL OVERWATER SURVIVAL KIT - Continued

(4) Closing the survival kit.

(a) Fold the kit outer case upper section back onto the lower section and using the case slide interlocking fastener, close the outer case to a point adjacent to the top of the inflation assembly carbon dioxide cylinder.

(b) Connect the 3/4-inch-diameter split key ring on the end of the ring chape to the loop formed on the end of the inflation assembly pull-cable (figure 2-22).

CAUTION

When handling the Individual overwater survival kit under any circumstances, ensure the slide interlocking fastener thong Is secured to the kit outer case snap fastener to prevent Inadvertent activation of the raft inflation assembly as the stops on the slide interlocking fastener have been removed.

(c) Engage the snap on the side interlocking fastener with the snap on the side of the kit outer case and complete the closure of the kit outer case (figure 2-20).

Figure 2-20. Individual overwater survival kit packed and kit closure completed

2-14. INDIVIDUAL OVERWATER SURVIVAL KIT - Continued

NOTE

Prior to repacking the survival components in the kit Inner case, ensure the Inner case Is positioned Inside the kit outer case. In addition. place the survival manual (AFM 64-5) or (FM 21-76) and the operator's manual (TM 55-1680-350.10) in an individual compatible sized plastic polyethylene bags with Interlocking closure to prevent exposure of the printed matter to moisture.

NOTE

Folding (FIGURE 2-21) and packing the life raft will be in accordance with TM 5-4220.202-14/T.O. 14S-1-102, Maintenance Instructions With Parts Breakdown, USAF Flotation Equipment.

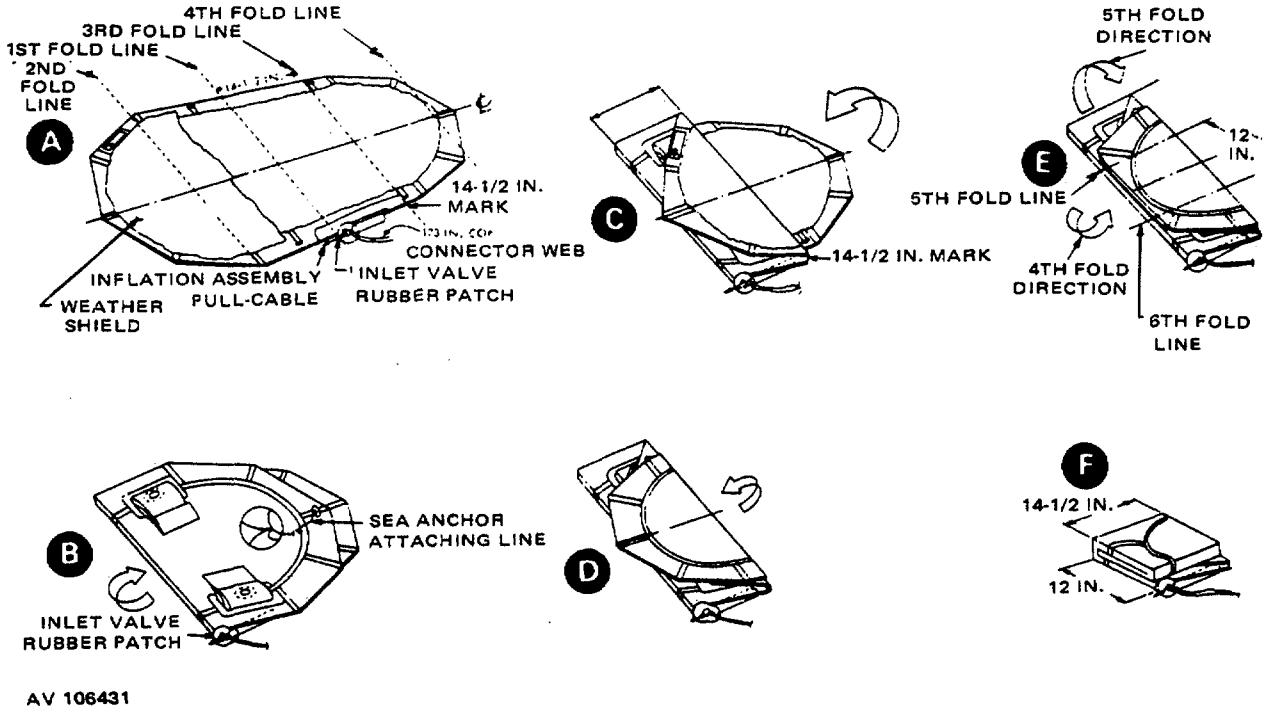

Figure 2-21. One-man life raft folding details

A. Raft in proper layout.
B. First fold completed.
C. Second fold completed.
D. Third fold completed.
E. Fourth fold completed with fifth and sixth fold specifics.
F. Raft folding completed.

2-14. INDIVIDUAL OVERWATER SURVIVAL KIT-Continued

(d) Complete the packing and closure of the overwater kit by drawing the free slide on the slide interlocking fastener to the opposite side of the kit outer case.

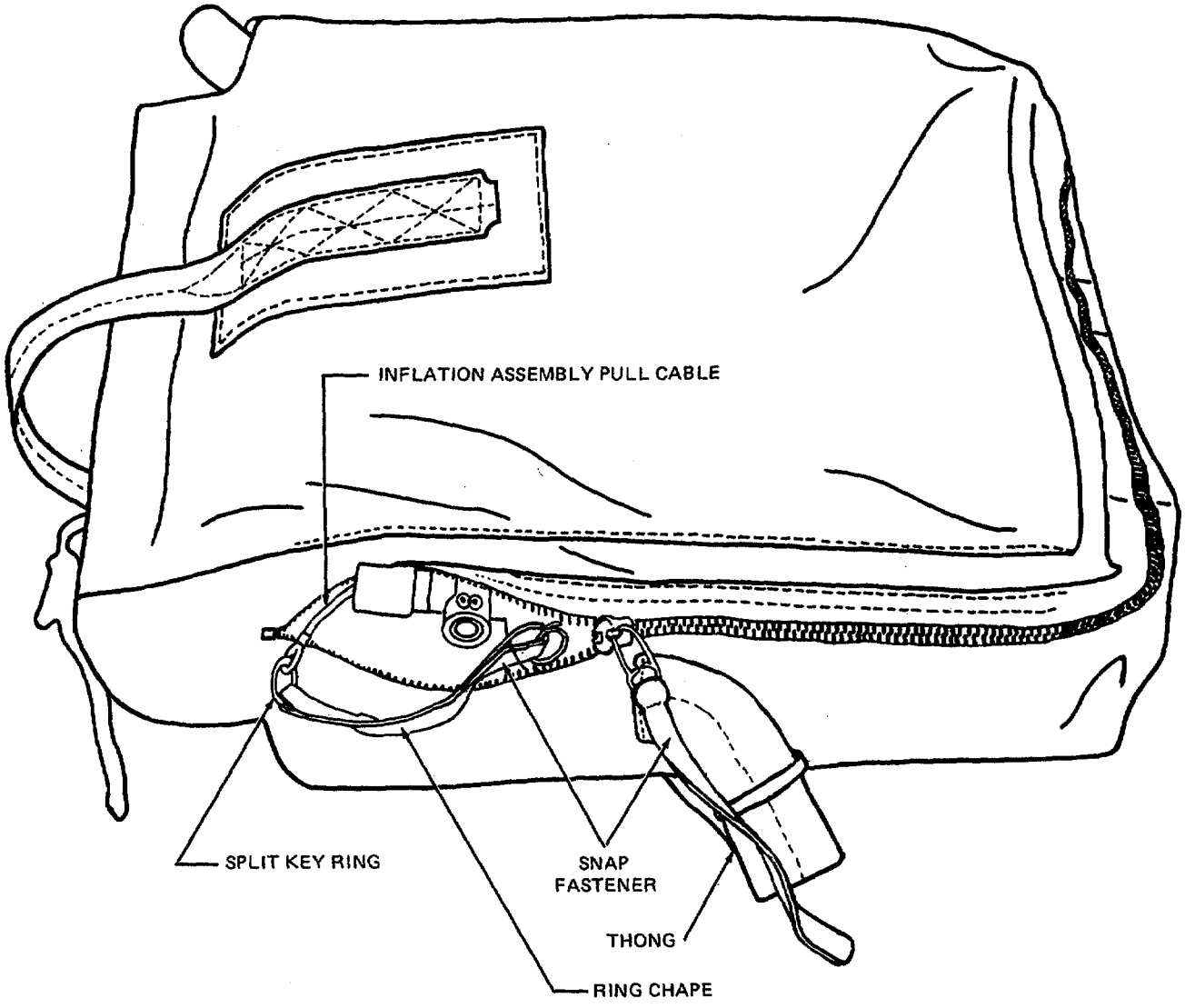

Figure 2-22. Connecting the raft inflation assembly and kit closing details

2-15. SRU-21/P SURVIVAL VEST-KIT

a. Vest.

(1) Inspection. Inspect the SRU-21/P survival vest according to procedures outlined in table 2-1.

(2) Service. As required, service the survival vest by cleaning and drying as prescribed in paragraph 2-6.

(3) Repair. Repair the SRU-21/P survival vest (figure 2-23) as follows:

(a) Restitching. Restitch broken or loose stitching on the survival vest according to original construction details and paragraph 2-7, using the specifics in table 2-3.

Figure 2-23. The SRU-21/P survival vest construction details

(b) **Darning and patching**.

1. **Vest.** The vest may be repaired by patching, using the procedures in paragraph 2-7, the specifics in table 2-3. Darning will not be performed on the vest body.

2. **Vest pockets.** The vest pockets may be repaired by darning or patching, as applicable, using the procedures in paragraph 2-7 and the specifics in table 2-3. Patching will be performed using type III 7.25-ounce nylon duck cloth.

2-15. SRU-21/P SURVIVAL VEST KIT-Continued

(c) Replacing edge and seam binding. Replace damaged binding around the outside edges and on the seams of the vest by fabricating as follows:

1. Remove the original edge binding length by cutting the stitching which secures the binding to the vest. Ensure the vest material is not damaged during the cutting process.

2. Cut a length of 3/4-inch-wide, type III nylon tape equal to the length of the original binding material and sear the ends.

3. Position the tape length in the original binding location, and secure the tape by stitching according to original construction details, using the specifics in table 2-3. Stitching will be made in accordance with paragraph 2-7.

(d) Replacing fastener tape. Replace defective nylon hook-or pile-fastener tape on the vest or a vest pocket by fabricating as follows:

1. Remove the original hook- or pile-fastener tape length by cutting the stitching which secures the tape to the vest or pocket, as applicable. Ensure the adjacent vest or pocket material, as applicable, is not damaged during the cutting process.

2. Cut a length of 1-inch-wide hook-or pile-fastener tape, as applicable, equal to the length of the original fastener tape.

3. Position the replacement fastener tape length in the original fastener tape location and secure the tape length by stitching according to original construction details and paragraph 2-7, using the specifics in table 2-3.

(e) Replacing loop adjustment webbing. Replace a damaged loop adjustment webbing length at the back of the vest by fabricating as follows:

1. Remove the original loop adjustment webbing length by cutting the stitching which secures the webbing to the vest. Ensure the adjacent vest material or the loop tape cord is not damaged during the cutting process.

2. Cut a length of 7/16-inch-wide nylon webbing with one looped edge equal in length to the original loop adjustment webbing length and sear the ends.

3. Position the webbing length in the original adjustment webbing location and secure the webbing by stitching according to original construction details and paragraph 2-7, using the specifics in table 2-3. Ensure the loops on the one webbing edge are securely anchored by stitching along the loop edge of the webbing, catching the webbing and the loops.

2-15. SRU-21/P SURVIVAL VEST-KIT-Continued

(f) Replacing a loop tape cord. Replace a defective loop tape cord at the vest back by fabricating as follows:

1. Remove the original loop tape cord by cutting the knot off of one cord end and unlace the cord from the loops on the loop adjustment webbing. Ensure the loops or the loop adjustment webbing is not damaged during the cutting process.

2. Cut a 114-inch length of 1/16-inch-wide, type 1A coreless nylon cord and sear the ends.

3. Secure one end of the cord length at the top loop on one length of loop adjustment webbing with a square knot. Working in alternating directions, lace the cord length running end through every third loop on the loop adjustment webbing, ending at the bottom of one loop adjustment webbing length. Secure the cord length running end to a bottom loop with a square knot and trim to 1/4 inch.

(g) Replacing a slide Interlocking fastener. A slide interlocking fastener (zipper) located on the vest front or on a vest pocket which is defective in any manner shall be replaced with a serviceable item from stock using the following procedures:

1. Remove the original slide interlocking fastener from the vest front or vest pocket as applicable, by cutting the stitching which secures the fastener. Ensure the adjacent vest material is not damaged during the cutting process.

2. Obtain a serviceable 15-inch-long, type IV, style 8, size MHS slide interlocking fastener for use as a replacement item for the vest front closure. For a vest pocket, use a serviceable 10-inch-long, type 1, style 7, size MS slide interlocking fastener as a replacement item.

3. Position the replacement fastener in the original fastener location and secure the fastener by stitching according to original construction details and paragraph 2-7, using the specifics in table 2-3.

(h) Replacing a thong. Replace a damaged thong on the vest front closure slide interlocking fastener (zipper) by fabricating as follows:

1. Remove the original thong from the vest front closure slide interlocking fastener by cutting the thong material.

2. Cut a 2-3/4-inch length of 5/16-inch-wide, type 1 nylon tape and sear the ends.

2-15. SRU-21/P SURVIVAL VEST - KIT - Continued

3. Double the tape length. Pass the alined tape ends through the wire stirrup, pull on the slide interlocking fastener and back through the loop formed by the fold in the tape length to make a slip loop. Draw the slip loop tight. The thong finished length should measure 2-1/2 inches.

4. With the thong loose ends alined, secure the thong with a bartack located 1/8 inch back from the alined thong ends. The bartack shall be made using original thong construction details and the specifics in table 2-3.

(i) Altering vest size. When required, the size of the SRU-21/P survival vest may be altered to permit the vest to be worn in conjunction with front and rear body armor. Vest alteration procedures are as follows.

1. Place the vest on a repair surface with the outside of the back facing up.

2. Remove the inside center panel by cutting the panel material along each side, adjacent to the edges of the loop adjustment webbing lengths (figure 2-24). Ensure the loop adjustment webbing and the loop tape cord are not damaged during the cutting process.

3. Cut a 5-inch-wide vertical length of material from the removed inside panel for use in expanding the width of the left vest flap.

4. Cut the left flap of the vest straight down the center and separate the cut material.

5. Insert the material cut in 3. above between the flap cut edges and connect the expansion panel side edges to the cut edges of the original flap material with 1/2- inch-wide overlapping seams. Secure each seam by making two rows of stitching 1/4 inch apart the full length of the seam. Stitching will be made in accordance with paragraph 2-7, using the specifics in table 2-3.

12-15. SRU-21/P SURVIVAL VEST-KIT-Continued

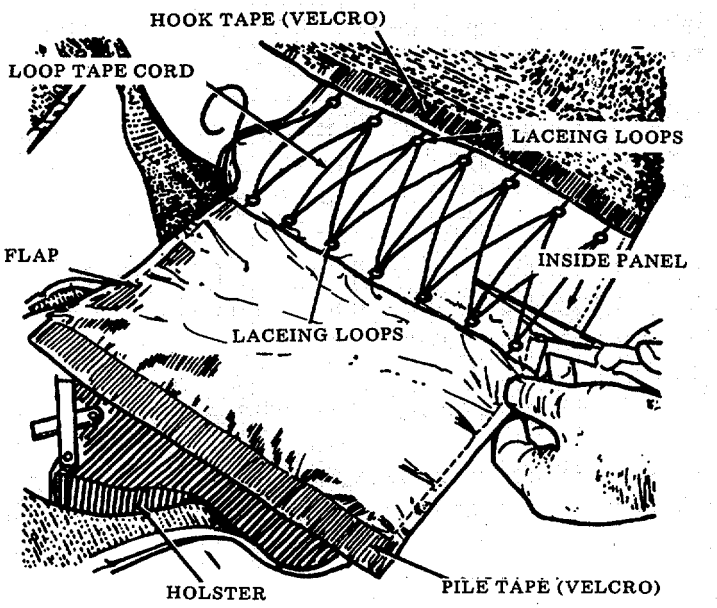

Figure 2-24. Removing the SRU-21/P survival vest inside panel.

6. Cut two lengths of 1-inch-wide pile-fastener tape equal in length to the original pile-fastener tape on the left flap. Secure the two lengths of tape to the flap, next to the original tape length, by stitching according to original construction details and paragraph 2-7, using the specifics in table 2-3.

(j) Altering vest to incorporate the ANIPRC-90 radio pocket. When required the SRU-21/P survival vest may be altered to incorporate the AN/PRC-90 pocket. Vest alteration procedures are as follows:

1. Remove the first aid kit pocket and the one above it from the left front side of the vest. Remove the vertical seams attaching the inside pocket and fold down. Use care while removing pockets, not to damage vest body or pockets that will be rein- stalled.

2. Remove the antenna cover from the old radio pocket, the contents from the first aid kit and tourniquet pockets may be installed in this pocket.

3. Position the new AN/PRC-90 radio pocket on the left side of the vest vertically, one inch from the zipper closure and' one inch from the lower edge of the vest. Sew in place.

2-15. SRU-21/P SURVIVAL VEST - KIT - Continued

4. Installation of the hunting knife and revolver holster is optional. If the vest is to be equipped with the hunting knife and revolver, position the knife sheath perpendicular and adjacent to the new radio pocket. Sew the top half in place and tack the bottom of the sheath in two places one turn double using waxed nylon 6 thread, FED-V-T-295. The revolver holster may be positioned at an angle behind the hunting knife sheath and sew in place.

NOTE

The SRU-21/P survival vest may be equipped with a holster, revolver. The survival vest may be equipped with a .38 caliber revolver when issued by the local unit commander. The holster shall be affixed, after being donned by the user, by handtacking the holster to the vest at four points using two turns doubled, ticket No. 6 waxed nylon thread. Secure each tack with a surgeon's and locking knot and trim tie end to 1/4 inch.

5. Resew the inside pocket in its original position. Stitching will be in accordance with paragraph 2-7, using the specifics in table 2-3.

(4) Replacement. Replace an SRU-21/P survival vest with a serviceable item from stock as authorized by repair parts, Appendix C.

b. **Survival Components**.

(1) Inspection. Inspect the survival components of the SRU-21/P survival vest using the procedures in table 2-1.

(2) Repair. Repair of the survival components shall only involve replacing a damaged distress marker(strobe light) attaching line. Replace the line by fabrication using a 30-inch-length of 1/16-inch-wide, type 1A coreless nylon cord with seared ends. Attach one end of the cut cord length to the marker unit according to original attachment details and secure the running end of the cord length by bartacking the cord material in the original location on the applicable vest stowage pocket. Bartacking shall be made according to original attaching details, using the specifics in table 2-3.

(3) Replacement. Replace a damaged, defective, or missing, survival component of the SRU-21/P survival vest with a serviceable item from stock as prescribed in paragraph 2-5 and in accordance with repair parts, Appendix C. A tourniquet or first aid kit medical items which are unserviceable will be replaced.

(4) Repacking the first aid kit. Repack the first aid kit with serviceable medical items according to original packing details. Affix a marked pressure-sensitive label to the kit container at a point adjacent to the opening of the zip-loc bag.

c. Assembly of Vest Survival Components. Assemble and stow the survival components of the SRU-21/P survival vest according to original vest assembly details, the vest assembly list, and the details shown in figure 2-25. The SDU-5/E distress marker light must be equipped with an ACR-FG1B flash guard and a suitable type dry battery which is prescribed in repair parts, Appendix C.

(5) Repacklng Procedure. Stow tourniquet with a 8-10 inch loop.

2-15. SRU-21/P SURVIVAL VEST-KIT-Continued

NOTE

The assembly list and the operators manual (TM 55-1680-351-10) for the SRU-21/P survival vest will be stowed in the vest inside pockets. Prior to repacking the manual in the vest, place the publication in an individual compatible sized plastic polyethylene bag (zip-loc bag) to prevent exposure to moisture.

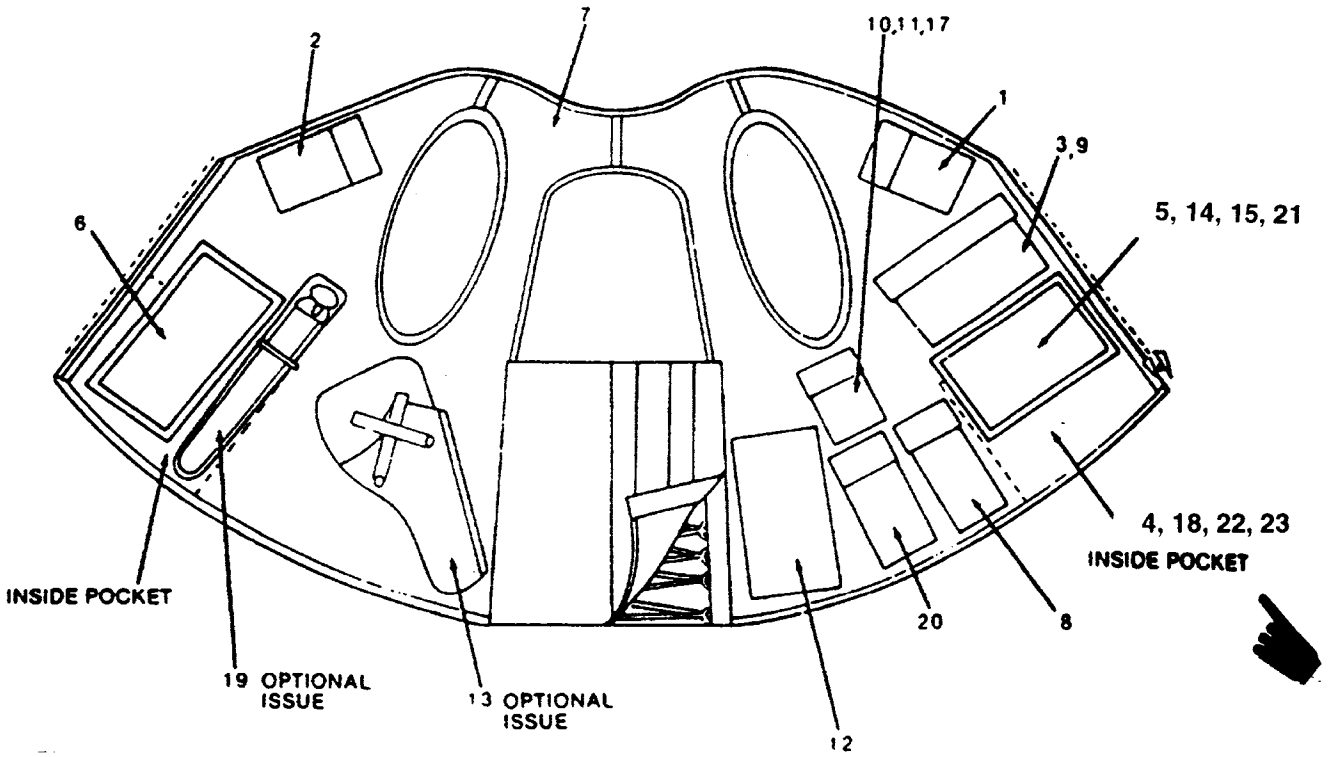

Figure 2-25. Assembly and stowage details for survival components of the SRU-21IP survival vest

1. Tourniquet
2. Lensatic composs
3. DELETED
4. Plastic water bag
5. Magnesium bar, fire starter
6. Survival receiver - transmitter (AN/PRC .90,ARCRT-10, AN/URC48 as applicable)
7. Survival vest
8. Pocket knife
9. Distress marker light
*10. .38 cliberM41 ball cartridges
11. .38 caliber M41 tracer cartridges
12. foliage penetrating signal kit
*13. Holster
14. Signaling mirror
15. First Aid Kit
16. Assembly instruction sheet (not shown)
17. Whistle, plastic
18. Blanket, combat
19. Knife, hunting, sheathed
20. Firestarter, spark life
21. Insect repellent
22. Glove Exam, 6515-01-364-8553
23. Betadine Pad, 6515-01-203-6285

*Issued by Unit Commander

2-15. SRU-21/P SURVIVAL VEST - KIT - Continued

d. Radio Installment Modifications. In order to insert the PRC/90 radio into the SRU-21/P radio pocket, the antenna must be positioned as shown in figure 2-26.

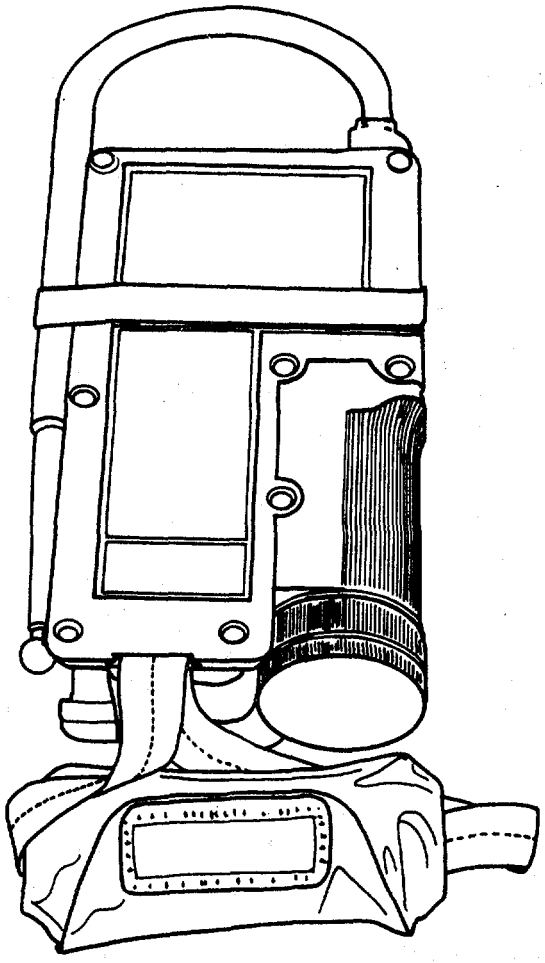

Figure 2-26. Radio with antenna stowed properly for SRU-21/P vest

2-16. OV-1 AIRCRAFT SURVIVAL VEST

a. Vest. The OV-1 aircraft survival vest is similar to the SRU-21/P survival vest, except that size alteration is not applicable to the OV-1 vest (comes in two sizes, small and large) and the OV-1 vest incorporates the LPU-10/P life preserver.

(1) Inspection. Inspect the OV-1 aircraft vest flotation equipment according to procedures outlined in TM 5-4220-202-14/T.0. 14S-1-102, Maintenance instruction with Parts Breakdown, USAF Flotation Equipment.

(2) Service. As required, service the survival vest by cleaning and drying as prescribed in paragraph 2-6.

(3) Repair. Use repair procedures applicable to SRU-21/P survival vest as outlined in paragraph 2-15.

(4) Replacement. Replace OV-1 survival vest with serviceable items from stock as authorized by repair parts Appendix C.

b. Survival Components. Refer to survival components for the OV-1 survival vest, in repair parts, Appendix C. The SRU-31/P OV-1 Survival Vest Component, packets will be inspected to assure serviceability and completeness. If the packets do not have an identification serial number assigned from manufacturer, assign a local number. Stencil in 1/2-inch letters across the top of each kit the date placed in service "DOI-MM/YY". On the medical packet attach a 2-inch by 31/2 inch stick-on label to the front of the packet listings the following:

Lomotil	Exp----------	Lot#----------
Aspirin	Exp----------	Lot#----------
Eye Oint	Exp----------	Lot#----------
Water Tabs	Lot#----------	Retest----------

This label will aid in locating recalled items and items about to expire. Attach a file label over the opening flop to seal the medical kit. The label should have the date plus first initial and last name of the individual who inspected the kit. On the general purpose kit attach a label across the opening flap as with the medical kit to seal the kit.

c. Life Preserver. Inspect the life presever, I.A.W. TM 54220-202- 14/T.O. 14S-1-102, Maintenance Instructions with Parts Breakdown, USAF Flotation Equipment. For alternate method of attaching LPU-10 flotation equipment to the OV+ 1 survival vest, see figure 2-27a.

(1) Place the completed webbing fabrication as shown in figure 2-27a 1/2 inch under the arm hole and parallel to the arm hole finished binging tope and sew the four edges of the webbing in the best over lapping the start and ending stitches.

(2) Attach the right hand LPU pocket to the webbing using the 15-1/2"nylon tie strop and looping it through the lower pocket grommets and the vertical web straps on the webbing. When all the grommets and the vertical web straps on the webbing. When all the grommets and loops have connected loop the nylon tie strap back to the connecting end of the nylon strap and secure it. Cut off excess strapping.

d. Survival Components.

(1) Inspection. Inspect the survival components using the procedures in table 2-1.

(2) Repair. Use SRU.21/P survival components repair procedures paragraph 2-15b.(2) and table 2-3.

(3) Replacement. Use repair parts, Appendix C for survival components replacement procedures.

2-16. OV-1 AIRCRAFT SURVIVAL VEST - Continued

e. Assembly of Vest Survival Components. Assemble and stow the survival components using figure 2-27, and for assembly of vest survival components procedures, paragraph 2-15.

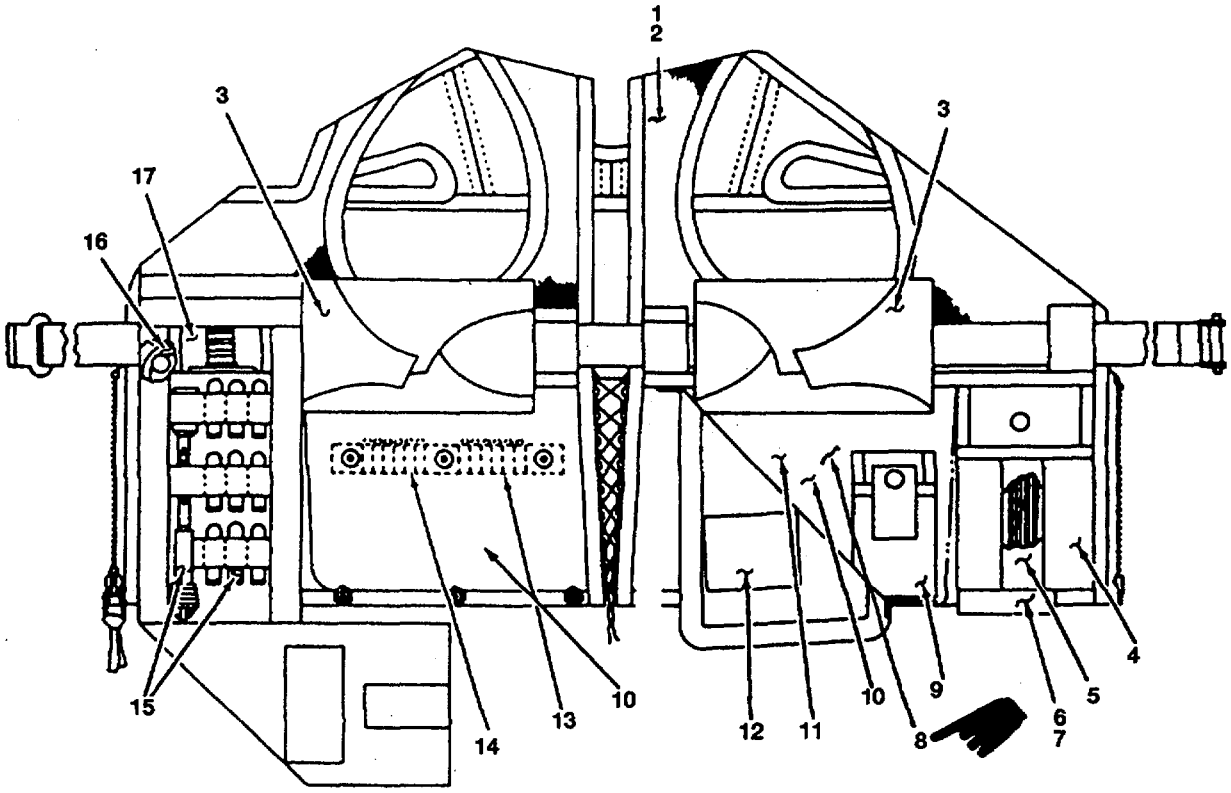

Figure 2-27. OV-1 aircraft survival vest components assembly and stowage details

1. Survival vest, small
2. Survival vest, large
3. Life preserver
4. Survival receiver-transmitter
5. Hook blade pocket knife
6. Fire starter, magnesium
7. Fire starter, spark lite
8. Plastic ball whistle
9. Distress marker light
10. SRU 31/P Packets 1 or 2
11. Assembly instruction sheet
12. Signaling mirror

*13. .38 caliber ball cartridges
*14. .38 caliber tracer cartridges
15. Distress signal kit
16. .38 caliber special revolver
17. Sheathed knife

*Issued by Unit Commander

Alternate method of attaching LPU-10 flotation equipment to the OV-1 survival vest, see figure 2-27a. Place the completed webbing fabrication as shown in figure 2-27a 1/2 inch under the arm hole and parallel to the arm hole finished binding tape and sew the four edges of the webbing in to the vest over lopping the start and ending stitches. Attach the right hand LPU pocket to the webbing using the 15-1/2' ' nylon tie strop and looping it through the lower pocket grommets and the vertical web straps on the webbing. When all the grommets and web loops have been connected loop the nylon tie strop back to the connecting end of the nylon strap and secure it. Cut off excess strapping.

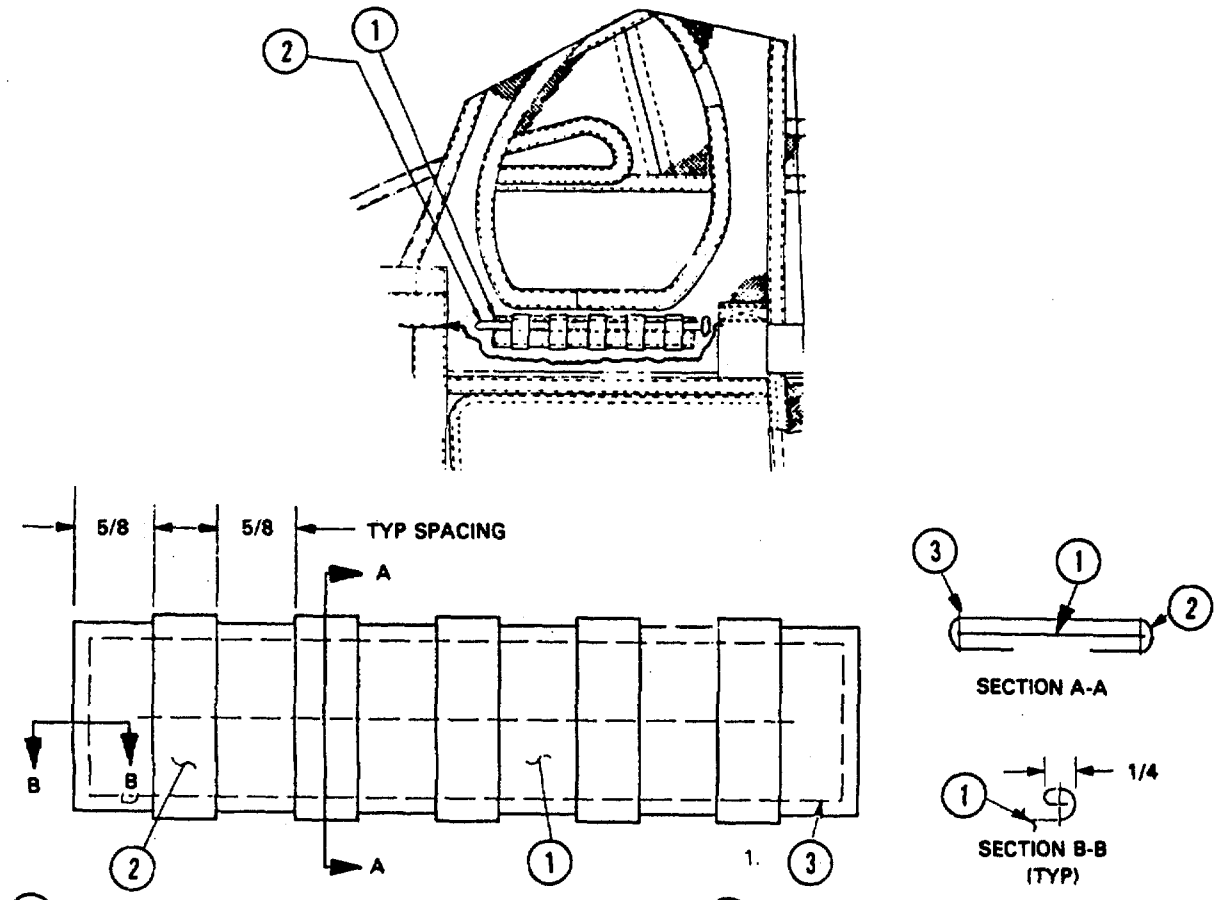

(1) MATERIALS LIST

1. Webbing 1" Finished Length 7"
   NSN 8305-00-261-8579

2. Webbing 1/2" Finished Length 1-1/2"
   NSN 8305-00-350-5596

(2) MATERIALS LIST

Strap, Electrical Bundle Tie 15.45" Long
NSN 5975-01-123-5761

(3) MATERIALS LIST

1. Thread, Nylon, OD-S1-V-T-295 Type 1
   Class A Size E

Figure 2-27a. Alternate method of attaching LPU-10 flotation equipment to the OV-1 survival vet.

2-17. MODIFICATION OF RADIO POCKET

a. In order to insert the PRC/90 radio into the OV-1 survival vest, modify radio pocket flap as shown in figure 2-29.

b. Position radio antenna as shown in figure 2-30.

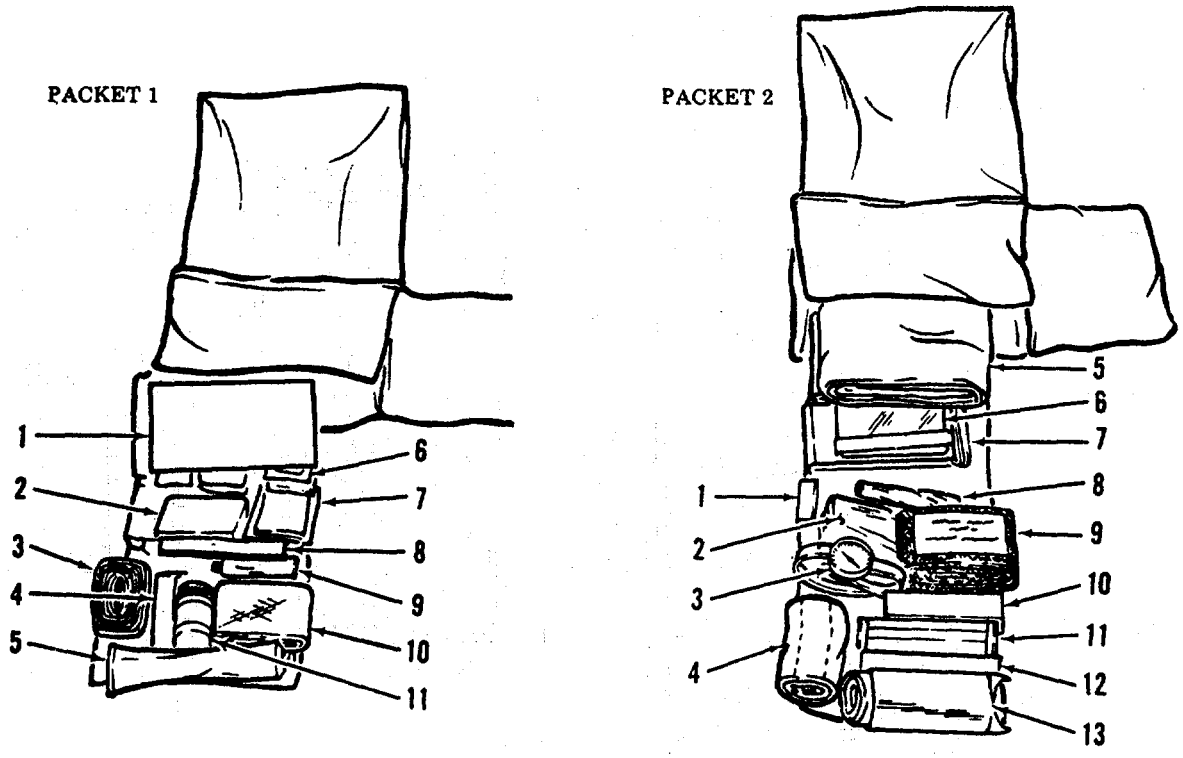

PACKET 1

1. Instruction card
2. Soap
3. Surgical tape
4. Water receptacle
5. Insect repellent
6. Pain killer
7. Anti-diarrhea
8. 8and-Ad
9. Bacitracin (eye ointment)
10. Bandage (elastic)
11. water pure tablets

PACKET 2

1. Chiclets
2. Tinder
3. Compass (wrist)
4. Water bag (1 quart)
5. Signal panel
6. Mirror
7. Razor knife
8. Tweezer and pins
9. Mosquito headnat and mittens
10. Charms
11. Enerjets
12. Metal match
13. Flashguards (red and blue)

Figure 2-28. SRU-31/P Packet 1 and 2

2-17. MODIFICATION OF RADIO POCKET - Continued

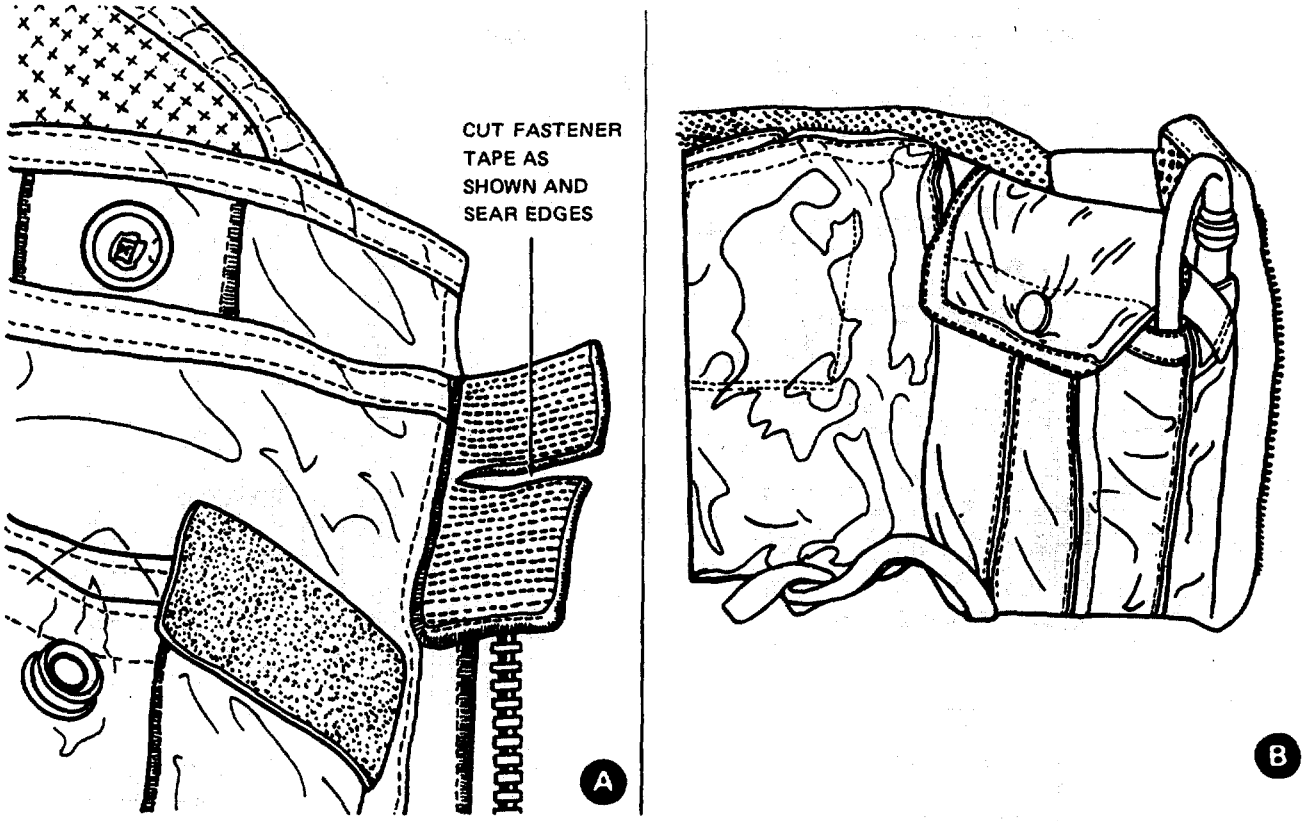

Figure 2-29. Radio pocket flap alterations for OV-1 vest

2-17. MODIFICATION OF RADIO POCKET - Continued

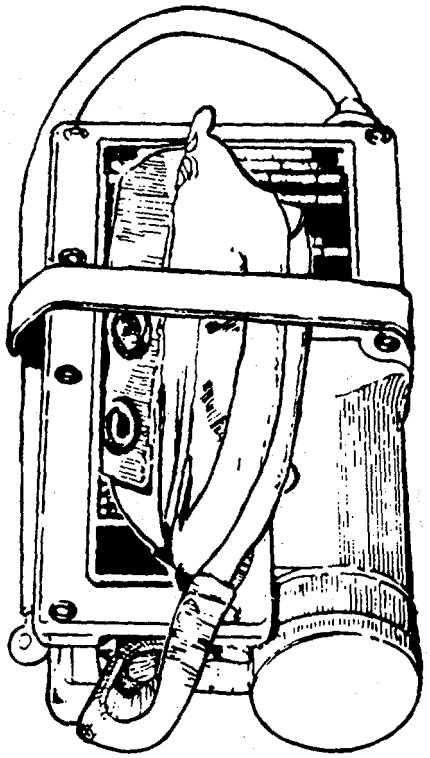

Figure 2-30. Radio with antenna stowed properly in OV-1 vest

2-18. OV-1 AIRCRAFT RIGID SEAT SURVIVAL KIT (RSSK)I

a. **Container**. Figure 2-31.

(1) **Inspection**. Inspect the container using the procedures in table 2-1.

(2) **Service.** As required, service the container as prescribed in table 2-1, Items 166-179.

(3) **Replacement**. The surviv6l kit or kit components which exceed the capability for being returned to a serviceable condition will be replaced with a serviceable item from stock as authorized in the repair ports listed in Appendix C.

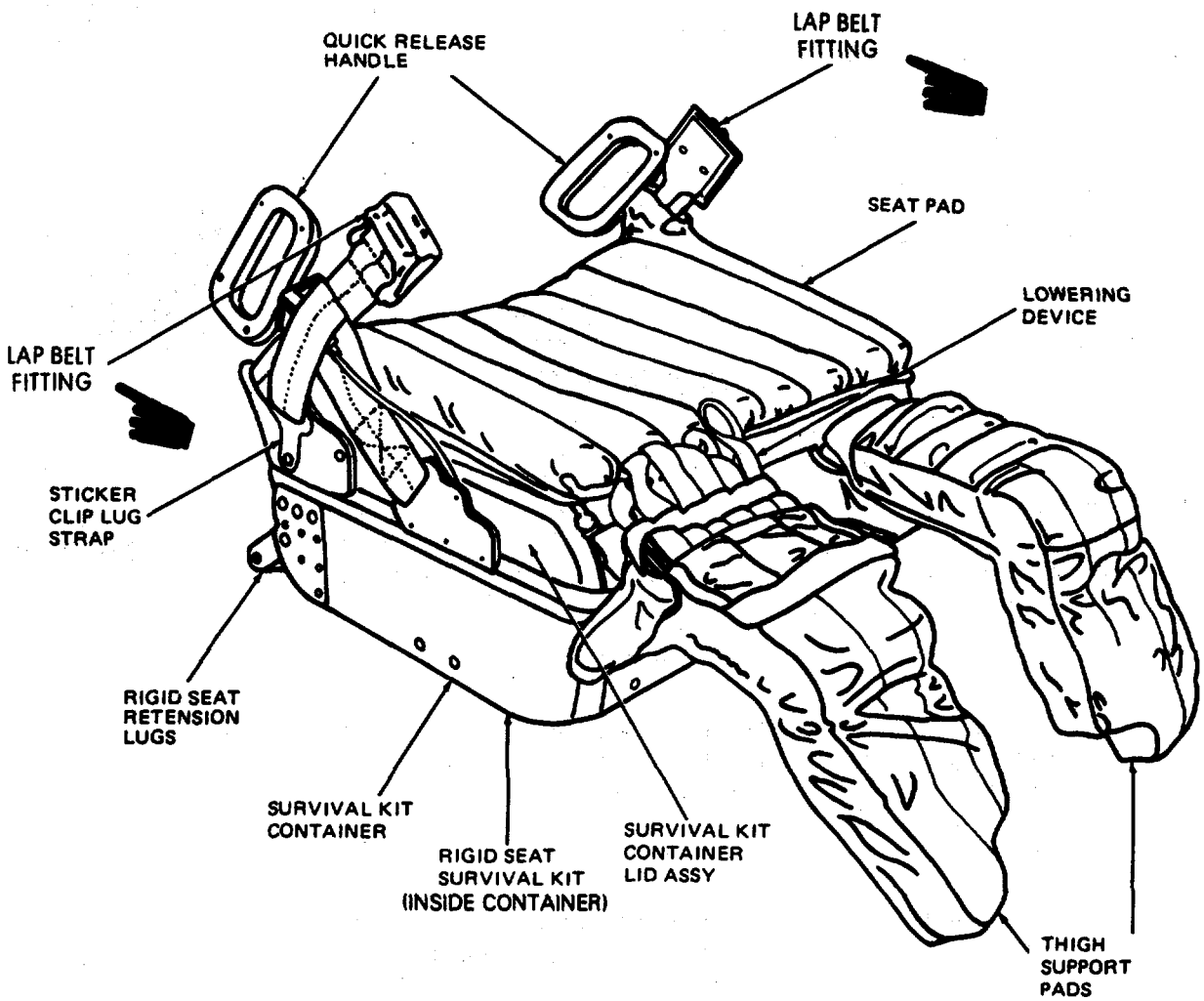

Figure 2-31. OV-1 aircraft rigid seat survival kit with seat pad and thigh support pads

2-18. OV1 AIRCRAFT RIGID SEAT SURVIVAL KIT (RSSK)-Continued

(4) **Folding and packing the RSSK 1 man life raft.**

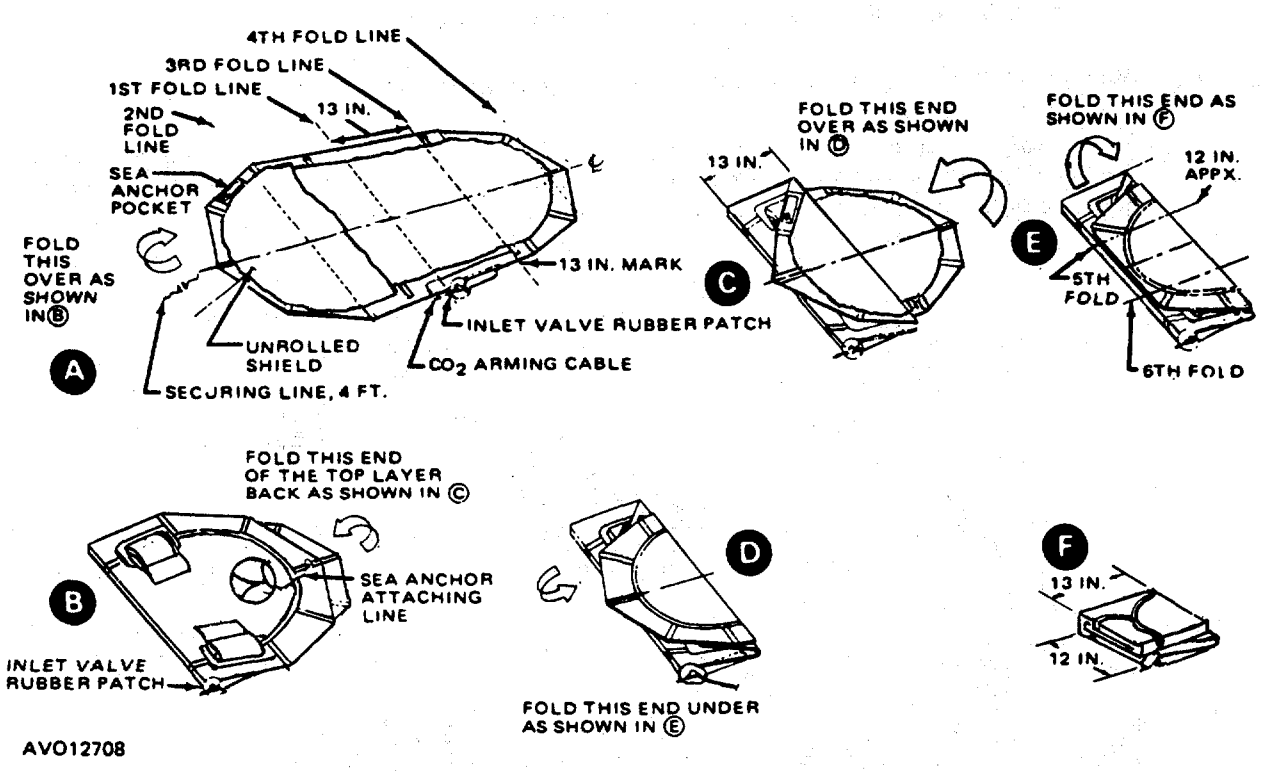

Figure 2-32. RSSK 1 man life raft folding details

A. Raft in proper layout.
B. First fold completed.
C. Second fold completed.
D. Third fold completed.
E. Fourth fold completed.
F. Fifth and sixth fold completed and ready for insertion into container.

NOTE

All references to direction (left, right, upper, lower) are presented as viewed by the packer facing the carbon dioxide cylinder side of the raft with the raft laying on the packing surface.

NOTE

Prior to folding a raft, ensure all trapped air is removed from the raft flotation tube by use of a vertical tank vacuum cleaner.

(a) **Folding**. Lay out the deflated raft on a clean packing table or other suitable surface with the raft top facing up and the raft weather shield located to the packer's left (A, figure 2-32.) Ensure the weather shield is unrolled and spread the shield over the top of the raft and smooth the shield out as flat as possible.

2.18. OV-1 AIRCRAFT RIGID SEAT SURVIVAL KIT (RSSK)-Continued

(b) Beginning at the left edge of the raft inlet valve rubber patch, measure 13 inches to the right along the raft side and using a piece of chalk, make a pronounced mark.

(c) Make the first fold of the raft by grasping the left end of the raft and extending the end over the top of the raft to the right, aligning the crease of the fold with the left edge of the inlet valve rubber patch (B).

(d) Shorten 28 inches of the sea anchor retaining line by making 8-inch-long hanks. Secure each end of the completed folds with a rubber band. In addition, spread the sea anchor out flat over the folded retaining line.

(e) At the 13-inch mark made in (b) above, complete the second fold of the raft by making a foldback in the previously folded raft end and ensure the foldback crease is alined with the mark (C).

(f) To make the third fold of the raft, fold the right end of the raft over the first two raft folds to the left (D).

(g) The fourth fold of the raft is made by making a fold-under of the raft ends which extend beyond the outside edge of the first raft fold (E). Ensure all edges of the raft are dressed.

(h) Complete the fifth fold of the raft by folding 12 inches of the raft upper end back toward the center of the folded raft.

(i) Make the sixth fold to complete the raft folding by folding the previously folded upper end of the raft over to the carbon dioxide bottle. Ensure all edges of the raft are dressed. The folded raft package should measure 12-inches-wide by 13-inches- long (F).

(5) **Attaching retaining line to cylinder.**

WARNING

GAS UNDER PRESSURE. Do not loosen or attempt to remove carbon dioxide cylinder from valve assembly.

(a) Unscrew valve from raft. Do not remove cylinder from pocket or anti-chafing ring from inlet check valve.

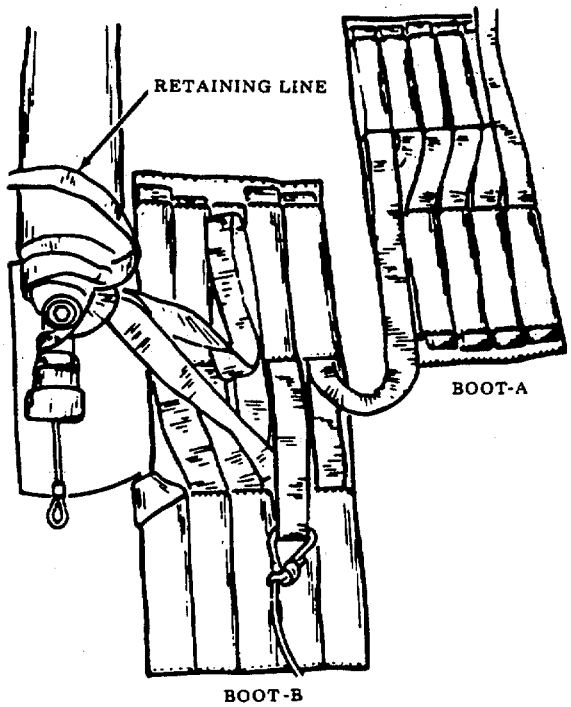

Figure 2-33. Attaching dropline around neck of valve

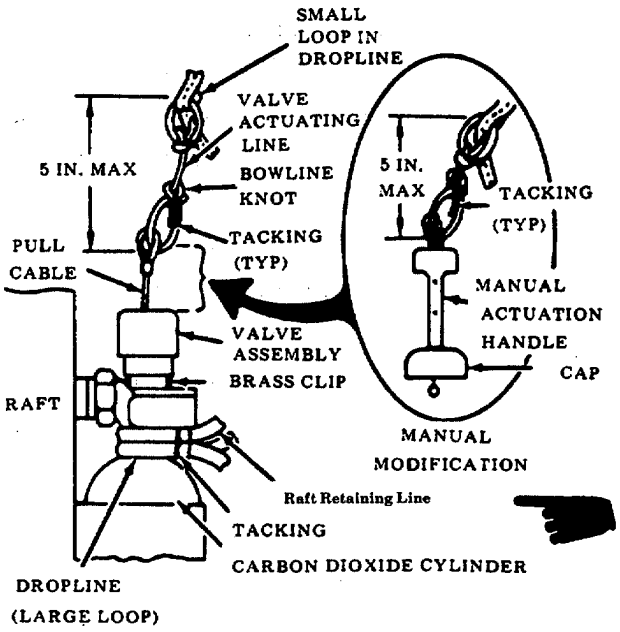

Figure 2-34. Passing actuating line through pull-cable loop

Note

When the raft Is completely packed and hooked up to cylinder in kit dropline, place raft on top of kit component bag and retaining line on top of raft. To better manage space, especially with the LRU-16/P and LRU. 17/P rafts, the raft must be pocked with the bottle to the rear of the RSSK. The contents of the inner bag must be arranged so as to leave a space in the rear where the inflation bottle will fit down Into. The Inner bag tiedown straps must be left loose enough to allow the raft bottle to extend to the bottom of the kit. The tiedown straps will still hold the inner kit contents bag in the bottom of the RSSK upon kit depolyment and lid/bottom separation.

(b) Attach large loop of dropline around neck of valve at cylinder with a slip loop knot. Pull knot tight and tack with two turns of waxed nylon - 6 cord single. Tie ends with a surgeon's knot followed by square knot (figure 2-33.)

(c) Attach loop of raft retaining line around neck of value at cylinder with a slip knot. Pull knot tight and tack with two turns of waxed nylon - 6 cord single. Tie ends with a surgeon's knot followed by square knot (figure 2-34).

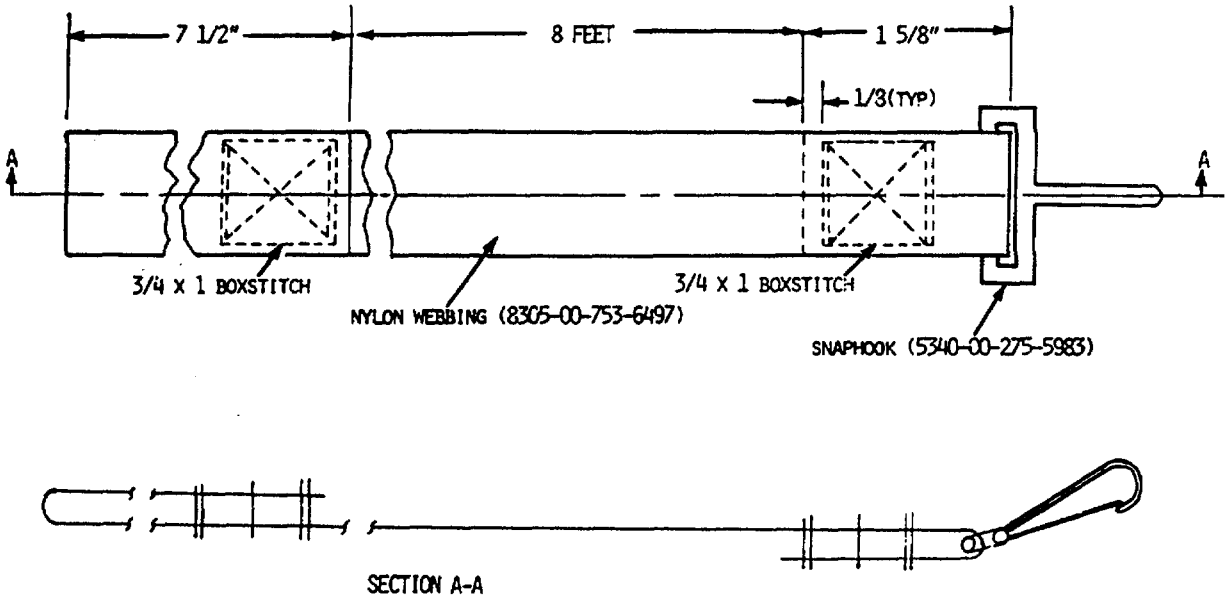

FABRICATION DETAIL FOR LIFE RAFT RETAINER LINE.

Figure 2-34a. Raft Retaining Line (OV-1 RSSK)

2-18. OV-1/AIRCRAFT RIGID SEAT SURVIVAL KIT (RSSK)-Continued

(d) Re-attach valve to raft and tighten I.A.W. TM 4220-202-14/T.O. 14S-1-102.

WARNING

Final dimension of valve actuating line is critical. Finished length shall not exceed five inches.

(e) Coil retaining line attached to neck of carbon dioxide cylinder and stow in raft retaining line pocket, Navy rafts Type LR-1 and PR-2. Close pocket closure tab and mate hook and pile tape patches. On the LRU-16/P and LRU-17/P rafts the retaining line is stowed next to the inflator assembly when packing the raft in the RSSK.

(f) When removing the overwater kit from service the inflation actuating lanyard with pull cable need not be removed from the dropline. Instead proceed as follows:

1. Lower slide collar on the life raft inflation assembly.
2. Remove pull cable swaged ball end from inflation assembly .
3. Raise slide collar on inflation assembly.
4. Remove inflation bottle from raft.
5. Insert defuser plug in inflation head.
6. Fold valve actuating line with pull cable attached back against the small loop on the RSSK dropline. Tape in place with 3 turns of tape, filament reinforced (NSN 7510-00-582-4772).

(g) When removing the overwater kit from service the inflation actuating lanyard with pull cable need not be removed from the dropline. Instead proceed as follows:

1. Lower slide collar on the life raft inflation assembly.
2. Remove pull cable swaged ball end from inflation assembly .
3. Raise slide collar on inflation assembly.
4. Remove inflation bottle from raft.
5. Insert defuser plug in inflation head.
6. Fold valve actuating line with pull cable attached back against the small loop on the RSSK dropline. Tape in place with 3 turns of tape, filament reinforced (NSN 7510-00-582-4772). Fold a 1/2-inch tab on the tape end to ease later removal of the tape.

b. **Equipment Bag**.

(1) **Inspection**. Inspect the equipment bag (fig. 2-35) using the procedures in table 2-1.

(2) **Service.** As required, service the equipment bag by cleaning and drying the equipment bag as prescribed in paragraph 2-6.

2-18. OV-1 AIRCRAFT RIGID SEAT SURVIVAL KIT(RSSK)-Continued

(3) **Repair**.

(a) **Restitching**. Restitch broken or loose stitching on the equipment bag (figure 2-35) according to original construction details, using the procedures in paragraph 2-7 and the specifics in table 2-3.

(b) **Daming and patching**. As applicable, darn or patch an equipment bag using the procedures in paragraph 2-7 and the specifics in table 2-3. Patching shall be performed using type cotton duck cloth.

(c) **Replacing the slide interlocking fastener**. A slide interlocking fastener (zipper) on the equipment bag which is broken or hard to manipulate shall be replaced with a service- able zipper from stock using the procedures outlined in paragraph 2-12 b (3) (c) and the specifics in table 2-3.

(4) **Installing equipment bag In RSSK**. When installing the frying pan in the equipment bag en- sure the angled and (front) of the pan is opposite to the closed slide fasteners. If the slide fasteners are next to the angled end they can interfere with closure of the kit lid.

(5) **Replacement.** Replace a damaged equipment bag which is beyond repair with a serviceable item from stock as authorized in the applicable repair parts listed in Appendix C.

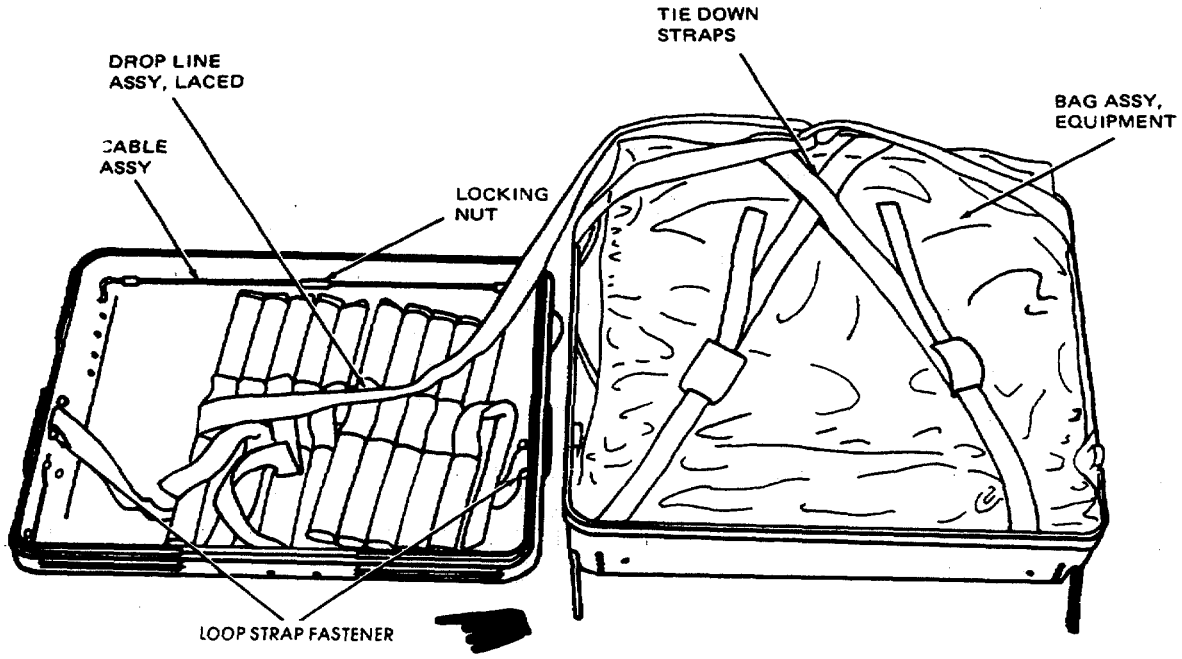

Figure 2-35. OV-1 aircraft RSSK, equipment bag, and drop line (Sheet 1 of 3)

2-18. OV-1 AIRCRAFT RIGID SEAT SURVIVAL KIT (RSSK)-Continued

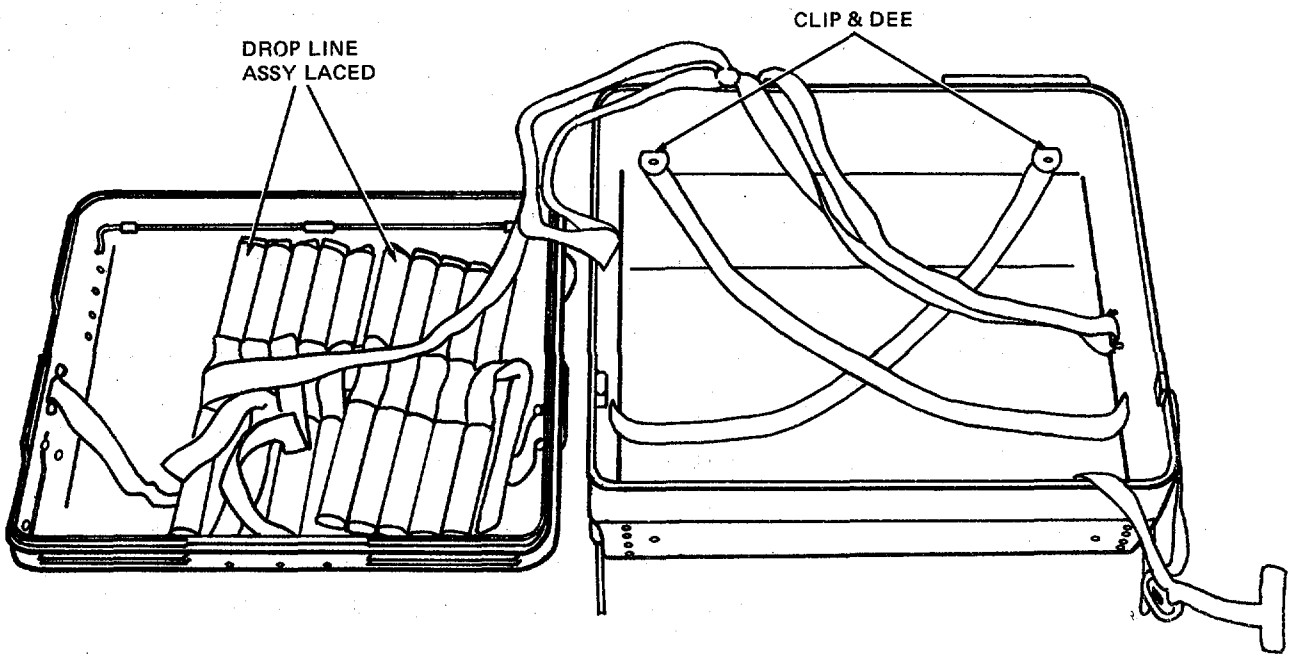

Figure 2-35. OV-1 aircraft RSSK, equipment bag, and drop line (Sheet 2 of 3)

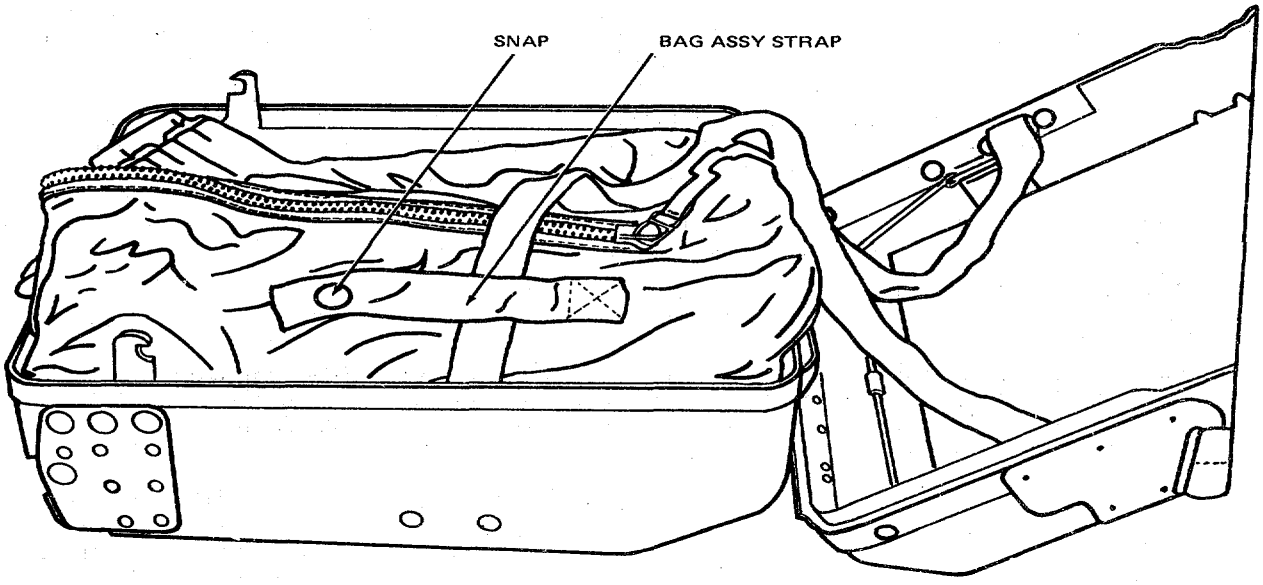

Figure 2-35. OV-1 aircraft RSSK, equipment bag, and drop line (Sheet 3 of 3)

2-18. OV-1 AIRCRAFT RIGID SEAT SURVIVAL KIT (RSSK)-Continued

c. **Replace RSSK hardware and accessories as listed in Appendix C, Repair Parts List and Special Tools List**.

(1) **Laced drop line assembly (figure 2-35).** Limit repair to darning and stitch replacement in accordance with paragraph 2-7. Use an 8-inch flat tip screwdriver, following the old folds, to restore a line that may be pulled out of container loops. Replace with a new line assembly that is completely removed from its container.

CAUTION

Use care not to sew line to container when repairing line container.

(2) **Tie down line assembly (figure 2-35).** Limit repair to minor restitching in accordance with paragraph 2-7. Replace as necessary, using supply catalog requirement.

(3) **RSSK lug attachment (figure 2-36, sheet 2, views A, B, and C).**

CAUTION

The left lug attachment assembly differs from the right lug attachment assembly. Use care when replacing them.

Use an 8-inch flat tip screwdriver and a 1/2-inch open end wrench, or equivalent tools, to replace the left or right Lug attachment assembly.

(4) **RSSK footman bracket (figure 2-35).** Use a 5/64 inch Allen wrench and a 3/8 inch open end wrench, or equivalent tools, to replace the footman bracket.

(5) **RSSK clip and dee (figure 2-35, attached to upper end of container and tie down straps, clip and dee not visible).** Use a 5/64 inch Allen wrench and a 3/8 inch open end wrench, or equivalent tools, to replace clip and dee.

(6) **Inspection cover, manual release (figure 2-36)**. Replace lid lock assembly inspection cover when cover does not stick properly or lettering is obliterated and lid locks are not visible for inspection.

NOTE

Remove inspection cover for manual opening of kit. Insert a six inch blade, flat tip screwdriver between lid locks and slide to the rear to open kit. This method of opening is used only when quick release handles will not open kit (figure 2-36).

(7) **Support assembly harness (figure 2-37).** Use a .050 Allen wrench or srnall flat tip screwdriver, or equivalent tools, depending on type of screw used, to remove canopy release from harness assembly (figure 2-37, detail A). After screw has been removed, remove keeper sleeve on canopy release to remove support assembly harness (figure 2-37, detail B).

2-18. OV.1 AIRCRAFT RIGID SEAT SURVIVAL KIT(RSSK)-Continued

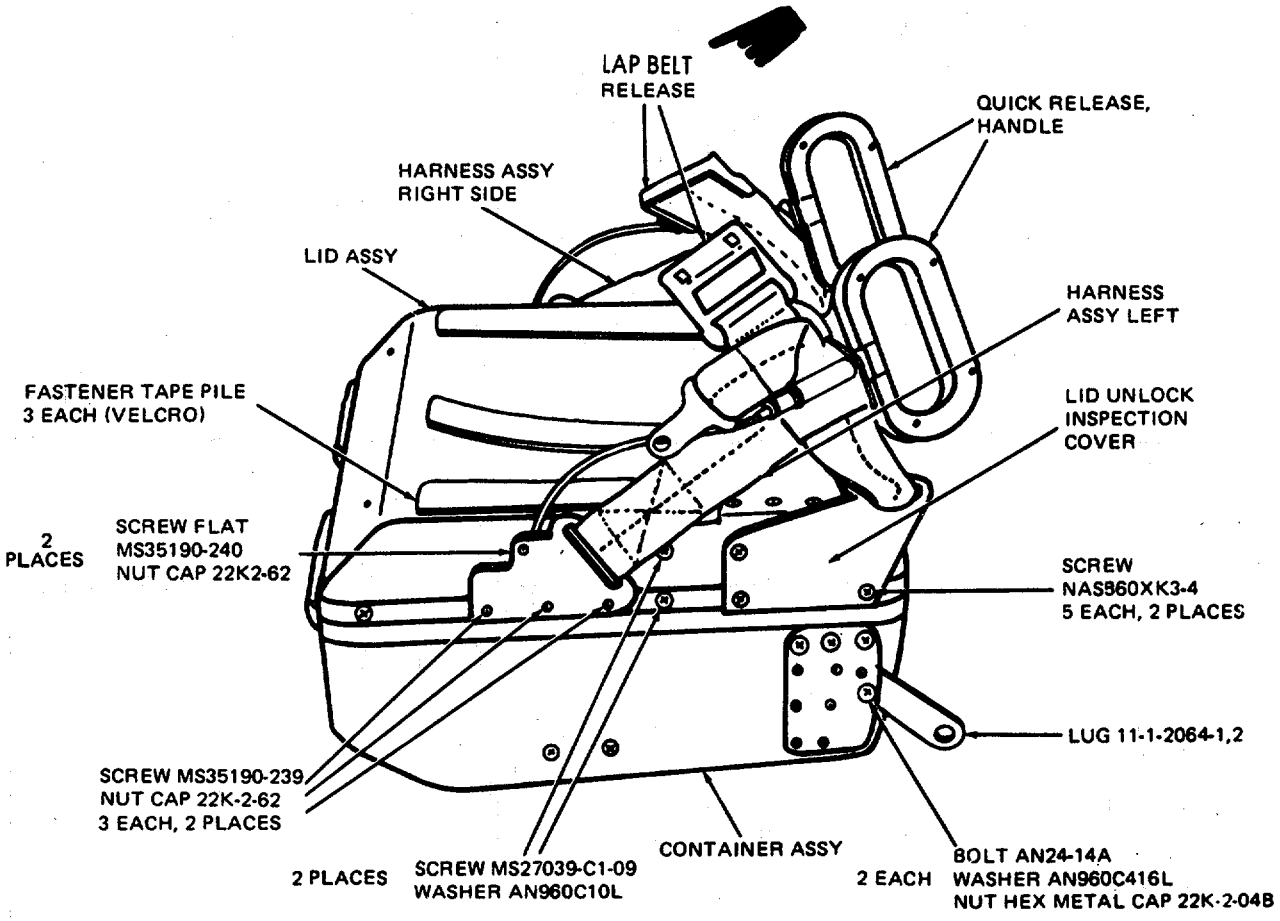

Figure 2-36. OV-1 aircraft rigid seat survival kit with harness assembly (Sheet 1 of 3)

2-18. OV1 AIRCRAFT RIGID SEAT SURVIVAL KIT (RSSK)-Continued

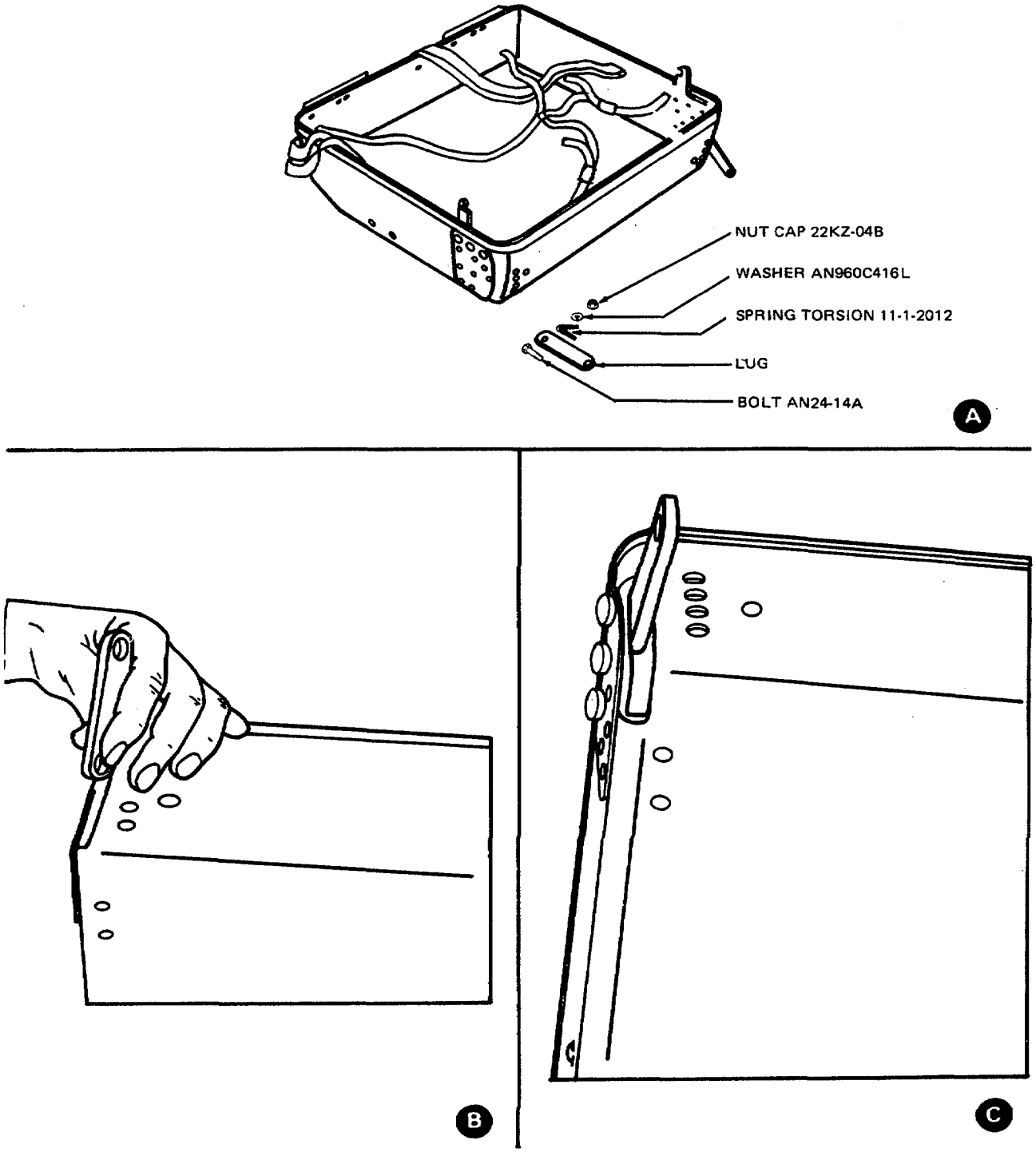

Figure 2-36. OV-1 aircraft rigid seat survival kit with harness assembly (Sheet 2 of 3)

2-18. OV-1 AIRCRAFT RIGID SEAT SURVIVAL KIT (RSSK)-Continued

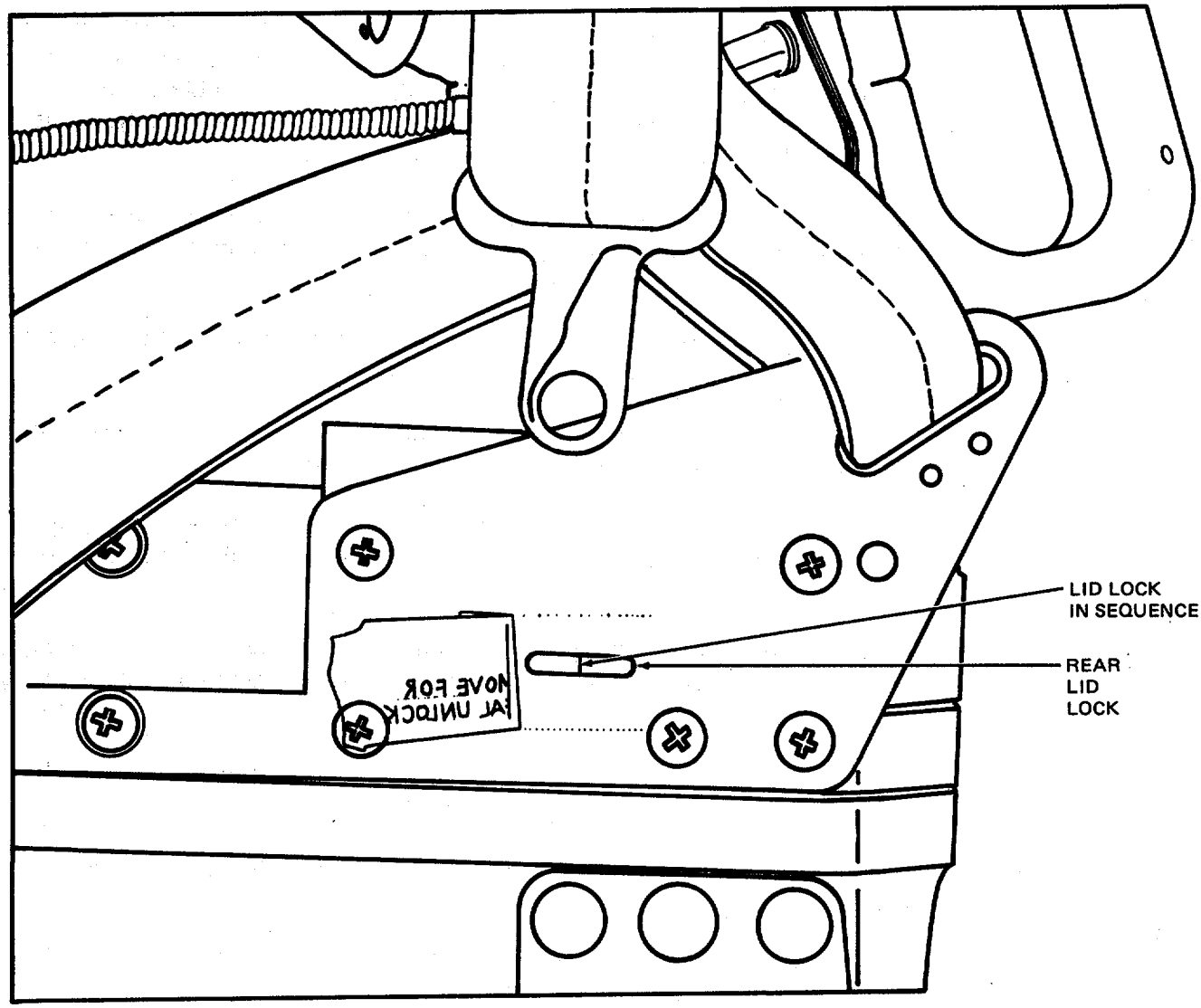

Figure 2-36. O V-1 aircraft rigid seat survival kit with harness assembly (Sheet 3 of 3)

2-18. OV-1 AIRCRAFT RIGID SEAT SURVIVAL KIT (RSSK)-Continued

(8) **Stiffener harness (figure 2-38, detail A).** Use a small, 3-inch blade cross point screwdriver or 5/64 inch Allen wrench, or equivalent tools, depending on type of screws, to remove stiffener harness. Use retaining compound MIL-S-22473, grade E, when replacing screws.

(9) **RSSK quick release handles and integrated parts (figures 2-37 and 2-38).** Quick release handles must be disassembled in order to replace left or right housing latch, support conduit, spacer housing, right or left-retainer conduit, left latch release (car) assembly, release latch handle assembly, right or left harness assembly, right, left, or rear cable assembly, or cable clamp support. Proceed as follows to remove the quick release handle:

(a) Using the proper tools, remove the four bolts that secure the bracket (handle harness and cable are attached to this bracket) to right side of the container lid (figure 2-37, detail C).

(b) Using the proper tools, remove the right housing latch assembly. (Right housing latch has three cables entering it.) (figure 2-38, details B and D).

(c) Using the proper tools, remove latch spacer assembly and support conduits to expose the latch release (car) assembly (figure 2-38, details B, C, and D).

(d) Use a 1/16 inch punch, or equivalent, to drive the drift pin out far enough to allow removal of cable (figure 2-38, detail D). Quick release handle assembly may be removed at this time.

(e) Disassembly procedures for left quick release handle assembly is the same as right quick release handle assembly, except that the left housing latch contains a spring (figure 2-38, details E and F).

(f) Use the proper size open end wrench to remove nut in order to remove handle from quick release handle assembly (figure 2-37, detail D).

(g) In order to remove handle from quick release handle assembly, pull handle out to expose steel ball, remove handle (figure 2-37, details E and F).

(h) Using proper tools, remove cable clamps to replace remaining cables (figure 2-36 and figure 2-38, details B, C, and D).

(10) Proceed as follows to assemble left and right quick release handle assemblies:

(a) Prior to assembly, handles must be attached to cables and nut drawn tight (figure 2-37, details F, E, and D).

(b) Begin assembly with right housing latch assembly; left housing cable needs more slack.

(c) Assemble cables in right latch release (car) and reset drift pin (figure 2-38, detail D).

2-18. OV-1 AIRCRAFT RIGID SEAT SURVIVAL KIT (RSSK)-Continued

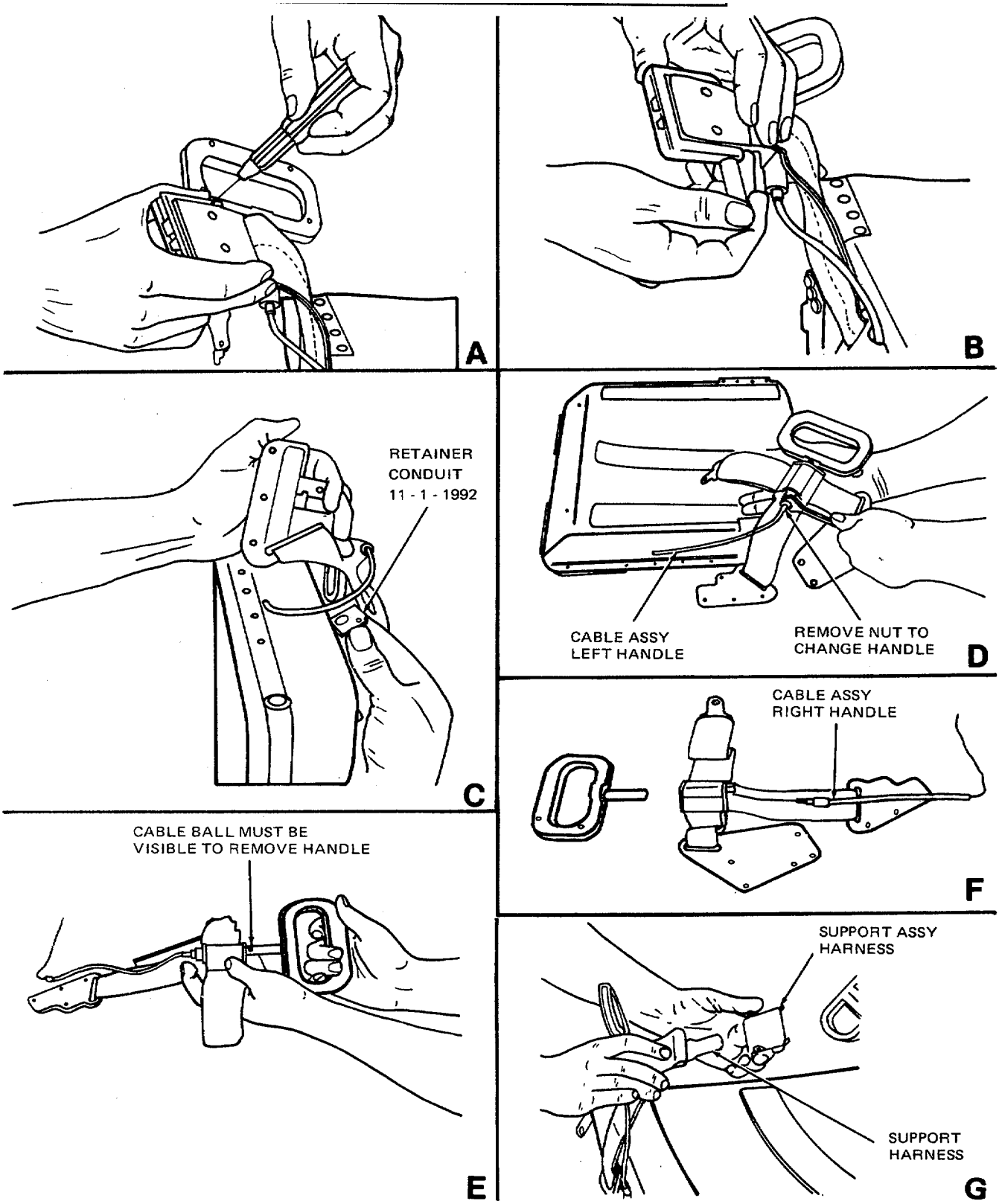

Figure 2-37. OV-1 aircraft RSSK canopy release and quick release handle

2-18. OV.1 AIRCRAFT RIGID SEAT SURVIVAL KIT (RSSK)-Continued

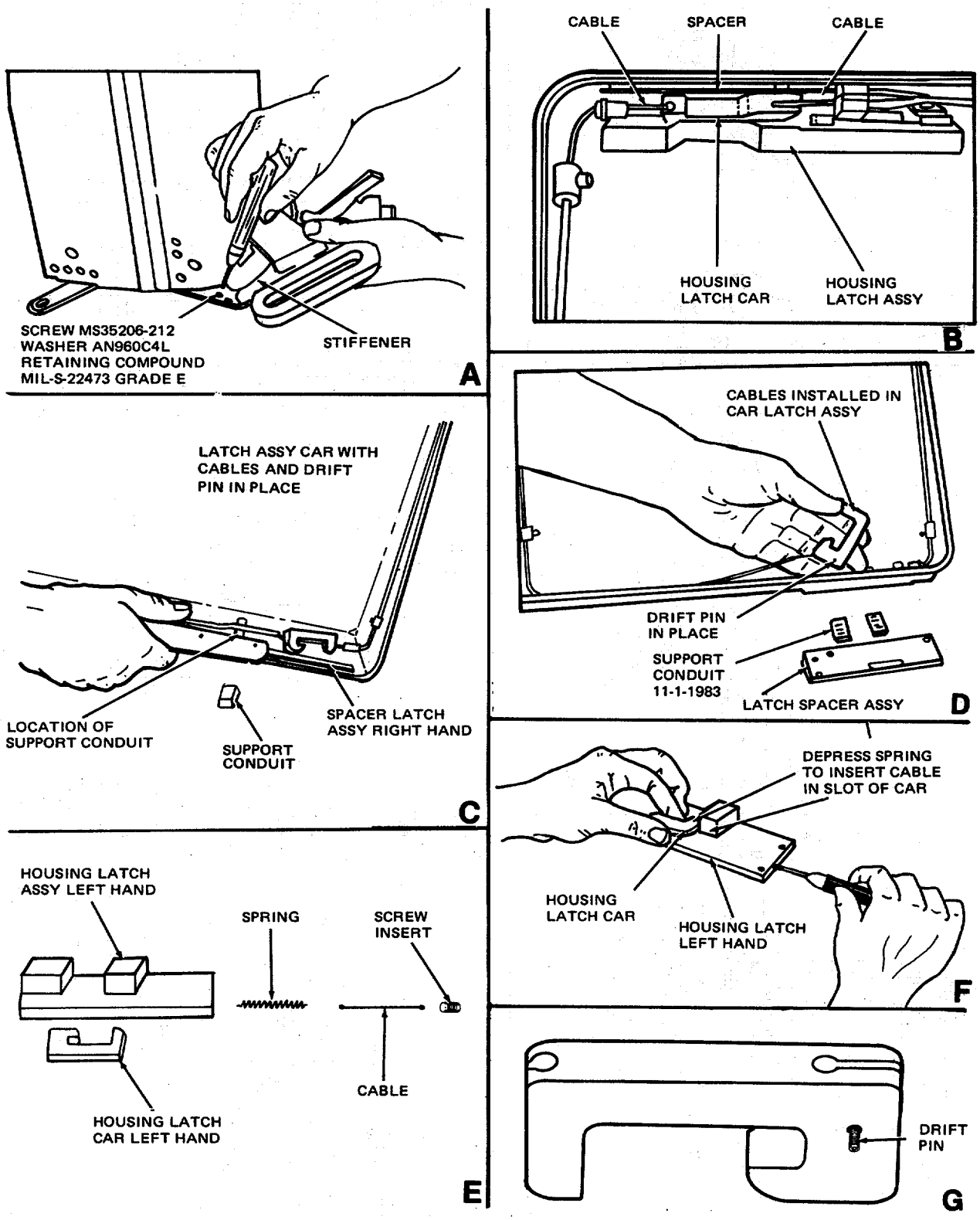

Figure 2-38. 0V-1 aircraft RSSK stiffener and housing latch assembly

2-18. OV-1 AIRCRAFT RIGID SEAT SURVIVAL KIT (RSSK)-Continued

(d) Replace support conduits and latch spacer assembly (figure 2-38, details D and B).

(e) Replace housing latch assembly. To prevent housing warp and binding of moving parts, alternately tighten opposite screws until properly seated (figure 2-38, detail B).

(f) Replace left housing assembly using same procedures as for right housing assembly. The spring in left housing assembly should allow enough slack for assembly.

(g) Using proper tools, replace retainer conduit and bracket (figure 2-37, detail C).

(h) Properly attach quick release handle assembly harness to canopy release harness (figure 2-36, Sheet 1).

(i) After RSSK container is properly reassembled, properly engage hinges and ensure that upper and lower container mate properly. Use inspection window to check container locks for proper adjustment. Check quick release handle assembly for proper operation (figure 2-36, Sheet 1).

NOTE

The folding and packing Instructions for the OV-1 aircraft RSSK Hot, Cold, and Overwater survival kits are the same as the nonrigid seat survival kit. Refer to figure 2-30, 2-40, and 2-41 for components arrangement.

(j) Using proper tools, loosen both cable safety nuts to make adjustments to container locks (figure 2-35). Turn cable adjuster away from safety nut to loosen container locks and turn cable adjuster toward safety nut to tighten container locks. Lock cable adjuster by tightening safety nut.

(k) Replace fastener tape pile using standard shop practices.

(l) Replace cushion seat as necessary.

(m) Replace thigh support pads as necessary.

2-18. OV-1 AIRCRAFT RIGID SEAT SURVIVAL KIT (RSSK Continued

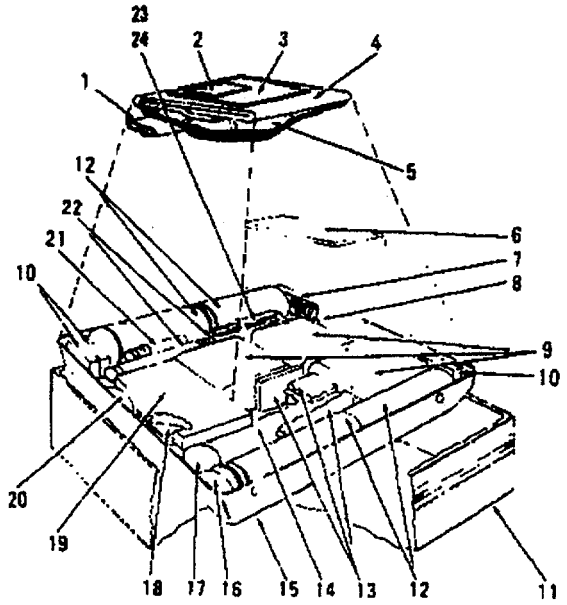

Figure 2-39. Packing details for survival components of the OV- 1 aircraft RSSK hot climate survival

1. Drinking water storage bag
2. Operator's manual (TM 55-8456-209-1 0)
3. Kit packing list
4. Tarpaulin
5. Insect headnet
6. Survival manual (AFM 64-5) (FM 21-76)
7. Knife sharpener
8. Snare wire
9. Survival food packets
10. Wood matches container
11. Kit case
12. Emergency drinking water
13. Compressed trioxane fuel
14. Signaling mirror
15. Frying pan
16. Sunburn preventive preparation
17. MC-1 magnetic compass
18. Hand saw assembly
19. Fishing tackle kit
20. Plastic spoon
21. Fire starter magnesium bar
22. Smoke and illumination signal
23. Pocket knife
24. Fire starter, spark lite

218. OV.1 AIRCRAFT RIGID SEAT SURVIVAL KIT (RSSK)-Continued

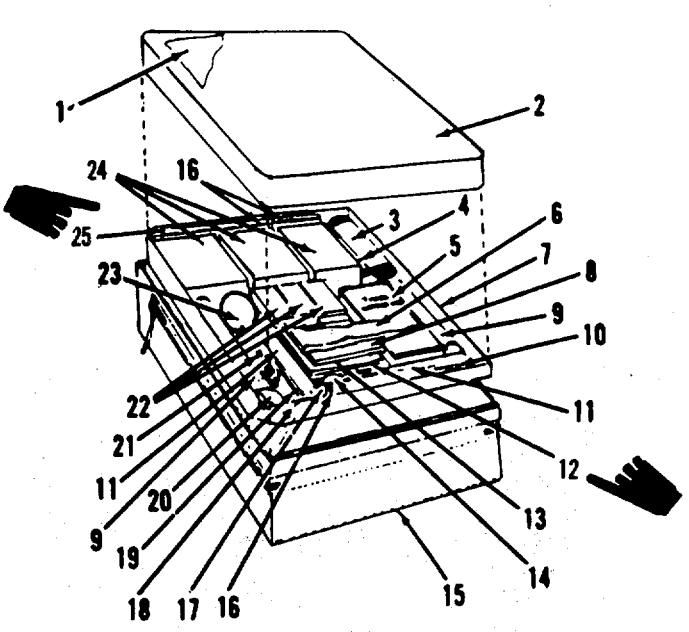

Figure 2-40. Packing details for survival components of the OV-1 aircraft RSSK cold climate survival kit

1. Packing list
2. Sleeping bog
3. Head insect net
4. Fire starter magnesium bar
5. Fishing tackle kit
6. Drinking water storage bog
7. Cooking pan
B. Operator's manual
9. Smoke and illumination signal
10. Parachute survival manual
11. Candle
12. Signaling mirror
13. Handsaw assembly
14. Plastic spoon
15. Equipment bag assembly
16. Compressed trioxane fuel
17. Knife sharpener
18. Snare wire
19. Survival manual
20. MC-1 Magnetic composs
21. Pocket knife
22. Wood matches container
23. Sunburn preventive preparation
24. Survival food packets
25. Fire starter spark lite

2-18. OV-1 AIRCRAFT RIGID SEAT SURVIVAL KIT (RSSK)-Continued

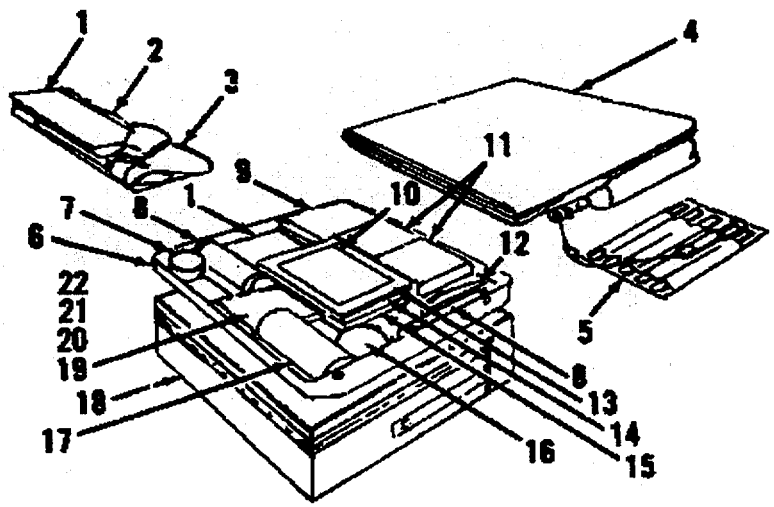

Figure 2-41. Packing details for survival components of the OV-1 aircraft RSSK overwater survival kit

1. Packing list
2. Drinking water storage bag
3. Reversible sun hat
4. 1 man inflatable life raft
5. Laced dropline assembly
6. Cooking pan
7. MC-1 magnetic compass
8. Smoke and illumination signal
9. MK-2 saltwater distiller kit
10. Operator's Manual
11. Survival food packet
12. Pocket knife
13. Cellulose sponge
14. Fishing tackle kit
15. Signaling mirror
16. Sunburn prevention preparation
17. Emergency drinking water
18. Equipment bag assembly
19. Fluorescein sea marker
20. Wood matches-1 container
21. Knife sharpener
22. Survival Manual

2-19. AIRCREW SURVIVAL ARMOR RECOVERY VEST, INSERT, AND PACKETS (SARVIP)

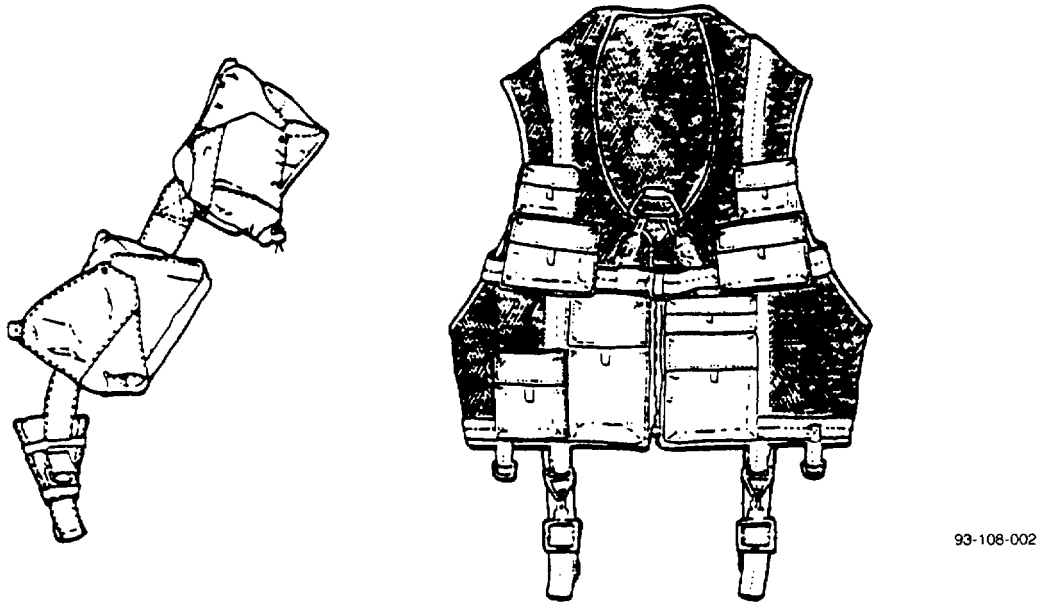

Figure 2-42. SARVIP

a. **Vest**. (Figure 2-42).

(1) **Inspection**. Inspection will be every 120 days in accordance with table 2-1. Each of the four survival packets will have an inventory list of the components included in the packet. These sealed packets will be exempt from opening for inspection. The packets are sealed in a plastic bag with the air evacuated. The components within have been individually sealed in a plastic heat shrink material. Inspect for damaged or open packets.

The medical packets will have a separate inventory list of medical components that have a potency expiration date. This list will contain the nomenclature, manufacturer, date of manufacture, and date of expiration.

(2) **Service.**

(a) **Cloth items**. Use warm soapy water for washing. Rinse with clear warm water in a container. Change water until it remains clear. Dry by air drying on a hanger out of direct sunlight.

(b) **Metal items.** Clean as prescribed in paragraph 2-6.

2-19. AIRCREW SURVIVAL ARMOR RECOVERY VEST, INSERT, AND PACKETS (SARVIP) - Continued

(3) **Repair.** The SARVIP will be repaired as follows:

(a) **Restitching**. Restitch broken or loose stitching according to original construction details and paragraph 2-7, using the specifics in table 2-3.

(b) **Darning and patching**. The vest body may be repaired by patching with cloth using the procedures in paragraph 2-7 and specifics in table 2-3. Darning is not permitted on the vest body. The vest pockets may be repaired by darning or patching, as applicable, using the procedures in paragraph 2-7 and specifics in table 2-3. Patching will be performed using oxford fire-resistant fabric and thread.

(c) **Replacing edge binding.** Replace damaged edge binding by fabricating as follows:

1 Remove the original edge binding length by cutting the stitching which secures the binding to the vest. Ensure the vest material is not damaged during the cutting process.

2 Cut a length of 1-inch-wide tape (MIL-T-5038) equal to the length of the original binding material and sear the ends.

3 Position the tape (MIL-T-5038) length in the original binding location, and secure the tape by stitching according to the original construction details, using the specifics in table 2-3. Stitching will be made in accordance with paragraph 2-7.

(d) **Replacing fastener tape.** Replace defective nylon hook-or pile-fastener tape on the vest or a vest pocket by fabricating as follows:

1 Remove the original hook-or pile-fastener tape length by cutting the stitching which secures the tape to the vest or pocket, as applicable. Ensure the adjacent vest or pocket material, as applicable, is not damaged during the cutting process.

2 Cut a length of 3/4-inch-wide hook-or pile-fastener tape, as required, equal to the length of the original fastener tape.

3 Position the replacement fastener tape length in the original fastener tape location and secure the tape length by stitching according to original construction details and paragraph 2-7, using the specifics in table 2-3.

2-19. AIRCREW SURVIVAL ARMOR RECOVERY VEST, INSERT, AND PACKETS (SARVIP) - Continued

(e) **Replacing a slide interlocking fastener**. A slide interlocking fastener (zipper) located on the vest front or on a vest pocket which is defective in any manner shall be replaced with a serviceable item from stock using the following procedures:

1 Remove the original slide interlocking fastener from the vest front or vest pocket, as applicable, by cutting the stitching which secures the fastener. Ensure the adjacent vest material is not damaged during the cutting process.

2 Obtain a serviceable 14 inch long, type IV, style 8, size MHS slide interlocking fastener for use as a replacement item for the vest front closure.

3 Position the replacement fastener in the original fastener location and secure by stitching according to original construction details and paragraph 2-7, using the specifics in table 2-3.

(f) **Replacing a thong.** Replace a damaged thong on the vest front closure slide interlocking fastener (zipper) by fabricating as follows:

1 Remove the original thong from the vest front closure slide interlocking fastener by cutting the thong material.

2 Cut a 2-3/4 inch length of 5/16 inch wide, type I nylon tape and sear the ends.

3 Fold the tape lengthwise and align the ends.

4 Pass the tape folded end through the slide interlocking fastener. Pass the seared ends through the loop formed by the folded end and pull tape tight. Align the thong loose ends and make an overhand knot near the bottom of thong.

(g) **Harness webbing repair**. Repair to rescue/lift harness webbing straps contained on the vest will not be done. This will be cause to condemn the vest. The vest contents will be removed and transferred to the replacement vest. The pockets and hardware will be removed from condemned vest and used as spare items for future repairs. The condemned vest will be destroyed by cutting in half.

2-19. AIRCREW SURVIVAL ARMOR RECOVERY VEST, INSERT, AND PACKETS (SARVIP) - Continued

(h) **Replacing waist adjustment strap**. Replace a damaged waist adjustment strap at the back of the vest by fabricating as follows:

1 Remove the original waist adjustment strap length by cutting the stitching which secures the strap to the vest. Ensure the adjacent vest material is not damaged during the cutting process.

2 Cut a length of 1 inch wide nylon webbing (MIL-W-4088) equal in length to the original waist adjustment strap length and sear the ends.

3 Position the webbing length in the original waist adjustment strap location and secure the webbing by stitching according to original construction details and paragraph 2-7, using the specifics in table 2-3.

4 If old hook- or pile-fastener tape is serviceable, remove it from the defective adjustment strap and attach it to the new webbing using procedures in paragraph 2-19a (3) (d). If hook-or pile-fastener tape is unserviceable, replace with 1-1/2 inch wide, type I, class 1 hook-or pile-fastener tape, as applicable, and attach to the waist adjustment strap following procedures in paragraph 2-19a (3) (d).

b. **Survival Components.**

(1) **Inspection**. Inspect survival components of the SARVIP using the procedures in table 2-1.

(2) **Repair.** Survival components will be repaired as follows:

(a) Replace damaged or missing lanyards on the signaling mirror, lensatic compass, and distress marker light by fabrication using MIL-C-5040 nylon cord with seared ends in lengths equal to length of damaged lanyard.

2-19. AIRCREW SURVIVAL ARMOR RECOVERY VEST, INSERT, AND PACKETS (SARVIP) - Continued

(b) The basic and medical packet cases will be resealed in new sealed plastic bag prescribed in paragraph 2-19e.

(3) **Replacement.** Replace damaged, defective or missing survival components of the SARVIP with serviceable components from stock as prescribed in paragraph 2-5.

c. **Distress marker light**. Maintenance of the distress marker light is IAW TM 55-1680-322-12/T.O.14S10-2-2.

(1) Battery. Screw battery cap out from bottom of distress marker and install new battery. Ensure that battery and o-ring establish a tight seal when the cap is secured. The o-ring should be compressed approximately 20 percent of its thickness.

(2) **Attaching line**. Replace the line by fabrication using a 30-inch length of MIL-C-5040 nylon cord with seared ends. Attach one end of the cut cord length to the marker unit according to original attachment details and secure the running end of the cord length by bartacking the cord material in the original location on the applicable vest storage pocket. Bartacking shall be made according to original attaching details using the specifics in table 2-3.

d. **Life Preserver LPU-10/P**. Inspect and maintain the life preserver in accordance with TM 5-4220-202-14/T.O. 14S-1-102, Maintenance Instructions with Parts Breakdown, USAF Flotation Equipment.

e. **Survival Packets**. The basic and medical packets will be inspected every 120 days in accordance with table 2-1. Each packet will have an inventory list of the components in the packet. These sealed packets are exempt from opening for inspection. The packets are sealed in a sealed plastic bag with the air evacuated. The components within the sealed plastic bag are individually sealed in a plastic material.

In addition to the regular inventory list, the medical packets will have a separate inventory list of medical components that have a potency expiration. This list will contain the nomenclature, manufacturer, date of manufacture, and expiration date. This packet may be opened to replace an expired item as follows:

(1) Seal the new item in plastic material.

2-19. AIRCREW SURVIVAL ARMOR RECOVERY VEST, INSERT, AND PACKETS (SARVIP) - Continued

(2) Place the sealed replacement item within the packet.

(3) Using plastic bag, create a sleeve for the packet and evacuate air from the sleeve using a vacuum cleaner.

(4) Using heat sealing irons, seal the ends of the plastic bag.

f. **Assembly of SARVIP components**. Assemble and stow the survival components of the SARVIP according to the assembly list and figure 2-43.

(1) Unscrew battery cap on radio set AN/PRC-90 and remove battery. Check date of manufacture stamped on battery. The BA-1568/U battery has a maximum shelf life of 3 years in temperate climate. Discard batteries more than 3 years old. Check for evidence of battery leakage or corrosion and condition of copper spring contacts. Install a good battery, if required, and screw battery cap on fingertight. For AN/PRC-112, refer to TM 11-5820-1037-13&P.

(2) Ensure that the SDU-5/E distress marker light is equipped with an ACR-FG1B flashguard and a BA-1574/U battery.

(3) Visually inspect all SARVIP components for damage and substitute serviceable components. Place serviceable components in the SARVIP pockets as designated in figure 2-43.

2-19. AIRCREW SURVIVAL ARMOR RECOVERY VEST, INSERT, AND PACKETS (SARVIP) - Continued

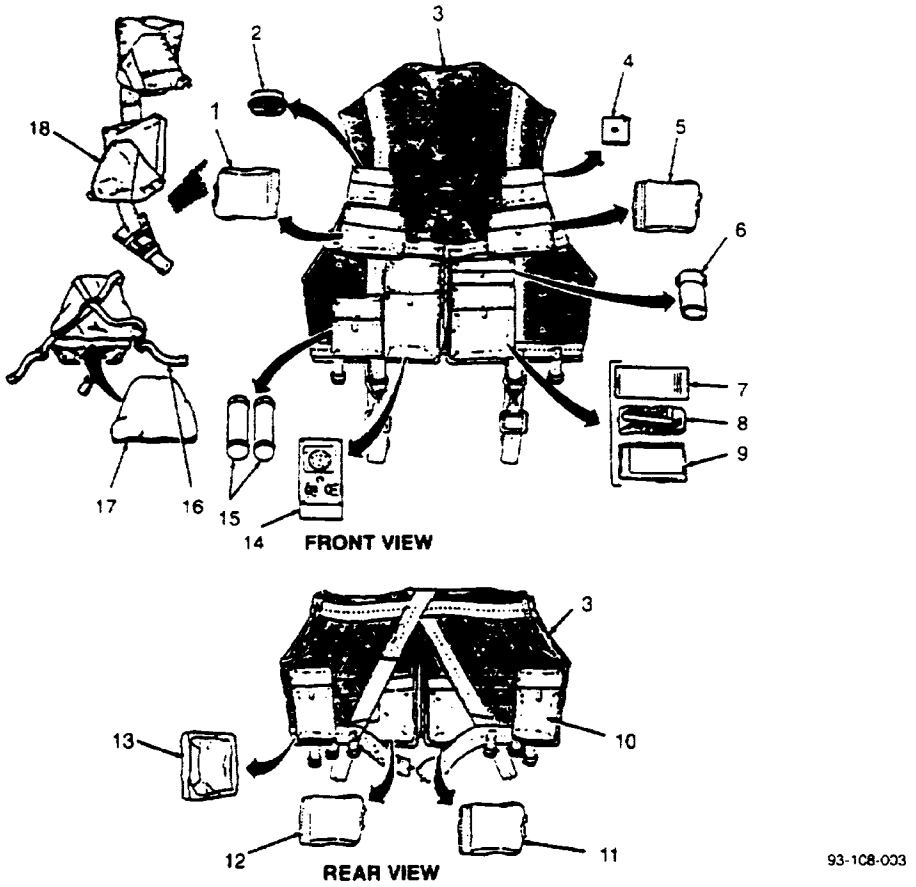

Figure 2-43. Assembly of SARVIP Components

1. Survival packet, type I, knife, pocket, general purpose.
2. Compass, magnetic, unmounted, lensatic.
3. SARVIP vest (5 sizes).
4. Mirror, emergency, signaling.
5. Survival packet, type II, medical.
6. Light marker, distress, SDU-5/E and flashguard.
7. Operator's manual.
8. Signal kit, personnel distress.
9. Paper, chemical agent detector & detector kit.
10. Spare pocket.
11. Survival packet, type III, medical.
12. Survival packet, type IV, medical.
13. Sea dye marker, flourescein.
14. Radio set, AN/PRC-90 and AN/PRC-112.
15. Signal, smoke and illumination.
16. Carrier.
17. Insert, 12.7 mm (.50 cal).
18. Life preserver, underarm, LPU-10/P.

CHAPTER 3

A.L.S.E. WORK, STORAGE AND FITTING AREAS

3.1. GENERAL

The life support equipment area consists of work, storage and fitting sections. Access to a classroom adjacent to or in close proximity to the life support area is needed for lectures and instructions on the equipment being used.

The shop area should contain not less than 1,000 square feet of usable area that is environmentally controlled within a range of 15.6ºC. (+60°F) to 23.8ºC. (+75ºF), have potable water source. Hot and cold water supply, and lavatory facilities.

The area will be protected from pilferage, dampness, fire, dust, insects, rodents, direct sunlight and be free from uncontrolled foot and vehicle traffic.

3.2. WORK AREA CRITERIA

The work area will have work bench surfaces free from rough or abrasive materials and splinter free tops. The area is to be well lighted with accessible electrical outlets to all bench and desk areas. Cabinets with locks for securing test equipment, tools, and supplies. Units that have oxygen equipment will have an area set aside for oxygen maintenance that will have hot and cold running water, stainless steel sinks, and floors that are sealed and protected from spills. The area will be restricted to only A.L.S.E. qualified personnel.

The floor of the work shop will be sealed and coated to prevent chemical spills penetrating the floor surface.

The work area will have hot and cold water for cleaning equipment as well as a wash area.

For units with flotation equipment support, there will be a low pressure, oil free air source and vacuum supply. A vacuum machine to be used only for flotation equipment can be used for the vacuum source.

3-3. STORAGE AREA CRITERIA

The storage area will be well ventilated, out of direct sunlight and well lighted. Have storage shelves and cabinets that provide security for the stored equipment. Be free from dust, moisture, fire, insects and rodents. The floor is to be sealed and covered with a dust free flooring material. A refrigerator will be used to store batteries used in life support equipment.

3-4. FITTING AREA CRITERIA

The fitting area will be well lighted and have enough space so personnel may be fitted with equipment being assigned to them i.e., survival vests, flight clothing, flight helmets, parachute harnesses, etc.

3-5. TEMPORARY STORAGE OF LIFE SUPPORT EQUIPMENT

a. Survival kits to be in temporary storage will:

(1) Be inspected, repaired and if needed, cleaned.

(2) Have components replaced if necessary.

(3) Have matches, smoke and illumination flares removed and stored in accordance with post policy for units operating within a military base or local policy for units not operating on a military base.

(4) Have kits tagged with annotations about items not in the kit.

(5) Be stored on shelves well ventilated and out of direct sunlight.

b. Survival vests to be put in temporary storage will:

(1) Be inspected, repaired and if needed cleaned.

(2) Have components replaced if necessary.

(3) Have signal kits, personal distress removed and stored in accordance with post policy if unit is operating from a military base or local policy if unit is operating off a military base.

(4) Have survival radios removed from vest. Battery in radio will be removed and put in refrigerated storage.

(5) Have light marker removed from vest. Battery in light marker will be removed and put in refrigerated storage.

(6) Have vest tagged and items not in vest annotated on tag. Vest will be hung up on hanger for storage, out of direct sunlight.

c. Flotation equipment to be put in temporary storage will be stored in accordance with TM 55-4220-202-14/T.O. 14S-1-102, Section 2-7, storage and shipment.

d. Pyrotechnics will be stored in accordance with post policy if unit is operating from a military base or local policy, if unit operates off a military base.

e Oxygen equipment to be put in temporary storage in accordance with TM55-1660-245-131 T.O. 15X-1-1, paragraph 2-47.

APPENDIX A

REFERENCES

A-1. DICTIONARIES OF TERMS AND ABBREVIATIONS

AR 310-25	Dictionary of United States Army Terms
AR 310-50	Authorized Abbreviations and Brevity Codes
AR 95-1	US Army Aviation General Provisions and Flight Regulations
AR 95-3	Aviation: General Provisions, Training, Standardization, and Resource Management

A-2. PUBLICATIONS INDEX

DA PAM 25-30	Consolidated Index of Army Publications and Blank Forms

A-3. LOGISTICS

DOD 4500.32-R (Vol. 1-2)	Military Standard Transportation and Movement Procedures (MIL-STAMP)
TM 38-230-1 and TM 38-230-2	Preservation, Packaging, and Packing of Military Supplies and Equipment (Vols 1 and 2)
Deleted	
TM 743-200-1	Storage and Materials Handling
CTA (CTF) 8-100	Army Medical Department Expendable/Durable Items
AR-4061	Medical Logistics Policies and Procedures

A-4. MAINTENANCE OF SUPPLIES AND EQUIPMENT

AR 750-5	Organization, Policies, and Responsibilities for Maintenance Operations
AR 750-32	Air Delivery, Parachute Recovery, and Aircraft Personnel Ejection Systems
TM 5-4220-202-14	Maintenance Instructions and Parts Breakdown-USAF Flotation Equipment
FM 10-16	General Repair of Canvas and Webbing
TM 10-3530-202-24	Sewing Machines for the Repair of Parachutes and Allied Equipment
DA PAM 738-751	Functional Users Manual for the Army Maintenance Management System Aviation (TAMMS-A)
TB 9-1300-385	Munitions restricted or suspended
AR 702-18	Material Quality Control Standards App. M. Med. Supplies
SB 11-6	Primary battery supply data / Management Data
	Vol. I, Identification/management data
DOD MED CAT	Vol. II, Sets, Kits and Outfits
FED LOG	Vol. III
43-0001-37	Army Ammunition Data Sheets for Military Pyrotechnics (Federal Supply Class 1370)
ARMY LOG	SB 700-20, AMDF
TM 11-5820-1049-12	Radio Set PRC 90-2
TM 11-5820-800-13 &P	Radio Set PRC 90

A-5. DISPOSAL

AR 755-2	Disposal of Excess, Surplus, Foreign Excess, Captured and Unwanted Material
DOD Manual 4160.21-M	Defense Disposal Manual

A-6. OPERATORS MANUALS

TM 55-1680-316-10	Operators manual for rigid seal survival kit NSN 1680-00-223-5759 and survival vest NSN 1680-00-205-0974 and NSN 1680-00-187-5716 for OV-1 aircrews
TM 55-1680-348-10	Operators manual for survival kit cold climate, individual NSN 1680-00-973-1862
TM 55-1680-349-10	Operators manual for survival kit hot climate, individual NSN 1680-00-973-1861
TM 55-1680-350-10	Operators manual for survival kit overwater, individual NSN 1680-00-973-1863
TM 55-1680-351-10	Operators manual for vest survival kit, individual SRU-21/P NSN 8465-00-177-4819 and 8465-01-174-2355
TM 55-1680-359-10	Operators manual for vest, inserts and packets, Aircrew Survival Armor Recovery (SARVIP)
TM 11-5820-1037-13 &P	Radio Set PRC - 112
TM 55-1680-322-12	SDU SE Distress Marker Light
TB 750-244-1-2	Procedures for the Destruction LIFE Support Equipment to Prevent Enemy Use
TM 9-1370-206-10	Pyrotechnic Signals Operator's Manual

APPENDIX B

MAINTENANCE ALLOCATION CHART

Section I. INTRODUCTION

B-1. GENERAL

a. This Maintenance Allocation Chart (MAC) assigns maintenance functions in accordance with the Three Levels of Maintenance concept for army aircraft. These maintenance levels: Aviation Unit Maintenance (AVUM), Aviation Intermediate Maintenance (AVIM), and Depot Maintenance, are depicted on the MAC as:

AVUM which corresponds to the O code in the Repair Parts and Special Tools List (RPSTL).

AVIM which corresponds to the F code in the Repair Parts and Special Tools List (RPSTL).

DEPOT which corresponds to the D code in the Repair Parts and Special Tools List (RPSTL).

b. The maintenance to be performed below depot and in the field is described as follows:

(1) Aviation Unit Maintenance (AVUM). AVUM activities will be staffed and equipped to perform high frequency "On-Equipment" maintenance tasks required to retain or return equipment to a serviceable condition. The maintenance capability of the AVUM will be governed by the MAC and limited by the amount and complexity of support equipment facilities required, and number of spaces and critical skills available. The range and quantity of authorized spare modules/components will be consistent with the mobility requirements dictated by the air mobility concept. (Assignment of maintenance tasks to divisional company size aviation units will consider the overall maintenance capability of the division, the requirement to con- serve personnel and equipment resources, and air-mobility requirements).

(a) Company Size Aviation Units. Perform those tasks which consist primarily of preventive maintenance and maintenance repair and replacement functions associated with sustaining a high level of equipment operational readiness. Perform maintenance inspections and servicing to include daily, intermediate, periodic and special inspections as authorized by the MAC or higher headquarters. Identify the cause of equipment system malfunctions using applicable technical manual troubleshooting instructions, Built-In-Test Equipment (BITE), installed instruments, or easy to use Test Measurement and Diagnostic Equipment (TMDE). Replace worn or damaged modules/components which do not require complex adjustments or system alignment and which can be removed/installed with available skills, tools and equipment. Perform operational and continuity checks and make minor repairs. Perform servicing, functional adjustments, and minor repair/replacement. Evacuate unserviceable modules/components and end items beyond the repair capability of AVUM to. the supporting AVIM.

(b) Less than Company Size Aviation Units. Aviation elements organic to brigade, group, battalion headquarters, and detachment size units are normally small and have less than ten aircraft assigned. Maintenance tasks performed by the aircraft crew chief or assigned aircraft repairman will normally be limited to preventive maintenance, inspections, servicing, spot painting, stop drilling, minor adjustments, module/component fault diagnosis and replacement of selected modules/components. Repair functions will normally be accomplished by the supporting AVIM unit.

(2) Aviation Intermediate Maintenance (AVIM). AVIM provides mobile, responsive "One Stop" maintenance support. (Maintenance functions which are not conducive to sustaining air mobility will be assigned to depot maintenance.) Performs all maintenance functions authorized to be done at AVUM. Repair of equipment for return to user will emphasize support or operational readiness requirements. Authorized maintenance includes replacement and repair of modules/components and end items which can be accomplished efficiently with available skills, tools, and equipment. Establishes the Direct Exchange (DX) program for AVUM units to be repairing selected items for return to stock when such repairs cannot be accomplished at the AVUM level. Inspects, troubleshoots, tests, diagnoses, repairs, adjusts, calibrates, and aligns system modules/components. Module component disassembly and repair will support the DX program and will normally be limited to tasks requiring cleaning and the replacement of seals, fittings, and items of common hardware. Unserviceable reparable modules/components and end items which are beyond the capability of AVIM to repair will be evacuated to Depot Maintenance. This level will perform special inspections which exceed AVUM capability. Provides quick response maintenance support, on-the-job training, and technical assistance through the use of mobile maintenance contact teams. Maintains authorized operational readiness float. Provides collections and classification services for serviceable/unserviceable material. Operates a cannibalization activity in accordance with AR 750-50. (The aircraft maintenance company within the maintenance battalion of a division will perform AVIM functions consistent with air mobility requirement resources. Additional intermediate maintenance support will be provided by the supporting non-divisional AVIM unit.)

B-2. USE OF THE MAINTENANCE ALLOCATION CHART

a. The MAC assigns maintenance functions to the lowest level of maintenance based on past experience and the following considerations:

(1) Skills available.

(2) Time required.

(3) Tools and test equipment required and/or available.

b. Only the lowest level of maintenance authorized to perform a maintenance function is indicated. If the lowest level of maintenance cannot perform ail tasks of any single maintenance function (e.g. test, repair), then the higher maintenance level(s) that can accomplish additional tasks will also be indicated.

c. A maintenance function assigned to a maintenance level will automatically be authorized to be performed at any higher maintenance level.

d. A maintenance function that cannot be performed at the assigned level of maintenance for any reason may be evacuated to the next higher maintenance levels, which will per- form the maintenance functions of lower maintenance levels when required or directed by the appropriate commander.

e. The assignment of a maintenance function will not be construed as authorization to carry the associated repair parts in stock. Authority to requisition, stock, or otherwise secure necessary repair parts will be specified in the Repair Parts and Special Tools List Appendix.

f. Normally there will be no deviation from the assigned level of maintenance. In cases of operational necessity, maintenance functions assigned to a maintenance level, may on a one-time basis and at the request of the lower maintenance level, be specifically authorized by the maintenance officer of the level of maintenance to which the function is assign- ed. The special tools, equipment, etc. required by the lower level of maintenance to per- form this function will be furnished by the maintenance level to which the function is assigned. This transfer of a maintenance function to a lower maintenance level does not relieve the higher maintenance level of the responsibility of the function. The higher level of maintenance has the authority to determine:

(1) If the lower level is capable of performing the work.
(2) If the lower level will require assistance or technical supervision and on-site inspection.
(3) If the authorization will be granted

g. Organizational through depot maintenance of the U.S. Army Electronics Command equipment be performed by designated U.S. Army Electronics Command personnel.

h. Changes to the MAC will be based on continuing evaluation and analysis by responsible technical personnel and on reports received from field activities.

B-3. DEFINITIONS I

a. **Inspect**. To determine serviceability of an item by comparing its physical, mechanical and electrical characteristics with established standards.

b. **Test**. To verify serviceability and detect incipient failure by measuring the mechanical or electrical characteristics of an item and comparing those characteristics with prescribed standards.

c. **Service**. To clean, to preserve, to charge, and to add fuel, lubricants, cooling agents and air.

d. **Adjust**. To rectify to the extent necessary to bring into proper operating range.

e. **Aline.** To adjust specified variable elements of an item to bring to optimum performance.

f. **Calibrate.** To determine the corrections to be made in the readings of instruments or test equipment used in precise measurement. Consists of the comparison of two instruments, one of which is a certified standard of known accuracy, to detect and adjust any discrepancy in the accuracy of the instrument or test equipment being compared with the certified standard.

g. **Install**. To set up for use in an operational environment such as an emplacement, site or vehicle.

h. **Replace**. To replace unserviceable assemblies, subassemblies, or parts.

i. **Repair.** To restore an item to serviceable condition through correction of a specific failure or unserviceable condition. This includes, but is not limited to, inspection, cleaning, preserving, adjusting, replacing, welding, riveting, and strengthening.

j. **Overhaul.** To restore an item to a completely serviceable condition as prescribed by maintenance serviceability standards prepared and published for the specific item to be overhauled.

k. **Rebuild.** To restore an item to a standard as near as possible to the original or new condition in appearance, performance, and life expectancy. This is accomplished through the maintenance technique of complete disassembly of the item, inspection of all parts or components, repair or replacement of worn or unserviceable elements (items) using original manufacturing tolerances and specifications, and subsequent reassembly of the item.

B-4. FUNCTIONAL GROUPS

Standard functional groupings are not considered feasible for aviation life support equipment due to variation and complexity. Therefore, variations to functional groupings may occur.

B-5. MAINTENANCE CATEGORIES AND WORK TIMES

The maintenance categories (levels) AVUM, AVIM, and DEPOT are listed on the Maintenance Allocation Chart with individual columns that indicate the work times for maintenance functions at each maintenance level. Work time presentations such as 0.1 indicate the average time it requires a maintenance level to perform a specified maintenance function. If a work time has not been established, the columnar presentation shall indicate "-.-". Maintenance levels higher than the level of maintenance indicated are authorized to perform the indicated function.

B-6. TOOLS AND TEST EQUIPMENT (Section III)

Common tool sets (not individual tools), special tools, test and support equipment required to perform maintenance functions are listed alphabetically with a reference number to permit cross-referencing to Column 5 in the MAC. In addition, the maintenance category authorized to use the device is listed along with the item National Stock Number (NSN) and, if applicable, the tool number to aid in identifying the tool device.

B-7. REMARKS (Section IV)

Remarks contained in Column 6, with an alphabetical code, are listed to provide a ready reference to the definition of the remark.

Section II. MAINTENANCE ALLOCATION CHART

(1) GROUP NUMBER	(2) COMPONENT ASSEMBLY	(3) MAINTENANCE FUNCTION	(4) MAINTENANCE CATEGORY			(5) TOOLS AND EQUIPMENT	(6) REMARKS
			AVUM	AVIM	DEPOT		
00	Army Aircraft Survival Kits						
01	Individual Hot Climate Survival Kit	Replace	0.1				
0101	Outer Case	Inspect	0.3				
		Service	0.2				
		Replace	0.4				
		Repair	1.0				
	Pocket Grommet	Replace	0.1				
		Repair	0.2				
	Pocket Tie Tape	Replace	0.2				Fabricate
	Carrying Handle	Replace	0.3				Fabricate
0102	Inner Case	Inspect	0.3				
		Service	0.2				
		Install	0.1				
		Replace	0.4				
		Repair	1.1				
	Attaching Strap	Replace	0.3				Fabricate
	Connecting Strap	Replace	0.3				Fabricate
	Connecting Strap Reinforcement	Replace	0.2				Fabricate
0103	Survival Components	Inspect	2.7				
		Test	0.1				
		Install	0.5				
		Replace	0.1				
		Repair	0.3				
	Tarpaulin	Replace	0.1				
		Repair	0.2				
	First Aid Kit Case	Replace	0.1				
		Repair	0.1				

Section II. MAINTENANCE ALLOCATION CHART

(1) GROUP NUMBER	(2) COMPONENT ASSEMBLY	(3) MAINTENANCE FUNCTION	(4) MAINTENANCE CATEGORY			(5) TOOLS AND EQUIPMENT	(6) REMARKS
			AVUM	AVIM	DEPOT		
	Tool Kit Carrier	Replace	0.1				
		Repair	0.2				
02	individual Cold Climate Survival Kit	Replace	0.1				
0201	Outer Case	Inspect	0.3				
		Service	0.2				
		Replace	0.4				
		Repair	1.0				
	Pocket Grommet	Replace	0.1				
		Repair	0.2				
	Pocket Tie Tape	Replace	0.2				Fabricate
	Carrying Handle	Replace	0.3				Fabricate
0202	Inner Case	Inspect	0.3				
		Service	0.2				
		Install	0.1				
		Replace	0.4				
		Repair	0.9				
	Attaching Strap	Replace	0.3				Fabricate
	Connecting Strap	Replace	0.3				Fabricate
	Connecting Strap Reinforcement	Replace	0.2				Fabricate
0203	Survival Components	Inspect	2.3				
		Install	0.5				
		Replace	0.1				
		Repair	0.1				
	First Aid Kit Case	Replace	0.1				
		Repair		0.1			
03	Individual Overwater Survival Kit	Replace	0.1				

Section II. MAINTENANCE ALLOCATION CHART

(1) GROUP NUMBER	(2) COMPONENT ASSEMBLY	(3) MAINTENANCE FUNCTION	(4) MAINTENANCE CATEGORY			(5) TOOLS AND EQUIPMENT	(6) REMARKS
			AVUM	AVIM	DEPOT		
0301	Outer Case	Inspect	0.3				
		Service	0.2				
		Replace	0.4				
		Repair	1.3				
	Pocket Grommet	Replace	0.1				
		Repair	0.2				
	Pocket Tie Tape	Replace	0.2				Fabricate
	Carrying Handle	Replace	0.3				Fabricate
	Connector Loop	Replace	0.2				Fabricate
	Snap Fastener	Replace	0.1				
		Repair	0.1				
	Thong	Replace	0.1				Fabricate
	Snap Fastener	Replace	0.1				
		Repair	0.1				
	Chape	Replace	0.1				Fabricate
0302	Inner Case	Inspect	0.3				
		Service	0.2				
		Install	0.1				
		Replace	0.4				
		Repair	1.3				
	Attaching Strap	Replace	0.3				Fabricate
	Connecting Strap	Replace	0.3				Fabricate
	Connecting Strap Reinforcement	Replace	0.2				Fabricate
0303	Connector Web	Inspect	0.1				
		Install	0.1				
		Replace	0.2				Fabricate
		Repair	0.1				

Section II. MAINTENANCE ALLOCATION CHART

(1) GROUP NUMBER	(2) COMPONENT ASSEMBLY	(3) MAINTENANCE FUNCTION	(4) MAINTENANCE CATEGORY			(5) TOOLS AND EQUIPMENT	(6) REMARKS
			AVUM	AVIM	DEPOT		
0304	1 Man Life Raft Assembly	Inspect	0.7				
		Test	2.0				Leak Test
		Service	0.5				
		Install	0.5				
		Replace	2.6				
		Repair	2.5				
	Sea Anchor Attaching Line	Replace	0.1				Fabricate
0305	Life Raft Inflation Assembly	Inspect	0.3				
		Test	0.5				Leak Test
		Service	0.5				Recharge
		Install	0.2				
		Replace	0.2				
0306	Survival Components	Inspect	2.6				
		Install	0.5				
		Replace	0.1				
		Repair	0.1				
	First Aid Kit Case	Replace	0.1				
		Repair	0.1				
04	SRU-21/PSurvival Vest	Replace	0.1				
0401	Vest	Inspect	0.3				
		Service	0.3				
		Replace	0.1				
		Repair	1.8				
	Edge Binding	Repair	0.2				Fabricate
	Expansion Panel	Repair	0.2				Fabricate
	Fastener Tape	Replace	0.3				
		Repair	0.2				
	Loop Adjustment	Replace Webbing	0.3				Fabricate
	Loop Tape Cord	Replace	0.1				Fabricate

Section II. MAINTENANCE ALLOCATION CHART

(1) GROUP NUMBER	(2) COMPONENT ASSEMBLY	(3) MAINTENANCE FUNCTION	(4) MAINTENANCE CATEGORY			(5) TOOLS AND EQUIPMENT	(6) REMARKS
			AVUM	AVIM	DEPOT		
	Seam Binding	Replace	0.2				Fabricate
	Snap Fastener	Replace Repair	0.1 0.1				
	Thong	Replace	0.2				Fabricate
	Receiver-Transmitter Antenna Cover	Replace	0.2				Fabricate
0402	Survival Components (Except Survival Receiver-Transmitter and Distress Marker Light)	Inspect Install Replace Repair	1.4 0.5 0.1 0.1				
0403	SDU-5/E Distress Marker Light	Inspect Test Install Replace Repair	0.1 0.2 0.1 0.1 0.1				
0404	Transceiver Survival Radio	Inspect Test Install Replace	.01 .30 .01 .01				
	Distress Marker Attaching Line	Replace	0.1				Fabricate
05	OV-1 Aircraft Rigid Seat Survival Kit						
0501	Rigid Seat Survival Kit	Inspect Service Aline Install Replace Repair	0.5 0.3 0.2 0.1 0.1 2.0				
0502	Drop Line Assembly Laced	Replace Repair	0.2 O.1				
0503	Container Drop Line	Repair	0.2				
0504	Tie Down Strap Assembly	Replace Repair	0.2 0.1				

Section II. MAINTENANCE ALLOCATION CHART

(1) GROUP NUMBER	(2) COMPONENT ASSEMBLY	(3) MAINTENANCE FUNCTION	(4) MAINTENANCE CATEGORY			(5) TOOLS AND EQUIPMENT	(6) REMARKS
			AVUM	AVIM	DEPOT		
0505	Bag, Equipment	Replace Repair	0.3 0.1				
0506	Strap, Bag, Equipment	Replace Repair	0.2 0.1				Fabricate
0507	Snap, Bag, Equipment Fastener	Replace Repair	0.1 0.1				
0508	Container Assembly	Install Replace Repair	0.2 0.2 0.2				
0509	Lug Attachment, Right and Left Hand	Replace	0.3				
0510	Spring, Torsion, Right and Left for Lug Attachment	Replace	0.3				
0511	Footman Bracket	Replace	0.2				
0512	Clip and Dee	Replace	0.2				
0513	Lid Assembly	Aline Install Replace Repair	0.2 0.3 0.3 0.3				
0514	Inspection Cover Manual Release	Inspect Replace	0.1 0.1				
0515	Latch Release, Right Hand	Replace	1.0				
0516	Housing Latch, Right Hand	Replace	1.0				
0517	Support Conduit	Replace	1.0				
0518	Spacer Housing	Replace	1.0				

Section II. MAINTENANCE ALLOCATION CHART

(1) GROUP NUMBER	(2) COMPONENT ASSEMBLY	(3) MAINTENANCE FUNCTION	(4) MAINTENANCE CATEGORY			(5) TOOLS AND EQUIPMENT	(6) REMARKS
			AVUM	AVIM	DEPOT		
0519	Spacer Mount Conduit	Replace	1.0				
0520	Retainer, Conduit, Right and Left Hand	Replace	0.2				
0521	Latch Assembly, Left Hand	Replace	1.0				
0522	Handle Assembly Release Latch	Replace	1.0				
0523	Harness Assembly, Right and Left	Replace	1.0				
0524	Support Assembly Harness	Replace	0.2				
0525	Stiffener Harness	Replace	0.2				
0526	Release, Canopy	Replace	0.2				
0527	Cable Assembly, Right and Left	Replace	1.0				
0528	Cable Assembly, Rear	Replace	1.0				
0529	Clamp Support	Replace	0.2				
0530	Fastener Tape Pile Repair	Replace	0.2 0.1				
06	OV-1 Aircraft Rigid Seat Survival Kit, Overwater Components	Inspect Install Replace Repair	2.6 0.5 0.1 0.1				
0601	1 Man Life Raft Assembly	Inspect Test Service Install Replace Repair	0.7 2.0 0.5 0.5 2.6 2.5				Leak Test

Section II. MAINTENANCE ALLOCATION CHART

(1) GROUP NUMBER	(2) COMPONENT ASSEMBLY	(3) MAINTENANCE FUNCTION	(4) MAINTENANCE CATEGORY			(5) TOOLS AND EQUIPMENT	(6) REMARKS
			AVUM	AVIM	DEPOT		
0602	Sea Anchor Attaching Line	Replace	0.1				Fabricate
0603	Life Raft Inflation Assembly	Inspect	0.3				
		Test	0.5				Leak Test
	Service		0.5				Recharge
	Install		0.2				
	Replace		0.2				
07	OV-1 Aircraft Rigid Seat Survival Kit, Hot Climate Components	Inspect	2.4				
		Install	0.5				
		Replace	0.1				
		Repair	0.3				
0701	Tarpaulin	Replace	0.1				
		Repair	0.2				
08	OV-1 Aircraft Rigid Seat Survival Kit, Cold Climate Components	Inspect	2.3				
		Install	0.5				
		Replace	0.1				
0801	Fastener Tape Hook	Inspect	0.1				
		Repair	0.1				
0802	Fastener Tape	Repair	0.2				
0803	Strap Assembly	Repair	0.2				
0804	Snap Fastener	Replace	0.1				
		Repair	0.1				
0805	Hardware Cover Assembly	Replace	0.5				Fabricate
		Repair	0.1				
09	OV-1 Aircraft Survival Vest	Inspect	0.3				
		Service	0.3				
		Replace	0.1				
		Repair	1.8				
0901	Edge Binding	Repair	0.2				
0902	Fastener Tape	Replace	0.3				
		Repair	0.2				

Section II. MAINTENANCE ALLOCATION CHART

MAINTENANCE ALLOCATION CHART							
(1)	(2)	(3)	(4) MAINTENANCE CATEGORY			(5)	(6)
GROUP NUMBER	COMPONENT/ ASSEMBLY	MAINTENANCE FUNCTION	AVUM	AVIM	DEPOT	TOOLS AND EQUIPMENT	REMARKS
0903	Loop Adjusting Webbing	Replace	0.3				Fabricate
0904	Loop Tape Cord	Replace	0.1				Fabricate
0905	Seam Binding	Replace	0.2				Fabricate
0906	Snap Fastener	Replace Repair	0.1 0.1				
0907	Thong	Replace	0.2				Fabricate
0908	Keepers, Elastic	Replace Repair	0.5 0.2				Fabricate
0909	Strap, Elastic	Replace Repair	0.5 0.2				Fabricate
0910	Lace Cord	Replace	0.3				Fabricate
0911	Tie Cord	Replace	0.2				Fabricate
0912	Strap Assembly Vest	Install Replace	0.2 0.2				
0913	Holster Assembly	Inspect Replace Repair	0.1 0.1 0.2				
0914	Snap Fastener	Replace	0.1				
0915	Attachment Cord	Replace	0.1				Fabricate
0916	Life Preserver LPU-1OIP	Inspect Test Service Install Replace Repair	0.1 0.5 0.3 0.3 0.1 0.5				
0917	Cases LPU-10/IP	Repair	0.1				
0918	Cord, Nylon	Replace	0.1				Fabricate

Section II. MAINTENANCE ALLOCATION CHART

MAINTENANCE ALLOCATION CHART							
(1)	(2)	(3)	(4) MAINTENANCE CATEGORY			(5)	(6)
GROUP NUMBER	COMPONENT/ ASSEMBLY	MAINTENANCE FUNCTION	AVUM	AVIM	DEPOT	TOOLS AND EQUIPMENT	REMARKS
0919	Snap Fastener	Replace	0.1				
		Repair	0.1				
0920	Cylinders, Carbon	Inspect	0.1				
	Dioxide	Test	0.1				Weight
		Replace	0.2				Check
0921	Survival Components	Inspect	1.4				
	(Except Receiver	Install	0.5				
	Transmitter and Dis-	Replace	0.1				
	tress Marker Light)	Repair	0.1				
0922	SDU-5E Distress	Inspect	0.1				
	Marker Light	Test	0.2				
		Install	0.1				
		Replace	0.1				
0923	Distress Marker	Replace	0.1				Fabricate
	Attaching Line						
10	SARVIP	Inspect	0.3				
		Replace	0.1				
		Repair		0.6			
1001	Vest	Inspect	0.3				
		Replace	0.1				
		Repair		0.8			
1002	Edge Binding	Replace		0.5			
		Repair		0.2			Fabricate
1003	Fastener Tape	Replace		0.5			
		Repair		0.2			Fabricate
1004	Waist Adjustment	Replace		0.5			
	Webbing	Repair		0.2			Fabricate
1005	Thong	Replace		0.2			Fabricate
1006	Ballistic Insert	Insert	0.3				
	Assembly	Replace	0.1				

Section II. MAINTENANCE ALLOCATION CHART-Continued

MAINTENANCE ALLOCATION CHART							
(1)	(2)	(3)	(4) MAINTENANCE CATEGORY			(5)	(6)
GROUP NUMBER	COMPONENT/ ASSEMBLY	MAINTENANCE FUNCTION	AVUM	AVIM	DEPOT	TOOLS AND EQUIPMENT	REMARKS
	Harness	Replace		0.6			Fabricate
	Insert Release Strap	Replace	0.4				
	Insert Carrier	Replace	0.1				
		Repair	0.5				
1007	Survival Components	Inspect	1.4				
	(Except Receiver	Install	0.5				
	Transmitter and	Replace					
	Distress Marker Light)	Repair					
1008	SDU-5E Distress	Inspect	0.1				
	Marker Light	Test	0.2				
		Install	0.1				
		Replace	0.1				
1009	Life Preserver LPU-10P	Inspect	0.1				IAW TM
		Test	0.5				5-4220-
		Service	0.3				202-14
		Install	0.3				
		Replace	0.1				
		Repair	0.5				

APPENDIX C

REPAIR PARTS AND SPECIAL TOOLS LIST

		Page
Section I.	INTRODUCTION.	C-1
Section II.	REPAIR PARTS	C-6
Section III.	TOOL AND TEST EQUIPMENT REQUIREMENTS	C-28
Section IV.	NATIONAL STOCK NUMBER AND REFERENCE NUMBER INDEX	C-29

Section I. INTRODUCTION

C-1. SCOPE

This appendix lists repair parts required for operation and performance of Aviation Unit and Aviation Intermediate Maintenance of the Aircraft individual Survival Kits.

C-2. GENERAL

This Repair Parts and Special Tools List is divided into the following sections:

a. Section II. Repair Parts List. A list of repair parts authorized for use in the performance of maintenance. Parts are listed in figure and item number sequence. Bulk materials are listed in alphabetical sequence by item name and description data.

b. Section Ill. Tool and Test Equipment Requirements.

c. Section IV. National Stock Number and Part Number Index. A list, in ascending numerical sequence, of all National stock numbers appearing in the listings, followed by a list, in alphanumeric sequence, of all part numbers appearing in the listings. National stock numbers and part numbers are cross- referenced to each illustration figure and item number appearance.

C.3. EXPLANATION OF COLUMNS

The following provides an explanation of columns found in the tabular listings:

a. Illustration. This column is divided as follows:

(1) Figure Number. Indicates the figure number of the illustration in which the item is shown.

(2) Item Number. The number used to identify each item called out in the illustration.

b. Source, Maintenance and Recoverability Codes (SMR).

(1) Source Code. Source codes are assigned to support items to indicate the manner of acquiring support items for maintenance, repair or overhaul of end items. Source codes are entered in the first and second positions of the Uniform SMR Code format as follows:

Code		Definition
PA	--	Item procured and stocked for anticipated or known usage.
PB	--	Item procured and stocked for insurance purpose because essentially dictates that a minimum quantity be available in the supply systems.
PC	--	Item procured and stocked and which otherwise would be coded PA except that it is deteriorate in nature.
MF	--	Item to be manufactured or fabricated at the direct support maintenance level.
XB	--	Item is not procured or stocked. If not available through salvage, requisition.
AD	--	Item to be assembled at depot maintenance level.
XA	--	Item is not procured or stocked because the requirements for the item will result in replacement of the next higher assembly.

NOTE

Cannibalization or salvage may be used as a source of supply for any items source coded above except aircraft support items as restricted by AR 700- 42.

(2) Maintenance Code. Maintenance codes are assigned to indicate the levels of maintenance authorized to USE and REPAIR support items. The maintenance codes are entered in the third and fourth positions of the Uniform SMR Code format as follows:

(a) The maintenance code entered in the third position will indicate the lowest maintenance level authorized to remove, replace and use the support item. The maintenance code entered in the third position will indicate the following level of maintenance:

Code		Application/Explanation
O	--	Support item is removed, replaced, used at the organizational level.
F	--	Support item is removed, replaced, used at the direct support level.
D	--	Support item that are removed, replaced, used at the depot level only.

(b) The maintenance code entered in the fourth position indicates whether the item is to be repaired and identifies the lowest maintenance level with the capability to perform complete repair (i.e., all authorized maintenance functions). This position will contain one of the following maintenance codes:

Code		Application/Explanation
O	--	Lowest maintenance level capable of complete repair of the support item.
F	--	The lowest maintenance level capable of complete repair of the support item is the direct support level.
D	--	Lowest level maintenance capable of complete repair of the support item.
Z	--	Nonreparable. No repair is authorized.

(3) Recoverability Code. Recoverability codes are assigned to support items to indicate the disposition action on unserviceable items. The recoverability code is entered in the fifth position of the Uniform SMR Code format as follows:

Code		Definition
Z	--	Nonreparable item. When unserviceable, condemn and dispose at the level indicated in position 3.
F	--	Reparable item. When uneconomically reparable, condemn and dispose at the direct support level.
O	--	Reparable item. When uneconomically reparable, condemn and dispose at organizational level.
D	--	Reparable item. When beyond lower level repair capability, return to depot. Condemnation and disposal not authorized below depot level.

c. National Stock Number. Indicates the National stock number assigned to the item and will be used for requisitioning purposes.

d. Part Number. Indicates the primary number used by the manufacturer (individual, company, firm, corporation, or Government activity), which controls the design and characteristics of the item by means of its engineering drawings, specifications standards and inspection requirements, to identify an item or range of items.

NOTE

When a stock numbered item is requisitioned, the repair part received may have a different part number than the part being replaced.

e. Federal Supply Code for Manufacturer (FSCM). The FSCM is a 5-digit numeric code listed in SB 708-42 which is used to identify the manufacturer, distributor, or Government agency, etc.

f. Description. Indicates the Federal item name and, if required, a minimum description to identify the item.

g. Unit of Measure (U/M). Indicates the standard of the basic quantity of the listed item as used in performing the actual maintenance function. This measure is expressed by a two-character alphabetical abbreviation (e.g., ea., in., pr, etc.). When the unit of measure differs from the unit of issue, the lowest unit of issue that will satisfy the required units of measure will be requisitioned.

h. Quantity Incorporated in Unit. Indicates the quantity of the item used in the breakout shown on the illustration figure, which is prepared for a functional group, subfunctional group, or an assembly. A "V" appearing in this column in lieu of a quantity indicates that no specific quantity is applicable (e.g., shims, spacers, etc.).

C-4. SPECIAL INFORMATION

a. Usable on codes are shown in the description column. Uncoded items are applicable to all models. Identification of the usable on codes used in the publication are:

Code	Used On
A	Survival Kit, individual - Hot Climate PIN 11-1-168 NSN 1680-00-973-1861
B	Survival Kit, Individual - Cold Climate PIN 11-1-170 NSN 1680-00-973-1862
C	Survival Kit, Individual - Overwater PIN 11-1-172 NSN 1680-00-973-1863
D	Rigid Seat Survival Kit (RSSK) Hot Climate PIN 11-1-1961 NSN 1680-00-148-9234
E	Rigid Seat Survival Kit (RSSK) Cold Climate P/N 11-1-1960 NSN 1680-00-148-9233
F	Rigid Seat Survival Kit (RSSK) Overwater PIN 11-1-1962 NSN 1680-00-140-3540
G	Survival Kit, individual - Vest Type, SRU-211P PIN 11-1-1783 NSN 8465-00-177-4819
H	Survival Kit, Individual OV-1 Vest Type, Small, P/N 11-1-468-1 NSN 1680-00-187-5716
J	Survival Kit, Individual OV-1 Vest Type, Large, P/N 11-1-468-2 NSN 1680-00-2050474
K	Survival Kit, Individual - Rigid Seat (See Figures C-9 and C-10 for P/N's and NSN's).

b. Detailed manufacturing instructions for items source coded to be manufactured or fabricated are found in the narrative portion of this publication. Bulk materials required to manufacture items are listed in the Bulk Material Group of the appendix.

C-5. HOW TO LOCATE REPAIR PARTS

a. When National Stock Number or Part Number is Unknown:

(1) First. Find the illustration covering the assembly to which the repair part belongs.

(2) Second. Identify the repair part on the illustration and note the illustration figure and item number of the repair part.

(3) Third. Using the Repair Parts Listing, find the figure and item number noted on the illustration.

b. When National Stock Number or Part Number is Known:

(1) First. Using the Index of National Stock Numbers and Part Numbers, find the pertinent National stock number or part number. This index is in ascending NSN sequence followed by a list of part numbers in ascending alphanumeric sequence, cross-referenced to the illustration figure number and item number.

(2) Second. After finding the figure and item number, locate the figure and item number in the repair parts list.

C-6. ABBREVIATIONS

(Not Applicable)

SECTION II. REPAIR PARTS

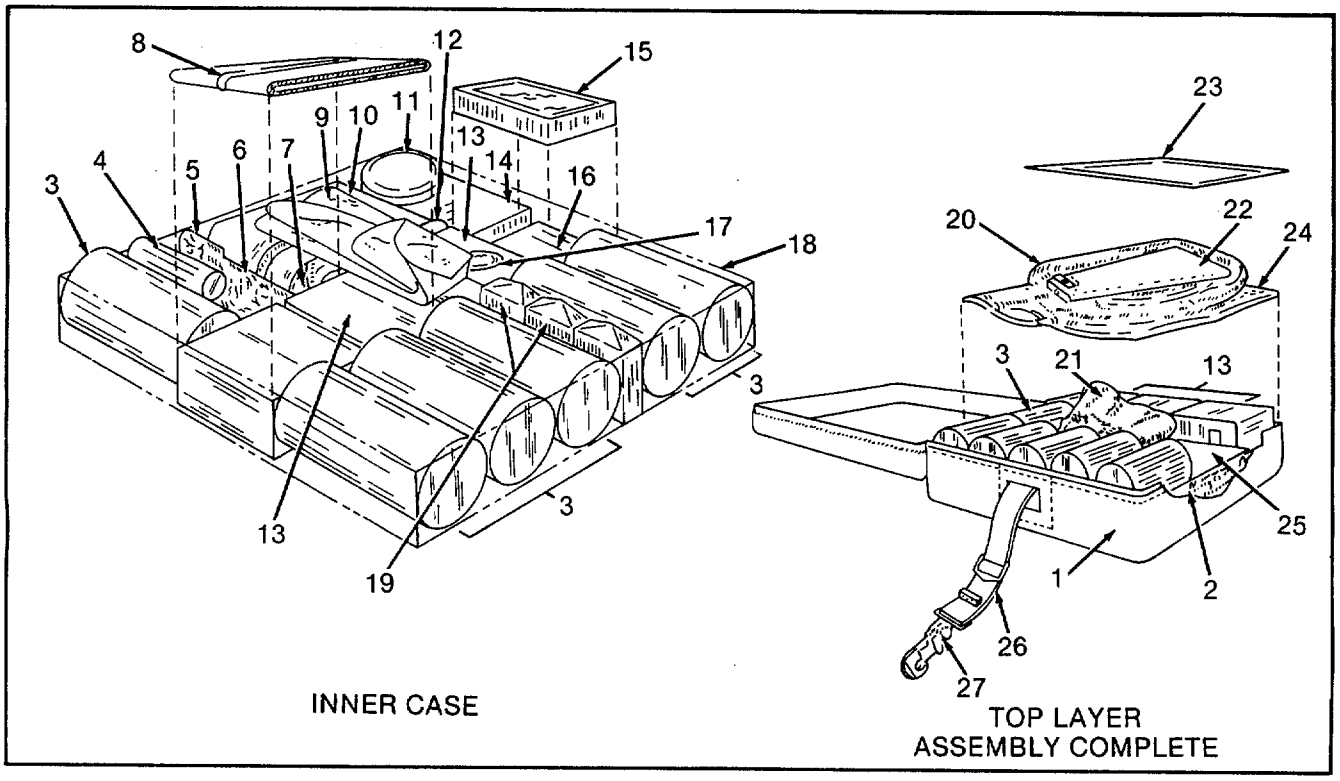

Figure C-1. Survival Kit, Individual, Hot Climate

(1) ILLUSTRATION (a) FIG NO.	(b) ITEM NO.	(2) SMR CODE	(3) NATIONAL STOCK NUMBER	(4) FSCM	(5) PART NUMBER	(6) DESCRIPTION USABLE ON CODE	(7) U/M	(8) QTY INC IN UNIT
C-1		ADOOO	1680-00-973-1861	81337	11-1-168	SURVIVAL KIT. INDIVIDUAL. HOT CLIMATE ... A	EA	
C-1	1	PAOCO	1680-00-082-2513	81337	11-1-190-1	.CASE. OUTER ... A	EA	1
C-1	2	PAOCO	1680-00-082-2514	81337	11-1-192	..CASE. INNER ... A B C	EA	1
C-1	3	PAOZZ	8960-00-916-4201	81337	MIL-W-15117	...WATER, DRINKING. CANNED 10 OZ ... A C D F (6 CAN INNER & OUTER CASE)	CN	12
C-1	3	PAOZZ	8960-01-124-4543	81349	MIL-W-44126	...WATER DRINKING PACKET. 125ML ... A C DF (12 EA INNER A OUTER CASE)	EA	24
C-1	4	PAOZZ	1680-01-233-0061	1 HPU	SL3	...FIRE STARTER. AVIATION SURVIVAL... . ... ABC D E F SPARKLITE	EA	1
C-1	5	PAOZZ	8465-00-254-8803	81349	MIL-W-1053	...WHSTLE.BALL. PLASTIC.O.D . ... ABCDEFG W/LANYARD	EA	1
C-1	6	PAOZZ	1370-00-309-5028	1001	LD165580	...SMOKE AND ILLUMINATION, MARINE. ... A B C D E F MOD 0 MK13L275	EA	2
C-1	7	PAOZZ	5110-00-162-2205	61343	MIL-K1860	...KNIFE. POCKET ...	EA	1
C-1	8	PAOZZ	8350-00-261-9772	51343	MIL-M-15371	..MIRROR. EMERGENCEY SIGNALING ... . ABC D E F	EA	1
C-1	9	PAOZZ	8465-00-485-3034	81348	MIL-B-8571	...BAG. DRINKING WATER STORAGE, ... A B CD E F PLASTIC. 10 PT CAP	EA	1
C-1	10	PAOZZ	6545-01-094-8412		NO REF	...FIRST AID KIT. INDIVIDUAL ... . ABC	EA	1
C-1		PACOO	6510-01-094-6142			...CASE, MEDICAL INSTRUMENT AND ... ABC SUPPLY SET, NYLON	EA	1
C-1		PAOZZ	6545-01-094-6136			...INSERT FIRST AID KIT CASE: PLASTIC ... . A B C O.D W/ATTACHED COVER	EA	1
C-1		PAOZZ	6510-00-201-1755			...BANDAGE. MUSLIN. COMPRESSED.. ... . A B C O D. 37 BY 37 BY 52 IN TRIANGLE	EA	1
C-1		PAOZZ	6530-00-042-8421			...BOTTLE, SAFETY CAP LIGHT RESISTANT. ... . A B C TABLET AND CAPSULE ROUND 7 DRAM 200S	EA	2
C-1		PAOZZ	6510-00-159-4883			...DRESSING FIRSTAID. FIELD. ... ABC CAMOUFLAGED. 4 IN W. 7 IN LG	EA	2
C-1		PAOZZ	6510-00-913-7909	81348	DDDB0035	...BANDAGE. ADHESIVE 3/4 IN. W 3 IN LG ... . A B C	EA	18
C-1		PAOZZ	6510-00-200-3180			...BANDAGE GUAZE: COMPRESSED. CAMOUFLAGED. ... ABC 2 INW. 6YD LG	EA	1
C 1		PAOZZ	65450-84S3309			...FIRST AID KIT. EYE DRESSING ... A B C	EA	
C-1		PAOZZ	6505-00-183-9419	04542	NDCO0085-0066-03	..SULFACETAMIDE SODIUM OPTHALMIC ... A B C OINTMENT, USP	TU	1
C-1		PAOZZ	6508-01-285-0079	04516	SUN BLOCK 15	....LIPSTICK. ANTICHAP ... . A B C	PG	1
C-1		PAOZZ	6505-00-914-3593	05181	NDC00034-2340-01	..POVIOINE-IODINE SOLUTION. ... A B C USP 10% IFL. OZ	BT	1
C-1		PAOZZ	6850-00-985-7166	81349	MIL-W-283	....WATER PURIFICATION TABLET. ... A B C IODINE: 6M(3	BT	1
C-1	11	PAOZZ	6505-01-121-2355	13811	NDC-72-5400-44.	... SUNBURN PREVENTIVE. . ... A C D F SUNSCREEN LOTION	BT	1
C-1	12	PAOZZ	7340-00-170-8374			...SPOON PICNIC. PLASTIC. ... A B CD E F	EA	1
C-1	13	PAOZZ	8973-00-082-5665	81349	MIL-F-43231	...FOOD PACKET. SURVIVAL GENERAL ... A BC D E F PURPOSE. INDIV	PZ	6
C-1	14	PAOZZ	9110-00-263-9865	81349	MIL-F-10805	...FUEL TRIOXANE BAR FORM... . A B C D E	BR	3
C-1	15	PAOZZ	4220-00-244-0764	81349	MIL-F-6218	...FISHING TACKLE KIT'SURVIVAL TYPE ... ABC D ,F	EA	1
C-1	16	PAOZZ	6605-00-515-5637	61349	AW2CI	...COMPASS. MAGNETIC ... ABCDEF UNMOUNTED. POCKET TYPE	EA	1
C-1	17	PAOZZ	9525-00-596-3498	81348	OOW321	...WIRE, NON-ELECTRICAL (SNARE WIRE)... A B C D E	FT	20
C-1	18	PAOZZ	7330-00-082-2398	81337	11-1-311	...PAN. FRYING:ALUMINUM ... . ABC	EA	1
C-1	19	PAOZZ	9920-01-154-7199	81349	MIL-E-101	...MATCHES. NON-SAFETY. WOOD ... AB CD E F ROUND PLASTIC CONTAINER W14 BXS 160 MATCHES	EA	1
C-1	20	FAOOO	8415-00-935-3130	81349	MIL-1-11489	...INSECT NET HEAD. NYLON CLOTH... A B C D E UNIV SIZE	EA	1
C-1	21	PAOOO	8415-00-270-0229			...HAT SUN- COTTON CLOTH UN!V SIZE ... A C DF WIDE BRIM O.D AND ORANGE	EA	1
C-1	22	PAOZZ	8465-00-973-4807	81337	LPIPDES76-64	..TOOL KIT SURVIVAL. WISHARPENING... A STONE & BURNING LENS	EA	1
C-1	23	XAOZZ		81337	11-1-168	...PACKING LIST. ... A	EA	1
C-1	24	PACOO	8340-00-485-3012	81349	MIL-T-7249	...TARPAULIN NYLON GREY-YELLOW... AD W/GROMMETS 11 FT LG 7FT W	EA	1
C-1	25	XAOZZ				...SURVIVAL MANUAL (AFM 64-5)... ABCDEF OR (FM 21-76)	BK	1
C-1	26	PAOOO				...ATTACHING STRAP ... A B C (SEE BULK LIST-WEBBING TEXT;LE 1-23132 IN)		
C-1	27	PAOZZ	1670-00-371-2243	96906	MS22017	...SNAP. PARACHUTE HARNESS EJECTOR... A B C	EA	2
C-1		PAOZZ	7210-00-935-6667		NO REF	...BLANKET COMBAT CASUALTY ... (NOT SHOWN INNER CASE)	EA	1
C-1		PAOZZ	5345-01-214-1050	62444	SS4A8	...SHARPENER. GENERAL PURPOSE ... (NOT SHOWN INNER CASE)	EA	1
C-1		PAOZZ	5110-00-570-6896	81349	MIL-S-9964	...SAW. HAND, FINGER GRIP ... A B CD E (NOT SHOWN INNER CASE)	EA	1
C-1		PAOZZ	1680-01-160-5618	62561	8702	...FIRESTARTER AVIATION SURVIVAL. MAGNESU'M ... (NOT SHOWN INNER CASE)	EA	1
C-1		PAOZZ	8465-00-300-2138	98752	67F45692	...NET MULTIPURPOSE (NET. GILL FISH,NG) ... A B C	EA	

SECTION II. REPAIR PARTS (Continued)

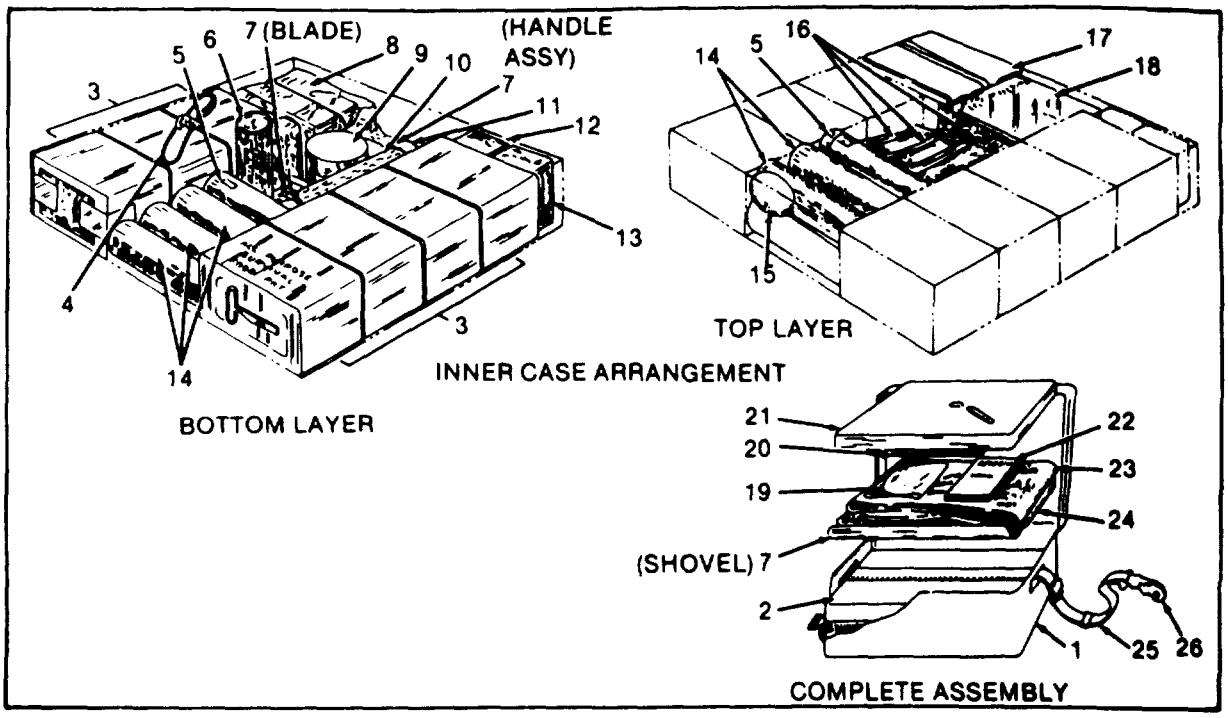

Figure C-2. Survival Kit, Individual, Cold Climate

SECTION II. REPAIR PARTS(Continued)

(1) ILLUS (a) FIG NO.	(b) ITEM NO.	(2) SMR CODE	(3) NATIONAL STOCK NUMBER	(4) FSCM	(5) PART NUMBER	(6) DESCRIPTION	USABLE ON CODE	(7) U/M	(8) QTY INC IN UNIT
C-2		ADOOO	1680-00-973-1862	81337	11-1-170	SURVIVAL KIT, INDIVIDUAL, COLD CLIMATE	B	EA	1
C-2	1	PAOOO	1680-00-082-2512	81337	11-1-190-2	CASE,OUTER	B	EA	1
C-2	2	PAOOO	1680-00-082-2514	81337	11-1-192	CASE, INNER	ABC	EA	1
C-2	3	PAOZZ	8970-00-082-5665	81349	MIL-F-43231	FOOD PACKET SURVIVAL, GENERAL PURPOSE INDIVIDUAL	ABCDEF	P2	7
C-2	4	PAOZZ	9525-00-596-3498	81348	QQW321	WIRE, NON-ELECTRICAL (SNARE WIRE).	ABC	FT	20
C-2	5	PAOZZ	1370-00-309-5028	10001	LD165580	SMOKE AND ILLUMINATION, MARINE MOD 0 MK 13-L275	ABCDEF	EA	2
C-2	6	PAOZZ	1680-01-233-0061	1HP49	SL3	FIRESTARTER AVIATION SURVIVAL, SPARK LITE	ABCDEF	EA	1
C-2	7	PAOZZ	5110-00-733-7129	98752	60C90302	KNIFE-SAW SHOVEL ASSY	B	EA	1
C-2		XAOZZ		98752	60C90303	BLADE (KNIFE & SAW) (INSIDE INNER CASE)	B	EA	1
C-2		XAOZZ		98762	50C3586	HANDLE ASSY (INSIDE INNER CASE)	B	EA	1
C-2		XAOZZ		98752	60C40304	SHOVEL (INSIDE OUTER CASE)	B	EA	1
C-2	8	PAOZZ	6545-01-094-8412		NO REF	FIRST AID KIT, INDIVIDUAL	ABC	EA	1
C-2		PAOOO	6510-01-094-6142			CASE, MEDICAL INSTRUMENT AND SUPPLY SET : NYLON	ABC	EA	1
C-2		PAOZZ	6545-01-094-6136			INSERT FIRST AID KIT CASE PLASTIC O.D. W/ATTACHED COVER	ABC	EA	1
C-2		PAOZZ	6510-00-201-1765			BANDAGE, MUSLIN: COMPRESSED, O.D. 37 BY 37 BY 52 IN. TRIANGLE	ABC	EA	1
C-2		PAOZZ	6530-00-042-8421			BOTTLE, SAFETY CAP. LIGHT RESISTANT TABLET & CAPSULE ROUND, 7 DRAM 200 S	ABC	BT	2
C-2		PAOZZ	6510-00-159-4883			DRESSING FIRST AID, FIELD: CAMOUFLAGED, 4 IN. W. 7 IN LG	ABC	EA	2
C-2		PAOZZ	6510-00-913-7909	81348	DDD60036	BANDAGE, ADHESIVE 3/4 IN W. IN. LG	ABC	EA	18
C-2		PAOZZ	6510-00-200-3180			BANDAGE, GAUZE.COMPRESSED, CAMOUFLAGED 2 IN. W, 6 YD. LG.	ABC	EA	1
C-2		PAOZZ	6545-00-853-6309			FIRST AID KIT, EYE DRESSING	ABC	EA	1
C-2		PAOZZ	6505-00-183-9419	04542	NDC00085006603	SULFACETAMIDE SODIUM OPHTHALMIC OINTMENT, U.S.P	ABC	TU	1
C-2		PAOZZ	6508-01-265-0079	04516	SUNBLOCK15	LIPSTICK,ANTICHAP	ABC	PG	1
C-2		PAOZZ	6505-00-914-3593	05161	NDC00034234001	POVIDONE IODINE SOLUTION, U.S.P. 10% ½ FL OZ.	ABC	BT	1
C-2		PAOZZ	6850-00-985-7166	81349	MIL-W-283	WATER PURIFICATION TABLET, IODINE: 8 MG	ABC	BT	1
C-2	9	PAOZZ	6605-00-515-5637	61349	AW2C1	COMPASS,MAGNETIC,UNMOUNTED ;TYPE	ABCDEF	EA	1
C-2	10	PAOZZ	5110-00-162-2205	81349	MIL-K-8180	KNIFE, POCKET		EA	1
C-2	11	PAOZZ	9920-01-154-7199	81349	MIL-E-101	MATCHES,NON-SAFETY,WOOD,ROUND PLASTIC CONTAINER W/4BXS-160 MATCHES	ABCDEF	EA	1
C-2	12	PAOZZ	7330-00-082-2398	81337	11-1-0311	PAN FRYING:ALUMINUM:	ABC	EA	1
C-2	13	PAOZZ	7210-00-935-6667		NO REF	BLANKET, COMBAT CASUALTY		EA	1
C-2	14	PAOZZ	6260-00-840-5578	81349	ML-C-25539	CANDLE, ILLUMINATING:	BD	EA	6
C-2	15	PAOZZ	7340-00-170-8374			SPOON,PICNIC,PLASTIC	ABCDEF	EA	1
C-2	16	PAOZZ	9110-00-263-9865	81349	ML-F-10805	FUEL,COMPRESSED,TRIOXANE	ABCDEF	EA	3
C-2	17	PAOZZ	6350-00-261-9772	81349	ML-M-18371	MIRROR,EMERGENCY,SIGNALING	ABCDEF	EA	1
C-2	18	PAOZZ	4220-00-244-0764	81349	ML-F-6218	FISHING TACKING KIT	ABCDEF	EA	1
C-2	19	PAOZZ	8465-00-485-3034	81348	ML-B-8571	BAG, DRINKING WATER STORAGE PLASTIC, 10 PT	ABCDEF	EA	1
C-2	20	XAOZZ		81337	11-1-170	PACKING LIST	B	EA	1
C-2	21	PAOZZ	8465-01-131-7921	81337	LP/PDES3-82	BAG, SLEEPING VACUUM PACKED	B	EA	1
C-2	22	XAOZZ				SURVIVAL MANUAL (AFM 64-5) OR (FM21-76)	ABCDEF	EA	1
C-2	23	PAOOO	8405-00-100-0976	81349	ML-P43700	PONCHO, WET WEATHER NYLON, WOODLAND CAMO, PATTERN	B	EA	1
C-2	24	PAOOO	8415-00-935-3130	81349	ML-1-11489	INSECT NET, HEAD NYLON CLOTH DARK GREEN UNIV. SIZE	ABCDE	EA	1
C-2	25	PAOOO				ATTACHING STRAP (SEE BULK LIST-WEBBING TEXTILE 1-23/32 IN.)	ABC		
C-2	20	PAOZZ	1670-00-371-2243	96906	MS22017	SNAP, PARACHUTE HARNESS EJECTOR	ABC	EA	2
C-2		PAOZZ	5345-01-214-1050	62444	SS#A8	SHARPENER GENERAL PURPOSE (NOT SHOWN) INNER CASE	ABCDE	EA	1
C-2		PAOZZ	5110-00-570-6896	81349	MIL-S-9964	SAW, HAND, FINGER GRIP (NOT SHOWN: INNER CASE)	ABCDE	EA	1
C-2		PAOZZ	8465-00-254-8803	81349	ML-W-1053	WHISTLE BALL, PLASTIC (NOT SHOWN: INNERCASE)		EA	1
C-2		PAOZZ	1680-01-160-5618	62561	8702	FIRESTARTER, AVIATION SURVIVAL, MAGNESIUM (NOT SHOWN, INNER CASE)		EA	1
C-2		PAOZZ	8465-00-300-2138	98752	67F45692	NET, MULTIPURPOSE (NET, GILL FISHING	ABC	EA	11

SECTION II. REPAIR PARTS(Continued)

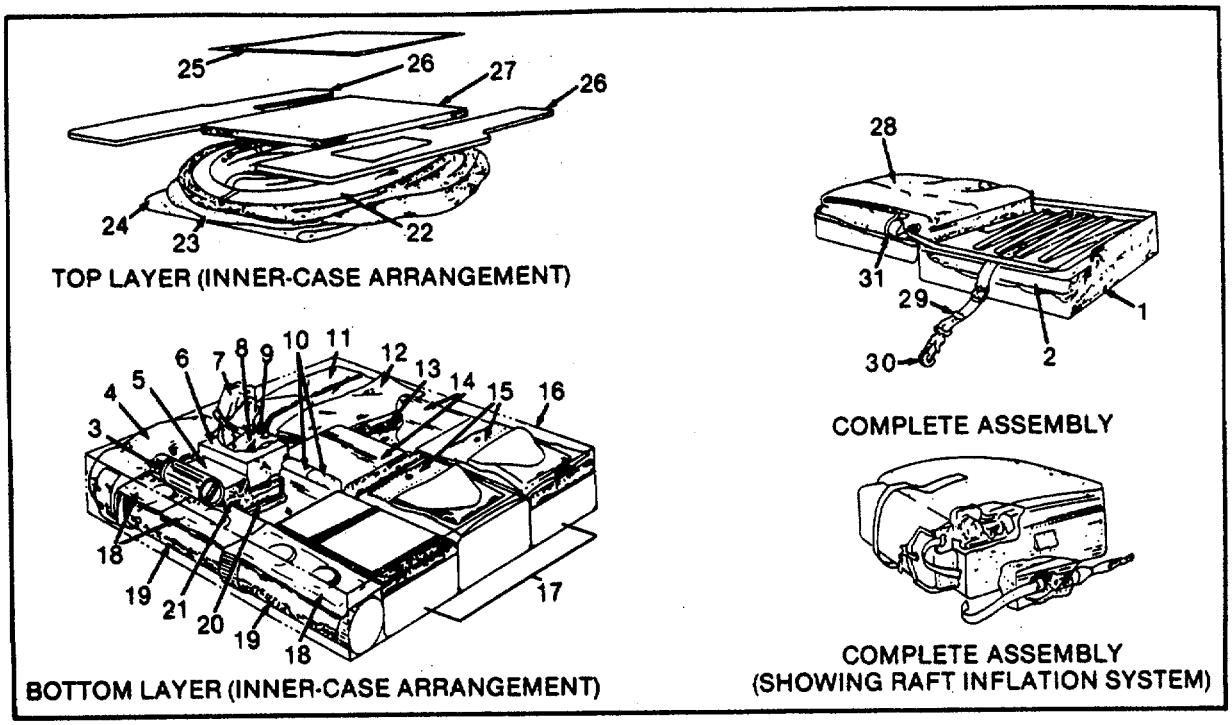

Figure C-3. Survival Kit, Individual, Overwater

(1) ILLUSTRATION (a) FIG NO.	(b) ITEM NO.	(2) SMR CODE	(3) NATIONAL STOCK NUMBER	(4) FSCM	(5) PART NUMBER	(6) DESCRIPTION USABLE ON CODE	(7) U/M	(8) QTY INC IN UNIT
C-3		ADOODC	1680-00-973-1863	81337	11-1-172	SURVIVAL KIT, INDIVIDUAL. OVERWATER .C	EA	1
C-3	1	PAOOO	1680-00-082-2511	81337	11-1-189	.CASE, OUTER.C	EA	1
C-3	2	PAOO	1680-00-082-2514	81337	11-1-192	..CASE, INNER ABC	EA	1
C-3	3	PAOZZ	1680-01-233-0061	1HP49	SL3	...FIRE STARTER AVIATION SURVIVAL, SPARK LITE ABCDEF	EA	1
C-3	4	PAOZZ	4220-00-763-3766	98752	67C46306-10	...REPAIR KIT, INFLATABLE CRAFT CF	EA	1
C-3	5	PAOZZ	9920-01-154-7199	81349	EE-M-101	...MATCHES, NON-SAFETY, WOOD ROUND PLASTIC CONTAINER .ABCDEF W/4 BXS-160 MATCHES	EA	1
C-3	6	PAOZZ	6605-00-515-5637	61349	AW2C1	...COMPASS. MAGNETIC, UNMOUNTED: POCKET TYPE ABCDEF	EA	1
C-3	7	PAOOO	2090-00-277-6583	80049	59C3778	...BAILER, BOAT CF	EA	1
C-3	8	PAOZZ	7920-00-240-2555	80244	L-S-626	...SPONGE, CELLULOSE. TYPE II, CLASS 2 SIZE 3 CF	EA	1
C-3	9	PAOZZ	6505-01-121-2335	13811	NDC-72-5400-04	...SUNBURN PREVENTIVE, SUNSCREEN LOTION ACDEF	BT	1
C-3	10	PAOZZ	7210-00-935-6667		NO REF	...BLANKET COMBAT CASUALTY	EA	1
C-3	11	PAOZZ	6545-01-094-8412		NO REF	...FIRST AID KIT, INDIVIDUAL ABC	EA	1
C-3		PAOOO	6510-01-094-6142			...CASE. MEDICAL INSTRUMENT AND SUPPLY SET: NYLON ABC	EA	1
C-3		PAOZZ	6545-01-094-6136			...INSERT. FIRST AID KIT CASE: PLASTIC O.D. W/ATTACHED COVER ABC	EA	1
C-3		PAOZZ	6510-00-201-1755			...BANDAGE.MUSLIN: COMPRESSED, O.D. 37 BY 37 BY 52 IN TRIANGLE ABC	EA	1
C-3		PAOZZ	6530-00-042-8421			...BOTTLE.SAFETY CAP LIGHT RESISTANT, TABLET & CAPSULE ROUND ABC 7 DRAM 200S	BT	1
C-3		PAOZZ	6510-00-159-4883			...DRESSING, FIRST AID, FIELD: CAMOUFLAGED, 4 IN. W., 7 IN. LG	EA	1
C-3		PAOZZ	6510-00-913-7909	81348	DDDB0035	....BANDAGE, ADHESIVE: 3/4 IN W 3 IN LG ABC	EA	18
C-3		PAOZZ	6510-00-200-3180			....BANDAGE, GAUZE: COMPRESSED, CAMOUFLAGED 2 IN. W. 6 YD. LG ABC	EA	1
C-3		PAOZZ	6545-00-853-6309			....FIRST AID KIT, EYE DRESSING ABC	KT	1
C-3		PAOZZ	6505-00-183-9419	04542	NDC00065-0066-03	....SULFACETAMIDE SODIUM OPHTHALMIC OINTMENT U.S.P ABC	TU	1
C-3		PAOZZ	6508-01-265-0079	04516	SUNBLOCK 15	....LIPSTICK, ANTICHAP ABC	PG	1
C-3		PAOZZ	6505-00-914-3593	05161	NDC00034-2340-01	....POVIDONE-IODINE SOLUTION: U.SP 10% 1 1/2 FLOZ ABC	BT	1
C-3		PAOZZ	6850-00-985-7166	81349	MIL-W-283	....WATER PURIFICATION TABLET, IODINE 8 MG ABC	BT	1
C-3	12	PAOZZ	7340-00-170-8374			..SPOON, PICNIC, PLASTIC ABCDE	EA	1
C-3	13	PAOZZ	5110-00-162-2205	81349	MIL-K-8180	...KNIFE, POCKET	EA	1
C-3	14	PAOZZ	8970-00-082-5665	81349	MIL-F-43231	...FOOD PACKET. SURVIVAL, GENERAL PURPOSE INDIVIDUAL ABCDEF	PZ	3
C-3	15	PAOZZ	6850-00-270-9966	81349	MIL-S-17980	...SEA MARKER, FLUORESCEIN CF	BG	2
C-3	16	PAOZZ	7330-00-082-2398	81337	11-1-0311	...PAN, FRYING ALUMINUM .ABC	EA	1
C-3	17	PAOZZ	4610-00-372-0592	81349	MIL-D-5531	...DESALTER KIT, SEAWATER, MK2 CF	KT	3
C-3	18	PAOZZ	9110-00-263-9665	81349	MIL-F-10805	...FUEL COMPRESSED TRIOXANE ABCDEF	EA	3
C-3	19	PAOZZ	1370-00-309-5028	10001	LD165580	...SIGNAL SMOKE AND ILLUMINATION MARINE, MOD 0 MK 13 ABCDEF	EA	2
C-3	20	PAOZZ	6350-00-261-9772	81349	MIL-M-18371	..MIRROR. EMERGENCY SIGNALING ABCDEF	EA	1
C-3	21	PAOZZ	4220-00-244-0764	81349	MIL-F-6218	...FISHING TACKLE KIT ABCDEF	EA	1
C-3	22	PAOOO	8415-00-935-3130	81349	MIL-I-11489	...INSECT NET, HEAD: NYLON CLOTH, DK GREEN UNIVERSAL SIZE ABCDE	EA	1
C-3	23	PAOOO	8415-00-270-0229	81349	MIL-M-43371	...HAT, SUN REVERSIBLE O D. & ORANGE UNIVERSAL SIZE .ACDF	EA	1
C-3	24	PAOZZ	8465-00-485-3034	81346	MIL-B-8571	...BAG, DRINKING WATER STORAGE. PLASTIC 10 PT ABCDEF	EA	1
C-3	25	XAOZZ		81337	11-1-172	...PACKING LIST C	EA	1
C-3	26	PAOZZ	2040-00-485-3018	80049	45D18813	...PADDLE BOAT 14 IN. LG. 3250 IN W BLADE C	EA	2
C-3	27	XAOZZ				...SURVIVAL MANUAL (AFM 65-4) OR (FM21-76) ABCDEF	BK	1
C-3	28	PAOOO	4220-01-056-8667	81349	MIL-L-83491	...LIFE RAFT 1 MAN LRU-17/P CF	EA	1
C-3		PAOOO	4220-01-003-6763	81349	MIL-L-83491	...LIFE RAFT 1 MAN LRU-16/P INSULATED BOTTOM AND SPRAY SHIELD CF	EA	1
C-3	29	PAOOO				...ATTACHING STRAP (SEE BULK LIST-WEBBING TEXTILE 1-23/32 IN.) CDEF	EA	1
C-3	30	PAOZZ	1670-00-371-2243	96906	MS22017	...SNAP, PARACHUTE HARNESS EJECTOR ABC	EA	1
C-3	31	PAOZZ	4220-00-565-3276	80049	5683857	...LIFEBOAT INFLATION ASSEMBLY AND CYLINDER CF	EA	1
C-3		PAOZZ	8465-00-254-8803	81349	MIL-W-1053	...WHISTLE BALL PLASTIC (NOT SHOWN: INNER CASE)	EA	1
C-3		PAOZZ	5345-01-214-1050	62444	SS#A8	...SHARPENER. GENERAL PURPOSE (NOT SHOWN: INNER CASE)	EA	1
C-3		PAOZZ	5110-00-570-6896	81349	MIL-S-9964	...SAW, HAND. FINGER GRIP (NOT SHOWN: INNER CASE) ABCDE	EA	1
C-3		PAOZZ	1680-01-160-5618	62561	8702	...FIRESTARTER, AVIATION SURVIVAL, MAGNESIUM. (NOT SHOWN: INNER CASE)	EA	1
C-3		PAFZZ	5325-01-128-4441	81337	11-1-188-6	...FASTENER, SLIDE, INTERLOCKING, 47 IN. LG G	EA	1
C-3		PAOZZ	8465-00-300-2138	98752	67F45692	...NET, MULTIPURPOSE (NET, GILL FISHING) .ABC	EA	1

SECTION II. REPAIR PARTS(Continued)

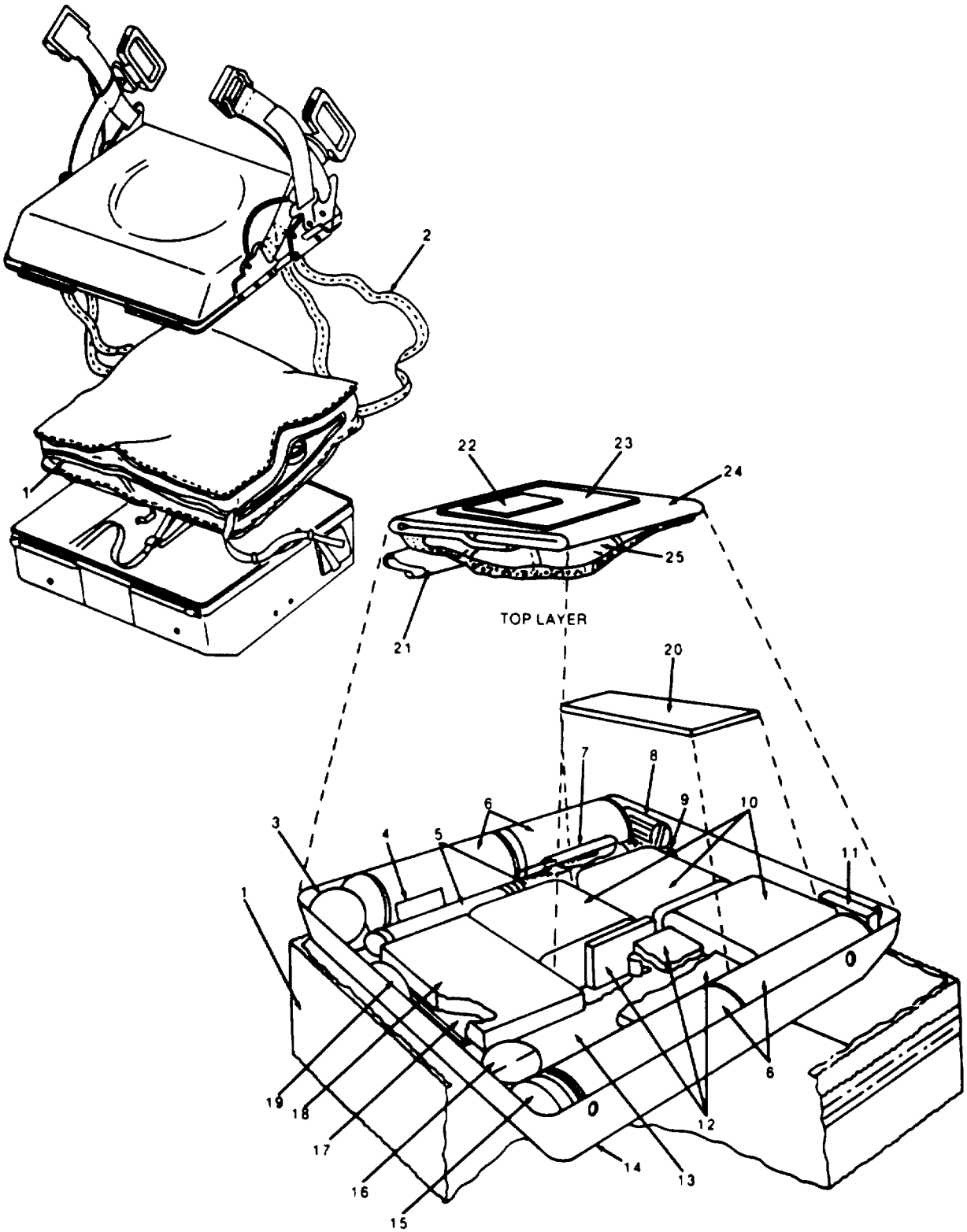

Figure C-4. Rigid Seat Survival Kit, Hot Climate

SECTION II. REPAIR PARTS(Continued)

(1) ILLUS (a) FIG NO.	(b) ITEM NO .	(2) SMR CODE	(3) NATIONAL STOCK NUMBER	(4) FSCM	(5) PART NUMBER	(6) DESCRIPTION	USABLE ON CODE	(7) U/M	(8) QTY INC IN UNIT
C-4		ADOOO	1680-00-148-9234	81337	11-1-1961	RIGID SEAT SURVIVAL KIT HOT CLIMATE	D	EA	1
C-4	1	PAOOO	1680-00-205-0489	81337	11-1-2006	BAG ASSEMBLY EQUIPMENT	DEF	EA	1
C4	2	PAOOO	1680-00-849-9896	81337	11-1-2055	LANYARD ASSEMBLY,SURVIVAL KIT(ATTACHES EQUIP BAG TO CONTAINER)	DEF	EA	1
C-4	3	PAOZZ	9920-01-154-7199	81349	EE-M-101	MATCHES,NON-SAFETY,WOOD ROUND PLASTIC CONTAINER W/4 BXS-160 MATCHES	ABCDEF	EA	1
C-4	4	PAOZZ	1680-01-160-5618	62561	8702	FIRE STARTER, AVIATION SURVIVAL MAGNESIUIM		EA	1
C-4	5	PAOZZ	1370-00-309-5028	10001	LD1655800	SIGNAL, SMOKE AND ILLUMINATION, MARINE MOD.OMK13	ABCDEF	EA	2
C-4	6	PAOZZ	8960-00-916-4201	81337	MILW-15117	WATER DRINKING CANNED,10 OZ	ACDF	CN	4
C-4	6	PAOZZ	8960-01-319-4703	47823		WATER,DRINKING, PACKET, 125 ML	ACDF	EA	8
C-4	7	PAOZZ	5110-00-162-2205	81349	MIL-K-8180	KNIFE, POCKET		EA	1
C-4	8	PAOZZ	1680-01-233-0061	IHP49	SL3	FIRE STARTER AVIATION SURVIVAL,SPARK LITE	ABCDEF	EA	1
C-4	9	PAOZZ	9525-00-596-3498	81349	QQW321	WIRE,NON-ELECTRICAL (SNARE WIRE)	ABCDE	FT	20
C-4	10	PAOZZ	6970-00-082-5665	81349	ML-F-43231	FOOD PACKETS,SURVIVAL	ABCDEF	PZ	3
C-4	11	PAOCZ	7210-00-935-6667		NOREF	BLANKET,COMBATCASUALTY		EA	1
C-4	12	PAOZZ	9110-00-263-9865	81349	MIL-F-1QBO5	FUEL,CCMPRESSEDTRIOXANE	ABCDEF	BR	3
C-4	13	PAOZZ	6350-00-261-9772	81349	MIL-M-18371	MIRROR EMERGENCY SIGNALG	ABCDEF	EA	1
C-4	14	PAOZZ	7330-00-213-7173	81337	11-1-2005	PAN,COOKING .	DEF	EA	1
C-4	15	PAOZZ	6605-01-121-2335	13811	NDC 724400-04	SUNBURN PREVENTIVE SUNSCREEN LOTION: AMNBENZOIC ACID	ACDF	BT	1
C-4	16	PAOZZ	6605-00-515-5637	61349	AW2C1	COMPASS,MAGNETIC,UNMOUNTED POCKET TYPE	ABOCEF	EA	1
C-4	17	PAOCZ	5110-00-570-6896	81349	MIL-S-9964	SAW,HAND FINGER GIRP	ABCDE	EA	1
C-4	18	PAOCZ	4220-00-244-0764	81349	MIL-F62181	FISHING TACKLE KIT	ABCDEF	EA	1
C-4	19	PAOZZ	7340-00-170-8374			SPOON, PICNIC, PLASTIC	ABCDEF	EA	1
C-4	20	XAOZZ				MANUAL,SURVIVAL AFM 64-5OR FM21-76	ABCDF	BK	1
C-4	21	PAOZZ	8465-00-485-3034	81348	MIL-B-8571	BAG,DRINKING WATER STORAGE PLASTIC 10 PT.CAP	ABCDEF	EA	1
C-4	22	XACZZ				OPERATORS MANUAL TM 55-1680-316-10	DEF	BK	1
C-4	23	XAOZZ		81337	11-1-1961	PACKING LIST	D	EA	1
C-4	24	PAOOO	8340-00-235-3012	81349	ML-T-7249	TARPAULIN NYLON,GREY&YELLOW WGROMMETS 11 FT LG.7 FT W	AD	EA	1
C-4	25	PAOOO	8415-00-935-3130	81349	ML4-11489	INSECT NET,HEAD NYLON CLOTH UNIVERSALSIZE	ABDE	EA	1
C-4		PAOZZ	5345-01-214-1060	62444	SS5M	SHARPENER GENERAL PURPOSE (NOT SHOWN: EOUP. BAG)	ABCDE	EA	1

SECTION II. REPAIR PARTS(Continued)

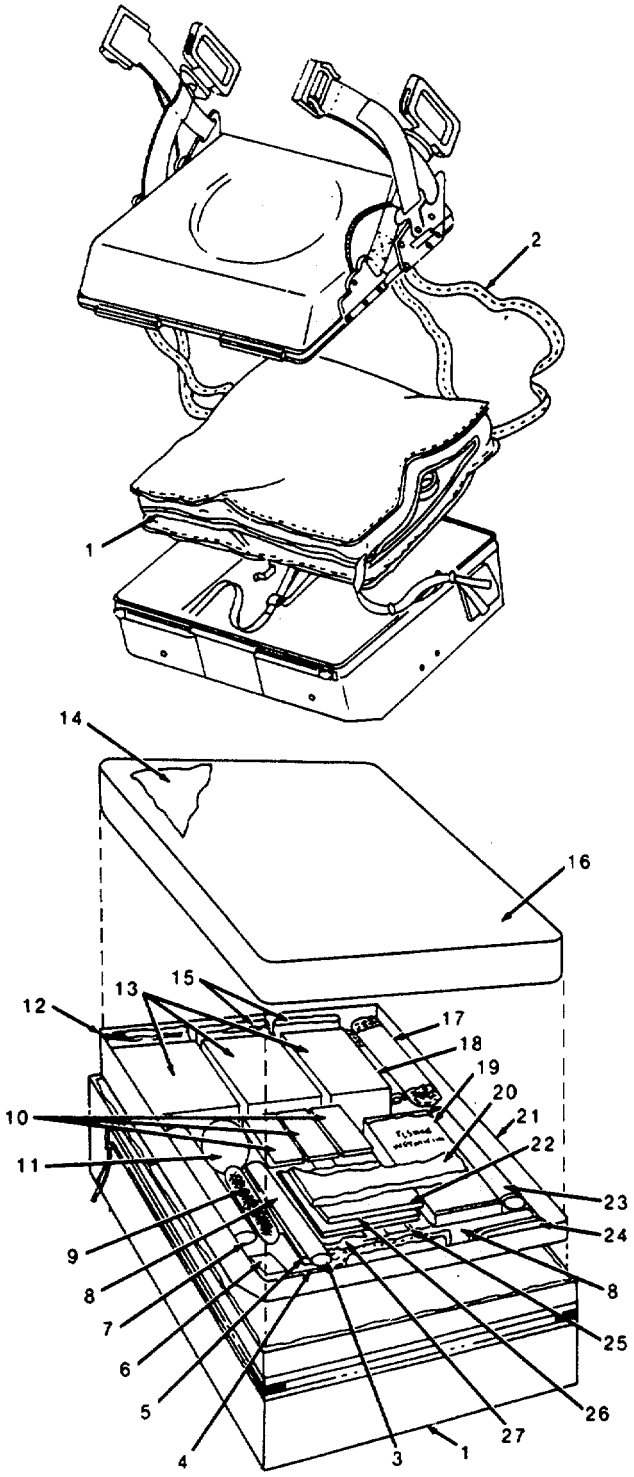

Figure C-5. Rigid Seat Survival Kit, cold Climate

SECTION II. REPAIR PARTS(Continued)

(1) ILLUS (a) FIG NO.	(b) ITEM NO.	(2) SMR CODE	(3) NATIONAL STOCK NUMBER	(4) FSCM	(5) PART NUMBER	(6) DESCRIPTION	USABLE ON CODE	(7) U/M	(8) QTY INC IN UNIT
C-5		ADOOO	1680-00-148-9233	81337	11-1-1960	RIGID SEAT SURVIVAL KIT (RSSK)COLD CLIMATE	E	EA	1
C-5	1	PAOOO	1680-00-205-0489	81337	11-1-2006	BAG ASSEMBLY EQUIPMENT	DEF	EA	1
C-5	2	PAOOO	1660-00-849-9896	81337	11-1-2055	LANYARD ASSEMBLY,SURVIVAL KIT(ATTACHES EQUIP. BAG TO CONTAINER)	DEF	EA	1
C-5	3	PAOZZ	1680-01-233-0061	1HP49	SL3	FIRESTARTER, AVIATION SURVIVAL,SPARKLITE	ABCDEF	EA	1
C-5	4	PAOZZ	9525-00-596-3498	81348	QQW321	WIRE NON-ELECTRICAL (SNARE WIRE)	ABCDE	FT	20
C-5	5	XAOZZ				MANUAL SURVIVAL	ABCDEF	EA	1
C-5	6	PAOZZ	9920-01-154-7199	81349	EE-M-101	MATCHES, NONSAFETY WOOD:.ROUND PLASTIC CONTAINER W4/BX-160 MATCHNSS	ABCDEF	EA	1
C-5	7	PAOZZ	6605-00-515-5637	81349	AW2C1	COMPASS,MAGNETIC UNMOUNTED: POCKET TYPE	ABCDEF	EA	1
C-5	8	PAOZZ	7210-00-935-6667		NO REF	BLANKET, COMBAT CASUALTY		EA	1
C-5	9	PAOZZ	6260-00-840-5578	81349	MIL-C-25539	CANDLES,ILLUMINATING		EA	2
C-5	10	PAOZZ	5110-00-162-2205-	81349	M-L-K-8180	KNIFE POCKET		EA	1
C-5	11	PAOZZ	6605-01-121-2335	1381I	NDC-72-540-04	SUNBURN PREVENT,SUNSCREEN, LOTION:ABCDEF AMMO BENZOICACID		EA	1
C-5	12	PAOZZ	5345-01-214-1050	62444	SS#8	SHARPENER,GENERAL PURPOSE	ABCDE	EA	1
C-5	13	PAOZZ	8970-00-082-5665	81349	MIL-F-43231	FOOD PACKET,SURVIVAL	ABCDEF	PZ	3
C-5	14	PAOZZ		81337	11-1-960	PACKING LIST		EA	1
C-5	15	PAOZZ	9110-00-263-9865	81349	MIL-F10805	FUELCOMPRESSED TRIOXANE	ABCDE	EA.	3
C-5	16	PAOZZ	8465-01-131-7921	81337	LP/PDES3-82	SLEEPING BAG,ARCTC:VACUUM PACK	BE	EA	1
C-5	17	PAOZZ	8415-00-935-3130	81349	MIL-I-411489	INSECT NET,HEAD:NYLON CLOTH:UNIVERSALSZE	ABCDE	EA	1
C-5	18	PAOZZ	1680-01-160-5618	62561	8702	FIRE STARTER, AVIATION SURVIVAL, MAGNESIUM		EA	1
C-5	19	PAOZZ	4220-00-244-0764	81349	ML-F-62181	FISHNG TACKLE KIT	ABCDEF	EA	1
C-5	20	PAOZZ	8465-00-485-3034	81348	MIL-B-8571	BAG,DRINKING WATER STORAGE,PLASTIC, 10 PT	ABCDEF	EA	1
C-5	21	PAOZZ	7330-00-213-7173	81337	11-1-2005	PAN,COOKNG	DEF	EA	1
C-5	22	XAOZZ	TM 55-1680-316-10			MANUAL OPERATORS	DEF	BK	1
C-5	23	PAOZZ	1370-00-309-5028	10001	LD165580	SIGNAL, SMOKE AND ILLUMINATION MARINE MOD 0 MK 13	ABCDEF	EA	2
C-5	24	XAOZZ				MANUAL, SURVIVAL& EMERGENCY USES OF PARACHUTE	DEF	BK	1
C-5	25	PAOZZ	6350-00-261-9772	81349	MIL-M-18371	MIRROR EMERGENCY SIGNALING	ABCDEF	EA	1
C-5	26	PAOZZ	5110-00-570-6896	81349	MIL-S-9964	SAW HAND FINGER GRIP	ABCDE	EA	1
C-5	27	PAOZZ	7340-00-170-8374			SPOON,PICNIC PLASTIC	ABCDEF	EA	1

SECTION II. REPAIR PARTS(Continued)

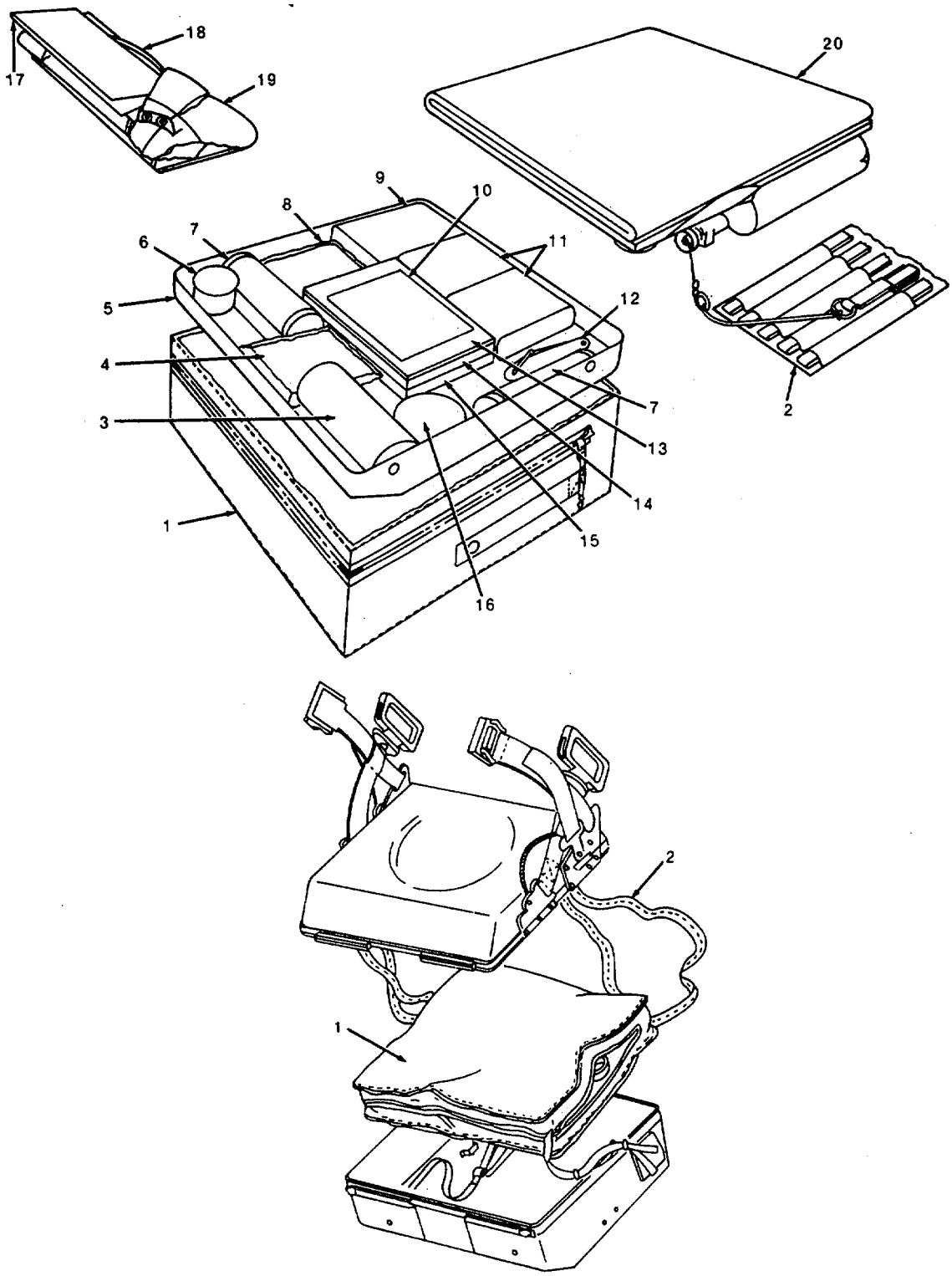

Figure C-6. Rigid Seat Survival Kit, Overwater

SECTION II. REPAIR PARTS(Continued)

(1) ILLUS (a) FIG NO.	(b) ITEM NO.	(2) SMR CODE	(3) NATIONAL STOCK NUMBER	(4) FSCM	(5) PART NUMBER	(6) DESCRIPTION	USABLE ON CODE	(7) U/M	(8) QTY INC IN UNIT
C-6		ADOOO	1680-00-140-3540	81337	11-1-1962	RIGID SEAT SURVIVAL KIT (RSSK) OVERWATER	F	EA	1
C-6	1	PAOOO	1680-00-205-0489	81337	11-1-2006	BAG ASSEMBLY,EQUIPMENT	DEF	EA	1
C-6	2	PAOOO	1660-00-849-9896	81337	11-1-2055	LANYARD ASSEMBLY, SURVIVAL KIT (ATTACHES EQUIP. BAG TO CONTAINER)	DEF	EA	1
C-6	3	PAOZZ	8960-00-916-4201	81337	MIL-W-15117	WATER DRINKING CANNED:10 OZ	ADF	CN	1
C-6	3	PAOZZ	8960-01-319-4703	47823		WATER, DRINKING,PACKET,125 ML	ADF	EA	2
C-6	4	PAOZZ	6850-00-270-9986	81349	ML-517980	SEA MARKER, FLUORESCEIN	CF	PZ	2
C-6	5	PAOZZ	7330-00-213-7173	81337	11-1-2005	PAN,COOKNG	DEF	EA	1
C-6	6	PAOZZ	6605-00-515-5637	61349	AW2C1	COMPASS, MAGNET UNMOUNTED, POCKET TYPE	ABCDEF	EA	1
C-6	7	PAOZZ	1370-00-309-5028	10001	LD165580	SIGNAL, SMOKE AND ILLUMINATING MARINE MOD 0 MK13	ABCDEF	EA	2
C-6	8	XAOZZ				SURVIVAL MANUAL	ABCDEF	BK	1
C-6	9	PAOZZ	4610-00-372-0592	81349	MIL-D-55310	DESALTER KIT,SEAWATER, MK2	CF	KT	1
C-6	10	XAOZZ				OPERATOR MANUAL	DEF	BK	1
C-6	11	PAOZZ	8970-00-082-5665	81349	MIL-F-43231	FOODPACKET,SURVIVAL	ABCDEF	PZ	3
C-6	12	PAOZZ	5110-00-162-2205	81349	MIL-K-8180	KNIFE POCKET		EA	1
C-6	13	PA0ZZ	7920-00-240-2555	80244	L-S-626	SPONGE, CELLULOSETYPE, CLASS 2, SIZE 3	CF	EA	1
C-6	14	PAOZZ	4220-00-244-0764	81349	MIL-F-62181	FISHNG TACKLE KT.	ABCDEF	EA	1
C-6	15	PAOZZ	6350-00-261-9772	81349	MIL-M-18371	MIRROR EMERGENCY SIGNALLING	ABCDEF	EA	1
C-6	16	PAOZZ	6605-01-121-2335	13811	NDC-72-54004	SUNBURN PREVENTIVE, SUNSCREEN LOTION AMINIBENZOIC ACID	ACDF	BT	1
C-6	17	XAOZZ		81337	11-1-1962	PACKING LIST	F	EA	1
C-6	18	PAOZZ	8465-00-485-3034	81348	MIL-B-8571	BAG, STORAGE DRINKING WATER PLASTIC,10 PT.CAP	ABCDEF	EA	1
C-6	19	PAOZZ	8415-00-270-0229	81349	MIL-M-43371	HAT, SUN REVERSIBLE O.D & ORANGE UNIVERSAL SIZE	ACDF	EA	1
C-6	20	PAOZZ	4220-01-056-8667	81349	MIL-L-83491	LIFE RAFT; 1 MAN LRU-17/P	CF	EA	1
C-6		PAOZZ	4220-01-003-6763	81349	MIL-L-83491	LIFE RAFT: 1 MAN LRU-16/P INSULATED BOTTOM AND SPRAY SHIELD	CF	EA	1
C-6		PAOZZ	4220-00-763-3766	98752	67C46306-10	REPAIR KIT, INFLATABLE RAFT (NOT SHOWN:EQUIP .BAG)	CF	EA	1
C-6		PAOZZ	7210-00-935-6667		NO REF	BLANET,COMBATCASUALTY(NOT SHOWN:EQUIP.BAG)		EA.	1

SECTION II. REPAIR PARTS(Continued)

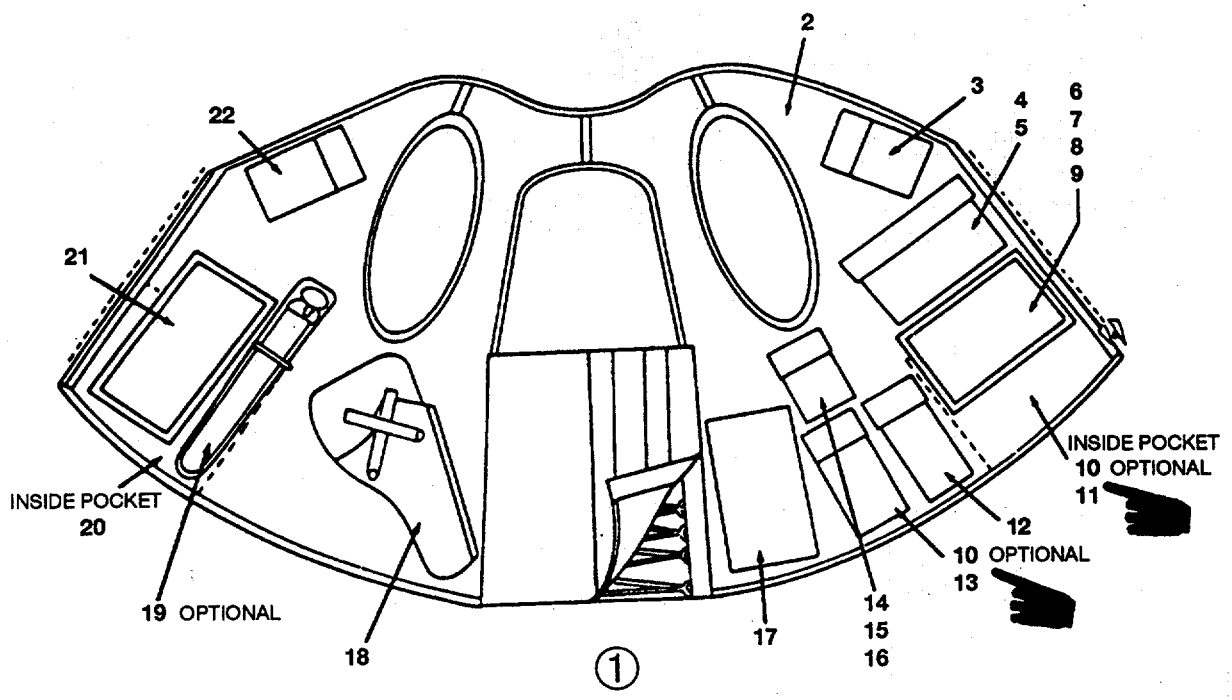

Figure C-7. Individual Survival Kit Vest-Type SRU-21/P

SECTION II. REPAIR PARTS (Continued)

(1) ILLUSTRATION (a) FIG NO.	(b) ITEM NO.	(2) SMR CODE	(3) NATIONAL STOCK NUMBER	(4) FSCM	(5) PART NUMBER	(6) DESCRIPTION USABLE ON CODE	(7) U/M	(8) QTY INC IN UNIT
						INDIVIDUAL SURVIVAL VEST SRU-21/P		
C-7	1	ADOOO	8465-001774819	81337	11-1-1783	SURVIVAL KIT, INDIVIDUAL, VEST.....G	KT	1
						TYPE SRU-21/P (LARGE)		
C-7		ADOOO	8465-01-174-2355	81337	11-1-1783	SURVIVAL KIT, INDIVIDUAL VEST.....	G KT	1
						TYPE SRU-21/P (SMALL)		
C-7	2	PAOOO	8415-00-1774818	81337	11-1-2898	.VEST, SURVIVAL, INDIVIDUAL(LARGE) .....G	EA	1
C-7		PAOOO	8415-00173-8098	81337	11-1-2898-1	.VEST, SURVIVAL, INDIVIDUAL (SMALL) .....G	EA	1
C-7	3	PAOZZ	6515-00383q3565	81349	MIL-T-388045	..TOURNIOUET, NON-PNEUMATIC, CAMOUFLAGE .....G	EA	1
C-7	4	PAOZZ	8465-00300-2138	98752	67F45692	DELETED		
C-7	5	PAOZZ	6230-00938-1778	81349	MIL-L-38217	..LIGHT MARKER, DISTRESS SDU-S/E ..... G H J	EA	1
C-7		PADLL	613500073-8939	90303	BA-1574/H	..BATTERY,BA-1574/U..... G H J	EA	1
C-7		PAOZZ	6230-00-401-2285	18560	FGIC	FLASHGUARD, AGR-FGIB ..... G H J	EA	1
C-7	6	ADOOO	6545-01-120-2632	89875	1-653	.SURVIVAL KIT, INDIVIDUAL, TROP, TACT .....G	EA	1
						AIRCREW		
C-7	7	PAOZZ	6350-00-105-1252	81349	MIL-M-18371	..MIRROR, EMERGENCY SIGNALING ..... G H J	EA	1
C-7	8	PAOZZ	168001-160-5618	62561	8702	..FIRESTARTER, AVIATION SURVIVAL	EA	1
						MAGNESIUM		
C-7	9	PAOZZ	7210-00-935-6667	81349	MIL-B-36964B	..BLANKET, COMBAT CASUALTY.....	EA	1
C-7	10	PAOZZ	6840-00142-8965	80882	00501	..INSECT REPELLENT, 1 OZ .....G	EA	1
C-7	11	PAOZZ	8465-00-6344499	81349	MIL-B4571	..BAG, DRINKING WATER STORAGE: 3PT .....G	EA	1
C-7	12	PAOZZ	5110-00162-2205	81349	MIL-K-8180	..KNIFE, POCKET	EA	1
C-7	13	PAOZZ	1680-01-233-0061	1HP49	SL3	FIRESTARTER, AVIATION SURVIVAL .....G	EA	1
						SPARK LITE		
C-7	14	PAOZZ	1305-00322-6391	19200	7553580	..CARTRIDGE, CALIBER 38 SPECIAL BALL ..... G H J	EA	17
						M41		
C-7	15	PAOZZ	1305-00301-1692	81349	MIL-C3030	..CARTRIDGE, CALIBER .38 SPECIAL ..... G H J	EA	6
						TRACER M41		
C-7	16	PAOZZ	M65-00254-8803	81349	MIL-W-1053	..WHISTLE, BALL PLASTIC O.D. (W/LANYARD)	EA	1
C-7	17	PAOZZ	1370-00-490-7362	27934	600007047-1	..SIGNAL KIT, FOLIAGE PENETRATOR ..... G H J	KT	1
						W/LAUNCHER AND 7 FLARES L-119		
C-7	18	PAOZZ	1095-00208-7598	81337	11-1-1797	.HOLSTER, REVOLVER, NYLON ..... G H J	EA	1
						38 CAL OR 9 MM		
C-7	19	PAOZZ	7340-00-0984327	81349	MIL-K-8662	..KNIFE, HUNTING W/SHEATH AND ..... GH J	EA	1
						SHARPENING STONE (OPTIONAL ISSUE)		
C-7	20	PAOZZ	81337	11-1-1783		..ASEMBLY INSTRUCTION SHEETAND .....G	EA	1
						DD FORM 1574 TAG		
C7	21	PADLL	528(00782-5308	80058	AN/PRC-90	..RADIO SET, AN/PRC-90, SURVIVAL ..... G H J	EA	1
C-7		PAOZZ	6136-00838-0705	81349	MIL-B-18-267	..BATTERY, BA-1568/7 (FOR PRC-90 RADIO)..... G H J	EA	1
C-7	22	PAOZZ	6605-01-196-6971	90640	SANDY 183	..COMPASS, MAGNETIC UNMOUNTED, LENSATIC .....G	EA	1
C-7		PAOZZ	5325-00182-9945	81348	VF106	..FASTENER, SLIDE, INTERLOCKING 15 IN LG .....G	EA	1
C-7		PADLL	582001-158-6082	19560	AN/PRC-901	..RADIO SET	EA	1
C-7		PADLL	5820-01-238-6603	19560	AN/PRC-9-2	..RADIO SET.....	EA	1

SECTION II. REPAIR PARTS (Continued)

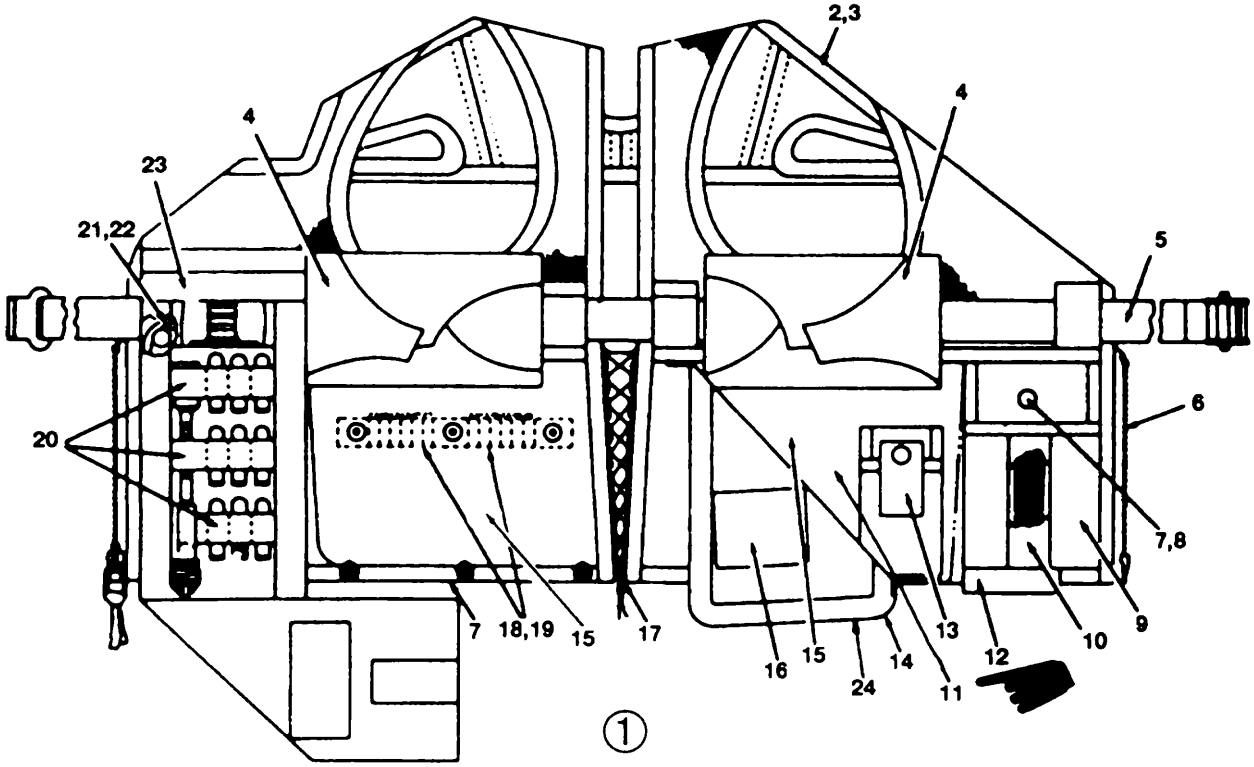

Figure C-8. Individual Survival Kit Vest-OV-1 Aircraft

SECTION II. REPAIR PARTS (Continued)

(1) ILLUSTRATION (a) FIG NO.	(b) ITEM NO.	(2) SMR CODE	(3) NATIONAL STOCK NUMBER	(4) FSCM	(5) PART NUMBER	(6) DESCRIPTION / USABLE ON CODE	(7) U/M	(8) QTY INC IN UNIT
						INDIVIDUAL SURVIVAL VEST OV- 1 AIRCREW		
C-8	1	ADOOO	16800-205-0474	81337	11-1-468-1	SURVIVAL KIT, INDIVIDUAL. VEST ..... H TYPE OV-1 (LARGE) W/ILPU-10	KT	1
C-8		ADOOO	1680-00-187-5716	81337	11-1-468-2	SURVIVAL KIT, INDIVIDUAL, VEST ..... J TYPE OV-1 (SMALL) W/LPU-10	KT	1
C-8	2	PAOOO	8415-00201-9097	81337	11-1-1795-1	.VEST, INDIVIDUAL SURVIVAL OV-1 LARGE..... .H	EA	1
C-8	3	PAOOO	8415-00-201-9098	81337	11-1-1795-2	.VEST, INDIVIDUAL SURVIVAL OV-1 SMALL ..... J	EA	1
C-8	4	PAOOO	422-00-850-8655	80049	LP410P	..LIFE PRESERVER, UNDERARM LPU-10/P ..... GH J	EA	1
C-8	5	PAFZZ	16800-251-8911	81337	11-1-1798-1	..STRAPASSEMBLY, SMALL, VEST..... J	EA	1
C-8		PAFZZ	1680-00-237-2614	81337	11-1-1798-2	..STRAPASSEMBLY, LARGE, VEST ..... H	EA	1
C-8	6	PAOZZ	5325-00-935-5970	81348	VF106	..FASTENER, SLIDE, INTERLOCKING ..... H J 7 3/4 IN LG TYPE IV STYLE 7 SIZE MH	EA	1
C-8	7	PAFZZ	5325-00-278-4908	96908	MS27983-3	..STUD, SNAP FASTENER ..... H J	EA	11
C-8	8	PAFZZ	5325-00-276-4978	96906	MS279834	EYELET, SNAP FASTENER ..... H J	EA	11
C-8	9	PADLL	5820-00-782-5308	80058	AN/PRC-90	..RADIO SET, AN/PRC-90 SURVIVAL ..... G H J	EA	1
C-8		PAOZZ	6135-00-838-0706	90303	BA-1568/4	...BATTERY, BA-1568/UJ (FOR PRC-90 RADIO) ..... G H J	EA	1
C-8	10	PAOZZ	5110-00-528-8740	81349	MIL-K-25594	..KNIFE, POCKET W/HOOK BLADE ..... H J	EA	1
C-8	11	PAOZZ	8465-00-254-8803	81349	MIL-W-1053	..WHISTLE, BALL, PLASTIC O.D. WAANYARD.....	EA	1
C-8	12	PAOZZ	1680-01-160-5618	62561	8702	..FIRESTARTER, AVIATION SURVIVAL, MAGNESIUM.....	EA	1
C-8	13	PAOZZ	6230-00-938-1778	81349	MIL-L-38217	..LIGHT MARKER, DISTRESS SDU-5/E G ..... H J	EA	1
C-8		PADLL	6135-00-073-8939	90303	BA-1574/U	...BATTERY, NONRECHARGEABLE BA-1754J4..... G H J	EA	1
C-8		PAOZZ	6230-00-401-2285	18560	FGIC	..FLASHGUARD AGR-FGIB ..... G H J	EA	1
C-8	14	MFFZZ	8315-00-106-5973	81337	MIL-F-21840	..TAPE FASTENER, PILE, 1 INCH O.D. TYPE II ..... .H J	IN	V
C-8		MFFZZ	8315-00-106-5974	81337	MIL-F-21840	..TAPE FASTENER, HOOK, 1 INCH O.D. TYPE II ..... H J	IN	V
C-8	15	ADOOO	6545-00-478-6504	80206	CL211-C2-10	..SURVIVAL KIT, INDIVIDUAL, W/MEDICAL ..... H J AND GENERAL PACKETS	KT	1
C-8		ADOOO	6545-00-152-1578	81349	MIL-S81941	...GENERAL PACKET, SURVIVAL KIT INDIVIDUAL ..... .H J	KT	1
C-8		ADOOO	6545-00-231-9421	80206	CL211C2-1	...MEDICAL PACKET, SURVIVAL KIT INDIVIDUAL . . .. H J	KT	1
C-8	16	PAOZZ	6530-00-105-1252	81349	MIL-M-18371	..MIRROR, EMERGNCY SIGNALING ..... G H J	EA	1
C-8	17	XBFZZ		81348	VF106	..FASTENER, SLIDE INTERLOCKING ..... H J 19 IN LG TYPE IV STYLE 2 SIZE M	EA	1
C-8	18	PAOZZ	1305-00-322-6391	19200	7553580	..CARTRIDGE, CALIBER .38 SPECIAL BALL ..... G H J M41	EA	6
C-8	19	PAOZZ	1305-00-301-1692	81349	MIL-C-3030	..CARTRIDGE, CALIBER .38 SPECIAL: TRACER . G H J M41	EA	6
C-8	20	PAOZZ	1370-00-490-7362	27934	6000D7047-1	..SIGNAL KIT, FOLIAGE PENETRATOR ..... G H J W/7 FLARES AND LAUNCHER: L119	KT	1
C-8	21	PAOZZ	1005-00-835-9773	19204	7791073	..REVOLVER .38 CALIBER SPECIAL ..... G H J	EA	1
C-8	22	PAOZZ	1095-00-208-7598	81337	11-1-1797	..HOLSTER, REVOLVER.38 CALIBER OR 9MM ..... G H J	EA	1
C 8		PAOZZ	7340-00-098-4327	81349	MIL-K-866L	..KNIFE, HUNTING W/SHEATH AND ..... G H J ..SHARPENING STONE	EA	1
C-8	23	PAOZZ	1680-01-233-0061	1HP49	SL3	..FIRESTARTER, AVIATION SURVIVAL..... H J SPARK LITE (NOT SHOWN) PUT IN WITH ITEM 12	EA	1
C-8	24	PAOZZ	5325-00-068-8295	88044	AN229-2AS78-1	..FASTENER, SLIDE COMPARTMENT, 19 1/4 LG ..... H J	EA	1
C-8		PADLL	5820-01-158-8082	18560	AN/PRC-901	..RADIO SET	EA	1
C-8		PADLL	5820-01-238-6603	18560	AN/PRC-90-2	..RADIO SET	EA	1

SECTION II. REPAIR PARTS (Continued)

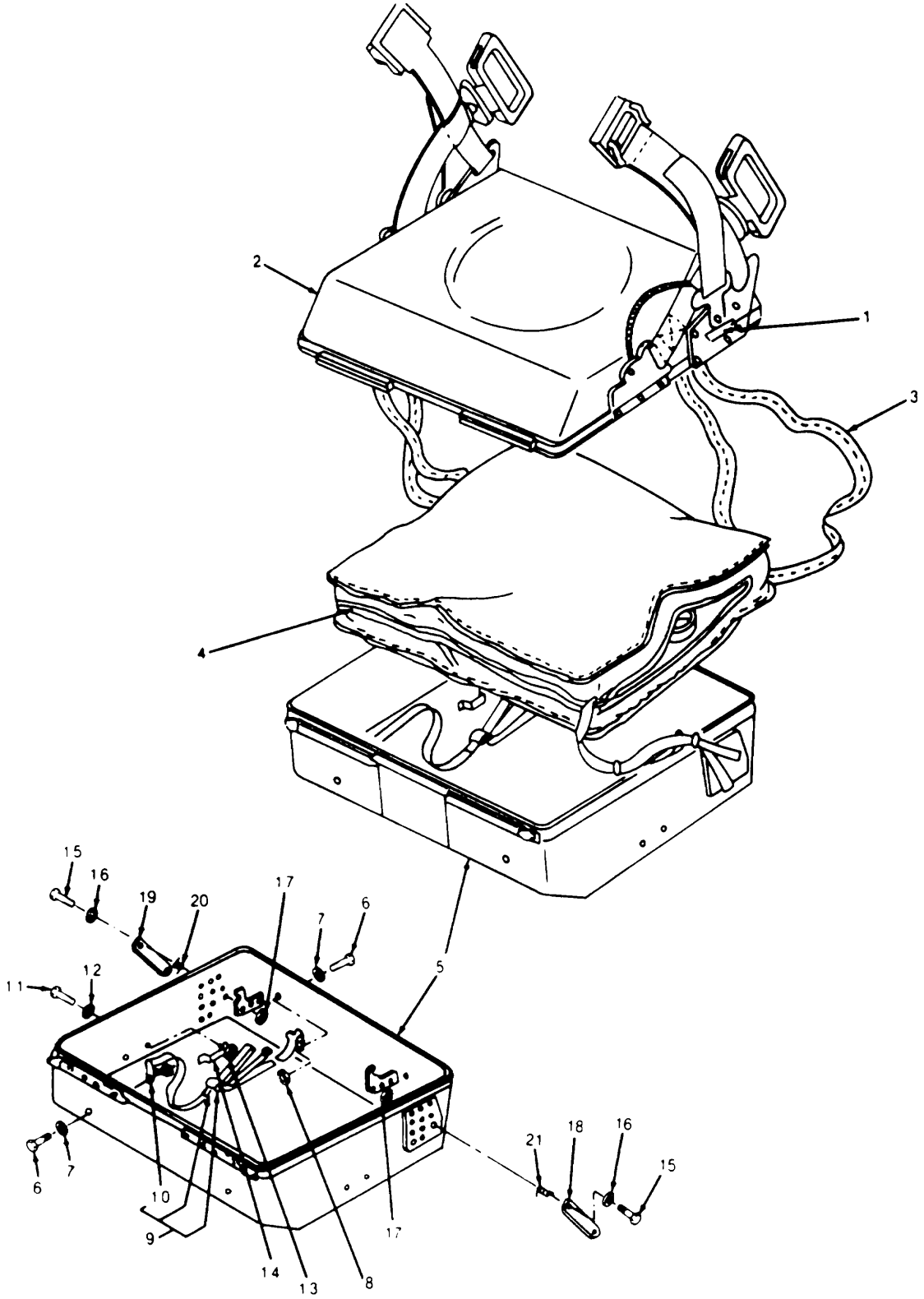

Figure C-9. Rigid Seat Survival Kit

SECTION II. REPAIR PARTS(Continued)

(1) ILLUS (a) FIG NO.	(b) ITEM NO.	(2) SMR CODE	(3) NATIONAL STOCK NUMBER	(4) FSCM	(5) PART NUMBER	(6) DESCRIPTION	USABLE ON CODE	(7) U/M	(8) QTY INC IN UNIT
C-9		ADOOZ	1680-00-233-5759	81337	11-1-1975	RIGID SEAT SURVIVAL KIT			
C-9	1	PBFZZ	9905-00-269-8281	81337	111--1970	PLATE,INSTRUCTION:(REMOVE FOR MANUAL UNLOCK)	K	EA	2
C-9	2	PAFFF	1680-00-223-5788	81337	11-1-2040	LID ASSEMBLY, SURVIVAL KIT: SEE FIG. C-6 FOR BREAKDOWN	K	EA	1
C-9	3	PAFZZ	1680-00-849-9896	81337	11-1-2055	LANYARD ASSEMBLY, SURVIVAL KIT	K	EA	1
C-9	4	XBFZZ				FASTENER, SLIDE, INTERLOCKING: 36-1/4 IN. LG. TYPE I, STYLE 11, SIZE MN, FED V-F-106	K	EA	1
C-9	5	PAFFF	1680-00-223-5770	81337	11-1-2021	CONTAINER ASSEMBLY,SURVIVALKIT	K	EA	1
C-9	6	PAFZZ	5305-00-984-4988	98906	MS35206-228	SCREW, MACHINE: PAN HEAD, NO. 6-32 NC, 3/8 IN. LG	K	EA	4
C-9	7	PAFZZ	5310-00-638-9857	88044	AN960C6L	WASHER, FLAT	K	EA	4
C-9	8	PAFZZ	5310-00-207-8922	72962	22K2-62	NUT, SELF-LOCKING, CAP	K	EA	4
C-9	9	PAFZZ	1670-0O-200-4500	81337	11-1-2054	STRAP,TIE-DOWN:EOUIPMENT BAG	K	EA	2
C-9	10	PAFZZ	5340-00-279-2992	81337	11-1-1969	LOOP,STRAP FASTENER	K	EA	2
C-9	11	PAFZZ	5305-00-984-4989	96906	MS35208-229	SCREW, MACHINE: PAN HEAD, NO. 6-32NC, 7/16 IN. LG	K	EA	4
C-9	12	PAFZZ	5310-00-638-9857	88044	AN960C6L.	WASHER, FLAT	K	EA	4
C-9	13	PAFZZ	5310-00-207-4922	72982	22K2-62	NUT, SELF-LOCKING, CAP	K	EA	4
C-9	14	PBFZZ	5340-00-342-9586	81337	11-1-2042	LOOP,STRAP FASTENER	K	EA	2
C-9	15	PAFZZ	5306-00-156-2698	88044	AN24-14	BOLT,CLEVIS	K	EA	2
C-9	16	PAFZZ	5310-00-515-7449	88D44	AN960C416L	WASHER, FLAT	K	EA	2
C-9	17	PAFZZ	5310-00-488-8566	72962	22K2-048	NUT, SELF-LOCKING	K	EA	2
C-9	18	PBFZZ	1680-00-271-9747	81337	11-1-2004-2	LUG,ATTACHMENT,SURVIVAL KIT:LH	K	EA	1
C-9	19	PSFZZ	1680-00-267-6941	81337	11-1-2004-1	LUG,ATTACHMENT,SURVIVAL KIT: RH	K	EA	1
C-9	20	PBFZZ	5360-00-283-3540	81337	11-1-2012-2	SPRING, HELICAL,TORSION: RH	K	EA	1
C-9	21	PBFZZ	5360-00-283-3543	81337	11-1-2012-1	SPRING,HELICAL,TORSION:LH	K	EA	1

SECTION II. REPAIR PARTS (Continued)

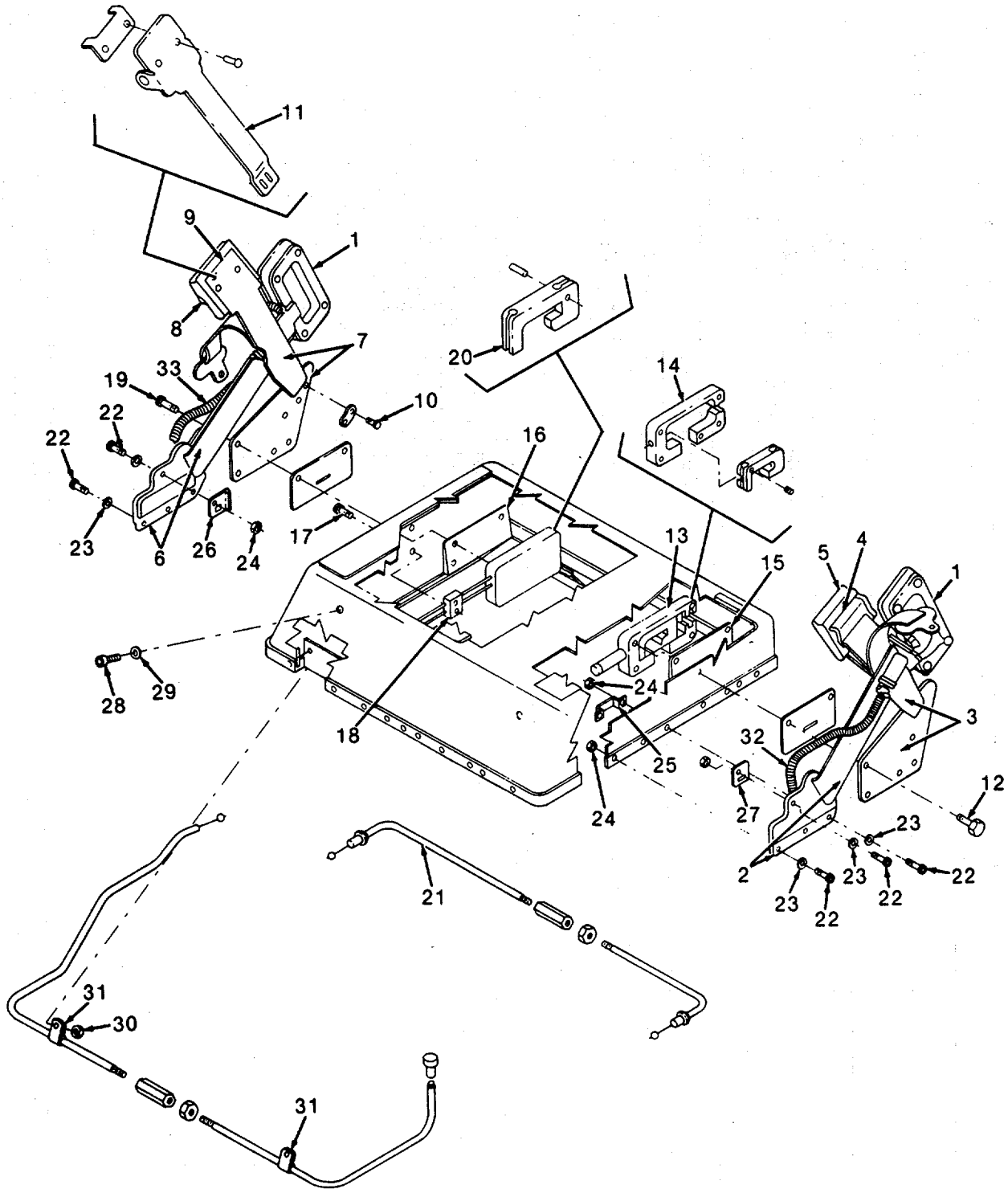

Figure C-10 . Survival Kit Lid Assembly

SECTION II. REPAIR PARTS (Continued)

(1) ILLUSTRATION (a) FIG NO.	(b) ITEM NO.	(2) SMR CODE	(3) NATIONAL STOCK NUMBER	(4) FSCM	(5) PART NUMBER	(6) DESCRIPTION USABLE ON CODE	(7) U/M	(8) QTY INC IN UNIT
						SURVIVAL KIT LID ASSEMBLY		
C-10		PAOFF	1680-002235788	81337	111 2040	LID ASSEMBLY SURVIVAL KIT ..... K	EA	1
C-10	1	PAOZZ	1680-00-271.9785	81337	11 1 1999	.HANDLE ASSEMBLY. RELEASE LATCH ..... K	EA	2
C-10	2	PAOZZ	168000-279-2991	81337	11-1.20222	.HARNESS ASSEMBLY SURVIVAL KIT LH ..... K	EA	1
C-10	3	XBFZZ		81337	11.1-2023.2	..MOUNT ASSEMBLY HARNESS LH ..... K	EA	1
C-10	4	PAOZZ	1670-002648934	81337	11-1-2028	...RELEASE. CANOPY ..... K	EA	1
C-10	5	PAOZZ	1680-00-2719749	81337	11 1-031	...SUPPORT ASSEMBLY HARNESS ..... K	EA	1
C-10	6	PAOZZ	1680-00-270-608	81337	11-1-2022.1	.HARNESS ASSEMBLY SURVIVAL KIT RH ..... K	EA	1
C-10	7	XBO0Z		81337	11-1 2023-1	..MOUNT ASSEMBLY HARNESS RH ..... K	EA	1
C-10	8	PAOZZ	167000-264-934	81337	11.12028	...RELEASE. CANOPY ..... K	EA	1
C-10	9	PAOZZ	168000-271 9749	81337	11-1.2031	...SUPPORTASSEMBLY HARNESS ..... K	EA	1
C-10	10	PAOZZ	5305-00993-0191	96906	MS35206-212	.SCREW, MACHINE PAN HEAD NO 4-40NC. 316 IN LG, ... K	EA	4
C-10	11	PAOZZ	168000 -264972	81337	11.1-2037	.SUPPORT HARNESS. SURVIVAL KIT ..... K	EA	2
C-10	12	PAOZZ	530-00.3094364	80205	NASS50XK3.4	.SCREW. MACHINE ..... K	EA	5
C-10	13	PAOZZ	168040 273-0807	81337	11.1.199	.LATCH ASSEMBLY SURVIVAL KIT LH ..... K	EA	1
C-10	14	PAOZZ	1680-002829733	81337	11-1 19812	.HOUSING LATCH. SURVIVAL KIT RH ..... K	EA	1
C-10	15	PAOZZ	1680-00273-0795	81337	11 1.190	.SPACER. HOUSING. SURVIVAL KIT ..... K	EA	1
C-10	16	PAOZZ	168000269-0327	81337	11.1 1991	.SPACER. CONDUIT SURVIVAL KIT ..... K	EA	1
C-10	17	PAOZZ	530500.964-49e9	990	MS35206-229	.SCREW. MACHINE PAN HEAD, NO 6-32NC 711 81N LG. ..... K	EA	2
C-10	18	PAOZZ	1680-00-262-9730	81337	111 193	.SUPPORT. CONDUIT SURVIVAL KIT ..... K	EA	1
C-10	19	PAOZZ	5305-00-309-4364	80205	NAS680XK3.4	.SCREW. MACHINE ..... K	EA	5
C-10	20	PAOZZ	168000-302-7618	81337	11.1 1979	.LATCH RELEASE. SURVIVAL KIT RH ..... K	EA	1
C-10	21	PAOZZ	1680-00.271.9748	81337	11.1.2030	.CABLE ASSEMBLY. SURVIVAL KIT REAR ..... K	EA	1
C-10	22	PAOZZ	5305-00-958-5451	96906	MS35190-239	.SCREW. MACHINE FLAT HEAD COUNTERSUNK. NO 6-32NC. S IN LG ..... K	EA	6
C-10	23	PAOZZ	5310-00-638-9857	68044	AN96OC6L	.WASHER. FLAT ..... K	EA	6
C-10	24	PAOZZ	5310-00-207-8922	72962	22K242	.NUT. SELF-LOCKING. CAP ..... K	EA	6
C-10	25	PAOZZ	5340-003429586	81337	11 1 2046	.LOOP STRAP FASTENER ..... K	EA	2
C-10	26	PAOZZ	1680000287-6942	81337	11 1 19921	.RETAINER. CONDUIT SURVIVAL KIT RH ..... K	EA	1
C-10	27	PAOZZ	16800D2690328	81337	11 11992 2	.RETAINER. CONDUIT SURVIVAL KIT LH ..... K	EA	1
C-10	28	PAOZZ	5305-00-8893000	908	MS35206-230	.SCREW. MACHINE PAN HEAD NO 6-32NC 1/2 IN LG. ..... K	EA	4
C-10	29	PAOZZ	531000-639857	88044	AN960C6L	.WASHER. FLAT ..... K	EA	4
C-10	30	PAOZZ	531000-207-8922	72962	22K2-62	.NUT SELF LOCKING. CAP ..... K	EA	4
C-10	31	PAOZZ	534000994612	96906	MS25281F2	.CLAMP. LOOP ..... K	EA	4
C-10	32	PAOZZ	16804002719786	81337	11 12026	.CABLE ASSEMBLY. SURVIVAL KIT LH. WICONDUIT ..... K	EA	1
C-10	33	PAOZ2	168002704610	81337	11 1 2029	.CABLE ASSEMBLY. SURVIVAL KIT RH WICONOUIT ..... K	EA	1

Section II. REPAIR PARTS (Continued)

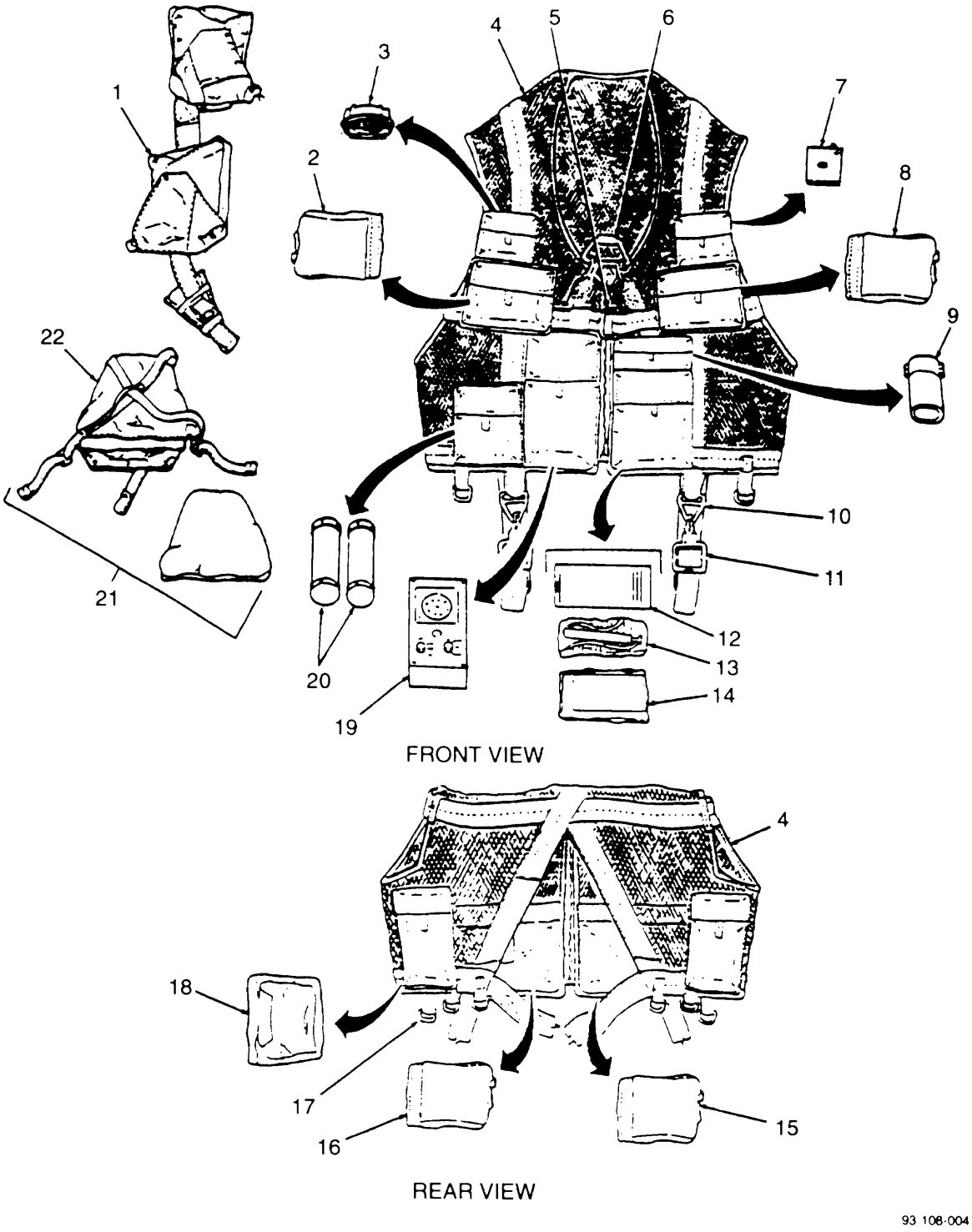

Figure C-11. SARVIP

SECTION II. REPAIR PARTS (Continued)

(1) ILLUSTRATION (a) FIG NO.	(b) ITEM NO.	(2) SMR CODE	(3) NATIONAL STOCK NUMBER	(4) FSCM	(5) PART NUMBER	(6) DESCRIPTION USABLE ON CODE	(7) U/M	(8) QTY INC IN UNIT
						ARCREW SURVIVAL ARMOR RECOVER VEST. INSERT. AND PACKETS (SARVIP)		
C-11		ADOOO	8465-01-361-4875	81349	MIL-S 44095	.X-SMALL (AS A KIT)	KT	1
		ADOOO	8465-01-361-4876	81349	MIL-S-44095	.SMALL (AS A KIT)	KT	1
		ADOO	8465-01-361-4877	81349	MIL-S-44095	.MEDIUM (AS A KIT)	KT	1
		ADOOO	8465-01-361 4878	81349	MIL S-44095	.LARGE (AS A KIT)	KT	1
		ADOOO	8465-01-361-4879	81349	MIL-S-44095	.X-LARGE (AS A KIT)	KT	1
C-11	1	PAOZZ	4220-00-850-8655	80049	LPU-10/P	..LIFE PRESERVER. UNDERARM LPU-10/P	EA	1
C-11	2	ADOOO	81337	11-1-		..PACKET. BASIC SURVIVAL TYPE I	KT	1
		PAOZZ	9110-00-263-9865	81349	MIL-F-10805	...FUEL. COMPRESSED. TRIOXANE. BARS	BX	3
		PCOZZ	9920-00-985-6891	81348	EE-M-101	...MATCHES. SAFETY. HUMIDITY RESISTANT BOX OF 30	BG	1
		PAOZZ	8465-00-254-8803	81349	MIL-W-1053	...WHISTLE, PLASTIC BALL TYPE	EA	1
		PAOZZ	4240-01-160-5618	62561	8702	...FIRE STARTER	EA	1
		PAOZZ	8415-01-192-2357	81349	MIL-S-37205	...HEADNET AND MITTEN SET	EA	1
		PAOZZ	6505-01-288-2188	98634	LE701	...SUNSCREEN	BT	1
		PCOZZ	5150-00-570-6896	81349	MIL-S-9964	...SAW HAND FINGER GRIP. SURVIVAL	EA	1
		PCOZZ	6510-00-203-6010	81348	UP 401	...MOLESKIN	RO	2
		PCOZZ	8925-00-160-6161	63298	A-A-20175	...GUM CHEWING	HD	3
		PCOZZ	8925-00-823-7101	63298	A-8-20177	...CANDY CHARMS	EA	10
C-11	3	PAOZZ	6605-01-196-6971	81349	MIL C 10436	...COMPASS. MAGNETIC. UNMOUNTED. LENSATIC	EA	1
C-11		PAOZZ	8415-01-358-9328	81349	MIL-V-44416	..VEST SURVIVAL X-SMALL	EA	1
C-11	4	PAOZZ	8415-01-358-9329	81349	MIL-V-44416	..VEST SURVIVAL. SMALL	EA	1
C-11	4	PAOZZ	8415-01-358-9330	81349	MIL-V-44416	..VEST SURVIVAL. MEDIUM	EA	1
C-11	4	PAOZZ	8415-01-358-9331	81349	MIL-V-44416	..VEST SURVIVAL. LARGE	EA	1
C-11	4	PAOZZ	8415-01-358-9332	81349	MIL-V-44416	..VEST X LARGE	EA	1
C-11	5	PAOZZ	5340-01-050 7680	96906	MS 70101-1	..ADAPTER CHEST ADJUSTMENT	EA	1
C-11	6	PAOZZ	8465-00-360-0228		COMMERCIAL	..PITON LIFTING	EA	1
C-11	7	PAOZZ	6350-00-105-1252	81349	MIL M-18371	..MIRROR. EMERGENCY SIGNALING	EA	1
C-11	8	ADOOO		81337	MIL-P-44407	..PACKET. MEDICAL SURVIVAL. TYPE II	KT	1
		PCOZZ	6505-00-118-1948			...ASPIRIN TABLETS	PG	10
		PAOZZ	6510-00-913-7909			...BANDAGE. ADHESIVE	BX	6
		PCOZZ	6510-00-913-7906			...BANDAGE GAUZE	BX	1
		PAOZZ	6505-00-582-4191			...BACITRACIN OINTMENT	TU	2
		PCOZZ	6505-00-582-4190			...BACITRACIN OPTHALMIC	TU	1
		PAOZZ	6520-00-935-007			...FLOSS. UNWAXED 100 YDS	PG	1
		PCOZZ	6505-01-238-5632			...IMODIUM CAPSULES	BX	6
		PAOZZ	8315-00-787-8000			...PIN. SAFETY	PG	4
		PAOZZ	6515-00-926-2089			...RAZOR. SURGICAL	EA	1
		PCOZZ	6510-00-926-8881			...TAPE. ADHESIVE	PG	1
		PAOZZ	6505-01-138-5692			...DISCS. TRANSDERM	PG	4
		PCOZZ				...NEEDLE. SEWING. 18 GAGE	PG	2
		PCOZZ	6515-00-926-8954			...PENROSE TUBING	BX	1
		PAOZZ	6850-00-985-7166			...WATER PURIFICATION TABLETS	BT	50
		PAOZZ	8520-00-551-0375			...SOAP TOILET	MX	1
C-11	9	PAOZZ	6230-00-938-1778	81349	MIL L-38217	...LIGHT MARKER. DISTRESS SDU-5/E	EA	1
		PDALL	6135-00-073-8939	90303	BA 1574/U	...BATTERY BA 1574/U	EA	1
		PAOZZ	6230-00-401-2285	18560	FGIC	...FLASHGUARD AGR-FG1B	EA	1
C-11	10	PAOZZ		AF-TN	54A90B2	..RING "V' TYPE II. CLASS 2. O0-P-416	EA	2
C-11	11	PAOZZ	5340-00-875-861	96906	MS 22018	..SNAP. HARNESS	EA	2
C-11	12	PAOZZ		TM 1-1680-359-10		..OPERATOR'S MANUAL	BK	1
C-11	13	PAOZZ	1370-00-490-7362	98747	89108839	..SIGNAL KIT. PERSONNEL DISTRESS. A/P258-GA	EA	1
C-11	14	PCOZZ	4230-01-101-3984	81361	D5-77-2366	..SKIN DECONTAMINATION KIT M258A1	BK	1
C-11	14	PAOZZ	6665-00-050-8529	83161	D5-67-266	..PAPER. CHEMICAL AGENT. DETECTOR	KT	1
C-11	15	ADOOO		81337	MIL-P-44407	..PACKET. FIRST AID DRESSING. TYPE III	EA	1
		PAOZZ	6510-00-159-4883	18162		..DRESSING. FIRST AID. FIELD, TYPE III		1
		PAOZZ	8465-00-634-4499	81349	MIL-B-8571	..BAG. WATER STORAGE	EA	1

SECTION II. REPAIR PARTS (Continued)

(1) ILLUSTRATION (a) FIG NO.	(b) ITEM NO.	(2) SMR CODE	(3) NATIONAL STOCK NUMBER	(4) FSCM	(5) PART NUMBER	(6) DESCRIPTION USABLE ON CODE	(7) U/M	(8) QTY INC IN UNIT
C-11	16	ADOOO		81337	MIL-P-44407	..PACKET, COMBAT CASUALTY. TYPE IV	KT	1
		PAOZZ	6510-00-159-4883			...BLANKET. COMBAT	EA	1
C-11	1 7	PAOZZ			MIL-R-3390	..RING. 'D"	EA	6
C-11	18	PAOZZ	6850-00-270-9986	81349	MIL-S-17980	..SEA MARKER. FLOURESCEIN	BX	1
C-11	19	PCOZZ	5820-00-782-5306	04655	01-524795-1	..RADIO SET, AN/PRC-90 SURVIVAL	EA	1
C-11	19	PAOZZ	5820-01-238-6603	18560	AN/PRC-90-9	PRC 90-2	EA	
C-11	19	PAOZZ	5820-01-279-5450	18560	ANIPRC-112	PRC 90-112	EA	
		PADLL	6135-00-838-0706	81349	MIL-B18267	..BATTERY, BA1568/U (FOR AN/PRC-90 RADIO ONLY)	EA	1
C-11	20	PADLL	1370-01-030-8330	10001	DL3139734	..SIGNAL, SMOKE AND ILLUMINATION. MK24	EA	2
		PADLL	6135-01-235-4168	81349	BA5112U	..BATTERY. BA5112/UJ (FOR AN/PCR-112 RADIO ONLY)	EA	2
						CARRIER. SMALL ARMS PROTECTIVE BODY ARMOR (WITH CERAMIC BODY ARMOR INSERT)		
C-11	21	ADOOO	8470-01-359-0426	81349	MIL-C-44417	.SHORT	KT	1
C-11	21	ADOOO	8470-01-359-0427	81349	MIL-C-44417	.REGULAR	KT	1
C-11	21	ADOOO	8470-01-359-0428	81349	MIL-C-44417	.LONG	KT	
C-11	21	ADDOO	8470-01-359-4029	81349	MIL-C-44417	.X-LONG	KT	1
						CARRIER. SMALL ARMS PROTECTIVE BODY ARMOR (WITHOUT CERAMIC BODY ARMOR INSERT)		
C-11	22	ADOOO	8470-01-359-0422	81349	MIL-C-44417	.SHORT	KT	1
C-11	22	ADOOO	8470-01-359-0423	81349	MIL-C-44417	.REGULAR	KT	1
C-11	22	ADOOO	8470-01-359-0424	81349	MIL-C-44417	.LONG	KT	1
C-11	22	ADOOO	8470-01-359-0425	81349	MIL-C-44417	.X-LONG	KT	1
						BULK ITEMS		
		PAOZZ	5340-01-078-5304	96906		ADAPTER, REVERSIBLE, QUICK FIT	EA	V
		PAOZZ		81349		CLOTH. BALLISTIC. ARAMID. TYPE II. CLASS 2. 14 OZ	YD	V
		PAOZZ	8305-00-483-1344	81349	MIL-C-43842	CLOTH. OXFORD. ARAMID. COLOR OG 106	YD	V
		PAOZZ		81349	MIL-C-43989	CLOTH. KNITTED, RASCHEL, ARAMID	YD	V
		PAOZZ	5325-00-159-3761	81349	MIL-SPEC-V-F-106	FASTENER. SLIDE. 8-3/4 IN	EA	V
		PAOXX	5325-00-159-3763	81349	MIL-SPEC-V-F-106	FASTENER. SLIDE. 9-3/4 IN	EA	V
		PAOZZ	5325-01-011-1007	81349	MIL-SPEC-V-F-106	FASTENER. SLIDE. 14 IN	EA	V
		PAOZZ	5325-00-891-9073	96906	MS-27983-1	FASTENER. SNAP ASSY. CAP. PULL DOT	HD	V
		PAOZZ	5325-00-267-4972	88044	AN227-63B	FASTENER, SNAP. ASSY. SOCKET, PULL DOT	HD	V
		PAOZZ	5325-00-276-4980	96906	MS27983-3	FASTENER,. SNAP ASSY, STUD. PULL DOT	HD	V
		PAOZZ	5325-00-276-4969	96906	MS27980-8N	FASTENER. SNAP ASSY, POST/EYELET. PULL DOT	HD	V
		PAOZZ	8315-01-010-7203	81349	MIL-F-21840	FASTENER. TAPE, HOOK, 5/8 IN. TYPE I, CLASS 2	YD	V
		PAOZZ	8315-01-010-7204	81349	MIL-F-21840	FASTENER, TAPE. PILE. 5/8 IN . TYPE I, CLASS 2	YD	V
		PAOZZ	8315-00-151-6480	81349	MIL-F-21840	FASTENER,. TAPE. HOOK. 1 IN, TYPE I. CLASS 2	YD	V
		PAOZZ	8315-00-151-6484	81349	MIL-F-21840	FASTENER. TAPE, PILE, 1 IN TYPE I. CLASS 2	YD	V
		PAOZZ	8315-00-151-6481	81349	MIL-F-21840	FASTENER. TAPE. HOOK, 1-23/32 IN . TYPE II. CLASS 2	YD	V
		PAOZZ	8315-00-151-6483	81349	MIL-F-21840	FASTENER, TAPE. PILE. 1-23/32 IN . TYPE II. CLASS 2	YD	V
		PAOZZ	8305-00-261-8579	81349	MIL-T-5038	TAPE, REINFORCING, NYLON. TYPE IV, CLASS 2	YD	V
		PAOZZ		81349	MIL-W-43685	TAPE, REINFORCING, ARAMID FIBER, 1 IN , TYPE II, OG 106	YD	V
		PAOZZ	8310-00-130-6245	81349	MIL-T-83195	THREAD, PARA-ARAMID. SIZE T-50. 3 PLY. COLOR OG	YD	V
		PAOZZ	8310-00-227-1244	81349	V-T-295	THREAD. SIZE FF, 3 PLY. TYPE I. CLASS A, OG	YD	V
		PAOZZ	8305-00-263-3598	81349	MIL-W-4088	WEBBING. WOVEN NYLON, 1-23/32 IN WIDE. TYPE VIII, CLASS I. OG	YD	V
		PAOZZ	8305-00-270-1868	81349	MIL-W-5664	WEBBING. ELASTIC. 1-1/2 IN WIDE. TYPE II. CLASS 1. OG	YD	V
						BULK MATERIALS		
BULK		PCFZZ	8040-00-262-9062	81348	MM-A-139	ADHESIVE LIQUID, RUBBER BASE, 1 PT CAN BAG, PLASTIC POLYETHYLENE. 8 IN SO	PT	V
BULK		PAFZZ	0105-00-837-7766			WANTERLOCKING SEAL CLOSURE. FED PPP-B-0026. TYPE II, STYLE 2	EA	V
BULK		PAFZZ	8105-00-837-7756	58536	A-A-1799	BAG. PLASTIC. POLYETHYLENE, 10 IN SO W/INTERLOCKING SEAL CLOSURE. FED PPP-B-0026. TYPE II. STYLE 2	EA	V
BULK		PAFZZ	1870-00-588-0323	22508	21AY061	BAND, RUBBER, PARACHUTE SUSPENSION LINE RETAINER. 100 PER BOX. MIL-B-1832, TYPE I	EA	V
BULK		PAFZZ	8100-00253-1171	81348	C-B-191	BEESWAX. TECHNICAL 1 LB CAKE. FEDC-B-191	LB	V

SECTION II. REPAIR PARTS (Continued)

(1) ILLUSTRATION (a) FIG NO.	(b) ITEM NO.	(2) SMR CODE	(3) NATIONAL STOCK NUMBER	(4) FSCM	(5) PART NUMBER	(6) DESCRIPTION USABLE ON CODE	(7) U/M	(8) QTY INC IN UNIT
BULK		PAFZZ	7510-00-154-8893			CHALK, MARKING WHITE. TAPERED. 3/8 IN TO 7/16 IN DIA. 144 PER BOX. FED 55-C-255. GRADE B	EA	V
BULK		PAFZZ	8305-00-420-5274	81349	MIL-C-20696	CLOTH. COATED NYLON, TYPE II. 3/8 IN W. BLACKSIDE. COATED BUTADIENE ACRYLONITRILE. OLIVE DRAB SIDE UNCOATED. MIL-C-20696. CLASS S	YD	V
BULK		PAFZZ	8305-00-935-6427	81349	MIL-C-19002	CLOTH. COATED. POLYCHLOROPRENE NYLON. TYPE 1. YELLOW 36 IN W. MIL-C-19002	YD	V
BULK		PAFZZ	8305-00-170-9284	81348	CCC-C-419	CLOTH. DUCK COTTON. TYPE I. OLIVE DRAB 14 35 OZ. 36 IN W. FED CCC-C-419	YD	V
BULK		PAFZZ	8305-00-171-1203	81348	CCC-C-419	CLOTH. DUCK COTTON, TYPE III, OLIVE DRAB 8 25 OZ. 33 IN W. FED CCC-C-419	YD	V
BULK		PAFZZ	8305-00-926-6870	81349	MIL-C-7219	CLOTH, DUCK NYLON, TYPE III. OLIVE GREEN 725 OZ. 40 IN W. MIL-C-7219	YD	V
BULK		PCFZZ	8305-00-765-2863	81349	MIL-C--7219	CLOTH. DUCK NYLON, TYPE III, SAGE GREEN 7 25 OZ. 42 IN W. MIL-C-7219	YD	V
BULK		PAFZZ	8305-00-350-5625	81349	MIL-C-8061	CLOTH. KNITTED NYLON. SAGE GREEN 10 5 OZ 38 IN W. MILL-C-8061	YD	V
BULK		PAFZZ	8305-00-926-6489	81349	MIL-C-23070	CLOTH. LAMINATED NYLON, RUBBER COATED. YELLOW ONE SIDE. BLUE ONE SIDE, 38 IN W. MIL-C-23070. VARIETY C	YD	V
BULK		PAFZZ	4020-00-240-2154			CORD, FIBROUS NYLON, TYPE I, 100 LB BREAKING STRENGTH. NATURAL COLOR, 500 YD PER SPOOL. MIL-C-5040	FT	V
BULK		PAFZZ	4020-00-935-5761			CORD. FIBROUS NYLON. TYPE 1, 100 LB BREAKING STRENGTH. OLIVE DRAB. 700 YD PER SPOOL. MIL-C-5040	FT	V
BULK		PAFZZ	4020-00-292-9920			CORD. FIBROUS NYLON. TYPE IA, 100 LB BREAKING STRENGTH. NATURAL COLOR. 700 YD PER SPOOL, MIL-C-5040	YD	V
BULK		PAFZZ	4020-00-240-2148			CORD, FIBROUS NYLON, TYPE 111, 550 LB BREAKING STRENGTH. NATURAL COLOR, 700 YD PER SPOOL, MIL-C-5040	YD	V
BULK		PAFZZ	4020O-0530-0174			CORD. FIBROUS NYLON, TYPE XI. 300 LB BREAKING STRENGTH. NATURAL COLOR. 2.333 YD PER SPOOL. MIL-C-7515	YD	V
BULK		PAFZZ	402000-903-8594			CORD. FIBROUS NYLON, TYPE XI, 300 LB BREAKING STRENTH. OLIVE DRAB, 2.333 YD PER SPOOL. MIL-C-7515	YD	V
BULK		PAFZZ	8010-00-515-9144			ENAMEL: GRAY. LUSTERLESS. 1 PT PRESSURIZED CAN. MIL-E-5558	PT	V
BULK		PAFZZ	8010-00595-5936			ENAMEL OLIVE DRAB, SEMIGLOSS. 12 OZ PRESSURIZED. CAN. FED TT-E-485. TYPE II	OZ	V
BULK		PAFZZ	8010-00-079-3760	70785	PSP8	ENAMEL RED. FULL GLOSS. 1 PT PRESSURIZED CAN, FED TT-E-00488	PT	V
BULK		PAFZZ	8315-00-926-4931	81349	MIL-F-21840	FASTENER TAPE. HOOK BLACK. 2 IN W. NYLON, MIL-F-21840. TYPE II	YD	V
BULK		PAFZZ	8315-00-106-5973	81349	MIL-F-21840	FASTENER TAPE. HOOK OLIVE GREEN. 1 IN W. NYLON. MIL-F-21840. TYPE II	YD	V
BULK		PAFZZ	8315-00-450-9837	81349	MIL-F-21840	FASTENER TAPE, HOOK OLIVE GREEN. 2 IN W. NYLON, MIL-F-21840. TYPE II	YD	V
BULK		PAFZZ	8315-00-926-4830	81349	MIL-F-21840	FASTENER TAPE. PILE: BLACK. 2 IN W. NYLON, MIL-F-21840. TYPE II	FT	V
BULK		PAFZZ	8315-00-106-5974	81349	MIL-F-21840	FASTENER TAPE. PILE OLIVE GREEN. 1 IN W. NYLON, MIL-F-21840. TYPE II	YD	V
BULK		PAFZZ	8315-00-498-6631	81349	MIL-F-21840	FASTENER TAPE, PILE OLIVE GREEN, 2 IN W. NYLON, MIL-F-21840. TYPE II	YD	V
BULK		PAFZZ	9150-00-985-7245	81349	MIL-G-23827	GREASE, AIRCRAFT AND INSTRUMENT 8 OZ TUBE MIL-0-3278	OZ	V
BULK		PAFZZ	5325-00-231-6589	81349	MIL-G-16491	GROMMET. METALLIC SIZE 0	EA	V
BULK		PAFZZ	7510-00-224-6734	58536	A-A-208	INK. MARKING. STENCIL BLACK. 1 PT CAN. FED TT-I-558	PT	V
BULK		PAFZZ	9150-00-231-5589			LUBRICATING OIL, GENERAL PURPOSE 1 QT CAN. FED VV-1-800	QT	V
BULK		PAFZZ	8810-00-281-2785	81346	ASTM-D-740	METHYL ETHYL KETONE. TECHNICAL 1 GAL CAN. FED TT-M-201	GL	V
BULK		PAFZZ	8810-00-223-9057			NAPHTHA. AROMATIC 1 GAL CAN. FED TT-K-97, TYPE II	GL	V
BULK		PAFZZ	5315-00-234-1864	64186	14-0712-03	PIN, COTTER	EA	V

SECTION II. REPAIR PARTS(Continued)

(1) ILLUSTRATION (a) FIG NO.	(b) ITEM NO.	(2) SMR CODE	(3) NATIONAL STOCK NUMBER	(4) FSCM	(5) PART NUMBER	(6) DESCRIPTION / USABLE ON CODE	(7) U/M	(8) QTY INC IN UNIT
BULK		PAFZZ	8030-00-081-2329			SEALING COMPOUND: 10CC BOTTLE, MIL-S-22473, GRADE E	CC	V
BULK		PAFZZ	7930-00-634-3935			SOAP, LAUNDRY:CHIP,180 TO 200 LB DRUM,FED P-S-579	LB	V
BULK		PAFZZ	5350-00-240-2920			STEEL WOOL. GRADE 00, 1 LB ROLL, FED F-F-740, TYPE I	LB	V
BULK		PAFZZ	9310-00-160-7858			STENCILBOARD:OILED,36 1N. LG,24 1N. W,100 SHEETS PER PKG, FED UU-P-543. TYPE 11, GRADE I	EA	V
BULK		PAFZZ	6810-00-270-9989			TALC, TECHNICAL: POWDER, 1 LB CAN, FED ZZ-T-416, TYPE IV	LB	V
BULK		PAFZZ	8135-00-272-9346			TAPE, GUMMED: PAPER, OPAQUE, BROWN, 2 IN. W, 600 FT. LG ROLL FED PPP-T-45, TYPE (II, GRADE 8	FT	V
BULK		PAFZZ	7510-00-266-5006			TAPE PRESSURE SENSITIVE ADHESIVE:1 1N. W,TYPE I OLIVE DRAB, CLOTH BACKING, OPAQUE, 60 YD ROLL, FED PPP-T-60	YD	V
BULK		PAFZZ	7510-00-515-0319			TAPE, PRESSURE SENSITIVE ADHESIVE: 2 IN. W, NATURAL COLDR GLASS. CLOTH BACKING. OPAQUE, 60 YD ROLL, MIL-T-4053	YD	V
BULK		PAFZZ	8315-00-253-6287			TAPE, TEXTILE: COTTON, TYPE 1, 1/2 IN. W, OLIVE DRAB 70 LB BREAKING STRENGTH, MIL-T-43588, CLASS 4	FT	V
BULK		PAFZZ	8315-00-231-8531			TAPE, TEXTILE: NYLON, I IN. W, OLIVE DRAB MIL-T-43664	FT	V
BULK		PAFZZ	8315-00-849-0208			TAPE TEXTILE: NYLON, TYPE I 5/16 1N. W,SAGE GREEN 350 LB BREAKING STRENGTH, 100 YD PER SPOOL, MIL-T-8383	YD	V
BULK		PAFZZ	8315-00-176-8083			TAPE, TEXTILE: NYLON, TYPE II, 3/4 IN. W, OLIVE DRAB 400 LB BREAKING STRENGTH, MIL-T-5038	FT	V
BULK		PAFZZ	8310-00-262-2770			THREAD. NYLON:SIZE NO. E NATURAL WHITE 2,600 YD PER TUBE, FED V-T-295, TYPE I, CLASS I	YD	V
BULK		PAFZZ	8310-00-262-2772			THREAD, NYLON: SIZE NO. E, OLIVE DRAB 2,800 YD PER TUBE, FED V-T-295, TYPE 1, CLASS I	YD	V
BULK		PAFZZ	8310-00-227-1244			THREAD, NYLON: SIZE NO. FF, OLIVE DRAB 1,362 YD PER TUBE, FED V-T-295, TYPE 1, CLASS I	YD	V
BULK		PAFZZ	8310-00-262-2780			THREAD, NYLON: SIZE NO. 6, OLIVE DRAB, 425 YD PER TUBE FEDV-T-295. TYPE I, CLASS I	YD	V
BULK		PAFZZ	6810-00-286-2285			TOLUENE-METHYL ISOBUTYL KETONE MIXTURE: 1 GAL CAN MIL-T-19588	GL	V
BULK		PAFZZ	9160-00-285-2044			WAX, PARAFFIN, TECHNICAL: LB CAKE, FED VV-W- 95 TYPE I, GRADE A	LB	V
BULK		PAFZZ	8305-00-261-8579			WEBBING,TEXTILE: NYLON. TYPE IV, 1 IN.W.OLIVE DRAB 1,000 LB BREAKING STRENGTH, MIL-T.5038	FT	V
BULK		PAFZZ	8305-00-753-6497			WEBBING, TEXTILE: NYLON, TYPE IV, 1 IN. W, YELLOW 1,000 LB BREAKING STRENGTH, MIL-T-5038	FT	V
BULK		PAFZZ	8305-00-263-2472			WEBBING, TEXTILE: NYLON, TYPE IV, 1-1/2 IN. W, OLIVE DRAB 1,500 LB BREAKING STRENGTH, MIL-T-5038	FT	V
BULK		PAFZZ	8305-00-411-5976			WEBBING, TEXTILE, NYLON, TYPE IV, 1-1/2 IN. W. RED 1,500 LB BREAKING STRENGTH, MIL-T-5038	FT	V
BULK		PAFZZ	8305-00-261-8585			WEBBING, TEXTILE: NYLON, TYPE VIII, 1-23/32 IN. W, OLIVE DRAB 3,600 LB BREAKING STRENGTH, MIL-W4088	FT	V
BULK		PAFZZ	8305-00-082-5752			WEBBING, TEXTILE NYLON, TUBULAR, 1/2 IN. W NATURAL COLOR, W/YELLOW IDENTIFICATION YARNS, 1,000 LB BREAKING STRENGTH, MIL-W-5825	FT	V
BULK		PAFZZ	8305-00-262-1665			WEBBING, TEXTILE: NYLON, TUBULAR, 1-1/2 IN. W ORANGE-YELLOW, 1,800 LB BREAKING STRENGTH, MIL-W-17337	FT	V
BULK		PAFZZ	8305-00-350-5596			WEBBING. TEXTILE: NYLON. 7/16 IN. W, W/ONE LOOPED EDGE SAGE GREEN, 175 LB BREAKING STRENGTH, MIL-T-26089	FT	V
BULK		PBFZZ	9505-00-892-4616			WIRE, STEEL, CORROSION RESISTING: 0.080 IN. DIA 59.60 FT PER LB. 10 LB COIL. FED QQ-W-423	LB	V
BULK		PAFZZ	7510-00-582-4772			TAPE, FILAMENT REINFORCED, TYPE II CLASS B 1 IN.W,NATURAL	RL	V

SECTION III. TOOL AND TEST EQUIPMENT REQUIREMENTS

SURVIVAL KITS				
TOOL OR TEST EOUIPMENT REFERENCE CODE	MAIN CATEGORY	NOMENCLATURE	NATIONAL/NATO STOCK NUMBER	TOOL NUMBER
1	AVUM	WRENCH.,TOROUE	5120-00-542-4489	
2	AVUM	ADAPTER.3/8 IN SQ. DRIVE	5120-00-542-9219	
3	AVUM	CROWFOOT,ATTACHMENT	5120-00 189-8403	
4	AVUM	WRENCH, TORQUE. 3/8 IN SQ. DRIVE	5120-00-821-3441	
5	AVUM	ADAPTER.1/2 IN SQ.DRIVE	5120-00-240-8703	
6	AVUM	BIT SET SCREWDRIVER	5120-00-678-5057	
7	AVUM	CLEANER,VACUUM	7910-00-550-9123	
8	AVUM	MANOMETER	6685-00-526-5323	
9	AVUM	SCALE, DIAL AND BEAM	6670-00-255-0239	
10	AVUM	SEPARATOR, OIL AND WATER	4920-00-242-4100	
11	AVUM	KNIFE SET, 3 HOLDER WIBLADES	5110-00-018-0952	
12	AVUM	HOT KNIFE.SEARING	5110 -00-029-9089	
13	AVUM	SEWING MACHINE, MEDIUM	3530-00-852-4779	
14	AVUM	DRILL, ELECTRIC 1/4 IN PORTABLE	5130-00-889-8994	
15	AVUM	DRILLSET, TWIST	5133-00-293-0983	
16	AVUM	TOOL KIT CHUCK AND DIE SET	5180-00-341 4137	
17	AVUM	FACE SHIELD	4240-00-965-1268	
18	AVUM	MALLET, RAWHIDE	5120 00-293-3397	
19	AVUM	AWL.SADDLERS	5120-00-223-8991	
20	AVUM	BRUSH, STENCIL	7520 00-248-9285	
21	AVUM	BRUSH, DUSTING	7920 00-240 6358	
22	AVUM	PUNCH, LEATHER	5110-00-596 9604	
23	AVUM	TWEEZERS CRAFTSMAN	5120-00-233-6985	
24	AVUM	TESTER TS 2530A/UR	6625 00-238-0223	
25	AVUM	TESTSET ANPRM-32A	6625-00-013-9900	
26	AVUM	TESTSET ANR/TS-24	6625-01-128-8588	
27	AVUM	SEALING IRON, ELECTRIC	3540-00-956-4511	
28	AVUM	TEST SET, STROBE	6625-01-085-9669	

SECTION IV. NATIONAL STOCK NUMBER AND PART NUMBER

STOCK NUMBER	FIG.	ITEM
AFM 64-5 OR TM 21-76	C-4	20
AFM 64-5 OR TM 21-76	C-5	5
AFM 64-5 OR TM 21-76	C-6	8
TM 10-1670-1	C-5	24
TM 55-1680-316-10	C-4	22
TM 55-1680-316-10	C-5	22
TM 55-1680-316-10	C-6	10
1005-00-835-9773	C-8	21
1095-00-208-7598	C-7	18
1095-00-208-7598	C-8	22
1305-00-301-1692	C-7	15
1305-00-301-1692	C-8	19
1305-00-322-6391	C-7	14
1305-00-322-6391	C-8	17
1370-00-309-5028	C-1	6
1370-00-309-5026	C-2	5
1370-00-309-5028	C-3	19
1370-00-309-5028	C-2	5
1370-00-309-5028	C-S	23
1370-00-309-5028	C-6	7
1370-00-490-7362	C-8	20
1370-00-782-6412	C-7	17
1660-00-849-9896	C-4	2
1660-00-849-9896	C-5	2
1660-00-849-9696	C-6	2
1680-00-849-9896	C-9	3
1670-00-200-4500	C-9	9
1670-00-264-8934	C-10	4
1670-00-264-8934	C-10	8
1670-00-887-2150	C-1	27
1670-00-887-2150	C-2	26
1670-00-667-2150	C-3	30
1680-00-082-2511	C-3	1
1680-00-082-2512	C-2	1
1680-00-082-2513	C-1	1
1660-00-082-2514	C-1	2
1660-00-082-2514	C-2	2
1680-00-082-2514	C-3	2
1680-00-140-3540	C-6	
1680-00-148-9233	C-5	
1680-00-148-9234	C-4	
1680-00-187-5716	C-8	
1680-00-205-0474	C-8	1
1680-00-205-0489	C-4	1
1660-00-205-0469	C-5	1
1680-00-205-0489	C-6	1
1680-00-223-5770	C-9	5
1680-00-223-5788	C-10	
1680-00-223-5788	C-9	2
1680-00-237-2614	C-8	
1680-00-251-8911	C-8	5
1680-00262-9730	C-10	16
1680-00-262-9733	C-10	14
1680-00-264-8972	C-10	11
1680-00-267-6941	C-9	19
1680-00-267-6942	C-10	26
1680-00-269-0327	C-10	16
1680-00-269-0328	C-10	27
1680-00-270-6610	C-10	33
1680-00-271-9747	C-9	18
1680-00-271-9746	C-10	21
1680-00-271-9749	C-10	5
1680-00-271-9749	C-10	9
1680-00-271-9785	C-10	1
1680-00-271-9786	C-10	32
1680-00-273-0795	C-10	15
1660-00-273-0607	C-10	13
1680-00-302-7616	C-10	20
1680-00-973-1661	C-1	
1680-00-973-1862	C-2	
1680-00-973-1863	C-3	
1680-01-160-5618	C-8	
1680-00-160-5618	C-2	
1680-01-160-5618	C-3	
1680-01-160-5618	C-4	4
1680-01-160-5618	C-5	18
1680-01-160-5618	C-7	8
1680-01-160-5618	C-8	12
2040-00-485-3018	C-3	26
2090-00-277-6563	C-3	7
4220-00-244-0764	C-1	15
4220.00-244-0764	C-2	1B
4220-00-244-0764	C-3	21
4220-00-244-0764	C-4	1B
4220-00-244-0764	C-5	19
4220-00-244-0764	C-6	14
4220-00-565-3276	C-3	31
4220-00-763-3766	C-3	4
4220-00-763-3766	C-6	
4220-00-850-8655	C-8	4
4220-01-003-6763	C-3	
4220-01-003-6763	C-6	
4220-01-056-8667	C-3	28
4220-01-056-8667	C-6	20
4610-00-372-0592	C-3	17
4610-00-372-0592	C-6	9
5OC3586	C-2	
5110-00-162-2205	C-1	7
5110-00-162-2205	C-2	10
5110-00-162-2205	C-3	13
5110-00-162-2205	C-4	7
5110-00-162-2205	C-5	10
5110-00-162-2205	C-6	12
5110-00-162-2205	C-7	12
5110-00-526-8470	C-8	10
5110-00-570-6896	C-5	26
5110-00-570-6896	C-1	
5110-00-570-6896	C-2	
5110-00-570-6896	C-3	
5110-00-570-6896	C-2	17
5110-00-733-7129	C-2	7
5280-00-782-5306	C-7	21
5305-00-309-4354	C-10	12
5305-00-309-4364	C-10	19
5305-00-889-3000	C-10	26
5305-00-958-5451	C-10	22
5305-00-984-4988	C-9	6
5305-00-984-4989	C-10	17
5305-00-984-4989	C-9	11
5305-00-993-0191	C-10	10
5306-00-156-2696	C-9	15
5310-00-207-8922	C-10	24
5310-00-207-8922	C-10	30
5310-00-207-8922	C-9	8
5310-00-207-8922	C-9	13
5310-00-468-8566	C-9	17
5310-00-515-7449	C-9	16
5310-00-638-9857	C-10	23
5310-00-638-9857	C-10	29
5310-00-638-9857	C-9	7
5310-00-638-9857	C-9	12
5325-00-182-9945	C-7	
5325-00-276-4908	C-8	7
5325-00-276-4978	C-8	8
534000-279-2992	C-9	10
5340-00-342-9586	C-10	25
5340-00-342-9566	C-9	14
5340-00-996-0612	C-1	31
5345-01-214-1050	C-1	
5345-01-214-1050	C-2	
5345-01-214-1050	C-3	
5345-01-214-1050	C-4	
5345-01-214-1050	C-5	12
5360-0		

SECTION IV. NATIONAL STOCK NUMBER AND PART NUMBER

STOCK NUMBER	FIG.	ITEM
5360-00-283-3543	C-9	21
5820-00-782-5308	C-8	9
60C40304	C-2	
60C90303	C-2	
6135-00-073-8939	C-7	
6135-00-073-8939	C-8	
6135-00-838-0706	C-7	
6135-00-838-0706	C-8	
6230-00-401-2285	C-7	
6230-00-401-2285	C-8	
6230-00-938-1778	C-7	5
6230-00-938-1778	C-8	13
6260-00-840-5578	C-2	14
6260-00-840-5578	C-5	9
6350-00-105-1252	C-7	7
6350-00-261-9772	C-1	8
6350-00-261-9772	C-2	17
6350-00-261-9772	C-3	20
6350-00-261-9772	C-4	13
6350-00-261-9772	C-5	25
6350-00-261-9772	C-6	15
6505-00-183-9419	C-1	
6505-00-183-9419	C-2	
6505-00-183-9419	C-3	
6505-00-914-3593	C-1	
6505-00-914-3593	C-2	
6505-00-914-3593	C-3	
6505-01-121-2335	C-1	11
6505-01-121-2335	C-3	9
6505-01-265-0079	C-1	
6505-01-265-0079	C-2	
6505-01-265-0079	C-3	
6510-00-159-4883	C-1	
6510-00-159-4883	C-2	
6510-00-200-3180	C-1	
6510-00-200-3180	C-2	
6510-00-200-3180	C-3	
6510-00-201-1755	C-1	
6510-00-201-1755	C-2	
6510-00-201-1755	C-1	
6510-00-913-7909	C-2	
6510-00-913-7909	C-3	
6510-00-913-7909	C-1	
6510-01-094-6142	C-2	
6510-01-094-6142	C-3	3
6510-01-094-6142	C-1	16
6515-00-383-0565	C-2	
6530-00-105-1252	C-3	
6530-00-112-0160	C-7	
6530-00-112-0160	C-8	
6530-00-112-0160	C-1	
6545-00-152-1578	C-2	
6545-00-231-9421	C-3	
6545-00-478-6504	C-8	15
6545-00-853-6309	C-1	
6545-00-853-6309	C-2	
6545-00-853-6309	C-3	
6545-01-094-6136	C-2	
6545-01-094-6136	C-3	
6545-01-094-6136	C-1	
6545-01-094-8412	C-2	10
6545-01-094-8412	C-3	8
6545-01-094-8412	C-3	11
6545-01-120-2632	C-7	6
6605-00-151-5337	C-7	22
6605-00-515-5637	C-1	16
6605-00-515-5637	C-2	9
6605-00-515-5637	C-3	6
6605-00-515-5637	C-4	16
6605-00-515-5637	C-5	7
6605-00-515-5637	C-6	6
6605-00-515-5637	C-5	7

STOCK NUMBER	FIG.	ITEM
6605-01-121-2335	C-4	15
6605-01-121-2335	C-5	11
6605-01-121-2335	C-6	16
6840-00-142-8965	C-7	10
6850-00-270-9966	C-3	15
6850-00-270-9966	C-6	4
6850-00-965-7166	C-1	
6850-00-965-7166	C-2	
6850-00-965-7166	C-3	
7210-00-935-6667	C-1	
7210-00-935-6667	C-2	13
7210-00-935-6667	C-3	10
7210-00-935-6667	C-4	11
7210-00-935-6667	C-5	8
7210-00-935-6667	C-6	
7210-00-935-6667	C-7	9
7330-00-082-2396	C-1	18
7330-00-082-2396	C-2	12
7330-00-082-2396	C-3	16
7330-00-213-7173	C-4	14
7330-00-213-7173	C-5	21
7330-00-213-7173	C-6	5
7340-00-098-4327	C-7	19
7340-00-098-4327	C-8	23
7340-00-170-8374	C-1	12
7340-00-170-8374	C-2	15
7340-00-170-8374	C-3	12
7340-00-170-8374	C-4	19
7340-00-170-8374	C-6	27
7920-00-240-2555	C-8	8
7920-00-240-2555	C-6	13
8315-00-106-5973	C-8	14
8315-00-106-5974	C-8	
8340-00-236-4012	C-4	24
8340-00-236-4012	C-1	24
8405-01-100-0976	C-2	23
8415-00-201-9097	C-3	2
8415-00-201-9096	C-8	3
8415-00-270-0229	C-1	21
8415-00-270-0229	C-2	23
8415-00-270-0229	C-3	19
8415-00-935-3130	C-1	20
8415-00-935-3130	C-2	24
8415-00-935-3130	C-3	22
8415-00-935-3130	C-4	26
8415-00-935-3130	C-5	17
8465-00-177-4818	C-7	2
8465-00-177-4819	C-7	1
8465-00-254-8803	C-1	5
8465-00-254-8803	C-2	
8465-00-254-8803	C-3	
8465-00-254-8803	C-7	16
8465-00-254-8803	C-8	11
8465-00-265-4925	C-1	4
8465-00-265-4925	C-2	6
8465-00-265-4925	C-3	3
8465-00-265-4925	C-4	8
8465-00-265-4925	C-5	3
8465-00-300-2138	C-7	4
8465-00-485-3034	C-1	9
8465-00-485-3034	C-2	19
8465-00-485-3034	C-3	24
8465-00-485-3034	C-4	21
8465-00-485-3034	C-5	20
8465-00-485-3034	C-6	18
8465-00-634-4499	C-7	11
8465-00-973-4807	C-1	22
8465-01-131-7921	C-2	21
8465-01-131-7921	C-5	16
8465-01-179-8096	C-7	
8465-01-174-2355	C-7	
8960-00-916-4201	C-1	3

SECTION IV. NATIONAL STOCK NUMBER AND PART NUMBER INDEX

STOCK NUMBER	FIG. NO.	ITEM NO.	STOCK NUMBER	FIG. NO.	ITEM NO.
8960-00-916-4201	C-4	6			
8960-00-916-4201	C-6	3			
8970-00-082-5665	C-4	10			
8970-00-082-5665	C-6	11			
8970-00-082-5665	C-8	11			
8960-00-916-4201	C-1	3			
8960-00-916-4201	C-4	6			
8960-00-916-4201	C-6	3			
8970-00-082-5665	C-1	13			
8970-00-085-5665	C-2	3			
8970-00-082-5665	C-3	14			
8970-00-062-5665	C-5	13			
9110-00-263-9865	C-1	14			
9110-00-263-9865	C-2	16			
9110-00-263-9865	C-3	18			
9110-00-263-9865	C-4	12			
9110-00-263-9865	C-5	15			
9525-00-596-3498	C-1	17			
9525-00-596-3498	C-2	4			
9525-00-596-3498	C-4	9			
9525-00-596-3498	C-5	4			
9905-00-269-8281	C-9	1			
9920-01-154-7199	C-1	19			
9920-01-154-7199	C-2	11			
9920-01-154-7199	C-3	5			
9920-01-154-7199	C-4	3			
9820-01-154-7199	C-5	6			
1680-01-233-0061	C-1	4			
1680-01-233-0061	C-2	6			
1680-01-233-0061	C-3	3			
1680-01-233-0061	C-4	8			
1680-01-233-0061	C-5	3			
1680-01-233-0061	C-7	16			
1680-01-233-0061	C-8				

SECTION IV. NATIONAL STOCK NUMBER AND PART NUMBER INDEX

PART NUMBER	FSCM	FIG. NO.	ITEM NO.
AN/PRC-90	80058	C-7	21
AN/PRC-90	80058	C-8	9
AN24-14	88044	C-9	15
AN960C418L	88044	C-9	16
AN960C6L	88044	C-10	29
AN960C6L	88044	C-10	23
AN960C6L	88044	C-9	7
AN960C6L	88044	C-9	12
AW2C1	61349	C-1	16
AW2C1	61349	C-2	9
AW2C1	61349	C-4	16
AW2C1	61349	C-5	7
AW2C1	61349	C-6	6
AW2C1	81349	C-3	6
BA-1568/4	90303	C-8	
BA-1574/H	90303	C-7	
BA-1574/U	90303	C-8	
CL211C2-1	80206	C-8	
CL211C2-10	80206	C-8	15
DDDB0035	813489	C-1	
DDDB0035	81348	C-2	
DDDB0035	81348	C-3	
EE-M-101	81349	C-3	5
EE-M-101	81349	C-4	3
EE-M-101	81349	C-5	6
FGIC	18560	C-7	
FGIC	18560	C-8	
L-S-626	80244	C-3	8
L-S-626	80244	C-6	13
LD165580	10001	C-1	6
LD165580	10001	C-2	5
LD165580	10001	C-3	19
LD165580	10001	C-4	5
LD165580	10001	C-5	23
LD165580	10001	C-6	7
LP/PDES3-82	81337	C-2	21
LP/PDES3-82	81337	C-5	16
LP/PDES76-64	81337	C-1	22
LP410P	80049	C-8	4
MIL-B-18-267	81349	C-7	
MIL-B-36964B	81349	C-7	9
MIL-B-40042	81349	C-1	4
MIL-B-40042	81349	C-3	3
MIL-B-40042	81349	C-4	8
MIL-B-40042	81349	C-5	3
MIL-B-8571	81348	C-1	9
MIL-B-8571	81348	C-2	19
MIL-B-8571	81348	C-3	24
MIL-B-8571	81348	C-4	21
MIL-B-8571	81348	C-5	20
MIL-B-8571	81348	C-6	18
MIL-B-8571	81349	C-7	11
MIL-C-10436	81349	C-7	22
MIL-C-25539	81349	C-2	14
MIL-C-25539	81349	C-5	9
MIL-C-3030	81349	C-7	15
MIL-C-3030	81349	C-8	19
MIL-D-5531	81349	C-3	17
MIL-D-55310	81349	C-6	9
MIL-E-101	81349	C-1	19
MIL-E-101	81349	C-2	11
MIL-F-10605	81349	C-1	14
MIL-F-10605	81349	C-2	16
MIL-F-10605	81349	C-3	18
MIL-F-10605	81349	C-4	12
MIL-F-10605	81349	C-5	15
MIL-F-21840	81337	C-8	
MIL-F-21840	81337	C-8	14
MIL-F-40042	81349	C-2	6
MIL-F-43231	81349	C-1	13
MIL-F-43231	81349	C2	3
MIL-F-43231	81349	C-3	14
MIL-F-43231	81349	C-5	13
MIL-F-43231	81349	C-4	10
MIL-F-43231	81349	C-6	11
MIL-F-6218	81349	C-1	15
MIL-F-6218	81349	C-2	18
MIL-F-6218	81349	C-3	21
MIL-F-62181	81349	C-4	18
MIL-F-62181	81349	C-5	19
MIL-F-62181	81349	C-6	14
MIL-I-11489	81349	C-1	20
MIL-I-11489	81349	C-2	24
MIL-I-11489	81349	C-3	22
MIL-I-11489	81349	C-4	25
MIL-I-11489	81349	C-5	17
MIL-K-25594	81349	C-8	10
MIL-K-8180	81349	C-1	7
MIL-K-8180	81349	C-2	10
MIL-K-8180	81349	C-3	13
MIL-K-8180	81349	C-4	7
MIL-K-8180	81349	C-5	10
MIL-K-8180	81349	C-5	12
MIL-K-8180	81349	C-7	12
MIL-K-866L	81349	C-8	23
MIL-K-8662	81349	C-7	19
MIL-K-38217	81349	C-7	5
MIL-L38217	81349	C-8	13
MIL-L-83491	81349	C-3	
MIL-L-83491	81349	C-3	28
MIL-L-83491	81349	C-6	
MIL-L-83491	81349	C-6	20
MIL-M-18371	81349	C-1	8
MIL-M-18371	81349	C-2	17
MIL-M-18371	81349	C-3	20
MIL-M-18371	81349	C-4	13
MIL-M-18371	81349	C-5	25
MIL-M-18371	81349	C-6	15
MIL-M-18371	81349	C-7	7
MIL-M-18371	81349	C-8	16
MIL-M-43371	81349	C-3	23
MIL-M-43371	81349	C-6	19
MIL-P-43700	81349	C-2	23
MIL-S-17980	81349	C-3	15
MIL-S-17980	81349	C-6	4
MIL-S-81941	81349	C-8	
MIL-S-9964	81349	C-1	
MIL-S-9964	81349	C-2	
MIL-S-9964	81349	C-3	
MIL-S-9964	81349	C-4	17
MIL-S-9964	81349	C-5	26
MIL-T-36045	81349	C-7	3
MIL-T-7249	81349	C-1	24
MIL-T-7249	81349	C-4	24
MIL-W-1053	81349	C-1	5
MIL-W-1053	81349	C-2	
MIL-W-1053	81349	C-3	
MIL-W-1053	81349	C-7	16
MIL-W-1053	81349	C-8	11
MIL-W-15117	81337	C-1	3
MIL-W-15117	81337	C-4	6
MIL-W-15117	81337	C-6	3
MIL-W-283	81349	C-1	
MIL-W-283	81349	C-2	
MIL-W-283	81349	C-3	
SUNBLOCK 15	04516	C-2	
MS22017	96906	C-1	27
MS22017	96906	C-2	26
MS22017	96906	C-3	30
MS25281F2	96906	C-10	31
MS27983-3	96906	C-8	7
MS27983-4	96906	C-8	8

SECTION IV. NATIONAL STOCK NUMBER AND PART NUMBER INDEX

PART NUMBER	FSCM.	FIG. NO.	ITEMNO.
MS35190-239	96906	C-10	22
MS35206-212	96906	C-10	10
MS35203-228	96906	C-9	6
MS35206-229	96906	C-10	17
MS35206-229	96906	C-9	11
MS35206-230	96906	C-10	28
NAS560XK-3-4	80205	C-10	19
NAS560XK-3-4	80205	C-10	12
NDC-72-5400-04	13811	C-1	11
NDC-72-5400-04	13811	C-3	9
NDC-72-5400-04	13811	C-4	15
NDC-72-5400-04	13811	C-5	11
NDC-72-5400-4	13811	C-6	16
NDC00034-2340-01	05161	C-1	
NDC00034-2340-01	05161	C-2	
NDC00034-2340-01	05161	C-3	
NDC00085-0066-03	04542	C-2	
NDC00085-0066-03	04542	C-3	
NDC00085-0066-03	04542	C-1	
NO REF		C-1	
NO REF		C-1	10
NO REF		C-2	13
NO REF		C-2	8
NO REF		C-3	11
NO REF		C-3	10
NO REF		C-4	11
NO REF		C-5	8
NO REF		C-6	
QQW321	81348	C-2	4
QQW321	81348	C-1	17
QQW321	81348	C-4	9
QQW321	81348	C-5	4
SS#A8	62444	C-1	
SS#A8	62444	C-2	
SS#A8	62444	C-3	
SS#A8	62444	C-4	
SS#A8	62444	C-5	12
VF106	81348	C-7	
VF106	81348	C-8	6
VF106	81348	C-8	17
00501	80882	C-7	10
1-653	89875	C-7	6
11-1-0311	81337	C-2	12
11-1-0311	81337	C-3	16
11-1-168	81337	C-1	23
11-1-168	81337	C-1	
11-1-170	81337	C-2	
11-1-170	81337	C-2	20
11-1-172	81337	C-3	
11-1-172	81337	C-3	25
11-1-1783	81337	C-7	20
11-1-1783	81337	C-7	1
11-1-1783	81337	C-7	
11-1-1795-1	81337	C-8	2
11-1-1795-2	81337	C-8	3
11-1-1797	81337	C-7	18
11-1-1797	81337	C-8	22
11-1-1798-1	81337	C-8	5
11-1-1798-2	81337	C-8	
11-1-189	81337	C-3	1
11-1-190-1	81337	C-1	1
11-1-190-2	81337	C-2	1
11-1-192	81337	C-1	2
11-1-192	81337	C-2	2
11-1-192	81337	C-3	2
11-1-1960	81337	C-5	
11-1-1961	81337	C-4	
11-1-1961	81337	C-4	23
11-1-1962	81337	C-6	
11-1-1962	81337	C-6	17
11-1-1969	81337	C-9	10
11-1-1970	81337	C-9	1

PART NUMBER	FSCM	FIG. NO.	ITEM NO.
11-1-1979	21337	C-10	20
11-1-1981-2	21337	C-10	14
11-1-1983	21337	C-10	18
11-1-1990	21337	C-10	15
11-1-1991	21337	C-10	16
11-1-1992-1	21337	C-10	26
11-1-1992-2	21337	C-10	27
11-1-1995	21337	C-10	13
11-1-1999	21337	C-10	1
11-1-2004-1	21337	C-9	19
11-1-2004-2	21337	C-9	18
11-1-2005	21337	C-4	14
11-1-2005	21337	C-5	21
11-1-2005	21337	C-6	5
11-1-2006	21337	C-4	1
11-1-2006	21337	C-5	1
11-1-2006	21337	C-6	1
11-1-2012-1	21337	C-9	21
11-1-2012-2	21337	C-9	20
11-1-2021	21337	C-9	5
11-1-2022-1	21337	C-10	6
11-1-2022-2	21337	C-10	2
11-1-2023-1	21337	C-10	7
11-1-2023-2	21337	C-10	3
11-1-2026	21337	C-10	32
11-1-2028	21337	C-10	8
11-1-2028	21337	C-10	4
11-1-2028	21337	C-10	33
11-1-2030	21337	C-10	21
11-1-2031	21337	C-10	5
11-1-2031	21337	C-10	9
11-1-2037	21337	C-10	11
11-1-2040	21337	C-10	
11-1-2040	21337	C-9	2
11-1-2042	21337	C-9	14
11-1-2046	21337	C-10	25
11-1-2054	21337	C-9	9
11-1-2055	21337	C-4	2
11-1-2055	21337	C-5	2
11-1-2055	21337	C-6	2
11-1-2055	21337	C-9	3
11-1-2898	21337	C-7	2
11-1-298-1	21337	C-7	
11-1-311	21337	C-1	18
11-1-468-1	21337	C-8	1
11-1-468-2	21337	C-8	
11-1-960	21337	C-5	14
22K2-048	72962	C-9	17
22K2-62	72962	C-10	30
22K2-62	72962	C-10	24
22K2-62	72962	C-9	13
22K2-62	72962	C-9	8
45D18813	80049	C-3	26
50C3586	98752	C-2	
56B3857	80049	C-3	31
59B3778	80049	C-3	4
60C40304	98752	C-2	
60C90302	97852	C-2	7
60C90303	97852	C-2	
6000D7047-1	27934	C-7	17
6000D7047-1	27934	C-8	20
67C46306-10	97852	C-3	4
67C46306-10	97852	C-6	
67F45692	97852	C-7	
7553580	19200	C-7	4
7553580	19200	C-8	14
7791073	19204	C-8	18
8702	62561	C-1	21
8702	62561	C-2	
8702	62651	C-3	
8702	62561	C-4	4
8702	92651	C-5	18

SECTION IV. NATIONAL STOCK NUMBER AND PART NUMBER INDEX (Continued)

PART NUMBER	FSCM	FIG. NO.	ITEMNO.
8702	62651	C-7	8
8702	62651	C-8	1
SL3	1HP49	C-1	4
SL3	1HP49	C-2	6
SL3	1HP49	C-3	3
SL3	1HP49	C-4	8
SL3	1HP49	C-5	3
SL3	1HP49	C-7	16
SL3	1HP49	C-8	

PART NUMBER	FSCM	FIG. NO.	ITEM NO.

INDEX

Subject	*Paragraph, Figure, Table Number*
A	
Aircraft, OV-1 Survival Vest	2-16, 2-17, F2-27 through F2-30, FC-8
Assembly, Lid	FC-10
Assembly, Stiffener and Housing Latch	F2-38
Attaching Strap	F-2-8, F2-9
B	
C	
Canopy Release and Quick Release Handle (RSSK)	2-18, F2-37
Cleaning	2-6
Codes	C-3
Cold Climate Individual Survival Kit	1-8a, 2-12, F2-40, FC-2
Components	1-9
Construction Details	F2-13 through F2-17
D	
Data for Survival Equipment	1-11
Definitions	B-3
Description	1-8
Components	1-9
Hazardous Components	1-10
Destruction of Material	1-3
Dictionaries	A-1
Disposal	A-5
E	
Equipment and Supplies, Maintenance of	A-4
Equipment Bag and Drop Line	2-18, F2-35A
F	
Fitting Area for Life Support Equipment	3-4
G	
Grommet Repair	2-9, F2-2

INDEX - Continued

Subject	*Paragraph, Figure, Table Number*
H	
Handle Replacement	F2-6
Hazardous Components	1-10
Hot Climate Individual Survival Kit	1-8a, 2-12, F2-1, F2-5 through F2-10, F2-39, FC-1
I	
Individual Survival Kits	
Cold Climate	1-8a,2-13, F2-12, F2-40, FC-2
Hot Climate	1-8a,2-12, F2-1, F2-5 through F2-10, F2-39, FC-1
Individual, OV-1	1-8b, 2-16, F1-2, F2-27, FC-8
Overwater	1-8a, 2-14, F2-18 through F2-22, FC-3
Rigid Seat Survival Kit (RSSK), OV-1 Aircraft	1-8d, 2-18, F1-4, F2-31 through F2-38, FC-4, FC-5, FC-6, FC-9
Typical	F1-1, F2-7
Inspection .	2-1 through 2-3
J	
K	
Kits, Individual Survival	
Cold Climate	1-8a, 2-13, F2-12, F2-40, FC-2
Hot Climate	1-8a,2-12, F2-1, F2-5 through F2-10, F2-39, FC-1
Individual, OV-1	1-8b, 2-16, F1-2, F2-27, FC-8
Overwater	1-8a, 2-14, F2-18 through F2-22, FC-3
Rigid Seat Survival Kit (RSSK), OV-1 Aircraft	1-8d, 2-18, F1-4, F2-31 through F2-38, FC-4, FC-5, FC-6, FC-9
Typical	F1-1,F2-72-
Knots	2-11, F2-4

INDEX - Continued

Subject	*Paragraph, Figure, Table Number*
L	
Lid Assembly	FC-10
Life Raft	2-14, F2-19, F2-21
Life Support Equipment	
Fitting Area	3-4
Storage Area	3-3,3-5
Work Area	3-1,3-2
Logistics	A-3
M	
MAC (Maintenance and Allocation Chart)	B-1
Maintenance and Services	2-3, 2-4, T2-1
Maintenance of Supplies and Equipment	A-4
Modification of Radio Pocket	2-17
N	
NSN (National Stock Number)	C-5
O	
OV-1 Aircraft Survival Vest	2-16, 2-17, F2-27 through F2-30, FC-8
Overwater Individual Survival Kit	1-8a, F2-18, FC-3
P	
Packing Details for Survival Kits	F2-39, F2-40, F2-41
Packing Survival Equipment	
Individual Cold Climate Survival Kit	2-13, F2-12
Individual Hot Climate Survival Kit	2-12, F2-7, F2-10, F2-11
Individual Overwater Survival Kit	2-14, F2-18, F2-20
Rigid Seat Survival Kit, (RSSK), OV-1 Aircraft	2-18, F2-31 through F2-38
Survival Vest, SRU-21/P	2-15, F2-23, F2-24
Tarpaulin	F2-11
Parts, Repair	C-1
Pocket, Radio	F2-17
Publications	A-2

INDEX - Continued

Subject	*Paragraph, Figure, Table Number*
Q	
R	
References	
Codes	C-3
Definitions	B-3
Dictionaries	A-1
Disposal	A-5
Logistics	A-3
Maintenance Allocation Chart	B-1
Maintenance of Supplies and Equipment	A-4
National Stock Number (NSN)	C-5
Publications	A-2
Repair Parts and Special Tools List	C-2
Repair Instructions	
Attaching Strap	F2-8, F2-9
Construction Details	F2-13 through F2-17
Grommet Repair	2-9, F2-2
Replacing Handle	F2-6
Searing and Waxing	2-8
Sewing	2-7, F2-1, T2-2, T2-3
Snap Repair	2-10, F2-3
Repair Parts	C5
Rigid Seat Survival Kit, (RSSK), OV-1 Aircraft	1-8d, 2-18, F1-4, F2-31 through F2-38, FC-4 through FC-6, FC-9
S	
Service and Maintenance	2-3, 2-4, T2-1
Sewing	2-7, F2-1, T2-2, T2-3
Snap Repair	2-10, F2-3
Special Tools	C-2
SRU-21/P Survival Vest	1-8c, 2-15, F1-3, F2-23, F2-24, FC-7
SRU-31/P Packet 1 and 2	2-28
Stiffener and Housing Latch Assembly	2-18, F2-38
Storage Area for Life Support Equipment	3-3, 3-5
Strap, Attaching	F2-8, F2-9

INDEX - Continued

Subject — *Paragraph, Figure, Table Number*

S - Continued

Survival Kits
- Cold Climate 1-8a,2-13, F2-12, F2-40, FC-2
- Hot Climate ..... 1-8a,2-12, F2-1, F2-5 through F2-10, F2-39, FC-1
- Individual, OV-1 ..... 1-8b,2-16, F1-2, F2-27, FC-8
- Overwater ..... 1-8a, 2-14, F2-18 through F2-22, FC-3
- Rigid Seat Survival Kit (RSSK), OV-1 Aircraft ..... 1-8d, 2-18, F1-4, F2-31 through F2-38, FC-4 through FC-6, FC-9
- Typical F1-1, F2-7

Survival Vest, SRU-21/P 1-8c, 2-15, F1-3, F2-23, F2-24, FC-7
- Assembly and Stowage 2-16, F2-25
- Construction Details 2-16, F2-23
- Radio 2-16, F2-26

T

Tarpaulin F2-11
Tools, Special C-2
Training 1-12

U

Usable on Codes C-4

V

Vest, Survival, OV-1 Aircraft ..... 2-16,2-17, F2-27 through F2-30, FC-8
Vest, Survival, SRU-21/P 1-8c, 2-15, F1-3, F2-23, F2-24, FC-7

W

Work Area for Life Support Equipment 3-1,3-2

By Order of the Secretary of the Army:

JOHN A. WICKHAM, JR.
General, United States Army
Chief of Staff

Official:

R. L. DILWORTH
Brigadier General, United States Army
The Adjutant General

DISTRIBUTION:
To be distributed in accordance with DA Form 12-31, AVIM and AVUM requirements for all Fixed and Rotary Wing Aircraft.

☆U.S. GOVERNMENT PRINTING OFFICE: 1994 - 300-421 (02373)

TB 9-6625-2282-35

THESE ARE THE INSTRUCTIONS FOR SENDING AN ELECTRONIC 2028

The following format must be used if submitting an electronic 2028. The subject line must be exactly the same and all fields must be included; however, only the following fields are mandatory: 1, 3, 4, 5, 6, 7, 8, 9, 10, 13, 15, 16, 17, and 27.

From: "Whomever" whomever@avma27.army.mil

To: 2028@redstone.army.mil

Subject: DA Form 2028

1. **From**: Joe Smith
2. Unit: Home
3. **Address**: 4300 Park
4. **City**: Hometown
5. **St**: MO
6. **Zip**: 77777
7. **Date Sent**: 19-Oct-93
8. **Pub No**: TB 9-6625-xxxx-35
9. **Pub Title**: Calibration Procedure for …
10. **Publication Date**:
11. Change Number:
12. **Submitted Rank**: MSG
13. **Sumitter Fname**: Joe
14. **Submitter Mname**: T
15. **Submitter Lname**: Smith
16. **Submitter Phone**: (123) 123-1234
17. **Problem**: 1
18. Page: 2
19. Paragraph: 3

20 Line: 4

21. NSN: 5
22. Reference: 6
23. Figure : 7
24. Table: 8
25. Item: 9
26. Total: 123

27: **Text**:

This is the text for the problem below line 27.

RECOMMENDED CHANGES TO EQUIPMENT TECHNICAL PUBLICATIONS

THEN . .JOT DOWN THE DOPE ABOUT IT ON THIS FORM, CAREFULLY TEAR IT OUT, FOLD IT AND DROP IT IN THE MAIL!

SOMETHING WRONG WITH THIS PUBLICATION?

FROM: (PRINT YOUR UNIT'S COMPLETE ADDRESS)
PFC John DOE
CO A 3rd Engineer Bn
Ft. Leonardwood, MO 63108

DATE SENT
10 January 1999

PUBLICATION NUMBER	PUBLICATION DATE	PUBLICATION TITLE
TM 55-1680-317-23&P	30 December 1998	Maintenance manual Army Aircraft

BE EXACT PIN–POINT WHERE IT IS

PAGE NO	PARA-GRAPH	FIGURE NO	TABLE NO
6	2-1 a		
B1		4-3	

IN THIS SPACE, TELL WHAT IS WRONG AND WHAT SHOULD BE DONE ABOUT IT:

In line 6 of paragraph 2-1a the manual states the engine has 6 cylinders. The engine on my set only has 4 cylinders. Change the manual to show 4 cylinders.

Callout 16 on figure 4-3 is pointed at a bolt. In key to figure 4-3, item 16 is calle a shim. Please correct one or the other

EXAMPLE

PRINTED NAME, GRADE OR TITLE, AND TELEPHONE NUMBER
JOHN DOE, PFC (268) 317–7111

SIGN HERE
JOHN DOE John Doe

DA FORM 1 JUL 79 2028–2

PREVIOUS EDITIONS ARE OBSOLETE.

DRSTS-M verprint2, 1 Nov 80

P.S.- - IF YOUR OUTFIT WANTS TO KNOW ABOUT YOUR RECOMMENDATION, MAKE A CARBON COPY OF THIS AND GIVE TO YOUR HEADQUARTERS.

RECOMMENDED CHANGES TO EQUIPMENT TECHNICAL PUBLICATIONS

THEN . .JOT DOWN THE DOPE ABOUT IT ON THIS FORM, CAREFULLY TEAR IT OUT, FOLD IT AND DROP IT IN THE MAIL!

SOMETHING WRONG WITH THIS PUBLICATION?

FROM: (PRINT YOUR UNIT'S COMPLETE ADDRESS)

DATE SENT

PUBLICATION NUMBER	PUBLICATION DATE	PUBLICATION TITLE

BE EXACT PIN–POINT WHERE IT IS

PAGE NO	PARA-GRAPH	FIGURE NO	TABLE NO

IN THIS SPACE, TELL WHAT IS WRONG AND WHAT SHOULD BE DONE ABOUT IT:

PRINTED NAME, GRADE OR TITLE, AND TELEPHONE NUMBER	SIGN HERE

DA FORM 1 JUL 79 2028–2

PREVIOUS EDITIONS ARE OBSOLETE.

DRSTS-M verprint2, 1 Nov 80

P.S.- - IF YOUR OUTFIT WANTS TO KNOW ABOUT YOUR RECOMMENDATION, MAKE A CARBON COPY OF THIS AND GIVE TO YOUR HEADQUARTERS.

REVERSE OF DA FORM 2028-2 Reverse of DRSTS-M Overprint 2,
1 Nov 80

TEAR ALONG PERFORATED LINE

FILL IN YOUR
UNITS ADDRESS

FOLD BACK

DEPARTMENT OF THE ARMY

OFFICIAL BUSINESS

COMMANDER
U.S. ARMY AVIATION AND MISSILE COMMAND
ATTN: AMSAM-MMC-MA-NP
REDSTONE ARSENAL, AL 35898-5230

RECOMMENDED CHANGES TO EQUIPMENT TECHNICAL PUBLICATIONS

THEN . .JOT DOWN THE DOPE ABOUT IT ON THIS FORM, CAREFULLY TEAR IT OUT, FOLD IT AND DROP IT IN THE MAIL!

SOMETHING WRONG WITH THIS PUBLICATION?

FROM: (PRINT YOUR UNIT'S COMPLETE ADDRESS)

DATE SENT

PUBLICATION NUMBER	PUBLICATION DATE	PUBLICATION TITLE

BE EXACT PIN–POINT WHERE IT IS

PAGE NO	PARA-GRAPH	FIGURE NO	TABLE NO

IN THIS SPACE, TELL WHAT IS WRONG AND WHAT SHOULD BE DONE ABOUT IT:

PRINTED NAME, GRADE OR TITLE, AND TELEPHONE NUMBER	SIGN HERE

DA FORM 1 JUL 79 2028–2

PREVIOUS EDITIONS ARE OBSOLETE.

DRSTS-M verprint2, 1 Nov 80

P.S.- - IF YOUR OUTFIT WANTS TO KNOW ABOUT YOUR RECOMMENDATION, MAKE A CARBON COPY OF THIS AND GIVE TO YOUR HEADQUARTERS.

REVERSE OF DA FORM 2028-2 Reverse of DRSTS-M Overprint 2,
1 Nov 80

TEAR ALONG PERFORATED LINE

FILL IN YOUR
UNITS ADDRESS

FOLD BACK

DEPARTMENT OF THE ARMY

OFFICIAL BUSINESS

COMMANDER
U.S. ARMY AVIATION AND MISSILE COMMAND
ATTN: AMSAM-MMC-MA-NP
REDSTONE ARSENAL, AL 35898-5230

RECOMMENDED CHANGES TO EQUIPMENT TECHNICAL PUBLICATIONS

THEN . .JOT DOWN THE DOPE ABOUT IT ON THIS FORM, CAREFULLY TEAR IT OUT, FOLD IT AND DROP IT IN THE MAIL!

SOMETHING WRONG WITH THIS PUBLICATION?

FROM: (PRINT YOUR UNIT'S COMPLETE ADDRESS)

DATE SENT

PUBLICATION NUMBER	PUBLICATION DATE	PUBLICATION TITLE

BE EXACT PIN–POINT WHERE IT IS

PAGE NO	PARA-GRAPH	FIGURE NO	TABLE NO

IN THIS SPACE, TELL WHAT IS WRONG AND WHAT SHOULD BE DONE ABOUT IT:

PRINTED NAME, GRADE OR TITLE, AND TELEPHONE NUMBER	SIGN HERE

DA FORM 1 JUL 79 2028–2

PREVIOUS EDITIONS ARE OBSOLETE.

DRSTS-M verprint2, 1 Nov 80

P.S.- - IF YOUR OUTFIT WANTS TO KNOW ABOUT YOUR RECOMMENDATION, MAKE A CARBON COPY OF THIS AND GIVE TO YOUR HEADQUARTERS.

REVERSE OF DA FORM 2028-2 Reverse of DRSTS-M Overprint 2,
1 Nov 80

TEAR ALONG PERFORATED LINE

FILL IN YOUR
UNITS ADDRESS

FOLD BACK

DEPARTMENT OF THE ARMY

OFFICIAL BUSINESS

COMMANDER
U.S. ARMY AVIATION AND MISSILE COMMAND
ATTN: AMSAM-MMC-MA-NP
REDSTONE ARSENAL, AL 35898-5230

The Metric System and Equivalents

Linear Measure

1 centimeter = 10 millimeters = .39 inch
1 decimeter = 10 centimeters = 3.94 inches
1 meter = 10 decimeters = 39.37 inches
1 dekameter = 10 meters = 32.8 feet
1 hectometer = 10 dekameters = 328.08 feet
1 kilometer = 10 hectometers = 3,280.8 feet

Weights

1 centigram = 10 milligrams = .15 grain
1 decigram = 10 centigrams = 1.54 grains
1 gram = 10 decigram = .035 ounce
1 decagram = 10 grams = .35 ounce
1 hectogram = 10 decagrams = 3.52 ounces
1 kilogram = 10 hectograms = 2.2 pounds
1 quintal = 100 kilograms = 220.46 pounds
1 metric ton = 10 quintals = 1.1 short tons

Liquid Measure

1 centiliter = 10 milliters = .34 fl. ounce
1 deciliter = 10 centiliters = 3.38 fl. ounces
1 liter = 10 deciliters = 33.81 fl. ounces
1 dekaliter = 10 liters = 2.64 gallons
1 hectoliter = 10 dekaliters = 26.42 gallons
1 kiloliter = 10 hectoliters = 264.18 gallons

Square Measure

1 sq. centimeter = 100 sq. millimeters = .155 sq. inch
1 sq. decimeter = 100 sq. centimeters = 15.5 sq. inches
1 sq. meter (centare) = 100 sq. decimeters = 10.76 sq. feet
1 sq. dekameter (are) = 100 sq. meters = 1,076.4 sq. feet
1 sq. hectometer (hectare) = 100 sq. dekameters = 2.47 acres
1 sq. kilometer = 100 sq. hectometers = .386 sq. mile

Cubic Measure

1 cu. centimeter = 1000 cu. millimeters = .06 cu. inch
1 cu. decimeter = 1000 cu. centimeters = 61.02 cu. inches
1 cu. meter = 1000 cu. decimeters = 35.31 cu. feet

Approximate Conversion Factors

To change	*To*	*Multiply by*	*To change*	*To*	*Multiply by*
inches	centimeters	2.540	ounce-inches	Newton-meters	.007062
feet	meters	.305	centimeters	inches	.394
yards	meters	.914	meters	feet	3.280
miles	kilometers	1.609	meters	yards	1.094
square inches	square centimeters	6.451	kilometers	miles	.621
square feet	square meters	.093	square centimeters	square inches	.155
square yards	square meters	.836	square meters	square feet	10.764
square miles	square kilometers	2.590	square meters	square yards	1.196
acres	square hectometers	.405	square kilometers	square miles	.386
cubic feet	cubic meters	.028	square hectometers	acres	2.471
cubic yards	cubic meters	.765	cubic meters	cubic feet	35.315
fluid ounces	milliliters	29,573	cubic meters	cubic yards	1.308
pints	liters	.473	milliliters	fluid ounces	.034
quarts	liters	.946	liters	pints	2.113
gallons	liters	3.785	liters	quarts	1.057
ounces	grams	28.349	liters	gallons	.264
pounds	kilograms	.454	grams	ounces	.035
short tons	metric tons	.907	kilograms	pounds	2.205
pound-feet	Newton-meters	1.356	metric tons	short tons	1.102
pound-inches	Newton-meters	.11296			

Temperature (Exact)

°F	Fahrenheit temperature	5/9 (after subtracting 32)	Celsius temperature	°C

PIN: 022316-009