*TM 9-3990-258-13&P-2

This manual supersedes TM 9-3990-258-13&P dated 1 November 2000

TECHNICAL MANUAL

OPERATOR, UNIT AND DIRECT SUPPORT MAINTENANCE MANUAL AND REPAIR PARTS AND SPECIAL TOOLS LIST (RPSTL)

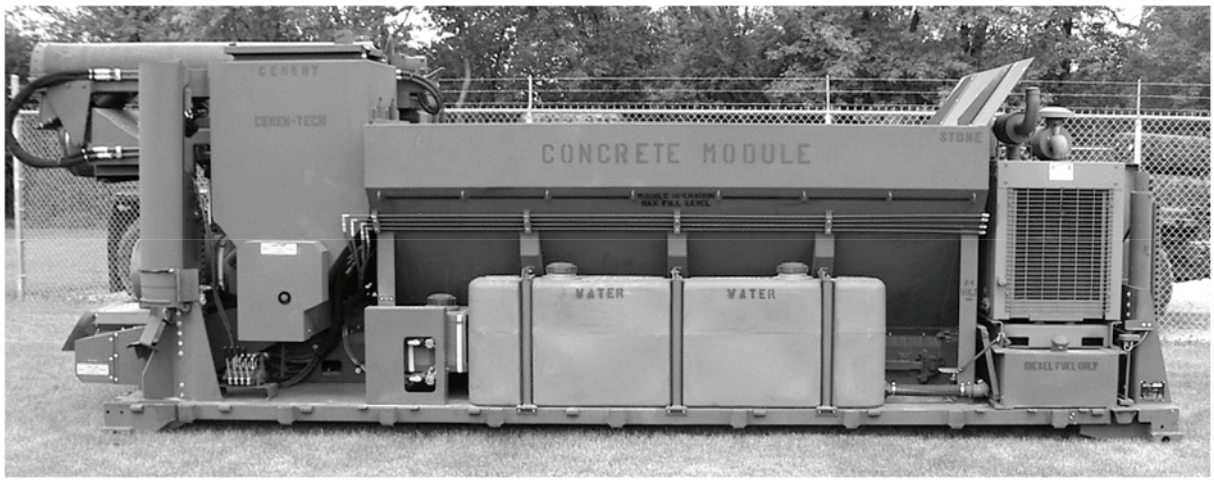

CONCRETE MOBILE MIXER MODULE

MODEL M5

(NSN 3990-01-444-5196) (EIC: BDN)

DISTRIBUTION STATEMENT A:
Approved for public release; distribution is unlimited.

HEADQUARTERS, DEPARTMENT OF THE ARMY

JUNE 2008

WARNING SUMMARY

The following is a list of warnings that appear in this manual. Concrete Mobile Mixer operators and mechanics must become familiar with all warnings. Severe injury or death can be avoided by operators and mechanics who understand the vehicle and are alert to possible dangers.

WARNING

- Freshly mixed grout or concrete may cause skin irritation. Avoid direct contact where possible and wash exposed skin area promptly with water. If any of cementitious material gets into eyes, rinse immediately with water. Failure to comply could result in serious injury to personnel.
- Always start and operate engine in a well ventilated area. If in an enclosed area, vent exhaust to outside. Failure to comply could result in serious injury or death to personnel.
- Do not idle engine for long periods without maintaining adequate ventilation in personnel compartments and immediate areas. Failure to comply could result in serious injury or death to personnel.
- Do not modify or tamper with exhaust system. Failure to comply could result in serious injury or death to personnel.
- Do not operate any vehicle with inspection plates, cover plates, or engine compartment doors removed unless it is necessary for maintenance purposes. Failure to comply could result in serious injury or death to personnel.
- Dry-cleaning solvent (P-D-680) is TOXIC and flammable. Wear protective goggles, face shield, and gloves; use only in a well-ventilated area; avoid contact with skin, eyes, and clothes, and do not breathe vapors. Keep away from heat or flame. Never smoke when using solvent. The flashpoint for Type II dry-cleaning solvent is 140°F (60°C) and Type III dry-cleaning solvent is 200°F (93°C). Failure to do so may result in serious injury or death to personnel.
- Avoid contact with wet concrete. It may cause skin irritation and burns. If skin is exposed directly or through saturated clothing, wash thoroughly with water. If any concrete gets into eyes, flush immediately with water and get prompt medical attention. Failure to comply could result in serious injury to personnel.
- Operator will be working with auger guard raised. Be careful not to catch your fingers or clothing in auger. Carelessness may cause severe injury to personnel.
- During loading operations or at any time there is cement dust in air, take precautions to avoid direct inhalation of dust. If you must be in immediate vicinity of dust, wear a dust mask, or if none is available, cover your nose and mouth with a cloth. Cement dust can cause serious lung problems. Failure to comply could result in serious injury or death to personnel.
- When working in area of serpentine on main drive, cement and dry admix chain drives, or mixing trough auger, be extremely careful to avoid contact with or catching clothing in moving parts. Failure to comply could result in serious injury or death to personnel.
- Ensure all personnel are clear of area around Concrete Mobile Mixer lowering or raising auger. Failure to comply could result in serious injury or death to personnel.

WARNING

- Cement dust can cause serious lung problems. During loading operations or any time there is cement dust in air, take precautions to avoid direct inhalation of dust. If you must be in immediate vicinity of dust, wear a dust mask, or if none is available, cover nose and mouth with a cloth. Failure to comply could result in serious illness to personnel.
- Single level hearing protection is required for personnel within 39 ft. 4 in. (12 m) of Concrete Mobile Mixer during operations that require use of high idle engine speed. Failure to comply may result in hearing loss to personnel.
- Single level hearing protection is required for personnel within 3 ft. 4 in. (1 m) of Concrete Mobile Mixer during operations that require use of low idle engine speed. Failure to comply may result in hearing loss to personnel.
- Auger will rotate with engine on and controls off. Extreme care should be taken when around auger area. Failure to comply may result in severe injury or death to personnel.
- Ensure Concrete Mobile Mixer engine is off and cement clutch is disengaged prior to installing breaker bar and socket on cement auger shaft. Failure to comply could result in injury or death to personnel.
- Ensure breaker bar and socket are removed from auger shaft prior to engaging cement bin clutch, if Concrete Mobile Mixer engine is on. Failure to comply could result in injury or death to personnel.
- Extreme care should be taken to prevent loss of balance while removing or installing delivery to chutes. Failure to comply could result in injury or death to personnel.
- Ensure hand crank is removed from auger shaft prior to engaging cement bin clutch if Concrete Mobile Mixer engine is on. Failure to comply could result in injury or death to personnel.
- Ensure Concrete Mobile Mixer engine is off and cement auger does not rotate prior to installing breaker bar and socket on cement auger shaft. Failure to comply could result in injury or death to personnel.
- Adhesives, solvents, and sealing compounds can burn easily, can give off harmful vapors, and are harmful to skin and clothing. To avoid injury or death, keep away from open fire and use in well-ventilated area. If adhesives, solvent, or sealing compound gets on skin or clothing, wash immediately with soap and water.
- If mixing auger is in stowed position, gravity could cause mixing auger to lower. Prior to performing this procedure, ensure mixing auger is secured with storage pin. Failure to comply could result in serious injury.
- Engine weighs 800 lb (363kg). Position engine on engine stand with adapter plate to support. Keep lift device connected for added stability. Failure to comply could result in serious injury or death to personnel.
- When manually rotating cement chain drive, be extremely careful to avoid contact with or catching clothing on moving parts. Failure to comply could result in injury to personnel.
- Fuel line pressure can penetrate skin and cause serious bodily harm. Do not allow any part of body to get in line of fuel spray. Failure to comply could result in serious injury or death to personnel.
- To prevent slipping or falling, ensure PLS ladder is setting on firm, level ground and evenly supported against PLS trailer. Failure to comply could result in serious injury or death to personnel.

WARNING

- Fuel is very flammable and can explode easily. To avoid serious injury or death, keep fuel away from open fire and keep fire extinguisher within easy reach when working with fuel. Do not work on fuel system when engine is hot. Fuel can be ignited by a hot engine.
- Radiator, radiator cap, coolant, and hoses are very hot and pressurized during truck operation. Let radiator cool before checking hoses. Failure to do so may result in serious burns to personnel.
- Ensure engine is cool before performing this task or injury to personnel may result.
- It is necessary to put the engine in the "run" position. Because the engine may start, be sure to follow all safety precautions. Use the normal engine starting procedures. Failure to comply could result in serious injury or death to personnel.
- While cranking engine, ensure personnel stay clear of moving parts. Failure to comply could result in serious injury or death to personnel.
- Concrete Mobile Mixer has a very high center of gravity (CG). A higher CG limits cornering and side slope operations. Limit side slope operations and transportation to no more than a 20 percent side slope angle when Concrete Mobile Mixer is loaded onto PLS truck and/or PLS trailer (PLST). Failure to comply may result in vehicle rollover causing injury or death to personnel.
- If operating Concrete Mobile Mixer on PLS trailer (PLST), ensure PLST turntable is LOCKED. Concrete Mobile Mixer has a very high center of gravity (CG) and PLST is unstable when front tires are not facing straight ahead and turntable is unlocked. Failure to comply may result in vehicle rollover causing injury or death to personnel.
- Air compressor weighs 60 lb (27.2 kg). Do not attempt to move or lift air compressor without the aid of an assistant. Failure to comply could result in serious injury to personnel.
- Cylinder head weighs 80 lb (36 kg). Do not attempt to lift or move without use of a suitable lifting device and aid of an assistant. Failure to comply could result in serious injury to personnel.
- Radiator weighs 175 lb (79.4 kg). Do not attempt to lift or move radiator without the aid of an assistant and suitable lifting device. Failure to comply could result in serious injury to personnel.
- Hoist must be secured before removing bypass hose. Failure to comply may result in serious injury or death to personnel or damage to equipment.
- Engine and engine support assembly weigh 1200 lb (545 kg). Do not attempt to move or lift engine and support assembly without aid of an assistant and suitable lifting device. Failure to comply could result in serious injury or death to personnel.
- Delivery chutes are heavy. Take care to keep hands away from slots when installing chutes. Failure to comply could result in injury to personnel.
- Batteries are connected during adjustment process. Magnetic switch connections are exposed 12 and 24 volts. Take care not to make contact with magnetic switch connections and engine enclosure. Failure to comply may result in serious injury to personnel and/or damage to equipment.

LIST OF EFFECTIVE PAGES Insert latest changed pages. Destroy superceded pages.

NOTE

The portion of the text affected by the changes is indicated by a vertical line in the outer margin of the page. Added or revised illustrations are indicated by a vertical line in the outer margin, adjacent to the illustration.

Dates of issue for original and changed pages are:

Original ..... 30 June 2008

TOTAL NUMBER OF PAGES IN THIS PUBLICATION IS 1000 CONSISTING OF THE FOLLOWING:

Page No.	*Change No.
4-378 thru 4-1137	0
4-1138 blank	0
A-1 and A-2	0
B-1 and B-2	0
C-1	0
C-2 blank	0
D-1 thru D-18	0
E-1 thru E-6	0
Fig. 1 thru 2-2 and blank	0
Fig. 3 thru 3-1 and blank	0
Fig. 4 thru 9-1 and blank	0
Fig. 10 thru 11-2 and blank	0
Fig. 12 thru 13-3 and blank	0
Fig. 14 thru 14-2 and blank	0
Fig. 15 thru 17-1 and blank	0
Fig. 18 thru 19-2 and blank	0
Fig. 20 thru BULK-1	0
F-1 thru F-7	0
F8 blank	0
G-1 thru G-9	0
G-10 blank	0
H-1 thru H-4	0
I-1 and I-2	0

* Zero In This Column Indicates An Original Page.

TECHNICAL MANUAL
No. 9-3990-258-13&P-2

HEADQUARTERS
DEPARTMENT OF THE ARMY
Washington, D.C., *30 June 2008*

OPERATOR, UNIT AND DIRECT SUPPORT MAINTENANCE MANUAL AND REPAIR PARTS AND SPECIAL TOOLS LIST (RPSTL) FOR

CONCRETE MOBILE MIXER MODULE MODEL M5 (NSN 3990-01-444-5196) (EIC: BDN)

Current as of 30 June 2008

REPORTING OF ERRORS AND RECOMMENDING IMPROVEMENTS

You can help improve this publication. If you find any errors, or if you would like to recommend any improvements to the procedures in this publication, please let us know. The preferred method is to submit your DA Form 2028 (Recommended Changes to Publications and Blank Forms) through the Internet, on the Army Electronic Product Support (AEPS) website. The Internet address is https://aeps.ria.army.mil. The DA Form 2028 is located under the Public Applications section in the AEPS Public Home Page. Fill out the form and click on SUBMIT. Using this form on AEPS will enable us to respond quicker to your comments and better manage the DA Form 2028 program. You may also mail, e-mail, or fax your comments or DA Form 2028 directly to the U.S. Army TACOM Life Cycle Management Command. The postal mailing address is U.S. Army TACOM Life Cycle Management Command, ATTN: AMSTA-LC-LMPP / TECH PUBS, 1 Rock Island Arsenal, Rock Island, IL 61299-7630. The e-mail address is tacomlcmc.daform2028@us.army.mil. The fax number is DSN 793-0726 or Commercial (309) 782-0726.

TABLE OF CONTENTS

Page

CHAPTER 4 UNIT MAINTENANCE TROUBLESHOOTING INSTRUCTIONS 4-1

APPENDIX A ADMIXTURE A-1

APPENDIX B HYDRAULIC OIL.....B-1

APPENDIX C BASIC ISSUE ITEMS (BII) C-1

Approved for public release; distribution is unlimited.

This manual supersedes TM 9-3990-258-13&P, dated 1 November 2000.

TABLE OF CONTENTS

Page

APPENDIX D ACCU-VANE D-1

APPENDIX E REPAIR PARTS AND SPECIAL TOOLS LIST (RPSTL) E-1

APPENDIX F TORQUE LIMITS F-1

APPENDIX G MAINTENANCE ALLOCATION CHART (MAC) G-1

APPENDIX H EXPENDABLE SUPPLIES AND MATERIALS LIST H-1

APPENDIX I TOOL IDENTIFICATION LIST I-1

12. CONCRETE MIXER CHUTE SWIVEL BINDS.

INITIAL SETUP

Tools and Special Tools
Tool Kit, General Mechanic's: Automotive (Item 19, Appendix I)

Equipment Condition
Concrete Mobile Mixer unloaded from PLS, (Para 2-5)
Concrete Mobile Mixer raised to operating level, (Para 2-28)
Mixing auger deployed, (Para 2-23)
Engine OFF, (Para 2-19)

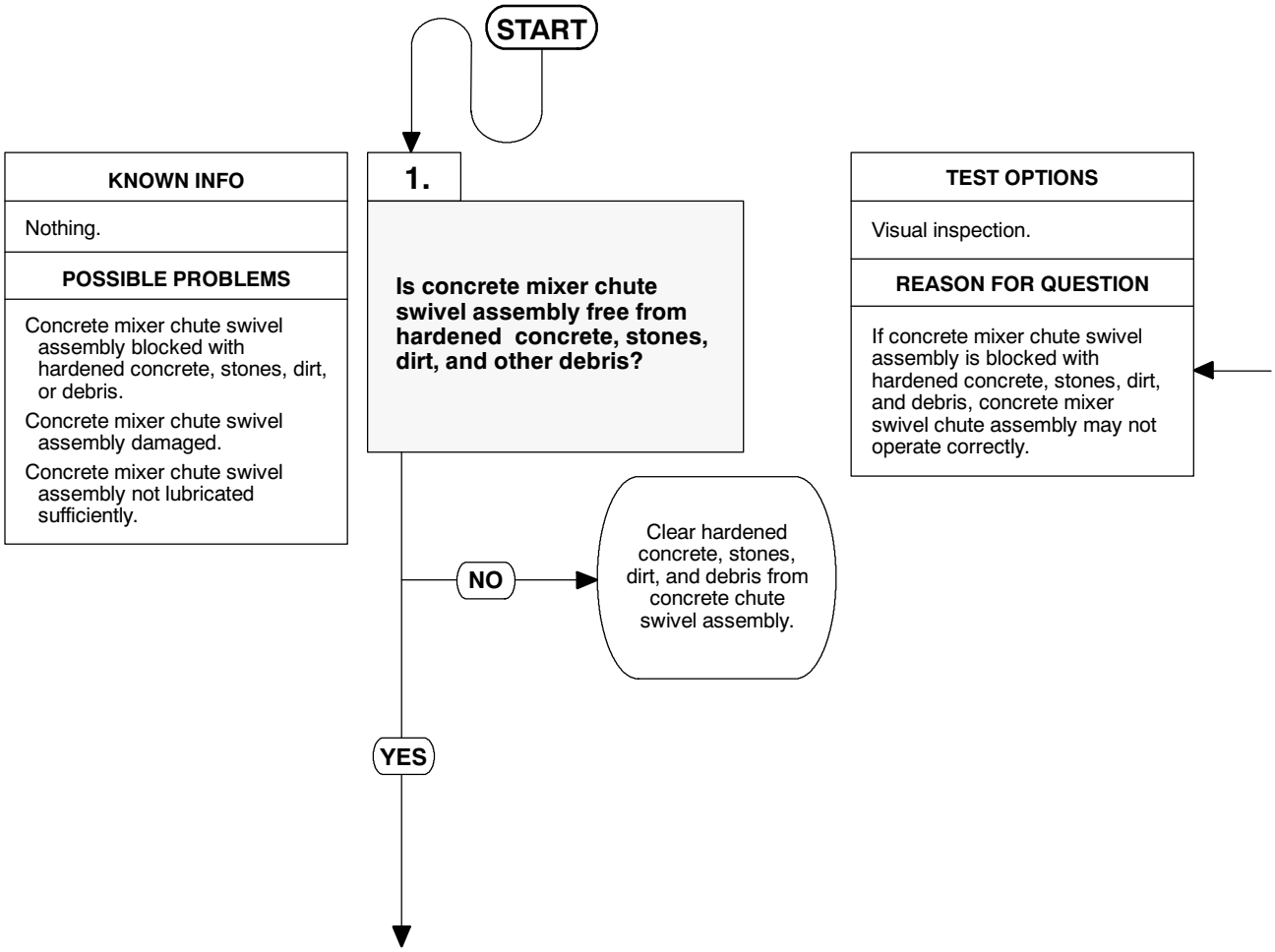

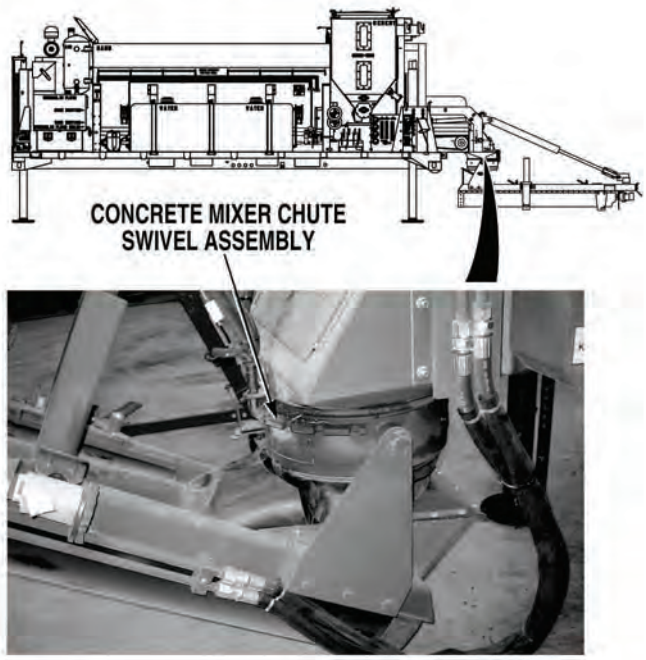

VISUAL INSPECTION
Check if concrete mixer chute swivel assembly is free from hardened concrete, stones, dirt, and debris, (a) If concrete mixer chute swivel assembly is blocked with hardened concrete, stones, dirt, and debris, clear blockage from concrete mixer chute swivel assembly. Verify repair, go to Step 4 of this Fault. (b) If concrete mixer chute swivel assembly is free of hardened concrete, stones, dirt, and debris, go to Step 2 of this Fault.

12. CONCRETE MIXER CHUTE SWIVEL BINDS (CONT).

KNOWN INFO
Concrete mixer chute swivel assembly not blocked with hardened concrete, stones, dirt, or debris.
POSSIBLE PROBLEMS
Concrete mixer chute swivel assembly damaged. Concrete mixer chute swivel assembly not lubricated sufficiently.

2.

Is concrete mixer chute swivel assembly free from damage?

TEST OPTIONS
Visual inspection.
REASON FOR QUESTION
If concrete mixer chute swivel assembly is damaged, concrete mixer chute swivel assembly may not operate correctly.

NO → Notify Supervisor.

YES ↓

VISUAL INSPECTION
Check if concrete mixer chute swivel assembly is free from damage. (a) If concrete mixer chute swivel assembly is not free from damage, notify Supervisor. (b) If concrete mixer chute swivel assembly is free from damage, go to Step 3 of this Fault.

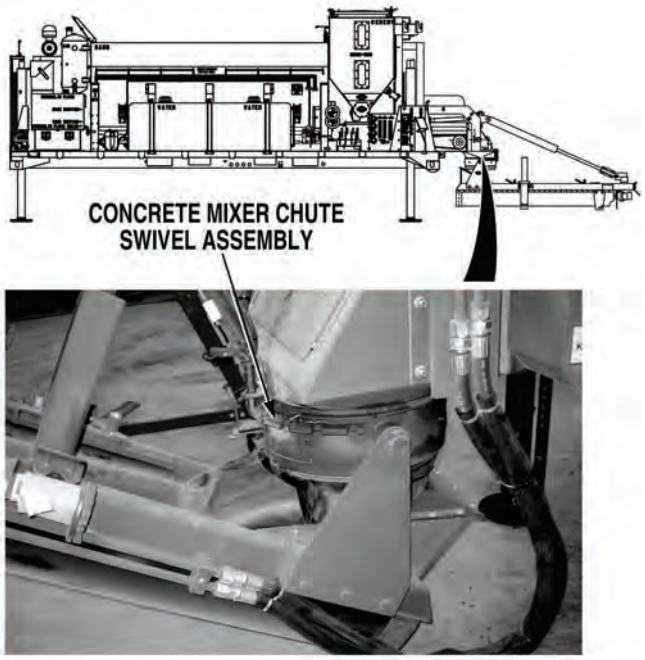

12. CONCRETE MIXER CHUTE SWIVEL BINDS (CONT).

KNOWN INFO
Concrete mixer chute swivel assembly not blocked with hardened concrete, stones, dirt, or debris. Concrete mixer chute swivel assembly not damaged.
POSSIBLE PROBLEMS
Concrete mixer chute swivel assembly not lubricated sufficiently.

3.

Does concrete mixer chute swivel assembly operate correctly after being lubricated?

TEST OPTIONS
Operational test.
REASON FOR QUESTION
If concrete mixer chute swivel assembly is not lubricated correctly, concrete mixer chute swivel assembly may not operate correctly.

NO → Notify Supervisor.

YES → Fault corrected. Verify repair, go to Step 4 of this Fault.

OPERATIONAL TEST

(1) Lubricate six grease zerks on concrete mixer chute swivel assembly, (Para 2-10).

(2) Check if concrete chute swivel assembly operates correctly.

(a) If concrete chute swivel assembly does not operate correctly, fault not corrected. Notify Supervisor.

(b) If concrete chute swivel assembly operates correctly, fault has been corrected. Verify repair, go to Step 4 of this Fault.

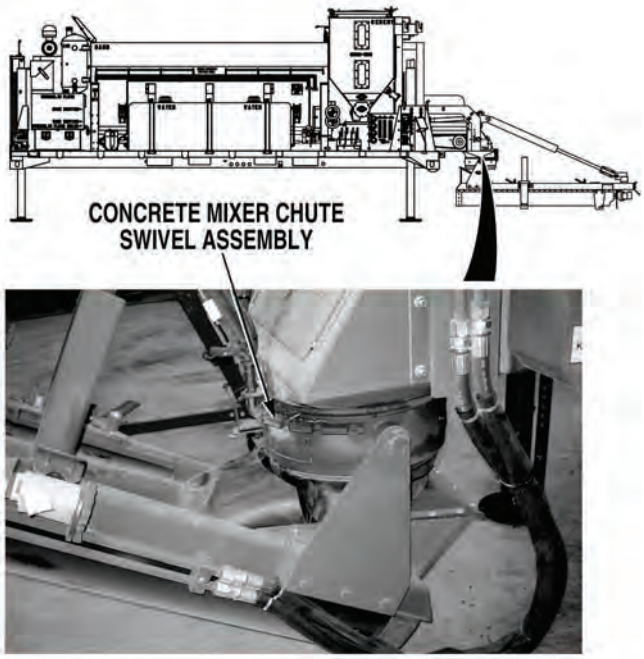

12. CONCRETE MIXER CHUTE SWIVEL BINDS (CONT).

KNOWN INFO
Concrete mixer chute swivel assembly not blocked with hardened concrete, stones, dirt, or debris. Concrete mixer chute swivel assembly not damaged. Concrete mixer chute swivel assembly lubricated sufficiently.
POSSIBLE PROBLEMS
None.

4.

Does concrete mixer chute swivel assembly operate correctly?

NO → Fault not corrected. Notify Supervisor.

YES → Fault corrected.

TEST OPTIONS
Verify repair.
REASON FOR QUESTION
If concrete mixer chute swivel assembly operates correctly, fault has been corrected.

VERIFY REPAIR
Check if concrete mixer chute swivel assembly operates correctly. (a) If concrete chute swivel assembly does not operate correctly, fault not corrected. Notify Supervisor. (b) If concrete chute swivel assembly operates correctly, fault has been corrected.

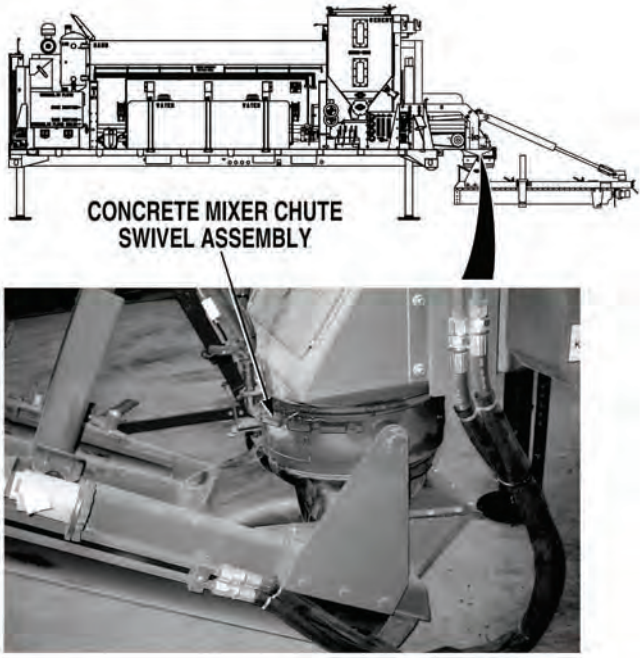

13. CONCRETE MIXER HOIST, RETRACTOR CYLINDERS, LIFT CYLINDERS, AND WATER PUMP DO NOT OPERATE.

INITIAL SETUP

Tools and Special Tools
Tool Kit, General Mechanic's: Automotive (Item 19, Appendix I)

Equipment Condition
Concrete Mobile Mixer unloaded from PLS, (Para 2-5)
Engine OFF, (Para 2-19)

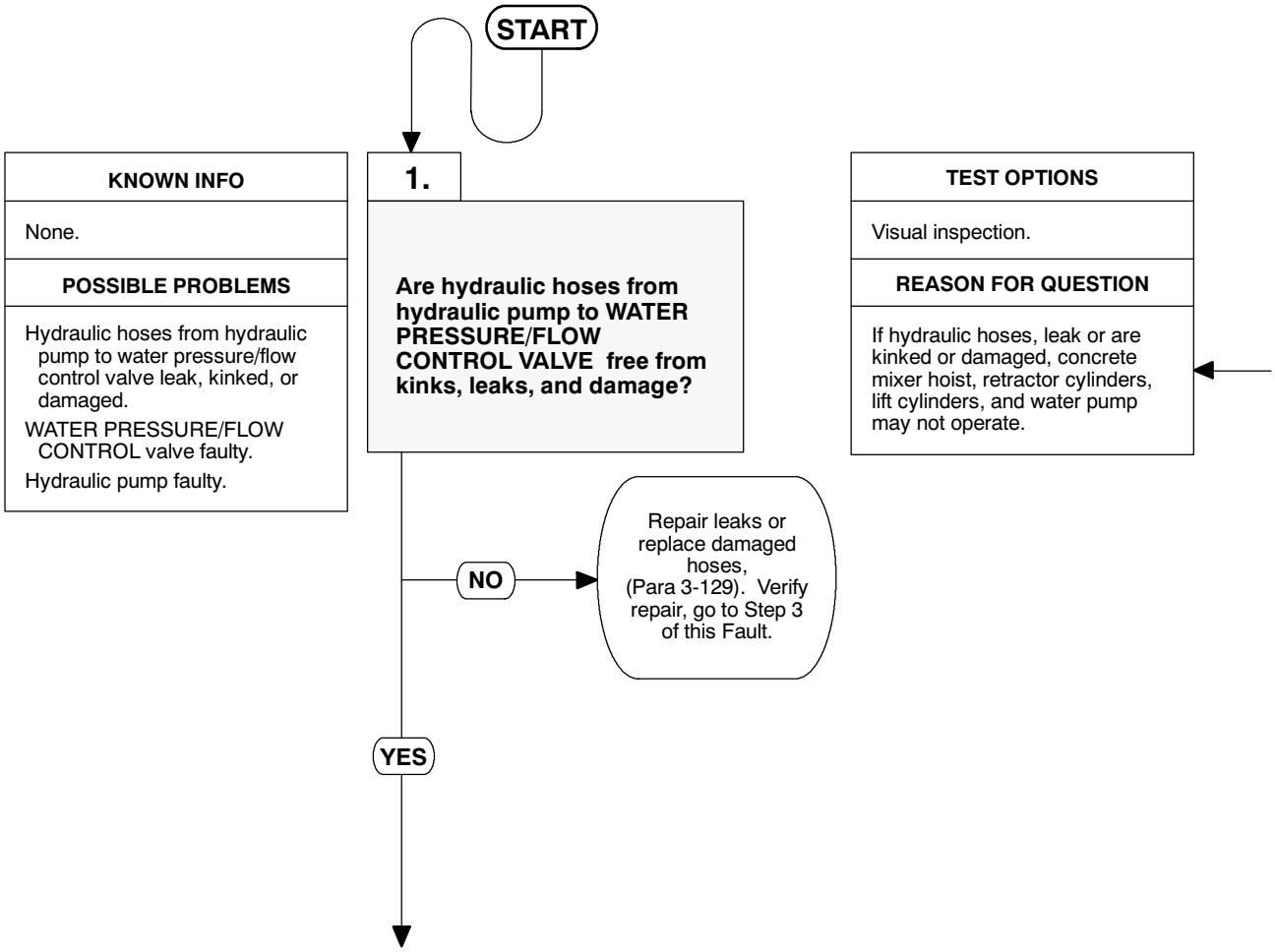

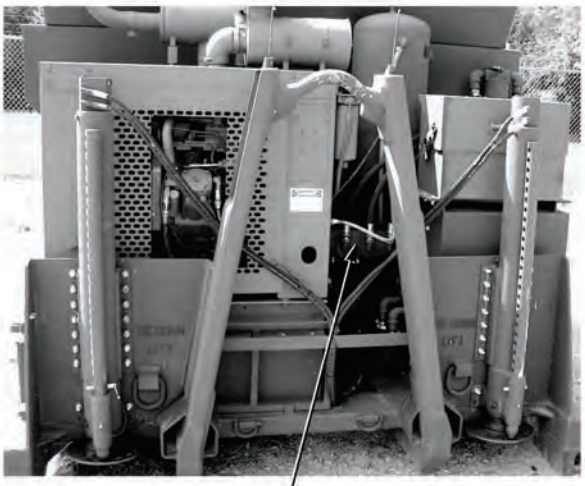

VISUAL INSPECTION
Check if hydraulic hoses from hydraulic pump to WATER PRESSURE/FLOW CONTROL valve are free from leaks, kinks, and damage. (a) If hydraulic hoses are not free from leaks, kinks, and damage, repair leaks or replace damaged hoses, (Para 3-129). Verify repair, go to Step 3 of this Fault. (b) If hydraulic hoses are free from leaks, kinks, and damage, go to Step 2 of this Fault.

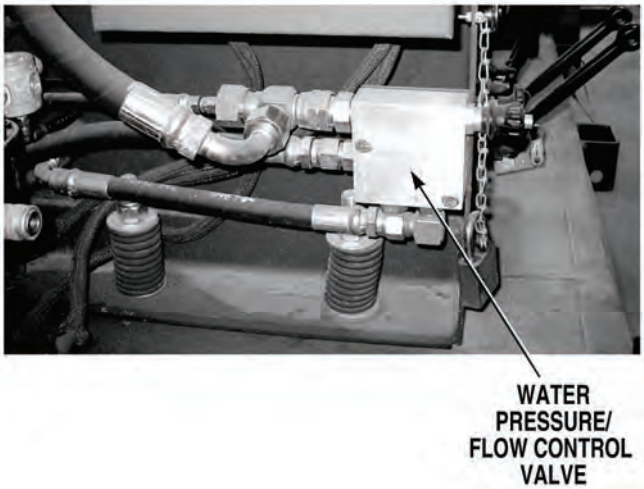

13. CONCRETE MIXER HOIST, RETRACTOR CYLINDERS, LIFT CYLINDERS, AND WATER PUMP DO NOT OPERATE (CONT).

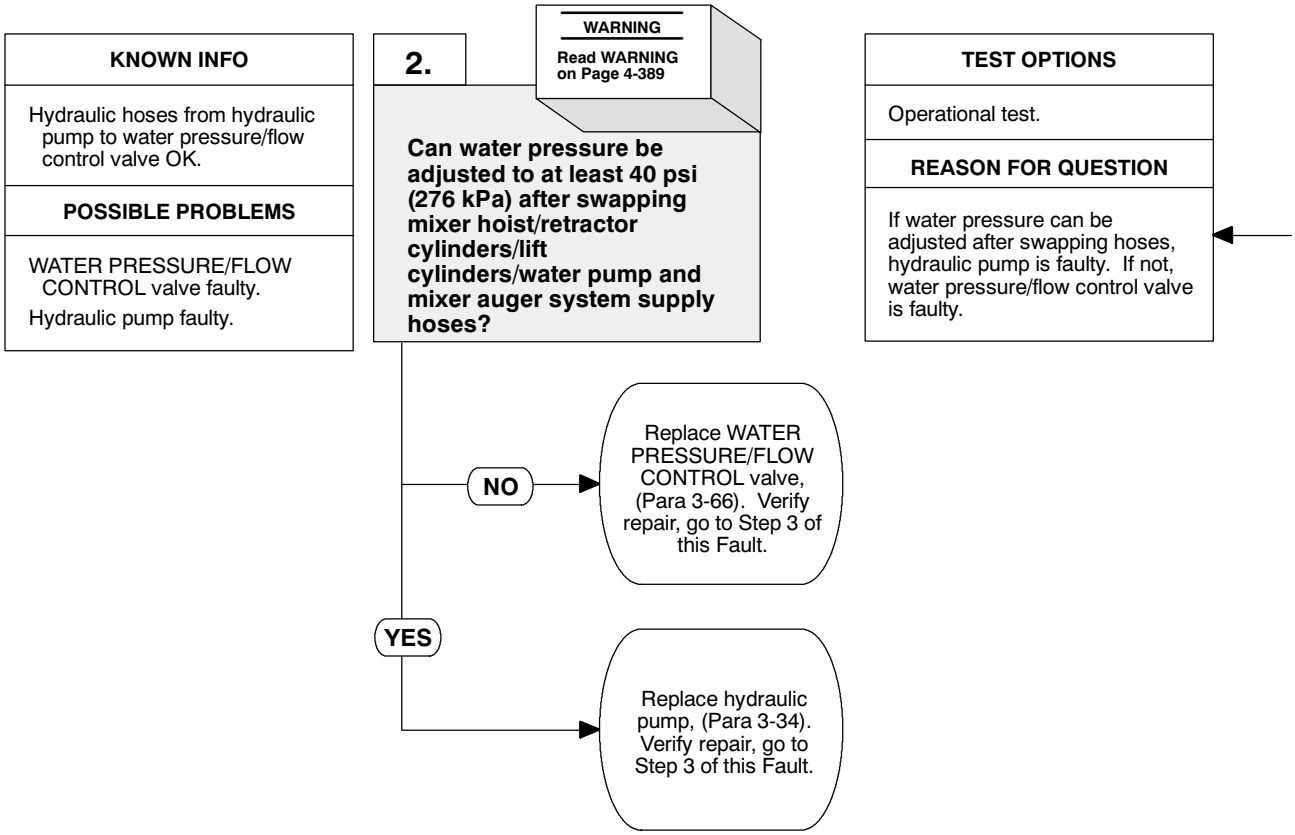

WARNING

Never disconnect any hydraulic line or fitting without first dropping pressure to zero. Failure to comply may result in serious injury or death to personnel.

OPERATIONAL TEST

(1) Place suitable drain pan under hydraulic hose connections above control box.

(2) Disconnect supply hose to WATER PRESSURE/FLOW CONTROL valve, (Para 3-129).

(3) Disconnect supply hose to concrete mixing auger.

(4) Connect supply hose for WATER PRESSURE/FLOW CONTROL valve to concrete mixing auger supply line.

(5) Connect supply hose for concrete mixing auger to WATER PRESSURE/FLOW CONTROL valve supply line.

(6) Start engine, (Para 2-19).

(7) Turn THROTTLE CONTROL to HIGH IDLE (Para 2-1).

(8) Push in WATER PUMP/LIFT CYLINDER control valve, (Para 2-1).

(9) Adjust WATER PRESSURE/FLOW CONTROL valve for 40 psi (276 kPa) water pressure, (Para 2-19).

   (a) If water pressure cannot be adjusted to at least 40 psi (276 kPa), replace water pressure/flow control valve, (Para 3-53).

   (b) If water pressure can be adjusted to at least 40 psi (276 kPa), replace hydraulic pump, (Para 3-34).

(10) Verify repair, go to Step 3 of this Fault.

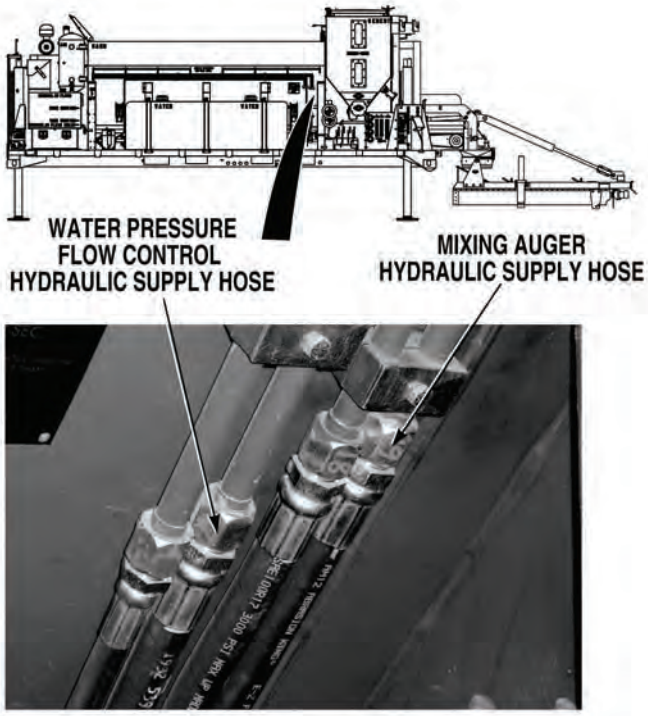

13. CONCRETE MIXER HOIST, RETRACTOR CYLINDERS, LIFT CYLINDERS, AND WATER PUMP DO NOT OPERATE (CONT).

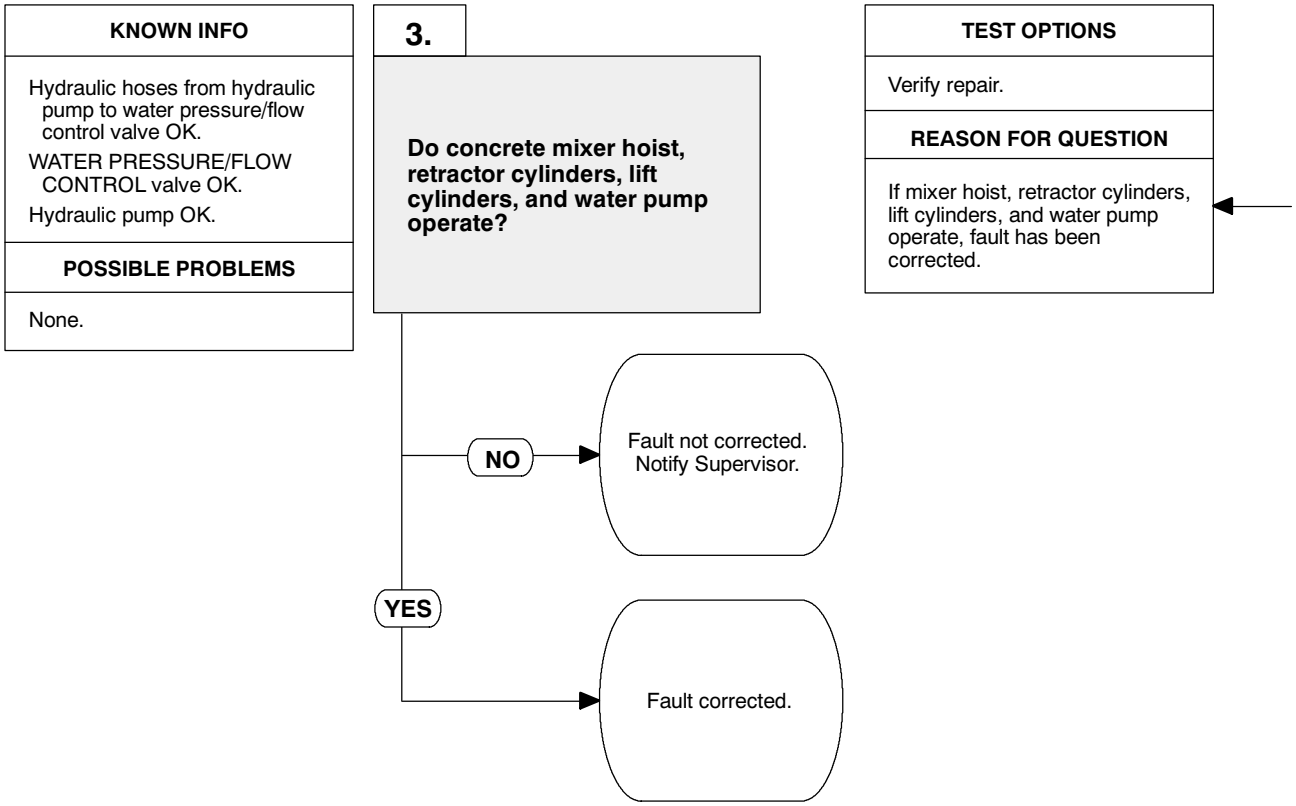

VERIFY REPAIR

(1) If WATER PRESSURE/FLOW CONTROL valve and concrete mixer auger supply hoses were swapped, reconnect hoses to their original configuration, (Para 3-129).

(2) Start engine, (Para 2-19).

(3) Turn THROTTLE CONTROL to HIGH IDLE, (Para 2-1).

(4) Push in WATER PUMP/LIFT CYLINDER control valve, (Para 2-1).

(5) Adjust WATER PRESSURE/FLOW CONTROL valve to 40 psi, (276 kPa) water pressure.

  (a) If water pressure cannot be adjusted to at least 40 psi (276 kPa), problem has not been corrected. Notify Supervisor.

  (b) If water pressure can be adjusted to at least 40 psi (276 kPa), problem has been corrected.

(6) Shut OFF engine, (Para 2-19).

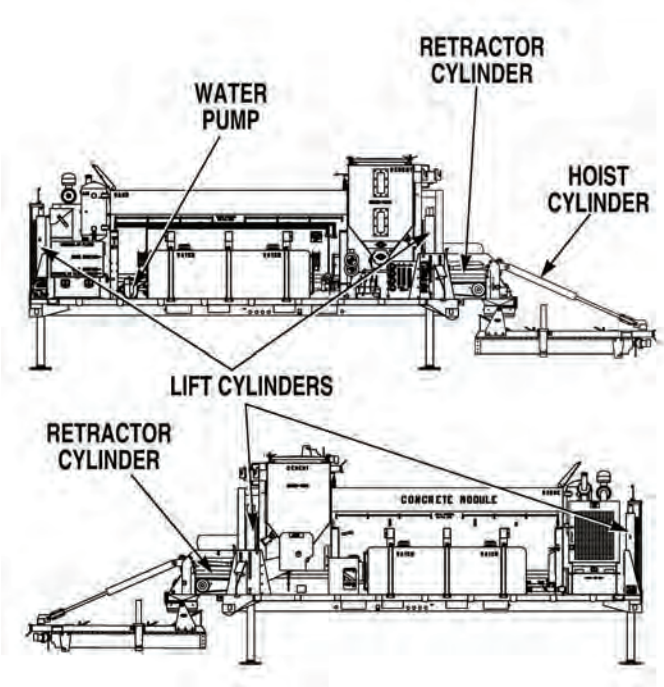

14. CONCRETE MIXER HOIST DOES NOT OPERATE CORRECTLY.

INITIAL SETUP

Tools and Special Tools
Tool Kit, General Mechanic's: Automotive (Item 19, Appendix I)
Cap and Plug Set (Item 3, Appendix I)

Equipment Condition
Concrete Mobile Mixer unloaded from PLS, (Para 2-5)
Concrete Mobile Mixer raised to operating level, (Para 2-28)
Engine OFF, (Para 2-19)

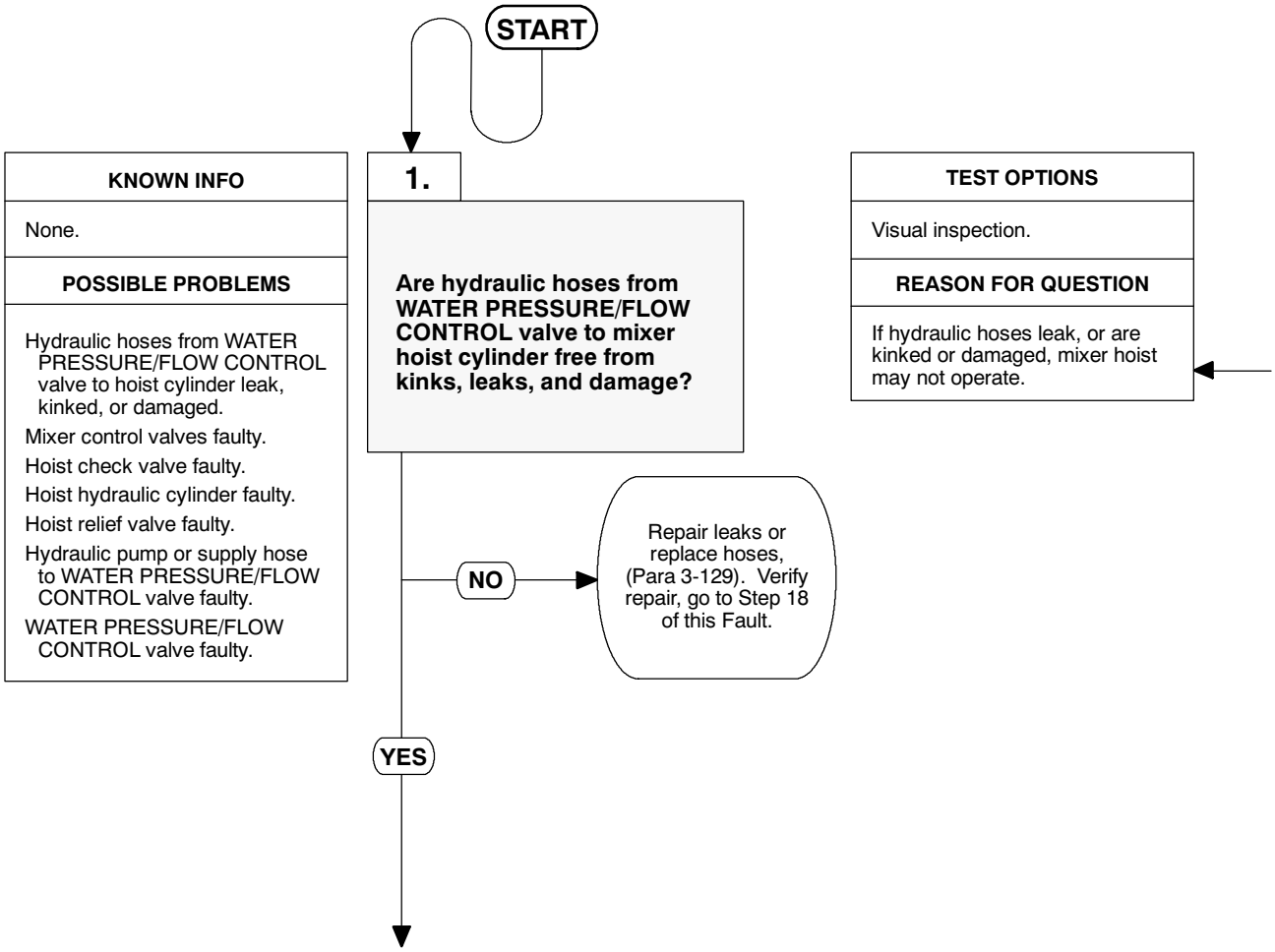

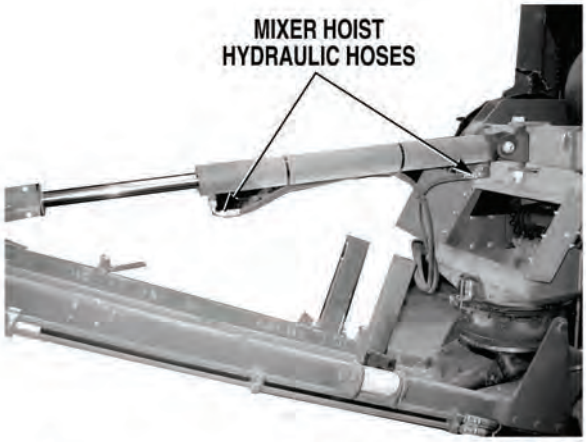

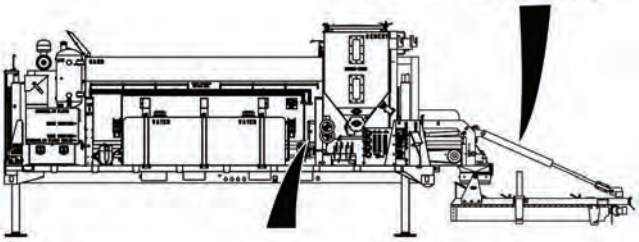

VISUAL INSPECTION
Check if hydraulic hoses from WATER PRESSURE/FLOW CONTROL valve to mixer hoist cylinder are free from leaks, kinks, and damage. (a) If hydraulic hoses are not free from leaks, kinks, and damage, repair leaks or replace damaged hoses, (Para 3-129). Verify repair, go to Step 18 of this Fault. (b) If hydraulic hoses are free from leaks, kinks, and damage, go to Step 2 of this Fault.

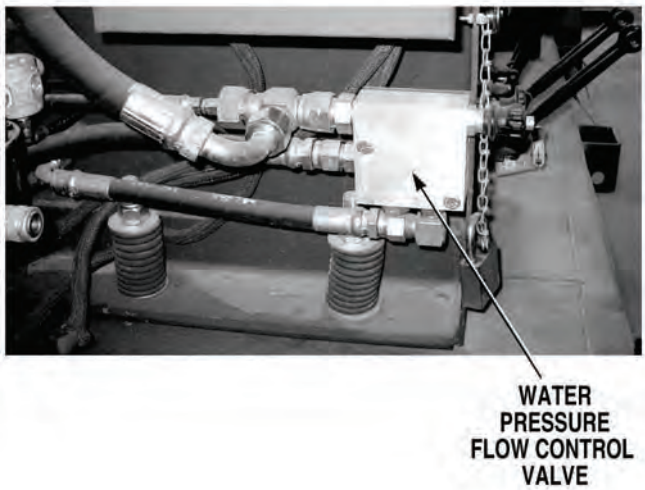

14. CONCRETE MIXER HOIST DOES NOT OPERATE CORRECTLY (CONT).

KNOWN INFO
Hydraulic hoses from WATER PRESSURE/FLOW CONTROL valve to hoist cylinder OK.
POSSIBLE PROBLEMS
Mixer control valves faulty. Hoist check valve faulty. Hoist hydraulic cylinder faulty. Hoist relief valve faulty. Hydraulic pump or supply hose to WATER PRESSURE/FLOW CONTROL valve faulty. WATER PRESSURE/FLOW CONTROL valve faulty.

2.

Do mixer RETRACTOR controls operate?

NO → Go to Step 16 of this Fault.

YES ↓

TEST OPTIONS
Operational test.
REASON FOR QUESTION
To further isolate fault.

OPERATIONAL TEST

(1) Start engine, (Para 2-19).

(2) Turn THROTTLE CONTROL to HIGH IDLE, (Para 2-1).

(3) Operate RETRACTOR control, (Para 2-23). Check retractor operations.

   (a) If retractor does not operate, go to Step 16 of this Fault.

   (b) If retractor operates, lower mixer assembly to its operating position and go to Step 3 of this Fault.

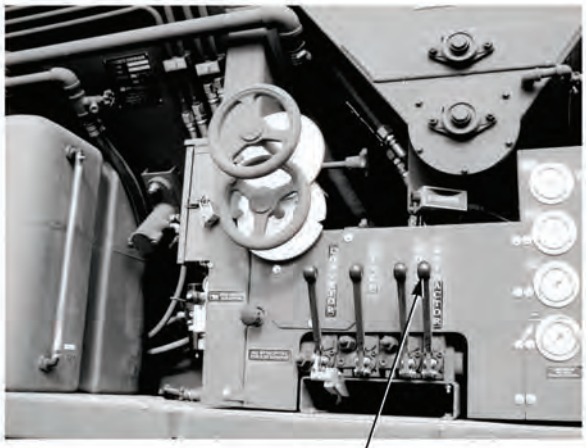

RETRACTOR CONTROL

14. CONCRETE MIXER HOIST DOES NOT OPERATE CORRECTLY (CONT).

KNOWN INFO
Hydraulic hoses from WATER PRESSURE/FLOW CONTROL valve to hoist cylinder OK. Hydraulic pump or supply hose to WATER PRESSURE/FLOW CONTROL valve OK. WATER PRESSURE/FLOW CONTROL valve OK.
POSSIBLE PROBLEMS
Mixer control valves faulty. Hoist check valve faulty. Hoist hydraulic cylinder faulty. Hoist relief valve faulty.

3.

Is mixer hoist in stowed position?

NO → Go to Step 9 of this Fault.

YES ↓

TEST OPTIONS
Visual inspection.
REASON FOR QUESTION
To determine best method to continue troubleshooting.

VISUAL INSPECTION
Check if mixer hoist is in stowed position. (a) If mixer hoist is not in stowed position, go to Step 9 of this Fault. (b) If mixer hoist is in stowed position, go to Step 4 of this Fault.

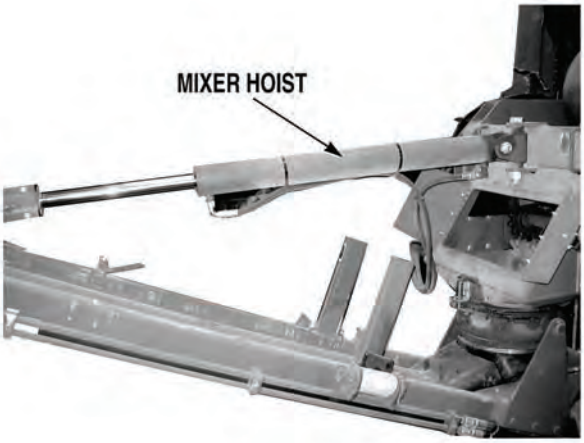

14. CONCRETE MIXER HOIST DOES NOT OPERATE CORRECTLY (CONT).

KNOWN INFO
Hydraulic hoses from WATER PRESSURE/FLOW CONTROL valve to hoist cylinder OK. Hydraulic pump or supply hose to WATER PRESSURE/FLOW CONTROL valve OK. WATER PRESSURE/FLOW CONTROL valve OK.
POSSIBLE PROBLEMS
Mixer control valves faulty. Hoist check valve faulty. Hoist hydraulic cylinder faulty. Hoist relief valve faulty.

4.

Can mixer hoist be lowered?

NO → Go to Step 6 of this Fault.

YES ↓

TEST OPTIONS
Operational test.
REASON FOR QUESTION
To futher isolate fault.

OPERATIONAL TEST

(1) If safety belts are securing mixing auger assembly, remove safety belts, (Para 2-23).

(2) Operate mixer HOIST controls, (Para 2-23). Check if mixing hoist can be lowered.

(a) If mixer hoist cannot be lowered, go to Step 6 of this Fault.

(b) If mixer hoist can be lowered, go to Step 5 of this Fault.

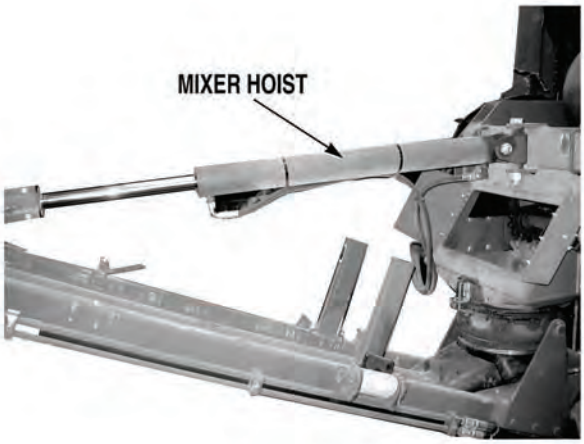

14. CONCRETE MIXER HOIST DOES NOT OPERATE CORRECTLY (CONT).

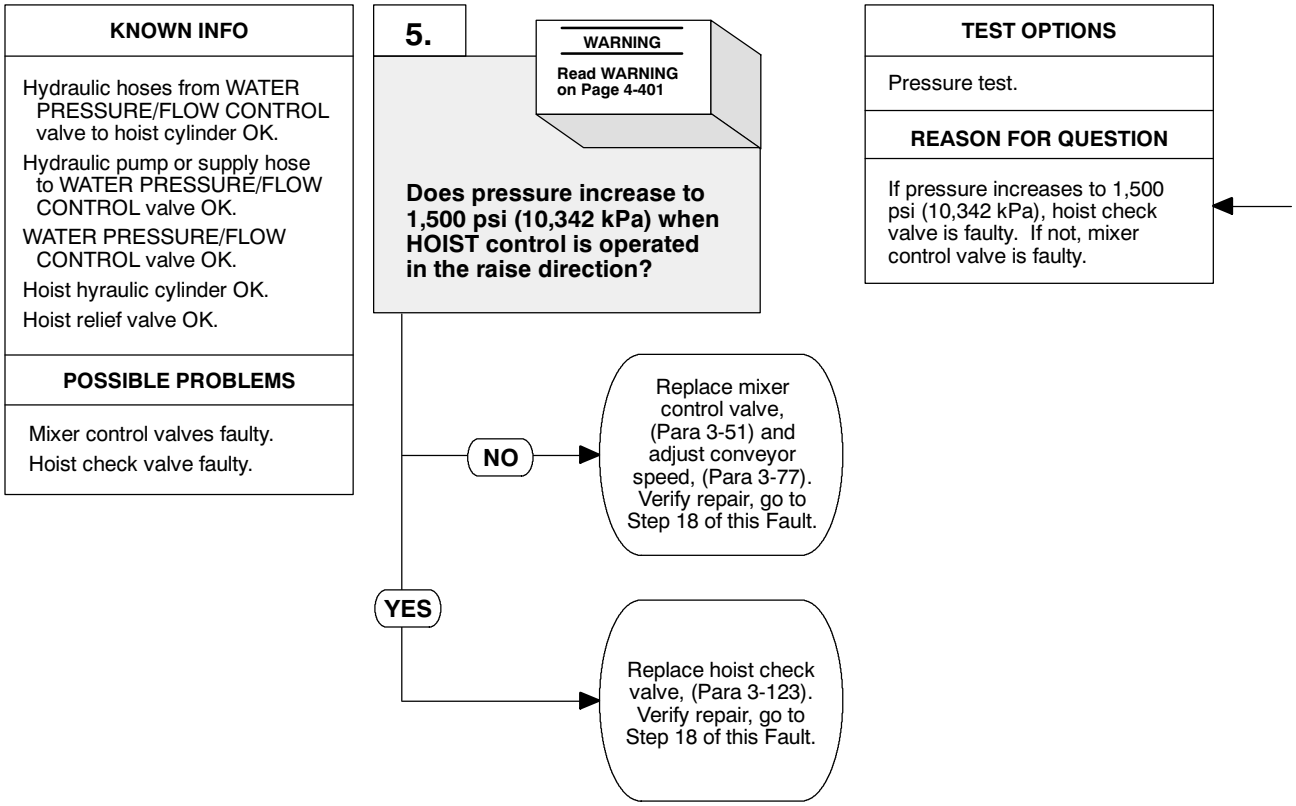

WARNING

Never disconnect any hydraulic line or fitting without first dropping pressure to zero. Failure to comply may result in serious injury or death to personnel.

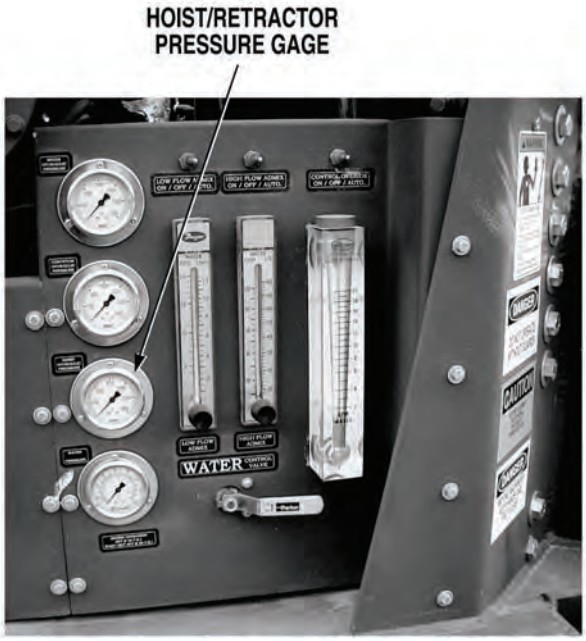

PRESSURE TEST

(1) Lower hoist to it's lowest position, (Para 2-23).

(2) Operate mixer HOIST control, (Para 2-23). Check if pressure increases to 1,500 psi (10, 342 kPa) when the controls are operated in the raise direction.

(a) If pressure does not increase to 1,500 psi (10, 342 kPa), replace mixer control valve, (Para 3-51) and adjust conveyor speed (Para 3-77).

(b) If pressure does increase to 1,500 psi (10,342 kPa), replace hoist check valve, (Para 3-123).

(3) Verify repair, go to Step 18 of this Fault.

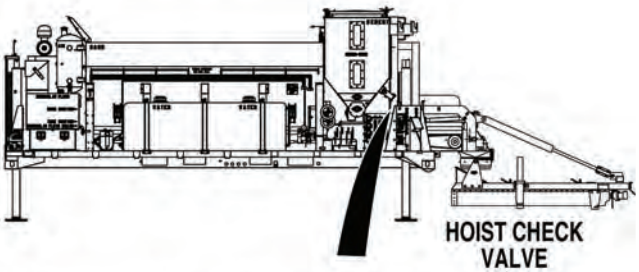

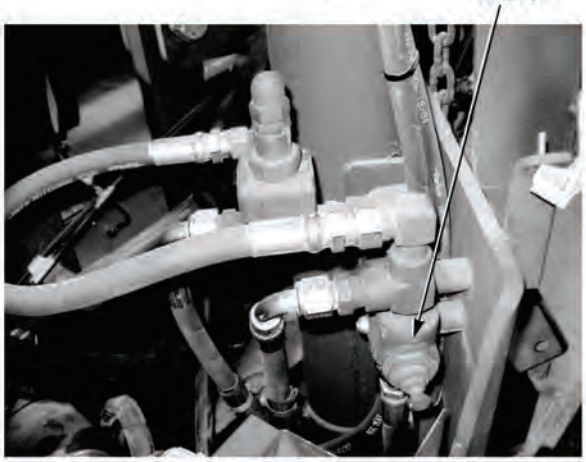

14. CONCRETE MIXER HOIST DOES NOT OPERATE CORRECTLY (CONT).

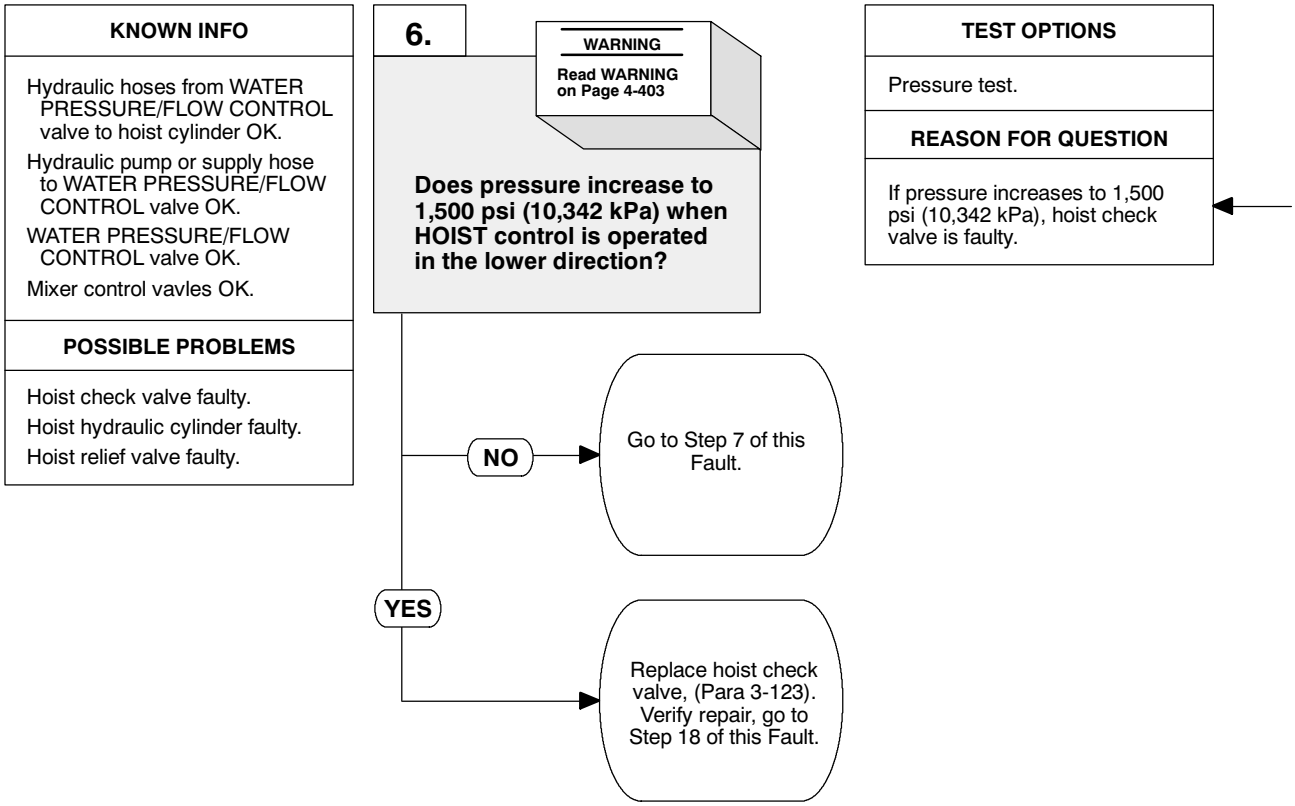

WARNING

Never disconnect any hydraulic line or fitting without first dropping pressure to zero. Failure to comply may result in serious injury or death to personnel.

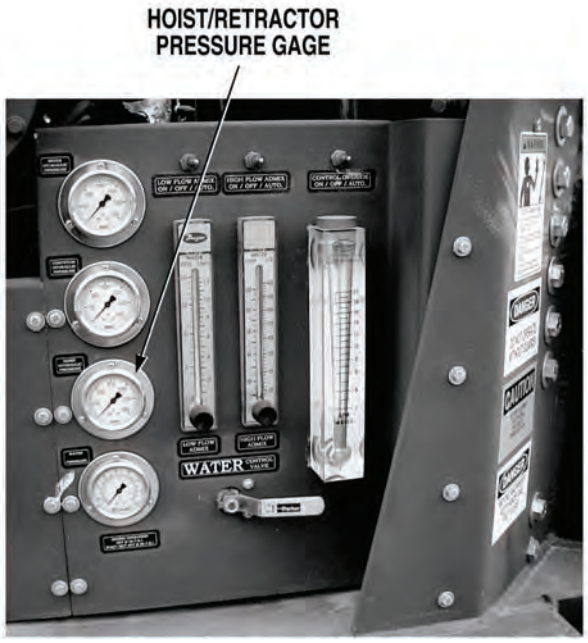

PRESSURE TEST
Operate mixer HOIST control, (Para 2-23). Check if pressure increases to 1,500 psi (10, 342 kPa) when the controls are operated in the lower direction. (a) If pressure does not increase to 1,500 psi (10,342 kPa), go to Step 7 of this Fault. (b) If pressure increases to 1,500 psi (10,342 kPa), install safety belts to secure mixing auger assembly, (Para 2-23) and replace hoist check valve, (Para 3-123). Verify repair, go to Step 18 of this Fault.

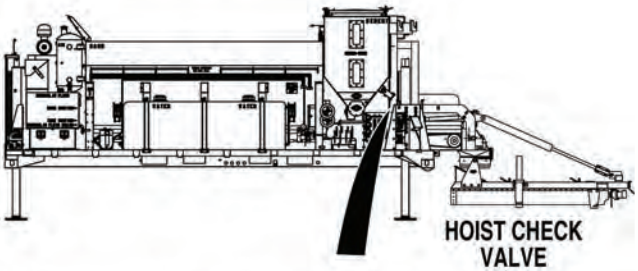

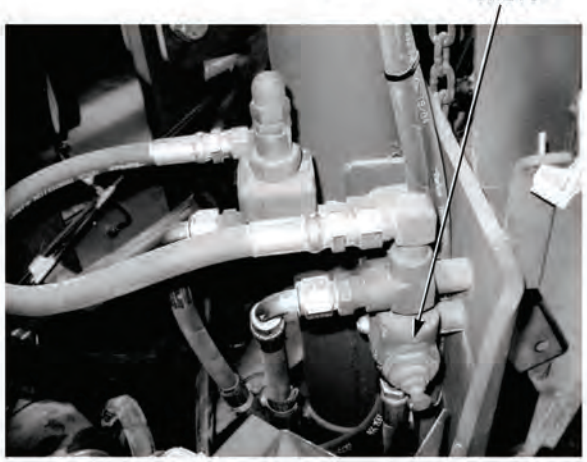

14. CONCRETE MIXER HOIST DOES NOT OPERATE CORRECTLY (CONT).

KNOWN INFO

Hydraulic hoses from WATER PRESSURE/FLOW CONTROL valve to hoist cylinder OK.

Hydraulic pump or supply hose to WATER PRESSURE/FLOW CONTROL valve OK.

WATER PRESSURE/FLOW CONTROL valve OK.

Hoist check valve OK.

POSSIBLE PROBLEMS

Mixer control valves faulty.

Hoist hydraulic cylinder faulty.

Hoist relief valve faulty.

7.

WARNING

Read WARNING on Page 4-405

Does pressure increase to 1,500 psi (10,342 kPa) when hoist lower supply hose is disconnected and capped and HOIST control is operated in the lower direction?

NO → Replace mixer control valve, (Para 3-51) and adjust conveyor speed, (Para 3-77). Verify repair, go to Step 18 of this Fault.

YES ↓

TEST OPTIONS

Pressure test.

REASON FOR QUESTION

If pressure does not increase to 1,500 psi (10,342 kPa), mixer control valve is faulty.

WARNING

Never disconnect any hydraulic line or fitting without first dropping pressure to zero. Failure to comply may result in serious injury or death to personnel.

PRESSURE TEST

(1) Install safety belts to secure mixing auger assembly, (Para 2-23).

(2) Shut OFF engine, (Para 2-19).

(3) Place suitable drain pan under hoist check valve.

(4) Disconnect hoist lower supply hose from hoist check valve, (Para 3-129).

(5) Cap hoist lower supply hose and check valve port.

(6) Start engine, (Para 2-19).

(7) Turn THROTTLE CONTROL to HIGH IDLE, (Para 2-1).

(8) Operate mixer HOIST control, (Para 2-23). Check if pressure increases to 1,500 psi (10,342 kPa) when the controls are operated in the the lower direction.

(a) If pressure does not increase to 1,500 psi (10,342 kPa), replace mixer control valve, (Para 3-51) and adjust conveyor speed (Para 3-77). Verify repair, go to Step 18 of this Fault.

(b) If pressure increases to 1,500 psi (10,342 kPa), go to Step 8 of this Fault.

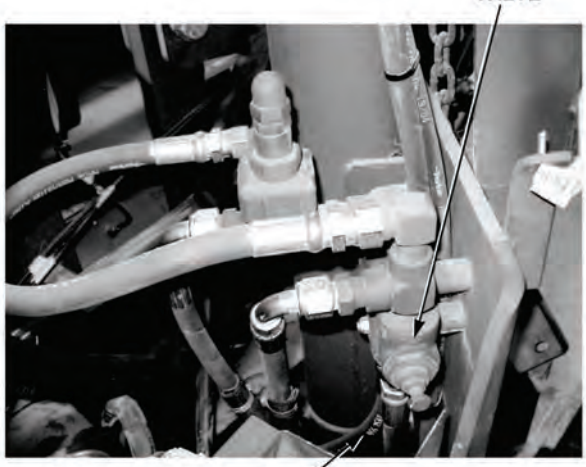

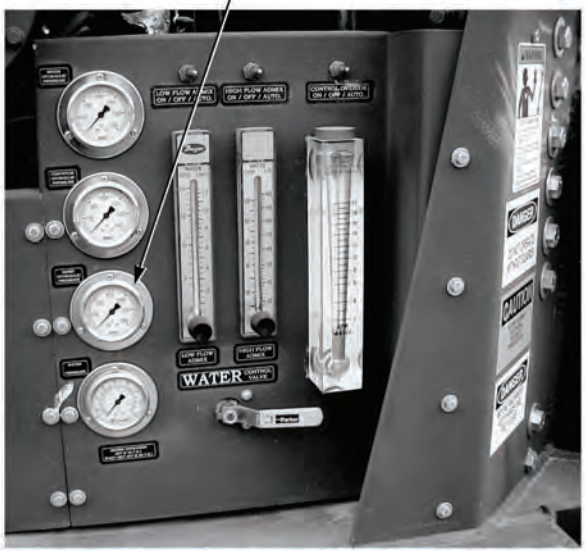

14. CONCRETE MIXER HOIST DOES NOT OPERATE CORRECTLY (CONT).

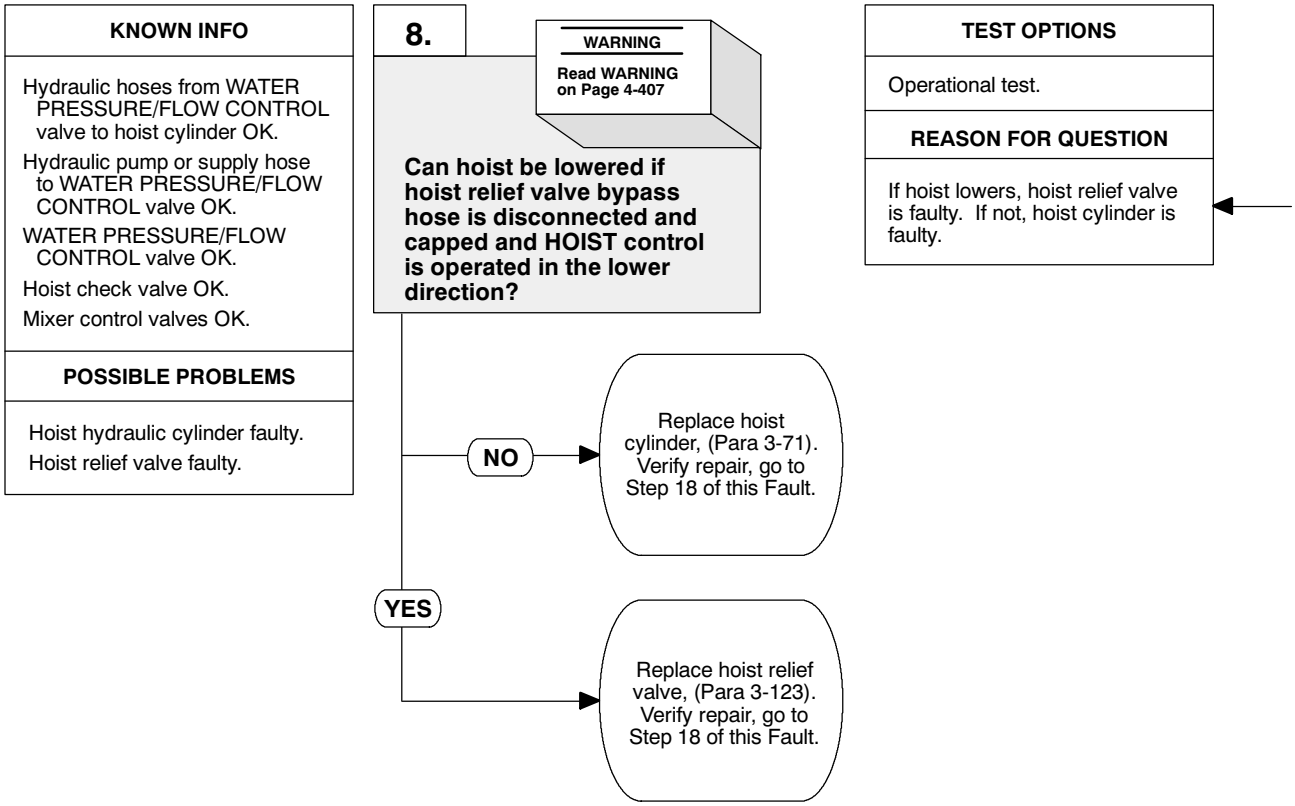

WARNING

- Never disconnect any hydraulic line or fitting without first dropping pressure to zero. Failure to comply may result in serious injury or death to personnel.
- Hoist must be secured before removing bypass hose. Failure to comply may result in serious injury or death to personnel or damage to equipment.

OPERATIONAL TEST

(1) Shut OFF engine, (Para 2-19).
(2) Connect hoist lower supply hose to check valve, (Para 3-129).
(3) Disconnect hose from hoist relief valve bypass port, (Para 3-129).
(4) Cap hose and relief valve bypass port.
(5) Remove safety belts from mixing auger assembly, (Para 2-23).
(6) Start engine, (Para 2-19).
(7) Turn THROTTLE CONTROL to HIGH IDLE, (Para 2-1).
(8) Operate mixer HOIST control, (Para 2-23). Check if hoist lowers when the controls are operated in lower direction.
    (a) If hoist does not lower, replace hoist cylinder, (Para 3-71).
    (b) If hoist lowers, replace hoist relief valve, (Para 3-123).
(9) Verify repair, go to Step 18 of this Fault.

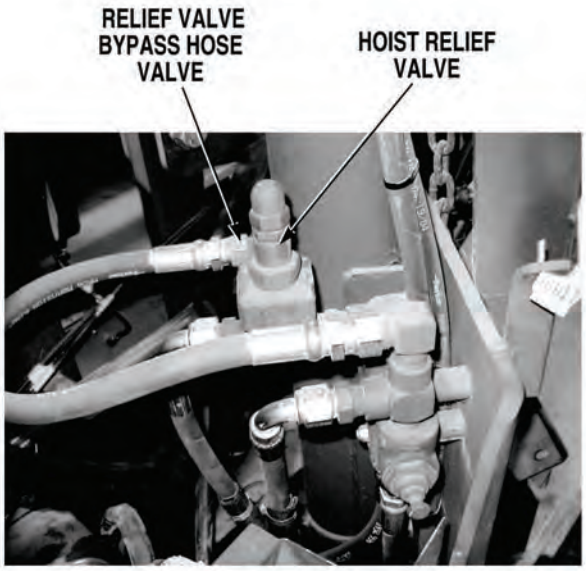

14. CONCRETE MIXER HOIST DOES NOT OPERATE CORRECTLY (CONT).

KNOWN INFO
Hydraulic hoses from WATER PRESSURE/FLOW CONTROL valve to hoist cylinder OK. Hydraulic pump or supply hose to WATER PRESSURE/FLOW CONTROL valve OK. WATER PRESSURE/FLOW CONTROL valve OK.
POSSIBLE PROBLEMS
Mixer control valves faulty. Hoist check valve faulty. Hoist hydraulic cylinder faulty. Hoist relief valve faulty.

9.

Can mixer hoist be raised?

NO → Go to Step 12 of this Fault.

YES ↓

TEST OPTIONS
Operational test.
REASON FOR QUESTION
To further isolate fault.

OPERATIONAL TEST
Operate mixer HOIST controls, (Para 2-23). Check if mixer hoist can be raised. (a) If mixer hoist cannot be raised, go to Step 12 of this Fault. (b) If mixer hoist can be raised, go to Step 10 of this Fault.

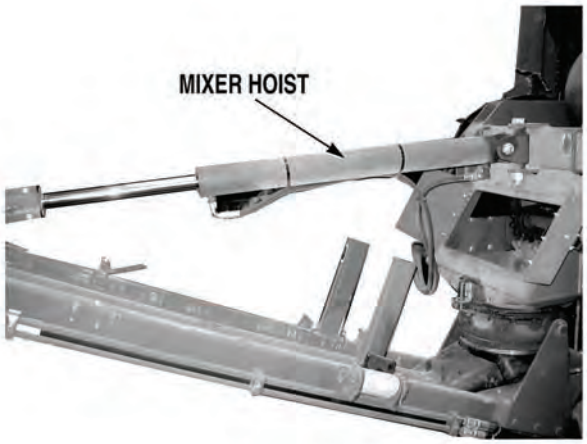

14. CONCRETE MIXER HOIST DOES NOT OPERATE CORRECTLY (CONT).

KNOWN INFO
Hydraulic hoses from WATER PRESSURE/FLOW CONTROL valve to hoist cylinder OK. Hydraulic pump or supply hose to WATER PRESSURE/FLOW CONTROL valve OK. WATER PRESSURE/FLOW CONTROL valve OK. Hoist hydraulic cylinder OK.
POSSIBLE PROBLEMS
Mixer control valves faulty. Hoist check valve faulty. Hoist relief valve faulty.

10.

WARNING

Read WARNING on Page 4-411

Does pressure increase to 1,500 psi (10,342 kPa) when HOIST control is operated in lower position?

NO → Go to Step 11 of this Fault.

YES → Replace hoist check valve, (Para 3-123). Verify repair, go to Step 18 of this Fault.

TEST OPTIONS
Pressure test.
REASON FOR QUESTION
If pressure increases to 1,500 psi, (10,342 kPa), hoist check valve is faulty.

WARNING

Never disconnect any hydraulic line or fitting without first dropping pressure to zero. Failure to comply may result in serious injury or death to personnel.

PRESSURE TEST

(1) Raise hoist to its stowed position, (Para 2-23).

(2) Operate mixer HOIST control, (Para 2-23). Check if pressure increases to 1,500 psi (10,342 kPa) when the controls are operated in the lower direction.

(a) If pressure does not increase to 1,500 psi (10,342 kPa), go to Step 11 of this Fault.

(b) If pressure increases to 1,500 psi (10,342 kPa), install safety belt to secure mixing auger assembly, (Para 2-23). Replace hoist check valve, (Para 3-123). Verify repair, go to Step 18 of this Fault.

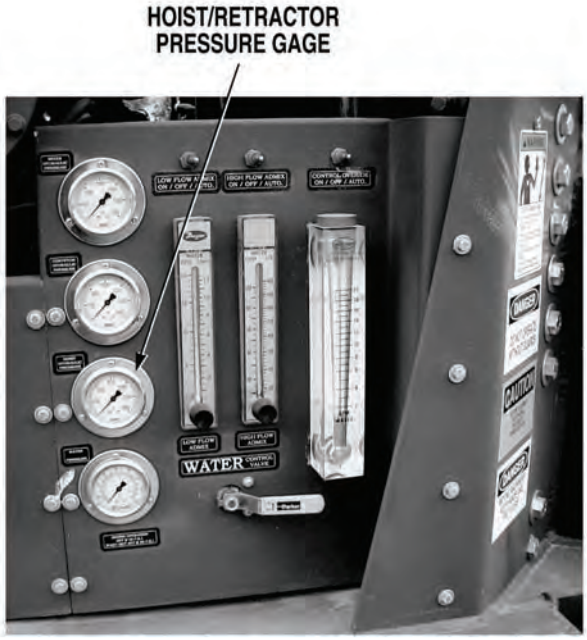

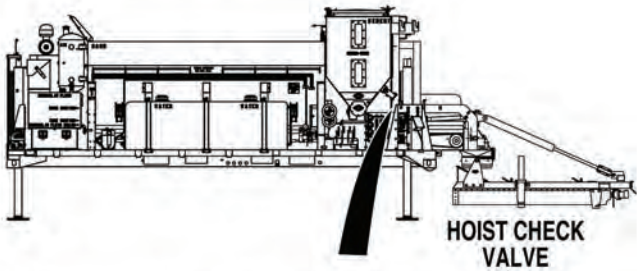

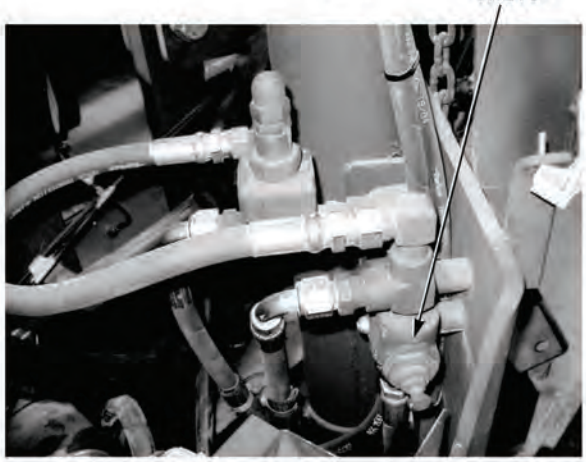

14. CONCRETE MIXER HOIST DOES NOT OPERATE CORRECTLY (CONT).

KNOWN INFO

Hydraulic hoses from WATER PRESSURE/FLOW CONTROL valve to hoist cylinder OK.

Hydraulic pump or supply hose to WATER PRESSURE/FLOW CONTROL valve OK.

WATER PRESSURE/FLOW CONTROL valve OK.

Hoist hydraulic cylinder OK.

Mixer control valves OK.

POSSIBLE PROBLEMS

Hoist check valve faulty.

Hoist relief valve faulty.

11.

WARNING

Read WARNING on Page 4-413

Does pressure increase to 1,500 psi (10,342 kPa) when hoist lower supply hose is disconnected and capped and HOIST control is operated in the lower direction?

NO → Replace mixer control valve, (Para 3-51) and adjust conveyor speed, (Para 3-77). Verify repair, go to Step 18 of this Fault.

YES → Replace hoist relief valve, (Para 3-123). Verify repair, go to Step 18 of this Fault.

TEST OPTIONS

Pressure test.

REASON FOR QUESTION

If pressure increases to 1,500 psi (10,342 kPa), hoist relief valve is faulty. If not, mixer control valve is faulty.

WARNING

Never disconnect any hydraulic line or fitting without first dropping pressure to zero. Failure to comply may result in serious injury or death to personnel.

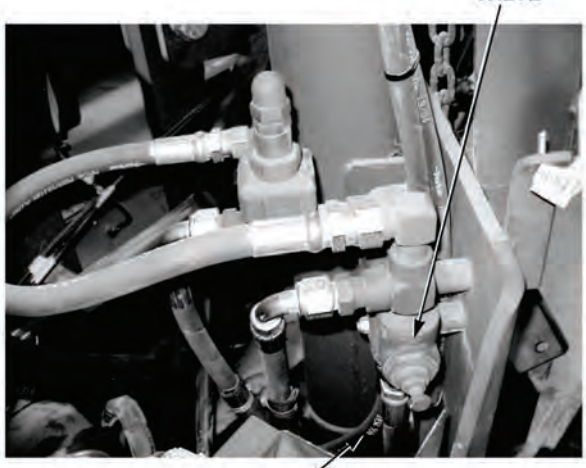

PRESSURE TEST

(1) Install safety belts to secure mixing auger assembly, (Para 2-23).

(2) Shut OFF engine, (Para 2-19).

(3) Place suitable drain pan under hoist check valve.

(4) Disconnect hoist lower supply hose from hoist check valve (Para 3-129).

(5) Cap lower supply hose and check valve port.

(6) Start engine, (Para 2-19).

(7) Turn THROTTLE CONTROL to HIGH IDLE, (Para 2-1).

(8) Operate mixer HOIST control, (Para 2-23). Check if pressure increases to 1,500 psi (10,342 kPa) when the controls are operated in the lower direction.

(a) If pressure does not increase to 1,500 psi (10,342 kPa), replace mixer control valve, (Para 3-51) and adjust conveyor speed, (Para 3-77). Verify repair, go to Step 18 of this Fault.

(b) If pressure increases to 1,500 psi (10,342 kPa), replace hoist relief valve, (Para 3-129).

(9) Verify repair, go to Step 18 of this Fault.

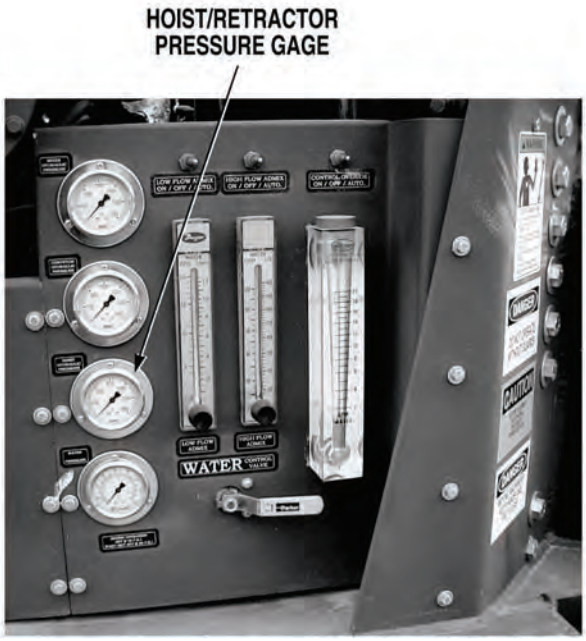

14. CONCRETE MIXER HOIST DOES NOT OPERATE CORRECTLY (CONT).

KNOWN INFO
Hydraulic hoses from WATER PRESSURE/FLOW CONTROL valve to hoist cylinder OK. Hydraulic pump or supply hose to WATER PRESSURE/FLOW CONTROL valve OK. WATER PRESSURE/FLOW CONTROL valve OK. Hoist relief valve OK.
POSSIBLE PROBLEMS
Mixer control valves faulty. Hoist check valve faulty. Hoist hydraulic cylinder faulty.

12.

Is mixer hoist at it's lowest position?

NO → Go to Step 15 of this Fault.

YES ↓

TEST OPTIONS
Operational test.
REASON FOR QUESTION
To determine best method to continue troubleshooting.

OPERATIONAL TEST

Check if mixer hoist is at its lowest position.

(a) If mixer hoist is not at its lowest position, go to Step 15 of this Fault.

(b) If mixer hoist is at its lowest position, go to Step 13 of this Fault.

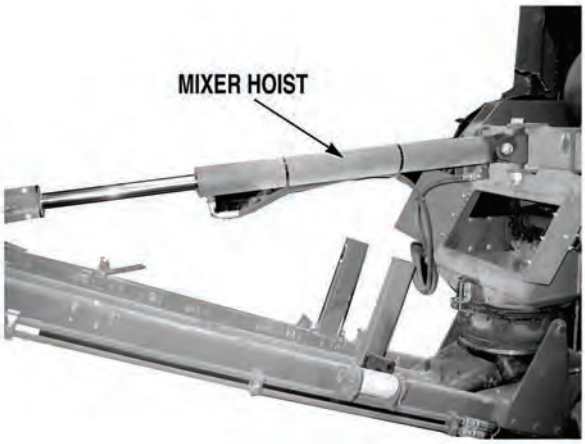

14. CONCRETE MIXER HOIST DOES NOT OPERATE CORRECTLY (CONT).

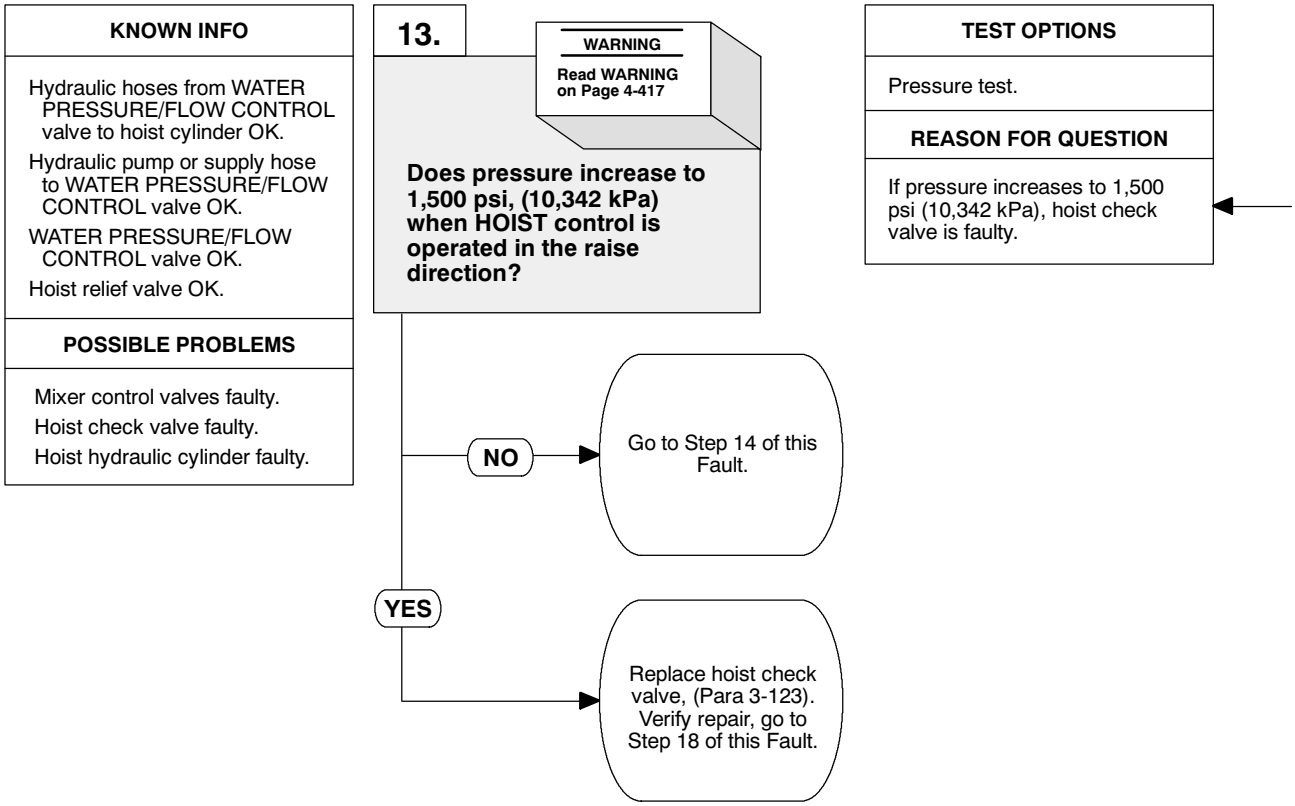

WARNING

Never disconnect any hydraulic line or fitting without first dropping pressure to zero. Failure to comply may result in serious injury or death to personnel.

PRESSURE TEST

Operate mixer HOIST control, (Para 2-23). Check if pressure increases to 1,500 psi (10,342 kPa) when the controls are operated in the raise direction.

(a) If pressure does not increase to 1,500 psi (10,342 kPa), go to Step 14 of this Fault.

(b) If pressure increases to 1,500 psi (10,342 kPa), use suitable devices to brace mixing auger assembly and replace check valve, (Para 3-123). Verify repair, go to Step 18 of this Fault.

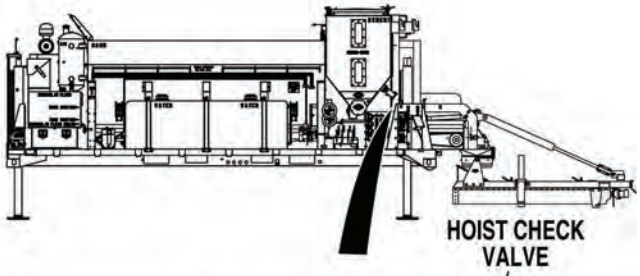

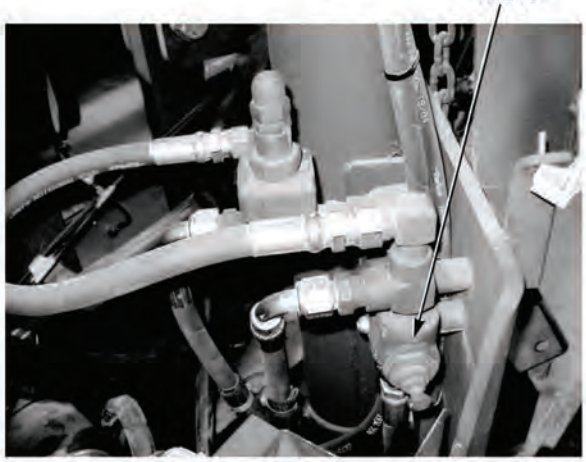

14. CONCRETE MIXER HOIST DOES NOT OPERATE CORRECTLY (CONT).

KNOWN INFO

Hydraulic hoses from WATER PRESSURE/FLOW CONTROL valve to hoist cylinder OK.

Hydraulic pump or supply hose to WATER PRESSURE/FLOW CONTROL valve OK.

WATER PRESSURE/FLOW CONTROL valve OK.

Hoist relief valve OK.

Mixer control valves OK.

POSSIBLE PROBLEMS

Hoist check valve faulty.

Hoist hydraulic cylinder faulty.

14.

WARNING

Read WARNING on Page 4-419

Does pressure increase to 1,500 psi (10,342 kPa) when hoist raise supply hose is disconnected and capped and HOIST control is operated in the raise direction?

NO → Replace mixer control valve, (Para 3-51) and adjust conveyor speed, (Para 3-77). Verify repair, go to Step 18 of this Fault.

YES → Replace hoist cylinder, (Para 3-71). Verify repair, go to Step 18 of this Fault.

TEST OPTIONS

Pressure test.

REASON FOR QUESTION

If pressure increase to 1,500 psi (10,342 kPa), hoist cylinder is faulty. If not, mixer control valve is faulty.

WARNING

Never disconnect any hydraulic line or fitting without first dropping pressure to zero. Failure to comply may result in serious injury or death to personnel.

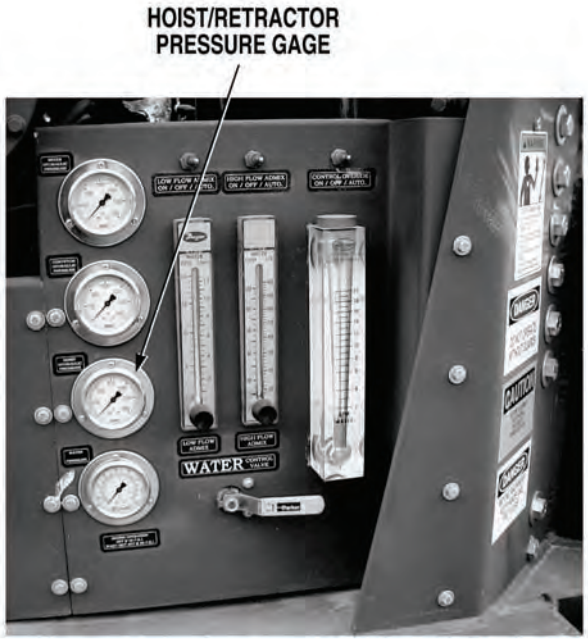

PRESSURE TEST

(1) Shut OFF engine, (Para 2-19).

(2) Place suitable drain pan under hoist check valve.

(3) Disconnect hoist raise supply hose from hoist check valve (Para 3-129).

(4) Cap hoist raise supply hose and check valve port.

(5) Start engine, (Para 2-19).

(6) Turn THROTTLE CONTROL to HIGH IDLE, (Para 2-1).

(7) Operate mixer HOIST control, (Para 2-23). Check if pressure increases to 1,500 psi (10,342 kPa) when the controls are operated in the raise direction.

  (a) If pressure does not increase to 1,500 psi (10,342 kPa), replace mixer control valve, (Para 3-51) and adjust conveyor speed, (Para 3-77).

  (b) If pressure increases to 1,500 psi (10,342 kPa), use suitable devices to brace mixing auger assembly and replace hoist cylinder, (Para 3-71).

(8) Verify repair, go to Step 18 of this Fault.

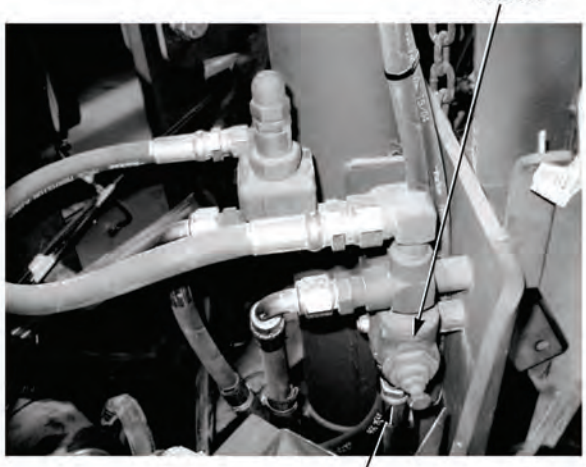

14. CONCRETE MIXER HOIST DOES NOT OPERATE CORRECTLY (CONT).

KNOWN INFO
Hydraulic hoses from WATER PRESSURE/FLOW CONTROL valve to hoist cylinder OK. Hydraulic pump or supply hose to WATER PRESSURE/FLOW CONTROL valve OK. WATER PRESSURE/FLOW CONTROL valve OK. Hoist relief valve OK. Hoist hydraulic cylinder OK.
POSSIBLE PROBLEMS
Mixer control valves faulty. Hoist check valve faulty.

15.

WARNING

Read WARNING on Page 4-421

Does pressure increase to 1,500 psi (10,342 kPa) when HOIST control is operated in the the raise direction?

NO → Replace mixer control valve, (Para 3-51) and adjust conveyor speed, (Para 3-77). Verify repair, go to Step 18 of this Fault.

YES → Replace hoist check valve, (Para 3-123). Verify repair, go to Step 18 of this Fault.

TEST OPTIONS
Pressure test.
REASON FOR QUESTION
If pressure increases to 1,500 psi (10,342), hoist check valve is faulty. If not, mixer control valve is faulty.

WARNING

Never disconnect any hydraulic line or fitting without first dropping pressure to zero. Failure to comply may result in serious injury or death to personnel.

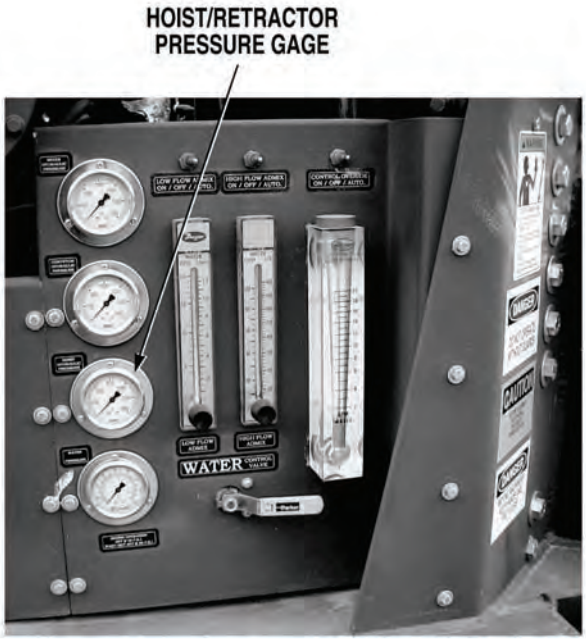

PRESSURE TEST

(1) Operate mixer HOIST control, (Para 2-23). Check if pressure increases to 1,500 psi (10,342 kPa) when the controls are operated in the raise direction.

(a) If pressure does not increase to 1,500 psi (10,342 kPa), replace mixer control valve, (Para 3-51) and adjust conveyor speed, (Para 3-77).

(b) If pressure increases to 1,500 psi (10,342 kPa), replace hoist check valve, (Para 3-123).

(2) Verify repair, go to Step 18 of this Fault.

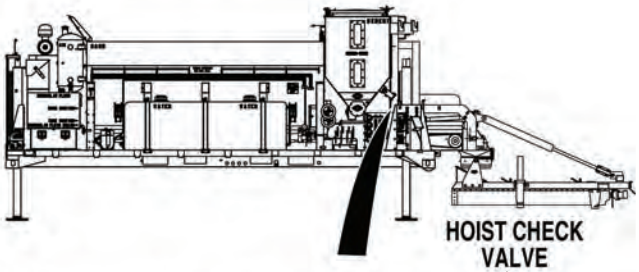

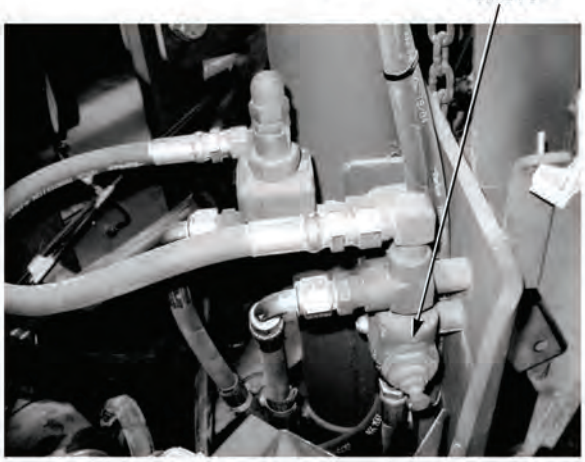

14. CONCRETE MIXER HOIST DOES NOT OPERATE CORRECTLY (CONT).

KNOWN INFO

Hydraulic hoses from WATER PRESSURE/FLOW CONTROL valve to hoist cylinder OK.

Hoist check valve OK.

Hoist hydraulic cylinder OK.

Hoist relief valve OK.

POSSIBLE PROBLEMS

Mixer control valves faulty.

Hydraulic pump or supply hose to WATER PRESSURE/FLOW CONTROL valve faulty.

WATER PRESSURE/FLOW CONTROL valve faulty.

16.

Can water pressure be adjusted to at least 40 psi (276 kPa)?

NO → Go to “Concrete Mixer Hoist, Retractor Cylinders, Lift Cylinders, and Pump Do Not Operate”, (Fault 13).

YES ↓

TEST OPTIONS

Operational test.

REASON FOR QUESTION

If water pressure cannot be adjusted, another troubleshooting procedure applies.

OPERATIONAL TEST
(1) Push in WATER PUMP/LIFT CYLINDER control valve, (Para 2-1). (2) Adjust WATER PRESSURE/FLOW CONTROL valve for 40 psi (276 kPa) water pressure 2-19). (a) If water pressure cannot be adjusted to at least 40 psi (276 kPa), shut OFF engine, (Para 2-19) and go to "Concrete Mixer Hoist, Retractor Cylinders, Lift Cylinders, and Pump Do Not Operate", (Fault 13). (b) If water pressure can be adjusted to at least 40 psi (276 kPa), go to Step 17 of this Fault.

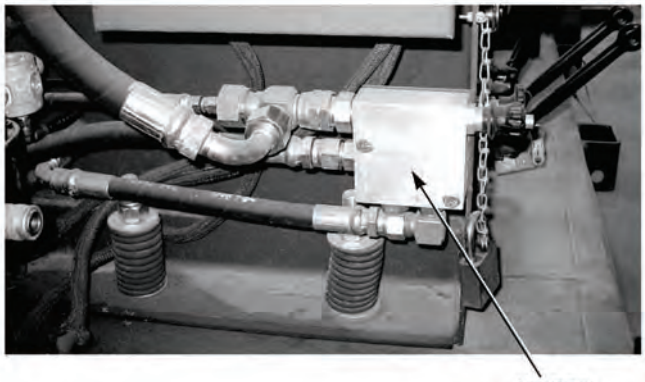

WATER PRESSURE FLOW CONTROL VALVE

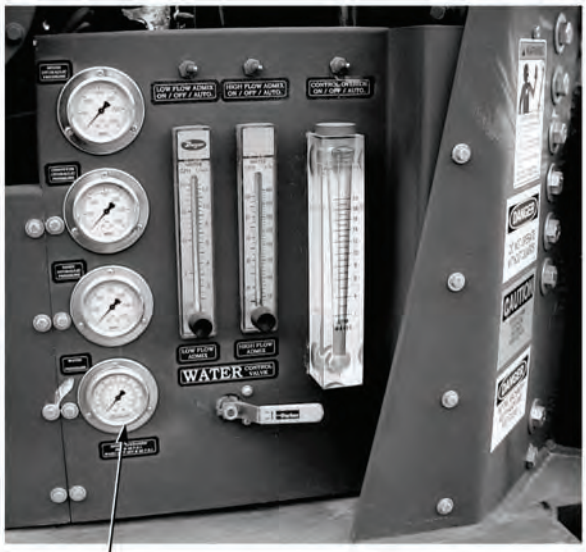

WATER PRESSURE GAGE

14. CONCRETE MIXER HOIST DOES NOT OPERATE CORRECTLY (CONT).

KNOWN INFO

Hydraulic hoses from WATER PRESSURE/FLOW CONTROL valve to hoist cylinder OK.
Hoist check valve OK.
Hoist hydraulic cylinder OK.
Hoist relief valve OK.
Hydraulic pump or supply hose to WATER PRESSURE/FLOW CONTROL valve OK.

POSSIBLE PROBLEMS

Mixer control valves faulty.
WATER PRESSURE/FLOW CONTROL valve faulty.

17.

Does HOIST or RETRACTOR controls operate after swapping hydraulic hoses at WATER PRESSURE/FLOW CONTROL valve EX and CF ports (note operation will be slow)?

NO → Replace mixer control valve, (Para 3-51) and adjust conveyor speed, (Para 3-77). Verify repair, go to Step 18 of this Fault.

YES → Replace WATER PRESSURE/FLOW CONTROL valve, (Para 3-66). Verify repair, go to Step 18 of this Fault.

TEST OPTIONS

Operational test.

REASON FOR QUESTION

If water pressure can be adjusted, WATER PRESSURE/FLOW CONTROL valve is faulty. If not, mixer control valve is faulty.

CAUTION

Do not operate lift cylinder controls in this configuration. The lift cylinders will operate quicker than expected, because lift cylinder speed control function is disabled. Failure to comply may result in damage to equipment.

OPERATIONAL TEST

(1) Shut OFF engine, (Para 2-19).

(2) Place suitable drain pan under WATER PRESSURE/FLOW CONTROL valve.

(3) Remove two mounting screws from WATER PRESSURE/FLOW CONTROL valve, (Para 3-66).

(4) Disconnect mixer retractor/hoist supply hose from WATER PRESSURE/FLOW CONTROL valve EX port, (Para 3-129).

(5) Disconnect lift cylinder/water pump supply hose from WATER PRESSURE/FLOW CONTROL valve CF port, (Para 3-129).

(6) Connect mixer retractor/hoist supply hose to WATER PRESSURE/FLOW CONTROL valve CF port.

(7) Connect lift cylinder/water pump supply hose to WATER PRESSURE/FLOW CONTROL valve EX port.

NOTE

Pull out WATER PUMP/LIFT CYLINDER control valve to disable water pump before starting engine. Failure to comply will cause water pressure to increase to 100 psi (689 kPa) when engine is started.

(8) Pull out WATER PUMP/LIFT CYLINDER control valve, (Para 2-1).

(9) Start engine, (Para 2-1).

(10) Turn THROTTLE CONTROL to HIGH IDLE, (Para 2-1).

(11) Operate mixer RETRACTOR or HOIST controls, (Para 2-23). Check mixer retractor or hoist operations (note operation will be slow).

(a) If mixer RETRACTOR and HOIST controls do not operate, replace mixer control valve, (Para 3-51) and adjust conveyor speed, (Para 3-77).

(b) If mixer RETRACTOR and/or HOIST controls operate, replace WATER PRESSURE/FLOW CONTROL valve, (Para 3-53).

(12) Verify repair, go to Step 18 of this Fault.

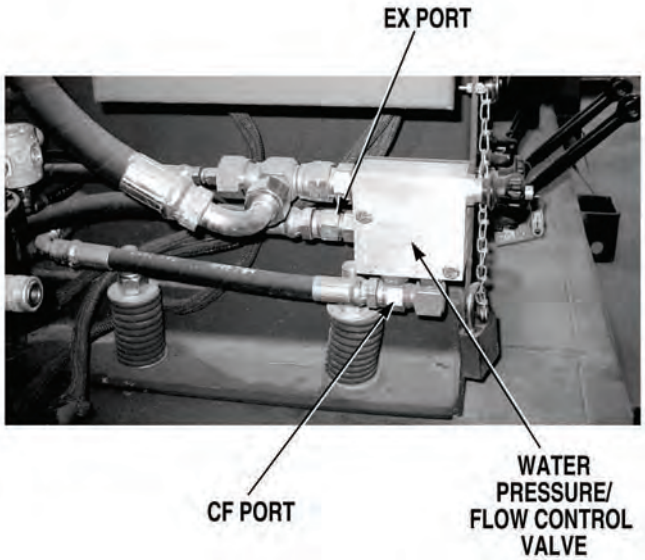

14. CONCRETE MIXER HOIST DOES NOT OPERATE CORRECTLY (CONT).

KNOWN INFO
Hydraulic hoses from WATER PRESSURE/FLOW CONTROL valve to hoist cylinder OK. Mixer control valves OK. Hoist check valve OK. Hoist hydraulic cylinder OK. Hydraulic pump or supply hose to WATER PRESSURE/FLOW CONTROL valve OK. WATER PRESSURE/FLOW CONTROL valve OK.
POSSIBLE PROBLEMS
None.

18.

WARNING

Read WARNING on Page 4-427

Does concrete mixer hoist operate correctly?

NO → Fault not corrected. Notify Supervisor.

YES → Fault corrected.

TEST OPTIONS
Verify repair.
REASON FOR QUESTION
If concrete mixer hoist operates correctly, fault has been corrected.

WARNING

Never disconnect any hydraulic line or fitting without first dropping pressure to zero. Failure to comply may result in serious injury or death to personnel.

VERIFY REPAIR

(1) If WATER PRESSURE/FLOW CONTROL VALVE hoses are swapped, reconnect hoses to their original places, (Para 3-129).

(2) If removed, install WATER PRESSURE/FLOW CONTROL valve and two mounting screws, (Para 3-66).

(3) If disconnected, reconnect hoist check valve hoses to their original places, (Para 3-129).

(4) Start engine, (Para 2-19).

(5) Turn THROTTLE CONTROL to HIGH IDLE, (Para 2-1).

(6) Operate mixer HOIST controls, (Para 2-23). Check if mixer hoist operates correctly.

(a) If mixer hoist does not operate correctly, fault not corrected. Notify Supervisor.

(b) If mixer hoist operates correctly, fault has been corrected.

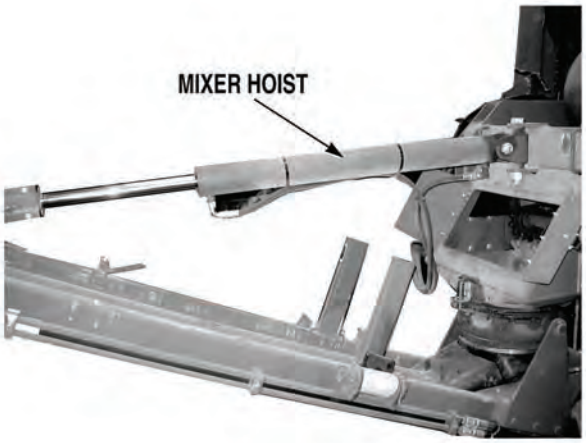

15. CONCRETE MIXER RETRACTOR CYLINDERS DO NOT OPERATE CORRECTLY.

INITIAL SETUP

Tools and Special Tools

Tool Kit, General Mechanic's: Automotive (Item 19, Appendix I)

Cap and Plug Set, (Item 3, Appendix I)

Equipment Condition

Concrete Mobile Mixer unloaded from PLS, (Para 2-5)

Concrete Mobile Mixer raised to operating level, (Para 2-28)

Engine OFF, (Para 2-19)

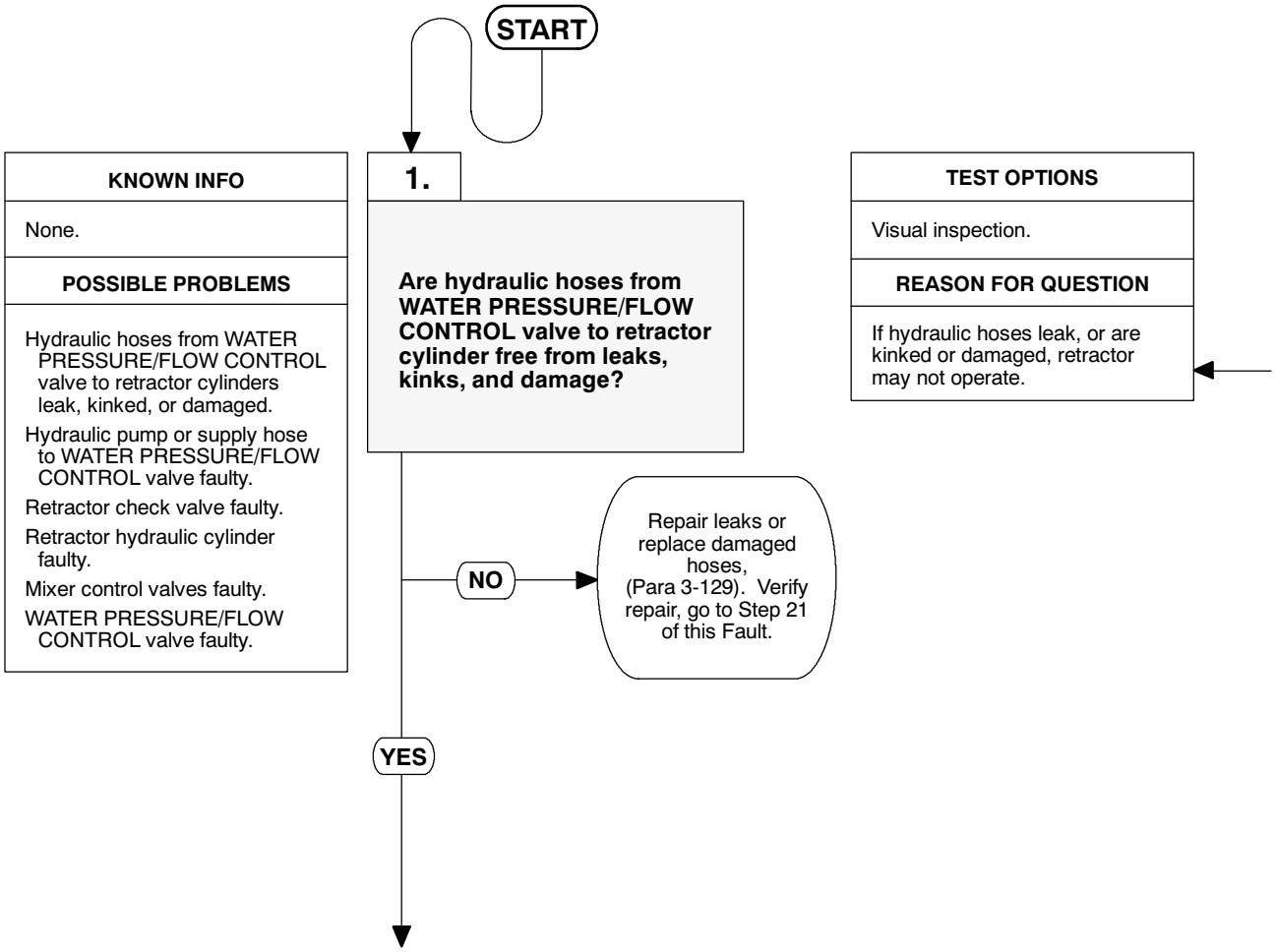

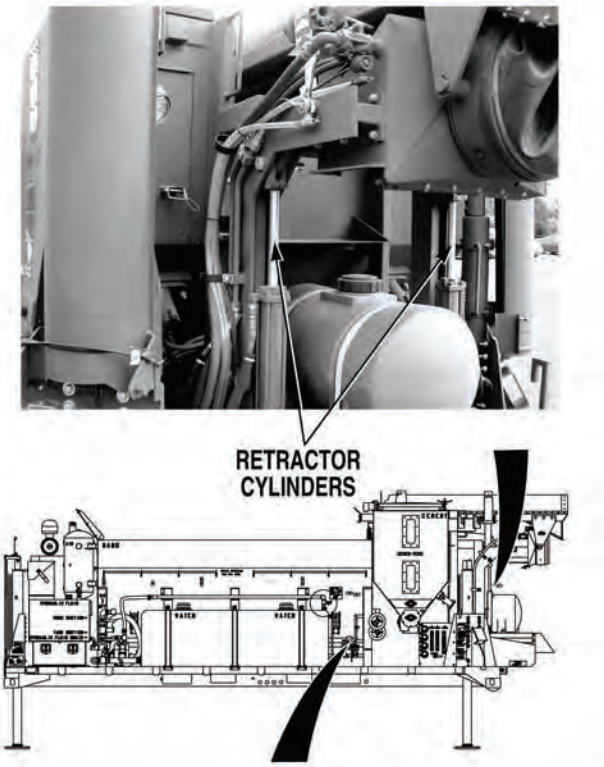

VISUAL INSPECTION
Check if hydraulic hoses from WATER PRESSURE/FLOW CONTROL valve to retractor cylinders are free from leaks, kinks, and damage, (Para 3-129). (a) If hydraulic hoses are not free from leaks, kinks, or damage, repair leaks or replace damaged hoses, (Para 3-129). Verify repair, go to Step 21 of this Fault. (b) If hydraulic hoses are free from leaks, kinks, and damage, go to Step 2 of this Fault.

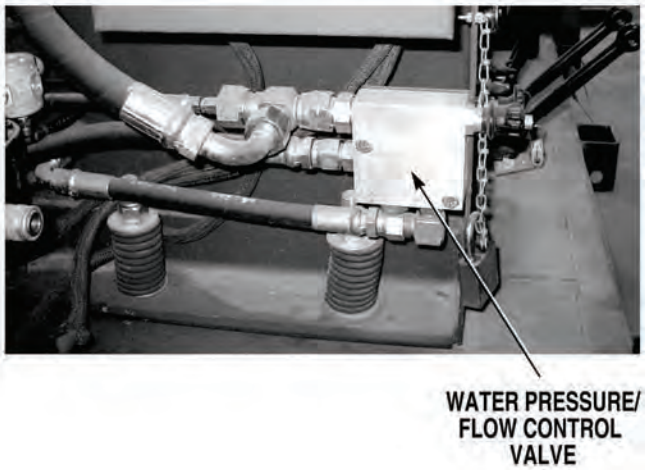

15. CONCRETE MIXER RETRACTOR CYLINDERS DO NOT OPERATE CORRECTLY. (CONT).

KNOWN INFO
Hydraulic hoses from WATER PRESSURE/FLOW CONTROL valve to retractor cylinders OK.
POSSIBLE PROBLEMS
Hydraulic pump or supply hose to WATER PRESSURE/FLOW CONTROL valve faulty. Retractor check valve faulty. Retractor hydraulic cylinder faulty. Mixer control valves faulty. WATER PRESSURE/FLOW CONTROL valve faulty.

2.

Is mixing auger assembly in stowed position?

NO → Go to Step 7 of this Fault.

YES → Go to Step 3 of this Fault.

TEST OPTIONS
Visual inspection.
REASON FOR QUESTION
To determine best method of troubleshooting.

VISUAL INSPECTION
Check if mixing auger assembly is in stowed position. (a) If mixing auger assembly is not in stowed position, go to Step 7 of this Fault. (b) If mixing auger assembly is in stowed position, go to Step 3 of this Fault.

RETRACTOR CYLINDERS
(MIXING AUGER ASSEMBLY IN STOWED POSITION)

15. CONCRETE MIXER RETRACTOR CYLINDERS DO NOT OPERATE CORRECTLY. (CONT).

KNOWN INFO
Hydraulic hoses from WATER PRESSURE/FLOW CONTROL valve to retractor cylinders OK.
POSSIBLE PROBLEMS
Hydraulic pump or supply hose to WATER PRESSURE/FLOW CONTROL valve faulty. Retractor check valve faulty. Retractor hydraulic cylinder faulty. Mixer control valves faulty. WATER PRESSURE/FLOW CONTROL valve faulty.

3.

Can water pressure be adjusted to at least 40 psi (276 kPa)?

NO → Go to “Concrete Mixer Hoist, Retractor Cylinders, Lift Cylinders, and Water Pump Do Not Operate”, (Fault 13).

YES ↓

TEST OPTIONS
Operational test.
REASON FOR QUESTION
If water pressure cannot be adjusted, another troubleshooting procedure applies.

OPERATIONAL TEST

(1) Start engine, (Para 2-19).

(2) Turn THROTTLE CONTROL to HIGH IDLE, (Para 2-1).

(3) Push in WATER PUMP/LIFT CYLINDER control valve, (Para 2-1).

(4) Adjust WATER PRESSURE/FLOW CONTROL valve for 40 psi (276 kPa) water pressure, (Para 2-18).

(a) If water pressure cannot be adjusted to at least 40 psi (276 kPa), shut OFF engine, (Para 2-19) and go to "Concrete Mixer Hoist, Retractor Cylinders, Lift Cylinders, and Water Pump Do Not Operate, (Fault 13).

(b) If water pressure can be adjusted to at least 40 psi (276 kPa), go to Step 4 of this Fault.

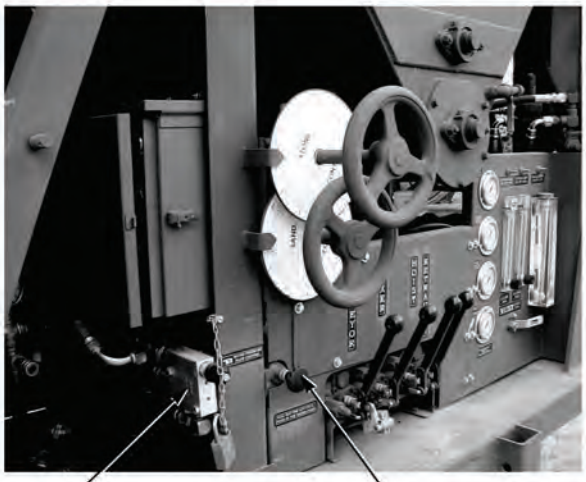

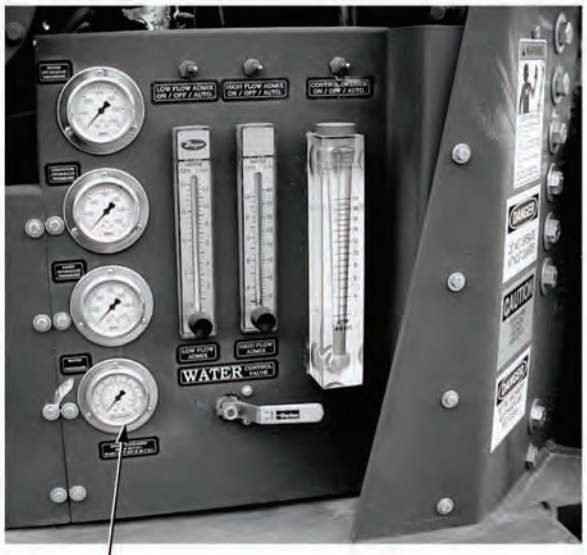

15. CONCRETE MIXER RETRACTOR CYLINDERS DO NOT OPERATE CORRECTLY. (CONT).

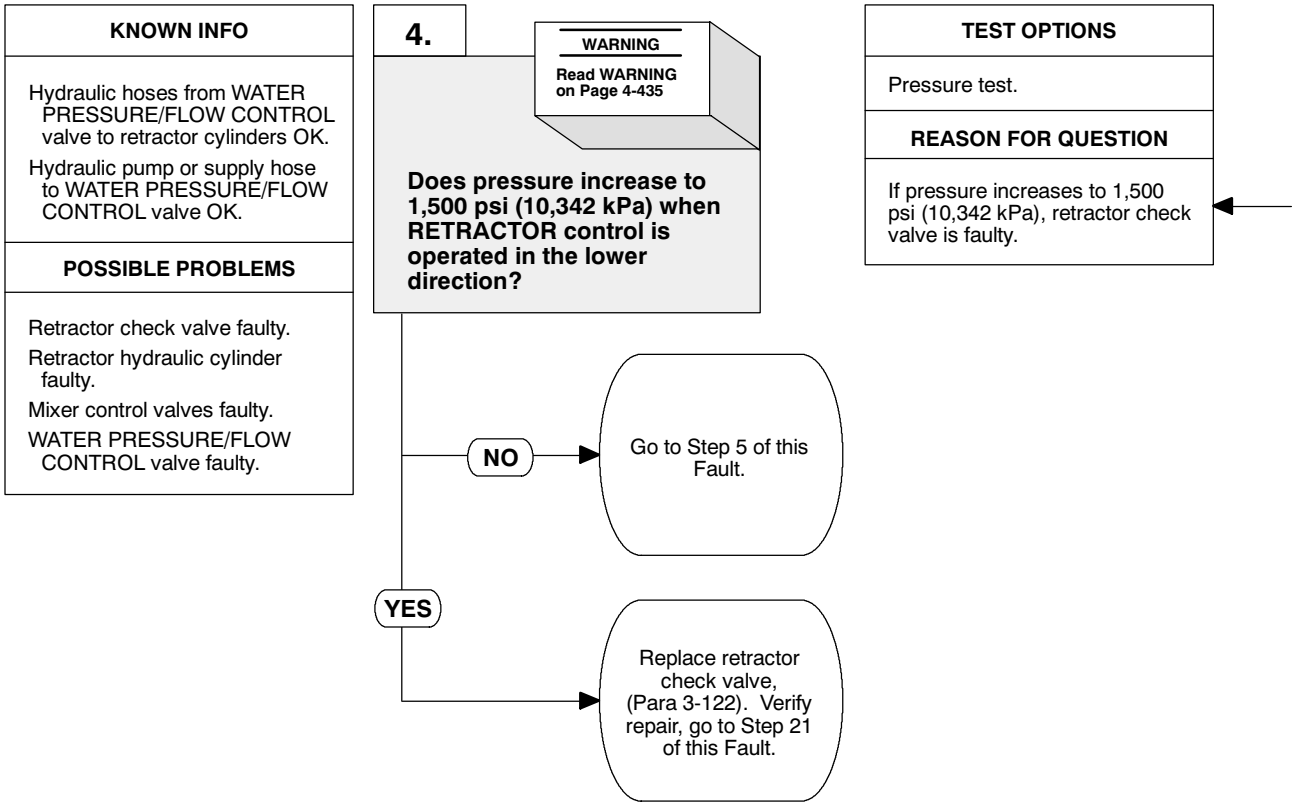

WARNING

Never disconnect any hydraulic line or fitting without first dropping pressure to zero. Failure to comply may result in serious injury or death to personnel.

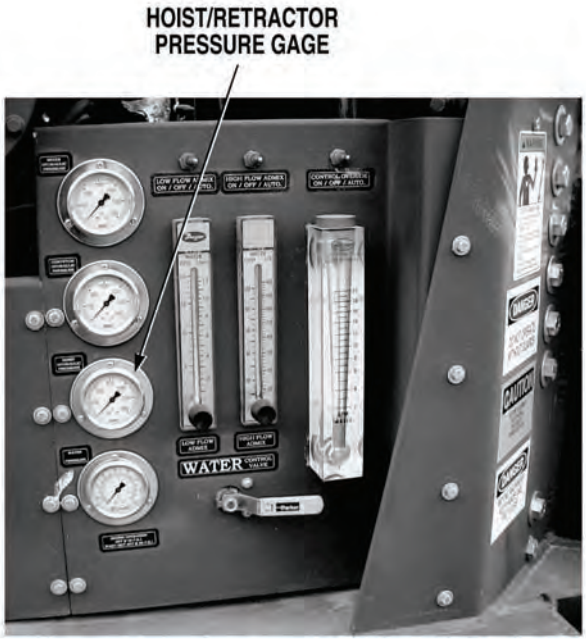

PRESSURE TEST

(1) If installed, remove T-pin, (Para 2-23).

(2) Operate mixer RETRACTOR control, (Para 2-23). Check if pressure increases 1,500 psi (10,342 kPa) when the controls are operated in the lower direction.

(a) If pressure does not increase to 1,500 psi (10,342 kPa), go to Step 5 of this Fault.

(b) If pressure does increase to 1,500 psi (10,342 kPa), replace retractor check valve, (Para 3-122). Verify repair, go to Step 21 of this Fault.

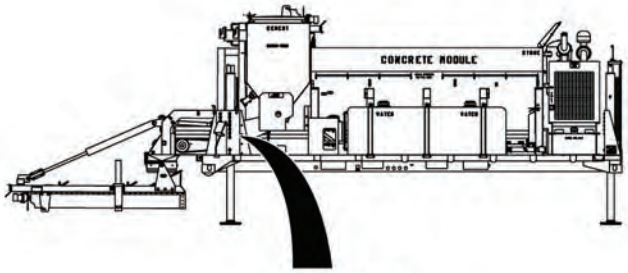

15. CONCRETE MIXER RETRACTOR CYLINDERS DO NOT OPERATE CORRECTLY. (CONT).

KNOWN INFO

Hydraulic hoses from WATER PRESSURE/FLOW CONTROL valve to retractor cylinders OK.

Hydraulic pump or supply hose to WATER PRESSURE/FLOW CONTROL valve OK.

Retractor check valve OK.

POSSIBLE PROBLEMS

Retractor hydraulic cylinder faulty.

Mixer control valves faulty.

WATER PRESSURE/FLOW CONTROL valve faulty.

5.

WARNING

Read WARNING on Page 4-437

Does pressure increase to 1,500 psi (10,342 kPa) when retractor lower supply hose is disconnected and capped and RETRACTOR control is operated in the lower direction?

NO → Go to Step 20 of this Fault.

YES ↓

TEST OPTIONS

Pressure test.

REASON FOR QUESTION

If pressure does not increase 1,500 psi (10,342 kPa), retractor will not operate correctly.

WARNING

Never disconnect any hydraulic line or fitting without first dropping pressure to zero. Failure to comply may result in serious injury or death to personnel.

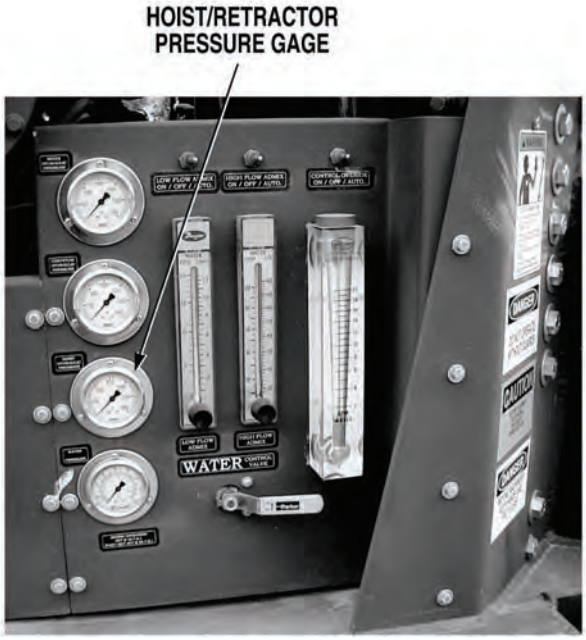

PRESSURE TEST

(1) Shut OFF engine, (Para 2-19).

(2) Place suitable drain pan under hoist check valve.

(3) Disconnect retractor lower supply hose from hoist check valve, (Para 3-129).

(4) Cap retractor lower supply hose and check valve port.

(5) Start engine, (Para 2-19).

(6) Turn THROTTLE CONTROL to HIGH IDLE, (Para 2-1).

(7) Operate mixer RETRACTOR control, (Para 2-23). Check if pressure increases to 1,500 psi (10, 342 kPa) when the controls are operated in the lower direction.

   (a) If pressure does not increase to 1,500 psi (10,342 kPa), go to Step 20 of this Fault.

   (b) If pressure increases to 1,500 psi (10,342 kPa), go to Step 6 of this Fault.

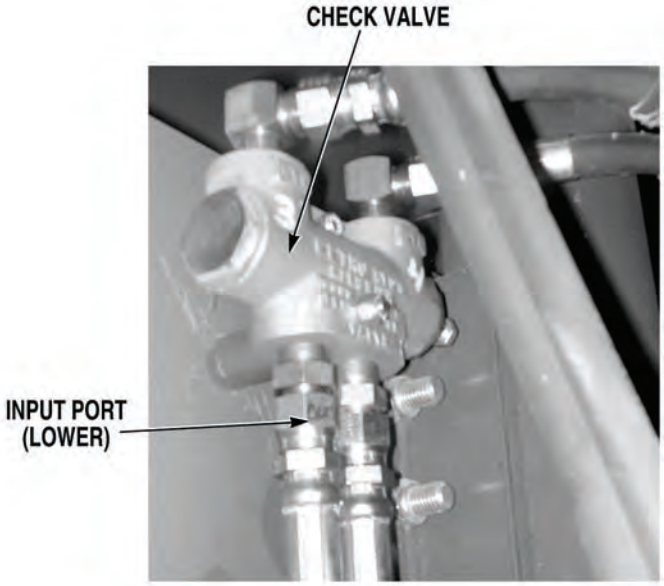

15. CONCRETE MIXER RETRACTOR CYLINDERS DO NOT OPERATE CORRECTLY. (CONT).

KNOWN INFO

Hydraulic hoses from WATER PRESSURE/FLOW CONTROL valve to retractor cylinders OK.

Hydraulic pump or supply hose to WATER PRESSURE/FLOW CONTROL valve OK.

Retractor check valve OK.

Mixer control valves OK.

WATER PRESSURE/FLOW CONTROL valve OK.

POSSIBLE PROBLEMS

Retractor hydraulic cylinder faulty.

6.

WARNING

Read WARNING on Page 4-439

Does right retractor cylinder operate when cylinder piston end is disconnected and hydraulic hoses to left cylinder are disconnected and capped.

NO → Replace right retractor cylinder, (Para 3-87). Verify repair, go to Step 21 of this Fault.

YES → Replace left retractor cylinder, (Para 3-87). Verify repair, go to Step 21 of this Fault.

TEST OPTIONS

Operational test.

REASON FOR QUESTION

If right cylinder operates, left cylinder is faulty. If not, right cylinder is faulty.

WARNING

Never disconnect any hydraulic line or fitting without first dropping pressure to zero. Failure to comply may result in serious injury or death to personnel.

OPERATIONAL TEST

(1) Shut OFF engine, (Para 2-19).

(2) Connect retractor lower supply hose to retractor check valve, (Para 3-129).

(3) Place suitable drains under left retractor cylinder ports.

(4) Disconnect hoses from left retractor cylinder, (Para 3-129).

(5) Cap cylinder port and hose connections.

(6) Disconnect right retractor piston end, (Para 3-87). Prop cylinder if required, to clear retractor assembly when operated.

(7) Start engine, (Para 2-19).

(8) Turn THROTTLE CONTROL to HIGH IDLE, (Para 2-1).

(9) Operate mixer RETRACTOR control, (Para 2-23). Check if right retractor cylinder operates when the controls are operated in the lower direction.

  (a) If right cylinder does not operate, replace right retractor cylinder, (Para 3-87).

  (b) If right cylinder operates, replace left retractor cylinder, (Para 3-87).

(10) Verify repair, go to Step 21 of this Fault.

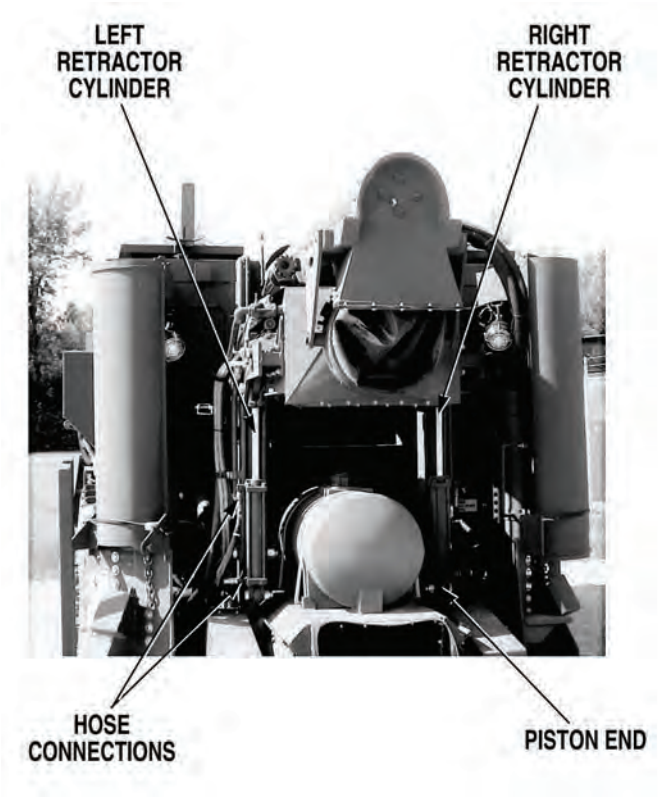

15. CONCRETE MIXER RETRACTOR CYLINDERS DO NOT OPERATE CORRECTLY. (CONT).

KNOWN INFO
Hydraulic hoses from WATER PRESSURE/FLOW CONTROL valve to retractor cylinders OK.
POSSIBLE PROBLEMS
Hydraulic pump or supply hose to WATER PRESSURE/FLOW CONTROL valve faulty. Retractor check valve faulty. Retractor hydraulic cylinder faulty. Mixer control valves faulty. WATER PRESSURE/FLOW CONTROL valve faulty.

7.

Is mixing auger assembly in operating position?

NO → Go to Step 12 of this Fault.

YES ↓

TEST OPTIONS
Visual inspection.
REASON FOR QUESTION
To determine best method of troubleshooting.

VISUAL INSPECTION
Check if mixing auger assembly is in operating position. (a) If mixing auger assembly is not in operating position, go to Step 12 of this Fault. (b) If mixing auger assembly is in operating position, go to Step 8 of this Fault.

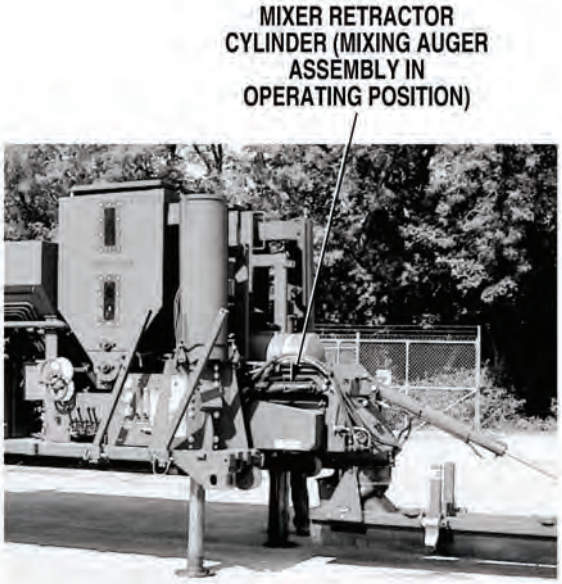

15. CONCRETE MIXER RETRACTOR CYLINDERS DO NOT OPERATE CORRECTLY. (CONT).

KNOWN INFO
Hydraulic hoses from WATER PRESSURE/FLOW CONTROL valve to retractor cylinders OK.
POSSIBLE PROBLEMS
Hydraulic pump or supply hose to WATER PRESSURE/FLOW CONTROL valve faulty. Retractor check valve faulty. Retractor hydraulic cylinder faulty. Mixer control valves faulty. WATER PRESSURE/FLOW CONTROL valve faulty.

8.

Can mixer hoist be raised or lowered?

NO → Go to Step 19 of this Fault.

YES ↓

TEST OPTIONS
Operational test.
REASON FOR QUESTION
To further isolate fault.

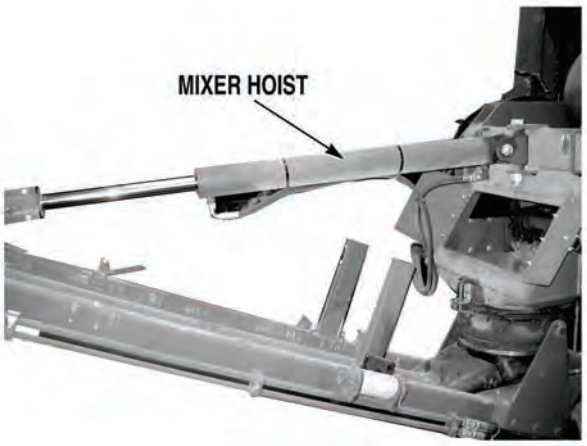

OPERATIONAL TEST

(1) If safety belts are securing mixing auger assembly, remove safety belts, (Para 2-23).

(2) Start engine, (Para 2-19).

(3) Turn THROTTLE CONTROL to HIGH IDLE, (Para 2-1).

(4) Operate mixer HOIST controls, (Para 2-23). Check if mixer hoist can be raised or lowered.

  (a) If mixer hoist cannot be raised or lowered, go to Step 19 of this Fault.

  (b) If mixer hoist can be raised or lowered, go to Step 9 of this Fault.

15. CONCRETE MIXER RETRACTOR CYLINDERS DO NOT OPERATE CORRECTLY. (CONT).

KNOWN INFO
Hydraulic hoses from WATER PRESSURE/FLOW CONTROL valve to retractor cylinders OK. Hydraulic pump or supply hose to WATER PRESSURE/FLOW CONTROL valve OK.
POSSIBLE PROBLEMS
Retractor check valve faulty. Retractor hydraulic cylinder faulty. Mixer control valves faulty. WATER PRESSURE/FLOW CONTROL valve faulty.

9.

Does pressure increase to 1,500 psi (10,342 kPa) when RETRACTOR control is operated in the raise direction?

TEST OPTIONS
Pressure test.
REASON FOR QUESTION
If pressure increases to 1,500 psi (10,342 kPa), retractor check valve is faulty.

NO → Go to Step 10 of this Fault.

YES → Replace retractor check valve, (Para 3-122). Verify repair, go to Step 21 of this Fault.

PRESSURE TEST
Operate mixer RETRACTOR control, (Para 2-23). Check if pressure increases to 1,500 psi (10,342 kPa) when the controls are operated in the raise direction. (a) If pressure does not increase to 1,500 psi (10,342 kPa), go to Step 10 of this Fault. (b) If pressure does increase to 1,500 psi (10,342 kPa), replace retractor check valve, (Para 3-122). Verify repair, go to Step 21 of this Fault.

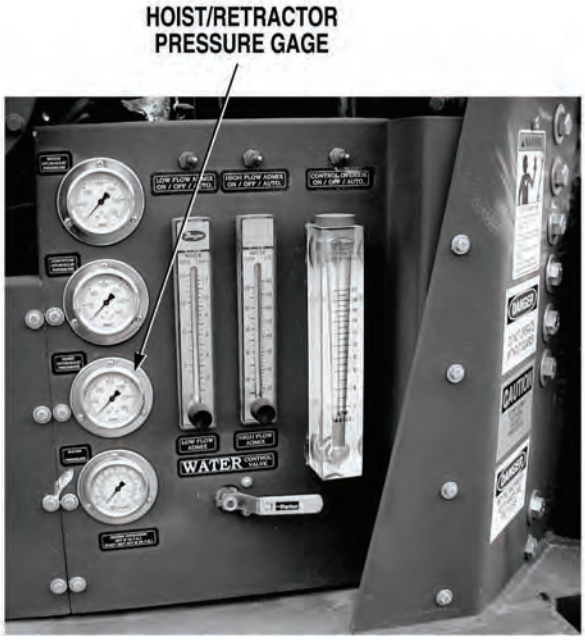

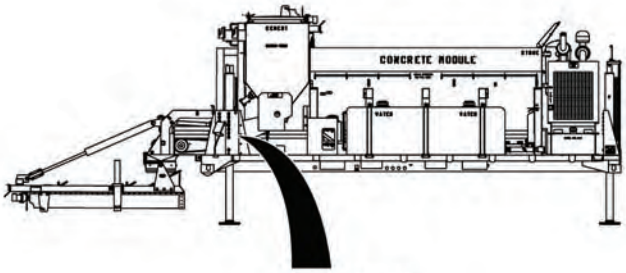

15. CONCRETE MIXER RETRACTOR CYLINDERS DO NOT OPERATE CORRECTLY. (CONT).

KNOWN INFO

Hydraulic hoses from WATER PRESSURE/FLOW CONTROL valve to retractor cylinders OK.

Hydraulic pump or supply hose to WATER PRESSURE/FLOW CONTROL valve OK.

Retractor check valve OK.

POSSIBLE PROBLEMS

Retractor hydraulic cylinder faulty.

Mixer control valves faulty.

WATER PRESSURE/FLOW CONTROL valve faulty.

10.

WARNING

Read WARNING on Page 4-447

Does pressure increase to 1,500 psi (10,342 kPa) when retractor raise supply hose is disconnected and capped and RETRACTOR control is operated in the raise direction?

NO → Go to Step 20 of this Fault.

YES ↓

TEST OPTIONS

Pressure test.

REASON FOR QUESTION

If pressure does not increase to 1,500 psi (10,342 kPa), retractor will not operate correctly.

WARNING

Never disconnect any hydraulic line or fitting without first dropping pressure to zero. Failure to comply may result in serious injury or death to personnel.

PRESSURE TEST

(1) Shut OFF engine, (Para 2-19).

(2) Place suitable drain pan under hoist check valve.

(3) Disconnect retractor raise supply hose from hoist check valve, (Para 3-129).

(4) Cap retractor raise supply hose and check valve port.

(5) Start engine, (Para 2-19).

(6) Turn THROTTLE CONTROL to HIGH IDLE, (Para 2-1).

(7) Operate mixer RETRACTOR control, (Para 2-23). Check if pressure increases to 1,500 psi (10,342 kPa) when the controls are operated in the raise direction.

(a) If pressure does not increase to 1,500 psi (10,342 kPa), go to Step 20 of this Fault.

(b) If pressure increases to 1,500 psi (10,342 kPa), go to Step 11 of this Fault.

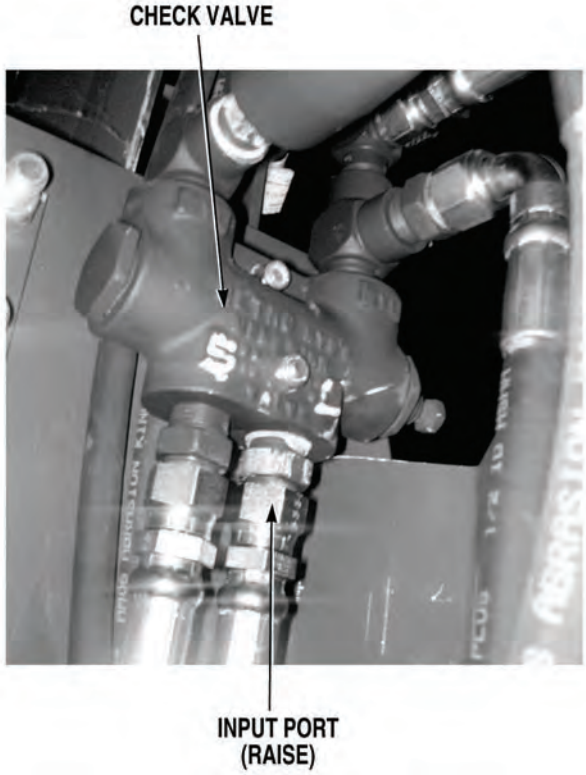

15. CONCRETE MIXER RETRACTOR CYLINDERS DO NOT OPERATE CORRECTLY. (CONT).

KNOWN INFO

Hydraulic hoses from WATER PRESSURE/FLOW CONTROL valve to retractor cylinders OK.

Hydraulic pump or supply hose to WATER PRESSURE/FLOW CONTROL valve OK.

Retractor check valve OK.

Mixer control valves OK.

WATER PRESSURE/FLOW CONTROL valve OK.

POSSIBLE PROBLEMS

Retractor hydraulic cylinder faulty.

11.

WARNING

Read WARNING on Page 4-449

Does right retractor cylinder operate when cylinder piston end is disconnected and hydraulic hoses to left cylinder are disconnected and capped?

NO → Replace right retractor cylinder, (Para 3-87). Verify repair, go to Step 21 of this Fault.

YES → Replace left retractor cylinder, (Para 3-87). Verify repair, go to Step 21 of this Fault.

TEST OPTIONS

Operational test.

REASON FOR QUESTION

If right cylinder operates, left cylinder is faulty. If not, right cylinder is faulty.

WARNING

Never disconnect any hydraulic line or fitting without first dropping pressure to zero. Failure to comply may result in serious injury or death to personnel.

OPERATIONAL TEST

(1) Shut OFF engine, (Para 2-19).

(2) Connect retractor raise supply hose to retractor check valve, (Para 3-129).

(3) Place suitable drain pans under left retractor cylinder ports.

(4) Disconnect hoses from left retractor cylinder, (Para 3-129).

(5) Cap cylinder port and hose connections.

(6) Disconnect right retractor cylinder piston end, (Para 3-87). Prop cylinder if required, to clear retractor assembly when operated.

(7) Start engine, (Para 2-19).

(8) Turn THROTTLE CONTROL to HIGH IDLE, (Para 2-1).

(9) Operate mixer RETRACTOR control, (Para 2-23). Check if right retractor cylinder operates when the controls are operated in the raise direction.

  (a) If right cylinder does not operate, replace right retractor cylinder (Para 3-87).

  (b) If right cylinder operates, replace left retractor cylinder, (Para 3-87).

(10) Verify repair, go to Step 21 of this Fault.

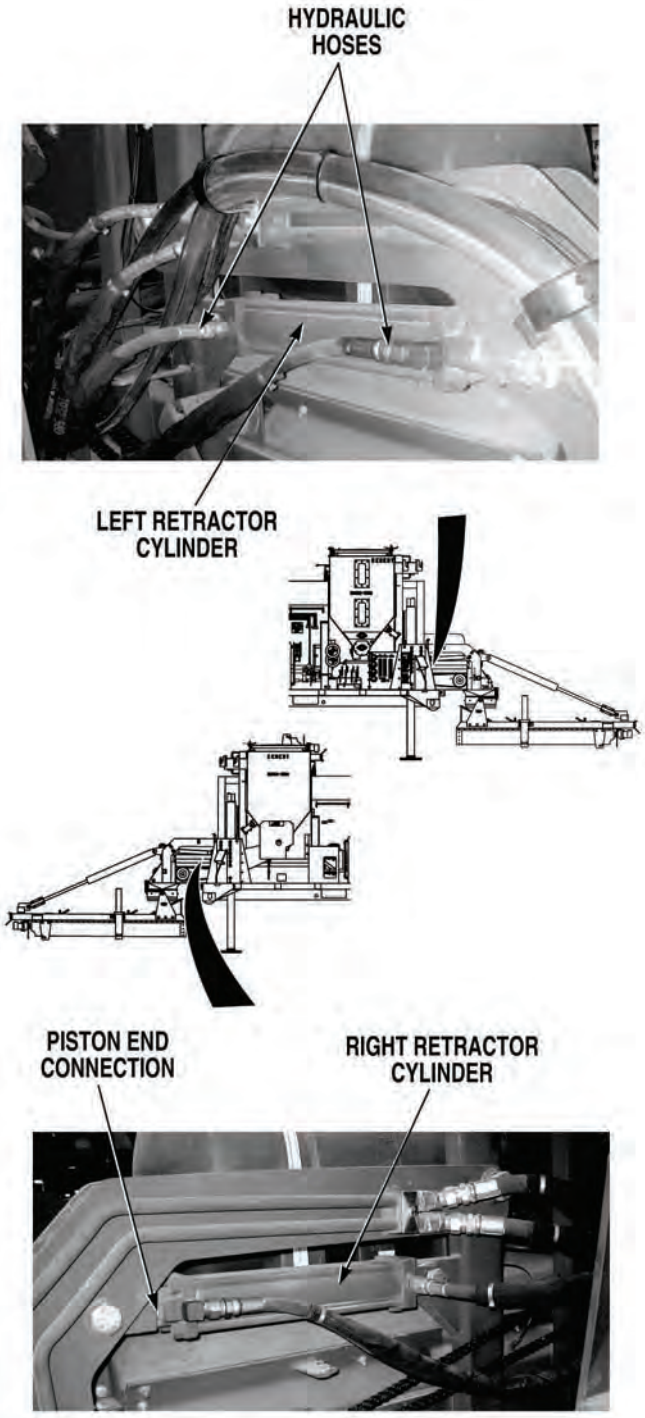

15. CONCRETE MIXER RETRACTOR CYLINDERS DO NOT OPERATE CORRECTLY. (CONT).

KNOWN INFO
Hydraulic hoses from WATER PRESSURE/FLOW CONTROL valve to retractor cylinders OK. Retractor hydraulic cylinder OK.
POSSIBLE PROBLEMS
Hydraulic pump or supply hose to WATER PRESSURE/FLOW CONTROL valve faulty. Retractor check valve faulty. Mixer control valves faulty. WATER PRESSURE/FLOW CONTROL valve faulty.

12.

Can mixing auger assembly be lowered to operating position?

NO → Go to Step 14 of this Fault.

YES ↓

TEST OPTIONS
Operational test.
REASON FOR QUESTION
To further isolate fault.

OPERATIONAL TEST

(1) Start engine, (Para 2-19).

(2) Turn THROTTLE CONTROL to HIGH IDLE, (Para 2-1).

(3) Operate mixer RETRACTOR controls, (Para 2-23). Check mixing auger assembly can be lowered to the operating position.

   (a) If mixer retractor cannot be lowered, go to Step 14 of this Fault.

   (b) If mixer retractor can be lowered, go to Step 13 of this Fault.

15. CONCRETE MIXER RETRACTOR CYLINDERS DO NOT OPERATE CORRECTLY. (CONT).

KNOWN INFO
Hydraulic hoses from WATER PRESSURE/FLOW CONTROL valve to retractor cylinders OK. Retractor hydraulic cylinder OK. Hydraulic pump or supply hose to WATER PRESSURE/FLOW CONTROL valve OK. WATER PRESSURE/FLOW CONTROL valve OK.
POSSIBLE PROBLEMS
Retractor check valve faulty. Mixer control valves faulty.

13.

Does pressure increase to 1,500 psi (10,342 kPa) when RETRACTOR control is operated in the raise direction?

NO → Replace mixer control valve, (Para 3-51) and adjust conveyor speed, (Para 3-77). Verify repair, go to Step 21 of this Fault.

YES → Replace retractor check valve, (Para 3-122). Verify repair, go to Step 21 of this Fault.

TEST OPTIONS
Pressure test.
REASON FOR QUESTION
If pressure increases to 1,500 psi (10,342 kPa), retractor check valve is faulty. If not, mixer control valve is faulty.

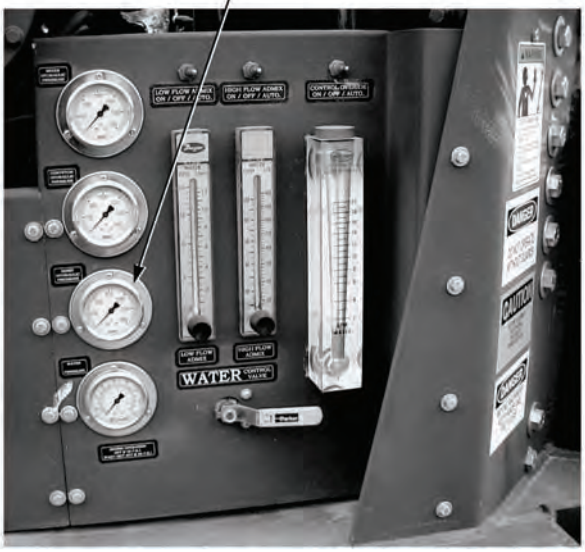

PRESSURE TEST

(1) Lower mixing auger assembly to operating position, (Para 2-23).

(2) Operate mixer RETRACTOR control, (Para 2-23). Check if pressure increases 1,500 psi (10,342 kPa) when the controls are operated in the raise direction.

   (a) If pressure does not increase to 1,500 psi (10,342 kPa) when the controls are operated in the raise direction, replace mixer control valve, (Para 3-51) and adjust conveyor speed, (Para 3-77).

   (b) If pressure does increase to 1,500 psi (10,342 kPa), replace retractor check valve, (Para 3-122).

(3) Verify repair, go to Step 21 of this Fault.

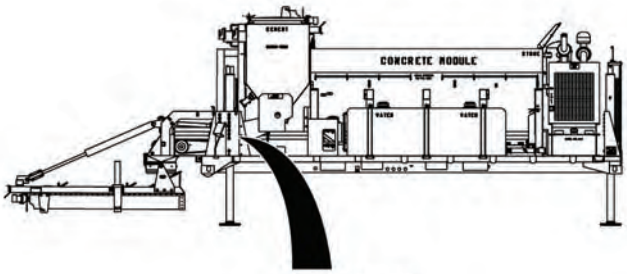

15. CONCRETE MIXER RETRACTOR CYLINDERS DO NOT OPERATE CORRECTLY. (CONT).

KNOWN INFO
Hydraulic hoses from WATER PRESSURE/FLOW CONTROL valve to retractor cylinders OK. Retractor hydraulic cylinder OK.
POSSIBLE PROBLEMS
Hydraulic pump or supply hose to WATER PRESSURE/FLOW CONTROL valve faulty. Retractor check valve faulty. Mixer control valves faulty. WATER PRESSURE/FLOW CONTROL valve faulty.

14.

Can mixing auger assembly be raised to stow position?

NO → Go to Step 16 of this Fault.

YES ↓

TEST OPTIONS
Operational test.
REASON FOR QUESTION
To further isolate fault.

OPERATIONAL TEST
Operate mixer RETRACTOR controls, (Para 2-23). Check if mixing auger assembly can be raised to stow position. (a) If mixing auger assembly cannot be raised, go to Step 16 of this Fault. (b) If mixing auger assembly can be raised, go to Step 15 of this Fault.

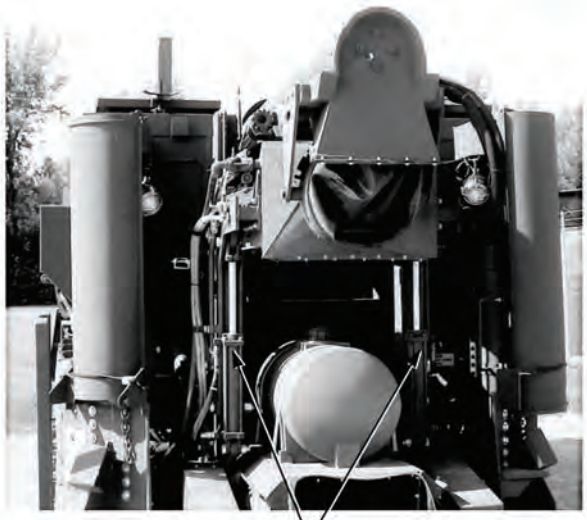

RETRACTOR CYLINDERS
(MIXING AUGER ASSEMBLY IN STOWED POSITION)

15. CONCRETE MIXER RETRACTOR CYLINDERS DO NOT OPERATE CORRECTLY. (CONT).

KNOWN INFO
Hydraulic hoses from WATER PRESSURE/FLOW CONTROL valve to retractor cylinders OK. Retractor hydraulic cylinder OK. WATER PRESSURE/FLOW CONTROL valve OK. Hydraulic pump or supply hose to WATER PRESSURE/FLOW CONTROL valve OK.
POSSIBLE PROBLEMS
Mixer control valves faulty. Retractor check valve faulty.

15.

Does pressure increase to 1,500 psi (10,342 kPa) when RETRACTOR control is operated in the lower direction?

NO → Replace mixer control valve, (Para 3-51) and adjust conveyor speed, (Para 3-77). Verify repair, go to Step 21 of this Fault.

YES → Replace retractor check valve, (Para 3-122). Verify repair, go to Step 21 of this Fault.

TEST OPTIONS
Pressure test.
REASON FOR QUESTION
If pressure increases to 1,500 psi (10,342 kPa), retractor check valve is faulty. If not, mixer control valve is faulty.

PRESSURE TEST

(1) Raise mixing auger assembly to stow position, (Para 2-23).

(2) Operate mixer RETRACTOR control, (Para 2-23). Check if pressure increases 1,500 psi (10,342 kPa) when the controls are operated in the lower direction.

(a) If pressure does not increase to 1,500 psi (10,342 kPa), replace mixer control valve, (Para 3-51) and adjust conveyor speed, (Para 3-77).

(b) If pressure does increase to 1,500 psi (10,342 kPa), replace retractor check valve, (Para 3-122).

(3) Verify repair, go to Step 21 of this Fault.

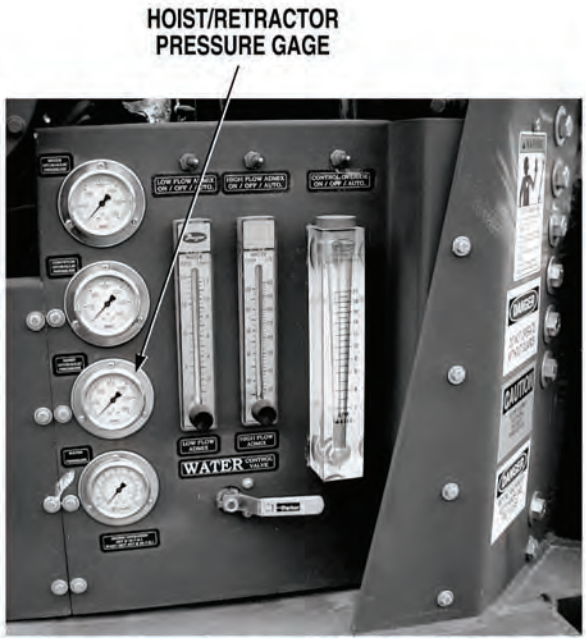

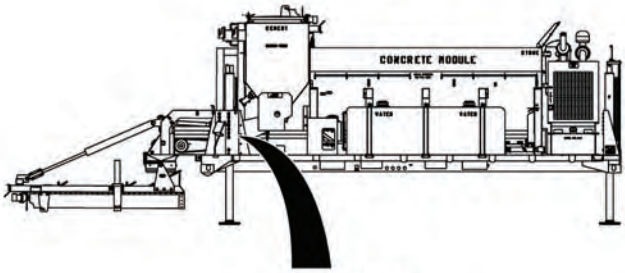

15. CONCRETE MIXER RETRACTOR CYLINDERS DO NOT OPERATE CORRECTLY. (CONT).

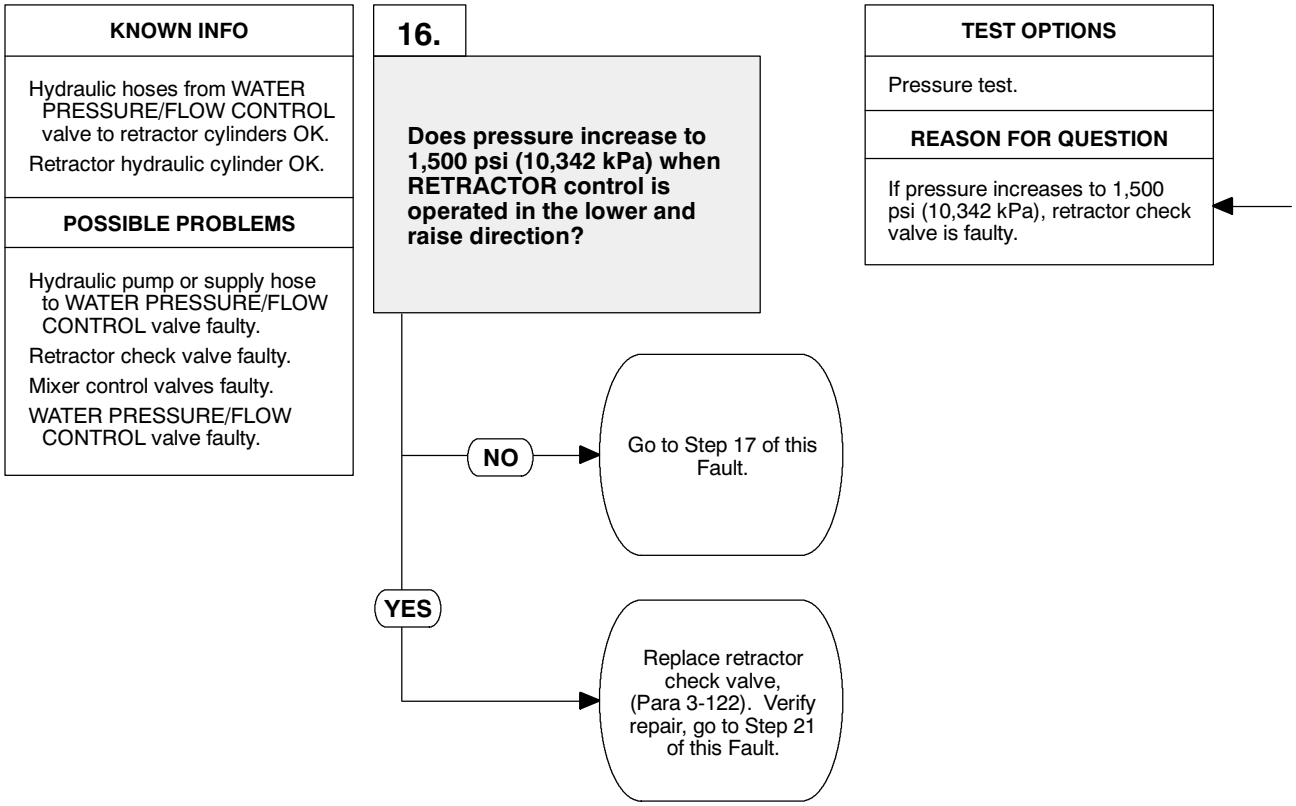

PRESSURE TEST
Operate mixer RETRACTOR control, (Para 2-23). Check if pressure increases to 1,500 psi (10,342 kPa) when the controls are operated in the raise and lower direction. (a) If pressure does not increase to 1,500 psi (10,342 kPa), go to Step 17 of this Fault. (b) If pressure does increase to 1,500 psi (10,342 kPa), replace retractor check valve, (Para 3-122). Verify repair, go to Step 21 of this Fault.

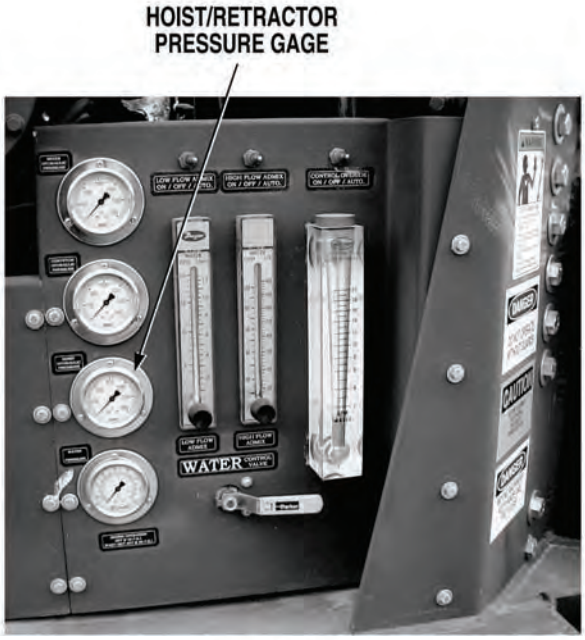

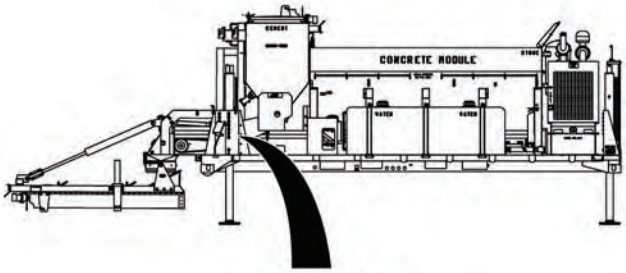

15. CONCRETE MIXER RETRACTOR CYLINDERS DO NOT OPERATE CORRECTLY. (CONT).

KNOWN INFO
Hydraulic hoses from WATER PRESSURE/FLOW CONTROL valve to retractor cylinders OK. Retractor hydraulic cylinder OK. Retractor check valve OK.
POSSIBLE PROBLEMS
Hydraulic pump or supply hose to WATER PRESSURE/FLOW CONTROL valve faulty. Mixer control valves faulty. WATER PRESSURE/FLOW CONTROL valve faulty.

17.

Is mixing auger assembly in a position where hoist can be operated safely?

NO → Go to Step 19 of this Fault.

YES ↓

TEST OPTIONS
Visual inspection.
REASON FOR QUESTION
To determine best method of troubleshooting.

VISUAL INSPECTION
Check if mixer retractor is in a position where hoist can be operated safely. (a) If mixer retractor is not in a safe operating position, go to Step 19 of this Fault. (b) If mixer retractor is in safe operating position, go to Step 18 of this Fault.

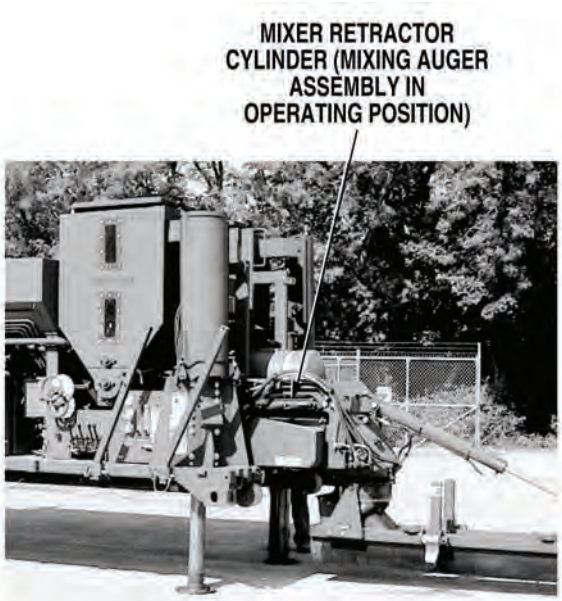

15. CONCRETE MIXER RETRACTOR CYLINDERS DO NOT OPERATE CORRECTLY. (CONT).

KNOWN INFO

Hydraulic hoses from WATER PRESSURE/FLOW CONTROL valve to retractor cylinders OK.

Retractor hydraulic cylinder OK.

Retractor check valve OK.

POSSIBLE PROBLEMS

Hydraulic pump or supply hose to WATER PRESSURE/FLOW CONTROL valve faulty.

Mixer control valves faulty.

WATER PRESSURE/FLOW CONTROL valve faulty.

18.

Can mixer hoist be raised and lowered?

NO → Go to Step 19 of this Fault.

YES → Replace mixer control valves, (Para 3-51) and adjust conveyor speed, (Para 3-77). Verify repair, go to Step 21 of this Fault.

TEST OPTIONS

Operational test.

REASON FOR QUESTION

If mixer hoist can be raised and lowered, hydraulic power to mixer control valve is OK. Therefore, RETRACTOR control valve is faulty.

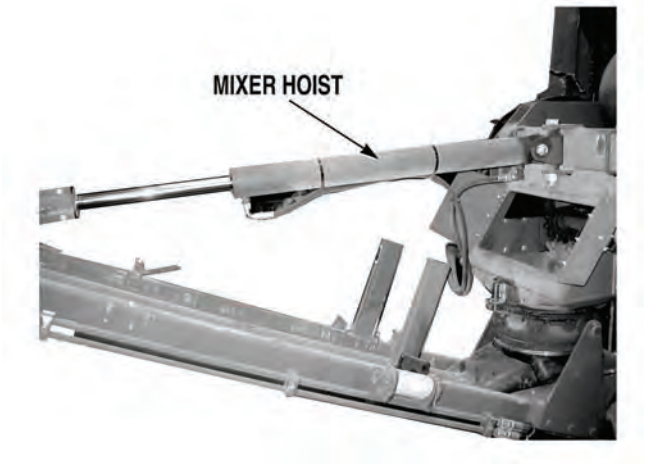

OPERATIONAL TEST

(1) If safety belts are securing mixing auger assembly, remove safety belts, (Para 2-23).

(2) Operate mixer HOIST controls, (Para 2-23). Check if mixer hoist can be raised or lowered.

   (a) If mixer hoist cannot be raised or lowered, go to Step 19 of this Fault.

   (b) If mixer hoist can be raised or lowered, replace mixer control valve, (Para 3-51) and adjust conveyor speed, (Para 3-77). Verify repair, go to Step 21 of this Fault.

15. CONCRETE MIXER RETRACTOR CYLINDERS DO NOT OPERATE CORRECTLY. (CONT).

KNOWN INFO

Hydraulic hoses from WATER PRESSURE/FLOW CONTROL valve to retractor cylinders OK.

Retractor hydraulic cylinder OK.

Retractor check valve OK.

POSSIBLE PROBLEMS

Hydraulic pump or supply hose to WATER PRESSURE/FLOW CONTROL valve faulty.

Mixer control valves faulty.

WATER PRESSURE/FLOW CONTROL valve faulty.

19.

Can water pressure be adjusted to at least 40 psi (276 kPa)?

NO → Go to “Concrete Mixer Hoist, Retractor Cylinders, Lift Cylinders, and Water Pump Do Not Operate”, (Fault 13).

YES ↓

TEST OPTIONS

Operational test.

REASON FOR QUESTION

If water pressure cannot be adjusted, another troubleshooting procedure applies.

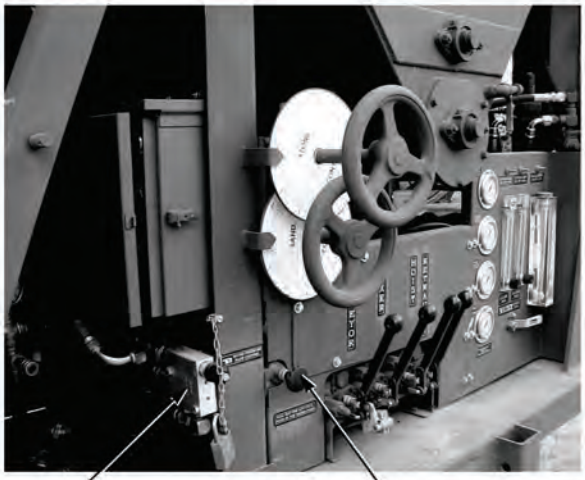

OPERATIONAL TEST

(1) Push in WATER PUMP/LIFT CYLINDER control valve, (Para 2-1).

(2) Adjust WATER PRESSURE/FLOW CONTROL valve for 40 psi (276 kPa) water pressure, (Para 2-18).

(a) If water pressure cannot be adjusted to at least 40 psi, (276 kPa), shut OFF engine, (Para 2-18) and go to "Concrete Mixer Hoist, Retractor Cylinders, Lift Cylinders, and Water Pump Do Not Operate", (Fault 13).

(b) If water pressure can be adjusted to at least 40 psi (276 kPa), go to Step 20 of this Fault.

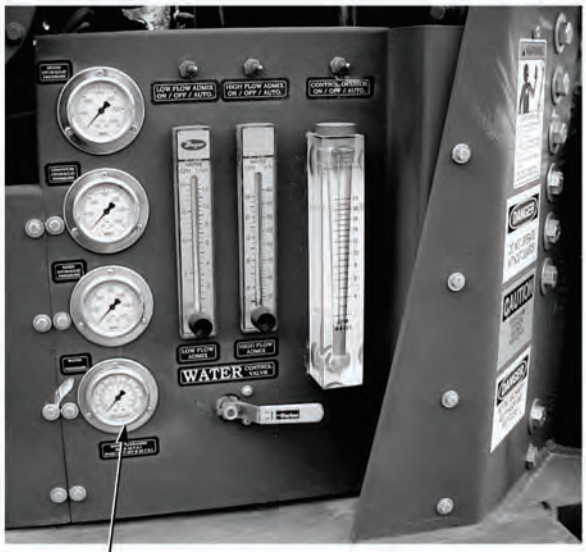

15. CONCRETE MIXER RETRACTOR CYLINDERS DO NOT OPERATE CORRECTLY. (CONT).

KNOWN INFO

Hydraulic hoses from WATER PRESSURE/FLOW CONTROL valve to retractor cylinders OK.

Retractor hydraulic cylinder OK.

Retractor check valve OK.

Hydraulic pump or supply hose to WATER PRESSURE/FLOW CONTROL valve OK.

POSSIBLE PROBLEMS

Mixer control valves faulty.

WATER PRESSURE/FLOW CONTROL valve faulty.

20.

WARNING

Read WARNING on Page 4-467

Does mixer hoist or RETRACTOR controls operate after swapping hydraulic hoses at WATER PRESSURE/FLOW CONTROL valve EX and CF ports (note operation will be slow)?

NO → Replace mixer control valve, (Para 3-51) and adjust conveyor speed, (Para 3-77). Verify repair, go to Step 21 of this Fault.

YES → Replace WATER PRESSURE/FLOW CONTROL valve, (Para 3-66). Verify repair, go to Step 21 of this Fault.

TEST OPTIONS

Operational test.

REASON FOR QUESTION

If mixer hoist or retractor operate, WATER PRESSURE/FLOW CONTROL valve is faulty. If not, mixer control valve is faulty.

WARNING

Never disconnect any hydraulic line or fitting without first dropping pressure to zero. Failure to comply may result in serious injury or death to personnel.

CAUTION

Do not operate lift cylinder controls in this configuration. The lift cylinders will operate quicker than expected, because the lift cylinder speed control function is disabled. Failure to comply could cause damage to equipment.

OPERATIONAL TEST

(1) Shut OFF engine, (Para 2-19).

(2) If disconnected, connect retractor supply hose to retractor check valve, (Para 3-129).

(3) Place suitable drain pan under WATER PRESSURE/FLOW CONTROL valve.

(4) Remove two mounting screws from WATER PRESSURE/FLOW CONTROL valve, (Para 3-66).

(5) Disconnect mixer retractor/hoist supply hose from WATER PRESSURE/FLOW CONTROL valve EX port, (Para 3-129).

(6) Disconnect lift cylinder/water pump supply hose from WATER PRESSURE/FLOW CONTROL valve CF port, (Para 3-129).

(7) Connect mixer retractor/hoist supply hose to WATER PRESSURE/FLOW CONTROL valve CF port.

(8) Connect lift cylinder/water pump supply hose to WATER PRESSURE/FLOW CONTROL valve EX port.

NOTE

Pull out WATER PUMP/LIFT CYLINDER control valve to disable water pump before starting engine. Failure to comply will cause water pressure to increase to 100 psi (689 kPa) when engine is started.

(9) Pull out WATER PUMP/LIFT CYLINDER control valve, (Para 2-1).

(10) Start engine, (Para 2-18).

(11) Turn THROTTLE CONTROL to HIGH IDLE, (Para 2-1).

(12) Operate mixer RETRACTOR or HOIST controls, (Para 2-23). Check mixer retractor or hoist operations (note operation will be slow).

(a) If mixer RETRACTOR and HOIST controls do not operate, replace mixer control valve, (Para 3-51) and adjust conveyor speed, (Para 3-77).

(b) If mixer RETRACTOR and/or HOIST controls operate, replace WATER PRESSURE/FLOW CONTROL valve, (Para 3-53).

(13) Verify repair, go to Step 21 of this Fault.

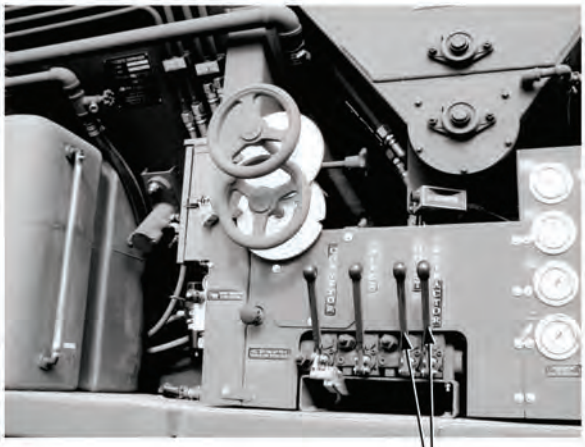

HOIST AND RETRACTOR CONTROLS

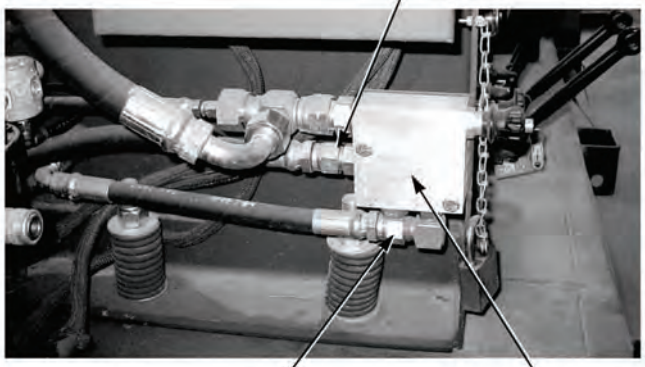

15. CONCRETE MIXER RETRACTOR CYLINDERS DO NOT OPERATE CORRECTLY. (CONT).

KNOWN INFO
Hydraulic hoses from WATER PRESSURE/FLOW CONTROL valve to retractor cylinders OK. Hydraulic pump or supply hose to WATER PRESSURE/FLOW CONTROL valve OK. Retractor check valve OK. Retractor hydraulic cylinder OK. Mixer control valves OK. WATER PRESSURE/FLOW CONTROL valve OK.
POSSIBLE PROBLEMS
None.

21.

Do concrete mixer retractor cylinders operate correctly?

NO → Fault not corrected. Notify Supervisor.

YES → Fault corrected.

TEST OPTIONS
Verify repair.
REASON FOR QUESTION
If concrete mixer retractor cylinders do not operate correctly, fault has not been corrected.

VERIFY REPAIR

(1) If WATER PRESSURE/FLOW CONTROL valve hoses are swapped, reconnect hoses to their original places, (Para 3-129).

(2) If removed, install WATER PRESSURE/FLOW CONTROL valve and two mounting screws, (Para 3-66).

(3) If disconnected, reconnect retractor check valve hoses to their original places, (Para 3-129).

(4) Start engine, (Para 2-19).

(5) Turn THROTTLE CONTROL to HIGH IDLE, (Para 2-1).

(6) Operate mixer RETRACTOR controls, (Para 2-23). Check retractor cylinders operate correctly.

  (a) If retractor cylinders do not operate correctly, Fault has not been corrected. Notify Supervisor.

  (b) If retractor cylinders operate correctly, Fault has been corrected.

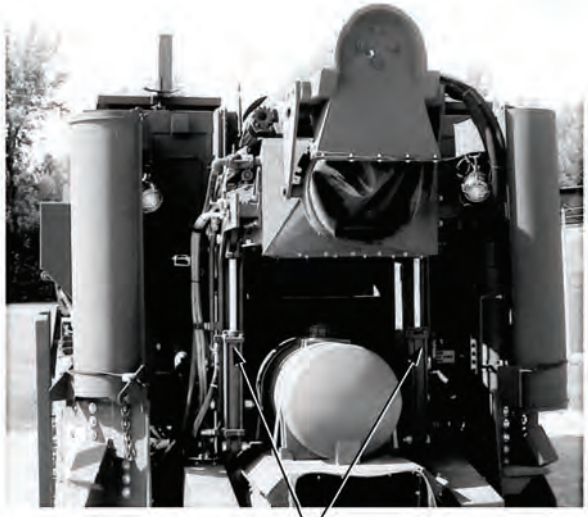

RETRACTOR CYLINDERS
(MIXING AUGER ASSEMBLY IN STOWED POSTION)

MIXER RETRACTOR CYLINDER (MIXING AUGER ASSEMBLY IN OPERATING POSITION)

16. CONVEYOR BELT DOES NOT OPERATE CORRECTLY OR IS DAMAGED.

INITIAL SETUP

Tools and Special Tools

Tool Kit, General Mechanic's: Automotive (Item 19, Appendix I)

Drain Pan (Item 12, Appendix I)

Cap and Plug Set (Item 3, Appendix I)

Equipment Condition

Concrete Mobile Mixer unloaded from PLS, (Para 2–5)

Concrete Mobile Mixer raised to operating level, (Para 2–28)

Engine OFF, (Para 2-19)

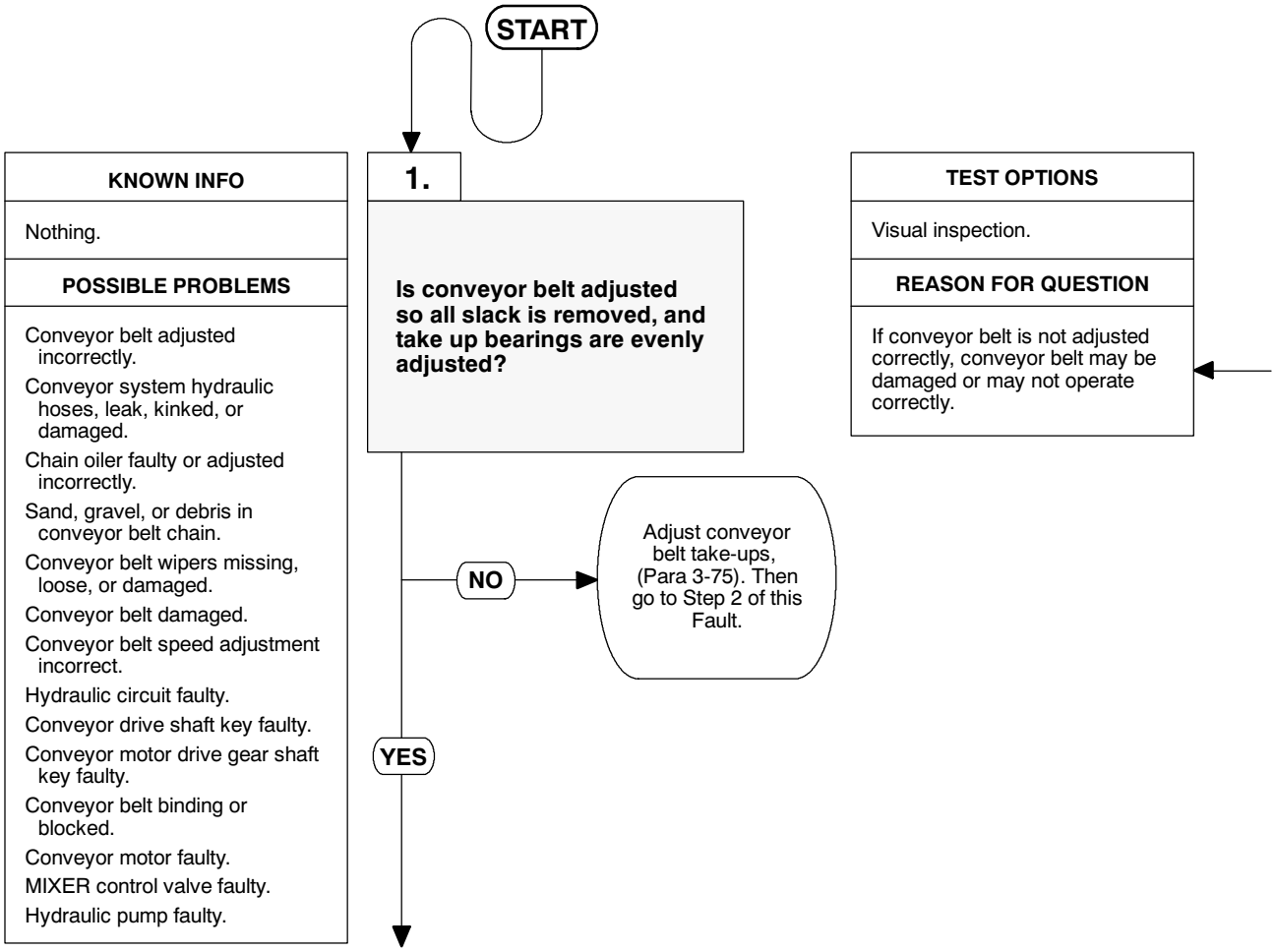

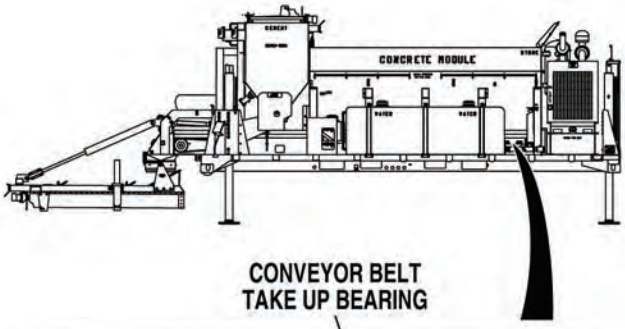

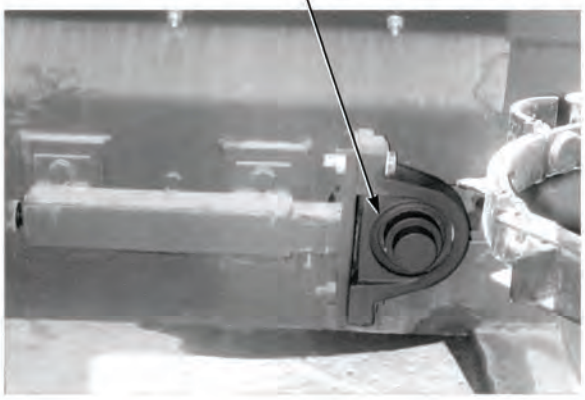

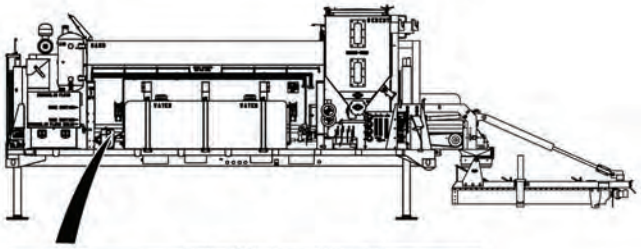

VISUAL INSPECTION
Check if conveyor belt is adjusted so all slack is removed and bearing take-ups are adjusted evenly. (a) If conveyor belt is not adjusted so all slack is removed and bearing take-ups are not adjusted evenly, adjust conveyor belt, (Para 3-75). Then go to Step 2 of this Fault. (b) If conveyor belt is adjusted so all slack is removed and bearing take-ups are adjusted evenly, go to Step 2 of this Fault.

16. CONVEYOR BELT DOES NOT OPERATE CORRECTLY OR IS DAMAGED (CONT).

KNOWN INFO
Conveyor belt adjusted correctly.
POSSIBLE PROBLEMS
Conveyor system hydraulic hoses, leak, kinked, or damaged. Chain oiler faulty or adjusted incorrectly. Sand, gravel, or debris in conveyor belt chain. Conveyor belt wipers missing, loose, or damaged. Conveyor belt damaged. Conveyor belt speed adjustment incorrect. Hydraulic circuit faulty. Conveyor drive shaft key faulty. Conveyor motor drive gear shaft key faulty. Conveyor belt binding or blocked. Conveyor motor faulty. MIXER control valve faulty. Hydraulic pump faulty.

2.

Are hydraulic hoses from CONVEYOR control valve to conveyor motor free from leaks, kinks, and damage?

NO → Repair leaks or replace damaged hoses, (Para 3-129). Verify repair, go to Step 17 of this Fault.

YES ↓

TEST OPTIONS
Visual inspection.
REASON FOR QUESTION
If conveyor system hydraulic hoses are not free from leaks, kinks, and damage, conveyor belt may not operate correctly.

VISUAL INSPECTION
Check if hydraulic hoses from CONVEYOR control valve to conveyor motor are free from leaks, kinks, and damage. (a) If hydraulic hoses are not free from leaks, kinks, and damage, repair leaks or replace damaged hydraulic hoses, (Para 3-129). Verify repair, go to Step 17 of this Fault. (b) If hydraulic hoses are free from leaks, kinks, and damage, go to Step 3 of this Fault.

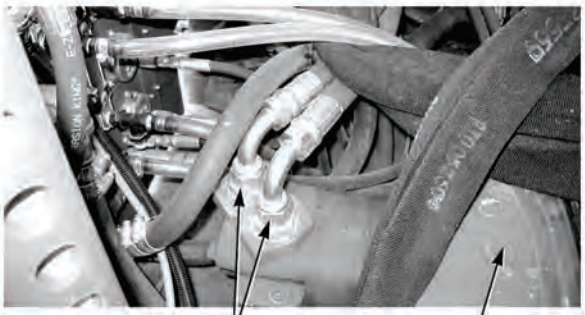

HYDRAULIC HOSE CONNECTIONS

CONVEYOR MOTOR

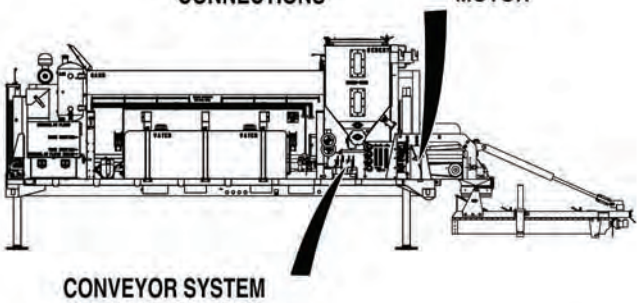

CONVEYOR SYSTEM HYDRAULIC HOSES

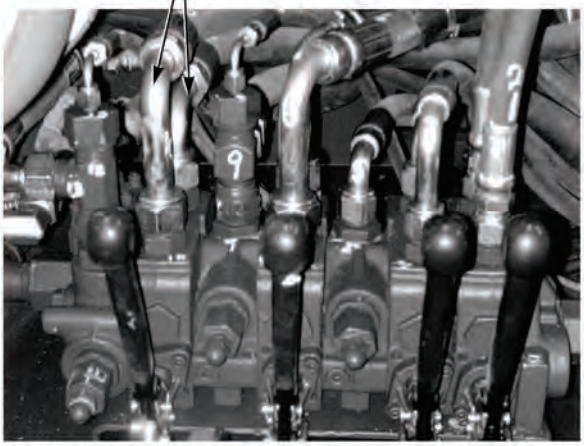

(HYDRAULIC CONTROLS PANEL REMOVED FOR CLARITY)

16. CONVEYOR BELT DOES NOT OPERATE CORRECTLY OR IS DAMAGED (CONT).

KNOWN INFO
Conveyor belt adjusted correctly. Conveyor system hydraulic hoses, not leaking, kinked, or damaged.
POSSIBLE PROBLEMS
Chain oiler faulty or adjusted incorrectly. Sand, gravel, or debris in conveyor belt chain. Conveyor belt wipers missing, loose, or damaged. Conveyor belt damaged. Conveyor belt speed adjustment incorrect. Hydraulic circuit faulty. Conveyor drive shaft key faulty. Conveyor motor drive gear shaft key faulty. Conveyor belt binding or blocked. Conveyor motor faulty. MIXER control valve faulty. Hydraulic pump faulty.

3.

Does conveyor operate when engaged?

NO → Go to Step 9 of this Fault.

YES ↓

TEST OPTIONS
Operational test.
REASON FOR QUESTION
To further isolate fault.

OPERATIONAL TEST

(1) If filled, close sand and stone bin gates until gages just clear conveyor belt, (Para 2-1).

(2) Disengage cement bin clutch, (Para 2-22).

(3) Close water flow control valve, (Para 2-1).

(4) Start engine, (Para 2-19).

(5) Turn 12 VOLT switch ON, (Para 2-1).

(6) Turn CONTROL OVERIDE switch to AUTO, (Para 2-1).

(7) Pull CONVEYOR control out to ON position, (Para 2-1).

(8) Check if conveyor belt operates.

(a) If conveyor belt does not operate, push in CONVEYOR control to OFF position and go to Step 10 of this Fault.

(b) If conveyor belt operates, go to Step 4 of this Fault.

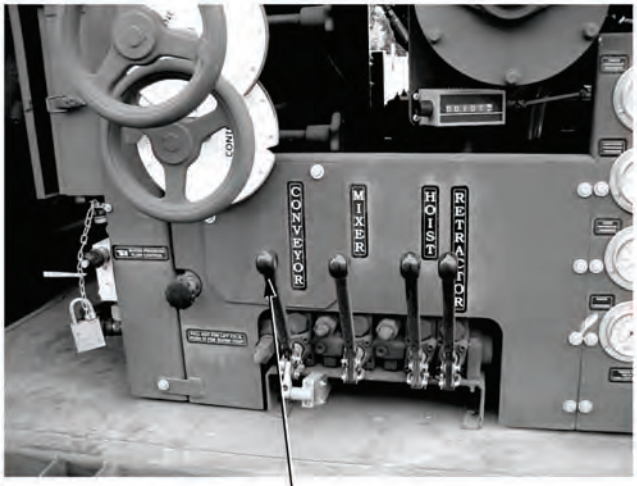

CONVEYOR CONTROL

CONVEYOR BELT

16. CONVEYOR BELT DOES NOT OPERATE CORRECTLY OR IS DAMAGED (CONT).

KNOWN INFO

- Conveyor belt adjusted correctly.
- Conveyor system hydraulic hoses, not leaking, kinked, or damaged.
- Hydraulic circuit OK.
- Conveyor drive shaft key OK.
- Conveyor motor drive gear shaft key OK.
- Conveyor belt not binding or blocked.

POSSIBLE PROBLEMS

- Chain oiler faulty or adjusted incorrectly.
- Sand, gravel, or debris in conveyor belt chain.
- Conveyor belt wipers missing, loose, or damaged.
- Conveyor belt damaged.
- Conveyor belt speed adjustment incorrect.
- Conveyor motor faulty.
- MIXER control valve faulty.
- Hydraulic pump faulty.

4.

Does both conveyor chain oiler chambers operate at a rate of one drop of oil per two to three seconds?

NO → Go to Step 5 of this Fault.

YES → Go to Step 6 of this Fault.

TEST OPTIONS

Operational test.

REASON FOR QUESTION

If conveyor chain oiler is not operating correctly, conveyor belt will be damaged.

OPERATIONAL TEST

While conveyor is operating with CONTROL OVERIDE switch in AUTO, (Para 2-20), check if both conveyor chain oiler chambers operate at a rate of one drop of oil every two to three seconds, (Para 2-11).

(a) If conveyor chain oiler does not operate at a rate of one drop every two to three seconds, go to Step 5 of this Fault.

(b) If conveyor chain oiler operates at a rate of one drop every two to three seconds, go to Step 6 of this Fault.

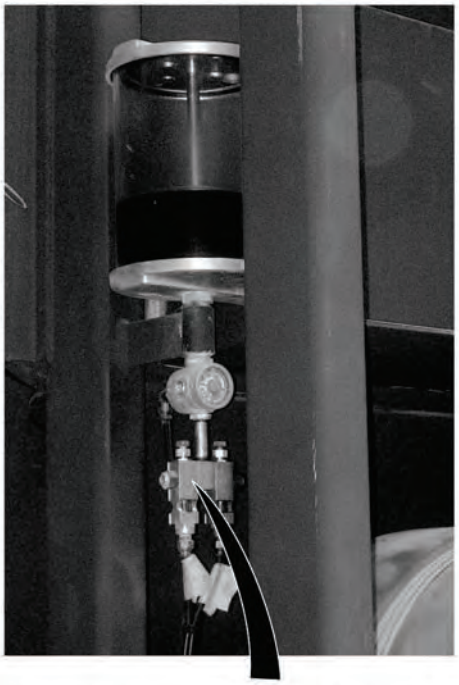

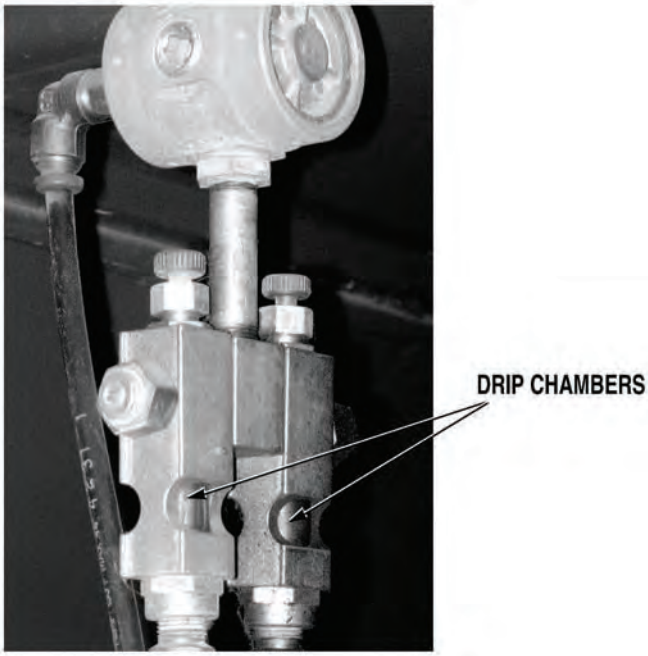

16. CONVEYOR BELT DOES NOT OPERATE CORRECTLY OR IS DAMAGED (CONT).

KNOWN INFO

- Conveyor belt adjusted correctly.
- Conveyor system hydraulic hoses, not leaking, kinked, or damaged.
- Hydraulic circuit OK.
- Conveyor drive shaft key OK.
- Conveyor motor drive gear shaft key OK.
- Conveyor belt not binding or blocked.

POSSIBLE PROBLEMS

- Chain oiler faulty or adjusted incorrectly.
- Sand, gravel, or debris in conveyor belt chain.
- Conveyor belt wipers missing, loose, or damaged.
- Conveyor belt damaged.
- Conveyor belt speed adjustment incorrect.
- Conveyor motor faulty.
- MIXER control valve faulty.
- Hydraulic pump faulty.

5.

Can chain oiler drip rate be adjusted to one drip per two to three seconds?

NO → Go to “Conveyor Belt Oiler Does Not Operate”, (Fault 17).

YES ↓

TEST OPTIONS

Operational test.

REASON FOR QUESTION

If chain oiler drip rate cannot be adjusted, another troubleshooting procedure applies.

OPERATIONAL TEST
While conveyor is operating with CONTROL OVERIDE switch in AUTO, (Para 2-20), check if chain oiler drip rate can be adjusted to one drip per two to three seconds, (Para 2-11). (a) If chain oiler drip rate cannot be adjusted, go to “Conveyor Belt Oiler Does Not Operate”, (Fault 17). (b) If chain oiler drip rate can be adjusted, go to Step 6 of this Fault.

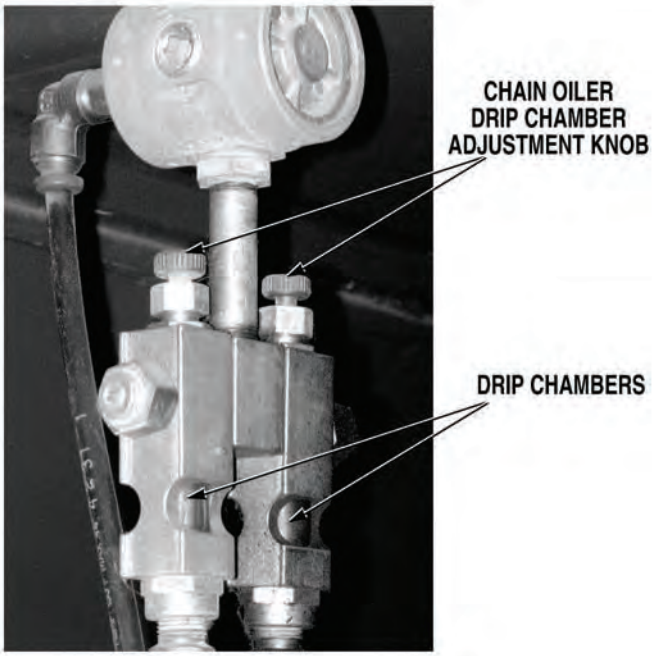

16. CONVEYOR BELT DOES NOT OPERATE CORRECTLY OR IS DAMAGED (CONT).

KNOWN INFO

- Conveyor belt adjusted correctly.
- Conveyor system hydraulic hoses, not leaking, kinked, or damaged.
- Hydraulic circuit OK.
- Conveyor drive shaft key OK.
- Conveyor motor drive gear shaft key OK.
- Conveyor belt not binding or blocked.
- Chain oiler OK.

POSSIBLE PROBLEMS

- Sand, gravel, or debris in conveyor belt chain.
- Conveyor belt wipers missing, loose, or damaged.
- Conveyor belt damaged.
- Conveyor belt speed adjustment incorrect.
- Conveyor motor faulty.
- MIXER control valve faulty.
- Hydraulic pump faulty.

6.

Is conveyor belt chain free from sand, gravel, and other debris?

NO → Go to Step 7 of this Fault.

YES → Go to Step 8 of this Fault.

TEST OPTIONS

Visual inspection.

REASON FOR QUESTION

If sand, gravel, or debris is in conveyor belt chain, damage may occur.

VISUAL INSPECTION

While conveyor is operating, check if conveyor belt chain is free from sand, gravel, and other debris.

(a) If conveyor belt chain is not free from sand, gravel, and other debris, go to Step 7 of this Fault.

(b) If conveyor belt is free from sand, gravel, and other debris, go to Step 8 of this Fault.

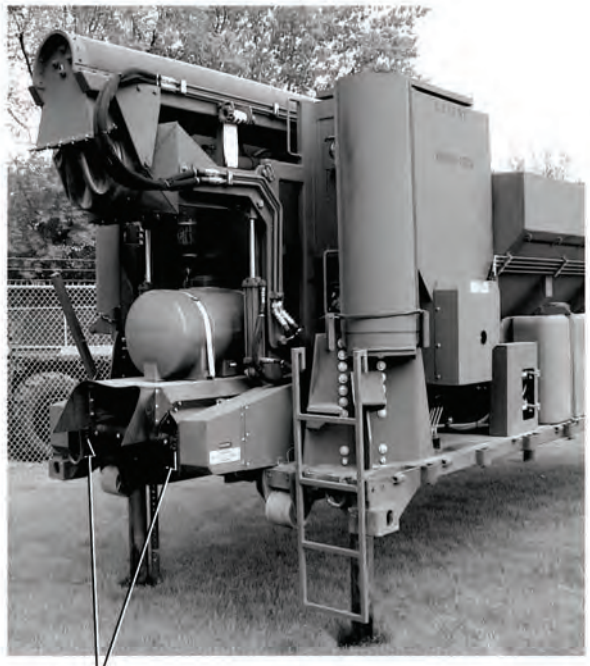

CONVEYOR BELT CHAIN

16. CONVEYOR BELT DOES NOT OPERATE CORRECTLY OR IS DAMAGED (CONT).

KNOWN INFO

- Conveyor belt adjusted correctly.
- Conveyor system hydraulic hoses, not leaking, kinked, or damaged.
- Hydraulic circuit OK.
- Conveyor drive shaft key OK.
- Conveyor motor drive gear shaft key OK.
- Conveyor belt not binding or blocked.
- Chain oiler OK.

POSSIBLE PROBLEMS

- Sand, gravel, or debris in conveyor belt chain.
- Conveyor belt wipers missing, loose, or damaged.
- Conveyor belt damaged.
- Conveyor belt speed adjustment incorrect.
- Conveyor motor faulty.
- MIXER control valve faulty.
- Hydraulic pump faulty.

7.

Are conveyor belt wipers missing, loose or damaged?

NO → Locate and correct source of debris, then clean and oil conveyor belt chain and go to Step 8 of this Fault.

YES → Tighten loose or replace missing and damaged belt wipers, (Para 3-76). Then clean and oil conveyor belt chains and go to Step 8 of this Fault.

TEST OPTIONS

Visual inspection.

REASON FOR QUESTION

If conveyor belt wipers are missing, loose, or damaged, sand and stone will get into conveyor belt chain, and cause damage.

VISUAL INSPECTION
(1) If filled, empty sand and stone bins, (Para 2-13). (2) Push CONVEYOR control in to OFF position, (Para 2-1). (3) Shut OFF engine, (Para 2-19). (4) Check if conveyor belt wipers are loose, missing, or damaged. (a) If conveyor belt wipers are not loose, missing, or damaged, locate and correct source of debris and clean and oil conveyor belt chain. Then go to Step 8 of this Fault. (b) If conveyor belt wipers are loose, missing, or damaged, tighten loose or replace missing and damaged belt wipers, (Para 3-76) and clean and oil conveyor belt chain. Then go to Step 8 of this Fault.

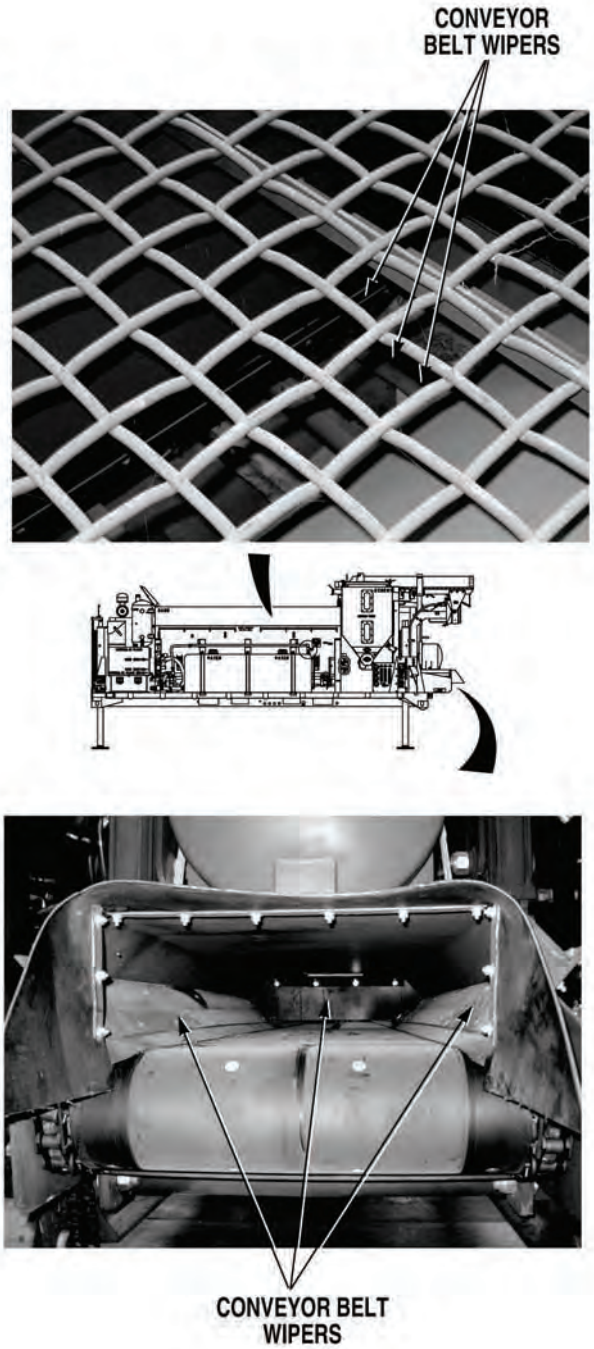

16. CONVEYOR BELT DOES NOT OPERATE CORRECTLY OR IS DAMAGED (CONT).

KNOWN INFO

- Conveyor belt adjusted correctly.
- Conveyor system hydraulic hoses, not leaking, kinked, or damaged.
- Hydraulic circuit OK.
- Conveyor drive shaft key OK.
- Conveyor motor drive gear shaft key OK.
- Conveyor belt not binding or blocked.
- Chain oiler OK.
- No Sand, gravel, or debris in conveyor belt chain.
- Conveyor belt wipers not missing, loose, or damaged.

POSSIBLE PROBLEMS

- Conveyor belt damaged.
- Conveyor belt speed adjustment incorrect.
- Conveyor motor faulty.
- MIXER control valve faulty.
- Hydraulic pump faulty.

8.

Is conveyor belt free from damage?

NO → Replace conveyor belt, (Para 3-75). Verify repair, go to Step 17 of this Fault.

YES → Go to Step 13 of this Fault.

TEST OPTIONS

Visual inspection.

REASON FOR QUESTION

If conveyor belt is damaged, conveyor will not operate correctly.

VISUAL INSPECTION

(1) If OFF, start engine, (Para 2-19).

(2) If OFF, turn CONTROL OVERIDE switch to ON position, (Para 2-1).

(3) If OFF, pull CONVEYOR control out to ON position, (Para 2-1).

(4) While conveyor is operating, check if conveyor belt is free from damage.

(a) If conveyor belt is not free from damage, replace conveyor belt, (Para 3-75). Verify repair, go to Step 17 of this Fault.

(b) If conveyor belt is free from damage, go to Step 9 of this Fault.

16. CONVEYOR BELT DOES NOT OPERATE CORRECTLY OR IS DAMAGED (CONT).

KNOWN INFO

- Conveyor belt adjusted correctly.
- Conveyor system hydraulic hoses, not leaking, kinked, or damaged.
- Hydraulic circuit OK.
- Conveyor drive shaft key OK.
- Conveyor motor drive gear shaft key OK.
- Conveyor belt not binding or blocked.
- Chain oiler OK.
- No Sand, gravel, or debris in conveyor belt chain.
- Conveyor belt wipers not missing, loose, or damaged.
- Conveyor belt not damaged.

POSSIBLE PROBLEMS

- Conveyor belt speed adjustment faulty.
- Conveyor motor faulty.
- MIXER control valve faulty.
- Hydraulic pump faulty.

9.

Does conveyor drive gear rotate at 33-35 RPM at high idle?

NO → Go to Step 14 of this Fault.

YES → Fault corrected. Verify repair, go to Step 17 of this Fault.

TEST OPTIONS

Operational test.

REASON FOR QUESTION

If conveyor drive gear rotates at 33-35 RPM, problem has been corrected.

OPERATIONAL TEST

(1) Push CONVEYOR control in to OFF position, (Para 2-1).

NOTE

Chalk line will be used as a visual marker to count rotations of conveyor belt drive gear.

(2) Apply chalk line to tooth on conveyor drive gear.

(3) If OFF, turn THROTTLE CONTROL switch to HIGH IDLE, (Para 2-1).

(4) Pull CONVEYOR control out to ON position, (Para 2-1).

(5) Check if conveyor sprocket rotates at 33-35 RPM. (Refer to Para 3-77).

(a) If conveyor sprocket does not rotate at 33-35 RPM, go to Step 14 of this Fault.

(b) If conveyor sprocket rotates at 33-35 RPM, fault corrected. Verify repair, go to Step 17 of this Fault.

CONVEYOR SPROCKET

16. CONVEYOR BELT DOES NOT OPERATE CORRECTLY OR IS DAMAGED (CONT).

KNOWN INFO

Conveyor belt adjusted correctly.
Conveyor system hydraulic hoses, not leaking, kinked, or damaged.
Chain oiler OK.
No sand, gravel, or debris in conveyor belt chain.
Conveyor belt wipers not missing, loose, or damaged.
Conveyor belt not damaged.

POSSIBLE PROBLEMS

Hydraulic circuit faulty.
Conveyor drive shaft key faulty.
Conveyor motor drive gear shaft key faulty.
Conveyor belt binding or blocked.
Conveyor belt speed adjustment faulty.
Conveyor motor faulty.
MIXER control valve faulty.
Hydraulic pump faulty.

10.

Does MIXER, HOIST, or RETRACTOR function operate?

NO → Go to “Hydraulic Circuits Do Not Operate”, (Fault 27).

YES ↓

TEST OPTIONS

Operational test.

REASON FOR QUESTION

If mixing auger, hoist, or retractor functions do not operate, another troubleshooting procedure applies.

OPERATIONAL TEST

(1) Operate MIXER, HOIST, or RETRACTOR controls, (Para 2-20).

(2) Check if mixing auger, hoist, or retractor function operates.

(a) If MIXER, HOIST, or RETRACTOR functions do not operate, go to “Hydraulic CIrcuits Do Not Operate”, (Fault 27).

(b) If MIXER, HOIST, or RETRACTOR controls operate, go to Step 11 of this Fault.

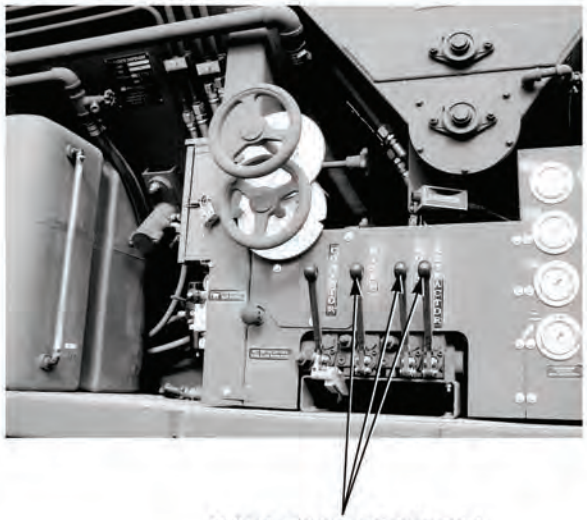

MIXER, HOIST, RETRACTOR CONTROLS

16. CONVEYOR BELT DOES NOT OPERATE CORRECTLY OR IS DAMAGED (CONT).

KNOWN INFO

- Conveyor belt adjusted correctly.
- Conveyor system hydraulic hoses, not leaking, kinked, or damaged.
- Chain oiler OK.
- No sand, gravel, or debris in conveyor belt chain.
- Conveyor belt wipers not missing, loose, or damaged.
- Conveyor belt not damaged.
- Hydraulic circuit OK.

POSSIBLE PROBLEMS

- Conveyor drive shaft key faulty.
- Conveyor motor drive gear shaft key faulty.
- Conveyor belt binding or blocked.
- Conveyor belt speed adjustment faulty.
- Conveyor motor faulty.
- MIXER control valve faulty.
- Hydraulic pump faulty.

11.

Is conveyor drive chain moving?

NO → Go to Step 11 of this Fault.

YES → Conveyor drive shaft key is broken, notify Supervisor.

TEST OPTIONS

Visual inspection

REASON FOR QUESTION

If conveyor drive chain is moving, conveyor drive shaft key is broken.

VISUAL INSPECTION

(1) If ON, push CONVEYOR control in to OFF position, (Para 2-1).

(2) Shut OFF engine, (Para 2-19).

(3) Remove conveyor drive guard, (Para 3-65).

(4) Start engine, (Para 2-19).

(5) Pull out CONVEYOR control to ON position, (Para 2-1).

(6) Check if conveyor drive chain is moving.

  (a) If conveyor drive chain is not moving, go to Step 12 of this Fault.

  (b) If conveyor drive chain is moving, conveyor drive shaft key is broken, notify Supervisor.

(SHOWN WITH CONVEYOR BELT REMOVED)

16. CONVEYOR BELT DOES NOT OPERATE CORRECTLY OR IS DAMAGED (CONT).

KNOWN INFO

- Conveyor belt adjusted correctly.
- Conveyor system hydraulic hoses, not leaking, kinked, or damaged.
- Chain oiler OK.
- No sand, gravel, or debris in conveyor belt chain.
- Conveyor belt wipers not missing, loose, or damaged.
- Conveyor belt not damaged.
- Hydraulic circuit OK.
- Conveyor drive shaft key OK.

POSSIBLE PROBLEMS

- Conveyor motor drive gear shaft key faulty.
- Conveyor belt binding or blocked.
- Conveyor belt speed adjustment faulty.
- Conveyor motor faulty.
- MIXER control valve faulty.
- Hydraulic pump faulty.

12.

Is conveyor motor operating?

NO → Go to Step 13 of this Fault.

YES → Locate and remove cause of conveyor binding and replace conveyor motor (drive shaft key is broken), (Para 3-65). Verify repair, go to Step 17 of this Fault.

TEST OPTIONS

Operational test.

REASON FOR QUESTION

If conveyor motor is operating, and drive chain is not, conveyor motor drive gear shaft was broken because of conveyor binding.

OPERATIONAL TEST
Check if conveyor motor is operating. (a) If conveyor motor is not operating, go to Step 13 of this Fault. (b) If conveyor motor is operating, locate and remove cause of conveyor binding and replace conveyor motor (drive shaft key is broken), (Para 3-65). Verify repair, go to Step 17 of this Fault.

16. CONVEYOR BELT DOES NOT OPERATE CORRECTLY OR IS DAMAGED (CONT).

KNOWN INFO

- Conveyor belt adjusted correctly.
- Conveyor system hydraulic hoses, not leaking, kinked, or damaged.
- Chain oiler OK.
- No sand, gravel, or debris in conveyor belt chain.
- Conveyor belt wipers not missing, loose, or damaged.
- Conveyor belt not damaged.
- Hydraulic circuit OK.
- Conveyor drive shaft key OK.
- Conveyor motor drive gear shaft key OK.

POSSIBLE PROBLEMS

- Conveyor belt binding or blocked.
- Conveyor belt speed adjustment faulty.
- Conveyor motor faulty.
- MIXER control valve faulty.
- Hydraulic pump faulty.

13.

Does conveyor motor gear operate at correct speed if conveyor drive chain is removed from system?

NO → Install conveyor drive chain, (Para 3-65), then go to Step 14 of this Fault.

YES → Locate and remove cause of conveyor binding and reinstall drive chain, (Para 3-65). Verify repair, go to Step 17 of this Fault.

TEST OPTIONS

Operational test.

REASON FOR QUESTION

If conveyor motor gear operates at correct speed with drive chain removed, conveyor belt is binding.

OPERATIONAL TEST

(1) Push in CONVEYOR control to OFF position, (Para 2-1).

(2) Shut OFF engine, (Para 2-19).

(3) Remove conveyor drive chain, (Para 3-65).

(4) Start engine, (Para 2-19).

(5) Pull out CONVEYOR control to ON position, (Para 2-1).

(6) Check if conveyor motor gear is operating at correct speed with drive chain removed.

(a) If conveyor motor gear is not operating at correct speed, install conveyor drive chain and go to Step 14 of this Fault.

(b) If conveyor motor gear is operating at correct speed, conveyor belt is binding. Locate and remove cause of binding and reinstall conveyor drive chain, (Para 3-65). Verify repair, go to Step 17 of this Fault.

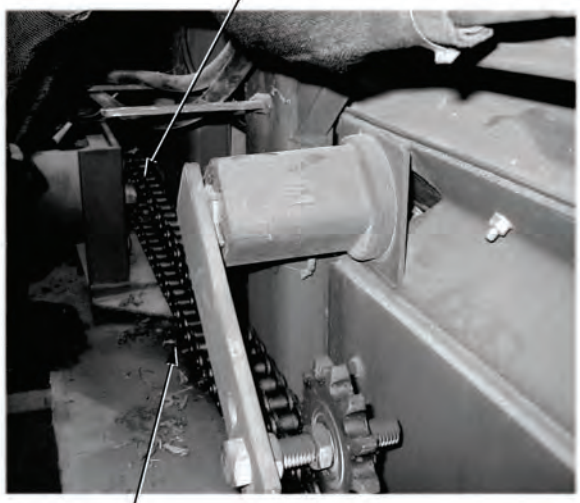

16. CONVEYOR BELT DOES NOT OPERATE CORRECTLY OR IS DAMAGED (CONT).

KNOWN INFO

- Conveyor belt adjusted correctly.
- Conveyor system hydraulic hoses, not leaking, kinked, or damaged.
- Chain oiler OK.
- No sand, gravel, or debris in conveyor belt chain.
- Conveyor belt wipers not missing, loose, or damaged.
- Conveyor belt not damaged.
- Hydraulic circuit OK.
- Conveyor drive shaft key OK.
- Conveyor motor drive gear shaft key OK.
- Conveyor belt not binding or blocked.

POSSIBLE PROBLEMS

- Conveyor belt speed adjustment faulty.
- Conveyor motor faulty.
- MIXER control valve faulty.
- Hydraulic pump faulty.

14.

Can conveyor speed be adjusted for 33-35 RPM?

NO → Go to Step 15 of this Fault.

YES → Problem corrected. Verify repair, go to Step 17 of this Fault.

TEST OPTIONS

Operational test.

REASON FOR QUESTION

If conveyor can be adjusted to 33-35 RPM, problem has been corrected.

OPERATIONAL TEST
Adjust conveyor speed to 33-35 RPM, (Para 3-77). (a) If conveyor speed cannot be adjusted to 33-35 RPM, go to Step 15 of this Fault. (b) If conveyor speed can be adjusted to 33-35 RPM, problem has been corrected. Verify repair, go to Step 17 of this Fault.

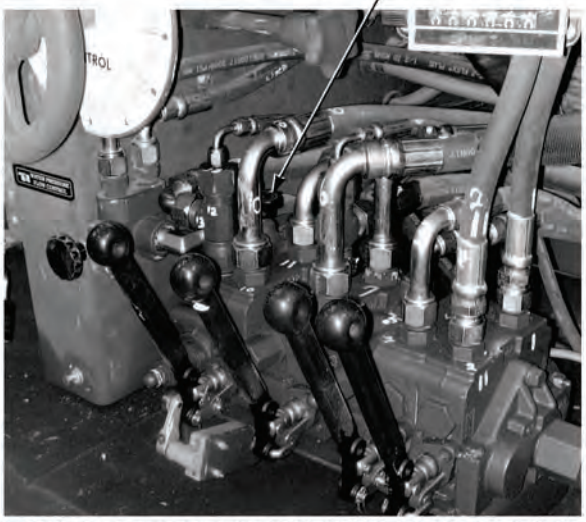

(HYDRAULIC CONTROLS PANEL REMOVED FOR CLARITY)

16. CONVEYOR BELT DOES NOT OPERATE CORRECTLY OR IS DAMAGED (CONT).

KNOWN INFO

- Conveyor belt adjusted correctly.
- Conveyor system hydraulic hoses, not leaking, kinked, or damaged.
- Chain oiler OK.
- No sand, gravel, or debris in conveyor belt chain.
- Conveyor belt wipers not missing, loose, or damaged.
- Conveyor belt not damaged.
- Hydraulic circuit OK.
- Conveyor drive shaft key OK.
- Conveyor motor drive gear shaft key OK.
- Conveyor belt not binding or blocked.

POSSIBLE PROBLEMS

- Conveyor belt speed adjustment faulty.
- Conveyor motor faulty.
- MIXER control valve faulty.
- Hydraulic pump faulty.

15.

WARNING

Read WARNING on Page 4-499

Does conveyor system pressure build to 2,500 psi (17,237 kPa), when hydraulic hoses are disconnected and capped at conveyor motor and CONVEYOR control valve is activated?

NO → Go to Step 16 of this Fault.

YES → Replace conveyor motor, (Para 3-65) and adjust conveyor speed, (Para 3-77). Verify repair, go to Step 17 of this Fault.

TEST OPTIONS

Operational test.

REASON FOR QUESTION

If conveyor system pressure, cannot be adjusted to 2,500 psi (17,237 kPa), conveyor motor is faulty.

WARNING

Never disconnect any hydraulic line or fitting without first dropping pressure to zero. Failure to comply may result in serious injury or death to personnel.

OPERATIONAL TEST

(1) Push conveyor control in to OFF position, (Para 2-1).

(2) Shut OFF engine, (Para 2-19).

(3) Disconnect hydraulic hoses at conveyor motor, (Para 3-129). Plug hydraulic hose fittings.

(4) Start engine, (Para 2-19).

(5) Pull CONVEYOR control out to ON position, (Para 2-1).

(6) Check if conveyor system hydraulic pressure builds to 2,500 psi (17,237 kPa).

(a) If conveyor system hydraulic pressure does not build to 2,500 psi (17,237 kPa), go to Step 16 of this Fault.

(b) If conveyor system hydraulic pressure builds to 2,500 psi (17,237 kPa), replace conveyor motor, (Para 3-65) and adjust conveyor speed, (Para 3-77). Verify repair, go to Step 17 of this Fault.

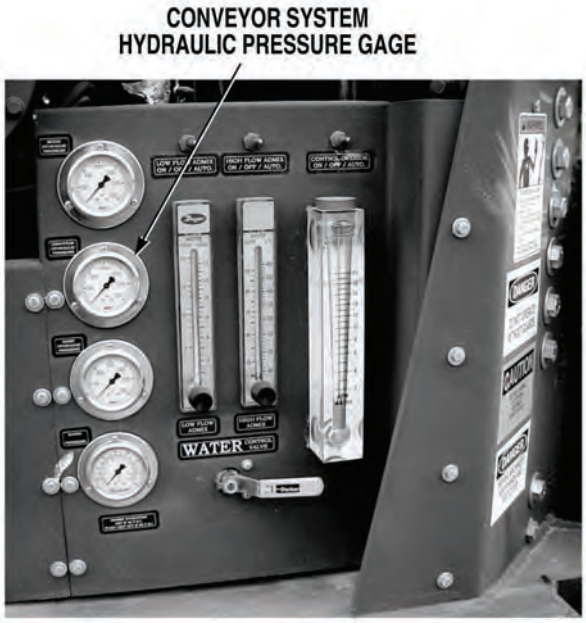

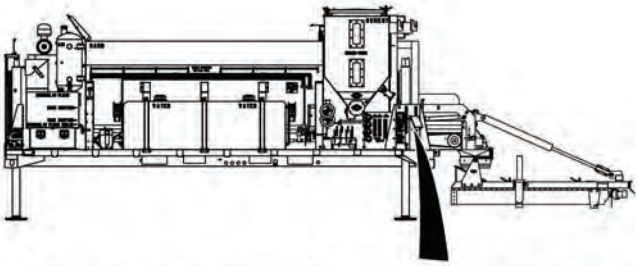

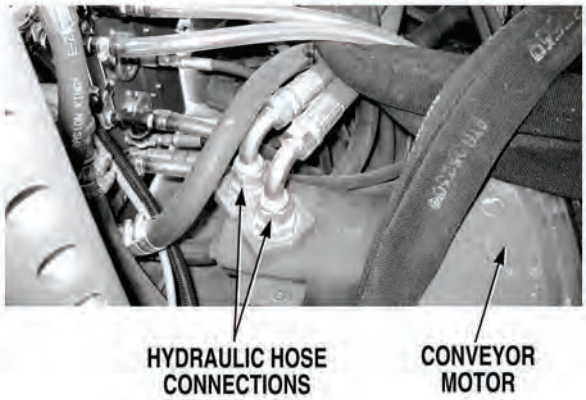

16. CONVEYOR BELT DOES NOT OPERATE CORRECTLY OR IS DAMAGED (CONT).

KNOWN INFO

- Conveyor belt adjusted correctly.
- Conveyor system hydraulic hoses, not leaking, kinked, or damaged.
- Chain oiler OK.
- No sand, gravel, or debris in conveyor belt chain.
- Conveyor belt wipers not missing, loose, or damaged.
- Conveyor belt not damaged.
- Hydraulic circuit OK.
- Conveyor drive shaft key OK.
- Conveyor motor drive gear shaft key OK.
- Conveyor belt not binding or blocked.
- Conveyor motor OK.

POSSIBLE PROBLEMS

- Conveyor belt speed adjustment faulty.
- MIXER control valve faulty.
- Hydraulic pump faulty.

16.

WARNING

Read WARNING on Page 4-501

Does conveyor system pressure build to 2,500 psi (17,237 kPa), when hydraulic hoses are disconnected and capped at conveyor motor and CONVEYOR control valve is activated after swapping conveyor and mixing auger system supply hoses?

NO → Replace MIXER control valve, (Para 3-51) and adjust conveyor speed, (Para 3-77). Verify repair, go to Step 17 of this Fault.

YES → Replace hydraulic pump, (Para 3-34) and adjust conveyor speed, (Para 3-77). Verify repair, go to Step 17 of this Fault.

TEST OPTIONS

Operational test.

REASON FOR QUESTION

If at least 2,500 psi (17,237 kPa) is present, hydraulic pump is faulty. If not, CONVEYOR control valve is faulty.

WARNING

Never disconnect any hydraulic line or fitting without first dropping pressure to zero. Failure to comply may result in serious injury or death to personnel.

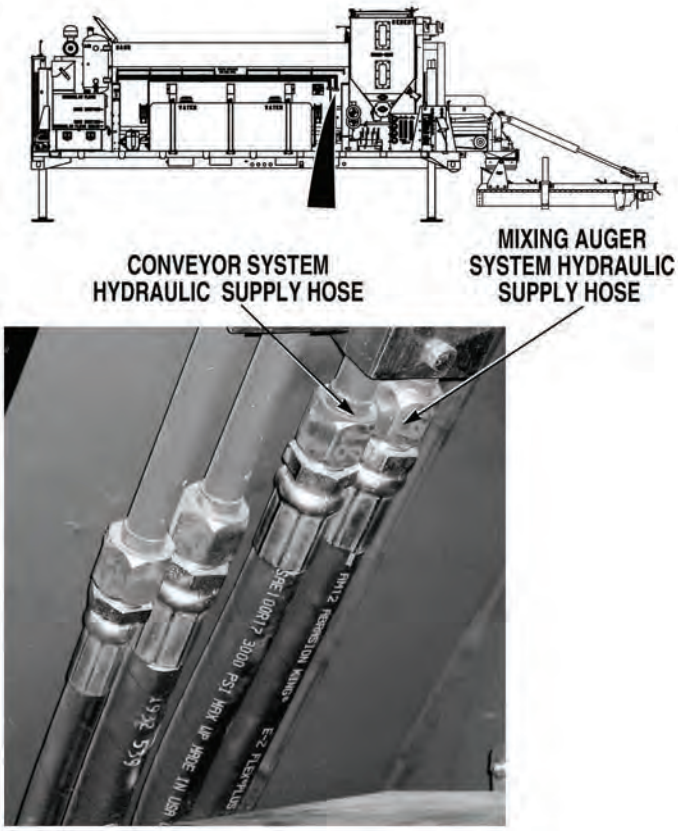

OPERATIONAL TEST

(1) Push CONVEYOR control in to OFF position, (Para 2-20).

(2) Shut OFF engine, (Para 2-19).

(3) Place suitable drain pan under hydraulic connectors above control box.

(4) Disconnect conveyor system supply hose at connector fitting above control box, (Para 3-129).

(5) Disconnect mixing auger system supply hose at connector fitting above control box, (Para 3-129).

(6) Connect mixing auger supply hose to conveyor system connector fitting.

(7) Connect conveyor system supply hose to mixing auger connector fitting.

(8) Start engine, (Para 2-19).

(9) Pull CONVEYOR control out to ON position, (Para 2-20).

(10) Check if conveyor system pressure builds to 2,500 psi (17,237 kPa).

  (a) If conveyor system pressure does not build to 2,500 psi (17,237 kPa), replace MIXER control valve, (Para 3-51) and adjust conveyor speed, (Para 3-77).

  (b) If conveyor system pressure builds to 2,500 psi (17,237 kPa), replace hydraulic pump, (Para 3-34) and adjust conveyor speed, (Para 3-77).

(11) Verify repair, go to Step 17 of this Fault.

16. CONVEYOR BELT DOES NOT OPERATE CORRECTLY OR IS DAMAGED (CONT).

KNOWN INFO
Conveyor belt adjusted correctly. Conveyor system hydraulic hoses, not leaking, kinked, or damaged. Chain oiler OK. No sand, gravel, or debris in conveyor belt chain. Conveyor belt wipers not missing, loose, or damaged. Conveyor belt not damaged. Hydraulic circuit OK. Conveyor drive shaft key OK. Conveyor motor drive gear shaft key OK. Conveyor belt not binding or blocked. Conveyor motor OK. MIXER control valve OK. Hydraulic pump OK. Conveyor belt speed adjustment OK.
POSSIBLE PROBLEMS
None.

17.

Is conveyor belt operating correctly?

NO → Fault not corrected. Notify Supervisor.

YES → Fault corrected.

TEST OPTIONS
Verify repair.
REASON FOR QUESTION
If conveyor belt is operating correctly, fault has been corrected.

VERIFY REPAIR

(1) If ON, shut OFF engine, (Para 2-19).

(2) If swapped, connect conveyor and mixing auger supply hoses back to original connections, (Para 3-129).

(3) If disconnected, connect hydraulic hoses at conveyor motor, (Para 3-129).

(4) If removed, install conveyor drive guard, (Para 3-65).

(5) Start engine, (Para 2-19).

(6) If OFF, turn CONTROL OVERIDE switch to ON position, (Para 2-1).

(7) Pull CONVEYOR control out to ON position, (Para 2-1).

(8) Check if conveyor belt is operating correctly.

  (a) If conveyor belt is not operating correctly, Fault not corrected. Notify Supervisor.

  (b) If conveyor belt is operating correctly, Fault has been corrected.

(9) Push CONVEYOR control in to OFF position, (Para 2-1).

(10) Shut OFF engine, (Para 2-19).

CONVEYOR BELT

17. CONVEYOR BELT OILER DOES NOT OPERATE.

INITIAL SETUP

Tools and Special Tools

Tool Kit, General Mechanic's: Automotive (Item 19, Appendix I)

Equipment Condition

Concrete Mobile Mixer unloaded from PLS, (Para 2-5)

Concrete Mobile Mixer at operating level, (Para 2–28).

Engine OFF, (Para 2-19)

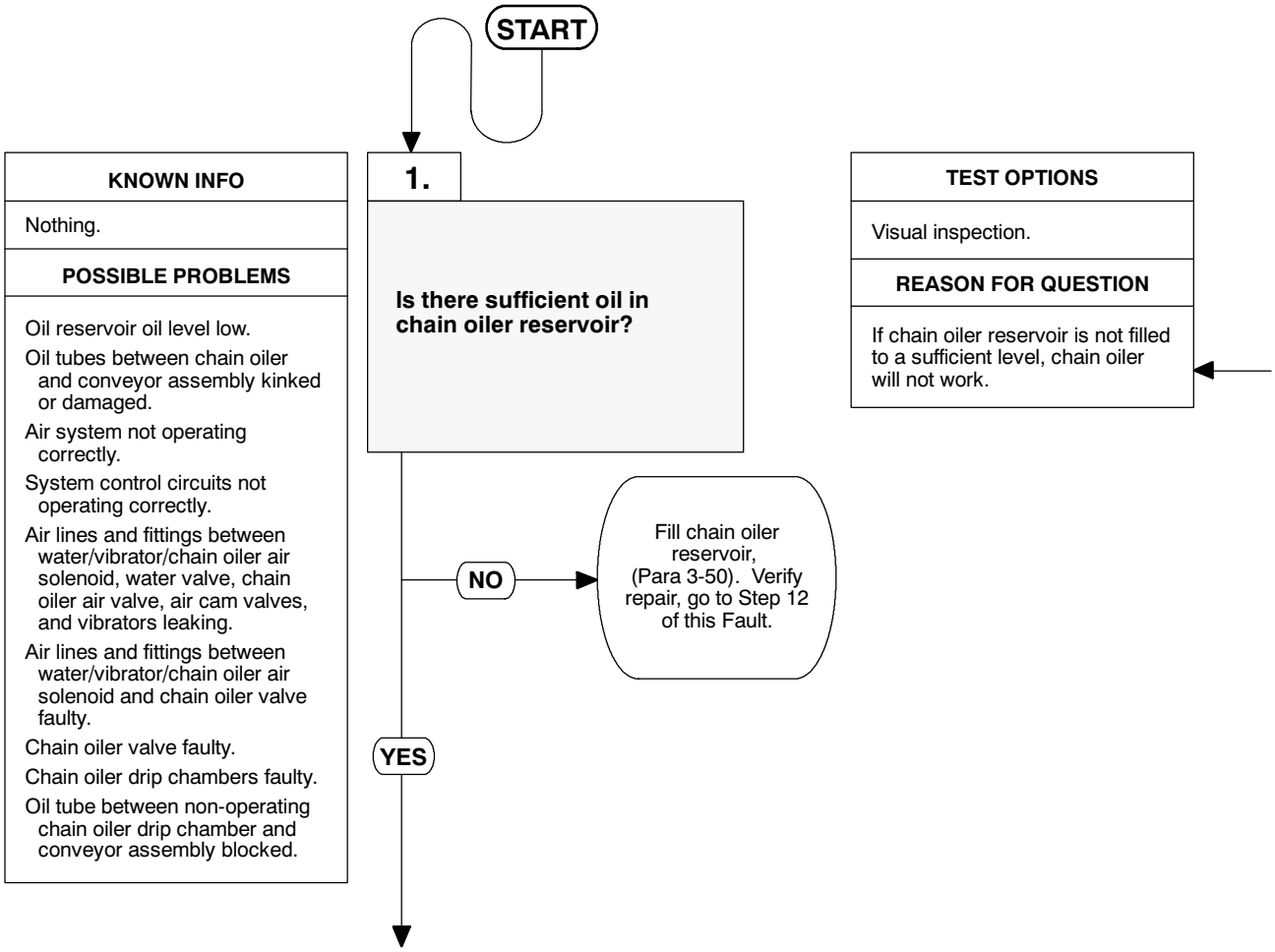

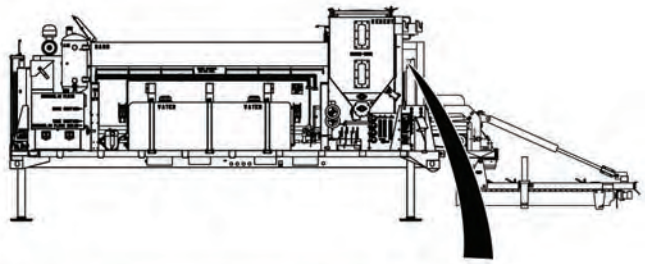

VISUAL INSPECTION
Check if oil level in chain oil reservoir is sufficient. (a) If oil level in chain oiler reservoir is not sufficient, fill oil reservoir, (Para 3-50). Verify repair, go to Step 2 of this Fault. (b) If oil level in chain oiler reservoir is sufficient, go to Step 2 of this Fault.

17. CONVEYOR BELT OILER DOES NOT OPERATE (CONT).

KNOWN INFO
Oil reservoir oil level OK.
POSSIBLE PROBLEMS
Oil tubes between chain oiler and conveyor assembly kinked or damaged. Air system not operating correctly. System control circuits not operating correctly. Air lines and fittings between water/vibrator/chain oiler air solenoid, water valve, chain oiler air valve, air cam valves, and vibrators leaking. Air lines and fittings between water/vibrator/chain oiler air solenoid and chain oiler valve faulty. Chain oiler valve faulty. Chain oiler drip chambers faulty. Oil tube between non-operating chain oiler drip chamber and conveyor assembly blocked.

2.

Are tubes from chain oiler to conveyor assembly free from kinks and damage?

NO → Replace damaged tubes, (Para 3-50). Verify repair, go to Step 12 of this Fault.

YES ↓

TEST OPTIONS
Visual inspection.
REASON FOR QUESTION
If tubes from chain oiler to conveyor assembly are not free from kinks and damage, conveyor belt oiler may not work.

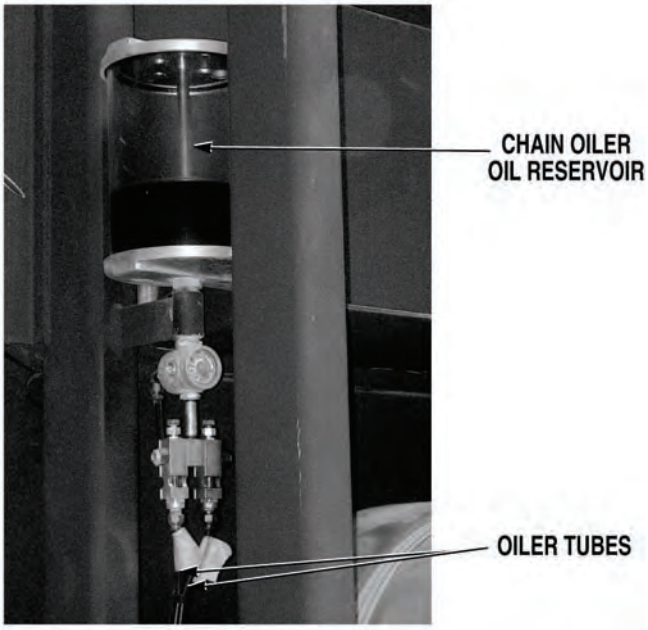

VISUAL INSPECTION
Check if oil tubes between chain oiler and conveyor assembly are free from kinks and damage. (a) If oil tubes are not free from kinks and damage, replace damaged oil tubes, (Para 3-50). Verify repair, go to Step 12 of this Fault. (b) If oil tubes are free from kinks and damage, go to Step 3 of this Fault.

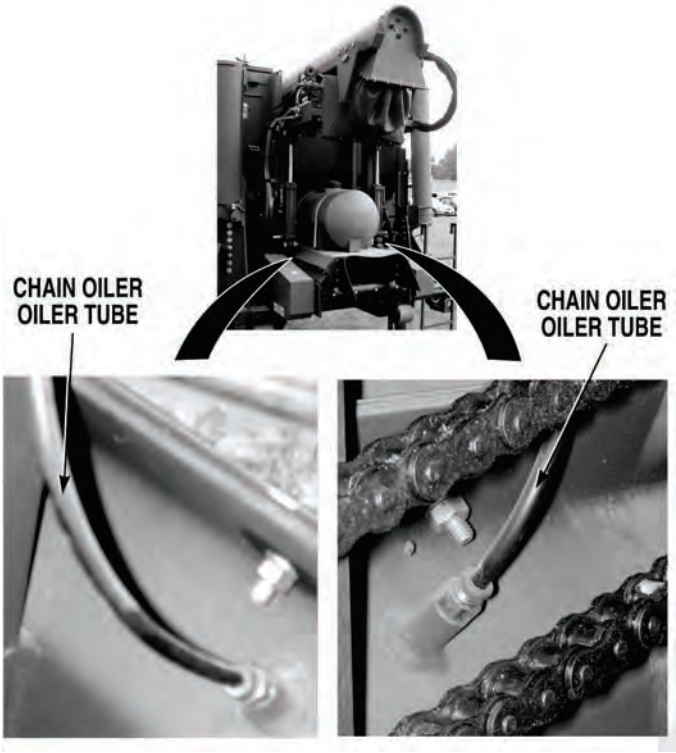

17. CONVEYOR BELT OILER DOES NOT OPERATE (CONT).

KNOWN INFO
Oil reservoir oil level OK. Oil tubes between chain oiler and conveyor assembly not kinked or damaged.
POSSIBLE PROBLEMS
Air system not operating correctly. System control circuits not operating correctly. Air lines and fittings between water/vibrator/chain oiler air solenoid, water valve, chain oiler air valve, air cam valves, and vibrators leaking. Air lines and fittings between water/vibrator/chain oiler air solenoid and chain oiler valve faulty. Chain oiler valve faulty. Chain oiler drip chambers faulty. Oil tube between non-operating chain oiler drip chamber and conveyor assembly blocked.

3.

Does air system charge to 80 to 100 psi (552 to 690 kPa) with CONTROL OVERIDE, HIGH FLOW and LOW FLOW ADMIX switches OFF?

NO → Go to “Air Pressure Low or System Charge is Slow”, (Fault 3).

YES ↓

TEST OPTIONS
Operational test.
REASON FOR QUESTION
If air system does not charge to 80 to 100 psi (552 to 690 kPa), another troubleshooting procedure applies.

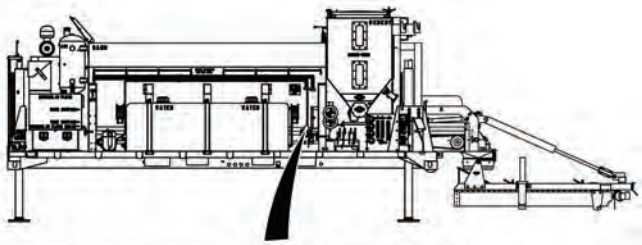

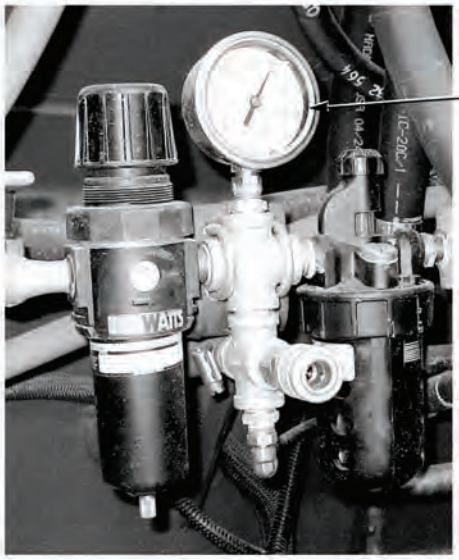

OPERATIONAL TEST

(1) If ON, turn CONTROL OVERIDE switch OFF, (Para 2-1).

(2) If ON, turn LOW FLOW ADMIX switch OFF, (Para 2-1).

(3) If ON, turn HIGH FLOW ADMIX switch OFF, (Para 2-1).

(4) If open, close CEMENT BIN FLUFFER VALVE, (Para 2-1).

(5) Start engine, (Para 2-19).

(6) If closed, open air system supply control valve, (Para 2-18).

(7) Check if air system charges to 80 to 100 psi (552 to 690 kPa). Adjust air regulator/lubricator if required (Para 2-18).

(a) If air system does not charge to 80 to 100 psi (552 go 690 kPa), go to “Air Pressure Low or System Charge is Low”, (Fault 3).

(b) If air system charges to 80 to 100 psi (552 to 690 kPa), go to Step 4 of this Fault.

17. CONVEYOR BELT OILER DOES NOT OPERATE (CONT).

KNOWN INFO

Oil reservoir oil level OK.

Oil tubes between chain oiler and conveyor assembly not kinked or damaged.

Air system operating correctly.

POSSIBLE PROBLEMS

System control circuits not operating correctly.

Air lines and fittings between water/vibrator/chain oiler air solenoid, water valve, chain oiler air valve, air cam valves, and vibrators leaking.

Air lines and fittings between water/vibrator/chain oiler air solenoid and chain oiler valve faulty.

Chain oiler valve faulty.

Chain oiler drip chambers faulty.

Oil tube between non-operating chain oiler drip chamber and conveyor assembly blocked.

4.

Are vibrators activated when CONTROL OVERIDE switch is turned ON?

NO → Go to Step 5 of this Fault.

YES → If cement bin vibrators are enabled, operate conveyor with cement bin clutch engaged until vibrators are disabled (Para 2-20). If not, close sand bin vibrator air valve, (Para 2-20). Then go to Step 6 of this Fault.

TEST OPTIONS

Operational test.

REASON FOR QUESTION

To verify operation of control override circuit. If vibrators operate, circuit is OK. If not, further testing is required.

OPERATIONAL TEST
(1) Turn CONTROL OVERIDE switch ON, (Para 2-1). (2) Check if vibrators are operating. (a) If vibrators are not operating, go to Step 5 of this Fault. (b) If cement bin vibrators are operating, operate conveyor with cement bin clutch engaged until vibrators are disabled, (Para 2-20). If sand bin vibrators are operating, (Para 2-20) close sand bin vibrator air supply valve. Then go to Step 6 of this Fault.

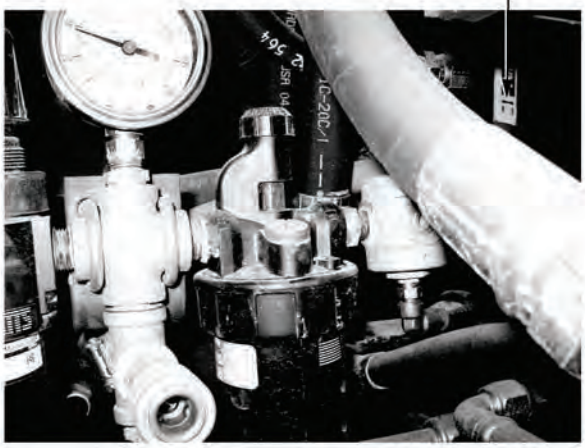

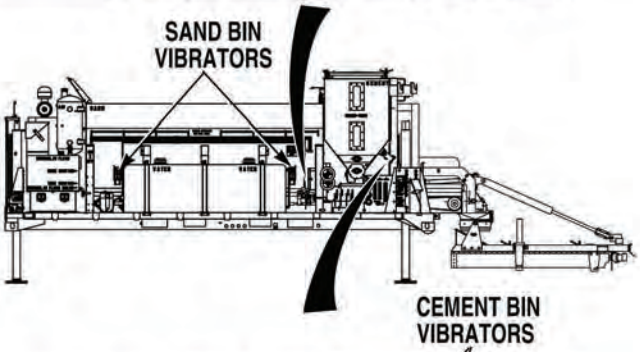

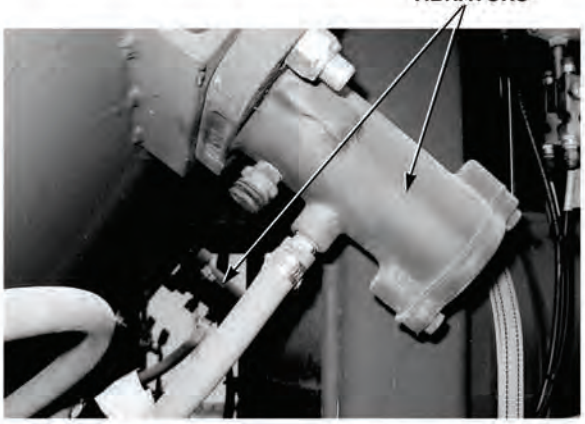

17. CONVEYOR BELT OILER DOES NOT OPERATE (CONT).

KNOWN INFO

Oil reservoir oil level OK.

Oil tubes between chain oiler and conveyor assembly not kinked or damaged.

Air system operating correctly.

POSSIBLE PROBLEMS

System control circuits not operating correctly.

Air lines and fittings between water/vibrator/chain oiler air solenoid, water valve, chain oiler air valve, air cam valves, and vibrators leaking.

Air lines and fittings between water/vibrator/chain oiler air solenoid and chain oiler valve faulty.

Chain oiler valve faulty.

Chain oiler drip chambers faulty.

Oil tube between non-operating chain oiler drip chamber and conveyor assembly blocked.

5.

Is water/vibrator/chain oiler air solenoid energized when CONTROL OVERIDE switch is placed in the ON position (engine OFF and IGNITION SWITCH ON)?

NO → Go to “Concrete Mixer Auto and/or Manual Controls Do Not Operate”, (Fault 29).

YES ↓

TEST OPTIONS

Operational test.

REASON FOR QUESTION

If water/vibrator/chain oiler air solenoid does not energize, another troubleshooting procedure applies.

OPERATIONAL TEST

(1) Shut OFF engine, (Para 2-19).

(2) Turn IGNITION SWITCH ON, (Para 2-1). Do not start engine.

(3) Turn 12 VOLT switch ON, (Para 2-1).

NOTE

Air solenoid is checked by listening for a clicking sound.

(4) While turning CONTROL OVERIDE switch ON, (Para 2-1), check if water/vibrator/chain oiler air solenoid is energized.

(a) If water/vibrator/chain oiler air solenoid does not energize, go to, “Concrete Mixer Auto and/or Manual Controls Do Not Operate”, (Fault 29).

(b) If water/vibrator/chain oiler air solenoid energizes, go to Step 6 of this Fault.

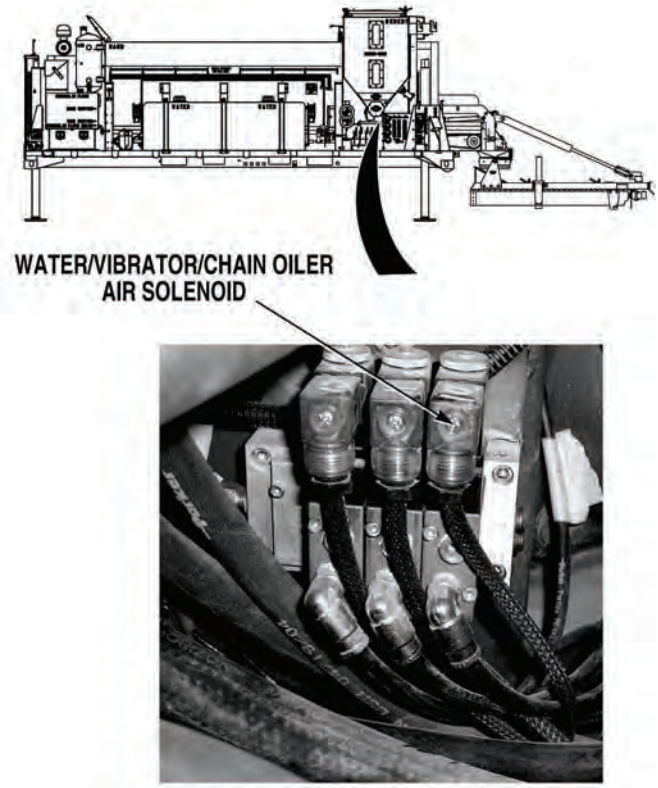

17. CONVEYOR BELT OILER DOES NOT OPERATE (CONT).

KNOWN INFO

Oil reservoir oil level OK.

Oil tubes between chain oiler and conveyor assembly not kinked or damaged.

Air system operating correctly.

POSSIBLE PROBLEMS

System control circuits not operating correctly.

Air lines and fittings between water/vibrator/chain oiler air solenoid, water valve, chain oiler air valve, air cam valves, and vibrators leaking.

Air lines and fittings between water/vibrator/chain oiler air solenoid and chain oiler valve faulty.

Chain oiler valve faulty.

Chain oiler drip chambers faulty.

Oil tube between non-operating chain oiler drip chamber and conveyor assembly blocked.

6.

Is water/vibrator/chain oiler air solenoid energized when CONTROL OVERIDE switch is placed in the AUTO position and CONVEYOR control is enabled (engine OFF and IGNITION SWITCH ON)?

NO → Go to “Concrete Mixer Auto and/or Manual Controls Do Not Operate”, (Fault 29).

YES ↓

TEST OPTIONS

Operational test.

REASON FOR QUESTION

If water/vibrator/chain oiler air solenoid is not energized when CONTROL OVERIDE switch is placed in the AUTO position and CONVEYOR control is enabled, another troubleshooting procedure applies.

OPERATIONAL TEST

(1) If ON, shut OFF engine, (Para 2-19).

(2) If OFF, turn IGNITION SWITCH ON, (Para 2-1). Do not start engine.

(3) If OFF, turn 12 VOLT switch ON, (Para 2-1).

(4) Turn CONTROL OVERIDE switch to AUTO, (Para 2-1).

(5) Pull CONVEYOR control out to ON position, (Para 2-1).

NOTE

Air solenoid is checked by listening for a clicking sound.

(6) Check if water/vibrator/chain oiler air solenoid is energized.

(a) If water/vibrator/chain oiler air solenoid does not energize, go to “Concrete Mixer Auto and/or Manual Controls Do Not Operate”, (Fault 29).

(b) If water/vibrator/chain oiler air solenoid energizes, go to Step 7 of this Fault.

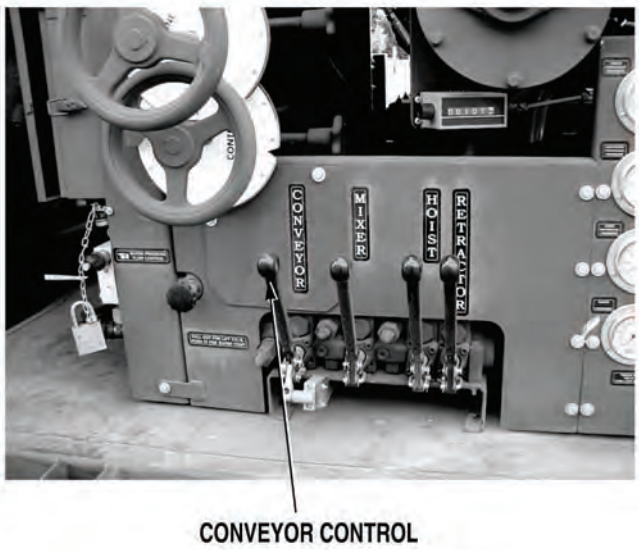

17. CONVEYOR BELT OILER DOES NOT OPERATE (CONT).

KNOWN INFO

Oil reservoir oil level OK.

Oil tubes between chain oiler and conveyor assembly not kinked or damaged.

Air system operating correctly.

System control circuits operating correctly.

POSSIBLE PROBLEMS

Air lines and fittings between water/vibrator/chain oiler air solenoid, water valve, chain oiler air valve, air cam valves, and vibrators leaking.

Air lines and fittings between water/vibrator/chain oiler air solenoid and chain oiler valve faulty.

Chain oiler valve faulty.

Chain oiler drip chambers faulty.

Oil tube between non-operating chain oiler drip chamber and conveyor assembly blocked.

7.

Is air system charge between 80 and 100 psi (522 to 690 kPa) with CONTROL OVERIDE switch in ON position?

NO → Repair or replace leaking air lines and fittings, (Para 3-132). Verify repair, go to Step 12 of this Fault.

YES ↓

TEST OPTIONS

Operational test.

REASON FOR QUESTION

If air system charge is not 80 to 100 psi (552 to 690 kPa), air lines and fittings between water/vibrator/chain oiler air solenoid, water valve, chain oiler air valve, air cam valves, and vibrators are leaking.

OPERATIONAL TEST

(1) Turn CONTROL OVERIDE switch ON, (Para 2-1).

(2) Check if air system charge is 80 to 100 psi (552 to 690 kPa).

(a) If air system charge is not 80 to 100 psi (552 to 690 kPa), repair or replace air lines and fittings, between water/vibrator/chain oiler air solenoid, water valve, chain oiler, air cam valves, and vibrators, (Para 3-132). Verify repair, go to Step 12 of this Fault.

(b) If air system charge is 80 to 100 psi (552 to 690 kPa), go to Step 8 of this Fault.

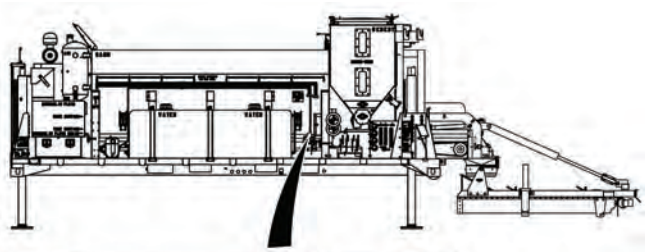

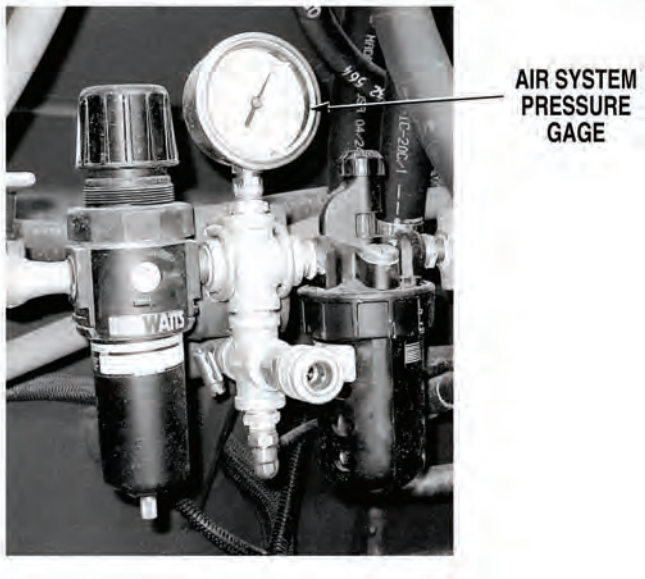

17. CONVEYOR BELT OILER DOES NOT OPERATE (CONT).

KNOWN INFO

Oil reservoir oil level OK.

Oil tubes between chain oiler and conveyor assembly not kinked or damaged.

Air system operating correctly.

System control circuits operating correctly.

Air lines and fittings between water/vibrator/chain oiler air solenoid, water valve, chain oiler air valve, air cam valves, and vibrators not leaking.

POSSIBLE PROBLEMS

Air lines and fittings between water/vibrator/chain oiler air solenoid and chain oiler valve faulty.

Chain oiler valve faulty.

Chain oiler drip chambers faulty.

Oil tube between non-operating chain oiler drip chamber and conveyor assembly blocked.

8.

WARNING

Read WARNING on Page 4-519

Is air pressure present at oiler valve?

NO → Repair or replace air lines between water/vibrator/chain oil solenoid valve and chain oiler valve, (Para 3-132). Verify repair, go to Step 12 of this Fault.

YES ↓

TEST OPTIONS

Operational test.

REASON FOR QUESTION

If air pressure is not present at oiler valve, air lines between water/vibrator/chain oiler air solenoid and chain oiler valve are blocked.

WARNING

Air lines are under extreme pressure. Ensure all personnel wear protective goggles when working around compressed air. Failure to comply may result in serious injury or death to personnel.

OPERATIONAL TEST

(1) Slowly disconnect air line at chain oiler valve, (Para 3-50).

(2) Listen for air to escape from air line.

(a) If air is not present at chain oiler valve, repair or replace air lines between water/vibrator/chain oiler air solenoid and chain oiler valve, (Para 3-132). Verify repair, go to Step 12 of this Fault.

(b) If air is present at chain oiler valve, go to Step 9 of this Fault.

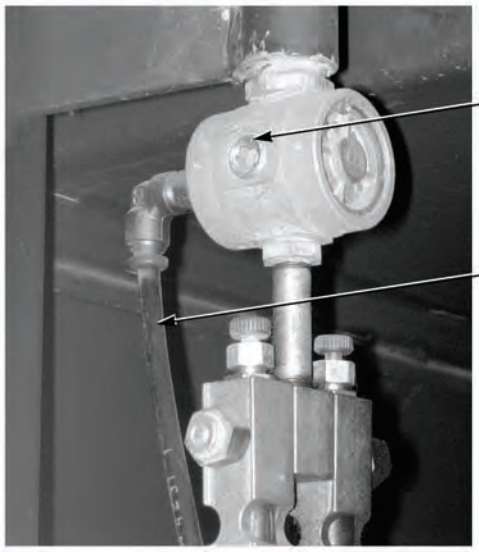

17. CONVEYOR BELT OILER DOES NOT OPERATE (CONT).

KNOWN INFO

Oil reservoir oil level OK.

Oil tubes between chain oiler and conveyor assembly not kinked or damaged.

Air system operating correctly.

System control circuits operating correctly.

Air lines and fittings between water/vibrator/chain oiler air solenoid, water valve, chain oiler air valve, air cam valves, and vibrators not leaking.

Air lines and fittings between water/vibrator/chain oiler air solenoid and chain oiler valve OK.

POSSIBLE PROBLEMS

Chain oiler valve faulty.

Chain oiler drip chambers faulty.

Oil tube between non-operating chain oiler drip chamber and conveyor assembly blocked.

9.

Can at least one of the chain oiler drip chambers be adjusted for 1 drip per 2 to 3 seconds, (Para 2-10)?

NO → Replace chain oiler valve, (Para 3-50). Verify repair, go to Step 12 of this Fault.

YES ↓

TEST OPTIONS

Operational test.

REASON FOR QUESTION

If chain oiler drip chambers cannot be adjusted for 1 drip every 2 to 3 seconds, chain oiler valve is faulty.

OPERATIONAL TEST

(1) Connect air line at chain oiler valve, (Para 3-132).

(2) If system is not charged to 80 to 100 psi (552 to 690 kPa) start engine, (Para 2-19).

(3) If OFF, turn CONTROL OVERIDE switch ON, (Para 2-1).

(4) Check if at least one chain oiler drip chamber can be adjusted for 1 drip every 2 to 3 seconds, (Para 2-10).

(a) If chain oiler drip chambers cannot be adjusted for 1 drip every 2 to 3 seconds, replace chain oiler valve, (Para 3-50). Verify repair, go to Step 12 of this Fault.

(b) If chain oiler drip chambers can be adjusted for 1 drip every 2 to 3 seconds, go to Step 10 of this Fault.

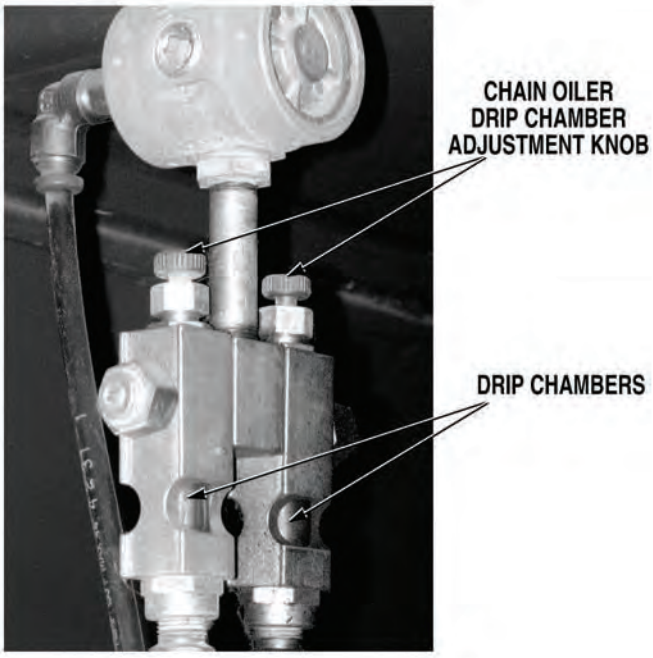

17. CONVEYOR BELT OILER DOES NOT OPERATE (CONT).

KNOWN INFO

- Oil reservoir oil level OK.
- Oil tubes between chain oiler and conveyor assembly not kinked or damaged.
- Air system operating correctly.
- System control circuits operating correctly.
- Air lines and fittings between water/vibrator/chain oiler air solenoid, water valve, chain oiler air valve, air cam valves, and vibrators not leaking.
- Air lines and fittings between water/vibrator/chain oiler air solenoid and chain oiler valve OK.
- Chain oiler valve OK.

POSSIBLE PROBLEMS

- Chain oiler drip chambers faulty.
- Oil tube between non-operating chain oiler drip chamber and conveyor assembly blocked.

10.

Is non-operating chain oiler drip chamber full of oil?

NO → Replace chain oiler drip chambers, (Para 3-50). Verify repair, go to Step 12 of this Fault.

YES ↓

TEST OPTIONS

Visual inspection.

REASON FOR QUESTION

If non-operating chain oiler drip chamber is not full of oil, chain oiler drip chamber is faulty.

VISUAL INSPECTION
Check if non-operating drip chamber is full of oil. (a) If non-operating drip chamber is not full of oil, replace chain oiler drip chambers, (Para 3-50). Verify repair, go to Step 12 of this Fault. (b) If non-operating drip chamber is full of oil, go to Step 11 of this Fault.

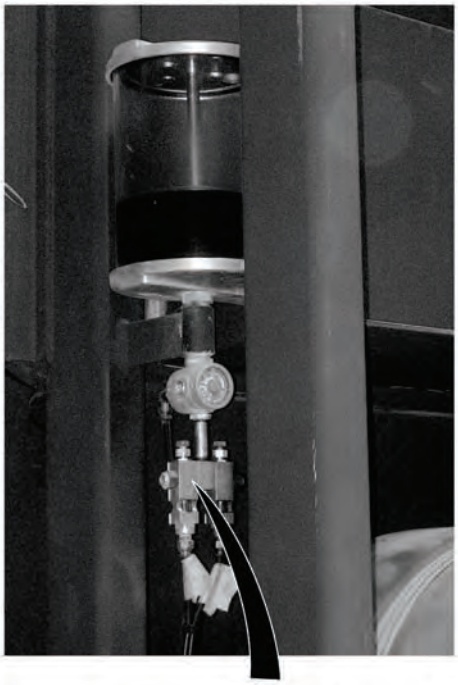

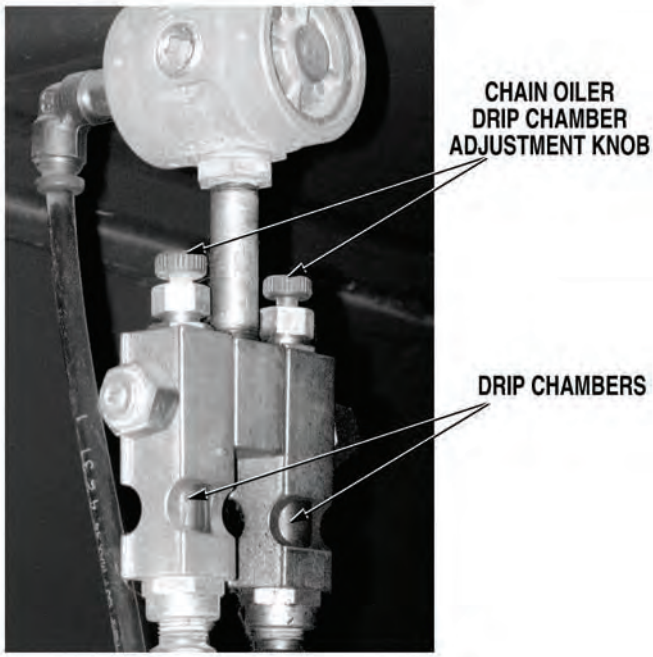

17. CONVEYOR BELT OILER DOES NOT OPERATE (CONT).

KNOWN INFO

- Oil reservoir oil level OK.
- Oil tubes between chain oiler and conveyor assembly not kinked or damaged.
- Air system operating correctly.
- System control circuits operating correctly.
- Air lines and fittings between water/vibrator/chain oiler air solenoid, water valve, chain oiler air valve, air cam valves, and vibrators not leaking.
- Air lines and fittings between water/vibrator/chain oiler air solenoid and chain oiler valve OK.
- Chain oiler valve OK.

POSSIBLE PROBLEMS

- Chain oiler drip chambers faulty.
- Oil tube between non-operating chain oiler drip chamber and conveyor assembly blocked.

11.

Does oil drain from drip chamber if tube between non-operating chain oiler drip chamber and conveyor assembly is disconnected?

NO → Replace chain oiler drip chambers, (Para 3-50). Verify repair, go to Step 12 of this Fault.

YES → Remove blockage or replace tube between non-operating chain oiler drip chamber and conveyor assembly, (Para 3-50). Verify repair, go to Step 12 of this Fault.

TEST OPTIONS

Visual inspection.

REASON FOR QUESTION

If oil drains from non-operating chain oiler drip chamber, tube between chain oiler and conveyor assembly is faulty. If not, chain oil drip chamber is faulty.

VISUAL INSPECTION

(1) Disconnect oil tube from non-operating chain oiler drip chamber, (Para 3-50).

(2) Check if oil drains from non-operating chain oiler drip chamber.

  (a) If oil does not drain from non-operating chain oiler drip chamber, replace chain oiler drip chambers, (Para 3-50).

  (b) If oil drains from non-operating drip chamber, replace tube between non-operating chain oiler drip chamber and conveyor assembly, (Para 3-50).

(3) Verify repair, go to Step 12 of this Fault.

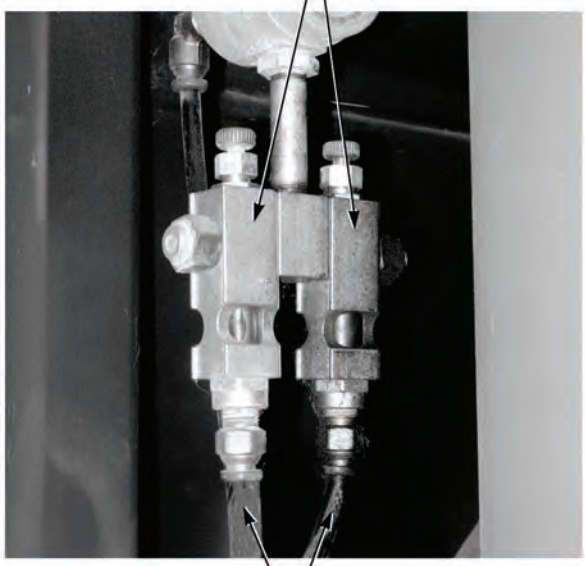

17. CONVEYOR BELT OILER DOES NOT OPERATE (CONT).

KNOWN INFO
Oil reservoir oil level OK. Oil tubes between chain oiler and conveyor assembly not kinked or damaged. Air system operating correctly. System control circuits operating correctly. Air lines and fittings between water/vibrator/chain oiler air solenoid, water valve, chain oiler air valve, air cam valves, and vibrators not leaking. Air lines and fittings between water/vibrator/chain oiler air solenoid and chain oiler valve OK. Chain oiler valve OK. Chain oiler drip chambers OK. Oil tube between non-operating chain oiler drip chamber and conveyor assembly OK.
POSSIBLE PROBLEMS
None.

12.

Does conveyor belt oiler operate correctly?

NO → Fault not corrected. Notify Supervisor.

YES → Fault corrected.

TEST OPTIONS
Verify repair.
REASON FOR QUESTION
If conveyor belt oiler operates correctly, fault has been corrected.

VERIFY REPAIR
(1) If OFF, start engine, (Para 2-19). (2) If discharged, allow air system to charge to 80 to 100 psi (552 to 690 kPa). (3) If OFF, turn CONTROL OVERIDE switch to AUTO, (Para 2-1). (4) If in, pull CONVEYOR control out to ON position, (Para 2-20). (5) Check if conveyor belt chain oiler is operating correctly. (a) If conveyor belt chain oiler does not operate correctly, fault not corrected. Notify Supervisor. (b) If conveyor belt chain oiler operates correctly, fault has been corrected. (6) Push CONVEYOR control in to OFF position, (Para 2-20). (7) Turn CONTROL OVERIDE switch OFF, (Para 2-1). (8) Shut OFF engine, (Para 2-19).

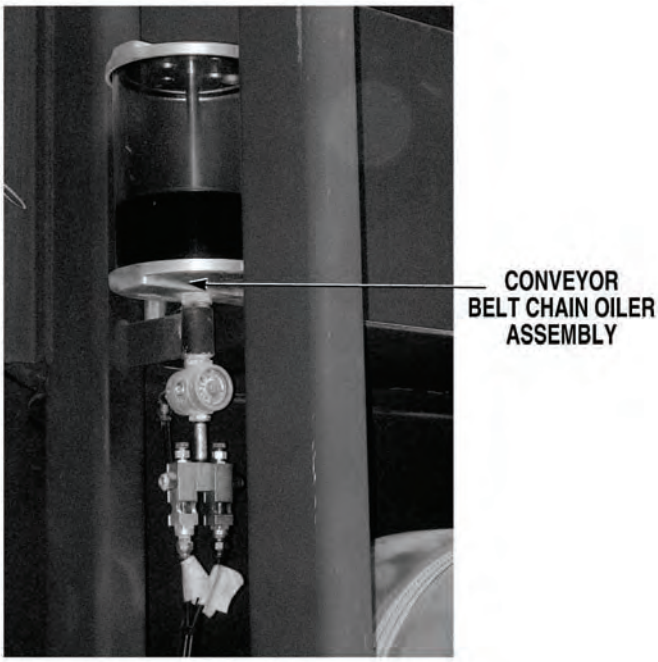

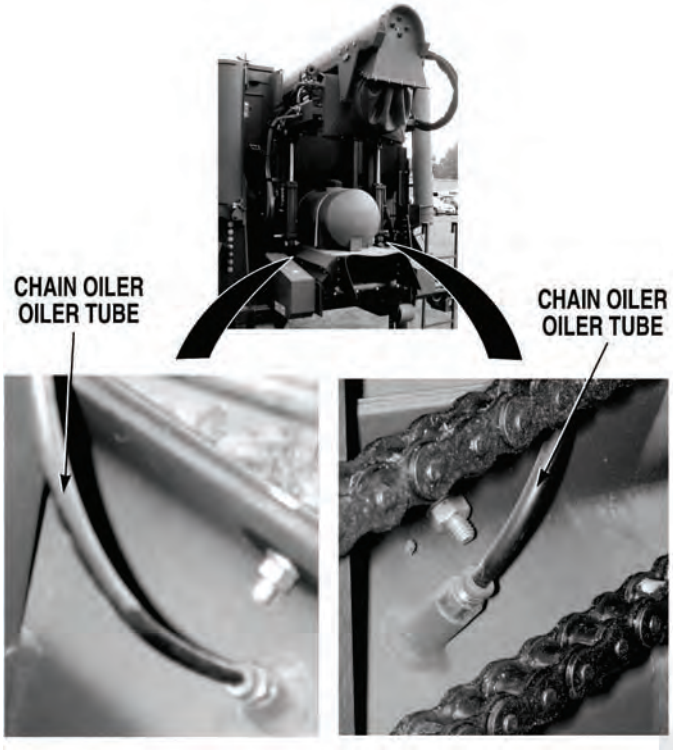

18. ENGINE CRANKS BUT FAILS TO START (EXHAUST SMOKE NOT PRESENT).

INITIAL SETUP

Tools and Special Tools
Tool Kit, General Mechanic's: Automotive (Item 19, Appendix I)
Multimeter (Item 11, Appendix I)

Personnel Required
2

Equipment Condition
Concrete Mobile Mixer unloaded from PLS, (Para 2-5)
Engine OFF, (Para 2-19)

KNOWN INFO
Nothing.

POSSIBLE PROBLEMS
Fuel level in fuel tank insufficient.
Power or ground to control panel faulty.
TATTLE TALE SWITCH not pressed during engine startup. (Procedural error).
Fuel line from tank to injection pump leaks, kinked, or damaged.
Air in fuel system.
Fuel transfer pump faulty.
Fuel injector pump faulty.
Fuel/water separator filter clogged.
Inline fuel filter clogged.
Control box 8-pin wire harness fuel pump enable (pink) wire faulty.
Control box switch battery (orange) wire connection at TATTLE TALE SWITCH faulty.
TATTLE TALE SWITCH faulty.
Main wire harness fuel pump enable (pink) wire faulty.
Engine wire harness fuel pump enable (pink) wire faulty.
Fuel pump thermo switch faulty.
Fuel pump thermo switch wire harness faulty.

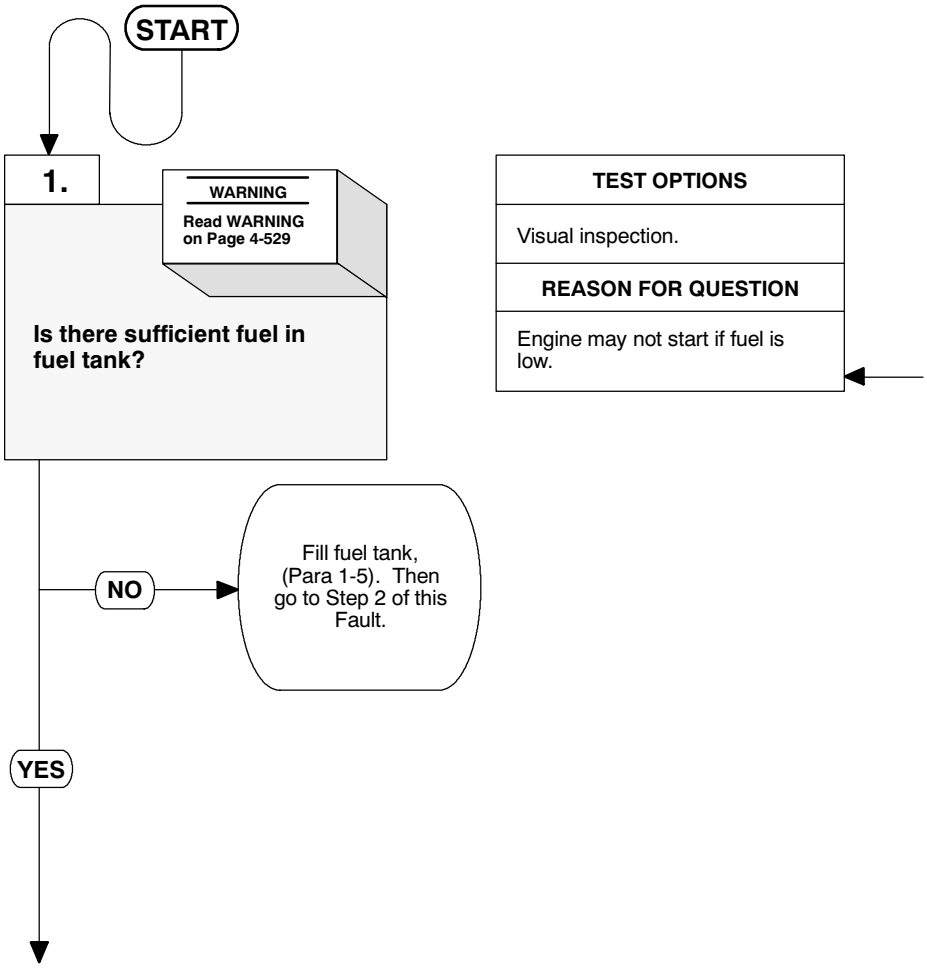

WARNING

To prevent personal injury when working with fuel, do not smoke or use open flame. Fuel is flammable and may explode. Keep fire extinguisher within reach.

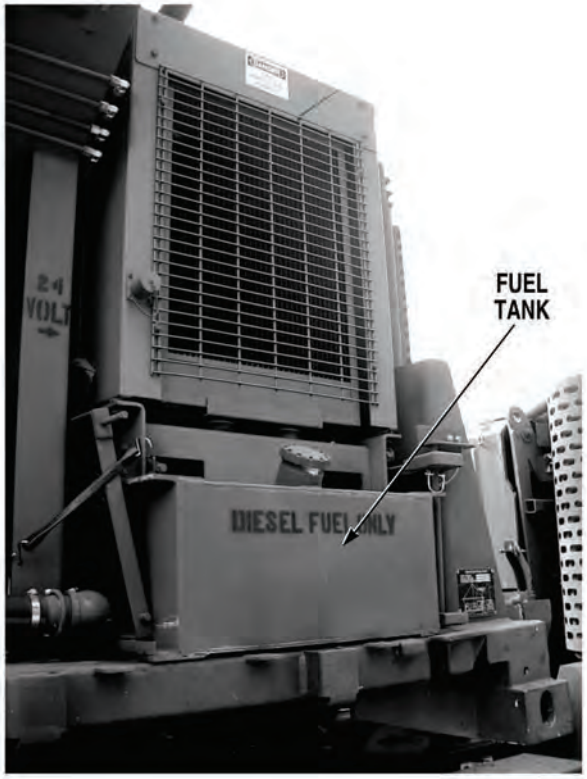

VISUAL INSPECTION
Check fuel level in fuel tank. (a) If fuel level is insufficient, fill fuel tank, (Para 1-5). Then go to Step 2 of this fault. (b) If fuel level is sufficient, go to Step 2 of this Fault.

18. ENGINE CRANKS BUT FAILS TO START (EXHAUST SMOKE NOT PRESENT) (CONT).

KNOWN INFO
Fuel level in fuel tank OK.
POSSIBLE PROBLEMS
Power or ground to control panel faulty. TATTLE TALE SWITCH not pressed during engine startup. (Procedural error). Fuel line from tank to injection pump leaks, kinked, or damaged. Air in fuel system. Fuel transfer pump faulty. Fuel injector pump faulty. Fuel/water separator filter clogged. Inline fuel filter clogged. Control box 8-pin wire harness fuel pump enable (pink) wire faulty. Control box switched battery (orange) wire connection at TATTLE TALE SWITCH faulty. TATTLE TALE SWITCH faulty. Main wire harness fuel pump enable (pink) wire faulty. Engine wire harness fuel pump enable (pink) wire faulty. Fuel pump thermo switch faulty. Fuel pump thermo switch wire harness faulty.

2.

Is voltmeter reading greater than 0 VDC, when IGNITION SWITCH is turned on?

NO → Go to “Engine Gage Reading Incorrect”, (Fault 23).

YES ↓

TEST OPTIONS
Operational test.
REASON FOR QUESTION
If voltmeter reading is 0 volts, another troubleshooting procedure applies.

OPERATIONAL TEST

(1) Turn IGNITION SWITCH ON, (Para 2-1).

(2) Check if voltmeter reading is greater than 0 VDC.

(a) If voltmeter reading is 0 VDC, go to “Engine Gage Reading Incorrect”, (Fault 23).

(b) If voltmeter reading is greater than 0 VDC, go to Step 3 of this Fault.

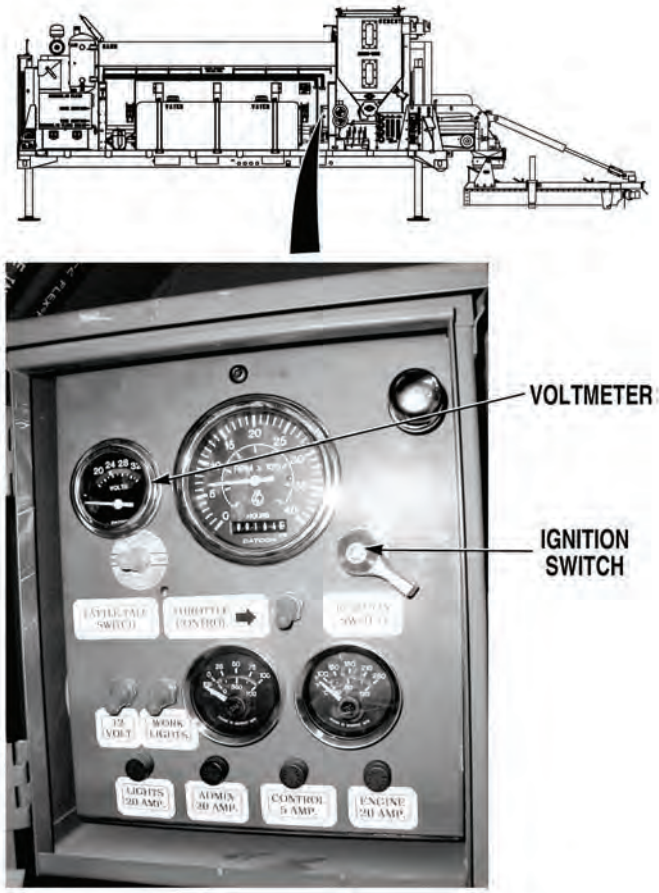

18. ENGINE CRANKS BUT FAILS TO START (EXHAUST SMOKE NOT PRESENT) (CONT).

KNOWN INFO
Fuel level in fuel tank OK. Power and ground to control panel OK.
POSSIBLE PROBLEMS
TATTLE TALE SWITCH not pressed during engine startup. (Procedural error). Fuel line from tank to injection pump leaks, kinked, or damaged. Air in fuel system. Fuel transfer pump faulty. Fuel injector pump faulty. Fuel/water separator filter clogged. Inline fuel filter clogged. Control box 8-pin wire harness fuel pump enable (pink) wire faulty. Control box switched battery (orange) wire connection at TATTLE TALE SWITCH faulty. TATTLE TALE SWITCH faulty. Main wire harness fuel pump enable (pink) wire faulty. Engine wire harness fuel pump enable (pink) wire faulty. Fuel pump thermo switch faulty. Fuel pump thermo switch wire harness faulty.

3.

Does engine start if TATTLE TALE SWITCH is pressed during startup procedure?

NO → Go to Step 4 of this Fault.

YES → Fault corrected. (Procedural error). Verify repair, go to Step 17 of this Fault.

TEST OPTIONS
Operational test.
REASON FOR QUESTION
If engine starts when TATTLE TALE SWITCH is pressed during startup procedure, fault was caused by a procedural error.

OPERATIONAL TEST
(1) Press in and hold TATTLE TALE SWITCH, while performing engine startup procedure, (Para 2-19). (2) Check if engine starts. (a) If engine does not start, go to Step 4 of this Fault. (b) If engine starts, fault was caused by procedural error. Verify repair, go to Step 17 of this Fault.

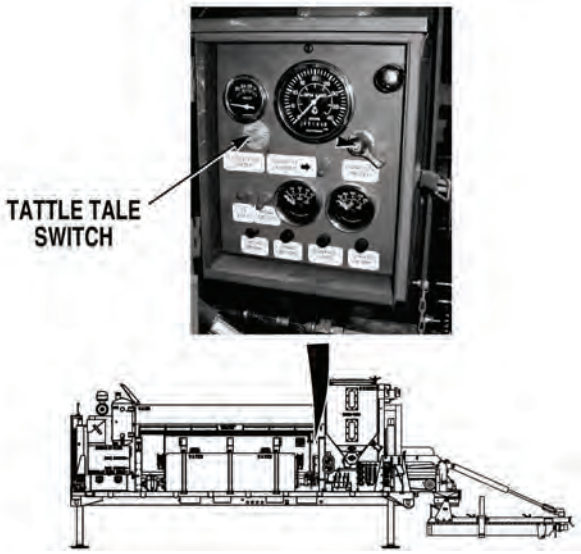

18. ENGINE CRANKS BUT FAILS TO START (EXHAUST SMOKE NOT PRESENT) (CONT).

KNOWN INFO
Fuel level in fuel tank OK. Power and ground to control panel OK. TATTLE TALE SWITCH pressed during engine startup. (No procedural errors).
POSSIBLE PROBLEMS
Fuel line from tank to injection pump leaks, kinked, or damaged. Air in fuel system. Fuel transfer pump faulty. Fuel injector pump faulty. Fuel/water separator filter clogged. Inline fuel filter clogged. Control box 8-pin wire harness fuel pump enable (pink) wire faulty. Control box switched battery (orange) wire connection at TATTLE TALE SWITCH faulty. TATTLE TALE SWITCH faulty. Main wire harness fuel pump enable (pink) wire faulty. Engine wire harness fuel pump enable (pink) wire faulty. Fuel pump thermo switch faulty. Fuel pump thermo switch wire harness faulty.

4.

WARNING

Read WARNING on Page 4-535

Is continuity measured across fuel pump thermo switch and harness when harness connectors are disconnected?

NO → Go to Step 16 of this Fault.

YES ↓

TEST OPTIONS
Continuity test.
REASON FOR QUESTION
If there is no continuity, engine will not start.

WARNING

Remove all jewelry such as rings, dog tags, bracelets, etc. If jewelry or tools contact positive electrical circuits, a direct short may result. Damage to equipment, injury, or death to personnel may occur.

CONTINUITY TEST

(1) If ON, turn IGNITION SWITCH OFF, (Para 2-1).

(2) Disconnect batteries, (Para 3-10).

(3) Remove front engine access panel, (Para 3-78).

(4) Disconnect fuel pump thermo switch harness connectors, (Para 3-112).

(5) Set multimeter select switch to ohms.

(6) Connect positive (+) multimeter lead to one end of fuel pump thermo switch harness.

(7) Connect negative (-) multimeter lead to other end of fuel pump thermo switch harness.

(a) If continuity is not measured, go to Step 16 of this Fault.

(b) Go to Step 5 of this Fault.

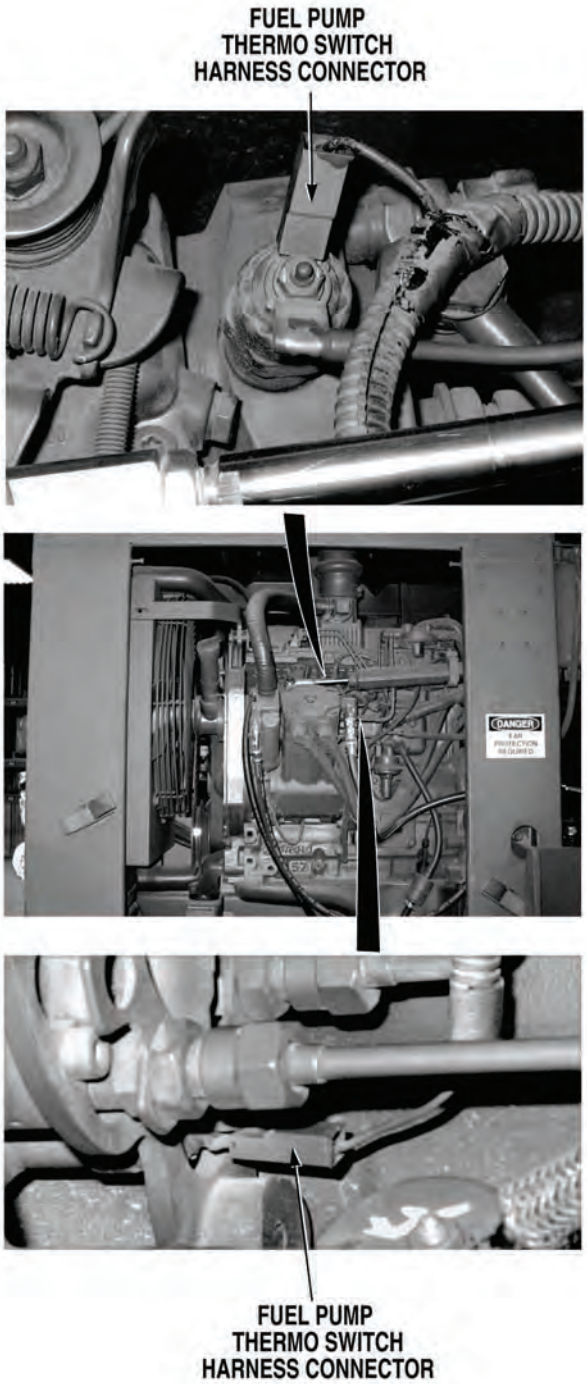

18. ENGINE CRANKS BUT FAILS TO START (EXHAUST SMOKE NOT PRESENT) (CONT).

KNOWN INFO

- Fuel level in fuel tank OK.
- Power and ground to control panel OK.
- TATTLE TALE SWITCH pressed during engine startup. (No procedural errors).
- Fuel pump thermo switch OK.
- Fuel pump thermo switch wire harness OK.

POSSIBLE PROBLEMS

- Fuel line from tank to injection pump leaks, kinked, or damaged.
- Air in fuel system.
- Fuel transfer pump faulty.
- Fuel injector pump faulty.
- Fuel/water separator filter clogged.
- Inline fuel filter clogged.
- Control box 8-pin wire harness fuel pump enable (pink) wire faulty.
- Control box switched battery (orange) wire connection at TATTLE TALE SWITCH faulty.
- TATTLE TALE SWITCH faulty.
- Main wire harness fuel pump enable (pink) wire faulty.
- Engine wire harness fuel pump enable (pink) wire faulty.

5.

WARNING

Read WARNING on Page 4-537

Are 22 to 28 VDC measured between engine harness, fuel pump enable (pink) wire at fuel injector pump and a known good ground, when IGNITION SWITCH is ON and TATTLE TALE SWITCH is pressed?

NO → Go to Step 12 of this Fault.

YES ↓

TEST OPTIONS

Voltage test.

REASON FOR QUESTION

To isolate fault.

WARNING

Remove all jewelry such as rings, dog tags, bracelets, etc. If jewelry or tools contact positive electrical circuits, a direct short may result. Damage to equipment, injury, or death to personnel may occur.

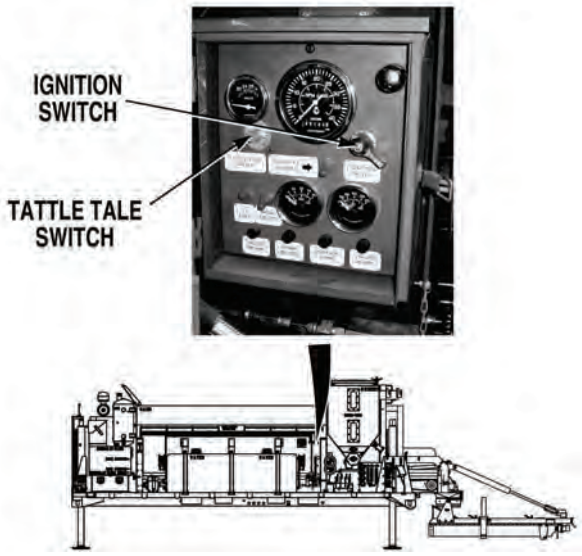

VOLTAGE TEST

(1) Connect fuel pump thermo switch harness connectors, (Para 3-112).

(2) Connect batteries, (Para 3-10).

(3) Turn IGNITION SWITCH ON, (Para 2-1). Do not try to start engine.

(4) Connect positive (+) multimeter lead to fuel injector pump enable (pink) wire at fuel injector pump.

(5) Connect negative (-) multimeter lead to a known good ground.

(6) While assistant presses and holds TATTLE TALE SWITCH, (Para 2-1), check if 22 to 28 VDC is measured.

(a) If 22 to 28 VDC is not measured, go to Step 12 of this Fault.

(b) If 22 to 28 VDC is measured, go to Step 6 of this Fault.

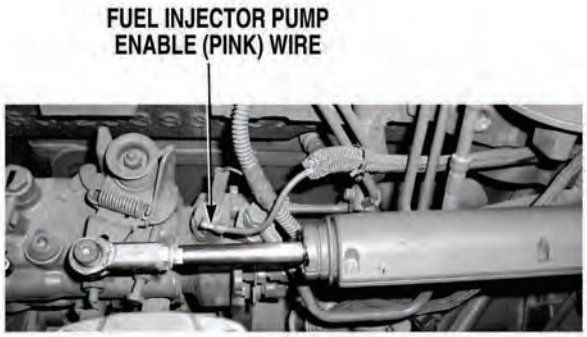

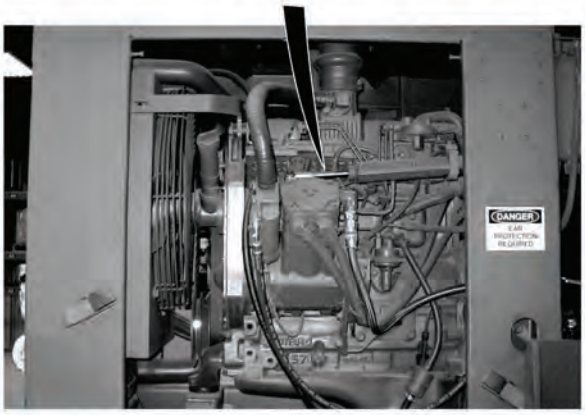

18. ENGINE CRANKS BUT FAILS TO START (EXHAUST SMOKE NOT PRESENT) (CONT).

KNOWN INFO

- Fuel level in fuel tank OK.
- Power and ground to control panel OK.
- TATTLE TALE SWITCH pressed during engine startup. (No operator's error).
- Fuel pump thermo switch OK.
- Fuel pump thermo switch wire harness OK.
- Control box 8-pin wire harness fuel pump enable (pink) wire OK.
- Control box switched battery (orange) wire connection at TATTLE TALE SWITCH OK.
- TATTLE TALE SWITCH OK.
- Main wire harness fuel pump enable (pink) wire OK.
- Engine wire harness fuel pump enable (pink) wire OK.

POSSIBLE PROBLEMS

- Fuel line from tank to injection pump leaks, kinked, or damaged.
- Air in fuel system.
- Fuel transfer pump faulty.
- Fuel injector pump faulty.
- Fuel/water separator filter clogged.
- Inline fuel filter clogged.

6.

Is fuel line from fuel tank to fuel injector pump free from leaks, kinks, and damage?

NO → Repair or replace damaged fuel line, (Para 3-133). Verify repair, go to Step 17 of this Fault.

YES ↓

TEST OPTIONS

Visual inspection.

REASON FOR QUESTION

If fuel lines are leaking, kinked, or damaged, engine may not start.

VISUAL INSPECTION
Check if fuel lines from fuel tank to fuel injector pump are free from leaks, kinks, and damage. (a) If fuel lines are not free from leaks, kinks, and damage, repair or replace damaged fuel lines, (Para 3-133). Verify repair, go to Step 17 of this Fault. (b) If fuel lines are free from leaks, kinks, and damage, go to Step 7 of this Fault.

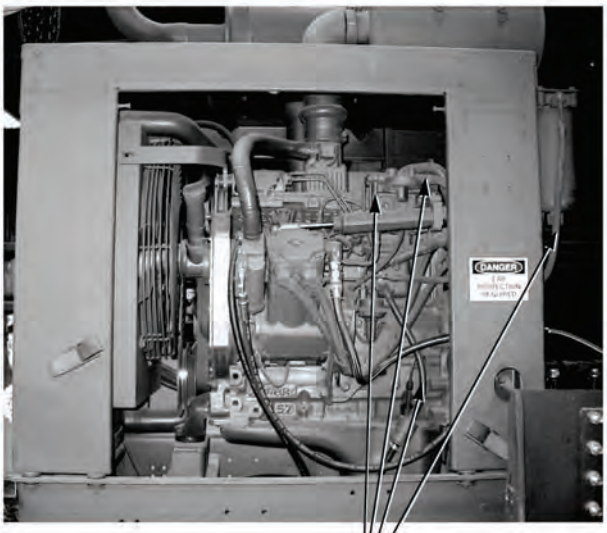

FUEL LINES

18. ENGINE CRANKS BUT FAILS TO START (EXHAUST SMOKE NOT PRESENT) (CONT).

KNOWN INFO
Fuel level in fuel tank OK.
Power and ground to control panel OK.
TATTLE TALE SWITCH pressed during engine startup. (No operator's error).
Fuel pump thermo switch OK.
Fuel pump thermo switch wire harness OK.
Control box 8-pin wire harness fuel pump enable (pink) wire OK.
Control box switched battery (orange) wire connection at TATTLE TALE SWITCH OK.
TATTLE TALE SWITCH OK.
Main wire harness fuel pump enable (pink) wire OK.
Engine wire harness fuel pump enable (pink) wire OK.
Fuel line from tank to injection pump not leaking, kinked, or damaged.

POSSIBLE PROBLEMS
Air in fuel system.
Fuel transfer pump faulty.
Fuel injector pump faulty.
Fuel/water separator filter clogged.
Inline fuel filter clogged.

7.

WARNING

Read WARNING on Page 4-541

Does engine start after bleeding fuel system?

NO → Go to Step 8 of this Fault.

YES → Fault corrected. Verify repair, go to Step 17 of this Fault.

TEST OPTIONS
Operational test.
REASON FOR QUESTION
Engine may not start if air has entered fuel system.

WARNING

To prevent personal injury when working with fuel, do not smoke or use open flame. Fuel is flammable and may explode. Keep fire extinguisher within reach.

OPERATIONAL TEST

(1) Perform fuel system bleeding procedure, (Para 3-8).

(2) Check if engine starts after performing fuel system bleeding procedure.

(a) If engine does not start, go to Step 8 of this Fault.

(b) If engine starts, air was in fuel system. Verify repair, go to Step 17 of this Fault.

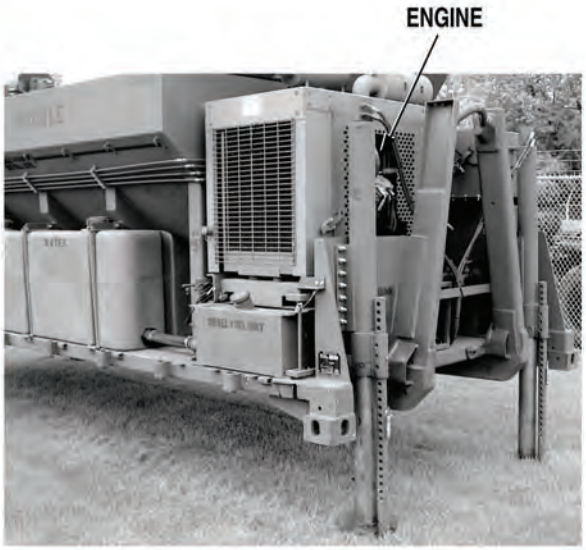

18. ENGINE CRANKS BUT FAILS TO START (EXHAUST SMOKE NOT PRESENT) (CONT).

KNOWN INFO
Fuel level in fuel tank OK.
Power and ground to control panel OK.
TATTLE TALE SWITCH pressed during engine startup. (No operator's error).
Fuel pump thermo switch OK.
Fuel pump thermo switch wire harness OK.
Control box 8-pin wire harness fuel pump enable (pink) wire OK.
Control box switched battery (orange) wire connection at TATTLE TALE SWITCH OK.
TATTLE TALE SWITCH OK.
Main wire harness fuel pump enable (pink) wire OK.
Engine wire harness fuel pump enable (pink) wire OK.
Fuel line from tank to injection pump not leaking, kinked, or damaged.
No air in fuel system.

POSSIBLE PROBLEMS
Fuel transfer pump faulty.
Fuel injector pump faulty.
Fuel/water separator filter clogged.
Inline fuel filter clogged.

8.

WARNING

Read WARNING on Page 4-543

Is fuel present at fuel line bleed screw when activating fuel transfer pump priming lever?

NO → Go to Step 10 of this Fault.

YES ↓

TEST OPTIONS
Operational test.
REASON FOR QUESTION
If fuel is not present, engine will not start.

WARNING

To prevent personal injury when working with fuel, do not smoke or use open flame. Fuel is flammable and may explode. Keep fire extinguisher within reach.

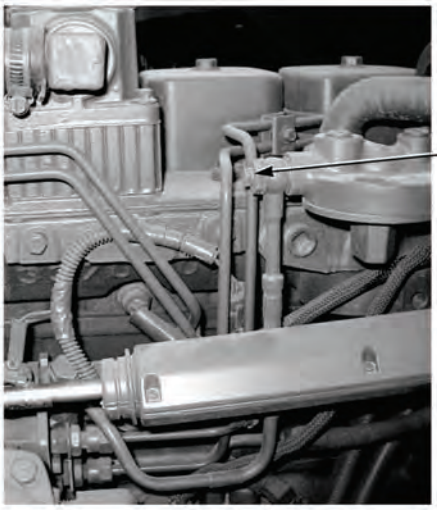

OPERATIONAL TEST

(1) Loosen fuel system bleed screw, (Para 3-133).

(2) While activating fuel transfer pump priming lever, (Para 3-8), check if fuel is present at fuel system bleed screw.

(a) If fuel is not present at fuel system bleed screw, go to Step 10 of this Fault.

(b) If fuel is present at fuel system bleed screw, go to Step 9 of this Fault.

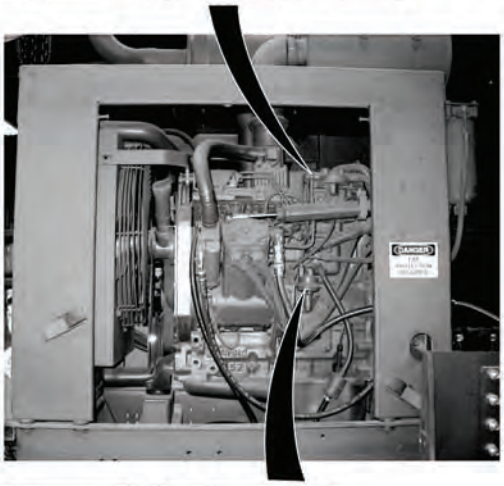

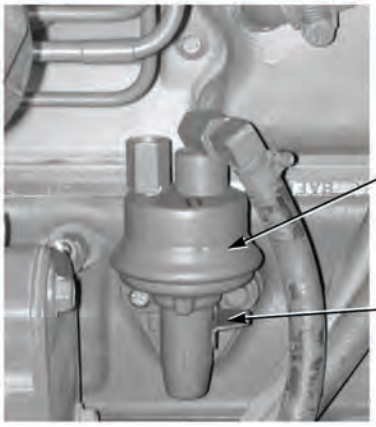

18. ENGINE CRANKS BUT FAILS TO START (EXHAUST SMOKE NOT PRESENT) (CONT).

KNOWN INFO

- Fuel level in fuel tank OK.
- Power and ground to control panel OK.
- TATTLE TALE SWITCH pressed during engine startup. (No procedural errors).
- Fuel pump thermo switch OK.
- Fuel pump thermo switch wire harness OK.
- Control box 8-pin wire harness fuel pump enable (pink) wire OK.
- Control box switched battery (orange) wire connection at TATTLE TALE SWITCH OK.
- TATTLE TALE SWITCH OK.
- Main wire harness fuel pump enable (pink) wire OK.
- Engine wire harness fuel pump enable (pink) wire OK.
- Fuel line from tank to injection pump not leaking, kinked, or damaged.
- No air in fuel system.
- Fuel/water separator filter not clogged.
- Inline fuel filter not clogged.

POSSIBLE PROBLEMS

- Fuel transfer pump faulty.
- Fuel injector pump faulty.

9.

WARNING

Read WARNING on Page 4-545

Is fuel present at fuel line bleed screw when cranking engine (do not press TATTLE TALE SWITCH)?

NO → Replace fuel transfer pump, (3-98). Verify repair, go to Step 17 of this Fault.

YES → Replace fuel injector pump, (3-117). Verify repair, go to Step 17 of this Fault.

TEST OPTIONS

Operational test.

REASON FOR QUESTION

If fuel is present at fuel line bleed screw, fuel injector pump is faulty. If not, fuel transfer pump is faulty.

WARNING

To prevent personal injury when working with fuel, do not smoke or use open flame. Fuel is flammable and may explode. Keep fire extinguisher within reach.

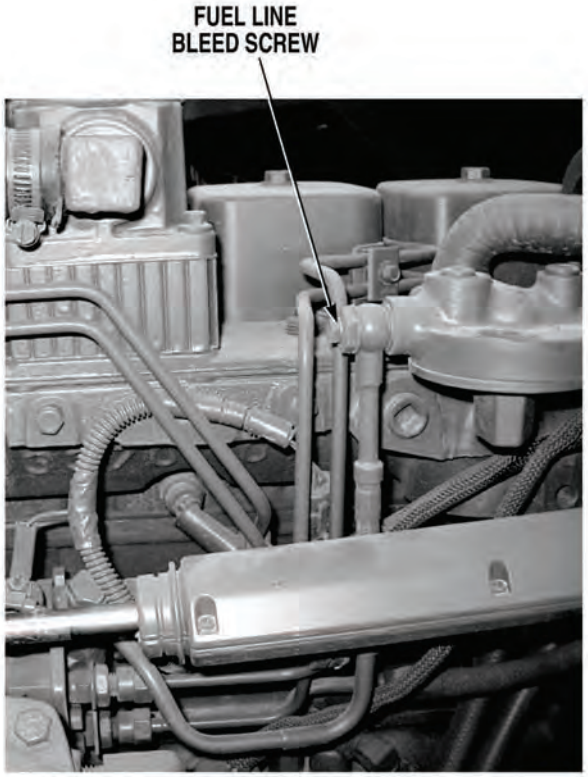

OPERATIONAL TEST

NOTE

Do not press in TATTLE TALE SWITCH.

(1) While an assistant turns IGNITION SWITCH to START position, (Para 2-1) to crank over engine, check if fuel is present at fuel line bleed screw.

(a) If fuel is not present at fuel line bleed screw, replace fuel transfer pump, (Para 3-98).

(b) If fuel is present at fuel line bleed screw, replace fuel injector pump, (Para 3-117).

(2) Verify repair, go to Step 16 of this Fault.

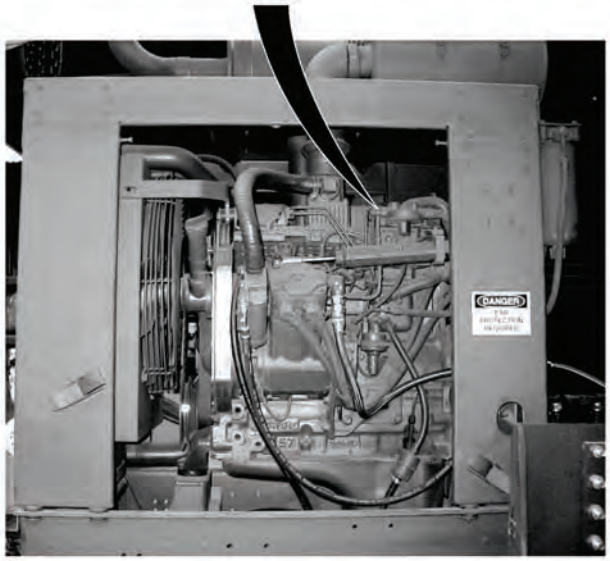

18. ENGINE CRANKS BUT FAILS TO START (EXHAUST SMOKE NOT PRESENT) (CONT).

KNOWN INFO

- Fuel level in fuel tank OK.
- Power and ground to control panel OK.
- TATTLE TALE SWITCH pressed during engine startup. (No procedural errors).
- Fuel pump thermo switch OK.
- Fuel pump thermo switch wire harness OK.
- Control box 8-pin wire harness fuel pump enable (pink) wire OK.
- Control box switched battery (orange) wire connection at TATTLE TALE SWITCH OK.
- TATTLE TALE SWITCH OK.
- Main wire harness fuel pump enable (pink) wire OK.
- Engine wire harness fuel pump enable (pink) wire OK.
- Fuel line from tank to injection pump not leaking, kinked, or damaged.
- No air in fuel system.
- Fuel injector pump OK.

POSSIBLE PROBLEMS

- Fuel transfer pump faulty.
- Fuel/water separator filter clogged.
- Inline fuel filter clogged.

10.

WARNING

Read WARNING on Page 4-547

Is fuel present at input of water separator/fuel filter when activating fuel transfer pump priming lever?

NO → Go to Step 11 of this Fault.

YES → Replace water separator/fuel filter, (Para 3-27). Verify repair, go to Step 17 of this Fault.

TEST OPTIONS

Operational test.

REASON FOR QUESTION

If fuel is present at water separator/fuel filter, water separator/fuel filter is faulty.

WARNING

To prevent personal injury when working with fuel, do not smoke or use open flame. Fuel is flammable and may explode. Keep fire extinguisher within reach.

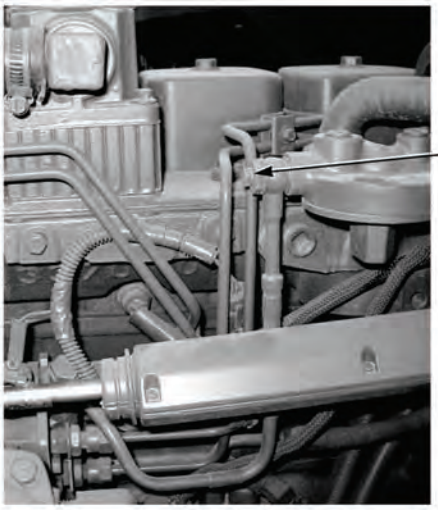

OPERATIONAL TEST

(1) Tighten fuel line bleed screw, (Para 3-133).

(2) Disconnect fuel line at water separator/fuel filter input, (Para 3-133).

(3) While activating fuel transfer pump priming lever, (Para 3-8), check if fuel is present at water separator/fuel filter input fuel line.

(a) If fuel is not present, reconnect fuel line at water separator/fuel filter and go to Step 11 of this Fault.

(b) If fuel is present, reconnect fuel line at water separator/fuel filter and replace water separator/fuel filter, (Para 3-28). Verify repair, go to Step 17 of this Fault.

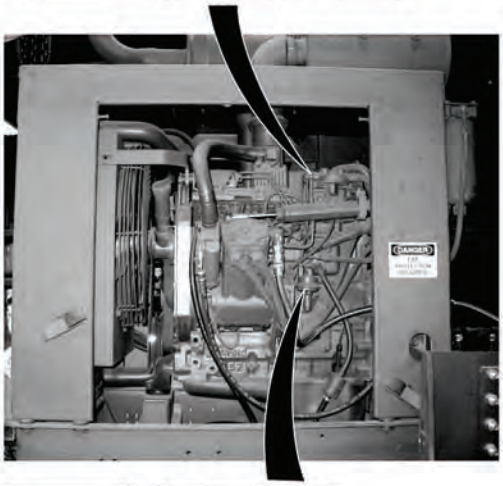

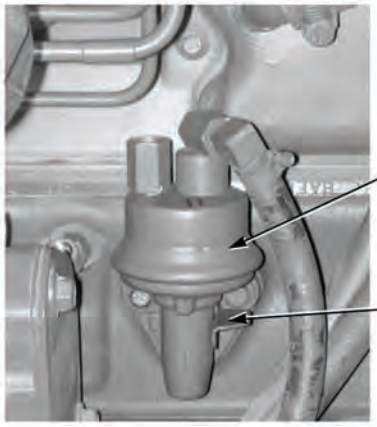

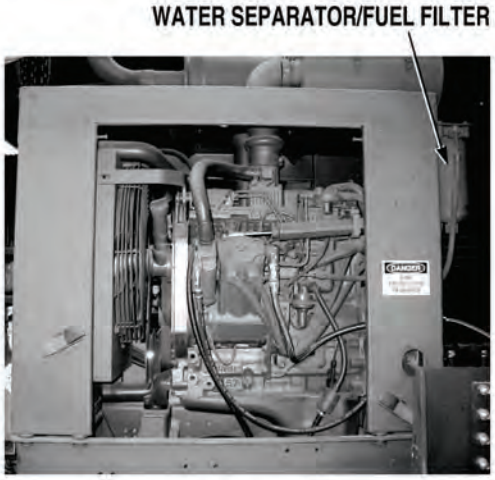

18. ENGINE CRANKS BUT FAILS TO START (EXHAUST SMOKE NOT PRESENT) (CONT).

KNOWN INFO

- Fuel level in fuel tank OK.
- Power and ground to control panel OK.
- TATTLE TALE SWITCH pressed during engine startup. (No procedural errors).
- Fuel pump thermo switch OK.
- Fuel pump thermo switch wire harness OK.
- Control box 8-pin wire harness fuel pump enable (pink) wire OK.
- Control box switched battery (orange) wire connection at TATTLE TALE SWITCH OK.
- TATTLE TALE SWITCH OK.
- Main wire harness fuel pump enable (pink) wire OK.
- Engine wire harness fuel pump enable (pink) wire OK.
- Fuel line from tank to injection pump not leaking, kinked, or damaged.
- No air in fuel system.
- Fuel injector pump OK.
- Fuel/water separator filter not clogged.

POSSIBLE PROBLEMS

- Fuel transfer pump faulty.
- Inline fuel filter clogged.

11.

WARNING

Read WARNING on Page 4-549

Does engine start after replacing inline fuel filter?

NO → Replace fuel transfer pump, (Para 3-97). Verify repair, go to Step 17 of this Fault.

YES → Fault corrected. Verify repair, go to Step 17 of this Fault.

TEST OPTIONS

Operational test.

REASON FOR QUESTION

If engine starts after replacing inline fuel filter, inline fuel filter is faulty. If not, fuel transfer pump is faulty.

WARNING

To prevent personal injury when working with fuel, do not smoke or use open flame. Fuel is flammable and may explode. Keep fire extinguisher within reach.

OPERATIONAL TEST
(1) Replace inline fuel filter, (Para 3-29).
(2) Check if engine starts, (Para 2-19).
(a) If engine does not start, replace fuel transfer pump, (Para 3-98).
(b) If engine starts, inline fuel filter was faulty, fault corrected.
(3) Verify repair, go to Step 17 of this Fault.

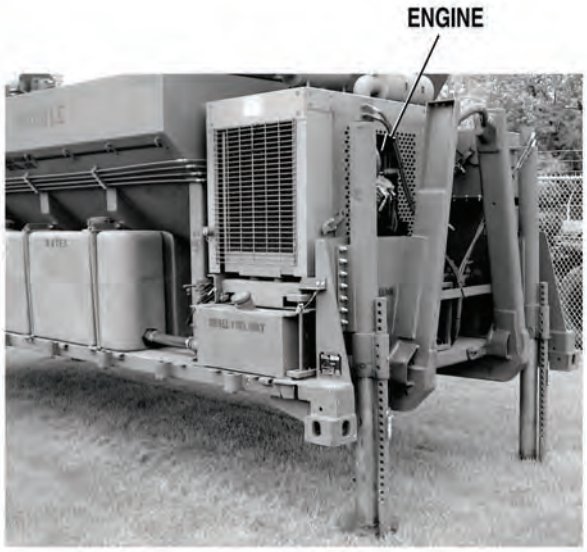

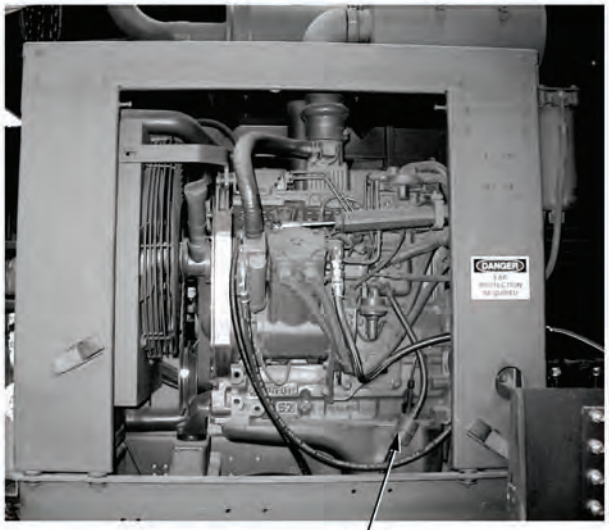

18. ENGINE CRANKS BUT FAILS TO START (EXHAUST SMOKE NOT PRESENT) (CONT).

KNOWN INFO

- Fuel level in fuel tank OK.
- Power and ground to control panel OK.
- TATTLE TALE SWITCH pressed during engine startup. (No procedural errors).
- Fuel pump thermo switch OK.
- Fuel pump thermo switch wire harness OK.
- Fuel line from tank to injection pump not leaking, kinked, or damaged.
- No air in fuel system.
- Fuel transfer pump OK.
- Fuel injector pump OK.
- Fuel/water separator filter not clogged.
- Inline fuel filter not clogged.

POSSIBLE PROBLEMS

- Control box 8-pin wire harness fuel pump enable (pink) wire faulty.
- Control box switched battery (orange) wire connection at TATTLE TALE SWITCH faulty.
- TATTLE TALE SWITCH faulty.
- Main wire harness fuel pump enable (pink) wire faulty.
- Engine wire harness fuel pump enable (pink) wire faulty.

12.

WARNING

Read WARNING on Page 4-551

Is continuity measured across fuel pump enable (pink) wire from engine wire harness fuel injector pump terminal to main wire harness 8-pin connector, terminal A?

NO → Go to Step 15 of this Fault.

YES ↓

TEST OPTIONS

Continuity test.

REASON FOR QUESTION

To further isolate fault.

WARNING

Remove all jewelry such as rings, dog tags, bracelets etc. If jewelry or tools contact positive electrical circuits, a direct short may result. Damage to equipment, injury or death to personnel may occur.

CONTINUITY TEST

(1) Release TATTLE TALE SWITCH, (Para 2-1).

(2) Turn IGNITION SWITCH OFF, (Para 2-1).

(3) Disconnect main wire harness 8-pin connector, (Para 3-134).

(4) Disconnect engine wire harness fuel injector pump enable (pink) wire, (Para 3-136).

(5) Set multimeter select switch to ohms.

(6) Connect jumperwire between engine wire harness fuel injector pump enable (pink) wire and a known good ground.

(7) Connect positive (+) multimeter lead to fuel pump enable (pink) wire at main wire harness 8-pin connector, terminal A.

(8) Connect negative (-) multimeter lead to a known good ground.

(a) If continuity is not measured, go to Step 15 of this Fault.

(b) If continuity is measured, go to Step 13 of this Fault.

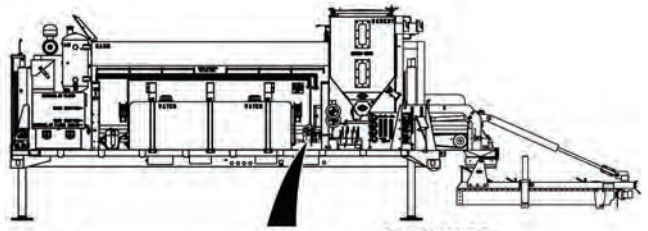

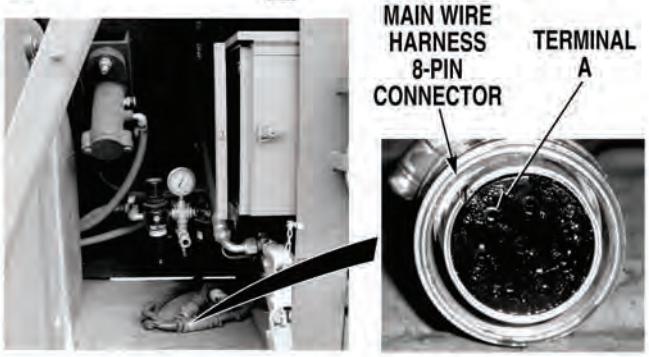

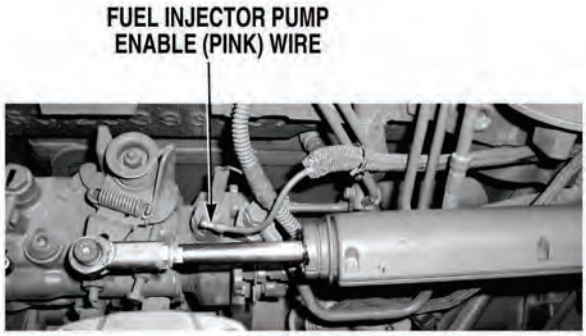

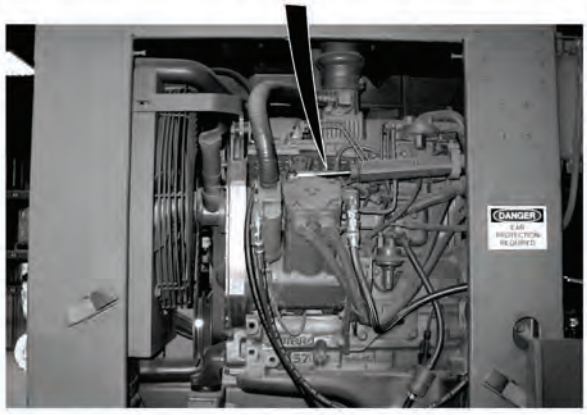

18. ENGINE CRANKS BUT FAILS TO START (EXHAUST SMOKE NOT PRESENT) (CONT).

KNOWN INFO

- Fuel level in fuel tank OK.
- Power and ground to control panel OK.
- TATTLE TALE SWITCH pressed during engine startup. (No procedural errors).
- Fuel pump thermo switch OK.
- Fuel pump thermo switch wire harness OK.
- Fuel line from tank to injection pump not leaking, kinked, or damaged.
- No air in fuel system.
- Fuel transfer pump OK.
- Fuel injector pump OK.
- Fuel/water separator filter not clogged.
- Inline fuel filter not clogged.
- Main wire harness fuel pump enable (pink) wire OK.
- Engine wire harness fuel pump enable (pink) wire OK.

POSSIBLE PROBLEMS

- Control box 8-pin wire harness fuel pump enable (pink) wire faulty.
- Control box switched battery (orange) wire connection at TATTLE TALE SWITCH faulty.
- TATTLE TALE SWITCH faulty.

13.

WARNING

Read WARNING on Page 4-553

Is continuity measured across control box 8-pin harness fuel pump enable (pink) wire from connector, terminal A to TATTLE TALE SWITCH, terminal NC?

NO → Repair wire, (Para 3-141) or replace control box 8-pin wire harness, (Para 3-137). Verify repair, go to Step 17 of this Fault.

YES ↓

TEST OPTIONS

Continuity test.

REASON FOR QUESTION

If continuity is not measured, control box 8-pin wire harness fuel pump enable (pink) wire is faulty.

WARNING

Remove all jewelry such as rings, dog tags, bracelets etc. If jewelry or tools contact positive electrical circuits, a direct short may result. Damage to equipment, injury or death to personnel may occur.

CONTINUITY TEST

(1) Remove control box from Concrete Mobile Mixer, (Para 3-90).

(2) Remove screw from top of control panel. Gently tip control panel forward for access to wires.

(3) Set multimeter select switch to ohms.

(4) Connect positive (+) multimeter lead to control box 8-pin wire harness connector, terminal A.

(5) Connect negative (-) multimeter lead to TATTLE TALE SWITCH, terminal NC.

(a) If continuity is not measured, repair fuel pump enable (pink) wire, (Para 3-141) or repair control box 8-pin wire harness, (Para 3-137). Verify repair, go to Step 17 of this Fault.

(b) If continuity is measured, go to Step 14 of this Fault.

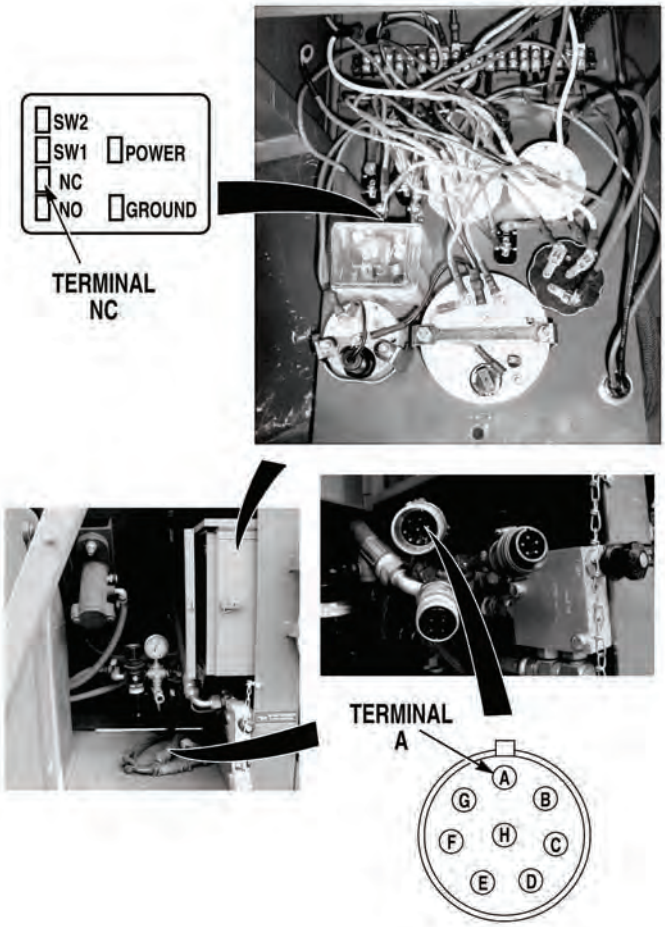

18. ENGINE CRANKS BUT FAILS TO START (EXHAUST SMOKE NOT PRESENT) (CONT).

KNOWN INFO

- Fuel level in fuel tank OK.
- Power and ground to control panel OK.
- TATTLE TALE SWITCH pressed during engine startup. (No procedural errors).
- Fuel pump thermo switch OK.
- Fuel pump thermo switch wire harness OK.
- Fuel line from tank to injection pump not leaking, kinked, or damaged.
- No air in fuel system.
- Fuel transfer pump OK.
- Fuel injector pump OK.
- Fuel/water separator filter not clogged.
- Inline fuel filter not clogged.
- Main wire harness fuel pump enable (pink) wire OK.
- Engine wire harness fuel pump enable (pink) wire OK.
- Control box 8-pin wire harness fuel pump enable (pink) wire OK.

POSSIBLE PROBLEMS

- Control box switched battery (orange) wire connection at TATTLE TALE SWITCH faulty.
- TATTLE TALE SWITCH faulty.

14.

Is control box switched battery (orange) wire connection at TATTLE TALE SWITCH, terminal B secure and free from damage?

NO → Repair control box switched battery (orange) wire connection or replace control box, (Para 3-90). Verify repair, go to Step 17 of this Fault.

YES → Replace TATTLE TALE switch, (Para 3-60). Verify repair, go to Step 17 of this Fault.

TEST OPTIONS

Visual inspection.

REASON FOR QUESTION

If control box switched battery (orange) wire is secure and free from damage, TATTLE TALE SWITCH is faulty. If not, fuel injector pump will not be enabled and engine will not start.

VISUAL INSPECTION

(1) Check if control box switched (orange) wire connection at TATTLE TALE SWITCH is secure and free from damage.

(a) If control box switched (orange) wire connection is not secure and free from damage, tighten or repair wire connection, (Para 3-141) or replace control box, (Para 3-90).

(b) If control box switched (orange) wire connection is secure and free from damage, replace TATTLE TALE SWITCH, (Para 3-60).

(2) Verify repair, go to Step 17 of this Fault.

18. ENGINE CRANKS BUT FAILS TO START (EXHAUST SMOKE NOT PRESENT) (CONT).

KNOWN INFO

- Fuel level in fuel tank OK.
- Power and ground to control panel OK.
- TATTLE TALE SWITCH pressed during engine startup. (No procedural errors).
- Fuel pump thermo switch OK.
- Fuel pump thermo switch wire harness OK.
- Fuel line from tank to injection pump not leaking, kinked, or damaged.
- No air in fuel system.
- Fuel transfer pump OK.
- Fuel injector pump OK.
- Fuel/water separator filter not clogged.
- Inline fuel filter not clogged.
- Control box 8-pin wire harness fuel pump enable (pink) wire OK.
- Control box switched battery (orange) wire connection at TATTLE TALE SWITCH OK.
- TATTLE TALE SWITCH OK.

POSSIBLE PROBLEMS

- Main wire harness fuel pump enable (pink) wire faulty.
- Engine wire harness fuel pump enable (pink) wire faulty.

15.

WARNING

Read WARNING on Page 4-557

Is continuity measured across main wire harness fuel pump enable (pink) wire from engine connector, terminal A to 8-pin connector, terminal A?

NO → Repair wire, (Para 3-141) or replace main wire harness, (Para 3-134). Verify repair, go to Step 17 of this Fault.

YES → Repair wire, (Para 3-141) or replace engine wire harness, (Para 3-136). Verify repair, go to Step 17 of this Fault.

TEST OPTIONS

Continuity test.

REASON FOR QUESTION

If continuity is measured, engine harness fuel pump enable (pink) wire is faulty. If not, main wire harness fuel pump enable (pink) wire is faulty.

WARNING

Remove all jewelry such as rings, dog tags, bracelets etc. If jewelry or tools contact positive electrical circuits, a direct short may result. Damage to equipment, injury or death to personnel may occur.

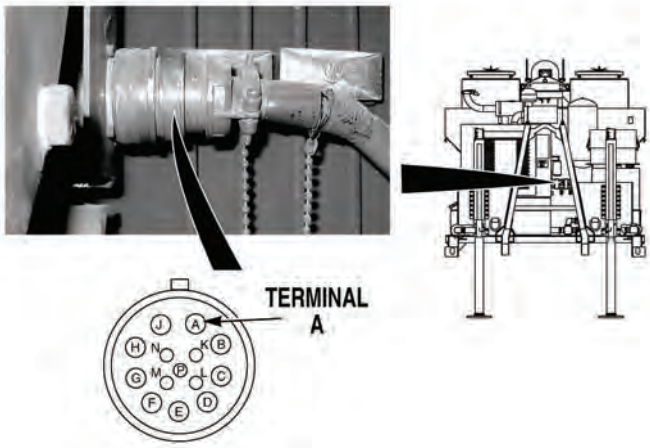

CONTINUITY TEST

(1) Disconnect main wire harness at engine harness connector, (Para 3-134).

(2) Set multimeter select switch to ohms.

(3) Connect jumperwire between main wire harness fuel pump enable (pink) wire at engine harness connector, terminal A and a known good ground.

(4) Connect positive (+) multimeter lead to main wire harness fuel pump enable (pink) wire at control box 8-pin connector, terminal A.

(5) Connect negative (-) multimeter lead to a known good ground.

(a) If continuity is not measured, repair fuel pump enable (pink) wire, (Para 3-140) or replace main wire harness, (Para 3-134).

(b) If continuity is measured, repair fuel pump enable (pink) wire, (Para 3-141) or replace engine wire harness, (Para 3-136).

(6) Verify repair, go to Step 17 of this Fault.

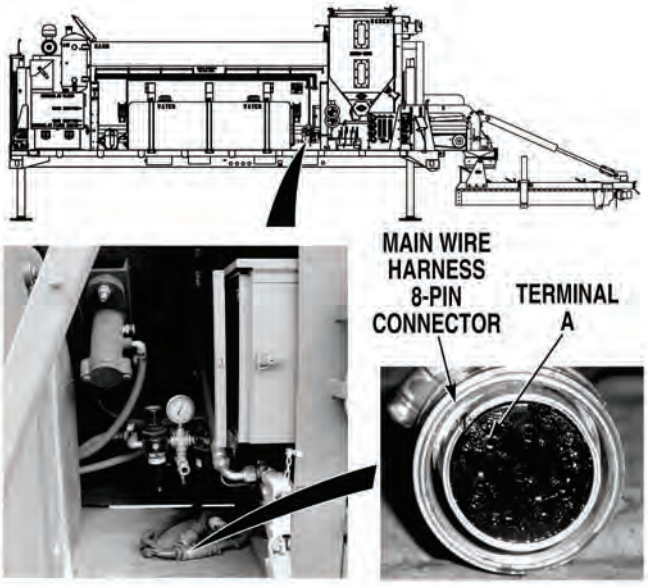

18. ENGINE CRANKS BUT FAILS TO START (EXHAUST SMOKE NOT PRESENT) (CONT).

KNOWN INFO

- Fuel level in fuel tank OK.
- Power and ground to control panel OK.
- TATTLE TALE SWITCH pressed during engine startup. (No procedural errors).
- Fuel line from tank to injection pump not leaking, kinked, or damaged.
- No air in fuel system.
- Fuel transfer pump OK.
- Fuel injector pump OK.
- Fuel/water separator filter not clogged.
- Inline fuel filter not clogged.
- Control box 8-pin wire harness fuel pump enable (pink) wire OK.
- Control box switched battery (orange) wire connection at TATTLE TALE SWITCH OK.
- TATTLE TALE SWITCH OK.
- Main wire harness fuel pump enable (pink) wire OK.
- Engine wire harness fuel pump enable (pink) wire OK.

POSSIBLE PROBLEMS

- Fuel pump thermo switch faulty.
- Fuel pump thermo switch wire harness faulty.

16.

WARNING

Read WARNING on Page 4-559

Is continuity measured across fuel pump thermo switch connector, outside terminals?

NO → Replace fuel pump thermo switch, (Para 3-112). Verify repair, go to Step 17 of this Fault.

YES → Replace fuel pump thermo switch harness, (Para 3-112). Verify repair, go to Step 17 of this Fault.

TEST OPTIONS

Continuity test.

REASON FOR QUESTION

If continuity is present, fuel pump thermo switch harness is faulty. If not, fuel pump thermo switch is faulty.

WARNING

Remove all jewelry such as rings, dog tags, bracelets etc. If jewelry or tools contact positive electrical circuits, a direct short may result. Damage to equipment, injury or death to personnel may occur.

CONTINUITY TEST

(1) Disconnect fuel pump thermo switch connector, (Para 3-112).

(2) Set multimeter select switch to ohms.

(3) Connect positive (+) multimeter lead to fuel pump thermo switch connector, outside terminal.

(4) Connect negative (-) multimeter lead to fuel pump thermo switch connector, opposite outside terminal.

(a) If continuity is not measured, replace fuel pump thermo switch, (Para 3-112).

(b) If continuity is measured, replace fuel pump thermo switch harness, (Para 3-112).

(5) Verify repair, go to Step 17 of this Fault.

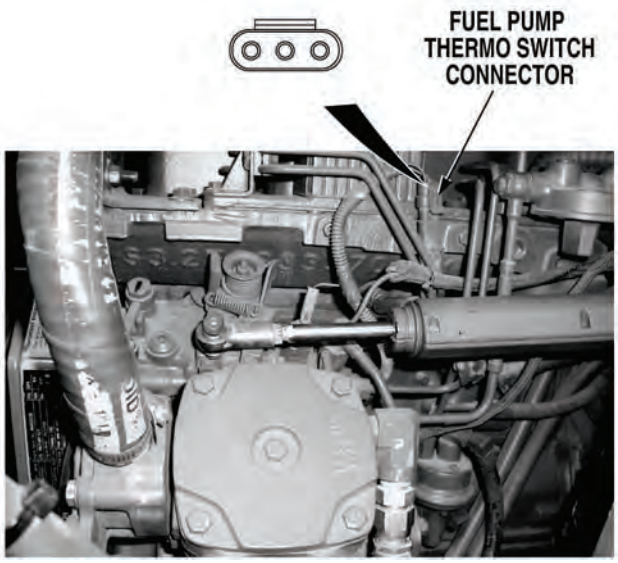

18. ENGINE CRANKS BUT FAILS TO START (EXHAUST SMOKE NOT PRESENT) (CONT).

KNOWN INFO
Fuel level in fuel tank OK. Power and ground to control panel OK. TATTLE TALE SWITCH pressed during engine startup. (No procedural errors). Fuel pump thermo switch OK. Fuel pump thermo switch wire harness OK. Fuel line from tank to injection pump not leaking, kinked, or damaged. No air in fuel system. Fuel transfer pump OK. Fuel injector pump OK. Fuel/water separator filter not clogged. Inline fuel filter not clogged. Control box 8-pin wire harness fuel pump enable (pink) wire OK. Control box switched battery (orange) wire connection at TATTLE TALE SWITCH OK. TATTLE TALE SWITCH OK. Main wire harness fuel pump enable (pink) wire OK. Engine wire harness fuel pump enable (pink) wire OK.
POSSIBLE PROBLEMS
None.

17.

Does engine start?

NO → Fault not corrected. Notify Supervisor.

YES → Fault corrected.

TEST OPTIONS
Verify repair.
REASON FOR QUESTION
If engine starts, fault has been corrected.

VERIFY REPAIR

(1) If open, close control panel and install screw at top of control panel.

(2) If removed, install control box on Concrete Mobile Mixer, (Para 3-90).

(3) If disconnected, connect main wire harness at control box 8-pin wire harness connector, (Para 3-134).

(4) If disconnected, connect main wire harness at engine harness connector, (Para 3-134).

(5) If disconnected, connect fuel pump thermo switch harness connections, (Para 3-136).

(6) Start engine, (Para 2-19).

  (a) If engine does not start, Fault not corrected, notify Supervisor.

  (b) If engine starts, Fault has been corrected.

(7) Shut OFF engine, (Para 2-19).

(8) Install front engine access panel, (Para 3-78).

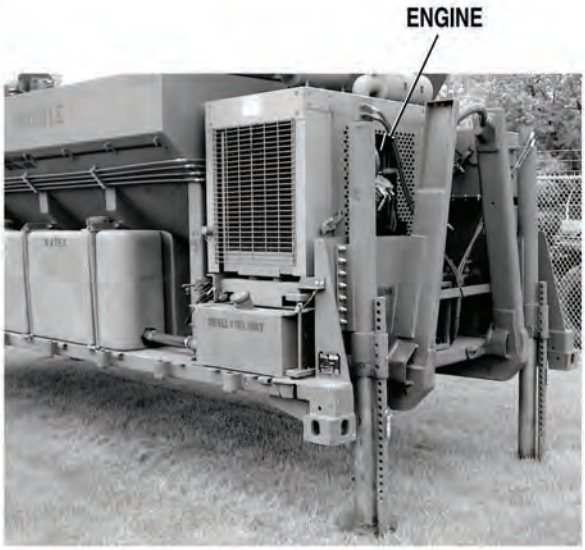

19. ENGINE CRANKS BUT HARD TO START OR WILL NOT START (EXHAUST SMOKE PRESENT).

INITIAL SETUP

Tools and Special Tools
Tool Kit, General Mechanic's: Automotive (Item 19, Appendix I)
Suitable Drain Pan

Equipment Condition
Concrete Mobile Mixer unloaded from PLS, (Para 2-5)
Engine OFF, (Para 2-19)

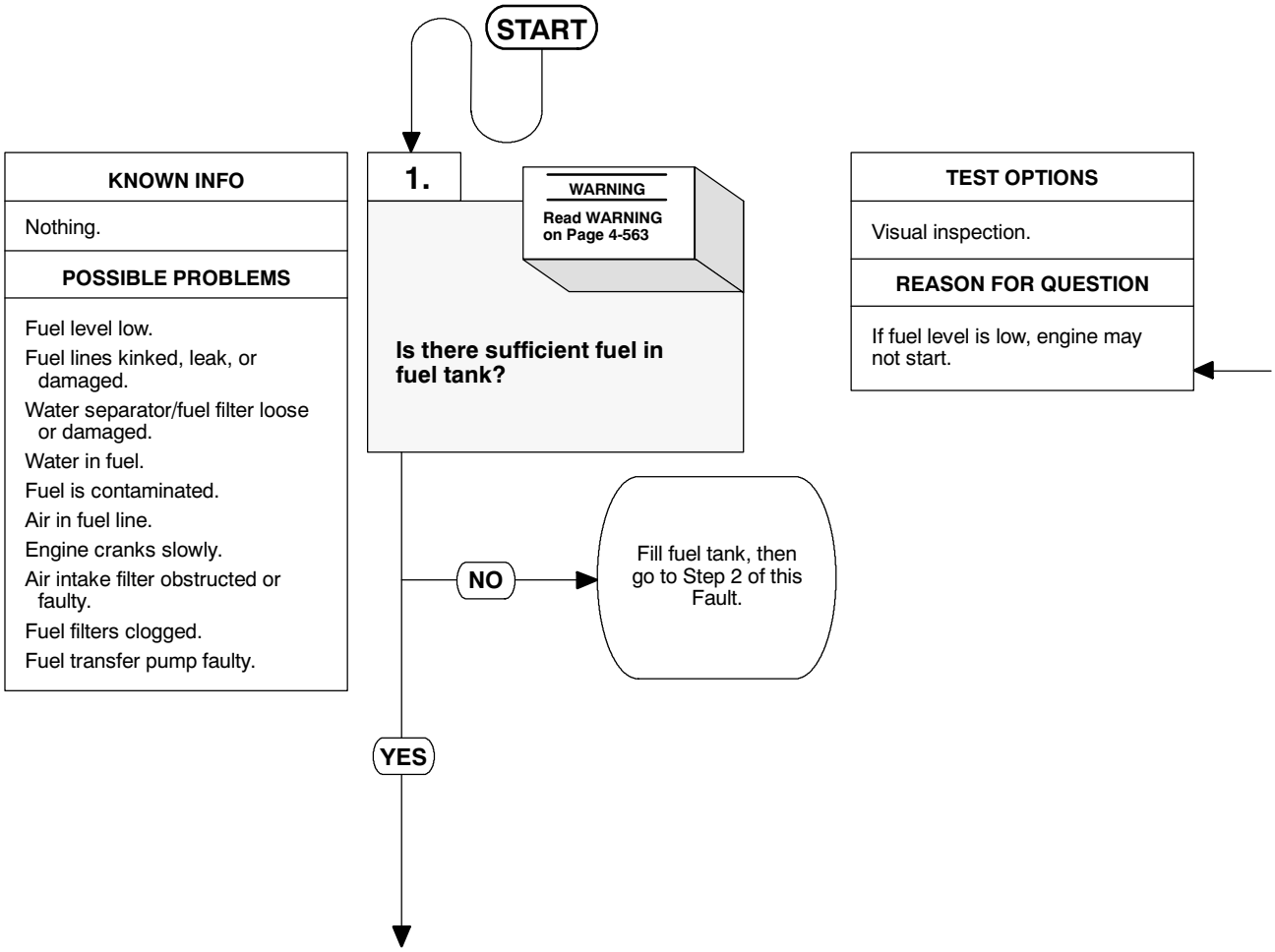

WARNING

To prevent personal injury when working with fuel, do not smoke or use open flame. Fuel is flammable and may explode. Keep fire extinguisher within reach.

VISUAL INSPECTION
Check if there is sufficient fuel in fuel tank. (a) If there is not sufficient fuel in fuel tank, fill fuel tank, then go to Step 2 of this Fault. (b) If there is sufficient fuel in fuel tank, go to Step 2 of this Fault.

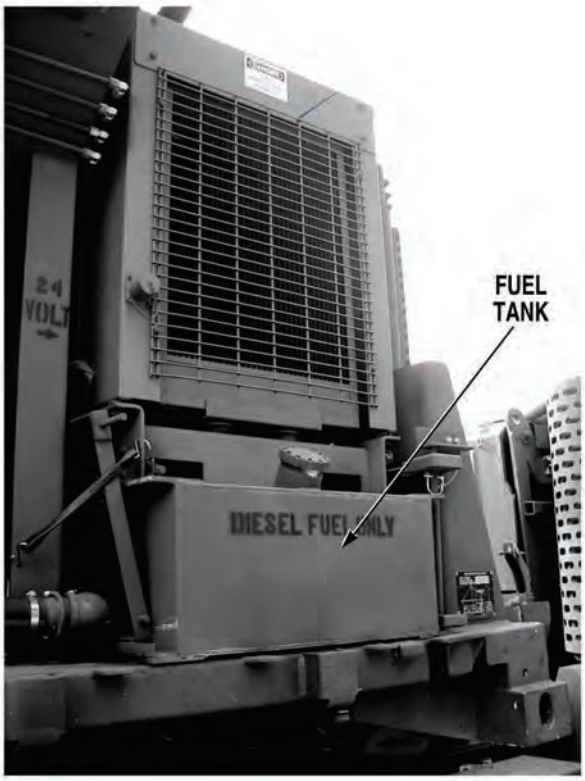

19. ENGINE CRANKS BUT HARD TO START OR WILL NOT START (EXHAUST SMOKE PRESENT) (CONT).

KNOWN INFO
Fuel level OK.
POSSIBLE PROBLEMS
Fuel lines kinked, leak, or damaged. Water separator/fuel filter loose or damaged. Water in fuel. Fuel is contaminated. Air in fuel line. Engine cranks slowly. Air intake filter obstructed or faulty. Fuel filters clogged. Fuel transfer pump faulty.

2.

Are all fuel lines free from kinks, leaks, and damage?

NO → Repair leaks or replace damaged fuel lines, (Para 3-133). Verify repair, go to Step 11 of this Fault.

YES ↓

TEST OPTIONS
Visual inspection.
REASON FOR QUESTION
If fuel lines are not free from kinks, leaks, and damage, engine may be hard to start or will not start.

VISUAL INSPECTION

(1) Remove front engine access panel, (Para 3-78).

(2) Check if fuel lines are free from kinks, leaks, and damage.

(a) If fuel lines are not free from kinks, leaks, and damage, repair leaks or replace damaged fuel lines, (Para 3-133). Verify repair, go to Step 11 of this Fault.

(b) If fuel lines are free from kinks, leaks, and damage, go to Step 3 of this Fault.

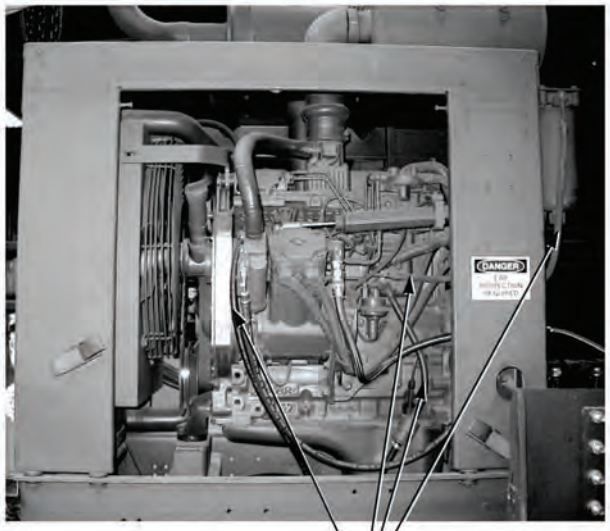

FUEL LINES

19. ENGINE CRANKS BUT HARD TO START OR WILL NOT START (EXHAUST SMOKE PRESENT) (CONT).

KNOWN INFO

Fuel level OK.

Fuel lines not kinked, leak, or damaged.

POSSIBLE PROBLEMS

Water separator/fuel filter loose or damaged.

Water in fuel.

Fuel is contaminated.

Air in fuel line.

Engine cranks slowly.

Air intake filter obstructed or faulty.

Fuel filters clogged.

Fuel transfer pump faulty.

3.

WARNING

Read WARNING on Page 4-567

Is water separator/fuel filter tight and free from damage?

NO → Tighten or replace water separator/fuel filter, (Para 3-28). Verify repair, go to Step 11 of this Fault.

YES ↓

TEST OPTIONS

Visual inspection.

REASON FOR QUESTION

If engine separator/fuel filter is not tight and free from damage, engine may start hard or fail to start.

WARNING

To prevent personal injury when working with fuel, do not smoke or use open flame. Fuel is flammable and may explode. Keep fire extinguisher within reach.

VISUAL INSPECTION

Check if water separator/fuel filter is tight and free from damage.

(a) If water separator/fuel filter is loose or damaged, tighten or replace water separator/fuel filter, (Para 3-28). Verify repair, go to Step 11 of this Fault.

(b) If water separator/fuel filter is tight and free from damage, go to Step 4 of this Fault.

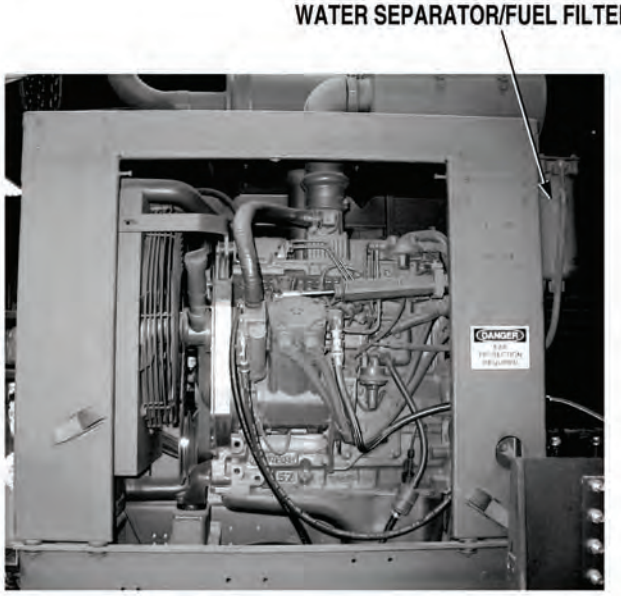

19. ENGINE CRANKS BUT HARD TO START OR WILL NOT START (EXHAUST SMOKE PRESENT) (CONT).

KNOWN INFO

Fuel level OK.
Fuel lines not kinked, leak, or damaged.
Water separator/fuel filter not loose or damaged.

POSSIBLE PROBLEMS

Water in fuel.
Fuel is contaminated.
Air in fuel line.
Engine cranks slowly.
Air intake filter obstructed or faulty.
Fuel filters clogged.
Fuel transfer pump faulty.

4.

WARNING
Read WARNING on Page 4-569

Is water separator/fuel filter free from excessive water and contaminants?

NO → Drain and flush fuel tank and lines and replace inline filter, (Para 3-29) and water separator/fuel filters, (Para 3-28). Verify repair, go to Step 11 of this Fault.

YES ↓

TEST OPTIONS

Visual inspection.

REASON FOR QUESTION

If water separator/fuel filter is not free from excessive water and contaminants, engine may start hard or not start.

WARNING

To prevent personal injury when working with fuel, do not smoke or use open flame. Fuel is flammable and may explode. Keep fire extinguisher within reach.

VISUAL INSPECTION

(1) Drain water separator/fuel filter, (Para 2-6).

NOTE

It is normal for some water and sediment to drain from water separator/fuel filter.

(2) Check if water separator/fuel filter is free from excessive water and contaminants.

(a) If water separator/fuel filter is not free from excessive water and contaminants, drain and flush fuel tank and lines and replace inline, (Para 3-29) and water separator/fuel filters, (Para 3-28). Verify repair, go to Step 11 of this Fault.

(b) If water separator/fuel filter is free from excessive water and contaminants, go to Step 5 of this Fault.

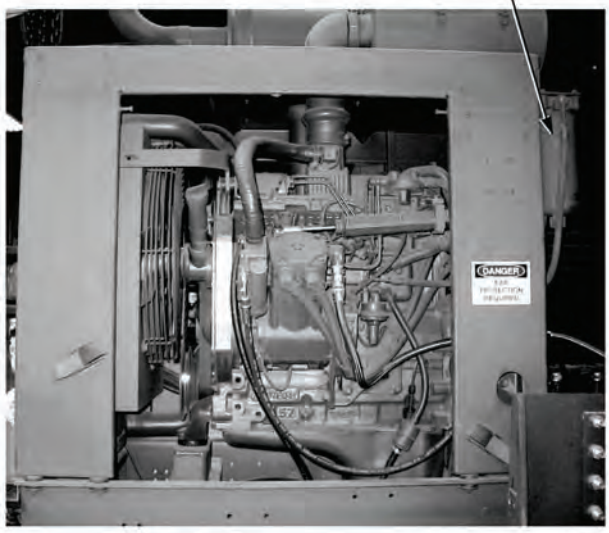

19. ENGINE CRANKS BUT HARD TO START OR WILL NOT START (EXHAUST SMOKE PRESENT) (CONT).

KNOWN INFO
Fuel level OK. Fuel lines not kinked, leak, or damaged. Water separator/fuel filter not loose or damaged. No water in fuel.
POSSIBLE PROBLEMS
Fuel is contaminated. Air in fuel line. Engine cranks slowly. Air intake filter obstructed or faulty. Fuel filters clogged. Fuel transfer pump faulty.

5.

WARNING

Read WARNING on Page 4-571

Does engine start after bleeding fuel system?

NO → Go to Step 6 of this Fault.

YES → Fault corrected. Verify repair, go to Step 11 of this Fault.

TEST OPTIONS
Operational test.
REASON FOR QUESTION
If engine starts after bleeding fuel line, air in fuel line was preventing engine from starting.

WARNING

To prevent personal injury when working with fuel, do not smoke or use open flame. Fuel is flammable and may explode. Keep fire extinguisher within reach.

OPERATIONAL TEST
(1) Perform fuel system bleed procedure, (Para 3-8). (2) Start engine, (Para 2-19). (a) If engine does not start after bleeding fuel system, go to Step 6 of this Fault. (b) If engine starts after bleeding fuel line, fault corrected. Verify repair, go to Step 11 of this Fault.

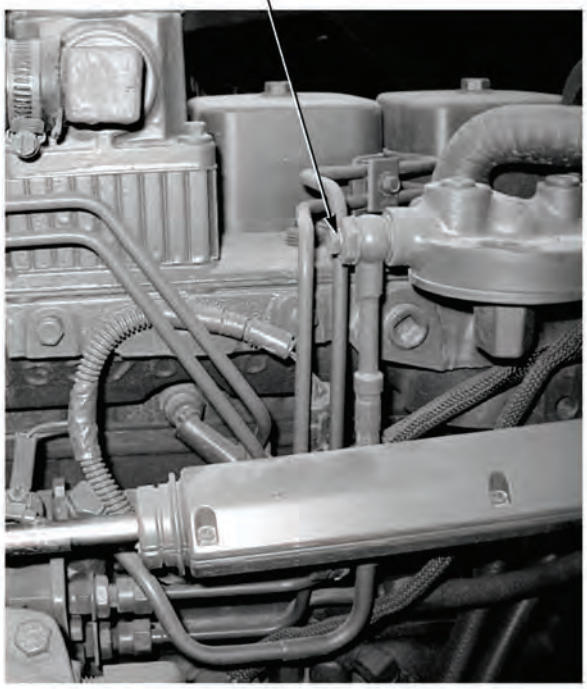

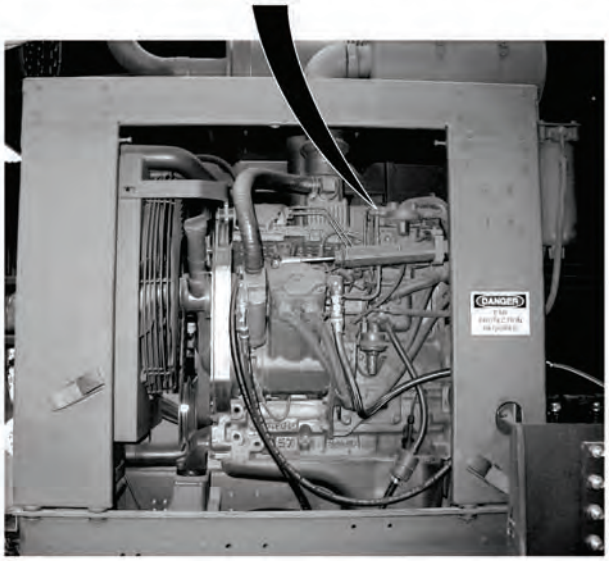

19. ENGINE CRANKS BUT HARD TO START OR WILL NOT START (EXHAUST SMOKE PRESENT) (CONT).

KNOWN INFO
Fuel level OK. Fuel lines not kinked, leak, or damaged. Water separator/fuel filter not loose or damaged. No water in fuel.
POSSIBLE PROBLEMS
Fuel is contaminated. Air in fuel line. Engine cranks slowly. Air intake filter obstructed or faulty. Fuel filters clogged. Fuel transfer pump faulty.

6.

Is engine cranking speed greater than 150 RPM?

NO → Go to “Engine Fails to Crank or Cranks Slowly”, (Fault 22).

YES ↓

TEST OPTIONS
Operational test.
REASON FOR QUESTION
If engine cranking speed is not greater than 150 RPM, another troubleshooting procedure applies.

OPERATIONAL TEST
(1) Turn IGNITION SWITCH to start position, (Para 2-1). Do not press TATTLE TALE SWITCH. (2) Check if engine cranking speed is greater than 150 RPM. (a) If engine cranking speed is not greater than 150 RPM, go to “Engine Fails to Crank or Cranks Slowly”, (Fault 22). (b) If engine cranking speed is greater than 150 RPM, go to Step 7 of this Fault.

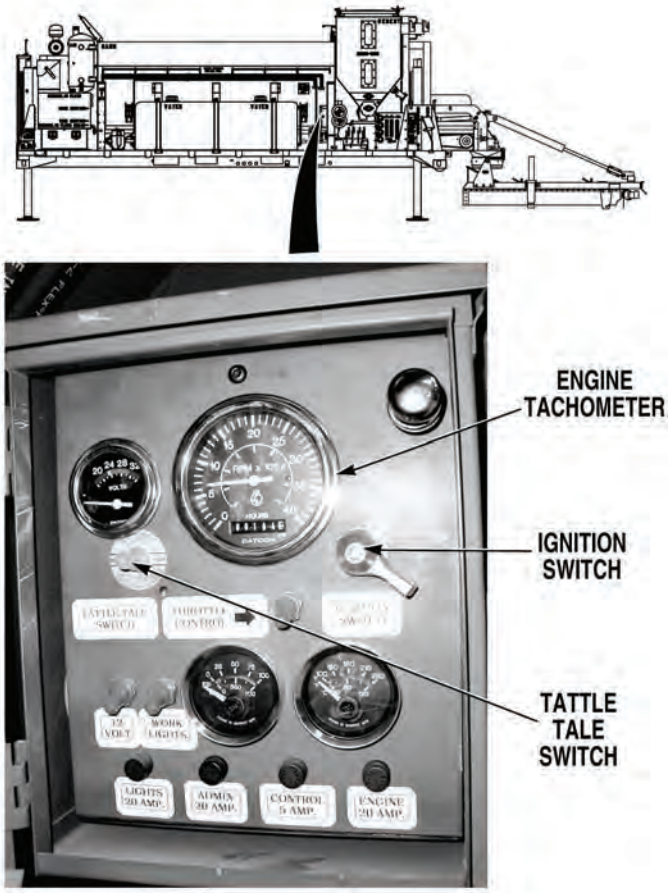

19. ENGINE CRANKS BUT HARD TO START OR WILL NOT START (EXHAUST SMOKE PRESENT) (CONT).

KNOWN INFO

- Fuel level OK.
- Fuel lines not kinked, leak, or damaged.
- Water separator/fuel filter not loose or damaged.
- No water in fuel.
- Engine cranks OK.

POSSIBLE PROBLEMS

- Fuel is contaminated.
- Air in fuel line.
- Air intake filter obstructed or faulty.
- Fuel filters clogged.
- Fuel transfer pump faulty.

7.

WARNING

Read WARNING on Page 4-575

Is air present at fuel line bleed screw when activating transfer pump priming lever?

NO → Go to Step 8 of this Fault.

YES → Air is leaking into fuel line between tank and fuel transfer pump. Locate and repair leak. Then bleed system, (Para 3-8) until fuel is present at a steady stream at fuel line bleed screw. Verify repair, go to Step 11 of this Fault.

TEST OPTIONS

Operational test.

REASON FOR QUESTION

If air is present at fuel line bleed screw, air is leaking into fuel line between tank and fuel transfer pump.

WARNING

To prevent personal injury when working with fuel, do not smoke or use open flame. Fuel is flammable and may explode. Keep fire extinguisher within reach.

OPERATIONAL TEST

(1) Turn IGNITION SWITCH OFF, (Para 2-1).

(2) Loosen fuel line bleed screw, (Para 3-8).

(3) Activate transfer pump priming lever, (Para 3-8).

(4) Check if air is present in fuel line.

(a) If air is not present in fuel line, go to Step 8 of this Fault.

(b) If air is present in fuel line, locate and repair leak between tank and fuel transfer pump. Then bleed system, (Para 3-8) until a steady stream of fuel is present at fuel line bleed screw. Verify repair, go to Step 11 of this Fault.

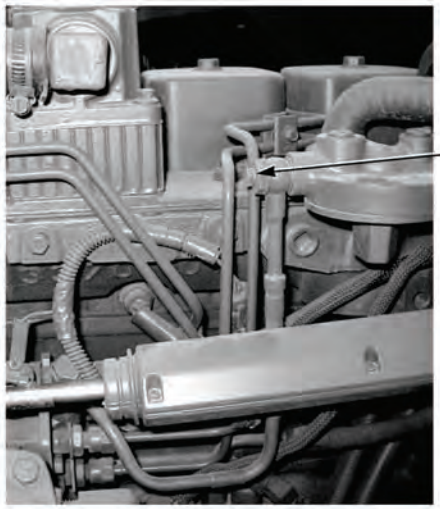

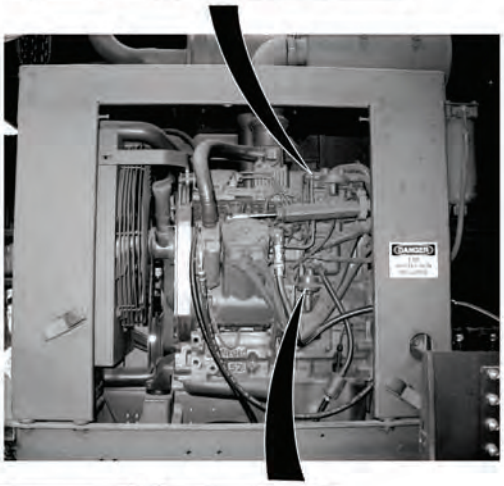

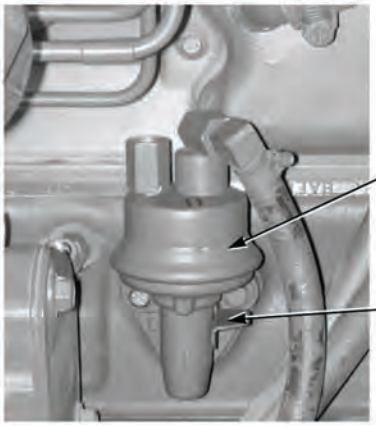

19. ENGINE CRANKS BUT HARD TO START OR WILL NOT START (EXHAUST SMOKE PRESENT) (CONT).

KNOWN INFO

- Fuel level OK.
- Fuel lines not kinked, leak, or damaged.
- Water separator/fuel filter not loose or damaged.
- No water in fuel.
- Engine cranks OK.
- No air in fuel line.

POSSIBLE PROBLEMS

- Fuel is contaminated.
- Air intake filter obstructed or faulty.
- Fuel filters clogged.
- Fuel transfer pump faulty.

8.

Is air restriction indicator in red area?

NO → Go to Step 9 of this Fault.

YES → Remove air intake obstruction or replace air intake filter, (Para 3-4). Verify repair, go to Step 11 of this Fault.

TEST OPTIONS

Visual inspection.

REASON FOR QUESTION

If air intake filter is obstructed or faulty, engine may be hard to start or may not start.

VISUAL INSPECTION
Check if air restriction indicator is in red area. (a) If air restriction indicator is not in red area, go to Step 9 of this Fault. (b) If air restriction indicator is in red area, remove air cleaner obstruction or replace air intake filter, (Para 3-4). Verify repair, go to Step 11 of this Fault.

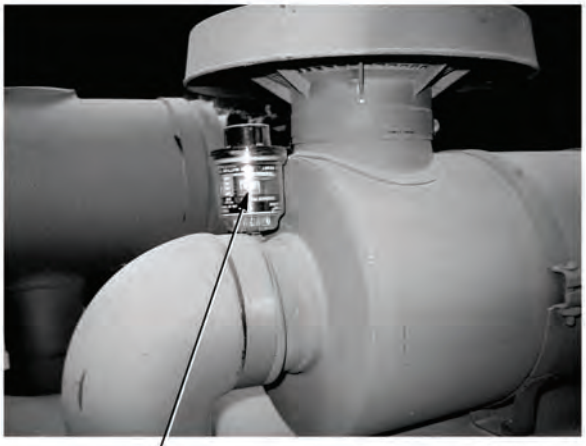

19. ENGINE CRANKS BUT HARD TO START OR WILL NOT START (EXHAUST SMOKE PRESENT) (CONT).

KNOWN INFO
Fuel level OK. Fuel lines not kinked, leak, or damaged. Water separator/fuel filter not loose or damaged. No water in fuel. Engine cranks OK. No air in fuel line. Air intake OK.
POSSIBLE PROBLEMS
Fuel is contaminated. Fuel filters clogged. Fuel transfer pump faulty.

9.

Does engine start after removing air intake restriction?

TEST OPTIONS
Operational test.
REASON FOR QUESTION
If engine starts, problem has been corrected.

NO → Go to Step 10 of this Fault.

YES → Fault corrected. Verify repair, go to Step 11 of this Fault.

OPERATIONAL TEST
(1) Start engine, (Para 2-19). (2) Check if engine starts hard or will not start. (a) If engine starts, fault has been corrected. Verify repair, go to Step 11 of this Fault. (a) If engine does not start, go to Step 10 of this Fault.

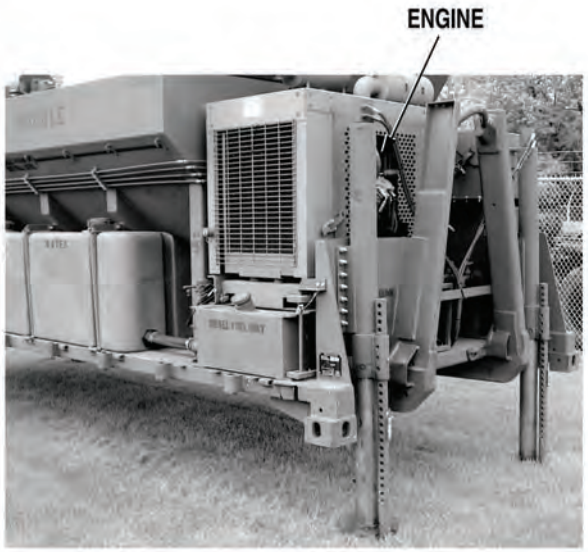

19. ENGINE CRANKS BUT HARD TO START OR WILL NOT START (EXHAUST SMOKE PRESENT) (CONT).

KNOWN INFO

- Fuel level OK.
- Fuel lines not kinked, leak, or damaged.
- Water separator/fuel filter not loose or damaged.
- No water in fuel.
- Engine cranks OK.
- No air in fuel line.
- Air intake OK.

POSSIBLE PROBLEMS

- Fuel is contaminated.
- Fuel filters clogged.
- Fuel transfer pump faulty.

10.

WARNING

Read WARNING on Page 4-581

Does engine start after draining and flushing fuel tank and lines and replacing inline and water separator/fuel filters?

NO → Replace fuel transfer pump, (Para 3-97). Verify repair, go to Step 11 of this Fault.

YES → Fault corrected. Verify repair, go to Step 11 of this Fault.

TEST OPTIONS

Operational test.

REASON FOR QUESTION

If engine starts after draining and flushing fuel tank and lines, and replacing inline water separator/ fuel filters, fuel was conaminated or filters were clogged. If not, fuel transfer pump is faulty.

WARNING

To prevent personal injury when working with fuel, do not smoke or use open flame. Fuel is flammable and may explode. Keep fire extinguisher within reach.

OPERATIONAL TEST

(1) Drain and flush fuel tank and lines.
(2) Replace in-line fuel filter, (Para 3-29) and water separator/fuel filter, (Para 3-28).
(3) Fill fuel tank.
(4) Bleed fuel system, (Para 3-8).
(5) Start engine, (Para 2-19).
(6) Check if engine starts hard or does not start.
    (a) If engine starts hard or does not start, replace fuel transfer pump, (Para 3-97).
    (b) If engine starts, fault corrected.
(7) Verify repair, go to Step 11 of this Fault.

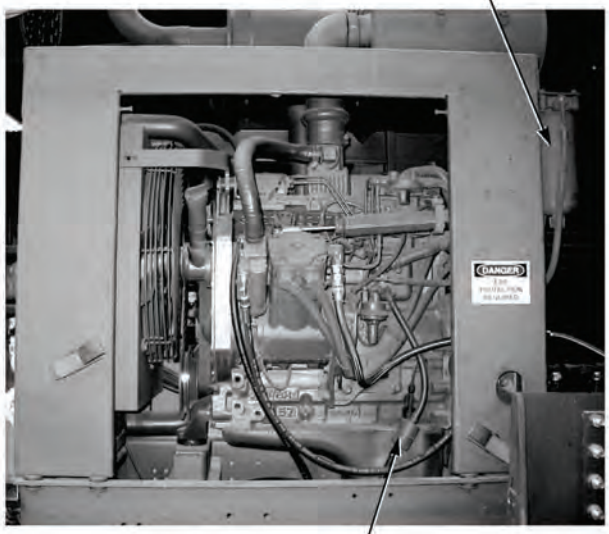

19. ENGINE CRANKS BUT HARD TO START OR WILL NOT START (EXHAUST SMOKE PRESENT) (CONT).

KNOWN INFO
Fuel level OK. Fuel lines not kinked, leak, or damaged. Water separator/fuel filter not loose or damaged. No water in fuel. No air in fuel line. Engine cranks OK. Air intake OK. Fuel is not contaminated. Fuel filters OK. Fuel transfer pump OK.
POSSIBLE PROBLEMS
None.

11.

Does engine start?

NO → Fault not corrected. Notify Supervisor.

YES → Fault corrected.

TEST OPTIONS
Verify repair.
REASON FOR QUESTION
If engine starts, fault has been corrected.

VERIFY REPAIR
(1) Install front engine access panel, (Para 3-78). (2) Start engine, (Para 2-19). (3) Check if engine starts hard or will not start. (a) If engine starts hard or does not start, fault not corrected. Notify Supervisor. (b) If engine starts, fault has been corrected. (4) Shut OFF engine, (Para 2-19).

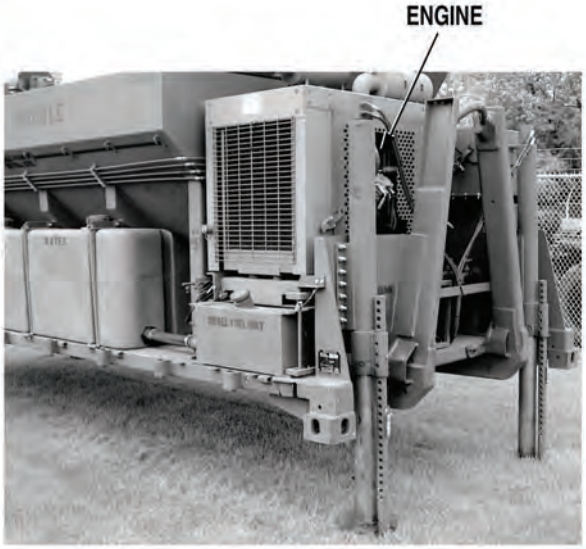

20. ENGINE DOES NOT SHUT DOWN DURING LOW OIL PRESSURE OR ENGINE OVERHEAT CONDITIONS.

INITIAL SETUP

Tools and Special Tools
Tool Kit, General Mechanic's: Automotive (Item 19, Appendix I)
Jumperwire

Equipment Condition
Concrete Mobile Mixer unloaded from PLS, (Para 2-5)
Engine OFF, (Para 2-19)

NOTE

- Oil pressure gage set point should be set at about 10 psi (69 kPa). Engine should shut down when oil pressure is below 10 psi (69 kPa).
- Water temperature gage set point should be set at about 215°F (102°C). Engine should shut down when water temperature is above 215°F (102°C).

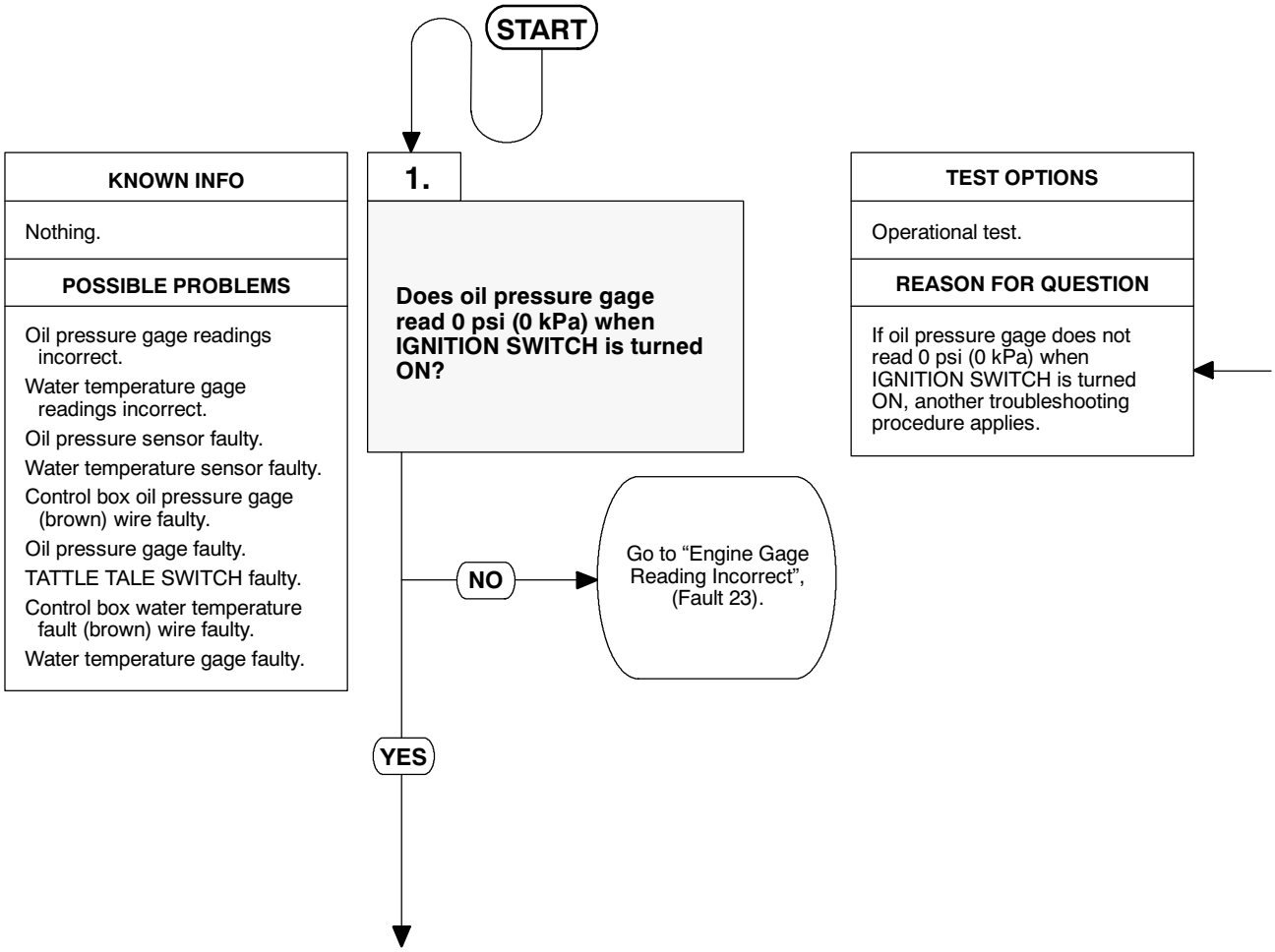

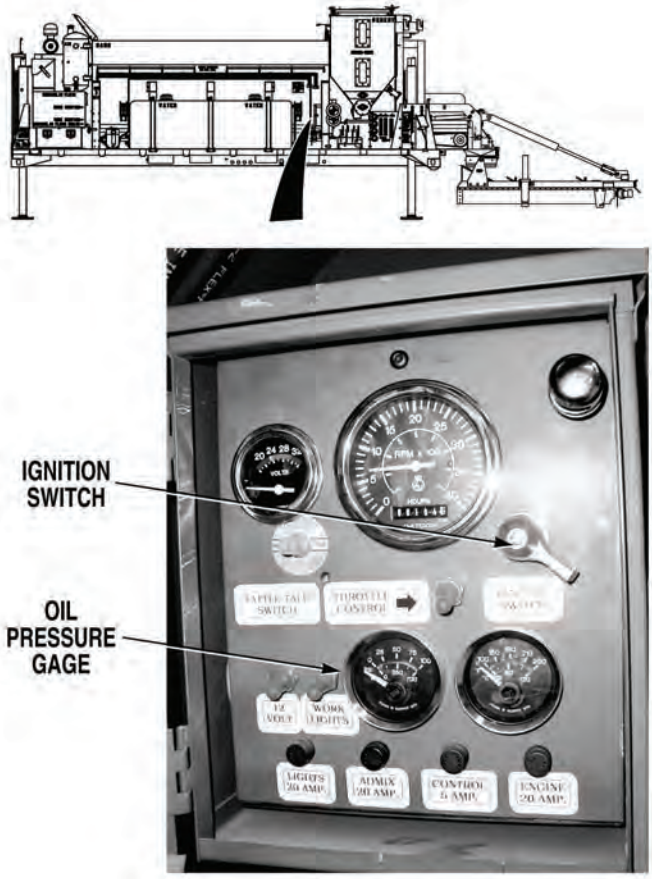

OPERATION TEST

(1) Turn IGNITION SWITCH ON, (Para 2-1). Do not start engine.

(2) Check if oil pressure gage reads 0 psi (0 kPa).

(a) If oil pressure gage does not read 0 psi (0 kPa), go to “Engine Gage Reading Incorrect”, (Fault 23).

(b) If oil pressure gage reads 0 psi (0 kPa), go to Step 2 of this Fault.

20. ENGINE DOES NOT SHUT DOWN DURING LOW OIL PRESSURE OR ENGINE OVERHEAT CONDITIONS (CONT).

KNOWN INFO
Nothing.
POSSIBLE PROBLEMS
Oil pressure gage readings incorrect. Water temperature gage readings incorrect. Oil pressure sensor faulty. Water temperature sensor faulty. Control box oil pressure gage (brown) wire faulty. Oil pressure gage faulty. TATTLE TALE SWITCH faulty. Control box water temperature fault (brown) wire faulty. Water temperature gage faulty.

2.

WARNING

Read WARNING on Page 4-587

Does oil pressure gage go to full scale reading when oil pressure sensor (blue) wire is jumpered to a known good ground and IGNITION SWITCH is turned ON?

NO → Go to “Engine Gage Reading Incorrect”, (Fault 23).

YES ↓

TEST OPTIONS
Operational test.
REASON FOR QUESTION
If oil pressure does not go to full scale reading, another troubleshooting procedure applies.

WARNING

Remove all jewelry such as rings, dog tags, bracelets etc. If jewelry or tools contact positive electrical circuits, a direct short may result. Damage to equipment, injury or death to personnel may occur.

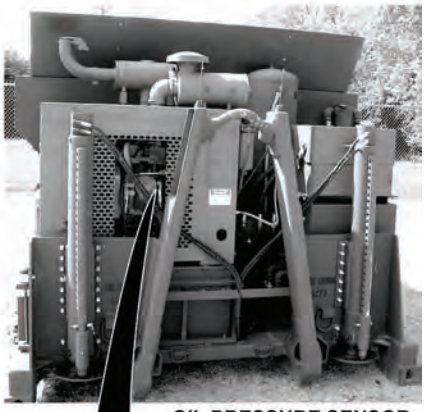

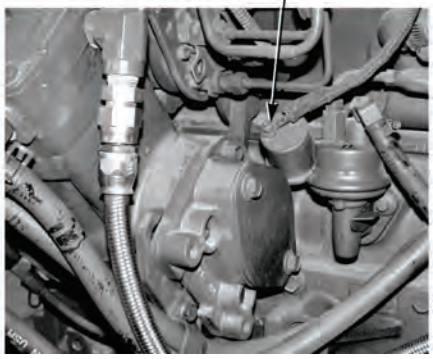

OPERATIONAL SWITCH

(1) Remove front engine cover, (Para 3-78).

(2) Connect jumperwire between oil pressure sensor (blue) wire and a known good ground.

(3) If OFF, turn IGNITION SWITCH ON, (Para 2-1). Do not start engine.

(4) Check if oil pressure gage goes to full scale reading.

- (a) If oil pressure gage does not go to full scale reading, remove jumperwire and go to "Engine Gage Reading Incorrect", (Fault 23).
- (b) If oil pressure gage does go to full scale reading, go to Step 3 of this Fault. Do not remove jumperwire.

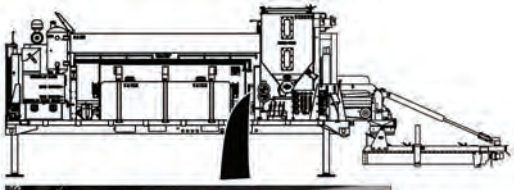

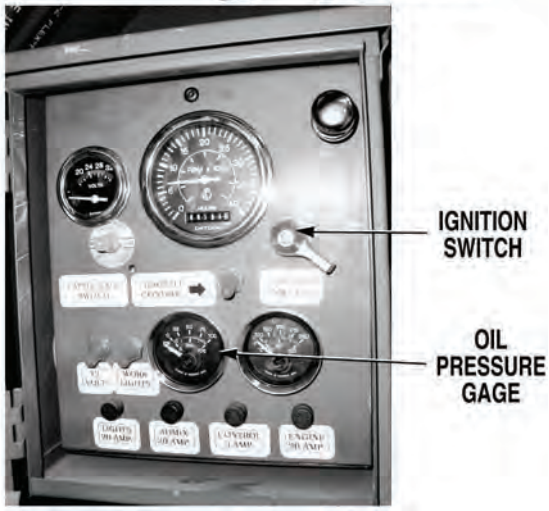

20. ENGINE DOES NOT SHUT DOWN DURING LOW OIL PRESSURE OR ENGINE OVERHEAT CONDITIONS (CONT).

KNOWN INFO
Oil pressure gage readings OK.
POSSIBLE PROBLEMS
Water temerature gage readings incorrect. Oil pressure sensor faulty. Water temperature sensor faulty. Control box oil pressure gage (brown) wire faulty. Oil pressure gage faulty. TATTLE TALE SWITCH faulty. Control box water temperature fault (brown) wire faulty. Water temperature gage faulty.

3.

WARNING

Read WARNING on Page 4-589

Does water temperature gage go to full scale reading when water temperature sensor (yellow) wire is jumpered to a known good ground and IGNITION SWITCH is turned ON?

NO → Go to “Engine Gage Reading Incorrect”, (Fault 23).

YES ↓

TEST OPTIONS
Operational test.
REASON FOR QUESTION
If water temperature gage does not go to full scale reading, another troubleshooting procedure applies.

WARNING

Remove all jewelry such as rings, dog tags, bracelets etc. If jewelry or tools contact positive electrical circuits, a direct short may result. Damage to equipment, injury or death to personnel may occur.

OPERATIONAL TEST

(1) Remove top engine cover, (Para 3-93).

(2) Connect jumperwire between water temperature sensor (yellow) wire and a known good ground.

(3) If OFF, turn IGNITION SWITCH ON, (Para 2-1). Do not start engine.

(4) Check if water temperature gage goes to full scale reading.

  (a) If water temperature gage does not go to full scale reading, remove jumperwire and go to “Engine Gage Reading Incorrect”, (Fault 23).

  (b) If water temperature gage goes to full scale reading, go to Step 4 of this Fault.

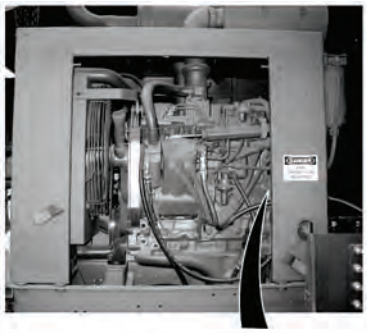

20. ENGINE DOES NOT SHUT DOWN DURING LOW OIL PRESSURE OR ENGINE OVERHEAT CONDITIONS (CONT).

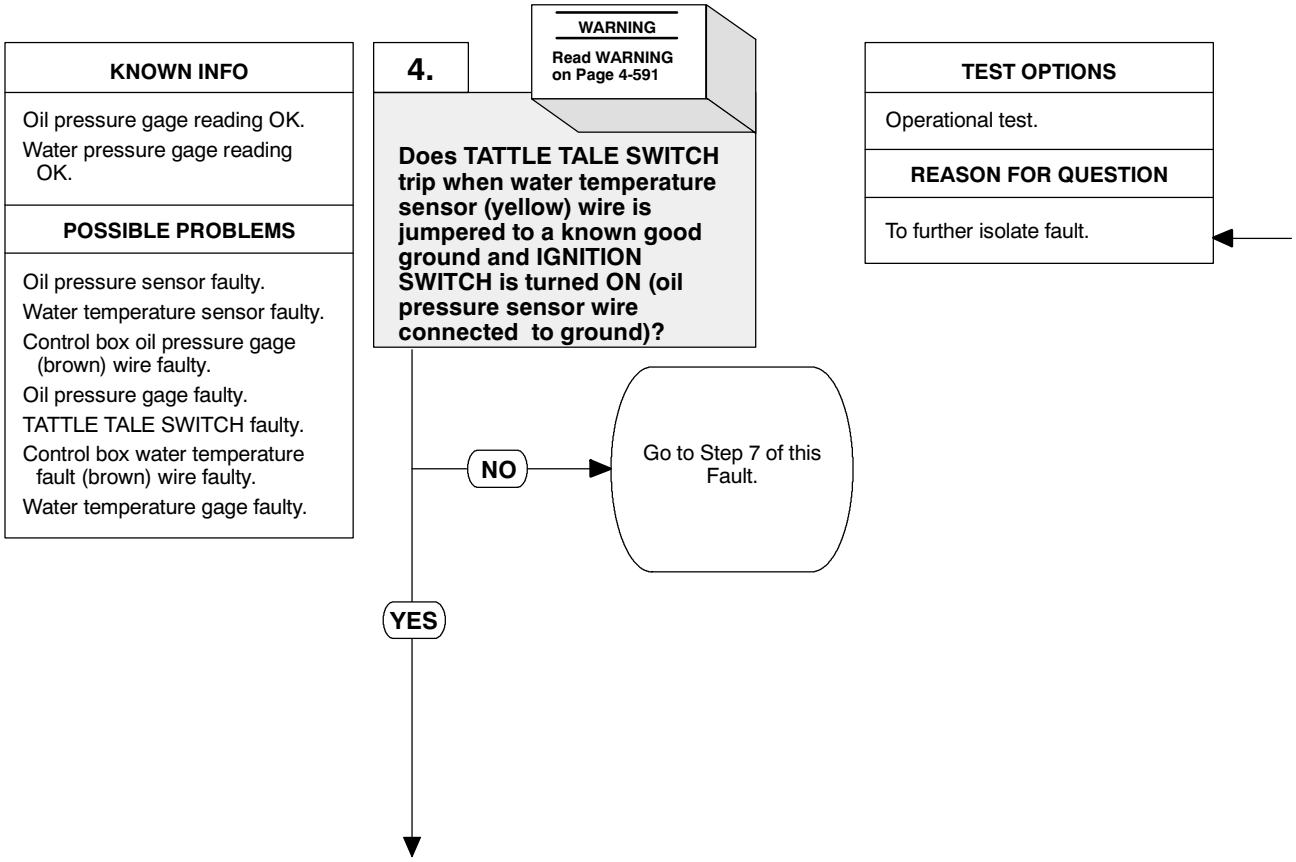

WARNING

Remove all jewelry such as rings, dog tags, bracelets etc. If jewelry or tools contact positive electrical circuits, a direct short may result. Damage to equipment, injury or death to personnel may occur.

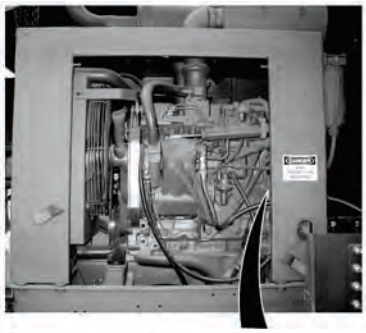

OPERATIONAL TEST

NOTE

Jumperwire is connected between oil pressure sensor wire and ground.

(1) Remove jumperwire between water temperature sensor (yellow) wire and ground.

(2) Press TATTLE TALE SWITCH push button, (Para 2-1).

(3) Connect jumperwire between water temperature sensor (yellow) wire and a known good ground.

(4) Check if TATTLE TALE SWITCH trips.

(a) If TATTLE TALE SWITCH does not trip, go to Step 7 of this Fault.

(b) If TATTLE TALE SWITCH trips, go to Step 5 of this Fault.

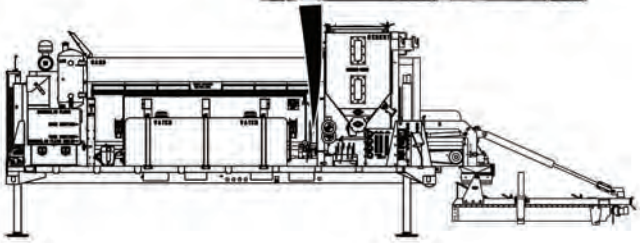

20. ENGINE DOES NOT SHUT DOWN DURING LOW OIL PRESSURE OR ENGINE OVERHEAT CONDITIONS (CONT).

KNOWN INFO
Oil pressure gage reading OK. Water pressure gage reading OK. TATTLE TALE SWITCH OK. Control box water temperature fault (brown) wire OK. Water temperature gage OK.
POSSIBLE PROBLEMS
Oil pressure sensor faulty. Water temperature sensor faulty. Control box oil pressure gage (brown) wire faulty. Oil pressure gage faulty.

5.

WARNING

Read WARNING on Page 4-593

Does TATTLE TALE SWITCH trip when ground is removed from oil pressure sensor (blue) wire with IGNITION SWITCH turned ON?

NO → Go to Step 6 of this Fault.

YES → Go to “Engine Gage Reading Incorrect”, (Fault 23).

TEST OPTIONS
Operational test.
REASON FOR QUESTION
If TATTLE TALE SWITCH trips, another troubleshooting procedure applies.

WARNING

Remove all jewelry such as rings, dog tags, bracelets etc. If jewelry or tools contact positive electrical circuits, a direct short may result. Damage to equipment, injury or death to personnel may occur.

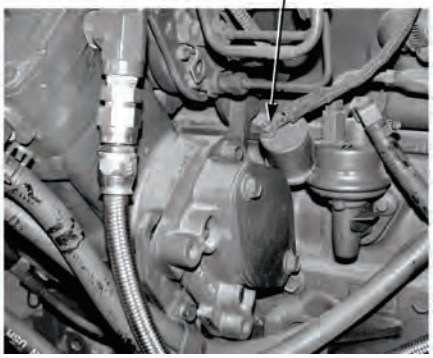

OPERATIONAL TEST

(1) Remove jumperwire between water temperature sensor (yellow) wire and ground.

(2) Press TATTLE TALE SWITCH push button, (Para 2-1).

(3) Remove jumperwire between oil pressure sensor (blue) wire and a known good ground.

(4) Check if TATTLE TALE SWITCH trips.

  (a) If TATTLE TALE SWITCH does not trip, go to Step 6 of this Fault.

  (b) If TATTLE TALE SWITCH trips, go to, “Engine Gage Reading Incorrect”, (Fault 23).

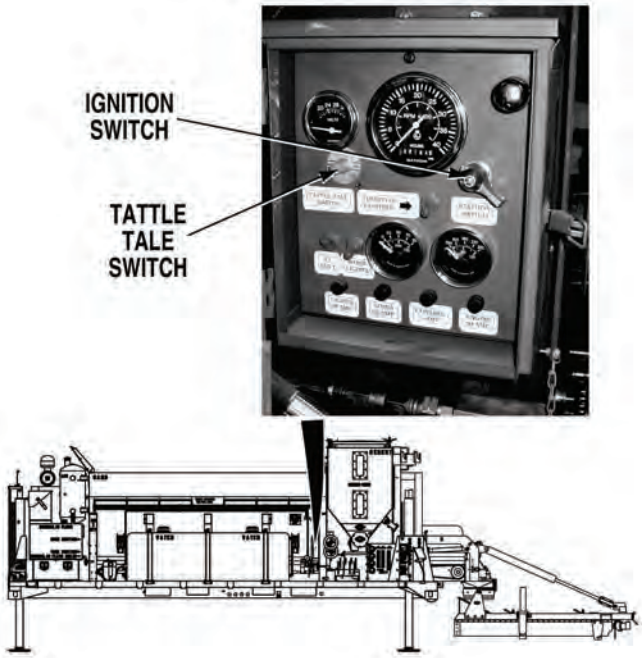

20. ENGINE DOES NOT SHUT DOWN DURING LOW OIL PRESSURE OR ENGINE OVERHEAT CONDITIONS (CONT).

KNOWN INFO

- Oil pressure gage reading OK.
- Water temperature gage reading OK.
- TATTLE TALE SWITCH OK.
- Control box water temperature fault (brown) wire OK.
- Oil pressure sensor OK.
- Water temperature sensor OK.
- Water temperature gage OK.

POSSIBLE PROBLEMS

- Control box oil pressure gage (brown) wire faulty.
- Oil pressure gage faulty.

6.

WARNING

Read WARNING on Page 4-595

Is continuity measured across control box oil pressure gage (brown) wire from oil pressure gage connector terminal to TATTLE TALE switch terminal SW1?

NO → Repair brown wire between oil pressure gage and TATTLE TALE SWITCH, (Para 3-141) or replace control box, (Para 3-90). Verify repair, go to Step 9 of this Fault.

YES → Replace oil pressure gage, (Para 3-54). Verify repair, go to Step 9 of this Fault.

TEST OPTIONS

Continuity test.

REASON FOR QUESTION

If continuity is measured, oil pressure gage is faulty. If not, control box oil pressure gage (brown) wire is faulty.

WARNING

Remove all jewelry such as rings, dog tags, bracelets etc. If jewelry or tools contact positive electrical circuits, a direct short may result. Damage to equipment, injury or death to personnel may occur.

CONTINUITY TEST

(1) Turn IGNITION SWITCH OFF, (Para 2-1).

(2) Disconnect batteries, (Para 3-10).

(3) Remove control box from Concrete Mobile Mixer, (Para 3-90).

(4) Open control box door and remove screw from top of control panel.

(5) Gently tip control panel forward for access to wires.

(6) Disconnect connector from oil pressure gage, (Para 3-54).

(7) Set multimeter select switch to ohms.

(8) Connect positive (+) multimeter lead to brown wire at oil pressure gage connector.

(9) Connect negative (-) multimeter lead to brown wire at TATTLE TALE SWITCH, terminal SW1.

  (a) If continuity is not measured, repair brown wire between oil pressure gage and TATTLE TALE SWITCH, (Para 3-141) or replace control box, (Para 3-90).

  (b) If continuity is measured, replace oil pressure gage, (Para 3-54).

(10) Verify repair, go to Step 9 of this Fault.

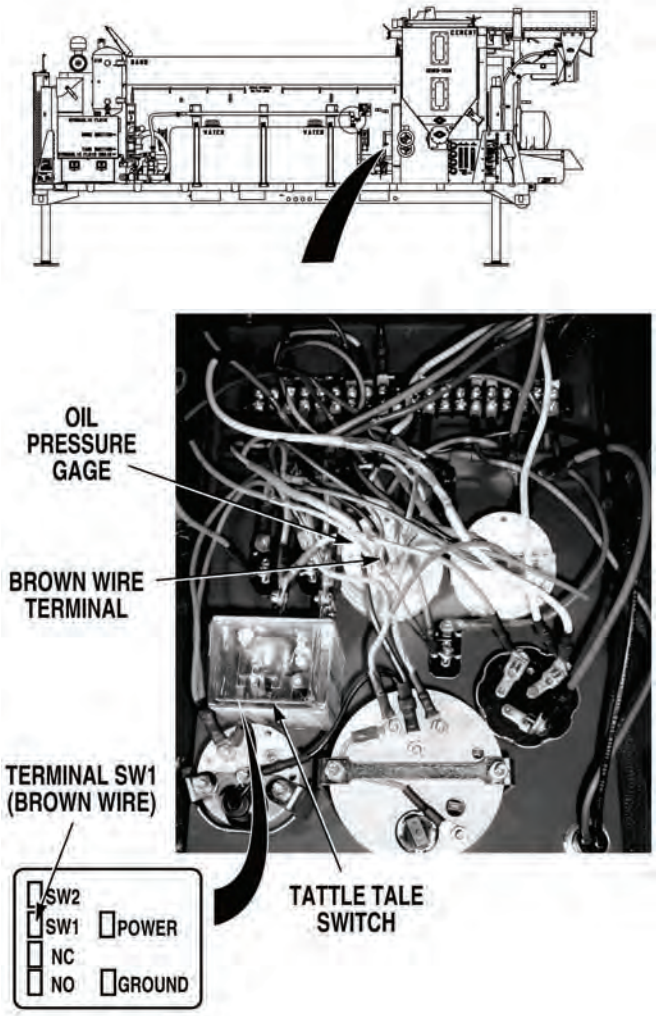

20. ENGINE DOES NOT SHUT DOWN DURING LOW OIL PRESSURE OR ENGINE OVERHEAT CONDITIONS (CONT).

KNOWN INFO

Oil pressure gage reading OK.
Water pressure gage reading OK.
Control box oil pressure gage (brown) wire OK.
Oil pressure sensor OK.
Water temperature sensor OK.
Oil pressure gage OK.

POSSIBLE PROBLEMS

TATTLE TALE SWITCH faulty.
Control box water temperature fault (brown) wire faulty.
Water temperature gage faulty.

7.

WARNING

Read WARNING on Page 4-597

Does TATTLE TALE SWITCH trip when ground is removed from oil pressure sensor (blue) wire with IGNITION SWITCH turned ON?

NO → Replace TATTLE TALE SWITCH, (Para 3-60). Verify repair, go to Step 9 of this Fault.

YES ↓

TEST OPTIONS

Operational test.

REASON FOR QUESTION

If TATTLE TALE SWITCH does not trip, TATTLE TALE SWITCH is faulty.

WARNING

Remove all jewelry such as rings, dog tags, bracelets etc. If jewelry or tools contact positive electrical circuits, a direct short may result. Damage to equipment, injury or death to personnel may occur.

OPERATIONAL TEST
(1) Remove jumperwire between oil pressure sensor (blue) wire and a known good ground. (2) Check if TATTLE TALE SWITCH trips. (a) If TATTLE TALE SWITCH does not trip, replace TATTLE TALE SWITCH, (Para 3-60). Verify repair, go to Step 9 of this Fault. (b) If TATTLE TALE SWITCH trips, go to Step 8 of this Fault.

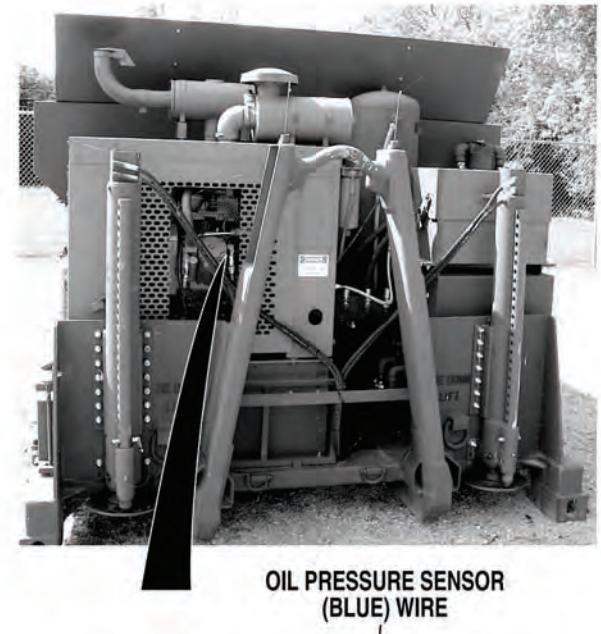

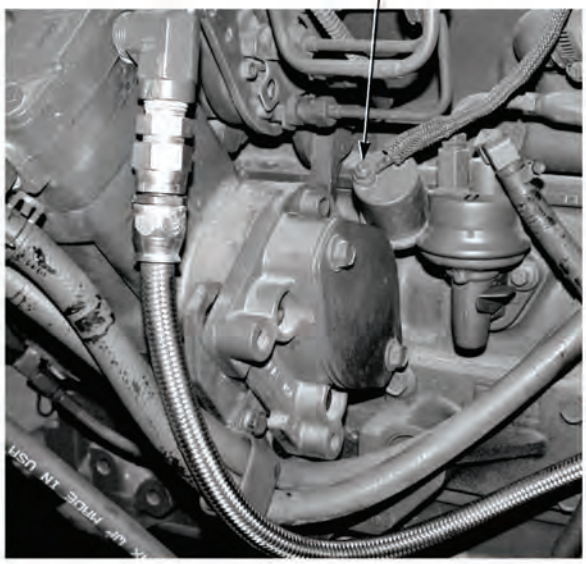

20. ENGINE DOES NOT SHUT DOWN DURING LOW OIL PRESSURE OR ENGINE OVERHEAT CONDITIONS (CONT).

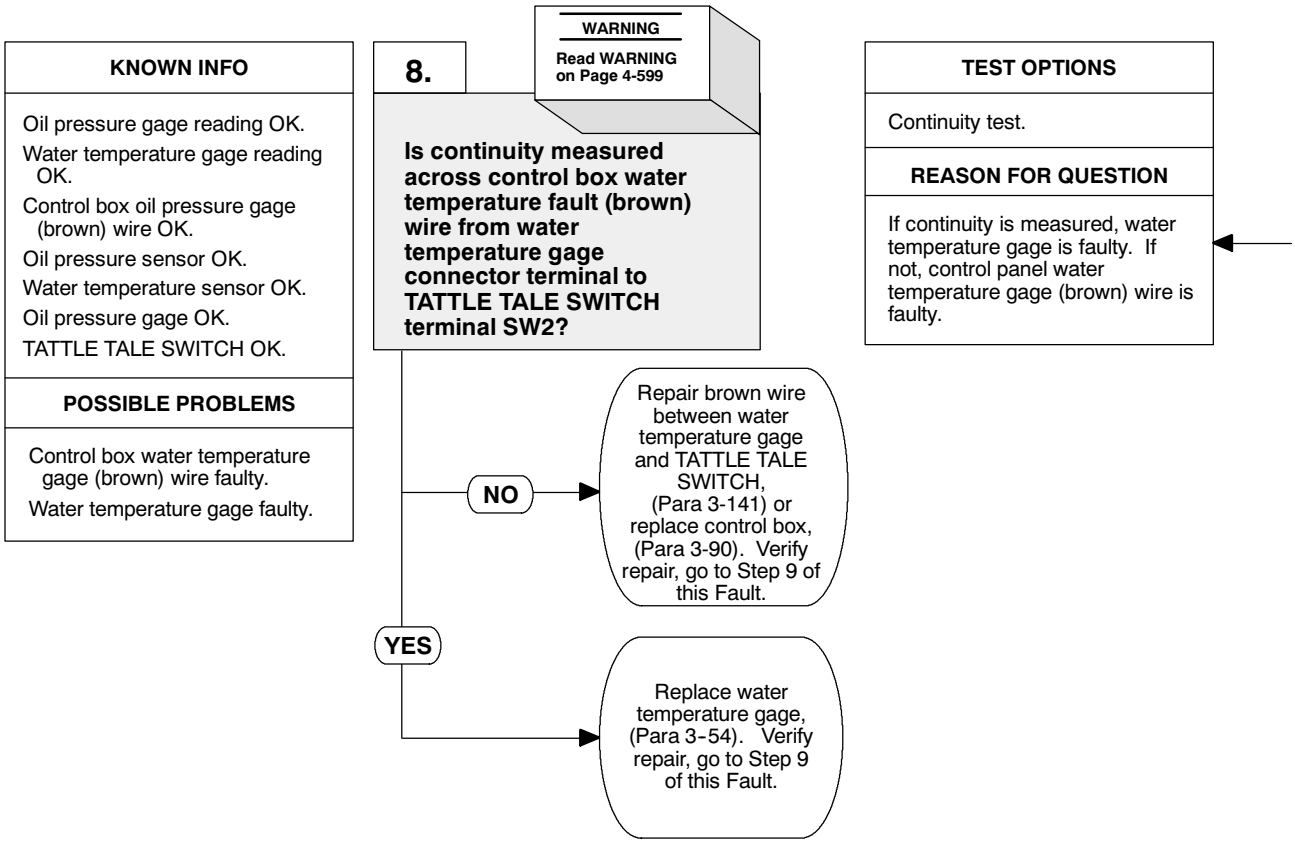

WARNING

Remove all jewelry such as rings, dog tags, bracelets etc. If jewelry or tools contact positive electrical circuits, a direct short may result. Damage to equipment, injury or death to personnel may occur.

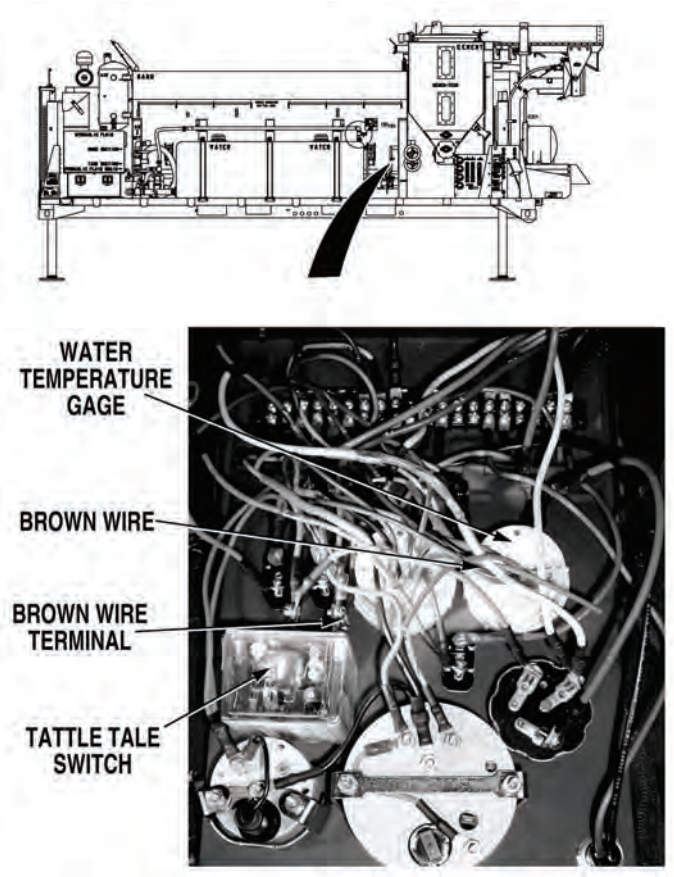

CONTINUITY TEST

(1) Turn IGNITION SWITCH OFF, (Para 2-1).

(2) Disconnect batteries, (Para 3-10).

(3) Remove control box from Concrete Mobile Mixer, (Para 3-90).

(4) Open control box door and remove screw from top of control panel.

(5) Gently tip control panel forward for access to wires.

(6) Disconnect connector from water temperature gage, (Para 3-54).

(7) Set multimeter select switch to ohms.

(8) Connect positive (+) multimeter lead to brown wire at water temperature gage connector.

(9) Connect negative (-) multimeter lead to brown wire at TATTLE TALE SWITCH, terminal SW2.

  (a) If continuity is not measured, repair brown wire between water temperature gage and TATTLE TALE SWITCH, (Para 3-141) or replace control box, (Para 3-90).

  (b) If continuity is measured, replace water temperature gage, (Para 3-54).

(10) Verify repair, go to Step 9 of this Fault.

20. ENGINE DOES NOT SHUT DOWN DURING LOW OIL PRESSURE OR ENGINE OVERHEAT CONDITIONS (CONT).

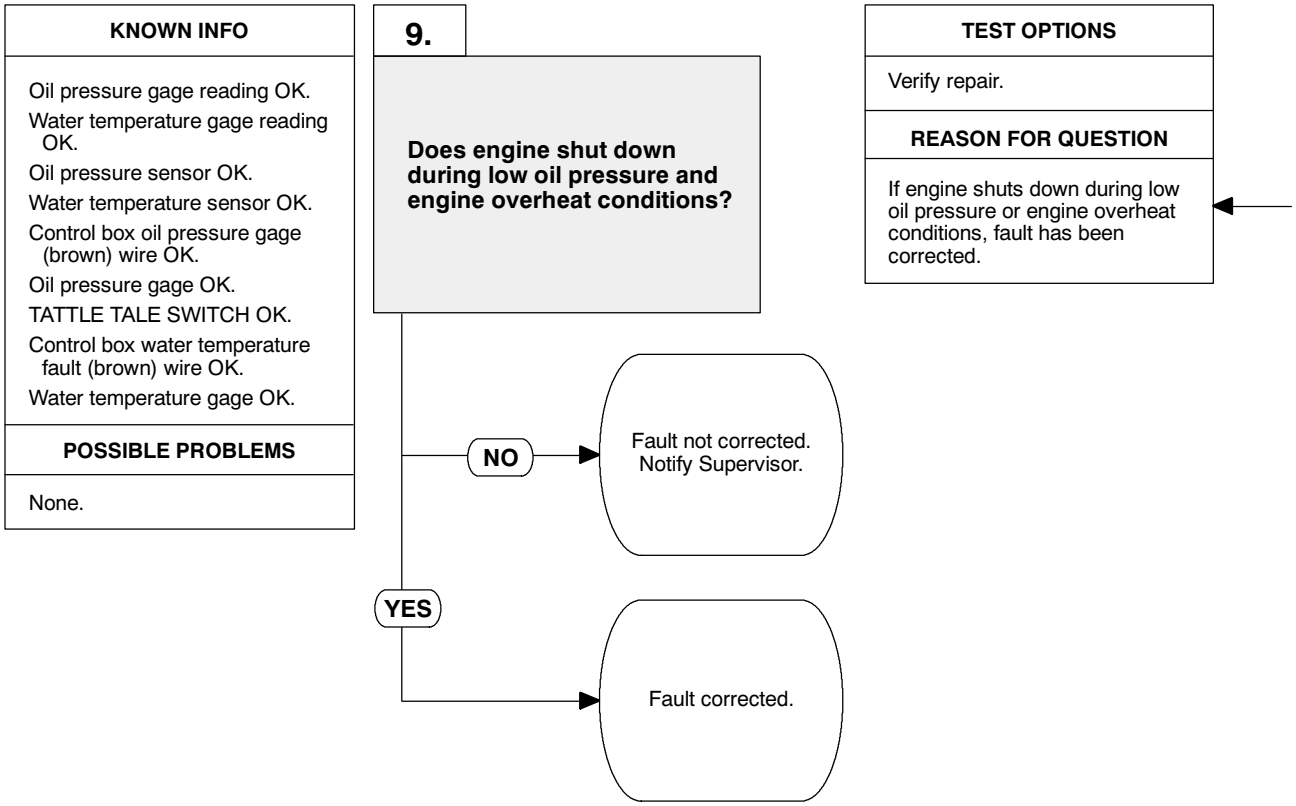

VERIFY REPAIR

(1) If removed, install control box on Concrete Mobile Mixer, (Para 3-90).

(2) If connected, disconnect jumperwire between water temperature sensor (yellow) wire and ground.

(3) If disconnected, connect jumperwire between oil pressure sensor (blue) wire and a known good ground.

(4) If OFF, turn IGNITION SWITCH ON, (Para 2-1).

(5) Press TATTLE TALE SWITCH push button, (Para 2-1).

(6) Simulate a high temperature fault by connecting jumperwire between water temperature sensor (yellow) wire at temperature sensor and a known good ground.

(7) Note if TATTLE TALE SWITCH is tripped, (Para 2-1).

(8) Remove jumperwire between water temperature sensor (yellow) wire and ground.

(9) If tripped, press TATTLE TALE SWITCH push button, (Para 2-1).

(10) Simulate a low oil pressure fault by removing jumperwire between oil pressure sensor (blue) wire and ground.

(11) Note if TATTLE TALE SWITCH is tripped.

(a) If TATTLE TALE SWITCH did not trip in Steps 6 or 10 above, fault has not been corrected. Notify Supervisor.

(b) If TATTLE TALE SWITCH tripped in Steps 6 and 10 above, fault has been corrected.

(12) Turn IGNITION SWITCH OFF , (Para 2-1).

(13) If removed, install top engine cover, (Para 3-93).

(14) Install front engine cover, (Para 3-78).

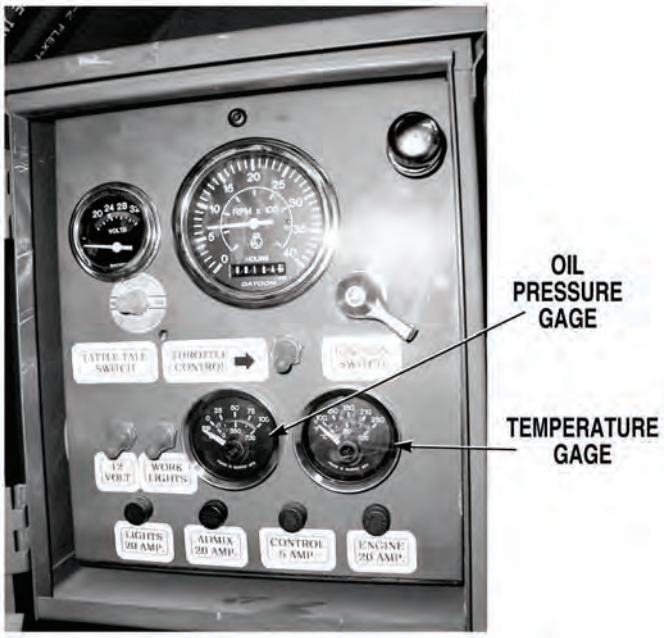

21. ENGINE EXCESSIVE NOISE OR VIBRATION.

INITIAL SETUP

Tools and Special Tools
Tool Kit, General Mechanic's: Automotive (Item 19, Appendix I)

Equipment Condition
Concrete Mobile Mixer unloaded from PLS, (Para 2-5)
Engine OFF, (Para 2-19)

KNOWN INFO

Nothing.

POSSIBLE PROBLEMS

- Exhaust assembly damaged.
- Exhaust assembly hardware loose or missing.
- Air intake assembly damaged.
- Air intake assembly hardware loose or missing.
- Air compressor air intake hose loose or damaged.
- Air compressor mounting hardware loose or missing.
- Engine cooling fan damaged.
- Engine cooling fan drive belt loose or damaged.
- Hydraulic reservoir fluid level incorrect.
- Hydraulic reservoir gate valves closed.
- Engine oil level incorrect.
- Engine running rough, knocking, or misfiring.
- Hydraulic pump faulty.
- Air compressor oil line kinked, leaks, or damaged.
- Air compressor coolant hoses faulty.
- Air compressor faulty.

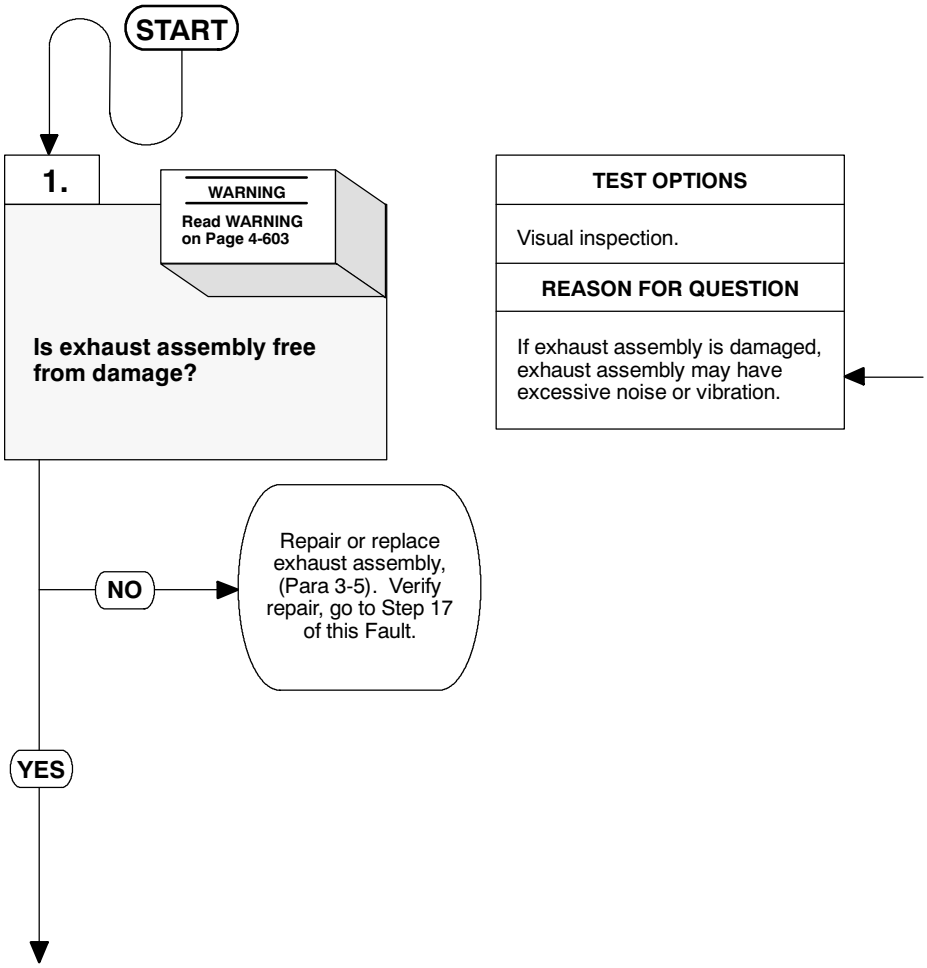

WARNING

The exhaust pipe and muffler are very hot during engine operation. Do not touch these parts with bare hands, or allow body to come in contact with exhaust pipe or muffler. Failure to comply could cause serious injury to personnel.

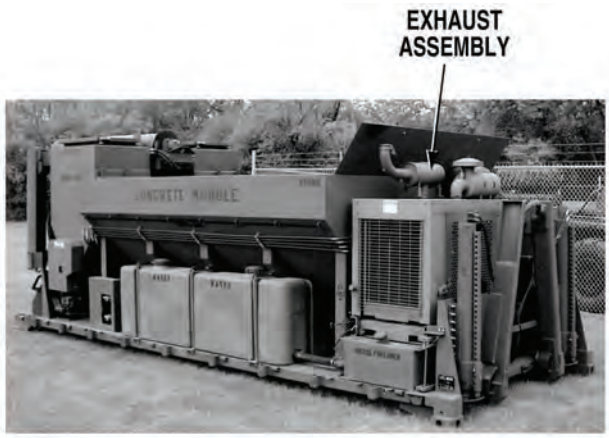

VISUAL INSPECTION
(1) Remove front engine access panel, (Para 3-78). (2) Check if exhaust assembly is free from damage. (a) If exhaust assembly is damaged, repair or replace exhaust assembly, (Para 3-5). Verify repair, go to Step 17 of this Fault. (b) If exhaust assembly is free from damage, go to Step 2 of this Fault.

21. ENGINE EXCESSIVE NOISE OR VIBRATION (CONT).

KNOWN INFO
Exhaust assembly not damaged.
POSSIBLE PROBLEMS
Exhaust assembly hardware loose or missing. Air intake assembly damaged. Air intake assembly hardware loose or missing. Air compressor air intake hose loose or damaged. Air compressor mounting hardware loose or missing. Engine cooling fan damaged. Engine cooling fan drive belt loose or damaged. Hydraulic reservoir fluid level incorrect. Hydraulic reservoir gate valves closed. Engine oil level incorrect. Engine running rough, knocking, or misfiring. Hydraulic pump faulty. Air compressor oil line kinked, leaks, or damaged. Air compressor coolant hoses faulty. Air compressor faulty.

2.

Is all exhaust assembly hardware present and secure?

NO → Tighten loose and replace missing hardware, (Para 3-5). Verify repair, go to Step 17 of this Fault.

YES ↓

TEST OPTIONS
Visual inspection.
REASON FOR QUESTION
If exhaust assembly hardware is missing or loose, exhaust assembly may have excessive noise and vibration.

VISUAL INSPECTION
Check if all exhaust assembly hardware is present and secure. (a) If exhaust assembly hardware is missing or loose, tighten loose and replace missing hardware, (Para 3-5). Verify repair, go to Step 17 of this Fault. (b) If exhaust assembly hardware is present and secure, go to Step 3 of this Fault.

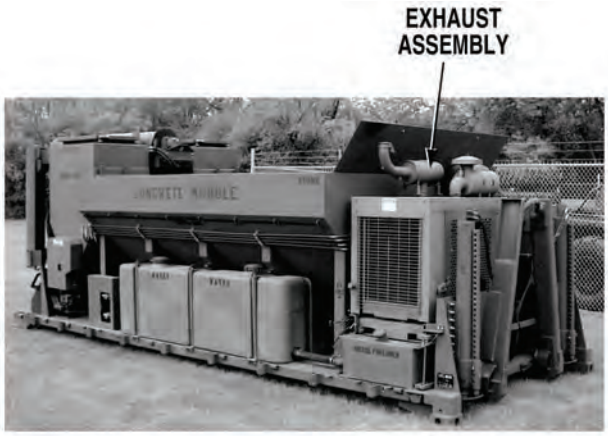

21. ENGINE EXCESSIVE NOISE OR VIBRATION (CONT).

KNOWN INFO
Exhaust assembly not damaged. Exhaust assembly hardware not loose or missing.
POSSIBLE PROBLEMS
Air intake assembly damaged. Air intake assembly hardware loose or missing. Air compressor air intake hose loose or damaged. Air compressor mounting hardware loose or missing. Engine cooling fan damaged. Engine cooling fan drive belt loose or damaged. Hydraulic reservoir fluid level incorrect. Hydraulic reservoir gate valves closed. Engine oil level incorrect. Engine running rouch, knocking, or misfiring. Hydraulic pump faulty. Air compressor oil line kinked, leaks, or damaged. Air compressor coolant hoses faulty. Air compressor faulty.

3.

Is air intake assembly free from damage?

NO → Repair or replace air intake assembly, (Para 3-3). Verify repair, go to Step 17 of this Fault.

YES ↓

TEST OPTIONS
Visual inspection.
REASON FOR QUESTION
If air intake assembly is damaged, air intake assembly may have excessive noise or vibration.

VISUAL INSPECTION
Check if air intake assembly is free from damage. (a) If air intake assembly is damaged, repair or replace air intake assembly, (Para 3-3). Verify repair, go to Step 17 of this Fault. (b) If air intake assembly is free from damage, go to Step 4 of this Fault.

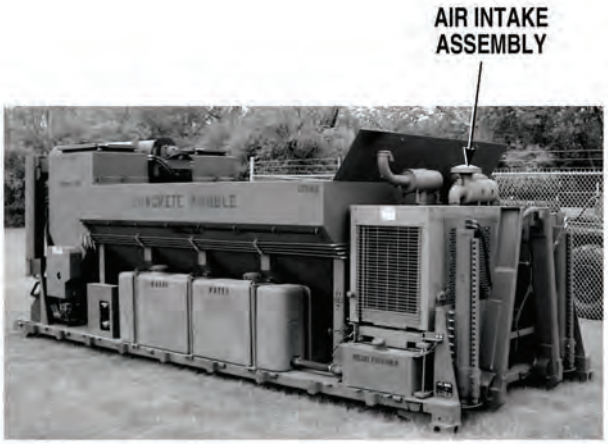

21. ENGINE EXCESSIVE NOISE OR VIBRATION (CONT).

KNOWN INFO
Exhaust assembly not damaged. Exhaust assembly hardware not loose or missing. Air intake assembly not damaged.
POSSIBLE PROBLEMS
Air intake assembly hardware loose or missing. Air compressor air intake hose loose or damaged. Air compressor mounting hardware loose or missing. Engine cooling fan damaged. Engine cooling fan drive belt loose or damaged. Hydraulic reservoir fluid level incorrect. Hydraulic reservoir gate valves closed. Engine oil level incorrect. Engine running rough, knocking, or misfiring. Hydraulic pump faulty. Air compressor oil line kinked, leaks, or damaged. Air compressor coolant hoses faulty. Air compressor faulty.

4.

Is all air intake assembly hardware present and secure?

NO → Tighten loose and replace missing hardware, (Para 3-3). Verify reapir, go to Step 17 of this Fault.

YES ↓

TEST OPTIONS
Visual inspection.
REASON FOR QUESTION
If air intake assembly hardware is missing or loose, air intake assembly may have excessive noise and vibration.

VISUAL INSPECTION
Check if all air intake assembly hardware is present and secure. (a) If air intake assembly hardware is missing or loose, tighten loose and replace missing hardware, (Para 3-3). Verify repair, go to Step 17 of this Fault. (b) If air intake assembly hardware is present and secure, go to Step 5 of this Fault.

21. ENGINE EXCESSIVE NOISE OR VIBRATION (CONT).

KNOWN INFO

Exhaust assembly not damaged.
Exhaust assembly hardware not loose or missing.
Air intake assembly not damaged.
Air intake assembly hardware not loose or missing.

POSSIBLE PROBLEMS

Air compressor air intake hose loose or damaged.
Air compressor mounting hardware loose or missing.
Engine cooling fan damaged.
Engine cooling fan drive belt loose or damaged.
Hydraulic reservoir fluid level incorrect.
Hydraulic reservoir gate valves closed.
Engine oil level incorrect.
Engine running rough, knocking, or misfiring.
Hydraulic pump faulty.
Air compressor oil line kinked, leaks, or damaged.
Air compressor coolant hoses faulty.
Air compressor faulty.

5.

Is air compressor air intake hose secure and free from damage?

NO → Tighten loose hose connections or replace damaged hose, (Para 3-110). Verify repair, go to Step 17 of this Fault.

YES ↓

TEST OPTIONS

Visual inspection.

REASON FOR QUESTION

If air compressor air intake hose is loose or damaged, engine may have excessive noise and vibration.

VISUAL INSPECTION
Check if air compressor air intake hose is secure and free from damage. (a) If air compressor air intake hose is loose or damaged tighten loose hose connections or replace damaged hose, (Para 3-110). Verify repair, go to Step 17 of this Fault. (b) If air compressor air intake hose is secure and free from damage, go to Step 6 of this Fault.

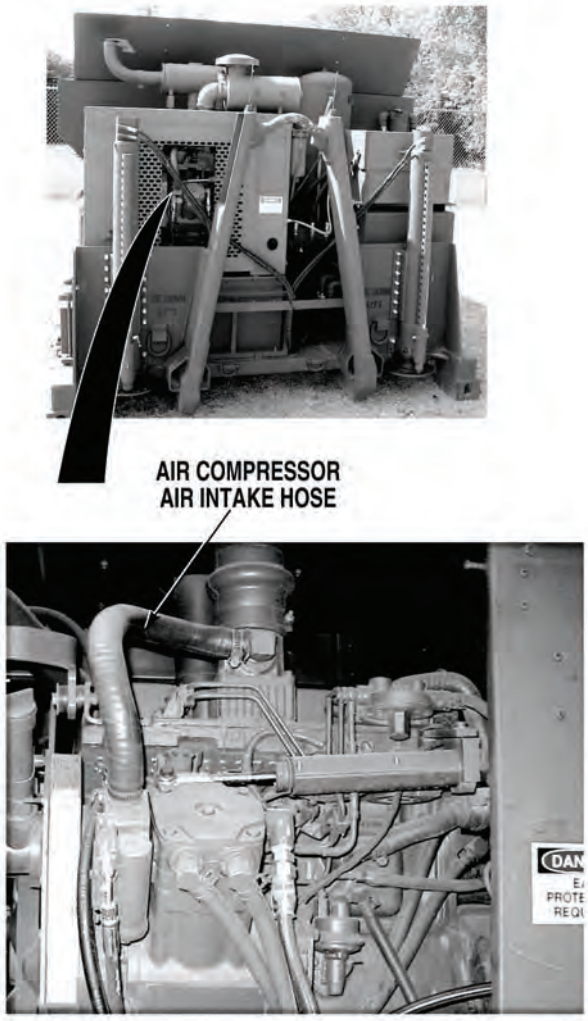

21. ENGINE EXCESSIVE NOISE OR VIBRATION (CONT).

KNOWN INFO
Exhaust assembly not damaged. Exhaust assembly hardware not loose or missing. Air intake assembly not damaged. Air intake assembly hardware not loose or missing. Air compressor air intake hose not loose or damaged.
POSSIBLE PROBLEMS
Air compressor mounting hardware loose or missing. Engine cooling fan damaged. Engine cooling fan drive belt loose or damaged. Hydraulic reservoir fluid level incorrect. Hydraulic reservoir gate valves closed. Engine oil level incorrect. Engine running rough, knocking, or misfiring. Hydraulic pump faulty. Air compressor oil line kinked, leaks, or damaged. Air compressor coolant hoses faulty. Air compressor faulty.

6.

Is all air compressor mounting hardware present and secure?

NO → Tighten loose and replace missing hardware, (Para 3-110). Verify repair, go to Step 17 of this Fault.

YES ↓

TEST OPTIONS
Visual inspection.
REASON FOR QUESTION
If air compressor mounting hardware is loose or missing, air compressor may have excessive noise and vibration.

VISUAL INSPECTION
Check if air compressor mounting hardware is present and secure. (a) If air compressor mounting hardware is loose or missing, tighten loose and replace missing hardware, (Para 3-110). Verify repair, go to Step 17 of this Fault. (b) If air compressor mounting hardware is present and secure, go to Step 7 of this Fault.

21. ENGINE EXCESSIVE NOISE OR VIBRATION (CONT).

KNOWN INFO
Exhaust assembly not damaged. Exhaust assembly hardware not loose or missing. Air intake assembly not damaged. Air intake assembly hardware not loose or missing. Air compressor air intake hose not loose or damaged. Air compressor mounting hardware not loose or missing.
POSSIBLE PROBLEMS
Engine cooling fan damaged. Engine cooling fan drive belt loose or damaged. Hydraulic reservoir fluid level incorrect. Hydraulic reservoir gate valves closed. Engine oil level incorrect. Engien running rough, knocking, or misfiring. Hydraulic pump faulty. Air compressor oil line kinked, leaks, or damaged. Air compressor coolant hoses faulty. Air compressor faulty.

7.

Is engine cooling fan free from damage?

NO → Replace cooling fan, (Para 3-102). Verify repair, go to Step 17 of this Fault.

YES ↓

TEST OPTIONS
Visual inspection.
REASON FOR QUESTION
If engine cooling fan is damaged, engine may have excessive noise or vibration.

VISUAL INSPECTION
Check if engine cooling fan is free from damage. (a) If engine cooling fan is damaged, replace engine cooling fan, (Para 3-102). Verify repair, go to Step 17 of this Fault. (b) If engine cooling fan is free from damage, go to Step 8 of this Fault.

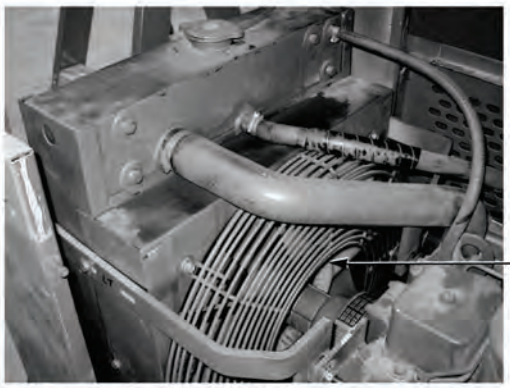

(TOP ENGINE PANEL NOT SHOWN FOR CLARITY)

21. ENGINE EXCESSIVE NOISE OR VIBRATION (CONT).

KNOWN INFO

- Exhaust assembly not damaged.
- Exhaust assembly hardware not loose or missing.
- Air intake assembly not damaged.
- Air intake assembly hardware not loose or missing.
- Air compressor air intake hose not loose or damaged.
- Air compressor mounting hardware not loose or missing.
- Engine cooling fan not damaged.

POSSIBLE PROBLEMS

- Engine cooling fan drive belt loose or damaged.
- Hydraulic reservoir fluid level incorrect.
- Hydraulic reservoir gate valves closed.
- Engine oil level incorrect.
- Engine running rough, knocking, or misfiring.
- Hydraulic pump faulty.
- Air compressor oil line kinked, leaks, or damaged.
- Air compressor coolant hoses faulty.
- Air compressor faulty.

8.

Is engine cooling fan drive belt tight and free from damage?

NO → Replace fan drive belt tensioner, (Para 3-108) and/or replace fan drive belt, (Para 3-107). Verify repair, go to Step 17 of this Fault.

YES ↓

TEST OPTIONS

Visual inspection.

REASON FOR QUESTION

If engine cooling fan drive belt is loose or damaged, engine may have excessive noise or vibration.

VISUAL INSPECTION
Check if engine cooling fan drive belt is tight and free from damage. (a) If engine cooling fan drive belt is loose or damaged, replace fan drive belt tensioner, (Para 3-108) and/or replace fand drive belt, (Para 3-107). Verify repair, go to Step 17 of this Fault. (b) If engine cooling fan drive belt is tight and free from damage, go to Step 9 of this Fault.

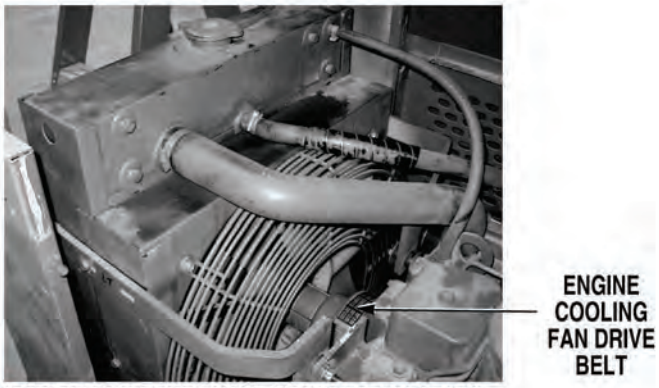

(TOP ENGINE PANEL NOT SHOWN FOR CLARITY)

21. ENGINE EXCESSIVE NOISE OR VIBRATION (CONT).

KNOWN INFO

- Exhaust assembly not damaged.
- Exhaust assembly hardware not loose or missing.
- Air intake assembly not damaged.
- Air intake assembly hardware not loose or missing.
- Air compressor air intake hose not loose or damaged.
- Air compressor mounting hardware not loose or missing.
- Engine cooling fan not damaged.
- Engine cooling fan drive belt not loose or damaged.

POSSIBLE PROBLEMS

- Hydraulic reservoir fluid level incorrect.
- Hydraulic reservoir gate valves closed.
- Engine oil level incorrect.
- Engine running rouch, knocking, or misfiring.
- Hydraulic pump faulty.
- Air compressor oil line kinked, leaks, or damaged.
- Air compressor coolant hoses faulty.
- Air compressor faulty.

9.

Is fluid level in hydraulic reservoir at correct level?

NO → Fill hydraulic reservoir, (Para 2-9). Verify repair, go to Step 17 of this Fault.

YES ↓

TEST OPTIONS

Visual inspection.

REASON FOR QUESTION

If fluid level in hydraulic reservoir is low, hydraulic pump may be noisy and vibrate.

VISUAL INSPECTION
Check if fluid in hydraulic reservoir is at correct level. (a) If fluid level in hydraulic reservoir is low, fill hydraulic reservoir to correct level, (Para 2-9). Verify repair, go to Step 17 of this Fault. (b) If fluid in hydraulic reservoir is at correct level, go to Step 10 of this Fault.

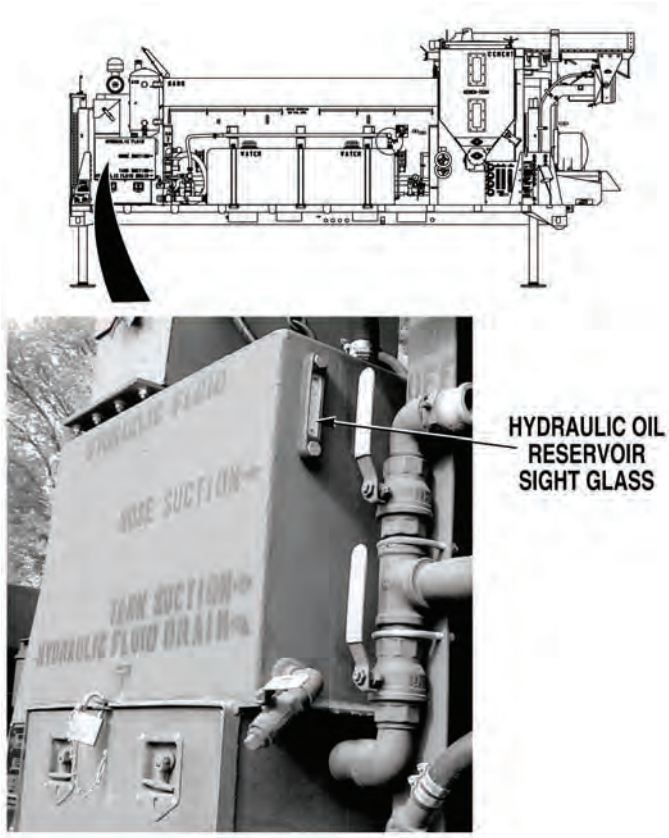

21. ENGINE EXCESSIVE NOISE OR VIBRATION (CONT).

KNOWN INFO
Exhaust assembly not damaged. Exhaust assembly hardware not loose or missing. Air intake assembly not damaged. Air intake assembly hardware not loose or missing. Air compressor air intake hose not loose or damaged. Air compressor mounting hardware not loose or missing. Engine cooling fan not damaged. Engine cooling fan drive belt not loose or damaged. Hydraulic reservoir fluid level OK.
POSSIBLE PROBLEMS
Hydraulic reservoir gate valves closed. Engine oil level incorrect. Engine running rough, knocking, or misfiring. Hydraulic pump faulty. Air compressor oil line kinked, leaks, or damaged. Air compressor coolant hoses faulty. Air compressor faulty.

10.

Are both hydraulic reservoir gate valves open?

NO → Open gate valves, (Para 2-20). Verify repair, go to Step 17 of this Fault.

YES ↓

TEST OPTIONS
Visual inspection.
REASON FOR QUESTION
If hydraulic reservoir gate valves are not open, hydraulic pump may be noisy and vibrate.

VISUAL INSPECTION
Check if both hydraulic reservoir gate valves are open. Handles turn left to open gate valves. (a) If both hydraulic reservoir gate valves are not open, open gate valves, (Para 2-20). Verify repair, go to Step 17 of this Fault. (b) If both hydraulic reservoir gate valves are open, go to Step 12 of this Fault.

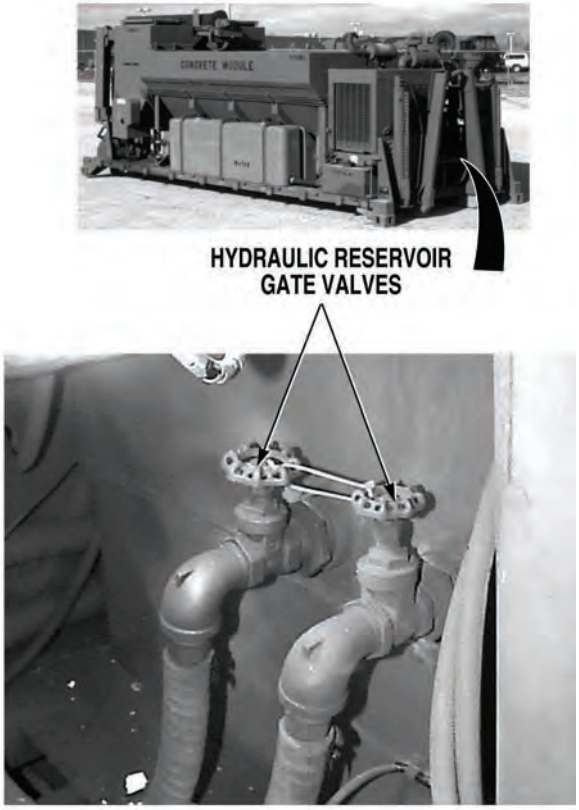

21. ENGINE EXCESSIVE NOISE OR VIBRATION (CONT).

KNOWN INFO

- Exhaust assembly not damaged.
- Exhaust assembly hardware not loose or missing.
- Air intake assembly not damaged.
- Air intake assembly hardware not loose or missing.
- Air compressor air intake hose not loose or damaged.
- Air compressor mounting hardware not loose or missing.
- Engine cooling fan not damaged.
- Engine cooling fan drive belt not loose or damaged.
- Hydraulic reservoir fluid level OK.
- Hydraulic reservoir gate valves open.

POSSIBLE PROBLEMS

- Engine oil level incorrect.
- Engine running rough, knocking, or misfiring.
- Hydraulic pump faulty.
- Air compressor oil line kinked, leaks, or damaged.
- Air compressor coolant hoses faulty.
- Air compressor faulty.

11.

Is engine oil at correct level?

NO → Fill/drain engine oil to correct level, (Para 2-9). Verify repair, go to Step 17 of this Fault.

YES ↓

TEST OPTIONS

Visual inspection.

REASON FOR QUESTION

If engine oil level is is too low or too high, engine may overheat causing excessive noise or vibration.

VISUAL INSPECTION
Check if engine oil is at correct level. (a) If engine oil is not at correct level, fill or drain engine oil to correct level, (Para 2-9). Verify repair, go to Step 17 of this Fault. (b) If engine oil is at correct level, go to Step 12 of this Fault.

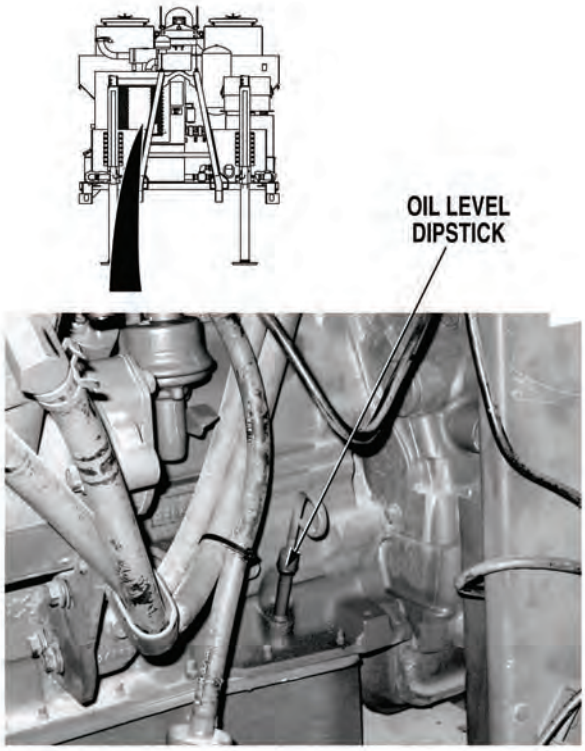

21. ENGINE EXCESSIVE NOISE OR VIBRATION (CONT).

KNOWN INFO

- Exhaust assembly not damaged.
- Exhaust assembly hardware not loose or missing.
- Air intake assembly not damaged.
- Air intake assembly hardware not loose or missing.
- Air compressor air intake hose not loose or damaged.
- Air compressor mounting hardware not loose or missing.
- Engine cooling fan not damaged.
- Engine cooling fan drive belt not loose or damaged.
- Hydraulic reservoir fluid level OK.
- Hydraulic reservoir gate valves open.
- Engine oil level OK.

POSSIBLE PROBLEMS

- Engine running rough, knocking, or misfiring.
- Hydraulic pump faulty.
- Air compressor oil line kinked, leaks, or damaged.
- Air compressor coolant hoses faulty.
- Air compressor faulty.

12.

Does engine run rough, knock, or misfire?

NO → Go to Step 13 of this Fault.

YES → Go to “Engine Starts but Runs Rough, Has Low Power, Excessive Exhaust Smoke, Excessive Fuel Consumption, or Stops”, (Fault 26).

TEST OPTIONS

Operational test.

REASON FOR QUESTION

If engine runs rough, knocks, or misfires, another troubleshooting procedure applies.

OPERATIONAL TEST

(1) Start engine, (Para 2-19). Do not turn THROTTLE CONTROL to high idle.

(2) Let engine warm up to normal operating temperature.

(3) Check if engine runs rough, knocks, or misfires.

(a) If engine does not run rough, knock, or misfires, go to Step 13 of this Fault.

(b) If engine runs rough, knocks, or misfires, go to “Engine Starts but Runs Rough, Has Low Power, Excessive Exhaust Smoke, Excessive Fuel Consumption, or Stops”, (Fault 26).

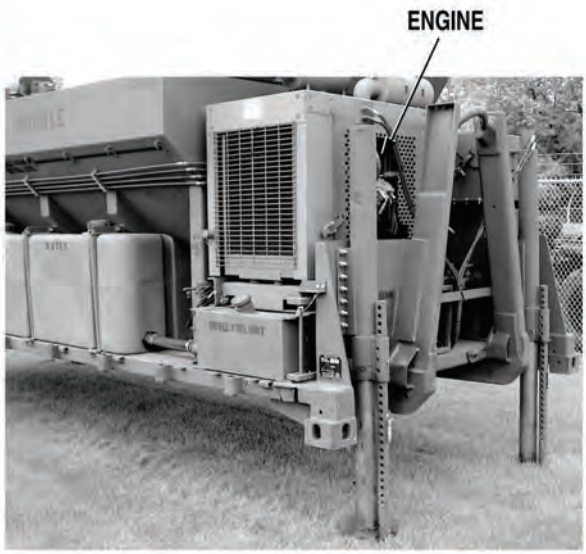

21. ENGINE EXCESSIVE NOISE OR VIBRATION (CONT).

KNOWN INFO
Exhaust assembly not damaged. Exhaust assembly hardware not loose or missing. Air intake assembly not damaged. Air intake assembly hardware not loose or missing. Air compressor air intake hose not loose or damaged. Air compressor mounting hardware not loose or missing. Engine cooling fan not damaged. Engine cooling fan drive belt not loose or damaged. Hydraulic reservoir fluid level OK. Hydraulic reservoir gate valves open. Engine oil level OK. Engine not running rough, knocking, or misfiring.
POSSIBLE PROBLEMS
Hydraulic pump faulty. Air compressor oil line kinked, leaks, or damaged. Air compressor coolant hoses faulty. Air compressor faulty.

13.

Is hydraulic pump free from excessive noise?

NO → Replace hydraulic pump, (Para 3-34). Verify repair, go to Step 17 of this Fault.

YES ↓

TEST OPTIONS
Operational test.
REASON FOR QUESTION
If hydraulic pump is not free from excessive noise, engine may seem to have excessive noise or vibration.

OPERATIONAL TEST
(1) Turn THROTTLE CONTROL to high idle, (Para 2-1). (2) Check if hydraulic pump is free from excessive noise and vibration. (a) If hydraulic pump is excessively noisy or vibrates, replace hydraulic pump, (Para 3-34). Verify repair, go to Step 17 of this Fault. (b) If hydraulic pump is free from excessive noise and vibration, go to Step 14 of this Fault.

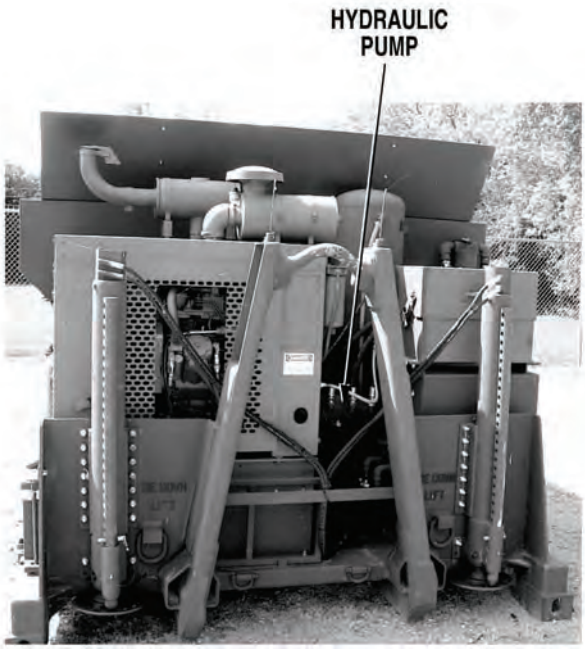

21. ENGINE EXCESSIVE NOISE OR VIBRATION (CONT).

KNOWN INFO

- Exhaust assembly not damaged.
- Exhaust assembly hardware not loose or missing.
- Air intake assembly not damaged.
- Air intake assembly hardware not loose or missing.
- Air compressor air intake hose not loose or damaged.
- Air compressor mounting hardware not loose or missing.
- Engine cooling fan not damaged.
- Engine cooling fan drive belt not loose or damaged.
- Hydraulic reservoir fluid level OK.
- Hydraulic reservoir gate valves open.
- Engine oil level OK.
- Engine not running rough, knocking, or misfiring.
- Hydraulic pump OK.

POSSIBLE PROBLEMS

- Air compressor oil line kinked, leaks, or damaged.
- Air compressor coolant hoses faulty.
- Air compressor faulty.

14.

Is air compressor free from excessive noise?

NO → Go to Step 15 of this Fault.

YES → Notify Supervisor.

TEST OPTIONS

Operaional test.

REASON FOR QUESTION

If air compressor is excessively noisy, engine may seem to have excessive noise or vibration.

OPERATIONAL TEST
Check if air compressor is free from excessive noise. (a) If air compressor is excessively noisy, go to Step 15 of this Fault. (b) If air compressor is free from excessive noise, notify Supervisor.

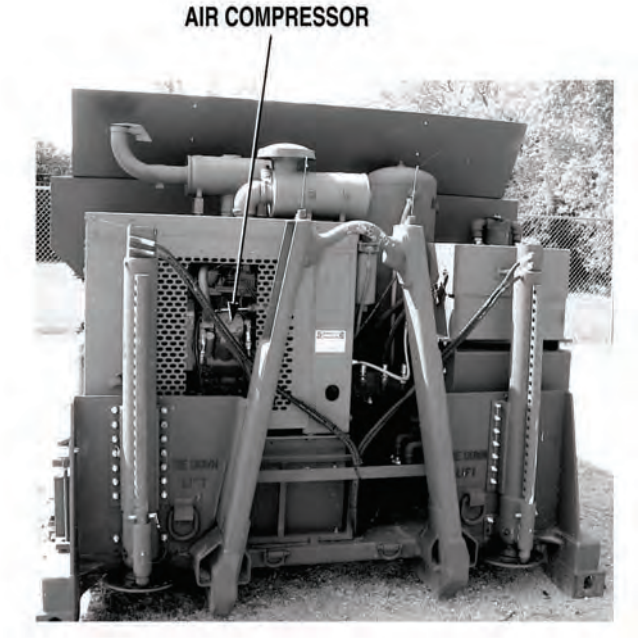

21. ENGINE EXCESSIVE NOISE OR VIBRATION (CONT).

KNOWN INFO

- Exhaust assembly not damaged.
- Exhaust assembly hardware not loose or missing.
- Air intake assembly not damaged.
- Air intake assembly hardware not loose or missing.
- Air compressor air intake hose not loose or damaged.
- Air compressor mounting hardware not loose or missing.
- Engine cooling fan not damaged.
- Engine cooling fan drive belt not loose or damaged.
- Hydraulic reservoir fluid level OK.
- Hydraulic reservoir gate valves open.
- Engine oil level OK.
- Engine not running rough, knocking, or misfiring.
- Hydraulic pump OK.

POSSIBLE PROBLEMS

- Air compressor oil line kinked, leaks, or damaged.
- Air compressor coolant hoses faulty.
- Air compressor faulty.

15.

WARNING

Read WARNING on Page 4-631

Is air compressor oil line free from kinks and damage?

NO → Repair or replace air compressor oil line, (Para 3-110). Verify repair, go to Step 17 of this Fault.

YES ↓

TEST OPTIONS

Visual inspection.

REASON FOR QUESTION

If air compressor oil line is not free from kinks and damage, compressor could overheat causing air compressor to have excessive noise or vibration.

WARNING

Use extreme caution when working in engine compartment. Engine components may be extremely hot. Failure to comply could cause serious injury to personnel.

VISUAL INSPECTION
(1) Shut OFF engine, (Para 2-19). (2) Check if air compressor oil line is free from kinks and damage. (a) If air compressor oil line is kinked and damaged, replace air compressor oil line, (Para 3-110). Verify repair, go to Step 17 of this Fault. (b) If air compressor oil line is free from kinks and damage, go to Step 16 of this Fault.

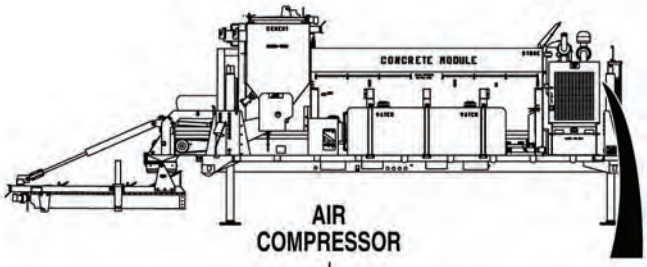

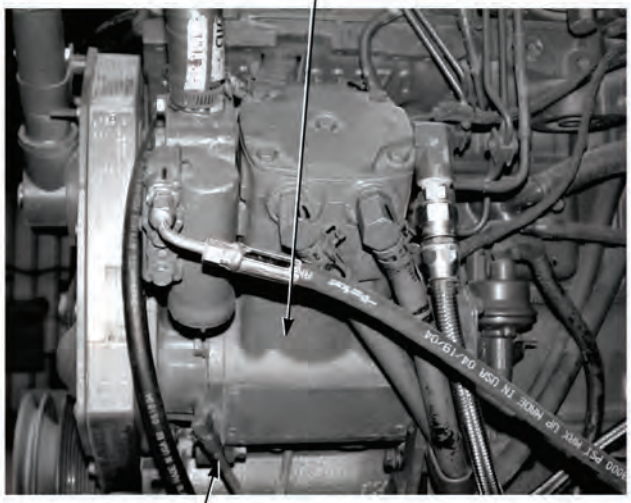

21. ENGINE EXCESSIVE NOISE OR VIBRATION (CONT).

KNOWN INFO

- Exhaust assembly not damaged.
- Exhaust assembly hardware not loose or missing.
- Air intake assembly not damaged.
- Air intake assembly hardware not loose or missing.
- Air compressor air intake hose not loose or damaged.
- Air compressor mounting hardware not loose or missing.
- Engine cooling fan not damaged.
- Engine cooling fan drive belt not loose or damaged.
- Hydraulic reservoir fluid level OK.
- Hydraulic reservoir gate valves open.
- Engine oil level OK.
- Engine not running rough, knocking, or misfiring.
- Hydraulic pump OK.
- Air compressor oil line not kinked, leaking or damaged.

POSSIBLE PROBLEMS

- Air compressor coolant hoses faulty.
- Air compressor faulty.

16.

Are air compressor coolant hoses free from kinks and damage?

NO → Repair or replace air compressor coolant hoses, (Para 3-110). Verify repair, go to Step 17 of this Fault.

YES → Replace air compressor, (Para 3-110). Verify repair, go to Step 17 of this Fault.

TEST OPTIONS

Visual inspection.

REASON FOR QUESTION

Damaged or kinked coolant hoses, or faulty air compressor could cause air compressor to have excessive noise or vibration.

VISUAL INSPECTION

(1) Check if air compressor coolant hoses are free from kinks and damage.

(a) If air compressor coolant hoses are kinked and damaged, repair or replace air compressor coolant hoses, (Para 3-110).

(b) If air compressor coolant hoses are free from kinks and damage, replace air compressor, (Para 3-110).

(2) Verify repair, go to Step 17 of this Fault.

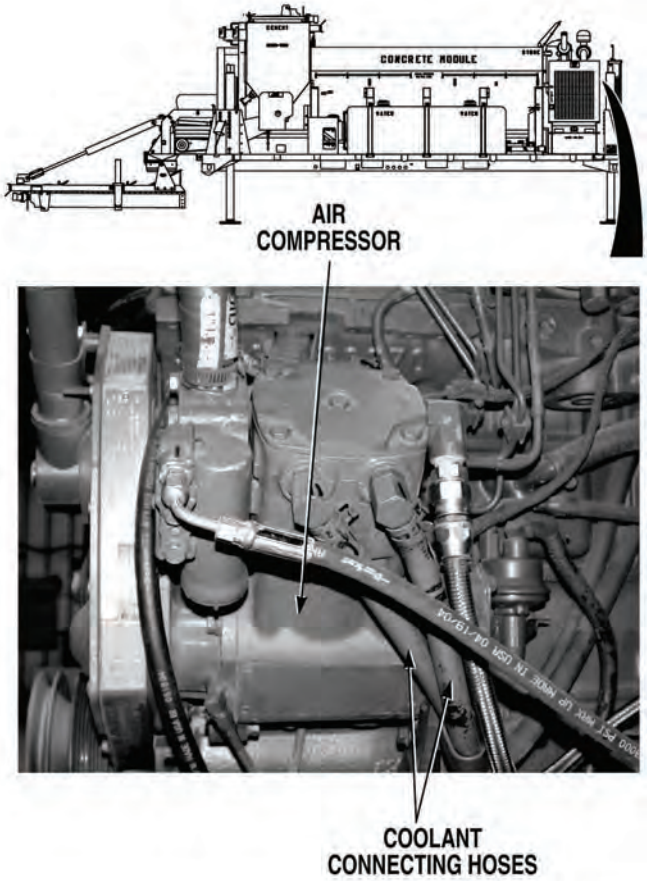

21. ENGINE EXCESSIVE NOISE OR VIBRATION (CONT).

KNOWN INFO
Exhaust assembly not damaged. Exhaust assembly hardware not loose or missing. Air intake assembly not damaged. Air intake assembly hardware not loose or missing. Air compressor air intake hose not loose or damaged. Air compressor mounting hardware not loose or missing. Engine cooling fan not damaged. Engine cooling fan drive belt not loose or damaged. Hydraulic reservoir fluid level OK. Hydraulic reservoir gate valves open. Engine oil level OK. Engine not running rough, knocking, or misfiring. Hydraulic pump OK. Air compressor oil line not kinked, leaking or damaged. Air compressor coolant hoses OK. Air compressor OK.
POSSIBLE PROBLEMS
None.

17.

Does engine run without excessive noise or vibration?

NO → Fault not corrected. Notify Supervisor.

YES → Fault corrected.

TEST OPTIONS
Verify repair.
REASON FOR QUESTION
If engine runs without excessive noise or vibration, fault has been corrected.

VERIFY REPAIR

(1) If OFF, start engine, (Para 2-19).

(2) Check if engine is free from excessive noise and vibration.

  (a) If engine is not free from excessive noise and vibration, fault not corrected. Notify Supervisor.

  (b) If engine is free from excessive noise and vibration, fault has been corrected.

(3) Shut OFF engine, (Para 2-19).

(4) If removed, install front engine access panel, (Para 3-78).

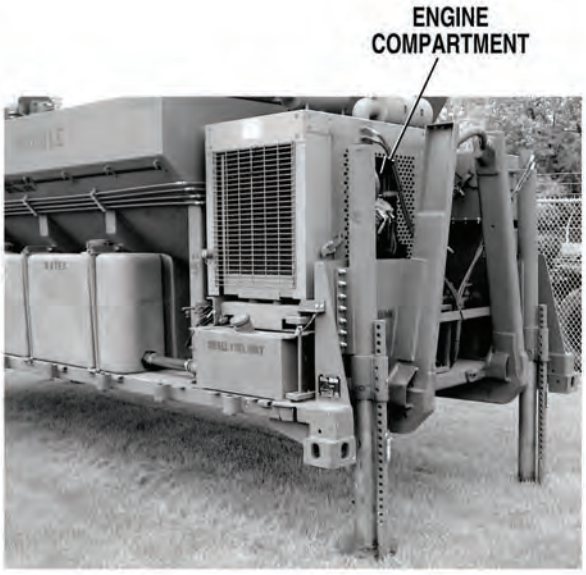

22. ENGINE FAILS TO CRANK OR CRANKS SLOWLY.

INITIAL SETUP

Tools and Special Tools

Tool Kit, General Mechanic's: Automotive (Item 19, Appendix I)

Multimeter (Item 11, Appendix I)

Jumperwire

Equipment Condition

Concrete Mobile Mixer unloaded from PLS, (Para 2-5)

Engine OFF, (Para 2-19)

KNOWN INFO

Nothing.

POSSIBLE PROBLEMS

- Battery terminals loose or corroded.
- Batteries faulty.
- Engine fuel or air intake system fault.
- Engine wire harness (white) wire faulty.
- Starter mounting screws loose.
- Wire connections at starter loose or corroded.
- NATO terminal connections loose or corroded.
- Starter faulty.
- Engine wire harness 24 VDC (red) wire to starter magnetic switch faulty.
- Starter magnetic switch faulty.
- Engine wire harness ground (black) wire faulty.
- Main wire harness (white) wire faulty.
- Control box 5-pin wire harness (white) wire faulty.
- IGNITION SWITCH faulty.
- ENGINE fuse faulty.
- Control box 5-pin wire harness 24 VDC (red) wire faulty.
- Main wire harness 24 VDC (red) wire faulty.
- Negative battery wire connection at starter loose or corroded.
- Negative battery cable faulty.
- Engine wire harness 24 VDC control panel/alternator (red) wire faulty.
- 24 VDC battery cable faulty.

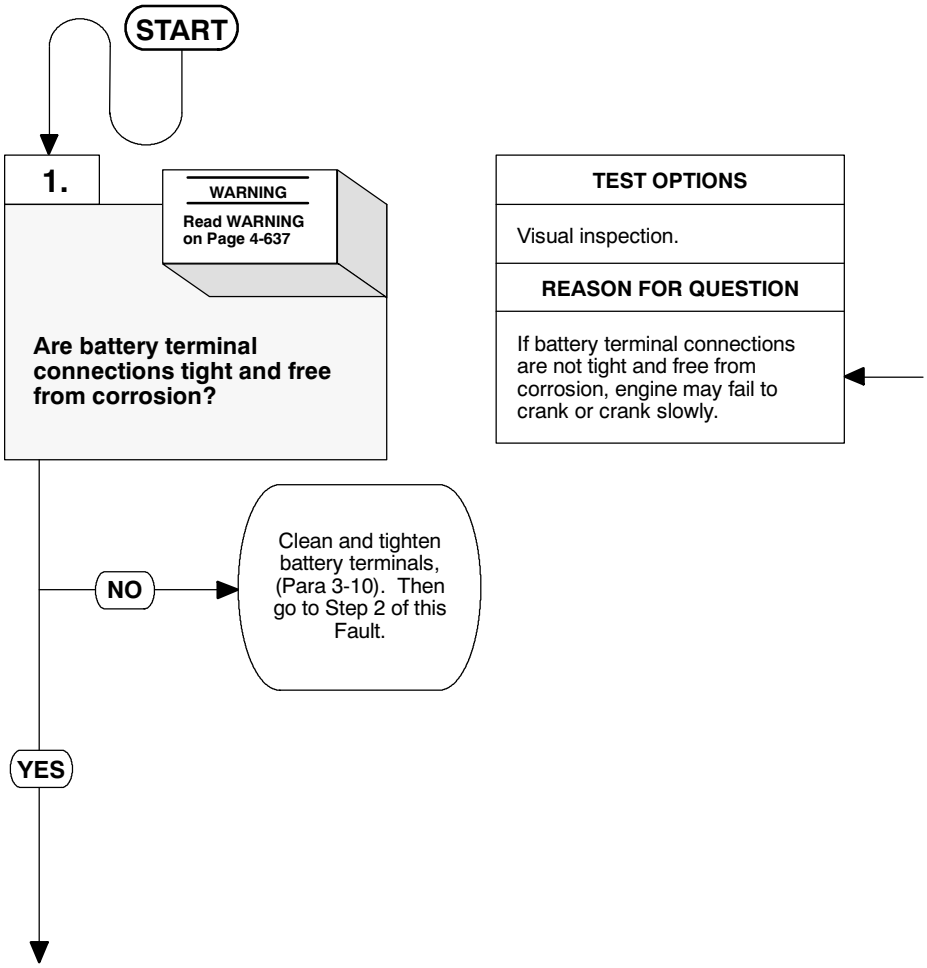

WARNING

Remove all jewelry such as rings, dog tags, bracelets etc. If jewelry or tools contact positive electrical circuits, a direct short may result. Damage to equipment, injury, or death to personnel may occur.

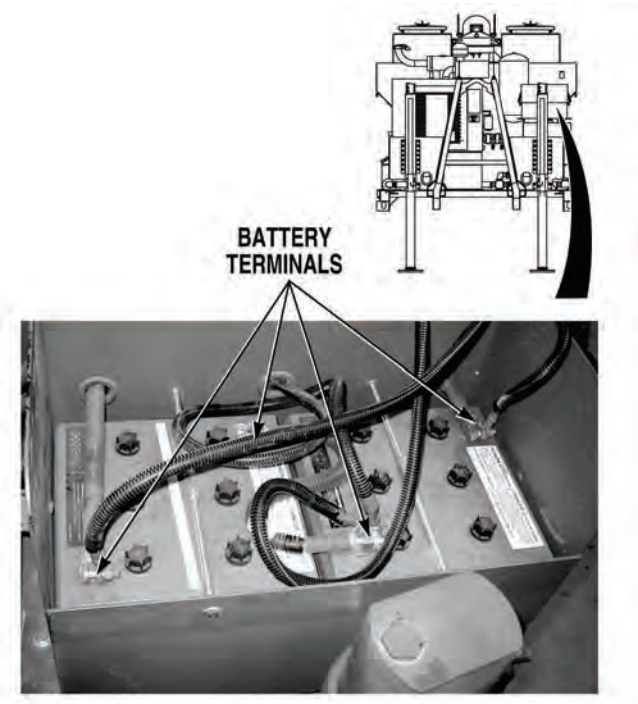

VISUAL INSPECTION

(1) Open battery box, (Para 3-10).

(2) Check if battery terminals are tight and free from corrosion.

(a) If battery terminals are not tight and free from corrosion, clean and tighten battery terminal connections, (Para 3-10). Then go to Step 2 of this Fault.

(b) If battery terminals are tight and free from corrosion, go to Step 2 of this Fault.

22. ENGINE FAILS TO CRANK OR CRANKS SLOWLY (CONT).

KNOWN INFO
Battery terminals not loose or corroded.

POSSIBLE PROBLEMS
Batteries faulty.
Engine fuel or air intake system fault.
Engine wire harness (white) wire faulty.
Starter mounting screws loose.
Wire connections at starter loose or corroded.
NATO terminal connections loose or corroded.
Starter faulty.
Engine wire harness 24 VDC (red) wire to starter magnetic switch faulty.
Starter magnetic switch faulty.
Engine wire harness ground (black) wire faulty.
Main wire harness (white) wire faulty.
Control box 5-pin wire harness (white) wire faulty.
IGNITION SWITCH faulty.
ENGINE fuse faulty.
Control box 5-pin wire harness 24 VDC (red) wire faulty.
Main wire harness 24 VDC (red) wire faulty.
Negative battery wire connection at starter loose or corroded.
Negative battery cable faulty.
Engine wire harness 24 VDC control panel/alternator (red) wire faulty.
24 VDC battery cable faulty.

2.

Does engine crank?

NO → Go to Step 7 of this Fault.

YES ↓

TEST OPTIONS
Operational test.

REASON FOR QUESTION
To isolate fault.

OPERATIONAL TEST
(1) Perform start engine procedure, (Para 2-19). (2) Check if engine cranks. (a) If engine does not crank, go to Step 7 of this Fault. (b) If engine cranks, go to Step 3 of this Fault.

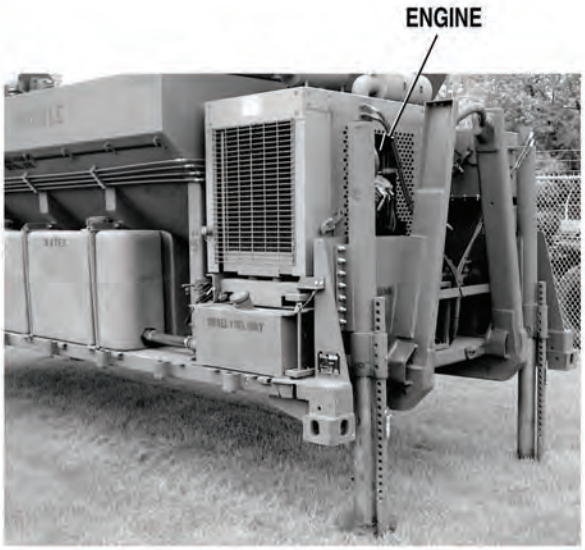

22. ENGINE FAILS TO CRANK OR CRANKS SLOWLY (CONT).

KNOWN INFO
Battery terminals not loose or corroded.
Engine wire harness (white) wire OK.
Engine wire harness 24 VDC (red) wire to starter magnetic switch OK.
Starter magnetic switch OK.
Engine wire harness ground (black) wire OK.
Main wire harness (white) wire OK.
Control box 5-pin wire harness (white) wire OK.
IGNITION SWITCH OK.
ENGINE fuse OK.
Control box 5-pin wire harness 24 VDC (red) wire OK.
Main wire harness 24 VDC (red) wire OK.
Negative battery wire connection at starter not loose or corroded.
Negative battery cable OK.
Engine wire harness 24 VDC control panel/alternator (red) wire OK.
24 VDC battery cable OK.

POSSIBLE PROBLEMS
Batteries faulty.
Engine fuel or air intake system fault.
Starter mounting screws loose.
Wire connections at starter loose or corroded.
NATO terminal connections loose or corroded.
Starter faulty.

3.

Does engine start?

NO → Go to Step 4 of this Fault.

YES → Problem corrected. Verify repair, go to Step 29 of this Fault.

TEST OPTIONS
Operational test.
REASON FOR QUESTION
If engine starts, battery terminals were loose or corroded.

OPERATIONAL TEST
(1) Perform start engine procedure, (Para 2-19). (2) Check if engine starts. (a) If engine does not start, go to Step 4 of this Fault. (b) If engine starts, battery terminals were loose or corroded. Verify repair, go to Step 30 of this Fault.

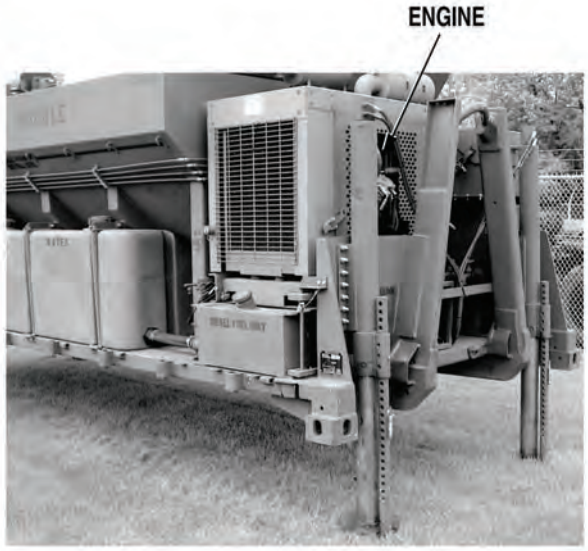

22. ENGINE FAILS TO CRANK OR CRANKS SLOWLY (CONT).

KNOWN INFO

- Battery terminals not loose or corroded.
- Engine wire harness (white) wire OK.
- Engine wire harness 24 VDC (red) wire to starter magnetic switch OK.
- Starter magnetic switch OK.
- Engine wire harness ground (black) wire OK.
- Main wire harness (white) wire OK.
- Control box 5-pin wire harness (white) wire OK.
- IGNITION SWITCH OK.
- ENGINE fuse OK.
- Control box 5-pin wire harness 24 VDC (red) wire OK.
- Main wire harness 24 VDC (red) wire OK.
- Negative battery wire connection at starter not loose or corroded.
- Negative battery cable OK.
- Engine wire harness 24 VDC control panel/alternator (red) wire OK.
- 24 VDC battery cable OK.

POSSIBLE PROBLEMS

- Batteries faulty.
- Engine fuel or air intake system fault.
- Starter mounting screws loose.
- Wire connections at starter loose or corroded.
- NATO terminal connections loose or corroded.
- Starter faulty.

4.

Is voltmeter reading between 22 to 28 VDC when IGNITION SWITCH is turned ON?

NO → Check specific gravity (TM 9-6140-200-14) and service batteries. Verify repair, go to Step 29 of this Fault.

YES ↓

TEST OPTIONS

Voltage test.

REASON FOR QUESTION

If voltmeter reading is not between 22 and 28 VDC, batteries maybe faulty.

VOLTAGE TEST

(1) Turn IGNITION SWITCH ON, (Para 2-1).

(2) Check if voltmeter reading is between 22 and 28 VDC.

(a) If voltmeter reading is not between 22 and 28 VDC, check specific gravity (TM 9-6140-200-14) and service batteries. Verify repair, go to Step 29 of this Fault.

(b) If voltmeter reading is between 22 and 28 VDC, go to Step 5 of this Fault.

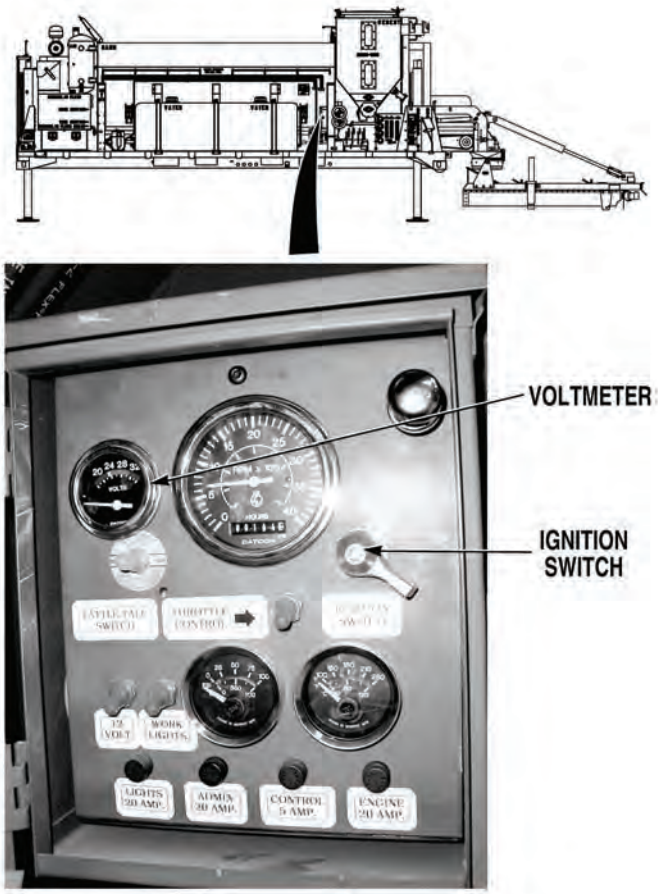

22. ENGINE FAILS TO CRANK OR CRANKS SLOWLY (CONT).

KNOWN INFO
Battery terminals not loose or corroded.
Engine wire harness (white) wire OK.
Engine wire harness 24 VDC (red) wire to starter magnetic switch OK.
Starter magnetic switch OK.
Engine wire harness ground (black) wire OK.
Main wire harness (white) wire OK.
Control box 5-pin wire harness (white) wire OK.
IGNITION SWITCH OK.
ENGINE fuse OK.
Control box 5-pin wire harness 24 VDC (red) wire OK.
Main wire harness 24 VDC (red) wire OK.
Negative battery wire connection at starter not loose or corroded.
Negative battery cable OK.
Engine wire harness 24 VDC control panel/alternator (red) wire OK.
24 VDC battery cable OK.
Batteries OK.

POSSIBLE PROBLEMS
Engine fuel or air intake system fault.
Starter mounting screws loose.
Wire connections at starter loose or corroded.
NATO terminal connections loose or corroded.
Starter faulty.

5.

Is engine cranking speed greater than 150 RPM?

NO → Go to Step 11 of this Fault.

YES ↓

TEST OPTIONS
Operational test.
REASON FOR QUESTION
If engine cranking speed is not above 150 RPM's engine may not start.

OPERATIONAL TEST
(1) Turn IGNITION SWITCH to start engine position, (Para 2-1). Do not press TATTLE TALE switch. (2) Check if engine cranking speed is greater than 150 RPM. (a) If engine cranking speed is not greater than 150 RPM, go to Step 11 of this Fault. (b) If engine cranking speed is greater than 150 RPM, go to Step 6 of this Fault.

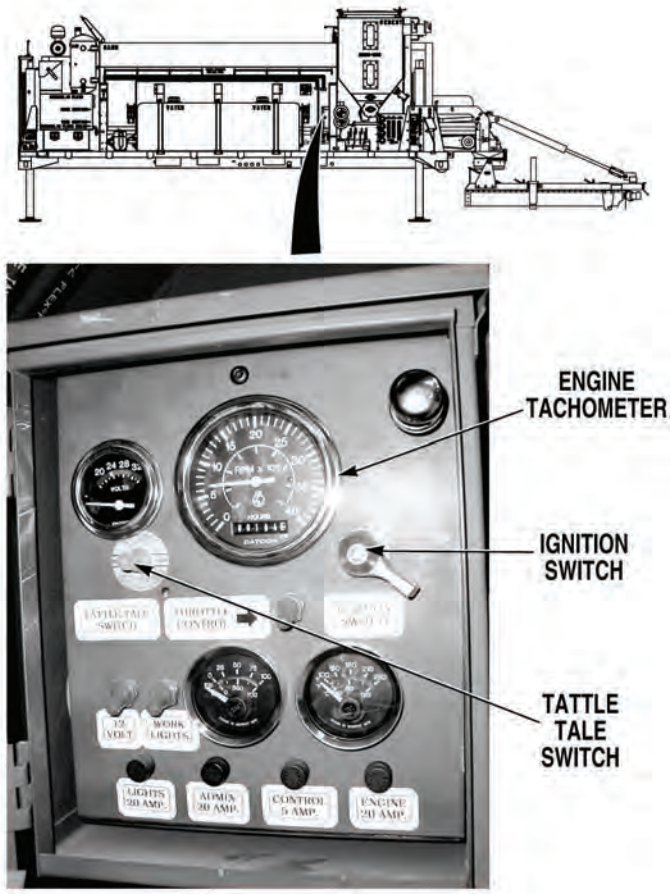

22. ENGINE FAILS TO CRANK OR CRANKS SLOWLY (CONT).

KNOWN INFO
Battery terminals not loose or corroded. Engine wire harness (white) wire OK. Engine wire harness 24 VDC (red) wire to starter magnetic switch OK. Starter magnetic switch OK. Engine wire harness ground (black) wire OK. Main wire harness (white) wire OK. Control box 5-pin wire harness (white) wire OK. IGNITION SWITCH OK. ENGINE fuse OK. Control box 5-pin wire harness 24 VDC (red) wire OK. Main wire harness 24 VDC (red) wire OK. Negative battery wire connection at starter not loose or corroded. Negative battery cable OK. Engine wire harness 24 VDC control panel/alternator (red) wire OK. 24 VDC battery cable OK. Batteries OK. Starter mounting screws OK. Wire connections at starter not loose or corroded. NATO terminal connections OK. Starter OK.
POSSIBLE PROBLEMS
Engine fuel or air intake system fault.

6.

Is exhaust smoke present?

NO → Go to “Engine Cranks But Fails to Start (Exhaust Smoke Not Present)”, (Fault 18).

YES → Go to “Engine Cranks But Hard to Start or Will Not Start (Exhaust Smoke Present”, (Fault 19).

TEST OPTIONS
Visual inspection.
REASON FOR QUESTION
To determine best method of troubleshooting fault.

VISUAL INSPECTION
While cranking engine, check if exhaust smoke is present. (a) If exhaust smoke is not present while cranking engine, go to “Engine Cranks but Fails to Start (Exhaust Smoke Not Present)”, (Fault 18). (b) If exhaust smoke is present while cranking engine, go to “Engine Cranks Hard But Hard To Start or Will Not Start (Exhaust Smoke Present)”, (Fault 19).

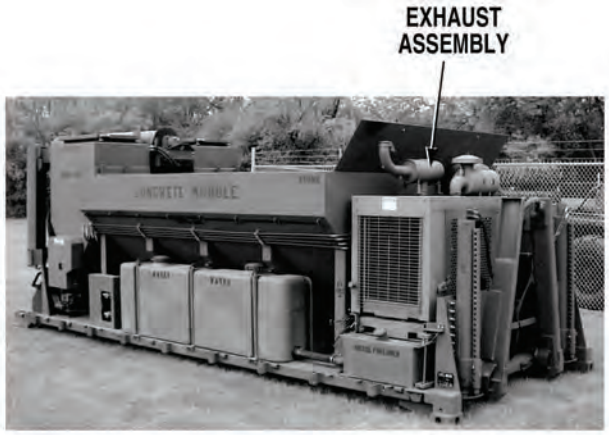

22. ENGINE FAILS TO CRANK OR CRANKS SLOWLY (CONT).

KNOWN INFO
Battery terminals not loose or corroded.
No engine fuel or air intake system fault.

POSSIBLE PROBLEMS
Batteries faulty.
Engine wire harness (white) wire faulty.
Starter mounting screws faulty.
Wire connections at starter loose or corroded.
NATO terminal connections loose or corroded.
Starter faulty.
Engine wire harness 24 VDC (red) wire to starter magnetic switch faulty.
Starter magnetic switch faulty.
Engine wire harness ground (black) wire faulty.
Main wire harness (white) wire faulty.
Control box 5-pin wire harness (white) wire faulty.
IGNITION SWITCH faulty.
ENGINE fuse faulty.
Control box 5-pin wire harness 24 VDC (red) wire faulty.
Main wire harness 24 VDC (red) wire faulty.
Negative battery wire connection at starter loose or corroded.
Negative battery cable faulty.
Engine wire harness 24 VDC control panel/alternator (red) wire faulty.
24 VDC battery cable faulty.

7.

Is voltmeter reading between 22 to 28 VDC when IGNITION SWITCH is turned ON?

NO → Go to Step 19 of this Fault.

YES ↓

TEST OPTIONS
Voltage test.

REASON FOR QUESTION
To further isolate fault.

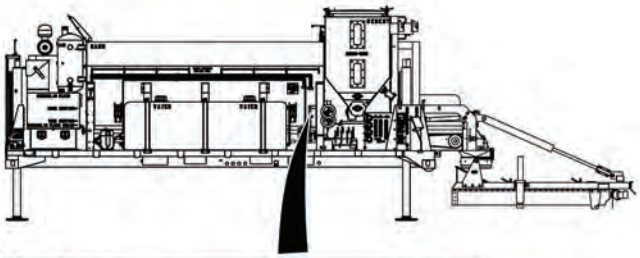

VOLTAGE TEST

(1) Turn IGNITION SWITCH ON, (Para 2-1). Do not start engine.

(2) Check if voltmeter reading is between 22 and 28 VDC.

(a) If voltmeter reading is not between 22 and 28 VDC, go to Step 19 of this Fault.

(b) If voltmeter reading, is between 22 and 28 VDC, go to Step 8 of this Fault.

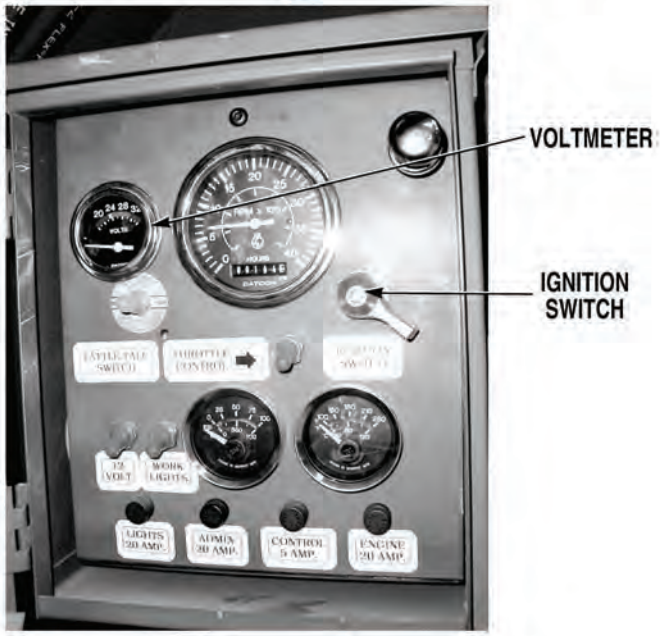

22. ENGINE FAILS TO CRANK OR CRANKS SLOWLY (CONT).

KNOWN INFO
Battery terminals not loose or corroded.
No engine fuel or air intake system fault.
Batteries OK.
ENGINE fuse OK.
Control box 5-pin wire harness 24 VDC (red) wire OK.
Main wire harness 24 VDC (red) wire OK.
Negative battery wire connection at starter not loose or corroded.
Negative battery cable faulty.
Engine wire harness 24 VDC control panel/alternator (red) wire OK.
24 VDC battery cable OK.

POSSIBLE PROBLEMS
Engine wire harness (white) wire faulty.
Starter mounting screws faulty.
Wire connections at starter loose or corroded.
NATO terminal connections loose or corroded.
Starter faulty.
Engine wire harness 24 VDC (red) wire to starter magnetic switch faulty.
Starter magnetic switch faulty.
Engine wire harness ground (black) wire faulty.
Main wire harness (white) wire faulty.
Control box 5-pin wire harness (white) wire faulty.
IGNITION SWITCH faulty.

8.

Is starter magnetic switch energized, when IGNITION SWITCH is positioned to START position?

NO → Go to Step 14 of this Fault.

YES ↓

TEST OPTIONS
Audible test.
REASON FOR QUESTION
If starter magnetic switch does not energize, starter will not be enabled.

OPERATIONAL TEST

NOTE

A clicking sound will be heard from magnetic switch when energizing.

(1) Turn IGNITION SWITCH OFF, (Para 2-1).

(2) Remove front engine access panel, (Para 3-78).

(3) Remove magnetic switch cover plate from engine cover, (Para 3-19).

(4) While an assistant turns IGNITION SWITCH to start position, (Para 2-1). Check if starter magnetic switch energizes. Do not press TATTLE TALE switch.

(a) If starter magnetic switch does not energize, go to Step 14 of this Fault.

(b) If starter magnetic switch energizes, go to Step 9 of this Fault.

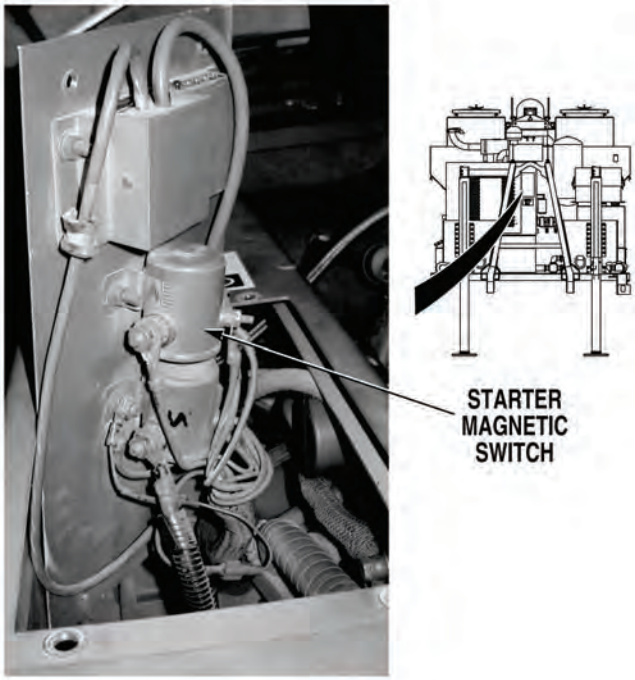

22. ENGINE FAILS TO CRANK OR CRANKS SLOWLY (CONT).

KNOWN INFO
Battery terminals not loose or corroded.
No engine fuel or air intake system fault.
Batteries OK.
ENGINE fuse OK.
Control box 5-pin wire harness 24 VDC (red) wire OK.
Main wire harness 24 VDC (red) wire OK.
Negative battery wire connection at starter not loose or corroded.
Negative battery cable faulty.
Engine wire harness 24 VDC control panel/alternator (red) wire OK.
24 VDC battery cable OK.
Engine wire harness ground (black) wire OK.
Main wire harness (white) wire OK.
Control box 5-pin wire harness (white) wire OK.
IGNITION SWITCH OK.

POSSIBLE PROBLEMS
Engine wire harness (white) wire faulty.
Starter mounting screws faulty.
Wire connections at starter loose or corroded.
NATO terminal connections loose or corroded.
Starter faulty.
Engine wire harness 24 VDC (red) wire to starter magnetic switch faulty.
Starter magnetic switch faulty.

9.

WARNING

Read WARNING on Page 4-653

Are 22 to 28 VDC measured between starter magnetic switch, starter (white) wire terminal and a known good ground, when IGNITION SWITCH is in START position?

NO → Go to Step 13 of this Fault.

YES ↓

TEST OPTIONS
Voltage test.
REASON FOR QUESTION
To further isolate fault.

WARNING

Remove all jewelry such as rings, dog tags, bracelets etc. If jewelry or tools contact positive electrical circuits, a direct short may result. Damage to equipment, injury, or death to personnel may occur.

VOLTAGE TEST

(1) Turn IGNITION SWITCH OFF, (Para 2-1).

(2) Connect positive (+) multimeter lead to starter (white) wire terminal.

(3) Connect negative (-) multimeter lead to a known good ground.

(4) While an assistant turns IGNITION SWITCH to START position, (Para 2-1). Note meter reading. Do not press in TATTLE TALE switch.

(a) If 22 to 28 VDC are not present, go to Step 13 of this Fault.

(b) If 22 to 28 VDC is present, go to Step10 if this Fault.

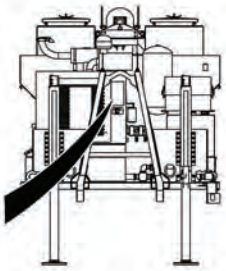

22. ENGINE FAILS TO CRANK OR CRANKS SLOWLY (CONT).

KNOWN INFO
Battery terminals not loose or corroded.
No engine fuel or air intake system fault.
Batteries OK.
ENGINE fuse OK.
Control box 5-pin wire harness 24 VDC (red) wire OK.
Main wire harness 24 VDC (red) wire OK.
Negative battery wire connection at starter not loose or corroded.
Negative battery cable faulty.
Engine wire harness 24 VDC control panel/alternator (red) wire OK.
24 VDC battery cable OK.
Engine wire harness ground (black) wire OK.
Main wire harness (white) wire OK.
Control box 5-pin wire harness (white) wire OK.
IGNITION SWITCH OK.
Engine wire harness 24 VDC (red) wire to starter magnetic switch OK.
Starter magnetic switch OK.

POSSIBLE PROBLEMS
Engine wire harness (white) wire faulty.
Starter mounting screws faulty.
Wire connections at starter loose or corroded.
NATO terminal connections loose or corroded.
Starter faulty.

10.

WARNING

Read WARNING on Page 4-655

Is continuity measured across starter (white) wire from starter magnetic switch contact terminal to starter solenoid terminal?

NO → Repair starter (white) wire or replace engine wire harness, (Para 3-136). Verify repair, go to Step 29 of this Fault.

YES ↓

TEST OPTIONS
Continuity test.
REASON FOR QUESTION
If continuity is not measured, engine wire harness starter (white) wire is faulty.

WARNING

Remove all jewelry such as rings, dog tags, bracelets etc. If jewelry or tools contact positive electrical circuits, a direct short may result. Damage to equipment, injury, or death to personnel may occur.

CONTINUITY TEST

(1) Turn IGNITION SWITCH OFF, (Para 2-1).

(2) Disconnect batteries (Para 3-10).

(3) Remove top engine cover, (Para 3-93).

(4) Set multimeter select switch to ohms.

(5) Connect positive (+) multimeter lead to magnetic switch contact (white) wire terminal.

(6) Connect negative (-) multimeter lead to starter (white) wire terminal.

(a) If continuity is not measured, repair white wire, (Para 3-141) or replace engine wire harness, (Para 3-136). Verify repair, go to Step 29 of this Fault.

(b) If continuity is measured, go to Step 10 of this Fault.

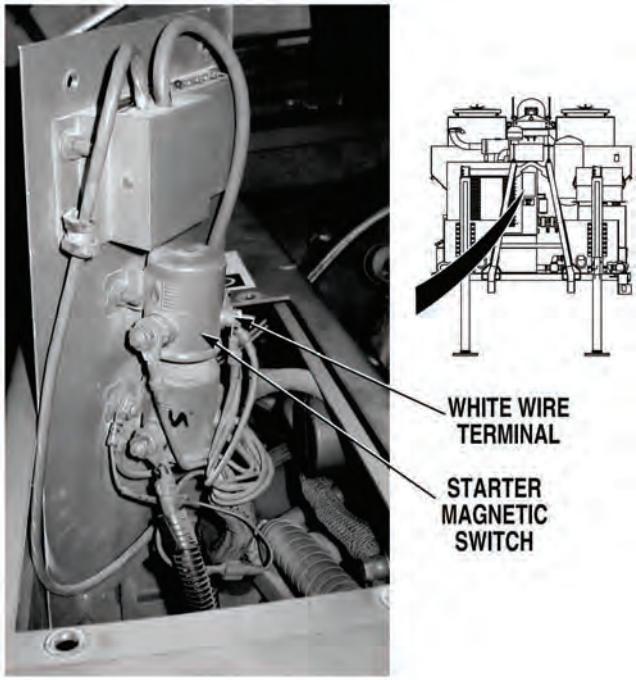

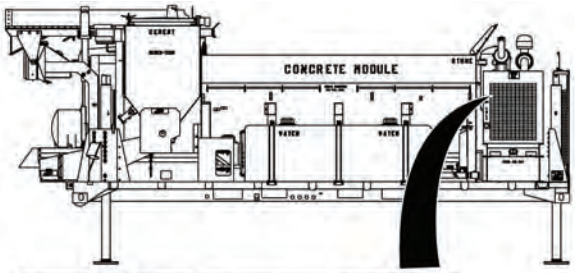

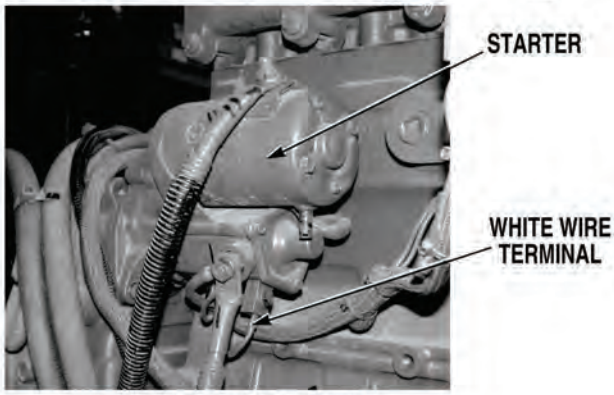

(ENGINE SHOWN REMOVED FROM MODULE FOR CLARITY)

22. ENGINE FAILS TO CRANK OR CRANKS SLOWLY (CONT).

KNOWN INFO

- Battery terminals not loose or corroded.
- No engine fuel or air intake system fault.
- Batteries OK.
- ENGINE fuse OK.
- Control box 5-pin wire harness 24 VDC (red) wire OK.
- Main wire harness 24 VDC (red) wire OK.
- Negative battery wire connection at starter not loose or corroded.
- Negative battery cable faulty.
- Engine wire harness 24 VDC control panel/alternator (red) wire OK.
- 24 VDC battery cable OK.
- Engine wire harness ground (black) wire OK.
- Main wire harness (white) wire OK.
- Control box 5-pin wire harness (white) wire OK.
- IGNITION SWITCH OK.
- Engine wire harness 24 VDC (red) wire to starter magnetic switch OK.
- Starter magnetic switch OK.
- Engine wire harness (white) wire OK.

POSSIBLE PROBLEMS

- Starter mounting screws loose.
- Wire connections at starter loose or corroded.
- NATO terminal connections loose or corroded.
- Starter faulty.

11.

WARNING

Read WARNING on Page 4-657

Are starter mounting screws and terminal connections tight?

NO → Tighten starter mounting screws and terminal connections, (Para 3-24). Verify repair, go to Step 29 of this Fault.

YES ↓

TEST OPTIONS

Visual inspection.

REASON FOR QUESTION

If starter mounting screws and terminal connections are not tight, engine may fail to crank or may crank slowly.

WARNING

Remove all jewelry such as rings, dog tags, bracelets etc. If jewelry or tools contact positive electrical circuits, a direct short may result. Damage to equipment, injury, or death to personnel may occur.

VISUAL INSPECTION
Check if starter mounting screws and terminal connections are tight. (a) If starter mounting screws and terminal connections are not tight, tighten loose mounting screws and terminal connections, (Para 3-24). Verify repair, go to Step 29 of this Fault. (b) If starter mounting screws and terminal connections are tight, go to Step 12 of this Fault.

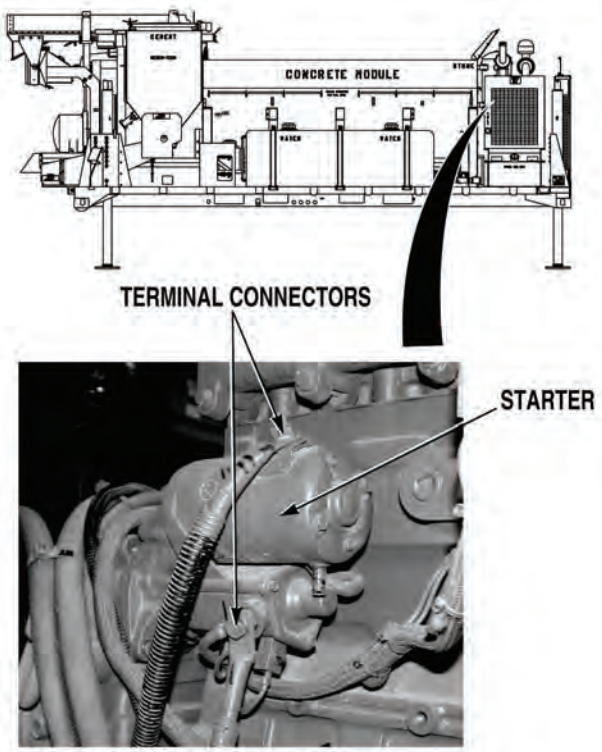

(ENGINE SHOWN REMOVED FROM MODULE FOR CLARITY)

22. ENGINE FAILS TO CRANK OR CRANKS SLOWLY (CONT).

KNOWN INFO

- Battery terminals not loose or corroded.
- No engine fuel or air intake system fault.
- Batteries OK.
- ENGINE fuse OK.
- Control box 5-pin wire harness 24 VDC (red) wire OK.
- Main wire harness 24 VDC (red) wire OK.
- Negative battery wire connection at starter not loose or corroded.
- Negative battery cable faulty.
- Engine wire harness 24 VDC control panel/alternator (red) wire OK.
- 24 VDC battery cable OK.
- Engine wire harness ground (black) wire OK.
- Main wire harness (white) wire OK.
- Control box 5-pin wire harness (white) wire OK.
- IGNITION SWITCH OK.
- Engine wire harness 24 VDC (red) wire to starter magnetic switch OK.
- Starter magnetic switch OK.
- Engine wire harness (white) wire OK.
- Starter mounting screws OK.
- Wire connections at starter not loose or corroded.

POSSIBLE PROBLEMS

- NATO terminal connections loose or corroded.
- Starter faulty.

12.

WARNING

Read WARNING on Page 4-659

Are NATO terminal connections tight and free from corrosion?

NO → Clean and tighten NATO terminal connections, (Para 3-22). Verify repair, go to Step 29 of this Fault.

YES → Replace starter, (Para 3-23). Verify repair go to Step 29 of this Fault.

TEST OPTIONS

Visual inspection.

REASON FOR QUESTION

Engine may fail to crank or crank slowly if NATO terminal connections are loose or starter is faulty.

WARNING

Remove all jewelry such as rings, dog tags, bracelets etc. If jewelry or tools contact positive electrical circuits, a direct short may result. Damage to equipment, injury, or death to personnel may occur.

VISUAL INSPECTION

(1) Remove grill from engine shroud, (Para 3-22).

(2) Check if NATO terminal connections are tight and free from corrosion.

(a) If connections are not tight and free from corrosion, clean and tighten NATO terminal connections, (Para 3-22).

(b) If connections are tight and free from corrosion, replace starter, (Para 3-23).

(3) Verify repair, go to Step 29 of this Fault.

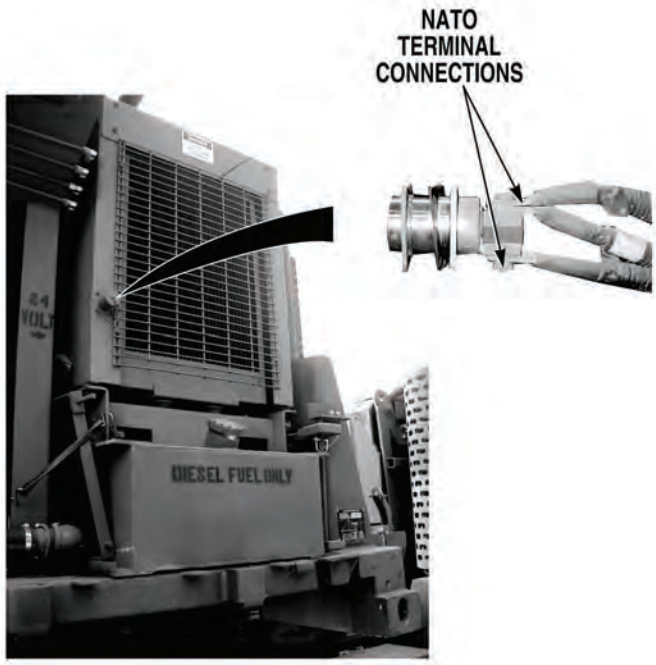

22. ENGINE FAILS TO CRANK OR CRANKS SLOWLY (CONT).

KNOWN INFO

- Battery terminals not loose or corroded.
- No engine fuel or air intake system fault.
- Batteries OK.
- ENGINE fuse OK.
- Control box 5-pin wire harness 24 VDC (red) wire OK.
- Main wire harness 24 VDC (red) wire OK.
- Negative battery wire connection at starter not loose or corroded.
- Negative battery cable faulty.
- Engine wire harness 24 VDC control panel/alternator (red) wire OK.
- 24 VDC battery cable OK.
- Engine wire harness ground (black) wire OK.
- Main wire harness (white) wire OK.
- Control box 5-pin wire harness (white) wire OK.
- IGNITION SWITCH OK.
- Engine wire harness (white) wire OK.
- Starter mounting screws OK.
- Wire connections at starter not loose or corroded.
- NATO terminal connections OK.
- Starter OK.

POSSIBLE PROBLEMS

- Engine wire harness 24 VDC (red) wire to starter magnetic switch faulty.
- Starter magnetic switch faulty.

13.

WARNING

Read WARNING on Page 4-661

Are 22 to 28 VDC measured between 24 VDC battery (red) wire at starter magnetic switch and a known good ground?

NO → Repair 24 VDC battery (red) wire or replace engine wire harness, (Para 3-141). Verify repair, go to Step 29 of this Fault.

YES → Replace starter magnetic switch, (Para 3-18). Verify repair, go to Step 29 of this Fault.

TEST OPTIONS

Voltage test.

REASON FOR QUESTION

If 22 to 28 VDC are present, starter magnetic switch is faulty. If not, engine harness 24 VDC (red) wire is faulty.

WARNING

Remove all jewelry such as rings, dog tags, bracelets etc. If jewelry or tools contact positive electrical circuits, a direct short may result. Damage to equipment, injury, or death to personnel may occur.

VOLTAGE TEST

(1) Connect positive (+) multimeter lead to 24 VDC battery (red) wire at starter magnetic switch.

(2) Connect negative (-) multimeter lead to a known good ground.

(a) If 22 to 28 VDC is not present, repair 24 VDC battery (red) wire, (Para 3-141) or replace engine wire harness, (Para 3-136).

(b) If 22 to 28 VDC is present, replace starter magnetic switch, (Para 3-18).

(3) Verify repair, go to Step 29 of this Fault.

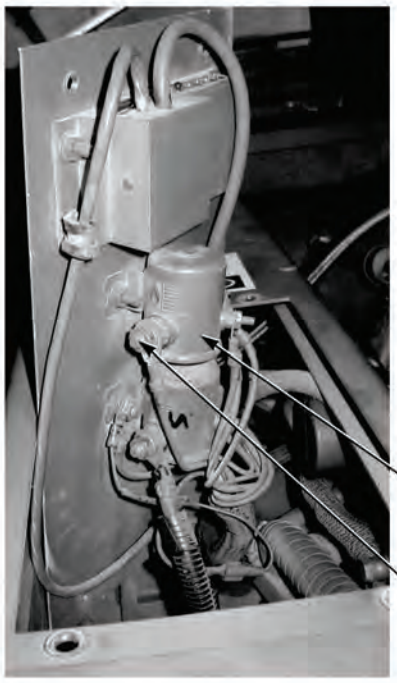

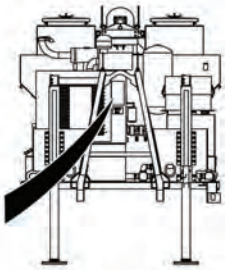

STARTER MAGNETIC SWITCH

24 VDC BATTERY (RED) WIRE

22. ENGINE FAILS TO CRANK OR CRANKS SLOWLY (CONT).

KNOWN INFO
Battery terminals not loose or corroded.
No engine fuel or air intake system fault.
Batteries OK.
ENGINE fuse OK.
Control box 5-pin wire harness 24 VDC (red) wire OK.
Main wire harness 24 VDC (red) wire OK.
Negative battery wire connection at starter not loose or corroded.
Negative battery cable faulty.
Engine wire harness 24 VDC control panel/alternator (red) wire OK.
24 VDC battery cable OK.
Starter mounting screws OK.
Wire connections at starter not loose or corroded.
NATO terminal connections OK.
Starter OK.
Engine wire harness 24 VDC (red) wire to starter magnetic switch OK.

POSSIBLE PROBLEMS
Engine wire harness (white) wire faulty.
Starter magnetic switch faulty.
Engine wire harness ground (black) wire faulty.
Main wire harness (white) wire faulty.
Control box 5-pin wire harness (white) wire faulty.
IGNITION SWITCH faulty.

14.

WARNING

Read WARNING on Page 4-663

Are 22 to 28 VDC measured between starter control (white) wire at starter magnetic switch, control terminal and a known good ground at starter, when IGNITION switch is in the START position?

NO → Go to Step 16 of this Fault.

YES ↓

TEST OPTIONS
Voltage test.
REASON FOR QUESTION
To further isolate fault.

WARNING

Remove all jewelry such as rings, dog tags, bracelets etc. If jewelry or tools contact positive electrical circuits, a direct short may result. Damage to equipment, injury, or death to personnel may occur.

VOLTAGE TEST

(1) Connect positive (+) multimeter lead to starter control (white) wire at starter magnetic switch.

(2) Connect negative (-) multimeter lead to a known good ground on starter.

(3) While an assistant turns IGNITION SWITCH to start position, (Para 2-19). Do not press TATTLE TALE switch.

(4) Check if 22 to 28 VDC are present.

(a) If 22 to 28 VDC are not present, go to Step 16 of this Fault.

(b) If 22 to 28 VDC are present, go to Step 15 of this Fault.

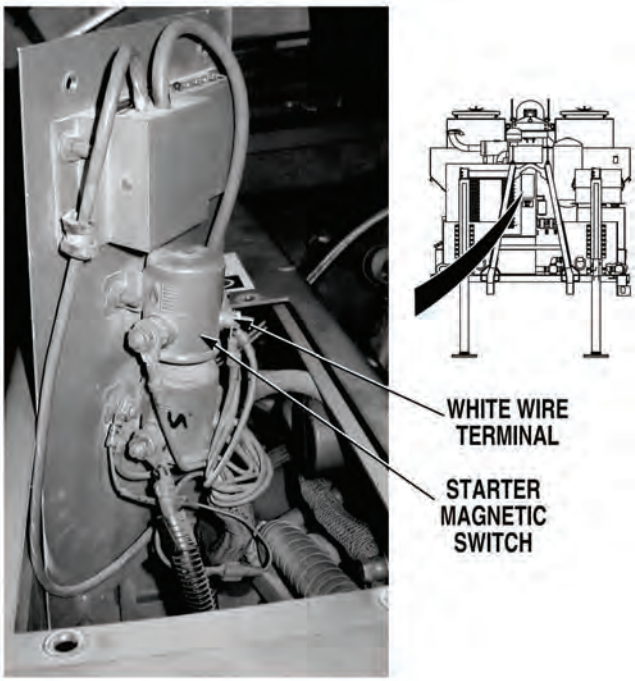

22. ENGINE FAILS TO CRANK OR CRANKS SLOWLY (CONT).

KNOWN INFO
Battery terminals not loose or corroded.
No engine fuel or air intake system fault.
Batteries OK.
ENGINE fuse OK.
Control box 5-pin wire harness 24 VDC (red) wire OK.
Main wire harness 24 VDC (red) wire OK.
Negative battery wire connection at starter not loose or corroded.
Negative battery cable faulty.
Engine wire harness 24 VDC control panel/alternator (red) wire OK.
24 VDC battery cable OK.
Starter mounting screws OK.
Wire connections at starter not loose or corroded.
NATO terminal connections OK.
Starter OK.
Engine wire harness 24 VDC (red) wire to starter magnetic switch OK.
Engine wire harness (white) wire OK.
Main wire harness (white) wire OK.
Control box 5-pin wire harness (white) wire OK.
IGNITION SWITCH OK.

POSSIBLE PROBLEMS
Starter magnetic switch faulty.
Engine wire harness ground (black) wire faulty.

15.

WARNING

Read WARNING on Page 4-665

Is continuity measured between starter magnetic switch case and a known good ground at starter?

NO → Repair ground wire between engine cover plate connection and engine intake manifold connection, (Para 3-141) or replace engine wire harness, (Para 3-136). Verify repair, go to Step 29 of this Fault.

YES → Replace starter magnetic switch, (Para 3-19). Verify repair, go to Step 29 of this Fault.

TEST OPTIONS
Continuity test.

REASON FOR QUESTION
If continuity is measured, starter magnetic switch is faulty. If not, engine wire harness ground wire is faulty.

WARNING

Remove all jewelry such as rings, dog tags, bracelets etc. If jewelry or tools contact positive electrical circuits, a direct short may result. Damage to equipment, injury, or death to personnel may occur.

CONTINUITY TEST

(1) Turn IGNITION SWITCH OFF, (Para 2-1).

(2) Disconnect batteries, (Para 3-10).

(3) Set multimeter select switch to ohms.

(4) Connect positive (+) multimeter lead to starter magnetic switch case.

(5) Connect negative (-) multimeter lead to a known good ground at starter.

(a) If continuity is not measured, repair ground wire between engine compartment and engine intake manifold, (Para 3-141) or replace engine wire harness, (Para 3-136).

(b) If continuity is measured, replace starter magnetic switch, (Para 3-19).

(6) Verify repair, go to Step 29 of this Fault.

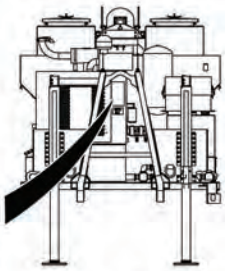

STARTER MAGNETIC SWITCH

22. ENGINE FAILS TO CRANK OR CRANKS SLOWLY (CONT).

KNOWN INFO

- Battery terminals not loose or corroded.
- No engine fuel or air intake system fault.
- Batteries OK.
- ENGINE fuse OK.
- Control box 5-pin wire harness 24 VDC (red) wire OK.
- Main wire harness 24 VDC (red) wire OK.
- Negative battery wire connection at starter not loose or corroded.
- Negative battery cable faulty.
- Engine wire harness 24 VDC control panel/alternator (red) wire OK.
- 24 VDC battery cable OK.
- Starter mounting screws OK.
- Wire connections at starter not loose or corroded.
- NATO terminal connections OK.
- Starter OK.
- Engine wire harness 24 VDC (red) wire to starter magnetic switch OK.
- Starter magnetic switch OK.
- Engine wire harness ground (black) wire OK.

POSSIBLE PROBLEMS

- Engine wire harness (white) wire faulty.
- Main wire harness (white) wire faulty.
- Control box 5-pin wire harness (white) wire faulty.
- IGNITION SWITCH faulty.

16.

WARNING

Read WARNING on Page 4-667

Is continuity measured across main wire harness starter control (white) wire from engine connector, terminal D to 5-pin connector, terminal B?

NO → Repair starter control (white) wire, (Para 3-141) or replace main wire harness, (Para 3-134). Verify repair, go to Step 29 of this Fault.

YES ↓

TEST OPTIONS

Continuity test.

REASON FOR QUESTION

If continuity is not measured, main wire harness starter control (white) wire is faulty.

WARNING

Remove all jewelry such as rings, dog tags, bracelets etc. If jewelry or tools contact positive electrical circuits, a direct short may result. Damage to equipment, injury, or death to personnel may occur.

CONTINUITY TEST

(1) Turn IGNITION SWITCH OFF, (Para 2-1).

(2) Disconnect batteries, (Para 3-10).

(3) Disconnect main wire harness 5-pin connector, (Para 3-134).

(4) Disconnect main wire harness engine connector, (Para 3-134).

(5) Set multimeter select switch to ohms.

(6) Connect jumperwire between main wire harness 5-pin connector, terminal B and a known good ground.

(7) Connect positive (+) multimeter lead to main wire harness engine wire harness connector, terminal D.

(8) Connect negative (-) multimeter lead to a known good ground.

(a) If continuity is not measured, repair starter control (white) wire, (Para 3-141) or replace main wire harness, (Para 3-134). Verify repair, go to Step 29 of this Fault.

(b) If continuity is measured, go to Step 17 of this Fault.

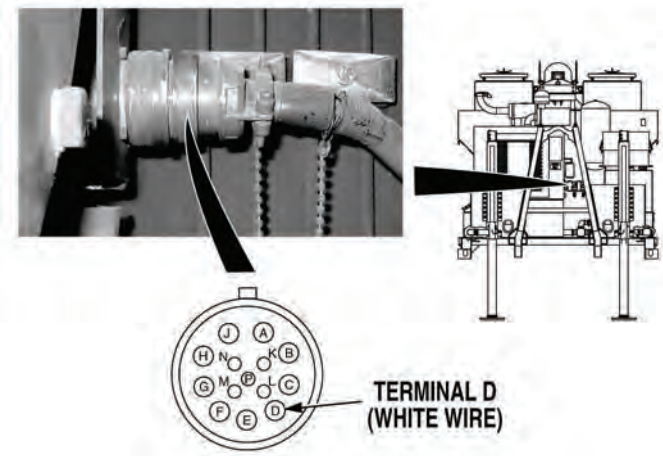

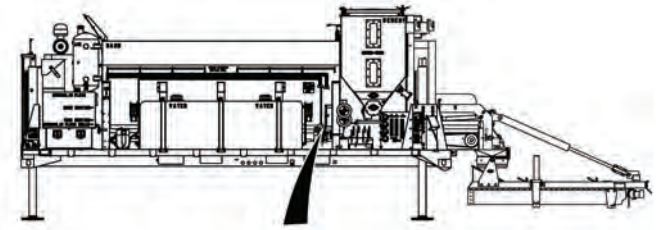

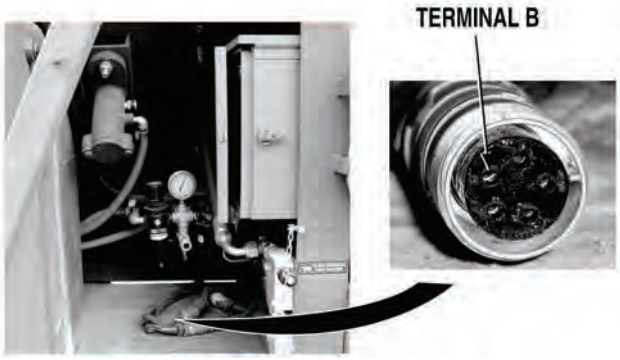

22. ENGINE FAILS TO CRANK OR CRANKS SLOWLY (CONT).

KNOWN INFO

- Battery terminals not loose or corroded.
- No engine fuel or air intake system fault.
- Batteries OK.
- ENGINE fuse OK.
- Control box 5-pin wire harness 24 VDC (red) wire OK.
- Main wire harness 24 VDC (red) wire OK.
- Negative battery wire connection at starter not loose or corroded.
- Negative battery cable faulty.
- Engine wire harness 24 VDC control panel/alternator (red) wire OK.
- 24 VDC battery cable OK.
- Starter mounting screws OK.
- Wire connections at starter not loose or corroded.
- NATO terminal connections OK.
- Starter OK.
- Engine wire harness 24 VDC (red) wire to starter magnetic switch OK.
- Starter magnetic switch OK.
- Engine wire harness ground (black) wire OK.
- Main wire harness (white) wire OK.

POSSIBLE PROBLEMS

- Engine wire harness (white) wire faulty.
- Control box 5-pin wire harness (white) wire faulty.
- IGNITION SWITCH faulty.

17.

WARNING

Read WARNING on Page 4-669

Is continuity measured across control box 5-pin wire harness starter control (white) wire from connector, terminal B to IGNITION SWITCH?

NO → Repair wire, (Para 3-141) or replace control box 5-pin wire harness, (Para 3-138). Verify repair, go to Step 29 of this Fault.

YES ↓

TEST OPTIONS

Continuity test.

REASON FOR QUESTION

If continuity is not measured, control box 5-pin wire harness starter control (white) wire is faulty.

WARNING

Remove all jewelry such as rings, dog tags, bracelets etc. If jewelry or tools contact positive electrical circuits, a direct short may result. Damage to equipment, injury, or death to personnel may occur.

CONTINUITY TEST

(1) Remove control box from Concrete Mobile Mixer, (Para 3-90).

(2) Remove screw from top of control panel. Gently tip control panel forward for access to wires.

(3) Set multimeter select switch to ohms.

(4) Connect positive (+) multimeter lead to control box 5-pin wire harness starter control (white) wire connector, terminal B.

(5) Connect negative (-) multimeter lead to IGNITION SWITCH starter control (white) wire terminal.

(a) If continuity is not measured, repair starter control (white) wire, (Para 3-141) or replace control box 5-pin wire harness, (Para 3-138). Verify repair, go to Step 29 of this Fault.

(b) If continuity is measured, go to Step 18 of this Fault.

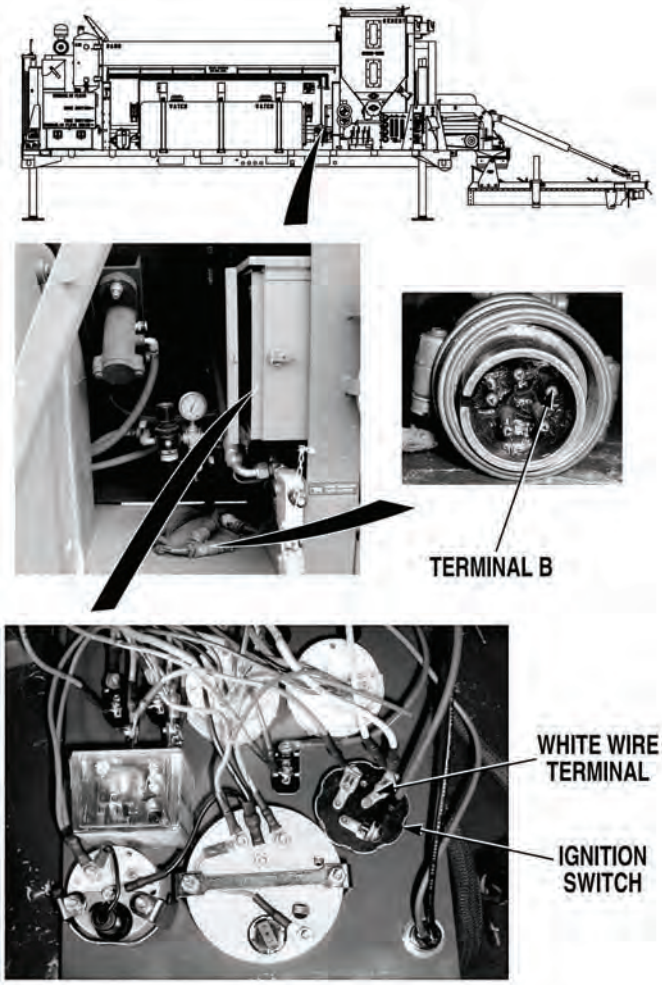

22. ENGINE FAILS TO CRANK OR CRANKS SLOWLY (CONT).

KNOWN INFO

- Battery terminals not loose or corroded.
- No engine fuel or air intake system fault.
- Batteries OK.
- ENGINE fuse OK.
- Control box 5-pin wire harness 24 VDC (red) wire OK.
- Main wire harness 24 VDC (red) wire OK.
- Negative battery wire connection at starter not loose or corroded.
- Negative battery cable faulty.
- Engine wire harness 24 VDC control panel/alternator (red) wire OK.
- 24 VDC battery cable OK.
- Starter mounting screws OK.
- Wire connections at starter not loose or corroded.
- NATO terminal connections OK.
- Starter OK.
- Engine wire harness 24 VDC (red) wire to starter magnetic switch OK.
- Starter magnetic switch OK.
- Engine wire harness ground (black) wire OK.
- Main wire harness (white) wire OK.
- Control box 5-pin wire harness (white) wire OK.

POSSIBLE PROBLEMS

- Engine wire harness (white) wire faulty.
- IGNITION SWITCH faulty.

18.

WARNING

Read WARNING on Page 4-671

Is continuity measured across IGNITION SWITCH from battery B terminal to start S terminal when switch is in the start engine position?

NO → Replace IGNITION SWITCH, (Para 3-56). Verify repair, go to Step 29 of this Fault.

YES → Repair starter control (white) wire, (Para 3-141) or replace engine wire harness, (Para 3-136). Verify repair, go to Step 29 of this Fault.

TEST OPTIONS

Continuity test.

REASON FOR QUESTION

If continuity is measured, engine wire harness starter control (white) wire is faulty. If not, IGNITION SWITCH is faulty.

WARNING

Remove all jewelry such as rings, dog tags, bracelets etc. If jewelry or tools contact positive electrical circuits, a direct short may result. Damage to equipment, injury, or death to personnel may occur.

CONTINUITY TEST

(1) Set multimeter select switch to ohms.

(2) Connect positive (+) multimeter lead to IGNITION SWITCH, terminal (battery) B.

(3) Connect negative (-) multimeter lead to IGNITION SWITCH, terminal (start) S.

(4) Check continuity while turning IGNITION SWITCH to start engine position, (Para 2-1).

(a) If continuity is not measured, replace IGNITION SWITCH, (Para 3-56).

(b) If continuity is measured, repair starter control (white) wire, (Para 3-141) or replace engine wire harness, (Para 3-136).

(5) Verify repair, go to Step 29 of this Fault.

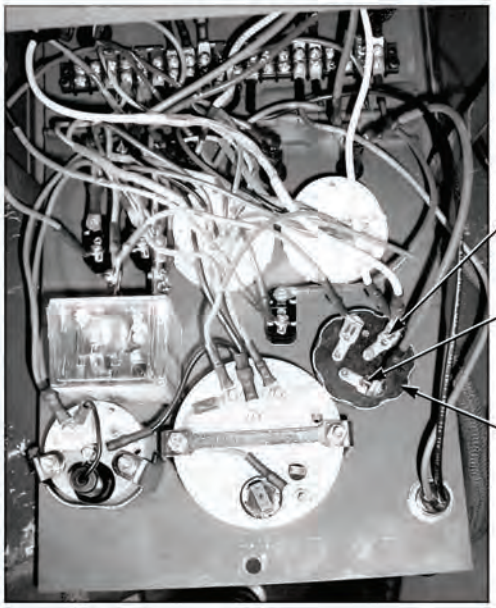

22. ENGINE FAILS TO CRANK OR CRANKS SLOWLY (CONT).

KNOWN INFO

- Battery terminals not loose or corroded.
- No engine fuel or air intake system fault.
- Engine wire harness (white) wire OK.
- Starter mounting screws OK.
- NATO terminal connections OK.
- Starter OK.
- Engine wire harness 24 VDC (red) wire to starter magnetic switch OK.
- Starter magnetic switch OK.
- Engine wire harness ground (black) wire OK.
- Main wire harness (white) wire OK.
- Control box 5-pin wire harness (white) wire OK.

POSSIBLE PROBLEMS

- Batteries faulty.
- Wire connections at starter loose or corroded.
- IGNITION SWITCH faulty.
- ENGINE fuse faulty.
- Control box 5-pin wire harness 24 VDC (red) wire faulty.
- Main wire harness 24 VDC (red) wire faulty.
- Negative battery wire connection at starter loose or corroded.
- Negative battery cable faulty.
- Engine wire harness 24 VDC control panel/alternator (red) wire faulty.
- 24 VDC battery cable faulty.

19.

Is voltmeter reading greater than 0 VDC?

NO → Go to Step 20 of this Fault.

YES → Check specific gravity (TM 9-6140-200-14) and service batteries. Verify repair, go to Step 29 of this Fault.

TEST OPTIONS

Operational test.

REASON FOR QUESTION

If voltmeter reading is greater than 0 VDC, voltmeter circuit is OK and batteries may be faulty.

OPERATIONAL TEST
Check if voltmeter reading is greater than 0 VDC. (a) If voltmeter reading is not greater than 0 VDC, go to Step 20 of this Fault. (b) If voltmeter reading is greater than 0 VDC, check specific gravity, (TM 9-6140-200-14) and service batteries. Verify repair, go to Step 29 of this Fault.

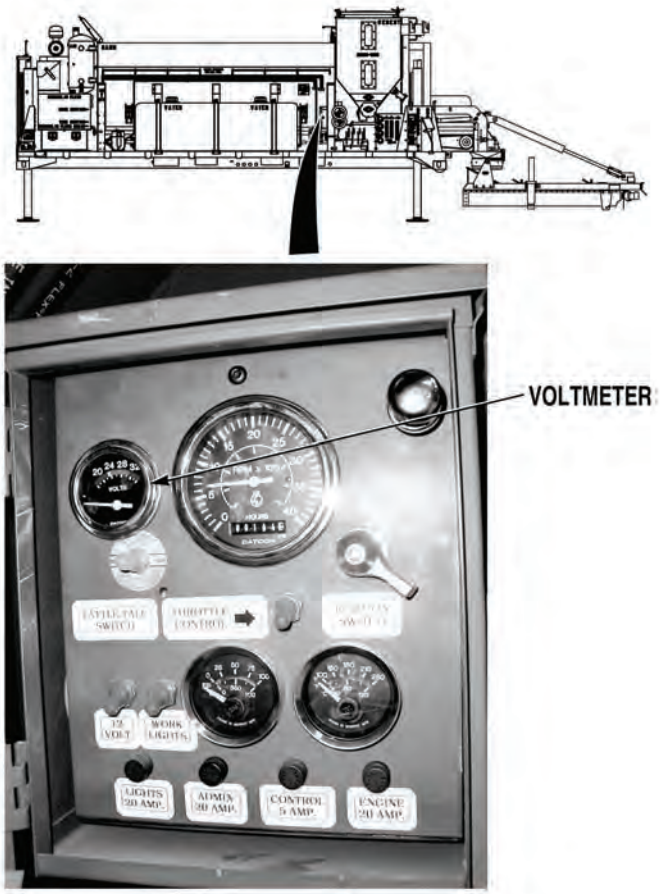

22. ENGINE FAILS TO CRANK OR CRANKS SLOWLY (CONT).

KNOWN INFO
Battery terminals not loose or corroded.
No engine fuel or air intake system fault.
Engine wire harness (white) wire OK.
Starter mounting screws OK.
NATO terminal connections OK.
Starter OK.
Engine wire harness 24 VDC (red) wire to starter magnetic switch OK.
Starter magnetic switch OK.
Engine wire harness ground (black) wire OK.
Main wire harness (white) wire OK.
Control box 5-pin wire harness (white) wire OK.
Batteries OK.

POSSIBLE PROBLEMS
Wire connections at starter loose or corroded.
IGNITION SWITCH faulty.
ENGINE fuse faulty.
Control box 5-pin wire harness 24 VDC (red) wire faulty.
Main wire harness 24 VDC (red) wire faulty.
Negative battery wire connection at starter loose or corroded.
Negative battery cable faulty.
Engine wire harness 24 VDC control panel/alternator (red) wire faulty.
24 VDC battery cable faulty.

20.

WARNING

Read WARNING on Page 4-675

Is continuity measured across ENGINE fuse?

NO → Replace ENGINE fuse, (Para 3-58). Verify repair, go to Step 29 of this Fault.

YES ↓

TEST OPTIONS
Continuity test.
REASON FOR QUESTION
If continuity is not measured, ENGINE fuse is faulty.

WARNING

Remove all jewelry such as rings, dog tags, bracelets etc. If jewelry or tools contact positive electrical circuits, a direct short may result. Damage to equipment, injury, or death to personnel may occur.

CONTINUITY TEST

(1) Turn IGNITION SWITCH OFF, (Para 2-1).

(2) Set multimeter select switch to ohms.

(3) Remove ENGINE fuse from fuse holder, (Para 3-58).

(4) Connect positive (+) multimeter lead to one end of ENGINE fuse.

(5) Connect negative (-) multimeter lead to opposite end of ENGINE fuse.

(a) If continuity is not measured, replace ENGINE fuse, (Para 3-58). Verify repair, go to Step 29 of this Fault.

(b) If continuity is measured, go to Step 21 of this Fault.

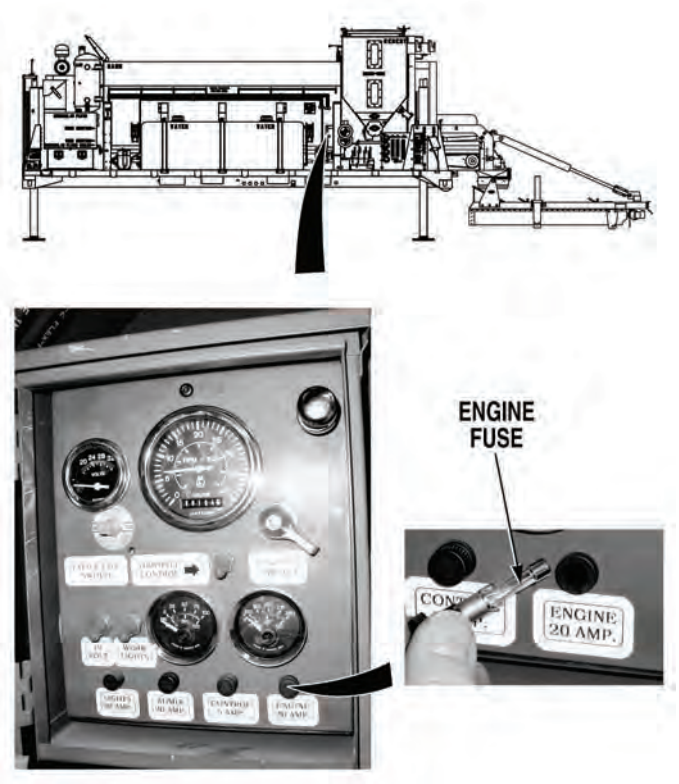

22. ENGINE FAILS TO CRANK OR CRANKS SLOWLY (CONT).

KNOWN INFO
Battery terminals not loose or corroded.
No engine fuel or air intake system fault.
Engine wire harness (white) wire OK.
Starter mounting screws OK.
NATO terminal connections OK.
Starter OK.
Engine wire harness 24 VDC (red) wire to starter magnetic switch OK.
Starter magnetic switch OK.
Engine wire harness ground (black) wire OK.
Main wire harness (white) wire OK.
Control box 5-pin wire harness (white) wire OK.
Batteries OK.
ENGINE fuse OK.

POSSIBLE PROBLEMS
Wire connections at starter loose or corroded.
IGNITION SWITCH faulty.
Control box 5-pin wire harness 24 VDC (red) wire faulty.
Main wire harness 24 VDC (red) wire faulty.
Negative battery wire connection at starter loose or corroded.
Negative battery cable faulty.
Engine wire harness 24 VDC control panel/alternator (red) wire faulty.
24 VDC battery cable faulty.

21.

WARNING

Read WARNING on Page 4-677

Are 22 to 28 VDC measured between main wire harness 5-pin connector, terminal A and C?

NO → Go to Step 23 of this Fault.

YES ↓

TEST OPTIONS
Voltage test.
REASON FOR QUESTION
To further isolate fault.

WARNING

When working in engine compartment area with engine running, be extremely careful to avoid contact with or catching clothing in moving parts. Failure to comply could result in serious injury or death to personnel.

VOLTAGE TEST

(1) Install engine fuse, (Para 3-58).

(2) Disconnect batteries, (Para 3-10).

(3) Disconnect main wire harness 5-pin connector, (Para 3-134).

(4) Connect batteries, (Para 3-10).

(5) Connect positive (+) multimeter lead to main wire harness 5-pin connector, terminal A.

(6) Connect negative (-) multimeter lead to main wire harness 5-pin connector, terminal C.

(a) If 22 to 28 VDC are not present, go to Step 23 of this Fault.

(b) If 22 to 28 VDC are present, go to Step 22 of this Fault.

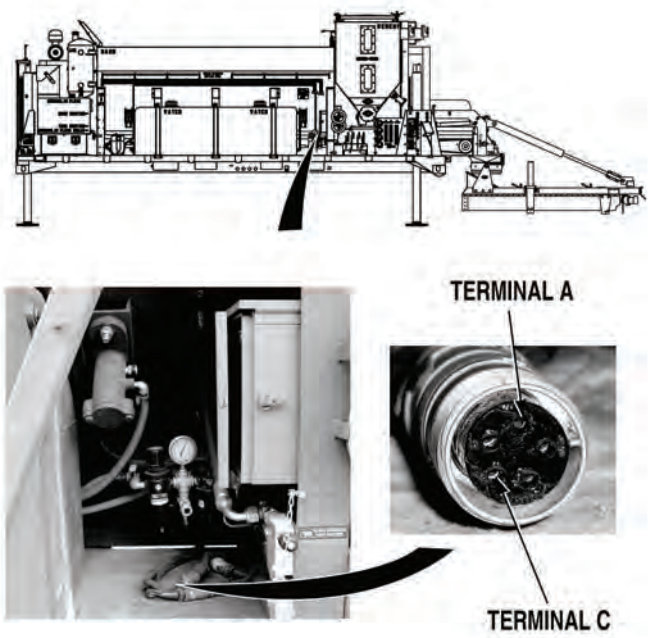

22. ENGINE FAILS TO CRANK OR CRANKS SLOWLY (CONT).

KNOWN INFO

- Battery terminals not loose or corroded.
- No engine fuel or air intake system fault.
- Engine wire harness (white) wire OK.
- Starter mounting screws OK.
- NATO terminal connections OK.
- Starter OK.
- Engine wire harness 24 VDC (red) wire to starter magnetic switch OK.
- Starter magnetic switch OK.
- Engine wire harness ground (black) wire OK.
- Main wire harness (white) wire OK.
- Control box 5-pin wire harness (white) wire OK.
- Batteries OK.
- ENGINE fuse OK.
- Wire connections at starter not loose or corroded.
- Main wire harness 24 VDC (red) wire OK.
- Negative battery wire connection at starter not loose or corroded.
- Negative battery cable OK.
- Engine wire harness 24 VDC control panel/alternator (red) wire OK.
- 24 VDC battery cable OK.

POSSIBLE PROBLEMS

- IGNITION SWITCH faulty.
- Control box 5-pin wire harness 24 VDC (red) wire faulty.

22.

WARNING

Read WARNING on Page 4-679

Is continuity measured across control box 5-pin harness 24 VDC battery power (red) wire from connector, terminal C to IGNITION SWITCH terminal B with IGNITION fuse installed?

NO → Repair wire, (Para 3-141) or replace control box 5-pin wire harness, (Para 3-138). Verify repair, go to Step 29 of this Fault.

YES → Replace IGNITION SWITCH, (Para 3-56). Verify repair, go to Step 29 of this Fault.

TEST OPTIONS

Continuity test.

REASON FOR QUESTION

If continuity is measured, control box 5-pin wire harness battery power (red) wire is faulty. If not, IGNITION SWITCH is faulty.

WARNING

Remove all jewelry such as rings, dog tags, bracelets etc. If jewelry or tools contact positive electrical circuits, a direct short may result. Damage to equipment, injury, or death to personnel may occur.

CONTINUITY TEST

(1) Disconnect batteries, (Para 3-10).

(2) Remove control box from Concrete Mobile Mixer, (Para 3-90).

(3) Remove screw from top control panel. Gently tip control panel forward for access to wires.

(4) If removed, install ENGINE fuse, (Para 3-58).

(5) Set multimeter select switch to ohms.

(6) Connect positive (+) multimeter lead to control box 5-pin connector 24 VDC battery power (red) wire, terminal C.

(7) Connect negative (-) multimeter lead to IGNITION SWITCH, terminal B.

  (a) If continuity is not measured, repair 24 VDC battery power (red) wire, (Para 3-141) or replace control box 5-pin wire harness, (Para 3-138).

  (b) If continuity is measured, replace IGNITION SWITCH, (Para 3-56).

(8) Verify repair, go to Step 29 of this Fault.

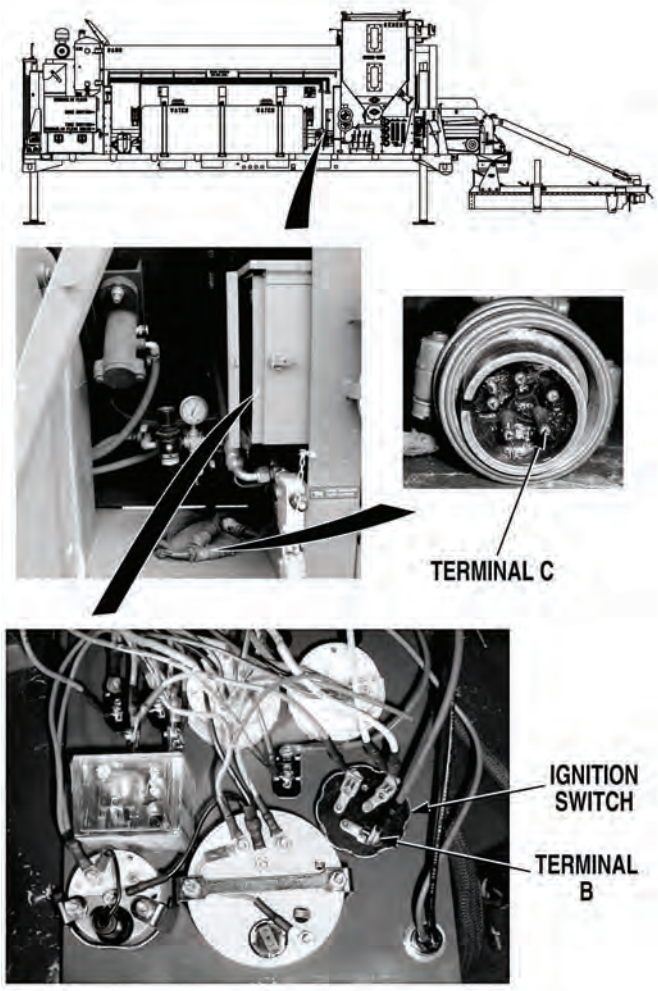

22. ENGINE FAILS TO CRANK OR CRANKS SLOWLY (CONT).

KNOWN INFO

- Battery terminals not loose or corroded.
- No engine fuel or air intake system fault.
- Engine wire harness (white) wire OK.
- Starter mounting screws OK.
- NATO terminal connections OK.
- Starter OK.
- Engine wire harness 24 VDC (red) wire to starter magnetic switch OK.
- Starter magnetic switch OK.
- Engine wire harness ground (black) wire OK.
- Main wire harness (white) wire OK.
- Control box 5-pin wire harness (white) wire OK.
- Batteries OK.
- ENGINE fuse OK.
- IGNITION SWITCH OK.
- Control box 5-pin wire harness 24 VDC (red) wire OK.

POSSIBLE PROBLEMS

- Wire connections at starter loose or corroded.
- Main wire harness 24 VDC (red) wire faulty.
- Negative battery wire connection at starter loose or corroded.
- Negative battery cable faulty.
- Engine wire harness 24 VDC control panel/alternator (red) wire faulty.
- 24 VDC battery cable faulty.

23.

WARNING

Read WARNING on Page 4-681

Is continuity measured across main wire harness 24 VDC battery power (red) wire from engine connector, terminal E to control box 5-pin connector, terminal C?

NO → Repair wire, (Para 3-141) or replace main wire harness, (Para 3-134). Verify repair, go to Step 29 of this Fault.

YES ↓

TEST OPTIONS

Continuity test.

REASON FOR QUESTION

If continuity is not measured, main wire harness 24 VDC battery power (red) wire faulty.

WARNING

Remove all jewelry such as rings, dog tags, bracelets etc. If jewelry or tools contact positive electrical circuits, a direct short may result. Damage to equipment, injury, or death to personnel may occur.

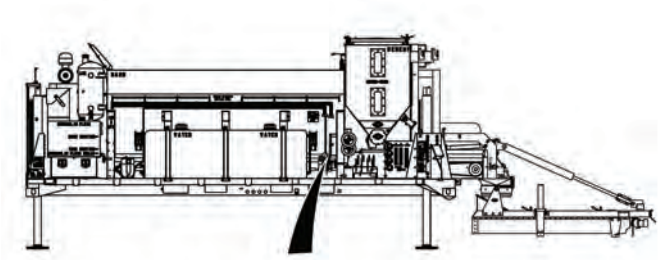

CONTINUITY TEST

(1) Disconnect batteries, (Para 3-10).

(2) Disconnect main wire harness at engine harness connector, (Para 3-134).

(3) Set multimeter select switch to ohms.

(4) Connect jumperwire between main wire harness connector engine harness, terminal E and a known good ground.

(5) Connect positive (+) multimeter lead to main wire harness control box 5-pin harness connector, terminal C.

(6) Connect negative (-) multimeter lead to a known good ground.

(a) If continuity is not measured, repair 24 VDC battery power (red) wire, (Para 3-141) or replace main wire harness, (Para 3-134). Verify repair, go to Step 29 of this Fault.

(b) If continuity is measured, go to Step 24 of this Fault.

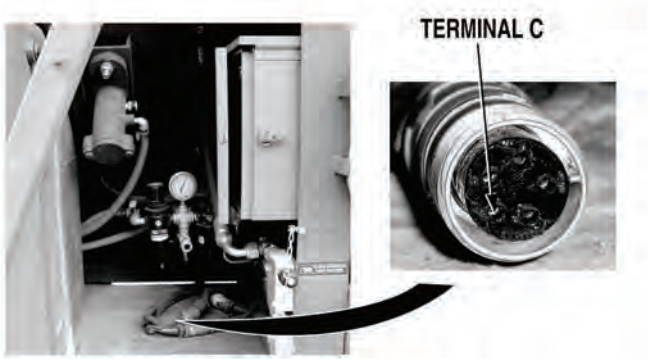

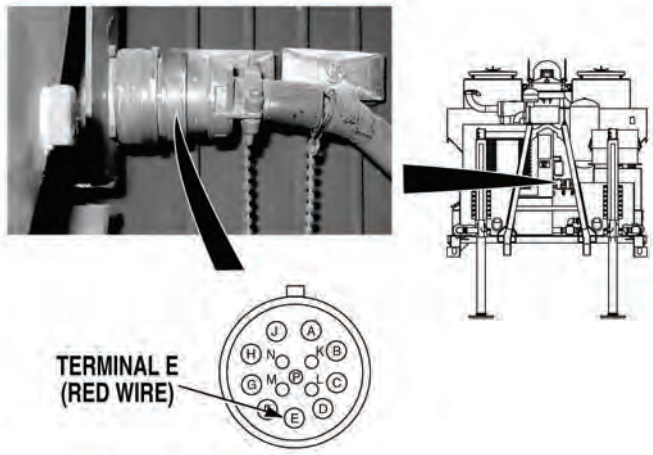

22. ENGINE FAILS TO CRANK OR CRANKS SLOWLY (CONT).

KNOWN INFO

- Battery terminals not loose or corroded.
- No engine fuel or air intake system fault.
- Engine wire harness (white) wire OK.
- Starter mounting screws OK.
- NATO terminal connections OK.
- Starter OK.
- Engine wire harness 24 VDC (red) wire to starter magnetic switch OK.
- Starter magnetic switch OK.
- Engine wire harness ground (black) wire OK.
- Main wire harness (white) wire OK.
- Control box 5-pin wire harness (white) wire OK.
- Batteries OK.
- ENGINE fuse OK.
- IGNITION SWITCH OK.
- Control box 5-pin wire harness 24 VDC (red) wire OK.
- Main wire harness 24 VDC (red) wire OK.

POSSIBLE PROBLEMS

- Negative battery wire connection at starter loose or corroded.
- Negative battery cable faulty.
- Wire connections at starter loose or corroded.
- Engine wire harness 24 VDC control panel/alternator (red) wire faulty.
- 24 VDC battery cable faulty.

24.

WARNING

Read WARNING on Page 4-683

Is negative battery wire connection at starter tight and free from damage and corrosion?

NO → Clean and tighten negative battery wire connection, (Para 3-24). Verify repair, go to Step 29 of this Fault.

YES ↓

TEST OPTIONS

Visual inspection.

REASON FOR QUESTION

If negative battery wire connection is not tight and free from corrosion, engine may crank slowly or fail to crank.

WARNING

Remove all jewelry such as rings, dog tags, bracelets etc. If jewelry or tools contact positive electrical circuits, a direct short may result. Damage to equipment, injury, or death to personnel may occur.

VISUAL INSPECTION

(1) Remove front engine access panel, (Para 3-78).

(2) Remove top engine cover, (Para 3-93).

(3) Check if negative battery cable connection at starter is tight and free from corrosion.

(a) If negative battery connection is not tight and free from corrosion, clean and tighten connection, (Para 3-24). Verify repair, go to Step 29 of this Fault.

(b) If negative battery cable connection is tight and free from corrosion, go to Step 25 of this Fault.

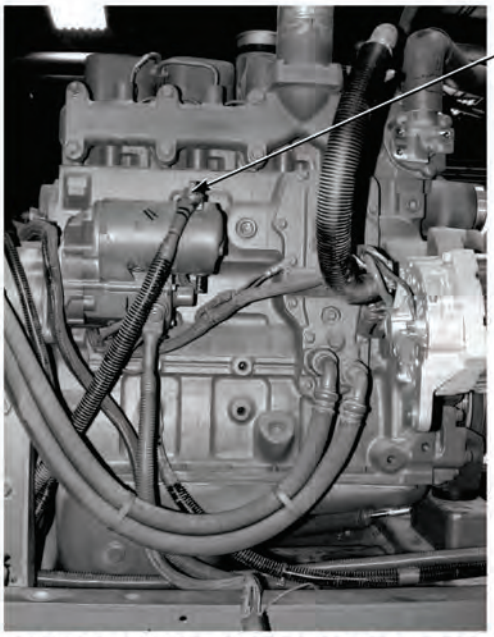

(ENGINE SHOWN REMOVED FROM MODULE FOR CLARITY)

22. ENGINE FAILS TO CRANK OR CRANKS SLOWLY (CONT).

KNOWN INFO
Battery terminals not loose or corroded.
No engine fuel or air intake system fault.
Engine wire harness (white) wire OK.
Starter mounting screws OK.
NATO terminal connections OK.
Starter OK.
Engine wire harness 24 VDC (red) wire to starter magnetic switch OK.
Starter magnetic switch OK.
Engine wire harness ground (black) wire OK.
Main wire harness (white) wire OK.
Control box 5-pin wire harness (white) wire OK.
Batteries OK.
ENGINE fuse OK.
IGNITION SWITCH OK.
Control box 5-pin wire harness 24 VDC (red) wire OK.
Main wire harness 24 VDC (red) wire OK.
Negative battery wire connection at starter not loose or corroded.

POSSIBLE PROBLEMS
Wire connections at starter loose or corroded.
Negative battery cable faulty.
Engine wire harness 24 VDC control panel/alternator (red) wire faulty.
24 VDC battery cable faulty.

25.

WARNING

Read WARNING on Page 4-685

Is continuity measured across negative battery cable from negative battery terminal to starter connection?

NO → Repair or replace negative battery cable, (Para 3-141). Verify repair, go to Step 29 of this Fault.

YES ↓

TEST OPTIONS
Continuity test.
REASON FOR QUESTION
If continuity is not measured, negative battery cable is faulty.

WARNING

Remove all jewelry such as rings, dog tags, bracelets etc. If jewelry or tools contact positive electrical circuits, a direct short may result. Damage to equipment, injury, or death to personnel may occur.

CONTINUITY TEST

(1) Set multimeter select switch to ohms.

(2) Connect positive (+) multimeter lead to negative battery cable at battery negative terminal.

(3) Connect negative (-) multimeter lead to a negative battery cable at starter connection. Use jumperwire if required.

(a) If continuity is not measured, repair or replace negative battery cable, (Para 3-141). Verify repair, go to Step 29 of this Fault.

(b) If continuity is measured, go to Step 26 of this Fault.

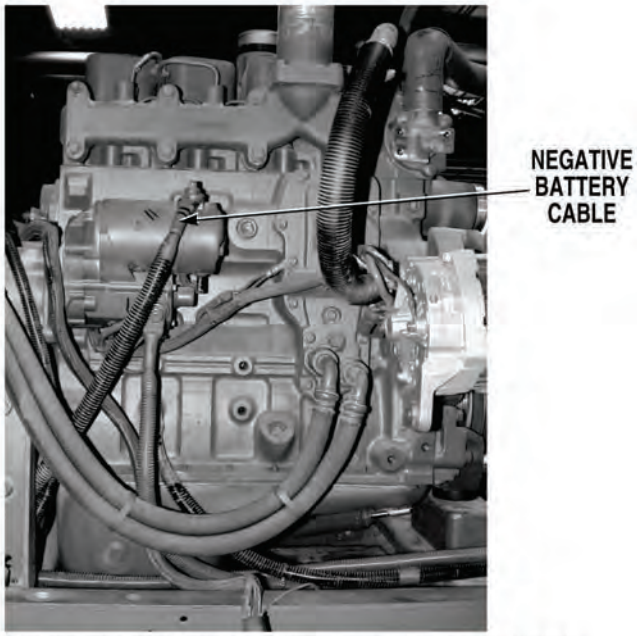

(ENGINE SHOWN REMOVED FROM MODULE FOR CLARITY)

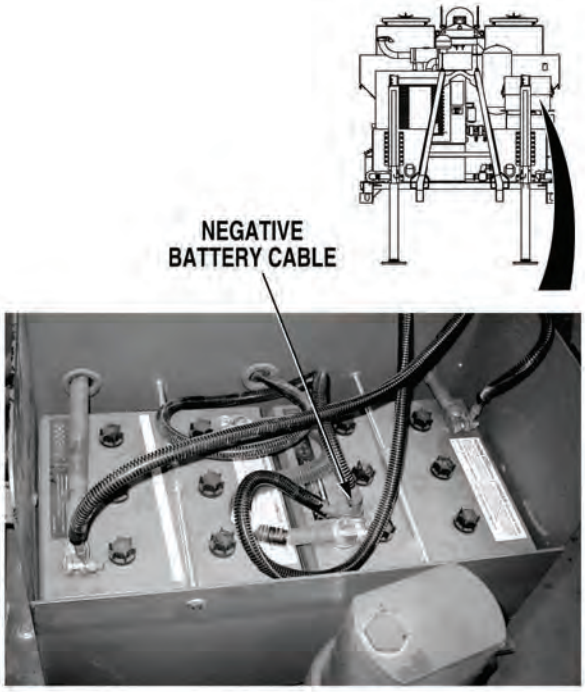

22. ENGINE FAILS TO CRANK OR CRANKS SLOWLY (CONT).

KNOWN INFO

- Battery terminals not loose or corroded.
- No engine fuel or air intake system fault.
- Engine wire harness (white) wire OK.
- Starter mounting screws OK.
- NATO terminal connections OK.
- Starter OK.
- Engine wire harness 24 VDC (red) wire to starter magnetic switch OK.
- Starter magnetic switch OK.
- Engine wire harness ground (black) wire OK.
- Main wire harness (white) wire OK.
- Control box 5-pin wire harness (white) wire OK.
- Batteries OK.
- ENGINE fuse OK.
- IGNITION SWITCH OK.
- Control box 5-pin wire harness 24 VDC (red) wire OK.
- Main wire harness 24 VDC (red) wire OK.
- Negative battery wire connection at starter not loose or corroded.
- Negative battery cable OK.

POSSIBLE PROBLEMS

- Wire connections at starter loose or corroded.
- Engine wire harness 24 VDC control panel/alternator (red) wire faulty.
- 24 VDC battery cable faulty.

26.

WARNING

Read WARNING on Page 4-687

Is 24 VDC battery cable connection at starter terminal B tight and free from damage and corrosion?

NO → Clean and tighten 24 VDC battery cable connection, (Para 3-24). Verify repair, go to Step 29 of this Fault.

YES ↓

TEST OPTIONS

Visual inspection.

REASON FOR QUESTION

If battery cable connection is not tight and free from corrosion, engine may not crank or crank slowly.

WARNING

Remove all jewelry such as rings, dog tags, bracelets etc. If jewelry or tools contact positive electrical circuits, a direct short may result. Damage to equipment, injury, or death to personnel may occur.

VISUAL INSPECTION

Check if 24 VDC battery wire connection at starter, terminal B is tight and free from corrosion.

(a) If 24 VDC battery cable connection is not tight and free from corrosion, clean and tighten connection (Para 3-24). Verify repair, go to Step 29 of this Fault.

(b) If 24 VDC battery wire connection is tight and free from corrosion, go to Step 27 of this Fault.

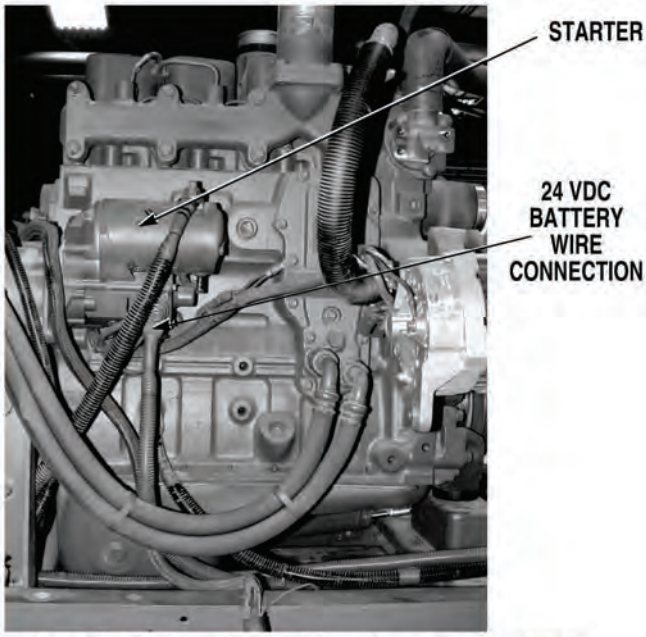

(ENGINE SHOWN REMOVED FROM MODULE FOR CLARITY)

22. ENGINE FAILS TO CRANK OR CRANKS SLOWLY (CONT).

KNOWN INFO

- Battery terminals not loose or corroded.
- No engine fuel or air intake system fault.
- Engine wire harness (white) wire OK.
- Starter mounting screws OK.
- NATO terminal connections OK.
- Starter OK.
- Engine wire harness 24 VDC (red) wire to starter magnetic switch OK.
- Starter magnetic switch OK.
- Engine wire harness ground (black) wire OK.
- Main wire harness (white) wire OK.
- Control box 5-pin wire harness (white) wire OK.
- Batteries OK.
- ENGINE fuse OK.
- IGNITION SWITCH OK.
- Control box 5-pin wire harness 24 VDC (red) wire OK.
- Main wire harness 24 VDC (red) wire OK.
- Negative battery wire connection at starter not loose or corroded.
- Negative battery cable OK.
- Wire connections at starter not loose or corroded.

POSSIBLE PROBLEMS

- Engine wire harness 24 VDC control panel/alternator (red) wire faulty.
- 24 VDC battery cable faulty.

27.

WARNING

Read WARNING on Page 4-689

Are 22 to 24 VDC measured between 24 VDC battery power (red) wire at alternator terminal B and a known good ground?

NO → Go to Step 28 of this Fault.

YES → Repair 24 VDC battery power (red) wire from starter terminal B to connector or replace engine wire harness, (Para 3-136). Verify repair, go to Step 29 of this Fault.

TEST OPTIONS

Voltage test.

REASON FOR QUESTION

If 22 to 26 VDC are present, engine wire harness 24 VDC battery power (red) wire between starter and engine wire harness connector is faulty.

WARNING

Remove all jewelry such as rings, dog tags, bracelets etc. If jewelry or tools contact positive electrical circuits, a direct short may result. Damage to equipment, injury, or death to personnel may occur.

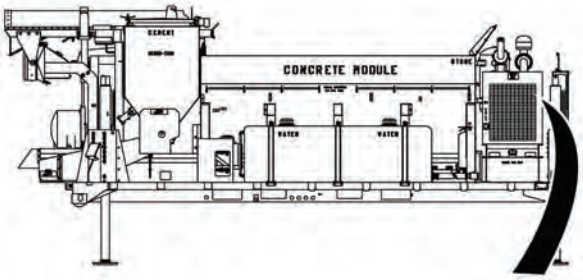

VOLTAGE TEST

(1) Connect batteries, (Para 3-10).

(2) Connect positive (+) multimeter lead to 24 VDC battery power (red) wire at alternator, terminal B.

(3) Connect negative (-) multimeter lead to a known good ground.

(a) If 22 to 24 VDC are not present, go to Step 28 of this Fault.

(b) If 22 to 26 VDC are present, repair 24 VDC battery power (red) wire from starter terminal B to engine harness connector, terminal E, (Para 3-141), or replace engine wire harness, (Para 3-136). Verify repair, go to Step 29 of this Fault.

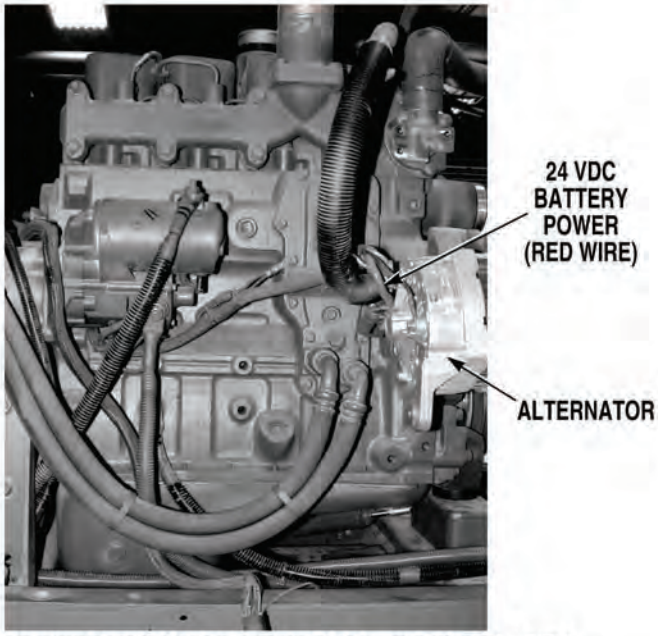

(ENGINE SHOWN REMOVED FROM MODULE FOR CLARITY)

22. ENGINE FAILS TO CRANK OR CRANKS SLOWLY (CONT).

KNOWN INFO

- Battery terminals not loose or corroded.
- Engine fuel or air intake OK.
- NATO terminal connections not loose or corroded.
- Starter mounting screws and terminal connections OK.
- Starter OK.
- Engine wire harness 24 VDC (red) wire OK.
- Starter magnetic switch OK.
- Engine wire harness ground wire OK.
- Main wire harness (white) wire OK.
- Control box 5-pin wire harness (white) wire OK.
- Engine wire harness control (white) wire OK.
- Batteries OK.
- ENGINE fuse OK.
- Control box 5-pin wire harness battery power (red) wire OK.
- IGNITION SWITCH OK.
- Main wire harness 24 VDC (red) wire OK.
- Negative battery wire connection at starter not loose or corroded.
- Negative battery cable OK.
- 24 VDC battery wire connection at starter not loose or corroded.

POSSIBLE PROBLEMS

- Engine harness 24 VDC battery/control panel alternator (red) wire faulty.
- 24 VDC battery cable faulty.

28.

WARNING

Read WARNING on Page 4-691

Are 22 to 28 VDC measured between 24 VDC battery power (red) wire at starter terminal B and a known good ground?

NO → Repair or replace 24 VDC battery cable, (Para 3-141). Verify repair, go to Step 29 of this Fault.

YES → Repair 24 VDC battery power (red) wire at starter terminal or replace engine wire harness, (Para 3-136). Verify repair, go to Step 29 of this Fault.

TEST OPTIONS

Voltage test.

REASON FOR QUESTION

If 22 to 28 VDC are present, engine wire harness 24 VDC battery power (red) wire at starter terminal is faulty. If not, 24 VDC battery cable is faulty.

WARNING

Remove all jewelry such as rings, dog tags, bracelets etc. If jewelry or tools contact positive electrical circuits, a direct short may result. Damage to equipment, injury, or death to personnel may occur.

VOLTAGE TEST

(1) Connect positive (+) multimeter lead to 24 VDC battery power (red) wire at starter.

(2) Connect negative (-) multimeter lead to a known good ground.

(a) If 22 to 28 VDC are present, repair 24 VDC battery power (red) wire from starter terminal B to engine harness connector, terminal E, (Para 3-141), or replace engine wire harness, (Para 3-136). Verify repair, go to Step 29 of this Fault.

(b) If 22 to 28 VDC are present, repair or replace 24 VDC battery cable, (Para 3-141).

(3) Verify repair, go to Step 29 of this Fault.

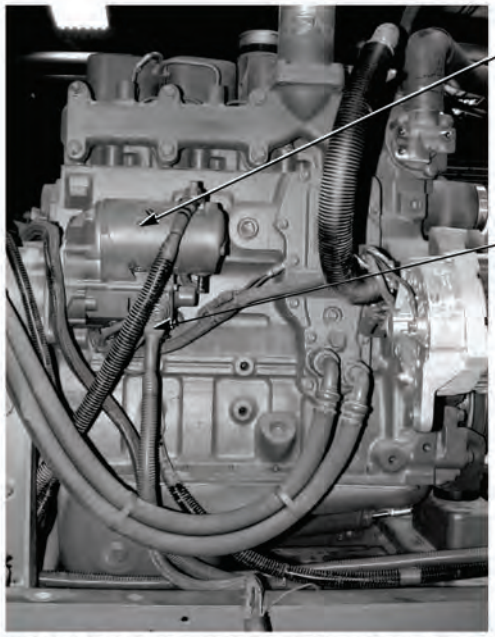

(ENGINE SHOWN REMOVED FROM MODULE FOR CLARITY)

22. ENGINE FAILS TO CRANK OR CRANKS SLOWLY (CONT).

KNOWN INFO
Battery terminals not loose or corroded.
Engine fuel or air intake OK.
NATO terminal connections not loose or corroded.
Starter mounting screws and terminal connections OK.
Starter OK.
Engine wire harness 24 VDC (red) wire OK.
Starter magnetic switch OK.
Engine wire harness ground wire OK.
Main wire harness (white) wire OK.
Control box 5-pin wire harness (white) wire OK.
Engine wire harness control (white) wire OK.
Batteries OK.
ENGINE fuse OK.
Control box 5-pin wire harness battery power (red) wire OK.
IGNITION SWITCH OK.
Main wire harness 24 VDC (red) wire OK.
Negative battery wire connection at starter not loose or corroded.
Negative battery cable OK.
24 VDC battery wire connection at starter not loose or corroded.
Engine harness 24 VDC battery/control panel alternator (red) wire OK.
24 VDC battery cable OK.

POSSIBLE PROBLEMS
None.

29.

Does engine crank at normal speed?

NO → Fault not corrected. Notify Supervisor.

YES → Fault corrected.

TEST OPTIONS
Verify repair.

REASON FOR QUESTION
If engine cranks at normal speed, fault has been corrected.

VERIFY REPAIR

(1) If removed, install engine shroud grille, (Para 3-22).

(2) If removed, install magnetic switch cover plate, (Para 3-19).

(3) If removed, install top engine cover, (Para 3-93).

(4) If removed, install front engine access panel, (Para 3-78).

(5) If disconnected, connect main wire harness engine connector, (Para 3-134).

(6) If open, close control panel and install screw at top of control panel.

(7) If removed, install control box, (Para 3-90).

(8) If disconnected, connect main wire harness 5-pin connector, (Para 3-134).

(9) If disconnected, connect batteries, (Para 3-10).

(10) Start engine, (Para 2-19).

(11) Check if engine cranks at normal speed.

  (a) If engine does not crank at normal speed, fault not corrected. Notify Supervisor.

  (b) If engine cranks at normal speed and starts, Fault has been corrected.

(12) Shut OFF engine, (Para 2-19).

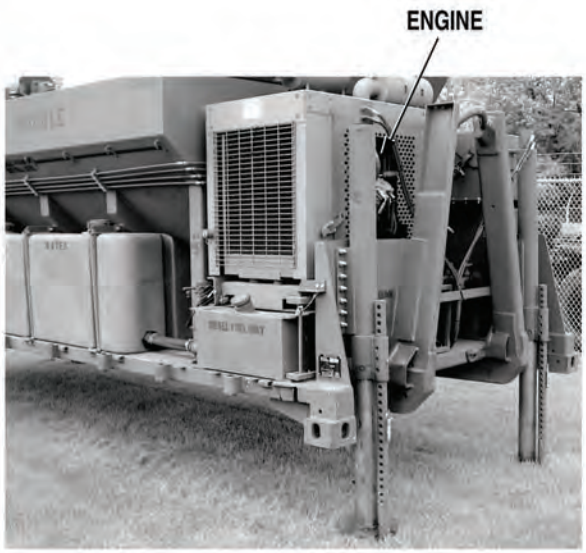

23. ENGINE GAGE READING INCORRECT.

INITIAL SETUP

Tools and Special Tools
Tool Kit, General Mechanic's: Automotive (Item 19, Appendix I)

Equipment Condition
Concrete Mobile Mixer unloaded from PLS, (Para 2-5)
Engine OFF, (Para 2-19)

KNOWN INFO
Nothing.
POSSIBLE PROBLEMS
Temperature sensor faulty. Alternator tachometer wire connection loose. Control box 8-pin wire harness (yellow/black) wire faulty. Tachometer faulty. Alternator tachometer sensor faulty. Main wire harness (yellow/black) wire faulty. Engine wire harness (yellow/black) wire faulty. Engine oil level low causing low oil pressure. Oil pressure sensor wire faulty. Engine oil pressure fault. Engine overheating. Main wire harness (yellow) wire faulty. Engine wire harness (yellow) wire faulty. Control box 8-pin wire harness (yellow) wire faulty. Control panel temperature sensor (blue) wire faulty. Temperature gage faulty. Main wire harness (blue) wire faulty. Engine wire harness (blue) wire faulty. Control box 8-pin wire harness (blue) wire harness faulty. Control panel oil pressure sensor (blue) wire faulty. Oil pressure gage faulty. Voltmeter faulty. Battery charging system fault. Control panel voltmeter tachometer ground (black) wire faulty. Control panel switched power (orange) wire to voltmeter faulty. Power to control panel faulty. Control panel switched power (orange) wire to TATTLE TALE SWITCH faulty. IGNITION SWITCH faulty. Control panel TATTLE TALE SWITCH ground (black) wire faulty. Control box 5-pin wire harness (black) wire faulty. Main wire harness (black) wire faulty. Engine wire harness ground wire between connector and ground connection faulty.

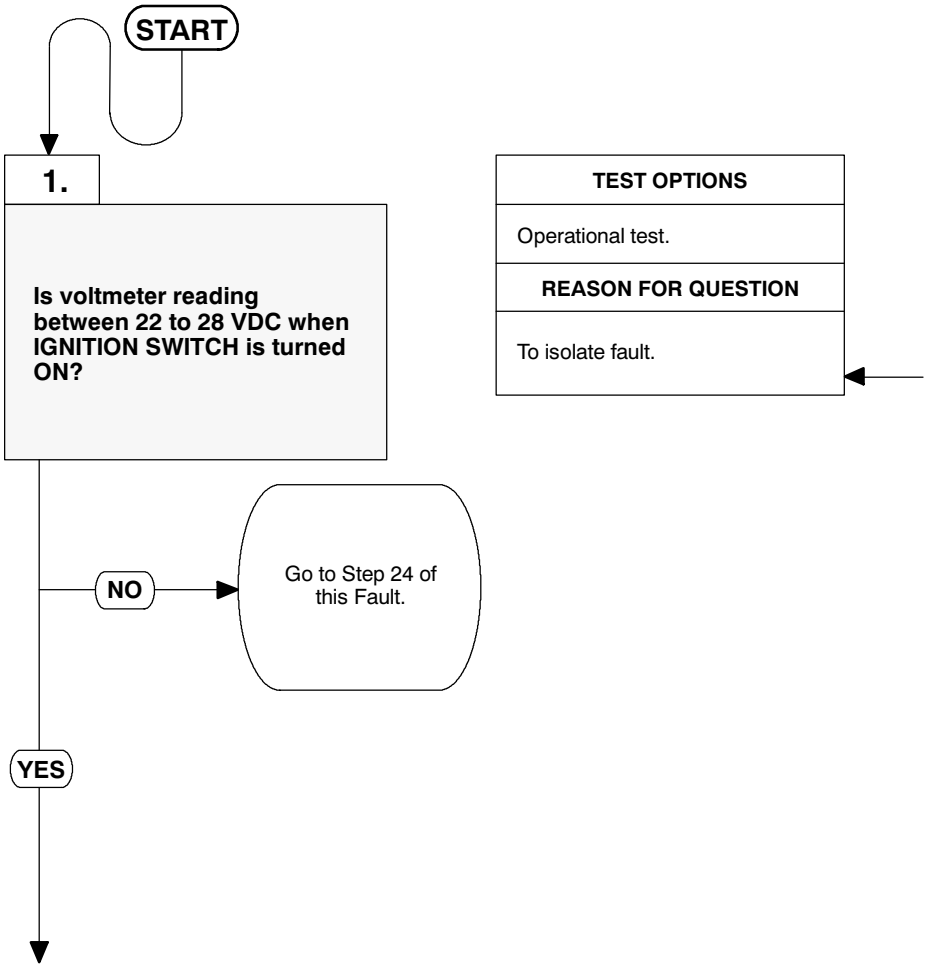

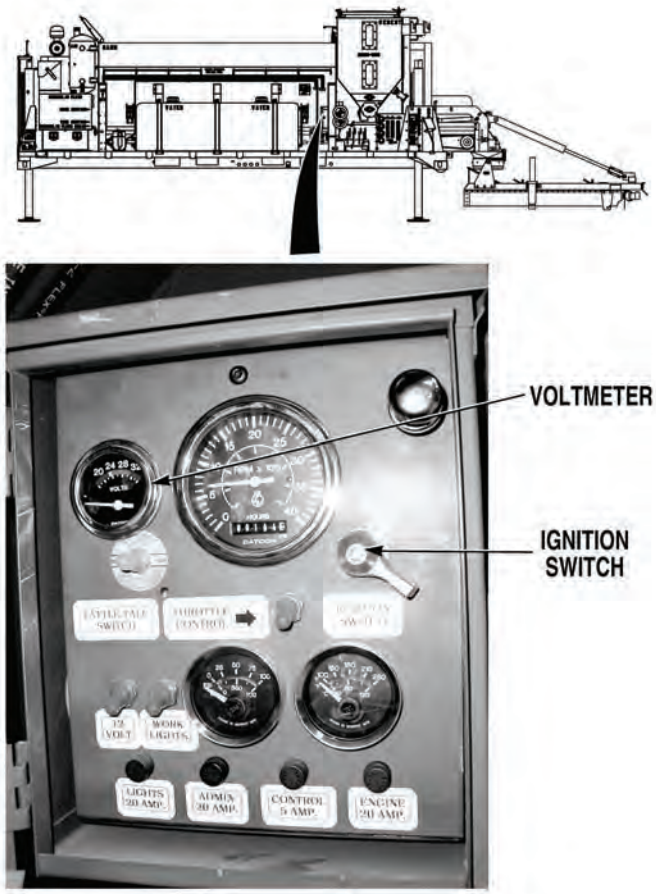

OPERATIONAL TEST

(1) Turn IGNITION SWITCH ON, (Para 2-1).

(2) Check if voltmeter reading is between 22 to 28 VDC .

(a) If voltmeter reading is not between 22 to 28 VDC, go to Step 24 of this fault.

(b) If voltmeter reads between 22 to 28 VDC, go to Step 2 of this Fault.

23. ENGINE GAGE READING INCORRECT (CONT).

KNOWN INFO

- Voltmeter OK.
- Battery charging system OK.
- Control panel voltmeter tachometer ground (black) wire OK.
- Control panel switched power (orange) wire to voltmeter OK.
- Power to control panel OK.
- Control panel switched power (orange) wire to TATTLE TALE SWITCH OK.
- IGNITION SWITCH OK.
- Control panel TATTLE TALE SWITCH ground (black) wire OK.
- Control box 5-pin wire harness (black) wire OK.
- Main wire harness (black) wire OK.
- Engine wire harness ground wire between connector and ground connection OK.

POSSIBLE PROBLEMS

- Temperature sensor faulty.
- Alternator tachometer wire connection loose.
- Control box 8-pin wire harness (yellow/black) wire faulty.
- Tachometer faulty.
- Alternator tachometer sensor faulty.
- Main wire harness (yellow/black) wire faulty.
- Engine wire harness (yellow/black) wire faulty.
- Engine oil level low causing low oil pressure.
- Oil pressure sensor wire faulty.
- Engine oil pressure fault.
- Engine overheating.
- Main wire harness (yellow) wire faulty.
- Engine wire harness (yellow) wire faulty.
- Control box 8-pin wire harness (yellow) wire faulty.
- Control panel temperature sensor (blue) wire faulty.
- Temperature gage faulty.
- Main wire harness (blue) wire faulty.
- Engine wire harness (blue) wire faulty.
- Control box 8-pin wire harness (blue) wire harness faulty.
- Control box oil pressure sensor wire faulty.
- Oil pressure gage faulty.

2.

WARNING

Read WARNING on Page 4-699

Does oil pressure gage go to full scale reading when oil pressure sensor wire is jumpered to a known good ground and IGNITION SWITCH is turned ON?

NO → Go to Step 20 of this Fault.

YES ↓

TEST OPTIONS

Operational test.

REASON FOR QUESTION

To further isolate fault.

WARNING

Remove all jewelry such as rings, dog tags, bracelets etc. If jewelry or tools contact positive electrical circuits, a direct short may result. Damage to equipment, injury or death to personnel may occur.

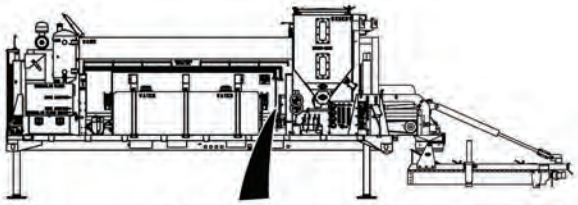

OPERATIONAL TEST

(1) Turn IGNITION SWITCH OFF, (Para 2-1).

(2) Remove front engine access panel, (Para 3-18).

(3) Connect jumperwire between oil pressure sensor wire and a known good ground.

(4) Turn IGNITION SWITCH ON, (Para 2-1).

(5) Check if oil pressure gage goes to full scale reading.

(a) If oil pressure gage reading does not go to full scale reading, go to Step 20 of this Fault.

(b) If oil pressure gage reading goes to full scale reading, go to Step 3 of this Fault.

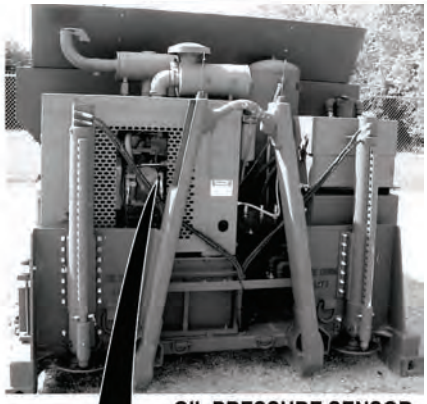

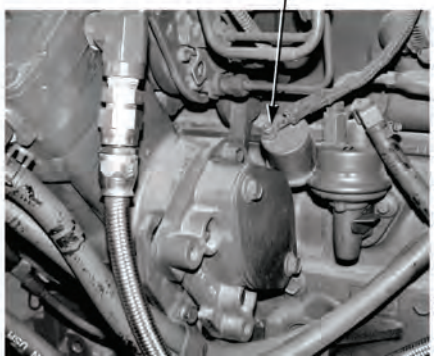

23. ENGINE GAGE READING INCORRECT (CONT).

KNOWN INFO
Voltmeter OK.
Battery charging system OK.
Control panel voltmeter tachometer ground (black) wire OK.
Control panel switched power (orange) wire to voltmeter OK.
Power to control panel OK.
Control panel switched power (orange) wire to TATTLE TALE SWITCH OK.
IGNITION SWITCH OK.
Control panel TATTLE TALE SWITCH ground (black) wire OK.
Control box 5-pin wire harness (black) wire OK.
Main wire harness (black) wire OK.
Engine wire harness ground wire between connector and ground connection OK.
Main wire harness (blue) wire OK.
Engine wire harness (blue) wire OK.
Control box 8-pin wire harness (blue) wire harness OK.
Control panel oil pressure sensor (blue) wire OK.
Oil pressure gage OK.

POSSIBLE PROBLEMS
Temperature sensor faulty.
Alternator tachometer wire connection loose.
Control box 8-pin wire harness (yellow/black) wire faulty.
Tachometer faulty.
Alternator tachometer sensor faulty.
Main wire harness (yellow/black) wire faulty.
Engine wire harness (yellow/black) wire faulty.
Engine oil level low causing low oil pressure.
Oil pressure sensor wire faulty.
Engine oil pressure fault.
Engine overheating.
Main wire harness (yellow) wire faulty.
Engine wire harness (yellow) wire faulty.
Control box 8-pin wire harness (yellow) wire faulty.
Control panel temperature sensor (blue) wire faulty.
Temperature gage faulty.

3.

WARNING

Read WARNING on Page 4-701

Does temperature gage go to full scale reading when water temperature sensor wire is jumpered to a known good ground and IGNITION SWITCH is turned ON?

NO → Go to Step 16 of this Fault.

YES ↓

TEST OPTIONS
Operational test.
REASON FOR QUESTION
To further isolate fault.

WARNING

Remove all jewelry such as rings, dog tags, bracelets etc. If jewelry or tools contact positive electrical circuits, a direct short may result. Damage to equipment, injury or death to personnel may occur.

OPERATIONAL TEST

(1) Turn IGNITION SWITCH OFF, (Para 2-1).

(2) Remove top engine cover, (Para 3-93).

(3) Disconnect jumperwire at oil pressure sensor and ground.

(4) Connect jumperwire between water temperature sensor and a known good ground.

(5) Turn IGNITION SWITCH ON, (Para 2-1).

(6) Check if temperature gage reading goes to full scale.

(a) If temperature gage does not go to full scale, go to Step 16 of this Fault.

(b) If temperature gage goes to full scale, go to Step 4 of this Fault.

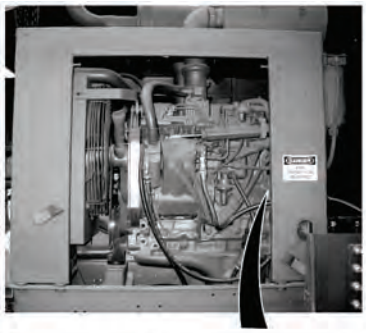

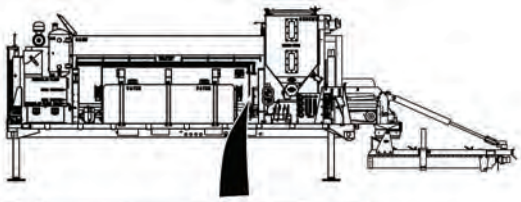

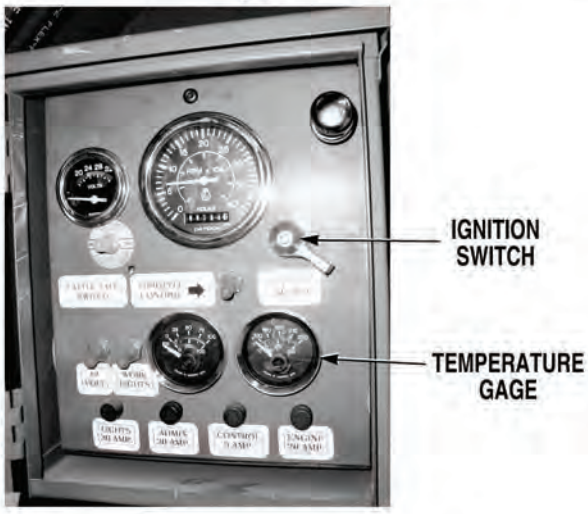

23. ENGINE GAGE READING INCORRECT (CONT).

KNOWN INFO
Voltmeter OK.
Battery charging system OK.
Control panel voltmeter tachometer ground (black) wire OK.
Control panel switched power (orange) wire to voltmeter OK.
Power to control panel OK.
Control panel switched power (orange) wire to TATTLE TALE SWITCH OK.
IGNITION SWITCH OK.
Control panel TATTLE TALE SWITCH ground (black) wire OK.
Control box 5-pin wire harness (black) wire OK.
Main wire harness (black) wire OK.
Engine wire harness ground wire between connector and ground connection OK.
Main wire harness (blue) wire OK.
Engine wire harness (blue) wire OK.
Control box 8-pin wire harness (blue) wire harness OK.
Control panel oil pressure sensor (blue) wire OK.
Oil pressure gage OK.
Main wire harness (yellow) wire OK.
Engine wire harness (yellow) wire OK.
Control box 8-pin wire harness (yellow) wire harness OK.
Control panel temperature sensor (blue) wire OK.
Temperature gage OK.

POSSIBLE PROBLEMS
Temperature sensor faulty.
Alternator tachometer wire connection loose.
Control box 8-pin wire harness (yellow/black) wire faulty.
Tachometer faulty.
Alternator tachometer sensor faulty.
Main wire harness (yellow/black) wire faulty.
Engine wire harness (yellow/black) wire faulty.
Alternator tachometer wire harness loose.
Engine oil level low causing low oil pressure.
Oil pressure sensor wire faulty.
Engine oil pressure fault.
Engine overheating.

4.

WARNING

Read WARNING on Page 4-703

Is temperature gage reading less than 210°F (99°C) when IGNITION SWITCH is turned ON?

NO → Go to Step 15 of this Fault.

YES ↓

TEST OPTIONS
Operational test.
REASON FOR QUESTION
To further isolate fault.

WARNING

Remove all jewelry such as rings, dog tags, bracelets etc. If jewelry or tools contact positive electrical circuits, a direct short may result. Damage to equipment, injury or death to personnel may occur.

OPERATIONAL TEST

(1) Disconnect jumperwire at water temperature sensor and ground.

(2) Check if temperature gage reading is less than 210°F (99°C).

(a) If temperature gage reading is greater than 210°F (99°C), go to Step 15 of this Fault.

(b) If temperature gage reading is less than 210°F (99°C), go to Step 5 of this Fault.

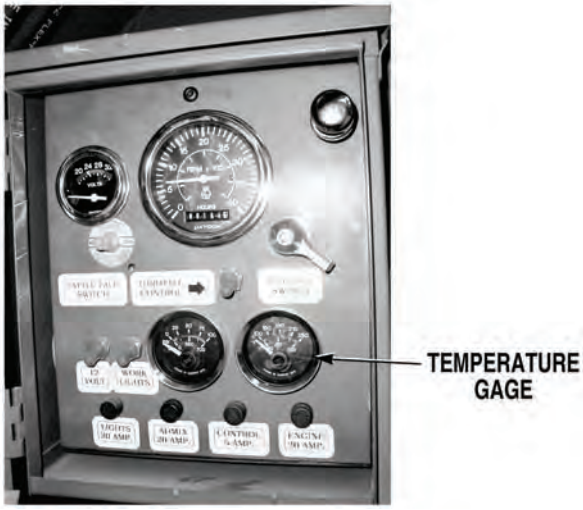

23. ENGINE GAGE READING INCORRECT (CONT).

KNOWN INFO
Voltmeter OK.
Battery charging system OK.
Control panel voltmeter tachometer ground (black) wire OK.
Control panel switched power (orange) wire to voltmeter OK.
Power to control panel OK.
Control panel switched power (orange) wire to TATTLE TALE SWITCH OK.
IGNITION SWITCH OK.
Control panel TATTLE TALE SWITCH ground (black) wire OK.
Control box 5-pin wire harness (black) wire OK.
Main wire harness (black) wire OK.
Engine wire harness ground wire between connector and ground connection OK.
Main wire harness (blue) wire OK.
Engine wire harness (blue) wire OK.
Control box 8-pin wire harness (blue) wire harness OK.
Control panel oil pressure sensor (blue) wire OK.
Oil pressure gage OK.
Main wire harness (yellow) wire OK.
Engine wire harness (yellow) wire OK.
Control box 8-pin wire harness (yellow) wire OK.
Control panel temperature sensor (blue) wire OK.
Temperature gage OK.
Engine not overheating.

POSSIBLE PROBLEMS
Temperature sensor faulty.
Alternator tachometer wire connection loose.
Control box 8-pin wire harness (yellow/black) wire faulty.
Tachometer faulty.
Alternator tachometer sensor faulty.
Main wire harness (yellow/black) wire faulty.
Engine wire harness (yellow/black) wire faulty.
Engine oil level low causing low oil pressure.
Oil pressure sensor faulty.
Engine oil pressure fault.

5.

Does oil pressure gage reading increase to a value greater than 10 psi (69 kPa) when starting engine (do not press TATTLE TALE SWITCH)?

NO → Go to Step 13 of this Fault.

YES ↓

TEST OPTIONS
Pressure test.
REASON FOR QUESTION
To further isolate fault.

PRESSURE TEST

(1) Perform engine starting procedure, (Para 2-19). Do not press TATTLE TALE SWITCH.

(2) Check if oil pressure gage reading increases to a value greater than 10 psi (69 kPa) while cranking engine.

(a) If oil pressure gage reading is not greater than 10 psi (69 kPa), go to Step 13 of this Fault.

(b) If oil pressure gage reading is greater than 10 psi (69 kPa), go to Step 6 of this Fault.

23. ENGINE GAGE READING INCORRECT (CONT).

KNOWN INFO
Voltmeter OK.
Battery charging system OK.
Control panel voltmeter tachometer ground (black) wire OK.
Control panel switched power (orange) wire to voltmeter OK.
Power to control panel OK.
Control panel switched power (orange) wire to TATTLE TALE SWITCH OK.
IGNITION SWITCH OK.
Control panel TATTLE TALE SWITCH ground (black) wire OK.
Control box 5-pin wire harness (black) wire OK.
Main wire harness (black) wire OK.
Engine wire harness ground wire between connector and ground connection OK.
Main wire harness (blue) wire OK.
Engine wire harness (blue) wire OK.
Control box 8-pin wire harness (blue) wire harness OK.
Control panel oil pressure sensor (blue) wire OK.
Oil pressure gage OK.
Main wire harness (yellow) wire OK.
Engine wire harness (yellow) wire OK.
Control box 8-pin wire harness (yellow) wire OK.
Control panel temperature sensor (blue) wire OK.
Temperature gage OK.
Engine not overheating.
Engine oil level OK.
Oil pressure sensor OK.
No engine oil pressure fault.

POSSIBLE PROBLEMS
Temperature sensor faulty.
Alternator tachometer wire connection loose.
Control box 8-pin wire harness (yellow/black) wire faulty.
Tachometer faulty.
Alternator tachometer sensor faulty.
Main wire harness (yellow/black) wire faulty.
Engine wire harness (yellow/black) wire faulty.

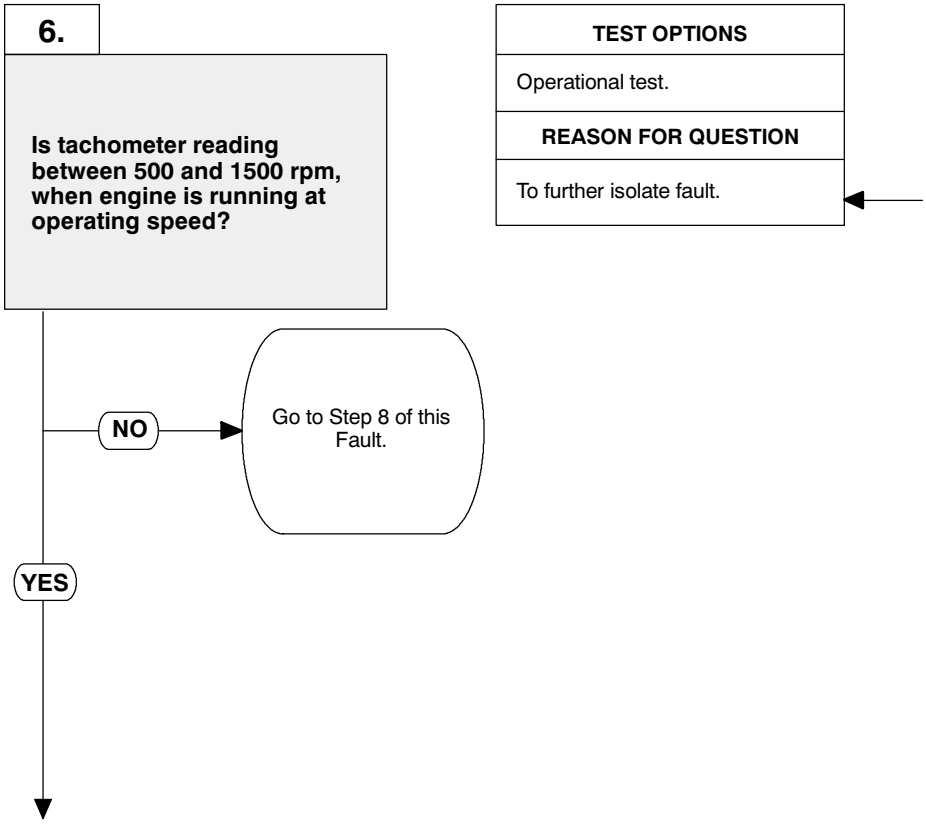

OPERATIONAL TEST
(1) Turn IGNITION SWITCH OFF, (Para 2-1). (2) Install top engine cover, (Para 3-93). (3) Start engine, (Para 2-19). (4) Check if tachometer reading is between 500 and 1500 rpm when engine is running at operating speed. (a) If tachometer reading is not between 500 and 1,500 rpm, go to Step 8 of this Fault. (b) If tachometer reading is between 500 and 1,500 rpm, go to Step 7 of this Fault.

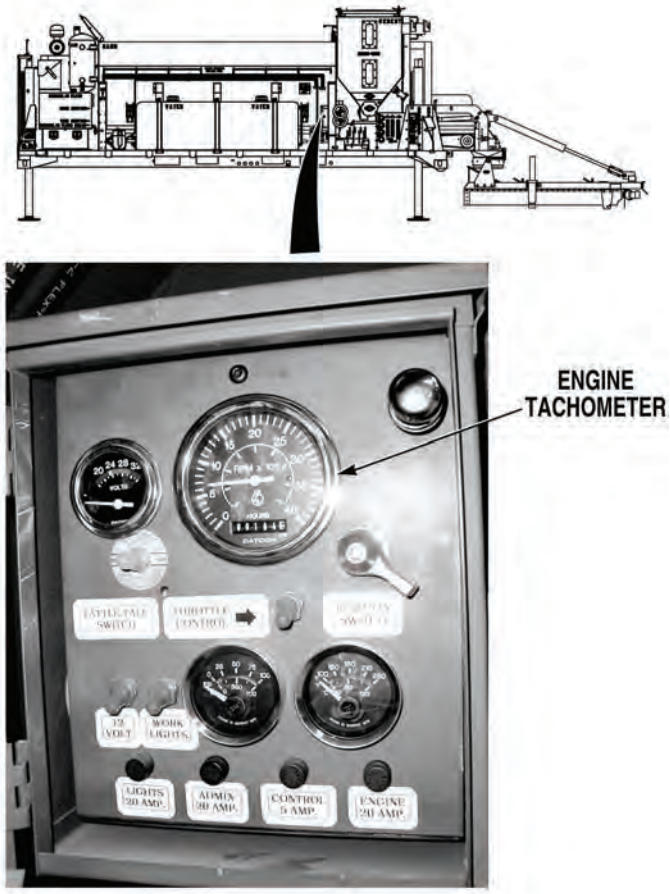

23. ENGINE GAGE READING INCORRECT (CONT).

KNOWN INFO
Voltmeter OK.
Battery charging system OK.
Control panel voltmeter tachometer ground (black) wire OK.
Control panel switched power (orange) wire to voltmeter OK.
Power to control panel OK.
Control panel switched power (orange) wire to TATTLE TALE SWITCH OK.
IGNITION SWITCH OK.
Control panel TATTLE TALE SWITCH ground (black) wire OK.
Control box 5-pin wire harness (black) wire OK.
Main wire harness (black) wire OK.
Engine wire harness ground wire between connector and ground connection OK.
Main wire harness (blue) wire OK.
Engine wire harness (blue) wire OK.
Control box 8-pin wire harness (blue) wire harness OK.
Control panel oil pressure sensor (blue) wire OK.
Oil pressure gage OK.
Main wire harness (yellow) wire OK.
Engine wire harness (yellow) wire OK.
Control box 8-pin wire harness (yellow) wire OK.
Control panel temperature sensor (blue) wire OK.
Temperature gage OK.
Engine not overheating.
Engine oil level OK.
Oil pressure sensor OK.
No engine oil pressure fault.
Alternator tachometer wire connection OK.
Control box 8-pin wire harness (yellow/black) wire OK.
Tachometer OK.
Alternator tachometer sensor OK.
Main wire harness (yellow/black) wire OK.
Engine wire harness (yellow/black) wire OK.

POSSIBLE PROBLEMS
Temperature sensor faulty.

7.

Does temperature gage read a normal reading when engine is running at operating temperature?

NO → Replace temperature sensor, (Para 3-125). Verify repair, go to Step 35 of this Fault.

YES → Fault corrected.

TEST OPTIONS
Operational test.
REASON FOR QUESTION
If temperature gage reading is in normal range, all gages are reading correctly. If not, temperature sensor is faulty.

OPERATIONAL TEST

(1) Operate engine until it reaches operating temperature.

(2) Check if temperature gage is reading normal operating temperatures.

  (a) If temperature gage is not reading normal temperatures, replace water temperature sensor, (Para 3-125).

  (b) If temperature gage is reading normal operating temperatures, fault has been corrected.

(3) Verify repair, go to Step 35 of this Fault.

23. ENGINE GAGE READING INCORRECT (CONT).

KNOWN INFO
Voltmeter OK.
Battery charging system OK.
Control panel voltmeter tachometer ground (black) wire OK.
Control panel switched power (orange) wire to voltmeter OK.
Power to control panel OK.
Control panel switched power (orange) wire to TATTLE TALE SWITCH OK.
IGNITION SWITCH OK.
Control panel TATTLE TALE SWITCH ground (black) wire OK.
Control box 5-pin wire harness (black) wire OK.
Main wire harness (black) wire OK.
Engine wire harness ground wire between connector and ground connection OK.
Main wire harness (blue) wire OK.
Engine wire harness (blue) wire OK.
Control box 8-pin wire harness (blue) wire harness OK.
Control panel oil pressure sensor (blue) wire OK.
Oil pressure gage OK.
Main wire harness (yellow) wire OK.
Engine wire harness (yellow) wire OK.
Control box 8-pin wire harness (yellow) wire OK.
Control panel temperature sensor (blue) wire OK.
Temperature gage OK.
Engine not overheating.
Engine oil level OK.
Oil pressure sensor OK.
No engine oil pressure fault.
Temperature sensor OK.

POSSIBLE PROBLEMS
Alternator tachometer wire connection loose.
Control box 8-pin wire harness (yellow/black) wire faulty.
Tachometer faulty.
Alternator tachometer sensor faulty.
Main wire harness (yellow/black) wire faulty.
Engine wire harness (yellow/black) wire faulty.

8.

WARNING

Read WARNING on Page 4-711

Are alternator terminal connections tight and free from corrosion?

NO → Clean and tighten connections, (Para 3-26). Verify repair, go to Step 35 of this Fault.

YES ↓

TEST OPTIONS
Visual inspection.
REASON FOR QUESTION
It alternator connections are loose or corroded, engine gage readings may not operate correctly.

WARNING

Remove all jewelry such as rings, dog tags, bracelets etc. If jewelry or tools contact positive electrical circuits, a direct short may result. Damage to equipment, injury or death to personnel may occur.

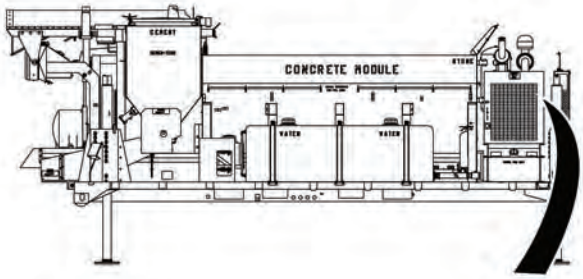

VISUAL INSPECTION

(1) Shut OFF engine, (Para 2-19).

(2) Remove top engine cover, (Para 3-93).

(3) Check if alternator terminal connections are tight and free from corrosion.

(a) If alternator terminal connections are loose and/or corroded, clean and tighten alternator terminal connections, (Para 3-26). Verify repair, go to Step 35 of this Fault.

(b) If alternator terminal connections are tight and free from corrosion, go to Step 9 of this Fault.

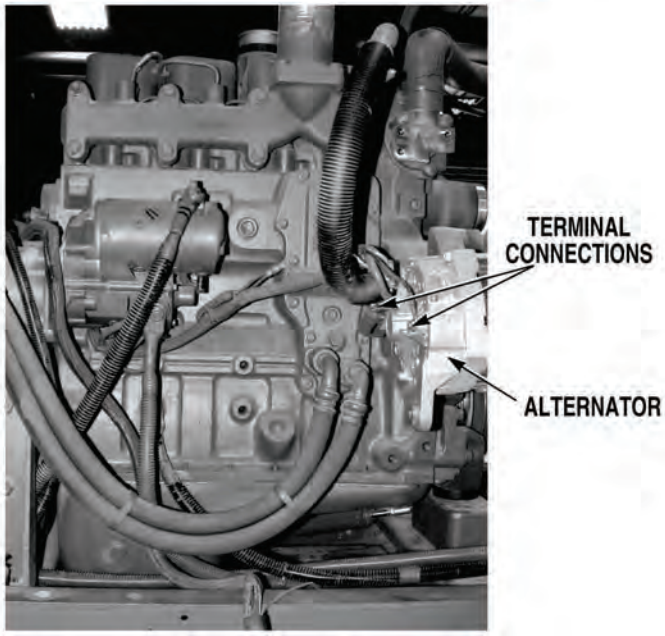

23. ENGINE GAGE READING INCORRECT (CONT).

KNOWN INFO

- Voltmeter OK.
- Battery charging system OK.
- Control panel voltmeter tachometer ground (black) wire OK.
- Control panel switched power (orange) wire to voltmeter OK.
- Power to control panel OK.
- Control panel switched power (orange) wire to TATTLE TALE SWITCH OK.
- IGNITION SWITCH OK.
- Control box TATTLE TALE SWITCH ground (black) wire OK.
- Control box 5-pin wire harness (black) wire OK.
- Main wire harness (black) wire OK.
- Engine wire harness ground wire between connector and ground connection OK.
- Main wire harness (blue) wire OK.
- Engine wire harness (blue) wire OK.
- Control box 8-pin wire harness (blue) wire harness OK.
- Control panel oil pressure sensor (blue) wire OK.
- Oil pressure gage OK.
- Main wire harness (yellow) wire OK.
- Engine wire harness (yellow) wire OK.
- Control box 8-pin wire harness (yellow) wire OK.
- Control panel temperature sensor (blue) wire OK.
- Temperature gage OK.
- Engine not overheating.
- Engine oil level OK.
- Oil pressure sensor OK.
- No engine oil pressure fault.
- Temperature sensor OK.
- Alternator tachometer wire connection OK.

POSSIBLE PROBLEMS

- Control box 8-pin wire harness (yellow/black) wire faulty.
- Tachometer faulty.
- Alternator tachometer sensor faulty.
- Main wire harness yellow/black wire faulty.
- Engine wire harness yellow/black wire faulty.

9.

WARNING

Read WARNING on Page 4-713

Is continuity measured across tachometer sensor (yellow/black) wire from engine wire harness alternator terminal to main wire harness 8-pin connector, terminal B?

NO → Go to Step 12 of this Fault.

YES ↓

TEST OPTIONS

Continuity test.

REASON FOR QUESTION

If continuity is not measured, tachometer reading will not be correct.

WARNING

Remove all jewelry such as rings, dog tags, bracelets etc. If jewelry or tools contact positive electrical circuits, a direct short may result. Damage to equipment, injury or death to personnel may occur.

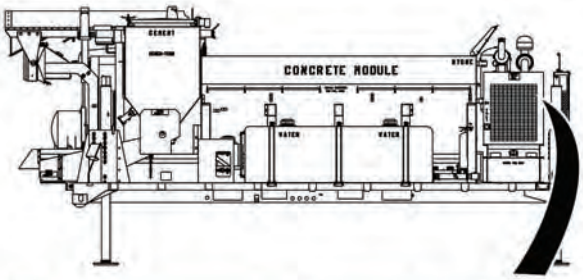

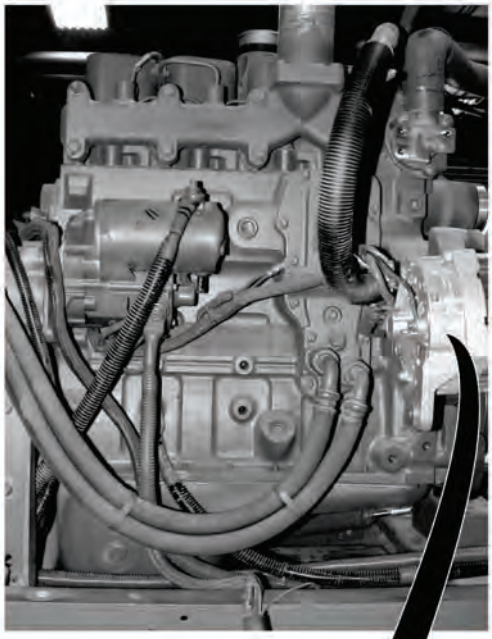

CONTINUITY TEST

(1) Disconnect batteries, (Para 3-10).

(2) Disconnect main wire harness 8-pin connector, (Para 3-137).

(3) Set multimeter select switch to ohms.

(4) Connect jumperwire between tachometer sensor (yellow/black) wire at alternator terminal and a known good ground.

(5) Connect positive (+) multimeter lead to main wire harness 8-pin connector, terminal B.

(6) Connect negative (-) multimeter lead to a known good ground.

(a) If continuity is not measured, go to Step 12 of this Fault.

(b) If continuity is measured, go to Step 10 of this Fault.

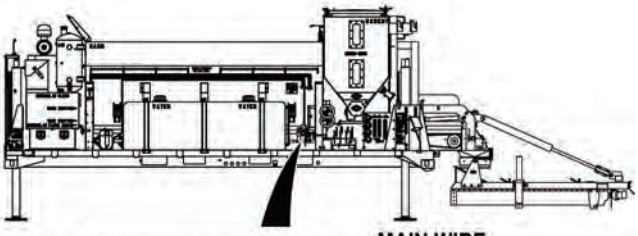

23. ENGINE GAGE READING INCORRECT (CONT).

KNOWN INFO
Voltmeter OK.
Battery charging system OK.
Control panel voltmeter tachometer ground (black) wire OK.
Control panel switched power (orange) wire to voltmeter OK.
Power to control panel OK.
Control panel switched power (orange) wire to TATTLE TALE SWITCH OK.
IGNITION SWITCH OK.
Control box TATTLE TALE SWITCH ground (black) wire OK.
Control box 5-pin wire harness (black) wire OK.
Main wire harness (black) wire OK.
Engine wire harness ground wire between connector and ground connection OK.
Main wire harness (blue) wire OK.
Engine wire harness (blue) wire OK.
Control box 8-pin wire harness (blue) wire harness OK.
Control panel oil pressure sensor (blue) wire OK.
Oil pressure gage OK.
Main wire harness (yellow) wire OK.
Engine wire harness (yellow) wire OK.
Control box 8-pin wire harness (yellow) wire OK.
Control panel temperature sensor (blue) wire OK.
Temperature gage OK.
Engine not overheating.
Engine oil level OK.
Oil pressure sensor OK.
No engine oil pressure fault.
Temperature sensor OK.
Alternator tachometer wire connection OK.
Main wire harness (yellow/black) wire OK.
Engine wire harness (yellow/black) wire OK.

POSSIBLE PROBLEMS
Control box 8-pin wire harness (yellow/black) wire faulty.
Tachometer faulty.
Alternator tachometer sensor faulty.

10.

WARNING

Read WARNING on Page 4-715

Is continuity measured across control box 8-pin harness tachometer sensor (yellow/black) wire from connector, terminal B to tachometer terminal?

NO → Repair wire, (Para 3-141) or replace control box 8-pin wire harness, (Para 3-137). Verify repair, go to Step 35 of this Fault.

YES ↓

TEST OPTIONS
Continuity test.
REASON FOR QUESTION
If continuity is not measured, control box 8-pin harness (yellow/black) wire is faulty.

WARNING

Remove all jewelry such as rings, dog tags, bracelets etc. If jewelry or tools contact positive electrical circuits, a direct short may result. Damage to equipment, injury or death to personnel may occur.

CONTINUITY TEST

(1) Remove control box from Concrete Mobile Mixer, (Para 3-90).

(2) Release latch and open control box door.

(3) Remove screw from top of control panel. Gently tip control panel forward for access to wires.

(4) Set multimeter select switch to ohms.

(5) Connect positive (+) multimeter to lead control box 8-pin connector, terminal B.

(6) Connect negative (-) multimeter lead to tachometer sensor (yellow/black) wire at tachometer terminal.

(a) If continuity is not measured, repair (yellow/black) wire, (Para 3-141), or replace control box 8-pin wire harness, (Para 3-137). Verify repair, go to Step 35 of this Fault.

(b) If continuity is measured, go to Step 11 of this Fault.

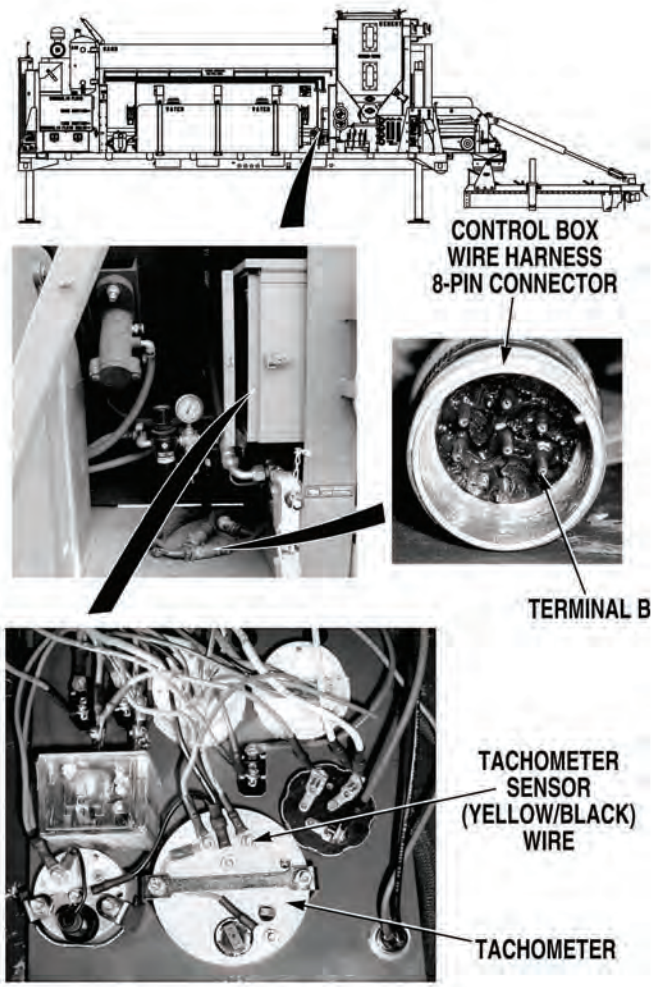

23. ENGINE GAGE READING INCORRECT (CONT).

KNOWN INFO
Voltmeter OK.
Battery charging system OK.
Control panel voltmeter tachometer ground (black) wire OK.
Control panel switched power (orange) wire to voltmeter OK.
Power to control panel OK.
Control panel switched power (orange) wire to TATTLE TALE SWITCH OK.
IGNITION SWITCH OK.
Control box TATTLE TALE SWITCH ground (black) wire OK.
Control box 5-pin wire harness (black) wire OK.
Main wire harness (black) wire OK.
Engine wire harness ground wire between connector and ground connection OK.
Main wire harness (blue) wire OK.
Engine wire harness (blue) wire OK.
Control box 8-pin wire harness (blue) wire harness OK.
Control panel oil pressure sensor (blue) wire OK.
Oil pressure gage OK.
Main wire harness (yellow) wire OK.
Engine wire harness (yellow) wire OK.
Control box 8-pin wire harness (yellow) wire OK.
Control panel temperature sensor (blue) wire OK.
Temperature gage OK.
Engine not overheating.
Engine oil level OK.
Oil pressure sensor OK.
No engine oil pressure fault.
Temperature sensor OK.
Alternator tachometer wire connection OK.
Main wire harness (yellow/black) wire OK.
Engine wire harness (yellow/black) wire OK.
Control box 8-pin wire harness (yellow/black) wire OK.

POSSIBLE PROBLEMS
Tachometer faulty.
Alternator tachometer sensor faulty.

11.

Is tachometer reading between 500 and 1,500 rpm, when engine is running at operating speed after tachometer is replaced?

NO → Replace alternator, (Para 3-25). Verify repair, go to Step 35 of this Fault.

YES → Fault corrected. Verify repair, go to Step 35 of this Fault.

TEST OPTIONS
Operational test.
REASON FOR QUESTION
If reading is correct after replacing tachometer, tachometer was faulty. If not, alternator speed sensor is faulty.

OPERATIONAL TEST

(1) Replace tachometer, (Para 3-54).

(2) Install control box on Concrete Mobile Mixer, (Para 3-90).

(3) Install top engine cover, (Para 3-93).

(4) Start engine, (Para 2-19).

(5) Check if engine tachometer reading is between 500 and 1,500 RPM, when engine is running at normal operating speed.

  (a) If engine tachometer reading is not between 500 and 1,500 RPM, replace alternator, (Para 3-26).

  (b) If engine tachometer reading is between 500 and 1,500 RPM, problem has been corrected.

(6) Verify repair, go to Step 35 of this Fault.

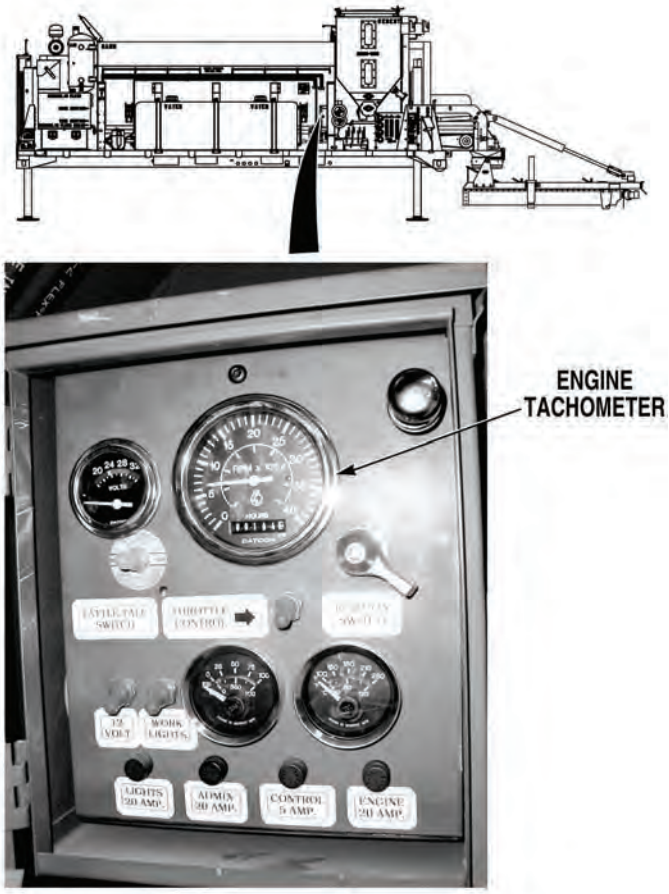

23. ENGINE GAGE READING INCORRECT (CONT).

KNOWN INFO

- Voltmeter OK.
- Battery charging system OK.
- Control panel voltmeter tachometer ground (black) wire OK.
- Control panel switched power (orange) wire to voltmeter OK.
- Power to control panel OK.
- Control panel switched power (orange) wire to TATTLE TALE SWITCH OK.
- IGNITION SWITCH OK.
- Control box TATTLE TALE SWITCH ground (black) wire OK.
- Control box 5-pin wire harness (black) wire OK.
- Main wire harness (black) wire OK.
- Engine wire harness ground wire between connector and ground connection OK.
- Main wire harness (blue) wire OK.
- Engine wire harness (blue) wire OK.
- Control box 8-pin wire harness (blue) wire harness OK.
- Control panel oil pressure sensor (blue) wire OK.
- Oil pressure gage OK.
- Main wire harness (yellow) wire OK.
- Engine wire harness (yellow) wire OK.
- Control box 8-pin wire harness (yellow) wire OK.
- Control panel temperature sensor (blue) wire OK.
- Temperature gage OK.
- Engine not overheating.
- Engine oil level OK.
- Oil pressure sensor OK.
- No engine oil pressure fault.
- Temperature sensor OK.
- Alternator tachometer wire connection OK.
- Control box 8-pin wire harness (yellow/black) wire OK.
- Tachometer OK.
- Alternator tachometer sensor OK.

POSSIBLE PROBLEMS

- Main wire harness (yellow/black) wire faulty.
- Engine wire harness (yellow/black) wire faulty.

12.

WARNING

Read WARNING on Page 4-719

Is continuity measured across main wire harness tachometer sensor (yellow/black) wire from engine connector, terminal C to control box 8-pin connector, terminal B?

NO → Repair wire, (Para 3-141) or replace main wire harness (Para 3-134). Verify repair, go to Step 35 of this Fault.

YES → Repair wire, (Para 3-141) or replace engine wire harness, (Para 3-136). Verify repair, go to Step 35 of this Fault.

TEST OPTIONS

Continuity test.

REASON FOR QUESTION

If continuity is measured, engine harness (yellow/black) wire is faulty. If not, main wire harness (yellow/black) wire is faulty.

WARNING

Remove all jewelry such as rings, dog tags, bracelets etc. If jewelry or tools contact positive electrical circuits, a direct short may result. Damage to equipment, injury or death to personnel may occur.

CONTINUITY TEST

(1) Disconnect main wire harness at engine harness connector, (Para 3-134).

(2) Set multimeter select switch to ohms.

(3) Connect jumperwire between main wire harness engine harness connector, terminal C and a known good ground.

(4) Connect positive (+) multimeter lead to main wire harness 8-pin connector, terminal B.

(5) Connect negative (-) multimeter lead to a known good ground.

(a) If continuity is not measured, repair tachometer sensor (yellow/black) wire, (Para 3-141) or replace main wire harness, (Para 3-134).

(b) If continuity is measured, repair tachometer sensor (yellow/black) wire, (Para 3-141) or replace engine wire harness, (Para 3-136).

(6) Verify repair, go to Step 35 of this Fault.

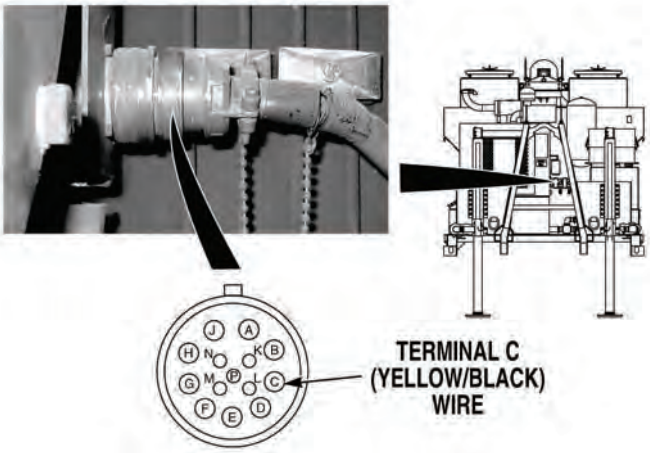

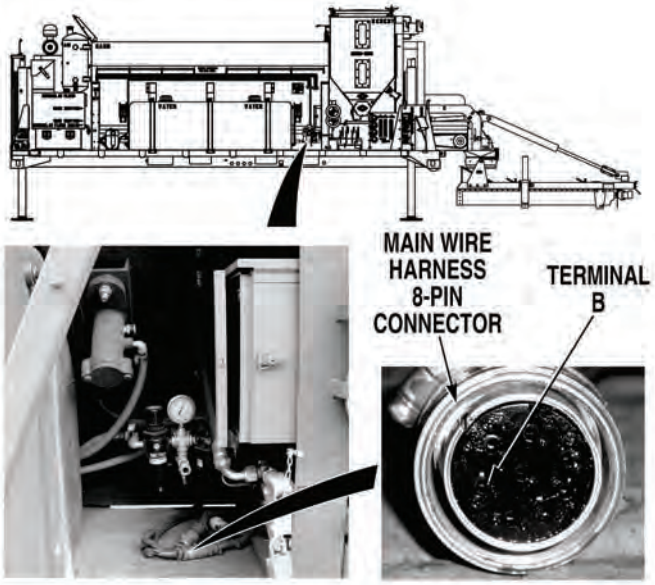

23. ENGINE GAGE READING INCORRECT (CONT).

KNOWN INFO
Voltmeter OK.
Battery charging system OK.
Control panel voltmeter tachometer ground (black) wire OK.
Control panel switched power (orange) wire to voltmeter OK.
Power to control panel OK.
Control panel switched power (orange) wire to TATTLE TALE SWITCH OK.
IGNITION SWITCH OK.
Control box TATTLE TALE SWITCH ground (black) wire OK.
Control box 5-pin wire harness (black) wire OK.
Main wire harness (black) wire OK.
Engine wire harness ground wire between connector and ground connection OK.
Main wire harness (blue) wire OK.
Engine wire harness (blue) wire OK.
Control box 8-pin wire harness (blue) wire harness OK.
Control panel oil pressure sensor (blue) wire OK.
Oil pressure gage OK.
Main wire harness (yellow) wire OK.
Engine wire harness (yellow) wire OK.
Control box 8-pin wire harness (yellow) wire OK.
Control panel temperature sensor (blue) wire OK.
Temperature gage OK.
Engine not overheating.
Temperature sensor OK.
Alternator tachometer wire connection OK.
Control box 8-pin wire harness (yellow/black) wire OK.
Tachometer OK.
Alternator tachometer sensor OK.
Main wire harness (yellow/black) wire OK.
Engine wire harness (yellow/black) wire OK.

POSSIBLE PROBLEMS
Engine oil level low causing low oil pressure.
Oil pressure sensor faulty.
Engine oil pressure fault.

13.

Is engine oil at correct level?

NO → Fill to correct level.

YES ↓

TEST OPTIONS
Visual inspection.
REASON FOR QUESTION
Low engine oil level could cause low oil pressure reading.

VISUAL INSPECTION

(1) Turn IGNITION SWITCH OFF, (Para 2-1).

(2) Remove jumperwire.

(3) Check if engine oil level is correct, (Para 2-10).

(a) If engine oil level is not correct, drain/fill oil to correct level, (Para 2-10).

(b) If engine oil level is correct, go to Step 14 of this Fault.

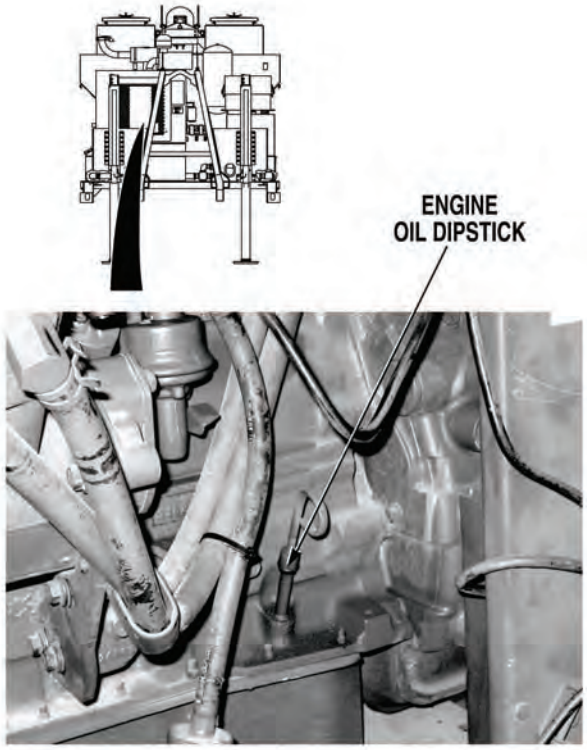

23. ENGINE GAGE READING INCORRECT (CONT).

KNOWN INFO
Voltmeter OK.
Battery charging system OK.
Control panel voltmeter tachometer ground (black) wire OK.
Control panel switched power (orange) wire to voltmeter OK.
Power to control panel OK.
Control panel switched power (orange) wire to TATTLE TALE SWITCH OK.
IGNITION SWITCH OK.
Control box TATTLE TALE SWITCH ground (black) wire OK.
Control box 5-pin wire harness (black) wire OK.
Main wire harness (black) wire OK.
Engine wire harness ground wire between connector and ground connection OK.
Main wire harness (blue) wire OK.
Engine wire harness (blue) wire OK.
Control box 8-pin wire harness (blue) wire harness OK.
Control panel oil pressure sensor (blue) wire OK.
Oil pressure gage OK.
Main wire harness (yellow) wire OK.
Engine wire harness (yellow) wire OK.
Control box 8-pin wire harness (yellow) wire OK.
Control panel temperature sensor (blue) wire OK.
Temperature gage OK.
Engine not overheating.
Temperature sensor OK.
Alternator tachometer wire connection OK.
Control box 8-pin wire harness (yellow/black) wire OK.
Tachometer OK.
Alternator tachometer sensor OK.
Main wire harness (yellow/black) wire OK.
Engine wire harness (yellow/black) wire OK.
Engine oil level OK.

POSSIBLE PROBLEMS
Oil pressure sensor faulty.
Engine oil pressure fault.

14.

Does oil pressure gage reading increase to a value greater than 20 psi (138 kPa) when starting engine (Do not press TATTLE TALE SWITCH) after replacing oil pressure sending unit?

NO → Fault not corrected, notify Supervisor.

YES → Fault corrected.

TEST OPTIONS
Operational test.

REASON FOR QUESTION
If oil pressure gage reading is correct, oil pressure gage is faulty. If not, engine oil pressure fault is present.

OPERATIONAL TEST

(1) Replace oil pressure sensor, (Para 3-125).

(2) Perform engine starting procedure, (Para 2-19). Do not press TATTLE TALE switch.

(3) Check if oil pressure gage reading is greater than 20 psi (138 kPa), while cranking engine.

(a) If oil pressure gage reading is not greater than 20 psi (138 kPa), notify Supervisor.

(b) If oil pressure gage reading is greater than 20 psi, (138 kPa), fault corrected. Verify repair, go to Step 35 of this Fault.

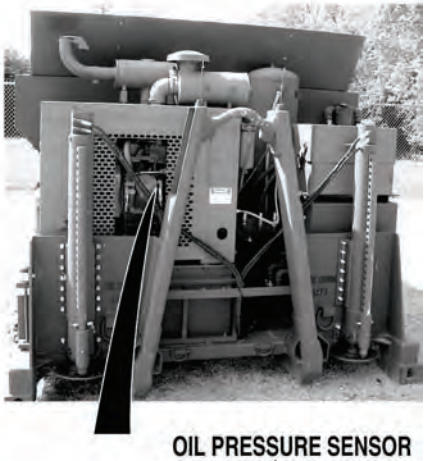

23. ENGINE GAGE READING INCORRECT (CONT).

KNOWN INFO
Voltmeter OK.
Battery charging system OK.
Control panel voltmeter tachometer ground (black) wire OK.
Control panel switched power (orange) wire to voltmeter OK.
Power to control panel OK.
Control panel switched power (orange) wire to TATTLE TALE SWITCH OK.
IGNITION SWITCH OK.
Control box TATTLE TALE SWITCH ground (black) wire OK.
Control box 5-pin wire harness (black) wire OK.
Main wire harness (black) wire OK.
Engine wire harness ground wire between connector and ground connection OK.
Main wire harness (blue) wire OK.
Engine wire harness (blue) wire OK.
Control box 8-pin wire harness (blue) wire harness OK.
Control panel oil pressure sensor (blue) wire OK.
Oil pressure gage OK.
Main wire harness (yellow) wire OK.
Engine wire harness (yellow) wire OK.
Control box 8-pin wire harness (yellow) wire OK.
Control panel temperature sensor (blue) wire OK.
Temperature gage OK.
Alternator tachometer wire connection OK.
Control box 8-pin wire harness (yellow/black) wire OK.
Tachometer OK.
Alternator tachometer sensor OK.
Main wire harness (yellow/black) wire OK.
Engine wire harness (yellow/black) wire OK.
Engine oil level OK.
Oil pressure sensor OK.
No engine oil pressure fault.

POSSIBLE PROBLEMS
Temperature sensor faulty.
Engine overheating.

15.

Is engine overheating?

NO → Replace water temperature sensor, (Para 3-125). Verify repair, go to Step 35 of this Fault.

YES → Go to “Engine Overheats (Engine Shutdown Occurs When Water Temperature Gage Reads Above 210°F (99°C)”, (Fault 25).

TEST OPTIONS
Visual inspection.
REASON FOR QUESTION
If engine is overheating, another troubleshooting procedure applies. If not, temperature sensor is faulty.

VISUAL INSPECTION
Check if engine is overheating. (a) If engine is not overheating, replace water temperature sensor, (Para 3-125). Verify repair, go to Step 35 of this Fault. (b) If engine is overheating, go to "Engine Overheats (Engine Shutdown Occurs When Water Temperature Gage Reads Above 210°F [99°C]), (Fault 25).

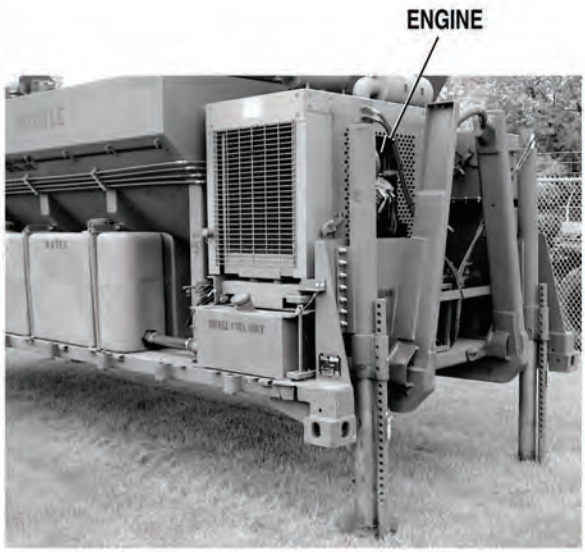

23. ENGINE GAGE READING INCORRECT (CONT).

KNOWN INFO
Voltmeter OK.
Battery charging system OK.
Control panel voltmeter tachometer ground (black) wire OK.
Control panel switched power (orange) wire to voltmeter OK.
Power to control panel OK.
Control panel switched power (orange) wire to TATTLE TALE SWITCH OK.
IGNITION SWITCH OK.
Control box TATTLE TALE SWITCH ground (black) wire OK.
Control box 5-pin wire harness (black) wire OK.
Main wire harness (black) wire OK.
Engine wire harness ground wire between connector and ground connection OK.
Main wire harness (blue) wire OK.
Engine wire harness (blue) wire OK.
Control box 8-pin wire harness (blue) wire OK.
Control panel oil pressure sensor (blue) wire OK.
Oil pressure gage OK.
Temperature sensor OK.
Alternator tachometer wire connection OK.
Control box 8-pin wire harness (yellow/black) wire OK.
Tachometer OK.
Alternator tachometer sensor OK.
Main wire harness (yellow/black) wire OK.
Engine wire harness (yellow/black) wire OK.
Engine oil level OK.
Oil pressure sensor OK.
No engine oil pressure fault.
Engine not overheating.

POSSIBLE PROBLEMS
Main wire harness (yellow) wire faulty.
Engine wire harness (yellow) wire faulty.
Control box 8-pin wire harness (yellow) wire faulty.
Control panel temperature sensor (blue) wire faulty.
Temperature gage faulty.

WARNING

Read WARNING on Page 4-727

16.

Does temperature gage go to full scale reading when temperature sensor wire at control box 8-pin harness connector, terminal E is jumpered to a known good ground and IGNITION SWITCH is turned ON?

NO → Go to Step 19 of this Fault.

YES ↓

TEST OPTIONS
Operational test.
REASON FOR QUESTION
To further isolate fault.

WARNING

Remove all jewelry such as rings, dog tags, bracelets etc. If jewelry or tools contact positive electrical circuits, a direct short may result. Damage to equipment, injury or death to personnel may occur.

OPERATIONAL TEST

(1) Turn IGNITION SWITCH OFF, (Para 2-1).

(2) Remove jumperwire from temperature sensor and ground.

(3) Disconnect control box 8-pin wire harness connector, (Para 3-137).

(4) Turn IGNITION SWITCH ON, (Para 2-1).

(5) Connect jumperwire between control box 8-pin wire harness connector, terminal E and a known good ground.

(6) Check if temperature gage goes to full scale reading.

(a) If temperature gage does not go to full scale reading, go to Step 18 of this Fault.

(b) If temperature gage goes to full scale reading, go to Step 17 of this Fault.

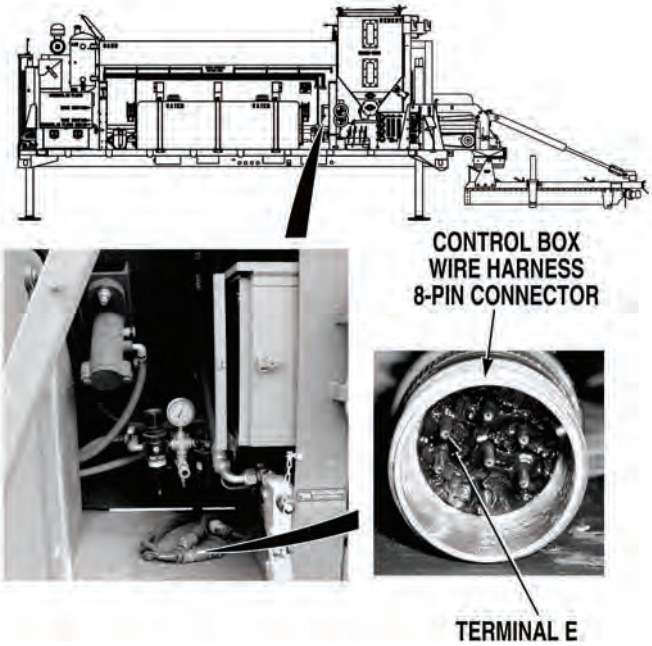

23. ENGINE GAGE READING INCORRECT (CONT).

KNOWN INFO

- Voltmeter OK.
- Battery charging system OK.
- Control panel voltmeter tachometer ground (black) wire OK.
- Control panel switched power (orange) wire to voltmeter OK.
- Power to control panel OK.
- Control panel switched power (orange) wire to TATTLE TALE SWITCH OK.
- IGNITION SWITCH OK.
- Control panel TATTLE TALE SWITCH ground (black) wire OK.
- Control box 5-pin wire harness (black) wire OK.
- Main wire harness (black) wire OK.
- Engine wire harness ground wire between connector and ground connection OK.
- Main wire harness (blue) wire OK.
- Engine wire harness (blue) wire OK.
- Control box 8-pin wire harness (blue) wire harness OK.
- Control panel oil pressure sensor (blue) wire OK.
- Oil pressure gage OK.
- Temperature sensor OK.
- Alternator tachometer wire connection OK.
- Control box 8-pin wire harness (yellow/black) wire OK.
- Tachometer OK.
- Alternator tachometer sensor OK.
- Main wire harness (yellow/black) wire OK.
- Engine wire harness (yellow/black) wire OK.
- Engine oil level OK.
- Oil pressure sensor OK.
- No engine oil pressure fault.
- Engine not overheating.
- Control box 8-pin wire harness (yellow) wire OK.
- Control panel temperature sensor (blue) wire OK.
- Temperature gage OK.

POSSIBLE PROBLEMS

- Main wire harness (yellow) wire faulty.
- Engine wire harness (yellow) wire faulty.

17.

WARNING

Read WARNING on Page 4-729

Is continuity measured across main wire harness temperature sensor (yellow) wire from engine connector, terminal K to control box 8-pin connector, terminal E?

NO → Repair wire, (Para 3-141) or replace main wire harness (Para 3-134). Verify repair, go to Step 35 of this Fault.

YES → Repair wire, (Para 3-141) or replace engine wire harness (Para 3-136). Verify repair, go to Step 35 of this Fault.

TEST OPTIONS

Continuity test.

REASON FOR QUESTION

If continuity is measured, engine wire harness (yellow) wire is faulty. If not, main wire yellow wire is faulty.

WARNING

Remove all jewelry such as rings, dog tags, bracelets etc. If jewelry or tools contact positive electrical circuits, a direct short may result. Damage to equipment, injury or death to personnel may occur.

CONTINUITY TEST

(1) Turn IGNITION SWITCH OFF, (Para 2-1).

(2) Remove jumperwire.

(3) Disconnect batteries, (Para 3-10).

(4) Disconnect main wire harness at engine harness connector, (Para 3-134).

(5) Set multimeter select switch to ohms.

(6) Connect jumperwire between main wire harness engine harness connector, terminal K.

(7) Connect positive (+) multimeter lead to main wire harness 8-pin connector, terminal E.

(8) Connect negative (-) multimeter lead to a known good ground.

(a) If continuity is not measured, repair temperature sensor (yellow) wire, (Para 3-141) or replace main wire harness, (Para 3-134).

(b) If continuity is measured, repair temperature sensor (yellow) wire, (Para 3-141) or replace engine wire harness, (Para 3-136).

(9) Verify repair, go to Step 35 of this Fault.

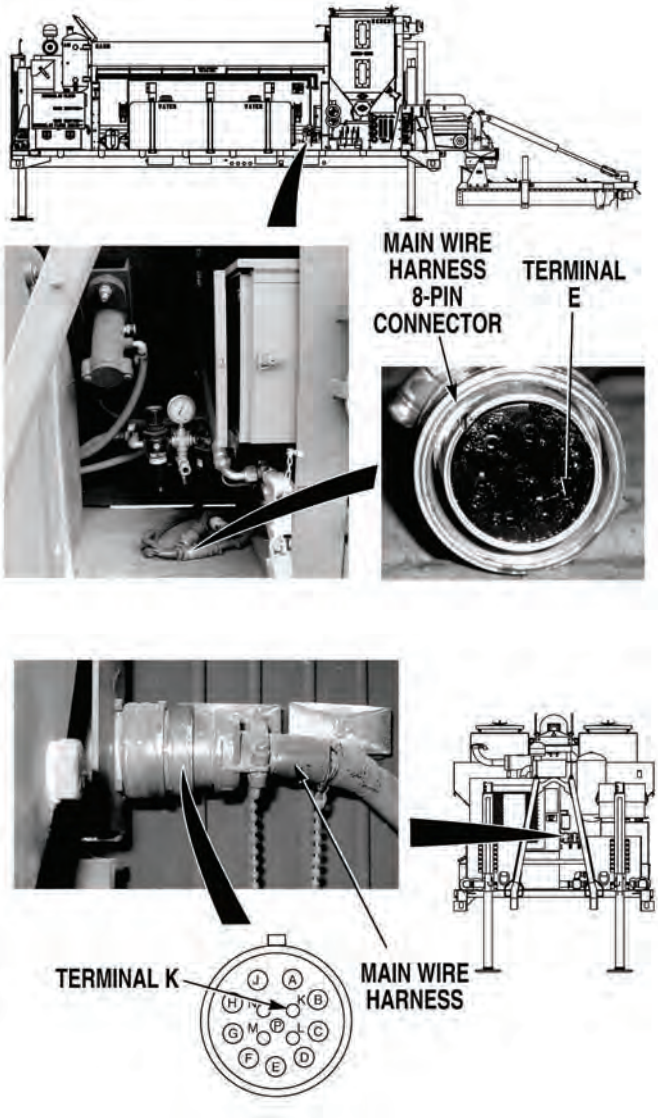

23. ENGINE GAGE READING INCORRECT (CONT).

KNOWN INFO

- Voltmeter OK.
- Battery charging system OK.
- Control panel voltmeter tachometer ground (black) wire OK.
- Control panel switched power (orange) wire to voltmeter OK.
- Power to control panel OK.
- Control panel switched power (orange) wire to TATTLE TALE SWITCH OK.
- IGNITION SWITCH OK.
- Control box TATTLE TALE SWITCH ground (black) wire OK.
- Control box 5-pin wire harness (black) wire OK.
- Main wire harness (black) wire OK.
- Engine wire harness ground wire between connector and ground connection OK.
- Main wire harness (blue) wire OK.
- Engine wire harness (blue) wire OK.
- Control box 8-pin wire harness (blue) wire harness OK.
- Control panel oil pressure sensor (blue) wire OK.
- Oil pressure gage OK.
- Temperature sensor OK.
- Alternator tachometer wire connection OK.
- Control box 8-pin wire harness (yellow/black) wire OK.
- Tachometer OK.
- Alternator tachometer sensor OK.
- Main wire harness (yellow/black) wire OK.
- Engine wire harness (yellow/black) wire OK.
- Engine oil level OK.
- Oil pressure sensor OK.
- No engine oil pressure fault.
- Engine not overheating.
- Main wire harness (yellow) wire OK.
- Engine wire harness (yellow) wire OK.

POSSIBLE PROBLEMS

- Control box 8-pin wire harness (yellow) wire faulty.
- Control panel temperature sensor (blue) wire faulty.
- Temperature gage faulty.

18.

WARNING

Read WARNING on Page 4-731

Is continuity measured across control box 8-pin harness temperature sensor (yellow) wire from connector, terminal E to terminal strip 8?

NO → Repair wire, (Para 3-141) or replace control box 8-pin wire harness, (Para 3-137). Verify repair, go to Step 35 of this Fault.

YES ↓

TEST OPTIONS

Continuity test.

REASON FOR QUESTION

If continuity is not measured, control box 8-pin harness yellow wire is faulty.

WARNING

Remove all jewelry such as rings, dog tags, bracelets etc. If jewelry or tools contact positive electrical circuits, a direct short may result. Damage to equipment, injury or death to personnel may occur.

CONTINUITY TEST

(1) Turn IGNITION SWITCH OFF, (Para 2-1).

(2) Remove jumperwire.

(3) Remove control box from Concrete Mobile Mixer, (Para 3-90).

(4) Release latch and open control panel door. Remove screw from top of control panel and gently tip control panel forward for access to wires.

(5) Set multimeter select switch to ohms.

(6) Connect positive (+) multimeter lead control box 8-pin harness, terminal E.

(7) Connect negative (-) multimeter lead to control box terminal strip, terminal 8.

(a) If continuity is not measured, repair temperature sensor (yellow) wire, (Para 3-141) or replace control box 8-pin wire harness, (Para 3-137). Verify repair, go to Step 35 of this Fault.

(b) If continuity is measured, go to Step 19 of this Fault.

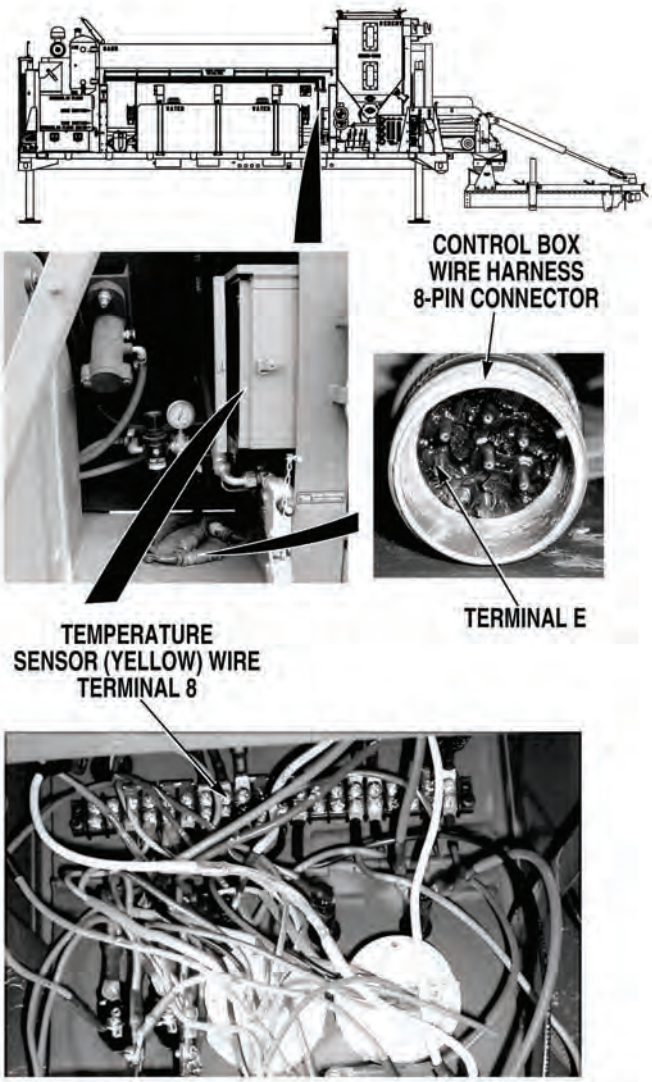

23. ENGINE GAGE READING INCORRECT (CONT).

KNOWN INFO

- Voltmeter OK.
- Battery charging system OK.
- Control panel voltmeter tachometer ground (black) wire OK.
- Control panel switched power (orange) wire to voltmeter OK.
- Power to control panel OK.
- Control panel switched power (orange) wire to TATTLE TALE SWITCH OK.
- IGNITION SWITCH OK.
- Control box TATTLE TALE SWITCH ground (black) wire OK.
- Control box 5-pin wire harness (black) wire OK.
- Main wire harness (black) wire OK.
- Engine wire harness ground wire between connector and ground connection OK.
- Main wire harness (blue) wire OK.
- Engine wire harness (blue) wire OK.
- Control box 8-pin wire harness (blue) wire harness OK.
- Control panel oil pressure sensor (blue) wire OK.
- Oil pressure gage OK.
- Temperature sensor OK.
- Alternator tachometer wire connection OK.
- Control box 8-pin wire harness (yellow/black) wire OK.
- Tachometer OK.
- Alternator tachometer sensor OK.
- Main wire harness (yellow/black) wire OK.
- Engine wire harness (yellow/black) wire OK.
- Engine oil level OK.
- Oil pressure sensor OK.
- No engine oil pressure fault.
- Engine not overheating.
- Main wire harness (yellow) wire OK.
- Engine wire harness (yellow) wire OK.
- Control box 8-pin wire harness (yellow) wire OK.

POSSIBLE PROBLEMS

- Control panel temperature sensor (blue) wire faulty.
- Temperature gage faulty.

19.

WARNING
Read WARNING on Page 4-733

Is continuity measured across control panel temperature sensor (blue) wire from terminal strip, terminal 8 to temperature gage connector terminal?

TEST OPTIONS

Continuity test.

REASON FOR QUESTION

If continuity is measured, temperature gage is faulty. If not, control panel temperature sensor (blue) is faulty.

NO → Repair wire, (Para 3-141) or replace control box, (Para 3-90). Verify repair, go to Step 35 of this Fault.

YES → Replace temperature gage, (Para 3-54). Verify repair, go to Step 35 of this Fault.

WARNING

Remove all jewelry such as rings, dog tags, bracelets etc. If jewelry or tools contact positive electrical circuits, a direct short may result. Damage to equipment, injury or death to personnel may occur.

CONTINUITY TEST

(1) Set multimeter select switch to ohms.

(2) Disconnect temperature gage connector, (Para 3-54).

(3) Connect positive (+) multimeter lead to blue wire at terminal strip, terminal 8.

(4) Connect negative (-) multimeter lead to blue wire at temperature gage connector.

  (a) If continuity is not measured, repair temperature sensor (blue) wire, (Para 3-141) or replace control box, (Para 3-90).

  (b) If continuity is measured, replace temperature gage, (Para 3-54).

(5) Verify repair, go to Step 35 of this Fault.

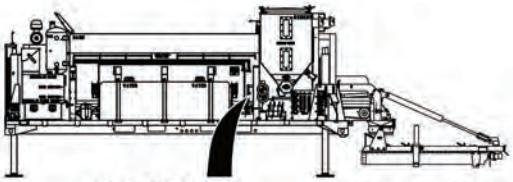

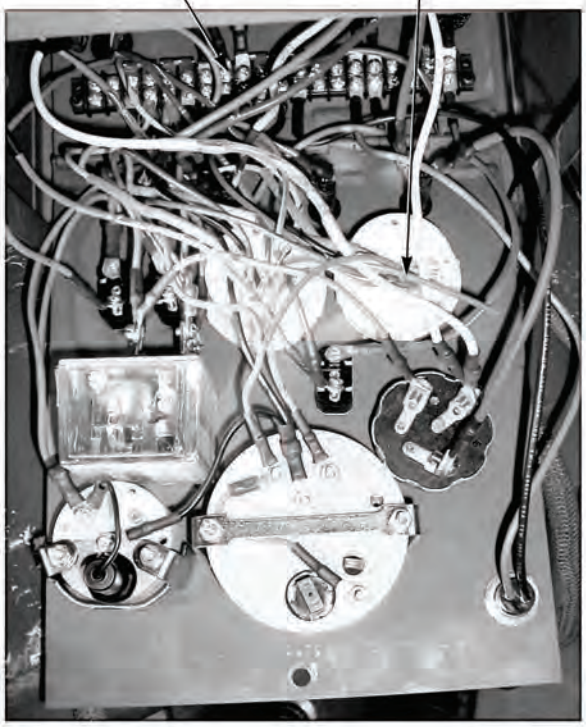

23. ENGINE GAGE READING INCORRECT (CONT).

KNOWN INFO
Voltmeter OK.
Battery charging system OK.
Control panel voltmeter tachometer ground (black) wire OK.
Control panel switched power (orange) wire to voltmeter OK.
Power to control panel OK.
Control panel switched power (orange) wire to TATTLE TALE SWITCH OK.
IGNITION SWITCH OK.
Control box TATTLE TALE SWITCH ground (black) wire OK.
Control box 5-pin wire harness (black) wire OK.
Main wire harness (black) wire OK.
Engine wire harness ground wire between connector and ground connection OK.
Temperature sensor OK.
Alternator tachometer wire connection OK.
Control box 8-pin wire harness (yellow/black) wire OK.
Tachometer OK.
Alternator tachometer sensor OK.
Main wire harness (yellow/black) wire OK.
Engine wire harness (yellow/black) wire OK.
Engine oil level OK.
Oil pressure sensor OK.
No engine oil pressure fault.
Engine not overheating.
Main wire harness (yellow) wire OK.
Engine wire harness (yellow) wire OK.
Control box 8-pin wire harness (yellow) wire OK.
Control panel temperature sensor (blue) wire OK.
Temperature gage OK.

POSSIBLE PROBLEMS
Main wire harness (blue) wire faulty.
Engine wire harness (blue) wire faulty.
Control box 8-pin wire harness (blue) wire harness faulty.
Control panel oil pressure sensor (blue) wire faulty.
Oil pressure gage faulty.

20.

WARNING

Read WARNING on Page 4-735

Does oil pressure gage go to full scale reading when oil pressure sensor wire at control box 8-pin harness connector, terminal H is jumpered to a known good ground and IGNITION SWITCH is turned ON?

NO → Go to Step 23 of this Fault.

YES ↓

TEST OPTIONS
Pressure test.
REASON FOR QUESTION
To further isolate fault.

WARNING

Remove all jewelry such as rings, dog tags, bracelets etc. If jewelry or tools contact positive electrical circuits, a direct short may result. Damage to equipment, injury or death to personnel may occur.

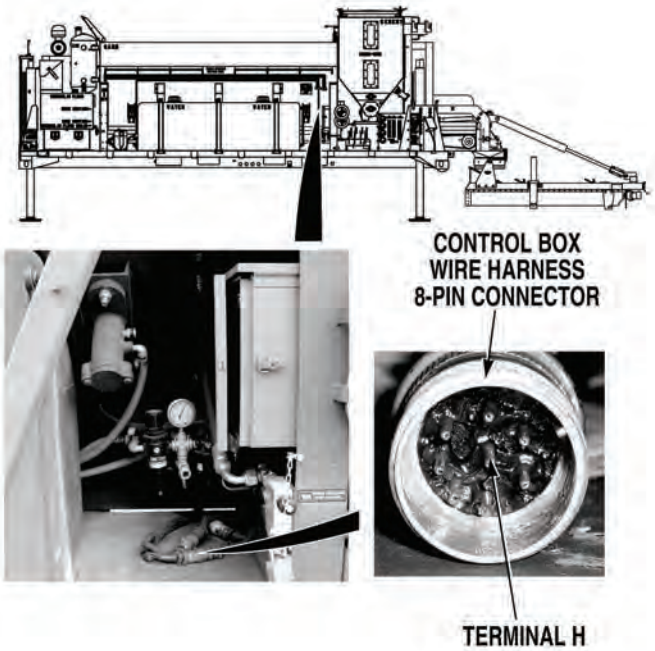

PRESSURE TEST

(1) Turn IGNITION SWITCH OFF, (Para 2-1).

(2) Remove jumperwire between oil pressure sensor and ground.

(3) Disconnect control box 8-pin connector, (Para 3-137).

(4) Turn IGNITION SWITCH ON, (Para 2-1).

(5) Connect jumperwire between control box 8-pin wire harness connector, terminal H and a known good ground.

(6) Check if oil pressure gage goes to full scale reading.

  (a) If oil pressure gage does not go to full scale reading, go to Step 22 of this Fault.

  (b) If oil pressure gage goes to full scale reading, go to Step 21 of this Fault.

23. ENGINE GAGE READING INCORRECT (CONT).

KNOWN INFO
Voltmeter OK.
Battery charging system OK.
Control panel voltmeter tachometer ground (black) wire OK.
Control panel switched power (orange) wire to voltmeter OK.
Power to control panel OK.
Control panel switched power (orange) wire to TATTLE TALE SWITCH OK.
IGNITION SWITCH OK.
Control box TATTLE TALE SWITCH ground (black) wire OK.
Control box 5-pin wire harness (black) wire OK.
Main wire harness (black) wire OK.
Engine wire harness ground wire between connector and ground connection OK.
Temperature sensor OK.
Alternator tachometer wire connection OK.
Control box 8-pin wire harness (yellow/black) wire OK.
Tachometer OK.
Alternator tachometer sensor OK.
Main wire harness (yellow/black) wire OK.
Engine wire harness (yellow/black) wire OK.
Engine oil level OK.
Oil pressure sensor OK.
No engine oil pressure fault.
Engine not overheating.
Main wire harness (yellow) wire OK.
Engine wire harness (yellow) wire OK.
Control box 8-pin wire harness (yellow) wire OK.
Control panel temperature sensor (blue) wire OK.
Temperature gage OK.
Control box 8-pin wire harness (blue) wire harness OK.
Control panel oil pressure sensor (blue) wire OK.
Oil pressure gage OK.

POSSIBLE PROBLEMS
Main wire harness (blue) wire faulty.
Engine wire harness (blue) wire faulty.

21.

WARNING

Read WARNING on Page 4-737

Is continuity measured across main wire harness oil pressure sensor (blue) wire from engine connector, terminal N to control box 8-pin connector, terminal H?

NO → Repair wire, (Para 3-141) or replace main wire harness, (Para 3-134). Verify repair, go to Step 35 of this Fault.

YES → Repair wire, (Para 3-141) or replace engine wire harness, (Para 3-136). Verify repair, go to Step 35 of this Fault.

TEST OPTIONS
Continuity test.
REASON FOR QUESTION
If continuity is measured, engine wire harness (blue) wire is faulty. If not, main wire harness (blue) wire is faulty.

WARNING

Remove all jewelry such as rings, dog tags, bracelets etc. If jewelry or tools contact positive electrical circuits, a direct short may result. Damage to equipment, injury or death to personnel may occur.

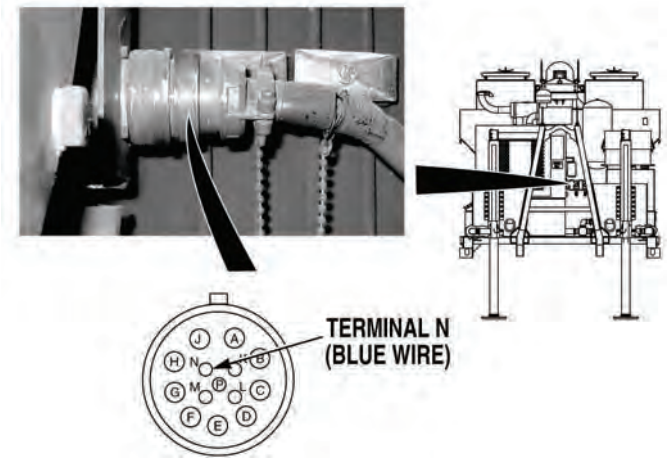

CONTINUITY TEST

(1) Turn IGNITION SWITCH OFF, (Para 2-1).

(2) Remove jumperwire.

(3) Disconnect batteries, (Para 3-10).

(4) Disconnect main wire harness at engine harness connector, (Para 3-134).

(5) Set multimeter select switch to ohms.

(6) Connect jumperwire between main wire harness engine harness connector, terminal N.

(7) Connect positive (+) multimeter lead to main wire harness 8-pin connector, terminal H.

(8) Connect negative (-) multimeter lead to a known good ground.

  (a) If continuity is not measured, repair oil pressure sensor (blue) wire, (Para 3-141) or replace main wire harness, (Para 3-134).

  (b) If continuity is measured, repair oil pressure sensor (blue) wire, (Para 3-141) or replace engine wire harness, (Para 3-136).

(9) Verify repair, go to Step 35 of this Fault.

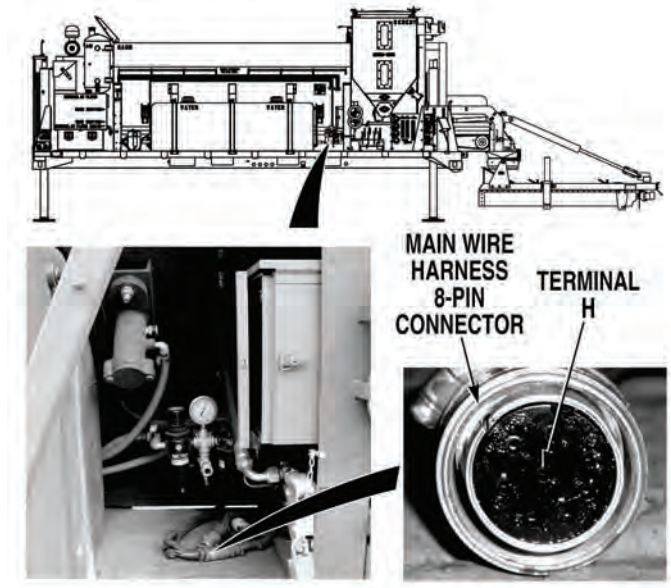

23. ENGINE GAGE READING INCORRECT (CONT).

KNOWN INFO

- Voltmeter OK.
- Battery charging system OK.
- Control panel voltmeter tachometer ground (black) wire OK.
- Control panel switched power (orange) wire to voltmeter OK.
- Power to control panel OK.
- Control panel switched power (orange) wire to TATTLE TALE SWITCH OK.
- IGNITION SWITCH OK.
- Control box TATTLE TALE SWITCH ground (black) wire OK.
- Control box 5-pin wire harness (black) wire OK.
- Main wire harness (black) wire OK.
- Engine wire harness ground wire between connector and ground connection OK.
- Temperature sensor OK.
- Alternator tachometer wire connection OK.
- Control box 8-pin wire harness (yellow/black) wire OK.
- Tachometer OK.
- Alternator tachometer sensor OK.
- Main wire harness (yellow/black) wire OK.
- Engine wire harness (yellow/black) wire OK.
- Engine oil level OK.
- Oil pressure sensor OK.
- No engine oil pressure fault.
- Engine not overheating.
- Main wire harness (yellow) wire OK.
- Engine wire harness (yellow) wire OK.
- Control box 8-pin wire harness (yellow) wire OK.
- Control panel temperature sensor (blue) wire OK.
- Temperature gage OK.
- Main wire harness (blue) wire OK.
- Engine wire harness (blue) wire OK.

POSSIBLE PROBLEMS

- Control box 8-pin wire harness (blue) wire faulty.
- Control panel oil pressure sensor (blue) wire faulty.
- Oil pressure gage faulty.

22.

WARNING

Read WARNING on Page 4-739

Is continuity measured across control box 8-pin harness oil pressure sensor (blue) wire from connector, terminal H to terminal strip terminal 7?

NO → Repair wire, (Para 3-141) or replace control box 8-pin wire harness, (Para 3-137). Verify repair, go to Step 35 of this Fault.

YES ↓

TEST OPTIONS

Continuity test.

REASON FOR QUESTION

If continuity is not measured, control box 8-pin harness (blue) wire is faulty.

WARNING

Remove all jewelry such as rings, dog tags, bracelets etc. If jewelry or tools contact positive electrical circuits, a direct short may result. Damage to equipment, injury or death to personnel may occur.

CONTINUITY TEST

(1) Turn IGNITION SWITCH OFF, (Para 2-1).

(2) Remove jumperwire.

(3) Remove control box from Concrete Mobile Mixer, (Para 3-90).

(4) Release latch and open control box door. Remove screw from top of control panel and gently tip control panel forward for access to wires.

(5) Set multimeter select switch to ohms.

(6) Connect positive (+) multimeter lead to control box 8-pin wire harness connector, terminal H.

(7) Connect negative (-) multimeter to control box terminal strip, terminal 7.

(a) If continuity is not measured, repair oil pressure sensor (blue) wire, (Para 3-141) or replace control box 8-pin wire harness, (Para 3-137). Verify repair, go to Step 35 of this Fault.

(b) If continuity is measured, go to Step 23 of this Fault.

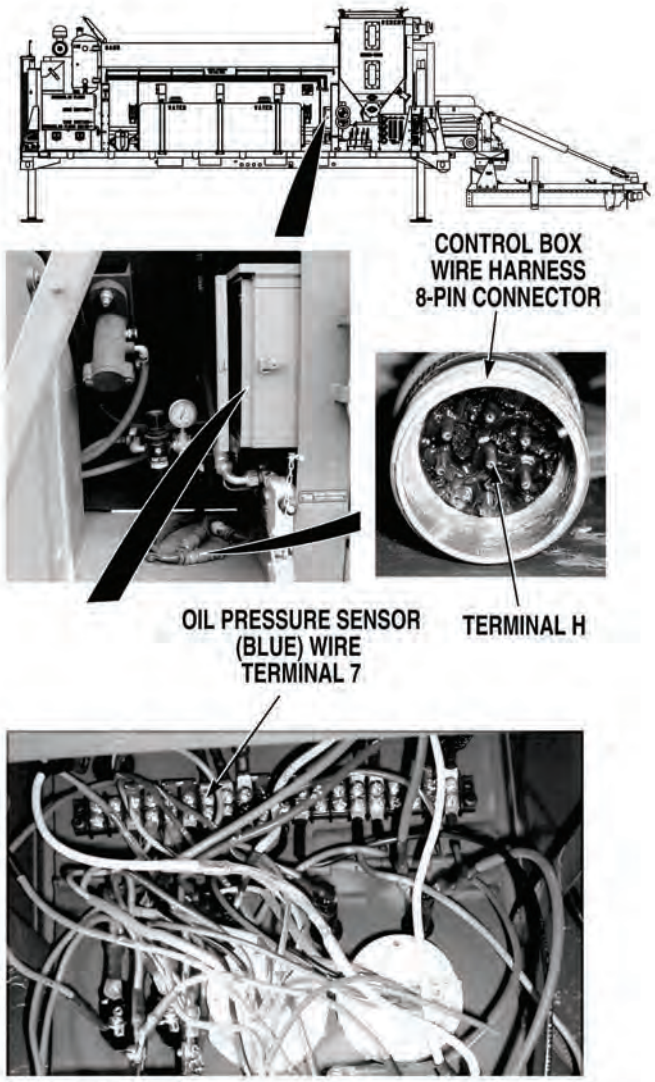

23. ENGINE GAGE READING INCORRECT (CONT).

KNOWN INFO
Voltmeter OK.
Battery charging system OK.
Control panel voltmeter tachometer ground (black) wire OK.
Control panel switched power (orange) wire to voltmeter OK.
Power to control panel OK.
Control panel switched power (orange) wire to TATTLE TALE SWITCH OK.
IGNITION SWITCH OK.
Control box TATTLE TALE SWITCH ground (black) wire OK.
Control box 5-pin wire harness (black) wire OK.
Main wire harness (black) wire OK.
Engine wire harness ground wire between connector and ground connection OK.
Temperature sensor OK.
Alternator tachometer wire connection OK.
Control box 8-pin wire harness (yellow/black) wire OK.
Tachometer OK.
Alternator tachometer sensor OK.
Main wire harness (yellow/black) wire OK.
Engine wire harness (yellow/black) wire OK.
Engine oil level OK.
Oil pressure sensor OK.
No engine oil pressure fault.
Engine not overheating.
Main wire harness (yellow) wire OK.
Engine wire harness (yellow) wire OK.
Control box 8-pin wire harness (yellow) wire OK.
Control panel temperature sensor (blue) wire OK.
Temperature gage OK.
Main wire harness (blue) wire OK.
Engine wire harness (blue) wire OK.
Control box 8-pin wire harness (blue) wire harness OK.

POSSIBLE PROBLEMS
Control panel oil pressure sensor (blue) wire faulty.
Oil pressure gage faulty.

23.

WARNING

Read WARNING on Page 4-741

Is continuity measured across control panel oil pressure sensor (blue) wire from terminal strip, terminal 7 to oil pressure gage connector terminal?

NO → Repair wire, (Para 3-141) or replace control box, (Para 3-90). Verify repair, go to Step 35 of this Fault.

YES → Replace oil pressure gage, (Para 3-54). Verify repair, go to Step 35 of this Fault.

TEST OPTIONS
Continuity test.
REASON FOR QUESTION
If continuity is measured, oil pressure gage is faulty. If not, control panel oil pressure sensor (blue) wire is faulty.

WARNING

Remove all jewelry such as rings, dog tags, bracelets etc. If jewelry or tools contact positive electrical circuits, a direct short may result. Damage to equipment, injury or death to personnel may occur.

CONTINUITY TEST

(1) Set multimeter select switch to ohms.

(2) Disconnect oil pressure gage connector, (Para 3-54).

(3) Connect positive (+) multimeter lead to oil pressure sensor (blue) wire at control box terminal strip, terminal 7.

(4) Connect negative (–) multimeter lead to oil pressure sensor (blue) wire at pressure gage connector terminal.

(a) If continuity is not measured, repair oil pressure sensor (blue) wire, (Para 3-141) or replace control box, (Para 3-90).

(b) If continuity is measured, replace oil pressure gage, (Para 3-54).

(5) Verify repair, go to Step 35 of this Fault.

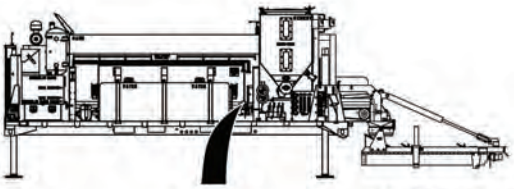

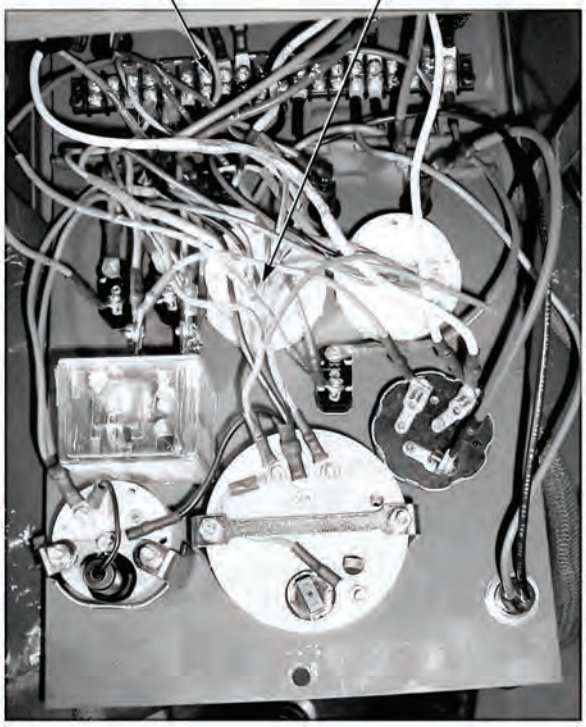

23. ENGINE GAGE READING INCORRECT (CONT).

KNOWN INFO
Temperature sensor OK.
Alternator tachometer wire connection OK.
Control box 8-pin wire harness (yellow/black) wire OK.
Tachometer OK.
Alternator tachometer sensor OK.
Main wire harness (yellow/black) wire OK.
Engine wire harness (yellow/black) wire OK.
Engine oil level OK.
Oil pressure sensor OK.
No engine oil pressure fault.
Engine not overheating.
Main wire harness (yellow) wire OK.
Engine wire harness (yellow) wire OK.
Control box 8-pin wire harness (yellow) wire OK.
Control panel temperature sensor (blue) wire OK.
Temperature gage OK.
Main wire harness (blue) wire faulty.
Engine wire harness (blue) wire faulty.
Control box 8-pin wire harness (blue) wire harness OK.
Control panel oil pressure sensor (blue) wire OK.
Oil pressure gage OK.

POSSIBLE PROBLEMS
Voltmeter faulty.
Battery charging system fault.
Control panel voltmeter tachometer ground (black) wire faulty.
Control panel switched power (orange) wire to voltmeter faulty.
Power to control panel faulty.
Control panel switched power (orange) wire to TATTLE TALE SWITCH faulty.
IGNITION SWITCH faulty.
Control box TATTLE TALE SWITCH ground (black) wire faulty.
Control box 5-pin wire harness (black) wire faulty.
Main wire harness (black) wire faulty.
Engine wire harness ground wire between connector and ground connection faulty.

24.

Is voltmeter reading greater than 0 VDC?

NO → Go to Step 27 of this Fault.

YES ↓

TEST OPTIONS
Voltage test.
REASON FOR QUESTION
To further isolate fault.

VOLTAGE TEST
Check if voltmeter reading is greater than 0 VDC. (a) If voltmeter reading is 0 VDC, go to Step 26 of this Fault. (b) If voltmeter reading is greater than 0 VDC, go to Step 25 of this Fault.

23. ENGINE GAGE READING INCORRECT (CONT).

KNOWN INFO

- Temperature sensor OK.
- Alternator tachometer wire connection OK.
- Control box 8-pin wire harness (yellow/black) wire OK.
- Tachometer OK.
- Alternator tachometer sensor OK.
- Main wire harness (yellow/black) wire OK.
- Engine wire harness (yellow/black) wire OK.
- Engine oil level OK.
- Oil pressure sensor OK.
- No engine oil pressure fault.
- Engine not overheating.
- Main wire harness (yellow) wire OK.
- Engine wire harness (yellow) wire OK.
- Control box 8-pin wire harness (yellow) wire OK.
- Control panel temperature sensor (blue) wire OK.
- Temperature gage OK.
- Main wire harness (blue) wire OK.
- Engine wire harness (blue) wire OK.
- Control box 8-pin wire harness (blue) wire harness OK.
- Control panel oil pressure sensor (blue) wire faulty.
- Oil pressure gage faulty.
- Control panel voltmeter tachometer ground (black) wire OK.
- Control panel switched power (orange) wire to voltmeter OK.
- Power to control panel OK.
- Control panel switched power (orange) wire to TATTLE TALE SWITCH OK.
- IGNITION SWITCH OK.
- Control box TATTLE TALE SWITCH ground (black) wire OK.
- Control box 5-pin wire harness (black) wire OK.
- Main wire harness (black) wire OK.
- Engine wire harness ground wire between connector and ground connection OK.

POSSIBLE PROBLEMS

- Voltmeter faulty.
- Battery charging system faulty.

25.

WARNING

Read WARNING on Page 4-745

Does voltmeter reading equal voltage measured between battery 24 VDC terminal and battery ground terminal?

NO → Replace voltmeter, (Para 3-54). Verify repair, go to Step 35 of this Fault.

YES → Go to “Battery Charging System or Battery Equalizer Does Not Operate Correctly”, (Fault 5).

TEST OPTIONS

Voltage reading.

REASON FOR QUESTION

If voltmeter reading equals measured reading, another troubleshooting procedure applies. If not, voltmeter is faulty.

WARNING

Remove all jewelry such as rings, dog tags, bracelets etc. If jewelry or tools contact positive electrical circuits, a direct short may result. Damage to equipment, injury or death to personnel may occur.

VOLTAGE TEST

(1) Loosen clamps and open battery box, (Para 3-10).

(2) Connect positive (+) multimeter lead to 24 VDC battery terminal.

(3) Connect negative (-) multimeter lead to battery ground terminal.

(4) Note voltage reading.

(5) Check if voltmeter reading is equal to voltmeter reading found in Step 24.

(a) If voltmeter readings are not equal, replace voltmeter, (Para 3-54). Verify repair, go to Step 35 of this Fault.

(b) If voltmeter readings are equal, go to “Battery Charging System or Battery Equalizer Does Not Operate Correctly”, (Fault 5).

+24 VDC TERMINAL

GROUND TERMINAL

23. ENGINE GAGE READING INCORRECT (CONT).

KNOWN INFO
Temperature sensor OK.
Alternator tachometer wire connection OK.
Control box 8-pin wire harness (yellow/black) wire OK.
Tachometer OK.
Alternator tachometer sensor OK.
Main wire harness (yellow/black) wire OK.
Engine wire harness (yellow/black) wire OK.
Engine oil level OK.
Oil pressure sensor OK.
No engine oil pressure fault.
Engine not overheating.
Main wire harness (yellow) wire OK.
Engine wire harness (yellow) wire OK.
Control box 8-pin wire harness (yellow) wire OK.
Control panel temperature sensor (blue) wire OK.
Temperature gage OK.
Main wire harness (blue) wire OK.
Engine wire harness (blue) wire OK.
Control box 8-pin wire harness (blue) wire OK.
Control panel oil pressure sensor (blue) wire OK.
Oil pressure gage OK.
Battery charging system OK.

POSSIBLE PROBLEMS
Voltmeter faulty.
Control panel voltmeter tachometer ground (black) wire faulty.
Control panel switched power (orange) wire to voltmeter faulty.
Power to control panel faulty.
Control panel switched power (orange) wire to TATTLE TALE SWITCH faulty.
IGNITION SWITCH faulty.
Control box TATTLE TALE SWITCH ground (black) wire faulty.
Control box 5-pin wire harness (black) wire faulty.
Main wire harness (black) wire faulty.
Engine wire harness ground wire between connector and ground connection faulty.

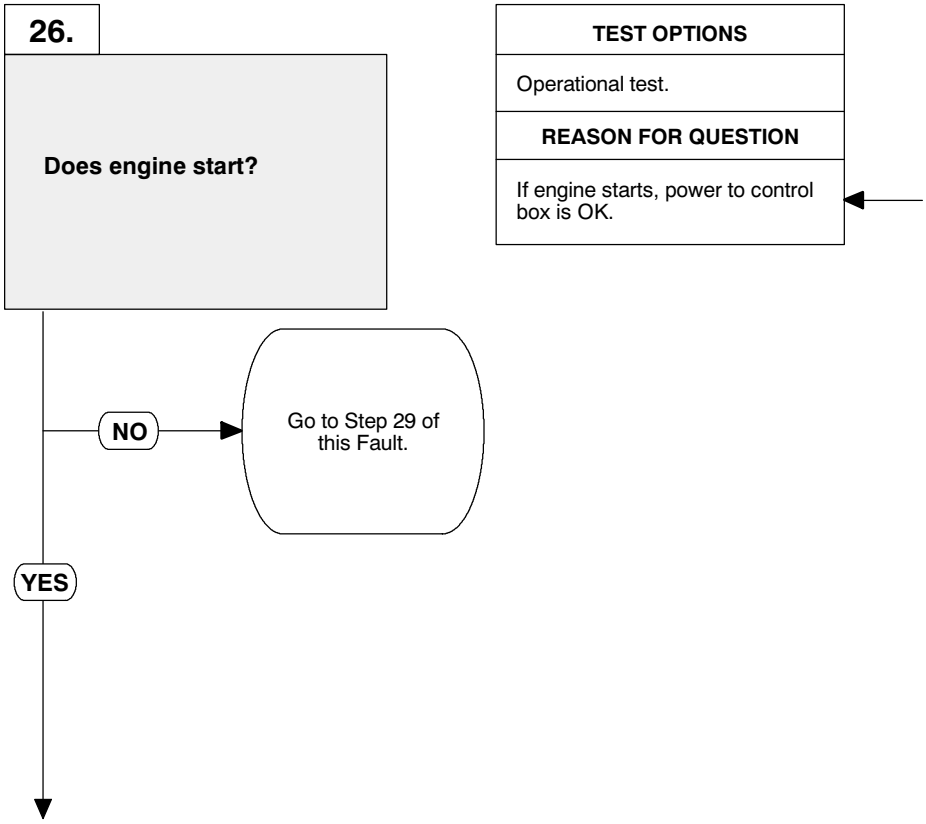

OPERATIONAL TEST
Start engine, (Para 2-19). (a) If engine doesn't start, go to Step 29 of this Fault. (b) If engine starts, go to Step 27 of this Fault.

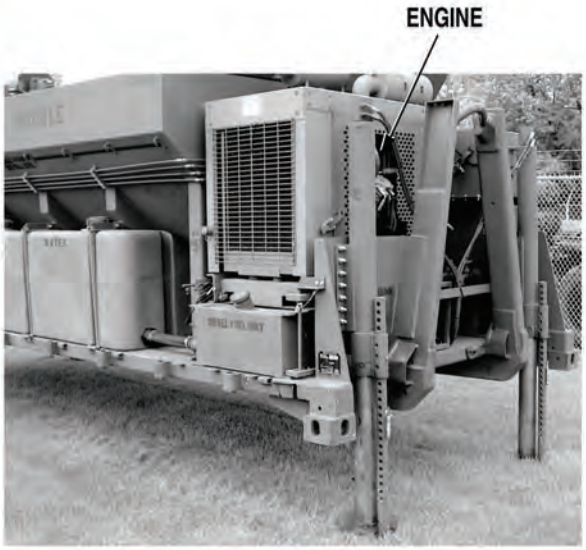

23. ENGINE GAGE READING INCORRECT (CONT).

KNOWN INFO

- Temperature sensor OK.
- Alternator tachometer wire connection OK.
- Control box 8-pin wire harness (yellow/black) wire OK.
- Tachometer OK.
- Alternator tachometer sensor OK.
- Main wire harness (yellow/black) wire OK.
- Engine wire harness (yellow/black) wire OK.
- Engine oil level OK.
- Oil pressure sensor OK.
- No engine oil pressure fault.
- Engine not overheating.
- Main wire harness (yellow) wire OK.
- Engine wire harness (yellow) wire OK.
- Control box 8-pin wire harness (yellow) wire OK.
- Control panel temperature sensor (blue) wire OK.
- Temperature gage OK.
- Main wire harness (blue) wire OK.
- Engine wire harness (blue) wire OK.
- Control box 8-pin wire harness (blue) wire harness OK.
- Control panel oil pressure sensor (blue) wire OK.
- Oil pressure gage OK.
- Battery charging system OK.
- Power to control panel OK.
- Control panel switched power (orange) wire to TATTLE TALE SWITCH OK.
- IGNITION SWITCH OK.
- Control box TATTLE TALE SWITCH ground (black) wire OK.
- Control box 5-pin wire harness (black) wire OK.
- Main wire harness (black) wire OK.
- Engine wire harness ground wire between connector and ground connection OK.

POSSIBLE PROBLEMS

- Voltmeter faulty.
- Control panel voltmeter tachometer ground (black) wire faulty.
- Control panel switched power (orange) wire to voltmeter faulty.

27.

WARNING

Read WARNING on Page 4-749

Is continuity measured across control panel voltmeter ground (black) wire from voltmeter terminal to TATTLE TALE SWITCH terminal?

NO → Repair wire, (Para 3-141) or replace control box, (Para 3-54). Verify repair, go to Step 35 of this Fault.

YES ↓

TEST OPTIONS

Continuity test.

REASON FOR QUESTION

If continuity is not measured, control panel voltmeter ground (black) wire is faulty.

WARNING

Remove all jewelry such as rings, dog tags, bracelets etc. If jewelry or tools contact positive electrical circuits, a direct short may result. Damage to equipment, injury or death to personnel may occur.

CONTINUITY TEST

(1) Shut OFF engine, (Para 2-19).

(2) Disconnect batteries, (Para 3-10).

(3) Remove control box from Concrete Mobile Mixer, (Para 3-90).

(4) Release latch and open control box door. Remove screw from top of control panel and gently tip control panel forward for access to wires.

(5) Connect positive (+) multimeter lead to voltmeter ground (black) wire at voltmeter connector.

(6) Connect negative (-) multimeter lead to voltmeter ground (black) wire at TATTLE TALE SWITCH terminal.

(a) If continuity is not measured, repair control box voltmeter ground (black) wire between voltmeter and TATTLE TALE SWITCH, (Para 3-141) or replace control box, (Para 3-90). Verify repair, go to Step 35 of this Fault.

(b) If continuity is measured, go to Step 28 of this Fault.

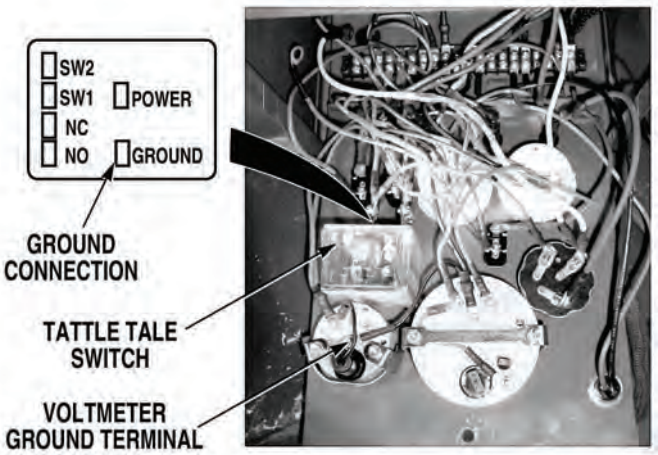

23. ENGINE GAGE READING INCORRECT (CONT).

KNOWN INFO

- Temperature sensor OK.
- Alternator tachometer wire connection OK.
- Control box 8-pin wire harness (yellow/black) wire OK.
- Tachometer OK.
- Alternator tachometer sensor OK.
- Main wire harness (yellow/black) wire OK.
- Engine wire harness (yellow/black) wire OK.
- Engine oil level OK.
- Oil pressure sensor OK.
- No engine oil pressure fault.
- Engine not overheating.
- Main wire harness (yellow) wire OK.
- Engine wire harness (yellow) wire OK.
- Control box 8-pin wire harness (yellow) wire OK.
- Control panel temperature sensor (blue) wire OK.
- Temperature gage OK.
- Main wire harness (blue) wire OK.
- Engine wire harness (blue) wire OK.
- Control box 8-pin wire harness (blue) wire harness OK.
- Control panel oil pressure sensor (blue) wire OK.
- Oil pressure gage OK.
- Battery charging system OK.
- Power to control panel OK.
- Control panel switched power (orange) wire to TATTLE TALE SWITCH OK.
- IGNITION SWITCH OK.
- Control box TATTLE TALE SWITCH ground (black) wire OK.
- Control box 5-pin wire harness (black) wire OK.
- Main wire harness (black) wire OK.
- Engine wire harness ground wire between connector and ground connection OK.
- Control panel voltmeter tachometer ground (black) wire OK.

POSSIBLE PROBLEMS

- Voltmeter faulty.
- Control panel switched power (orange) wire to voltmeter faulty.

28.

WARNING

Read WARNING on Page 4-751

Is continuity measured across control panel switched power (orange) wire from TATTLE TALE SWITCH terminal, to voltmeter terminal?

NO → Repair switched battery (orange) wire from TATTLE TALE SWITCH to voltmeter terminal, (Para 3-141) or replace control box (Para 3-90). Verify repair, go to Step 35 of this Fault.

YES → Replace voltmeter (Para 3-54). Verify repair, go to Step 35 of this Fault.

TEST OPTIONS

Continuity test.

REASON FOR QUESTION

If continuity is measured, voltmeter is faulty. If not, control panel (orange) wire is faulty.

WARNING

Remove all jewelry such as rings, dog tags, bracelets etc. If jewelry or tools contact positive electrical circuits, a direct short may result. Damage to equipment, injury or death to personnel may occur.

CONTINUITY TEST

(1) Set multimeter select switch to ohms.

(2) Connect positive (+) multimeter lead to (orange) wire at TATTLE TALE SWITCH terminal.

(3) Connect negative (-) multimeter lead to (orange) wire at voltmeter connector.

(a) If continuity is not measured, repair switched battery (orange) wire, (Para 3-141) or replace control box, (Para 3-90).

(b) If continuity is measured, replace voltmeter, (Para 3-54).

(4) Verify repair, go to Step 35 of this Fault.

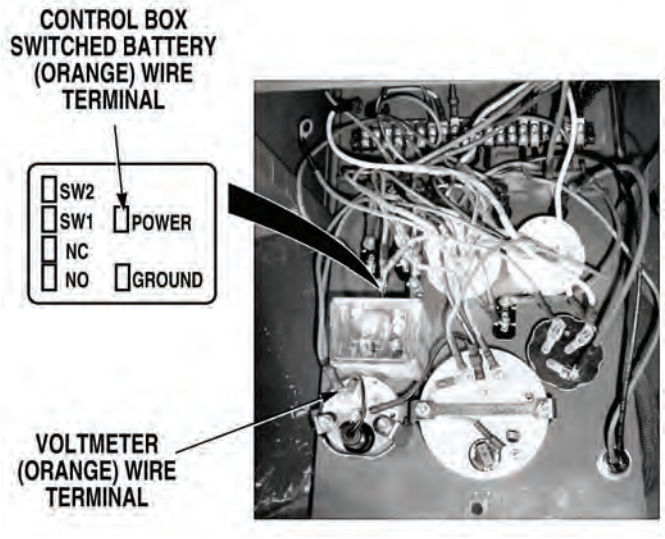

23. ENGINE GAGE READING INCORRECT (CONT).

KNOWN INFO
Temperature sensor OK.
Alternator tachometer wire connection OK.
Control box 8-pin wire harness (yellow/black) wire OK.
Tachometer OK.
Alternator tachometer sensor OK.
Main wire harness (yellow/black) wire OK.
Engine wire harness (yellow/black) wire OK.
Engine oil level OK.
Oil pressure sensor OK.
No engine oil pressure fault.
Engine not overheating.
Main wire harness (yellow) wire OK.
Engine wire harness (yellow) wire OK.
Control box 8-pin wire harness (yellow) wire OK.
Control panel temperature sensor (blue) wire OK.
Temperature gage OK.
Main wire harness (blue) wire OK.
Engine wire harness (blue) wire OK.
Control box 8-pin wire harness (blue) wire harness OK.
Control panel oil pressure sensor (blue) wire OK.
Oil pressure gage OK.
Battery charging system OK.
Voltmeter OK.
Control panel voltmeter tachometer ground (black) wire OK.
Control panel switched power (orange) wire to voltmeter OK.

POSSIBLE PROBLEMS
Power to control panel faulty.
Control panel switched power (orange) wire to TATTLE TALE SWITCH faulty.
IGNITION SWITCH faulty.
Control box TATTLE TALE SWITCH ground (black) wire faulty.
Control box 5-pin wire harness (black) wire faulty.
Main wire harness (black) wire faulty.
Engine wire harness ground wire between connector and ground connection faulty.

29.

WARNING

Read WARNING on Page 4-753

Does engine crank when IGNITION SWITCH is positioned to START position?

NO → Go to “Engine Fails to Crank or Cranks Slowly”, (Fault 22).

YES ↓

TEST OPTIONS
Operational test.
REASON FOR QUESTION
If engine does not crank, another troubleshooting procedure applies.

WARNING

Remove all jewelry such as rings, dog tags, bracelets etc. If jewelry or tools contact positive electrical circuits, a direct short may result. Damage to equipment, injury or death to personnel may occur.

OPERATIONAL TEST
Check if engine cranks while performing start engine procedures, (Para 2-19). (a) If engine does not crank, go to “Engine Fails to Crank or Cranks Slowly”, (Fault 22). (b) If engine cranks, go to Step 30 of this Fault.

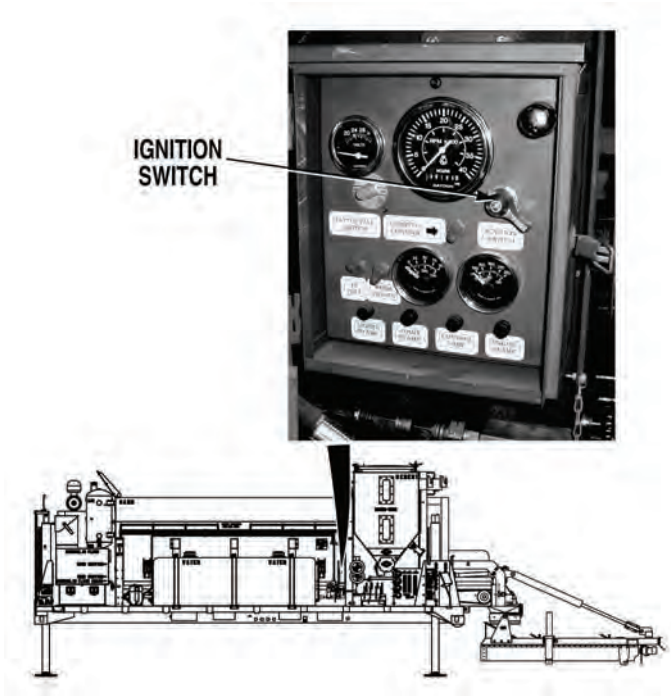

23. ENGINE GAGE READING INCORRECT (CONT).

KNOWN INFO

- Temperature sensor OK.
- Alternator tachometer wire connection OK.
- Control box 8-pin wire harness (yellow/black) wire OK.
- Tachometer OK.
- Alternator tachometer sensor OK.
- Main wire harness (yellow/black) wire OK.
- Engine wire harness (yellow/black) wire OK.
- Engine oil level OK.
- Oil pressure sensor OK.
- No engine oil pressure fault.
- Engine not overheating.
- Main wire harness (yellow) wire OK.
- Engine wire harness (yellow) wire OK.
- Control box 8-pin wire harness (yellow) wire OK.
- Control panel temperature sensor (blue) wire OK.
- Temperature gage OK.
- Main wire harness (blue) wire OK.
- Engine wire harness (blue) wire OK.
- Control box 8-pin wire harness (blue) wire harness OK.
- Control panel oil pressure sensor (blue) wire OK.
- Oil pressure gage OK.
- Battery charging system OK.
- Voltmeter OK.
- Control panel voltmeter tachometer ground (black) wire OK.
- Control panel switched power (orange) wire to voltmeter OK.
- Power to control panel OK.

POSSIBLE PROBLEMS

- Control panel switched power (orange) wire to TATTLE TALE SWITCH faulty.
- IGNITION SWITCH faulty.
- Control box TATTLE TALE SWITCH ground (black) wire faulty.
- Control box 5-pin wire harness (black) wire faulty.
- Main wire harness (black) wire faulty.
- Engine wire harness ground wire between connector and ground connection faulty.

30.

WARNING

Read WARNING on Page 4-755

Is continuity measured across ground (black) wire from main wire harness 5-pin connector, terminal A to a known good ground?

NO → Go to Step 34 of this Fault.

YES ↓

TEST OPTIONS

Continuity test.

REASON FOR QUESTION

If continuity is not measured, engine gage readings will not be correct.

WARNING

Remove all jewelry such as rings, dog tags, bracelets etc. If jewelry or tools contact positive electrical circuits, a direct short may result. Damage to equipment, injury or death to personnel may occur.

CONTINUITY TEST

(1) Turn IGNITION switch OFF, (Para 2-1).

(2) Disconnect batteries, (Para 3-10).

(3) Disconnect main wire harness 5-pin connector, (Para 3-138).

(4) Set multimeter select switch to ohms.

(5) Connect positive (+) multimeter lead to main wire harness 5-pin connector, terminal A.

(6) Connect negative (-) multimeter lead to a known good ground.

(a) If continuity is not measured, go to Step 34 of this Fault.

(b) If continuity is measured, go to Step 31 of this Fault.

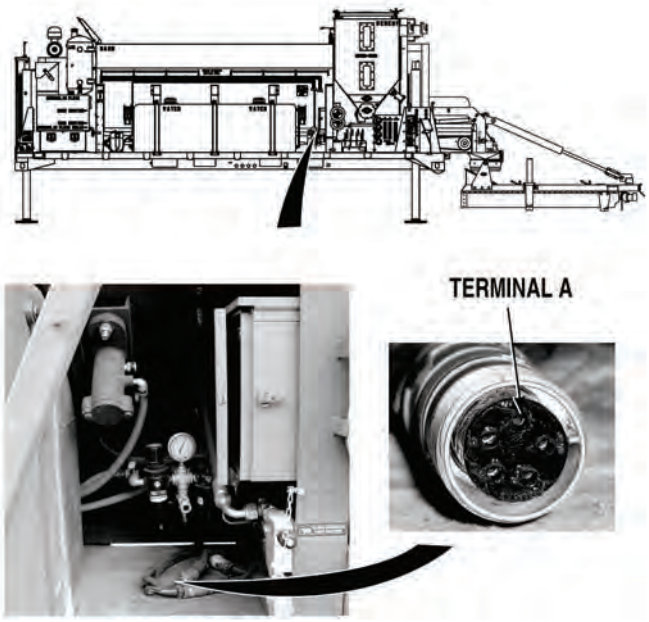

23. ENGINE GAGE READING INCORRECT (CONT).

KNOWN INFO
Temperature sensor OK.
Alternator tachometer wire connection OK.
Control box 8-pin wire harness (yellow/black) wire OK.
Tachometer OK.
Alternator tachometer sensor OK.
Main wire harness (yellow/black) wire OK.
Engine wire harness (yellow/black) wire OK.
Engine oil level OK.
Oil pressure sensor OK.
No engine oil pressure fault.
Engine not overheating.
Main wire harness (yellow) wire OK.
Engine wire harness (yellow) wire OK.
Control box 8-pin wire harness (yellow) wire OK.
Control panel temperature sensor (blue) wire OK.
Temperature gage OK.
Main wire harness (blue) wire OK.
Engine wire harness (blue) wire OK.
Control box 8-pin wire harness (blue) wire harness OK.
Control panel oil pressure sensor (blue) wire OK.
Oil pressure gage OK.
Battery charging system OK.
Voltmeter OK.
Control panel voltmeter tachometer ground (black) wire OK.
Control panel switched power (orange) wire to voltmeter OK.
Power to control panel OK.
Main wire harness (black) wire OK.
Engine wire harness ground wire between connector and ground connection OK.

POSSIBLE PROBLEMS
Control panel switched power (orange) wire to TATTLE TALE SWITCH faulty.
IGNITION SWITCH faulty.
Control box TATTLE TALE SWITCH ground (black) wire faulty.
Control box 5-pin wire harness (black) wire faulty.

31.

WARNING

Read WARNING on Page 4-757

Is continuity measured across ground (black) wire from TATTLE TALE SWITCH to control box 5-pin wire harness connector, terminal A?

NO → Go to Step 33 of this Fault.

YES ↓

TEST OPTIONS
Continuity test.
REASON FOR QUESTION
To further isolate fault.

WARNING

Remove all jewelry such as rings, dog tags, bracelets etc. If jewelry or tools contact positive electrical circuits, a direct short may result. Damage to equipment, injury or death to personnel may occur.

CONTINUITY TEST

(1) Remove control box from concrete mixer, (Para 3-90).

(2) Release latch and open control box door. Remove screw from top of control panel and gently tip control panel forward for access to wires.

(3) Set multimeter select switch to ohms.

(4) Connect positive (+) multimeter lead to control box 5-pin connector, terminal A.

(5) Connect negative (-) multimeter lead to ground (black) wire at TATTLE TALE switch.

(a) If continuity is not measured, go to Step 33 of this Fault.

(b) If continuity is measured, go to Step 32 of this Fault.

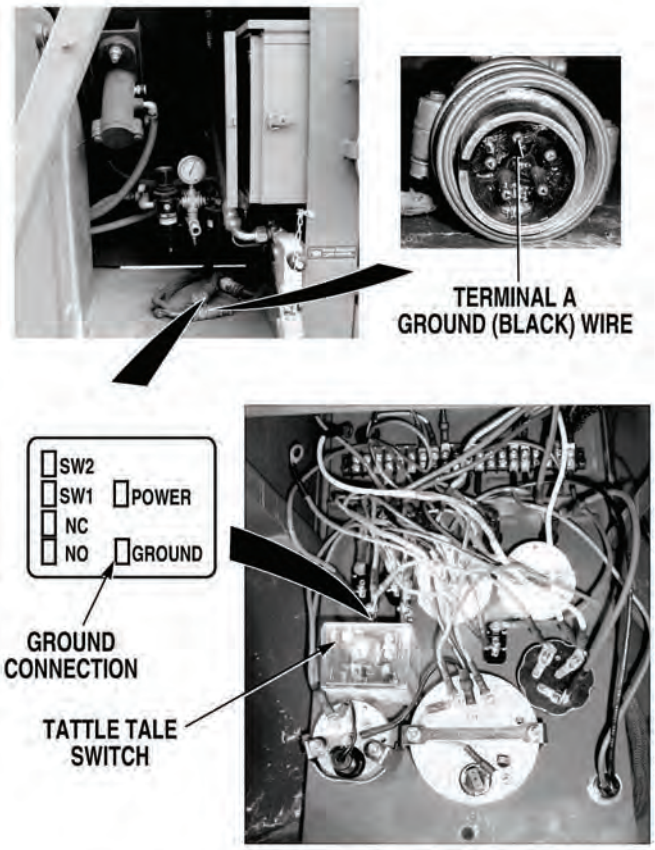

23. ENGINE GAGE READING INCORRECT (CONT).

KNOWN INFO

- Temperature sensor OK.
- Alternator tachometer wire connection OK.
- Control box 8-pin wire harness (yellow/black) wire OK.
- Tachometer OK.
- Alternator tachometer sensor OK.
- Main wire harness (yellow/black) wire OK.
- Engine wire harness (yellow/black) wire OK.
- Engine oil level OK.
- Oil pressure sensor OK.
- No engine oil pressure fault.
- Engine not overheating.
- Main wire harness (yellow) wire OK.
- Engine wire harness (yellow) wire OK.
- Control box 8-pin wire harness (yellow) wire OK.
- Control panel temperature sensor (blue) wire OK.
- Temperature gage OK.
- Main wire harness (blue) wire OK.
- Engine wire harness (blue) wire OK.
- Control box 8-pin wire harness (blue) wire OK.
- Control panel oil pressure sensor (blue) wire OK.
- Oil pressure gage OK.
- Battery charging system OK.
- Voltmeter OK.
- Control panel voltmeter tachometer ground (black) wire OK.
- Control panel switched power (orange) wire to voltmeter OK.
- Power to control panel OK.
- Main wire harness (black) wire OK.
- Engine wire harness ground wire between connector and ground connection OK.
- Control box TATTLE TALE SWITCH ground (black) wire OK.
- Control box 5-pin wire harness (black) wire OK.

POSSIBLE PROBLEMS

- Control panel switched power (orange) wire to TATTLE TALE SWITCH faulty.
- IGNITION SWITCH faulty.

32.

WARNING
Read WARNING on Page 4-759

Is continuity measured across control box switched battery (orange) wire from IGNITION SWITCH, terminal ACC to TATTLE TALE SWITCH terminal?

NO → Replace IGNITION SWITCH, (Para 3-56). Verify repair go to Step 35 of this Fault.

YES → Repair switched battery (orange) wire from IGNITION SWITCH terminal ACC to TATTLE TALE SWITCH, (Para 3-141) or replace control box, (Para 3-90). Verify repair, go to Step 35 of this Fault.

TEST OPTIONS

Continuity test.

REASON FOR QUESTION

If continuity is measured, control box switched battery (orange) wire from IGNITION SWITCH terminal ACC to TATTLE TALE switch is faulty. If not, IGNITION SWITCH is faulty.

WARNING

Remove all jewelry such as rings, dog tags, bracelets etc. If jewelry or tools contact positive electrical circuits, a direct short may result. Damage to equipment, injury or death to personnel may occur.

CONTINUITY TEST

(1) Set multimeter select switch to ohms.

(2) Connect positive (+) multimeter lead to control box switched (orange) wire at IGNITION SWITCH, terminal ACC.

(3) Connect negative (-) multimeter lead to TATTLE TALE SWITCH terminal.

  (a) If continuity is not measured, repair control box switched battery (orange) wire from IGNITION SWITCH to TATTLE TALE SWITCH, (Para 3-141) or replace control box, (Para 3-90).

  (b) If continuity is measured, replace IGNITION SWITCH, (Para 3-57).

(4) Verify repair, go to Step 35 of this Fault.

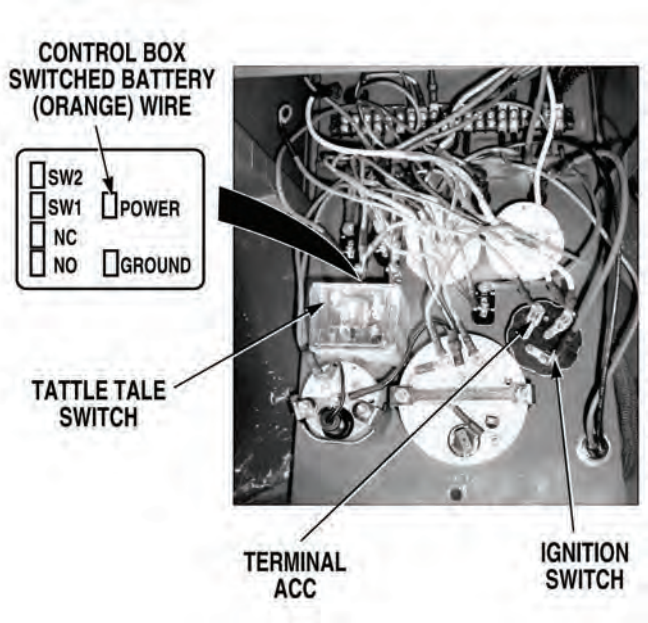

23. ENGINE GAGE READING INCORRECT (CONT).

KNOWN INFO

- Temperature sensor OK.
- Alternator tachometer wire connection OK.
- Control box 8-pin wire harness (yellow/black) wire OK.
- Tachometer OK.
- Alternator tachometer sensor OK.
- Main wire harness (yellow/black) wire OK.
- Engine wire harness (yellow/black) wire OK.
- Engine oil level OK.
- Oil pressure sensor OK.
- No engine oil pressure fault.
- Engine not overheating.
- Main wire harness (yellow) wire OK.
- Engine wire harness (yellow) wire OK.
- Control box 8-pin wire harness (yellow) wire OK.
- Control panel temperature sensor (blue) wire OK.
- Temperature gage OK.
- Main wire harness (blue) wire OK.
- Engine wire harness (blue) wire OK.
- Control box 8-pin wire harness (blue) wire harness OK.
- Control panel oil pressure sensor (blue) wire OK.
- Oil pressure gage OK.
- Battery charging system OK.
- Voltmeter OK.
- Control panel voltmeter tachometer ground (black) wire OK.
- Control panel switched power (orange) wire to voltmeter OK.
- Power to control panel OK.
- Main wire harness (black) wire OK.
- Engine wire harness ground wire between connector and ground connection OK.
- Control panel switched power (orange) wire to TATTLE TALE SWITCH OK.
- IGNITION SWITCH OK.

POSSIBLE PROBLEMS

- Control panel TATTLE TALE SWITCH ground (black) wire faulty.
- Control box 5-pin wire harness (black) wire faulty.

33.

WARNING

Read WARNING on Page 4-761

Is continuity measured across ground (black) wire from TATTLE TALE switch to control panel terminal strip, terminal 9?

NO → Repair ground (black) wire, (Para 3-141) or replace control box, (Para 3-54). Verify repair, go to Step 35 of this Fault.

YES → Repair ground (black) wire, (Para 3-141) or replace control box 5-pin wire harness, (Para 3-138). Verify repair, go to Step 35 of this Fault.

TEST OPTIONS

Continuity test.

REASON FOR QUESTION

If continuity is measured, control box 5-pin wire harness (black) ground wire is faulty. If not, control box (black) ground wire is faulty.

WARNING

Remove all jewelry such as rings, dog tags, bracelets etc. If jewelry or tools contact positive electrical circuits, a direct short may result. Damage to equipment, injury or death to personnel may occur.

CONTINUITY TEST

(1) Set multimeter select switch to ohms.

(2) Connect positive (+) multimeter lead to ground (black) wire at TATTLE TALE SWITCH.

(3) Connect negative (–) multimeter lead to ground (black) wire at control box terminal strip, terminal 9.

(a) If continuity is not measured, repair ground (black) wire, (Para 3-141) or replace control box, (Para 3-90).

(b) If continuity is measured, repair ground (black) wire, (Para 3-141) or replace control box 5-pin wire harness, (Para 3-138).

(4) Verify repair, go to Step 35 of this Fault.

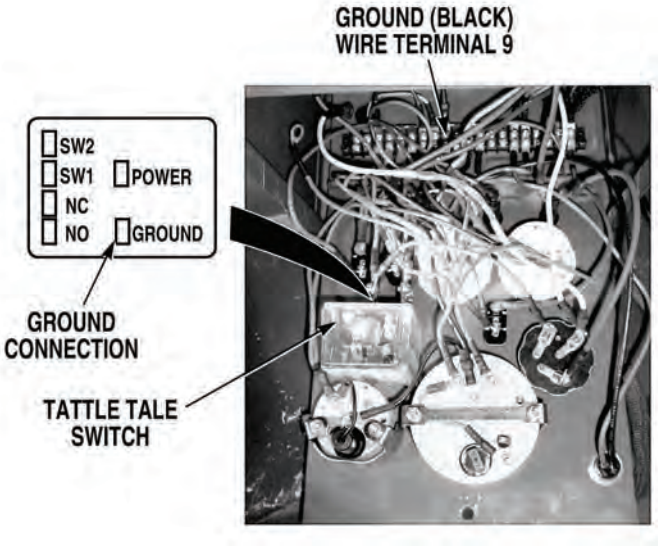

23. ENGINE GAGE READING INCORRECT (CONT).

KNOWN INFO

- Temperature sensor OK.
- Alternator tachometer wire connection OK.
- Control box 8-pin wire harness (yellow/black) wire OK.
- Tachometer OK.
- Alternator tachometer sensor OK.
- Main wire harness (yellow/black) wire OK.
- Engine wire harness (yellow/black) wire OK.
- Engine oil level OK.
- Oil pressure sensor OK.
- No engine oil pressure fault.
- Engine not overheating.
- Main wire harness (yellow) wire OK.
- Engine wire harness (yellow) wire OK.
- Control box 8-pin wire harness (yellow) wire OK.
- Control panel temperature sensor (blue) wire OK.
- Temperature gage OK.
- Main wire harness (blue) wire OK.
- Engine wire harness (blue) wire OK.
- Control box 8-pin wire harness (blue) wire harness OK.
- Control panel oil pressure sensor (blue) wire OK.
- Oil pressure gage OK.
- Battery charging system OK.
- Voltmeter OK.
- Control panel voltmeter tachometer ground (black) wire OK.
- Control panel switched power (orange) wire to voltmeter OK.
- Power to control panel OK.
- Control panel switched power (orange) wire to TATTLE TALE SWITCH OK.
- IGNITION SWITCH OK.
- Control panel TATTLE TALE SWITCH ground (black) wire OK.
- Control box 5-pin wire harness (black) wire OK.

POSSIBLE PROBLEMS

- Main wire harness (black) wire faulty.
- Engine wire harness ground wire between connector and ground connection faulty.

34.

WARNING

Read WARNING on Page 4-763

Is continuity measured across main wire harness ground (black) wire from engine connector, terminal B to control box 5-pin connector, terminal A?

NO → Repair wire, (Para 3-141) or replace main wire harness, (Para 3-134). Verify repair, go to Step 35 of this Fault.

YES → Repair ground (black) wire between connector and engine ground connection, (Para 3-141) or replace engine wire harness, (Para 3-136). Verify repair, go to Step 35 of this Fault.

TEST OPTIONS

Continuity test.

REASON FOR QUESTION

If continuity is measured, engine wire harness ground (black) wire is faulty. If not, main wire harness ground (black) wire is faulty.

WARNING

Remove all jewelry such as rings, dog tags, bracelets etc. If jewelry or tools contact positive electrical circuits, a direct short may result. Damage to equipment, injury or death to personnel may occur.

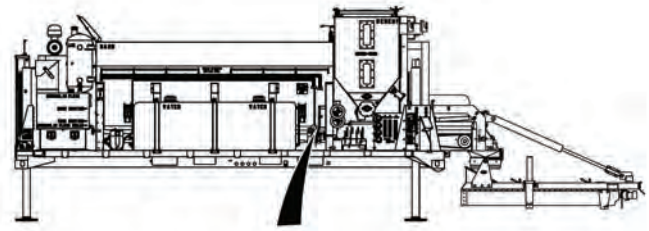

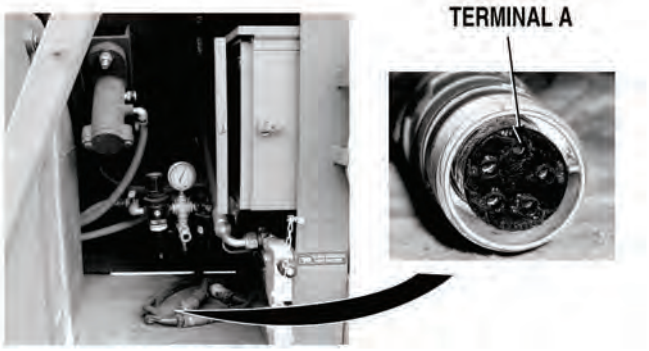

CONTINUITY TEST

(1) Disconnect main wire harness at engine harness connector, (Para 3-134).

(2) Set multimeter select switch to ohms.

(3) Connect jumperwire between main wire harness engine harness connector, terminal B and a known good ground.

(4) Connect positive (+) multimeter lead to main wire harness 5-pin harness connector, terminal A.

(5) Connect negative (-) multimeter lead to a known good ground.

  (a) If continuity is not measured, repair ground (black) wire, (Para 3-141) or replace main wire harness, (Para 3-134).

  (b) If continuity is measured, repair ground (black) wire between engine harness connector and engine ground connection, (Para 3-141) or replace engine wire harness, (Para 3-136).

(6) Verify repair, go to Step 35 of this Fault.

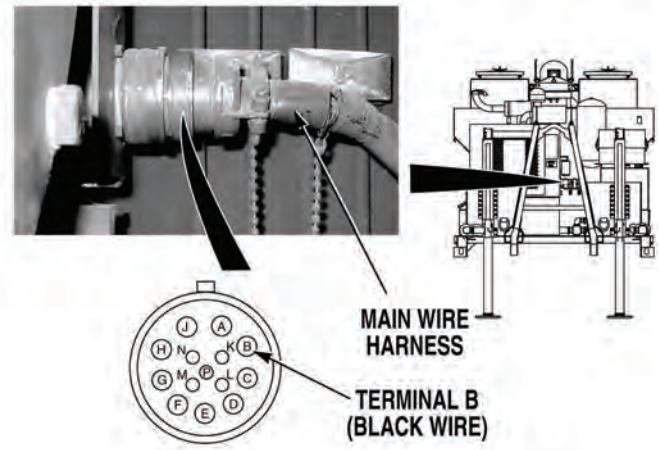

23. ENGINE GAGE READING INCORRECT (CONT).

KNOWN INFO
Temperature sensor OK.
Alternator tachometer wire connection OK.
Control box 8-pin wire harness (yellow/black) wire OK.
Tachometer OK.
Alternator tachometer sensor OK.
Main wire harness (yellow/black) wire OK.
Engine wire harness (yellow/black) wire OK.
Engine oil level OK.
Oil pressure sensor OK.
No engine oil pressure fault.
Engine not overheating.
Main wire harness (yellow) wire OK.
Engine wire harness (yellow) wire OK.
Control box 8-pin wire harness (yellow) wire OK.
Control panel temperature sensor (blue) wire OK.
Temperature gage OK.
Main wire harness (blue) wire OK.
Engine wire harness (blue) wire OK.
Control box 8-pin wire harness (blue) wire harness OK.
Control panel oil pressure sensor (blue) wire OK.
Oil pressure gage OK.
Voltmeter OK.
Battery charging system OK.
Control panel voltmeter tachometer ground (black) wire OK.
Control panel switched power (orange) wire to voltmeter OK.
Power to control panel OK.
Control panel switched power (orange) wire to TATTLE TALE SWITCH OK.
IGNITION SWITCH OK.
Control panel TATTLE TALE SWITCH ground (black) wire OK.
Control box 5-pin wire harness (black) wire OK.
Main wire harness (black) wire OK.
Engine wire harness ground wire between connector and ground connection OK.

POSSIBLE PROBLEMS
None.

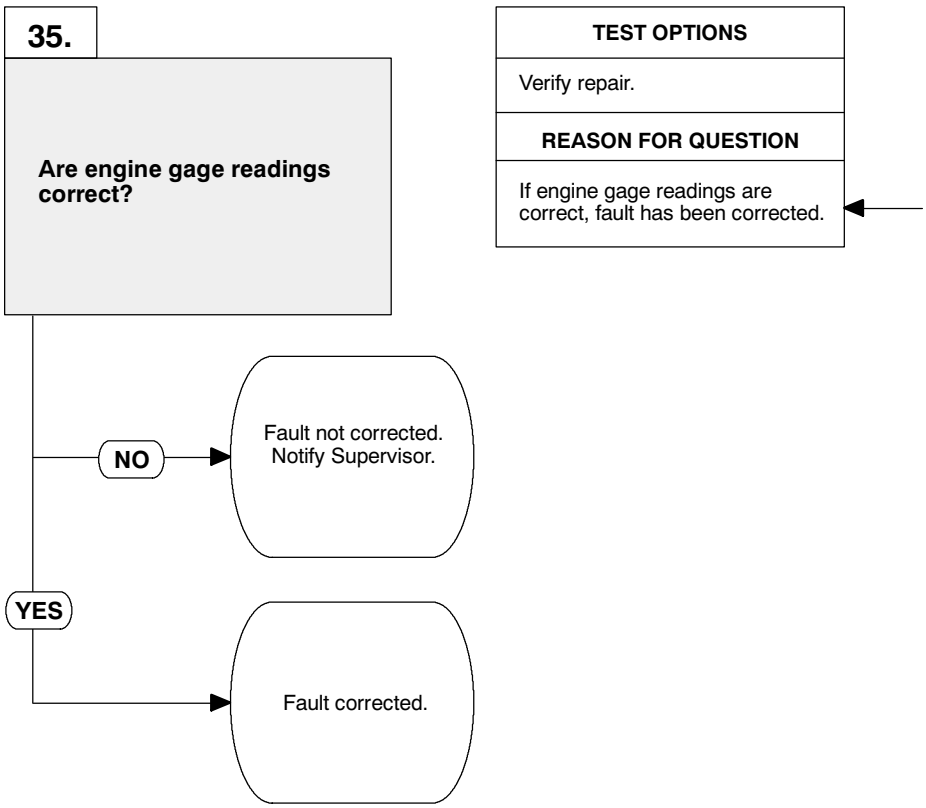

VERIFY REPAIR

(1) If disconnected, connect main wire harness at engine harness connector, (Para 3-134).

(2) If removed, install control box (Para 3-90).

(3) If disconnected, connect main wire harness 8-pin connector, (Para 3-134).

(4) If disconnected, connect main wire harness 5-pin connector, (Para 3-134).

(5) If connected, disconnect jumperwire from water temperature gage.

(6) If connected, disconnect jumper wire from oil pressure gage.

(7) If removed, install top engine cover, (Para 3-93).

(8) If removed, install front engine access panel, (Para 3-78).

(9) Start engine, (Para 2-19).

(10) Check if engine gage readings are reading correctly.

(a) If engine gage readings are not correct, fault not corrected. Notify Supervisor.

(b) If engine gage readings are correct, fault has been corrected.

(11) Shut OFF engine, (Para 2-19).

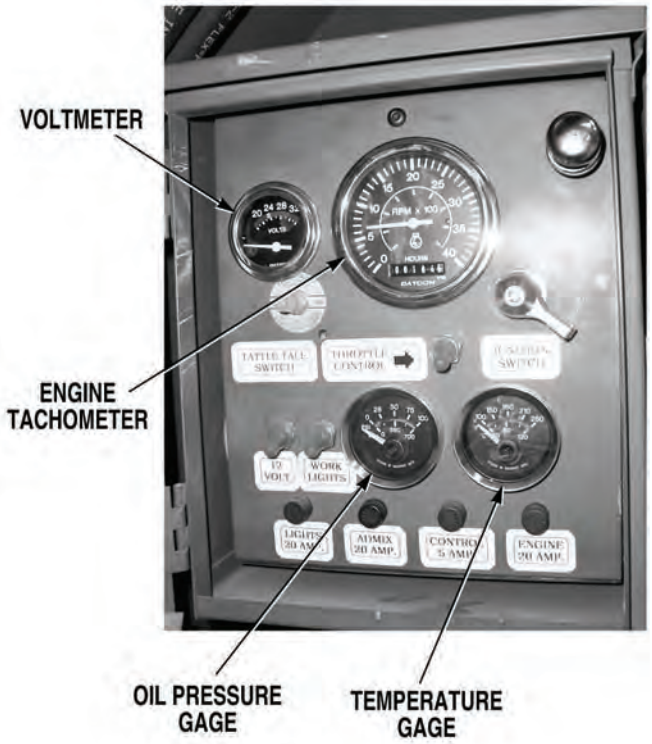

24. ENGINE HIGH IDLE DOES NOT OPERATE.

INITIAL SETUP

Tools and Special Tools
Tool Kit, General Mechanic's: Automotive (Item 19, Appendix I)
Jumperwire

Personnel
2

Equipment Condition
Concrete Mobile Mixer unloaded from PLS, (Para 2-5)
Engine OFF, (Para 2-19)

KNOWN INFO

Nothing.

POSSIBLE PROBLEMS

- All 12 VDC circuits faulty.
- CONTROL fuse faulty.
- Throttle actuator/control module connections loose.
- Throttle actuator binding.
- Fuel injector pump faulty.
- High idle control module ground wire faulty.
- High idle control module faulty.
- Throttle actuator/control module wires loose or damaged.
- Throttle actuator faulty.
- High idle control module not adjusted correctly.
- Battery equalizer circuit not operating correctly.
- Main wire harness high idle control (red) wire faulty.
- Control box high idle control (red) wire faulty.
- THROTTLE CONTROL switch faulty.
- Main wire harness (red/white) wire faulty.
- Battery equalizer magnetic switch connections loose.
- Engine wire harness (red/white) wire faulty.
- Control box 8-pin wire harness (red/white) wire faulty.
- Control box (red/white) wire faulty.

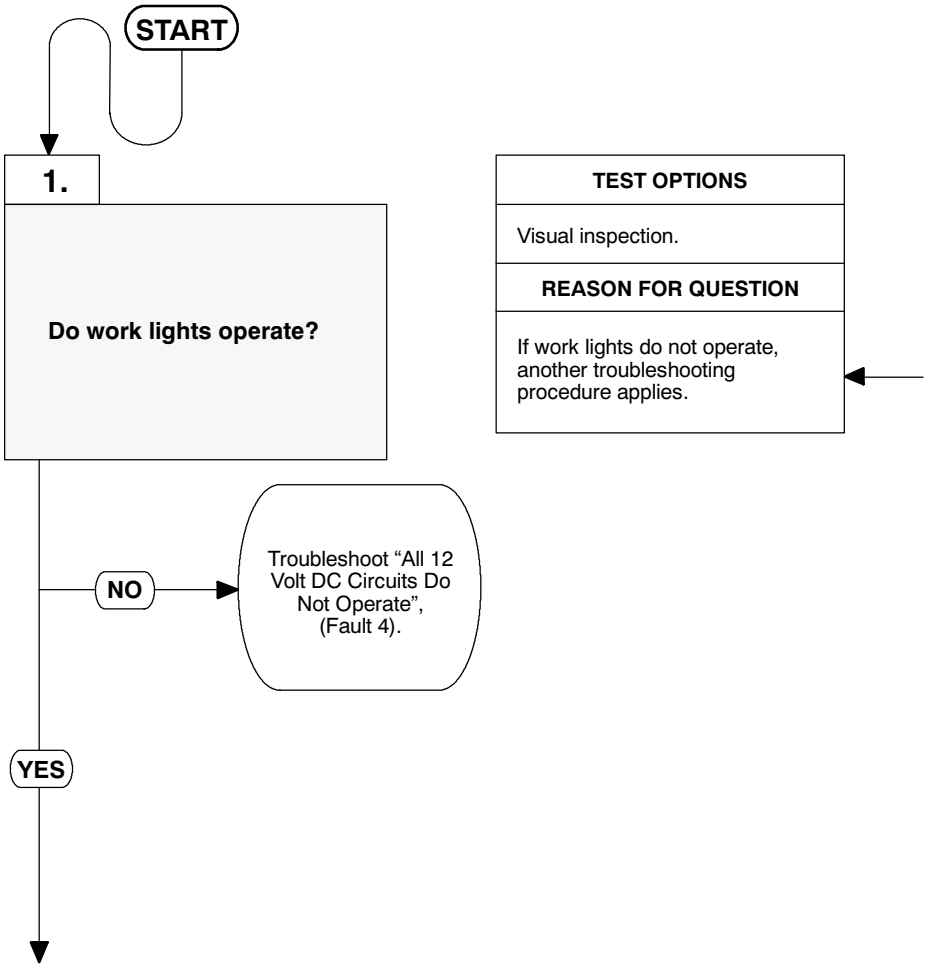

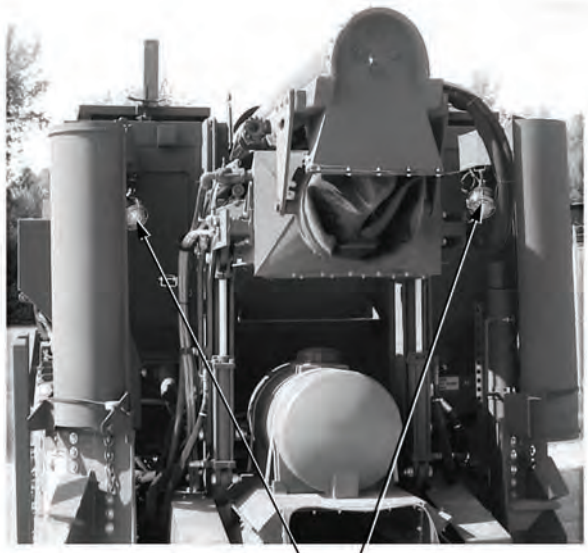

VISUAL INSPECTION
(1) Turn IGNITION SWITCH ON, (Para 2-1). (2) Turn 12 VOLT switch ON, (Para 2-1). (3) Turn WORK LIGHTS switch ON, (Para 2-1). (4) Check if work lights operate. (a) If work lights do not operate, turn switches off and go to “All 12-Volt DC circuits Do Not Operate”, (Fault 4). (b) If work lights operate, go to Step 2 of this Fault.

24. ENGINE HIGH IDLE DOES NOT OPERATE (CONT).

KNOWN INFO
All 12 VDC circuits OK.
POSSIBLE PROBLEMS
CONTROL fuse faulty. Throttle actuator/control module connections loose. Throttle actuator binding. Fuel injector pump faulty. High idle control module ground wire faulty. High idle control module faulty. Throttle actuator/control module wires loose or damaged. Throttle actuator faulty. High idle control module not adjusted correctly. Battery equalizer circuit not operating correctly. Main wire harness high idle control (red) wire faulty. Control box high idle control (red) wire faulty. THROTTLE CONTROL switch faulty. Main wire harness (red/white) wire faulty. Battery equalizer magnetic switch connections loose. Engine wire harness (red/white) wire faulty. Control box 8-pin wire harness (red/white) wire faulty. Control box (red/white) wire faulty.

2.

WARNING

Read WARNING on Page 4-769

Is continuity measured across CONTROL fuse?

NO → Replace CONTROL fuse, (Para 3-58). Verify repair, go to Step 24 of this Fault.

YES ↓

TEST OPTIONS
Continuity test.
REASON FOR QUESTION
If continuity is not measured, CONTROL fuse is faulty.

WARNING

Remove all jewelry such as rings, dog tags, bracelets etc. If jewelry or tools contact positive electrical circuits, a direct short may result. Damage to equipment, injury or death to personnel may occur.

CONTINUITY TEST

(1) Turn WORK LIGHTS switch OFF, (Para 2-1).

(2) Turn 12 VOLT switch OFF, (Para 2-1).

(3) Turn IGNITION SWITCH OFF, (Para 2-1).

(4) Remove CONTROL fuse from fuse holder, (Para 3-58).

(5) Set multimeter select switch to ohms.

(6) Connect positive (+) multimeter lead to one end of CONTROL fuse.

(7) Connect negative (-) multimeter lead to opposite end of CONTROL fuse.

(a) If continuity is not measured, replace fuse, (Para 3-58). Verify repair, go to Step 24 of this Fault.

(b) If continuity is measured, go to Step 3 of this Fault.

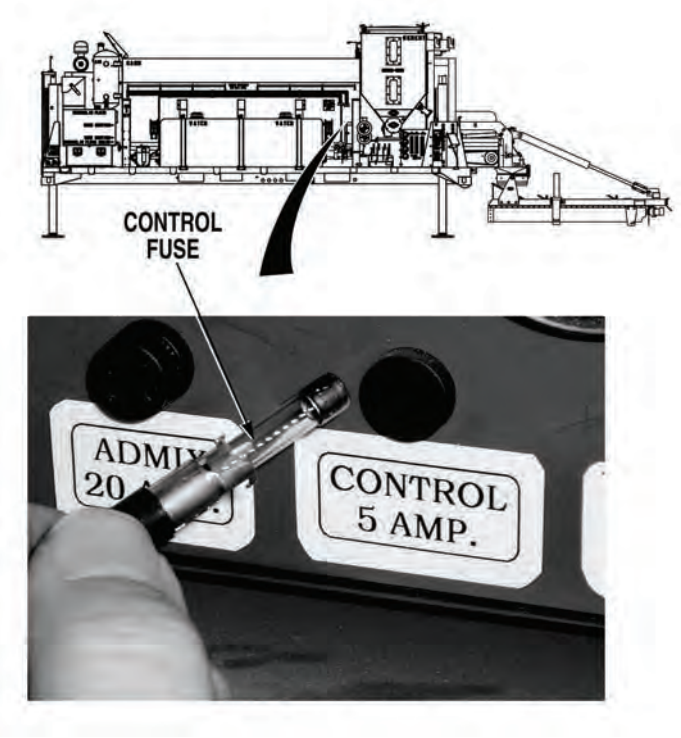

24. ENGINE HIGH IDLE DOES NOT OPERATE (CONT).

KNOWN INFO
All 12 VDC circuits OK. CONTROL fuse OK.
POSSIBLE PROBLEMS
Throttle actuator/control module connections loose. Throttle actuator binding. Fuel injector pump faulty. High idle control module ground wire faulty. High idle control module faulty. Throttle actuator/control module wires loose or damaged. Throttle actuator faulty. High idle control module not adjusted correctly. Battery equalizer circuit not operating correctly. Main wire harness high idle control (red) wire faulty. Control box high idle control (red) wire faulty. THROTTLE CONTROL switch faulty. Main wire harness (red/white) wire faulty. Battery equalizer magnetic switch connections loose. Engine wire harness (red/white) wire faulty. Control box 8-pin wire harness (red/white) wire faulty. Control box (red/white) wire faulty.

3.

Does high-flow or low-flow admix pump operate when HIGH FLOW or LOW FLOW ADMIX switch is placed in the ON position?

NO → Go to Step 20 of this Fault.

YES ↓

TEST OPTIONS
Operational test.
REASON FOR QUESTION
If HIGH FLOW or LOW FLOW ADMIX pump do not operate, power to ADMIX pumps and throttle actuator system is faulty.

OPERATIONAL TEST

(1) Install CONTROL fuse, (Para 3-58).

(2) Turn IGNITION SWITCH ON, (Para 2-1).

(3) Turn 12 VOLT switch ON, (Para 2-1).

(4) Turn HIGH FLOW or LOW FLOW ADMIX switch ON, (Para 2-1).

(5) Check if high-flow or low-flow admix pump operates.

(a) If admix pump does not operate, go to Step 20 of this Fault.

(b) If admix pump operates, go to Step 4 of this Fault.

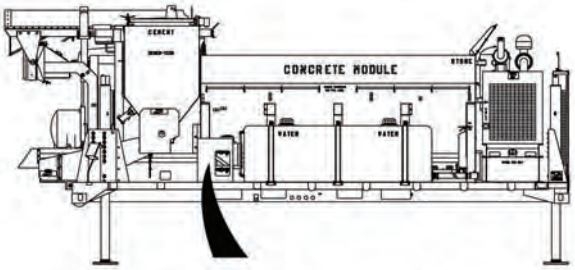

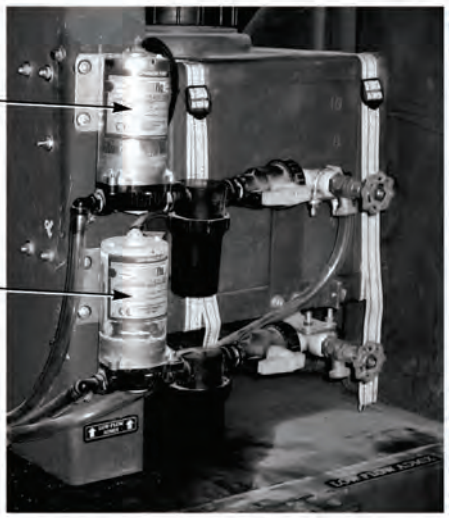

24. ENGINE HIGH IDLE DOES NOT OPERATE (CONT).

KNOWN INFO

All 12 VDC circuits OK.
CONTROL fuse OK.
Main wire harness (red/white) wire OK.
Battery equalizer magnetic switch connections not loose.
Engine wire harness (red/white) wire OK.
Control box 8-pin wire harness (red/white) wire OK.
Control box (red/white) wire OK.

POSSIBLE PROBLEMS

Throttle actuator/control module connections loose.
Throttle actuator binding.
Fuel injector pump faulty.
High idle control module ground wire faulty.
High idle control module faulty.
Throttle actuator/control module wires loose or damaged.
Throttle actuator faulty.
High idle control module not adjusted correctly.
Battery equalizer circuit not operating correctly.
Main wire harness high idle control (red) wire faulty.
Control box high idle control (red) wire faulty.
THROTTLE CONTROL switch faulty.

4.

WARNING
Read WARNING on Page 4-773

Are throttle actuator and actuator control module harness connections secure?

NO → Tighten loose connections, (Para 3-7). Verify repair, go to Step 24 of this Fault.

YES ↓

TEST OPTIONS

Visual inspection.

REASON FOR QUESTION

If throttle actuator and control module harness connections are not secure, high idle will not operate.

WARNING

Remove all jewelry such as rings, dog tags, bracelets etc. If jewelry or tools contact positive electrical circuits, a direct short may result. Damage to equipment, injury or death to personnel may occur.

VISUAL INSPECTION

(1) Turn admix switch OFF, (Para 2-1).
(2) Turn switches OFF, (Para 2-1).
(3) Turn IGNITION SWITCH OFF, (Para 2-1).
(4) Remove front engine access panel, (Para 3-78).
(5) Remove magnetic switch cover plate from engine compartment, (Para 3-19).
(6) Check if throttle actuator and actuator control module harness connections are secure.
    (a) If harness connections are not secure, tighten loose harness connections, (Para 3-7). Verify repair, go to Step 24 of this Fault.
    (b) If harness connections are secure, go to Step 5 of this Fault.

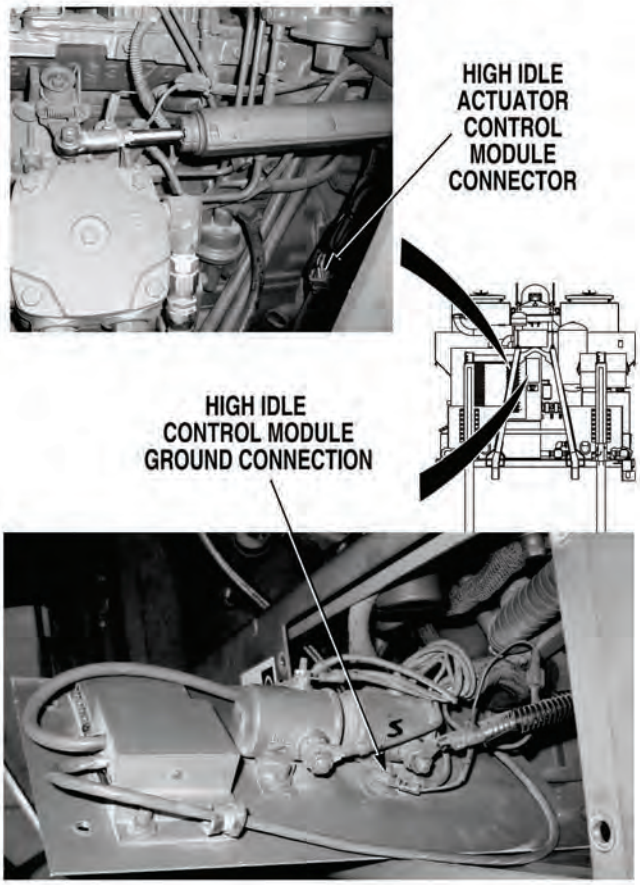

24. ENGINE HIGH IDLE DOES NOT OPERATE (CONT).

KNOWN INFO
All 12 VDC circuits OK.
CONTROL fuse OK.
Main wire harness (red/white) wire OK.
Battery equalizer magnetic switch connections not loose.
Engine wire harness (red/white) wire OK.
Control box 8-pin wire harness (red/white) wire OK.
Control box (red/white) wire OK.
Throttle actuator/control module connections OK.

POSSIBLE PROBLEMS
Throttle actuator binding.
Fuel injector pump faulty.
High idle control module ground wire faulty.
High idle control module faulty.
Throttle actuator/control module wires loose or damaged.
Throttle actuator faulty.
High idle control module not adjusted correctly.
Battery equalizer circuit not operating correctly.
Main wire harness high idle control (red) wire faulty.
Control box high idle control (red) wire faulty.
THROTTLE CONTROL switch faulty.

5.

Does throttle linkage and throttle actuator shaft move freely with IGNITION SWITCH and THROTTLE CONTROL switches OFF?

NO → Go to Step 6 of this Fault.

YES → Go to Step 7 of this Fault.

TEST OPTIONS
Operational test.

REASON FOR QUESTION
If throttle linkage and throttle actuator shaft do not move freely, high idle may not operate.

OPERATIONAL TEST

NOTE

Throttle actuator shaft should move freely with IGNITION SWITCH and THROTTLE CONTROL switches OFF.

Move throttle linkage and throttle actuator shaft. Check if they move freely.

(a) If throttle linkage and throttle actuator shaft do not move freely, go to Step 6 of this Fault.

(b) If throttle linkage and throttle actuator shaft move freely, go to Step 7 of this Fault.

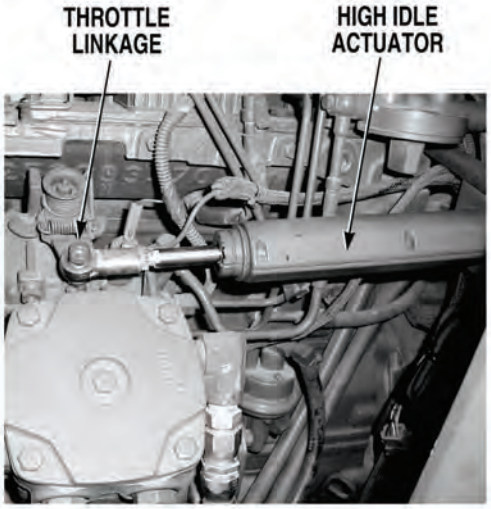

24. ENGINE HIGH IDLE DOES NOT OPERATE (CONT).

KNOWN INFO

- All 12 VDC circuits OK.
- CONTROL fuse OK.
- Main wire harness (red/white) wire OK.
- Battery equalizer magnetic switch connections not loose.
- Engine wire harness (red/white) wire OK.
- Control box 8-pin wire harness (red/white) wire OK.
- Control box (red/white) wire OK.
- Throttle actuator/control module connections OK.
- High idle control module ground wire OK.
- High idle control module OK.
- Throttle actuator/control module wires not loose or damaged.
- Throttle actuator OK.
- High idle control module adjusted correctly.
- Battery equalizer circuit operating correctly.
- Main wire harness high idle control (red) wire OK.
- Control box high idle control (red) wire OK.
- THROTTLE CONTROL switch OK.

POSSIBLE PROBLEMS

- Throttle actuator binding.
- Fuel injector pump faulty.

6.

Does throttle actuator shaft move freely when high idle is OFF and throttle linkage is disconnected?

NO → Repair binding or replace throttle actuator, (Para 3-7). Verify repair, go to Step 24 of this Fault.

YES → Replace fuel injector pump, (Para 3-117). Verify repair, go to Step 24 of this Fault.

TEST OPTIONS

Operational test.

REASON FOR QUESTION

If throttle actuator shaft is moving freely, fuel injector pump throttle linkage is faulty. If not, high idle throttle actuator is faulty.

OPERATIONAL TEST

(1) Disconnect throttle actuator from throttle linkage, (Para 3-7).

(2) Check if throttle actuator shaft moves freely.

(a) If throttle actuator shaft does not move freely, repair binding or replace throttle actuator, (Para 3-7).

(b) If throttle actuator shaft moves freely, replace fuel injector pump, (Para 3-117).

(3) Verify repair, go to Step 24 of this Fault.

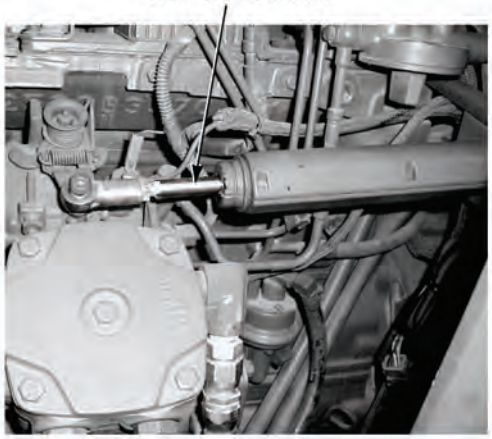

24. ENGINE HIGH IDLE DOES NOT OPERATE (CONT).

KNOWN INFO
All 12 VDC circuits OK. CONTROL fuse OK. Main wire harness (red/white) wire OK. Battery equalizer magnetic switch connections not loose. Engine wire harness (red/white) wire OK. Control box 8-pin wire harness (red/white) wire OK. Control box (red/white) wire OK. Throttle actuator/control module connections not loose. Throttle actuator not binding.
POSSIBLE PROBLEMS
Fuel injector pump faulty. High idle control module ground wire faulty. High idle control module faulty. Throttle actuator/control module wires loose or damaged. Throttle actuator faulty. High idle control module not adjusted correctly. Battery equalizer circuit not operating correctly. Main wire harness high idle control (red) wire faulty. Control box high idle control (red) wire faulty. THROTTLE CONTROL switch faulty.

7.

Does high idle shaft move the full range (approximately 1.00 inches [25.4 mm]) when THROTTLE CONTROL switch is turned ON?

NO → Go to Step 9 of this Fault.

YES ↓

TEST OPTIONS
Operational test.
REASON FOR QUESTION
To further isolate fault.

OPERATIONAL TEST

(1) Turn IGNITION SWITCH ON, (Para 2-1).

(2) Turn 12 VOLT switch ON, (Para 2-1).

(3) Turn THROTTLE CONTROL switch ON, (Para 2-1).

(4) Check if throttle actuator shaft moves full range (approximately 1.00 in. [25.4 mm]).

(a) If throttle actuator shaft does not move full range, go to Step 9 of this Fault.

(b) If high actuator shaft moves full range, go to Step 8 of this Fault.

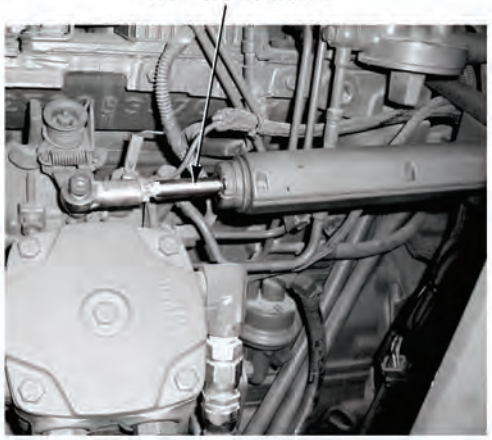

24. ENGINE HIGH IDLE DOES NOT OPERATE (CONT).

KNOWN INFO
All 12 VDC circuits OK. CONTROL fuse OK. Main wire harness (red/white) wire OK. Battery equalizer magnetic switch connections not loose. Engine wire harness (red/white) wire OK. Control box 8-pin wire harness (red/white) wire OK. Control box (red/white) wire OK. Throttle actuator/control module connections OK. Throttle actuator not binding. High idle control module ground wire OK. High idle control module faulty. Throttle actuator/control module wires not loose or damaged. High idle control module adjusted correctly. Battery equalizer circuit operating correctly. Main wire harness high idle control (red) wire OK. Control box high idle control (red) wire OK. THROTTLE CONTROL switch OK. Throttle actuator OK.
POSSIBLE PROBLEMS
Fuel injector pump faulty.

8.

Does high idle operate?

NO → Replace fuel injector pump, (Para 3-117). Verify repair, go to Step 24 of this Fault.

YES → Fault corrected. Verify repair, go to Step 24 of this Fault.

TEST OPTIONS
Operational test.
REASON FOR QUESTION
If high idle does not operate, fuel injector pump is faulty.

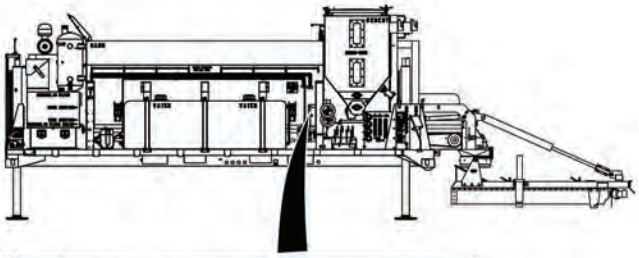

OPERATIONAL TEST

(1) Turn THROTTLE CONTROL switch OFF, (Para 2-1).

(2) Turn 12 VOLT switch OFF, (Para 2-1).

(3) Start engine, (Para 2-19).

(4) Turn 12 VOLT switch ON, (Para 2-1).

(5) Turn THROTTLE CONTROL switch ON, (Para 2-1).

(6) Check if high idle operates.

  (a) If high idle does not operate, replace fuel injector pump, (Para 3-117).

  (b) If high idle operates, fault has been corrected.

(7) Verify repair, go to Step 24 of this Fault.

24. ENGINE HIGH IDLE DOES NOT OPERATE (CONT).

KNOWN INFO

All 12 VDC circuits OK.
CONTROL fuse OK.
Main wire harness (red/white) wire OK.
Battery equalizer magnetic switch connections not loose.
Engine wire harness (red/white) wire OK.
Control box 8-pin wire harness (red/white) wire OK.
Control box (red/white) wire OK.
Throttle actuator/control module connections OK.
Throttle actuator not binding.
Fuel injector pump OK.

POSSIBLE PROBLEMS

High idle control module ground wire faulty.
High idle control module faulty.
Throttle actuator/control module wires loose or damaged.
Throttle actuator faulty.
High idle control module not adjusted correctly.
Battery equalizer circuit not operating correctly.
Main wire harness high idle control (red) wire faulty.
Control box high idle control (red) wire faulty.
THROTTLE CONTROL switch faulty.

9.

WARNING
Read WARNING on Page 4-783

Are 11.5 to 14 VDC measured between engine harness high idle enable (red) wire at high idle control module and a known good ground when THROTTLE CONTROL switch is ON?

NO → Go to Step 16 of this Fault.

YES ↓

TEST OPTIONS

Voltage test.

REASON FOR QUESTION

If 11.5 to 14 VDC are not present, high idle will not operate correctly.

WARNING

Remove all jewelry such as rings, dog tags, bracelets etc. If jewelry or tools contact positive electrical circuits, a direct short may result. Damage to equipment, injury or death to personnel may occur.

VOLTAGE TEST

(1) Connect positive (+) multimeter lead to engine harness high idle enable (red) wire at high idle control module.

(2) Connect negative (-) multimeter lead to a known good ground.

NOTE

Throttle actuator operating range is 11.5 to 16 VDC. Operation is degraded at 10.5 to 11.5 VDC and system is shut down at 10.5 VDC.

(3) Check if 11.5 to 14 VDC are present.

(a) If 11.5 to 14 VDC are not present, go to Step 16 of this Fault.

(b) If 11.5 to 14 VDC are present, go to Step 10 of this Fault.

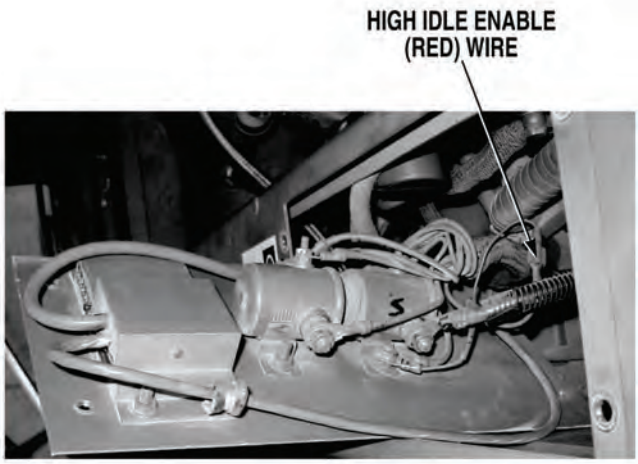

24. ENGINE HIGH IDLE DOES NOT OPERATE (CONT).

KNOWN INFO

- All 12 VDC circuits OK.
- CONTROL fuse OK.
- Main wire harness (red/white) wire OK.
- Battery equalizer magnetic switch connections not loose.
- Engine wire harness (red/white) wire OK.
- Control box 8-pin wire harness (red/white) wire OK.
- Control box (red/white) wire OK.
- Throttle actuator/control module connections OK.
- Throttle actuator not binding.
- Fuel injector pump OK.
- Battery equalizer circuit operating correctly.
- Main wire harness high idle control (red) wire OK.
- Control box high idle control (red) wire OK.
- THROTTLE CONTROL switch OK.

POSSIBLE PROBLEMS

- High idle control module ground wire faulty.
- High idle control module faulty.
- Throttle actuator/control module wires loose or damaged.
- Throttle actuator faulty.
- High idle control module not adjusted correctly.

10.

WARNING

Read WARNING on Page 4-785

Is high idle control module ground wire connection (engine cover plate ground connection) tight and free from damage?

NO → Repair connection or replace high idle control module, (Para 3-127). Verify repair, go to Step 24 of this Fault.

YES ↓

TEST OPTIONS

Visual inspection.

REASON FOR QUESTION

If high idle control module ground wire connection is loose or damaged, high idle may not operate.

WARNING

Remove all jewelry such as rings, dog tags, bracelets etc. If jewelry or tools contact positive electrical circuits, a direct short may result. Damage to equipment, injury or death to personnel may occur.

VISUAL INSPECTION

(1) Turn THROTTLE CONTROL switch OFF, (Para 2-1).

(2) Turn 12 VOLT switch OFF, (Para 2-1).

(3) Turn IGNITION SWITCH OFF, (Para 2-1).

(4) Check if high idle control module ground wire connection (engine cover plate ground connection) is tight and free from damage.

(a) If ground wire connection is loose or damaged, repair ground connection or replace high idle control module, (Para 3-127). Verify repair, go to Step 24 of this Fault.

(b) If ground wire connection is tight and free from damage, go to Step 11 of this Fault.

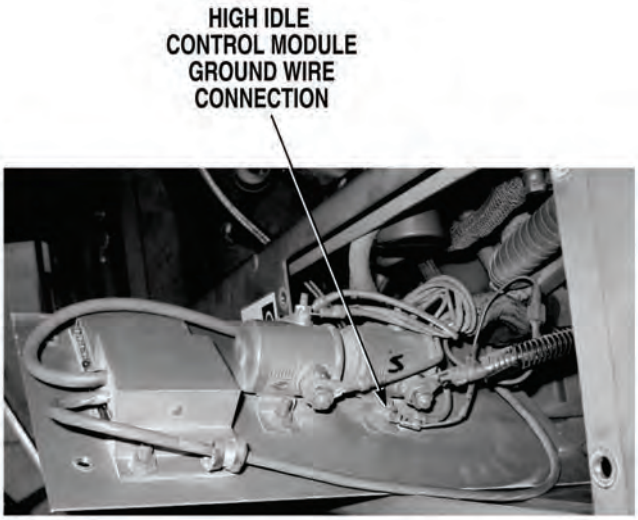

24. ENGINE HIGH IDLE DOES NOT OPERATE (CONT).

KNOWN INFO

All 12 VDC circuits OK.
CONTROL fuse OK.
Main wire harness (red/white) wire OK.
Battery equalizer magnetic switch connections not loose.
Engine wire harness (red/white) wire OK.
Control box 8-pin wire harness (red/white) wire OK.
Control box (red/white) wire OK.
Throttle actuator/control module connections OK.
Throttle actuator not binding.
Fuel injector pump OK.
Battery equalizer circuit operating correctly.
Main wire harness high idle control (red) wire OK.
Control box high idle control (red) wire OK.
THROTTLE CONTROL switch OK.
High idle control module ground wire OK.

POSSIBLE PROBLEMS

High idle control module faulty.
Throttle actuator/control module wires loose or damaged.
Throttle actuator faulty.
High idle control module not adjusted correctly.

11.

WARNING
Read WARNING on Page 4-787

Are wires and connections between high idle control module and throttle actuator secure and free from damage?

NO → Repair wires, (Para 3-141) or replace damaged high idle control module, (Para 3-127) or throttle actuator, (Para 3-7). Verify repair, go to Step 24 of this Fault.

YES ↓

TEST OPTIONS

Visual inspection.

REASON FOR QUESTION

If wires and connections between high idle control module and throttle actuator are loose or damaged, high idle may not operate.

WARNING

Remove all jewelry such as rings, dog tags, bracelets etc. If jewelry or tools contact positive electrical circuits, a direct short may result. Damage to equipment, injury or death to personnel may occur.

VISUAL INSPECTION
Check if wires and connections between high idle control module and throttle actuator are secure and free from damage. (a) If wires are loose or damaged, repair wires, (Para 3-141) or replace damaged high idle control module, (Para 3-127) or throttle actuator, (Para 3-7). Verify repair, go to Step 24 of this Fault. (b) If wires are secure and free from damage, go to Step 12 of this Fault.

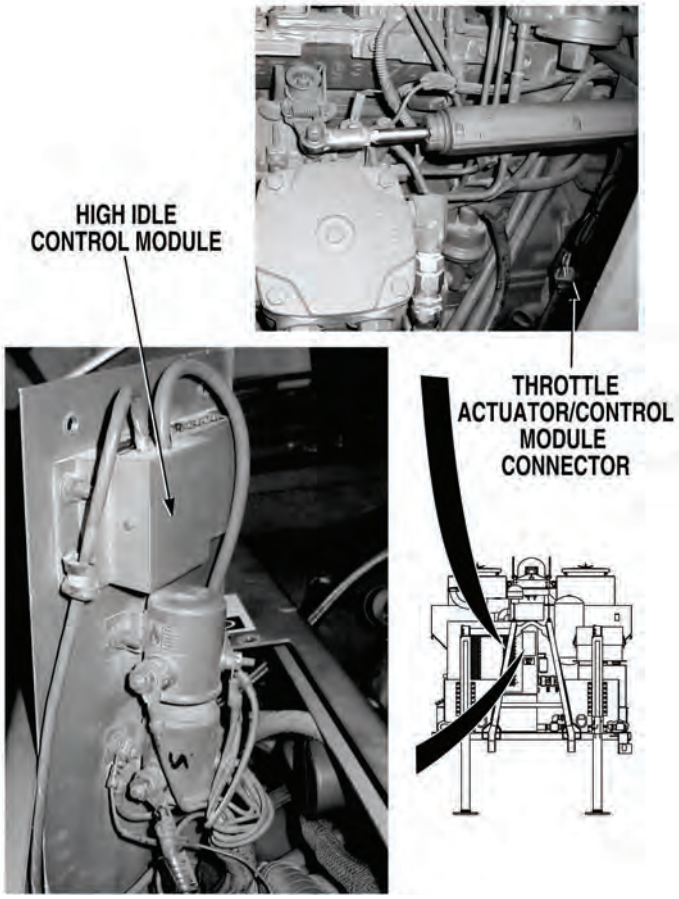

24. ENGINE HIGH IDLE DOES NOT OPERATE (CONT).

KNOWN INFO
All 12 VDC circuits OK.
CONTROL fuse OK.
Main wire harness (red/white) wire OK.
Battery equalizer magnetic switch connections not loose.
Engine wire harness (red/white) wire OK.
Control box 8-pin wire harness (red/white) wire OK.
Control box (red/white) wire OK.
Throttle actuator/control module connections OK.
Throttle actuator not binding.
Fuel injector pump OK.
Battery equalizer circuit operating correctly.
Main wire harness high idle control (red) wire OK.
Control box high idle control (red) wire OK.
THROTTLE CONTROL switch OK.
High idle control module ground wire OK.
Throttle actuator/control module wires not loose or damaged.

POSSIBLE PROBLEMS
High idle control module faulty.
Throttle actuator faulty.
High idle control module not adjusted correctly.

12.

Does high idle control module red LED illuminate when THROTTLE CONTROL switch is turned ON?

NO → Go to Step 14 of this Fault.

YES ↓

TEST OPTIONS
Operational test.
REASON FOR QUESTION
To further isolate fault.

OPERATIONAL TEST

(1) Turn IGNITION SWITCH ON, (Para 2-1).

(2) Turn 12 VOLT switch ON, (Para 2-1).

(3) While assistant turns THROTTLE CONTROL switch on, check if high idle control module (red) LED is illuminated.

(a) If red LED does not illuminate, go to Step 14 of this Fault.

(b) If red LED illuminates, go to Step 13 of this Fault.

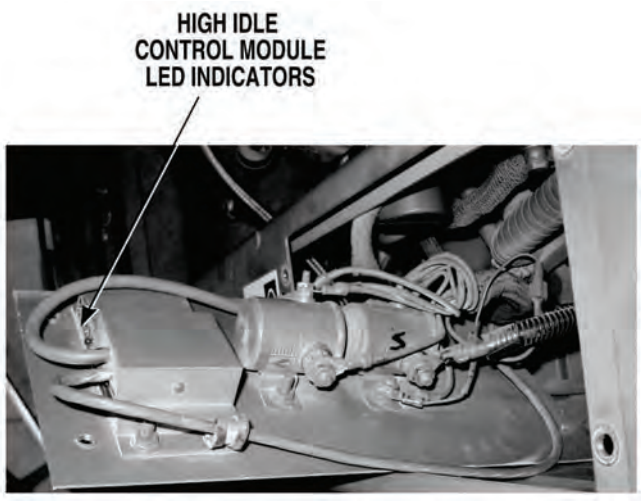

24. ENGINE HIGH IDLE DOES NOT OPERATE (CONT).

KNOWN INFO

- All 12 VDC circuits OK.
- CONTROL fuse OK.
- Main wire harness (red/white) wire OK.
- Battery equalizer magnetic switch connections not loose.
- Engine wire harness (red/white) wire OK.
- Control box 8-pin wire harness (red/white) wire OK.
- Control box (red/white) wire OK.
- Throttle actuator/control module connections OK.
- Throttle actuator not binding.
- Fuel injector pump OK.
- Battery equalizer circuit operating correctly.
- Main wire harness high idle control (red) wire OK.
- Control box high idle control (red) wire OK.
- THROTTLE CONTROL switch OK.
- High idle control module ground wire OK.
- Throttle actuator/control module wires not loose or damaged.
- High idle control module adjusted correctly.

POSSIBLE PROBLEMS

- High idle control module faulty.
- Throttle actuator faulty.

13.

Does high idle operate after replacing throttle actuator?

NO → Reinstall original throttle actuator, (Para 3-7) and replace high idle control module, (Para 3-127). Verify repair, go to Step 25 of this Fault.

YES → Fault corrected. Verify repair, go to Step 24 of this Fault.

TEST OPTIONS

Operational test.

REASON FOR QUESTION

If high idle does not operate after replacing actuator, high idle control module is faulty.

OPERATIONAL TEST

(1) Turn THROTTLE CONTROL switch OFF, (Para 2-1).

(2) Turn 12 VDC switch OFF, (Para 2-1).

(3) Turn IGNITION SWITCH OFF, (Para 2-1).

(4) Replace throttle actuator, (Para 3-7).

(5) Start engine and turn HIGH IDLE ON, (Para 2-19).

(6) Check if high idle operates.

  (a) If high idle does not operate, reinstall original throttle actuator, (Para 3-7) and replace high idle control module, (Para 3-127).

  (b) If high idle operates, fault has been corrected.

(7) Verify repair, go to Step 24 of this Fault.

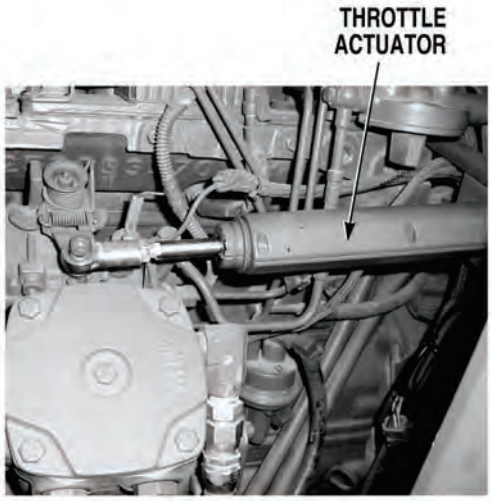

24. ENGINE HIGH IDLE DOES NOT OPERATE (CONT).

KNOWN INFO

- All 12 VDC circuits OK.
- CONTROL fuse OK.
- Main wire harness (red/white) wire OK.
- Battery equalizer magnetic switch connections not loose.
- Engine wire harness (red/white) wire OK.
- Control box 8-pin wire harness (red/white) wire OK.
- Control box (red/white) wire OK.
- Throttle actuator/control module connections OK.
- Throttle actuator not binding.
- Fuel injector pump OK.
- Battery equalizer circuit operating correctly.
- Main wire harness high idle control (red) wire OK.
- Control box high idle control (red) wire OK.
- THROTTLE CONTROL switch OK.
- High idle control module ground wire OK.
- Throttle actuator/control module wires not loose or damaged.
- Throttle actuator OK.

POSSIBLE PROBLEMS

- High idle control module faulty.
- High idle control module adjusted incorrectly.

14.

Does high idle control module green and amber LED illuminate when THROTTLE CONTROL switch is turned ON?

NO → Replace high idle control module, (Para 3-127). Verify repair, go to Step 24 of this Fault.

YES ↓

TEST OPTIONS

Operational test.

REASON FOR QUESTION

If high idle control module green and amber LED's do not illuminate, high idle control module is faulty.

OPERATIONAL TEST

NOTE

LED's will illuminate while actuator is moving.

(1) Turn THROTTLE CONTROL switch OFF, (Para 2-1).

(2) While assistant turns THROTTLE CONTROL switch ON, (Para 2-1), check if high idle control module green and amber LED's illuminate.

(a) If green and amber LED's do not illuminate, replace high idle control module, (Para 3-127). Verify repair, go to Step 24 of this Fault.

(b) If green and amber LED's illuminate, go to Step 15 of this Fault.

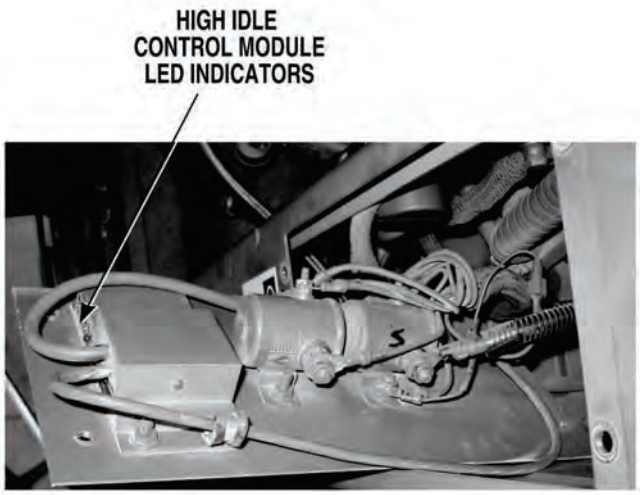

24. ENGINE HIGH IDLE DOES NOT OPERATE (CONT).

KNOWN INFO

- All 12 VDC circuits OK.
- CONTROL fuse OK.
- Main wire harness (red/white) wire OK.
- Battery equalizer magnetic switch connections not loose.
- Engine wire harness (red/white) wire OK.
- Control box 8-pin wire harness (red/white) wire OK.
- Control box (red/white) wire OK.
- Throttle actuator/control module connections OK.
- Throttle actuator not binding.
- Fuel injector pump OK.
- Battery equalizer circuit operating correctly.
- Main wire harness high idle control (red) wire OK.
- Control box high idle control (red) wire OK.
- THROTTLE CONTROL switch OK.
- High idle control module ground wire OK.
- Throttle actuator/control module wires not loose or damaged.
- Throttle actuator OK.

POSSIBLE PROBLEMS

- High idle control module faulty.
- High idle control module adjusted incorrectly.

15.

Can high idle control module be adjusted for correct high idle actuation movement?

NO → Replace high idle control module, (Para 3-127). Verify repair, go to Step 25 of this Fault.

YES → Verify repair, go to Step 24 of this Fault.

TEST OPTIONS

Operational test.

REASON FOR QUESTION

If high idle control module can be adjusted for correct high idle actuation movement, high idle control module was adjusted incorrectly. If not, high idle control module is faulty.

OPERATIONAL TEST
Check if high idle control module can be adjusted for correct high idle actuation movement, (Para 3-7). (a) If high idle control module cannot be adjusted, replace high idle control module, (Para 3-127). Verify repair, go to Step 16 of this Fault. (b) If high idle control module can be adjusted, verify repair and go to Step 24 of this Fault.

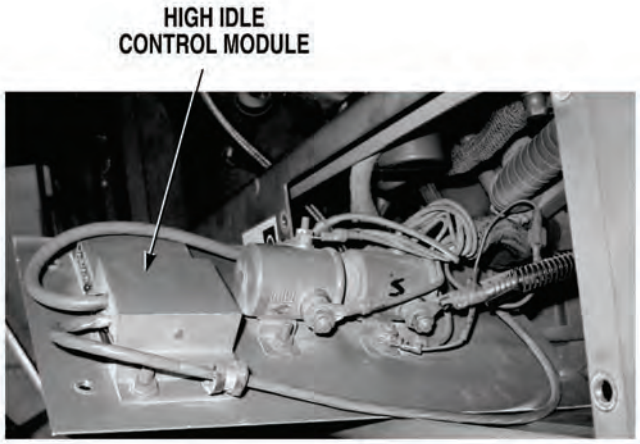

24. ENGINE HIGH IDLE DOES NOT OPERATE (CONT).

KNOWN INFO
All 12 VDC circuits OK.
CONTROL fuse OK.
Main wire harness (red/white) wire OK.
Battery equalizer magnetic switch connections not loose.
Engine wire harness (red/white) wire OK.
Control box (red/white) wire OK.
Throttle actuator/control module connections OK.
Throttle actuator not binding.
Fuel injector pump OK.
High idle control module ground wire OK.
High idle control module OK.
Throttle actuator/control module wires not loose or damaged.
Throttle actuator OK.
High idle control module adjusted correctly.

POSSIBLE PROBLEMS
Battery equalizer circuit not operating correctly.
Main wire harness high idle control (red) wire faulty.
Control box 8-pin wire harness (red/white) wire faulty.
Control box high idle control (red) wire faulty.
THROTTLE CONTROL switch faulty.

16.

WARNING

Read WARNING on Page 4-797

Is voltage measured between engine harness high idle enable (red) wire at high idle control module and a known good ground when THROTTLE CONTROL switch is ON?

NO → Go to Step 17 of this Fault.

YES → Go to “Battery Charging System or Battery Equalizer Does Not Operate Correctly”, (Fault 5).

TEST OPTIONS
Voltage test.
REASON FOR QUESTION
If voltage is present, another troubleshooting procedure applies.

WARNING

Remove all jewelry such as rings, dog tags, bracelets etc. If jewelry or tools contact positive electrical circuits, a direct short may result. Damage to equipment, injury or death to personnel may occur.

VOLTAGE TEST

(1) Connect positive (+) multimeter lead to engine harness high idle enable (red) wire at high idle control module.

(2) Connect negative (-) multimeter lead to a known good ground.

(3) Check if any voltage is present.

(a) If no voltage is present, go to Step 17 of this Fault.

(b) If voltage is present, go to Go to “Battery Charging System or Battery Equalizer Does Not Operate Correctly”, (Fault 5).

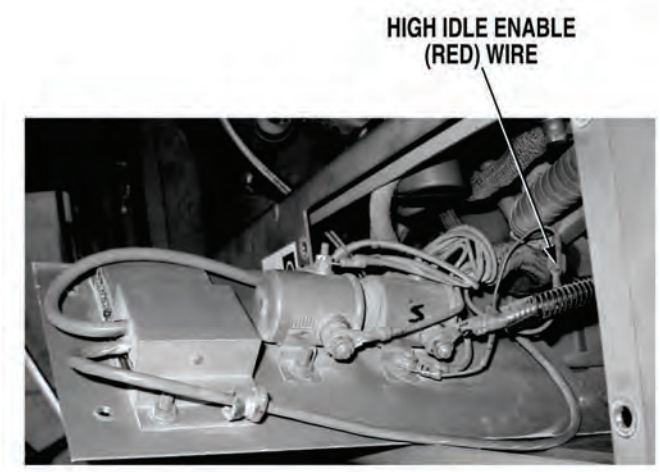

24. ENGINE HIGH IDLE DOES NOT OPERATE (CONT).

KNOWN INFO
All 12 VDC circuits OK.
CONTROL fuse OK.
Main wire harness (red/white) wire OK.
Battery equalizer magnetic switch connections not loose.
Engine wire harness (red/white) wire OK.
Control box (red/white) wire OK.
Throttle actuator/control module connections OK.
Throttle actuator not binding.
Fuel injector pump OK.
High idle control module ground wire OK.
High idle control module OK.
Throttle actuator/control module wires not loose or damaged.
Throttle actuator OK.
High idle control module adjusted correctly.
Battery equalizer circuit operating correctly.

POSSIBLE PROBLEMS
Main wire harness high idle control (red) wire faulty.
Control box 8-pin wire harness (red/white) wire faulty.
Control box high idle control (red) wire faulty.
THROTTLE CONTROL switch faulty.

17.

WARNING

Read WARNING on Page 4-799

Is continuity measured across main wire harness high idle control (red) wire from engine connector, terminal L to 8-pin connector, terminal F?

NO → Repair high idle control (red) wire, (Para 3-141) or replace main wire harness, (Para 3-134). Verify repair, go to Step 24 of this Fault.

YES ↓

TEST OPTIONS
Continuity test.

REASON FOR QUESTION
if continuity is not measured, main wire harness high idle control (red) wire is faulty.

WARNING

Remove all jewelry such as rings, dog tags, bracelets etc. If jewelry or tools contact positive electrical circuits, a direct short may result. Damage to equipment, injury or death to personnel may occur.

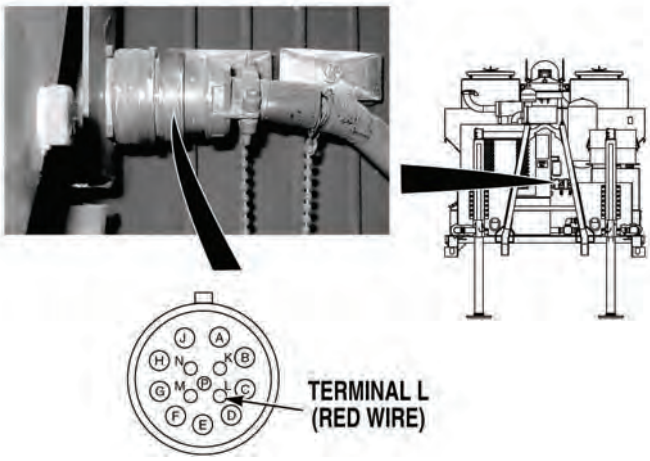

CONTINUITY TEST

(1) Turn THROTTLE CONTROL switch OFF, (Para 2-1).

(2) Turn 12 VOLT switch OFF, (Para 2-1).

(3) Turn IGNITION SWITCH OFF, (Para 2-1).

(4) Disconnect batteries, (Para 3-10).

(5) Disconnect main wire harness at engine harness connector, (Para 3-134).

(6) Disconnect main wire harness 8-pin connector, (Para 3-134).

(7) Set multimeter select switch to ohms.

(8) Connect jumperwire between main wire harness high idle control (red) wire at engine harness connector, terminal L and a known good ground.

(9) Connect positive (+) multimeter lead to main wire harness 8-pin connector, terminal F.

(10) Connect negative (-) multimeter lead to a known good ground.

(a) If continuity is not measured, repair high idle control (red) wire, (Para 3-141) or replace main wire harness, (Para 3-134). Verify repair, go to Step 24 of this Fault.

(b) If continuity is measured, go to Step 18 of this Fault.

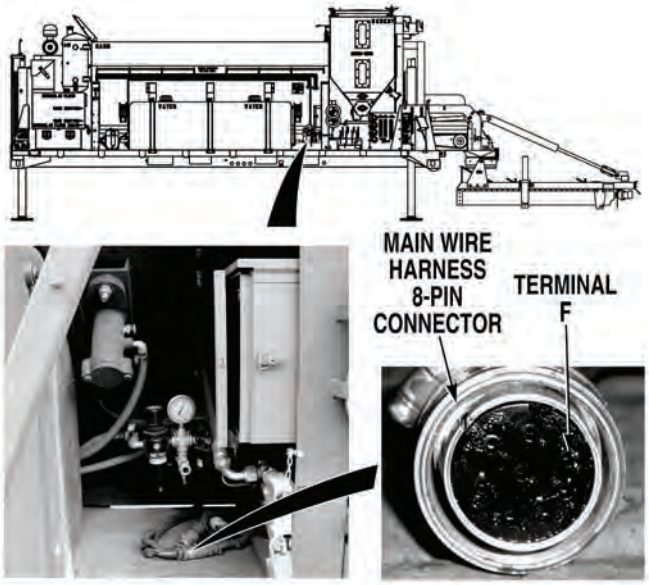

24. ENGINE HIGH IDLE DOES NOT OPERATE (CONT).

KNOWN INFO

- All 12 VDC circuits OK.
- CONTROL fuse OK.
- Main wire harness (red/white) wire OK.
- Battery equalizer magnetic switch connections not loose.
- Engine wire harness (red/white) wire OK.
- Control box (red/white) wire OK.
- Throttle actuator/control module connections OK.
- Throttle actuator not binding.
- Fuel injector pump OK.
- High idle control module ground wire OK.
- High idle control module OK.
- Throttle actuator/control module wires not loose or damaged.
- Throttle actuator OK.
- High idle control module adjusted correctly.
- Battery equalizer circuit operating correctly.
- Main wire harness high idle control (red) wire OK.

POSSIBLE PROBLEMS

- Control box 8-pin wire harness (red/white) wire faulty.
- Control box high idle control (red) wire faulty.
- THROTTLE CONTROL switch faulty.

18.

WARNING

Read WARNING on Page 4-801

Is continuity measured across control box 8-pin wire harness high idle control (red) wire from connector terminal F to THROTTLE CONTROL switch?

NO → Repair high idle control (red) wire, (Para 3-141) or replace control box 8-pin wire harness, (Para 3-137). Verify repair, go to Step 24 of this Fault.

YES ↓

TEST OPTIONS

Continuity test.

REASON FOR QUESTION

If continuity is not measured, control box 8-pin wire harness high idle control (red) wire is faulty.

WARNING

Remove all jewelry such as rings, dog tags, bracelets etc. If jewelry or tools contact positive electrical circuits, a direct short may result. Damage to equipment, injury or death to personnel may occur.

CONTINUITY TEST

(1) Remove control box from Concrete Mobile Mixer, (Para 3-90).

(2) Release latch and open control box door. Remove screw from top of control panel, gently tip control panel forward for access to wires.

(3) Set multimeter select switch to ohms.

(4) Connect positive (+) multimeter lead to control box 8-pin connector high idle control (red) wire, terminal F.

(5) Connect negative (-) multimeter lead to high idle control (red) wire at THROTTLE CONTROL switch.

(a) If continuity is not measured, repair high idle control (red) wire, (Para 3-141) or replace control box 8-pin wire harness, (Para 3-137). Verify repair, go to Step 24 of this Fault.

(b) If continuity is measured, go to Step 19 of this Fault.

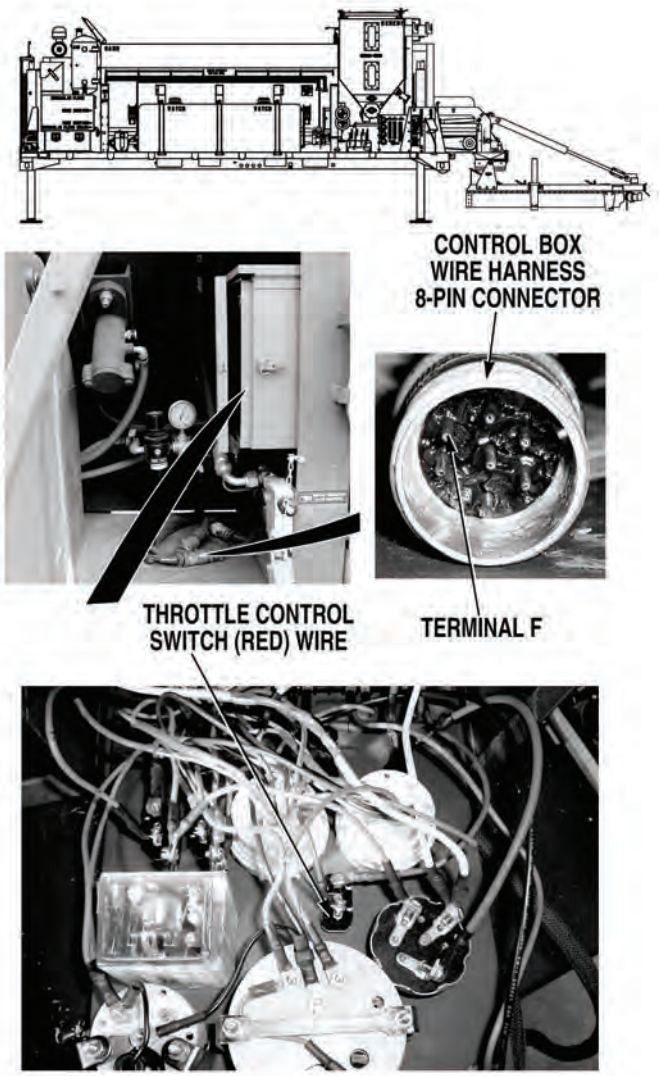

24. ENGINE HIGH IDLE DOES NOT OPERATE (CONT).

KNOWN INFO

- All 12 VDC circuits OK.
- CONTROL fuse OK.
- Main wire harness (red/white) wire OK.
- Battery equalizer magnetic switch connections not loose.
- Engine wire harness (red/white) wire OK.
- Control box (red/white) wire OK.
- Throttle actuator/control module connections OK.
- Throttle actuator not binding.
- Fuel injector pump OK.
- High idle control module ground wire OK.
- High idle control module OK.
- Throttle actuator/control module wires not loose or damaged.
- Throttle actuator OK.
- High idle control module adjusted correctly.
- Battery equalizer circuit operating correctly.
- Main wire harness high idle control (red) wire OK.
- Control box 8-pin wire harness (red/white) wire OK.

POSSIBLE PROBLEMS

- Control box high idle control (red) wire faulty.
- THROTTLE CONTROL switch faulty.

19.

WARNING

Read WARNING on Page 4-803

Is continuity measured across high idle control (red) wire from THROTTLE CONTROL switch to terminal strip terminals 19 and 20?

NO → Repair wire (Para 3-141) or replace control box, (Para 3-90). Verify repair, go to Step 24 of this Fault.

YES → Replace high idle control switch, (Para 3-127). Verify repair, go to Step 24 of this Fault.

TEST OPTIONS

Continuity test.

REASON FOR QUESTION

If continuity is measured, THROTTLE CONTROL switch is faulty. If not, high idle control (red) wire between THROTTLE CONTROL switch and control box terminal, terminals 19 and 20 is faulty.

WARNING

Remove all jewelry such as rings, dog tags, bracelets etc. If jewelry or tools contact positive electrical circuits, a direct short may result. Damage to equipment, injury or death to personnel may occur.

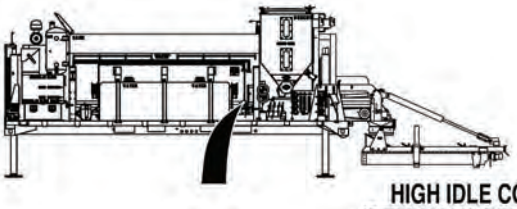

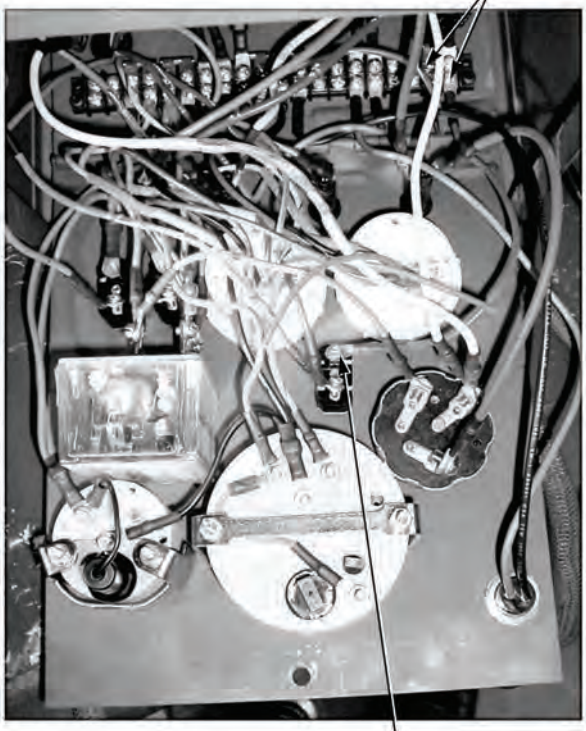

CONTINUITY TEST

(1) Set multimeter select switch to ohms.

(2) Connect positive (+) multimeter to high idle control (red) wire at THROTTLE CONTROL switch.

(3) Connect negative (-) multimeter lead to high idle control (red) wire at control box terminal strip, terminals 19 and 20.

  (a) If continuity is not measured, repair high idle control (red) wire between THROTTLE CONTROL switch and terminal strip, (Para 3-40) or replace control box, (Para 3-90).

  (b) If continuity is measured, replace THROTTLE CONTROL switch, (Para 3-57).

(4) Verify repair, go to Step 24 of this Fault.

24. ENGINE HIGH IDLE DOES NOT OPERATE (CONT).

KNOWN INFO

- All 12 VDC circuits OK.
- CONTROL fuse OK.
- Throttle actuator/control module connections OK.
- Throttle actuator not binding.
- Fuel injector pump OK.
- High idle control module ground wire OK.
- High idle control module OK.
- Throttle actuator/control module wires not loose or damaged.
- Throttle actuator OK.
- High idle control module adjusted correctly.
- Battery equalizer circuit operating correctly.
- Main wire harness high idle control (red) wire OK.
- Control box high idle control (red) wire OK.
- THROTTLE CONTROL switch OK.

POSSIBLE PROBLEMS

- Main wire harness (red/white) wire faulty.
- Battery equalizer magnetic switch connections loose.
- Engine wire harness (red/white) wire faulty.
- Control box 8-pin wire harness (red/white) wire faulty.
- Control box (red/white) wire faulty.

20.

WARNING

Read WARNING on Page 4-805

Is continuity measured across main wire harness control power (red/white) wire from engine connector, terminal H to 8-pin connector, terminal C?

NO → Repair control power (red/white) wire, (Para 3-141) or replace main wire harness, (Para 3-134). Verify repair, go to Step 24 of this Fault.

YES ↓

TEST OPTIONS

Continuity test.

REASON FOR QUESTION

If continuity is not measured, main wire harness control power (red/white) wire is faulty.

WARNING

Remove all jewelry such as rings, dog tags, bracelets etc. If jewelry or tools contact positive electrical circuits, a direct short may result. Damage to equipment, injury or death to personnel may occur.

CONTINUITY TEST

(1) Turn admix switch OFF, (Para 2-1).

(2) Turn 12 VOLT switch OFF, (Para 2-1).

(3) Turn IGNITION SWITCH OFF, (Para 2-1).

(4) Disconnect batteries, (Para 3-10).

(5) Disconnect main wire harness engine harness connector, (Para 3-134).

(6) Disconnect main wire harness 8-pin connector, (Para 3-134).

(7) Set multimeter select switch to ohms.

(8) Connect positive (+) multimeter lead to main wire harness engine connector, terminal H.

(9) Connect negative (-) multimeter lead to main wire harness 8-pin connector, terminal C.

(a) If continuity is not measured, repair control power (red/white) wire, (Para 3-141) or replace main wire harness, (Para 3-134). Verify repair, go to Step 24 of this Fault.

(b) If continuity is measured, go to Step 21 of this Fault.

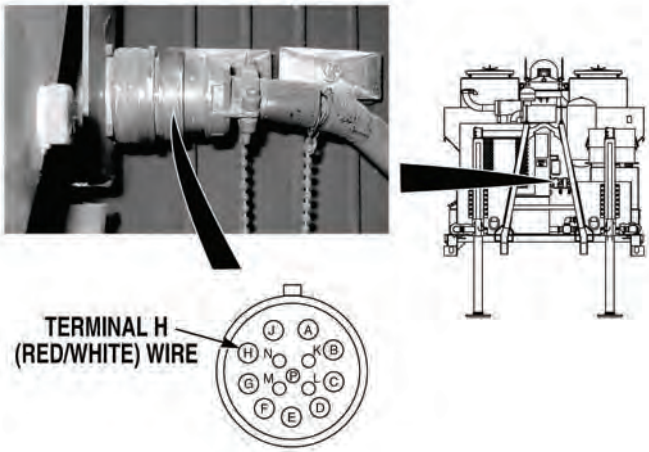

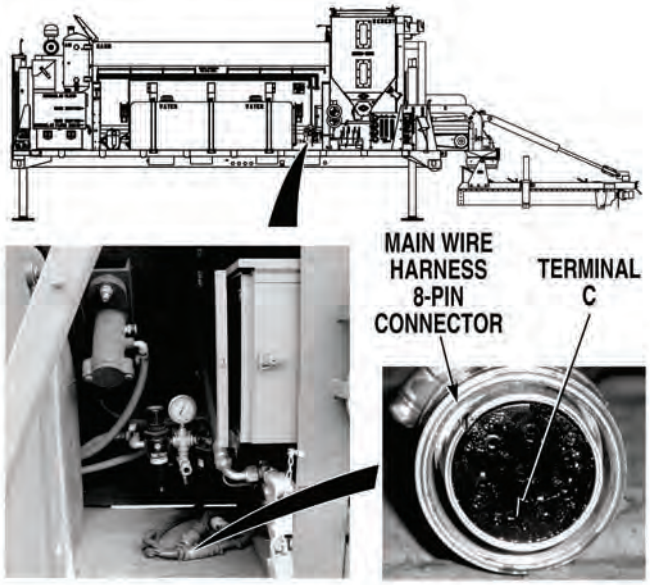

24. ENGINE HIGH IDLE DOES NOT OPERATE (CONT).

KNOWN INFO
All 12 VDC circuits OK.
CONTROL fuse OK.
Throttle actuator/control module connections OK.
Throttle actuator not binding.
Fuel injector pump OK.
High idle control module ground wire OK.
High idle control module OK.
Throttle actuator/control module wires not loose or damaged.
Throttle actuator OK.
High idle control module adjusted correctly.
Battery equalizer circuit operating correctly.
Main wire harness high idle control (red) wire OK.
Control box high idle control (red) wire OK.
THROTTLE CONTROL switch OK.
Main wire harness (red/white) wire OK.

POSSIBLE PROBLEMS
Battery equalizer magnetic switch connections loose.
Engine wire harness (red/white) wire faulty.
Control box 8-pin wire harness (red/white) wire faulty.
Control box (red/white) wire faulty.

21.

WARNING

Read WARNING on Page 4-807

Is continuity measured across control power (red/white) wire from control box 8-pin harness connector, terminal C to terminal strip terminals 19 and 20, with CONTROL fuse installed?

NO → Go to Step 23 of this Fault.

YES ↓

TEST OPTIONS
Continuity test.
REASON FOR QUESTION
To further isloate fault.

WARNING

Remove all jewelry such as rings, dog tags, bracelets etc. If jewelry or tools contact positive electrical circuits, a direct short may result. Damage to equipment, injury or death to personnel may occur.

CONTINUITY TEST

(1) Remove control box from Concrete Mobile Mixer, (Para 3-90).

(2) Release latch and open control box door, remove screw from top of control panel, and gently tip control panel forward for access to wires.

(3) Set multimeter select switch to ohms.

(4) Connect positive (+) multimeter lead to control box 8-pin connector, terminal C.

(5) Connect negative (-) multimeter lead to control box terminal strip, terminals 19 and 20.

(a) If continuity is not measured, go to Step 23 of this Fault.

(b) If continuity is measured, go to Step 22 of this Fault.

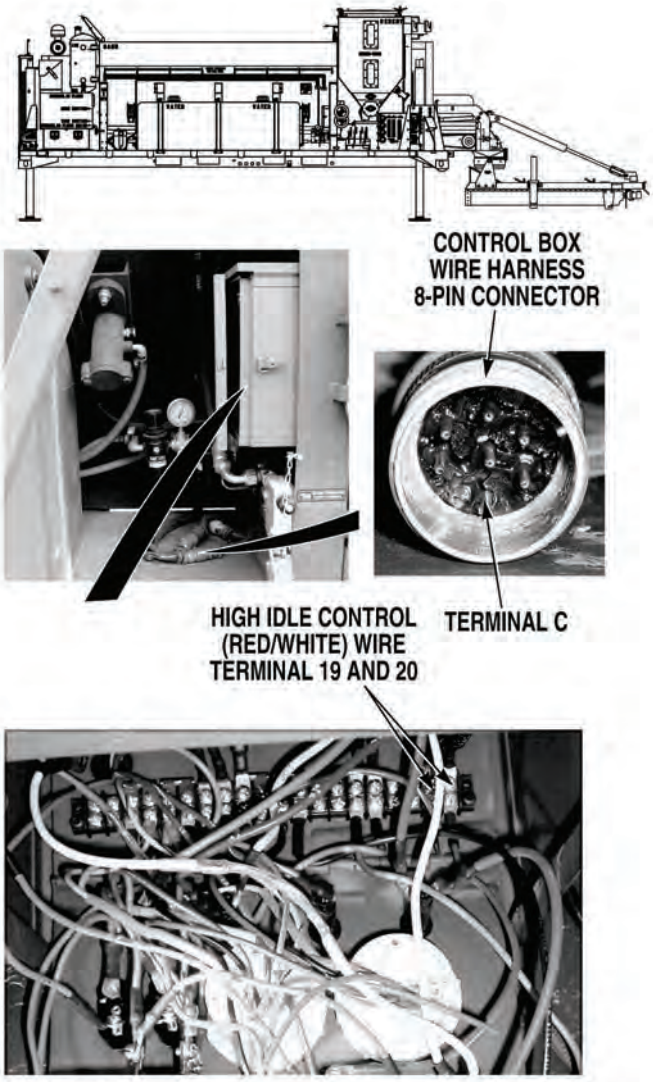

24. ENGINE HIGH IDLE DOES NOT OPERATE (CONT).

KNOWN INFO

- All 12 VDC circuits OK.
- CONTROL fuse OK.
- Throttle actuator/control module connections OK.
- Throttle actuator not binding.
- Fuel injector pump OK.
- High idle control module ground wire OK.
- High idle control module OK.
- Throttle actuator/control module wires not loose or damaged.
- Throttle actuator OK.
- High idle control module adjusted correctly.
- Battery equalizer circuit operating correctly.
- Main wire harness high idle control (red) wire OK.
- Control box high idle control (red) wire OK.
- THROTTLE CONTROL switch OK.
- Main wire harness (red/white) wire OK.
- Control box 8-pin wire harness (red/white) wire OK.
- Control box (red/white) wire OK.

POSSIBLE PROBLEMS

- Battery equalizer magnetic switch connections loose.
- Engine wire harness (red/white) wire faulty.

22.

WARNING

Read WARNING on Page 4-809

Are battery equalizer magnetic switch terminals tight and free from corrosion?

NO → Clean and tighten connections. Verify repair, go to Step 24 of this Fault.

YES → Repair control power (red/white) wire, (Para 3-141) or replace engine wire harness, (Para 3-136). Verify repair, go to Step 24 of this Fault.

TEST OPTIONS

Visual inspection.

REASON FOR QUESTION

If battery equalizer magnetic switch terminals are loose or corroded, high idle may not operate or engine harness control power (red/white) wire is faulty.

WARNING

Remove all jewelry such as rings, dog tags, bracelets etc. If jewelry or tools contact positive electrical circuits, a direct short may result. Damage to equipment, injury or death to personnel may occur.

VISUAL INSPECTION

(1) Check if battery equalizer magnetic switch terminals are tight and free from corrosion.

(a) If battery equalizer magnetic switch terminals are loose or corroded, clean and tighten battery equalizer magnetic switch terminals, (Para 3-17).

(b) If battery equalizer magnetic switch terminals are tight and free from corrosion, repair control power (red/white) wire, (Para 3-141) or replace engine wire harness, (Para 3-136).

(2) Verify repair, go to Step 24 of this Fault.

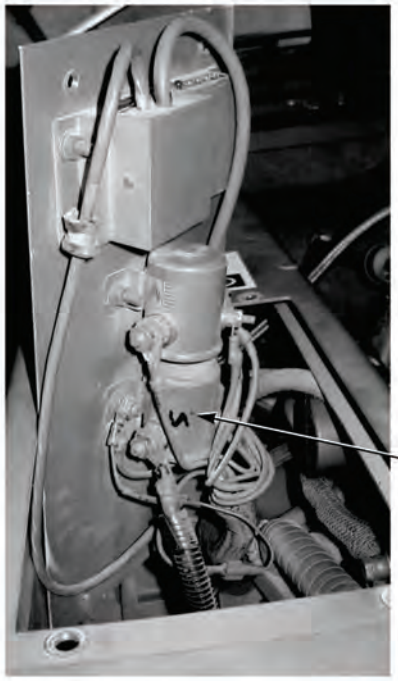

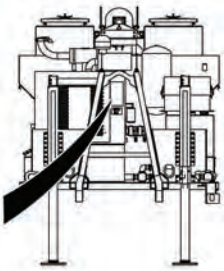

BATTERY EQUALIZER MAGNETIC SWITCH

24. ENGINE HIGH IDLE DOES NOT OPERATE (CONT).

KNOWN INFO

- All 12 VDC circuits OK.
- CONTROL fuse OK.
- Throttle actuator/control module connections OK.
- Throttle actuator not binding.
- Fuel injector pump OK.
- High idle control module ground wire OK.
- High idle control module OK.
- Throttle actuator/control module wires not loose or damaged.
- Throttle actuator OK.
- High idle control module adjusted correctly.
- Battery equalizer circuit operating correctly.
- Main wire harness high idle control (red) wire OK.
- Control box high idle control (red) wire OK.
- THROTTLE CONTROL switch OK.
- Main wire harness (red/white) wire OK.
- Battery equalizer magnetic switch connections not loose.
- Engine wire harness (red/white) wire OK.

POSSIBLE PROBLEMS

- Control box 8-pin wire harness (red/white) wire faulty.
- Control box (red/white) wire faulty.

23.

WARNING

Read WARNING on Page 4-811

Is continuity measured across control box 8-pin harness control power (red/white) wire from connector terminal C to CONTROL fuse holder?

NO → Repair control power (red/white) wire, (Para 3-141) or replace control box 8-pin harness, (Para 3-137). Verify repair, go to Step 24 of this Fault.

YES → Repair control power (red/white) wire, (Para 3-141) or replace control box, (Para 3-90). Verify repair, go to Step 24 of this Fault.

TEST OPTIONS

Continuity test.

REASON FOR QUESTION

If continuity is measured, control box power (red)white) wire is faulty. If not, control box 8-pin wire harness control power (red/white) wire is faulty.

WARNING

Remove all jewelry such as rings, dog tags, bracelets etc. If jewelry or tools contact positive electrical circuits, a direct short may result. Damage to equipment, injury or death to personnel may occur.

CONTINUITY TEST

(1) Set multimeter select switch to ohms.

(2) Connect positive (+) multimeter lead to control box 8-pin connector control power (red/white) wire, terminal C.

(3) Connect negative (-) multimeter lead to control power (red/white) wire at CONTROL fuse holder.

(a) If continuity is not measured, repair control power (red/white) wire, (Para 3-141) or replace control box 8-pin wire harness, (Para 3-137).

(b) If continuity is measured, repair control power (red/white) wire, (Para 3-141) or replace control box, (Para 3-90).

(4) Verify repair, go to Step 24 of this Fault.

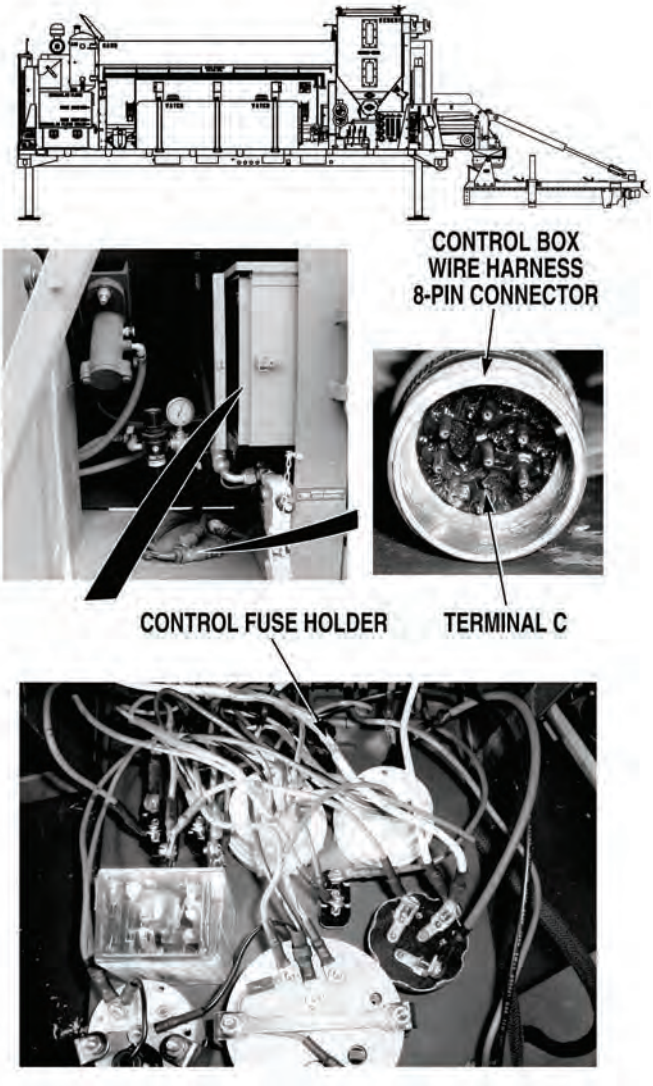

24. ENGINE HIGH IDLE DOES NOT OPERATE (CONT).

KNOWN INFO
All 12 VDC circuits OK. CONTROL fuse OK. Throttle actuator/control module connections OK. Throttle actuator not binding. Fuel injector pump OK. High idle control module ground wire OK. High idle control module OK. Throttle actuator/control module wires not loose or damaged. Throttle actuator OK. High idle control module adjusted correctly. Battery equalizer circuit operating correctly. Main wire harness high idle control (red) wire OK. Control box high idle control (red) wire OK. THROTTLE CONTROL switch OK. Main wire harness (red/white) wire OK. Battery equalizer magnetic switch connections not loose. Engine wire harness (red/white) wire OK. Control box 8-pin wire harness (red/white) wire OK. Control box (red/white) wire OK.
POSSIBLE PROBLEMS
None.

24.

Does engine high idle operate correctly?

NO → Fault not corrected. Notify Supervisor.

YES → Fault corrected.

TEST OPTIONS
Verify repair.
REASON FOR QUESTION
If engine high idle operates correctly, fault has been corrected.

VERIFY REPAIR

(1) If disconnected, connect throttle actuator throttle linkage, (Para 3-7).

(2) If removed, install magnetic switch cover plate, (Para 3-17).

(3) If removed, install front access cover, (Para 3-78).

(4) If disconnected, connect main wire harness at engine harness connector, (Para 3-134).

(5) If open, gently tip control panel forward into control box and install screw at top of control panel.

(6) If removed, install control box on Concrete Mobile MIxer, (Para 3-90).

(7) If disconnected, connect main wire harness 8-pin connector.

(8) Start engine, (Par 2-19).

(9) Turn 12 VOLT switch ON, (Para 2-1).

(10) Turn THROTTLE CONTROL switch ON, (Para 2-1).

(11) Check if high idle operates.

(a) If high idle does not operate, fault not corrected. Notify Supervisor.

(b) If high idle operates, fault has been corrected.

(12) Turn THROTTLE CONTROL switch OFF, (Para 2-1).

(13) Shut OFF engine, (Para 2-19).

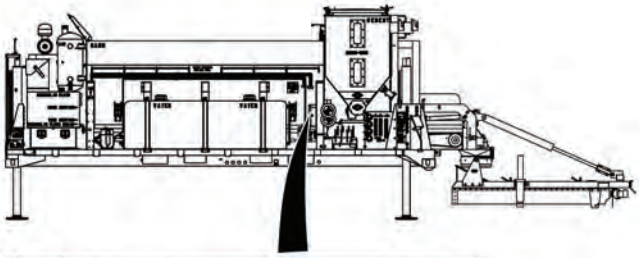

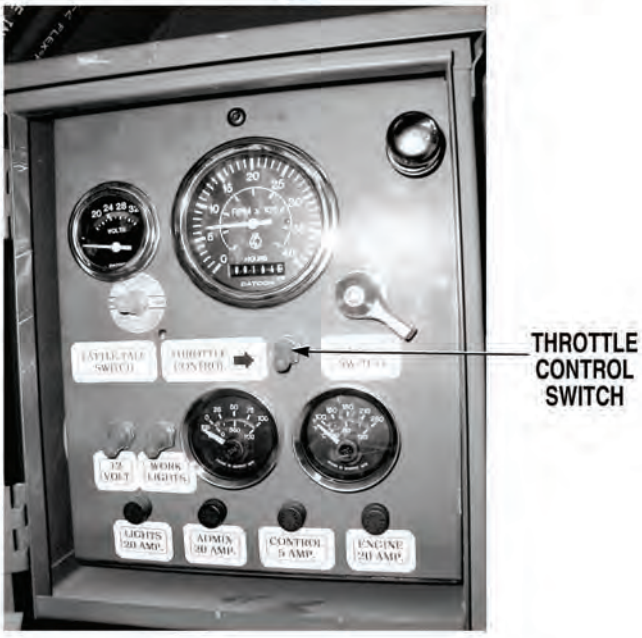

25. ENGINE OVERHEATS (ENGINE SHUTDOWN OCCURS WHEN WATER TEMPERATURE GAGE READS ABOVE 215°F [102°C]).

INITIAL SETUP

Tools and Special Tools
Tool Kit, General Mechanic's: Automotive (Item 19, Appendix I)

Equipment Condition
Concrete Mobile Mixer unloaded from PLS, (Para 2-5)
Engine OFF, (Para 2-19)

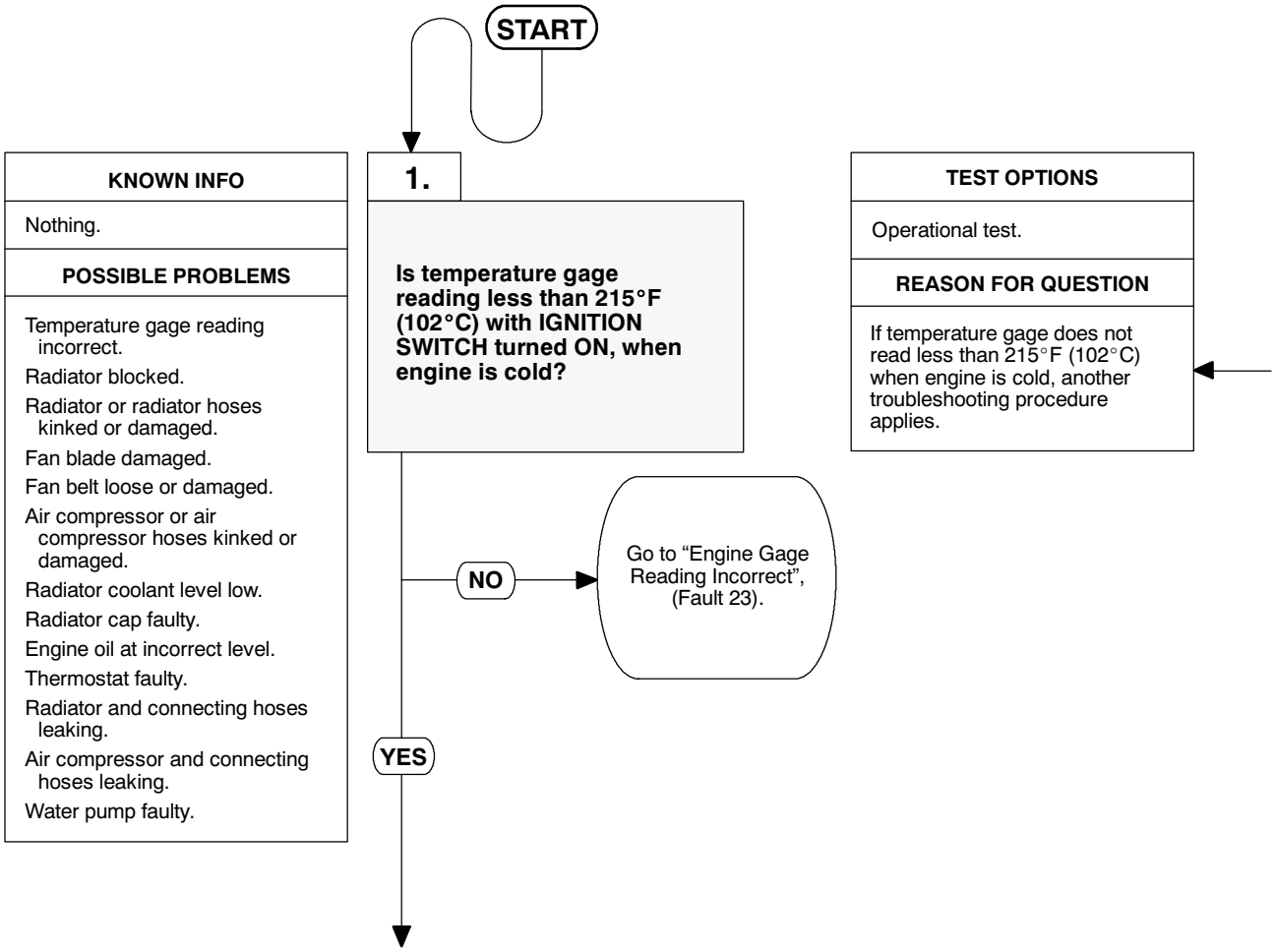

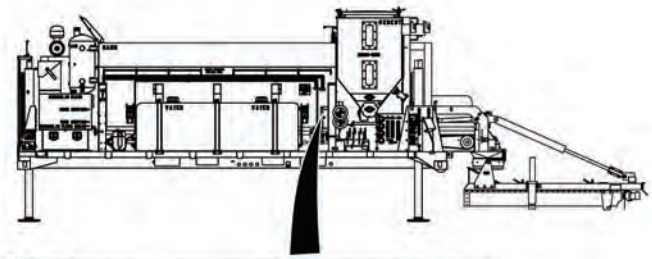

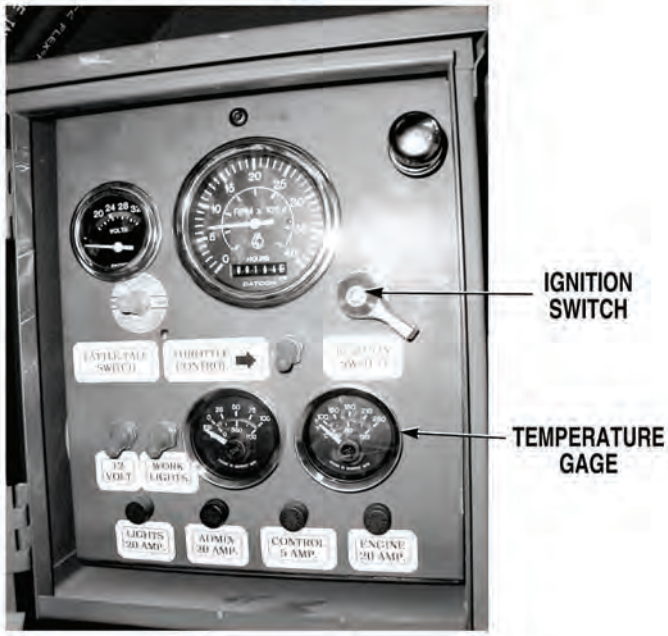

VISUAL INSPECTION

(1) Turn IGNITION SWITCH ON, (Para 2-1).

(2) Check if temperature gage reading is less than 215°F (102°C).

(a) If temperature gage reading is not less than 215°F (102°C), go to “Engine Gage Reading Incorrect”, (Fault 23).

(b) If temperature gage reading is less than 215°F (102°C), go to Step 2 of this Fault.

25. ENGINE OVERHEATS (ENGINE SHUTDOWN OCCURS WHEN WATER TEMPERATURE GAGE READS ABOVE 215°F [102°C] (CONT).

KNOWN INFO
Temperature gage reading correct.
POSSIBLE PROBLEMS
Radiator blocked. Radiator or radiator hoses kinked or damaged. Fan blade damaged. Fan belt loose or damaged. Air compressor or air compressor hoses kinked or damaged. Radiator coolant level low. Radiator cap faulty. Engine oil at incorrect level. Thermostat faulty. Radiator and connecting hoses leaking. Air compressor and connecting hoses leaking. Water pump faulty.

2.

WARNING

Read WARNING on Page 4-817

Is radiator free from blockage?

NO → Remove blockage from radiator. Verify repair, go to Step 16 of this Fault.

YES ↓

TEST OPTIONS
Visual inspection.
REASON FOR QUESTION
If radiator is not free from blockage, engine may overheat.

WARNING

When working in engine compartment area with engine running, be extremely careful to avoid contact with or catching clothing in moving parts. Failure to comply could result in serious injury or death to personnel.

VISUAL INSPECTION
Check if fins on both sides of radiator are free from blockage (leaves, dirt, foreign materials, etc.). (a) If radiator fins are not free from blockage, clear blockage from radiator. Verify repair, go to Step 16 of this Fault. (b) If radiator fins are free from blockage, go to Step 3 of this Fault.

25. ENGINE OVERHEATS (ENGINE SHUTDOWN OCCURS WHEN WATER TEMPERATURE GAGE READS ABOVE 215°F [102°C] (CONT).

KNOWN INFO

Temperature gage reading correct.

Radiator not blocked.

POSSIBLE PROBLEMS

Radiator or radiator hoses kinked or damaged.

Fan blade damaged.

Fan belt loose or damaged.

Air compressor or air compressor hoses kinked or damaged.

Radiator coolant level low.

Radiator cap faulty.

Engine oil at incorrect level.

Thermostat faulty.

Radiator and connecting hoses leaking.

Air compressor and connecting hoses leaking.

Water pump faulty.

3.

WARNING

Read WARNING on Page 4-819

Are radiator and connecting hoses free from kinks and damage?

NO → Replace damaged radiator and hoses, (Para 3-21). Verify repair, go to Step 16 of this Fault.

YES ↓

TEST OPTIONS

Visual inspection.

REASON FOR QUESTION

If radiator or connecting hoses are kinked and damaged, engine may overheat.

WARNING

When working in engine compartment area with engine running, be extremely careful to avoid contact with or catching clothing in moving parts. Failure to comply could result in serious injury or death to personnel.

VISUAL INSPECTION

(1) Remove front engine access panel, (Para 3-78).

(2) Check if radiator and connecting hoses are free from kinks and damage.

(a) If radiator and connecting hoses are not free from kinks and damage, replace damaged radiator and hoses, (Para 3-21). Verify repair, go to Step 16 of this Fault.

(b) If radiator and connecting hoses are free from kinks and damage, go to Step 4 of this Fault.

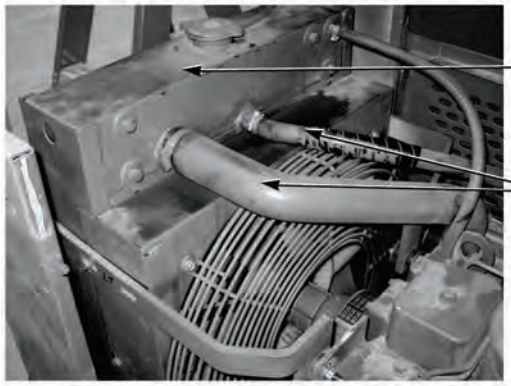

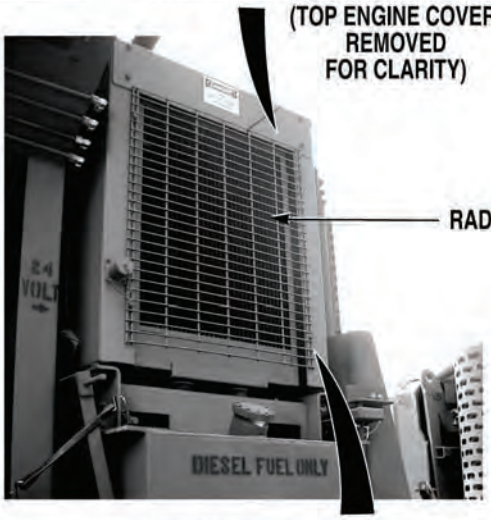

25. ENGINE OVERHEATS (ENGINE SHUTDOWN OCCURS WHEN WATER TEMPERATURE GAGE READS ABOVE 215°F [102°C] (CONT).

KNOWN INFO

Temperature gage reading correct.

Radiator not blocked.

Radiator or radiator hoses not kinked or damaged.

POSSIBLE PROBLEMS

Fan blade damaged.

Fan belt loose or damaged.

Air compressor or air compressor hoses kinked or damaged.

Radiator coolant level low.

Radiator cap faulty.

Engine oil at incorrect level.

Thermostat faulty.

Radiator and connecting hoses leaking.

Air compressor and connecting hoses leaking.

Water pump faulty.

4.

WARNING

Read WARNING on Page 4-821

Is fan blade free from damage?

NO → Replace fan blade, (Para 3-102). Verify repair, go to Step 16 of this Fault.

YES ↓

TEST OPTIONS

Visual inspection.

REASON FOR QUESTION

If fan blade is damaged, engine may overheat.

WARNING

When working in engine compartment area with engine running, be extremely careful to avoid contact with or catching clothing in moving parts. Failure to comply could result in serious injury or death to personnel.

VISUAL INSPECTION

Check if fan blade is free from damage.

(a) If fan blade is damaged, replace fan blade, (Para 3-102). Verify repair, go to Step 16 of this Fault.

(b) If fan blade is free from damage, go to Step 4 of this Fault.

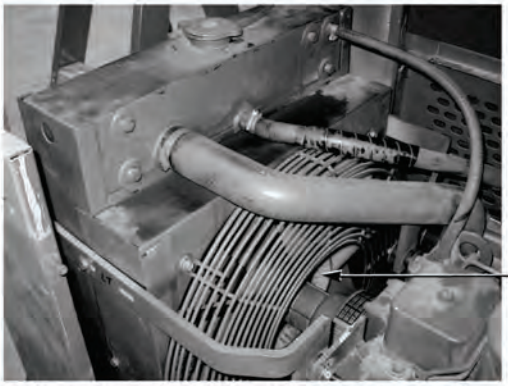

(TOP ENGINE PANEL REMOVED FOR CLARITY)

25. ENGINE OVERHEATS (ENGINE SHUTDOWN OCCURS WHEN WATER TEMPERATURE GAGE READS ABOVE 215°F [102°C] (CONT).

KNOWN INFO

Temperature gage reading correct.

Radiator not blocked.

Radiator or radiator hoses not kinked or damaged.

Fan blade not damaged.

POSSIBLE PROBLEMS

Fan belt loose or damaged.

Air compressor or air compressor hoses kinked or damaged.

Radiator coolant level low.

Radiator cap faulty.

Engine oil at incorrect level.

Thermostat faulty.

Radiator and connecting hoses leaking.

Air compressor and connecting hoses leaking.

Water pump faulty.

5.

WARNING

Read WARNING on Page 4-823

Is fan belt tight and free from damage?

NO → Replace fan belt, (Para 3-107) and/or replace fan drive belt tensioner, (Para 3-108). Verify repair, go to Step 16 of this Fault.

YES ↓

TEST OPTIONS

Visual inspection.

REASON FOR QUESTION

If fan belt is not tight and free from damage, engine may overheat.

WARNING

When working in engine compartment area with engine running, be extremely careful to avoid contact with or catching clothing in moving parts. Failure to comply could result in serious injury or death to personnel.

VISUAL INSPECTION
Check if fan belt is tight and free from damage, (a) If fan belt is loose or damaged, replace fan belt, (Para 3-106) and/or replace fan belt drive tensioner, (Para 3-108). Verify repair, go to Step 16 of this Fault. (b) If fan belt is tight and free from damage, go to Step 6 of this Fault.

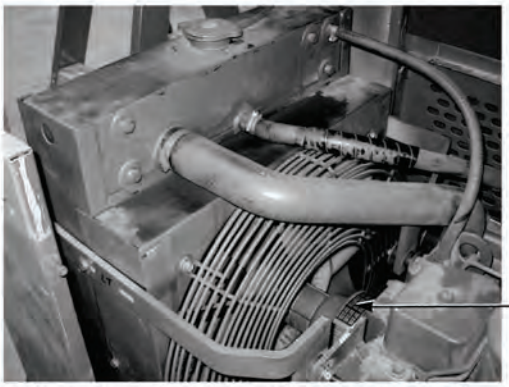

(TOP ENGINE PANEL REMOVED FOR CLARITY)

25. ENGINE OVERHEATS (ENGINE SHUTDOWN OCCURS WHEN WATER TEMPERATURE GAGE READS ABOVE 215°F [102°C] (CONT).

KNOWN INFO

Temperature gage reading correct.
Radiator not blocked.
Radiator or radiator hoses not kinked or damaged.
Fan blade not damaged.
Fan belt not loose or damaged.

POSSIBLE PROBLEMS

Air compressor or air compressor hoses kinked or damaged.
Radiator coolant level low.
Radiator cap faulty.
Engine oil at incorrect level.
Thermostat faulty.
Radiator and connecting hoses leaking.
Air compressor and connecting hoses leaking.
Water pump faulty.

6.

WARNING

Read WARNING on Page 4-825

Is air compressor and connecting hoses free from kinks and damage (including air compressor oil hose)?

NO → Repair or replace damaged air compressor or air compressor hoses, (Para 3-110). Verify repair, go to Step 16 of this Fault.

YES ↓

TEST OPTIONS

Visual inspection.

REASON FOR QUESTION

If air compressor is overheating, engine may overheat.

WARNING

When working in engine compartment area with engine running, be extremely careful to avoid contact with or catching clothing in moving parts. Failure to comply could result in serious injury or death to personnel.

VISUAL INSPECTION

Check air compressor and connecting hoses for kinks and damage, (including air compressor oil hose).

(a) If air compressor and connecting hoses are not free from kinks and damage, replace damaged air compressor, and connecting hoses, (Para 3-110). Verify repair, go to Step 16 of this Fault.

(b) If air compressor and connecting hoses are free from kinks and damage, go to Step 7 of this Fault.

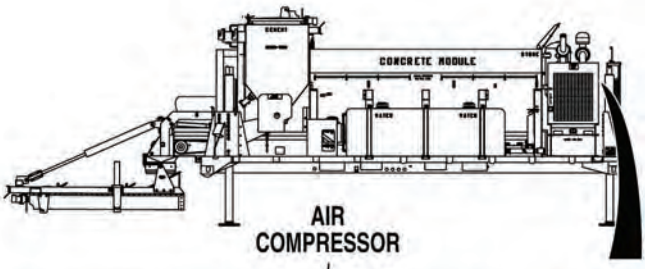

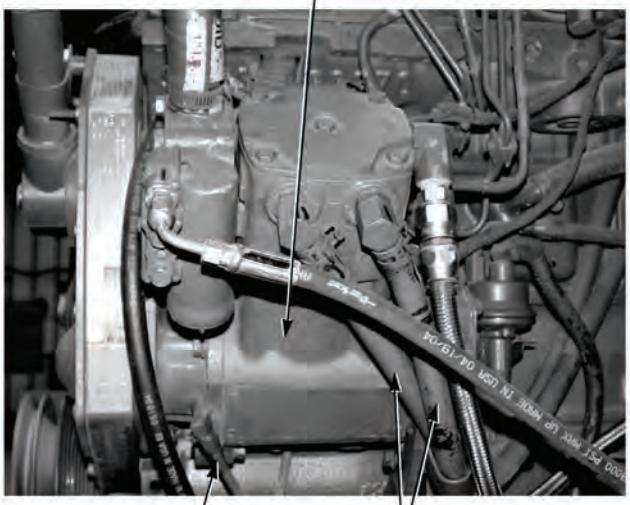

25. ENGINE OVERHEATS (ENGINE SHUTDOWN OCCURS WHEN WATER TEMPERATURE GAGE READS ABOVE 215°F [102°C] (CONT).

KNOWN INFO

Temperature gage reading correct.
Radiator not blocked.
Radiator or radiator hoses not kinked or damaged.
Fan blade not damaged.
Fan belt not loose or damaged.
Air compressor or air compressor hoses not kinked or damaged.

POSSIBLE PROBLEMS

Radiator coolant level low.
Radiator cap faulty.
Engine oil at incorrect level.
Thermostat faulty.
Radiator and connecting hoses leaking.
Air compressor and connecting hoses leaking.
Water pump faulty.

7.

WARNING
Read WARNING on Page 4-827

Is radiator coolant at correct level?

NO → Fill radiator coolant to correct level, (Para 3-83). Then go to Step 8 of this Fault.

YES ↓

TEST OPTIONS

Visual inspection.

REASON FOR QUESTION

If radiator coolant level is insufficient, engine may overheat.

WARNING

Radiator, radiator cap, coolant, and hoses are very hot and pressurized during engine operation. Let engine cool before checking hoses. Failure to comply may result in serious burns to personnel.

VISUAL INSPECTION

(1) Remove radiator cap, (Para 3-83).

(2) Check if radiator coolant is at correct level.

(a) If radiator coolant is not at correct level, fill radiator to correct level, (Para 3-83). Then go to Step 8 of this Fault.

(b) If radiator coolant is at correct level, go to Step 8 of this Fault.

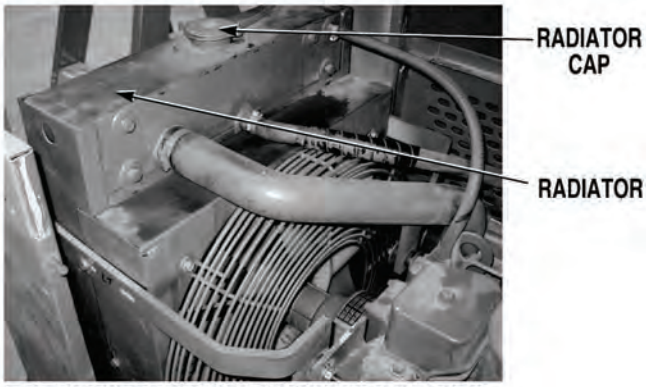

(TOP ENGINE COVER NOT SHOWN FOR CLARITY)

25. ENGINE OVERHEATS (ENGINE SHUTDOWN OCCURS WHEN WATER TEMPERATURE GAGE READS ABOVE 215°F [102°C] (CONT).

KNOWN INFO

- Temperature gage reading correct.
- Radiator not blocked.
- Radiator or radiator hoses not kinked or damaged.
- Fan blade not damaged.
- Fan belt not loose or damaged.
- Air compressor or air compressor hoses not kinked or damaged.
- Radiator coolant level OK.

POSSIBLE PROBLEMS

- Radiator cap faulty.
- Engine oil at incorrect level.
- Thermostat faulty.
- Radiator and connecting hoses leaking.
- Air compressor and connecting hoses leaking.
- Water pump faulty.

8.

WARNING

Read WARNING on Page 4-829

Does radiator cap hold 7 psi (48 kPa) pressure for 30 seconds?

NO → Replace radiator cap, (Para 3-83). Verify repair, go to Step 16 of this Fault.

YES ↓

TEST OPTIONS

Operational test.

REASON FOR QUESTION

If radiator cap does not hold pressure, cooling system will not operate correctly causing engine to overheat.

WARNING

Radiator, radiator cap, coolant, and hoses are very hot and pressurized during engine operation. Let engine cool before checking hoses. Failure to comply may result in serious burns to personnel.

OPERATIONAL TEST

(1) Install radiator cap in radiator pressure tester.

(2) Pressurize radiator cap to 7 psi (48 kPa).

(3) Check if radiator cap holds 7 psi (48 kPa) pressure for 30 seconds.

(a) If radiator cap does not hold pressure, replace radiator cap, (Para 3-83). Verify repair, go to Step 16 of this Fault.

(b) If radiator cap holds pressure, go to Step 9 of this Fault.

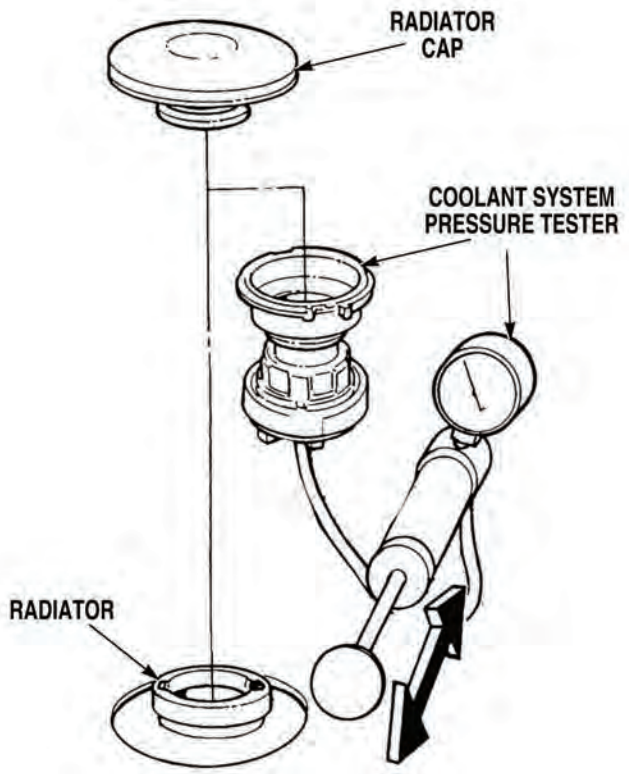

25. ENGINE OVERHEATS (ENGINE SHUTDOWN OCCURS WHEN WATER TEMPERATURE GAGE READS ABOVE 215°F [102°C] (CONT).

KNOWN INFO

Temperature gage reading correct.
Radiator not blocked.
Radiator or radiator hoses not kinked or damaged.
Fan blade not damaged.
Fan belt not loose or damaged.
Air compressor or air compressor hoses not kinked or damaged.
Radiator coolant level OK.
Radiator cap OK.

POSSIBLE PROBLEMS

Engine oil at incorrect level.
Thermostat faulty.
Radiator and connecting hoses leaking.
Air compressor and connecting hoses leaking.
Water pump faulty.

9.

WARNING

Read WARNING on Page 4-831

Does cooling system hold 10 psi (69 kPa) pressure for 2 minutes?

NO → Go to Step 13 of this Fault.

YES ↓

TEST OPTIONS

Operational test.

REASON FOR QUESTION

To isolate fault.

WARNING

Radiator, radiator cap, coolant, and hoses are very hot and pressurized during engine operation. Let engine cool before checking hoses. Failure to comply may result in serious burns to personnel.

OPERATIONAL TEST

(1) Release pressure, and remove radiator cap from radiator pressure tester.

(2) Attach radiator pressure tester to radiator.

(3) Pressurize coolant system to 10 psi (69 kPa).

(4) Check if coolant system holds 10 psi (69 kPa) for 2 minutes.

  (a) If coolant system does not hold 10 psi (69 kPa) pressure for 2 minutes, go to Step 13 of this Fault.

  (b) If coolant system holds 10 psi (69 kPa) pressure for 2 minutes, remove pressure tester and reinstall radiator cap, (Para 3-83). Then go to Step 10 of this Fault.

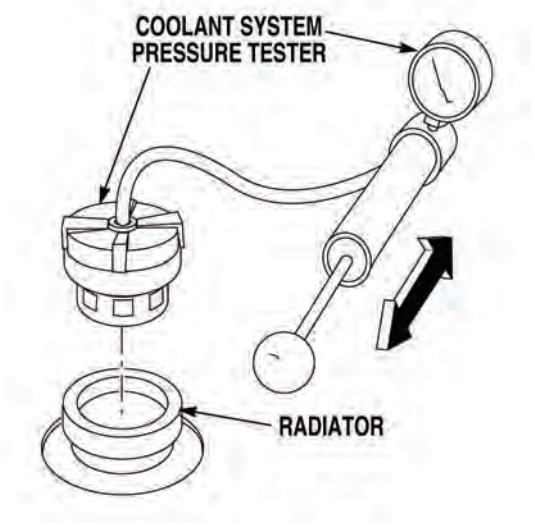

25. ENGINE OVERHEATS (ENGINE SHUTDOWN OCCURS WHEN WATER TEMPERATURE GAGE READS ABOVE 215°F [102°C] (CONT).

KNOWN INFO
Temperature gage reading correct. Radiator not blocked. Radiator or radiator hoses not kinked or damaged. Fan blade not damaged. Fan belt not loose or damaged. Air compressor or air compressor hoses not kinked or damaged. Radiator coolant level OK. Radiator cap OK. Radiator and connecting hoses not leaking. Air compressor and connecting hoses not leaking. Water pump OK.
POSSIBLE PROBLEMS
Engine oil at incorrect level. Thermostat faulty.

10.

Is engine oil at correct level?

NO → Fill or drain engine oil to correct level, (Para 3-82). Then go to Step 11 of this Fault.

YES ↓

TEST OPTIONS
Visual inspection.
REASON FOR QUESTION
If engine oil level is too high or too low, engine may overheat.

VISUAL INSPECTION
Check if engine oil is at correct level, using engine oil dipstick. (a) If engine oil is not at correct level, drain or fill engine oil to correct level, (Para 3-82). Then go to Step 11 of this Fault. (b) If engine oil is at correct level, go to Step 11 of this Fault.

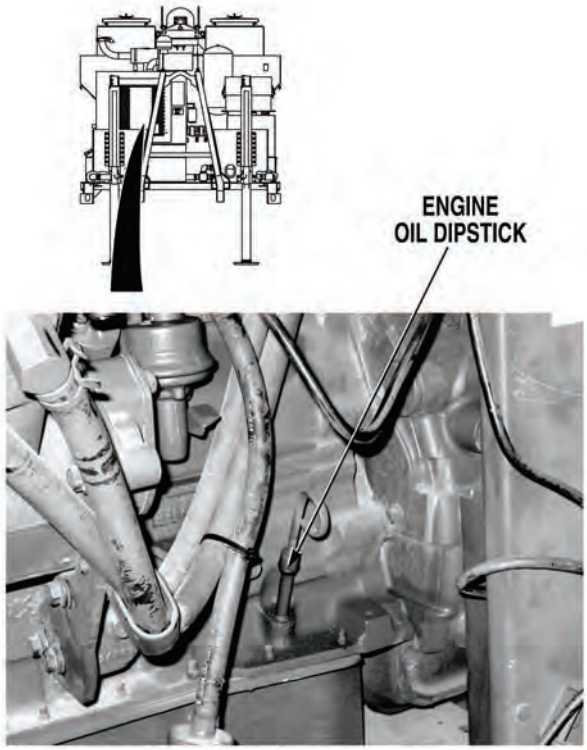

25. ENGINE OVERHEATS (ENGINE SHUTDOWN OCCURS WHEN WATER TEMPERATURE GAGE READS ABOVE 215°F [102°C] (CONT).

KNOWN INFO
Temperature gage reading correct. Radiator not blocked. Radiator or radiator hoses not kinked or damaged. Fan blade not damaged. Fan belt not loose or damaged. Air compressor or air compressor hoses not kinked or damaged. Radiator coolant level OK. Radiator cap OK. Radiator and connecting hoses not leaking. Air compressor and connecting hoses not leaking. Water pump OK. Engine oil at correct level.
POSSIBLE PROBLEMS
Thermostat faulty.

11.

Does engine overheat?

NO → Fault corrected. Verify repair, go to Step 16 of this Fault.

YES ↓

TEST OPTIONS
Operational test.
REASON FOR QUESTION
If engine does not overheat, problem has been corrected.

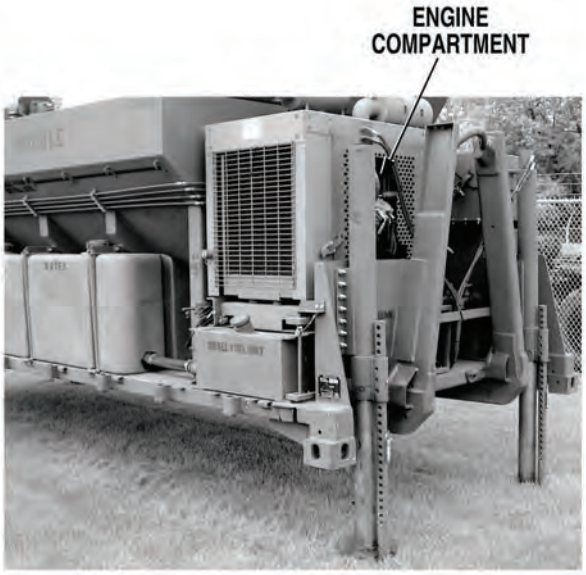

OPERATIONAL TEST

(1) Start engine, (Para 2-19).

(2) Operate system in accordance with Unit SOP. Note engine temperature during system operation.

(3) Check if engine temperature goes above 215°F (102°C).

(a) If engine temperature does not go above 215°F (102°C), fault has been corrected. Verify repair, go to Step 16 of this Fault.

(b) If engine temperature goes above 215°F (102°C), go to Step 12 of this Fault

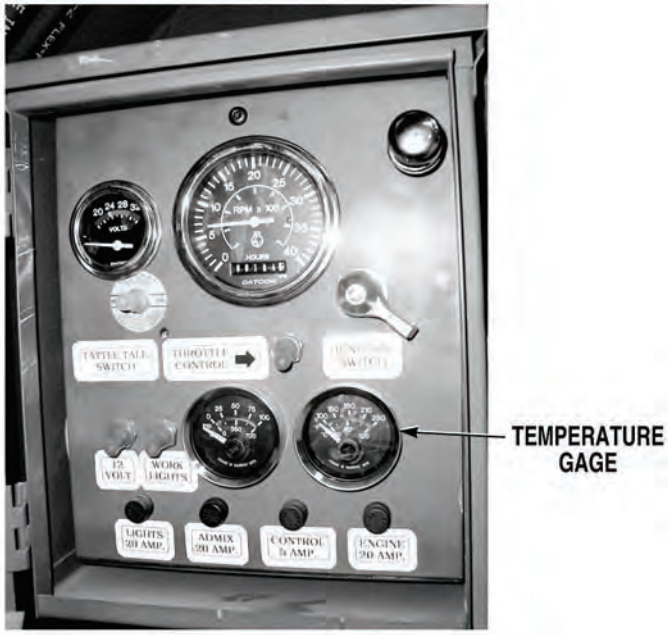

25. ENGINE OVERHEATS (ENGINE SHUTDOWN OCCURS WHEN WATER TEMPERATURE GAGE READS ABOVE 215°F [102°C] (CONT).

KNOWN INFO

- Temperature gage reading correct.
- Radiator not blocked.
- Radiator or radiator hoses not kinked or damaged.
- Fan blade not damaged.
- Fan belt not loose or damaged.
- Air compressor or air compressor hoses not kinked or damaged.
- Radiator coolant level OK.
- Radiator cap OK.
- Radiator and connecting hoses not leaking.
- Air compressor and connecting hoses not leaking.
- Water pump OK.
- Engine oil at correct level.

POSSIBLE PROBLEMS

Thermostat faulty.

12.

WARNING

Read WARNING on Page 4-837

Does engine overheat after replacing thermostat?

NO → Fault corrected. Verify repair, go to Step 16 of this Fault.

YES → Notify Supervisor.

TEST OPTIONS

Operational test.

REASON FOR QUESTION

If thermostat is not operating correctly, engine coolant may overheat causing engine to shut down.

WARNING

Ensure engine is cool before performing this task or injury to personnel may result.

OPERATIONAL TEST

(1) If running, shut OFF engine, (Para 2-19).

(2) Replace engine thermostat, (Para 3-100).

(3) Start engine, (Para 2-19).

(4) Operate system in accordance with Unit SOP. Note engine temperature during system operation.

(5) Check if engine water temperature goes above 215°F (102°C).

(a) If engine water temperature does not go above 215°F (102°C), fault has been corrected. Verify repair, go to Step 16 of this Fault.

(b) If engine water temperature goes above 215°F (102°C), notify Supervisor.

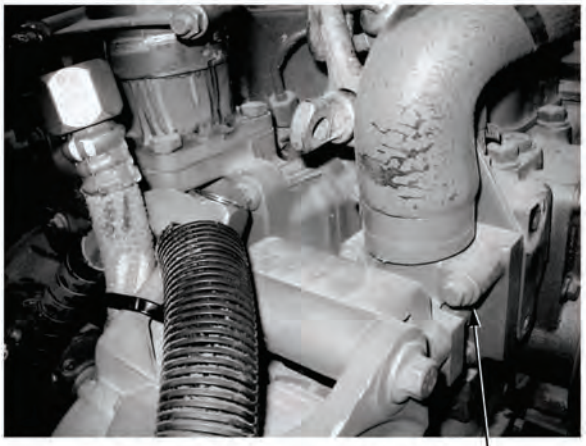

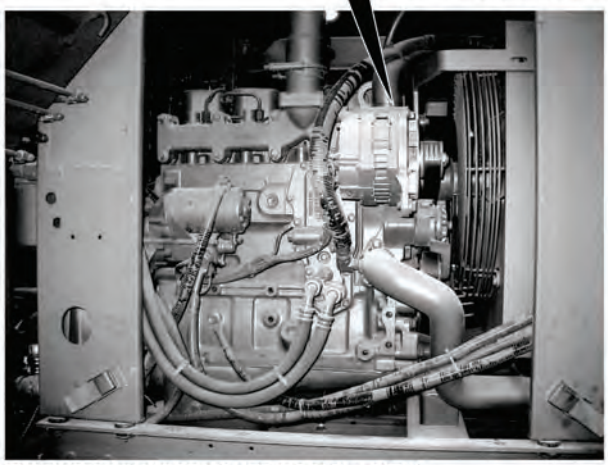

(ENGINE SHOWN REMOVED FOR CLARITY)

25. ENGINE OVERHEATS (ENGINE SHUTDOWN OCCURS WHEN WATER TEMPERATURE GAGE READS ABOVE 215°F [102°C] (CONT).

KNOWN INFO

- Temperature gage reading correct.
- Radiator not blocked.
- Radiator or radiator hoses not kinked or damaged.
- Fan blade not damaged.
- Fan belt not loose or damaged.
- Air compressor or air compressor hoses not kinked or damaged.
- Radiator coolant level OK.
- Radiator cap OK.
- Engine oil at correct level.

POSSIBLE PROBLEMS

- Radiator and connecting hoses leaking.
- Air compressor and connecting hoses leaking.
- Water pump faulty.

13.

Is radiator or connecting hoses free from leaks?

NO → Repair or replace leaking radiator and connecting hoses, (Para 3-21). Verify repair go to Step 16 of this Fault.

YES ↓

TEST OPTIONS

Visual inspection.

REASON FOR QUESTION

If radiator or connecting hoses are not free from leaks, engine may overheat.

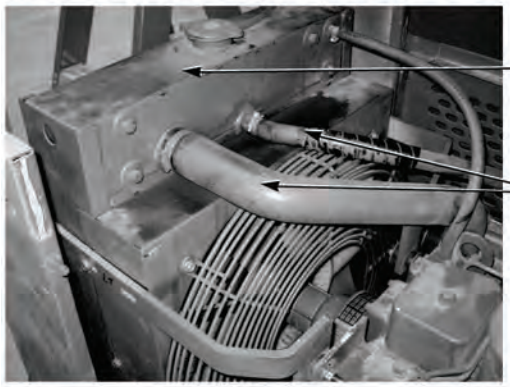

VISUAL INSPECTION
Check if radiator and connecting hoses are free from leaks. (a) If radiator and connecting hoses are leaking, repair or replace radiator and connecting hoses, (Para 3-21). Verify repair, go to Step 16 of this Fault. (b) If radiator and connecting hoses are free from leaks, go to Step 14 of this Fault.

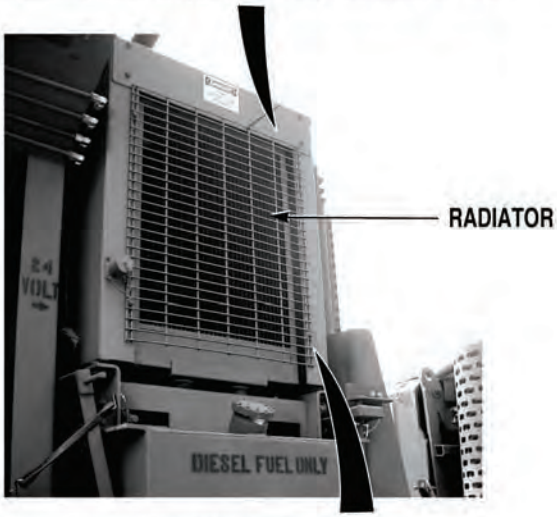

25. ENGINE OVERHEATS (ENGINE SHUTDOWN OCCURS WHEN WATER TEMPERATURE GAGE READS ABOVE 215°F [102°C] (CONT).

KNOWN INFO

- Temperature gage reading correct.
- Radiator not blocked.
- Radiator or radiator hoses not kinked or damaged.
- Fan blade not damaged.
- Fan belt not loose or damaged.
- Air compressor or air compressor hoses not kinked or damaged.
- Radiator coolant level OK.
- Radiator cap OK.
- Engine oil at correct level.
- Radiator and connecting hoses not leaking.

POSSIBLE PROBLEMS

- Air compressor and connecting hoses leaking.
- Water pump faulty.

14.

Are air compressor and connecting hoses free from leaks?

NO → Repair or replace leaking air compressor, and connecting hoses, (Para 3-110). Verify repair, go to Step 16 of this Fault.

YES ↓

TEST OPTIONS

Visual inspection.

REASON FOR QUESTION

If air compressor or connecting hoses are leaking engine coolant, engine may overheat.

VISUAL INSPECTION
Check if air compressor and connecting hoses are free from leaks. (a) If air compressor or connecting hoses are not free from leaks, repair or replace air compressor and connecting hoses, (Para 3-110). Verify repair, go to Step 16 of this Fault. (b) If air compressor or connecting hoses are free from leaks, go to Step 15 of this Fault.

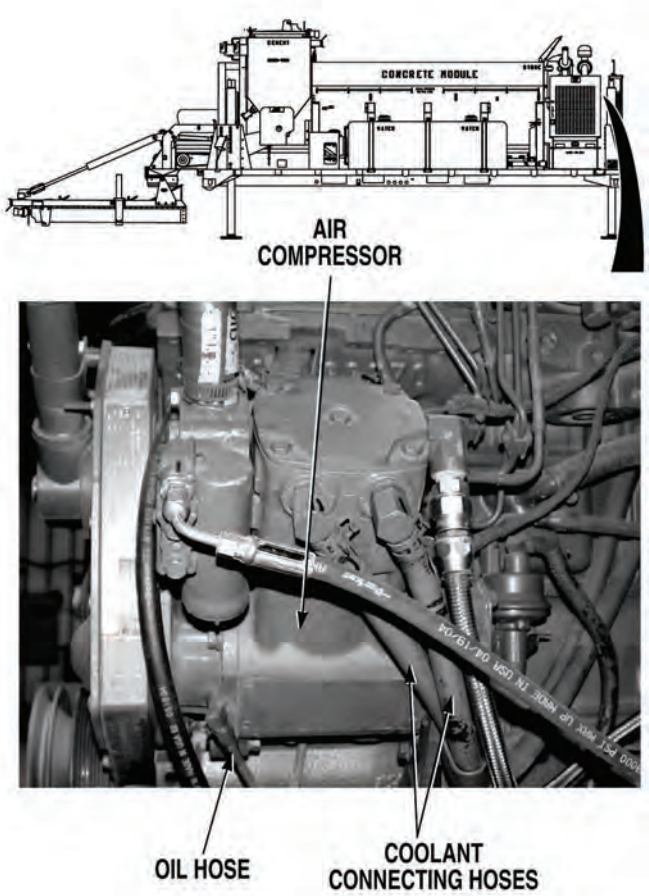

25. ENGINE OVERHEATS (ENGINE SHUTDOWN OCCURS WHEN WATER TEMPERATURE GAGE READS ABOVE 215°F [102°C] (CONT).

KNOWN INFO
Temperature gage reading correct. Radiator not blocked. Radiator or radiator hoses not kinked or damaged. Fan blade not damaged. Fan belt not loose or damaged. Air compressor or air compressor hoses not kinked or damaged. Radiator coolant level OK. Radiator cap OK. Engine oil at correct level. Radiator and connecting hoses not leaking. Air compressor and connecting hoses not leaking.
POSSIBLE PROBLEMS
Water pump faulty.

15.

Is water pump free from leaks?

NO → Replace water pump, (Para 3-105). Verify repair, go to Step 16 of this Fault.

YES → Engine is faulty. Notify Supervisor.

TEST OPTIONS
Visual inspection.
REASON FOR QUESTION
If water pump is leaking engine coolant, engine may overheat.

VISUAL INSPECTION
Check if water pump is free from leaks. (a) If water pump is leaking, replace water pump, (Para 3-105). Verify repair, go to Step 16 of this Fault. (b) If water pump is free from leaks, engine is faulty. Remove radiator pressure tester and reinstall radiator cap. Notify Supervisor.

25. ENGINE OVERHEATS (ENGINE SHUTDOWN OCCURS WHEN WATER TEMPERATURE GAGE READS ABOVE 215°F [102°C] (CONT).

KNOWN INFO
Temperature gage reading correct. Radiator not blocked. Radiator or radiator hoses not kinked or damaged. Fan blade not damaged. Fan belt not loose or damaged. Air compressor or air compressor hoses not kinked or damaged. Radiator coolant level OK. Radiator cap OK. Engine oil at correct level. Radiator and connecting hoses not leaking. Air compressor and connecting hoses not leaking. Water pump OK.
POSSIBLE PROBLEMS
None.

16.

Does engine overheat?

NO → Fault not corrected. Notify Supervisor.

YES → Fault corrected.

TEST OPTIONS
Verify repair.
REASON FOR QUESTION
If engine does not overheat, fault has been corrected.

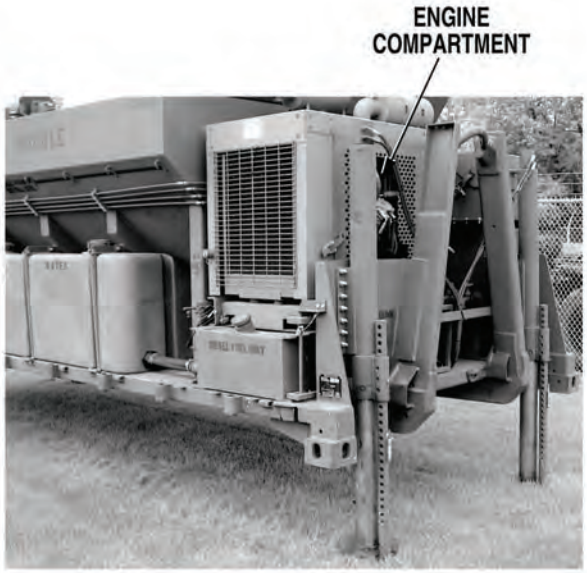

VERIFY REPAIR

(1) If connected, disconnect radiator pressure tester.

(2) If removed, install radiator cap, (Para 3-83).

(3) Install front engine access panel, (Para 3-78).

(4) Start engine, (Para 2-19).

(5) Operate system in accordance with Unit SOP. Note engine temperature gage during system operation.

(6) Check if engine water temperature goes above 210°F (99°C).

  (a) If engine water temperature does not go above 210°F (99°C), fault has been corrected.

  (b) If engine water temperature goes above 210°F (99°C), fault has not been corrected. Notify Supervisor.

26. ENGINE STARTS, BUT RUNS ROUGH, HAS LOW POWER, EXCESSIVE EXHAUST SMOKE, EXCESSIVE FUEL CONSUMPTION, OR STOPS.

INITIAL SETUP

Tools and Special Tools
Tool Kit, General Mechanic's: Automotive (Item 19, Appendix I)

Equipment Condition
Concrete Mobile Mixer unloaded from PLS, (Para 2-5)
Engine OFF, (Para 2-19)

KNOWN INFO
Nothing.

POSSIBLE PROBLEMS
Fuel level in fuel tank insufficient.
Oil level incorrect.
Fuel lines leak, kinked, or damaged.
Air in fuel system.
Air filter clogged.
Air intake assembly damaged.
Air intake assembly hardware loose or missing.
Exhaust assembly damaged.
Exhaust assembly hardware loose or missing.
Exhaust assembly blocked.
Temperature gage readings incorrect.
Engine overheated.
Oil pressure gage reading incorrect.
Temperature gage faulty.
Oil pressure gage faulty.
Fuel contaminated.
Inline fuel filter or fuel/water separator filter clogged.
Fuel transfer pump faulty.

START

1.

WARNING
Read WARNING on Page 4-847

Is there sufficient fuel in fuel tank?

NO → Fill fuel tank (Para 1-5). Then go to Step 2.

YES

TEST OPTIONS
Visual inspection.

REASON FOR QUESTION
If fuel level is low, engine may not run correctly or may stop.

WARNING

To prevent personal injury when working with fuel, do not smoke or use open flame. Fuel is flammable and may explode. Keep fire extinguisher within reach.

VISUAL INSPECTION
Check fuel level in fuel tank, (Para 1-5). (a) If fuel level in fuel tank is low, fill fuel tank, (Para 1-5). Then go to Step 2 of this Fault. (b) If fuel level in fuel tank is sufficient, go to Step 2 of this Fault.

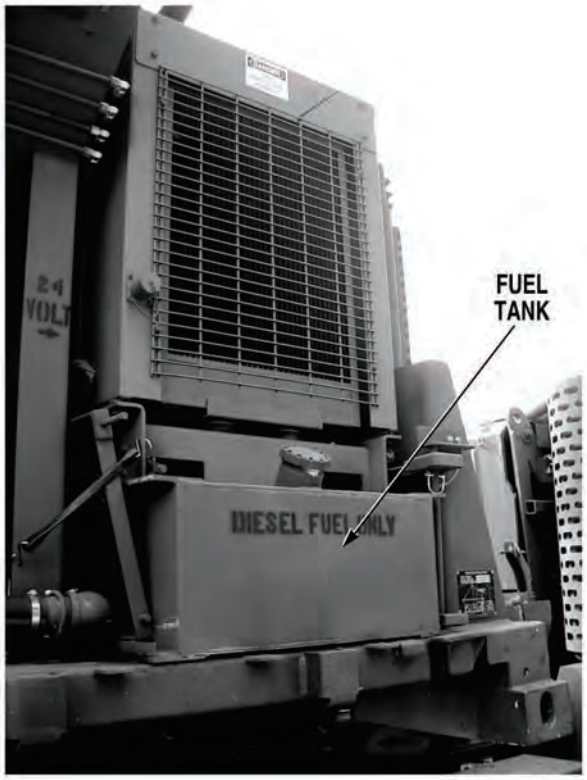

26. ENGINE STARTS, BUT RUNS ROUGH, HAS LOW POWER, EXCESSIVE EXHAUST SMOKE, EXCESSIVE FUEL CONSUMPTION, OR STOPS (CONT).

KNOWN INFO
Fuel level in fuel tank OK.
POSSIBLE PROBLEMS
Oil level incorrect. Fuel lines leak, kinked, or damaged. Air in fuel system. Air filter clogged. Air intake assembly damaged. Air intake assembly hardware loose or missing. Exhaust assembly damaged. Exhaust assembly hardware loose or missing. Exhaust assembly blocked. Temperature gage readings incorrect. Engine overheated. Oil pressure gage reading incorrect. Temperature gage faulty. Oil pressure gage faulty. Fuel contaminated. Inline fuel filter or fuel/water separator filter clogged. Fuel transfer pump faulty.

2.

Is engine oil at correct level?

NO → Fill or drain engine oil to correct level, (Para 2-6). Then go to Step 3 of this Fault.

YES ↓

TEST OPTIONS
Visual inspection.
REASON FOR QUESTION
If engine oil level is too high or low, engine may not operate correctly.

VISUAL INSPECTION

(1) Remove front engine access panel, (Para 3-78).

(2) Check engine oil level, (Para 2-6).

(a) If engine oil level is incorrect, drain or fill engine oil to correct level, (Para 2-6). Then go to Step 3 of this Fault.

(b) If engine oil level is correct, go to Step 3 of this Fault.

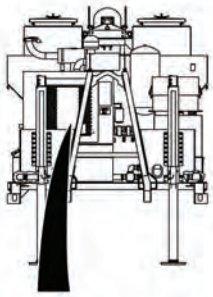

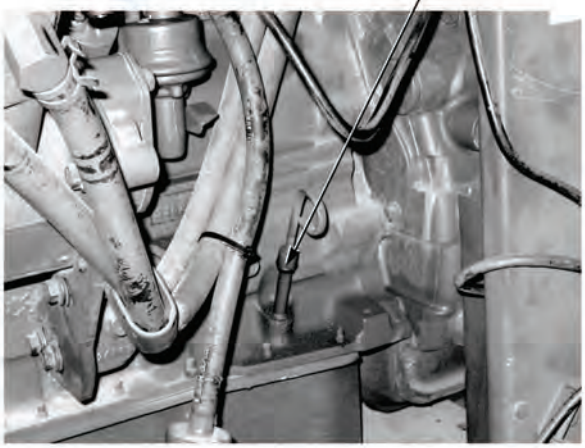

26. ENGINE STARTS, BUT RUNS ROUGH, HAS LOW POWER, EXCESSIVE EXHAUST SMOKE, EXCESSIVE FUEL CONSUMPTION, OR STOPS (CONT).

KNOWN INFO
Fuel level in fuel tank OK. Oil level OK.
POSSIBLE PROBLEMS
Fuel lines leak, kinked, or damaged. Air in fuel system. Air filter clogged. Air intake assembly damaged. Air intake assembly hardware loose or missing. Exhaust assembly damaged. Exhaust assembly hardware loose or missing. Exhaust assembly blocked. Temperature gage readings incorrect. Engine overheated. Oil pressure gage reading incorrect. Temperature gage faulty. Oil pressure gage faulty. Fuel contaminated. Inline fuel filter or fuel/water separator filter clogged. Fuel transfer pump faulty.

3.

WARNING

Read WARNING on Page 4-851

Are all fuel lines free from kinks, leaks, and damage?

NO → Repair leaks or replace damaged fuel lines, (Para 3-133). Verify repair, go to Step 18 of this Fault.

YES ↓

TEST OPTIONS
Visual inspection.
REASON FOR QUESTION
If fuel lines leak or are kinked or damaged, engine may not operate correctly.

WARNING

To prevent personal injury when working with fuel, do not smoke or use open flame. Fuel is flammable and may explode. Keep fire extinguisher within reach.

VISUAL INSPECTION
Check if fuel lines are free from kinks, leaks, damage. (a) If fuel lines are not free from kinks, leaks, and damage, repair leaks or replace damaged fuel lines, (Para 3-133). Verify repair, go to Step 18 of this Fault. (b) If fuel lines are free from kinks, leaks, and damage, go to Step 4 of this Fault.

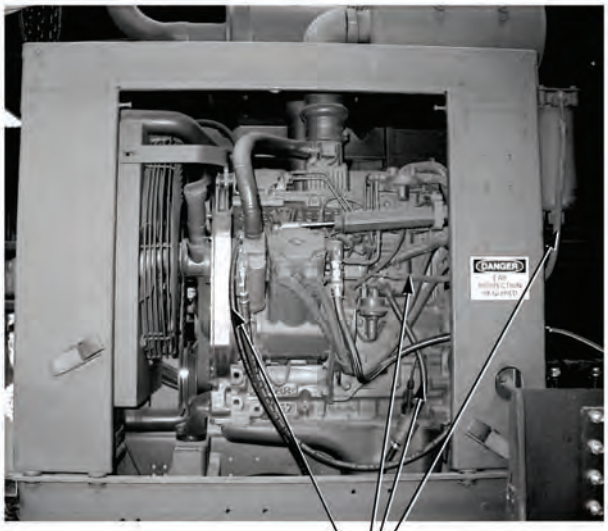

FUEL LINES

26. ENGINE STARTS, BUT RUNS ROUGH, HAS LOW POWER, EXCESSIVE EXHAUST SMOKE, EXCESSIVE FUEL CONSUMPTION, OR STOPS (CONT).

KNOWN INFO

Fuel level in fuel tank OK.
Oil level OK.
Fuel lines not leaking, kinked, or damaged.

POSSIBLE PROBLEMS

Air in fuel system.
Air filter clogged.
Air intake assembly damaged.
Air intake assembly hardware loose or missing.
Exhaust assembly damaged.
Exhaust assembly hardware loose or missing.
Exhaust assembly blocked.
Temperature gage readings incorrect.
Engine overheated.
Oil pressure gage reading incorrect.
Temperature gage faulty.
Oil pressure gage faulty.
Fuel contaminated.
Inline fuel filter or fuel/water separator filter clogged.
Fuel transfer pump faulty.

4.

WARNING
Read WARNING on Page 4-853

Is air present at fuel line bleed screw when activating fuel transfer pump priming lever?

NO → Go to Step 5 of this Fault.

YES → Air is leaking into fuel line between tank and fuel transfer pump. Locate and repair air leak between fuel tank and fuel transfer pump. Then activate fuel transfer pump priming lever, (Para 3-8) until fuel is present at a steady stream at fuel line bleed screw.

TEST OPTIONS

Operational test.

REASON FOR QUESTION

If air is present at fuel line bleed screw, air is entering fuel system between tank and fuel transfer pump.

WARNING

To prevent personal injury when working with fuel, do not smoke or use open flame. Fuel is flammable and may explode. Keep fire extinguisher within reach.

OPERATIONAL TEST

(1) Loosen fuel line bleed screw, (Para 3-8).

(2) While activating fuel transfer pump priming lever, (Para 3-8), check if air is present at fuel line bleed screw.

(a) If air is not present at fuel line bleed screw, go to Step 5 of this Fault.

(b) If air is present at fuel line bleed screw, locate and repair air leak between fuel tank and fuel transfer pump. Then activate fuel transfer pump priming lever until fuel is present at a steady stream at fuel line bleed screw. Verify repair, go to Step 18 of this Fault.

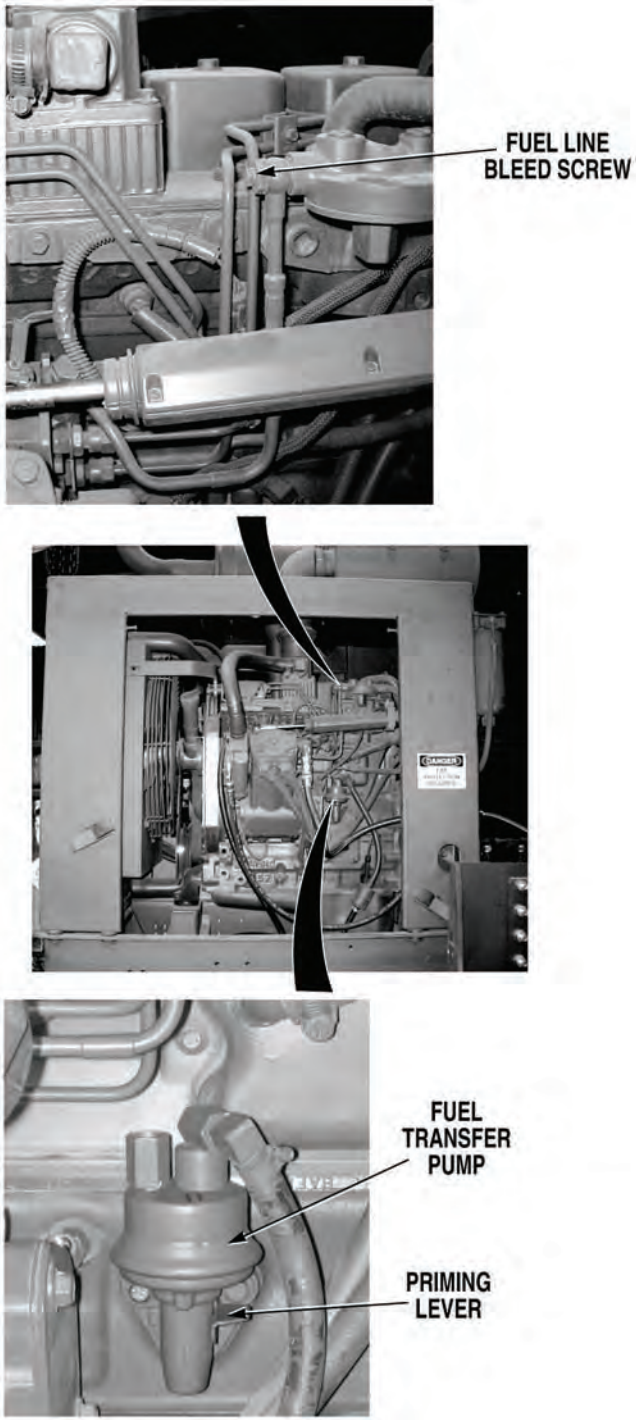

26. ENGINE STARTS, BUT RUNS ROUGH, HAS LOW POWER, EXCESSIVE EXHAUST SMOKE, EXCESSIVE FUEL CONSUMPTION, OR STOPS (CONT).

KNOWN INFO

Fuel level in fuel tank OK.
Oil level OK.
Fuel lines not leaking, kinked, or damaged.
No air in fuel system.

POSSIBLE PROBLEMS

Air filter clogged.
Air intake assembly damaged.
Air intake assembly hardware loose or missing.
Exhaust assembly damaged.
Exhaust assembly hardware loose or missing.
Exhaust assembly blocked.
Temperature gage readings incorrect.
Engine overheated.
Oil pressure gage reading incorrect.
Temperature gage faulty.
Oil pressure gage faulty.
Fuel contaminated.
Inline fuel filter or fuel/water separator filter clogged.
Fuel transfer pump faulty.

5.

Is air restriction indicator in red area?

NO → Go to Step 6 of this Fault.

YES → Replace air filter, (Para 3-4). Verify repair, go to Step 18 of this Fault.

TEST OPTIONS

Visual inspection.

REASON FOR QUESTION

If air restriction indicator is in red area, air filter is dirty and may cause engine to operate incorrectly.

VISUAL INSPECTION
Check if air restriction indicator is in red area, (Para 2-9). (Red band is visible). (a) If air restriction indicator is not in red area, go to Step 6 of this Fault. (b) If air restriction indicator is in red area, replace air intake filter, (Para 3-4). Verify repair, go to Step 18 of this Fault.

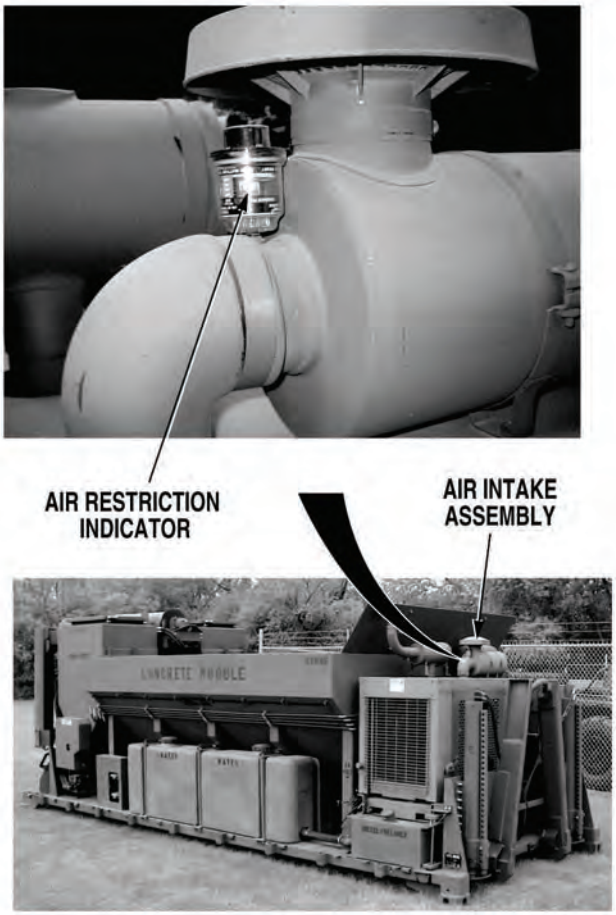

26. ENGINE STARTS, BUT RUNS ROUGH, HAS LOW POWER, EXCESSIVE EXHAUST SMOKE, EXCESSIVE FUEL CONSUMPTION, OR STOPS (CONT).

KNOWN INFO
Oil level OK. Fuel lines not leaking, kinked, or damaged. No air in fuel system. Air filter not clogged.
POSSIBLE PROBLEMS
Air intake assembly damaged. Air intake assembly hardware loose or missing. Exhaust assembly damaged. Exhaust assembly hardware loose or missing. Exhaust assembly blocked. Temperature gage readings incorrect. Engine overheated. Oil pressure gage reading incorrect. Temperature gage faulty. Oil pressure gage faulty. Fuel contaminated. Inline fuel filter or fuel/water separator filter clogged. Fuel transfer pump faulty.

6.

Is air intake assembly free from damage?

NO → Repair or replace air intake assembly, (Para 3-3). Verify repair, go to Step 18 of this Fault.

YES ↓

TEST OPTIONS
Visual inspection.
REASON FOR QUESTION
If air intake assembly is damaged, engine may not operate correctly.

VISUAL INSPECTION
Check if air intake assembly is free from damage. (a) If air intake assembly is damaged, repair or replace air intake assembly, (Para 3-3). Verify repair, go to Step 18 of this Fault. (b) If air intake assembly is free from damage, go to Step 7 of this Fault.

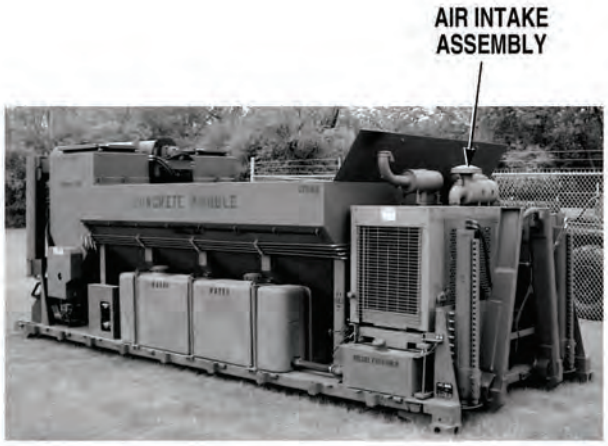

26. ENGINE STARTS, BUT RUNS ROUGH, HAS LOW POWER, EXCESSIVE EXHAUST SMOKE, EXCESSIVE FUEL CONSUMPTION, OR STOPS (CONT).

KNOWN INFO

- Oil level OK.
- Fuel lines not leaking, kinked, or damaged.
- No air in fuel system.
- Air filter not clogged.
- Air intake assembly not damaged.

POSSIBLE PROBLEMS

- Air intake assembly hardware loose or missing.
- Exhaust assembly damaged.
- Exhaust assembly hardware loose or missing.
- Exhaust assembly blocked.
- Temperature gage readings incorrect.
- Engine overheated.
- Oil pressure gage reading incorrect.
- Temperature gage faulty.
- Oil pressure gage faulty.
- Fuel contaminated.
- Inline fuel filter or fuel/water separator filter clogged.
- Fuel transfer pump faulty.

7.

Is all air intake assembly hardware present and secure?

NO → Tighten loose and replace missing hardware, (Para 3-3). Verify repair, go to Step 18 of this Fault.

YES ↓

TEST OPTIONS

Visual inspection.

REASON FOR QUESTION

If air intake assembly hardware is loose or missing, engine may not operate correctly.

VISUAL INSPECTION
Check if all air intake assembly hardware is present and secure. (a) If air intake assembly hardware is loose or missing, tighten loose and replace missing hardware, (Para 3-3). Verify repair, go to Step 18 of this Fault. (b) If air intake assembly hardware is present and secure, go to Step 8 of this Fault.

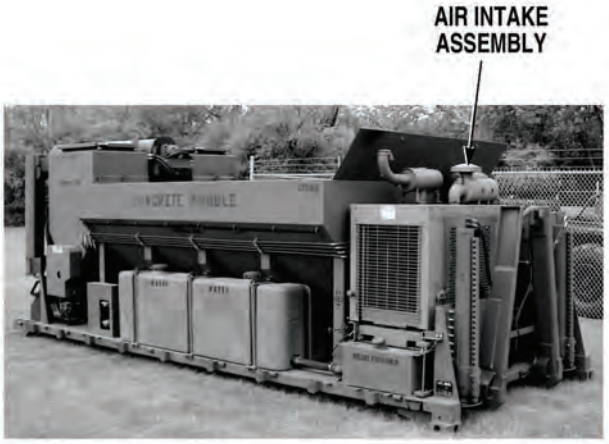

26. ENGINE STARTS, BUT RUNS ROUGH, HAS LOW POWER, EXCESSIVE EXHAUST SMOKE, EXCESSIVE FUEL CONSUMPTION, OR STOPS (CONT).

KNOWN INFO

- Oil level OK.
- Fuel lines not leaking, kinked, or damaged.
- No air in fuel system.
- Air filter not clogged.
- Air intake assembly not damaged.
- Air intake assembly hardware not loose or missing.

POSSIBLE PROBLEMS

- Exhaust assembly damaged.
- Exhaust assembly hardware loose or missing.
- Exhaust assembly blocked.
- Temperature gage readings incorrect.
- Engine overheated.
- Oil pressure gage reading incorrect.
- Temperature gage faulty.
- Oil pressure gage faulty.
- Fuel contaminated.
- Inline fuel filter or fuel/water separator filter clogged.
- Fuel transfer pump faulty.

8.

WARNING

Read WARNING on Page 4-861

Is exhaust assembly free from damage?

NO → Repair or replace exhaust assembly, (Para 3-5). Verify repair, go to Step 18 of this Fault.

YES ↓

TEST OPTIONS

Visual inspection.

REASON FOR QUESTION

If exhaust assembly is damaged, exhaust assembly may have excessive noise or vibration and engine may not operate correctly.

WARNING

The exhaust pipe and muffler are very hot during engine operation. Do not touch these parts with bare hands, or allow body to come in contact with exhaust pipe or muffler. Failure to comply could cause serious injury to personnel.

VISUAL INSPECTION
Check if exhaust assembly is free from damage. (a) If exhaust assembly is damaged, repair or replace exhaust assembly, (Para 3-5). Verify repair, go to Step 17 of this Fault. (b) If exhaust assembly is free from damage, go to Step 9 of this Fault.

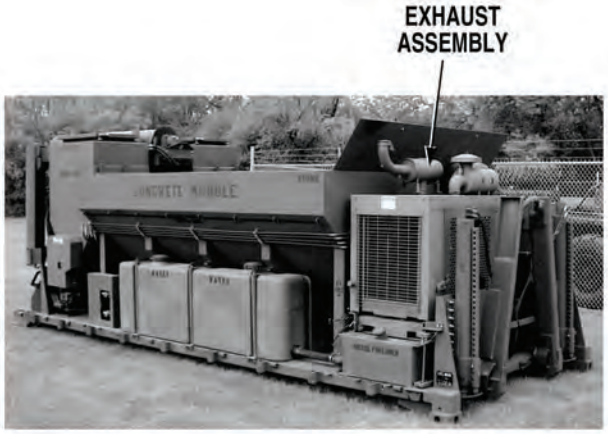

26. ENGINE STARTS, BUT RUNS ROUGH, HAS LOW POWER, EXCESSIVE EXHAUST SMOKE, EXCESSIVE FUEL CONSUMPTION, OR STOPS (CONT).

KNOWN INFO

- Oil level OK.
- Fuel lines not leaking, kinked, or damaged.
- No air in fuel system.
- Air filter not clogged.
- Air intake assembly not damaged.
- Air intake assembly hardware not loose or missing.
- Exhaust assembly not damaged.

POSSIBLE PROBLEMS

- Exhaust assembly hardware loose or missing.
- Exhaust assembly blocked.
- Temperature gage readings incorrect.
- Engine overheated.
- Oil pressure gage reading incorrect.
- Temperature gage faulty.
- Oil pressure gage faulty.
- Fuel contaminated.
- Inline fuel filter or fuel/water separator filter clogged.
- Fuel transfer pump faulty.

9.

WARNING

Read WARNING on Page 4-863

Is all exhaust assembly hardware present and secure?

NO → Tighten loose and replace missing hardware, (Para 3-5). Verify repair, go to Step 18 of this Fault

YES ↓

TEST OPTIONS

Visual inspection.

REASON FOR QUESTION

If exhaust assembly hardware is loose or missing, exhaust assembly may have excessive noise and vibration or engine may not operate correctly.

WARNING

The exhaust pipe and muffler are very hot during engine operation. Do not touch these parts with bare hands, or allow body to come in contact with exhaust pipe or muffler. Failure to comply could cause serious injury to personnel.

VISUAL INSPECTION
Check if exhaust assembly hardware is present and secure. (a) If exhaust assembly hardware is loose or missing, tighten loose and replace missing hardware, (Para 3-5). Verify repair, go to Step 18 of this Fault. (b) If exhaust assembly hardware is present and secure, go to Step 10 of this Fault.

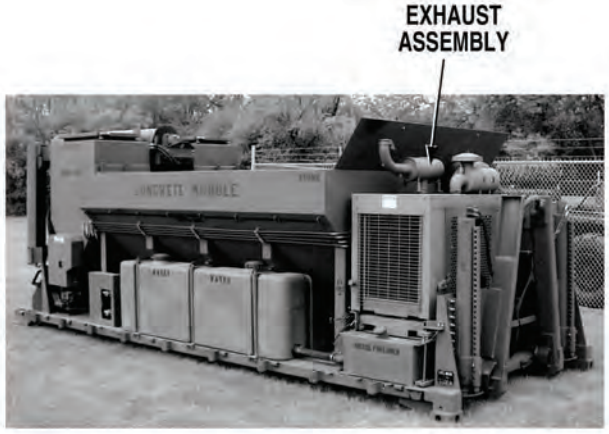

26. ENGINE STARTS, BUT RUNS ROUGH, HAS LOW POWER, EXCESSIVE EXHAUST SMOKE, EXCESSIVE FUEL CONSUMPTION, OR STOPS (CONT).

KNOWN INFO

- Oil level OK.
- Fuel lines not leaking, kinked, or damaged.
- No air in fuel system.
- Air filter not clogged.
- Air intake assembly not damaged.
- Air intake assembly hardware not loose or missing.
- Exhaust assembly not damaged.
- Exhaust assembly hardware not loose or missing.

POSSIBLE PROBLEMS

- Exhaust assembly blocked.
- Temperature gage readings incorrect.
- Engine overheated.
- Oil pressure gage reading incorrect.
- Temperature gage faulty.
- Oil pressure gage faulty.
- Fuel contaminated.
- Inline fuel filter or fuel/water separator filter clogged.
- Fuel transfer pump faulty.

10.

WARNING

Read WARNING on Page 4-865

Is exhaust assembly free from restrictions?

NO → Remove restrictions or replace exhaust assembly, (Para 3-5). Verify repair, go to Step 18 of this Fault.

YES ↓

TEST OPTIONS

Visual inspection.

REASON FOR QUESTION

If exhaust assembly is blocked, engine will not operate correctly.

WARNING

The exhaust pipe and muffler are very hot during engine operation. Do not touch these parts with bare hands, or allow body to come in contact with exhaust pipe or muffler. Failure to comply could cause serious injury to personnel.

VISUAL INSPECTION
Check if exhaust assembly is free from restrictions. (a) If exhaust assembly is blocked, remove restrictions or replace exhaust assembly, (Para 3-5). Verify repair, go to Step 18 of this Fault. (b) If exhaust assembly is free from restrictions, go to Step 11 of this Fault.

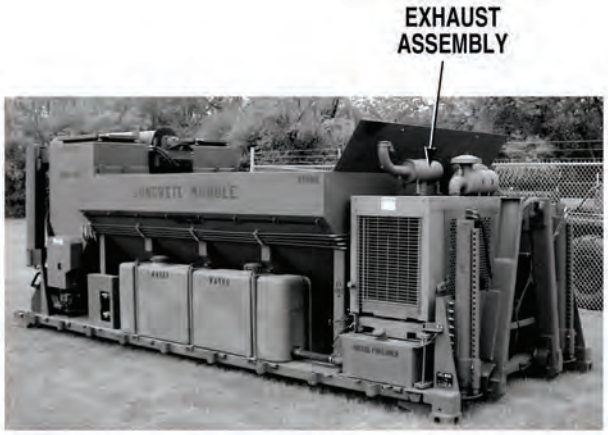

26. ENGINE STARTS, BUT RUNS ROUGH, HAS LOW POWER, EXCESSIVE EXHAUST SMOKE, EXCESSIVE FUEL CONSUMPTION, OR STOPS (CONT).

KNOWN INFO

- Oil level OK.
- Fuel lines not leaking, kinked, or damaged.
- No air in fuel system.
- Air filter not clogged.
- Air intake assembly not damaged.
- Air intake assembly hardware not loose or missing.
- Exhaust assembly not damaged.
- Exhaust assembly hardware not loose or missing.
- Exhaust assembly not blocked.

POSSIBLE PROBLEMS

- Temperature gage readings incorrect.
- Engine overheated.
- Oil pressure gage reading incorrect.
- Temperature gage faulty.
- Oil pressure gage faulty.
- Fuel contaminated.
- Inline fuel filter or fuel/water separator filter clogged.
- Fuel transfer pump faulty.

11.

Does engine stop when TATTLE TALE SWITCH is released during engine startup?

NO → Go to Step 16 of this Fault.

YES ↓

TEST OPTIONS

Operational test.

REASON FOR QUESTION

To further isolate fault.

OPERATIONAL TEST
(1) Start engine, (Para 2-19). (2) Check if engine stops when TATTLE TALE SWITCH is released. (a) If engine does not stop, go to Step 16 of this Fault. (b) If engine stops, go to Step 12 of this Fault.

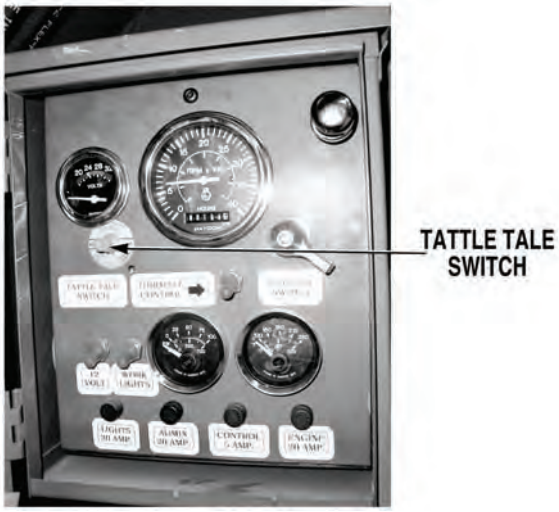

26. ENGINE STARTS, BUT RUNS ROUGH, HAS LOW POWER, EXCESSIVE EXHAUST SMOKE, EXCESSIVE FUEL CONSUMPTION, OR STOPS (CONT).

KNOWN INFO

- Oil level OK.
- Fuel lines not leaking, kinked, or damaged.
- No air in fuel system.
- Air filter not clogged.
- Air intake assembly not damaged.
- Air intake assembly hardware not loose or missing.
- Exhaust assembly not damaged.
- Exhaust assembly hardware not loose or missing.
- Exhaust assembly not blocked.
- Fuel not contaminated.
- Inline fuel filter and fuel/water separator filer OK.
- Fuel transfer pump OK.

POSSIBLE PROBLEMS

- Temperature gage readings incorrect.
- Engine overheated.
- Oil pressure gage reading incorrect.
- Temperature gage faulty.
- Oil pressure gage faulty.

12.

Is temperature gage reading greater than 215°F (102°C) when IGNITION SWITCH is turned ON?

NO → Go to Step 14 of this Fault.

YES ↓

TEST OPTIONS

Operational test.

REASON FOR QUESTION

If temperature gage reads, greater than 215°F (102°C), engine will shut down.

OPERATIONAL TEST
(1) If OFF, turn IGNITION SWITCH ON, (Para 2-1). Do not start engine. (2) Check if temperature gage reading is greater than 215°F (102°C). (a) If temperature gage reading is not greater than 215°F (102°C), go to Step 14 of this Fault. (b) If temperature gage reading is greater than 215°F (102°C), go to Step 13 of this Fault.

26. ENGINE STARTS, BUT RUNS ROUGH, HAS LOW POWER, EXCESSIVE EXHAUST SMOKE, EXCESSIVE FUEL CONSUMPTION, OR STOPS (CONT).

KNOWN INFO
Oil level OK.
Fuel lines not leaking, kinked, or damaged.
No air in fuel system.
Air filter not clogged.
Air intake assembly not damaged.
Air intake assembly hardware not loose or missing.
Exhaust assembly not damaged.
Exhaust assembly hardware not loose or missing.
Exhaust assembly not blocked.
Fuel not contaminated.
Inline fuel filter and fuel/water separator filter OK.
Fuel transfer pump OK.
Oil pressure gage reading OK.
Temperature gage OK.
Oil pressure gage OK.

POSSIBLE PROBLEMS
Temperature gage readings incorrect.
Engine overheated.

13.

Is engine overheated?

NO → Go to “Engine Gage Reading Incorrect”, (Fault 23).

YES → Go to “Engine Overheats (Engine Shutdown Occurs When Water Temperature Gage Reads Above 215°F (102°C)”, (Fault 25).

TEST OPTIONS
Operational test.

REASON FOR QUESTION
To determine best method to continue troubleshooting.

OPERATIONAL TEST
Check if engine is overheated. (a) If engine is not overheated, go to “Engine Gage Reading Incorrect”, (Fault 23). (b) If engine is overheated, go to “Engine Overheats (Engine Shutdown Occurs When Water Temperature Gage Reads Above 215°F (102°C)”, (Fault 25).

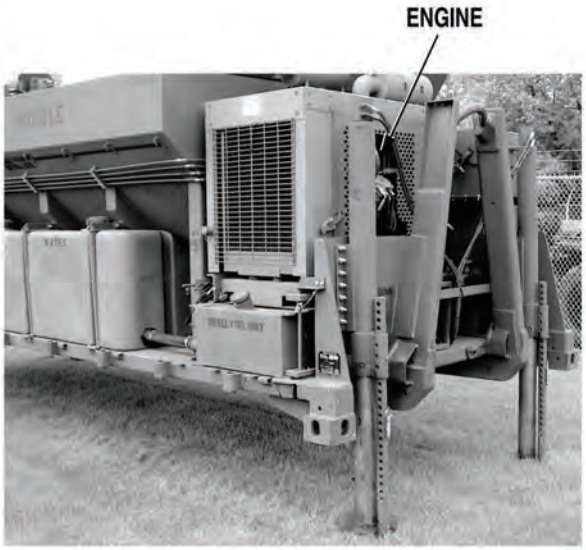

26. ENGINE STARTS, BUT RUNS ROUGH, HAS LOW POWER, EXCESSIVE EXHAUST SMOKE, EXCESSIVE FUEL CONSUMPTION, OR STOPS (CONT).

KNOWN INFO

- Oil level OK.
- Fuel lines not leaking, kinked, or damaged.
- No air in fuel system.
- Air filter not clogged.
- Air intake assembly not damaged.
- Air intake assembly hardware not loose or missing.
- Exhaust assembly not damaged.
- Exhaust assembly hardware not loose or missing.
- Exhaust assembly not blocked.
- Fuel not contaminated.
- Inline fuel filter and fuel/water separator filter OK.
- Fuel transfer pump OK.
- Temperature gage readings OK.
- Engine not overheated.

POSSIBLE PROBLEMS

- Oil pressure gage reading incorrect.
- Temperature gage faulty.
- Oil pressure gage faulty.

14.

Is oil pressure gage reading greater than 10 psi (69 kPa) when engine is cranking (Do not press TATTLE TALE SWITCH while engine is cranking)?

NO → Go to “Engine Gage Reading Incorrect”, (Fault 23).

YES ↓

TEST OPTIONS

Operational test.

REASON FOR QUESTION

If oil pressure gage reading is not greater than 10 psi (69 kPa), engine will shut down.

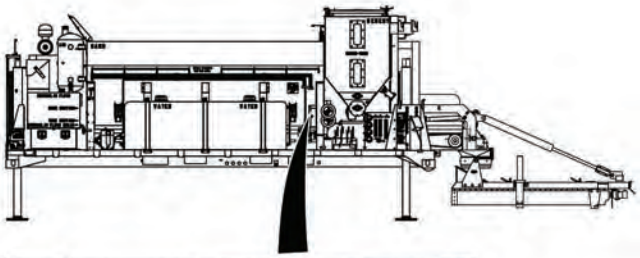

OPERATIONAL TEST

(1) Perform start engine procedure, (Para 2-19). Do not press TATTLE TALE SWITCH while cranking engine.

(2) Check if oil pressure gage reading is greater than 10 psi (69 kPa) while engine is cranking.

(a) If oil pressure gage reading is not greater than 10 psi (69 kPa), go to “Engine Gage Reading Incorrect”, (Fault 23).

(b) If oil pressure gage reading is greater than 10 psi (69 kPa), go to Step 15 of this Fault.

26. ENGINE STARTS, BUT RUNS ROUGH, HAS LOW POWER, EXCESSIVE EXHAUST SMOKE, EXCESSIVE FUEL CONSUMPTION, OR STOPS (CONT).

KNOWN INFO

- Oil level OK.
- Fuel lines not leaking, kinked, or damaged.
- No air in fuel system.
- Air filter not clogged.
- Air intake assembly not damaged.
- Air intake assembly hardware not loose or missing.
- Exhaust assembly not damaged.
- Exhaust assembly hardware not loose or missing.
- Exhaust assembly not blocked.
- Fuel not contaminated.
- Inline fuel filter and fuel/water separator filter OK.
- Fuel transfer pump OK.
- Temperature gage readings OK.
- Engine not overheated.
- Oil pressure gage reading correct.

POSSIBLE PROBLEMS

- Temperature gage faulty.
- Oil pressure gage faulty.

15.

WARNING

Read WARNING on Page 4-875

Does TATTLE TALE SWITCH remain set when it is pressed and released when oil pressure gage connector is disconnected and IGNITION SWITCH is turned ON?

NO → Replace water temperature gage, (Para 3-54). Verify repair, go to Step 18 of this Fault.

YES → Replace oil pressure gage, (Para 3-54). Verify repair, go to Step 18 of this Fault.

TEST OPTIONS

Operational test.

REASON FOR QUESTION

If TATTLE TALE SWITCH remains set, oil pressure gage is faulty. If not, water temperature gage is faulty.

WARNING

Remove all jewelry such as rings, dog tags, bracelets etc. If jewelry or tools contact positive electrical circuits, a direct short may result. Damage to equipment, injury or death may occur.

OPERATIONAL TEST

(1) Shut OFF engine, (Para 2-19).

(2) Remove screw at top of control panel and gently tip control panel forward for access to wires.

(3) Disconnect oil pressure gage connector at oil pressure gage, (Para 3-54).

(4) Turn IGNITION SWITCH ON, (Para 2-1). Do not start engine.

(5) Press TATTLE TALE SWITCH in, (Para 2-19).

(6) Release TATTLE TALE SWITCH.

(7) Check if TATTLE TALE SWITCH remains set.

  (a) If TATTLE TALE SWITCH does not remain set, replace water temperature gage, (Para 3-54).

  (b) If TATTLE TALE SWITCH remains set, replace oil pressure gage, (Para 3-54).

(8) Verify repair, go to Step 18 of this Fault.

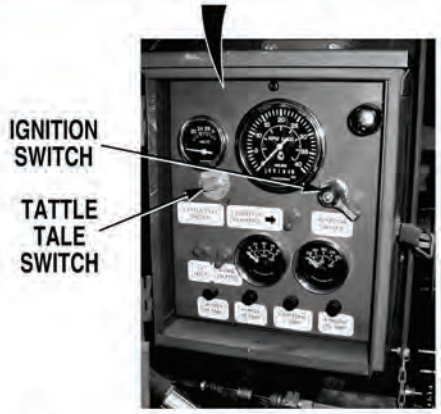

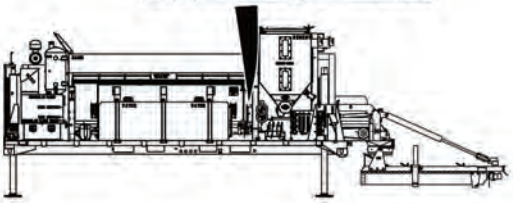

26. ENGINE STARTS, BUT RUNS ROUGH, HAS LOW POWER, EXCESSIVE EXHAUST SMOKE, EXCESSIVE FUEL CONSUMPTION, OR STOPS (CONT).

KNOWN INFO

- Oil level OK.
- Fuel lines not leaking, kinked, or damaged.
- No air in fuel system.
- Air filter not clogged.
- Air intake assembly not damaged.
- Air intake assembly hardware not loose or missing.
- Exhaust assembly not damaged.
- Exhaust assembly hardware not loose or missing.
- Exhaust assembly not blocked.
- Temperature gage readings OK.
- Engine not overheated.
- Oil pressure gage reading correct.
- Temperature gage OK.
- Oil pressure gage OK.

POSSIBLE PROBLEMS

- Fuel contaminated.
- Inline fuel filter or fuel/water separator filter clogged.
- Fuel transfer pump faulty.

16.

Does engine operate without surging, running rough, misfiring, poor response, loss of power, or stopping?

NO → Go to Step 17 of this Fault.

YES → Fault corrected. Verify repair, go to Step 18 of this Fault.

TEST OPTIONS

Operational test.

REASON FOR QUESTION

If engine operates without surging, running rough, misfiring, poor response, loss of power, or stopping, fault has been corrected.

OPERATIONAL TEST
Check if engine operates without surging, running rough, misfiring, poor response, loss of power, or stopping. (a) If engine does not operate correctly, go to Step 17 of this Fault. (b) If engine operates correctly, fault has been corrected. Verify repair, go to Step 18 of this Fault.

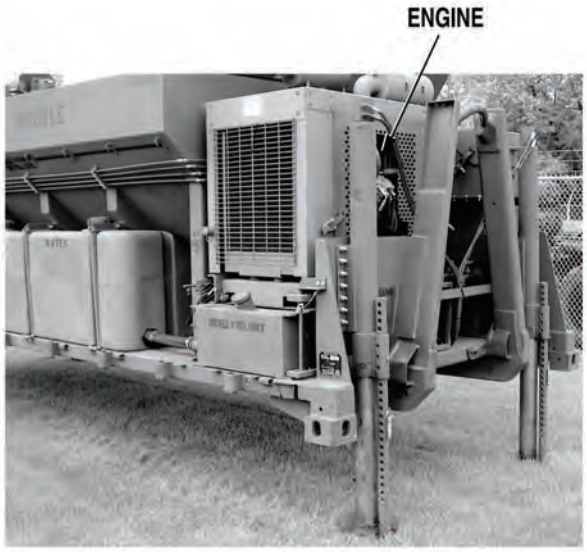

26. ENGINE STARTS, BUT RUNS ROUGH, HAS LOW POWER, EXCESSIVE EXHAUST SMOKE, EXCESSIVE FUEL CONSUMPTION, OR STOPS (CONT).

KNOWN INFO

- Oil level OK.
- Fuel lines not leaking, kinked, or damaged.
- No air in fuel system.
- Air filter not clogged.
- Air intake assembly not damaged.
- Air intake assembly hardware not loose or missing.
- Exhaust assembly not damaged.
- Exhaust assembly hardware not loose or missing.
- Exhaust assembly not blocked.
- Temperature gage readings OK.
- Engine not overheated.
- Oil pressure gage reading correct.
- Temperature gage OK.
- Oil pressure gage OK.

POSSIBLE PROBLEMS

- Fuel contaminated.
- Inline fuel filter or fuel/water separator filter clogged.
- Fuel transfer pump faulty.

17.

WARNING

Read WARNING on Page 4-879

Does engine operate without surging, running rough, misfiring, poor response, loss of power or stopping after draining and flushing fuel tank and lines, and replacing inline and water separator/fuel filters?

NO → Replace fuel transfer pump, (Para 3-98). Verify repair, go to Step 18 of this Fault.

YES → Fault corrected. Verify repair, go to Step 18 of this Fault.

TEST OPTIONS

Operational test.

REASON FOR QUESTION

If engine operates correctly, fuel was contaminated or inline fuel filter or fuel/water separator filter was clogged.

WARNING

To prevent personal injury when working with fuel, do not smoke or use open flame. Fuel is flammable and may explode. Keep fire extinguisher within reach.

OPERATIONAL TEST

(1) Shut OFF engine, (Para 2-19).
(2) Drain and flush fuel tank and lines.
(3) Replace inline fuel, (Para 3-29) and fuel/separator fuel filters, (Para 3-28).
(4) Fill fuel tank with new fuel.
(5) Bleed fuel system, (Para 3-8).
(6) Start engine, (Para 2-19).
(7) Check if engine operates correctly.
  (a) If engine does not operate correctly, replace fuel transfer pump, (Para 3-98).
  (b) If engine operates correctly, fault has been corrected.
(8) Verify repair, go to Step 18 of this Fault.

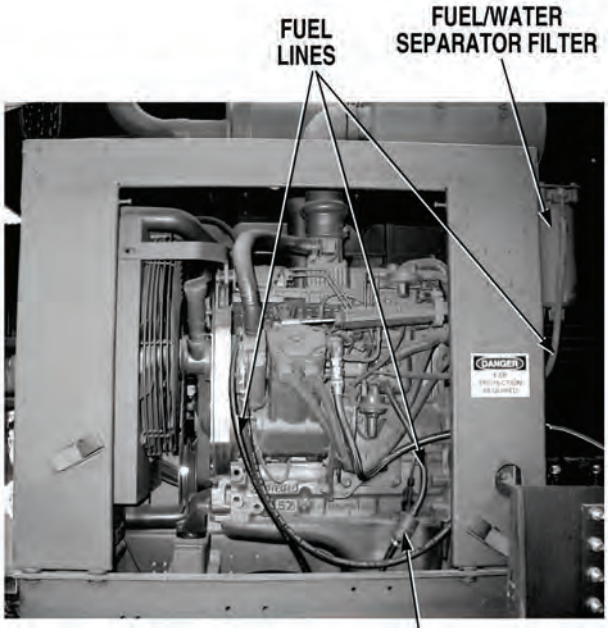

26. ENGINE STARTS, BUT RUNS ROUGH, HAS LOW POWER, EXCESSIVE EXHAUST SMOKE, EXCESSIVE FUEL CONSUMPTION, OR STOPS (CONT).

KNOWN INFO
Oil level OK. Fuel lines not leaking, kinked, or damaged. No air in fuel system. Air filter not clogged. Air intake assembly not damaged. Air intake assembly hardware not loose or missing. Exhaust assembly not damaged. Exhaust assembly hardware not loose or missing. Exhaust assembly not blocked. Temperature gage readings OK. Engine not overheated. Oil pressure gage reading correct. Temperature gage OK. Oil pressure gage OK. Fuel not contaminated. Inline fuel filter and fuel/water separator filter OK. Fuel transfer pump OK.
POSSIBLE PROBLEMS
None.

18.

Does engine operate correctly?

NO → Fault not corrected. Notify Supervisor.

YES → Fault corrected.

TEST OPTIONS
Verify repair.
REASON FOR QUESTION
If engine operates correctly, fault has been corrected.

VERIFY REPAIR

(1) If disconnected, connect oil pressure gage connector, (Para 3-54).

(2) If open, close control panel and install screw at top of control panel.

(3) Install front engine access panel, (Para 3-78).

(4) Start engine, (Para 2-19).

(5) Check if engine operates correctly.

  (a) If engine does not operate correctly, fault not corrected. Notify Supervisor.

  (b) If engine operates correctly, fault has been corrected.

(6) Shut OFF engine, (Para 2-19).

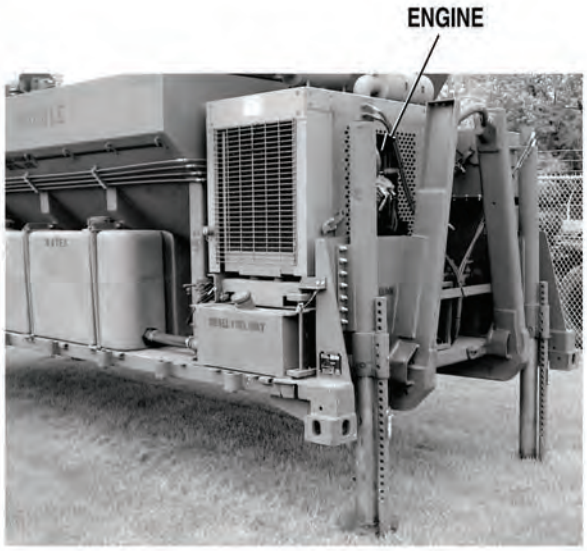

27. HYDRAULIC CIRCUITS DO NOT OPERATE.

INITIAL SETUP

Tools and Special Tools
Tool Kit, General Mechanic's: Automotive (Item 19, Appendix I)

Equipment Condition
Concrete Mobile Mixer unloaded from PLS, (Para 2-5)
Engine OFF, (Para 2-19)

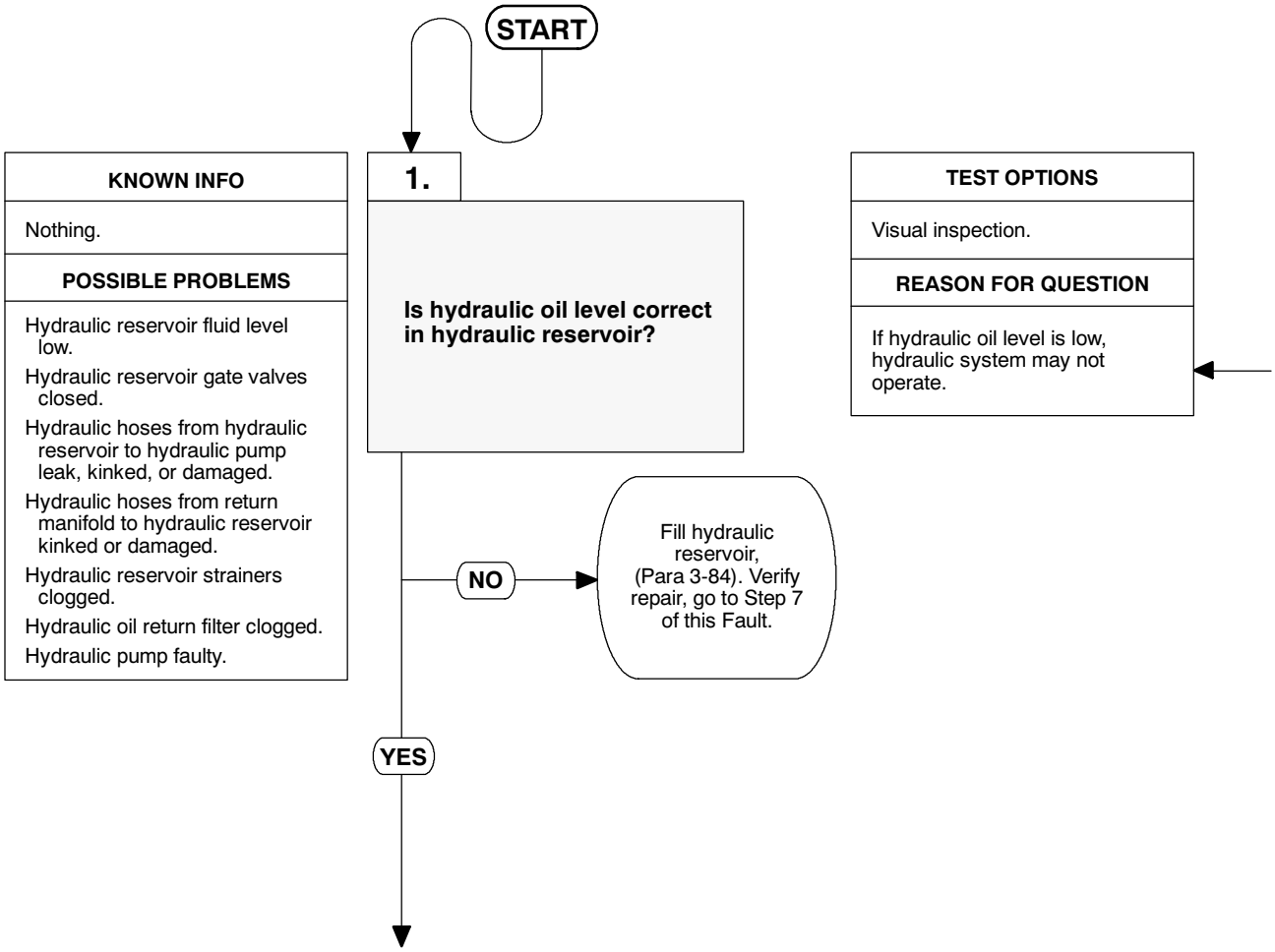

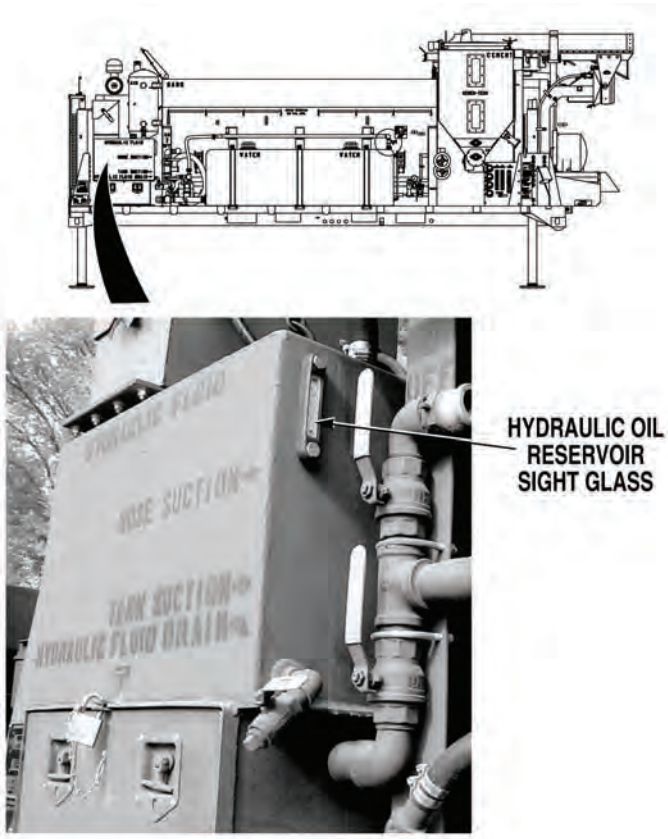

VISUAL INSPECTION
Look at sight glass on hydraulic reservoir. Check if hydraulic oil is at correct level. (a) If hydraulic oil is not at correct level, fill hydraulic reservoir to correct level, (Para 3-84). Verify repair, go to Step 7 of this Fault. (b) If hydraulic oil level is at correct level, go to Step 2 of this Fault.

27. HYDRAULIC CIRCUITS DO NOT OPERATE (CONT).

KNOWN INFO
Hydraulic reservoir fluid level correct.
POSSIBLE PROBLEMS
Hydraulic reservoir gate valves closed. Hydraulic hoses from hydraulic reservoir to hydraulic pump leak, kinked, or damaged. Hydraulic hoses from return manifold to hydraulic reservoir kinked or damaged. Hydraulic reservoir strainers clogged. Hydraulic oil return filter clogged. Hydraulic pump faulty.

2.

Are both hydraulic reservoir gate valves open?

NO → Open gate valves, (Para 3-37). Verify repair, go to Step 7 of this Fault.

YES ↓

TEST OPTIONS
Visual inspection.
REASON FOR QUESTION
If hydraulic reservoir gate valves are not open, hydraulic system will not operate.

VISUAL INSPECTION
Check if both hydraulic reservoir gate valves are open. (a) If both hydraulic reservoir gate valves are not open, open hydraulic reservoir gate valves, (Para 3-37). Verify repair, go to Step 7 of this Fault. (b) If both hydraulic reservoir gate valves are open, go to Step 3 of this Fault.

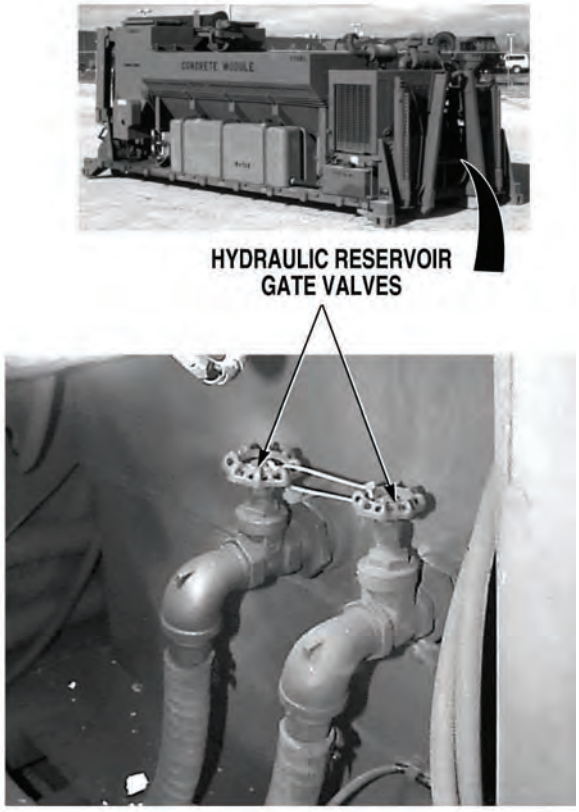

27. HYDRAULIC CIRCUITS DO NOT OPERATE (CONT).

KNOWN INFO
Hydraulic reservoir fluid level correct. Hydraulic reservoir gate valves open.
POSSIBLE PROBLEMS
Hydraulic hoses from hydraulic reservoir to hydraulic pump leak, kinked, or damaged. Hydraulic hoses from return manifold to hydraulic reservoir kinked or damaged. Hydraulic reservoir strainers clogged. Hydraulic oil return filter clogged. Hydraulic pump faulty.

3.

Are hydraulic hoses from hydraulic reservoir to hydraulic pumps free from kinks, leaks, and damage?

NO → Repair leaks or replace damaged hoses, (Para 3-129). Verify repair, go to Step 7 of this Fault.

YES ↓

TEST OPTIONS
Visual inspection.
REASON FOR QUESTION
If hydraulic hoses are not free from kinks, leaks, and damage, hydraulic system may not operate.

VISUAL INSPECTION
Check if hydraulic hoses from hydraulic reservoir to hydraulic pumps are free from kinks, leaks, and damage. (a) If hydraulic hoses are not free from kinks, leaks, and damage, repair leaks or replace hydraulic hoses, (Para 3-129). Verify repair, go to Step 7 of this Fault. (b) If hydraulic hoses are free from kinks, leaks, and damage, go to Step 4 of this Fault.

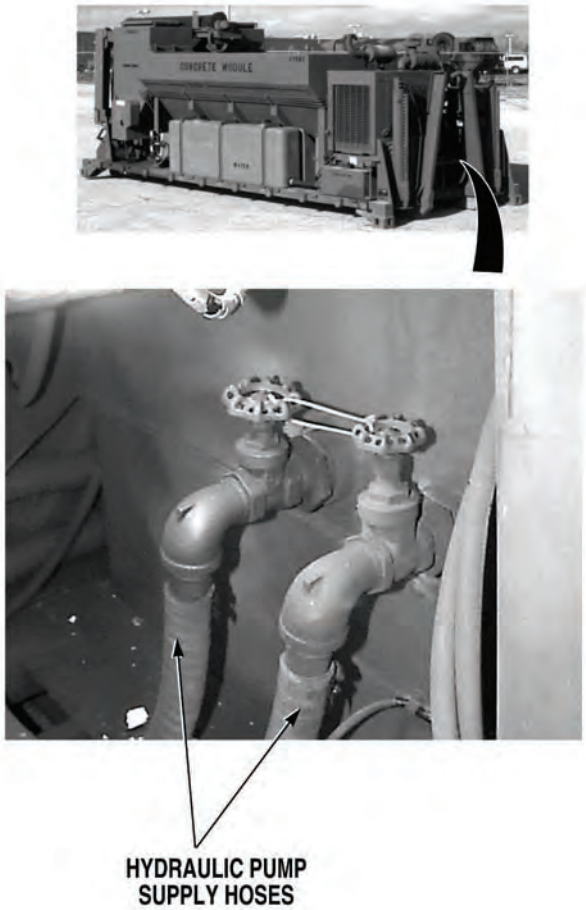

27. HYDRAULIC CIRCUITS DO NOT OPERATE (CONT).

KNOWN INFO
Hydraulic reservoir fluid level correct. Hydraulic reservoir gate valves open. Hydraulic hoses from hydraulic reservoir to hydraulic pumps OK.
POSSIBLE PROBLEMS
Hydraulic hoses from return manifold to hydraulic reservoir kinked or damaged. Hydraulic reservoir strainers clogged. Hydraulic oil return filter clogged. Hydraulic pump faulty.

4.

Are hydraulic hoses from return manifold to hydraulic reservoir free from kinks and damage?

NO → Repair or replace damaged hydraulic hoses, (Para 3-129). Verify repair, go to Step 7 of this Fault.

YES ↓

TEST OPTIONS
Visual inspection.
REASON FOR QUESTION
If hydraulic hoses are not free from kinks and damage, hydraulic system may not operate.

VISUAL INSPECTION
Check if hydraulic hoses from return manifold to hydraulic reservoir are free from kinks and damage. (a) If hydraulic hoses are not free from kinks and damage, replace damaged hydraulic hoses, (Para 3-129). Verify repair, go to Step 7 of this Fault. (b) If hydraulic hoses are free from kinks and damage, go to Step 5 of this Fault.

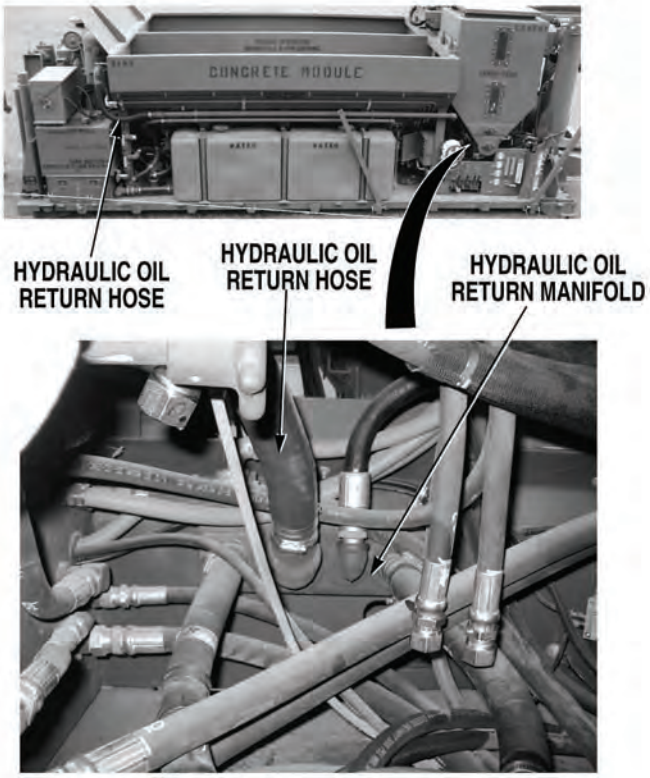

27. HYDRAULIC CIRCUITS DO NOT OPERATE (CONT).

KNOWN INFO
Hydraulic reservoir fluid level correct. Hydraulic reservoir gate valves open. Hydraulic hoses from hydraulic reservoir to hydraulic pumps OK. Hydraulic hoses from return manifold to hydraulic reservoir OK.
POSSIBLE PROBLEMS
Hydraulic reservoir strainers clogged. Hydraulic oil return filter clogged. Hydraulic pump faulty.

5.

Are hydraulic reservoir strainers free from clogs?

TEST OPTIONS
Visual inspection.
REASON FOR QUESTION
If hydraulic reservoir strainers are not free from clogs, hydraulic system may not operate.

NO → Perform strainer service, (Para 3-86). Replace hydraulic oil return filter, (Para 3-35) and fill reservoir with new hydraulic oil, (Para 3-84). Verify repair, go to Step 7 of this Fault.

YES ↓

VISUAL INSPECTION
(1) Drain hydraulic reservoir, (Para 3-84). (2) Check hydraulic reservoir strainers for clogs, (Para 3-86). (a) If hydraulic reservoir strainers are not free from clogs, perform hydraulic reservoir strainer service, (Para 3-86), replace hydraulic oil return filter, (Para 3-35), and fill hydraulic oil reservoir with new oil, (Para 3-84). Verify repair, go to Step 7 of this Fault. (b) If hydraulic reservoir strainers are free from clogs, refill hydraulic oil reservoir, (Para 3-84), then go to Step 6 of this Fault.

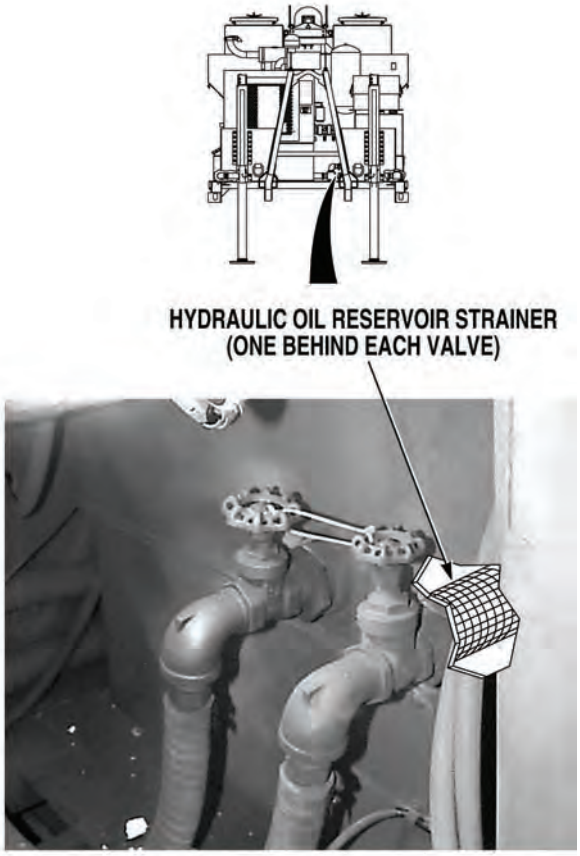

27. HYDRAULIC CIRCUITS DO NOT OPERATE (CONT).

KNOWN INFO
Hydraulic reservoir fluid level correct. Hydraulic reservoir gate valves open. Hydraulic hoses from hydraulic reservoir to hydraulic pumps OK. Hydraulic hoses from return manifold to hydraulic reservoir OK. Hydraulic reservoir strainers OK.
POSSIBLE PROBLEMS
Hydraulic oil return filter clogged. Hydraulic pump faulty.

6.

Do hydraulic circuits operate after replacing hydraulic oil return filter?

NO → Replace hydraulic pump, (Para 3-34). Verify repair, go to Step 7 of this Fault.

YES → Fault corrected. Go to Step 7 of this Fault.

TEST OPTIONS
Operational test.
REASON FOR QUESTION
If hydraulic circuits do not operate after replacing return filter, hydraulic pump may be faulty.

OPERATIONAL TEST
(1) Replace hydraulic reservoir return filter, (Para 3-35). (2) Start engine, (Para 2-19). (3) Turn THROTTLE CONTROL switch to high idle, (Para 2-1). (4) Push in water pump/lift cylinder control valve, (Para 2-20). (5) Adjust water pressure for 40 psi (276 kPa), (Para 2-20). (a) If water pressure cannot be adjusted, replace hydraulic pump, (Para 3-34). (b) If water pressure can be adjusted, fault corrected. Verify repair, go to Step 7 of this Fault.

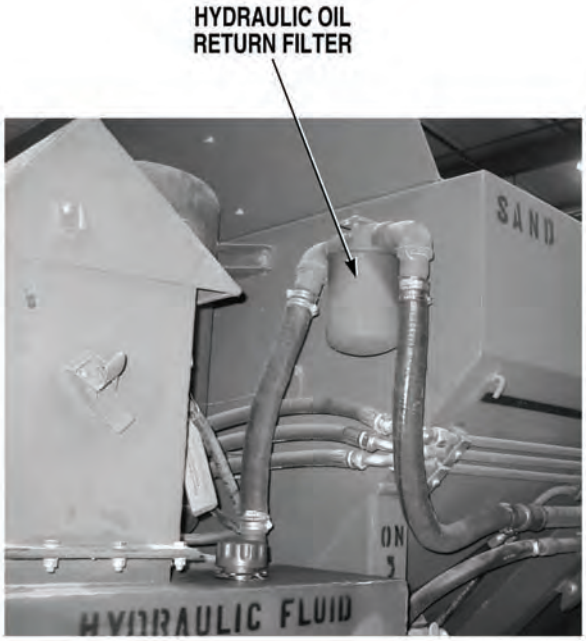

27. HYDRAULIC CIRCUITS DO NOT OPERATE (CONT).

KNOWN INFO
Hydraulic reservoir fluid level correct. Hydraulic reservoir gate valves open. Hydraulic hoses from hydraulic reservoir to hydraulic pumps OK. Hydraulic hoses from return manifold to hydraulic reservoir OK. Hydraulic reservoir strainers OK. Hydraulic oil return filter OK. Hydraulic pump OK.
POSSIBLE PROBLEMS
Nothing.

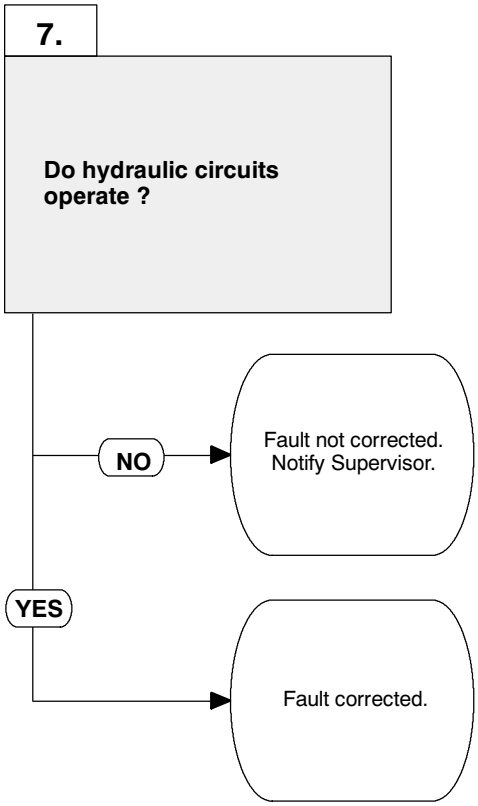

TEST OPTIONS
Verify repair.
REASON FOR QUESTION
If hydraulic circuits operate, fault has been corrected.

VERIFY REPAIR

(1) If OFF, start engine, (Para 2-19).

(2) Turn THROTTLE CONTROL switch to high idle, (Para 2-1).

(3) If pulled out, push in WATER PUMP/LIFT CYLINDER control valve, (Para 2-20).

(4) Adjust water pressure for 40 psi (276 kPa), (Para 2-20).

(5) Operate mixing auger deploy/stow function, (Para 2-23).

  (a) If water pressure cannot be adjusted, fault not corrected. Notify Supervisor.

  (b) If water pressure can be adjusted, fault has been corrected.

(6) Turn THROTTLE CONTROL switch to low idle, (Para 2-1).

(7) Shut OFF engine, (Para 2-1).

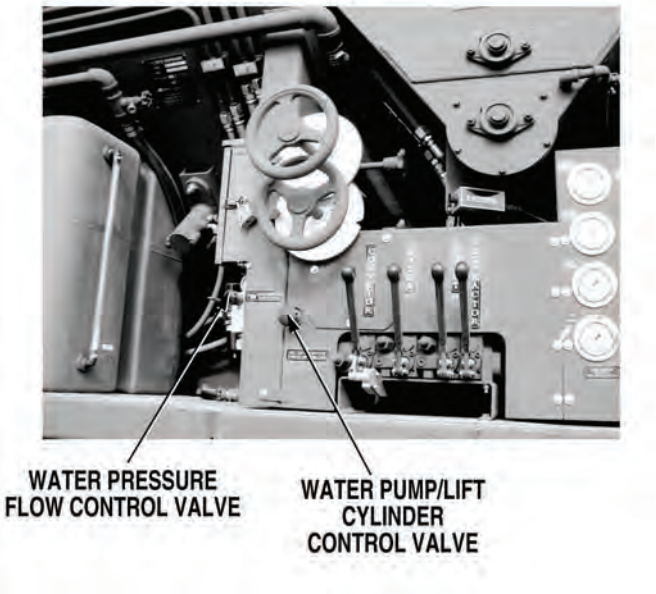

28. LIFT CYLINDER(S) DO NOT OPERATE CORRECTLY.

INITIAL SETUP

Tools and Special Tools
Tool Kit, General Mechanic's: Automotive (Item 19, Appendix I)

Equipment Condition
Concrete Mobile Mixer unloaded from PLS, (Para 2-5).
Engine OFF, (Para 2-19)

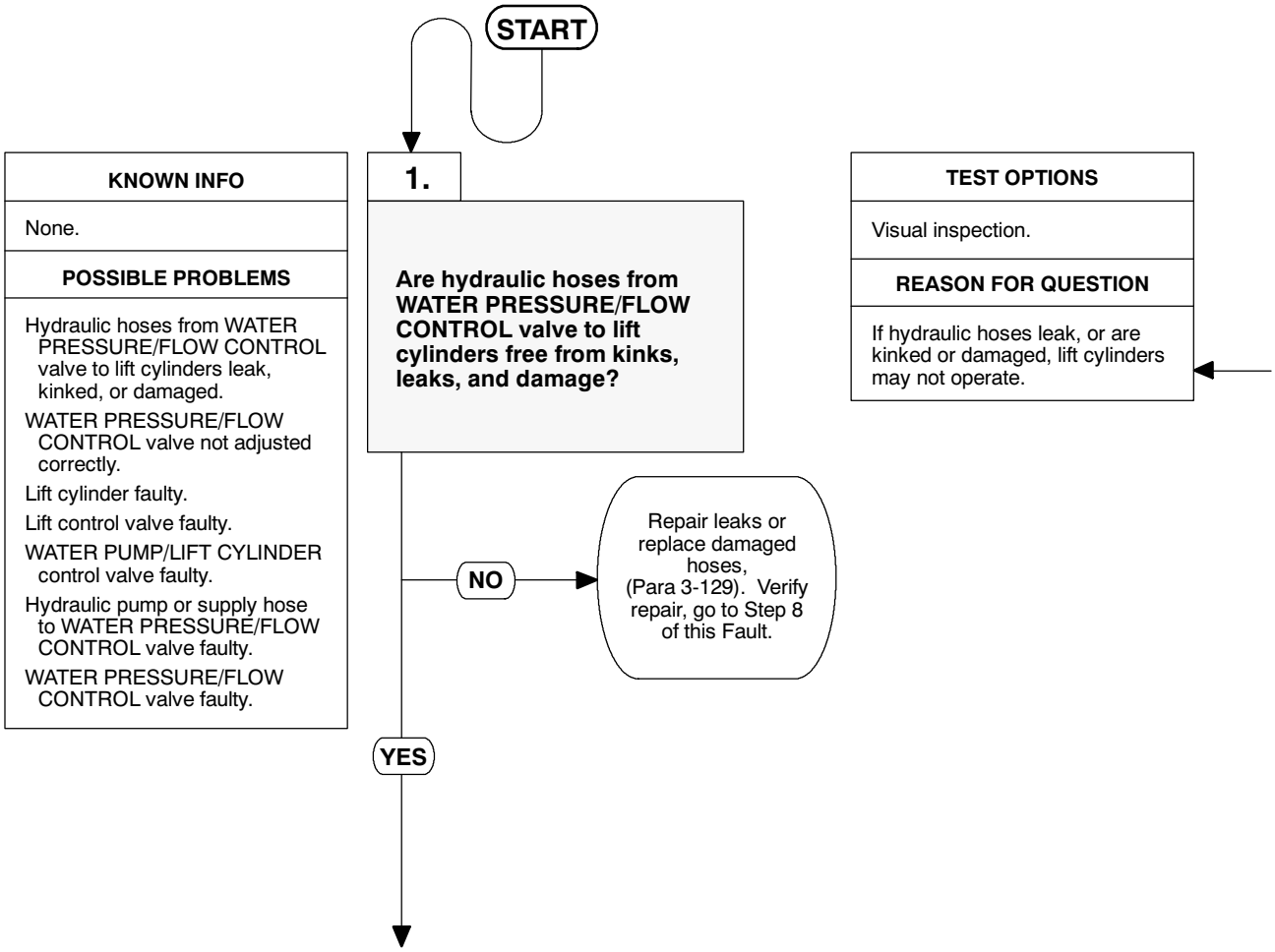

VISUAL INSPECTION
Check if hydraulic hoses from WATER PRESSURE/FLOW CONTROL valve to lift cylinders are free from leaks, kinks, and damage. (a) If hydraulic hoses are not free from leaks, kinks, and damage, repair leaks or replace damaged hoses, (Para 3-129). Verify repair, go to Step 8 of this Fault. (b) If hydraulic hoses are free from leaks, kinks, and damage, go to Step 2 of this Fault.

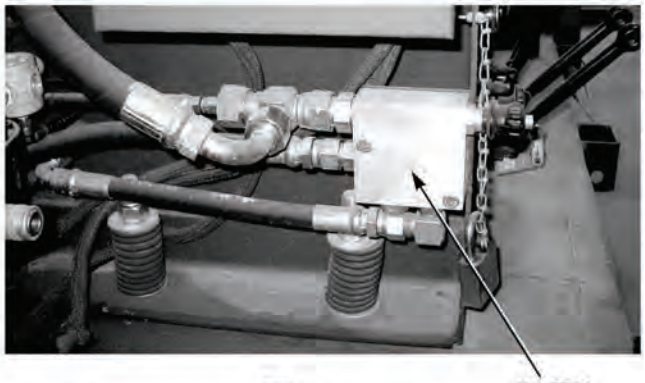

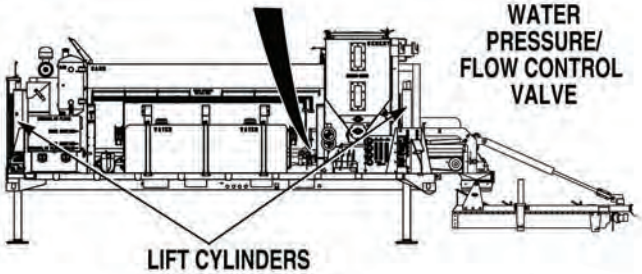

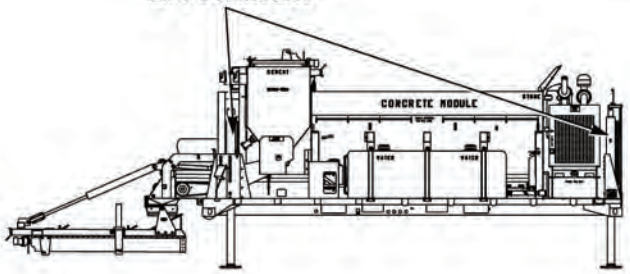

28. LIFT CYLINDER(S) DO NOT OPERATE CORRECTLY (CONT).

KNOWN INFO
Hydraulic hoses from WATER PRESSURE/FLOW CONTROL valve to lift cylinders OK.
POSSIBLE PROBLEMS
WATER PRESSURE/FLOW CONTROL valve not adjusted correctly. Lift cylinder faulty. Lift control valve faulty. WATER PUMP/LIFT CYLINDER control valve faulty. Hydraulic pump or supply hose to WATER PRESSURE/FLOW CONTROL valve faulty. WATER PRESSURE/FLOW CONTROL valve faulty.

2.

Can water pressure be adjusted to at least 40 psi (276 kPa)?

NO → Go to Step 7 of this Fault.

YES ↓

TEST OPTIONS
Operational test.
REASON FOR QUESTION
If water pressure cannot be adjusted, lift cylinders will not operate.

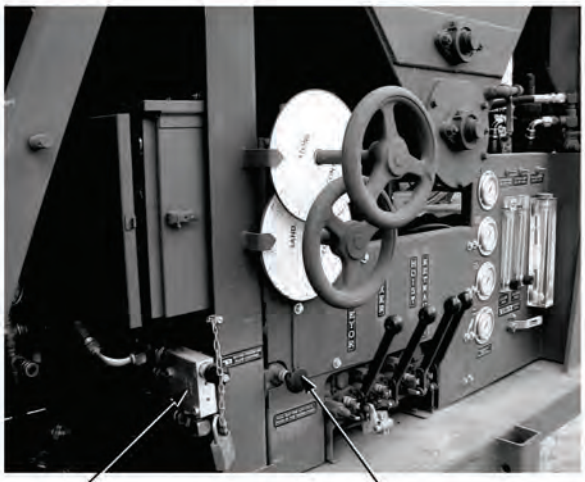

OPERATIONAL TEST
(1) Start engine (Para 2-19). (2) Turn THROTTLE CONTROL to HIGH IDLE, (Para 2-1). (3) Push in WATER PUMP/LIFT CYLINDER control valve, (Para 2-1). (4) Adjust WATER PRESSURE/FLOW CONTROL valve for 40 psi (276 kPa) water pressure, (Para 2-19). (a) If water pressure cannot be adjusted to at least 40 psi (276 kPa), go to Step 7 of this Fault. (b) If water pressure can be adjusted to at least 40 psi (276 kPa), go to Step 3 of this Fault.

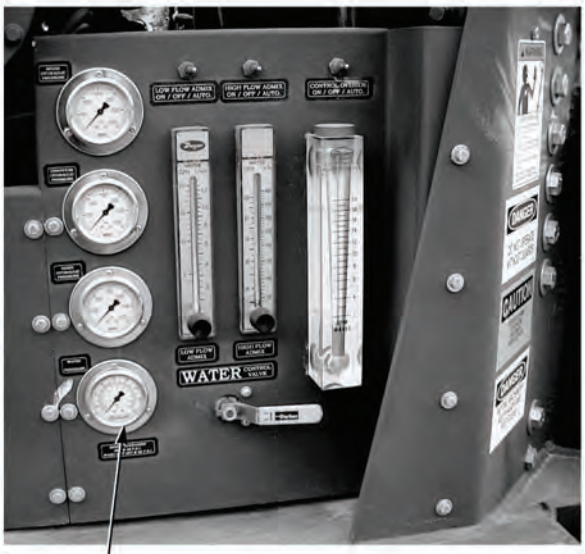

28. LIFT CYLINDER(S) DO NOT OPERATE CORRECTLY (CONT).

KNOWN INFO
Hydraulic hoses from WATER PRESSURE/FLOW CONTROL valve to lift cylinders OK. WATER PRESSURE/FLOW CONTROL valve adjusted correctly. Hydraulic pump and supply hose to WATER PRESSURE/FLOW CONTROL valve OK. WATER PRESSURE/FLOW CONTROL valve OK.
POSSIBLE PROBLEMS
Lift cylinder faulty. Lift control valve faulty. WATER PUMP/LIFT CYLINDER control valve faulty.

3.

Does at least one lift cylinder operate with the WATER PRESSURE/FLOW CONTROL valve setting from Step 2?

NO → Go to Step 6 of this Fault.

YES ↓

TEST OPTIONS
Operational test.
REASON FOR QUESTION
To further isolate fault.

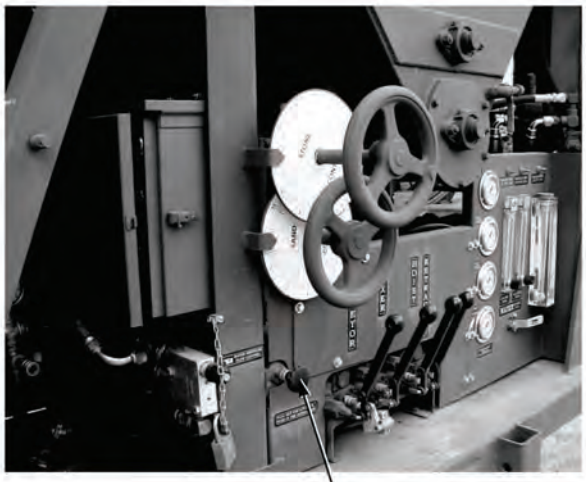

WATER PUMP/LIFT CYLINDERS CONTROL VALVE

OPERATIONAL TEST
(1) Pull out WATER PUMP/LIFT CYLINDER control valve, (Para 2-1). (2) Operate lift cylinders, (Para 2-28), check if at least one lift cylinder operates. (a) If all lift cylinders do not operate, go to Step 6 of this Fault. (b) If at least one lift cylinder operates, go to Step 4 of this Fault.

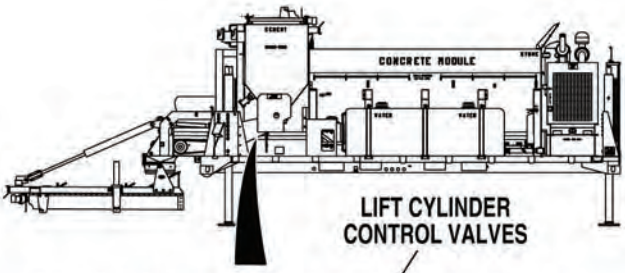

LIFT CYLINDER CONTROL VALVES

28. LIFT CYLINDER(S) DO NOT OPERATE CORRECTLY (CONT).

KNOWN INFO
Hydraulic hoses from WATER PRESSURE/FLOW CONTROL valve to lift cylinders OK. WATER PRESSURE/FLOW CONTROL valve adjusted correctly. Hydraulic pump and supply hose to WATER PRESSURE/FLOW CONTROL valve OK. WATER PRESSURE/FLOW CONTROL valve OK. WATER PUMP/LIFT CYLINDER control valve OK.
POSSIBLE PROBLEMS
Lift cylinder faulty. Lift control valve faulty.

4.

Do all lift cylinders operate?

NO → Go to Step 5 of this Fault.

YES → Fault corrected. Verify repair, go to Step 8 of this Fault.

TEST OPTIONS
Operational test.
REASON FOR QUESTION
If all lift cylinders operate, fault was corrected.

OPERATIONAL TEST
Operate lift cylinders, (Para 2-28), check if all lift cylinders operate. (a) If one of the lift cylinders does not operate, go to Step 5 of this Fault. (b) If all lift cylinders operate, fault has been corrected. Verify repair, go to Step 8 of this Fault.

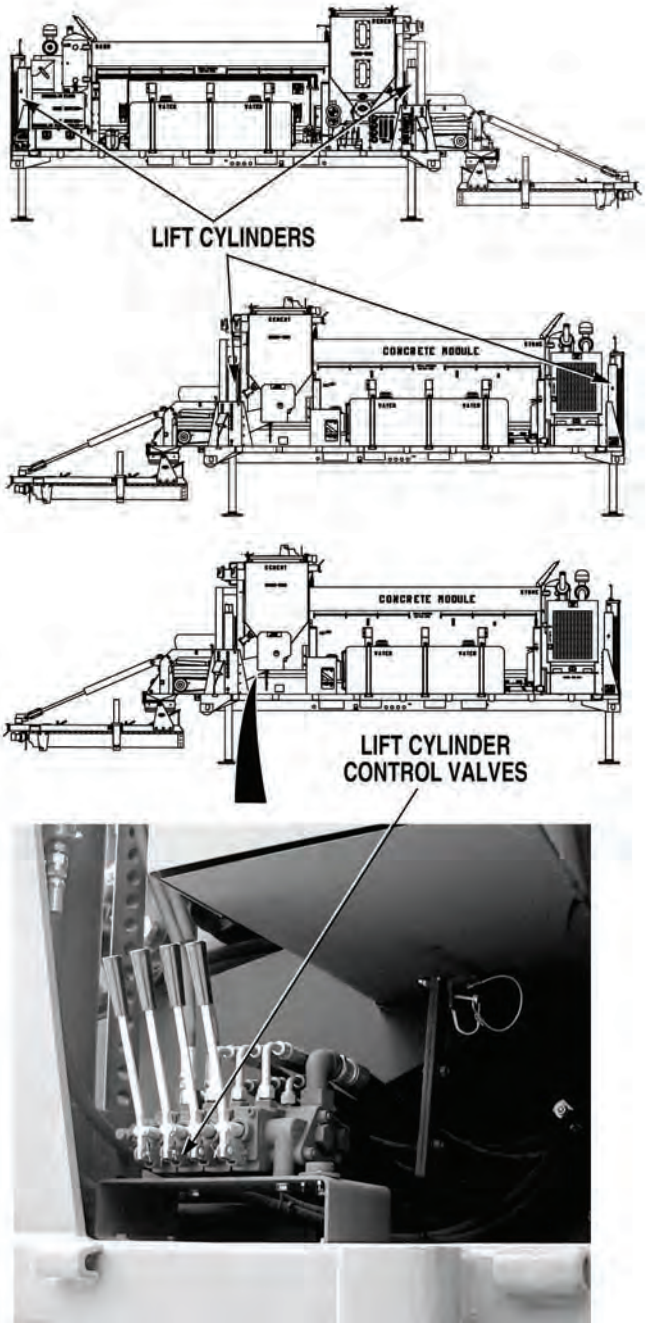

28. LIFT CYLINDER(S) DO NOT OPERATE CORRECTLY (CONT).

KNOWN INFO

Hydraulic hoses from WATER PRESSURE/FLOW CONTROL valve to lift cylinders OK.

WATER PRESSURE/FLOW CONTROL valve adjusted correctly.

Hydraulic pump and supply hose to WATER PRESSURE/FLOW CONTROL valve OK.

WATER PRESSURE/FLOW CONTROL valve OK.

WATER PUMP/LIFT CYLINDER control valve OK.

POSSIBLE PROBLEMS

Lift cylinder faulty.

Lift control valve faulty.

5.

WARNING

Read WARNING on Page 4-905

Does non-operating lift cylinder operate if lift cylinders hoses are swapped at the control valve assembly?

NO → Replace non-operating lift cylinder, (Para 3-43). Verify repair, go to Step 8 of this Fault.

YES → Replace lift control valves, (Para 3-70). Verify repair, go to Step 8 of this Fault.

TEST OPTIONS

Operational test.

REASON FOR QUESTION

If non-operating lift cylinder operates after swapping hoses, lift cylinder control valve is faulty. If not, non-operating lift cylinder is faulty.

WARNING

- Safety pins must be installed in safety rods on lift cylinders before disconnecting lift cylinder hoses. Failure to comply will result in damage to equipment or injury or death to personnel.
- Never disconnect any hydraulic line or fitting without first dropping pressure to zero. Failure to comply may result in serious injury or death to personnel.

OPERATIONAL TEST

(1) If removed, install safety pins in safety rods on all four lift cylinders, (Para 2-28).

(2) Shut OFF engine, (Para 2-19).

(3) Disconnect non-operating lift cylinder raise hose from lift control valve, (Para 3-129).

(4) Disconnect adjacent lift cylinder raise hose from lift control valve.

(5) Connect non-operating lift cylinder raise hose to lift control valve adjacent lift cylinder port.

(6) Connect adjacent lift cylinder hose to lift control valve non-operating lift cylinder port.

(7) Disconnect non-operating lift cylinder lower hose from lift control valve.

(8) Disconnect adjacent lift cylinder lower hose from lift control valve.

(9) Connect non-operating lift cylinder lower hose to lift control valve adjacent lift cylinder port.

(10) Connect adjacent lift cylinder lower hose to lift control valve non-operating lift cylinder port.

(11) Start engine, (Para 2-19).

(12) Turn THROTTLE CONTROL to HIGH IDLE, (Para 2-1).

(13) Remove safety pins from safety rods on lift cylinders, (Para 2-28).

(14) Operate controls for adjacent cylinder, (Para 2-28), check if non-operating lift cylinder operates.

  (a) If non-operating lift cylinder does not operate, install safety pins in safety rods, swap hydraulic hoses back to their original positions, and replace non-operating lift cylinder, (Para 3-43).

  (b) If non-operating lift cylinder operates, install safety pins in safety rods and replace lift cylinder control valves, (Para 3-70). (Swap hydraulic hoses back to their original positions.)

(15) Verify repair, go to Step 8 of this Fault.

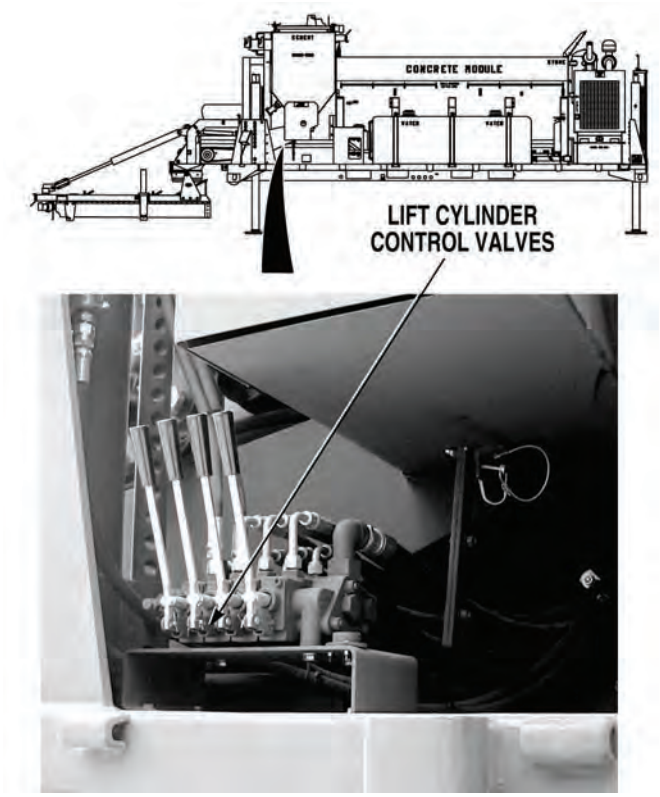

28. LIFT CYLINDER(S) DO NOT OPERATE CORRECTLY (CONT).

KNOWN INFO

Hydraulic hoses from WATER PRESSURE/FLOW CONTROL valve to lift cylinders OK.

WATER PRESSURE/FLOW CONTROL valve adjusted correctly.

Hydraulic pump and supply hose to WATER PRESSURE/FLOW CONTROL valve OK.

WATER PRESSURE/FLOW CONTROL valve OK.

Lift cylinder OK.

POSSIBLE PROBLEMS

Lift control valve faulty.

WATER PUMP/LIFT CYLINDER control valve faulty.

6.

WARNING

Read WARNING on Page 4-907

Does at least one lift cylinder operate, after connecting WATER PUMP/LIFT CYLINDER control valve input hose to lift cylinder supply hose (removing WATER PUMP/LIFT CYLINDER control valve from system)?

NO → Reconnect hoses in their original position, (Para 3-129), and replace lift cylinder control valves, (Para 3-70). Verify repair, go to Step 8 of this Fault.

YES → Replace WATER PUMP/LIFT CYLINDER control valves, (Para 3-67). Verify repair, go to Step 8 of this Fault.

TEST OPTIONS

Operational test.

REASON FOR QUESTION

If non-operating lift cylinder operates after swapping hoses, water pump/lift cylinder control valve is faulty. If not, lift cylinder control valve is faulty.

WARNING

- Safety rods must be installed in lift cylinders before disconnecting lift cylinder hoses. Failure to comply will result in damage to equipment or injury or death to personnel.
- Never disconnect any hydraulic line or fitting without first dropping pressure to zero. Failure to comply may result in serious injury or death to personnel.

OPERATIONAL TEST

(1) Shut OFF engine, (Para 2-19).

(2) Remove concrete mixer control valve panel, (Para 3-51).

(3) Disconnect WATER PUMP/LIFT CYLINDER control valve input hose, (Para 3-129).

(4) Disconnect lift cylinder supply hose from water pressure/lift cylinder control valve.

(5) Connect WATER PUMP/LIFT CYLINDER control valve input hose to lift cylinder hose. Use adaptors as required.

(6) Start engine, (Para 2-19).

(7) Turn THROTTLE CONTROL to HIGH IDLE, (Para 2-1).

(8) Operate lift cylinders, (Para 2-28), check if at least one lift cylinder operates.

  (a) If all lift cylinders do not operate, swap hydraulic hoses back to their original positions, and replace lift cylinder control valves, (Para 3-70).

  (b) If at least one lift cylinder operates, replace WATER PUMP/LIFT CYLINDER control valve, (Para 3-67). (Swap hydraulic hoses back to their original positions.)

(9) Verify repair, go to Step 8 of this Fault.

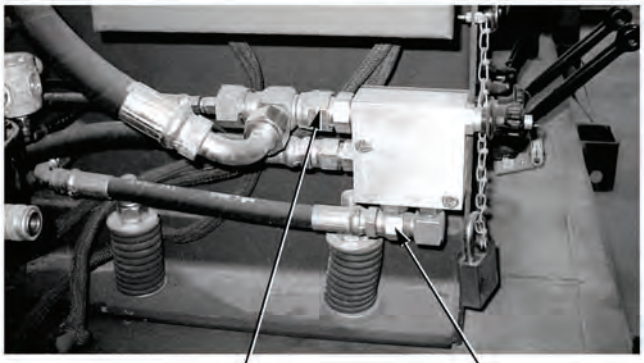

28. LIFT CYLINDER(S) DO NOT OPERATE CORRECTLY (CONT).

KNOWN INFO

Hydraulic hoses from WATER PRESSURE/FLOW CONTROL valve to lift cylinders OK.

WATER PRESSURE/FLOW CONTROL valve adjusted correctly.

Lift cylinder OK.

Lift control valve OK.

WATER PUMP/LIFT CYLINDER control valve OK.

POSSIBLE PROBLEMS

Hydraulic pump or supply hose to WATER PRESSURE/FLOW CONTROL valve faulty.

WATER PRESSURE/FLOW CONTROL valve faulty.

7.

Can concrete mixer hoist or retractor be raised or lowered?

NO → Go to “Concrete Mixer Hoist, Retractor Cylinders, Lift Cylinders, and Water Pump Do Not Operate”, (Fault 13).

YES → Replace WATER PRESSURE/FLOW CONTROL valve, (Para 3-66). Verify repair, go to Step 8 of this Fault.

TEST OPTIONS

Operational test.

REASON FOR QUESTION

If concrete mixer hoist or retractor can be raised or lowered, WATER PRESSURE/FLOW CONTROL valve is faulty. If not, another troubleshooting procedure applies.

CAUTION

Use caution when operating concrete mixer HOIST and RETRACTOR controls. Do not hit ground or other obstacles when operating controls, if concrete mixer is not at operating level. Failure to comply may result in damage to equipment.

OPERATIONAL TEST

Operate concrete mixer hoist or retractor controls, (Para 2-17) to check if concrete mixer hoist or retractor raises and lowers.

(a) If concrete mixer hoist and retractor do not raise and lower, go to "Concrete Mixer Hoist, Retractor Cylinders, Lift Cylinders, and Water Pump Do Not Operate", (Fault 13).

(b) If concrete mixer hoist or retractor do not raise or lower, replace WATER PRESSURE/FLOW CONTROL valve, (Para 3-66). Verify repair, go to Step 8 of this Fault.

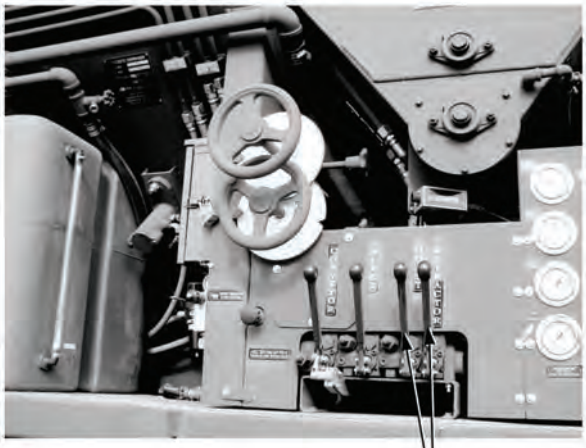

HOIST AND RETRACTOR CONTROLS

28. LIFT CYLINDER(S) DO NOT OPERATE CORRECTLY (CONT).

KNOWN INFO
Hydraulic hoses from WATER PRESSURE/FLOW CONTROL valve to lift cylinders OK. WATER PRESSURE/FLOW CONTROL valve adjusted correctly. Lift cylinder OK. Lift control valve OK. WATER PUMP/LIFT CYLINDER control valve OK. WATER PUMP/LIFT CYLINDER control valve OK. Hydraulic pump or supply hose to WATER PRESSURE/FLOW CONTROL valve OK. WATER PRESSURE/FLOW CONTROL valve OK.
POSSIBLE PROBLEMS
None.

8.

Do all lift cylinders operate?

NO → Fault not corrected. Notify Supervisor.

YES → Fault corrected.

TEST OPTIONS
Verify repair.
REASON FOR QUESTION
If all cylinders operate, fault has been corrected.

VERIFY REPAIR

(1) Start engine, (Para 2-19).

(2) Turn THROTTLE CONTROL to HIGH IDLE, (Para 2-1).

(3) Push in WATER PUMP/LIFT CYLINDER control valve, (Para 2-1).

(4) Adjust WATER PRESSURE/FLOW CONTROL valve for 40 psi (276 kPa) water pressure.

(5) Pull out WATER PUMP/LIFT CYLINDER control valve, (Para 2-1).

(6) Operate lift cylinders, (Para 2-28), check if all lift cylinders operate.

  (a) If one or more lift cylinder does not operate, fault has not been corrected. Notify Supervisor.

  (b) If all lift cylinders operate, fault has been corrected.

(7) Shut OFF engine, (Para 2-19).

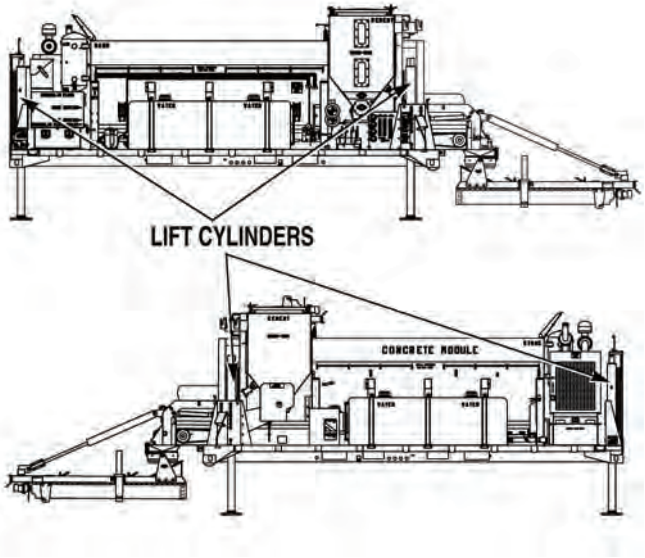

29. CONCRETE MIXER AUTO AND/OR MANUAL CONTROLS DO NOT OPERATE (AQUATIC [WATER] VALVE, HIGH AND LOW ADMIX, VIBRATORS, AND CHAIN OILER).

INITIAL SETUP

Tools and Special Tools

Tool Kit, General Mechanic's: Automotive (Item 19, Appendix I)

Multimeter (Item 11, Appendix I)

Equipment Condition

Concrete Mobile Mixer unloaded from PLS, (Para 2-5)

Engine OFF, (Para 2-19)

29. CONCRETE MIXER AUTO AND/OR MANUAL CONTROLS DO NOT OPERATE (AQUATIC [WATER] VALVE, HIGH AND LOW ADMIX, VIBRATORS, AND CHAIN OILER) (CONT).

KNOWN INFO
Nothing.

POSSIBLE PROBLEMS
Air supply system not operating correctly.
Control wire harness (red) wire between HIGH FLOW ADMIX and LOW FLOW ADMIX switches faulty.
LOW FLOW ADMIX switch faulty.
Control wire harness (blue) wire between HIGH FLOW ADMIX and LOW FLOW ADMIX switches faulty.
Control wire harness low-flow admix control (orange) wire from LOW FLOW ADMIX switch to air solenoid faulty.
Control wire harness low-flow admix air solenoid ground wire faulty.
Low-flow admix air solenoid faulty.
Control wire harness (red) wire between CONTROL OVERIDE switch and HIGH FLOW ADMIX switch faulty.
HIGH FLOW ADMIX switch faulty.
Control wire harness (blue) wire between CONTROL OVERIDE switch and HIGH FLOW ADMIX switch faulty.
Control wire harness high-flow admix control (brown) wire from HIGH FLOW ADMIX switch to air solenoid connector faulty.
Control wire harness high-flow admix air solenoid ground wire faulty.
High-flow admix air solenoid faulty.
CONTROL OVERIDE switch faulty.
Control harness roller switch control faulty.
Control wire harness water/vibrator/chain oiler control (red) wire from CONTROL OVERIDE switch to solenoid connector faulty.
Water/vibrator/chain oiler air solenoid ground wire faulty.
Water/vibrator/chain oiler air solenoid faulty.
Control box 4-pin wire harness control power (blue) wire faulty.
Control wire harness control power (blue) wire from connector to CONTROL OVERIDE switch faulty.

1.

Does air system charge to 80 to 100 psi (552 to 690 kPa) with CONTROL OVERIDE, HIGH FLOW ADMIX, and LOW FLOW ADMIX switches OFF?

NO → Go to “Air Pressure Low or System Charge is Slow”, (Fault 3).

YES ↓

TEST OPTIONS
Operational test.
REASON FOR QUESTION
If air system does not charge to 80 to 100 psi (552 to 690 kPa), another troubleshooting procedure applies.

OPERATIONAL TEST

(1) Start engine, (Para 2-19).

(2) Turn THROTTLE CONTROL switch to HIGH IDLE, (Para 2-1).

(3) Open air system supply valve, (Para 2-1).

(4) If ON, turn CONTROL OVERIDE, HIGH FLOW ADMIX, and LOW FLOW ADMIX switches OFF, (Para 2-1).

(5) If open, close CEMENT BIN FLUFFER VALVE, (Para 2-18).

(6) Check if air system charges to 80 to 100 psi (552 to 690 kPa).

(a) If air system does not charge to 80 to 100 psi (552 to 690 kPa), go to “Air Pressure Low or System Charge Is Slow”, (Fault 3).

(b) If air system charges to 80 to 100 psi (552 to 690 kPa), go to Step 2 of this Fault.

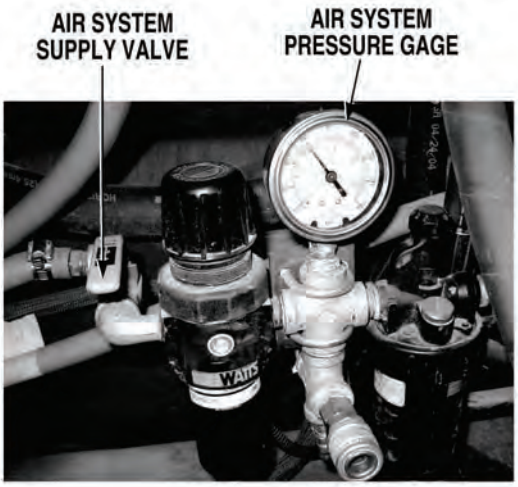

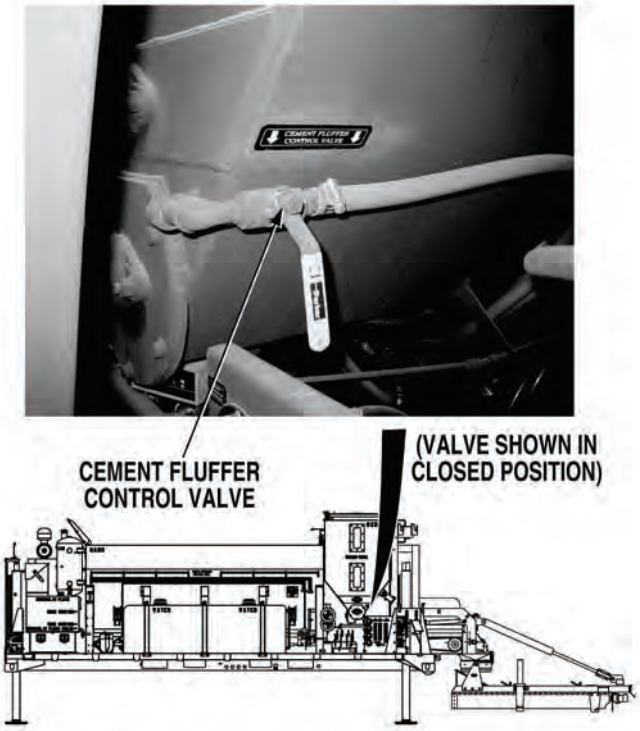

29. CONCRETE MIXER AUTO AND/OR MANUAL CONTROLS DO NOT OPERATE (AQUATIC [WATER] VALVE, HIGH AND LOW ADMIX, VIBRATORS, AND CHAIN OILER) (CONT).

KNOWN INFO
Air supply system OK.

POSSIBLE PROBLEMS
Control wire harness (red) wire between HIGH FLOW ADMIX and LOW FLOW ADMIX switches faulty.
LOW FLOW ADMIX switch faulty.
Control wire harness (blue) wire between HIGH FLOW ADMIX and LOW FLOW ADMIX switches faulty.
Control wire harness low-flow admix control (orange) wire from LOW FLOW ADMIX switch to air solenoid faulty.
Control wire harness low-flow admix air solenoid ground wire faulty.
Low-flow admix air solenoid faulty.
Control wire harness (red) wire between CONTROL OVERIDE switch and HIGH FLOW ADMIX switch faulty.
HIGH FLOW ADMIX switch faulty.
Control wire harness (blue) wire between CONTROL OVERIDE switch and HIGH FLOW ADMIX switch faulty.
Control wire harness high-flow admix control (brown) wire from HIGH FLOW ADMIX switch to air solenoid connector faulty.
Control wire harness high-flow admix air solenoid ground wire faulty.
High-flow admix air solenoid faulty.
CONTROL OVERIDE switch faulty.
Control harness roller switch control faulty.
Control wire harness water/vibrator/chain oiler control (red) wire from CONTROL OVERIDE switch to solenoid connector faulty.
Water/vibrator/chain oiler air solenoid ground wire faulty.
Water/vibrator/chain oiler air solenoid faulty.
Control box 4-pin wire harness control power (blue) wire faulty.
Control wire harness control power (blue) wire from connector to CONTROL OVERIDE switch faulty.

2.

Is water/vibrator/chain oiler air solenoid energized when CONTROL OVERIDE switch is placed in the ON position (engine OFF and IGNITION SWITCH ON)?

TEST OPTIONS
Operational test.
REASON FOR QUESTION
To isolate fault.

NO → Go to Step 19 of this Fault.

YES ↓

OPERATIONAL TEST

(1) Shut OFF engine, (Para 2-19).

(2) Turn IGNITION CONTROL switch ON, (Para 2-1).

(3) Turn 12 VOLT switch ON, (Para 2-1).

NOTE

A clicking sound will be heard when air solenoid energizes.

(4) Turn CONTROL OVERIDE switch ON, (Para 2-1).

(5) Check if water/vibrator/chain oiler air solenoid energizes.

(a) If air solenoid does not energize, go to Step 19 of this Fault.

(b) If air solenoid energizes, go to Step 3 of this Fault.

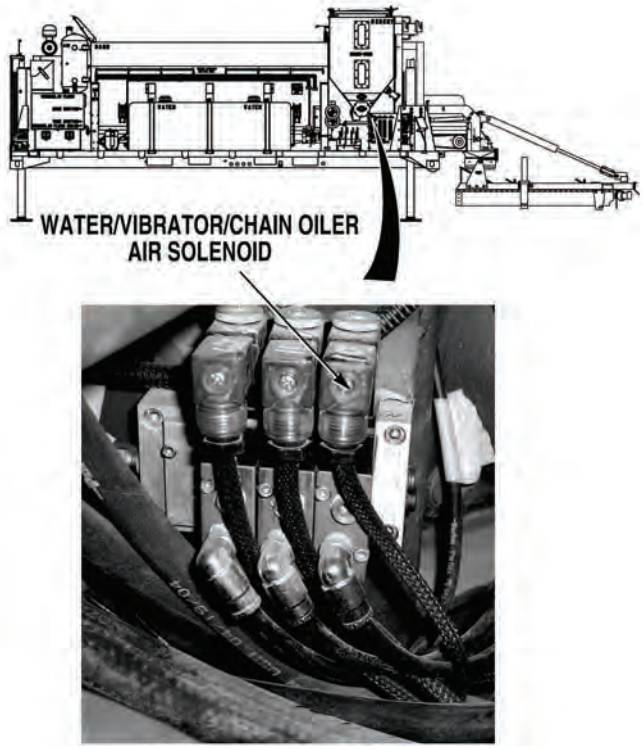

29. CONCRETE MIXER AUTO AND/OR MANUAL CONTROLS DO NOT OPERATE (AQUATIC [WATER] VALVE, HIGH AND LOW ADMIX, VIBRATORS, AND CHAIN OILER) (CONT).

KNOWN INFO

- Air supply system OK.
- Control wire harness water/vibrator/chain oiler control (red) wire from CONTROL OVERIDE switch to solenoid connector OK.
- Water/vibrator/chain oiler air solenoid ground wire OK.
- Water/vibrator/chain oiler air solenoid OK.
- Control box 4-pin wire harness control power (blue) wire OK.
- Control wire harness control power (blue) wire from connector to CONTROL OVERIDE switch OK.

POSSIBLE PROBLEMS

- Control wire harness (red) wire between HIGH FLOW ADMIX and LOW FLOW ADMIX switches faulty.
- LOW FLOW ADMIX switch faulty.
- Control wire harness (blue) wire between HIGH FLOW ADMIX and LOW FLOW ADMIX switches faulty.
- Control wire harness low-flow admix control (orange) wire from LOW FLOW ADMIX switch to air solenoid faulty.
- Control wire harness low-flow admix air solenoid ground wire faulty.
- Low-flow admix air solenoid faulty.
- Control wire harness (red) wire between CONTROL OVERIDE switch and HIGH FLOW ADMIX switch faulty.
- HIGH FLOW ADMIX switch faulty.
- Control wire harness (blue) wire between CONTROL OVERIDE switch and HIGH FLOW ADMIX switch faulty.
- Control wire harness high-flow admix control (brown) wire from HIGH FLOW ADMIX switch to air solenoid connector faulty.
- Control wire harness high-flow admix air solenoid ground wire faulty.
- High-flow admix air solenoid faulty.
- CONTROL OVERIDE switch faulty.
- Control harness roller switch control faulty.

3.

Is water/vibrator/chain oiler air solenoid energized when CONTROL OVERIDE switch is placed in the AUTO position and CONVEYOR controls are activated?

NO → Go to Step 18 of this Fault.

YES ↓

TEST OPTIONS

Operational test.

REASON FOR QUESTION

To further isolate fault.

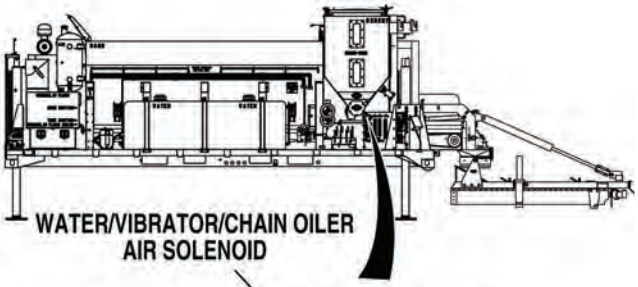

OPERATIONAL TEST

(1) Turn CONTROL OVERIDE switch to AUTO, (Para 2-1).

NOTE

A clicking sound will be heard when air solenoid energizes.

(2) Pull CONVEYOR control out to ON position, (Para 2-1).

(3) Check if water/vibrator/chain oiler air solenoid energizes.

(a) If air solenoid does not energize, go to Step 18 of this Fault.

(b) If air solenoid energizes, go to Step 4 of this Fault.

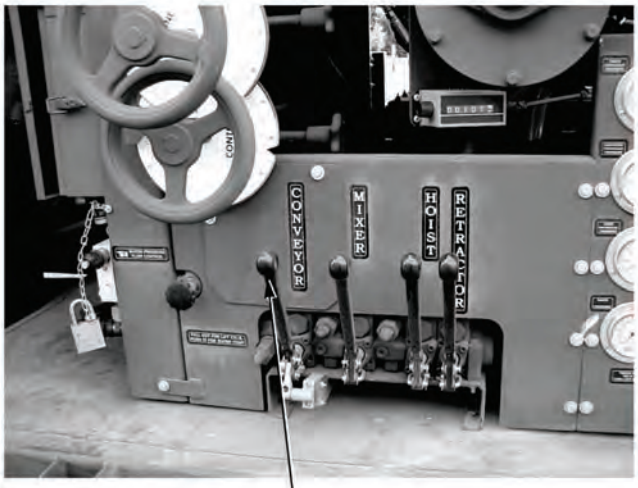

CONVEYOR CONTROL

29. CONCRETE MIXER AUTO AND/OR MANUAL CONTROLS DO NOT OPERATE (AQUATIC [WATER] VALVE, HIGH AND LOW ADMIX, VIBRATORS, AND CHAIN OILER) (CONT).

KNOWN INFO
Air supply system OK.
Control wire harness water/vibrator/chain oiler control (red) wire from CONTROL OVERIDE switch to solenoid connector OK.
Water/vibrator/chain oiler air solenoid ground wire OK.
Water/vibrator/chain oiler air solenoid OK.
Control box 4-pin wire harness control power (blue) wire OK.
Control wire harness control power (blue) wire from connector to CONTROL OVERIDE switch OK.
CONTROL OVERIDE switch OK.
Control harness roller switch control OK.

POSSIBLE PROBLEMS
Control wire harness (red) wire between HIGH FLOW ADMIX and LOW FLOW ADMIX switches faulty.
LOW FLOW ADMIX switch faulty.
Control wire harness (blue) wire between HIGH FLOW ADMIX and LOW FLOW ADMIX switches faulty.
Control wire harness low-flow admix control (orange) wire from LOW FLOW ADMIX switch to air solenoid faulty.
Control wire harness low-flow admix air solenoid ground wire faulty.
Low-flow admix air solenoid faulty.
Control wire harness (red) wire between CONTROL OVERIDE switch and HIGH FLOW ADMIX switch faulty.
HIGH FLOW ADMIX switch faulty.
Control wire harness (blue) wire between CONTROL OVERIDE switch and HIGH FLOW ADMIX switch faulty.
Control wire harness high-flow admix control (brown) wire from HIGH FLOW ADMIX switch to air solenoid connector faulty.
Control wire harness high-flow admix air solenoid ground wire faulty.
High-flow admix air solenoid faulty.

4.

Is high-flow admix air solenoid energized when HIGH FLOW ADMIX switch is placed in the ON position?

NO → Go to Step 14 of this Fault.

YES ↓

TEST OPTIONS
Operational test.
REASON FOR QUESTION
To further isolate fault.

OPERATIONAL TEST

(1) Push CONVEYOR control in to OFF position, (Para 2-1).

(2) Turn CONTROL OVERIDE switch to ON position, (Para 2-1).

NOTE

A clicking sound will be heard when air solenoid energizes.

(3) Turn HIGH FLOW ADMIX switch ON, (Para 2-1).

(4) Check if high-flow admix air solenoid energizes.

(a) If high-flow admix air solenoid does not energize, go to Step 14 of this Fault.

(b) If high-flow admix air solenoid energizes, go to Step 5 of this Fault.

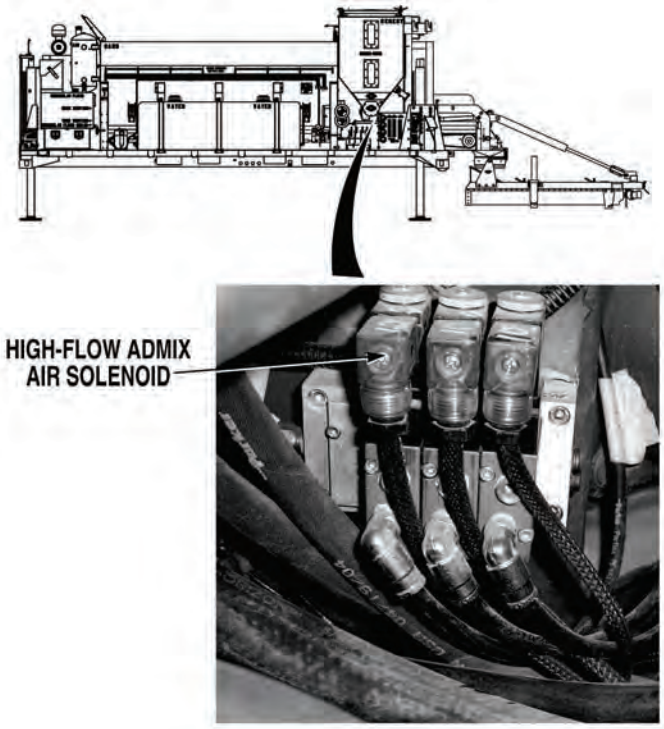

29. CONCRETE MIXER AUTO AND/OR MANUAL CONTROLS DO NOT OPERATE (AQUATIC [WATER] VALVE, HIGH AND LOW ADMIX, VIBRATORS, AND CHAIN OILER) (CONT).

KNOWN INFO

- Air supply system OK.
- Control wire harness water/vibrator/chain oiler control (red) wire from CONTROL OVERIDE switch to solenoid connector OK.
- Water/vibrator/chain oiler air solenoid ground wire OK.
- Water/vibrator/chain oiler air solenoid OK.
- Control box 4-pin wire harness control power (blue) wire OK.
- Control wire harness control power (blue) wire from connector to CONTROL OVERIDE switch OK.
- CONTROL OVERIDE switch OK.
- Control harness roller switch control OK.
- Control wire harness (blue) wire between CONTROL OVERIDE switch and HIGH FLOW ADMIX switch OK.
- Control wire harness high-flow admix control (brown) wire from HIGH FLOW ADMIX switch to air solenoid connector OK.
- Control wire harness high-flow admix air solenoid ground wire OK.
- High-flow admix air solenoid OK.

POSSIBLE PROBLEMS

- Control wire harness (red) wire between HIGH FLOW ADMIX and LOW FLOW ADMIX switches faulty.
- LOW FLOW ADMIX switch faulty.
- Control wire harness (blue) wire between HIGH FLOW ADMIX and LOW FLOW ADMIX switches faulty.
- Control wire harness low-flow admix control (orange) wire from LOW FLOW ADMIX switch to air solenoid faulty.
- Control wire harness low-flow admix air solenoid ground wire faulty.
- Low-flow admix air solenoid faulty.
- Control wire harness (red) wire between CONTROL OVERIDE switch and HIGH FLOW ADMIX switch faulty.
- HIGH FLOW ADMIX switch faulty.

5.

Is high-flow admix air solenoid energized when HIGH FLOW ADMIX switch is placed in the AUTO position and CONVEYOR control is activated?

NO → Go to Step 13 of this Fault.

YES ↓

TEST OPTIONS

Operational test.

REASON FOR QUESTION

To further isolate fault.

OPERATIONAL TEST

(1) Turn CONTROL OVERIDE switch to AUTO, (Para 2-1).

NOTE

A clicking sound will be heard when air solenoid energizes.

(2) Turn HIGH FLOW ADMIX SWITCH to AUTO, (Para 2-1).

NOTE

Water/vibrator/chain oiler air solenoid will also be energized in Step 3.

(3) Pull CONVEYOR control out to ON position, (Para 2-1).

(4) Check if high-flow admix air solenoid energizes.

(a) If air solenoid does not energize, go to Step 13 of this Fault.

(b) If air solenoid energizes, go to Step 6 of this Fault.

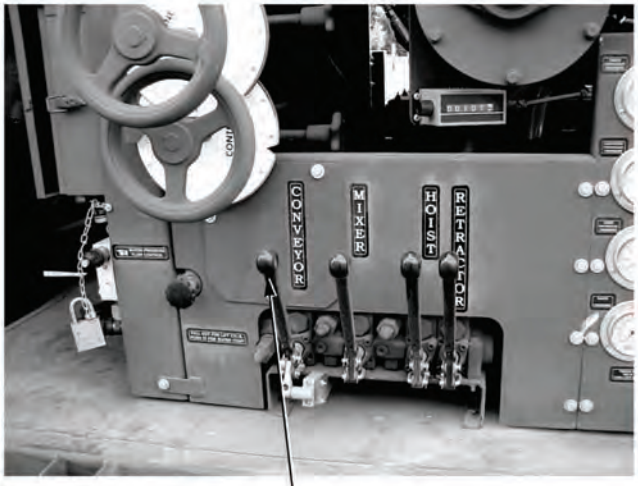

CONVEYOR CONTROL

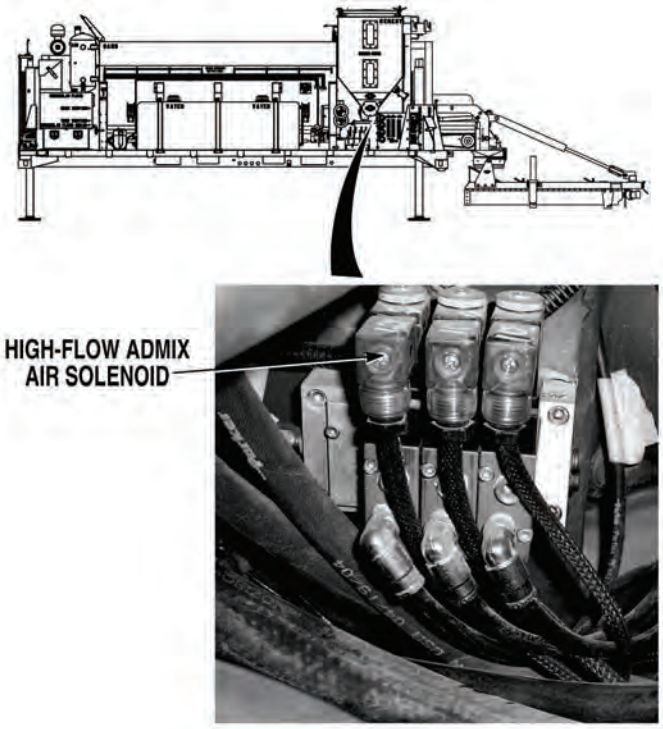

29. CONCRETE MIXER AUTO AND/OR MANUAL CONTROLS DO NOT OPERATE (AQUATIC [WATER] VALVE, HIGH AND LOW ADMIX, VIBRATORS, AND CHAIN OILER) (CONT).

KNOWN INFO

- Air supply system OK.
- Control wire harness water/vibrator/chain oiler control (red) wire from CONTROL OVERIDE switch to solenoid connector OK.
- Water/vibrator/chain oiler air solenoid ground wire OK.
- Water/vibrator/chain oiler air solenoid OK.
- Control box 4-pin wire harness control power (blue) wire OK.
- Control wire harness control power (blue) wire from connector to CONTROL OVERIDE switch OK.
- CONTROL OVERIDE switch OK.
- Control harness roller switch control OK.
- HIGH FLOW ADMIX switch OK.
- Control wire harness (blue) wire between CONTROL OVERIDE switch and HIGH FLOW ADMIX switch OK.
- Control wire harness high-flow admix control (brown) wire from HIGH FLOW ADMIX switch to air solenoid connector OK.
- Control wire harness high-flow admix air solenoid ground wire OK.
- High-flow admix air solenoid OK.
- Control wire harness (red) wire between CONTROL OVERIDE switch and HIGH FLOW ADMIX switch OK.

POSSIBLE PROBLEMS

- Control wire harness (red) wire between HIGH FLOW ADMIX and LOW FLOW ADMIX switches faulty.
- LOW FLOW ADMIX switch faulty.
- Control wire harness (blue) wire between HIGH FLOW ADMIX and LOW FLOW ADMIX switches faulty.
- Control wire harness low-flow admix control (orange) wire from LOW FLOW ADMIX switch to air solenoid faulty.
- Control wire harness low-flow admix air solenoid ground wire faulty.
- Low-flow admix air solenoid faulty.

6.

Is low-flow admix air solenoid energized when LOW FLOW ADMIX switch is placed in the ON position?

NO → Go to Step 9 of this Fault.

YES ↓

TEST OPTIONS

Operational test.

REASON FOR QUESTION

To further isolate fault.

OPERATIONAL TEST

(1) Push CONVEYOR control in to OFF position, (Para 2-1).

(2) Turn HIGH FLOW ADMIX SWITCH to OFF, (Para 2-1).

NOTE

A clicking sound will be heard when air solenoid energizes.

(3) Turn CONTROL OVERIDE switch to ON position, (Para 2-1).

(4) Turn LOW FLOW ADMIX switch ON, (Para 2-1).

(5) Check if low-flow admix air solenoid energizes.

(a) If low-flow admix air solenoid does not energize, go to Step 9 of this Fault.

(b) If low-flow admix air solenoid energizes, go to Step 7 of this Fault.

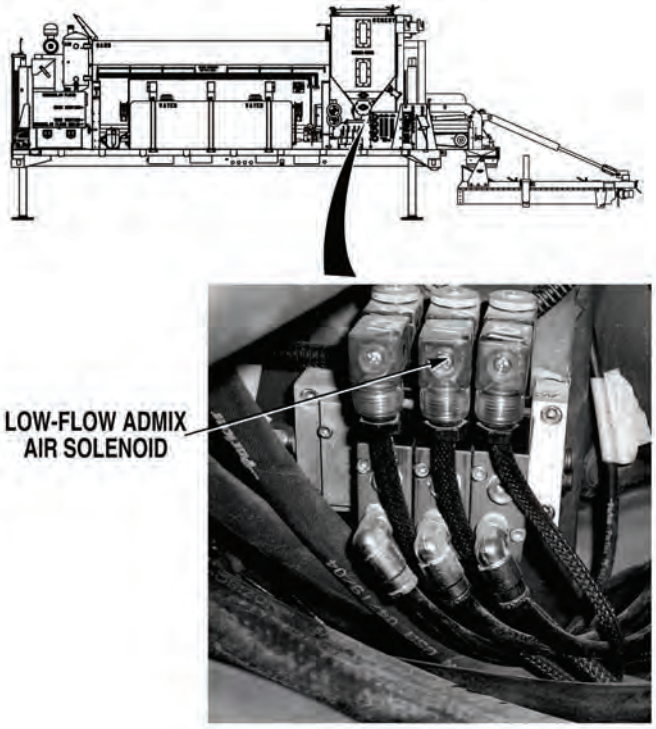

29. CONCRETE MIXER AUTO AND/OR MANUAL CONTROLS DO NOT OPERATE (AQUATIC [WATER] VALVE, HIGH AND LOW ADMIX, VIBRATORS, AND CHAIN OILER) (CONT).

KNOWN INFO

- Air supply system OK.
- Control wire harness water/vibrator/chain oiler control (red) wire from CONTROL OVERIDE switch to solenoid connector OK.
- Water/vibrator/chain oiler air solenoid ground wire OK.
- Water/vibrator/chain oiler air solenoid OK.
- Control box 4-pin wire harness control power (blue) wire OK.
- Control wire harness control power (blue) wire from connector to CONTROL OVERIDE switch OK.
- CONTROL OVERIDE switch OK.
- Control harness roller switch control OK.
- HIGH FLOW ADMIX switch OK.
- Control wire harness (blue) wire between CONTROL OVERIDE switch and HIGH FLOW ADMIX switch OK.
- Control wire harness high-flow admix control (brown) wire from HIGH FLOW ADMIX switch to air solenoid connector OK.
- Control wire harness high-flow admix air solenoid ground wire OK.
- High-flow admix air solenoid OK.
- Control wire harness (red) wire between CONTROL OVERIDE switch and HIGH FLOW ADMIX switch OK.
- Control wire harness (blue) wire between HIGH FLOW ADMIX and LOW FLOW ADMIX switches OK.
- Control wire harness low-flow admix control (orange) wire from LOW FLOW ADMIX switch to air solenoid OK.
- Control wire harness low-flow admix air solenoid ground wire OK.
- Low-flow admix air solenoid OK.

POSSIBLE PROBLEMS

- Control wire harness (red) wire between HIGH FLOW ADMIX and LOW FLOW ADMIX switches faulty.
- LOW FLOW ADMIX switch faulty.

7.

Is low-flow admix air solenoid energized when LOW FLOW ADMIX switch is placed in the AUTO position and CONVEYOR control is activated?

NO → Go to Step 8 of this Fault.

YES → Go to troubleshooting procedure for system that is not operating correctly, (Para 4-3).

TEST OPTIONS

Operational test.

REASON FOR QUESTION

If LOW-FLOW and HIGH-FLOW ADMIX system solenoids are energizing, an individual system is faulty and another troubleshooting procedure applies.

OPERATIONAL TEST

(1) Turn CONTROL OVERIDE switch to AUTO, (Para 2-1).

NOTE

A clicking sound will be heard when air solenoid energizes.

(2) Turn LOW FLOW ADMIX SWITCH to AUTO, (Para 2-1).

(3) Pull CONVEYOR control out to ON position, (Para 2-20).

NOTE

Water/vibrator/chain oiler air solenoid will also be energized in Step 3.

(4) Check if low-flow admix air solenoid energizes.

(a) If air solenoid does not energize, go to Step 8 of this Fault.

(b) If air solenoid energizes, go to troubleshooting procedure for system that is not operating correctly, (Para 4-3).

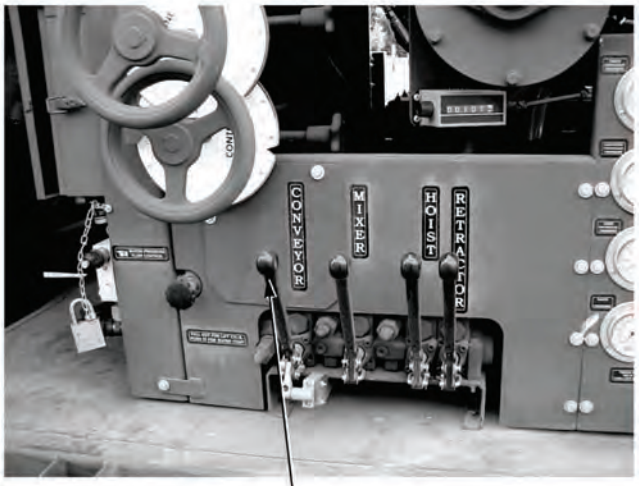

CONVEYOR CONTROL

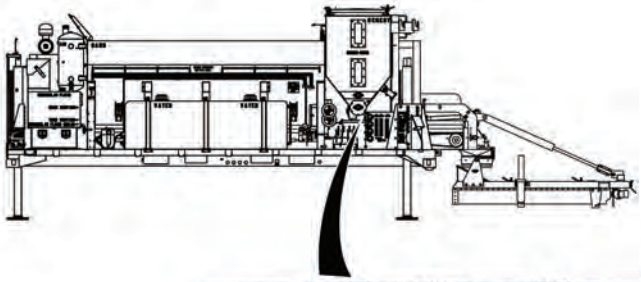

LOW-FLOW ADMIX AIR SOLENOID

29. CONCRETE MIXER AUTO AND/OR MANUAL CONTROLS DO NOT OPERATE (AQUATIC [WATER] VALVE, HIGH AND LOW ADMIX, VIBRATORS, AND CHAIN OILER) (CONT).

KNOWN INFO

- Air supply system OK.
- Control wire harness water/vibrator/chain oiler control (red) wire from CONTROL OVERIDE switch to solenoid connector OK.
- Water/vibrator/chain oiler air solenoid ground wire OK.
- Water/vibrator/chain oiler air solenoid OK.
- Control box 4-pin wire harness control power (blue) wire OK.
- Control wire harness control power (blue) wire from connector to CONTROL OVERIDE switch OK.
- CONTROL OVERIDE switch OK.
- Control harness roller switch control OK.
- HIGH FLOW ADMIX switch OK.
- Control wire harness (blue) wire between CONTROL OVERIDE switch and HIGH FLOW ADMIX switch OK.
- Control wire harness high-flow admix control (brown) wire from HIGH FLOW ADMIX switch to air solenoid connector OK.
- Control wire harness high-flow admix air solenoid ground wire OK.
- High-flow admix air solenoid OK.
- Control wire harness (red) wire between CONTROL OVERIDE switch and HIGH FLOW ADMIX switch OK.
- Control wire harness (blue) wire between HIGH FLOW ADMIX and LOW FLOW ADMIX switches OK.
- Control wire harness low-flow admix control (orange) wire from LOW FLOW ADMIX switch to air solenoid OK.
- Control wire harness low-flow admix air solenoid ground wire OK.
- Low-flow admix air solenoid OK.

POSSIBLE PROBLEMS

- Control wire harness (red) wire between HIGH FLOW ADMIX and LOW FLOW ADMIX switches faulty.
- LOW FLOW ADMIX switch faulty.

8.

WARNING

Read WARNING on Page 4-929

Is continuity measured across red wire from HIGH FLOW ADMIX switch terminal to LOW FLOW ADMIX switch terminal?

NO → Repair wire (Para 3-141) or replace control wire harness, (Para 3-135). Verify repair, go to Step 24 of this Fault.

YES → Replace LOW FLOW ADMIX switch, (Para 3-57). Verify repair, go to Step 24 of this Fault.

TEST OPTIONS

Continuity test.

REASON FOR QUESTION

If continuity is measured, LOW FLOW ADMIX switch is faulty. If not, red wire between LOW FLOW and HIGH FLOW ADMIX switches is faulty.

WARNING

Remove all jewelry such as rings, dog tags, bracelets etc. If jewelry or tools contact positive electrical circuits, a direct short may result. Damage to equipment, injury or death to personnel may occur.

CONTINUITY TEST

(1) Push in CONVEYOR control to OFF position, (Para 2-20).

(2) Turn LOW FLOW ADMIX switch OFF, (Para 2-1).

(3) Turn CONTROL OVERIDE switch to OFF, (Para 2-1).

(4) Turn IGNITION SWITCH OFF, (Para 2-1).

(5) Disconnect batteries, (Para 3-10).

(6) Set multimeter select switch to ohms.

(7) Connect positive (+) lead to red wire at LOW FLOW ADMIX switch terminal.

(8) Connect negative (-) lead to red wire at HIGH FLOW ADMIX switch terminal.

(a) If continuity is not measured, repair red wire, (Para 3-141) or replace control wire harness, (Para 3-135).

(b) If continuity is measured, replace LOW FLOW ADMIX switch, (Para 3-57).

(9) Verify repair, go to Step 24 of this Fault.

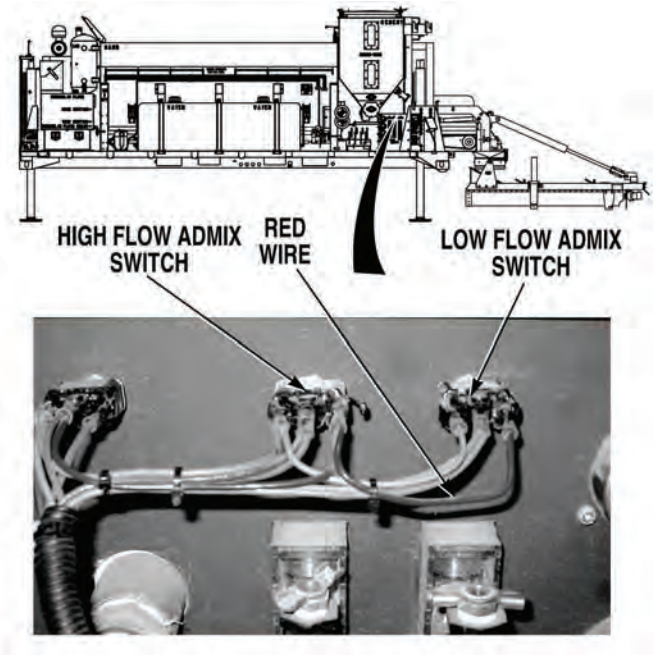

29. CONCRETE MIXER AUTO AND/OR MANUAL CONTROLS DO NOT OPERATE (AQUATIC [WATER] VALVE, HIGH AND LOW ADMIX, VIBRATORS, AND CHAIN OILER) (CONT).

KNOWN INFO

- Air supply system OK.
- Control wire harness water/vibrator/chain oiler control (red) wire from CONTROL OVERIDE switch to solenoid connector OK.
- Water/vibrator/chain oiler air solenoid ground wire OK.
- Water/vibrator/chain oiler air solenoid OK.
- Control box 4-pin wire harness control power (blue) wire OK.
- Control wire harness control power (blue) wire from connector to CONTROL OVERIDE switch OK.
- CONTROL OVERIDE switch OK.
- Control harness roller switch control OK.
- HIGH FLOW ADMIX switch OK.
- Control wire harness (blue) wire between CONTROL OVERIDE switch and HIGH FLOW ADMIX switch OK.
- Control wire harness high-flow admix control (brown) wire from HIGH FLOW ADMIX switch to air solenoid connector OK.
- Control wire harness high-flow admix air solenoid ground wire OK.
- High-flow admix air solenoid OK.
- Control wire harness (red) wire between CONTROL OVERIDE switch and HIGH FLOW ADMIX switch OK.
- Control wire harness (red) wire between HIGH FLOW ADMIX and LOW FLOW ADMIX switches OK.

POSSIBLE PROBLEMS

- Control wire harness (blue) wire between HIGH FLOW ADMIX and LOW FLOW ADMIX switches faulty.
- LOW FLOW ADMIX switch faulty.
- Control wire harness low-flow admix control (orange) wire from LOW FLOW ADMIX switch to air solenoid faulty.
- Control wire harness low-flow admix air solenoid ground wire faulty.
- Low-flow admix air solenoid faulty.

9.

Is low-flow admix air solenoid energized when CONTROL OVERIDE and LOW FLOW ADMIX switch is placed in the AUTO position?

TEST OPTIONS

Operational test.

REASON FOR QUESTION

To further isolate fault.

NO → Go to Step 11 of this Fault.

YES ↓

OPERATIONAL TEST

(1) Turn CONTROL OVERIDE switch to AUTO position, (Para 2-1).

(2) Turn LOW FLOW ADMIX switch to AUTO position, (Para 2-1).

NOTE

A clicking sound will be heard when air solenoid energizes.

(3) Pull CONVEYOR control out to ON position, (Para 2-1).

NOTE

Water/vibrator/chain oiler air solenoid will also be energized in Step 3.

(4) Check if low-flow admix air solenoid energizes.

(a) If air solenoid does not energize, go to Step 11 of this Fault.

(b) If air solenoid energizes, go to Step 10 of this Fault.

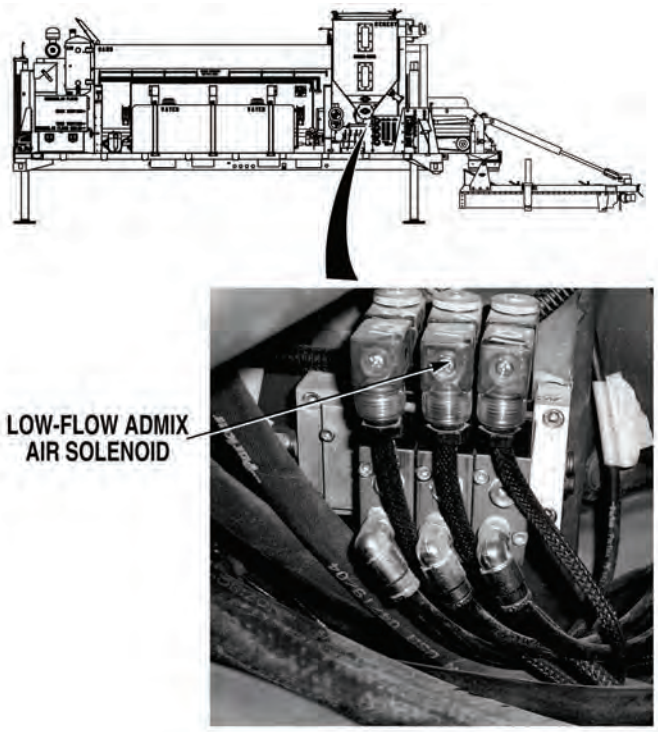

29. CONCRETE MIXER AUTO AND/OR MANUAL CONTROLS DO NOT OPERATE (AQUATIC [WATER] VALVE, HIGH AND LOW ADMIX, VIBRATORS, AND CHAIN OILER) (CONT).

KNOWN INFO

- Air supply system OK.
- Control wire harness water/vibrator/chain oiler control (red) wire from CONTROL OVERIDE switch to solenoid connector OK.
- Water/vibrator/chain oiler air solenoid ground wire OK.
- Water/vibrator/chain oiler air solenoid OK.
- Control box 4-pin wire harness control power (blue) wire OK.
- Control wire harness control power (blue) wire from connector to CONTROL OVERIDE switch OK.
- CONTROL OVERIDE switch OK.
- Control harness roller switch control OK.
- HIGH FLOW ADMIX switch OK.
- Control wire harness (blue) wire between CONTROL OVERIDE switch and HIGH FLOW ADMIX switch OK.
- Control wire harness high-flow admix control (brown) wire from HIGH FLOW ADMIX switch to air solenoid connector OK.
- Control wire harness high-flow admix ground wire OK.
- High-flow admix air solenoid OK.
- Control wire harness (red) wire between CONTROL OVERIDE switch and HIGH FLOW ADMIX switch OK.
- Control wire harness (red) wire between HIGH FLOW ADMIX and LOW FLOW ADMIX switches OK.
- Control wire harness low-flow admix control (orange) wire from LOW FLOW ADMIX switch to air solenoid OK.
- Control wire harness low-flow admix air solenoid ground wire OK.
- Low-flow admix air solenoid OK.

POSSIBLE PROBLEMS

- Control wire harness (blue) wire between HIGH FLOW ADMIX and LOW FLOW ADMIX switches faulty.
- LOW FLOW ADMIX switch faulty.

10.

WARNING

Read WARNING on Page 4-933

Is continuity measured across blue wire between HIGH FLOW ADMIX switch and LOW FLOW ADMIX switch?

NO → Repair blue wire (Para 3-141), or replace control wire harness, (Para 3-135). Verify repair, go to Step 24 of this Fault.

YES → Replace LOW FLOW ADMIX switch, (Para 3-57). Verify repair, go to Step 24 of this Fault.

TEST OPTIONS

Continuity test.

REASON FOR QUESTION

If continuity is measured, LOW FLOW ADMIX switch is faulty. If not, blue wire between LOW FLOW and HIGH FLOW ADMIX switches are faulty.

WARNING

Remove all jewelry such as rings, dog tags, bracelets etc. If jewelry or tools contact positive electrical circuits, a direct short may result. Damage to equipment, injury or death to personnel may occur.

CONTINUITY TEST

(1) Push in CONVEYOR control to OFF position, (Para 2-20).

(2) Turn LOW FLOW ADMIX switch OFF, (Para 2-1).

(3) Turn CONTROL OVERIDE switch to OFF, (Para 2-1).

(4) Turn IGNITION CONTROL SWITCH OFF, (Para 2-1).

(5) Disconnect batteries, (Para 3-10).

(6) Set multimeter select switch to ohms.

(7) Connect positive (+) lead to blue wire at LOW FLOW ADMIX switch terminal.

(8) Connect negative (-) lead to blue wire at HIGH FLOW ADMIX switch terminal.

(a) If continuity is not measured, repair blue wire, (Para 3-141) or replace control wire harness, (Para 3-135).

(b) If continuity is measured, replace LOW FLOW ADMIX switch, (Para 3-57).

(9) Verify repair, go to Step 24 of this Fault.

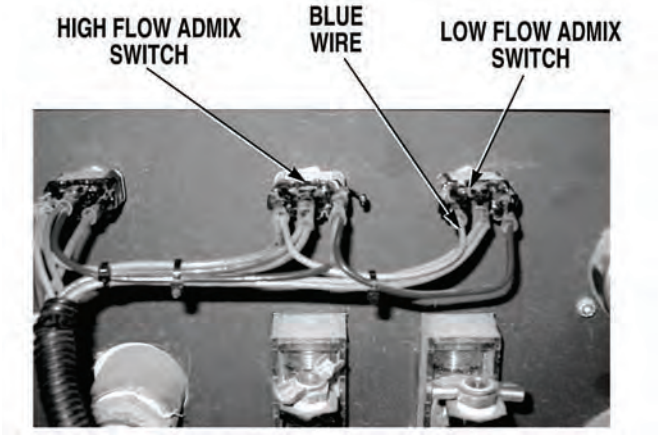

29. CONCRETE MIXER AUTO AND/OR MANUAL CONTROLS DO NOT OPERATE (AQUATIC [WATER] VALVE, HIGH AND LOW ADMIX, VIBRATORS, AND CHAIN OILER) (CONT).

KNOWN INFO

- Air supply system OK.
- Control wire harness water/vibrator/chain oiler control (red) wire from CONTROL OVERIDE switch to solenoid connector OK.
- Water/vibrator/chain oiler air solenoid ground wire OK.
- Water/vibrator/chain oiler air solenoid OK.
- Control box 4-pin wire harness control power (blue) wire OK.
- Control wire harness control power (blue) wire from connector to CONTROL OVERIDE switch OK.
- CONTROL OVERIDE switch OK.
- Control harness roller switch control OK.
- HIGH FLOW ADMIX switch OK.
- Control wire harness (blue) wire between CONTROL OVERIDE switch and HIGH FLOW ADMIX switch OK.
- Control wire harness high-flow admix control (brown) wire from HIGH FLOW ADMIX switch to air solenoid connector OK.
- Control wire harness high-flow admix air solenoid ground wire OK.
- High-flow admix air solenoid OK.
- Control wire harness (red) wire between CONTROL OVERIDE switch and HIGH FLOW ADMIX switch OK.
- Control wire harness (red) wire between HIGH FLOW ADMIX and LOW FLOW ADMIX switches OK.
- Control wire harness (blue) wire between HIGH FLOW ADMIX and LOW FLOW ADMIX switches OK.
- LOW FLOW ADMIX switch OK.

POSSIBLE PROBLEMS

- Control wire harness low-flow admix control (orange) wire from LOW FLOW ADMIX switch to air solenoid faulty.
- Control wire harness low-flow admix air solenoid ground wire faulty.
- Low admix air solenoid faulty.

11.

WARNING

Read WARNING on Page 4-935

Is continuity measured across control harness low flow admix air solenoid control (orange) wire from LOW FLOW ADMIX switch to solenoid connector?

NO → Repair orange wire (Para 3-141), or replace control wire harness, (Para 3-135). Verify repair, go to Step 24 of this Fault.

YES ↓

TEST OPTIONS

Continuity test.

REASON FOR QUESTION

If continuity is not measured, control wire harness (orange) wire is faulty.

WARNING

Remove all jewelry such as rings, dog tags, bracelets etc. If jewelry or tools contact positive electrical circuits, a direct short may result. Damage to equipment, injury or death to personnel may occur.

CONTINUITY TEST

(1) Push in CONVEYOR control to OFF position, (Para 2-20).

(2) Turn CONTROL OVERIDE switch OFF, (Para 2-1).

(3) Turn LOW FLOW ADMIX switch OFF, (Para 2-1).

(4) Turn IGNITION control switch OFF, (Para 2-1).

(5) Disconnect batteries, (Para 3-10).

(6) Remove mixing auger hydraulic controls cover, (Para 3-51).

(7) Set multimeter select switch to ohms.

(8) Connect positive (+) lead to control (orange) wire at LOW FLOW ADMIX switch terminal.

(9) Connect negative (-) lead to control (orange) wire at low-flow admix air solenoid valve connector.

(a) If continuity is not measured, repair orange wire, (Para 3-141) or replace control wire harness, (Para 3-135). Verify repair, go to Step 24 of this Fault.

(b) If continuity is measured, go to Step 14 of this Fault.

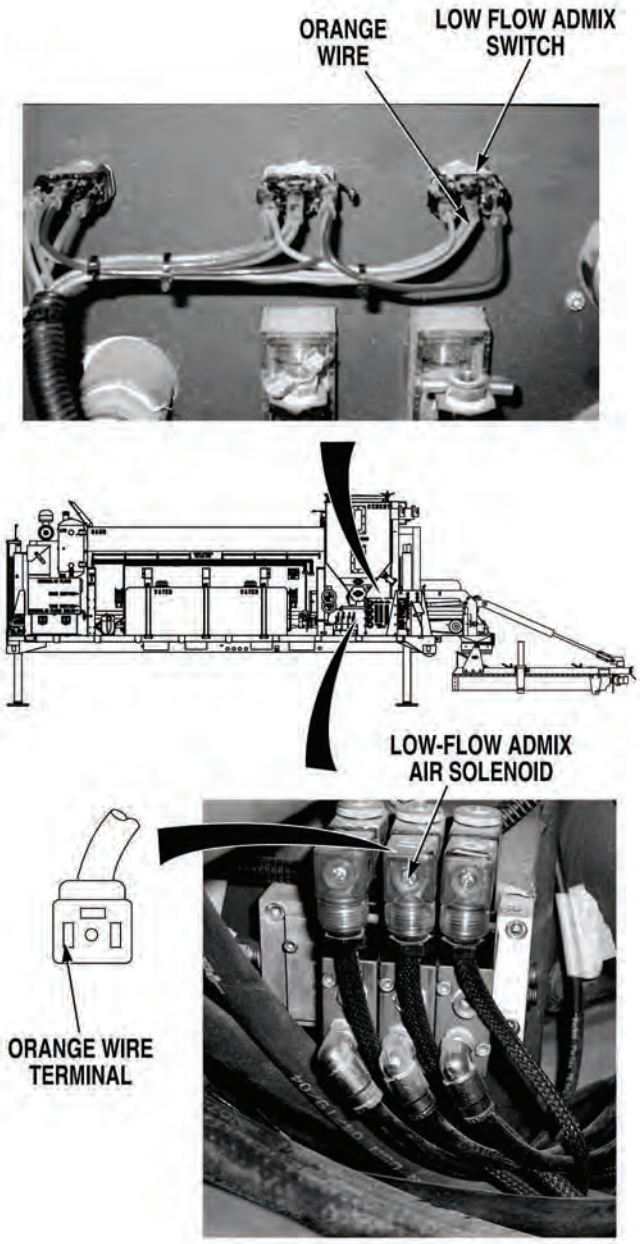

29. CONCRETE MIXER AUTO AND/OR MANUAL CONTROLS DO NOT OPERATE (AQUATIC [WATER] VALVE, HIGH AND LOW ADMIX, VIBRATORS, AND CHAIN OILER) (CONT).

KNOWN INFO

- Air supply system OK.
- Control wire harness water/vibrator/chain oiler control (red) wire from CONTROL OVERIDE switch to solenoid connector OK.
- Water/vibrator/chain oiler air solenoid ground wire OK.
- Water/vibrator/chain oiler air solenoid OK.
- Control box 4-pin wire harness control power (blue) wire OK.
- Control wire harness control power (blue) wire from connector to CONTROL OVERIDE switch OK.
- CONTROL OVERIDE switch OK.
- Control harness roller switch control OK.
- HIGH FLOW ADMIX switch OK.
- Control wire harness (blue) wire between CONTROL OVERIDE switch and HIGH FLOW ADMIX switch OK.
- Control wire harness high-flow admix control (brown) wire from HIGH FLOW ADMIX switch to air solenoid connector OK.
- Control wire harness high-flow admix air solenoid ground wire OK.
- High-flow admix air solenoid OK.
- Control wire harness (red) wire between CONTROL OVERIDE switch and HIGH FLOW ADMIX switch OK.
- Control wire harness (red) wire between HIGH FLOW ADMIX and LOW FLOW ADMIX switches OK.
- Control wire harness (blue) wire between HIGH FLOW ADMIX and LOW FLOW ADMIX switches OK.
- LOW FLOW ADMIX switch OK.
- Control wire harness low-flow admix control (orange) wire from LOW FLOW ADMIX switch to air solenoid OK.

POSSIBLE PROBLEMS

- Control wire harness low-flow admix air solenoid ground wire faulty.
- Low-flow admix air solenoid faulty.

12.

WARNING

Read WARNING on Page 4-937

Is continuity measured across low-flow admix air solenoid ground wire from valve connector to a known good ground?

NO → Repair ground wire (Para 3-141), or replace control wire harness, (Para 3-135). Verify repair, go to Step 24 of this Fault.

YES → Replace low admix air solenoid, (Para 3-64). Verify repair, go to Step 24 of this Fault.

TEST OPTIONS

Continuity test.

REASON FOR QUESTION

If continuity is measured, low-flow admix air solenoid is faulty. If not, control wire harness low-flow admix air solenoid ground wire is faulty.

WARNING

Remove all jewelry such as rings, dog tags, bracelets etc. If jewelry or tools contact positive electrical circuits, a direct short may result. Damage to equipment, injury or death to personnel may occur.

CONTINUITY TEST

(1) Set multimeter select switch to ohms.

(2) Connect positive (+) multimeter lead to low-flow admix air solenoid connector ground wire terminal.

(3) Connect negative (-) multimeter lead to a known good ground.

(a) If continuity is not measured, repair ground wire, (Para 3-141) or replace control wire harness, (Para 3-135).

(b) If continuity is measured, replace low-flow admix air solenoid, (Para 3-64).

(4) Verify repair, go to Step 24 of this Fault.

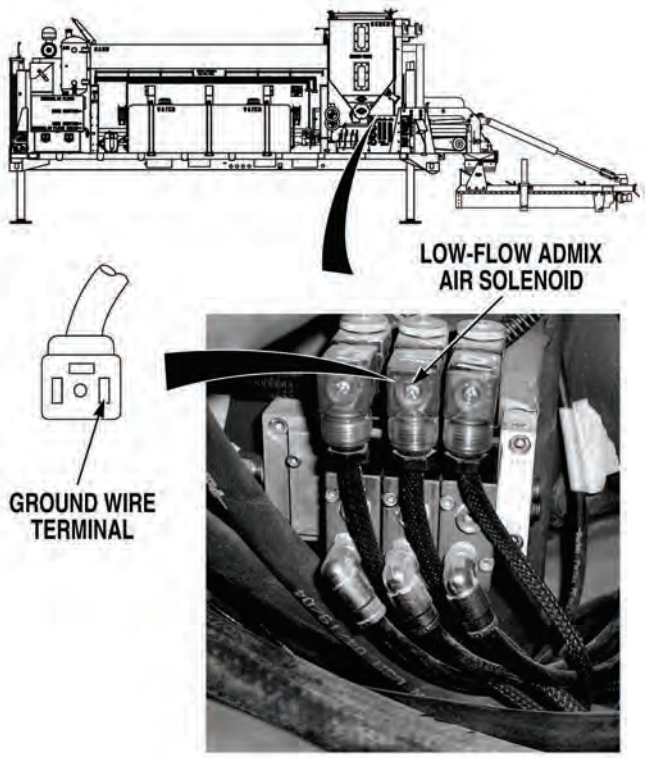

29. CONCRETE MIXER AUTO AND/OR MANUAL CONTROLS DO NOT OPERATE (AQUATIC [WATER] VALVE, HIGH AND LOW ADMIX, VIBRATORS, AND CHAIN OILER) (CONT).

KNOWN INFO

- Air supply system OK.
- Control wire harness water/vibrator/chain oiler control (red) wire from CONTROL OVERIDE switch to solenoid connector OK.
- Water/vibrator/chain oiler air solenoid ground wire OK.
- Water/vibrator/chain oiler air solenoid OK.
- Control box 4-pin wire harness control power (blue) wire OK.
- Control wire harness control power (blue) wire from connector to CONTROL OVERIDE switch OK.
- CONTROL OVERIDE switch OK.
- Control harness roller switch control OK.
- Control wire harness (blue) wire between CONTROL OVERIDE switch and HIGH FLOW ADMIX switch OK.
- Control wire harness high-flow admix control (brown) wire from HIGH FLOW ADMIX switch to air solenoid connector OK.
- Control wire harness high-flow admix air solenoid ground wire OK.
- High-flow admix air solenoid OK.
- Control wire harness (red) wire between HIGH FLOW ADMIX and LOW FLOW ADMIX switches OK.
- LOW FLOW ADMIX switch OK.
- Control wire harness (blue) wire between HIGH FLOW ADMIX and LOW FLOW ADMIX switches OK.
- Control wire harness low-flow admix control (orange) wire from LOW FLOW ADMIX switch to air solenoid OK.
- Control wire harness low-flow admix air solenoid ground wire OK.
- Low-flow admix air solenoid OK.

POSSIBLE PROBLEMS

- Control wire harness (red) wire between CONTROL OVERIDE switch and HIGH FLOW ADMIX switch faulty.
- HIGH FLOW ADMIX switch faulty.

13.

WARNING

Read WARNING on Page 4-939

Is continuity measured across red wire from CONTROL OVERIDE switch center terminal to HIGH FLOW ADMIX switch terminal?

NO → Repair (red) wire (Para 3-141), or replace control wire harness, (Para 3-135). Verify repair, go to Step 24 of this Fault.

YES → Replace HIGH FLOW ADMIX switch, (Para 3-57). Verify repair, go to Step 24 of this Fault.

TEST OPTIONS

Continuity test.

REASON FOR QUESTION

If continuity is measured, HIGH FLOW ADMIX switch is faulty. If not, control wire harness (red) wire between CONTROL OVERIDE switch and HIGH FLOW ADMIX switch is faulty.

WARNING

Remove all jewelry such as rings, dog tags, bracelets etc. If jewelry or tools contact positive electrical circuits, a direct short may result. Damage to equipment, injury or death to personnel may occur.

CONTINUITY TEST

(1) Push in CONVEYOR control to OFF position, (Para 2-20).

(2) Turn CONTROL OVERIDE switch OFF, (Para 2-1).

(3) Turn HIGH FLOW ADMIX switch OFF, (Para 2-1).

(4) Turn IGNITION SWITCH OFF, (Para 2-1).

(5) Disconnect batteries, (Para 3-10).

(6) Set multimeter select switch to ohms.

(7) Connect positive (+) lead to red wire at CONTROL OVERIDE switch center terminal.

(8) Connect negative (-) lead to red wire at HIGH FLOW ADMIX switch terminal.

(a) If continuity is not measured, repair red wire, (Para 3-141) or replace control wire harness, (Para 3-135).

(b) If continuity is measured, replace HIGH FLOW ADMIX switch, (Para 3-57).

(9) Verify repair, go to Step 24 of this Fault.

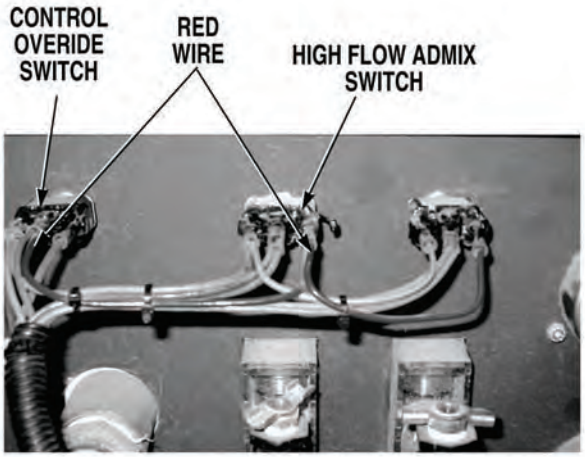

29. CONCRETE MIXER AUTO AND/OR MANUAL CONTROLS DO NOT OPERATE (AQUATIC [WATER] VALVE, HIGH AND LOW ADMIX, VIBRATORS, AND CHAIN OILER) (CONT).

KNOWN INFO

- Air supply system OK.
- Control wire harness water/vibrator/chain oiler control (red) wire from CONTROL OVERIDE switch to solenoid connector OK.
- Water/vibrator/chain oiler air solenoid ground wire OK.
- Water/vibrator/chain oiler air solenoid OK.
- Control box 4-pin wire harness control power (blue) wire OK.
- Control wire harness control power (blue) wire from connector to CONTROL OVERIDE switch OK.
- CONTROL OVERIDE switch OK.
- Control harness roller switch control OK.
- Control wire harness (red) wire between HIGH FLOW ADMIX and LOW FLOW ADMIX switches OK.
- LOW FLOW ADMIX switch OK.
- Control wire harness (blue) wire between HIGH FLOW ADMIX and LOW FLOW ADMIX switches OK.
- Control wire harness low-flow admix control (orange) wire from LOW FLOW ADMIX switch to air solenoid OK.
- Control wire harness low-flow admix air solenoid ground wire OK.
- Low-flow admix air solenoid OK.
- Control wire harness (red) wire between CONTROL OVERIDE switch and HIGH FLOW ADMIX switch OK.

POSSIBLE PROBLEMS

- HIGH FLOW ADMIX switch faulty.
- Control wire harness (blue) wire between CONTROL OVERIDE switch and HIGH FLOW ADMIX switch faulty.
- Control wire harness high-flow admix control (brown) wire from HIGH FLOW ADMIX switch to air solenoid connector faulty.
- Control wire harness high-flow admix air solenoid ground wire faulty.
- High-flow admix air solenoid faulty.

14.

Is high flow admix air solenoid energized when HIGH FLOW ADMIX switch is placed in the AUTO position and CONVEYOR controls are activated?

TEST OPTIONS

Operational test.

REASON FOR QUESTION

To further isolate fault.

NO → Go to Step 16 of this Fault.

YES ↓

OPERATIONAL TEST

(1) Turn CONTROL OVERIDE switch to AUTO position, (Para 2-1).

(2) Turn HIGH FLOW ADMIX switch to AUTO position, (Para 2-1).

NOTE

A clicking sound will be heard when air solenoid energizes.

NOTE

Washer/vibrator/chain oiler air solenoid will also be energized in Step 3.

(3) Pull CONVEYOR control out to ON position, (Para 2-20).

(4) Check if high-flow admix air solenoid energizes.

(a) If air solenoid does not energize, go to Step 16 of this Fault.

(b) If air solenoid energizes, go to Step 15 of this Fault.

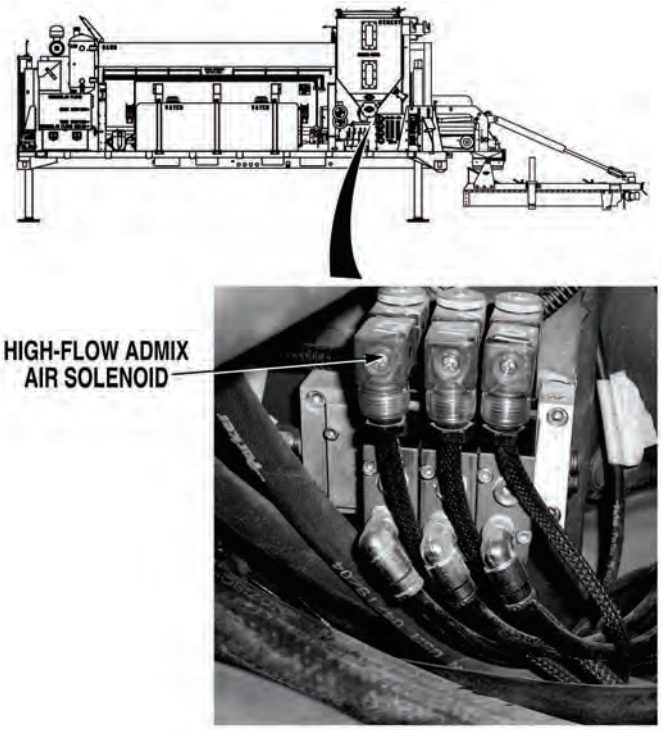

29. CONCRETE MIXER AUTO AND/OR MANUAL CONTROLS DO NOT OPERATE (AQUATIC [WATER] VALVE, HIGH AND LOW ADMIX, VIBRATORS, AND CHAIN OILER) (CONT).

KNOWN INFO

- Air supply system OK.
- Control wire harness water/vibrator/chain oiler control (red) wire from CONTROL OVERIDE switch to solenoid connector OK.
- Water/vibrator/chain oiler air solenoid ground wire OK.
- Water/vibrator/chain oiler air solenoid OK.
- Control box 4-pin wire harness control power (blue) wire OK.
- Control wire harness control power (blue) wire from connector to CONTROL OVERIDE switch OK.
- CONTROL OVERIDE switch OK.
- Control harness roller switch control OK.
- Control wire harness (red) wire between HIGH FLOW ADMIX and LOW FLOW ADMIX switches OK.
- LOW FLOW ADMIX switch OK.
- Control wire harness (blue) wire between HIGH FLOW ADMIX and LOW FLOW ADMIX switches OK.
- Control wire harness high-flow admix control (orange) wire from HIGH FLOW ADMIX switch to air solenoid OK.
- Control wire harness low-flow admix air solenoid ground wire OK.
- Low-flow admix air solenoid OK.
- Control wire harness (red) wire between CONTROL OVERIDE switch and HIGH FLOW ADMIX switch OK.
- Control wire harness low-flow admix control (brown) wire from LOW FLOW ADMIX switch to air solenoid connector OK.
- Control wire harness high-flow admix air solenoid ground wire OK.
- High-flow admix air solenoid OK.

POSSIBLE PROBLEMS

- HIGH FLOW ADMIX switch faulty.
- Control wire harness (blue) wire between CONTROL OVERIDE switch and HIGH FLOW ADMIX switch faulty.

15.

WARNING

Read WARNING on Page 4-943

Is continuity measured across blue wire between CONTROL OVERIDE switch and HIGH FLOW ADMIX switch?

NO → Repair or replace wire, (Para 3-141). Verify repair, go to Step 24 of this Fault.

YES → Replace HIGH FLOW ADMIX switch, (Para 3-57). Verify repair, go to Step 24 of this Fault.

TEST OPTIONS

Continuity test.

REASON FOR QUESTION

If continuity is measured, HIGH FLOW ADMIX switch is faulty. If not, blue wire between CONTROL OVERIDE and HIGH FLOW ADMIX switch is faulty.

WARNING

Remove all jewelry such as rings, dog tags, bracelets etc. If jewelry or tools contact positive electrical circuits, a direct short may result. Damage to equipment, injury or death to personnel may occur.

CONTINUITY TEST

(1) Push CONVEYOR control in to OFF position, (Para 2-20).

(2) Turn HIGH FLOW ADMIX switch OFF, (Para 2-1).

(3) Turn CONTROL OVERIDE switch OFF, (Para 2-1).

(4) Turn IGNITION CONTROL switch OFF, (Para 2-1).

(5) Disconnect batteries, (Para 3-10).

(6) Set multimeter select switch to ohms.

(7) Connect positive (+) multimeter lead to blue wire at CONTROL OVERIDE switch.

(8) Connect negative multimeter lead to blue wire at HIGH FLOW ADMIX switch.

  (a) If continuity is not measured, repair or replace blue wire between CONTROL OVERIDE and HIGH FLOW ADMIX switch, (Para 3-141).

  (b) If continuity is measured, replace HIGH FLOW ADMIX switch, (Para 3-57).

(9) Verify repair, go to Step 24 of this Fault.

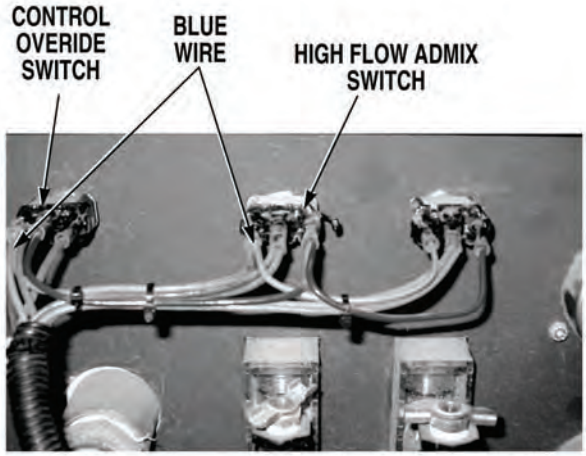

29. CONCRETE MIXER AUTO AND/OR MANUAL CONTROLS DO NOT OPERATE (AQUATIC [WATER] VALVE, HIGH AND LOW ADMIX, VIBRATORS, AND CHAIN OILER) (CONT).

KNOWN INFO

- Air supply system OK.
- Control wire harness water/vibrator/chain oiler control (red) wire from CONTROL OVERIDE switch to solenoid connector OK.
- Water/vibrator/chain oiler air solenoid ground wire OK.
- Water/vibrator/chain oiler air solenoid OK.
- Control box 4-pin wire harness control power (blue) wire OK.
- Control wire harness control power (blue) wire from connector to CONTROL OVERIDE switch OK.
- CONTROL OVERIDE switch OK.
- Control harness roller switch control OK.
- Control wire harness (red) wire between HIGH FLOW ADMIX and LOW FLOW ADMIX switches OK.
- LOW FLOW ADMIX switch OK.
- Control wire harness (blue) wire between HIGH FLOW ADMIX and LOW FLOW ADMIX switches OK.
- Control wire harness high-flow admix control (orange) wire from HIGH FLOW ADMIX switch to air solenoid OK.
- Control wire harness low-flow admix solenoid ground wire OK.
- Low-flow admix air solenoid OK.
- Control wire harness (red) wire between CONTROL OVERIDE switch and HIGH FLOW ADMIX switch OK.
- HIGH FLOW ADMIX switch OK.
- Control wire harness (blue) wire between CONTROL OVERIDE switch and HIGH FLOW ADMIX switch OK.

POSSIBLE PROBLEMS

- Control wire harness high-flow admix control (brown) wire from HIGH FLOW ADMIX switch to air solenoid connector faulty.
- Control wire harness high-flow admix air solenoid ground wire OK.
- High-flow admix air solenoid faulty.

16.

WARNING
Read WARNING on Page 4-945

Is continuity measured across control harness high-flow admix air solenoid control (brown) wire from HIGH FLOW ADMIX switch to valve connector?

NO → Repair brown wire, (Para 3-141) or replace control wire harness, (Para 3-135). Verify repair, go to Step 24 of this Fault.

YES ↓

TEST OPTIONS

Continuity test.

REASON FOR QUESTION

If continuity is not measured, control wire harness (brown) wire between HIGH FLOW ADMIX switch and high-flow air solenoid is faulty.

WARNING

Remove all jewelry such as rings, dog tags, bracelets etc. If jewelry or tools contact positive electrical circuits, a direct short may result. Damage to equipment, injury or death to personnel may occur.

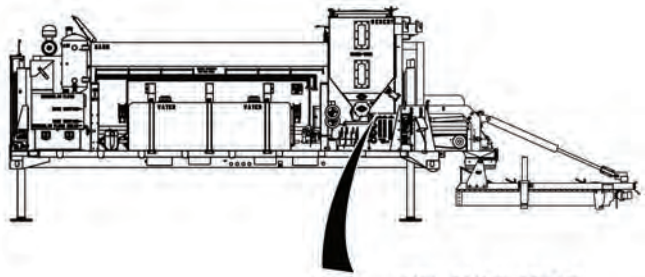

CONTINUITY TEST

(1) Push in CONVEYOR control to OFF position, (Para 2-20).

(2) Turn CONTROL OVERIDE switch OFF, (Para 2-1).

(3) Turn HIGH FLOW ADMIX switch OFF, (Para 2-1).

(4) Turn IGNITION CONTROL switch OFF, (Para 2-1).

(5) Disconnect batteries, (Para 3-10).

(6) Remove mixing auger hydraulic controls cover, (Para 3-51).

(7) Set multimeter select switch to ohms.

(8) Connect positive (+) lead to control (brown) wire at HIGH FLOW ADMIX switch terminal.

(9) Connect negative (-) lead to control (brown) wire at high-flow admix air solenoid valve connector.

  (a) If continuity is not measured, repair brown wire, (Para 3-141) or replace control wire harness, (Para 3-135). Verify repair, go to Step 24 of this Fault.

  (b) If continuity is measured, go to Step 17 of this Fault.

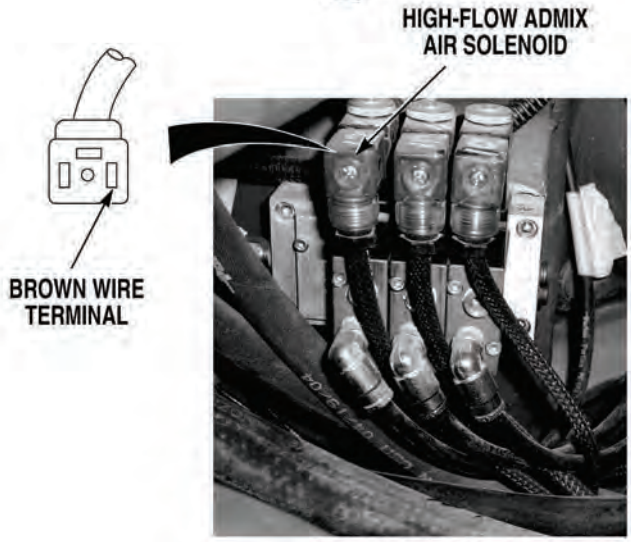

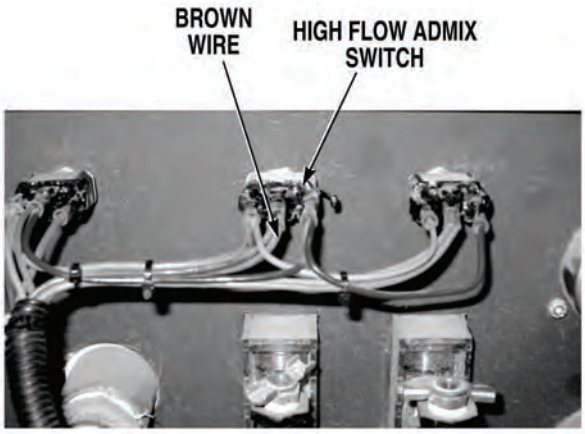

29. CONCRETE MIXER AUTO AND/OR MANUAL CONTROLS DO NOT OPERATE (AQUATIC [WATER] VALVE, HIGH AND LOW ADMIX, VIBRATORS, AND CHAIN OILER) (CONT).

KNOWN INFO

- Air supply system OK.
- Control wire harness water/vibrator/chain oiler control (red) wire from CONTROL OVERIDE switch to solenoid connector OK.
- Water/vibrator/chain oiler air solenoid ground wire OK.
- Water/vibrator/chain oiler air solenoid OK.
- Control box 4-pin wire harness control power (blue) wire OK.
- Control wire harness control power (blue) wire from connector to CONTROL OVERIDE switch OK.
- CONTROL OVERIDE switch OK.
- Control harness roller switch control OK.
- Control wire harness (red) wire between HIGH FLOW ADMIX and LOW FLOW ADMIX switches OK.
- LOW FLOW ADMIX switch OK.
- Control wire harness (blue) wire between HIGH FLOW ADMIX and LOW FLOW ADMIX switches OK.
- Control wire harness low-flow admix control (orange) wire from LOW FLOW ADMIX switch to air solenoid OK.
- Control wire harness low-flow admix air solenoid ground wire OK.
- Low-flow admix air solenoid OK.
- Control wire harness (red) wire between CONTROL OVERIDE switch and HIGH FLOW ADMIX switch OK.
- HIGH FLOW ADMIX switch OK.
- Control wire harness (blue) wire between CONTROL OVERIDE switch and HIGH FLOW ADMIX switch OK.
- Control wire harness high-flow admix control (brown) wire from HIGH FLOW ADMIX switch to air solenoid connector OK.

POSSIBLE PROBLEMS

- Control wire harness high-flow admix air solenoid ground wire faulty.
- High-flow admix air solenoid faulty.

17.

WARNING

Read WARNING on Page 4-947

Is continuity measured across high-flow admix air solenoid ground wire from valve connector to a known good ground?

NO → Repair ground wire, (Para 3-141) or replace control wire harness, (Para 3-135). Verify repair, go to Step 24 of this Fault.

YES → Replace high-flow admix air solenoid, (Para 3-64). Verify repair, go to Step 24 of this Fault.

TEST OPTIONS

Continuity test.

REASON FOR QUESTION

If continuity is measured, high-flow admix air solenoid is faulty. If not, control wire harness high-flow admix ground wire is faulty.

WARNING

Remove all jewelry such as rings, dog tags, bracelets etc. If jewelry or tools contact positive electrical circuits, a direct short may result. Damage to equipment, injury or death to personnel may occur.

CONTINUITY TEST

(1) Set multimeter select switch to ohms.

(2) Connect positive (+) multimeter lead to high-flow admix air solenoid connector ground wire.

(3) Connect negative (-) multimeter lead to a known good ground.

(a) If continuity is not measured, repair ground wire, (Para 3-141) or replace control wire harness, (Para 3-135).

(b) If continuity is measured, replace high-flow admix air solenoid, (Para 3-64).

(4) Verify repair, go to Step 24 of this Fault.

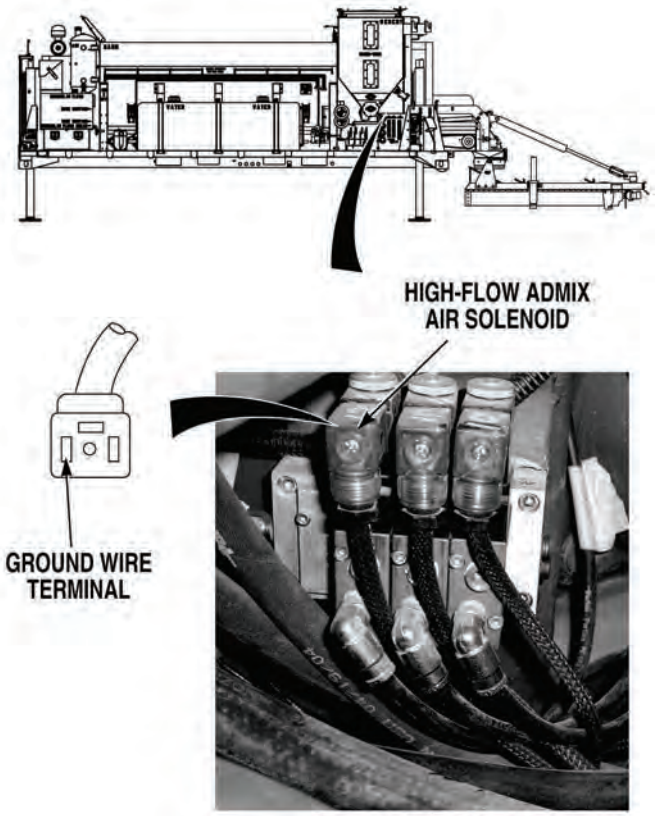

29. CONCRETE MIXER AUTO AND/OR MANUAL CONTROLS DO NOT OPERATE (AQUATIC [WATER] VALVE, HIGH AND LOW ADMIX, VIBRATORS, AND CHAIN OILER) (CONT).

KNOWN INFO

- Air supply system OK.
- Control wire harness water/vibrator/chain oiler control (red) wire from CONTROL OVERIDE switch to solenoid connector OK.
- Water/vibrator/chain oiler air solenoid ground wire OK.
- Water/vibrator/chain oiler air solenoid OK.
- Control box 4-pin wire harness control power (blue) wire OK.
- Control wire harness control power (blue) wire from connector to CONTROL OVERIDE switch OK.
- Control wire harness (red) wire between HIGH FLOW ADMIX and LOW FLOW ADMIX switches OK.
- LOW FLOW ADMIX switch OK.
- Control wire harness (blue) wire between HIGH FLOW ADMIX and LOW FLOW ADMIX switches OK.
- Control wire harness low-flow admix control (orange) wire from LOW FLOW ADMIX switch to air solenoid OK.
- Control wire harness low-flow admix air solenoid ground wire OK.
- Low-flow admix air solenoid OK.
- Control wire harness (red) wire between CONTROL OVERIDE switch and HIGH FLOW ADMIX switch OK.
- HIGH FLOW ADMIX switch OK.
- Control wire harness (blue) wire between CONTROL OVERIDE switch and HIGH FLOW ADMIX switch OK.
- Control wire harness high-flow admix control (brown) wire from HIGH FLOW ADMIX switch to air solenoid connector OK.
- Control wire harness high-flow admix air solenoid ground wire OK.
- High-flow admix air solenoid OK.

POSSIBLE PROBLEMS

- CONTROL OVERIDE switch faulty.
- Control harness roller switch control faulty.

18.

WARNING

Read WARNING on Page 4-949

Is continuity measured across CONTROL OVERIDE switch from blue wire terminal to center terminal when switch is in AUTO position?

NO → Replace CONTROL OVERIDE switch, (Para 3-60). Verify repair, go to Step 24 of this Fault.

YES → Repair blue wire, (Para 3-141) or replace control harness, (Para 3-135). Verify repair, go to Step 24 of this Fault.

TEST OPTIONS

Continuity test.

REASON FOR QUESTION

If continuity is measured, control harness roller switch control is faulty. If not, CONTROL OVERIDE switch is faulty.

WARNING

Remove all jewelry such as rings, dog tags, bracelets etc. If jewelry or tools contact positive electrical circuits, a direct short may result. Damage to equipment, injury or death to personnel may occur.

CONTINUITY TEST

(1) Push CONVEYOR control in to OFF position, (Para 2-20).

(2) Turn CONTROL OVERIDE switch to AUTO, (Para 2-1).

(3) Turn IGNITION SWITCH OFF, (Para 2-1).

(4) Disconnect batteries, (Para 3-10).

(5) Connect positive (+) multimeter to CONTROL OVERIDE switch, blue wire terminal.

(6) Connect negative (-) multimeter lead to CONTROL OVERIDE switch center terminal.

(a) If continuity is not measured, replace CONTROL OVERIDE switch, (Para 3-57).

(b) If continuity is measured, repair blue wire, (Para 3-141) or replace control wire harness, (Para 3-135).

(7) Verify repair, go to Step 24 of this Fault.

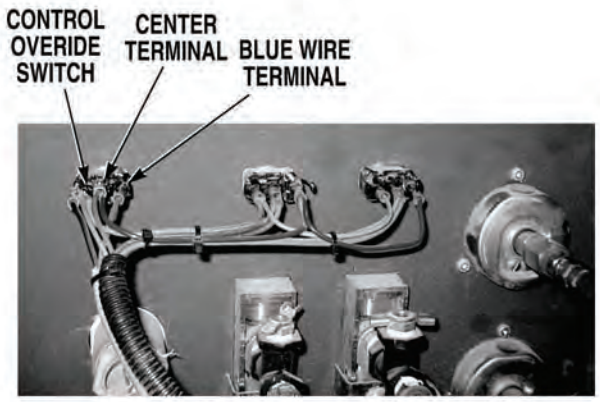

29. CONCRETE MIXER AUTO AND/OR MANUAL CONTROLS DO NOT OPERATE (AQUATIC [WATER] VALVE, HIGH AND LOW ADMIX, VIBRATORS, AND CHAIN OILER) (CONT).

KNOWN INFO

- Air supply system OK.
- Control wire harness (red) wire between HIGH FLOW ADMIX and LOW FLOW ADMIX switches OK.
- LOW FLOW ADMIX switch OK.
- Control wire harness (blue) wire between HIGH FLOW ADMIX and LOW FLOW ADMIX switches OK.
- Control wire harness low-flow admix control (orange) wire from LOW FLOW ADMIX switch to air solenoid OK.
- Control wire harness low-flow admix air solenoid ground wire OK.
- Low-flow admix air solenoid OK.
- Control wire harness (red) wire between CONTROL OVERIDE switch and HIGH FLOW ADMIX switch OK.
- HIGH FLOW ADMIX switch OK.
- Control wire harness (blue) wire between CONTROL OVERIDE switch and HIGH FLOW ADMIX switch OK.
- Control wire harness high-flow admix control (brown) wire from HIGH FLOW ADMIX switch to air solenoid connector OK.
- Control wire harness high-flow admix air solenoid ground wire OK.
- High-flow admix air solenoid OK.
- Control harness roller switch control OK.

POSSIBLE PROBLEMS

- CONTROL OVERIDE switch faulty.
- Control wire harness water/vibrator/chain oiler control (red) wire from CONTROL OVERIDE switch to solenoid connector faulty.
- Water/vibrator/chain oiler air solenoid ground wire faulty.
- Water/vibrator/chain oiler air solenoid faulty.
- Control box 4-pin wire harness control power (blue) wire faulty.
- Control wire harness control power (blue) wire from connector to CONTROL OVERIDE switch faulty.

19.

Is water/vibrator/chain oiler air solenoid energized when CONTROL OVERIDE switch is placed in the AUTO position and CONVEYOR controls are activated?

NO → Go to Step 20 of this Fault.

YES → Replace CONTROL OVERIDE switch, (Para 3-57). Verify repair, go to Step 24 of this Fault.

TEST OPTIONS

Operational test.

REASON FOR QUESTION

If water/vibrator/chain oiler air solenoid energizes, CONTROL OVERIDE switch is faulty.

OPERATIONAL TEST

(1) Turn CONTROL OVERIDE switch to AUTO position, (Para 2-1).

(2) Pull CONVEYOR control out to ON position, (Para 2-20).

(3) Check if water/vibrator/chain oiler air solenoid energizes.

NOTE

A clicking sound will be heard when air solenoid energizes.

(a) If air solenoid does not energize, go to Step 20 of this Fault.

(b) If air solenoid energizes, replace CONTROL OVERIDE switch, (Para 3-57). Verify repair, go to Step 24 of this Fault.

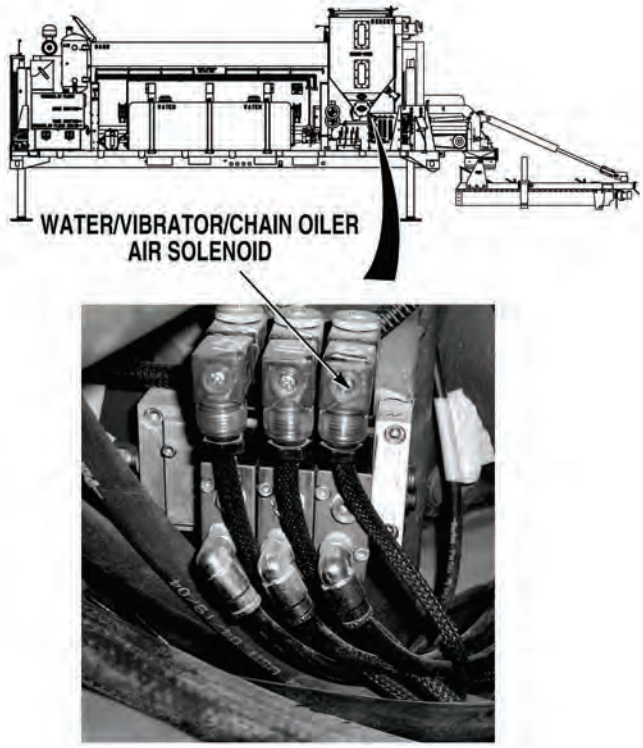

29. CONCRETE MIXER AUTO AND/OR MANUAL CONTROLS DO NOT OPERATE (AQUATIC [WATER] VALVE, HIGH AND LOW ADMIX, VIBRATORS, AND CHAIN OILER) (CONT).

KNOWN INFO
Air supply system OK.
Control wire harness (red) wire between HIGH FLOW ADMIX and LOW FLOW ADMIX switches OK.
LOW FLOW ADMIX switch OK.
Control wire harness (blue) wire between HIGH FLOW ADMIX and LOW FLOW ADMIX switches OK.
Control wire harness low-flow admix control (orange) wire from LOW FLOW ADMIX switch to air solenoid OK.
Control wire harness low-flow admix air solenoid ground wire OK.
Low-flow admix air solenoid OK.
Control wire harness (red) wire between CONTROL OVERIDE switch and HIGH FLOW ADMIX switch OK.
HIGH FLOW ADMIX switch OK.
Control wire harness (blue) wire between CONTROL OVERIDE switch and HIGH FLOW ADMIX switch OK.
Control wire harness high-flow admix control (brown) wire from HIGH FLOW ADMIX switch to air solenoid connector OK.
Control wire harness high-flow admix air solenoid ground wire OK.
High-flow admix air solenoid OK.
Control harness roller switch control OK.
CONTROL OVERIDE switch OK.

POSSIBLE PROBLEMS
Control wire harness water/vibrator/chain oiler control (red) wire from CONTROL OVERIDE switch to solenoid connector faulty.
Water/vibrator/chain oiler air solenoid ground wire faulty.
Water/vibrator/chain oiler air solenoid faulty.
Control box 4-pin wire harness control power (blue) wire faulty.
Control wire harness control power (blue) wire from connector to CONTROL OVERIDE switch faulty.

20.

WARNING

Read WARNING on Page 4-953

Are 10 to 14 VDC measured between control power (blue) wire at CONTROL OVERIDE switch, blue and black wire terminal, and a known good ground?

NO → Go to Step 23 of this Fault.

YES ↓

TEST OPTIONS
Voltage test.
REASON FOR QUESTION
To further isolate fault.

WARNING

Remove all jewelry such as rings, dog tags, bracelets etc. If jewelry or tools contact positive electrical circuits, a direct short may result. Damage to equipment, injury or death to personnel may occur.

VOLTAGE TEST

(1) Connect positive (+) multimeter lead to CONTROL OVERIDE switch blue and black wire terminal.

(2) Connect negative (-) multimeter lead to a known good ground.

(a) If 10 to 14 VDC are not present, go to Step 23 of this Fault.

(b) If 10 to 14 VDC are present, go to Step 21 of this Fault.

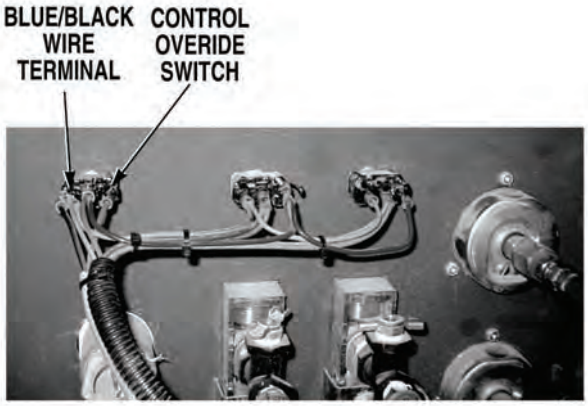

29. CONCRETE MIXER AUTO AND/OR MANUAL CONTROLS DO NOT OPERATE (AQUATIC [WATER] VALVE, HIGH AND LOW ADMIX, VIBRATORS, AND CHAIN OILER) (CONT).

KNOWN INFO

- Air supply system OK.
- Control wire harness (red) wire between HIGH FLOW ADMIX and LOW FLOW ADMIX switches OK.
- LOW FLOW ADMIX switch OK.
- Control wire harness (blue) wire between HIGH FLOW ADMIX and LOW FLOW ADMIX switches OK.
- Control wire harness low-flow admix control (orange) wire from LOW FLOW ADMIX switch to air solenoid OK.
- Control wire harness low-flow admix air solenoid ground wire OK.
- Low-flow admix air solenoid OK.
- Control wire harness (red) wire between CONTROL OVERIDE switch and HIGH FLOW ADMIX switch OK.
- HIGH FLOW ADMIX switch OK.
- Control wire harness (blue) wire between CONTROL OVERIDE switch and HIGH FLOW ADMIX switch OK.
- Control wire harness high-flow admix control (brown) wire from HIGH FLOW ADMIX switch to air solenoid connector OK.
- Control wire harness high-flow admix air solenoid ground wire OK.
- High-flow admix air solenoid OK.
- Control harness roller switch control OK.
- CONTROL OVERIDE switch OK.
- Control box 4-pin wire harness control power (blue) wire OK.
- Control wire harness control power (blue) wire from connector to CONTROL OVERIDE switch OK.

POSSIBLE PROBLEMS

- Control wire harness water/vibrator/chain oiler control (red) wire from CONTROL OVERIDE switch to solenoid connector faulty.
- Water/vibrator/chain oiler air solenoid ground wire faulty.
- Water/vibrator/chain oiler air solenoid faulty.

21.

WARNING

Read WARNING on Page 4-955

Is continuity measured across control harness water/vibrator/chain oiler air solenoid control (red) wire from CONTROL OVERIDE switch to air solenoid connector?

NO → Repair wire, (Para 3-141) or replace control wire harness, (Para 3-134). Verify repair, go to Step 24 of this Fault.

YES ↓

TEST OPTIONS

Continuity test.

REASON FOR QUESTION

If continuity is not measured, control harness (red) wire between CONTROL OVERIDE switch and air solenoid connector is faulty.

WARNING

Remove all jewelry such as rings, dog tags, bracelets etc. If jewelry or tools contact positive electrical circuits, a direct short may result. Damage to equipment, injury or death to personnel may occur.

CONTINUITY TEST

(1) Push CONVEYOR control in to OFF position, (Para 2-1).

(2) Turn CONTROL OVERIDE switch OFF, (Para 2-1).

(3) Turn IGNITION CONTROL switch OFF, (Para 2-1).

(4) Disconnect batteries, (Para 3-10).

(5) Remove mixing auger hydraulic controls cover, (Para 3-51).

(6) Set multimeter select switch to ohms.

(7) Connect positive (+) multimeter lead to water/vibrator/chain oiler air solenoid (red) wire at CONTROL OVERIDE switch.

(8) Connect negative (-) multimeter lead to red wire at water/vibrator/chain oiler air solenoid connector.

(a) If continuity is not measured, repair red wire between CONTROL OVERIDE switch and water/vibrator/chain oiler air solenoid connector, (Para 3-141) or replace control wire harness, (Para 3-135). Verify repair, go to Step 24 of this Fault.

(b) If continuity is measured, go to Step 22 of this Fault.

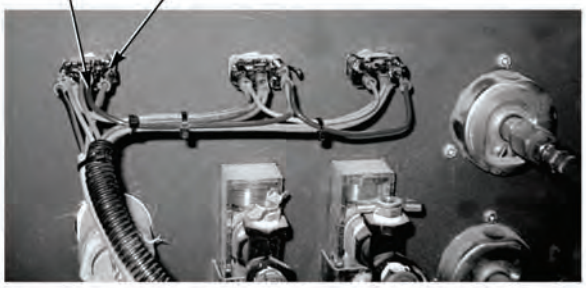

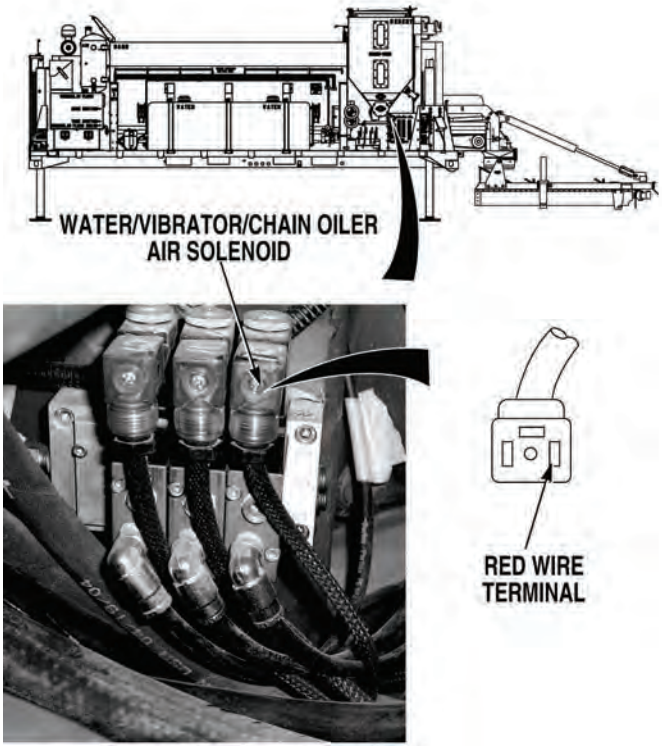

29. CONCRETE MIXER AUTO AND/OR MANUAL CONTROLS DO NOT OPERATE (AQUATIC [WATER] VALVE, HIGH AND LOW ADMIX, VIBRATORS, AND CHAIN OILER) (CONT).

KNOWN INFO

- Air supply system OK.
- Control wire harness (red) wire between HIGH FLOW ADMIX and LOW FLOW ADMIX switches OK.
- LOW FLOW ADMIX switch OK.
- Control wire harness (blue) wire between HIGH FLOW ADMIX and LOW FLOW ADMIX switches OK.
- Control wire harness low-flow admix control (orange) wire from LOW FLOW ADMIX switch to air solenoid OK.
- Control wire harness low-flow admix air solenoid ground wire OK.
- Low-flow admix air solenoid OK.
- Control wire harness (red) wire between CONTROL OVERIDE switch and HIGH FLOW ADMIX switch OK.
- HIGH FLOW ADMIX switch OK.
- Control wire harness (blue) wire between CONTROL OVERIDE switch and HIGH FLOW ADMIX switch OK.
- Control wire harness high-flow admix control (brown) wire from HIGH FLOW ADMIX switch to air solenoid connector OK.
- Control wire harness high-flow admix air solenoid ground wire OK.
- High-flow admix air solenoid OK.
- Control harness roller switch control OK.
- CONTROL OVERIDE switch OK.
- Control box 4-pin wire harness control power (blue) wire OK.
- Control wire harness control power (blue) wire from connector to CONTROL OVERIDE switch OK.
- Control wire harness water/vibrator/chain oiler control (red) wire from CONTROL OVERIDE switch to solenoid connector OK.

POSSIBLE PROBLEMS

- Water/vibrator/chain oiler air solenoid ground wire faulty.
- Water/vibrator/chain oiler air solenoid faulty.

22.

WARNING

Read WARNING on Page 4-957

Is continuity measured across water/vibrator/chain oiler air solenoid ground wire from valve connector to a known good ground?

NO → Repair ground wire, (Para 3-141) or replace control harness, (Para 3-135). Verify repair, go to Step 24 of this Fault.

YES → Replace water/vibrator/chain oiler air solenoid, (Para 3-64). Verify repair, go to Step 24 of this Fault.

TEST OPTIONS

Continuity test.

REASON FOR QUESTION

If continuity is measured, water/vibrator/chain oiler air solenoid is faulty. If not, air solenoid ground wire is faulty.

WARNING

Remove all jewelry such as rings, dog tags, bracelets etc. If jewelry or tools contact positive electrical circuits, a direct short may result. Damage to equipment, injury or death to personnel may occur.

CONTINUITY TEST

(1) Set multimeter select switch to ohms.

(2) Connect positive (+) multimeter lead to water/vibrator/chain oiler ground wire at air solenoid connector.

(3) Connect negative (-) multimeter lead to a known good ground.

(a) If continuity is not measured, repair ground wire, (Para 3-141) or replace control harness, (Para 3-135).

(b) If continuity is measured, replace water/vibrator/chain oiler air solenoid, (Para 3-64).

(4) Verify repair, go to Step 24 of this Fault.

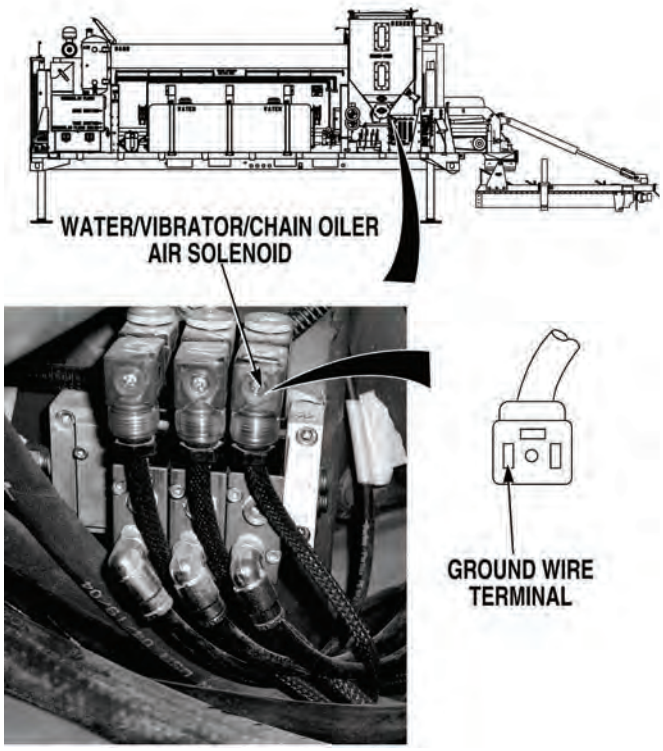

29. CONCRETE MIXER AUTO AND/OR MANUAL CONTROLS DO NOT OPERATE (AQUATIC [WATER] VALVE, HIGH AND LOW ADMIX, VIBRATORS, AND CHAIN OILER) (CONT).

KNOWN INFO

- Air supply system OK.
- Control wire harness (red) wire between HIGH FLOW ADMIX and LOW FLOW ADMIX switches OK.
- LOW FLOW ADMIX switch OK.
- Control wire harness (blue) wire between HIGH FLOW ADMIX and LOW FLOW ADMIX switches OK.
- Control wire harness low-flow admix control (orange) wire from LOW FLOW ADMIX switch to air solenoid OK.
- Control wire harness low-flow admix air solenoid ground wire OK.
- Low-flow admix air solenoid OK.
- Control wire harness (red) wire between CONTROL OVERIDE switch and HIGH FLOW ADMIX switch OK.
- HIGH FLOW ADMIX switch OK.
- Control wire harness (blue) wire between CONTROL OVERIDE switch and HIGH FLOW ADMIX switch OK.
- Control wire harness high-flow admix control (brown) wire from HIGH FLOW ADMIX switch to air solenoid connector OK.
- Control wire harness high-flow admix air solenoid ground wire OK.
- High-flow admix air solenoid OK.
- Control harness roller switch control OK.
- CONTROL OVERIDE switch OK.
- Control wire harness water/vibrator/chain oiler control (red) wire from CONTROL OVERIDE switch to solenoid connector OK.
- Water/vibrator/chain oiler air solenoid ground wire OK.
- Water/vibrator/chain oiler air solenoid OK.

POSSIBLE PROBLEMS

- Control box 4-pin wire harness control power (blue) wire faulty.
- Control wire harness control power (blue) wire from connector to CONTROL OVERIDE switch faulty.

23.

WARNING

Read WARNING on Page 4-959

Are 10 to 14 VDC measured between control power (blue) wire at control box 4-pin harness connector, terminal C and a known good ground?

NO → Repair blue wire (Para 3-141). or replace control box 4-pin wire harness, (Para 3-139). Verify repair, go to Step 24 of this Fault.

YES → Repair blue wire, (Para 3-141) or replace control harness, (Para 3-135). Verify repair, go to Step 24 of this Fault.

TEST OPTIONS

Voltage test.

REASON FOR QUESTION

If 10 to 14 VDC are present, control box 4-pin wire harness (blue) wire is faulty. If not, control wire harness control power (blue) wire from air solenoid connector to CONTROL OVERIDE switch is faulty.

WARNING

Remove all jewelry such as rings, dog tags, bracelets etc. If jewelry or tools contact positive electrical circuits, a direct short may result. Damage to equipment, injury or death to personnel may occur.

VOLTAGE TEST

(1) Turn IGNITION SWITCH OFF, (Para 2-1).

(2) Disconnect control box 4-pin harness connector, (Para 3-139).

(3) Turn IGNITION SWITCH ON, (Para 2-1).

(4) Connect positive (+) multimeter lead to control box 4-pin wire harness connector, terminal C.

(5) Connect negative (-) multimeter lead to a known good ground.

  (a) If 10 to 14 VDC are not present, repair blue wire, (Para 3-141) or replace control box 4-pin wire harness, (Para 3-139).

  (b) If 10 to 14 VDC are present, repair blue wire, (Para 3-141) or replace control harness, (Para 3-135).

(6) Verify repair, go to Step 24 of this Fault.

29. CONCRETE MIXER AUTO AND/OR MANUAL CONTROLS DO NOT OPERATE (AQUATIC [WATER] VALVE, HIGH AND LOW ADMIX, VIBRATORS, AND CHAIN OILER) (CONT).

KNOWN INFO
Air supply system OK. Control wire harness (red) wire between HIGH FLOW ADMIX and LOW FLOW ADMIX switches OK. LOW FLOW ADMIX switch OK. Control wire harness (blue) wire between HIGH FLOW ADMIX and LOW FLOW ADMIX switches OK. Control wire harness low-flow admix control (orange) wire from LOW FLOW ADMIX switch to air solenoid OK. Control wire harness low-flow admix air solenoid ground wire OK. Low-flow admix air solenoid OK. Control wire harness (red) wire between CONTROL OVERIDE switch and HIGH FLOW ADMIX switch OK. HIGH FLOW ADMIX switch OK. Control wire harness (blue) wire between CONTROL OVERIDE switch and HIGH FLOW ADMIX switch OK. Control wire harness high-flow admix control (brown) wire from HIGH FLOW ADMIX switch to air solenoid connector OK. Control wire harness high-flow admix air solenoid ground wire OK. High-flow admix air solenoid OK. CONTROL OVERIDE switch OK. Control harness roller switch control OK. Control wire harness water/vibrator/chain oiler control (red) wire from CONTROL OVERIDE switch to solenoid connector OK. Water/vibrator/chain oiler air solenoid ground wire OK. Water/vibrator/chain oiler air solenoid OK. Control box 4-pin wire harness control power (blue) wire OK. Control wire harness control power (blue) wire from connector to CONTROL OVERIDE switch OK.
POSSIBLE PROBLEMS
None.

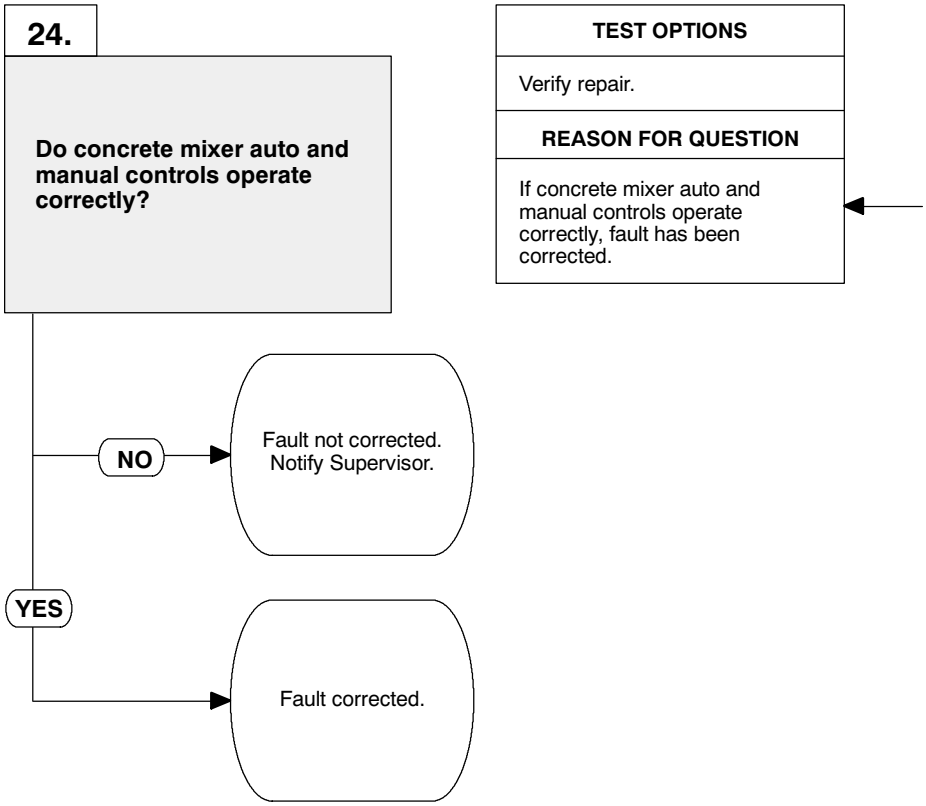

VERIFY REPAIR

(1) If disconnected, connect control harness 4-pin connector, (Para 3-139).

(2) If disconnected, connect air solenoid connectors, (Para 3-139).

(3) If removed, install mixing auger hydraulic control panel, (Para 3-51).

(4) If disconnected, connect batteries, (Para 3-10).

(5) Turn IGNITION SWITCH ON, (Para 2-1).

NOTE

A clicking sound will be heard when air solenoids energize in Steps 7, 10, 13, 17, 21, and 26.

(6) Turn CONTROL OVERIDE switch to ON, (Para 2-1).

(7) Note if water/vibrator/chain oiler air solenoid energizes.

(8) Turn CONTROL OVERIDE switch to OFF.

(9) Turn HIGH FLOW ADMIX switch to ON, (Para 2-1).

(10) Note if high-flow air solenoid energizes.

(11) Turn HIGH FLOW ADMIX switch to OFF.

(12) Turn LOW FLOW ADMIX switch to ON, (Para 2-1).

(13) Note if low-flow air solenoid energizes.

(14) Turn LOW FLOW ADMIX switch to OFF.

(15) Turn CONTROL OVERIDE switch to AUTO, (Para 2-1).

(16) Pull CONVEYOR control out to ON position, (Para 2-1).

(17) Note if water/vibrator/chain oiler air solenoid energizes.

(18) Push CONVEYOR control in to OFF position.

(19) Turn HIGH FLOW ADMIX switch to AUTO, (Para 2-1).

(20) Pull CONVEYOR control out to ON position, (Para 2-1).

(21) Note if high-admix air solenoid energizes. (Note water/vibrator/chain oiler air solenoid will also be energized).

(22) Push CONVEYOR control in to OFF position.

(23) Turn HIGH FLOW ADMIX switch to OFF.

(24) Turn LOW FLOW ADMIX switch to AUTO, (Para 2-1).

(25) Pull CONVEYOR control out to ON position, (Para 2-1).

(26) Note if low-admix air solenoid energizes. (Note water/vibrator/chain oiler air solenoid will also be energized).

(27) Push CONVEYOR control in to OFF position.

(28) Turn HIGH FLOW ADMIX switch to OFF.

(29) Turn CONTROL OVERIDE switch to OFF.

(30) Turn IGNITION CONTROL switch to OFF.

(31) Check if designated air solenoids energized in Steps 7, 10, 13, 17, 21, and 26.

(a) If air solenoids did not energize as indicated, fault has not been corrected. Notify Supervisor.

(b) If all solenoids are energized as indicated, fault has been corrected.

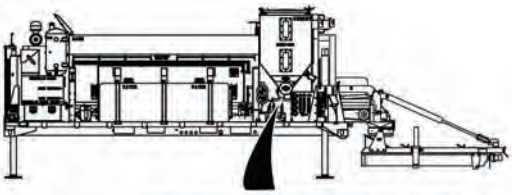

30. NO OR LOW WATER PRESSURE (UNABLE TO ADJUST WATER PRESSURE).

INITIAL SETUP

Tools and Special Tools
Tool Kit, General Mechanic's: Automotive (Item 19, Appendix I)

Equipment Condition
Concrete Mobile Mixer unloaded from PLS, (Para 2-5)
Engine OFF, (Para 2-19)

KNOWN INFO

Nothing.

POSSIBLE PROBLEMS

- Water pump drain cock valve open.
- Water tank clogged.
- Water level in tank low.
- Water system hoses kinked or damaged.
- Water system strainer canister leaking.
- Water system strainer clogged.
- Hydraulic hoses from WATER PRESSURE/FLOW CONTROL valve to water pump leak, kinked, or damaged.
- Hose suction or fill/return valve faulty.
- Hose suction, tank suction, or fill/return valve in wrong position.
- Hydraulic pump or supply hose to WATER PRESSURE/FLOW CONTROL valve faulty.
- WATER PRESSURE/FLOW CONTROL VALVE faulty or not adjusted correctly.
- Water hoses leaking.
- Water pump or pressure relief valve faulty.
- Water pump not primed.
- WATER PRESSURE GAGE faulty.
- WATER PUMP/LIFT CYLINDER CONTROL valve faulty.

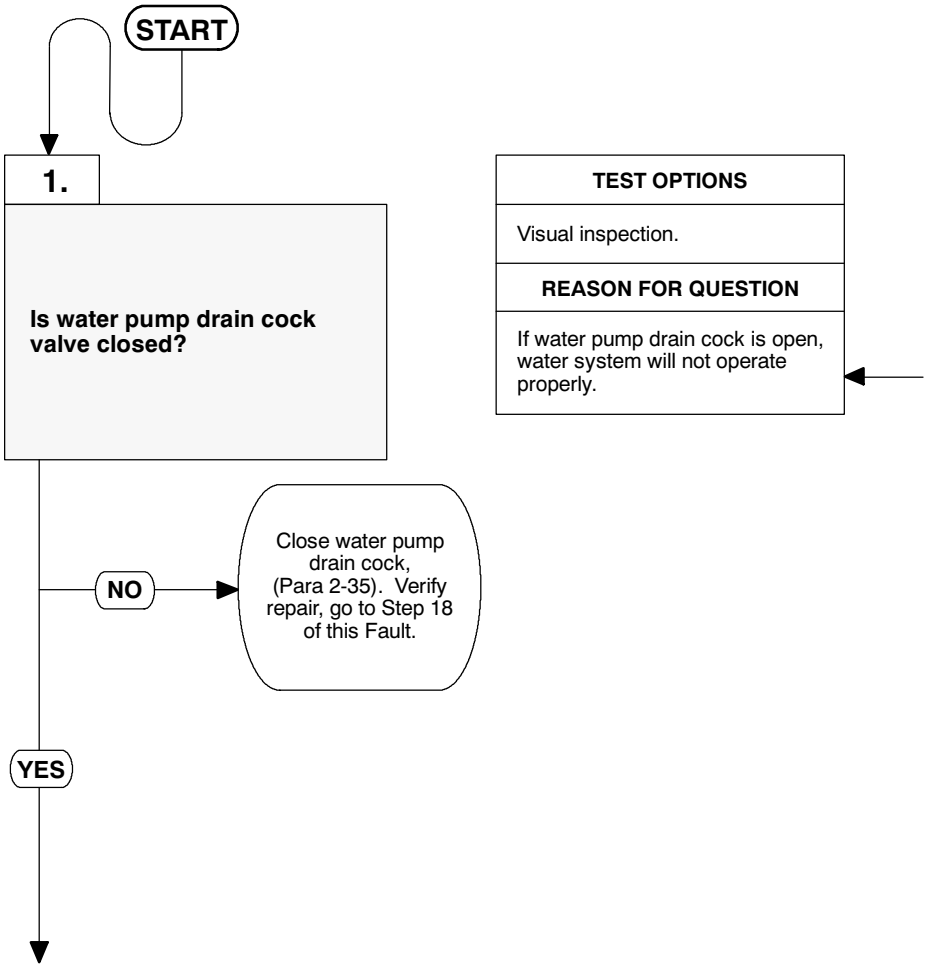

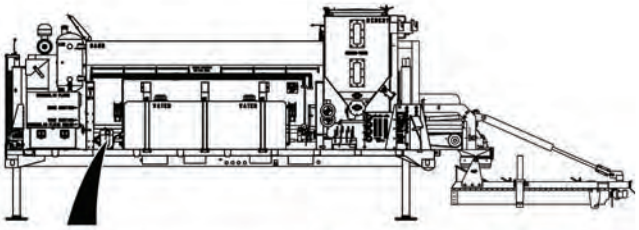

WATER PUMP
DRAIN COCK VALVE

VISUAL INSPECTION
Check if water pump drain cock valve is closed, (Para 2-35). (a) If water pump drain cock valve is open, close water pump drain cock, (Para 2-35). Verify repair, go to Step 18 of this Fault. (b) If water pump drain cock valve is open, go to Step 2 of this Fault.

30. NO OR LOW WATER PRESSURE (UNABLE TO ADJUST WATER PRESSURE). (CONT).

KNOWN INFO
Water pump drain cock valve closed.

POSSIBLE PROBLEMS
Water tank clogged.
Water level in tank low.
Water system hoses kinked or damaged.
Water system strainer canister leaking.
Water system strainer clogged.
Hydraulic hoses from WATER PRESSURE/FLOW CONTROL valve to water pump leak, kinked, or damaged.
Hose suction or fill/return valve faulty.
Hose suction, tank suction, or fill/return valve in wrong position.
Hydraulic pump or supply hose to WATER PRESSURE/FLOW CONTROL valve faulty.
WATER PRESSURE/FLOW CONTROL VALVE faulty or not adjusted correctly.
Water hoses leaking.
Water pump or pressure relief valve faulty.
Water pump not primed.
WATER PRESSURE GAGE faulty.
WATER PUMP/LIFT CYLINDER CONTROL valve faulty.

2.

Does water flow freely without excessive sediment, when plug is removed from water tank connection hose?

NO → Drain, flush, and fill water tanks, (Para 2-12) and clean water strainer, (Para 2-33). Verify repair, go to Step 18 of this Fault.

YES ↓

TEST OPTIONS
Visual inspection.

REASON FOR QUESTION
Water system may not operate correctly if there is excessive sediment in water tanks.

NOTE

Water will flow freely from water tank, when plug is removed from water tank connecting hose. Place suitable drain pan under plug, or move EMM unit to area where water can be drained before removing plug.

VISUAL INSPECTION

(1) Remove plug from water tank connecting hose, (Para 2-12).

(2) Check if water flows freely without excessive sediments.

(a) If water does not flow freely, or has excessive sediments, drain, flush, and refill water tanks with clean water, (Para 2-12) and clean water strainer, (Para 2-33). Verify repair, go to Step 18 of this Fault.

(b) If water flows freely without excessive sediments, go to Step 3 of this Fault.

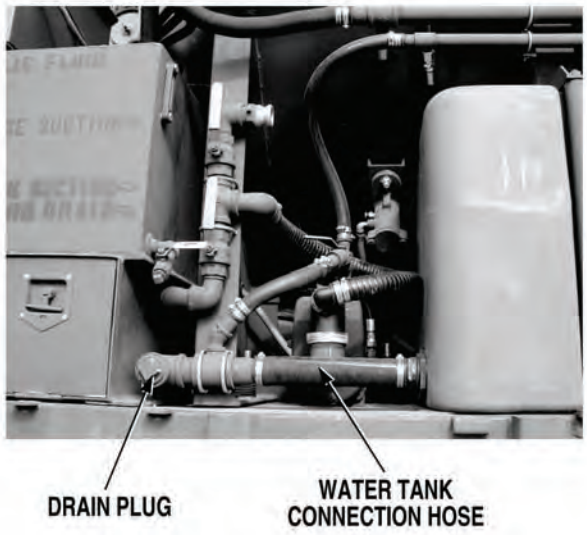

30. NO OR LOW WATER PRESSURE (UNABLE TO ADJUST WATER PRESSURE). (CONT).

KNOWN INFO
Water pump drain cock valve closed. Water tank not clogged.
POSSIBLE PROBLEMS
Water level in tank low. Water system hoses kinked or damaged. Water system strainer canister leaking. Water system strainer clogged. Hydraulic hoses from WATER PRESSURE/FLOW CONTROL valve to water pump leak, kinked, or damaged. Hose suction or fill/return valve faulty. Hose suction, tank suction, or fill/return valve in wrong position. Hydraulic pump or supply hose to WATER PRESSURE/FLOW CONTROL valve faulty. WATER PRESSURE/FLOW CONTROL VALVE faulty or not adjusted correctly. Water hoses leaking. Water pump or pressure relief valve faulty. Water pump not primed. WATER PRESSURE GAGE faulty. WATER PUMP/LIFT CYLINDER CONTROL valve faulty.

3.

Is there sufficient water in water tank to operate water pump from tank?

NO → Fill water tanks enough to operate water pump, (Para 2-12). Then go to Step 4 of this Fault.

YES ↓

TEST OPTIONS
Visual inspection.
REASON FOR QUESTION
Water system may not operate correctly if water level in water tanks is low.

NOTE

Water will flow freely from water tank, when plug is removed from water tank connecting hose. Place suitable drain pan under plug, or move EMM module to an area where water can be drained, before removing plug.

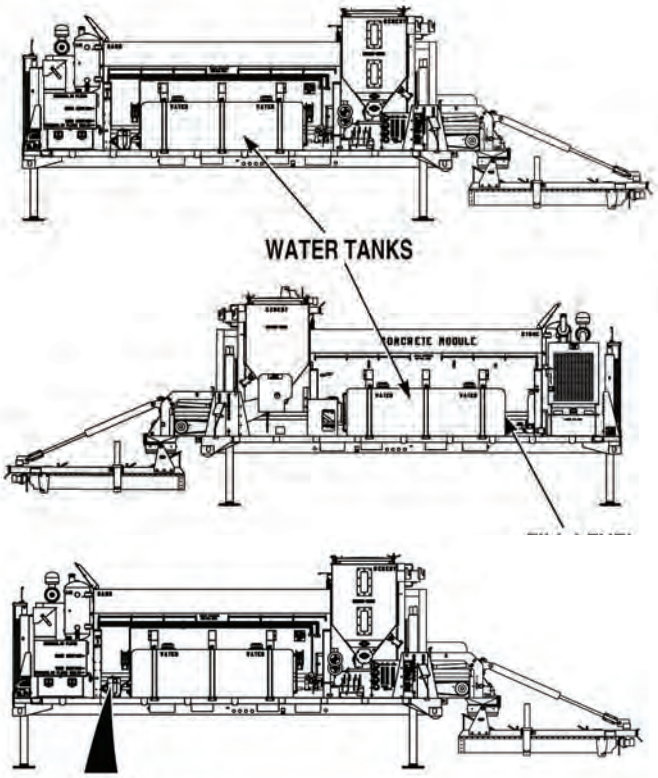

VISUAL INSPECTION
Check if water level in water tank is sufficient to operate water pump. (a) If water level is not sufficient, fill water tank, (Para 2-12), then go to Step 4 of this Fault. (b) If water level is sufficient, go to Step 4 of this Fault.

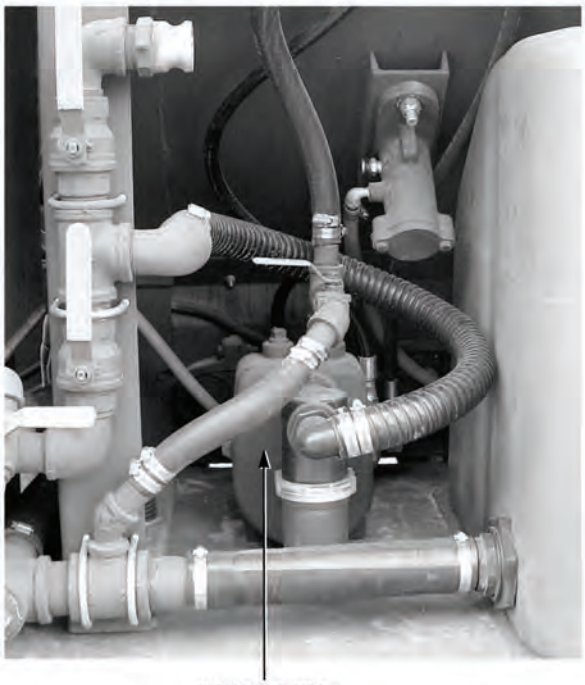

30. NO OR LOW WATER PRESSURE (UNABLE TO ADJUST WATER PRESSURE). (CONT).

KNOWN INFO

Water pump drain cock valve closed.
Water tank not clogged.
Water level in tank OK.

POSSIBLE PROBLEMS

Water system hoses kinked or damaged.
Water system strainer canister leaking.
Water system strainer clogged.
Hydraulic hoses from WATER PRESSURE/FLOW CONTROL valve to water pump leak, kinked, or damaged.
Hose suction or fill/return valve faulty.
Hose suction, tank suction, or fill/return valve in wrong position.
Hydraulic pump or supply hose to WATER PRESSURE/FLOW CONTROL valve faulty.
WATER PRESSURE/FLOW CONTROL VALVE faulty or not adjusted correctly.
Water hoses leaking.
Water pump or pressure relief valve faulty.
Water pump not primed.
WATER PRESSURE GAGE faulty.
WATER PUMP/LIFT CYLINDER CONTROL valve faulty.

4.

Are all water system hoses free from kinks and damage?

NO → Repair or replace damaged hoses, (Para 3-131). Verify repair, go to Step 18 of this Fault.

YES ↓

TEST OPTIONS

Visual inspection.

REASON FOR QUESTION

If water hoses kinked or damaged, water system may not operate correctly.

VISUAL INSPECTION
Check if all water system hoses are free from kinks and damage, (Para 3-131). (a) If water system hoses are not free from kinks and damage, replace damaged hoses, (Para 3-131). Verify repair, go to Step 18 of this Fault. (b) If water system hoses are free from leaks, kinks, and damage, go to Step 5 of this Fault.

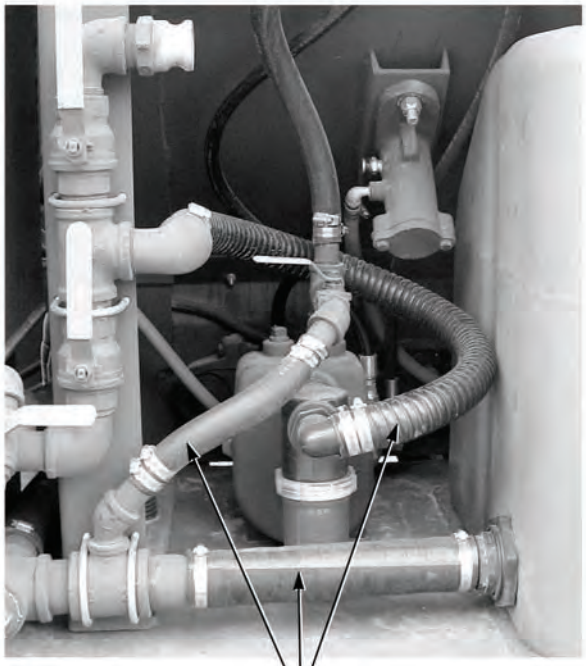

WATER HOSES

30. NO OR LOW WATER PRESSURE (UNABLE TO ADJUST WATER PRESSURE). (CONT).

KNOWN INFO

Water pump drain cock valve closed.
Water tank not clogged.
Water level in tank OK.
Water system hoses not kinked or damaged.

POSSIBLE PROBLEMS

Water system strainer canister leaking.
Water system strainer clogged.
Hydraulic hoses from WATER PRESSURE/FLOW CONTROL valve to water pump leak, kinked, or damaged.
Hose suction or fill/return valve faulty.
Hose suction, tank suction, or fill/return valve in wrong position.
Hydraulic pump or supply hose to WATER PRESSURE/FLOW CONTROL valve faulty.
WATER PRESSURE/FLOW CONTROL VALVE faulty or not adjusted correctly.
Water hoses leaking.
Water pump or pressure relief valve faulty.
Water pump not primed.
WATER PRESSURE GAGE faulty.
WATER PUMP/LIFT CYLINDER CONTROL valve faulty.

5.

Is water system strainer canister tight and free from damage?

NO → Tighten or replace damaged strainer canister, (Para 3-40). Verify repair, go to Step 18 of this Fault.

YES ↓

TEST OPTIONS

Visual inspection.

REASON FOR QUESTION

If water system strainer canister is loose or damaged, water system may not operate correctly.

VISUAL INSPECTION
Check if water system strainer canister is tight and free from damage. (a) If water system strainer canister is loose or damaged, tighten or replace damaged strainer canister, (Para 3-40). Verify repair, go to Step 18 of this Fault. (b) If water system strainer canister is tight and free from damage, go to Step 6 of this Fault.

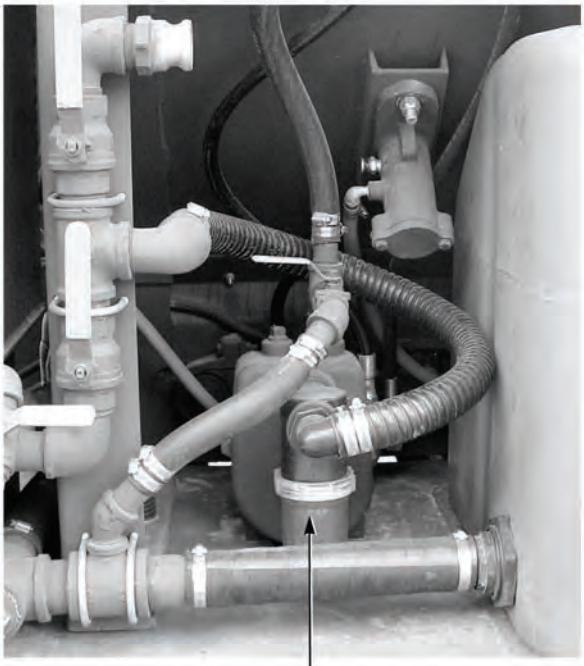

WATER SYSTEM STRAINER CANISTER

30. NO OR LOW WATER PRESSURE (UNABLE TO ADJUST WATER PRESSURE). (CONT).

KNOWN INFO
Water pump drain cock valve closed. Water tank not clogged. Water level in tank OK. Water system hoses not kinked or damaged. Water system strainer canister not leaking.

POSSIBLE PROBLEMS
Water system strainer clogged. Hydraulic hoses from WATER PRESSURE/FLOW CONTROL valve to water pump leak, kinked, or damaged. Hose suction or fill/return valve faulty. Hose suction, tank suction, or fill/return valve in wrong position. Hydraulic pump or supply hose to WATER PRESSURE/FLOW CONTROL valve faulty. WATER PRESSURE/FLOW CONTROL VALVE faulty or not adjusted correctly. Water hoses leaking. Water pump or pressure relief valve faulty. Water pump not primed. WATER PRESSURE GAGE faulty. WATER PUMP/LIFT CYLINDER CONTROL valve faulty.

6.

Is water system strainer free from obstructions?

NO → Clean water system strainer, (Para 2-33). Verify repair, go to Step 18 of this Fault.

YES ↓

TEST OPTIONS
Visual inspection.
REASON FOR QUESTION
If water system strainer is clogged, water system may not operate correctly.

VISUAL INSPECTION
Check if water system strainer is free from obstructions, (Para 2-33). (a) If water system strainer is obstructed, clean water system strainer, (Para 2-33). Verify repair, go to Step 18 of this Fault. (b) If water system strainer is free from obstructions, go to Step 7 of this Fault.

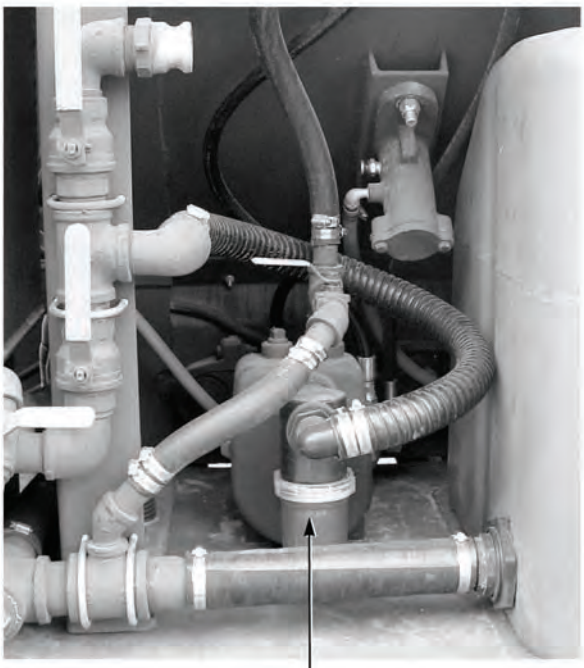

30. NO OR LOW WATER PRESSURE (UNABLE TO ADJUST WATER PRESSURE). (CONT).

KNOWN INFO

Water pump drain cock valve closed.

Water tank not clogged.

Water level in tank OK.

Water system hoses not kinked or damaged.

Water system strainer canister not leaking.

Water system strainer not clogged.

POSSIBLE PROBLEMS

Hydraulic hoses from WATER PRESSURE/FLOW CONTROL valve to water pump leak, kinked, or damaged.

Hose suction or fill/return valve faulty.

Hose suction, tank suction, or fill/return valve in wrong position.

Hydraulic pump or supply hose to WATER PRESSURE/FLOW CONTROL valve faulty.

WATER PRESSURE/FLOW CONTROL VALVE faulty or not adjusted correctly.

Water hoses leaking.

Water pump or pressure relief valve faulty.

Water pump not primed.

WATER PRESSURE GAGE faulty.

WATER PUMP/LIFT CYLINDER CONTROL valve faulty.

7.

Are hydraulic hoses from WATER PRESSURE/FLOW CONTROL valve to water pump free from kinks, leaks, and damage?

NO → Repair leaks or replace damaged hoses, (Para 3-129). Verify repair, go to Step 18 of this Fault.

YES ↓

TEST OPTIONS

Visual inspection.

REASON FOR QUESTION

If hydraulic hoses leak, or are kinked or damaged, water system may not operate correctly.

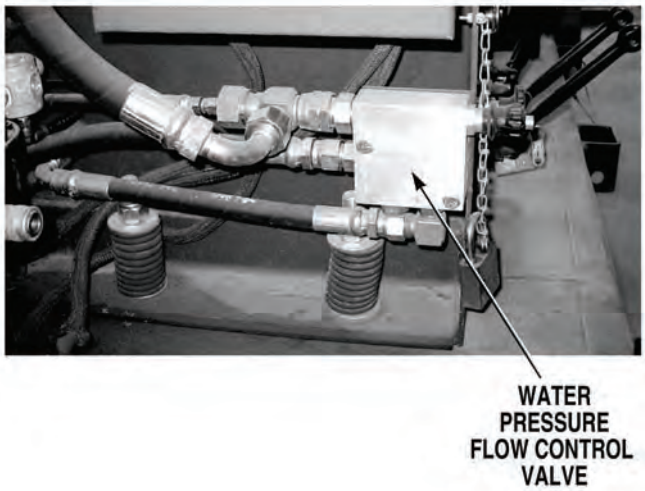

VISUAL INSPECTION

(1) If removed, install water system strainer and canister, (Para 2-33).

(2) Check if hydraulic hoses from WATER PRESSURE/FLOW CONTROL valve to water pump are free from leaks, kinks, and damage.

(a) If hydraulic hoses are not free from leaks, kinks, and damage, repair leaks or replace damaged hoses, (Para 3-129). Verify repair, go to Step 18 of this Fault.

(b) If hydraulic hoses are free from leaks, kinks, and damage, go to Step 8 of this Fault.

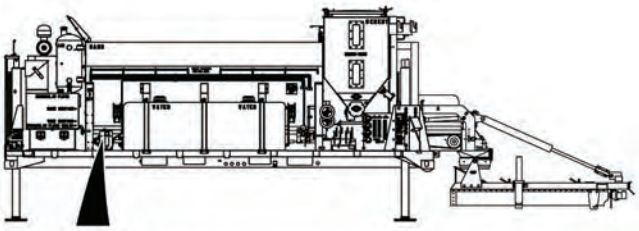

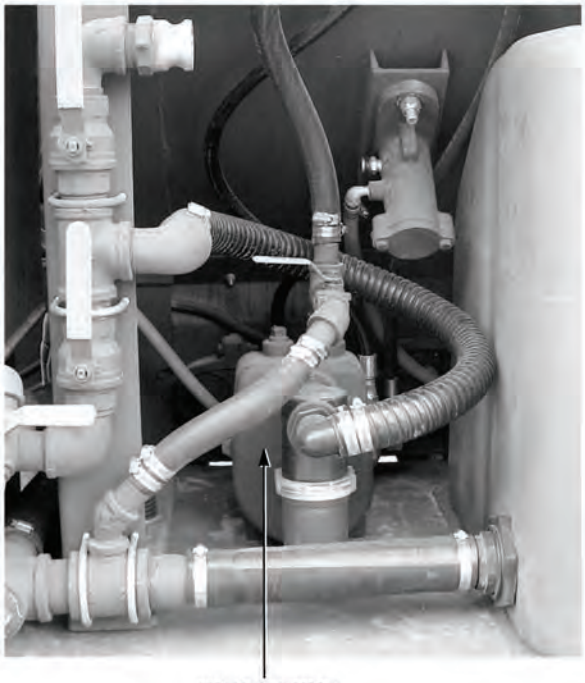

30. NO OR LOW WATER PRESSURE (UNABLE TO ADJUST WATER PRESSURE). (CONT).

KNOWN INFO

- Water pump drain cock valve closed.
- Water tank not clogged.
- Water level in tank OK.
- Water system hoses not kinked or damaged.
- Water system strainer canister not leaking.
- Water system strainer not clogged.
- Hydraulic hoses from WATER PRESSURE/FLOW CONTROL valve to water pump OK.

POSSIBLE PROBLEMS

- Hose suction or fill/return valve faulty.
- Hose suction, tank suction, or fill/return valve in wrong position.
- Hydraulic pump or supply hose to WATER PRESSURE/FLOW CONTROL valve faulty.
- WATER PRESSURE/FLOW CONTROL VALVE faulty or not adjusted correctly.
- Water hoses leaking.
- Water pump or pressure relief valve faulty.
- Water pump not primed.
- WATER PRESSURE GAGE faulty.
- WATER PUMP/LIFT CYLINDER CONTROL valve faulty.

8.

Are hose suction and fill/return valves free from binding and damage?

NO → Replace damaged valves, (Para 3-126). Verify repair, go to Step 18 of this Fault.

YES ↓

TEST OPTIONS

Visual inspection.

REASON FOR QUESTION

If hose suction or fill/return valves are binding or damaged, valves may not close completely, and water system may not operate correctly.

VISUAL INSPECTION
Check if hose suction and fill/return valves are free from binding and damage. (a) If valves are not free from binding and damage, replace damaged valves, (Para 3-126). Verify repair, go to Step 18 of this Fault. (b) If valves are free from binding and damage, go to Step 9 of this Fault.

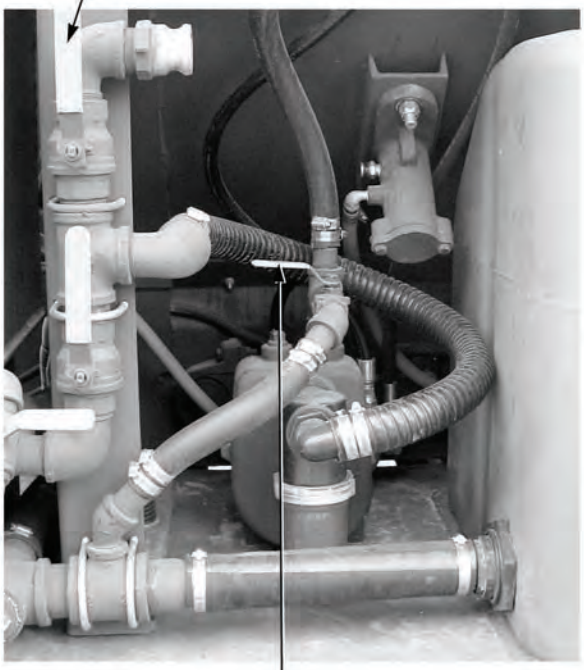

30. NO OR LOW WATER PRESSURE (UNABLE TO ADJUST WATER PRESSURE). (CONT).

KNOWN INFO

- Water pump drain cock valve closed.
- Water tank not clogged.
- Water level in tank OK.
- Water system hoses not kinked or damaged.
- Water system strainer canister not leaking.
- Water system strainer not clogged.
- Hydraulic hoses from WATER PRESSURE/FLOW CONTROL valve to water pump OK.
- Hose suction or fill/return valve OK.

POSSIBLE PROBLEMS

- Hose suction, tank suction, or fill/return valve in wrong position.
- Hydraulic pump or supply hose to WATER PRESSURE/FLOW CONTROL valve faulty.
- WATER PRESSURE/FLOW CONTROL VALVE faulty or not adjusted correctly.
- Water hoses leaking.
- Water pump or pressure relief valve faulty.
- Water pump not primed.
- WATER PRESSURE GAGE faulty.
- WATER PUMP/LIFT CYLINDER CONTROL valve faulty.

9.

Is tank suction valve open, and hose suction and fill/return valves closed?

NO → Position valves in correct position, (Para 2-18). Then go to Step 10 of this Fault.

YES ↓

TEST OPTIONS

Visual inspection.

REASON FOR QUESTION

If tank suction, hose suction, and fill/return valves are not in correct positions, water system may not operate correctly.

VISUAL INSPECTION
(1) Check if tank suction valve is open. If valve is closed, open valve. (2) Check if hose suction and fill/return valves are closed. If valves are open, close valves. (3) Go to Step 10 of this Fault.

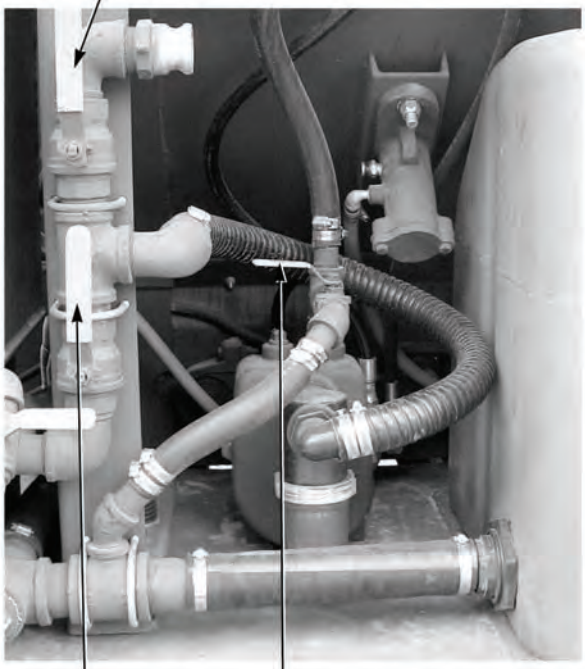

30. NO OR LOW WATER PRESSURE (UNABLE TO ADJUST WATER PRESSURE). (CONT).

KNOWN INFO

- Water pump drain cock valve closed.
- Water tank not clogged.
- Water level in tank OK.
- Water system hoses not kinked or damaged.
- Water system strainer canister not leaking.
- Water system strainer not clogged.
- Hydraulic hoses from WATER PRESSURE/FLOW CONTROL valve to water pump OK.
- Hose suction or fill/return valve OK.
- Hose suction, tank suction, or fill/return valve in correct position.

POSSIBLE PROBLEMS

- Hydraulic pump or supply hose to WATER PRESSURE/FLOW CONTROL valve faulty.
- WATER PRESSURE/FLOW CONTROL VALVE faulty or not adjusted correctly.
- Water hoses leaking.
- Water pump or pressure relief valve faulty.
- Water pump not primed.
- WATER PRESSURE GAGE faulty.
- WATER PUMP/LIFT CYLINDER CONTROL valve faulty.

10.

Does mixer HOIST or RETRACTOR controls operate?

NO → Go to “Concrete Mixer Hoist, Retractor Cylinders, Lift Cylinders, and Water Pump Do Not Operate”, (Fault 13).

YES ↓

TEST OPTIONS

Operational test.

REASON FOR QUESTION

If concrete mixer hoist or retractor cannot be raised or lowered, another troubleshooting procedure applies.

OPERATIONAL TEST

(1) Start engine, (Para 2-19).

(2) Turn THROTTLE CONTROL to HIGH IDLE, (Para 2-1).

(3) Operate concrete mixer HOIST or RETRACTOR controls, (Para 2-20). Check if mixer hoist or retractor raises or lowers.

(a) If concrete mixer hoist and retractor do not raise and lower, go to “Concrete Mixer Hoist, Retractor Cylinders, Lift Cylinders, and Water Pump Do Not Operate”, (Fault 13).

(b) If concrete mixer hoist or retractor do not raise or lower, go to Step 11 of this Fault.

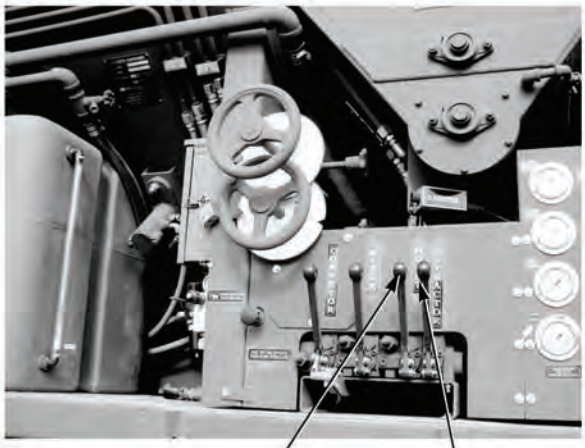

30. NO OR LOW WATER PRESSURE (UNABLE TO ADJUST WATER PRESSURE). (CONT).

KNOWN INFO

- Water pump drain cock valve closed.
- Water tank not clogged.
- Water level in tank OK.
- Water system hoses not kinked or damaged.
- Water system strainer canister not leaking.
- Water system strainer not clogged.
- Hydraulic hoses from WATER PRESSURE/FLOW CONTROL valve to water pump OK.
- Hose suction or fill/return valve OK.
- Hose suction, tank suction, or fill/return valve in correct position.
- Hydraulic pump or supply hose to WATER PRESSURE/FLOW CONTROL valve OK.

POSSIBLE PROBLEMS

- WATER PRESSURE/FLOW CONTROL VALVE faulty or not adjusted correctly.
- Water hoses leaking.
- Water pump or pressure relief valve faulty.
- Water pump not primed.
- WATER PRESSURE GAGE faulty.
- WATER PUMP/LIFT CYLINDER CONTROL valve faulty.

11.

Can WATER PRESSURE/FLOW CONTROL valve be adjusted so lift cylinder controls operate when WATER PUMP/LIFT CYLINDER valve is pulled out?

NO → Replace WATER PRESSURE/FLOW CONTROL valve, (Para 3-66). Verify repair, go to Step 18 of this Fault.

YES ↓

TEST OPTIONS

Operational test.

REASON FOR QUESTION

If WATER PRESSURE/FLOW CONTROL valve cannot be adjusted so lift cylinders operate, WATER PRESSURE/FLOW CONTROL valve is faulty.

OPERATIONAL TEST

(1) Pull out WATER PUMP/LIFT CYLINDER CONTROL valve, (Para 2-1).

(2) Operate lift controls, (Para 2-28). If lift cylinders do not operate, adjust WATER PRESSURE/FLOW CONTROL valve until lift control operates.

(a) If WATER PRESSURE/FLOW CONTROL valve cannot be adjusted so lift controls operate, replace WATER PRESSURE/FLOW CONTROL valve, (Para 3-66). Verify repair, go to Step 18 of this Fault.

(b) If WATER PRESSURE/FLOW CONTROL valve can be adjusted so lift controls operate, go to Step 12 of this Fault.

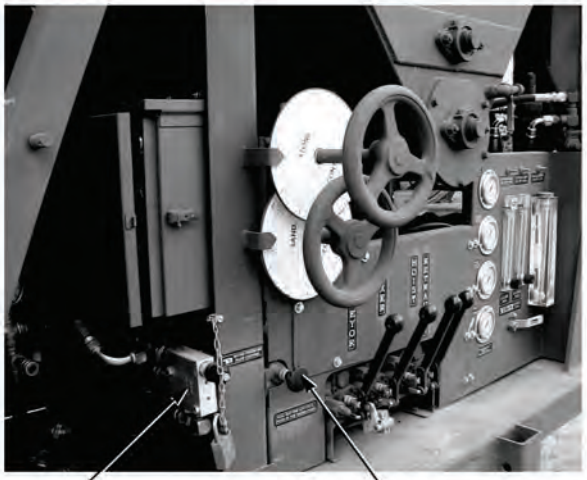

WATER PRESSURE/FLOW CONTROL VALVE

WATER PUMP/LIFT CYLINDER CONTROL VALVE

30. NO OR LOW WATER PRESSURE (UNABLE TO ADJUST WATER PRESSURE). (CONT).

KNOWN INFO
Water pump drain cock valve closed. Water tank not clogged. Water level in tank OK. Water system hoses not kinked or damaged. Water system strainer canister not leaking. Water system strainer not clogged. Hydraulic hoses from WATER PRESSURE/FLOW CONTROL valve to water pump OK. Hose suction or fill/return valve OK. Hose suction, tank suction, or fill/return valve in correct position. Hydraulic pump or supply hose to WATER PRESSURE/FLOW CONTROL valve OK. WATER PRESSURE/FLOW CONTROL valve OK.
POSSIBLE PROBLEMS
Water hoses leaking. Water pump or pressure relief valve faulty. Water pump not primed. WATER PRESSURE GAGE faulty. WATER PUMP/LIFT CYLINDER CONTROL valve faulty.

12.

Is water pressure measured at WATER PRESSURE GAGE after pushing in PUMP/LIFT CYLINDER control valve, with WATER PRESSURE/FLOW CONTROL valve setting from Step 11?

NO → Go to Step 15 of this Fault.

YES ↓

TEST OPTIONS
Operational test.
REASON FOR QUESTION
To further isolate fault.

OPERATIONAL TEST
(1) Push in WATER PUMP/LIFT CYLINDER CONTROL valve, (Para 2-1). (2) Check if water pressure is measured at WATER PRESSURE GAGE. (a) If water pressure is not measured, go to Step 15 of this Fault. (b) If water pressure is measured, go to Step 13 of this Fault.

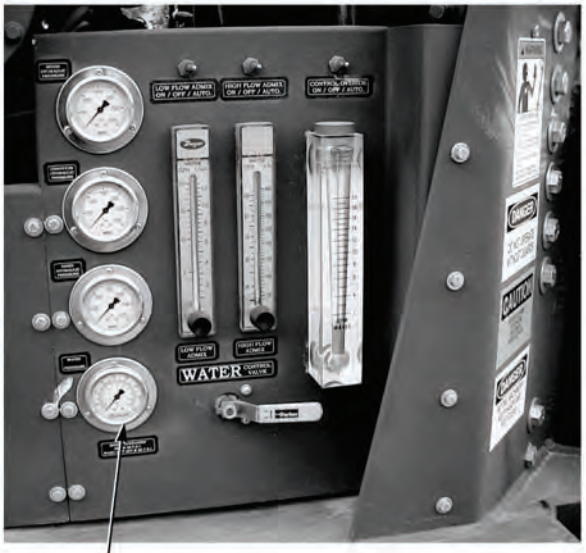

WATER PRESSURE GAGE

30. NO OR LOW WATER PRESSURE (UNABLE TO ADJUST WATER PRESSURE). (CONT).

KNOWN INFO

- Water pump drain cock valve closed.
- Water tank not clogged.
- Water level in tank OK.
- Water system hoses not kinked or damaged.
- Water system strainer canister not leaking.
- Water system strainer not clogged.
- Hydraulic hoses from WATER PRESSURE/FLOW CONTROL valve to water pump OK.
- Hose suction or fill/return valve OK.
- Hose suction, tank suction, or fill/return valve in correct position.
- Hydraulic pump or supply hose to WATER PRESSURE/FLOW CONTROL valve OK.
- WATER PRESSURE/FLOW CONTROL valve OK.
- Water pump primed.
- WATER PRESSURE GAGE OK.
- WATER PUMP/LIFT CYLINDER CONTROL valve OK.

POSSIBLE PROBLEMS

- Water hoses leaking.
- Water pump or pressure relief valve faulty.

13.

Are all water hoses free from leaks?

NO → Repair or replace leaking water hoses, (Para 3-131). Verify repair, go to Step 18 of this Fault.

YES ↓

TEST OPTIONS

Visual inspection.

REASON FOR QUESTION

If water hoses or fittings leak, water system may not operate correctly.

VISUAL INSPECTION
Check if all water hoses are free from leaks, (Para 3-131). (a) If water hoses are not free from kinks, repair leaks or replace damaged hoses and pipes, (Para 3-131). Verify repair, go to Step 18 of this Fault. (b) If water hoses are free from leaks, kinks, and damage, go to Step 14 of this Fault.

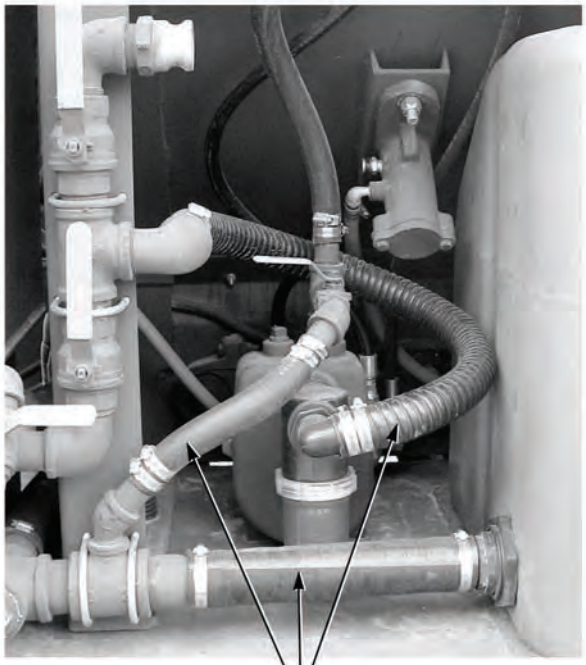

WATER HOSES

30. NO OR LOW WATER PRESSURE (UNABLE TO ADJUST WATER PRESSURE). (CONT).

KNOWN INFO

- Water pump drain cock valve closed.
- Water tank not clogged.
- Water level in tank OK.
- Water system hoses not kinked or damaged.
- Water system strainer canister not leaking.
- Water system strainer not clogged.
- Hydraulic hoses from WATER PRESSURE/FLOW CONTROL valve to water pump OK.
- Hose suction or fill/return valve OK.
- Hose suction, tank suction, or fill/return valve in correct position.
- Hydraulic pump or supply hose to WATER PRESSURE/FLOW CONTROL valve OK.
- WATER PRESSURE/FLOW CONTROL valve OK.
- Water pump primed.
- WATER PRESSURE GAGE OK.
- WATER PUMP/LIFT CYLINDER CONTROL valve OK.
- Water system lines and fittings not leaking.

POSSIBLE PROBLEMS

Water pump or pressure relief valve faulty.

14.

Can water pressure be adjusted up to 100 psi (689 kPa)?

NO → Replace water pump, and pressure reilef valve, (Para 3-38). Verify repair, go to Step 18 of this Fault.

YES → Fault corrected. Verify repair, go to Step 18 of this Fault.

TEST OPTIONS

Operational test.

REASON FOR QUESTION

If water pressure can be adjusted to 100 psi (689 kPa), fault has been corrected. If not, water pump or pressure relief valve is faulty.

OPERATIONAL TEST

(1) Adjust WATER PRESSURE/FLOW CONTROL valve for 100 psi (689 kPa) water pressure, (Para 2-18).

(a) If water pressure cannot be adjusted to at least 100 psi (689 kPa), replace water pump and pressure relief valve, (Para 3-38).

(b) If water pressure can be adjusted to at least 100 psi (689 kPa), fault has been corrected.

(2) Verify repair, go to Step 18 of this Fault.

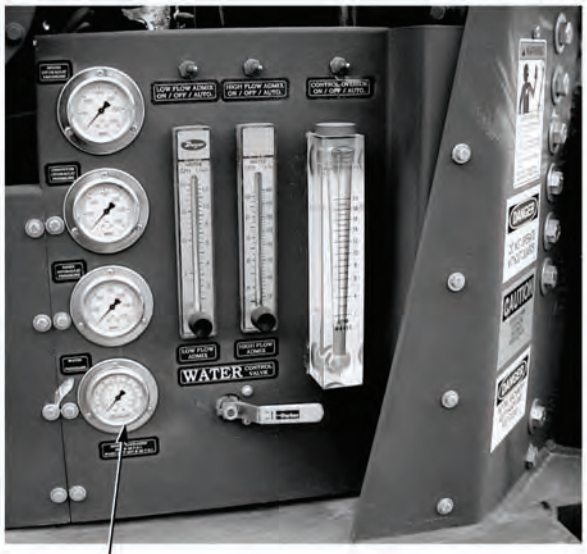

WATER PRESSURE GAGE

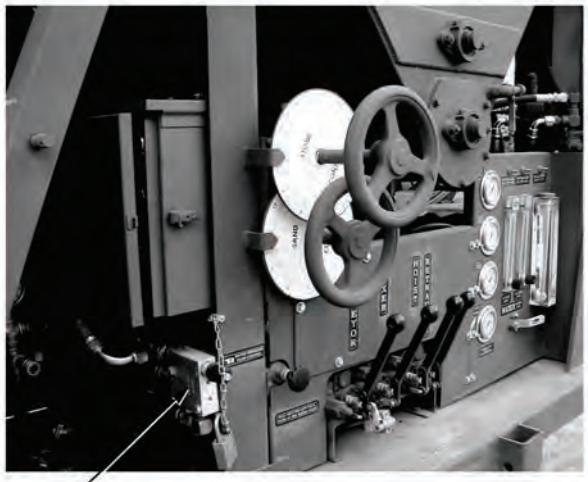

WATER PRESSURE/FLOW CONTROL VALVE

30. NO OR LOW WATER PRESSURE (UNABLE TO ADJUST WATER PRESSURE). (CONT).

KNOWN INFO

- Water pump drain cock valve closed.
- Water tank not clogged.
- Water level in tank OK.
- Water system hoses not kinked or damaged.
- Water system strainer canister not leaking.
- Water system strainer not clogged.
- Hydraulic hoses from WATER PRESSURE/FLOW CONTROL valve to water pump OK.
- Hose suction or fill/return valve OK.
- Hose suction, tank suction, or fill/return valve in correct position.
- Hydraulic pump or supply hose to WATER PRESSURE/FLOW CONTROL valve OK.
- WATER PRESSURE/FLOW CONTROL valve OK.
- Water system lines and fittings not leaking.

POSSIBLE PROBLEMS

- Water pump or pressure relief valve faulty.
- Water pump not primed.
- WATER PRESSURE GAGE faulty.
- WATER PUMP/LIFT CYLINDER CONTROL valve faulty.

15.

Is water pressure present after filling water pump priming port with water?

NO → Go to Step 16 of this Fault.

YES → Fault corrected. Verify repair, go to Step 18 of this Fault.

TEST OPTIONS

Operational test.

REASON FOR QUESTION

If water pressure is present after filling water pump priming port, system was not primed.

OPERATIONAL TEST

(1) Shut OFF engine, (Para 2-19).
(2) Remove plug from water pump.
(3) Fill water pump with water.
(4) Install plug in water pump.
(5) Start engine, (Para 2-19).
(6) Turn THROTTLE CONTROL to HIGH IDLE, (Para 2-1).
(7) Check if water pressure is measured at WATER PRESSURE GAGE.
    (a) If water pressure is not measured, go to Step 16 of this Fault.
    (b) If water pressure is measured, fault has been corrected. Verify repair, go to Step 18 of this Fault.

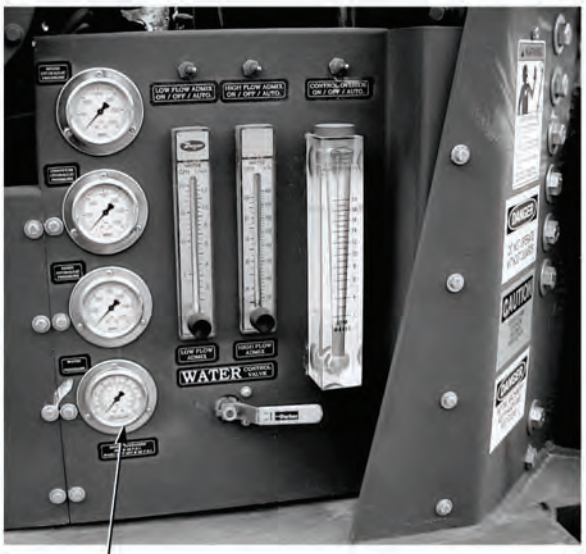

WATER PRESSURE GAGE

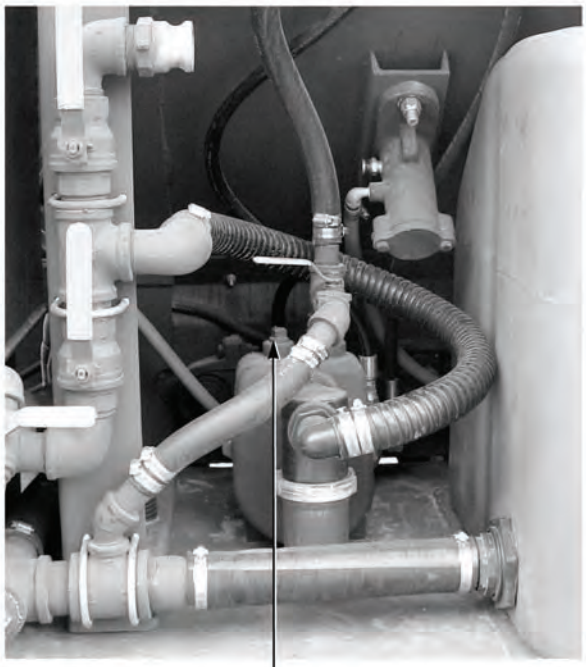

WATER PUMP PRIMING PORT

30. NO OR LOW WATER PRESSURE (UNABLE TO ADJUST WATER PRESSURE). (CONT).

KNOWN INFO

- Water pump drain cock valve closed.
- Water tank not clogged.
- Water level in tank OK.
- Water system hoses not kinked or damaged.
- Water system strainer canister not leaking.
- Water system strainer not clogged.
- Hydraulic hoses from WATER PRESSURE/FLOW CONTROL valve to water pump OK.
- Hose suction or fill/return valve OK.
- Hose suction, tank suction, or fill/return valve in correct position.
- Hydraulic pump or supply hose to WATER PRESSURE/FLOW CONTROL valve OK.
- WATER PRESSURE/FLOW CONTROL valve OK.
- Water hoses not leaking.
- Water pump primed.

POSSIBLE PROBLEMS

- Water pump or pressure relief valve faulty.
- WATER PRESSURE GAGE faulty.
- WATER PUMP/LIFT CYLINDER CONTROL valve faulty.

16.

Is water flow present at washout valve when valve is open?

NO → Go to Step 17 of this Fault.

YES → Replace WATER PRESSURE GAGE, (Para 3-61). Verify repair, go to Step 18 of this Fault.

TEST OPTIONS

Operational test.

REASON FOR QUESTION

If water flow is present, WATER PRESSURE GAGE is faulty.

OPERATIONAL TEST
(1) Open washout valve, (Para 2-1). (2) Check if water flows from washout valve. (a) If water flow is not present, close washout valve, (Para 2-1) and go to Step 17 of this Fault. (b) If water pressure is measured, fault has been corrected. Verify repair, close washout valve, (Para 2-1) and go to Step 18 of this Fault.

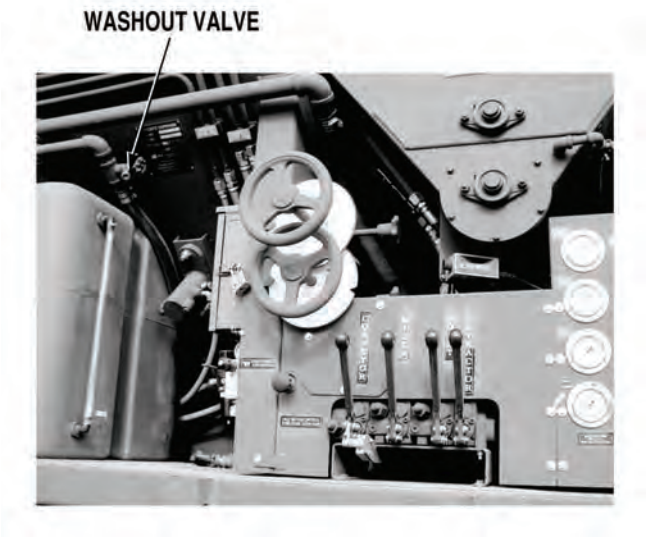

30. NO OR LOW WATER PRESSURE (UNABLE TO ADJUST WATER PRESSURE). (CONT).

KNOWN INFO

- Water pump drain cock valve closed.
- Water tank not clogged.
- Water level in tank OK.
- Water system hoses not kinked or damaged.
- Water system strainer canister not leaking.
- Water system strainer not clogged.
- Hydraulic hoses from WATER PRESSURE/FLOW CONTROL valve to water pump OK.
- Hose suction or fill/return valve OK.
- Hose suction, tank suction, or fill/return valve in correct position.
- Hydraulic pump or supply hose to WATER PRESSURE/FLOW CONTROL valve OK.
- WATER PRESSURE/FLOW CONTROL valve OK.
- Water hoses not leaking.
- Water pump primed.
- WATER PRESSURE GAGE OK.

POSSIBLE PROBLEMS

- Water pump or pressure relief valve faulty.
- WATER PUMP/LIFT CYLINDER CONTROL valve faulty.

17.

Is water pressure measured after replacing water pump and pressure relief valve?

NO → Replace water pump/lift cylinder control valve, (Para 3-67). Verify repair, go to Step 18 of this Fault.

YES → Fault corrected. Verify repair, go to Step 18 of this Fault.

TEST OPTIONS

Operational test.

REASON FOR QUESTION

If water pressure is present, WATER PUMP/LIFT CONTROL valve is faulty. If not, water pump or pressure relief valve is faulty.

OPERATIONAL TEST

(1) Turn THROTTLE CONTROL valve to low idle, (Para 2-1).

(2) Shut OFF engine, (Para 2-19).

(3) Replace water pump and pressure relief valve, (Para 3-38).

(4) Start engine, (Para 2-19).

(5) Turn THROTTLE CONTROL switch to high idle, (Para 2-1).

(6) Check if water pressure is measured at water pressure gage.

  (a) If water pressure is not measured, replace WATER PUMP/LIFT CYLINDER control valve, (Para 3-67).

  (b) If water pressure is measured, Fault corrected.

(7) Verify repair, go to Step 18 of this Fault.

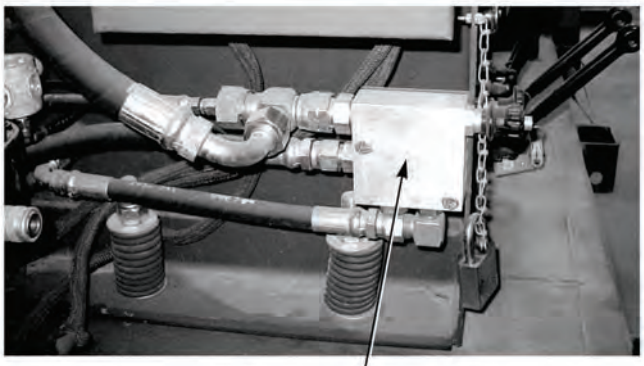

WATER PRESSURE/LIFT CYLINDER CONTROL VALVE

30. NO OR LOW WATER PRESSURE (UNABLE TO ADJUST WATER PRESSURE). (CONT).

KNOWN INFO
Water pump drain cock valve closed. Water tank not clogged. Water level in tank OK. Water system hoses not kinked or damaged. Water system strainer canister not leaking. Water system strainer not clogged. Hydraulic hoses from WATER PRESSURE/FLOW CONTROL valve to water pump OK. Hose suction or fill/return valve OK. Hose suction, tank suction, or fill/return valve in correct position. Hydraulic pump or supply hose to WATER PRESSURE/FLOW CONTROL valve OK. WATER PRESSURE/FLOW CONTROL valve OK. Water hoses not leaking. Water pump or pressure relief valve OK. Water pump primed. WATER PRESSURE GAGE OK. WATER PUMP/LIFT CYLINDER CONTROL valve OK.
POSSIBLE PROBLEMS
None.

18.

Can water pressure be adjusted to at least 40 psi (276 kPa)?

NO → Fault not corrected. Notify Supervisor.

YES → Fault corrected.

TEST OPTIONS
Verify repair.
REASON FOR QUESTION
If water pressure can be adjusted, fault has been corrected.

VERIFY REPAIR

(1) Start engine, (Para 2-18).

(2) Turn THROTTLE CONTROL to HIGH IDLE, (Para 2-1).

(3) If pulled out, push in WATER PUMP/LIFT CYLINDER CONTROL valve, (Para 2-1).

(4) Adjust WATER PRESSURE/FLOW CONTROL valve for 40 psi (276 kPa) water pressure, (Para 2-18).

(a) If water pressure cannot be adjusted to at least 40 psi (276 kPa), fault has not been corrected. Notify Supervisor.

(b) If water pressure can be adjusted to at least 40 psi (276 kPa), fault has been corrected.

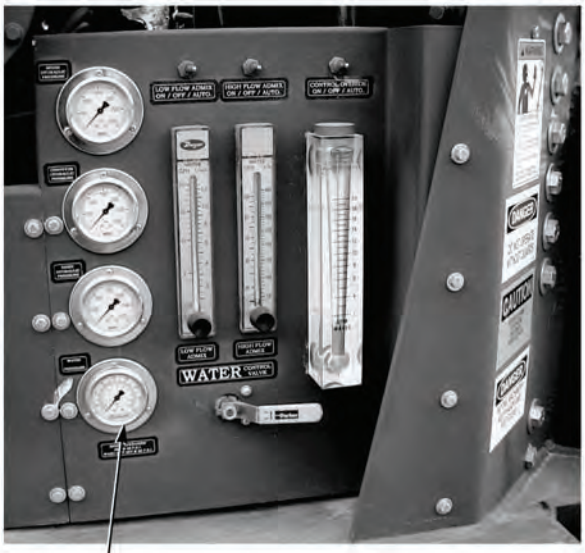

WATER PRESSURE GAGE

31. NOT ABLE TO FILL WATER TANKS FROM LAKES OR PONDS.

INITIAL SETUP

Tools and Special Tools
Tool Kit, General Mechanic's: Automotive (Item 19, Appendix I)

Equipment Condition
Concrete Mobile Mixer unloaded from PLS, (Para 2-5)
Engine OFF, (Para 2-19)
Concrete Mobile Mixer raised to operating level, (Para 2-28)

KNOWN INFO

Nothing.

POSSIBLE PROBLEMS

- Suction hose kinked or damaged.
- Water strainer blocked.
- Water pump drain cock valve open.
- Water hose between suction valve and water system strainer kinked or damaged.
- Water strainer canister loose or damaged.
- Water system strainer clogged.
- Fill/return hose kinked or damaged.
- TANK SUCTION valve binding or damaged.
- Hydraulic system faulty.
- Water pump pressure not adjusted correctly.
- Fill/return hose blocked or leaking.
- Vertical lift between strainer and pump inlet too great.
- Suction hose blocked or leaking.
- Pump is not primed.
- Water pump faulty.

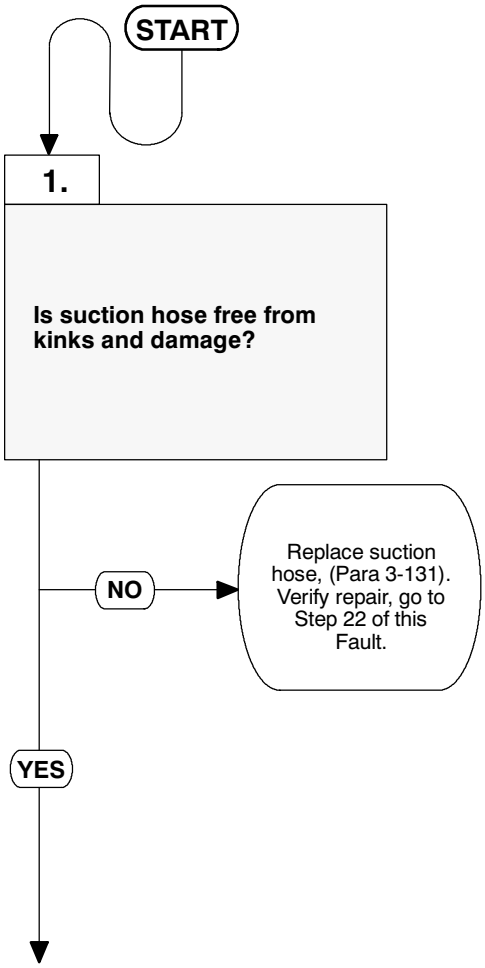

TEST OPTIONS

Visual inspection.

REASON FOR QUESTION

If suction hose is kinked or damaged, water system will not fill tank from lake or ponds.

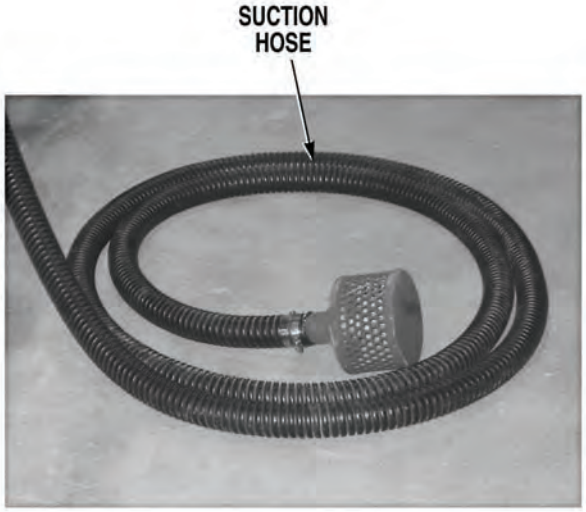

VISUAL INSPECTION
Check if suction hose is free from kinks and damage. (a) If suction hose is not free from kinks and damage, replace suction hose, (Para 3-131). Verify repair, go to Step 22 of this Fault. (b) If suction hose is free from kinks and damage, go to Step 2 of this Fault.

31. NOT ABLE TO FILL WATER TANKS FROM LAKES OR PONDS (CONT).

KNOWN INFO
Suction hose not kinked or damaged.

POSSIBLE PROBLEMS
Water strainer blocked.
Water pump drain cock valve open.
Water hose between suction valve and water system strainer kinked or damaged.
Water strainer canister loose or damaged.
Water system strainer clogged.
Fill/return hose kinked or damaged.
TANK SUCTION valve binding or damaged.
Hydraulic system faulty.
Water pump pressure not adjusted correctly.
Fill/return hose blocked or leaking.
Vertical lift between strainer and pump inlet too great.
Suction hose blocked or leaking.
Pump is not primed.
Water pump faulty.

2.

Is water strainer free from blockage?

NO → Remove blockage or replace water strainer, (Para 3-40). Verify repair, go to Step 22 of this Fault.

YES ↓

TEST OPTIONS
Visual inspection.

REASON FOR QUESTION
If water strainer is blocked, water system will not fill tank from lake or ponds.

VISUAL INSPECTION
Check if water strainer is blocked. (a) If water strainer is blocked, remove blockage or replace water strainer. Verify repair, go to Step 22 of this Fault. (b) If water strainer is not blocked, go to Step 3 of this Fault.

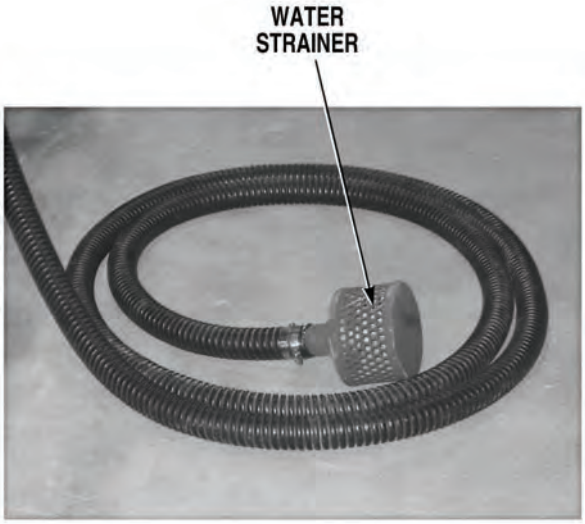

31. NOT ABLE TO FILL WATER TANKS FROM LAKES OR PONDS (CONT).

KNOWN INFO
Suction hose not kinked or damaged.
Water strainer not blocked.

POSSIBLE PROBLEMS
Water pump drain cock valve open.
Water hose between suction valve and water system strainer kinked or damaged.
Water strainer canister loose or damaged.
Water system strainer clogged.
Fill/return hose kinked or damaged.
TANK SUCTION valve binding or damaged.
Hydraulic system faulty.
Water pump pressure not adjusted correctly.
Fill/return hose blocked or damaged.
Vertical lift between strainer and pump inlet too great.
Suction hose blocked or leaking.
Pump not primed.
Water pump faulty.

3.

Is water pump drain cock valve closed?

NO → Close water pump drain cock valve, (Para 2-35). Verify repair, go to Step 22 of this Fault.

YES ↓

TEST OPTIONS
Visual inspection.

REASON FOR QUESTION
If water pump drain cock is open, water system will not operate properly.

VISUAL INSPECTION
Check if water pump drain cock valve is closed, (Para 2-35). (a) If water pump drain cock valve is open, close water pump drain cock, (Para 2-35). Verify repair, go to Step 22 of this Fault. (b) If water pump drain cock valve is open, go to Step 4 of this Fault.

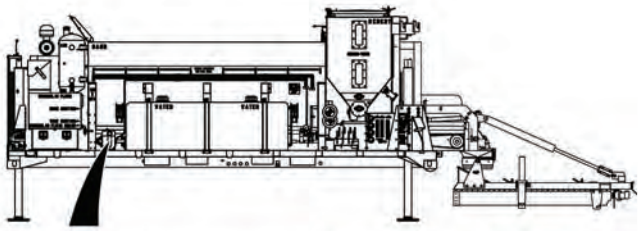

31. NOT ABLE TO FILL WATER TANKS FROM LAKES OR PONDS (CONT).

KNOWN INFO

Suction hose not kinked or damaged.
Water strainer not blocked.
Water pump drain cock valve closed.

POSSIBLE PROBLEMS

Water hose between suction valve and water system strainer kinked or damaged.
Water strainer canister loose or damaged.
Water system strainer clogged.
Fill/return hose kinked or damaged.
TANK SUCTION valve binding or damaged.
Hydraulic system faulty.
Water pump pressure not adjusted correctly.
Fill/return hose blocked or leaking.
Vertical lift between strainer and pump inlet too great.
Suction hose blocked or leaking.
Pump is not primed.
Water pump faulty.

4.

Is water hose between suction valve and water system strainer free from kinks and damage?

NO → Replace water hose, (Para 3-131). Verify repair, go to Step 22 of this Fault.

YES ↓

TEST OPTIONS

Visual inspection.

REASON FOR QUESTION

If water hose between suction valve and water system strainer are kinked or damaged, water system fill from lake or pond function may not operate.

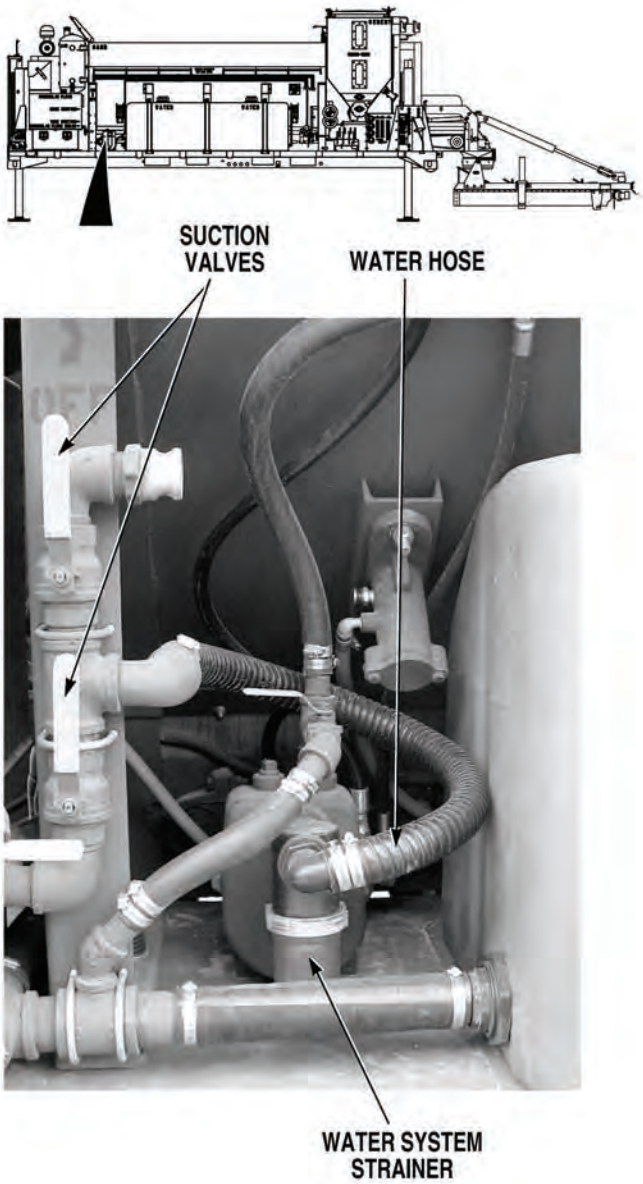

VISUAL INSPECTION
Check if water hose between suction valve and water system strainer are free from kinks and damage. (a) If water hose is kinked or damaged, replace water hose, (Para 3-131). Verify repair, go to Step 22 of this Fault. (b) If water hose is not kinked or damaged, go to Step 5 of this Fault.

31. NOT ABLE TO FILL WATER TANKS FROM LAKES OR PONDS (CONT).

KNOWN INFO
Suction hose not kinked or damaged.
Water strainer not blocked.
Water pump drain cock valve closed.
Water hose between suction valve and water system strainer not kinked or damaged.

POSSIBLE PROBLEMS
Water strainer canister loose or damaged.
Water system strainer clogged.
Fill/return hose kinked or damaged.
TANK SUCTION valve binding or damaged.
Hydraulic system faulty.
Water pump pressure not adjusted correctly.
Fill/return hose blocked or leaking.
Vertical lift between strainer and pump inlet too great.
Suction hose blocked or leaking.
Pump is not primed.
Water pump faulty.

5.

Is water system strainer canister tight and free from damage?

NO → Tighten or replace water strainer canister, (Para 3-40). Verify repair, go to Step 22 of this Fault.

YES ↓

TEST OPTIONS
Visual inspection.

REASON FOR QUESTION
If water strainer canister is loose or damaged, water system fill from lake or pond function may not operate correctly.

VISUAL INSPECTION
Check if water system strainer canister is tight and free from damage. (a) If water system strainer canister is loose or damaged, tighten loose or replace damaged water system strainer canister, (Para 3-40). Verify repair, go to Step 22 of this Fault. (b) If water system strainer canister is tight and and free from damage, go to Step 6 of this Fault.

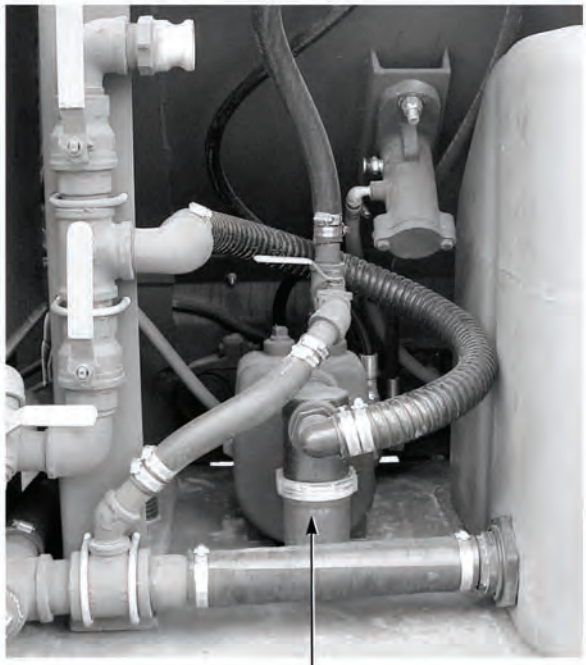

WATER SYSTEM STRAINER CANISTER

31. NOT ABLE TO FILL WATER TANKS FROM LAKES OR PONDS (CONT).

KNOWN INFO

Suction hose not kinked or damaged.
Water strainer not blocked.
Water pump drain cock valve closed.
Water hose between suction valve and water system strainer not kinked or damaged.
Water strainer canister not loose or damaged.

POSSIBLE PROBLEMS

Water system strainer clogged.
Fill/return hose kinked or damaged.
TANK SUCTION valve binding or damaged.
Hydraulic system faulty.
Water pump pressure not adjusted correctly.
Fill/return hose blocked or leaking.
Vertical lift between strainer and pump inlet too great.
Suction hose blocked or leaking.
Pump is not primed.
Water pump faulty.

6.

Is water system strainer free from blockage?

NO → Clean or replace water system strainer, (Para 3-40). Verify repair, go to Step 22 of this Fault.

YES ↓

TEST OPTIONS

Visual inspection.

REASON FOR QUESTION

If water system strainer is clogged, water system fill from lake or pond function may not operate.

VISUAL INSPECTION

NOTE

Inspect water system strainer gasket for damage while checking for clogs.

(1) Remove water system strainer canister, (Para 2-33).

(2) Check if water system strainer is free from clogs.

(a) If water system strainer is clogged, remove clogs or replace water system strainer, (Para 3-40). Verify repair, go to Step 22 of this Fault.

(b) If water system strainer is not clogged, go to Step 7 of this Fault.

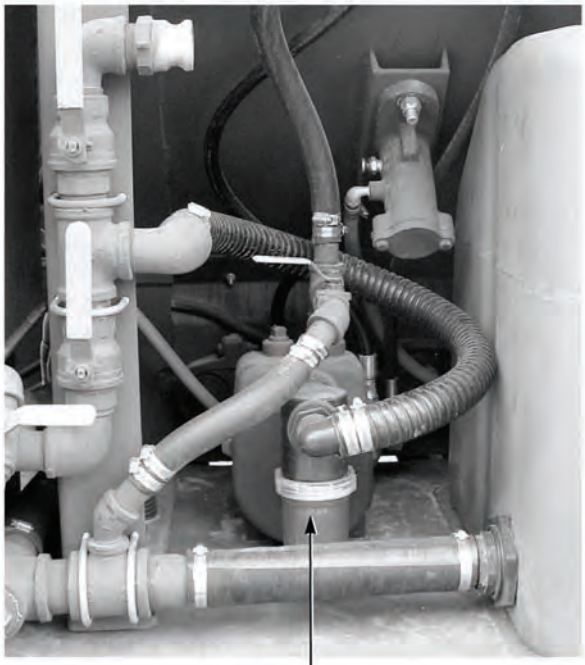

WATER SYSTEM STRAINER

31. NOT ABLE TO FILL WATER TANKS FROM LAKES OR PONDS (CONT).

KNOWN INFO

Suction hose not kinked or damaged.
Water strainer not blocked.
Water pump drain cock valve closed.
Water hose between suction valve and water system strainer not kinked or damaged.
Water strainer canister not loose or damaged.
Water system strainer not clogged.

POSSIBLE PROBLEMS

Fill/return hose kinked or damaged.
TANK SUCTION valve binding or damaged.
Hydraulic system faulty.
Water pump pressure not adjusted correctly.
Fill/return hose blocked or leaking.
Vertical lift between strainer and pump inlet too great.
Suction hose blocked or leaking.
Pump is not primed.
Water pump faulty.

7.

Is fill/return hose free from kinks and damage?

NO → Replace fill/return hose, (Para 3-131). Verify repair, go to Step 22 of this Fault.

YES ↓

TEST OPTIONS

Visual inspection.

REASON FOR QUESTION

If fill/return hose is kinked or damaged, water system fill from lake or pond function may not operate correctly.

VISUAL INSPECTION
(1) Install water system strainer, (Para 2-33). (2) Check if fill/return hose is free from kinks or damage. (a) If fill/return hose is kinked or damaged, replace fill/return hose, (Para 3-131). Verify repair, go to Step 22 of this Fault. (b) If fill/return hose is free from kinks and damage, go to Step 8 of this Fault.

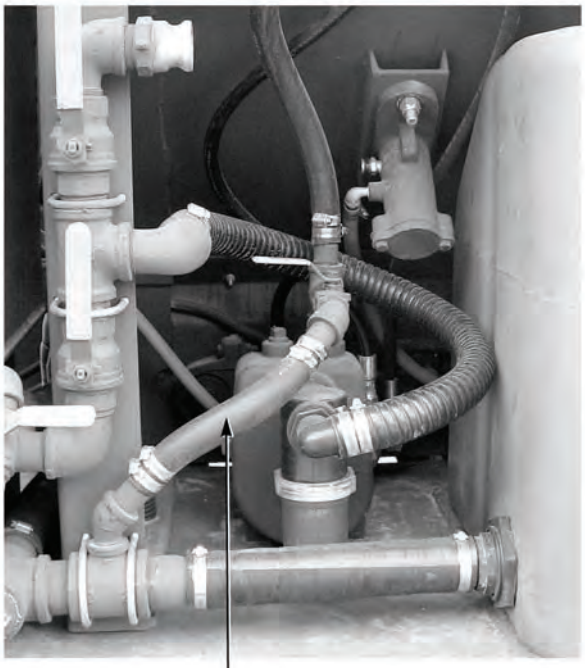

31. NOT ABLE TO FILL WATER TANKS FROM LAKES OR PONDS (CONT).

KNOWN INFO
Suction hose not kinked or damaged. Water strainer not blocked. Water pump drain cock valve closed. Water hose between suction valve and water system strainer not kinked or damaged. Water strainer canister not loose or damaged. Water system strainer not clogged. Fill/return hose not kinked or damaged.
POSSIBLE PROBLEMS
TANK SUCTION valve binding or damaged. Hydraulic system faulty. Water pump pressure not adjusted correctly. Fill/return hose blocked or leaking. Vertical lift between strainer and pump inlet too great. Suction hose blocked or leaking. Pump is not primed. Water pump faulty.

8.

Is TANK SUCTION valve free from binding and damage?

NO → Replace TANK SUCTION valve, (Para 3-126). Verify repair, go to Step 22 of this Fault.

YES ↓

TEST OPTIONS
Visual inspection.
REASON FOR QUESTION
If tank suction valve is binding or damaged, water system fill from lake or pond function may not operate correctly.

VISUAL INSPECTION
Check if TANK SUCTION valve is free from binding and damage. (a) If TANK SUCTION valve is binding or damaged, repair binding or replace water TANK SUCTION valve, (Para 3-126). Verify repair, go to Step 22 of this Fault. (b) If TANK SUCTION valve is free from binding and damage, go to Step 9 of this Fault.

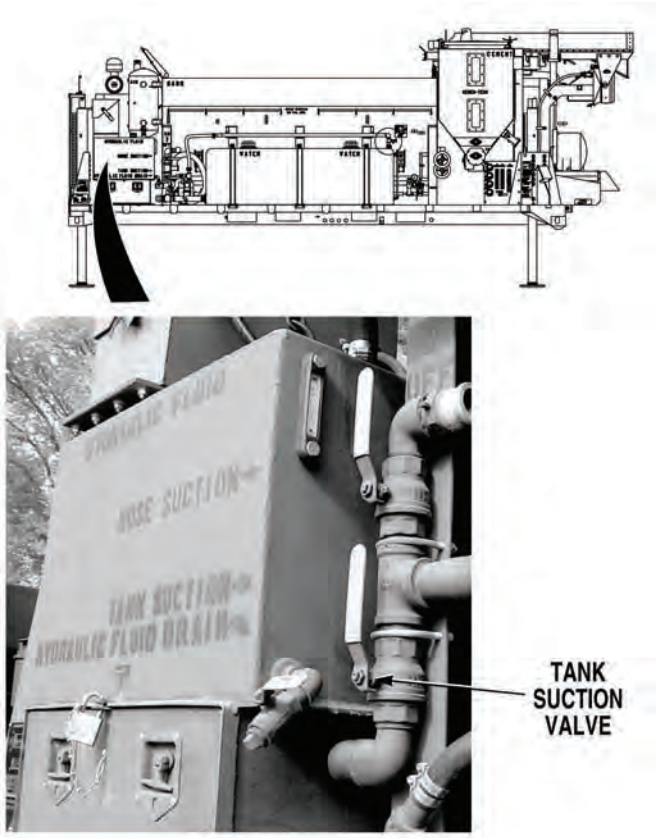

31. NOT ABLE TO FILL WATER TANKS FROM LAKES OR PONDS (CONT).

KNOWN INFO

- Suction hose not kinked or damaged.
- Water strainer not blocked.
- Water pump drain cock valve closed.
- Water hose between suction valve and water system strainer not kinked or damaged.
- Water strainer canister not loose or damaged.
- Water system strainer not clogged.
- Fill/return hose not kinked or damaged.
- TANK SUCTION valve not binding or damaged.

POSSIBLE PROBLEMS

- Hydraulic system faulty.
- Water pump pressure not adjusted correctly.
- Fill/return hose blocked or leaking.
- Vertical lift between strainer and pump inlet too great.
- Suction hose blocked or leaking.
- Pump is not primed.
- Water pump faulty.

9.

Does mixer HOIST or RETRACTOR controls operate?

NO → Go to “Concrete Mixer Hoist, Retractor Cylinders, Lift Cylinders, and Water Pump Do Not Operate”, (Fault 13).

YES ↓

TEST OPTIONS

Operational test.

REASON FOR QUESTION

If HOIST and RETRACTOR controls do not operate, another troubleshooting procedure applies.

OPERATIONAL TEST
(1) Start engine, (Para 2-19). (2) Operate HOIST or RETRACTOR controls, (Para 2-20). (a) If HOIST or RETRACTOR controls do not operate, go to “Concrete Mixer Hoist, Retractor Cylinders, Lift Cylinders, and Water Pump Do Not Operate”, (Fault 13). (b) If HOIST or RETRACTOR controls operate, go to Step 10 of this Fault.

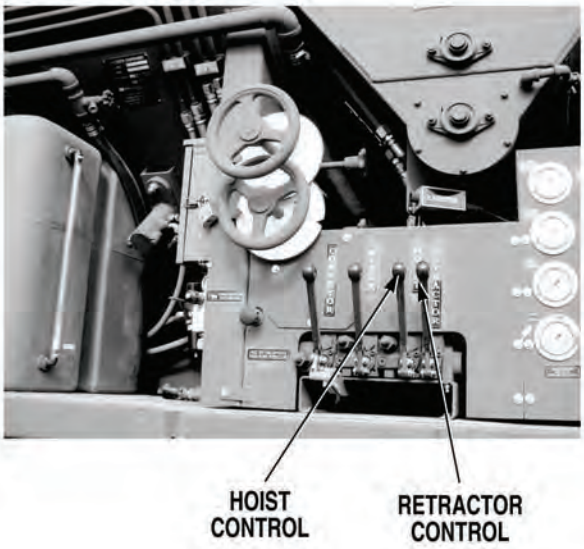

31. NOT ABLE TO FILL WATER TANKS FROM LAKES OR PONDS (CONT).

KNOWN INFO

- Suction hose not kinked or damaged.
- Water strainer not blocked.
- Water pump drain cock valve closed.
- Water hose between suction valve and water system strainer not kinked or damaged.
- Water strainer canister not loose or damaged.
- Water system strainer not clogged.
- Fill/return hose not kinked or damaged.
- TANK SUCTION valve not binding or damaged.
- Hydraulic system OK.

POSSIBLE PROBLEMS

- Water pump pressure not adjusted correctly.
- Fill/return hose blocked or leaking.
- Vertical lift between strainer and pump inlet too great.
- Suction hose blocked or leaking.
- Pump is not primed.
- Water pump faulty.

10.

Is there enough water in water tank to operate water pump from tank?

NO → Go to Step 11 of this Fault.

YES → Go to Step 12 of this Fault.

TEST OPTIONS

Visual inspection.

REASON FOR QUESTION

To determine best method to continue troubleshooting.

VISUAL INSPECTION
Check if water tanks are full enough to operate water pump from tank. (a) If water tanks are not full enough to operate water pump from tank, then go to Step 11 of this Fault. (b) If water tanks are filled enough to operate water pump from tank, go to Step 12 of this Fault.

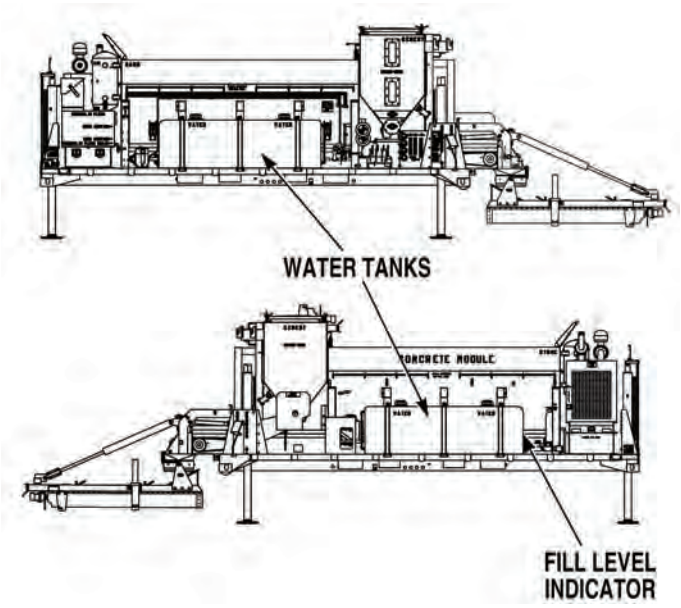

31. NOT ABLE TO FILL WATER TANKS FROM LAKES OR PONDS (CONT).

KNOWN INFO

- Suction hose not kinked or damaged.
- Water strainer not blocked.
- Water pump drain cock valve closed.
- Water hose between suction valve and water system strainer not kinked or damaged.
- Water strainer canister not loose or damaged.
- Water system strainer not clogged.
- Fill/return hose not kinked or damaged.
- TANK SUCTION valve not binding or damaged.
- Hydraulic system OK.

POSSIBLE PROBLEMS

- Water pump pressure not adjusted correctly.
- Fill/return hose blocked or leaking.
- Vertical lift between strainer and pump inlet too great.
- Suction hose blocked or leaking.
- Pump is not primed.
- Water pump faulty.

11.

Is water supply available to fill water tank using top tank caps?

NO → Go to Step 16 of this Fault.

YES → Fill water tank enough to operate water pump, (Para 2-12). Then go to Step 12. (Do not fill tank to top.)

TEST OPTIONS

Visual inspection.

REASON FOR QUESTION

To determine best method to continue troubleshooting.

VISUAL INSPECTION
Check if a water supply is available to fill water tanks using top tank caps. (a) If no water supply is available, go to Step 16 of this Fault. (b) If a water supply is available, fill water tanks enough to operate water pump, (Para 2-12) then go to Step 12 of this Fault.

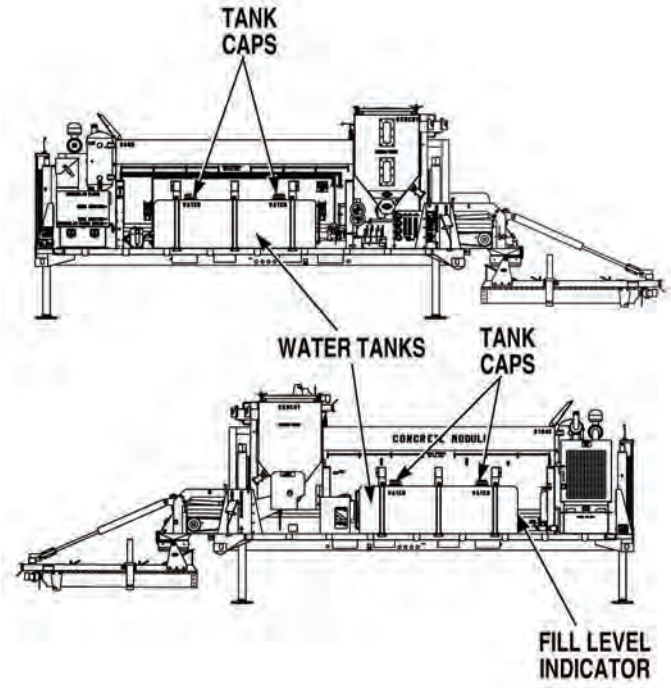

31. NOT ABLE TO FILL WATER TANKS FROM LAKES OR PONDS (CONT).

KNOWN INFO

- Suction hose not kinked or damaged.
- Water strainer not blocked.
- Water pump drain cock valve closed.
- Water hose between suction valve and water system strainer not kinked or damaged.
- Water strainer canister not loose or damaged.
- Water system strainer not clogged.
- Fill/return hose not kinked or damaged.
- TANK SUCTION valve not binding or damaged.
- Hydraulic system OK.

POSSIBLE PROBLEMS

- Water pump pressure not adjusted correctly.
- Fill/return hose blocked or leaking.
- Vertical lift between strainer and pump inlet too great.
- Suction hose blocked or leaking.
- Pump is not primed.
- Water pump faulty.

12.

Can system water pressure be adjusted to 40 psi (276 kPa) when pumping from tank?

NO → Go to “No or Low Water Pressure (Unable to Adjust Water Pressure)”, (Fault 30).

YES ↓

TEST OPTIONS

Operational test.

REASON FOR QUESTION

If water pressure cannot be adjusted, another troubleshooting procedure applies.

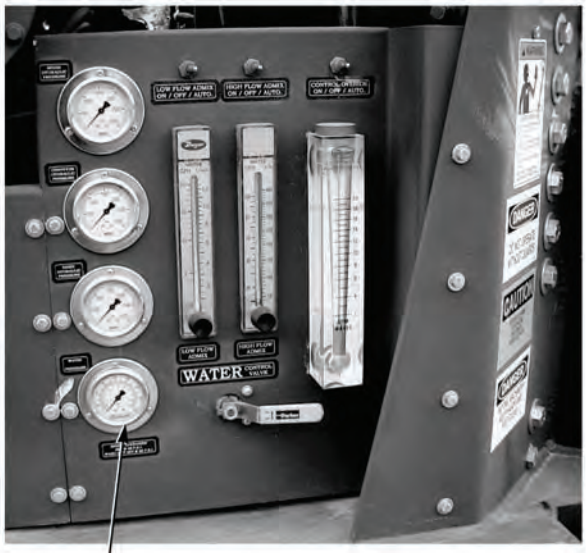

OPERATIONAL TEST

(1) Close HOSE SUCTION and FILL/RETURN valves, (Para 2-1).

(2) Open TANK SUCTION valve, (Para 2-1).

(3) Push in WATER PUMP/LIFT CYLINDER control valve, (Para 2-1).

(4) Adjust WATER PRESSURE/FLOW CONTROL valve to 40 psi (276 kPa) water pressure, (Para 2-20).

(5) Check if water pressure can be adjusted to 40 psi (276 kPa).

(a) If water pressure cannot be adjusted to 40 psi (276 kPa), go to “No or Low Water Pressure (Unable to Adjust Water Pressure)”, (Fault 30).

(b) If water pressure can be adjusted to 40 psi (276 kPa) when pumping from tank, go to Step 13 of this Fault.

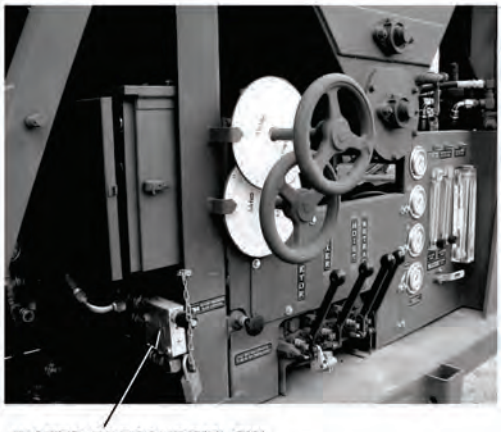

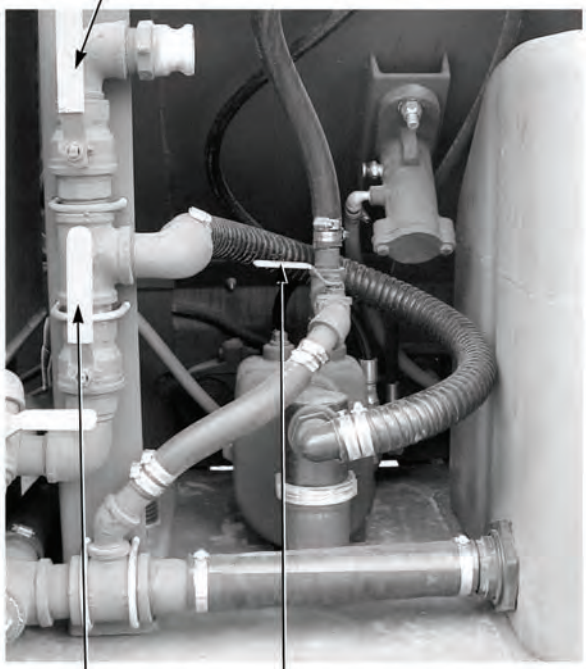

31. NOT ABLE TO FILL WATER TANKS FROM LAKES OR PONDS (CONT).

KNOWN INFO

- Suction hose not kinked or damaged.
- Water strainer not blocked.
- Water pump drain cock valve closed.
- Water hose between suction valve and water system strainer not kinked or damaged.
- Water strainer canister not loose or damaged.
- Water system strainer not clogged.
- Fill/return hose not kinked or damaged.
- TANK SUCTION valve not binding or damaged.
- Hydraulic system OK.
- Pump is primed.
- Water pump OK.
- Water pump pressure adjusted correctly.

POSSIBLE PROBLEMS

- Fill/return hose blocked or leaking.
- Vertical lift between strainer and pump inlet too great.
- Suction hose blocked or leaking.

13.

Can water tank be filled from lake or pond using water pressure flow control valve setting in Step 12?

NO → Go to Step 14 of this Fault.

YES → Fault corrected. If problem continues, reduce vertical lift between strainer and pump inlet. Verify repair, go to Step 22 of this Fault.

TEST OPTIONS

Operational test.

REASON FOR QUESTION

If WATER PRESSURE/FLOW CONTROL valve is not adjusted correctly, water system fill from lake or pond function may not operate correctly.

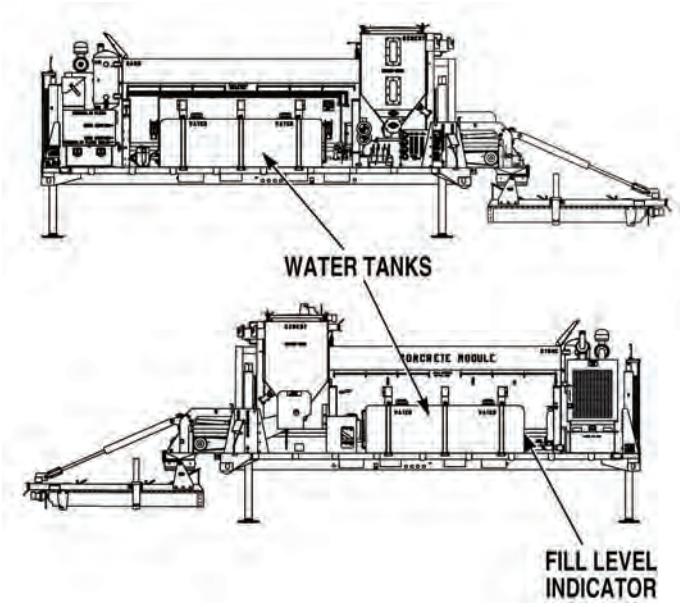

OPERATIONAL TEST

(1) Connect suction hose with strainer to HOSE SUCTION valve, (Para 2-12). Place strainer in lake or pond.

(2) Open FILL/RETURN valve, (Para 2-1).

(3) Open HOSE SUCTION valve, (Para 2-1).

(4) Close TANK SUCTION valve, (Para 2-1).

(5) Check if water can be pumped from lake or pond using pressure setting from Step 12, (Para 2-12).

  (a) If water cannot be pumped from lake or pond, go to Step 14 of this Fault.

  (b) If water can be pumped from lake or pond, fault corrected. If problem persists, reduce vertical lift between water strainer and pump inlet. Verify repair, go to Step 22 of this Fault.

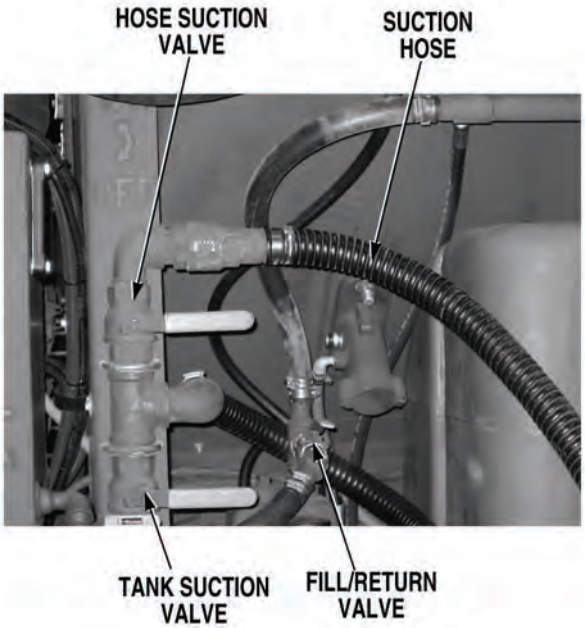

31. NOT ABLE TO FILL WATER TANKS FROM LAKES OR PONDS (CONT).

KNOWN INFO

- Suction hose not kinked or damaged.
- Water strainer not blocked.
- Water pump drain cock valve closed.
- Water hose between suction valve and water system strainer not kinked or damaged.
- Water strainer canister not loose or damaged.
- Water system strainer not clogged.
- Fill/return hose not kinked or damaged.
- TANK SUCTION valve not binding or damaged.
- Hydraulic system OK.
- Pump is primed.
- Water pump OK.
- Water pump pressure adjusted correctly.

POSSIBLE PROBLEMS

- Fill/return hose blocked or leaking.
- Vertical lift between strainer and pump inlet too great.
- Suction hose blocked or leaking.

14.

Is water pressure measured at water pressure gage, when fill/return valve is open?

NO → Go to Step 15 of this Fault.

YES → Remove blockage or replace fill/return hose, (Para 3-131). Verify repair, go to Step 22 of this Fault.

TEST OPTIONS

Operational test.

REASON FOR QUESTION

If water pressure is measured with fill/return valve open and tanks are not being filled, water fill/return hose is blocked.

OPERATIONAL TEST
(1) Ensure fill/return valve is open, (Para 2-1). (2) Check if water pressure is measured at water pressure gage. (a) If water pressure is not measured, go to Step 15 of this Fault. (b) If water pressure is measured, remove blockage or replace fill/return hose, (Para 3-131). Verify repair, go to Step 22 of this Fault.

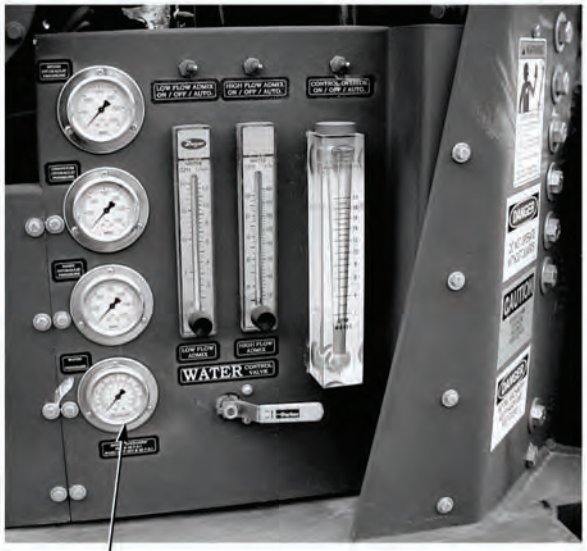

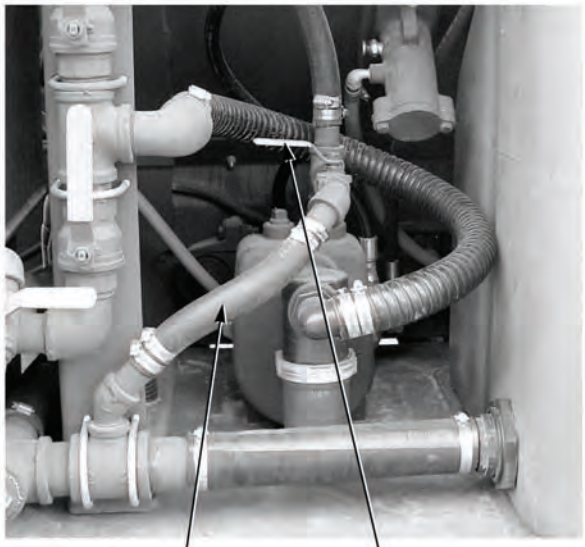

31. NOT ABLE TO FILL WATER TANKS FROM LAKES OR PONDS (CONT).

KNOWN INFO

- Suction hose not kinked or damaged.
- Water strainer not blocked.
- Water pump drain cock valve closed.
- Water hose between suction valve and water system strainer not kinked or damaged.
- Water strainer canister not loose or damaged.
- Water system strainer not clogged.
- Fill/return hose not kinked or damaged.
- TANK SUCTION valve not binding or damaged.
- Hydraulic system OK.
- Pump is primed.
- Water pump OK.
- Water pump pressure adjusted correctly.
- Fill/return hose not blocked or leaking.

POSSIBLE PROBLEMS

- Vertical lift between strainer and pump inlet too great.
- Suction hose blocked or leaking.

15.

Can water tank be filled from lake or pond if vertical lift between strainer and pump inlet is reduced?

NO → Suction hose either leaks or is blocked. Remove blockage, repair leaks, or replace suction hose, (Para 3-131). Verify repair, go to Step 22 of this Fault.

YES → Fault corrected. Verify repair, go to Step 22 of this Fault.

TEST OPTIONS

Operational test.

REASON FOR QUESTION

If water tank can be filled from lake or pond after reducing vertical lift between strainer and pump inlet, fault has been corrected. If not, suction hose either leaks or is blocked.

OPERATIONAL TEST

(1) Reduce vertical lift between strainer and pump inlet.

(2) Check if water tank can be filled from lake or pond, (Para 2-12).

(a) If water tank cannot be filled remove blockage, repair leaks, or replace damaged suction hose, (Para 3-131).

(b) If water tank can be filled, fault has been corrected.

(3) Verify repair, go to Step 22 of this Fault.

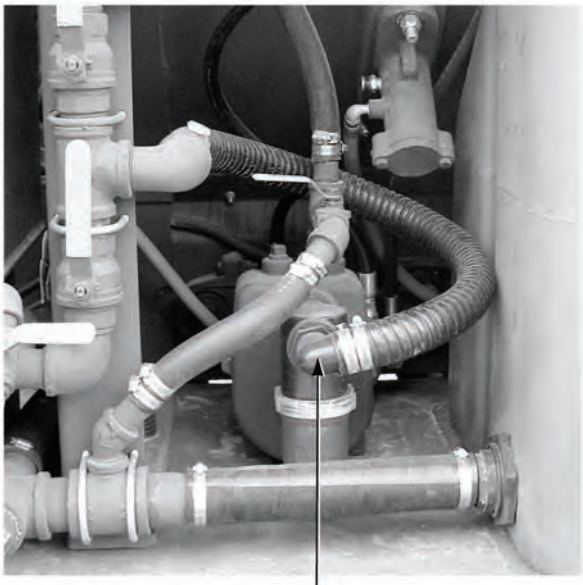

PUMP INLET

31. NOT ABLE TO FILL WATER TANKS FROM LAKES OR PONDS (CONT).

KNOWN INFO

- Suction hose not kinked or damaged.
- Water strainer not blocked.
- Water pump drain cock valve closed.
- Water hose between suction valve and water system strainer not kinked or damaged.
- Water strainer canister not loose or damaged.
- Water system strainer not clogged.
- Fill/return hose not kinked or damaged.
- TANK SUCTION valve not binding or damaged.
- Hydraulic system OK.

POSSIBLE PROBLEMS

- Water pump pressure not adjusted correctly.
- Fill/return hose blocked or leaking.
- Vertical lift between strainer and pump inlet too great.
- Suction hose blocked or leaking.
- Pump is not primed.
- Water pump faulty.

16.

Can WATER PRESSURE/FLOW CONTROL valve be adjusted so lift cylinder controls operate when WATER PUMP/LIFT CYLINDER control valve is pulled out?

NO → Go to “No or Low Water Pressure (Unable to Adjust Water Pressure)”, (Fault 30).

YES ↓

TEST OPTIONS

Operational test.

REASON FOR QUESTION

If WATER PRESSURE/FLOW CONTROL VALVE cannot be adjusted, another troubleshooting procedure applies.

OPERATIONAL TEST

(1) Pull out WATER PUMP/LIFT CYLINDER control valve, (Para 2-1).

(2) Check if WATER PRESSURE/FLOW CONTROL valve can be adjusted, (Para 2-1) so lift cylinders controls operate, (Para 2-28).

(a) If WATER PRESSURE/FLOW CONTROL valve cannot be adjusted so lift cylinders operate, go to “No or Low Water Pressure (Unable to Adjust Water Pressure)”, (Fault 30).

(b) If WATER PRESSURE/FLOW CONTROL valve can be adjusted so lift cylinders operate, go to Step 17 of this Fault.

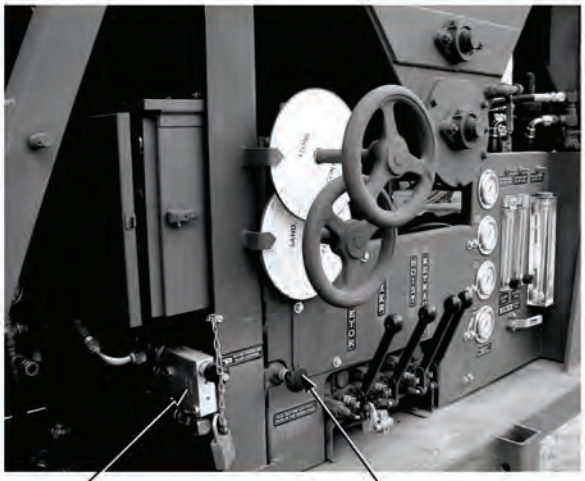

31. NOT ABLE TO FILL WATER TANKS FROM LAKES OR PONDS (CONT).

KNOWN INFO

Suction hose not kinked or damaged.
Water strainer not blocked.
Water pump drain cock valve closed.
Water hose between suction valve and water system strainer not kinked or damaged.
Water strainer canister not loose or damaged.
Water system strainer not clogged.
Fill/return hose not kinked or damaged.
TANK SUCTION valve not binding or damaged.
Hydraulic system OK.

POSSIBLE PROBLEMS

Water pump pressure not adjusted correctly.
Fill/return hose blocked or leaking.
Vertical lift between strainer and pump inlet too great.
Suction hose blocked or leaking.
Pump is not primed.
Water pump faulty.

17.

Can water tank be filled from lake or pond using WATER PRESSURE/FLOW CONTROL valve setting in Step 16, after pushing in WATER PUMP/LIFT CYLINDER control valve?

NO → Go to Step 18 of this Fault.

YES → Fault corrected. Verify repair, go to Step 22 of this Fault.

TEST OPTIONS

Operational test.

REASON FOR QUESTION

If water tank can be filled from lake or pond using WATER PRESSURE/FLOW CONTROL valve setting found in Step 16, WATER PRESSURE/FLOW CONTROL valve was not adjusted correctly.

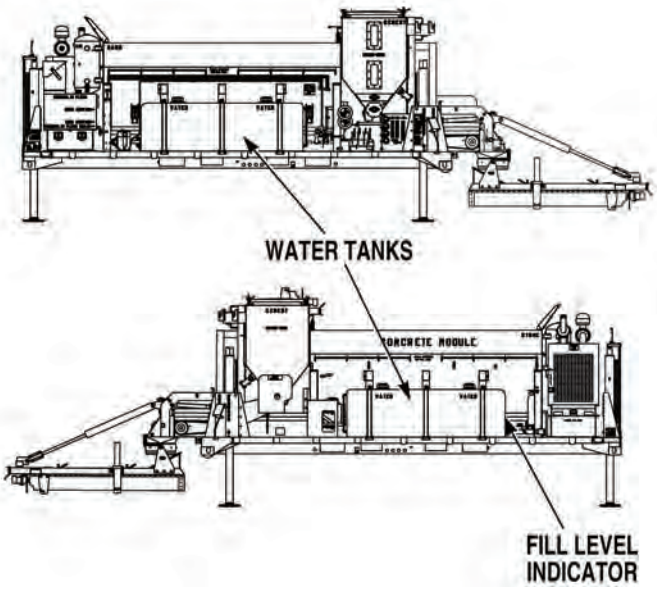

OPERATIONAL TEST

(1) Connect suction hose with strainer to HOSE SUCTION valve, (Para 2-12). Place strainer in lake or pond.

(2) Open FILL/RETURN valve, (Para 2-1).

(3) Open HOSE SUCTION valve, (Para 2-1).

(4) Close TANK SUCTION valve, (Para 2-1).

(5) Push in WATER PUMP/LIFT CYLINDER control valve, (Para 2-18).

(6) Check if water tank can be filled from a lake or pond, (Para 2-12).

  (a) If water tanks cannot be filled, go to Step 18 of this Fault.

  (b) If water tanks can be filled, fault corrected. Verify repair, go to Step 22 of this Fault.

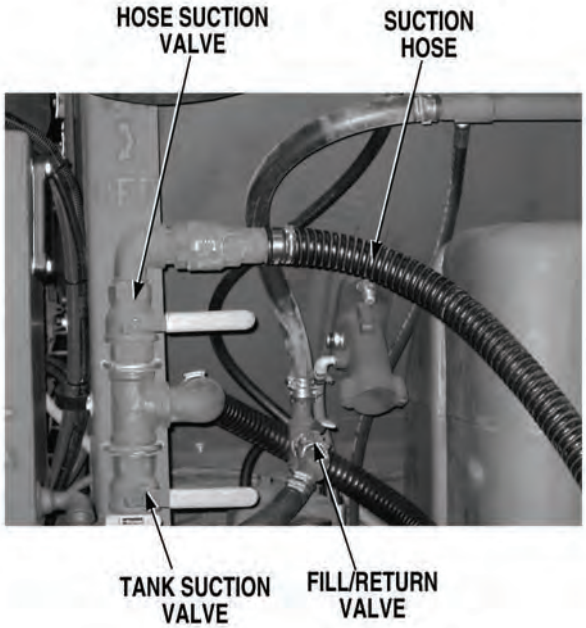

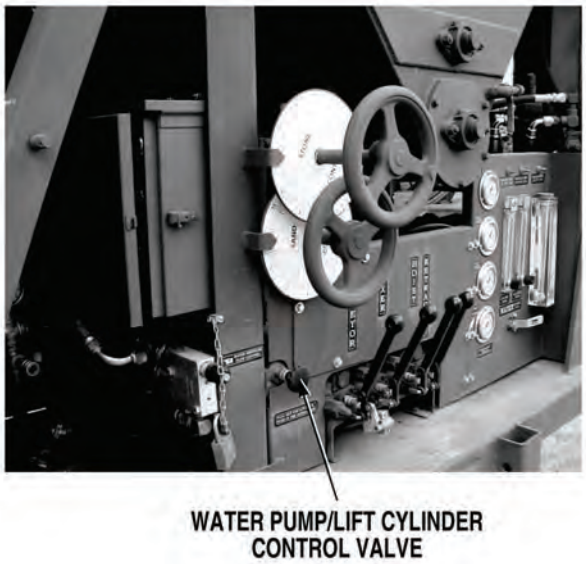

31. NOT ABLE TO FILL WATER TANKS FROM LAKES OR PONDS (CONT).

KNOWN INFO

- Suction hose not kinked or damaged.
- Water strainer not blocked.
- Water pump drain cock valve closed.
- Water hose between suction valve and water system strainer not kinked or damaged.
- Water strainer canister not loose or damaged.
- Water system strainer not clogged.
- Fill/return hose not kinked or damaged.
- TANK SUCTION valve not binding or damaged.
- Hydraulic system OK.
- Water pump pressure adjusted correctly.

POSSIBLE PROBLEMS

- Fill/return hose blocked or leaking.
- Vertical lift between strainer and pump inlet too great.
- Suction hose blocked or leaking.
- Pump is not primed.
- Water pump faulty.

18.

Can water tank be filled from lake or pond after filling water pump priming port with water?

NO → Go to Step 19 of this Fault.

YES → Fault corrected. Verify repair, go to Step 22 of this Fault.

TEST OPTIONS

Operational test.

REASON FOR QUESTION

If water tank can be filled from lake or pond after filling water pump priming port, system was not primed.

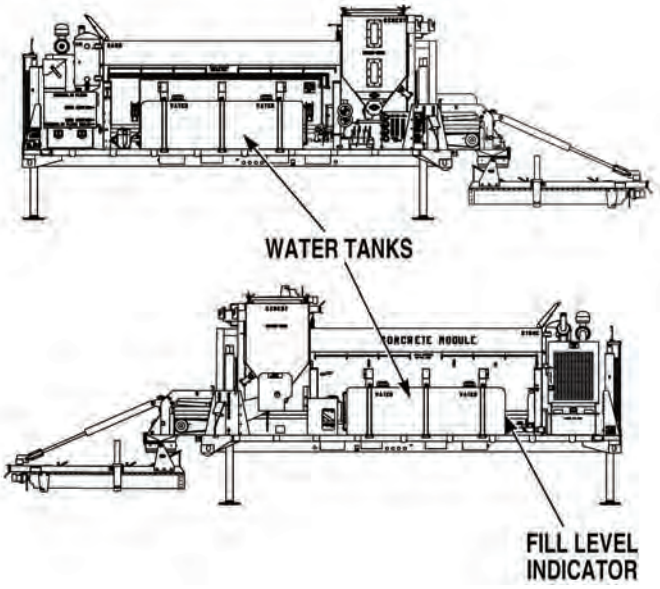

OPERATIONAL TEST

(1) Shut OFF engine, (Para 2-19).

(2) Remove plug from water pump, (Para 2-12).

(3) Fill water pump with water.

(4) Install plug in water pump.

(5) Start engine, (Para 2-19).

(6) Check if water tank can be filled from a lake or pond.

  (a) If water tanks cannot be filled go to Step 19 of this Fault.

  (b) If water tanks can be filled, fault corrected. Verify repair, go to Step 22 of this Fault.

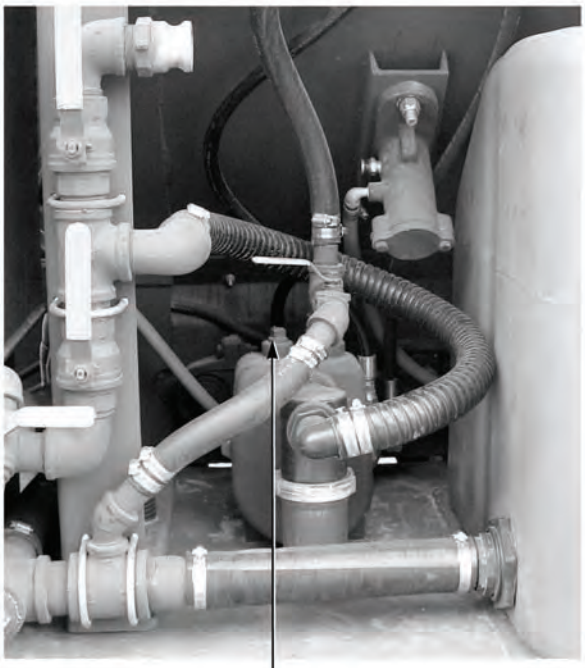

31. NOT ABLE TO FILL WATER TANKS FROM LAKES OR PONDS (CONT).

KNOWN INFO

- Suction hose not kinked or damaged.
- Water strainer not blocked.
- Water pump drain cock valve closed.
- Water hose between suction valve and water system strainer not kinked or damaged.
- Water strainer canister not loose or damaged.
- Water system strainer not clogged.
- Fill/return hose not kinked or damaged.
- TANK SUCTION valve not binding or damaged.
- Hydraulic system OK.
- Water pump pressure adjusted correctly.
- Pump is primed.

POSSIBLE PROBLEMS

- Fill/return hose blocked or leaking.
- Vertical lift between strainer and pump inlet too great.
- Suction hose blocked or leaking.
- Water pump faulty.

19.

Is water pressure measured at water pressure gage, when fill/return valve is open?

NO → Go to Step 20 of this Fault.

YES → Remove blockage or replace fill/return hose, (Para 3-131). Verify repair, go to Step 22 of this Fault.

TEST OPTIONS

Operational test.

REASON FOR QUESTION

If water pressure is measured with fill/return valve open and tanks are not being filled, fill/return hose is blocked.

OPERATIONAL TEST
(1) Ensure fill/return valve is open, (Para 2-1). (2) Check if water pressure is measured at water pressure gage. (a) If water pressure is not measured, go to Step 20 of this Fault. (b) If water pressure is measured, remove blockage or replace fill/return hose, (Para 3-131). Verify repair, go to Step 22 of this Fault.

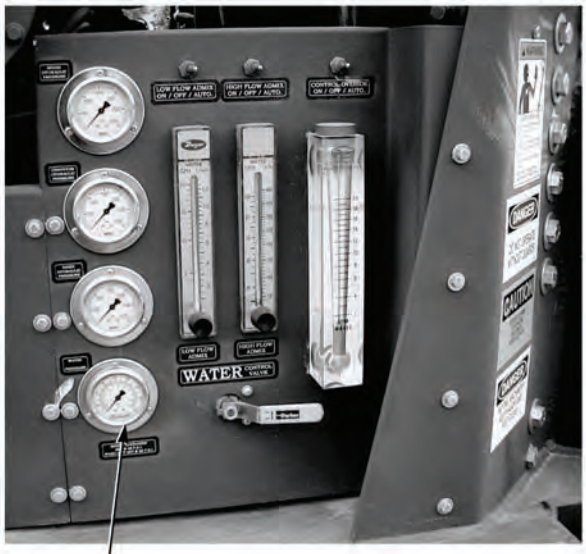

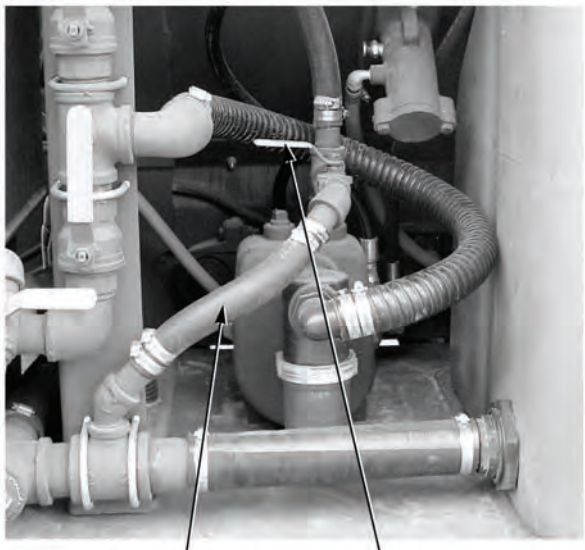

31. NOT ABLE TO FILL WATER TANKS FROM LAKES OR PONDS (CONT).

KNOWN INFO

- Suction hose not kinked or damaged.
- Water strainer not blocked.
- Water pump drain cock valve closed.
- Water hose between suction valve and water system strainer not kinked or damaged.
- Water strainer canister not loose or damaged.
- Water system strainer not clogged.
- Fill/return hose not kinked or damaged.
- TANK SUCTION valve not binding or damaged.
- Hydraulic system OK.
- Water pump pressure adjusted correctly.
- Pump is primed.
- Fill/return hose not blocked or leaking.

POSSIBLE PROBLEMS

- Vertical lift between strainer and pump inlet too great.
- Suction hose blocked or leaking.
- Water pump faulty.

20.

Can water tank be filled from lake or pond if vertical lift between strainer and pump inlet is reduced?

NO → Go to Step 21 of this Fault.

YES → Fault corrected. Verify repair, go to Step 22 of this Fault.

TEST OPTIONS

Operational test.

REASON FOR QUESTION

If water tanks can be filled from a lake or pond after reducing verticle lift between strainer and pump inlet, fault has been corrected.

OPERATIONAL TEST

(1) Reduce vertical lift between suction hose strainer and pump inlet.

(2) Check if water tanks can be filled from lake or pond, (Para 2-12).

(a) If water tanks cannot be filled, go to Step 21 of this Fault.

(b) If water tanks can be filled, Fault has been corrected. Verify repair, go to Step 22 of this Fault.

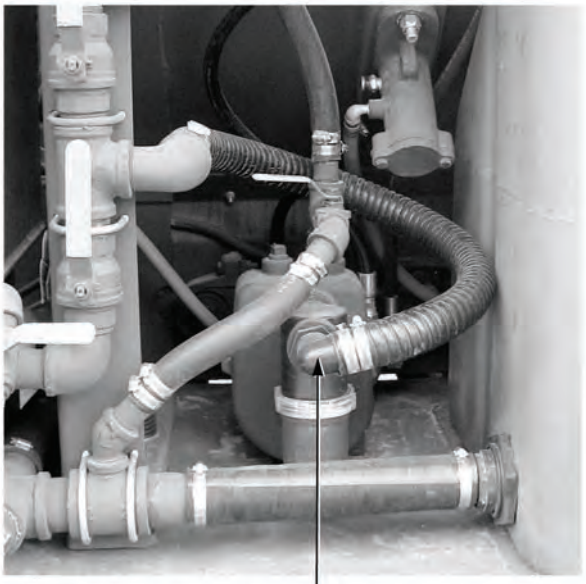

PUMP INLET

31. NOT ABLE TO FILL WATER TANKS FROM LAKES OR PONDS (CONT).

KNOWN INFO

- Suction hose not kinked or damaged.
- Water strainer not blocked.
- Water pump drain cock valve closed.
- Water hose between suction valve and water system strainer not kinked or damaged.
- Water strainer canister not loose or damaged.
- Water system strainer not clogged.
- Fill/return hose not kinked or damaged.
- TANK SUCTION valve not binding or damaged.
- Hydraulic system OK.
- Water pump pressure adjusted correctly.
- Pump is primed.
- Fill/return hose not blocked or leaking.
- Vertical lift between strainer and pump inlet OK.

POSSIBLE PROBLEMS

- Suction hose blocked or leaking.
- Water pump faulty.

21.

Can water tank be filled from lake or pond after suction hose and strainer are replaced?

NO → Replace water pump, (Para 3-105). Verify repair, go to Step 22 of this Fault.

YES → Fault corrected. Verify repair, go to Step 22 of this Fault.

TEST OPTIONS

Operational test.

REASON FOR QUESTION

If water tanks can be filled from lake or pond, suction hose and strainer were faulty. If not, water pump is faulty.

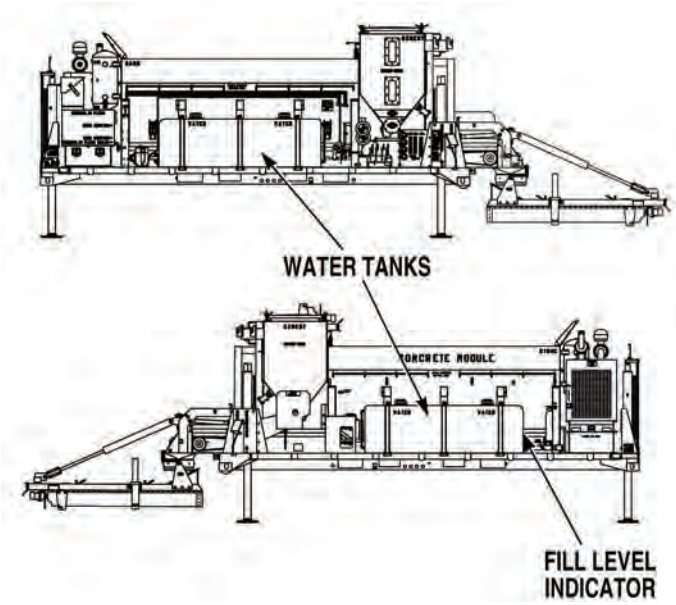

OPERATIONAL TEST
(1) Replace suction hose and strainer, (Para 3-131). (2) Check if water tanks can be filled from a lake or pond, (Para 2-12). (a) If water tanks cannot be filled, replace water pump, (Para 3-105). (b) If water tanks can be filled, fault corrected. (3) Verify repair, go to Step 22 of this Fault.

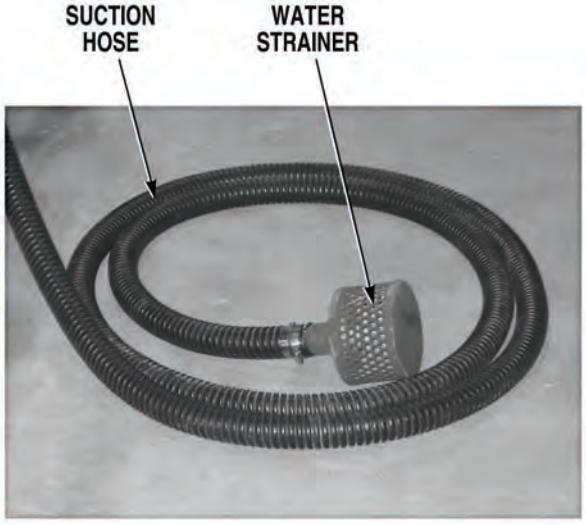

31. NOT ABLE TO FILL WATER TANKS FROM LAKES OR PONDS (CONT).

KNOWN INFO
Suction hose not kinked or damaged. Water strainer not blocked. Water pump drain cock valve closed. Water hose between suction valve and water system strainer not kinked or damaged. Water strainer canister not loose or damaged. Water system strainer not clogged. Fill/return hose not kinked or damaged. TANK SUCTION valve not binding or damaged. Hydraulic system OK. Water pump pressure adjusted correctly. Fill/return hose not blocked or leaking. Vertical lift between strainer and pump inlet OK. Suction hose not blocked or leaking. Pump is primed. Water pump OK.
POSSIBLE PROBLEMS
None.

22.

Can water tank be filled from lake or pond?

NO → Fault not corrected. Notify Supervisor.

YES → Fault corrected.

TEST OPTIONS
Verify repair.
REASON FOR QUESTION
If water tank can be filled from a lake or pond, fault has been corrected.

VERIFY REPAIR

(1) Start engine, (Para 2-19).

(2) Turn THROTTLE CONTROL valve to HIGH IDLE, (Para 2-1).

(3) Check if water tanks can be filled from a lake or pond, (Para 2-12).

  (a) If water tanks cannot be filled from a lake or pond, fault not corrected. Notify Supervisor.

  (b) If water tanks can be filled from a lake or pond, fault has been corrected.

(4) Turn THROTTLE CONTROL valve OFF, (Para 2-1).

(5) Shut OFF engine, (Para 2-19).

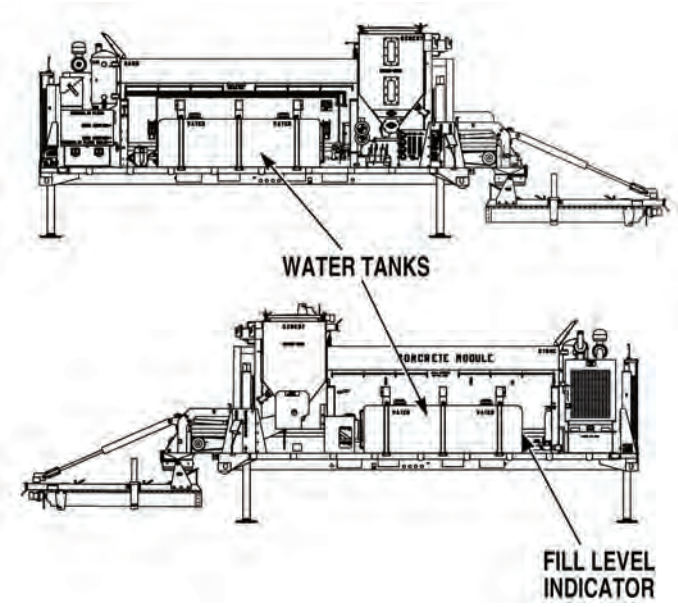

32. SAND AND STONE GATES DO NOT OPERATE CORRECTLY.

INITIAL SETUP

Tools and Special Tools
Tool Kit, General Mechanic's: Automotive (Item 19, Appendix I)

Equipment Condition
Concrete Mobile Mixer unloaded from PLS, (Para 2-5)
Engine OFF, (Para 2-19)

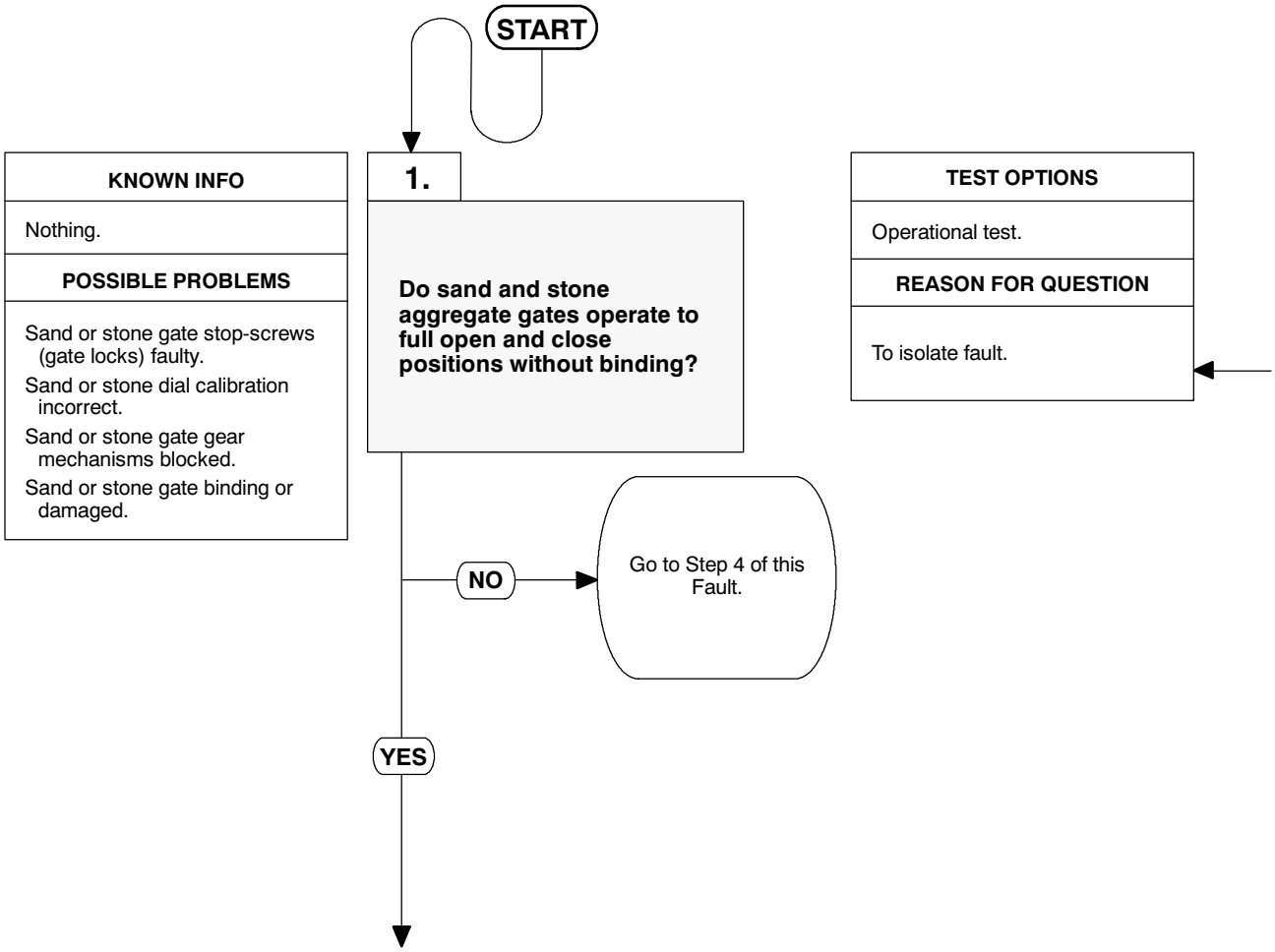

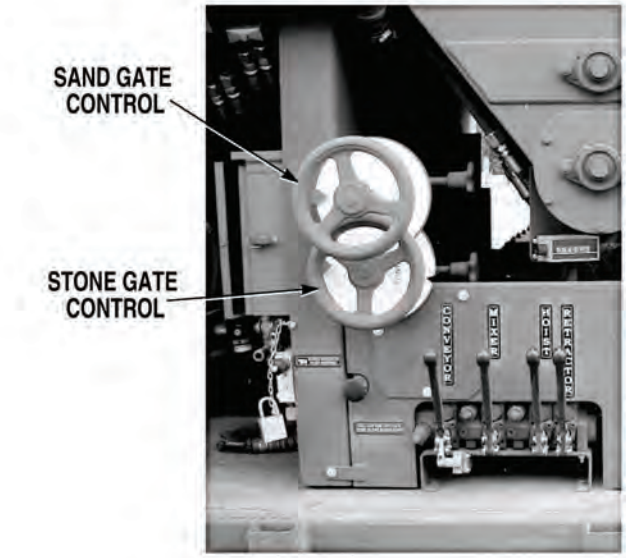

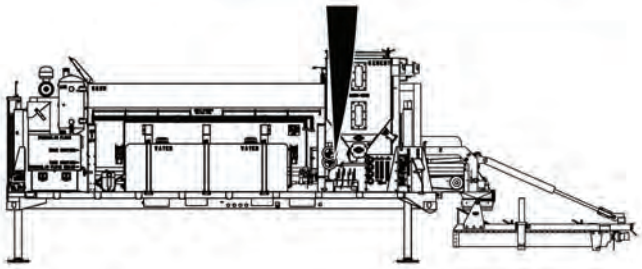

OPERATIONAL TEST

(1) Empty sand and stone bins.

(2) Loosen sand and stone gate stop-screws (gate locks), (Para 2-18).

(3) Operate sand and stone gates to their full open and closed position, (Para 2-18). Check if gates are free from blockage and binding.

(a) If sand or stone gate is blocked or binding, go to Step 4 of this Fault.

(b) If sand and stone gates are free from blockage and binding, go to Step 2 of this Fault.

32. SAND AND STONE GATES DO NOT OPERATE CORRECTLY (CONT).

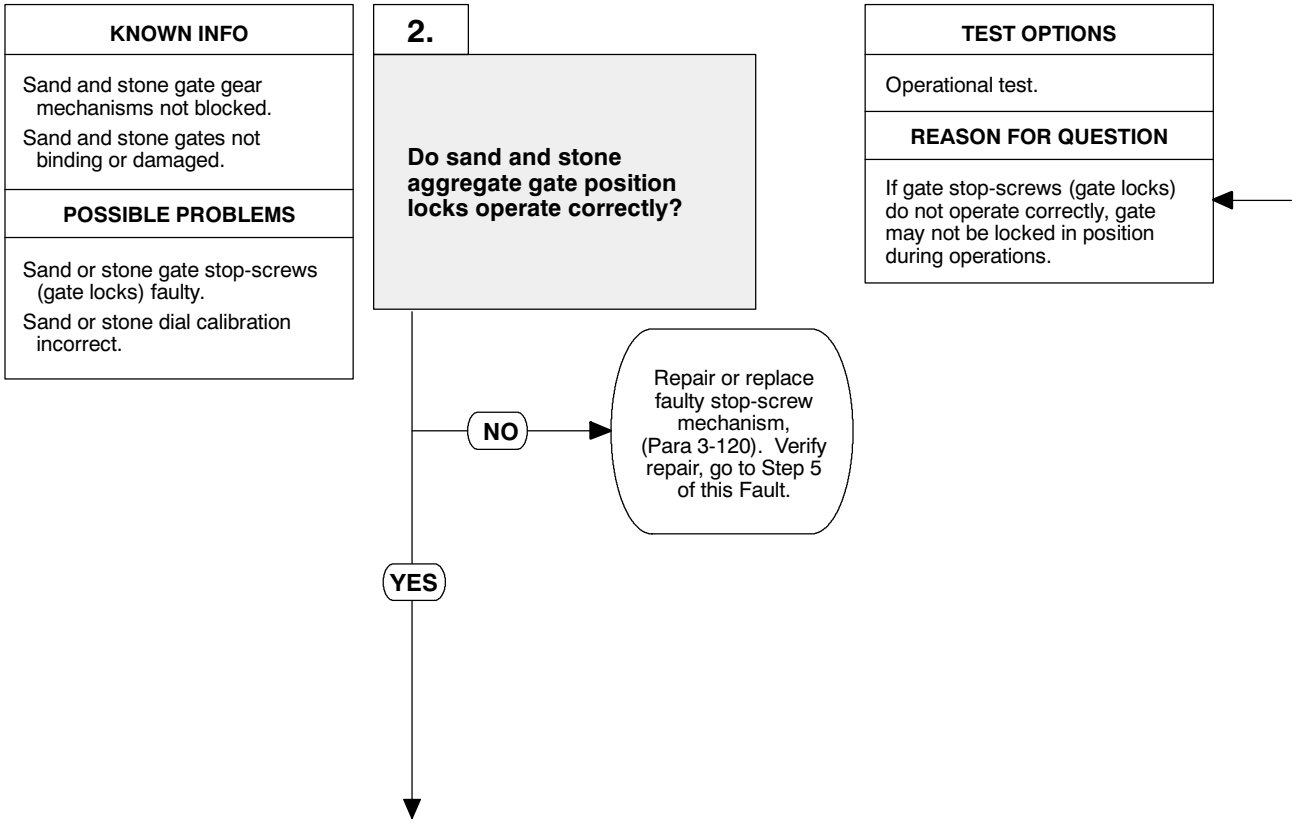

OPERATIONAL TEST
Operate sand and stone gates stop-screws (gate locks), (Para 2-18). Check if gates are locked into position. (a) If sand and stone gate stop-screws (gate locks) do not lock gates in position, replace faulty gate stop-screw (gate lock), (Para 3-120). Verify repair, go to Step 5 of this Fault. (b) If sand and stone gate stop-screws (gate locks) lock gates in position, go to Step 3 of this Fault.

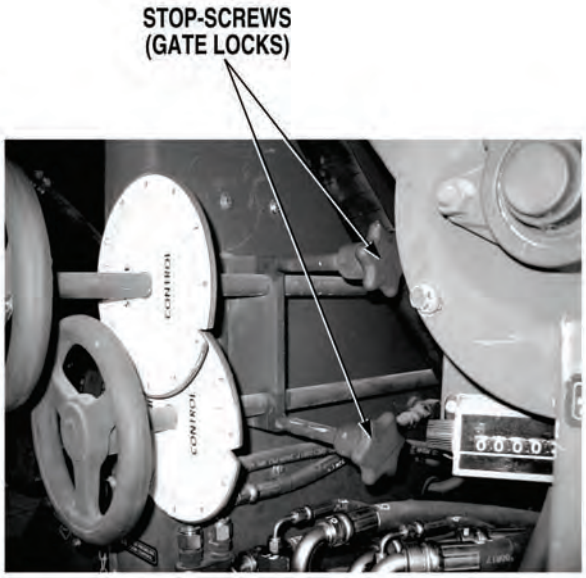

32. SAND AND STONE GATES DO NOT OPERATE CORRECTLY (CONT).

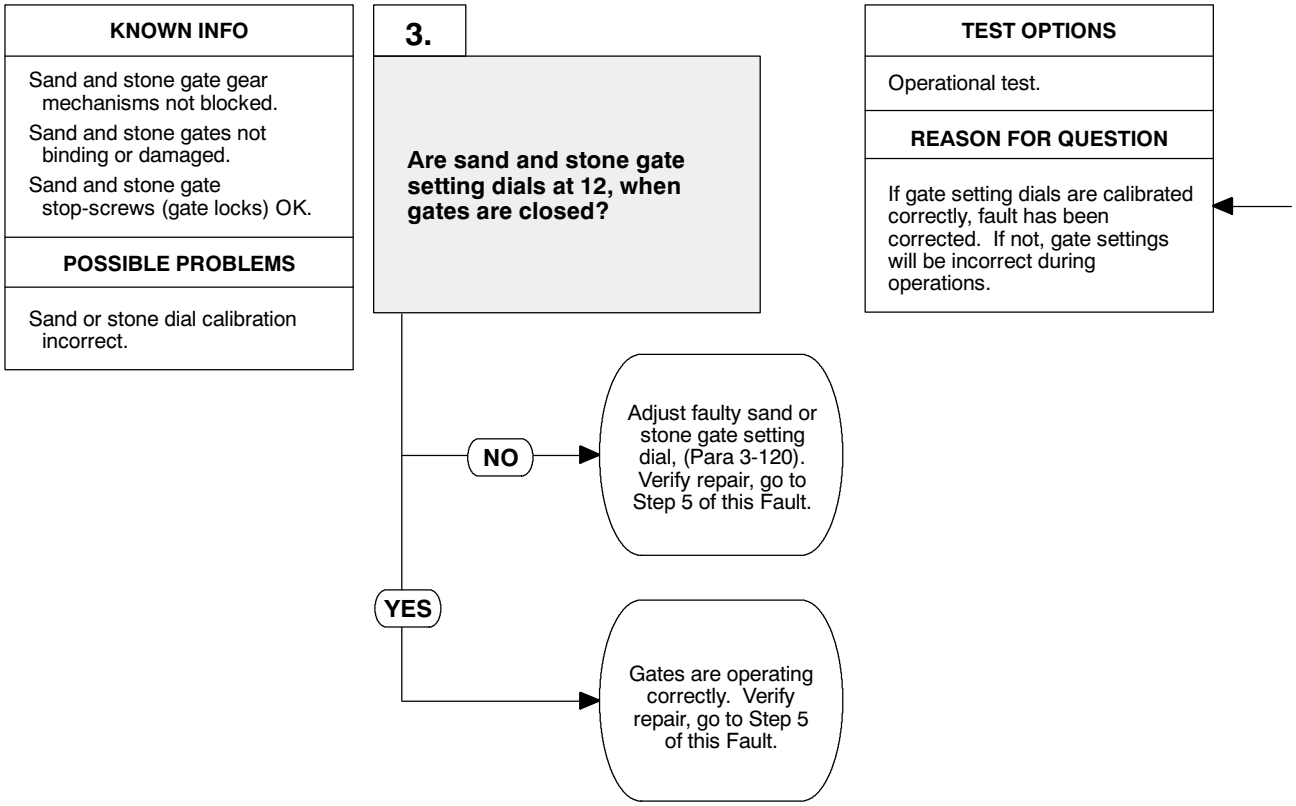

OPERATIONAL TEST

Close sand and stone gates so gates just touch conveyor belt, (Para 2-18). Check if gate setting dials read 12.

(a) If sand and stone gate setting dials do not read 12, adjust faulty gate setting dial, (Para 3-120). Verify repair, go to Step 5 of this Fault.

(b) If sand and stone gate setting dials read 12, gates are operating correctly. Verify repair, go to Step 5 of this Fault.

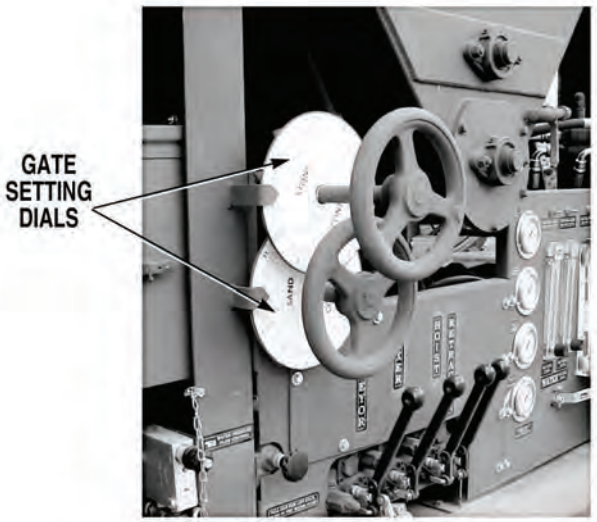

32. SAND AND STONE GATES DO NOT OPERATE CORRECTLY (CONT).

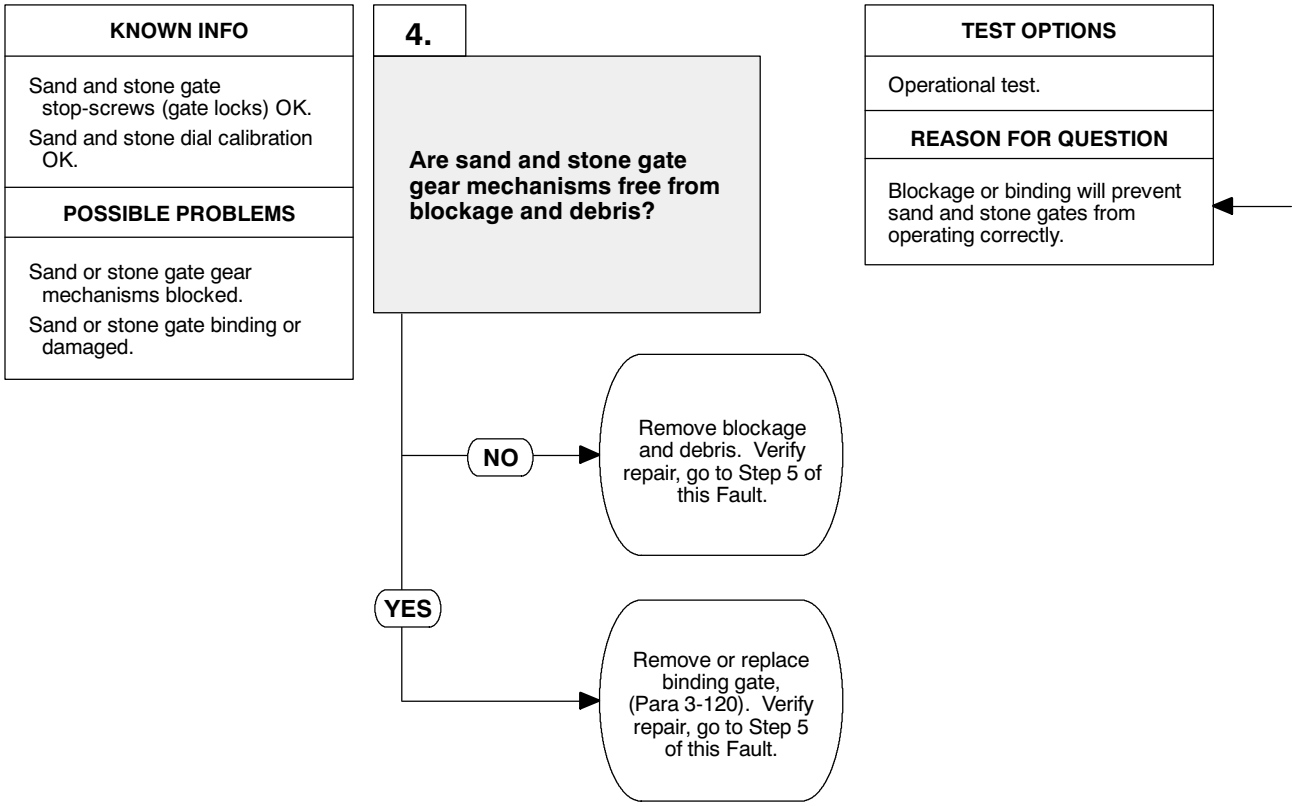

OPERATIONAL TEST
Inspect sand and stone gate gear mechanisms for blockage and debris. (a) If sand or stone gates are not free from blockage and debris, remove blockage and debris. Verify repair, go to Step 5 of this Fault. (b) If sand or stone gates are free from blockage and debris, repair or replace binding gate, (Para 3-120). Verify repair, go to Step 5 of this Fault.

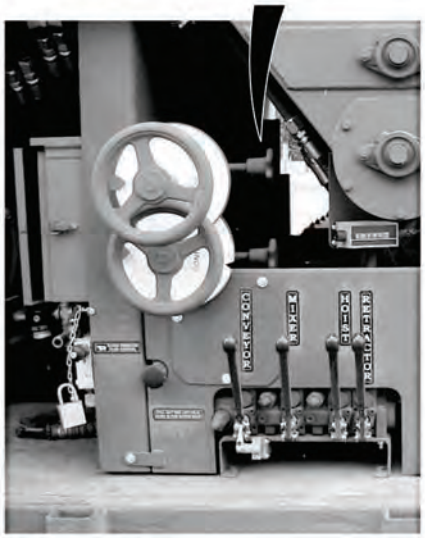

32. SAND AND STONE GATES DO NOT OPERATE CORRECTLY (CONT).

KNOWN INFO
Sand and stone gate stop-screws (gate locks) OK. Sand and stone dial calibration OK. Sand and stone gate gear mechanisms not blocked. Sand and stone gates not binding or damaged.
POSSIBLE PROBLEMS
None.

5.

Do sand and stone gates operate correctly?

NO → Fault not corrected. Notify Supervisor.

YES → Fault corrected.

TEST OPTIONS
Verify repair.
REASON FOR QUESTION
If sand and stone gates operate correctly, fault has been corrected.

VERIFY REPAIR

(1) Loosen sand and stone gate stop-screws (gate locks), (Para 2-18).

(2) Operate sand and stone gates to their full open and closed position, (Para 2-18). Check if gates are free from blockage and binding.

(3) Close sand and stone gates so they just touch conveyor belt, (Para 2-18). Check if gate setting dials read 12.

(4) Open sand and stone gates and operate sand and stone gates stop-screws (gate locks), (Para 2-18). Check if gates are locking into position.

   (a) If sand or stone gates do not operate as indicated above, fault has not been corrected. Notify Supervisor.

   (b) If sand or stone gates operate as indicated above, fault has been corrected.

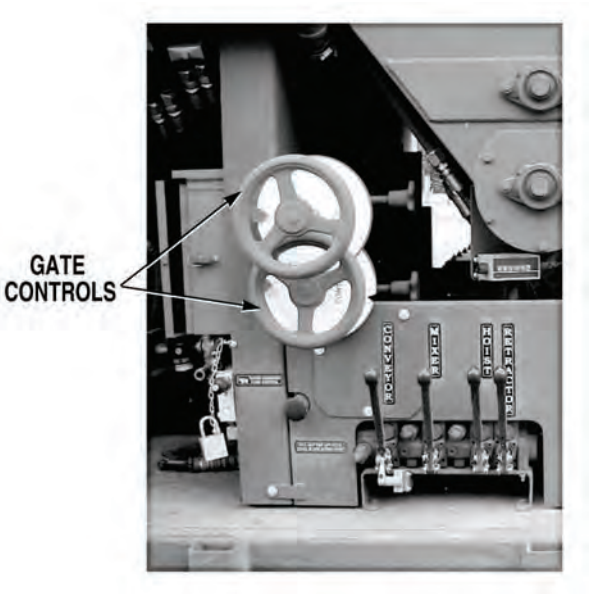

33. VIBRATOR(S) DO NOT OPERATE CORRECTLY.

INITIAL SETUP

Tools and Special Tools
Tool Kit, General Mechanic's: Automotive (Item 19, Appendix I)

Equipment Condition
Concrete Mobile Mixer unloaded from PLS, (Para 2-5)
Concrete Mobile Mixer raised to operating level, (Para 2-28)
Engine OFF, (Para 2-19)

KNOWN INFO

Nothing.

POSSIBLE PROBLEMS

- Air lines between water/vibrator chain oiler air solenoid valve and vibrators kinked, leak, or damaged.
- Oil level in air regulator/lubricator low.
- Sand bin vibrator shutoff valve closed.
- Air system pressure low.
- Air regulator/lubricator not adjusted correctly.
- Air regulator/lubricator faulty.
- Sand bin air cam valve adjusted incorrectly.
- Air line between sand bin vibrator air cam valve and T-fitting at sand bin blocked.
- Air line between T-fitting and sand bin vibrator blocked.
- Sand bin air cam valve faulty.
- Air line between T-fitting and non-operating vibrator blocked.
- Non-operating vibrator exhaust port blocked.
- Non-operating vibrator faulty.
- Cement bin air cam valve adjusted incorrectly.
- Air line between cement bin vibrator air cam valve and T-fitting at cement bin blocked.
- Air line between T-fitting and cement bin vibrator air cam blocked.
- Cement bin air cam faulty.
- System control circuit faulty.
- Air lines between water/vibrator/chain oiler air solenoid valve and vibrators leaking.
- Air lines between water/vibrator/chain oiler air solenoid valve and vibrator control valve blocked.
- Vibrator control valve faulty.

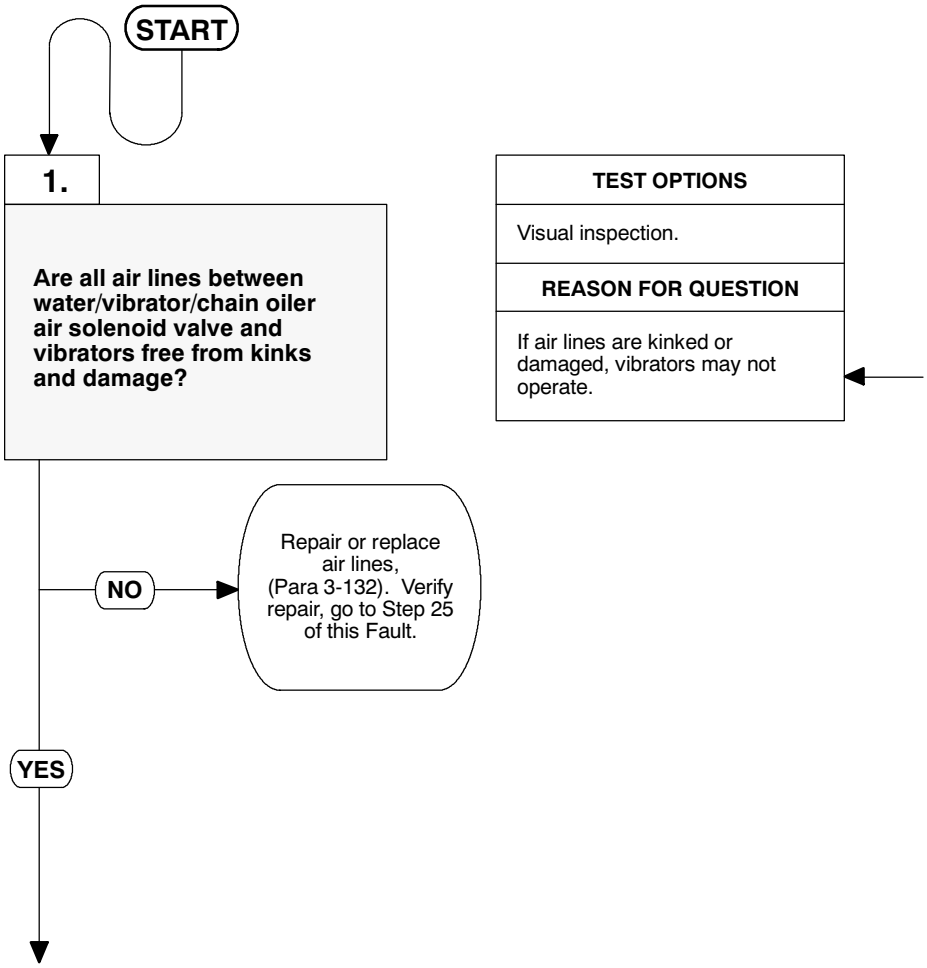

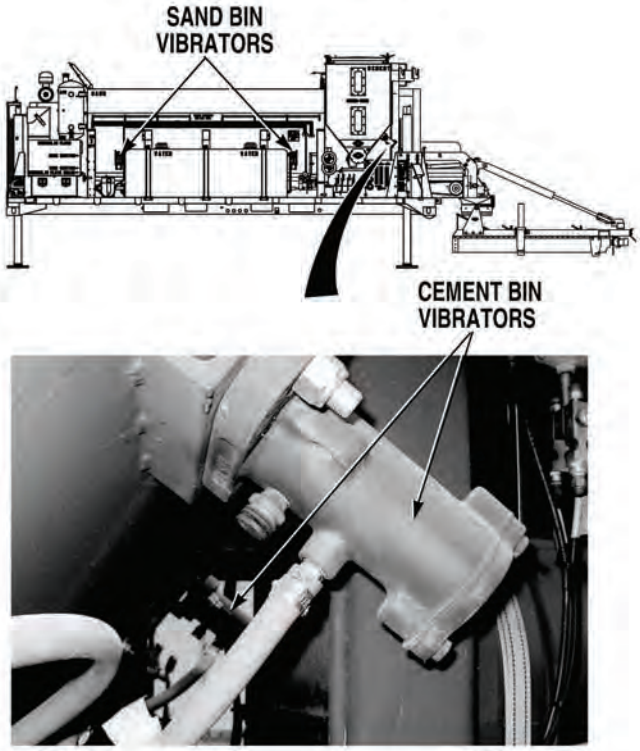

VISUAL INSPECTION
Check if air lines between water/vibrator/chain oiler air solenoid and vibrators are free from kinks and damage. (a) If air lines are not free from kinks or damage, repair or replace kinked, or damaged air lines, (Para 3-132). Verify repair, go to Step 2 of this Fault. (b) If air lines are free from kinks and damage, go to Step 2 of this Fault.

33. VIBRATOR(S) DO NOT OPERATE CORRECTLY (CONT).

KNOWN INFO
Air lines between water/vibrator chain oiler air solenoid valve and vibrators not kinked, leak, or damaged.

POSSIBLE PROBLEMS
Oil level in air regulator/lubricator low.
Sand bin vibrator shutoff valve closed.
Air system pressure low.
Air regulator/lubricator not adjusted correctly.
Air regulator/lubricator faulty.
Sand bin air cam valve adjusted incorrectly.
Air line between sand bin vibrator air cam valve and T-fitting at sand bin blocked.
Air line between T-fitting and sand bin vibrator blocked.
Sand bin air cam valve faulty.
Air line between T-fitting and non-operating vibrator blocked.
Non-operating vibrator exhaust port blocked.
Non-operating vibrator faulty.
Cement bin air cam valve adjusted incorrectly.
Air line between cement bin vibrator air cam valve and T-fitting at cement bin blocked.
Air line between T-fitting and cement bin vibrator air cam blocked.
Cement bin air cam faulty.
System control circuit faulty.
Air lines between water/vibrator/chain oiler air solenoid valve and vibrators leaking.
Air lines between water/vibrator/chain oiler air solenoid valve and vibrator control valve blocked.
Vibrator control valve faulty.

2.

Is oil present in air lubricator reservoir?

NO → Fill reservoir as required, (Para 2-9). Then go to Step 3.

YES ↓

TEST OPTIONS
Visual inspection.

REASON FOR QUESTION
If oil is not present in air lubricator reservoir, vibrators may not operate correctly.

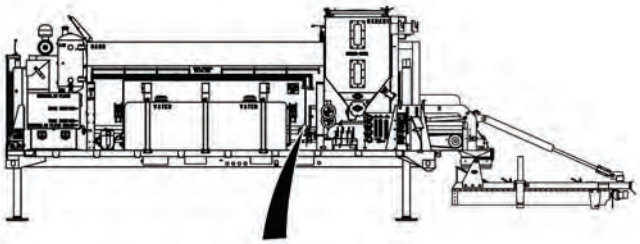

VISUAL INSPECTION

Check if air lubricator oil reservoir level is sufficient.

(a) If oil reservoir level is not sufficient, fill air lubricator oil reservoir, (Para 2-9). Then go to Step 3 of this Fault.

(b) If oil reservoir level is sufficient, go to Step 3 of this Fault.

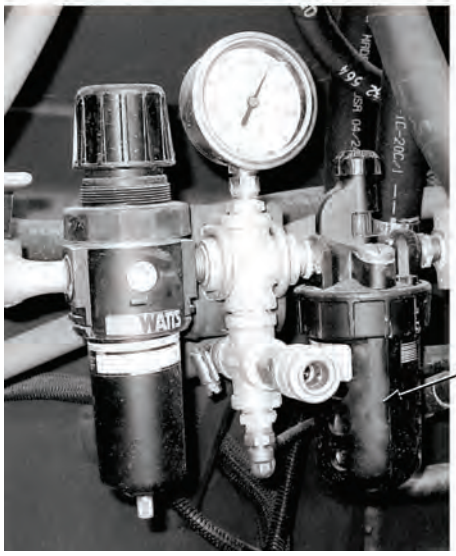

33. VIBRATOR(S) DO NOT OPERATE CORRECTLY (CONT).

KNOWN INFO
Air lines between water/vibrator chain oiler air solenoid valve and vibrators not kinked, leak, or damaged.
Oil level in air regulator/lubricator OK.

POSSIBLE PROBLEMS
Sand bin vibrator shutoff valve closed.
Air system pressure low.
Air regulator/lubricator not adjusted correctly.
Air regulator/lubricator faulty.
Sand bin air cam valve adjusted incorrectly.
Air line between sand bin vibrator air cam valve and T-fitting at sand bin blocked.
Air line between T-fitting and sand bin vibrator blocked.
Sand bin air cam valve faulty.
Air line between T-fitting and non-operating vibrator blocked.
Non-operating vibrator exhaust port blocked.
Non-operating vibrator faulty.
Cement bin air cam valve adjusted incorrectly.
Air line between cement bin vibrator air cam valve and T-fitting at cement bin blocked.
Air line between T-fitting and cement bin vibrator air cam blocked.
Cement bin air cam faulty.
System control circuit faulty.
Air lines between water/vibrator/chain oiler air solenoid valve and vibrators leaking.
Air lines between water/vibrator/chain oiler air solenoid valve and vibrator control valve blocked.
Vibrator control valve faulty.

3.

Is the sand bin vibrator shutoff valve open?

NO → Open sand bin vibrator shutoff valve, (Para 2-18). Then go to Step 4.

YES ↓

TEST OPTIONS
Visual inspection.

REASON FOR QUESTION
Sand bin vibrators will not operate if sand bin vibrator shutoff valve is closed.

VISUAL INSPECTION
Check if sand bin vibrator shutoff valve is open. (a) If sand bin vibrator shutoff valve is not open, open shutoff valve, (Para 2-18). Then go to Step 4 of this Fault. (b) If sand bin vibrator shutoff valve is open, go to Step 4 of this Fault.

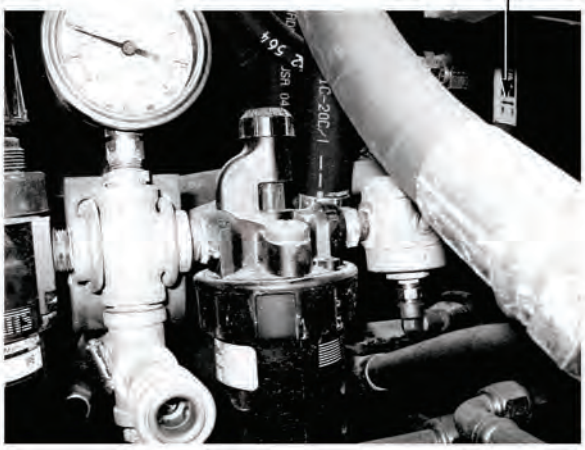

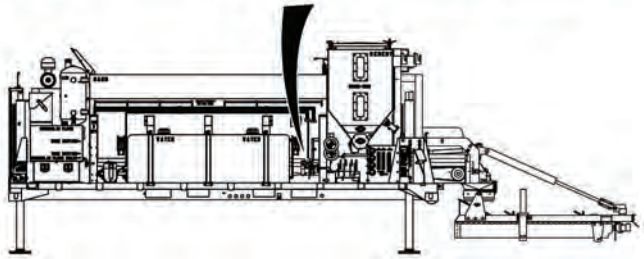

33. VIBRATOR(S) DO NOT OPERATE CORRECTLY (CONT).

KNOWN INFO
Air lines between water/vibrator chain oiler air solenoid valve and vibrators not kinked, leak, or damaged.
Oil level in air regulator/lubricator OK.
Sand bin vibrator shutoff valve open.

POSSIBLE PROBLEMS
Air system pressure low.
Air regulator/lubricator not adjusted correctly.
Air regulator/lubricator faulty.
Sand bin air cam valve adjusted incorrectly.
Air line between sand bin vibrator air cam valve and T-fitting at sand bin blocked.
Air line between T-fitting and sand bin vibrator blocked.
Sand bin air cam valve faulty.
Air line between T-fitting and non-operating vibrator blocked.
Non-operating vibrator exhaust port blocked.
Non-operating vibrator faulty.
Cement bin air cam valve adjusted incorrectly.
Air line between cement bin vibrator air cam valve and T-fitting at cement bin blocked.
Air line between T-fitting and cement bin vibrator air cam blocked.
Cement bin air cam faulty.
System control circuit faulty.
Air lines between water/vibrator/chain oiler air solenoid valve and vibrators leaking.
Air lines between water/vibrator/chain oiler air solenoid valve and vibrator control valve blocked.
Vibrator control valve faulty.

4.

Does air system charge to 80 to 100 psi (552 to 690 kPa) with CONTROL OVERIDE, HIGH FLOW ADMIX, and LOW FLOW ADMIX switches OFF?

NO → Troubleshoot “Air Pressure Low or System Charge is Slow”, (Fault 3).

YES ↓

TEST OPTIONS
Operational test.
REASON FOR QUESTION
If air system is not operating correctly, vibrators may not operate correctly.

OPERATIONAL TEST

(1) If ON, turn CONTROL OVERIDE, HIGH FLOW ADMIX and LOW FLOW ADMIX switches OFF, (Para 2-1).

(2) If open, close CEMENT BIN FLUFFER VALVE, (Para 2-1).

(3) Start engine, (Para 2-19).

(4) Check if air system charges to 80 to 100 psi (552 to 690 kPa). Adjust air filter regulator if required.

(a) If air system does not charge to 80 to 100 psi (552 to 690 kPa), go to “Air Pressure Low or System Charge is Slow”, (Fault 3).

(b) If air system charges to 80 to 100 psi (552 to 690 kPa), go to Step 5 of this Fault.

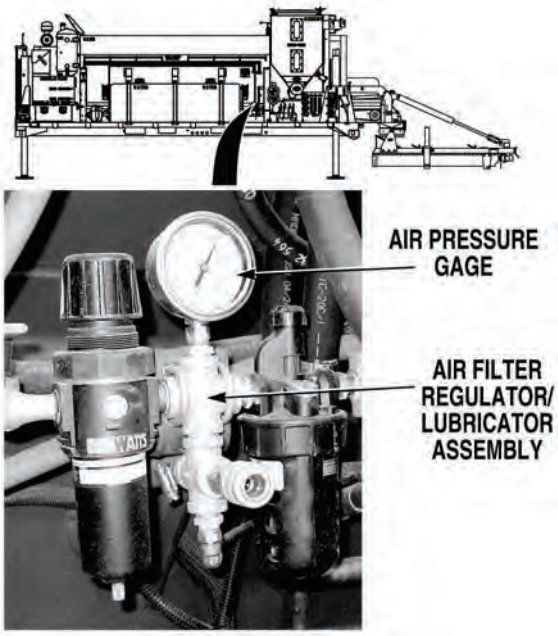

33. VIBRATOR(S) DO NOT OPERATE CORRECTLY (CONT).

KNOWN INFO
Air lines between water/vibrator chain oiler air solenoid valve and vibrators not kinked, leak, or damaged.
Oil level in air regulator/lubricator OK.
Sand bin vibrator shutoff valve open.
Air system pressure OK.

POSSIBLE PROBLEMS
Air regulator/lubricator not adjusted correctly.
Air regulator/lubricator faulty.
Sand bin air cam valve adjusted incorrectly.
Air line between sand bin vibrator air cam valve and T-fitting at sand bin blocked.
Air line between T-fitting and sand bin vibrator blocked.
Sand bin air cam valve faulty.
Air line between T-fitting and non-operating vibrator blocked.
Non-operating vibrator exhaust port blocked.
Non-operating vibrator faulty.
Cement bin air cam valve adjusted incorrectly.
Air line between cement bin vibrator air cam valve and T-fitting at cement bin blocked.
Air line between T-fitting and cement bin vibrator air cam blocked.
Cement bin air cam faulty.
System control circuit faulty.
Air lines between water/vibrator/chain oiler air solenoid valve and vibrators leaking.
Air lines between water/vibrator/chain oiler air solenoid valve and vibrator control valve blocked.
Vibrator control valve faulty.

5.

Does at least one vibrator operate when conveyor is operated with CONTROL OVERIDE switch placed in AUTO position and cement metering system clutch engaged?

NO → Go to Step 21 of this Fault.

YES ↓

TEST OPTIONS
Operational test.
REASON FOR QUESTION
To further isolate fault.

OPERATIONAL TEST

NOTE

There are two sets of two vibrators. Each set operates independently of the other.

NOTE

The vibrators do not operate constantly. Each set of vibrators operate once per cement metering system counter shaft rotation.

(1) Turn CONTROL OVERIDE switch to AUTO position, (Para 2-1).

(2) Engage cement metering clutch, (Para 2-22).

(3) Pull CONVEYOR control out to ON position, (Para 2-1).

(4) Check if at least one vibrator is operating.

(a) If all vibrators do not operate, go to Step 21 of this Fault.

(b) If at least one vibrator is operating, go to Step 6 of this Fault.

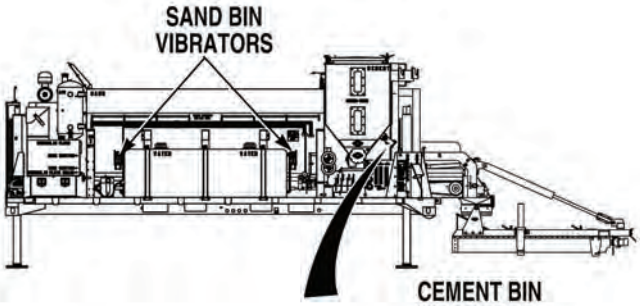

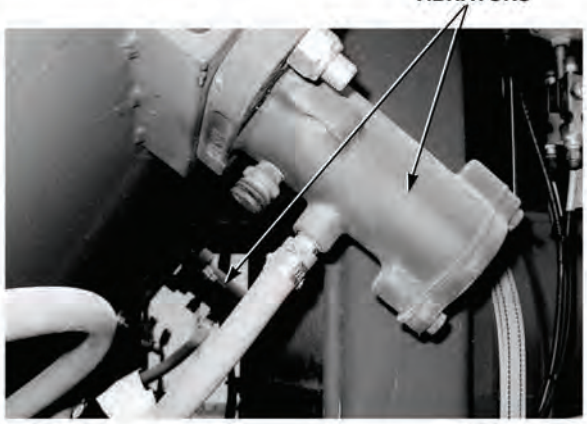

33. VIBRATOR(S) DO NOT OPERATE CORRECTLY (CONT).

KNOWN INFO

- Air lines between water/vibrator chain oiler air solenoid valve and vibrators not kinked, leak, or damaged.
- Oil level in air regulator/lubricator OK.
- Sand bin vibrator shutoff valve open.
- Air system pressure OK.
- System control circuit OK.
- Air lines between water/vibrator/chain oiler air solenoid valve and vibrators not leaking.
- Air lines between water/vibrator/chain oiler air solenoid valve and vibrator control valve not blocked.
- Vibrator control valve OK.

POSSIBLE PROBLEMS

- Air regulator/lubricator not adjusted correctly.
- Air regulator/lubricator faulty.
- Sand bin air cam valve adjusted incorrectly.
- Air line between sand bin vibrator air cam valve and T-fitting at sand bin blocked.
- Air line between T-fitting and sand bin vibrator blocked.
- Sand bin air cam valve faulty.
- Air line between T-fitting and non-operating vibrator blocked.
- Non-operating vibrator exhaust port blocked.
- Non-operating vibrator faulty.
- Cement bin air cam valve adjusted incorrectly.
- Air line between cement bin vibrator air cam valve and T-fitting at cement bin blocked.
- Air line between T-fitting and cement bin vibrator air cam blocked.
- Cement bin air cam faulty.

6.

Does air lubricator dispense one drop of oil every third vibrator operation?

NO → Adjust air lubricator, (Para 2-11). Then go to Step 7.

YES ↓

TEST OPTIONS

Operational test.

REASON FOR QUESTION

If air lubricator is not adjusted correctly, vibrators may not operate.

OPERATIONAL TEST
Check if air lubricator dispenses one drop of oil every third vibrator operation, (Para 2-11). (a) If air lubricator does not dispense one drop of oil every third vibrator operation, adjust air lubricator, (Para 2-11). Then go to Step 7 of this Fault. (b) If air lubricator dispenses one drop of oil every third vibrator operation, go to Step 7 of this Fault.

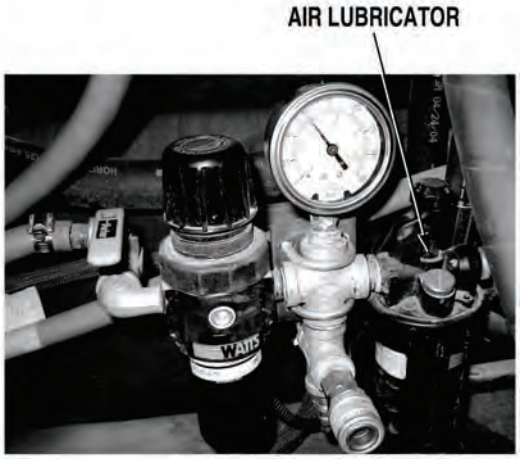

33. VIBRATOR(S) DO NOT OPERATE CORRECTLY (CONT).

KNOWN INFO
Air lines between water/vibrator chain oiler air solenoid valve and vibrators not kinked, leak, or damaged.
Oil level in air regulator/lubricator OK.
Sand bin vibrator shutoff valve open.
Air system pressure OK.
System control circuit OK.
Air lines between water/vibrator/chain oiler air solenoid valve and vibrators not leaking.
Air lines between water/vibrator/chain oiler air solenoid valve and vibrator control valve not blocked.
Vibrator control valve OK.
Air regulator/lubricator adjusted correctly.

POSSIBLE PROBLEMS
Air regulator/lubricator faulty.
Sand bin air cam valve adjusted incorrectly.
Air line between sand bin vibrator air cam valve and T-fitting at sand bin blocked.
Air line between T-fitting and sand bin vibrator blocked.
Sand bin air cam valve faulty.
Air line between T-fitting and non-operating vibrator blocked.
Non-operating vibrator exhaust port blocked.
Non-operating vibrator faulty.
Cement bin air cam valve adjusted incorrectly.
Air line between cement bin vibrator air cam valve and T-fitting at cement bin blocked.
Air line between T-fitting and cement bin vibrator air cam blocked.
Cement bin air cam faulty.

7.

Do both cement bin vibrators operate?

NO → Go to Step 14 of this Fault.

YES ↓

TEST OPTIONS
Operational test.
REASON FOR QUESTION
To further isolate fault.

OPERATIONAL TEST

NOTE

The vibrators do not operate constantly. Each set of vibrators operate once per cement metering system counter shaft rotation.

Check if both cement bin vibrators are operating.

(a) If cement bin vibrator(s) do not operate, go to Step 14 of this Fault.

(b) If both cement bin vibrators operate, go to Step 8 of this Fault.

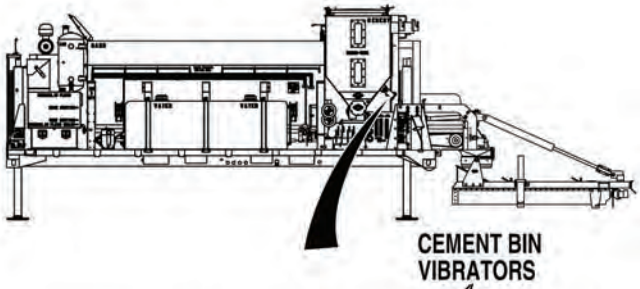

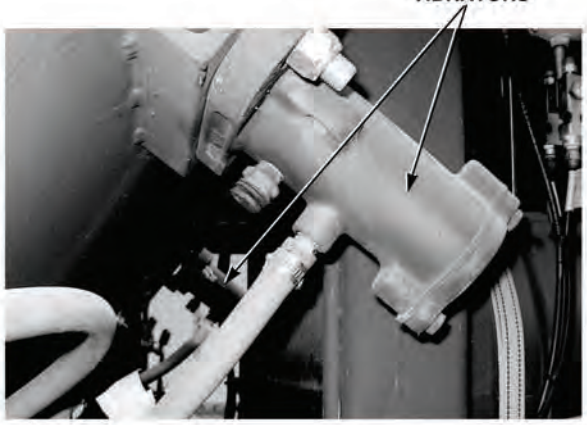

33. VIBRATOR(S) DO NOT OPERATE CORRECTLY (CONT).

KNOWN INFO
Air lines between water/vibrator chain oiler air solenoid valve and vibrators not kinked, leak, or damaged.
Oil level in air regulator/lubricator OK.
Sand bin vibrator shutoff valve open.
Air system pressure OK.
System control circuit OK.
Air lines between water/vibrator/chain oiler air solenoid valve and vibrators not leaking.
Air lines between water/vibrator/chain oiler air solenoid valve and vibrator control valve not blocked.
Vibrator control valve OK.
Air regulator/lubricator adjusted correctly.
Cement bin air cam valve adjusted correctly.
Air line between cement bin vibrator air cam valve and T-fitting at cement bin not blocked.
Air line between T-fitting and cement bin vibrator air cam not blocked.
Cement bin air cam OK.

POSSIBLE PROBLEMS
Air regulator/lubricator faulty.
Sand bin air cam valve adjusted incorrectly.
Air line between sand bin vibrator air cam valve and T-fitting at sand bin blocked.
Air line between T-fitting and sand bin vibrator blocked.
Sand bin air cam valve faulty.
Air line between T-fitting and non-operating vibrator blocked.
Non-operating vibrator exhaust port blocked.
Non-operating vibrator faulty.

8.

Do both sand bin vibrators operate (disengage cement metering system clutch)?

NO → Go to Step 10 of this Fault.

YES ↓

TEST OPTIONS
Operational test.
REASON FOR QUESTION
To further isolate fault.

OPERATIONAL TEST

NOTE

The vibrators do not operate constantly. Each set of vibrators operate once per cement metering system counter shaft rotation.

(1) Disengage cement metering clutch, (Para 2-22).

(2) Check if both sand bin vibrators operate.

(a) If sand bin vibrator(s) do not operate, go to Step 10 of this Fault.

(b) If both sand bin vibrators operate, go to Step 9 of this Fault.

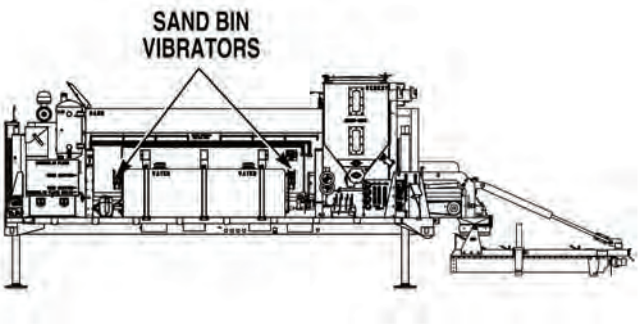

33. VIBRATOR(S) DO NOT OPERATE CORRECTLY (CONT).

KNOWN INFO
Air lines between water/vibrator chain oiler air solenoid valve and vibrators not kinked, leak, or damaged.
Oil level in air regulator/lubricator OK.
Sand bin vibrator shutoff valve open.
Air system pressure OK.
System control circuit OK.
Air lines between water/vibrator/chain oiler air solenoid valve and vibrators not leaking.
Air lines between water/vibrator/chain oiler air solenoid valve and vibrator control valve not blocked.
Vibrator control valve OK.
Air regulator/lubricator adjusted correctly.
Cement bin air cam valve adjusted correctly.
Air line between cement bin vibrator air cam valve and T-fitting at cement bin not blocked.
Air line between T-fitting and cement bin vibrator air cam not blocked.
Cement bin air cam OK.
Sand bin air cam valve adjusted correctly.
Air line between sand bin vibrator air cam valve and T-fitting at sand bin not blocked.
Air line between T-fitting and sand bin vibrator not blocked.
Sand bin air cam valve OK.
Air line between T-fitting and non-operating vibrator not blocked.
Non-operating vibrator exhaust port not blocked.
Non-operating vibrator OK.

POSSIBLE PROBLEMS
Air regulator/lubricator faulty.

9.

Is a fine oil mist released from vibrator exhaust ports when vibrators operate?

NO → Replace air regulator/lubricator, (Para 3-47). Verify repair, go to Step 25 of this Fault.

YES → Fault corrected. Verify repair, go to Step 25 of this Fault.

TEST OPTIONS
Operational test.

REASON FOR QUESTION
If a fine mist of oil is not present at vibrator exhaust ports when vibrators operate, air lubricator is faulty.

OPERATIONAL TEST

NOTE

The vibrators do not operate constantly. Each set of vibrators operate once per cement metering system counter shaft rotation.

(1) Engage cement metering clutch, (Para 2-22).

(2) Check if a fine oil mist is released from vibrator exhaust ports when vibrators operate.

(a) If a fine oil mist is not present, replace air lubricator, (Para 3-47).

(b) If a fine oil mist is present, fault corrected.

(3) Verify repair, go to Step 25 of this Fault.

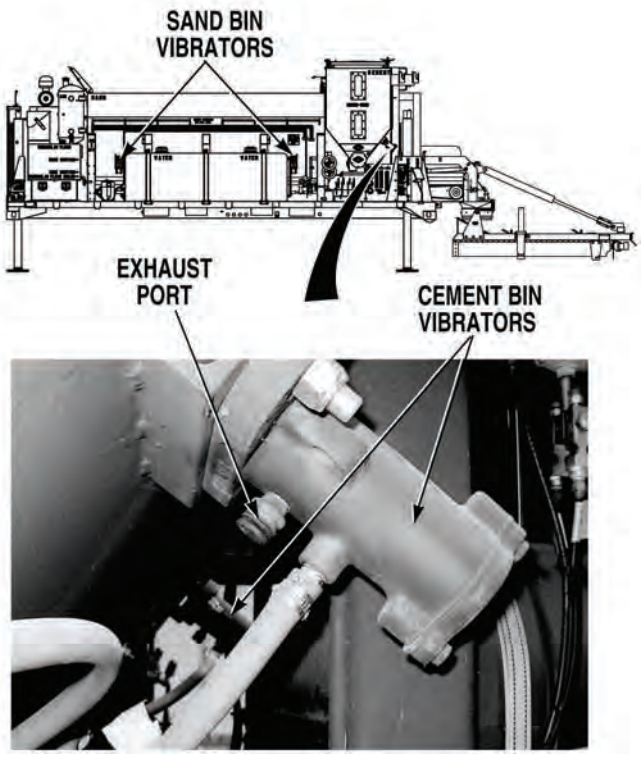

33. VIBRATOR(S) DO NOT OPERATE CORRECTLY (CONT).

KNOWN INFO
Air lines between water/vibrator chain oiler air solenoid valve and vibrators not kinked, leak, or damaged.
Oil level in air regulator/lubricator OK.
Sand bin vibrator shutoff valve open.
Air system pressure OK.
System control circuit OK.
Air lines between water/vibrator/chain oiler air solenoid valve and vibrators not leaking.
Air lines between water/vibrator/chain oiler air solenoid valve and vibrator control valve not blocked.
Vibrator control valve OK.
Air regulator/lubricator adjusted correctly.
Cement bin air cam valve adjusted correctly.
Air line between cement bin vibrator air cam valve and T-fitting at cement bin not blocked.
Air line between T-fitting and cement bin vibrator air cam not blocked.
Cement bin air cam OK.
Air regulator/lubricator OK.

POSSIBLE PROBLEMS
Sand bin air cam valve adjusted incorrectly.
Air line between sand bin vibrator air cam valve and T-fitting at sand bin blocked.
Air line between T-fitting and sand bin vibrator blocked.
Sand bin air cam valve faulty.
Air line between T-fitting and non-operating vibrator blocked.
Non-operating vibrator exhaust port blocked.
Non-operating vibrator faulty.

10.

Does at least one sand bin vibrator operate?

NO → Go to Step 11 of this Fault.

YES → Go to Step 15 of this Fault.

TEST OPTIONS
Operational test.
REASON FOR QUESTION
To further isolate fault.

OPERATIONAL TEST

NOTE

The vibrators do not operate constantly. Each set of vibrators operate once per cement metering system counter shaft rotation.

Check if at least one sand bin vibrator operates.

(a) If both sand bin vibrators do not operate, go to Step 11 of this Fault.

(b) If at least one sand bin vibrator operates, go to Step 15 of this Fault.

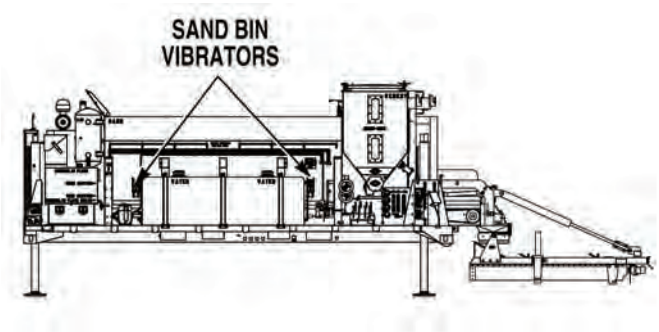

33. VIBRATOR(S) DO NOT OPERATE CORRECTLY (CONT).

KNOWN INFO
Air lines between water/vibrator chain oiler air solenoid valve and vibrators not kinked, leak, or damaged.
Oil level in air regulator/lubricator OK.
Sand bin vibrator shutoff valve open.
Air system pressure OK.
System control circuit OK.
Air lines between water/vibrator/chain oiler air solenoid valve and vibrators not leaking.
Air lines between water/vibrator/chain oiler air solenoid valve and vibrator control valve not blocked.
Vibrator control valve OK.
Air regulator/lubricator adjusted correctly.
Cement bin air cam valve adjusted correctly.
Air line between cement bin vibrator air cam valve and T-fitting at cement bin not blocked.
Air line between T-fitting and cement bin vibrator air cam not blocked.
Cement bin air cam OK.
Air regulator/lubricator OK.
Air line between T-fitting and non-operating vibrator not blocked.
Non-operating vibrator exhaust port not blocked.
Non-operating vibrator OK.

POSSIBLE PROBLEMS
Sand bin air cam valve adjusted incorrectly.
Air line between sand bin vibrator air cam valve and T-fitting at sand bin blocked.
Air line between T-fitting and sand bin vibrator blocked.
Sand bin air cam valve faulty.

11.

WARNING

Read WARNING on Page 4-1073

Is sand bin air cam valve adjusted so valve is activated when cement metering system shaft cam activates valve?

NO → Readjust sand bin air cam valve, (Para 3-49). Verify repair, go to Step 25 of this Fault.

YES ↓

TEST OPTIONS
Operational test.
REASON FOR QUESTION
If sand bin air cam valve is not in adjustment, sand bin vibrators will not operate.

WARNING

When working in area of serpentine on main drive, cement and dry admix chain drives, or mixing trough auger, be extremely careful to avoid contact with or catching clothing in moving parts. Failure to comply could result in serious injury or death to personnel.

OPERATIONAL TEST

(1) Shut OFF engine, (Para 2-19).

(2) Remove chain drive cover, (Para 3-88).

(3) Start engine, (Para 2-19).

(4) Turn CONTROL OVERIDE switch to AUTO position, (Para 2-1).

(5) Pull CONVEYOR CONTROL out to ON position, (Para 2-1).

(6) Check if sand bin air cam valve is adjusted so air cam valve is activated when cam rotates into position, (Para 3-49).

(a) If air cam valve is not adjusted correctly, readjust sand bin cam valve, (Para 3-49). Verify repair, go to Step 25 of this Fault.

(b) If sand bin air cam valve is adjusted correctly, go to Step 12 of this Fault.

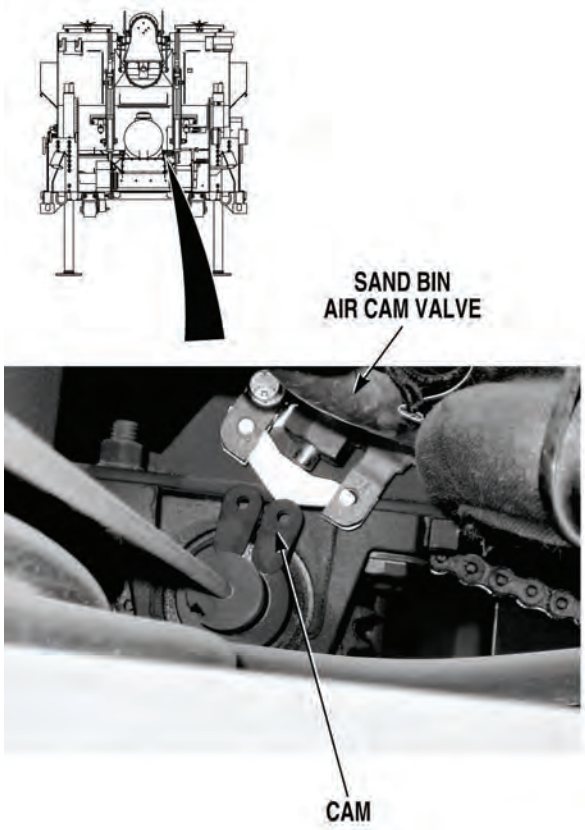

33. VIBRATOR(S) DO NOT OPERATE CORRECTLY (CONT).

KNOWN INFO

- Air lines between water/vibrator chain oiler air solenoid valve and vibrators not kinked, leak, or damaged.
- Oil level in air regulator/lubricator OK.
- Sand bin vibrator shutoff valve open.
- Air system pressure OK.
- System control circuit OK.
- Air lines between water/vibrator/chain oiler air solenoid valve and vibrators not leaking.
- Air lines between water/vibrator/chain oiler air solenoid valve and vibrator control valve not blocked.
- Vibrator control valve OK.
- Air regulator/lubricator adjusted correctly.
- Cement bin air cam valve adjusted correctly.
- Air line between cement bin vibrator air cam valve and T-fitting at cement bin not blocked.
- Air line between T-fitting and cement bin vibrator air cam not blocked.
- Cement bin air cam OK.
- Air regulator/lubricator OK.
- Air line between T-fitting and non-operating vibrator not blocked.
- Non-operating vibrator exhaust port not blocked.
- Non-operating vibrator OK.
- Sand bin air cam valve adjusted correctly.

POSSIBLE PROBLEMS

- Air line between sand bin vibrator air cam valve and T-fitting at sand bin blocked.
- Air line between T-fitting and sand bin vibrator blocked.
- Sand bin air cam valve faulty.

12.

WARNING

Read WARNING on Page 4-1075

Is air pressure present at output of sand bin vibrator air cam valve, when valve is activated during conveyor operation?

NO → Go to Step 13 of this Fault.

YES → Air line between sand bin vibrator air cam valve and T-fitting at sand bin is blocked. Locate and clear blockage or replace air line and T-fitting, (Para 3-132). Verify repair, go to Step 25 of this Fault.

TEST OPTIONS

Operational test.

REASON FOR QUESTION

If air is present at output of sand bin vibrator air cam valve, air line between sand bin vibrator air cam valve and T-fitting at sand bin is blocked.

WARNING

- Air lines are under extreme pressure. Ensure all personnel wear protective goggles when working around compressed air. Failure to comply may result in serious injury or death to personnel.
- When working in area of serpentine on main drive, cement and dry admix chain drives, or mixing trough auger, be extremely careful to avoid contact with or catching clothing in moving parts. Failure to comply could result in serious injury or death to personnel.

OPERATIONAL TEST

(1) Push CONVEYOR control in to OFF position, (Para 2-1).

(2) Disconnect air line at output of sand bin air cam valve, (Para 3-132).

(3) Pull CONVEYOR control out to ON position, (Para 2-1).

(4) Check if air is present at sand bin air cam valve output port when air cam valve is activated.

(a) If air is not present, go to Step 13 of this Fault.

(b) If air is present, air line between sand bin vibrator air cam valve and T-fitting at sand bin is blocked. Locate and clear blockage or replace air line and T-fitting, (Para 3-132). Verify repair, go to Step 25 of this Fault.

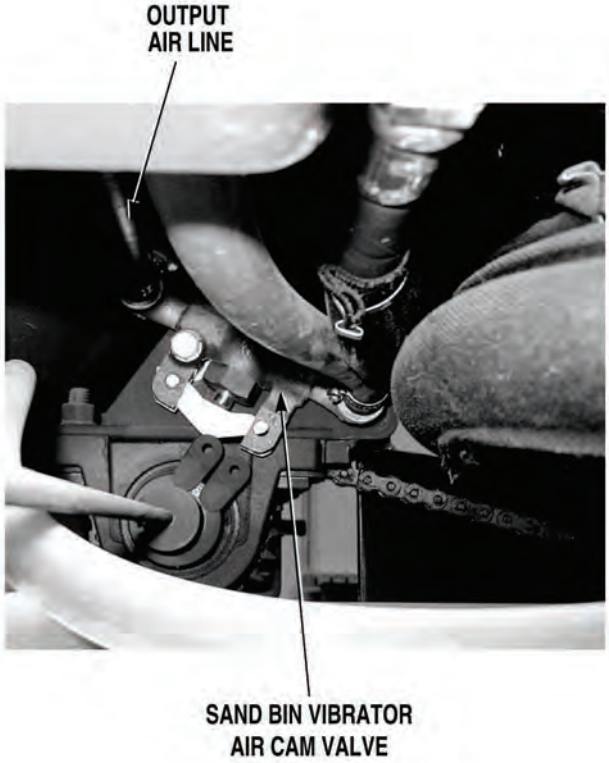

33. VIBRATOR(S) DO NOT OPERATE CORRECTLY (CONT).

KNOWN INFO

- Air lines between water/vibrator chain oiler air solenoid valve and vibrators not kinked, leak, or damaged.
- Oil level in air regulator/lubricator OK.
- Sand bin vibrator shutoff valve open.
- Air system pressure OK.
- System control circuit OK.
- Air lines between water/vibrator/chain oiler air solenoid valve and vibrators not leaking.
- Air lines between water/vibrator/chain oiler air solenoid valve and vibrator control valve not blocked.
- Vibrator control valve OK.
- Air regulator/lubricator adjusted correctly.
- Cement bin air cam valve adjusted correctly.
- Air line between cement bin vibrator air cam valve and T-fitting at cement bin not blocked.
- Air line between T-fitting and cement bin vibrator air cam not blocked.
- Cement bin air cam OK.
- Air regulator/lubricator OK.
- Air line between T-fitting and non-operating vibrator not blocked.
- Non-operating vibrator exhaust port not blocked.
- Non-operating vibrator OK.
- Sand bin air cam valve adjusted correctly.
- Air line between sand bin vibrator air cam valve and T-fitting at sand bin not blocked.

POSSIBLE PROBLEMS

- Air line between T-fitting and sand bin vibrator blocked.
- Sand bin air cam valve faulty.

13.

WARNING

Read WARNING on Page 4-1077

Is air pressure present at input of sand bin vibrator air cam valve?

NO → Air line between T-fitting and sand bin vibrator air cam valve is blocked. Locate and clear blockage or replace air line and T-fitting, (Para 3-132). Verify repair, go to Step 25 of this Fault.

YES → Replace sand bin air cam valve, (Para 3-49). Verify repair, go to Step 25 of this Fault.

TEST OPTIONS

Operational test.

REASON FOR QUESTION

If air is present, sand bin air cam valve is faulty. If not, air line between T-fitting and sand bin vibrator air cam valve is blocked.

WARNING

- Air lines are under extreme pressure. Ensure all personnel wear protective goggles when working around compressed air. Failure to comply may result in serious injury or death to personnel.
- When working in area of serpentine on main drive, cement and dry admix chain drives, or mixing trough auger, be extremely careful to avoid contact with or catching clothing in moving parts. Failure to comply could result in serious injury or death to personnel.

OPERATIONAL TEST

(1) Push CONVEYOR control in to OFF position, (Para 2-1).

(2) Connect air line at output of sand bin air cam valve, (Para 3-132).

(3) Disconnect air line at input of sand bin air cam valve, (Para 3-132).

(4) Turn CONTROL OVERIDE switch to ON position, (Para 2-1).

(5) Check if air is present from end of sand bin air cam valve air supply line.

  (a) If air is not present, air line between T-fitting and sand bin vibrator air cam valve is blocked. Locate and remove blockage or replace air line and T-fitting, (Para 3-132).

  (b) If air is present, replace sand bin cam valve, (Para 3-49).

(6) Verify repair, go to Step 25 of this Fault.

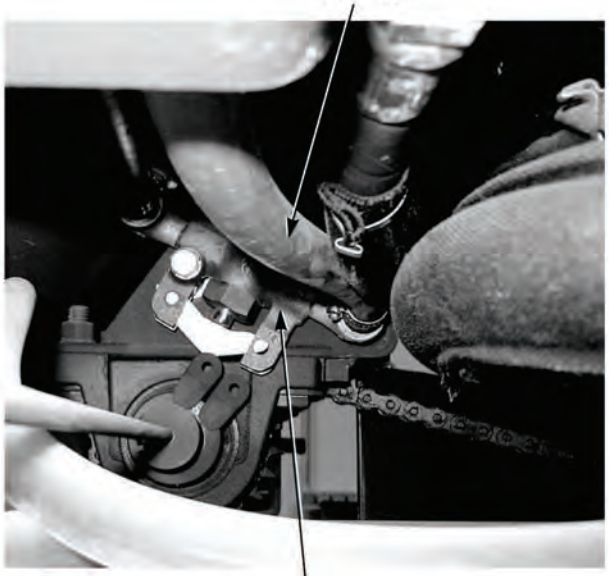

33. VIBRATOR(S) DO NOT OPERATE CORRECTLY (CONT).

KNOWN INFO
Air lines between water/vibrator chain oiler air solenoid valve and vibrators not kinked, leak, or damaged.
Oil level in air regulator/lubricator OK.
Sand bin vibrator shutoff valve open.
Air system pressure OK.
System control circuit OK.
Air lines between water/vibrator/chain oiler air solenoid valve and vibrators not leaking.
Air lines between water/vibrator/chain oiler air solenoid valve and vibrator control valve not blocked.
Vibrator control valve OK.
Air regulator/lubricator adjusted correctly.
Air regulator/lubricator OK.
Sand bin air cam valve adjusted correctly.
Air line between sand bin vibrator air cam valve and T-fitting at sand bin not blocked.
Air line between T-fitting and sand bin vibrator not blocked.
Sand bin air cam valve OK.

POSSIBLE PROBLEMS
Air line between T-fitting and non-operating vibrator blocked.
Non-operating vibrator exhaust port blocked.
Non-operating vibrator faulty.
Cement bin air cam valve adjusted incorrectly.
Air line between cement bin vibrator air cam valve and T-fitting at cement bin blocked.
Air line between T-fitting and cement bin vibrator air cam blocked.
Cement bin air cam faulty.

14.

Does at least one cement bin vibrator operate?

NO → Go to Step 18 of this Fault.

YES ↓

TEST OPTIONS
Operational test.
REASON FOR QUESTION
To further isolate fault.

OPERATIONAL TEST

NOTE

The vibrators do not operate constantly. Each set of vibrators operate once per cement metering system counter shaft rotation.

Check if at least one cement bin vibrator operates.

(a) If both cement bin vibrators do not operate, go to Step 18 of this Fault.

(b) If at least one cement bin vibrator operates, go to Step 15 of this Fault.

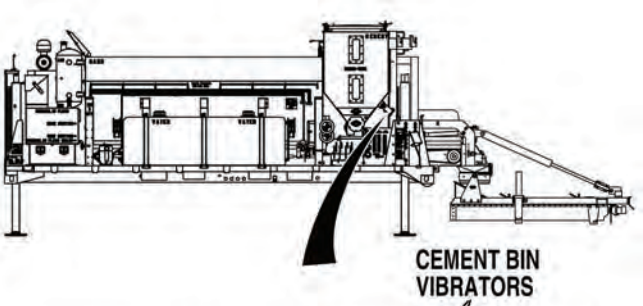

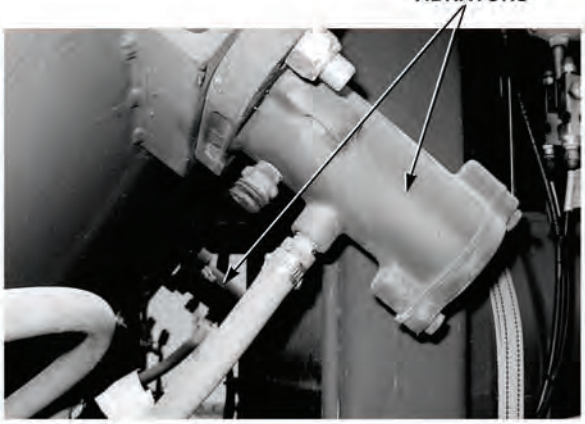

33. VIBRATOR(S) DO NOT OPERATE CORRECTLY (CONT).

KNOWN INFO

- Air lines between water/vibrator chain oiler air solenoid valve and vibrators not kinked, leak, or damaged.
- Oil level in air regulator/lubricator OK.
- Sand bin vibrator shutoff valve open.
- Air system pressure OK.
- System control circuit OK.
- Air lines between water/vibrator/chain oiler air solenoid valve and vibrators not leaking.
- Air lines between water/vibrator/chain oiler air solenoid valve and vibrator control valve not blocked.
- Vibrator control valve OK.
- Air regulator/lubricator adjusted correctly.
- Air regulator/lubricator OK.
- Sand bin air cam valve adjusted correctly.
- Air line between sand bin vibrator air cam valve and T-fitting at sand bin not blocked.
- Air line between T-fitting and sand bin vibrator not blocked.
- Sand bin air cam valve OK.
- Cement bin air cam valve adjusted correctly.
- Air line between cement bin vibrator air cam valve and T-fitting at cement bin not blocked.
- Air line between T-fitting and cement bin vibrator air cam not blocked.
- Cement bin air cam OK.

POSSIBLE PROBLEMS

- Air line between T-fitting and non-operating vibrator blocked.
- Non-operating vibrator exhaust port blocked.
- Non-operating vibrator faulty.

15.

WARNING

Read WARNING on Page 4-1081

Is air pressure present at non-operating vibrator?

NO → Air line between T-fitting and non-operating vibrator blocked. Locate and clear blockage or replace air line and T-fitting, (Para 3-132). Verify repair, go to Step 25 of this Fault.

YES ↓

TEST OPTIONS

Visual/audible inspection.

REASON FOR QUESTION

If air pressure is not present at non-operating vibrator, air line between T-fitting and non-operating vibrator is blocked.

WARNING

Air lines are under extreme pressure. Ensure all personnel wear protective goggles when working around compressed air. Failure to comply may result in serious injury or death to personnel.

VISUAL/AUDIBLE INSPECTION

NOTE

The vibrators do not operate constantly. Each set of vibrators operate once per cement metering system counter shaft rotation.

(1) Disconnect air line at non-operating vibrator, (Para 3-132).

(2) Check if air pressure is present at end of air line when vibrators are activated.

(a) If air pressure is not present, air line between T-fitting and non-operating vibrator blocked. Locate and clear blockage or replace air line and T-fitting, (Para 3-132). Verify repair, go to Step 25 of this Fault.

(b) If air pressure is present, go to Step 16 of this Fault.

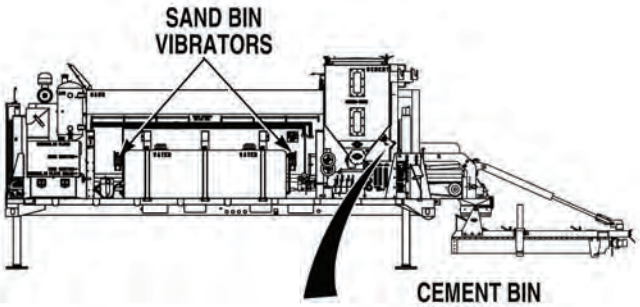

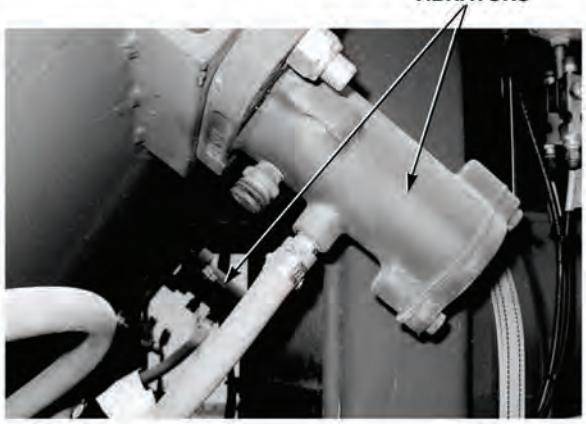

33. VIBRATOR(S) DO NOT OPERATE CORRECTLY (CONT).

KNOWN INFO
Air lines between water/vibrator chain oiler air solenoid valve and vibrators not kinked, leak, or damaged.
Oil level in air regulator/lubricator OK.
Sand bin vibrator shutoff valve open.
Air system pressure OK.
System control circuit OK.
Air lines between water/vibrator/chain oiler air solenoid valve and vibrators not leaking.
Air lines between water/vibrator/chain oiler air solenoid valve and vibrator control valve not blocked.
Vibrator control valve OK.
Air regulator/lubricator adjusted correctly.
Air regulator/lubricator OK.
Sand bin air cam valve adjusted correctly.
Air line between sand bin vibrator air cam valve and T-fitting at sand bin not blocked.
Air line between T-fitting and sand bin vibrator not blocked.
Sand bin air cam valve OK.
Cement bin air cam valve adjusted correctly.
Air line between cement bin vibrator air cam valve and T-fitting at cement bin not blocked.
Air line between T-fitting and cement bin vibrator air cam not blocked.
Cement bin air cam OK.
Air line between T-fitting and non-operating vibrator not blocked.

POSSIBLE PROBLEMS
Non-operating vibrator exhaust port blocked.
Non-operating vibrator faulty.

16.

Is non-operating vibrator exhaust port free from obstructions?

NO → Clear obstructions or replace vibrator, (Para 3-48). Verify repair, go to Step 25 of this Fault.

YES ↓

TEST OPTIONS
Visual inspection.
REASON FOR QUESTION
If non-operating vibrator exhaust port is blocked, vibrator will not operate.

VISUAL INSPECTION

(1) When vibrators are not operating, push CONVEYOR control to OFF position, (Para 2-1).

(2) Check if non-operating vibrator exhaust port is free from obstructions.

(a) If exhaust port is obstructed, clear obstructions or replace air vibrator, (Para 3-48). Verify repair, go to Step 25 of this Fault.

(b) If exhaust port is not obstructed, go to Step 17 of this Fault.

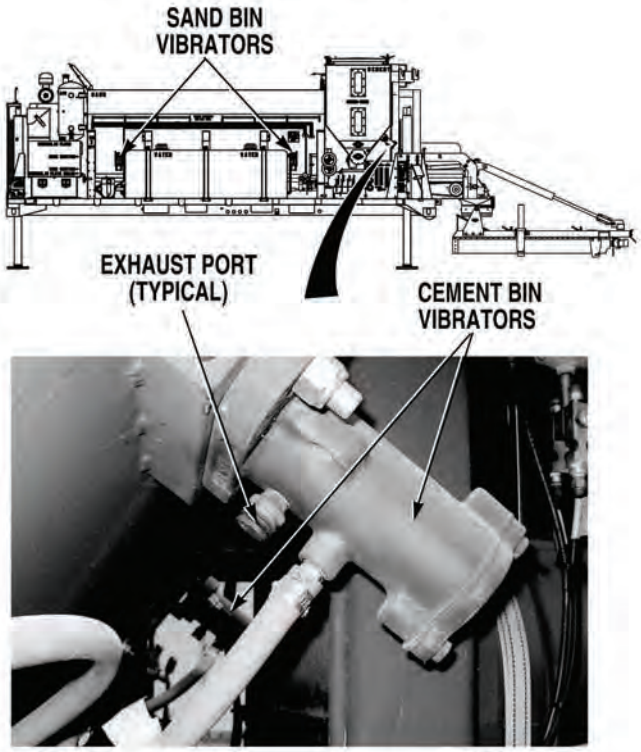

33. VIBRATOR(S) DO NOT OPERATE CORRECTLY (CONT).

KNOWN INFO
Air lines between water/vibrator chain oiler air solenoid valve and vibrators not kinked, leak, or damaged.
Oil level in air regulator/lubricator OK.
Sand bin vibrator shutoff valve open.
Air system pressure OK.
System control circuit OK.
Air lines between water/vibrator/chain oiler air solenoid valve and vibrators not leaking.
Air lines between water/vibrator/chain oiler air solenoid valve and vibrator control valve not blocked.
Vibrator control valve OK.
Air regulator/lubricator adjusted correctly.
Air regulator/lubricator OK.
Sand bin air cam valve adjusted correctly.
Air line between sand bin vibrator air cam valve and T-fitting at sand bin not blocked.
Air line between T-fitting and sand bin vibrator not blocked.
Sand bin air cam valve OK.
Cement bin air cam valve adjusted correctly.
Air line between cement bin vibrator air cam valve and T-fitting at cement bin not blocked.
Air line between T-fitting and cement bin vibrator air cam not blocked.
Cement bin air cam OK.
Air line between T-fitting and non-operating vibrator not blocked.
Non-operating vibrator exhaust port not blocked.

POSSIBLE PROBLEMS
Non-operating vibrator faulty.

17.

Does non-operating vibrator operate after putting several drops of penetrating oil in vibrator?

NO → Replace non-operating vibrator, (Para 3-48). Verify repair, go to Step 25 of this Fault.

YES → Fault corrected. Verify repair, go to Step 25 of this Fault.

TEST OPTIONS
Operational test.
REASON FOR QUESTION
If non-operating vibrator does not operate after oiling vibrator, non-operating vibrator is faulty.

OPERATIONAL TEST

(1) Manually place a few drops of penetrating oil in non-operating air vibrator.

(2) Connect air line at non-operating vibrator, (Para 3-132).

(3) Pull CONVEYOR control out to ON position, (Para 2-1).

NOTE

The vibrators do not operate constantly. Each set of vibrators operate once per cement metering system counter shaft rotation.

(4) Check if non-operating air vibrator operates.

(a) If air vibrator does not operate, replace non-operating air vibrator, (Para 3-48).

(b) If air vibrator operates, fault corrected.

(5) Verify repair, go to Step 25 of this Fault.

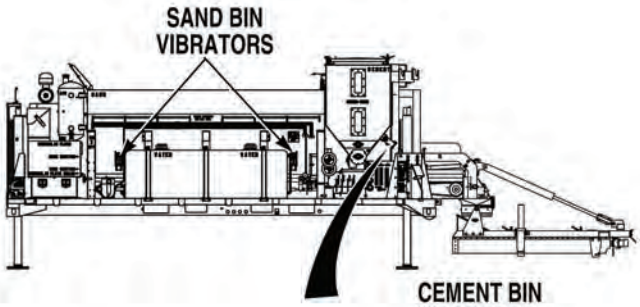

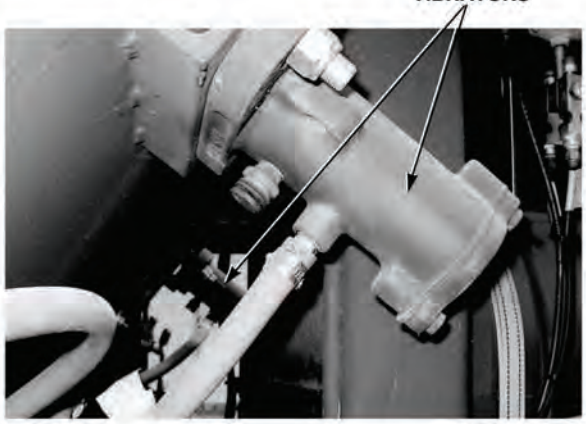

33. VIBRATOR(S) DO NOT OPERATE CORRECTLY (CONT).

KNOWN INFO

- Air lines between water/vibrator chain oiler air solenoid valve and vibrators not kinked, leak, or damaged.
- Oil level in air regulator/lubricator OK.
- Sand bin vibrator shutoff valve open.
- Air system pressure OK.
- System control circuit OK.
- Air lines between water/vibrator/chain oiler air solenoid valve and vibrators not leaking.
- Air lines between water/vibrator/chain oiler air solenoid valve and vibrator control valve not blocked.
- Vibrator control valve OK.
- Air regulator/lubricator adjusted correctly.
- Air regulator/lubricator OK.
- Sand bin air cam valve adjusted correctly.
- Air line between sand bin vibrator air cam valve and T-fitting at sand bin not blocked.
- Air line between T-fitting and sand bin vibrator not blocked.
- Sand bin air cam valve OK.
- Air line between T-fitting and non-operating vibrator not blocked.
- Non-operating vibrator exhaust port not blocked.
- Non-operating vibrator OK.

POSSIBLE PROBLEMS

- Cement bin air cam valve adjusted incorrectly.
- Air line between cement bin vibrator air cam valve and T-fitting at cement bin blocked.
- Air line between T-fitting and cement bin vibrator air cam blocked.
- Cement bin air cam faulty.

18.

WARNING

Read WARNING on Page 4-1091

Is cement bin air cam valve adjusted so valve is activated when cement metering system shaft cam activates valve?

NO → Readjust cement bin cam valve, (Para 3-49). Verify repair, go to Step 25 of this Fault.

YES ↓

TEST OPTIONS

Operational test.

REASON FOR QUESTION

If cement bin air cam valve is not in adjustment, cement bin vibrators will not operate.

WARNING

When working in area of serpentine on main drive, cement and dry admix chain drives, or mixing trough auger, be extremely careful to avoid contact with or catching clothing in moving parts. Failure to comply could result in serious injury or death to personnel.

OPERATIONAL TEST

(1) Shut OFF engine, (Para 2-19).

(2) Remove chain drive covers, (Para 3-88).

(3) Start engine, (Para 2-19).

(4) Turn CONTROL OVERIDE switch to AUTO position, (Para 2-1).

(5) Pull CONVEYOR CONTROL out to ON position, (Para 2-1).

(6) Check if cement bin air cam valve is adjusted so air cam valve is activated when cam rotates into position, (Para 3-49).

(a) If air cam valve is not adjusted correctly, readjust cement bin cam valve, (Para 3-49). Verify repair, go to Step 25 of this Fault.

(b) If cement bin air cam valve is adjusted correctly, go to Step 19 of this Fault.

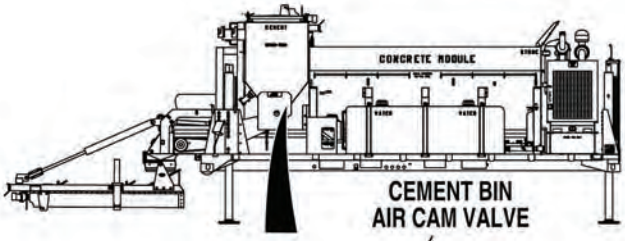

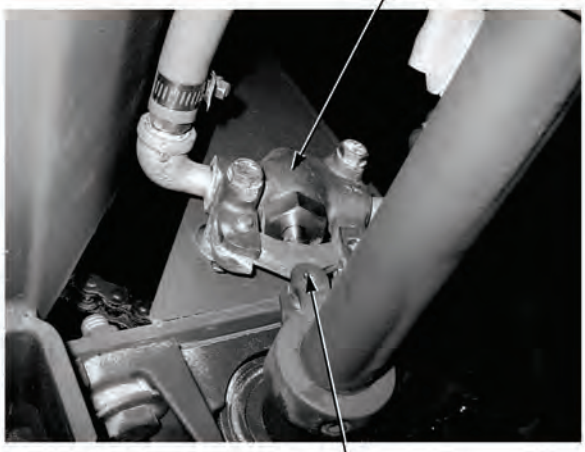

33. VIBRATOR(S) DO NOT OPERATE CORRECTLY (CONT).

KNOWN INFO

- Air lines between water/vibrator chain oiler air solenoid valve and vibrators not kinked, leak, or damaged.
- Oil level in air regulator/lubricator OK.
- Sand bin vibrator shutoff valve open.
- Air system pressure OK.
- System control circuit OK.
- Air lines between water/vibrator/chain oiler air solenoid valve and vibrators not leaking.
- Air lines between water/vibrator/chain oiler air solenoid valve and vibrator control valve not blocked.
- Vibrator control valve OK.
- Air regulator/lubricator adjusted correctly.
- Air regulator/lubricator OK.
- Sand bin air cam valve adjusted correctly.
- Air line between sand bin vibrator air cam valve and T-fitting at sand bin not blocked.
- Air line between T-fitting and sand bin vibrator not blocked.
- Sand bin air cam valve OK.
- Air line between T-fitting and non-operating vibrator not blocked.
- Non-operating vibrator exhaust port not blocked.
- Non-operating vibrator OK.
- Cement bin air cam valve adjusted correctly.

POSSIBLE PROBLEMS

- Air line between cement bin vibrator air cam valve and T-fitting at cement bin blocked.
- Air line between T-fitting and cement bin vibrator air cam blocked.
- Cement bin air cam faulty.

19.

WARNING

Read WARNING on Page 4-1089

Is air pressure present at output of cement bin vibrator air cam valve, when valve is activated during conveyor operation?

NO → Go to Step 20 of this Fault.

YES → Air line between cement bin vibrator air cam valve and T-fitting at sand bin is blocked. Locate and clear blockage or replace air line and T-fitting, (Para 3-132). Verify repair, go to Step 25 of this Fault.

TEST OPTIONS

Operational test.

REASON FOR QUESTION

If air pressure is not present at output of cement bin vibrator air cam valve, air line between cement bin vibrator air cam valve and T-fitting at sand bin is blocked.

WARNING

- Air lines are under extreme pressure. Ensure all personnel wear protective goggles when working around compressed air. Failure to comply may result in serious injury or death to personnel.
- When working in area of serpentine on main drive, cement and dry admix chain drives, or mixing trough auger, be extremely careful to avoid contact with or catching clothing in moving parts. Failure to comply could result in serious injury or death to personnel.

OPERATIONAL TEST

(1) Push CONVEYOR control in to OFF position, (Para 2-1).

(2) Disconnect air line at output of cement bin air cam valve, (Para 3-132).

(3) Pull CONVEYOR control out to ON position, (Para 2-1).

(4) Check if air is present at cement bin air cam valve output port when air cam is activated.

(a) If air is not present, go to Step 20 of this Fault.

(b) If air is present, air line between cement bin vibrator air cam valve and T-fitting at cement bin is blocked. Locate and clear blockage or replace air line and T-fitting, (Para 3-132). Verify repair, go to Step 25 of this Fault.

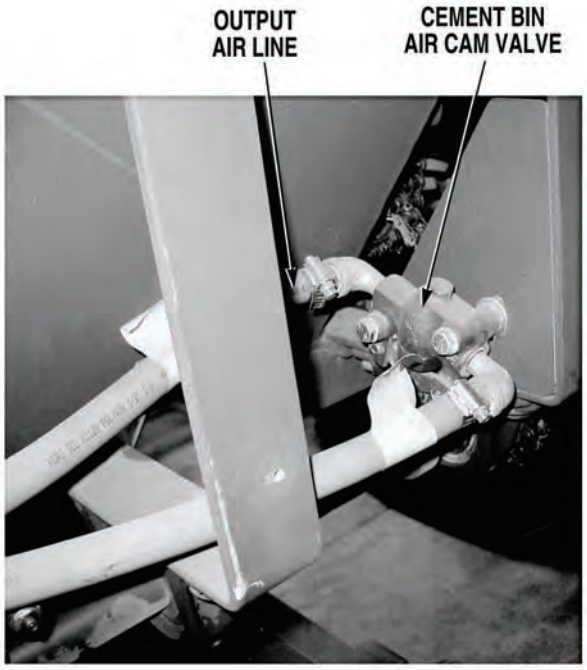

33. VIBRATOR(S) DO NOT OPERATE CORRECTLY (CONT).

KNOWN INFO
Air lines between water/vibrator chain oiler air solenoid valve and vibrators not kinked, leak, or damaged.
Oil level in air regulator/lubricator OK.
Sand bin vibrator shutoff valve open.
Air system pressure OK.
System control circuit OK.
Air lines between water/vibrator/chain oiler air solenoid valve and vibrators not leaking.
Air lines between water/vibrator/chain oiler air solenoid valve and vibrator control valve not blocked.
Vibrator control valve OK.
Air regulator/lubricator adjusted correctly.
Air regulator/lubricator OK.
Sand bin air cam valve adjusted correctly.
Air line between sand bin vibrator air cam valve and T-fitting at sand bin not blocked.
Air line between T-fitting and sand bin vibrator not blocked.
Sand bin air cam valve OK.
Air line between T-fitting and non-operating vibrator not blocked.
Non-operating vibrator exhaust port not blocked.
Non-operating vibrator OK.
Cement bin air cam valve adjusted correctly.
Air line between cement bin vibrator air cam valve and T-fitting at cement bin not blocked.

POSSIBLE PROBLEMS
Air line between T-fitting and cement bin vibrator air cam blocked.
Cement bin air cam faulty.

20.

WARNING

Read WARNING on Page 4-1091

Is air pressure present at input of cement bin vibrator air cam valve?

NO → Air line between T-fitting and cement bin vibrator air cam valve is blocked. Locate and clear blockage or replace air line and T-fitting, (Para 3-132). Verify repair, go to Step 25 of this Fault.

YES → Replace cement bin cam valve, (Para 3-49). Verify repair, go to Step 25 of this Fault.

TEST OPTIONS
Visual/audible inspection.

REASON FOR QUESTION
If air is present, cement bin air cam valve is faulty. If not, air line between T-fitting and cement bin vibrator air cam valve is blocked.

WARNING

- Air lines are under extreme pressure. Ensure all personnel wear protective goggles when working around compressed air. Failure to comply may result in serious injury or death to personnel.
- When working in area of serpentine on main drive, cement and dry admix chain drives, or mixing trough auger, be extremely careful to avoid contact with or catching clothing in moving parts. Failure to comply could result in serious injury or death to personnel.

VISUAL/AUDIBLE INSPECTION

(1) Push CONVEYOR control in to OFF position, (Para 2-1).

(2) Turn CONTROL OVERIDE switch to OFF position, (Para 2-1).

(3) Connect air line at output of cement bin air cam valve, (Para 3-132).

(4) Disconnect air line at input of cement bin air cam valve, (Para 3-132).

(5) Turn CONTROL OVERIDE switch to ON position, (Para 2-1).

(6) Check if air is present from end of cement bin air cam valve air supply line.

  (a) If air is not present, air line between T-fitting and cement bin vibrator air cam valve is blocked. Locate and remove blockage or replace air line and T-fitting, (Para 3-132).

  (b) If air is present, replace cement bin cam valve, (Para 3-49).

(7) Verify repair, go to Step 25 of this Fault.

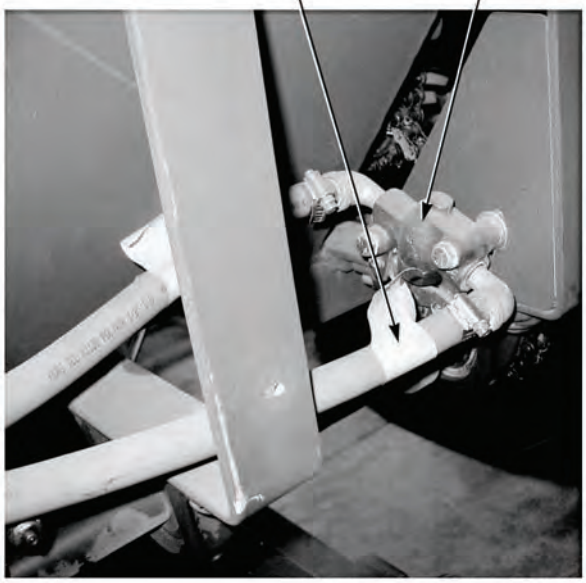

33. VIBRATOR(S) DO NOT OPERATE CORRECTLY (CONT).

KNOWN INFO
Air lines between water/vibrator chain oiler air solenoid valve and vibrators not kinked, leak, or damaged.
Oil level in air regulator/lubricator OK.
Sand bin vibrator shutoff valve open.
Air system pressure OK.
Air regulator/lubricator adjusted correctly.
Air regulator/lubricator OK.
Sand bin air cam valve adjusted correctly.
Air line between sand bin vibrator air cam valve and T-fitting at sand bin not blocked.
Air line between T-fitting and sand bin vibrator not blocked.
Sand bin air cam valve faulty.
Air line between T-fitting and non-operating vibrator not blocked.
Non-operating vibrator exhaust port not blocked.
Non-operating vibrator faulty.
Cement bin air cam valve adjusted correctly.
Air line between cement bin vibrator air cam valve and T-fitting at cement bin not blocked.
Air line between T-fitting and cement bin vibrator air cam not blocked.
Cement bin air cam OK.

POSSIBLE PROBLEMS
System control circuit faulty.
Air lines between water/vibrator/chain oiler air solenoid valve and vibrators leaking.
Air lines between water/vibrator/chain oiler air solenoid valve and vibrator control valve blocked.
Vibrator control valve faulty.

21.

Is water/vibrator/chain oiler air solenoid energized when CONTROL OVERIDE switch is placed in ON position (engine OFF and IGNITION SWITCH ON)?

NO → Troubleshoot "Concrete Mixer Auto and/or Manual Controls Do Not Operate", (Fault 29).

YES ↓

TEST OPTIONS
Operational test.
REASON FOR QUESTION
If water/vibrator/chain oiler air solenoid does not energize, another troubleshooting procedure applies.

OPERATIONAL TEST

(1) Shut OFF engine, (Para 2-19).

(2) Turn IGNITION SWITCH ON, (Para 2-1).

NOTE

A clicking sound will be heard when air solenoid energizes.

(3) Turn CONTROL OVERIDE switch to ON position, (Para 2-1).

(4) Check if water/vibrator/chain oiler air solenoid energizes when CONTROL OVERIDE switch is switched ON.

(a) If air solenoid does not energize, go to “Concrete Mixer Auto and/or Manual Controls Do Not Operate”, (Fault 29).

(b) If air solenoid energizes, go to Step 22 of this Fault.

33. VIBRATOR(S) DO NOT OPERATE CORRECTLY (CONT).

KNOWN INFO
Air lines between water/vibrator chain oiler air solenoid valve and vibrators not kinked, leak, or damaged.
Oil level in air regulator/lubricator OK.
Sand bin vibrator shutoff valve open.
Air system pressure OK.
Air regulator/lubricator adjusted correctly.
Air regulator/lubricator OK.
Sand bin air cam valve adjusted correctly.
Air line between sand bin vibrator air cam valve and T-fitting at sand bin not blocked.
Air line between T-fitting and sand bin vibrator not blocked.
Sand bin air cam valve faulty.
Air line between T-fitting and non-operating vibrator not blocked.
Non-operating vibrator exhaust port not blocked.
Non-operating vibrator faulty.
Cement bin air cam valve adjusted correctly.
Air line between cement bin vibrator air cam valve and T-fitting at cement bin not blocked.
Air line between T-fitting and cement bin vibrator air cam not blocked.
Cement bin air cam OK.

POSSIBLE PROBLEMS
System control circuit faulty.
Air lines between water/vibrator/chain oiler air solenoid valve and vibrators leaking.
Air lines between water/vibrator/chain oiler air solenoid valve and vibrator control valve blocked.
Vibrator control valve faulty.

22.

Is water/vibrator/chain oiler air solenoid energized when CONTROL OVERIDE switch is placed in AUTO position and CONVEYOR control is enabled (engine OFF and IGNITION SWITCH ON)?

NO → Troubleshoot “Concrete Mixer Auto and/or Manual Controls Do Not Operate”, (Fault 29).

YES ↓

TEST OPTIONS
Operational test.

REASON FOR QUESTION
If water/vibrator/chain oiler air solenoid does not energize, another troubleshooting procedure applies.

OPERATIONAL TEST

(1) Turn CONTROL OVERIDE switch to AUTO position, (Para 2-1).

(2) Pull CONVEYOR control out to ON position, (Para 2-20).

NOTE

A clicking sound will be heard when air solenoid energizes.

(3) Check if water/vibrator/chain oiler air solenoid energizes when conveyor is engaged.

(a) If air solenoid does not energize, go to “Concrete Mixer Auto and/or Manual Controls Do Not Operate”, (Fault 29).

(b) If air solenoid energizes, go to Step 23 of this Fault.

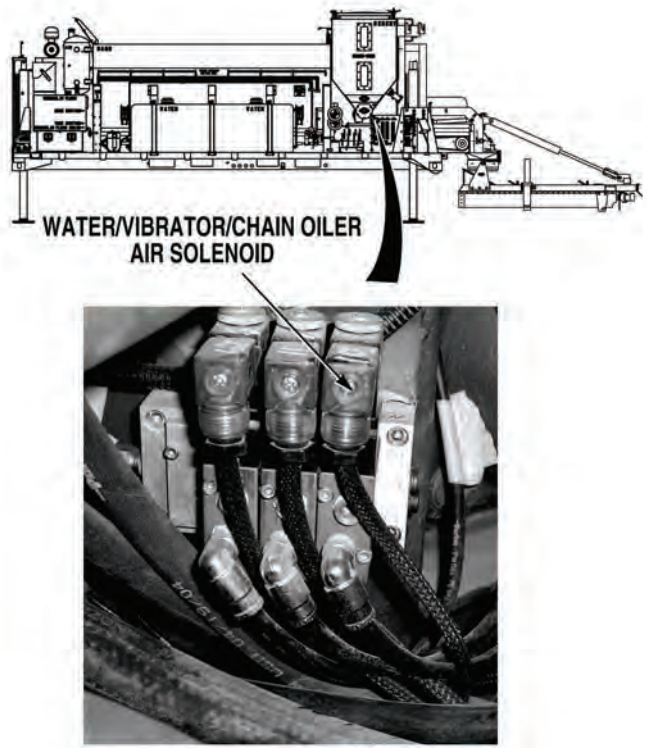

33. VIBRATOR(S) DO NOT OPERATE CORRECTLY (CONT).

KNOWN INFO

- Air lines between water/vibrator chain oiler air solenoid valve and vibrators not kinked, leak, or damaged.
- Oil level in air regulator/lubricator OK.
- Sand bin vibrator shutoff valve open.
- Air system pressure OK.
- Air regulator/lubricator adjusted correctly.
- Air regulator/lubricator OK.
- Sand bin air cam valve adjusted correctly.
- Air line between sand bin vibrator air cam valve and T-fitting at sand bin not blocked.
- Air line between T-fitting and sand bin vibrator not blocked.
- Sand bin air cam valve faulty.
- Air line between T-fitting and non-operating vibrator not blocked.
- Non-operating vibrator exhaust port not blocked.
- Non-operating vibrator faulty.
- Cement bin air cam valve adjusted correctly.
- Air line between cement bin vibrator air cam valve and T-fitting at cement bin not blocked.
- Air line between T-fitting and cement bin vibrator air cam not blocked.
- Cement bin air cam OK.
- System control circuit OK.

POSSIBLE PROBLEMS

- Air lines between water/vibrator/chain oiler air solenoid valve and vibrators leaking.
- Air lines between water/vibrator/chain oiler air solenoid valve and vibrator control valve blocked.
- Vibrator control valve faulty.

23.

Is air system charge between 80 to 100 psi (552 to 690 kPa) with CONTROL OVERIDE switch in ON position?

NO → Repair or replace leaking air lines and fittings between water/vibrator/chain oiler air solenoid, water valve, air cam valves, and vibrators, (Para 3-132). Verify repair, go to Step 25 of this Fault.

YES ↓

TEST OPTIONS

Operational test.

REASON FOR QUESTION

If air system does not charge to 80 to 100 psi (552 to 690 kPa), air lines and fittings between water/vibrator/chain oiler air solenoid, water valve, air cam valves, and air vibrators are leaking.

OPERATIONAL TEST

(1) Push CONVEYOR control in to OFF position, (Para 2-1).

(2) Start engine, (Para 2-19).

(3) Allow air system to charge to 80 to 100 psi (552 to 690 kPa).

(4) Turn CONTROL OVERIDE switch to ON position, (Para 2-1).

(5) Check if air system charges to 80 to 100 psi (552 to 690 kPa).

(a) If air system does not charge to 80 to 100 psi (552 to 690 kPa), repair or replace air lines and fittings between water/vibrator/chain oiler air solenoid, water valve, chain oiler air solenoid, air cam valves, and vibrators, (Para 3-132). Verify repair, go to Step 25 of this Fault.

(b) If air system charges to 80 to 100 psi (552 to 690 kPa), go to Step 24 of this Fault.

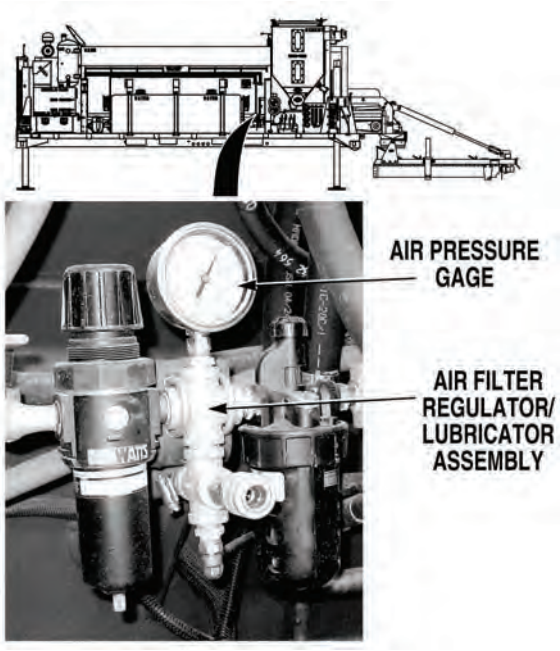

33. VIBRATOR(S) DO NOT OPERATE CORRECTLY (CONT).

KNOWN INFO

- Air lines between water/vibrator chain oiler air solenoid valve and vibrators not kinked, leak, or damaged.
- Oil level in air regulator/lubricator OK.
- Sand bin vibrator shutoff valve open.
- Air system pressure OK.
- Air regulator/lubricator adjusted correctly.
- Air regulator/lubricator OK.
- Sand bin air cam valve adjusted correctly.
- Air line between sand bin vibrator air cam valve and T-fitting at sand bin not blocked.
- Air line between T-fitting and sand bin vibrator not blocked.
- Sand bin air cam valve faulty.
- Air line between T-fitting and non-operating vibrator not blocked.
- Non-operating vibrator exhaust port not blocked.
- Non-operating vibrator faulty.
- Cement bin air cam valve adjusted correctly.
- Air line between cement bin vibrator air cam valve and T-fitting at cement bin not blocked.
- Air line between T-fitting and cement bin vibrator air cam not blocked.
- Cement bin air cam OK.
- System control circuit OK.
- Air lines between water/vibrator/chain oiler air solenoid valve and vibrators not leaking.

POSSIBLE PROBLEMS

- Air lines between water/vibrator/chain oiler air solenoid valve and vibrator control valve blocked.
- Vibrator control valve faulty.

24.

WARNING

Read WARNING on Page 4-1099

Is air pressure present at vibrator control valve control port when CONTROL OVERRIDE switch is in ON position?

NO → Repair air lines and fittings between water/vibrator/chain oiler air solenoid, and vibrator control valve, (Para 3-132). Verify repair, go to Step 25 of this Fault.

YES → Replace vibrator air control valve, (Para 3-49). Verify repair, go to Step 25 of this Fault.

TEST OPTIONS

Visual/audible inspection.

REASON FOR QUESTION

If air pressure is present at vibrator control valve, vibrator control valve is faulty. If not, air lines between water/vibrator/chain oiler air solenoid and vibrator control valve is faulty.

WARNING

Air lines are under extreme pressure. Ensure all personnel wear protective goggles when working around compressed air. Failure to comply may result in serious injury or death to personnel.

VISUAL/AUDIBLE INSPECTION

(1) Remove air line at vibrator control valve, (Para 3-132).

(2) Check if air pressure is present, at vibrator control valve air line.

  (a) If air pressure is not present, go to repair or replace air lines between water/vibrator/chain oiler air solenoid and vibrator control valve, (Para 3-132).

  (b) If air is present, replace vibrator control valve, (Para 3-49).

(3) Verify repair, go to Step 25 of this Fault.

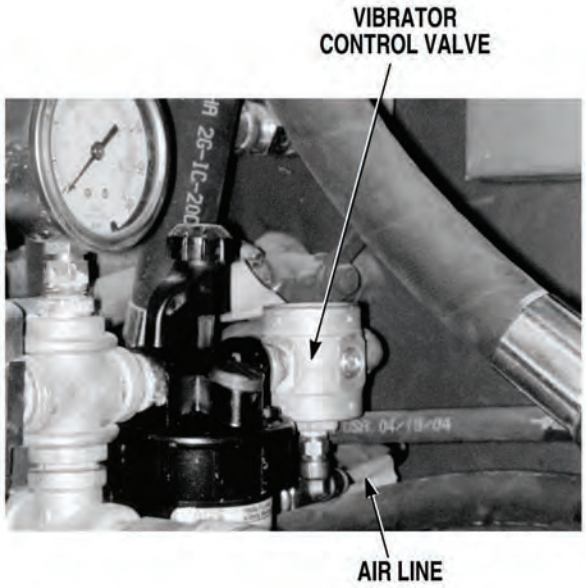

33. VIBRATOR(S) DO NOT OPERATE CORRECTLY (CONT).

KNOWN INFO
Air lines between water/vibrator chain oiler air solenoid valve and vibrators not kinked, leak, or damaged.
Oil level in air regulator/lubricator OK.
Sand bin vibrator shutoff valve open.
Air system pressure OK.
Air regulator/lubricator adjusted correctly.
Air regulator/lubricator OK.
Sand bin air cam valve adjusted correctly.
Air line between sand bin vibrator air cam valve and T-fitting at sand bin not blocked.
Air line between T-fitting and sand bin vibrator not blocked.
Sand bin air cam valve faulty.
Air line between T-fitting and non-operating vibrator not blocked.
Non-operating vibrator exhaust port not blocked.
Non-operating vibrator faulty.
Cement bin air cam valve adjusted correctly.
Air line between cement bin vibrator air cam valve and T-fitting at cement bin not blocked.
Air line between T-fitting and cement bin vibrator air cam not blocked.
Cement bin air cam OK.
System control circuit OK.
Air lines between water/vibrator/chain oiler air solenoid valve and vibrators not leaking.
Air lines between water/vibrator/chain oiler air solenoid valve and vibrator control valve not blocked.
Vibrator control valve OK.

POSSIBLE PROBLEMS
None.

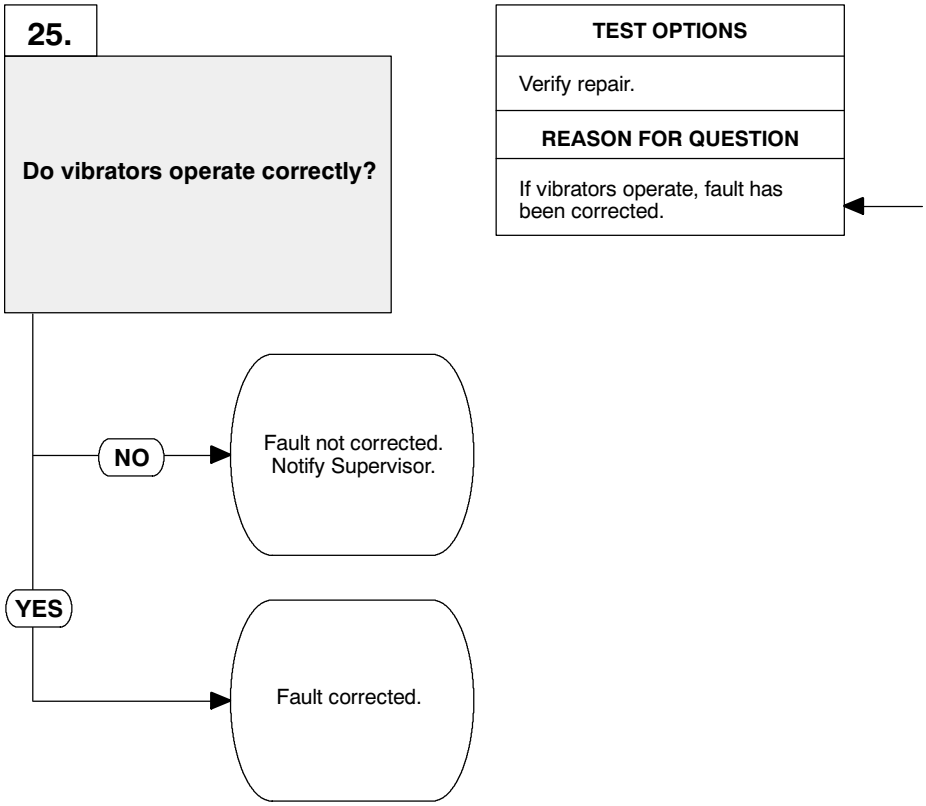

VERIFY REPAIR

NOTE

There are two sets of two vibrators. Each set operates independently of the other. The sand bin vibrators will not operate if the sand bin vibrator shutoff valve is closed.

NOTE

The vibrators do not operate constantly. Each set of vibrators operate once per cement metering system counter shaft rotation.

(1) If disconnected, connect air lines, (Para 3-132).

(2) If removed, install chain drive cover, (Para 3-88).

(3) Start engine, (Para 2-19).

(4) Turn CONTROL OVERIDE switch to AUTO position, (Para 2-1).

(5) Pull CONVEYOR control out to ON position, (Para 2-1).

(6) Check if any air vibrators operate.

  (a) If any air vibrators do not operate, fault not corrected. Notify Supervisor.

  (b) If all air vibrators operate, fault has been corrected.

(7) Push CONVEYOR control in to OFF position, (Para 2-1).

(8) Turn CONTROL OVERIDE switch OFF, (Para 2-1).

(9) Shut OFF engine, (Para 2-19).

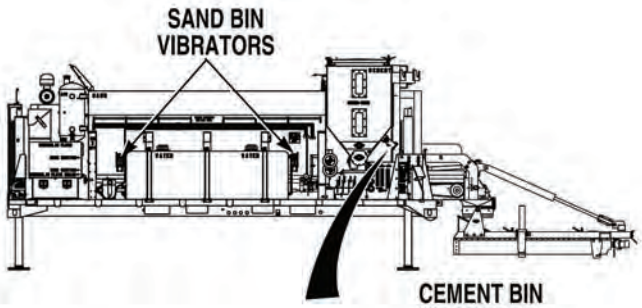

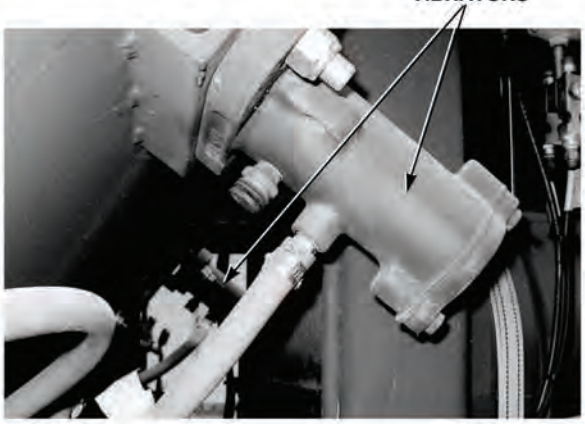

34. WORK LIGHT(S) DO NOT OPERATE.

INITIAL SETUP

Tools and Special Tools

Tool Kit, General Mechanic's: Automotive (Item 19, Appendix I)

Multimeter (Item 11, Appendix I)

Jumperwire

Equipment Condition

Concrete Mobile Mixer unloaded from PLS, (Para 2-5)

Engine OFF, (Para 2-19)

KNOWN INFO
Nothing.

POSSIBLE PROBLEMS
Remote work light ground wire faulty.
Remote work light faulty.
Control wire harness work light power (gray) wire faulty.
Control box 4-pin wire harness work light power (gray) wire faulty.
Control wire harness work light power (yellow) wire faulty.
Control box 4-pin wire harness work light power (yellow) wire faulty.
Control panel work light lamp faulty.
Control panel work light wire connections at terminal strip loose or corroded.
Control panel work light faulty.
All 12 VDC circuits not operating.
LIGHTS fuse faulty.
Main wire harness work light power (orange) wire faulty.
Battery equalizer magnetic switch terminals loose or corroded.
Engine wire harness work light power (orange) wire faulty.
Control panel 5-pin wire harness work light power (orange) wire faulty.
Control panel work light power (orange) wire between fuse and switch faulty.
Control panel work light power (orange) wire between switch and terminal strip faulty.
WORK LIGHTS switch faulty.

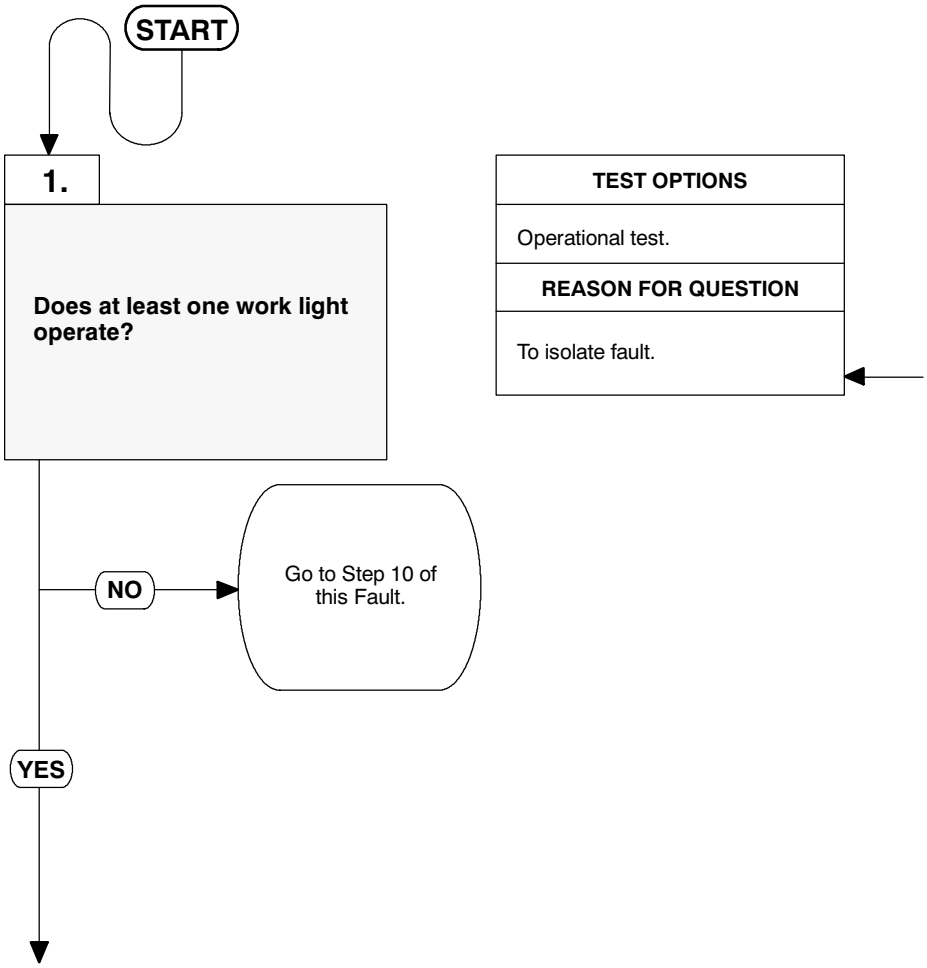

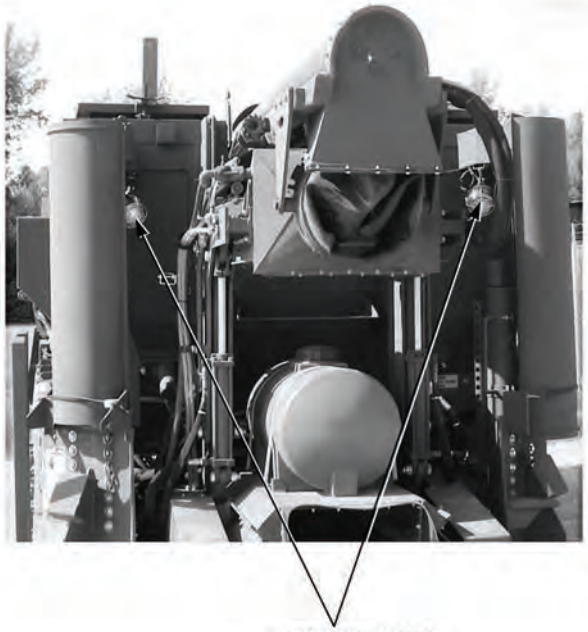

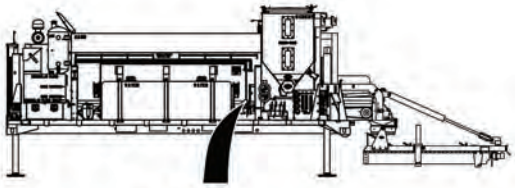

OPERATIONAL TEST

(1) Turn IGNITION SWITCH ON, (Para 2-1). Do not start engine.

(2) Turn 12 VOLT switch ON, (Para 2-1).

(3) Turn WORK LIGHTS switch ON, (Para 2-1).

(4) Check if at least one work light operates.

(a) If all work lights do not operate, go to Step 10 of this Fault.

(b) If at least one work light operates, go to Step 2 of this Fault.

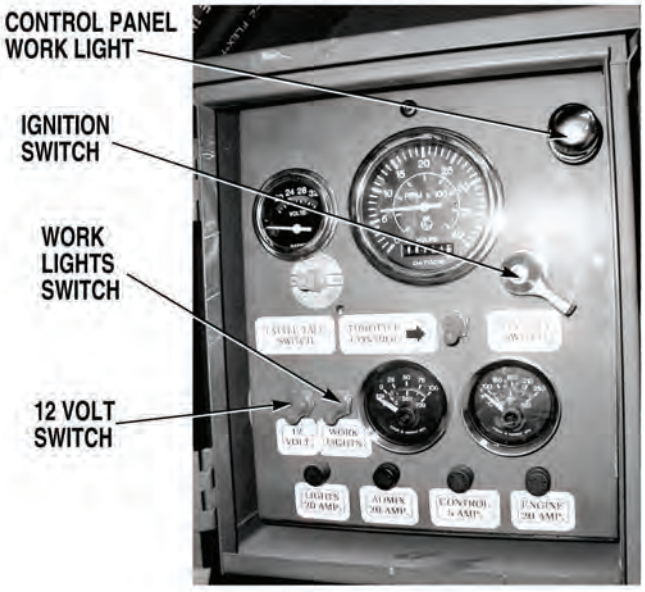

34. WORK LIGHT(S) DO NOT OPERATE (CONT).

KNOWN INFO
Other 12 VDC circuits operate.
LIGHTS fuse OK.
Main wire harness work light power (orange) wire OK.
Battery equalizer magnetic switch terminals not loose or corroded.
Engine wire harness work light power (orange) wire OK.
Control panel 5-pin wire harness work light power (orange) wire OK.
Control panel work light power (orange) wire between fuse and switch OK.
Control panel work light power (orange) wire between switch and terminal strip OK.
WORK LIGHTS switch OK.

POSSIBLE PROBLEMS
Remote work light ground wire faulty.
Remote work light faulty.
Control wire harness work light power (gray) wire faulty.
Control box 4-pin wire harness work light power (gray) wire faulty.
Control wire harness work light power (yellow) wire faulty.
Control box 4-pin wire harness work light power (yellow) wire faulty.
Control panel work light lamp faulty.
Control panel work light wire connections at terminal strip loose or corroded.
Control panel work light faulty.

2.

Does engine control panel work light operate?

NO → Go to Step 8 of this Fault.

YES ↓

TEST OPTIONS
Visual inspection.

REASON FOR QUESTION
To further isolate fault.

VISUAL INSPECTION
Check if control panel work light operates. (a) If control panel work light does not operate, go to Step 8 of this Fault. (b) If control panel work light operates, go to Step 3 of this Fault.

34. WORK LIGHT(S) DO NOT OPERATE (CONT).

KNOWN INFO

Other 12 VDC circuits operate.
LIGHTS fuse OK.
Main wire harness work light power (orange) wire OK.
Battery equalizer magnetic switch terminals not loose or corroded.
Engine wire harness work light power (orange) wire OK.
Control panel 5-pin wire harness work light power (orange) wire OK.
Control panel work light power (orange) wire between fuse and switch OK.
Control panel work light power (orange) wire between switch and terminal strip OK.
WORK LIGHTS switch OK.
Control panel work light lamp OK.
Control panel work light wire connections at terminal strip OK.
Control panel work light OK.

POSSIBLE PROBLEMS

Remote work light ground wire faulty.
Remote work light faulty.
Control wire harness work light power (gray) wire faulty.
Control box 4-pin wire harness work light power (gray) wire faulty.
Control wire harness work light power (yellow) wire faulty.
Control box 4-pin wire harness work light power (yellow) wire faulty.

3.

WARNING
Read WARNING on Page 4-1107

Is non-operating work light ground wire connection secure and free from damage?

NO → Repair connection or replace work light, (Para 3-32). Verify repair, go to Step 18 of this Fault.

YES ↓

TEST OPTIONS

Visual inspection.

REASON FOR QUESTION

If non-operating work light ground connection is not secure and free from damage, work light will not operate.

WARNING

Remove all jewelry such as rings, dog tags, bracelets etc. If jewelry or tools contact positive electrical circuits, a direct short may result. Damage to equipment, injury or death to personnel may occur.

VISUAL INSPECTION

(1) Turn WORK LIGHTS switch OFF, (Para 2-1).

(2) Turn 12 VOLT switch OFF, (Para 2-1).

(3) Turn IGNITION SWITCH OFF, (Para 2-1).

(4) Check if non-operating work light ground connection is secure and free from damage.

(a) If non-operating work light ground connection is not secure and free from damage, repair ground connection or replace work light, (Para 3-32). Verify repair, go to Step18 of this Fault.

(b) If non-operating work light ground connection is secure and free from damage, go to Step 4 of this Fault.

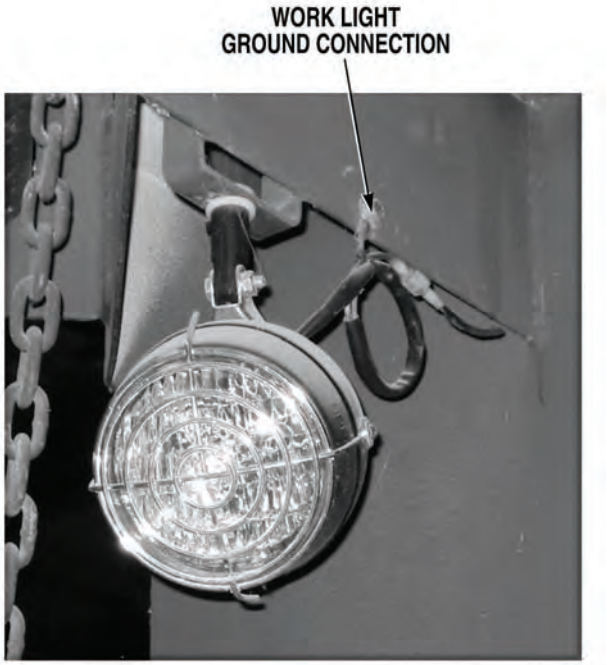

34. WORK LIGHT(S) DO NOT OPERATE (CONT).

KNOWN INFO

- Other 12 VDC circuits operate.
- LIGHTS fuse OK.
- Main wire harness work light power (orange) wire OK.
- Battery equalizer magnetic switch terminals not loose or corroded.
- Engine wire harness work light power (orange) wire OK.
- Control panel 5-pin wire harness work light power (orange) wire OK.
- Control panel work light power (orange) wire between fuse and switch OK.
- Control panel work light power (orange) wire between switch and terminal strip OK.
- WORK LIGHTS switch OK.
- Control panel work light lamp OK.
- Control panel work light wire connections at terminal strip OK.
- Control panel work light OK.
- Remote work light ground wire OK.

POSSIBLE PROBLEMS

- Remote work light faulty.
- Control wire harness work light power (gray) wire faulty.
- Control box 4-pin wire harness work light power (gray) wire faulty.
- Control wire harness work light power (yellow) wire faulty.
- Control box 4-pin wire harness work light power (yellow) wire faulty.

4.

WARNING

Read WARNING on Page 4-1109

Are 10 to 14 VDC measured at non-operating work light harness connector?

NO → Go to Step 5 of this Fault.

YES → Replace non-operating work light, (Para 3-32). Verify repair, go to Step 18 of this Fault.

TEST OPTIONS

Voltage test.

REASON FOR QUESTION

If 10 to 14 VDC are present, non-operating work light is faulty.

WARNING

Remove all jewelry such as rings, dog tags, bracelets etc. If jewelry or tools contact positive electrical circuits, a direct short may result. Damage to equipment, injury or death to personnel may occur.

VOLTAGE TEST

(1) Disconnect non-operating work light harness connector, (Para 3-32).

(2) Turn IGNITION SWITCH ON, (Para 2-1).

(3) Turn 12 VOLT switch ON, (Para 2-1).

(4) Turn WORK LIGHTS SWITCH ON, (Para 2-1).

(5) Connect positive (+) multimeter lead to non-operating work light harness power wire connector.

(6) Connect negative (-) multimeter lead to a known good ground.

(a) If 10 to 14 VDC are not present, go to Step 5 of this Fault.

(b) If 10 to 14 VDC are present, replace non-operating work light, (Para 3-32). Verify repair, go to Step 18 of this Fault.

34. WORK LIGHT(S) DO NOT OPERATE (CONT).

KNOWN INFO
Other 12 VDC circuits operate.
LIGHTS fuse OK.
Main wire harness work light power (orange) wire OK.
Battery equalizer magnetic switch terminals not loose or corroded.
Engine wire harness work light power (orange) wire OK.
Control panel 5-pin wire harness work light power (orange) wire OK.
Control panel work light power (orange) wire between fuse and switch OK.
Control panel work light power (orange) wire between switch and terminal strip OK.
WORK LIGHTS switch OK.
Control panel work light lamp OK.
Control panel work light wire connections at terminal strip OK.
Control panel work light OK.
Remote work light ground wire OK.
Remote work light OK.

POSSIBLE PROBLEMS
Control wire harness work light power (gray) wire faulty.
Control box 4-pin wire harness work light power (gray) wire faulty.
Control wire harness work light power (yellow) wire faulty.
Control box 4-pin wire harness work light power (yellow) wire faulty.

5.

Is control harness work light power wire for non-operating work light gray?

NO → Go to Step 7 of this Fault.

YES ↓

TEST OPTIONS
Visual inspection.
REASON FOR QUESTION
To isolate fault.

VISUAL INSPECTION
Check if control harness work light power wire for non-operating work light is gray. (a) If wire is not gray, go to Step 7 of this Fault. (b) If wire is gray, go to Step 6 of this Fault.

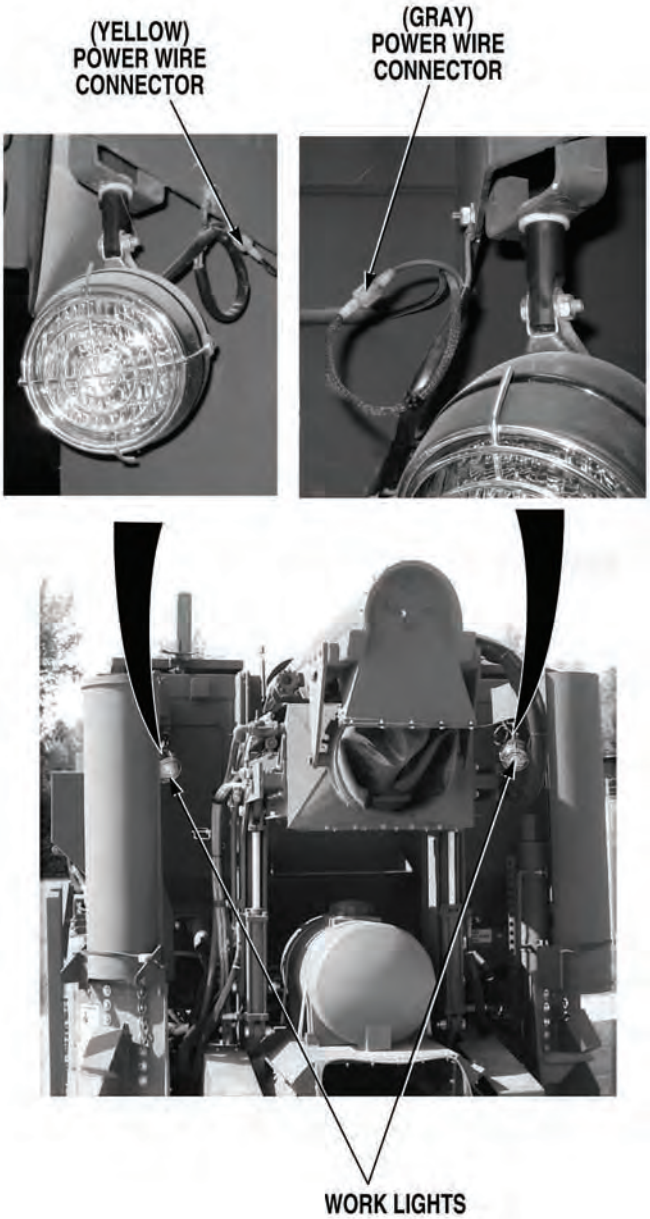

34. WORK LIGHT(S) DO NOT OPERATE (CONT).

KNOWN INFO

- Other 12 VDC circuits operate.
- LIGHTS fuse OK.
- Main wire harness work light power (orange) wire OK.
- Battery equalizer magnetic switch terminals not loose or corroded.
- Engine wire harness work light power (orange) wire OK.
- Control panel 5-pin wire harness work light power (orange) wire OK.
- Control panel work light power (orange) wire between fuse and switch OK.
- Control panel work light power (orange) wire between switch and terminal strip OK.
- WORK LIGHTS switch OK.
- Control panel work light lamp faulty.
- Control panel work light wire connections at terminal strip loose or corroded.
- Control panel work light faulty.
- Remote work light ground wire OK.
- Remote work light OK.
- Control wire harness work light power (yellow) wire OK.
- Control box 4-pin wire harness work light power (yellow) wire OK.

POSSIBLE PROBLEMS

- Control wire harness work light power (gray) wire faulty.
- Control box 4-pin wire harness work light power (gray) wire faulty.

6.

WARNING

Read WARNING on Page 4-1113

Is continuity measured across control harness work light power (gray) wire from connector, terminal A to non-operating work light harness connector?

NO → Repair work light power (gray) wire, (Para 3-141), or replace control wire harness, (Para 3-135). Verify repair, go to Step 18 of this Fault.

YES → Repair work light power (gray) wire, (Para 3-141), or replace control box 4-pin wire harness, (Para 3-139). Verify repair, go to Step 15 of this Fault.

TEST OPTIONS

Continuity test.

REASON FOR QUESTION

If continuity is measured, control box 4-pin harness work light power (gray) wire is faulty. If not, control wire harness work light power (gray) wire is faulty.

WARNING

Remove all jewelry such as rings, dog tags, bracelets etc. If jewelry or tools contact positive electrical circuits, a direct short may result. Damage to equipment, injury or death to personnel may occur.

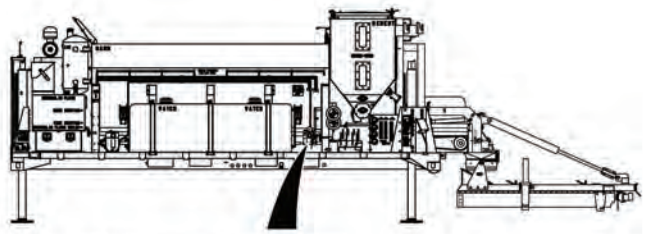

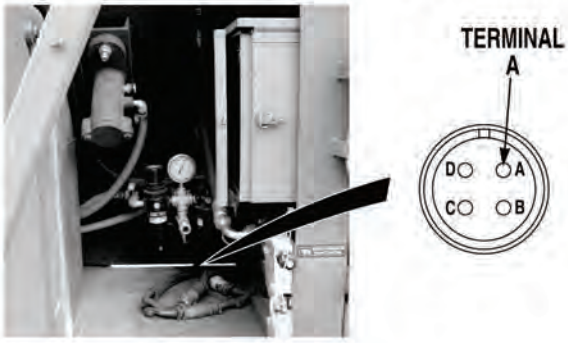

CONTINUITY TEST

(1) Turn 12 VOLT switch OFF, (Para 2-1).

(2) Turn IGNITION SWITCH OFF, (Para 2-1).

(3) Disconnect batteries, (Para 2-1).

(4) Disconnect control box 4-pin connector, (Para 3-139).

(5) Set multimeter select switch to ohms.

(6) Connect jumperwire between control wire harness work light power (gray) wire at connector, terminal A and a known good ground.

(7) Connect positive (+) multimeter lead to control harness work light power (gray) wire at non-operating work light.

(8) Connect negative (-) multimeter lead to a known good ground.

  (a) If continuity is not measured, repair work light power (gray) wire, (Para 3-141), or replace control wire harness, (Para 3-135).

  (b) If continuity is measured, repair work light power (gray) wire (Para 3-141), or replace control box 4-pin wire harness, (Para 3-139).

(9) Verify repair, go to Step 18 of this Fault.

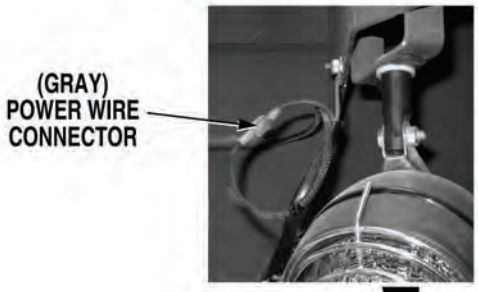

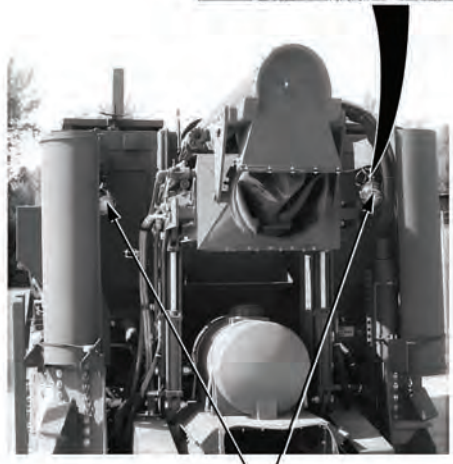

34. WORK LIGHT(S) DO NOT OPERATE (CONT).

KNOWN INFO

- Other 12 VDC circuits operate.
- LIGHTS fuse OK.
- Main wire harness work light power (orange) wire OK.
- Battery equalizer magnetic switch terminals not loose or corroded.
- Engine wire harness work light power (orange) wire OK.
- Control panel 5-pin wire harness work light power (orange) wire OK.
- Control panel work light power (orange) wire between fuse and switch OK.
- Control panel work light power (orange) wire between switch and terminal strip OK.
- WORK LIGHTS switch OK.
- Control panel work light lamp faulty.
- Control panel work light wire connections at terminal strip loose or corroded.
- Control panel work light faulty.
- Remote work light ground wire OK.
- Remote work light OK.
- Control wire harness work light power (gray) wire OK.
- Control box 4-pin wire harness work light power (gray) wire OK.

POSSIBLE PROBLEMS

- Control wire harness work light power (yellow) wire faulty.
- Control box 4-pin wire harness work light power (yellow) wire faulty.

7.

WARNING

Read WARNING on Page 4-1115

Is continuity measured across control harness work light power (yellow) wire from connector, terminal D to non-operating work light harness connector?

NO → Repair work light power (yellow) wire, (Para 3-141), or replace control wire harness, (Para 3-135). Verify repair, go to Step 18 of this Fault.

YES → Repair work light power (yellow) wire, (Para 3-141), or replace control box 4-pin wire harness, (Para 3-139). Verify repair, go to Step 18 of this Fault.

TEST OPTIONS

Continuity test.

REASON FOR QUESTION

If continuity is measured, control box 4-pin harness work light power (yellow) wire is faulty. If not, control wire harness work light power (yellow) wire is faulty.

WARNING

Remove all jewelry such as rings, dog tags, bracelets etc. If jewelry or tools contact positive electrical circuits, a direct short may result. Damage to equipment, injury or death to personnel may occur.

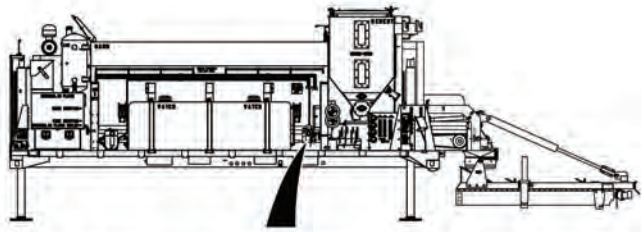

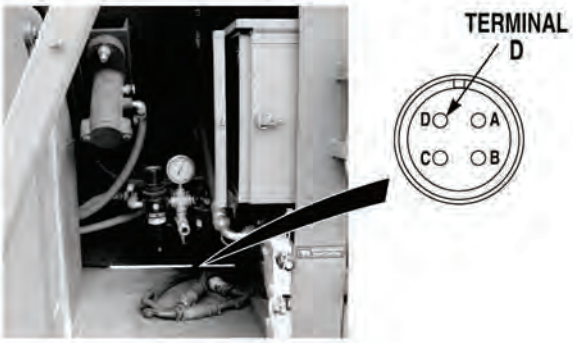

CONTINUITY TEST

(1) Turn 12 VOLT switch OFF, (Para 2-1).

(2) Turn IGNITION SWITCH OFF, (Para 2-1).

(3) Disconnect batteries, (Para 3-10).

(4) Disconnect control box 4-pin connector, (Para 3-139).

(5) Set multimeter select switch to ohms.

(6) Connect jumperwire between control wire harness work light power (yellow) wire at connector, terminal D and a known good ground.

(7) Connect positive (+) multimeter lead to control harness work light power (yellow) wire at non-operating work light.

(8) Connect negative (-) multimeter lead to a known good ground.

  (a) If continuity is not measured, repair work light power (yellow) wire, (Para 3-141), or replace control wire harness, (Para 3-135).

  (b) If continuity is measured, repair work light power (yellow) wire (Para 3-141), or replace control box 4-pin wire harness, (Para 3-139).

(9) Verify repair, go to Step 18 of this Fault.

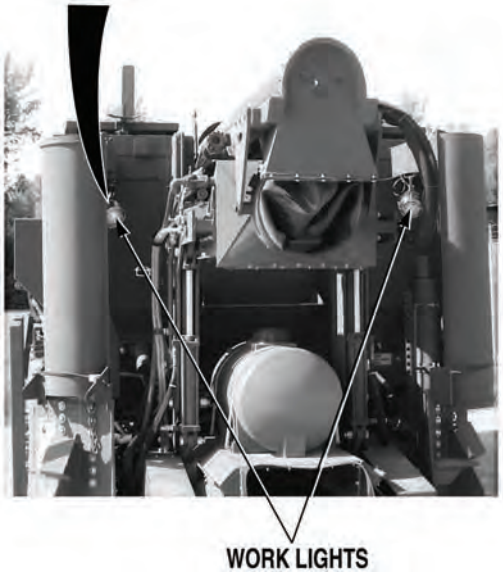

34. WORK LIGHT(S) DO NOT OPERATE (CONT).

KNOWN INFO
Other 12 VDC circuits operate. LIGHTS fuse OK. Main wire harness work light power (orange) wire OK. Battery equalizer magnetic switch terminals not loose or corroded. Engine wire harness work light power (orange) wire OK. Control panel 5-pin wire harness work light power (orange) wire OK. Control panel work light power (orange) wire between fuse and switch OK. Control panel work light power (orange) wire between switch and terminal strip OK. WORK LIGHTS switch OK. Remote work light ground wire OK. Remote work light OK. Control wire harness work light power (gray) wire OK. Control box 4-pin wire harness work light power (gray) wire OK. Control wire harness work light power (yellow) wire OK. Control box 4-pin wire harness work light power (yellow) wire OK.
POSSIBLE PROBLEMS
Control panel work light lamp faulty. Control panel work light wire connections at terminal strip loose or corroded. Control panel work light faulty.

8.

WARNING

Read WARNING on Page 4-1117

Is continuity measured across work light lamp?

NO → Replace control panel work light lamp, (Para 3-55). Verify repair, go to Step 18 of this Fault.

YES ↓

TEST OPTIONS
Continuity test.
REASON FOR QUESTION
If continuity is not measured, control panel work light lamp is faulty.

WARNING

Remove all jewelry such as rings, dog tags, bracelets etc. If jewelry or tools contact positive electrical circuits, a direct short may result. Damage to equipment, injury or death to personnel may occur.

CONTINUITY TEST

(1) Turn WORK LIGHTS switch OFF, (Para 2-1).

(2) Turn 12 VOLT switch OFF, (Para 2-1).

(3) Shut engine OFF, (Para 2-19).

(4) Disconnect batteries, (Para 3-10).

(5) Remove control panel work light lamp from work light assembly.

(6) Set multimeter select switch to ohms.

(7) Connect positive (+) multimeter lead to one terminal on work light lamp.

(8) Connect negative (-) multimeter lead to other terminal on work light lamp.

(a) If continuity is not measured, replace control panel work light lamp, (Para 3-55). Verify repair, go to Step 18 of this Fault.

(b) If continuity is measured, go to Step 9 of this Fault.

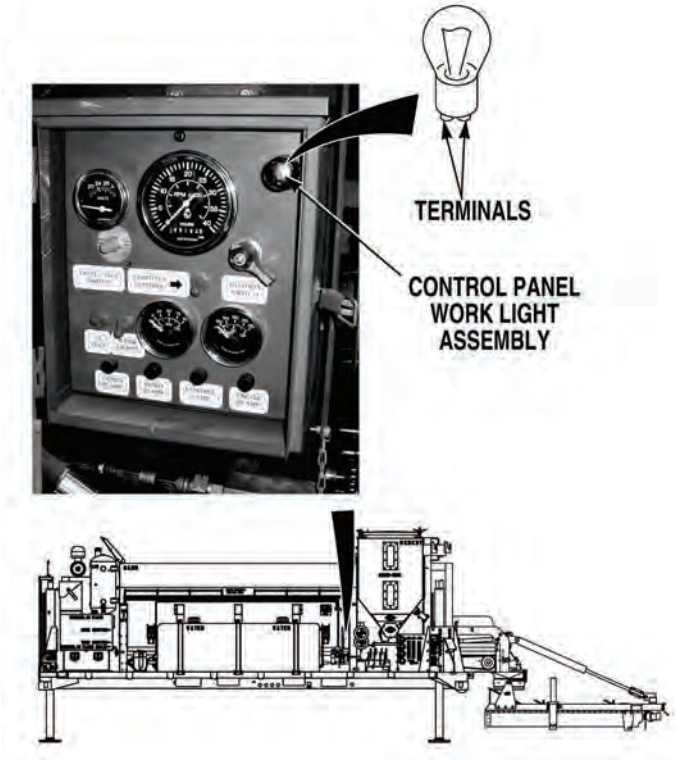

34. WORK LIGHT(S) DO NOT OPERATE (CONT).

KNOWN INFO

Other 12 VDC circuits operate.

LIGHTS fuse OK.

Main wire harness work light power (orange) wire OK.

Battery equalizer magnetic switch terminals not loose or corroded.

Engine wire harness work light power (orange) wire OK.

Control panel 5-pin wire harness work light power (orange) wire OK.

Control panel work light power (orange) wire between fuse and switch OK.

Control panel work light power (orange) wire between switch and terminal strip OK.

WORK LIGHTS switch OK.

Remote work light ground wire OK.

Remote work light OK.

Control wire harness work light power (gray) wire OK.

Control box 4-pin wire harness work light power (gray) wire OK.

Control wire harness work light power (yellow) wire OK.

Control box 4-pin wire harness work light power (yellow) wire OK.

Control panel work light lamp OK.

POSSIBLE PROBLEMS

Control panel work light wire connections at terminal strip loose or corroded.

Control panel work light faulty.

9.

WARNING

Read WARNING on Page 4-1119

Are control panel work light wire connections at control panel terminal strip, terminals 12 and 15 tight and free from corrosion?

NO → Clean and tighten loose work light wire connections at control panel terminal strip. Verify repair, go to Step 18 of this Fault.

YES → Replace control panel work light, (Para 3-32). Verify repair, go to Step 18 of this Fault.

TEST OPTIONS

Visual inspection.

REASON FOR QUESTION

If control panel work light wire connections at control panel terminal strip are tight and free from corrosion, control panel work light is faulty. If not, loose connection may be causing work light fault.

WARNING

Remove all jewelry such as rings, dog tags, bracelets etc. If jewelry or tools contact positive electrical circuits, a direct short may result. Damage to equipment, injury or death to personnel may occur.

VISUAL INSPECTION

(1) Remove control box from Concrete Mobile Mixer, (Para 3-90).

(2) Release latch and open control box door.

(3) Remove screw from top of control panel. Gently tip control panel forward for access to wires.

(4) Check if wire connections at engine control panel terminal strip, terminals 12 and 15 are tight and free from corrosion.

  (a) If wire connections 12 and 15 are tight and free from corrosion, clean and tighten terminal strip wire connections.

  (b) If wire connections 12 and 15 are tight and free from corrosion, replace control panel work light, (Para 3-32).

(5) Verify repair, go to Step 18 of this Fault.

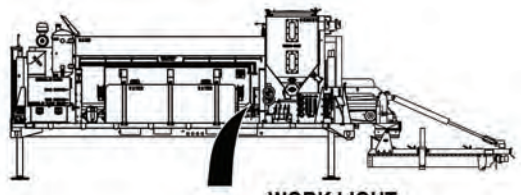

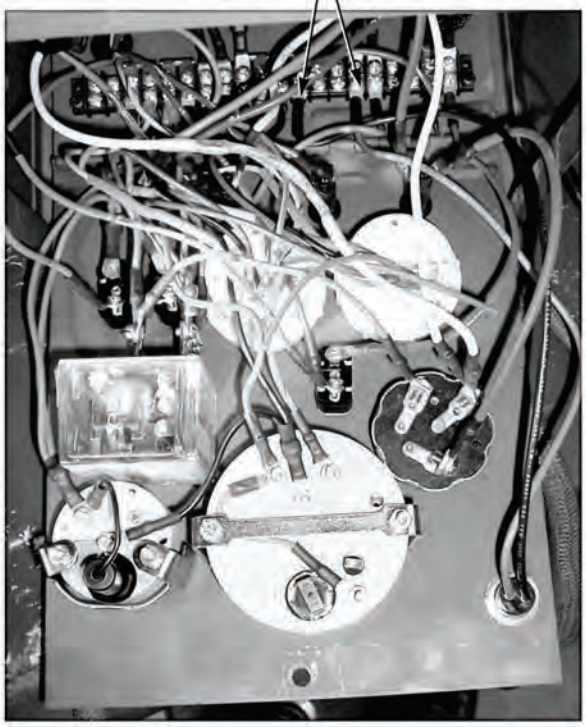

34. WORK LIGHT(S) DO NOT OPERATE (CONT).

KNOWN INFO
Remote work light ground wire OK.
Remote work light OK.
Control wire harness work light power (gray) wire OK.
Control box 4-pin wire harness work light power (gray) wire OK.
Control wire harness work light power (yellow) wire OK.
Control box 4-pin wire harness work light power (yellow) wire OK.
Control panel work light lamp OK.
Control panel work light wire connections at terminal strip not loose or corroded.
Control panel work light OK.

POSSIBLE PROBLEMS
All 12 VDC circuits not operating.
LIGHTS fuse faulty.
Main wire harness work light power (orange) wire faulty.
Battery equalizer magnetic switch terminals loose or corroded.
Engine wire harness work light power (orange) wire faulty.
Control panel 5-pin wire harness work light power (orange) wire faulty.
Control panel work light power (orange) wire between fuse and switch faulty.
Control panel work light power (orange) wire between switch and terminal strip faulty.
WORK LIGHTS switch faulty.

10.

Does high-flow and/or low-flow admix pump operate when HIGH FLOW ADMIX and/or LOW FLOW ADMIX switch is placed in ON position?

NO → Go to “All 12-VOLT DC Circuits Do Not Operate”, (Fault 4).

YES ↓

TEST OPTIONS
Operational test.

REASON FOR QUESTION
If high-flow and/or low-flow admix pumps are not operating, another troubleshooting procedure applies.

OPERATIONAL TEST

(1) Turn WORK LIGHTS switch OFF, (Para 2-1).

(2) Close admix solution valves, (Para 2-1).

NOTE

Admix pump operation will be checked, by checking for pump noise.

(3) Turn HIGH FLOW and/or LOW FLOW ADMIX switch ON, (Para 2-1).

(4) Check if admix pumps operate.

(a) If admix pump does not operate, go to “All 12-VOLT DC Circuits Do Not Operate”, (Fault 4).

(b) If admix pump operates, turn admix pump OFF, (Para 2-1). Then go to Step 11 of this Fault.

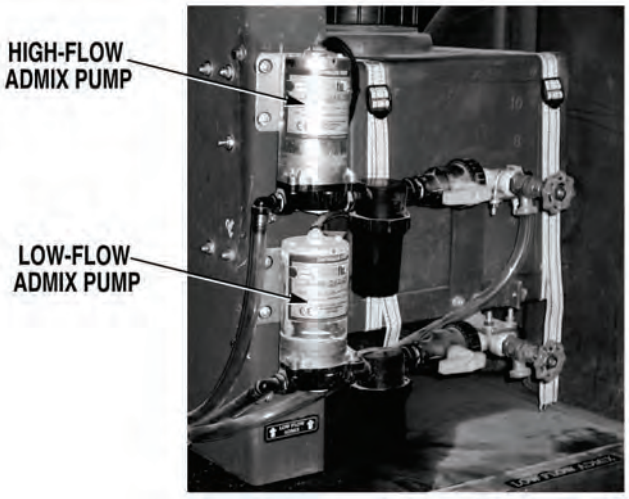

34. WORK LIGHT(S) DO NOT OPERATE (CONT).

KNOWN INFO
Remote work light ground wire OK.
Remote work light OK.
Control wire harness work light power (gray) wire OK.
Control box 4-pin wire harness work light power (gray) wire OK.
Control wire harness work light power (yellow) wire OK.
Control box 4-pin wire harness work light power (yellow) wire OK.
Control panel work light lamp OK.
Control panel work light wire connections at terminal strip not loose or corroded.
Control panel work light OK.
Other 12 VDC circuits operate.

POSSIBLE PROBLEMS
LIGHTS fuse faulty.
Main wire harness work light power (orange) wire faulty.
Battery equalizer magnetic switch terminals loose or corroded.
Engine wire harness work light power (orange) wire faulty.
Control panel 5-pin wire harness work light power (orange) wire faulty.
Control panel work light power (orange) wire between fuse and switch faulty.
Control panel work light power (orange) wire between switch and terminal strip faulty.
WORK LIGHTS switch faulty.

11.

WARNING

Read WARNING on Page 4-1123

Is continuity measured across LIGHTS fuse?

NO → Replace LIGHTS fuse, (Para 3-58). Verify repair, go to Step 18 of this Fault.

YES ↓

TEST OPTIONS
Continuity test.
REASON FOR QUESTION
If continuity is not measured, LIGHTS fuse is faulty.

WARNING

Remove all jewelry such as rings, dog tags, bracelets etc. If jewelry or tools contact positive electrical circuits, a direct short may result. Damage to equipment, injury or death to personnel may occur.

CONTINUITY TEST

(1) Turn 12 VOLT switch OFF, (Para 2-1).

(2) Turn IGNITION SWITCH OFF, (Para 2-1).

(3) Disconnect batteries, (Para 3-10).

(4) Set multimeter select switch to ohms.

(5) Remove LIGHTS fuse from fuse holder, (Para 3-58).

(6) Connect positive (+) multimeter lead to one end of fuse.

(7) Connect negative (-) multimeter lead to opposite end of LIGHTS fuse.

(a) If continuity is not measured, replace LIGHTS fuse, (Para 3-58). Verify repair, go to Step 18 of this Fault.

(b) If continuity is measured, reinstall LIGHTS fuse, then go to Step 12 of this Fault.

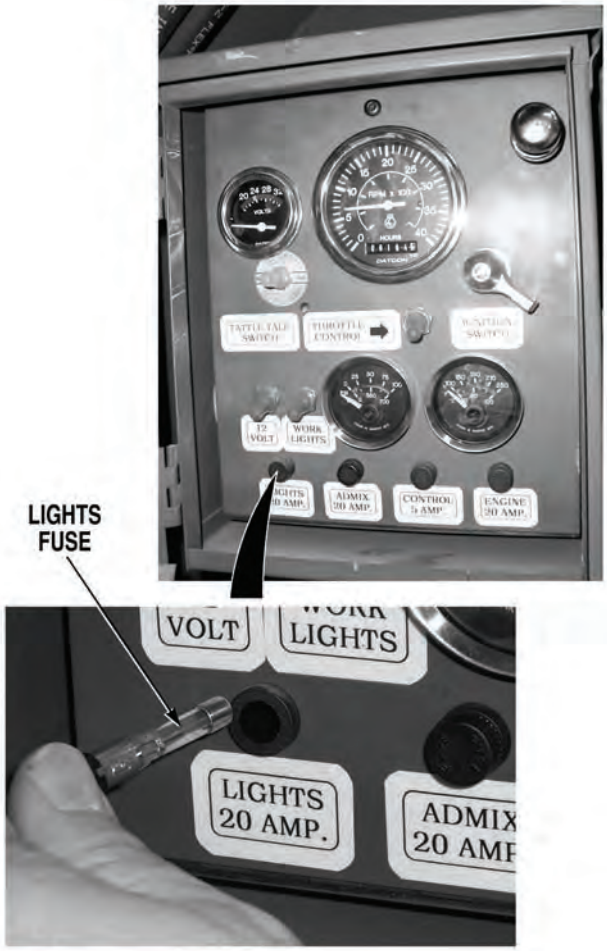

34. WORK LIGHT(S) DO NOT OPERATE (CONT).

KNOWN INFO

- Remote work light ground wire OK.
- Remote work light OK.
- Control wire harness work light power (gray) wire OK.
- Control box 4-pin wire harness work light power (gray) wire OK.
- Control wire harness work light power (yellow) wire OK.
- Control box 4-pin wire harness work light power (yellow) wire OK.
- Control panel work light lamp OK.
- Control panel work light wire connections at terminal strip not loose or corroded.
- Control panel work light OK.
- Other 12 VDC circuits operate.
- LIGHTS fuse OK.

POSSIBLE PROBLEMS

- Main wire harness work light power (orange) wire faulty.
- Battery equalizer magnetic switch terminals loose or corroded.
- Engine wire harness work light power (orange) wire faulty.
- Control panel 5-pin wire harness work light power (orange) wire faulty.
- Control panel work light power (orange) wire between fuse and switch faulty.
- Control panel work light power (orange) wire between switch and terminal strip faulty.
- WORK LIGHTS switch faulty.

12.

WARNING

Read WARNING on Page 4-1125

Is continuity measured across main wire harness work light power (orange) wire from engine connector, terminal F to control box 5- pin connector, terminal D?

NO → Repair work light power (orange) wire, (Para 3-141) or replace main wire harness, (Para 3-134). Verify repair, go to Step 18 of this Fault.

YES ↓

TEST OPTIONS

Continuity test.

REASON FOR QUESTION

If continuity is not measured, main wire harness work light power (orange) wire is faulty.

WARNING

Remove all jewelry such as rings, dog tags, bracelets etc. If jewelry or tools contact positive electrical circuits, a direct short may result. Damage to equipment, injury or death to personnel may occur.

CONTINUITY TEST

(1) Disconnect main wire harness at engine harness connector, (Para 3-134).

(2) Disconnect main wire harness at control box 5-pin connector, (Para 3-134).

(3) Set multimeter select switch to ohms.

(4) Connect jumperwire between main wire harness work light power (orange) wire at engine harness connector, terminal F and a known good ground.

(5) Connect positive (+) multimeter lead to main wire harness work light power (orange) wire at control box 5-pin connector, terminal D.

(6) Connect negative (-) multimeter lead to a known good ground.

(a) If continuity is not measured, repair work light wire power (orange) wire, (Para 3-141) or replace main wire harness, (Para 3-134). Verify repair, go to Step 18 of this Fault.

(b) If continuity is measured, go to Step 13 of this Fault.

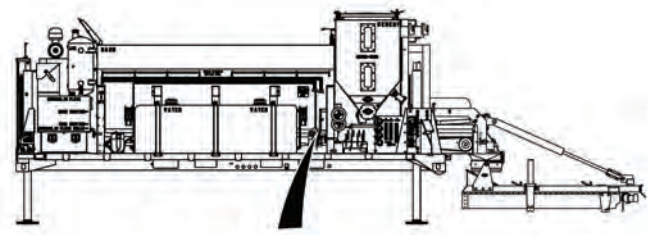

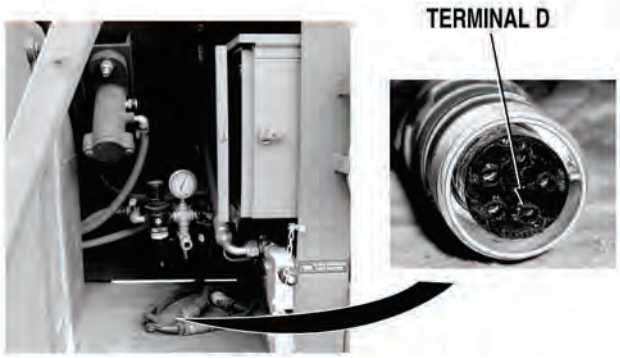

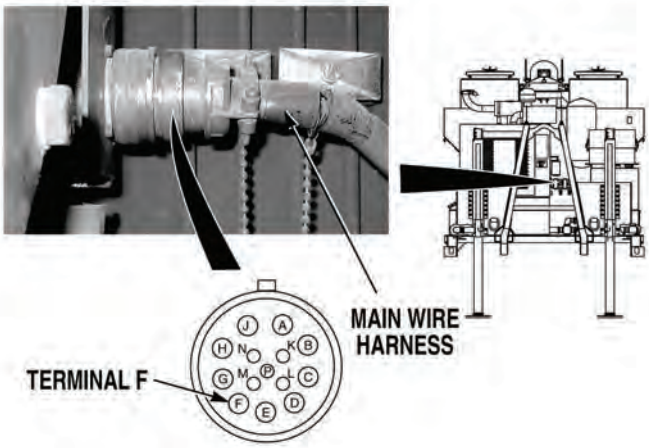

34. WORK LIGHT(S) DO NOT OPERATE (CONT).

KNOWN INFO

- Remote work light ground wire OK.
- Remote work light OK.
- Control wire harness work light power (gray) wire OK.
- Control box 4-pin wire harness work light power (gray) wire OK.
- Control wire harness work light power (yellow) wire OK.
- Control box 4-pin wire harness work light power (yellow) wire OK.
- Control panel work light lamp OK.
- Control panel work light wire connections at terminal strip not loose or corroded.
- Control panel work light OK.
- Other 12 VDC circuits operate.
- LIGHTS fuse OK.
- Main wire harness work light power (orange) wire OK.

POSSIBLE PROBLEMS

- Battery equalizer magnetic switch terminals loose or corroded.
- Engine wire harness work light power (orange) wire faulty.
- Control panel 5-pin wire harness work light power (orange) wire faulty.
- Control panel work light power (orange) wire between fuse and switch faulty.
- Control panel work light power (orange) wire between switch and terminal strip faulty.
- WORK LIGHTS switch faulty.

13.

WARNING

Read WARNING on Page 4-1127

Is continuity measured across work light power (orange) wire from control panel 5-pin wire harness connector, terminal D to control panel terminal strip, terminals 15/16 with fuse installed?

NO → Go to Step 15 of this Fault.

YES ↓

TEST OPTIONS

Continuity test.

REASON FOR QUESTION

To further isolate fault.

WARNING

Remove all jewelry such as rings, dog tags, bracelets etc. If jewelry or tools contact positive electrical circuits, a direct short may result. Damage to equipment, injury or death to personnel may occur.

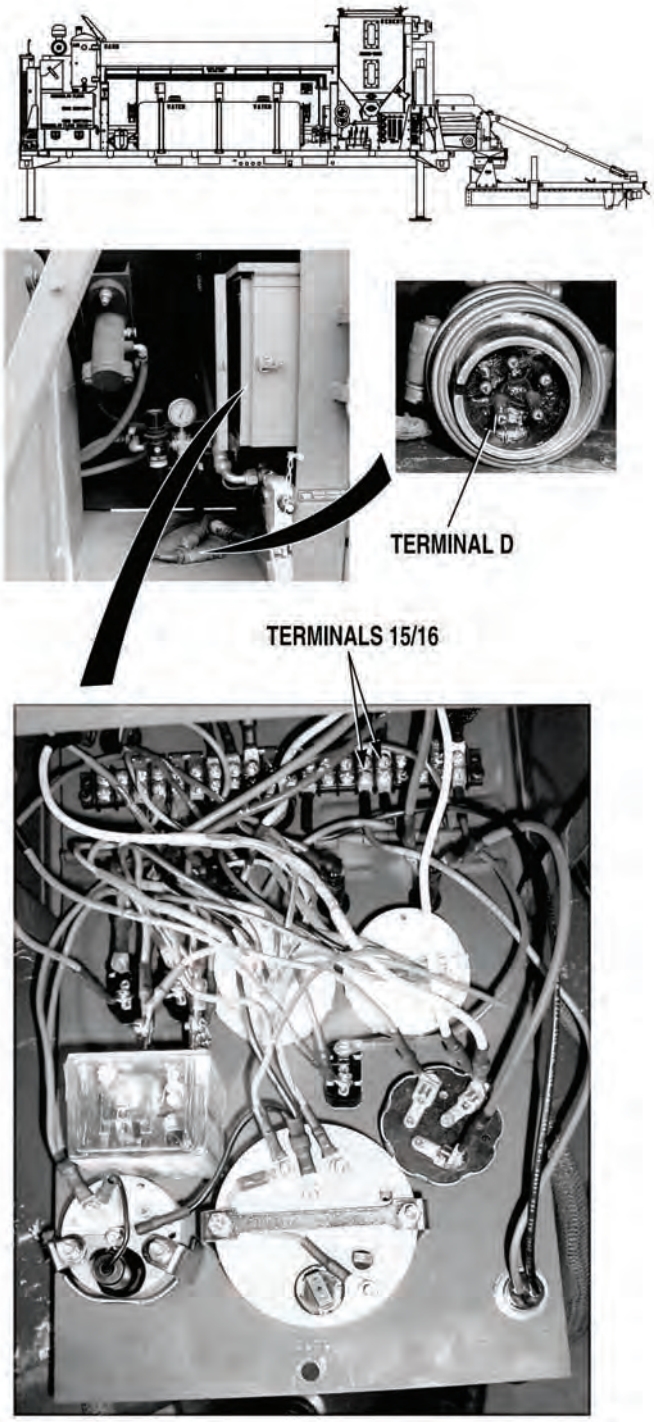

CONTINUITY TEST

(1) Remove control box from Concrete Mobile Mixer, (Para 3-90).

(2) Release latch and open control box door.

(3) Remove screw from top of control panel. Gently tip control panel forward for access to wires.

(4) Set multimeter select switch to ohms.

(5) Turn 12 VOLT switch ON, (Para 2-1).

(6) Connect positive (+) multimeter lead to control box 5-pin connector, terminal D.

(7) Connect negative (-) multimeter lead to control box terminal strip, terminal 15/16.

  (a) If continuity is not measured, go to Step 15 of this Fault.

  (b) If continuity is measured, go to Step 14 of this Fault.

34. WORK LIGHT(S) DO NOT OPERATE (CONT).

KNOWN INFO

- Remote work light ground wire OK.
- Remote work light OK.
- Control wire harness work light power (gray) wire OK.
- Control box 4-pin wire harness work light power (gray) wire OK.
- Control wire harness work light power (yellow) wire OK.
- Control box 4-pin wire harness work light power (yellow) wire OK.
- Control panel work light lamp OK.
- Control panel work light wire connections at terminal strip not loose or corroded.
- Control panel work light OK.
- Other 12 VDC circuits operate.
- LIGHTS fuse OK.
- Main wire harness work light power (orange) wire OK.
- Control panel 5-pin wire harness work light power (orange) wire OK.
- Control panel work light power (orange) wire between fuse and switch OK.
- Control panel work light power (orange) wire between switch and terminal strip OK.
- WORK LIGHTS switch OK.

POSSIBLE PROBLEMS

- Battery equalizer magnetic switch terminals loose or corroded.
- Engine wire harness work light power (orange) wire faulty.

14.

WARNING

Read WARNING on Page 4-1129

Are battery equalizer magnetic switch terminals tight and free from corrosion?

NO → Clean and tighten battery equalizer magnetic switch terminal connections, (Para 3-17). Verify repair, go to Step 18 of this Fault.

YES → Repair work light power (orange) wire, (Para 3-141) or replace engine harness, (Para 3-136). Verify repair, go to Step 18 of this Fault.

TEST OPTIONS

Visual inspection.

REASON FOR QUESTION

If battery equalizer magnetic switch terminals are tight and free from corrosion, engine wire harness work light power (orange) wire is faulty.

WARNING

Remove all jewelry such as rings, dog tags, bracelets etc. If jewelry or tools contact positive electrical circuits, a direct short may result. Damage to equipment, injury or death to personnel may occur.

VISUAL INSPECTION

(1) Remove magnetic switch cover panel from engine compartment, (Para 3-17).

(2) Check if battery equalizer magnetic switch terminals are tight and free from corrosion.

(a) If battery equalizer magnetic switch terminals are not tight and free from corrosion, clean and tighten terminals, (Para 3-17).

(b) If battery equalizer magnetic switch terminals are tight and free from corrosion, repair work light power (orange) wire, (Para 3-141) or replace engine wire harness, (Para 3-136).

(3) Verify repair, go to Step 18 of this Fault.

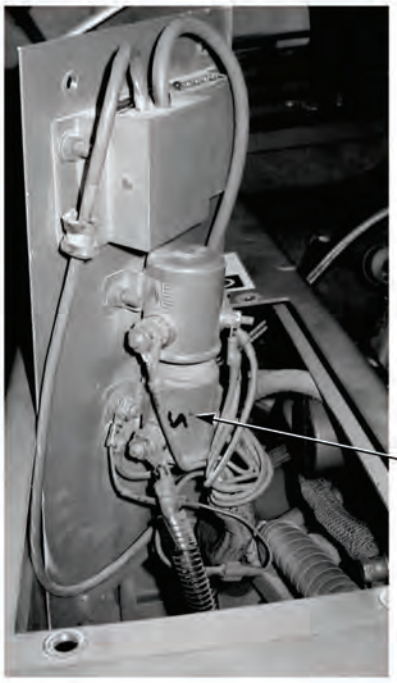

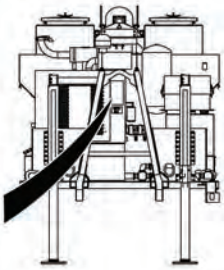

BATTERY EQUALIZER MAGNETIC SWITCH

34. WORK LIGHT(S) DO NOT OPERATE (CONT).

KNOWN INFO

- Remote work light ground wire OK.
- Remote work light OK.
- Control wire harness work light power (gray) wire OK.
- Control box 4-pin wire harness work light power (gray) wire OK.
- Control wire harness work light power (yellow) wire OK.
- Control box 4-pin wire harness work light power (yellow) wire OK.
- Control panel work light lamp OK.
- Control panel work light wire connections at terminal strip not loose or corroded.
- Control panel work light OK.
- Other 12 VDC circuits operate.
- LIGHTS fuse OK.
- Main wire harness work light power (orange) wire OK.
- Battery equalizer magnetic switch terminals not loose or corroded.
- Engine wire harness work light power (orange) wire OK.

POSSIBLE PROBLEMS

- Control panel 5-pin wire harness work light power (orange) wire faulty.
- Control panel work light power (orange) wire between fuse and switch faulty.
- Control panel work light power (orange) wire between switch and terminal strip faulty.
- WORK LIGHTS switch faulty.

15.

WARNING

Read WARNING on Page 4-1131

Is continuity measured across control panel 5-pin wire harness work light power (orange) wire from connector, terminal D to lights fuse holder?

NO → Repair work light power (orange) wire (Para 3-141), or replace control box 5-pin wire harness, (Para 3-138). Verify repair, go to Step 18 of this Fault.

YES ↓

TEST OPTIONS

Continuity test.

REASON FOR QUESTION

If continuity is not measured, control box 5-pin wire harness work light power (orange) wire is faulty.

WARNING

Remove all jewelry such as rings, dog tags, bracelets etc. If jewelry or tools contact positive electrical circuits, a direct short may result. Damage to equipment, injury or death to personnel may occur.

CONTINUITY TEST

(1) Set multimeter select switch to ohms.

(2) Connect positive (+) multimeter lead to control box 5-pin wire harness connector, terminal D.

(3) Connect negative (-) multimeter lead to LIGHTS fuse holder, WORK LIGHT power (orange) wire terminal.

(a) If continuity is not measured, repair work light power (orange) wire, (Para 3-141), or replace control box 5-pin wire harness, (Para 3-138). Verify repair, go to Step 18 of this Fault.

(b) If continuity is measured, go to Step 16 of this Fault.

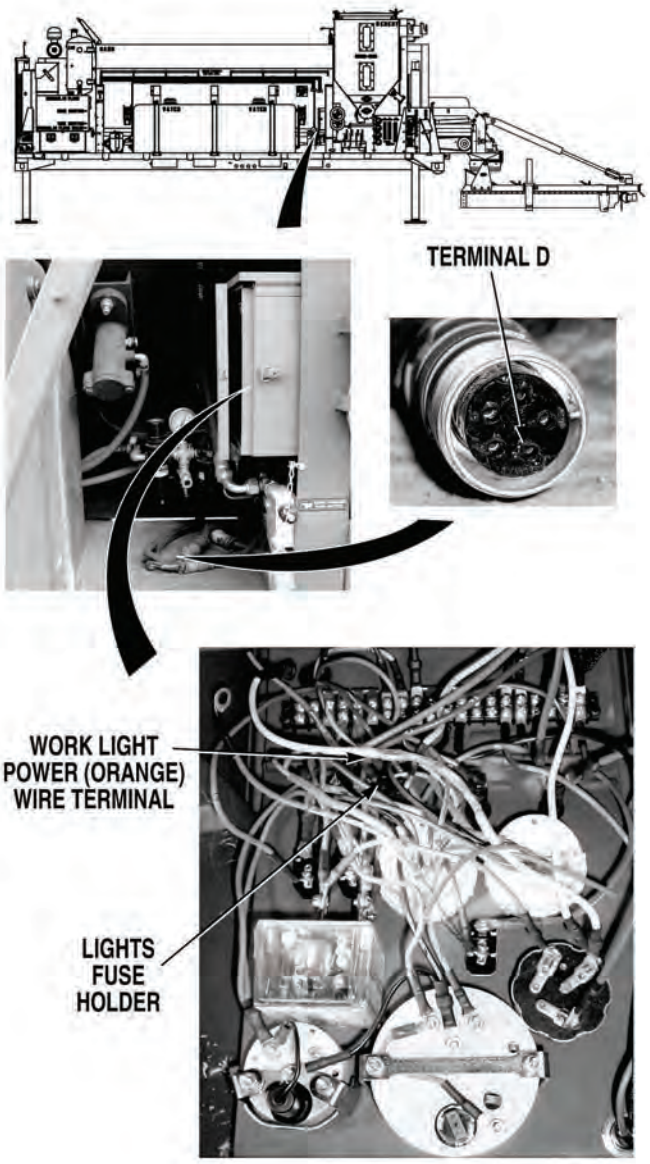

34. WORK LIGHT(S) DO NOT OPERATE (CONT).

KNOWN INFO
Remote work light ground wire OK.
Remote work light OK.
Control wire harness work light power (gray) wire OK.
Control box 4-pin wire harness work light power (gray) wire OK.
Control wire harness work light power (yellow) wire OK.
Control box 4-pin wire harness work light power (yellow) wire OK.
Control panel work light lamp OK.
Control panel work light wire connections at terminal strip not loose or corroded.
Control panel work light OK.
Other 12 VDC circuits operate.
LIGHTS fuse OK.
Main wire harness work light power (orange) wire OK.
Battery equalizer magnetic switch terminal not loose or corroded.
Engine wire harness work light power (orange) wire OK.
Control panel 5-pin wire harness work light power (orange) wire OK.

POSSIBLE PROBLEMS
Control panel work light power (orange) wire between fuse and switch faulty.
Control panel work light power (orange) wire between switch and terminal strip faulty.
WORK LIGHTS switch faulty.

16.

WARNING

Read WARNING on Page 4-1133

Is continuity measured across work light power (orange) wire from LIGHTS fuse holder to WORK LIGHTS switch?

NO → Repair control panel work light power (orange) wire (Para 3-141), or replace control box, (Para 3-90). Verify repair, go to Step 18 of this Fault.

YES ↓

TEST OPTIONS
Continuity test.
REASON FOR QUESTION
If continuity is not measured, control panel work light power (orange) wire is faulty.

WARNING

Remove all jewelry such as rings, dog tags, bracelets etc. If jewelry or tools contact positive electrical circuits, a direct short may result. Damage to equipment, injury or death to personnel may occur.

CONTINUITY TEST

(1) Set multimeter select switch to ohms.

(2) Connect positive (+) multimeter lead to LIGHTS fuse holder, work light power (orange) wire terminal.

(3) Connect negative (-) multimeter lead to WORK LIGHTS switch, work light power (orange) wire terminal.

(a) If continuity is not measured, repair control panel WORK LIGHTS power (orange) wire, (Para 3-141), or replace control box, (Para 3-90). Verify repair, go to Step 18 of this Fault.

(b) If continuity is measured, go to Step 17 of this Fault.

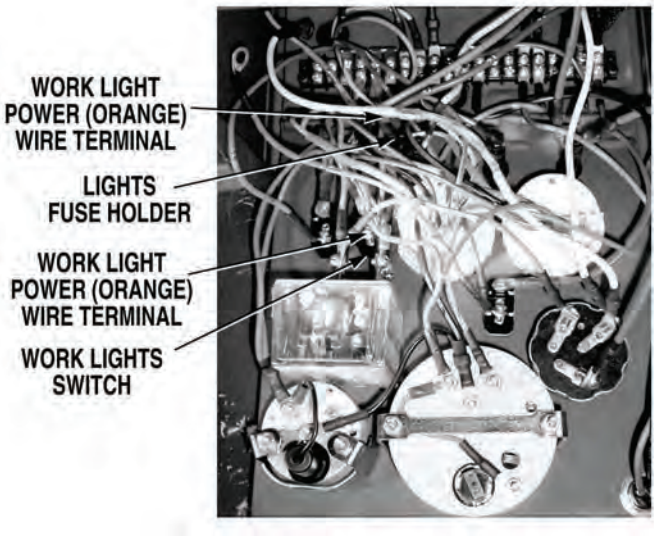

34. WORK LIGHT(S) DO NOT OPERATE (CONT).

KNOWN INFO

- Remote work light ground wire OK.
- Remote work light OK.
- Control wire harness work light power (gray) wire OK.
- Control box 4-pin wire harness work light power (gray) wire OK.
- Control wire harness work light power (yellow) wire OK.
- Control box 4-pin wire harness work light power (yellow) wire OK.
- Control panel work light lamp OK.
- Control panel work light wire connections at terminal strip not loose or corroded.
- Control panel work light OK.
- Other 12 VDC circuits operate.
- LIGHTS fuse OK.
- Main wire harness work light power (orange) wire OK.
- Battery equalizer magnetic switch terminals not loose or corroded.
- Engine wire harness work light power (orange) wire OK.
- Control panel 5-pin wire harness work light power (orange) wire OK.
- Control panel work light power (orange) wire between fuse and switch OK.

POSSIBLE PROBLEMS

- Control panel work light power (orange) wire between switch and terminal strip faulty.
- WORK LIGHTS switch faulty.

17.

WARNING

Read WARNING on Page 4-1135

Is continuity measured across work light power (orange) wire from work light switch to control panel terminal strip, terminals 15/16?

NO → Repair work light power (orange) wire between switch and terminal strip, (Para 3-141), or replace control box, (Para 3-90). Verify repair, go to Step 18 of this Fault.

YES → Replace WORK LIGHTS switch, (Para 3-57). Verify repair, go to Step 18 of this Fault.

TEST OPTIONS

Continuity test.

REASON FOR QUESTION

If continuity is measured, WORK LIGHT switch is faulty. If not, control panel work light power (orange) wire between WORK LIGHTS switch and terminal strip is faulty.

WARNING

Remove all jewelry such as rings, dog tags, bracelets etc. If jewelry or tools contact positive electrical circuits, a direct short may result. Damage to equipment, injury or death to personnel may occur.

CONTINUITY TEST

(1) Set multimeter select switch to ohms.

(2) Connect positive (+) multimeter lead to work light power (orange) wire at WORK LIGHTS switch.

(3) Connect negative (-) multimeter lead to control panel terminal strip, terminals 15/16.

(a) If continuity is not measured, repair, work light power (orange) wire between WORK LIGHTS switch and control panel terminal strip, (Para 3-141), or replace control box, (Para 3-90).

(b) If continuity is measured, replace WORK LIGHT switch, (Para 3-57).

(4) Verify repair, go to Step 18 of this Fault.

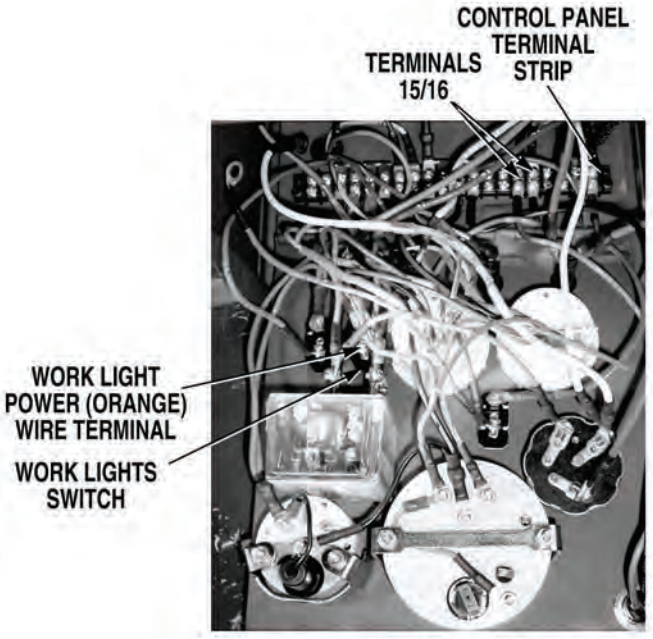

34. WORK LIGHT(S) DO NOT OPERATE (CONT).

KNOWN INFO
Remote work light ground wire OK. Remote work light OK. Control wire harness work light power (gray) wire OK. Control box 4-pin wire harness work light power (gray) wire OK. Control wire harness work light power (yellow) wire OK. Control box 4-pin wire harness work light power (yellow) wire OK. Control panel work light lamp OK. Control panel work light wire connections at terminal strip not loose or corroded. Control panel work light OK. Other 12 VDC circuits operate. LIGHTS fuse OK. Main wire harness work light power (orange) wire OK. Battery equalizer magnetic switch terminal not loose or corroded. Engine wire harness work light power (orange) wire OK. Control panel 5-pin wire harness work light power (orange) wire OK. Control panel work light power (orange) wire between fuse and switch OK. Control panel work light power (orange) wire between switch and terminal strip OK. WORK LIGHTS switch OK.
POSSIBLE PROBLEMS
None.

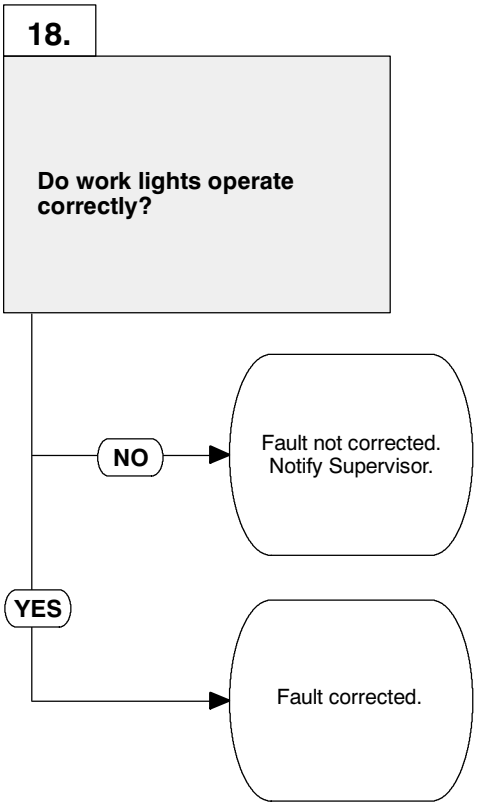

TEST OPTIONS
Verify repair.
REASON FOR QUESTION
If work lights operate correctly, fault has been corrected.

VERIFY REPAIR

(1) If open, close control panel and install screw at top of control panel.

(2) If removed, install control box on Concrete Mobile Mixer, (Para 3-90).

(3) If disconnected, connect control box 4-pin, 5-pin, and 8-pin wire harness connectors, (Para 3-90).

(4) Turn IGNITION SWITCH ON, (Para 2-1). Do not start engine.

(5) Turn 12 VOLT switch ON, (Para 2-1).

(6) Turn WORK LIGHTS switch ON, (Para 2-1).

  (a) If all three work lights do not operate correctly, fault not corrected. Notify Supervisor.

  (b) If work lights operate correctly, fault has been corrected.

(7) Turn WORK LIGHTS switch OFF, (Para 2-1).

(8) Turn 12 VOLT switch OFF, (Para 2-1).

(9) Turn IGNITION SWITCH OFF, (Para 2-1).

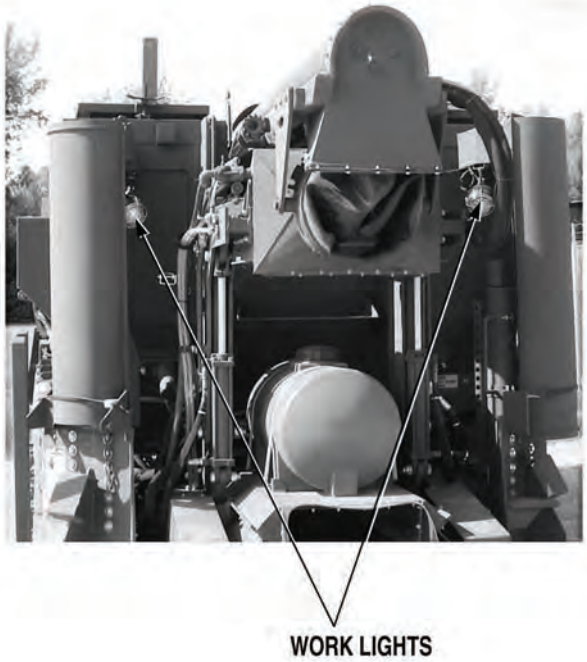

APPENDIX A

ADMIXTURE

Para	Contents	Page
A-1	Air Entrainment	A-1
A-2	Water-Reducing Agent	A-1
A-3	Concrete Accelerator	A-1
A-4	Retarders/Water Reducers Combination	A-2
A-5	Super Plasticizers (or Super Water Reducers or High-Range Water Reducers)	A-2
A-6	Summary	A-2

A-1. AIR ENTRAINMENT.

"Air" as it is commonly called is added to concrete to increase freeze/thaw durability. It should be used in all concrete where freezing temperatures occur. It works by incorporating thousands of microscopic bubbles into a plastic concrete mix. These "bubbles" are too small to see with the naked eye. Air content is expressed as a percent volume of the total mix. Not only does air entrainment make the concrete more durable, it also makes the concrete more flowable, thereby reducing water requirements, improving finishing characteristics (if proper procedures are followed), reducing bleeding, and reducing segregation. Normal recommended air content is 4%–6% with trailer haul applications higher to prevent segregation.

Most "air" admixture is injected at a rate of approximately 1 oz (28 g) per 100 lb (45.4 kg), or 1 oz (28 g)/bag (94 lb [42.6 kg]) of cement.

A-2. WATER-REDUCING AGENT.

A second type of admixture is a water-reducing agent. Its function is to reduce the water required to reach a given slump of concrete mixture. This in effect lowers the water/cement ratio improving the strength of the concrete. It has these advantages:

a. Reduces water requirements

b. The concrete is more waterproof

c. Workability is improved

d. Finishing is easier and quicker

e. Costs per cubic yard can be reduced

f. Injection rates for most water reducers are 1–6 oz (28–170 g) per 100 lb (45.4 kg) of cement.

A-3. CONCRETE ACCELERATOR.

During cold weather periods and in many pre-cast operations, it is desirable to decrease the set time of the plastic concrete mix. The process of concrete "setting up" is a chemical reaction and the rate of this reaction is dependent upon:

a. Cement content of mix

b. Temperature of mix

A-3. CONCRETE ACCELERATOR (CONT).

During cold weather, there are several ways to decrease set time:

c. Increase cement content of mix

d. Use hot water to increase mix temperature

e. Use an accelerating admix

f. Use heated aggregates

There are many types of accelerating admixtures available. The most common and least expensive is calcium chloride. It can be purchased in 100 lb (45.4 kg) bags and dissolved in solution for injection.

There are many non-chloride accelerators available. Many will also contain a water-reducing agent.

Injection rates for accelerators (including calcium chloride) generally vary from 16–64 oz (454–1814 g) per 100 lb (45.4 kg) of cement.

A-4. RETARDERS/WATER REDUCERS COMBINATION.

During extremely hot weather or for very large pours, it is desirable to extend the set time. During hot weather the temperature of the mix becomes high and the concrete can set before it is placed and finished, or a significant strength loss can be noted. This is a problem generally associated with ready mix trucks as travel time, etc., must be considered. It will be a rare occasion when a retarder is used in a concrete dispenser equipped with a mixer, unless the concrete is transported in a ready mix truck.

Most retarders are put in at a rate of 4–8 oz (113–227 g) per 100 lb (45.4 kg) of cement.

A-5. SUPER PLASTICIZERS (OR SUPER WATER REDUCERS OR HIGH-RANGE WATER REDUCERS).

Super plasticizers are a special type of water reducer which can raise the slump of concrete by 4–10 in. (102–254 mm) without changing the amount of water required. They are used to make “flowable” concrete. The product is very costly but many contractors find this higher cost justified by the higher strengths, reduced placement time, etc.

“Supers” were developed in Europe and at the present time, over 70% of all concrete in Europe contains a “super.” We would expect a large growth of “supers” in the USA.

The dosage rate of a “super” can be varied to achieve different slumps. Most are injected at rates of 6–20 oz (170–567 g) per 100 lb (45.4 kg) of cement. The biggest objection to super plasticizers is cost. Some are now available in powder form which reduces cost by 40%–50%. Contact the manufacturer for a dry powdered admix system to fit the concrete dispenser.

A-6. SUMMARY.

The new type of admix system allows for the introduction of any liquid admixture. The admixture type and dosage rate must be established so the concrete dispenser can be equipped with the proper system. Each of these systems must be calibrated with the customer’s admix before it can be used. The new admixture system makes the concrete dispenser easier to operate and maintain.

APPENDIX B

HYDRAULIC OIL

Para	Contents	Page
B-1	Hydraulic Oil Specifications	B-1
B-2	Hydraulic Oil Cross-Reference	B-2
B-3	Hydraulic Oil Filters	B-2
B-4	Conveyor Chain Oiler System	B-2
B-5	Recommended Oils	B-2

B-1. HYDRAULIC OIL SPECIFICATIONS.

The specifications for the hydraulic oil initially used in your unit are as follows:

Operation temperature limited to 32°F due to material (water) limitations.

Any oil added to the hydraulic system must be compatible with the above.

NOTE

- When ambient temperature is 32°F (0°C) or lower, always allow oil to warm up before working.
- When ambient temperature is 10°F (-12.2°C) or lower, use CITGO A/W 32 hydraulic oil or equivalent.

HYDRAULIC RESERVOIR

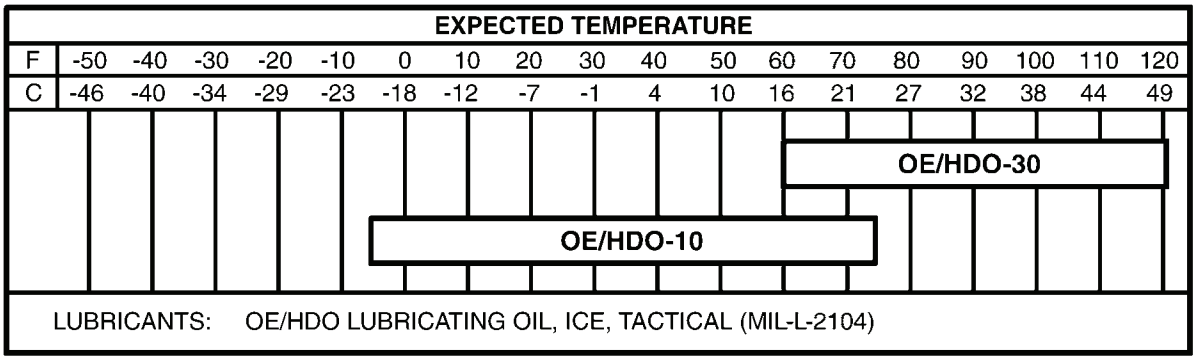

B-2. HYDRAULIC OIL CROSS-REFERENCE.

Following is only a partial list of hydraulic oil that can be used in the hydraulic system. If you have any questions, please notify the supervisor.

a. MOBIL DTE 26

b. PHILLIPS 66 MAGNUS A 68

c. SHELL TELLUS 68

d. AMOCO A/W 68

e. CONOCO SUPER HYDRAULIC OIL 68

f. CITGO A/W 68

B-3. HYDRAULIC OIL FILTERS.

a. There are two suction screens in the suction lines to the pump. The strainers are located in the reservoir at the suction port of the tank. The screens should be cleaned every time the oil is changed.

b. Change the return hydraulic oil filter after the initial 50 hours of operation and every 12 months after minimum.

B-4. CONVEYOR CHAIN OILER SYSTEM.

For lubrication of the main conveyor chain, an automatic chain oiler system is included. It comes on when the conveyor is running and is gravity fed through plastic tubing. Adjust drip controls so one drop of oil drips for every 2 or 3 seconds. The reservoir should be checked daily. Make sure that both sides of the chain are being lubricated.

B-5. RECOMMENDED OILS.

The recommended oil is: SAE 10W NON-DETERGENT.

In warmer climates, 10 weight oil may not be available and 30 weight is acceptable.

APPENDIX C

BASIC ISSUE ITEMS (BII)

Para Contents **Page**

C-1 Basic Issue Items (BII) C-1

C-1. BASIC ISSUE ITEMS (BII).

BII for the Concrete Mobile Mixer follows.

Part Name	Quanity	Part Number	National Stock Number
Tarp 10 x 12 Black	1	5910-71012	
Rope 1/4 in. (6.4 mm) dia. X 50 ft (15.24 m) Poly	1	5910-700	
Breaker Bar	1	1542-201	
IPL57 Grease Gun	1	1142	4930-00-253-2478
77335 Oil Can	1	50-122	4930-00-141-8703
Air Hose Assembly	1	1932-A60	
Air Chuck w/Coupling	1	5401-002	
25 ft (7.62 m) Suction Hose & Strainer	1	1932-703	
Nozzle, Washout	1	5450-001	
Washout Water Hose	1	5400-102	
Bar, Ratchet	1	1932-A61	
Operation Manual w/Keys	1		
58536 Fire Extinguisher	1	AA393-A1I	4210-00-889-2492
Shovel	1	S600D-B	5210-01-474-0299

APPENDIX D

ACCU-VANE

Para Contents **Page**

D-1 Procedure for Field Calibration of Cement Accu-Vane D-1
D-2 Mix Settings Graph Calculations D-3
D-3 Mix Settings D-8
D-4 Aggregate Calibration D-9
D-5 Admixture Calculation D-14

D-1. PROCEDURE FOR FIELD CALIBRATION OF CEMENT ACCU-VANE.

It is recommended that the cement accu-vane be recalibrated from time to time to verify cement delivery. Such recalibration should be made at least once a year, or more often, when required by local Weights and Measures Ordinances or job inspectors. The concrete module can be field calibrated in accordance with the procedure outlined below. For specification work, calibration work should be performed by a Certified Independent Testing Laboratory.

NOTE

Refer to Para 1-1 for general operating information.

Equipment Needed:

(1) Stop watch—accurate in seconds.

(2) Scales—accurate to 1 lb (0.45 kg) for a 400-lb (181-kg) load.

(3) One 55-gal. (208-L) open-top drum empty, clean, dry.

a. Preparation.

(1) Empty both aggregate bins (sand/stone) and clean thoroughly by vigorous sweeping or brushing.

NOTE

Check bin vibration by “feel” of hand against side of bin close to vibrator.

(2) Ensure that all bin vibrators are functioning properly.

(3) Thoroughly clean cement accu-vane discharge tube.

(4) Ensure cement bin aeration system is functioning properly.

(5) Ensure meter register is functioning properly.

(6) Mixing auger should be stowed in travel position.

D-1. PROCEDURE FOR FIELD CALIBRATION OF CEMENT ACCU-VANE (CONT).

(7) Weigh 55-gal. (208-L) drum, empty, and record tare weight.

(8) Fill cement bin with at least 36 bags of cement.

b. Calibration Steps.

(1) Place drum underneath conveyor and run out at least one bag of cement. Ensure that all cement discharged by conveyor belt is being caught in drum.

(2) Ensure that conveyor belt is "primed" with cement—entire belt length has passed under cement accu-vane in Step (1) and full cement discharge is on belt from accu-vane to discharge end.

(3) Remove 55-gal. (208-L) drum containing approximately one bag of cement. Record weight and meter register count. Empty drum back into bin.

(4) Reset cement meter register so it reads all zeros.

(5) Place empty drum beneath conveyor.

(6) Start main conveyor belt to make concrete module operative and precisely at the same time, start timer (stop watch).

NOTE

Carefully time each "run" with a stop watch. Record time required for each "run" through the proper count on cement meter register on work sheet. Also note exact unit count at which meter register stopped.

(7) Watch cement meter register and when it registers the specified count for cement accu-vane, immediately stop conveyer and stop the watch simultaneously.

(8) Weigh cement discharge into 55-gal. (208-L) drum during indicated count on cement meter register. Subtract weight of that drum from total weight of drum and cement. Record this figure. Record weight of the cement in the drum on the work sheet.

NOTE

Always use clean drum. Be sure to jot down weight of cement delivered in each "run" and number of seconds for each "run."

(9) Repeat Steps (4), (6), (7), and (8) at least five times.

NOTE

- For Steps (10) and (11), use the work sheet that shows each step for this purpose.
- When meter count varies from original calibration by more than two points, it is recommended that the unit be recalibrated by a 80 Certified Independent Testing Laboratory.

(10) Calculate cement meter register count for one bag (cubic foot [0.028 cubic m] or 94 lb [42.6 kg]) of cement.

(11) Calculate time, in seconds, required to discharge one bag (cubic foot [0.028 cubic m] or 94 lb [42.6 kg]) of cement.

D-2. MIX SETTINGS GRAPH CALCULATIONS.

NOTE

The operator cannot produce "Certified Strength" concrete if deviating from the chart settings in any way. The concrete module is a precision tool and must be operated as such.

This section of the manual contains information and data that has been specially developed and calculated for your concrete module. This information can be used to determine mix settings for concrete designs not included in the special mix settings chart provided for use, by the operator, when different aggregates and different cements are used.

Mix settings graphs are provided for use by the concrete module operator. These graphs should be used only with the specified aggregate and the cements noted on the graph.

In the back of this section is an easy-to-use, step-by-step outline of procedures to be followed to determine accurate mix control settings necessary to produce: (1) concrete that will meet special design specifications as may be required by some contractors or finishers, and (2) concrete to be made from aggregates and/or cements not specifically covered in the mix control settings charts that are provided.

If the mix setting control data are carefully and exactly applied to the controls on the concrete module, it is possible to produce and deliver "Certified Strength" concrete in accordance with the designs and materials specified on the mix control settings charts. By the same token, if calculations are carefully and exactingly made in accordance with the procedures as outlined herein, with the same care and precision used to develop concrete designs, and with accurate data pertaining to the variations in design and/or materials, it is possible to deliver "Certified Strength" concrete accordingly.

D-2. MIX SETTINGS GRAPH CALCULATIONS (CONT).

CONCRETE DISPENSER MODEL RDCD-100

"ACCU-VANE" FEEDER CALIBRATION
WORK SHEET

1. CLEAN "ACCU-VANE" CEMENT FEEDER
2. MAKE SURE VIBRATOR IS WORKING ON CEMENT BIN.
3. RUN 5 TRIALS TO 150 COUNT. COLLECT & WEIGH EACH SAMPLE.

UNIT SERIAL NO. _____ DATE _____

OWNER _____ LOCATION _____

CEMENT TYPE _____

CEMENT SOURCE _____

TRIAL #	1	2	3	4	5	TOTAL
COUNTS	_____	_____	_____	_____	_____	(A) _____
GROSS WT.	_____	_____	_____	_____	_____	
TARE WT.	_____	_____	_____	_____	_____	
NET WT.	_____	_____	_____	_____	_____	(B) _____
TIME	_____	_____	_____	_____	_____	(C) _____

DETERMINE THE COUNTS PER BAG OF CEMENT

TOTAL POUNDS (B) _____ ÷ TOTAL COUNT (A) _____ =

(D) _____ POUNDS PER COUNT

94 LBS. PER BAG ÷ LBS. PER COUNT (D) _____ =

(E) _____ COUNTS PER BAG

DETERMINE DISCHARGE TIME PER BAG

TOTAL COUNTS (A) _____ ÷ TOTAL SECONDS (C) _____ =

(F) _____ COUNTS PER SEC.

COUNTS PER BAG (E) _____ ÷ COUNTS PER SEC. (F) _____ =

SECONDS PER BAG _____

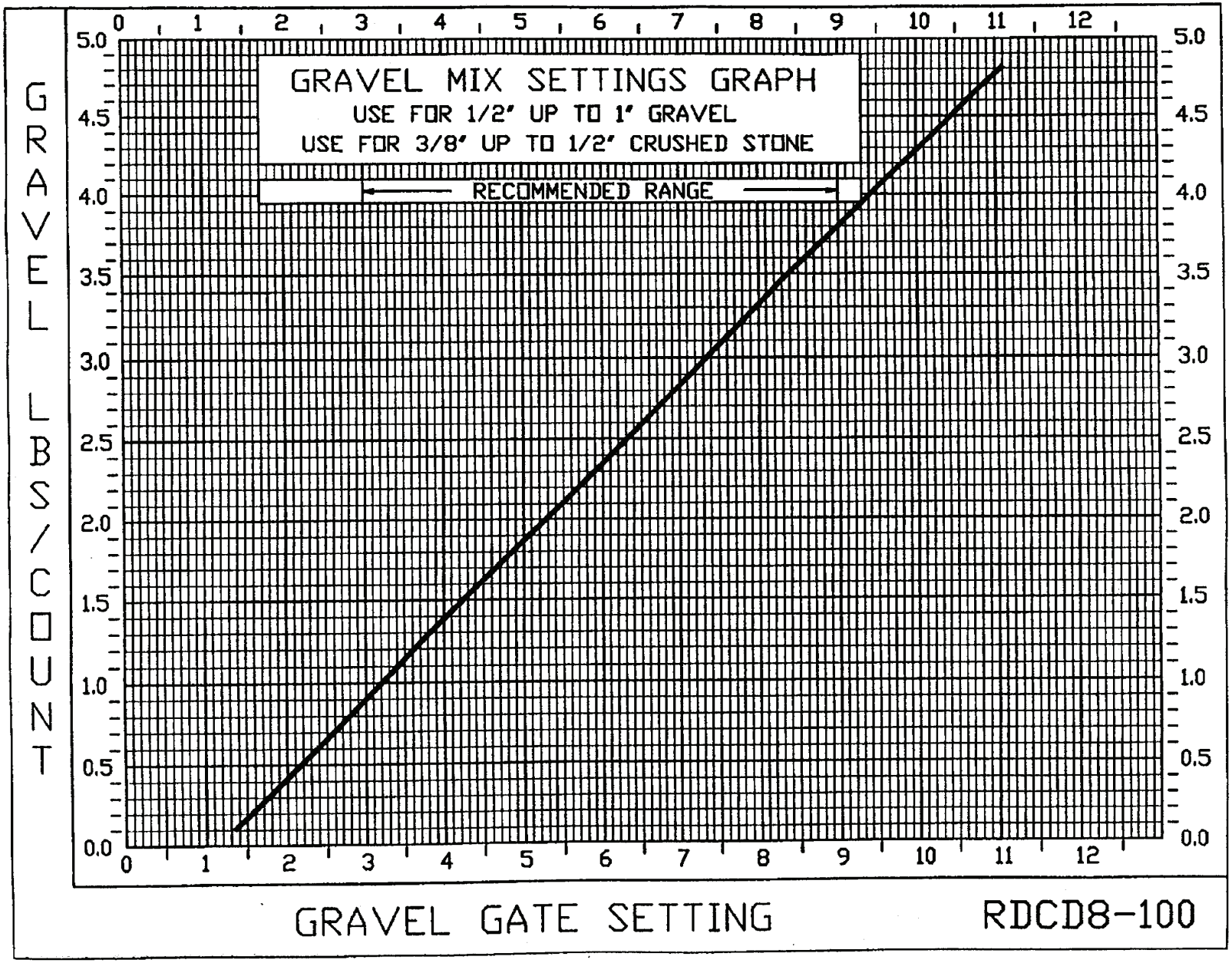
GRAVEL MIX SETTINGS GRAPH
USE FOR 1/2" UP TO 1" GRAVEL
USE FOR 3/8" UP TO 1/2" CRUSHED STONE
RECOMMENDED RANGE
GRAVEL LBS/COUNT
GRAVEL GATE SETTING
RDCD8-100
0
1
2
3
4
5
6
7
8
9
10
11
12
0.0
0.5
1.0
1.5
2.0
2.5
3.0
3.5
4.0
4.5
5.0

D-2. MIX SETTINGS GRAPH CALCULATIONS (CONT).

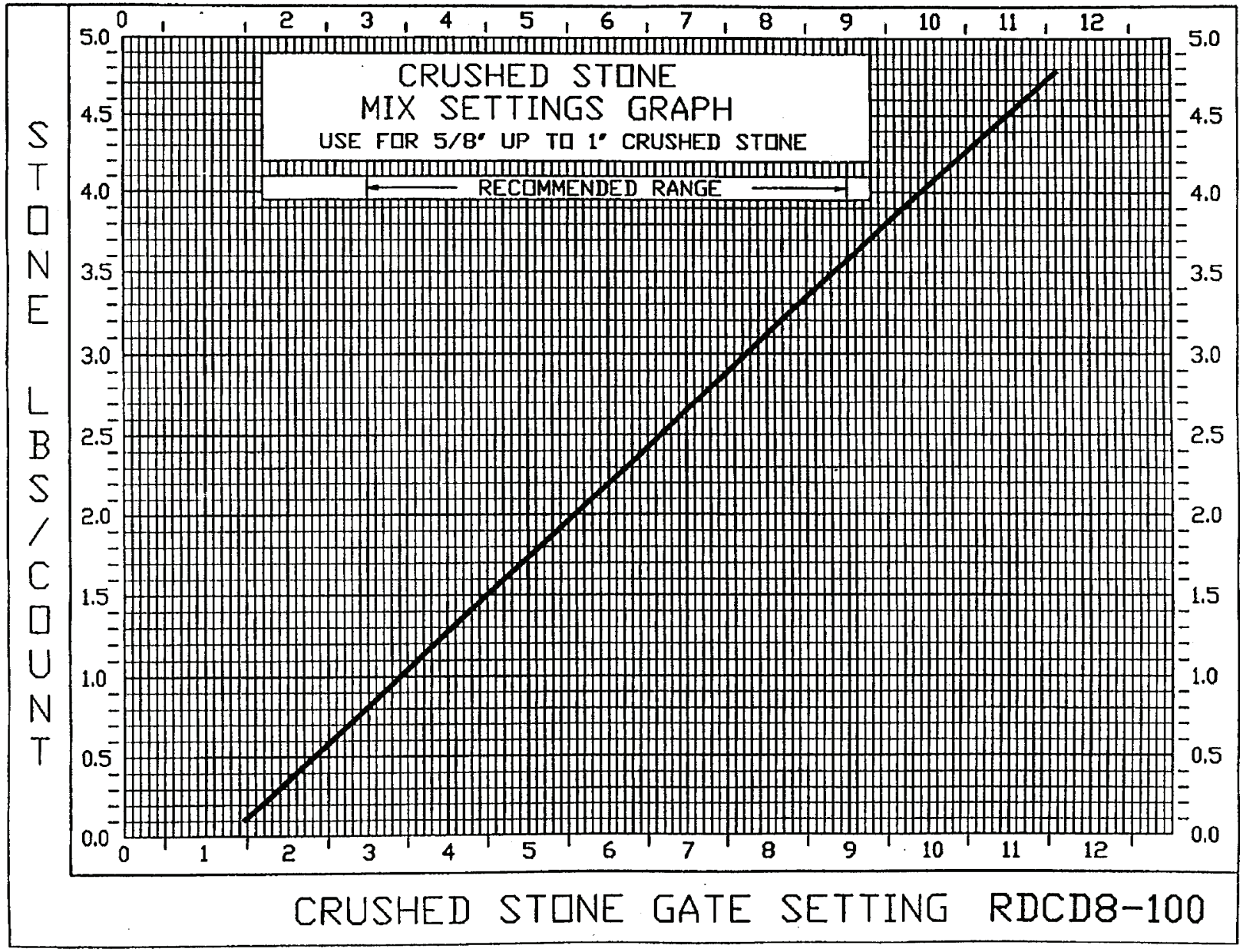

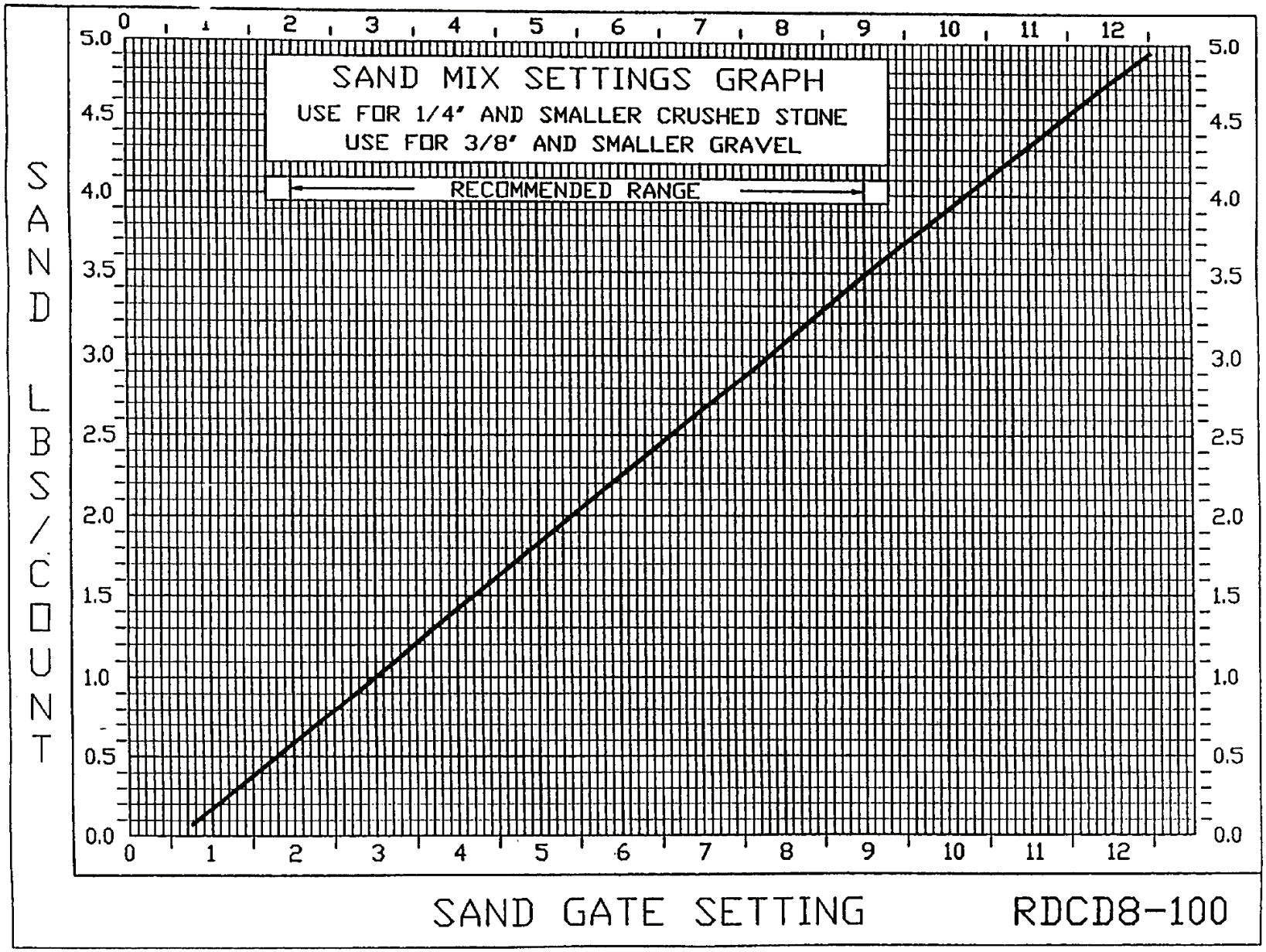
SAND MIX SETTINGS GRAPH
USE FOR 1/4" AND SMALLER CRUSHED STONE
USE FOR 3/8" AND SMALLER GRAVEL
RECOMMENDED RANGE
SAND LBS/COUNT
SAND GATE SETTING
RDCD8-100
0.0
0.5
1.0
1.5
2.0
2.5
3.0
3.5
4.0
4.5
5.0
0
1
2
3
4
5
6
7
8
9
10
11
12

D-3. MIX SETTINGS.

Before it is possible to calculate the settings tables, certain basic information is required. This is to be provided by the purchaser. It includes:

a. Weight, Type, Size of Coarse Aggregate.

Weight to be in lb per cubic yard (kg per cubic m) coarse aggregate.

Size to be in inches (mm).

Type to cover limestone, gravel, slag, etc.

b. Weight of Sand.

Weight to be in lb per cubic yard (kg per cubic m) sand.

c. Class and Type of Cement Used.

As: Type 1—Normal; Type 1-A—Air Entrained; etc.

If cement to be used varies from the U.S. Standard of 94 lb (42.6 kg) per cubic foot (0.028 cubic m) (per bag), such information should be provided.

d. Concrete Design Formulas.

To be listed in pounds of each of the aggregates (sand, coarse aggregate) per cubic yard of concrete pounds (or 94 lb [42.6 kg] bags) of cement per cubic yard of concrete.

Design formulas should be listed for each of five different strength requirements (28-day cure) as: 3000 psi (30,685 kPa); or 5-1/2 bags (94 lb [42.6 kg] bags); 3500 psi (24,133 kPa); 6 bags (94 lb [42.6 kg] bags), per cubic yard (0.77 cubic m) of concrete.

Such formulas generally are determined by a concrete engineer, laboratory, etc., and are based on the aggregates and cements normally used by the concrete module owner, and are based on the physical characteristics of those aggregates.

Thus, the factors required to calculate the mix settings charts are:

(From Data Provided by Purchaser):

(1) Weight, type, size of coarse aggregate

(2) Weight of sand

(3) Class and type of cement

(4) Concrete design formulas

(From Calibration Data for the Concrete Module):

(1) Cement meter count

(2) Cement discharge time

The form used to show the settings to be used to produce any of the specified design mixes is reproduced below.

NOTE

- The settings for ingredients proportioning controls on the concrete module, are listed in a single vertical column for each different concrete design mix. The space at the right of each of the columns shows the strength specification for the concrete to be produced, or lists the number of bags (94 lb [42.6 kg] bags or cubic feet) of cement per cubic of concrete.
- Suggested gate settings for various mixes

MIX NUM.	CEMENT CONTENT #/CU. YD.	CEMENT CONTENT BAGS/CY	COUNTS PER CU. YD.	A SAND GATE	B STONE GATE	C STONE GATE	D STONE GATE	E APPROX. PSI
1	470	5	750	5.2	5.9	6.0	5.7	2500
2	517	5.5	825	4.7	5.4	5.6	5.3	3000
3	564	6	900	4.3	4.9	5.1	4.8	3500
4	611	6.5	975	3.9	4.5	4.8	4.6	4000
5	658	7	1050	3.7	4.2	4.5	4.2	4500
6	705	7.5	1125	3.4	3.9	4.2	4.0	5000
7	752	8	1200	3.2	3.6	3.9	3.7	5500

NOTE

- These gate settings are approximate. It is highly recommended that a yield check and compression testing of cast cylinders be used to verify the particular mix selected.
- COLUMN A: For normal washed concrete sand.
- COLUMN B: Use for 1/4 in. (6.4 mm) and smaller crushed stone, and 3/8 in. (9.5 mm) and smaller gravel.
- COLUMN C: Use for 5/8 in. (15.9 mm) to 1 in. (25.4 mm) crushed stone.
- COLUMN D: Use for 1/2 in. (12.7 mm) to 1 in. (25.4 mm) gravel, and 3/8 in. (9.5 mm) to 1/2 in. (12.7 mm) crushed stone.
- COLUMN E: These are approximate psi compression strength after 28-day cure. Concrete must be produced with maximum 4 in. (102 mm) slump to meet these strengths. Test cylinders must be taken to verify strengths and accuracy of gate settings.

D-4. AGGREGATE CALIBRATION.

If you should need to calibrate the Concrete Mobile Mixer with the aggregate you are actually using, follow the simple steps on this page. Due to the efficiency of the aggregate metering system of the Concrete Mobile Mixer, the operator only needs to calibrate a low sample and high sample, and then a straight line can be drawn on the graph to show the relationship between gate opening and volume of material delivered.

D-4. AGGREGATE CALIBRATION (CONT).

CAUTION

Never run conveyor belt with gate closed and touching the belt. Failure to comply could result in damage to equipment.

To calibrate for each aggregate, proceed as follows:

a. Disengage cement bin clutch, refer to Para 2-16.

b. Fill aggregate bin which operator is calibrating with material being calibrated.

c. For “low” sample, set gate at “3.”

d. Run Concrete Mobile Mixer conveyor until material is discharged off the end of conveyor.

e. Set container under conveyor discharge.

f. Reset counter to “0.”

g. Run conveyor long enough to fill container with as large a sample as can be lifted onto scale. The larger the sample, the more accurate the calibration.

h. Record gate setting, meter count and gross weight.

i. Empty container. Weigh it again. Enter this weight under the “tare weight.”

j. Repeat above steps g through i two times.

k. Reset gate to “7.”

l. Run conveyor until the obvious “step” in material weight has reached discharge point.

m. Repeat above steps e through i two times.

n. Follow instructions on aggregate calibration form to determine “pounds per count” at the low and high setting.

o. Locate and mark these points on graph.

p. Draw a straight line between these points.

q. Maximum aggregate size for 9 in. (229 mm) mixer is 1 in. (25.4 mm) minus.

CONCRETE DISPENSER MODEL RDCD-100

AGGREGATE CALIBRATION WORK SHEET

Type of Aggregate: _____ Date: _____

1. Disconnect "ACCU-VANE".

2. Check to see that material guides are adjusted properly.

3. If you have a 2 aggregate system, fill only one bin half full.

4. The pointers should read 12 when the gate is closed on top of the conveyor belt. This way the pointer is reading the scale properly. Adjusted gage wheel if the pointer is not set properly.

5. A calibration is required for each material you will use. If you change materials either by source or gradation, a new calibration is required.

Trial #	1	2	3	4	5	6
Gate setting	_____	_____	_____	_____	_____	_____
Counts	_____	_____	_____	_____	_____	_____
Gross WT.	_____	_____	_____	_____	_____	_____
Tare WT.	_____	_____	_____	_____	_____	_____
Net WT.	_____	_____	_____	_____	_____	_____

6. After you run the two trials of each gate setting add the two Counts together and add the two Net WT. together. Fill in the blanks of the two formulas.

LOW SETTING:
TOTAL POUNDS _____ ÷ **TOTAL COUNT** _____ = **LBS/COUNT**_____

HIGH SETTING:
TOTAL POUNDS _____ ÷ **TOTAL COUNT** _____ = **LBS/COUNT**_____

7. These values can be plotted on the material graph which is used to set gate settings for the proper mix designs.

D-4. AGGREGATE CALIBRATION (CONT).

INGREDIENTS PROPORTIONING CONTROL DATA WORK SHEET. RDCD8-100

BAGS/CU. YD. [ ] PSI [ ] DATE [ ]

INGEDIENTS DATA	MIX DESIGN DATA
(A) TYPE OF STONE [ ]	(C) CONCRETE STRENGTH [ ]
TYPE OF STONE WILL DETERMINE WHICH GRAPH TO USE.	(D) POUNDS OF SAND/CU. YD. [ ]
	(E) POUNDS OF STONE /CU. YD. [ ]
(B) CEMENT METER COUNT PER BAG OF CEMENT [150]	(F) POUNDS OF CEMENT/CU. YD. [ ]
	(G) BAGS OF CEMENT/CU. YD. 1 BAG = 94 LBS. [ ]

(1) CEMENT METER COUNT PER CU. YD.

(B) _____ X (G) _____ = (T) [ ] COUNTS PER CU. YD.

(2) SAND GATE SETTING

(D) _____ / (T) _____ = [ ] POUNDS PER COUNT

GATE SETTING FROM SAND MIX SETTINGS GRAPH USE CORRECT GRAPH [ ] SAND GATE

USE SAND FLOW GRAPH. PROJECT STRAIGHT HORIZONTAL LINE FROM VERTICAL (Y) AXIS TO INTERSECT WITH GRAPH. FROM INTERSECTION, PROJECT STRAIGHT LINE DOWN TO GATE SETTING (X AXIS).

(3) STONE DIAL SETTING

(E) _____ / (T) _____ = [ ] POUNDS PER COUNT

GATE SETTING FROM STONE MIX SETTINGS GRAPH. USE CORRECT GRAPH [ ] STONE GATE

USE STONE FLOW GRAPH. PROJECT STRAIGHT HORIZONTAL LINE FROM VERTICAL (Y) AXIS TO INTERSECT WITH GRAPH. FROM INTERSECTION, PROJECT STRAIGHT LINE DOWN TO GATE SETTING (X AXIS).

(4) ONE QUARTER CU. YD. YIELD CHECK

At this point we recommend that you perform a 1/4 cu. yd. yield check. Construct a sturdy box with inside dimensions of 3 ft. by 3 ft. by 9 in. (1/4 cu. yd.). This box can be without bottom so the concrete may be used after the test by simply removing. Of course, the test must be made inside the flatwork and the form must remain rigid. Determine the counts per 1/4 cu. yd.

(T) _____ /4 = [ ] COUNTS PER 1/4 CU. YD.

Place the 1/4 cu. yd. yield box under the discharge of the mixer. Swing the mixer to the side and begin concrete production. After producing about 1/8 cu. yd., stop the mixer and conveyor simultaneously. Reset the counter. Swing the mixer so that discharge is into the yield box. Restart concrete production. When the count for 1/4 cu. yd. is reached, stop the mixer and conveyor simultaneously. Check the level of concrete in the yield box.. If it overflows, too much aggregate is being added per unit of cement. The gates should be lowered so that less aggregate is introduced. If the box is underfilled, then too little aggregate is being introduced. The gates should be opened to introduce more aggregate. The yield check should be repeated after the gates are adjusted.

FINAL REVISED GATE SETTINGS

SAND [ ]

STONE [ ]

It is advisable to periodically check the gate calibration to insure the gate opening indicator registers correctly. The gate opening indicator should read 12 when the gate is resting on the aggregate conveyor belt.

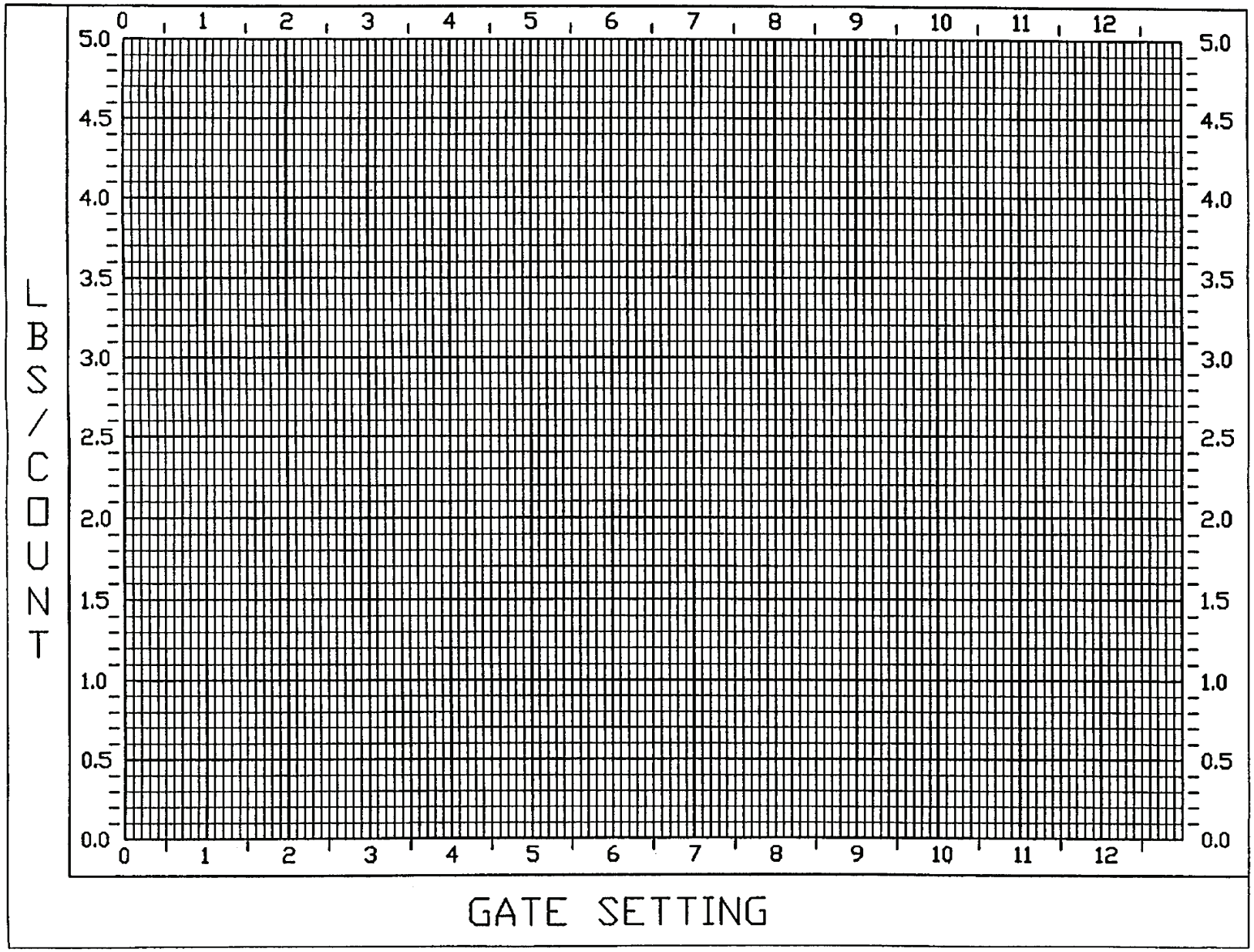
LBS/COUNT
5.0
4.5
4.0
3.5
3.0
2.5
2.0
1.5
1.0
0.5
0.0
0 1 2 3 4 5 6 7 8 9 10 11 12
GATE SETTING

D-5. ADMIXTURE CALCULATION.

NOTE

Refer to Appendix A for more information on admixtures.

The admixture systems on the concrete module are 12 volt dc pumps through a flowmeter. A quick acting valve starts and stops the admix flow simultaneously with operation of the conveyor control. The pumps also start and stop with the conveyor control (if the control switch is in the "auto" position).

Located at the control panel is the function selector switch for the admix system. A three-position switch has the following selections:

"ON"—Turns the admix system on. It is used during calibration to set the flow rate.

"OFF"—Used to shut off the admix system so no admixture is injected into the concrete.

"AUTO"—When the control switch is in the auto position, the admix system starts and stops in conjunction with the conveyor control.

The two admix systems available on the concrete are the HIGH FLOW and LOW FLOW systems. The LOW FLOW system is designed to inject liquids at rates of 10–50 oz (284–1418 g) per min. The HIGH FLOW system is designed to introduce admixture at rates of 1–6 qt (0.95–5.68 L) per min. Typically the LOW FLOW system is for air entrainment, water reducing, and similar low-dosage admixtures. The HIGH FLOW system is used for accelerators (calcium chloride) and other high-dosage admixtures.

General Considerations.

(1) The admix must approach the flowability of water. Thick admixes will have to be diluted so they can be used in the system. If dissolving an admixture, it must be completely dissolved.

(2) Trying to set the dosage rate too low on the flowmeter scale can cause problems in obtaining a consistent flow. If operator has this problem, dilute the admix with more water.

(3) The flowmeters used are calibrated with water. Since the viscosity of admix may be different than water, we recommend using a graduated container and actually calibrating the admix flowmeters with your admixture.

Refer to the calibration work sheet for the procedure.

LIQUID ADMIX DILUTION RATE CHART

LOW FLOW SYSTEM

RECOMMENDED LIQUID ADMIXTURE DILUTION RATE
LOW FLOW SYSTEM FOR CONCRETE MODULE

MINIMUM FLOW RATE 10 OZ. PER MIN. @ SETTING 5
MAXIMUM FLOW RATE 42 OZ. PER MIN. @ SETTING 20

APPROXIMATE DISCHARGE RATES IN BAGS(94 LBS.) PER MINUTE OF CEMENT. REFER TO SECTION 3 FOR THE ACCU-VANE CALIBRATION FOR THE EXACT DISCHARGE TIME. USE THE ADMIX CALCULATION WORK SHEET TO DETERMINE THE EXACT DOSAGE RATE AND FLOWMETER SETTING. FLOWS GIVEN ARE FOR LIQUIDS WITH VISCOSITY SIMILAR TO WATER.

SERIES RDCD	TIME (SEC.) TO DISCHARGE ONE BAG(94 LBS.) CEMENT	BAGS PER MIN. DISCHARGED.
100	27 SEC.	2.2

DILUTION RATE GIVEN IN PARTS WATER:PART ADMIX

SERIES RDCD	ADMIX MFG. RECOMMENDED ADDITION RATE OZ./100 LBS. CEMEN					
	0.5	1.0	2.0	3.0	4.0	5.0
100	10:1	5:1	3:1	2:1	1:1	1:1

NOTE: ABOVE DILUTION RATES ARE MINIMUM. YOU MAY DILUTE MORE IF NECESSARY BECAUSE OF CLEARNESS OR VISCOSITY OF THE LIQUID.

RDCD
AMIX_DIL.WK3/05/98

LIQUID ADMIX DILUTION RATE CHART

HIGH FLOW SYSTEM RDCD

RECOMMENDED LIQUID ADMIXTURE DILUTION RATE
HIGH FLOW SYSTEM FOR SERIES 100 CONCRETE MODULE.

MINIMUM FLOW RATE 42 OZ. PER MIN. @ SETTING 20
MAXIMUM FLOW RATE 213 OZ. PER MIN. @ SETTING 100

APPROXIMATE DISCHARGE RATES IN BAGS(94 LBS.) PER MINUTE OF CEMENT. REFER TO SECTION 3 FOR ACCU-VANE CALIBRATION FOR THE EXACT DISCHARGE TIME. USE THE ADMIX CALCULATION WORK SHEET TO DETERMINE THE EXACT DOSAGE RATE AND FLOWMETER SETTING. FLOWS GIVEN ARE FOR LIQUIDS WITH VISCOSITY SIMILAR TO WATER.

SERIES RDCD	TIME (SEC.) TO DISCHARGE ONE BAG(94 LBS.) CEMENT	BAGS PER MIN. DISCHARGED.
100	27 SEC.	2.2

DILUTION RATE GIVEN IN PARTS WATER:PART ADMIX

SERIES RDCD	ADMIX MFG. RECOMMENDED ADDITION RATE OZ./100 LBS. CEMEN					
	5	10	15	20	25	30
100	4:1	3:1	2:1	2:1	1:1	1:1

NOTE: ABOVE DILUTION RATES ARE MINIMUM. YOU MAY DILUTE MORE IF NECESSARY BECAUSE OF CLEARNESS OR VISCOSITY OF THE LIQUID.

RDCD
AMIX_DIL.WK3/05/98

D-5. ADMIXTURE CALCULATION (CONT).

CONCRETE MODULE

ADMIXTURE CALIBRATION
WORK SHEET

Admix dosage rates are usually given in oz. per bag or oz. per 100 lbs. of cement. During calibration of the cement vane feeder you determined the discharge time per bag of cement. All you have to do is coordinate the flow of admixture to this discharge time of the cement.

CEMENT DISCHARGE TIME (A)_____ seconds/bag (94 lbs.)
Locate the time from section 3 work sheet.

TO DETERMINE BAGS PER MINUTE DISCHARGED;

60 sec. ÷ (A)_____ = (B)_____ BAGS/MIN.
SECONDS PER BAG

Calculate the dilution rate for admix. The recommended minimum flow rate through the flowmeter is:

LOW FLOW 10 oz. per min.
HIGH FLOW 40 oz. per min.

The cement discharge rate of the CONCRETE MODULE is approximately 2.11 bags per minute. If you the admixture that you are using recommends a lower flow rate then the admix will need to be diluted with water. Refer to the LIQUID ADMIX DILUTION RATE form to determine the proper dilution rate.

RECOMMENDED DOSAGE RATE _____(C) oz./ bag

DILUTION RATE_____ water + _____ admix=_____(D)

DOSAGE RATE OF DILUTED ADMIX (D)_____ X (C)_____ = (E)_____

(E)_____ DILUTED ADMIX x (B)_____ = _____ oz/min.

FLOWMETER SETTING FROM CHARTS _____ (Flow Chart)

THE FOLLOWING IS USED FOR ACTUAL CALIBRATION OF YOUR ADMIX FLOWMETER.

CALIBRATION

FLOW METER READING	_____	_____	_____	_____	_____	_____	_____
TIME (sec.)	_____	_____	_____	_____	_____	_____	_____
OZ. ADMIX	_____	_____	_____	_____	_____	_____	_____
OZ./MIN.	_____	_____	_____	_____	_____	_____	_____

FLOWMETER SETTING _____

NOTE: There is a strainer in the line to the admix pump. If flow is reduced clean the strainer.

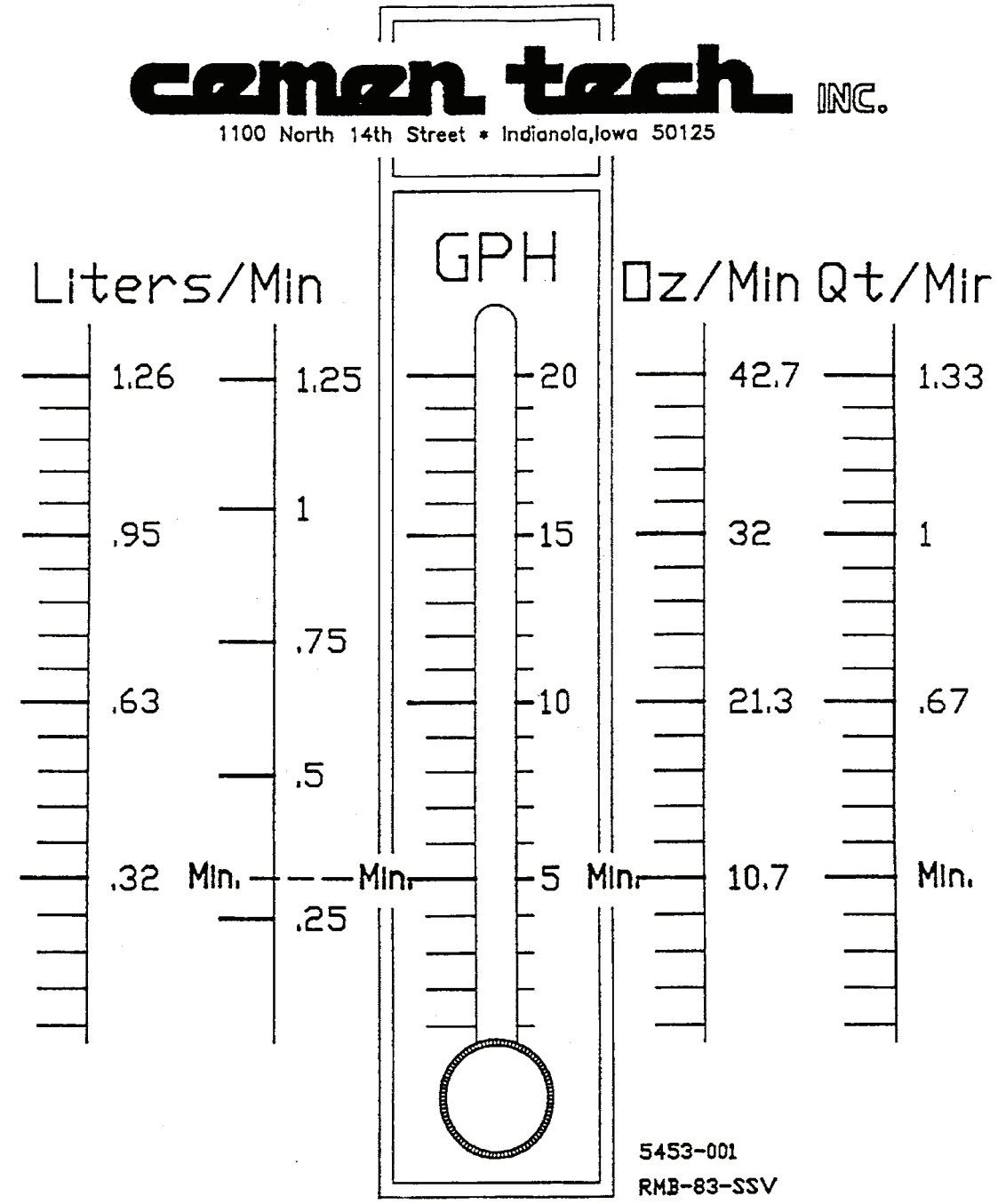

1 U.S. Gallon = 3.785 Liters
1 Liter = .2642 U.S. Gallon

READ FLOAT HERE →

1 U.S. Gallon = 128 U.S. Ounces
1 U.S. Quart = .9463 Liter

ALL VOLUMES ARE U.S. STANDARD

DO NOT SET FLOW BELOW Min.

D-5. ADMIXTURE CALCULATION (CONT).

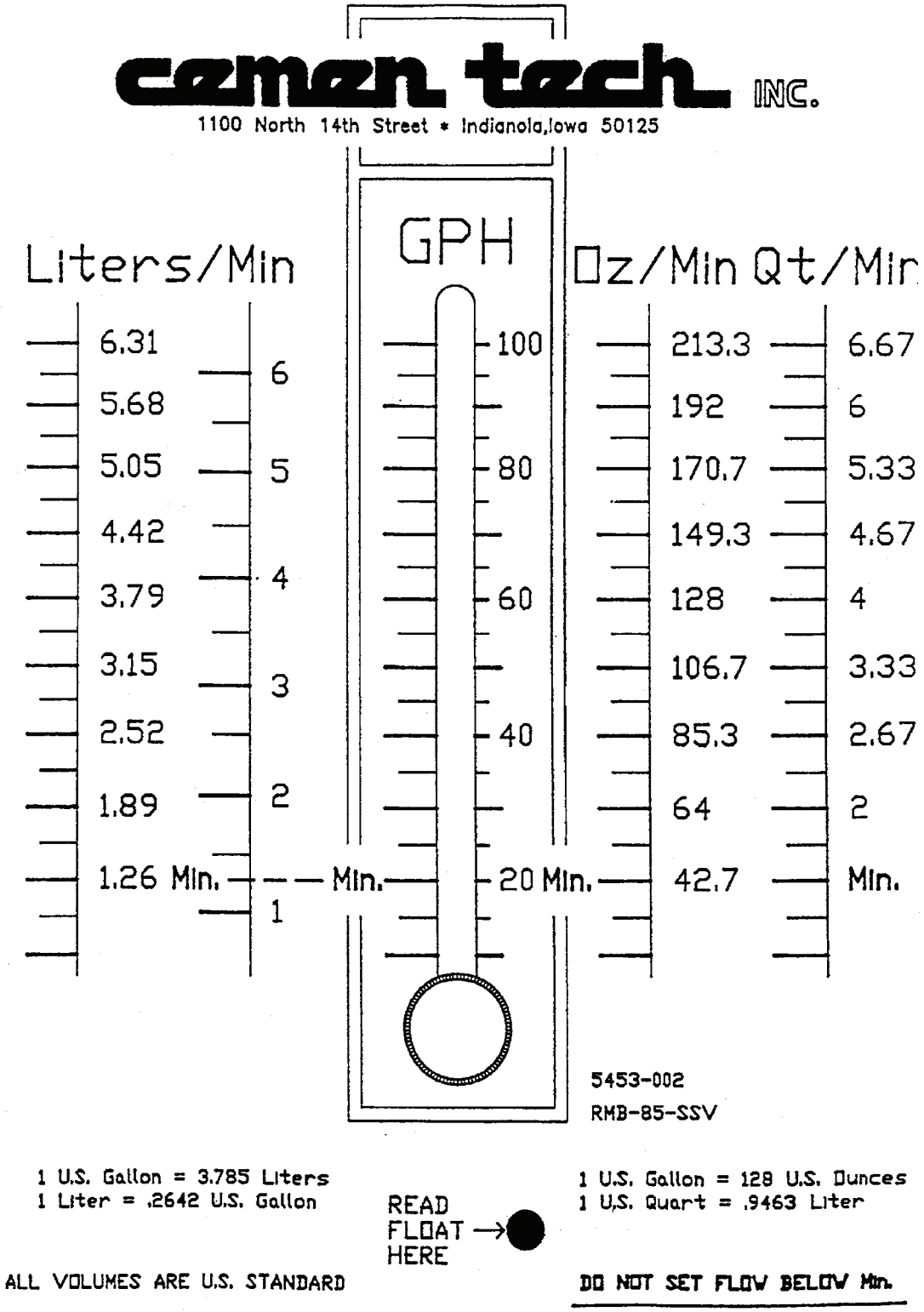

APPENDIX E
REPAIR PARTS AND SPECIAL TOOLS LIST (RPSTL)

Section I. INTRODUCTION E-1

Section II. REPAIR PARTS LIST

Figure 1. Concrete Mixer Overview 1-1
Figure 2. Conveyor 2-1
Figure 3. Conveyor Drive 3-1
Figure 4. Cement Bin 4-1
Figure 5. Concrete Metering Assembly 5-1
Figure 6. Cement Bin Drive Assembly 6-1
Figure 7. Cement Clutch 7-1
Figure 8. Aggregate Bin 8-1
Figure 9. Swivel 9-1
Figure 10. Mixer Support 10-1
Figure 11. Mixer 11-1
Figure 12. Air System 12-1
Figure 13 Water System 13-1
Figure 14. Water Control 14-1
Figure 15. Hydraulic Tank 15-1
Figure 16. Control Panel 16-1
Figure 17. Control Panel Wiring Harness 17-1
Figure 18. Hydraulics 18-1
Figure 19. Lift Cylinders and Control Valves 19-1
Figure 20. Air Cleaner 20-1
Figure 21. Exhaust System 21-1
Figure 22. Engine 22-1
Figure 23. Control Box Wiring Harness 23-1
Figure 24. Fluid Filter (Used on S/N 8RDCD301513HC thru 8RDCD301619HC) 24-1
Figure 25. Fluid Filter (Used on S/N 8RDCD301620HC and Subsequent) 25-1
Figure 26. Oil Filter 26-1
Figure 27. Worklight 27-1
Figure 28. Engine Mounting (Used on S/N 8RDCD301513HC thru 8RDCD301619HC) 28-1
Figure 29. Engine Mounting (Used on S/N 8RDCD301620HC and Subsequent) 29-1
Figure 30. Starter (Used on S/N 8RDCD301513HC thru 8RDCD301619HC) 30-1
Figure 31. Starter (Used on S/N 8RDCD301620HC and Subsequent) 31-1
Figure 32. Alternator (Used on S/N 8RDCD301513HC thru 8RDCD301619HC) 32-1
Figure 33. Alternator (Used on S/N 8RDCD301620HC and Subsequent) 33-1
Figure 34. Throttle Control 34-1
Figure 35. Cooling System (Used on S/N 8RDCD301513HC thru 8RDCD301619HC) 35-1
Figure 36. Cooling System (Used on S/N 8RDCD301620HC and Subsequent) 36-1
Figure 37. Batteries and Accessories 37-1
Figure 38. Magnetic Start Switch (Used on S/N 8RDCD301513HC thru 8RDCD301619HC) 38-1
Figure 39. Engine Enclosure 39-1
Figure 40. Control Panel 40-1
Figure 41. Air Compressor 41-1
Figure 42. Air Intake Connection (Used on S/N 8RDCD301513HC thru 8RDCD301619HC) 42-1

Figure 43. Air Intake Connection (Used on S/N 8RDCD301620HC and Subsequent) 43-1
Figure 44. Oil Level Gage 44-1
Figure 45. Oil Pan (Used on S/N 8RDCD301513HC thru 8RDCD301619HC) 45-1
Figure 46. Oil Pan (Used on S/N 8RDCD301620HC and Subsequent) 46-1
Figure 47. Exhaust Manifold 47-1
Figure 48. Water Pump 48-1
Figure 49. Fan Drive (Used on S/N 8RDCD301513HC thru 8RDCD301619HC) 49-1
Figure 50. Fan Drive (Used on S/N 8RDCD301620HC and Subsequent) 50-1
Figure 51. Thermostat 51-1
Figure 52. Fuel System Accessories (Used on S/N 8RDCD301513HC thru 8RDCD301619HC) 52-1
Figure 53. Fuel System Accessories (Used on S/N 8RDCD301620HC and Subsequent) 53-1
Figure 54. Fuel Shutoff Valve 54-1
Figure 55. Fuel Injector (Used on S/N 8RDCD301513HC thru 8RDCD301619HC) 55-1
Figure 56. Fuel Injector (Used on S/N 8RDCD301620HC and Subsequent) 56-1
Figure 57. Fuel Plumbing (Used on S/N 8RDCD301513HC thru 8RDCD301619HC) 57-1
Figure 58. Fuel Plumbing (Used on S/N 8RDCD301620HC and Subsequent) 58-1
Figure 59. Cylinder Head 59-1
Figure 60. Fuel Pump 60-1
Figure 61. Rocker Levers 61-1
Figure 62. Bulk Items BULK-1

Section I. INTRODUCTION

E-1. SCOPE.

This Repair Parts and Special Tools List (RPSTL) lists spares and repair parts and tools for maintenance of the Concrete Mobile Mixer Engineering Mission Module for the PLS system.

E-2. GENERAL.

This RPSTL is divided into two sections; Section I, this introduction; and Section II, the repair parts list.

E-3. EXPLANATION OF COLUMNS (SECTION II).

a. ITEM No. [Column (1)]. Indicates the number used to identify items called out in the illustration. Not all items called out in an illustration will be identified by a part number.

b. SMR CODE [Column (2)]. The Source, Maintenance, and Recoverability (SMR) code is a 5-position code containing supply/requisitioning information, maintenance category authorization criteria, and disposition instruction, as shown in the following breakout:

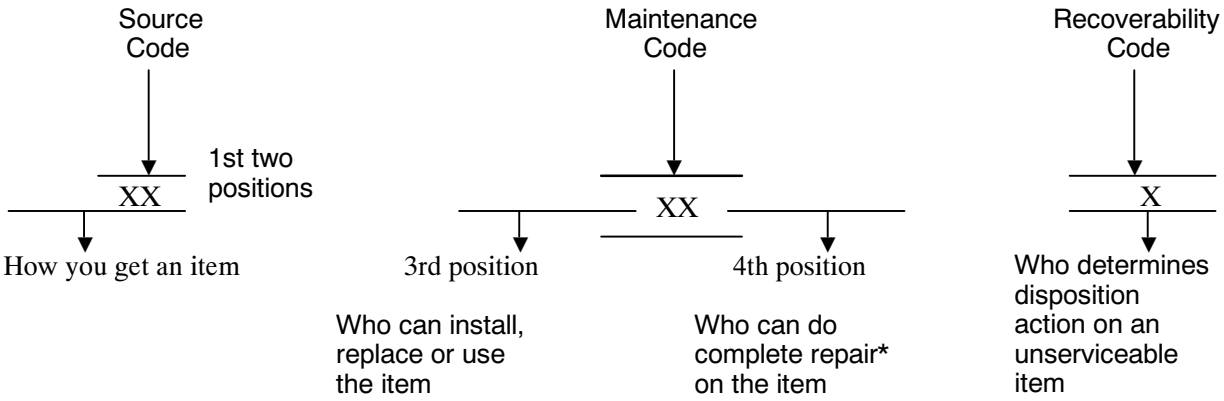

* Complete Repair: Maintenance capacity, capability, and authority to perform all corrective maintenance tasks for the "Repair" function in a use/user environment in order to restore serviceability to a failed item.

(1) Source Code. The source code tells you how to get an item needed for maintenance, repair, or overhaul of an end item/equipment. Explanations of source codes follows:

Code	Explanation
PA pb pc** pd pe pf pg	Stocked items; use the applicable NSN to request/requisition items with these source codes. They are authorized to the category indicated by the code entered in the 3rd position of the SMR code. **NOTE: Items coded PC are subject to deterioration.
kd kf kb	Items with these codes are not to be requested/requisitioned individually. They are part of a kit which is authorized to the maintenance category indicated in the 3rd position of the SMR code. The complete kit must be requisitioned and applied.
MO-(Made at org Level) MF-(Made at DS Level) MH-(Made at GS Level) ML-(Made at Specialized Repair Act (SRA) MD-(Made at Depot)	Items with these codes are not to be requested/requisitioned individually. They must be made from bulk material which is identified by the part number in the DESCRIPTION column of this IPL. If the item is authorized to you by the 3rd position code of the SMR code, but the source code indicates it is made at a higher level, order the item from the higher level of maintenance.

E-3. EXPLANATION OF COLUMNS (SECTION II) (CONT).

Code		Explanation
AO-(Assembled by org Level) AF-(Assembled by DS Level) AH-(Assembled by GS Level) AL-(Assembled by SRA) AD-(Assembled by Depot)	>	Items with these codes are not to be requested/requisitioned individually. The parts that make up the assembled item must be requisitioned or fabricated and assembled at the level of maintenance indicated by the source code. If the 3rd position code of the SMR code authorizes you to replace the item, but the source code indicated the item is assembled at a higher level, order the item from the higher level of maintenance.

XA- Do not requisition an "XA"-coded item. Order its next higher assembly. (Also, refer to the NOTE below.)

XB- If an "XB" item is not available from salvage, order it using the CAGEC and part number given.

XC- Installation drawing, diagram, instruction sheet, field service drawing, that is identified by manufacturer's part number.

XD- Item is not stocked. Order an "XD"-coded item through normal supply channels using the CAGEC and part number given, if no NSN is available.

NOTE

Cannibalization or controlled exchange, when authorized, may be used as a source of supply for items with the above source codes, except for those source coded "XA".

(2) Maintenance Code. Maintenance codes tell you the level(s) of maintenance authorized to USE and REPAIR support items. The maintenance codes are entered in the third and fourth positions of the SMR Code as follows:

(a) The maintenance code entered in the third position tells you the lowest maintenance level authorized to remove, replace, and use an item. The maintenance code entered in the third position will indicate authorization to one of the following levels of maintenance.

Code		Application/Explanation
C	-	Crew or operator maintenance done within organizational maintenance.
O	-	Unit Maintenance can remove, replace, and use the item.
F	-	Direct support level can remove, replace, and use the item.
H	-	General support level can remove, replace, and use the item.
L	-	Specialized repair activity can remove, replace, and use the item.
D	-	Depot level can remove, replace, and use the item.

(b) The maintenance code entered in the fourth position indicates whether the item is to be repaired and identifies the lowest maintenance level with the capability to perform complete repair (i.e., all authorized maintenance functions). (NOTE: Some limited repair may be done on the item at a lower level of maintenance, if authorized by the SMR codes.) This position will contain one of the following maintenance codes:

Code	Application/Explanation
O	- Unit Maintenance is the lowest level that can do complete repair of the item.
F	- Direct support is the lowest level that can do complete repair of the item.
H	- General support is the lowest level that can do complete repair of the item.
L	- Specialized repair activity is the lowest level that can do complete repair of the item.
D	- Depot is the lowest level that can do complete repair of the item.
Z	- Nonreparable. No repair is authorized.
B	- No repair is authorized. (No parts or special tools are authorized for the maintenance of “B”-coded item.) However, the item may be reconditioned by adjusting, lubrication, etc., at the user level.

(3) Recoverability Code. Recoverability codes are assigned to items to indicate the disposition action on unserviceable items. The recoverability code is entered in the fifth position of the SMR Code as follows:

Code	Application/Explanation
Z	- Nonreparable item. When unserviceable, condemn and dispose of the item at the level of maintenance shown in the 3rd position of SMR Code.
O	- Reparable item. When uneconomically reparable, condemn and dispose of the item at organizational level.
F	- Reparable item. When uneconomically reparable, condemn and dispose of the item at the direct support level.
H	- Reparable item. When uneconomically reparable, condemn and dispose of the item at the general support level.
D	- Reparable item. When beyond lower level repair capability, return to depot. Condemnation and disposal of item not authorized below depot level.
L	- Reparable item. Condemnation and disposal not authorized below specialized repair activity (SRA).
A	- Item requires special handling or condemnation procedures because of specific reasons (e.g., precious metal content, high dollar value, critical material or hazardous material). Refer to appropriate manuals/directives for specific instructions.

E-3. EXPLANATION OF COLUMNS (SECTION II) (CONT).

c. NSN [Column (3)]. The National Stock Number for the item is listed in this column.

d. CAGEC [Column (4)]. The Commercial and Government Entity Code (CAGEC) is a 5-digit numeric code which is used to identify the manufacturer, distributor, or Government agency, etc., that supplied the item.

e. PART NUMBER [Column (5)]. Indicates the primary number used by the manufacturer (individual, company, firm, corporation, or government activity), which controls the design and characteristics of the item by means of its engineering drawings, specifications standards, and inspection requirements to identify an item or range of items.

NOTE

When you use a NSN to requisition an item, the item you receive may have a different part number from the part ordered.

f. DESCRIPTION [Column (6)]. This column includes the following information:

(1) The item name and, when required, a minimum description to identify the item.

(2) Part numbers for bulk materials are referenced in this column in the line item entry for the item to be manufactured/fabricated.

g. QTY [Column (7)]. The QTY (quantity per figure column) indicates the quantity of the item used.

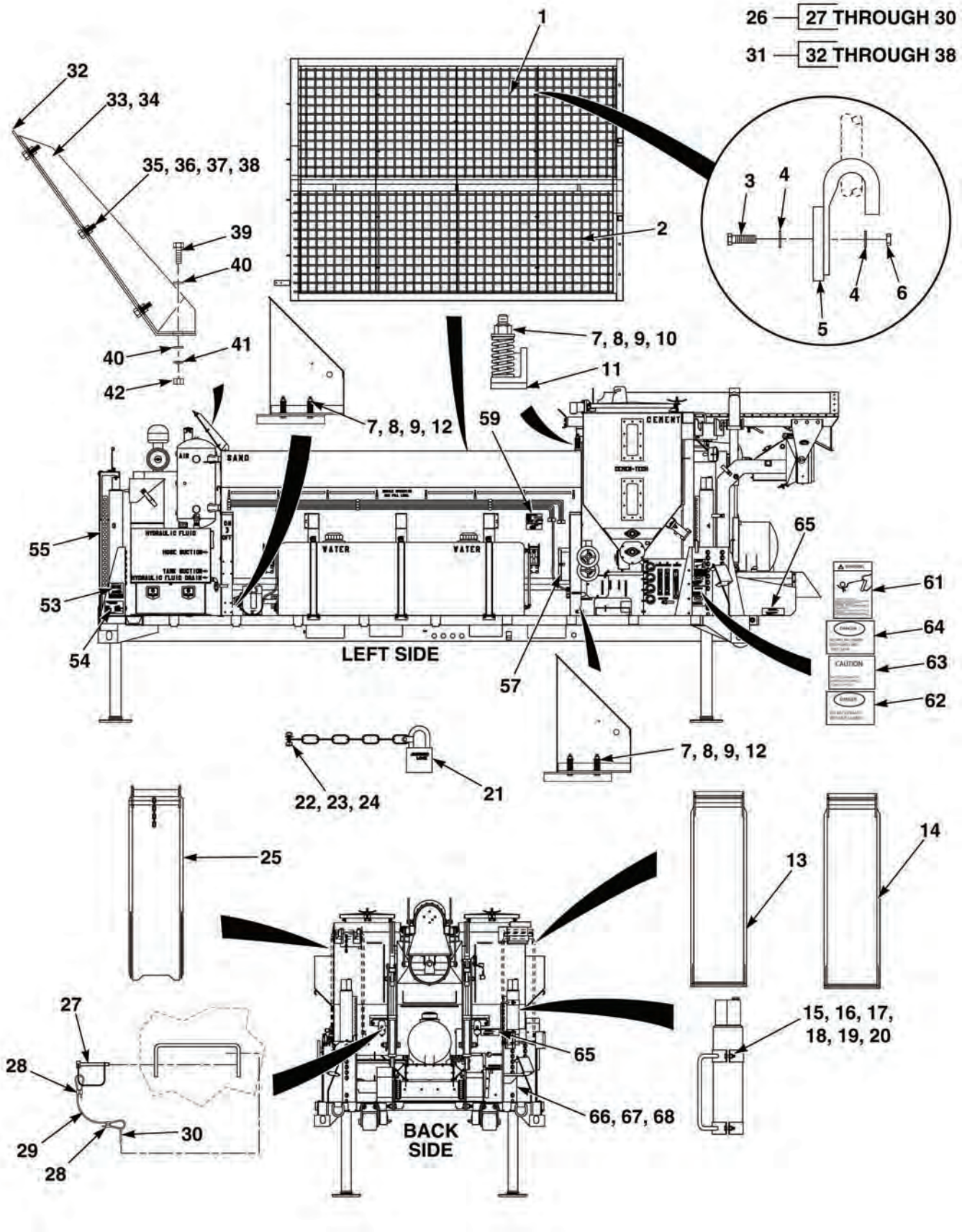

FIG. 1 CONCRETE MIXER OVERVIEW SHEET 1 OF 2

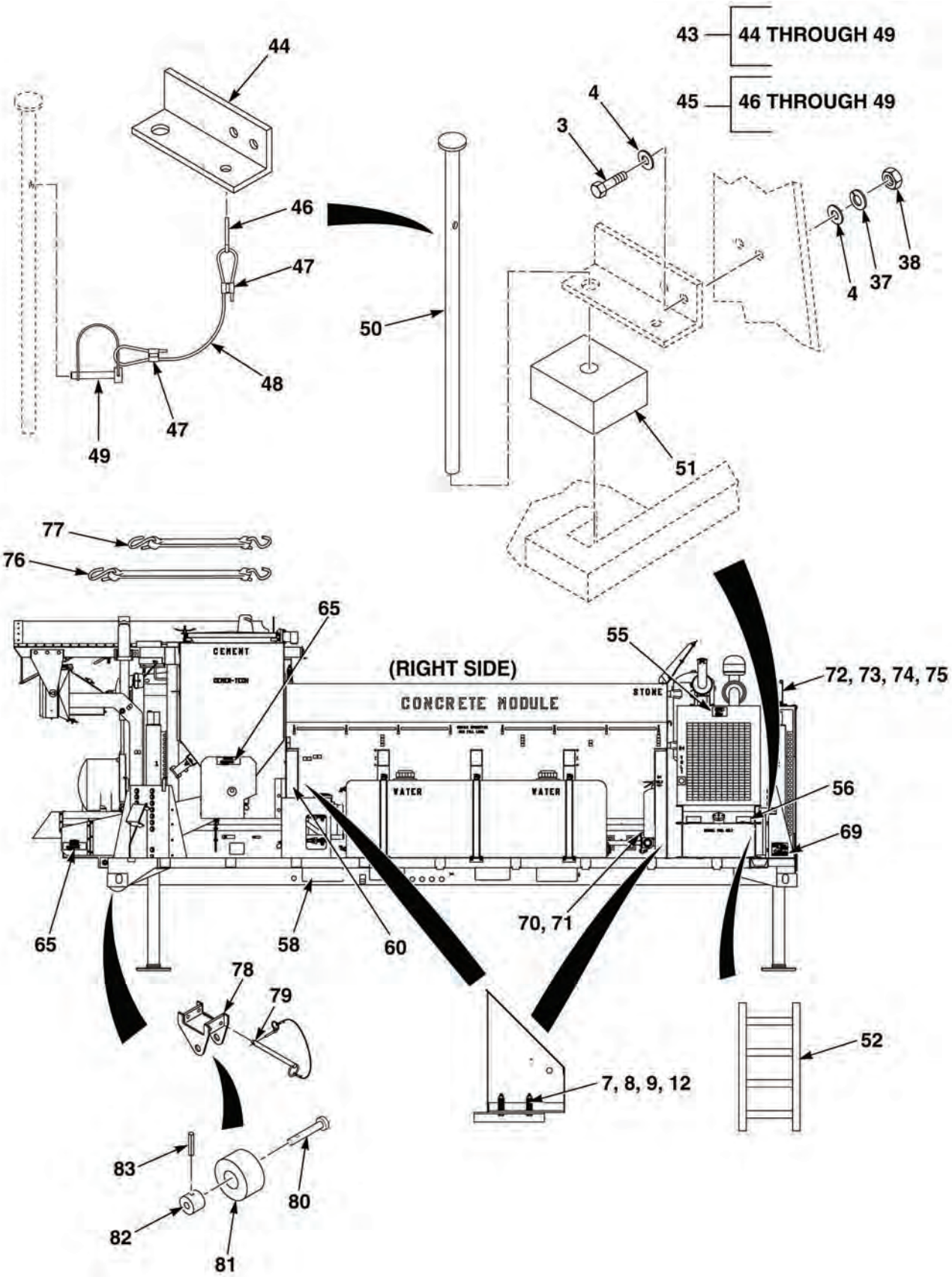

FIG. 1 CONCRETE MIXER OVERVIEW SHEET 2 OF 2

(1) ITEM NO	(2) SMR CODE	(3) NSN	(4) CAGEC	(5) PART NUMBER	(6) DESCRIPTION	(7) QTY
					FIG. 1 CONCRETE MIXER OVERVIEW	
1	PAFZZA		61796	1932-054	SCREEN,LH,SAND	1
2	PAFZZA		61796	1932-053	SCREEN,RH,STONE	1
3	PAFZZA	5305-01-353-8267	45152	1754220	SCREW,CAP,HEXAGON HD, 5/16-18 X 1 1/2	10
4	PAFZZA	5310-00-773-7618	80205	MS15795-814	WASHER,FLAT, 3/8	20
5	PAFZZA	5340-01-551-6399	61796	1932-C07	HOOK,QUARRY SCREEN	10
6	PAFZZA	5310-01-081-5351	08928	SN-524NE-24	NUT,SELF-LOCKING,HEX, 5/16-18	10
7	PAFZZA	5310-01-487-4530	45152	60862AX	LOCKNUT,3/4-10	4
8	PAFZZA	5310-00-809-8533	96906	MS27183-23	WASHER,FLAT	8
9	PAFZZA	5360-01-551-4620	39428	9624K56	SPRING,HELICAL,COMPRESSION	12
10	PAFZZA	5305-01-552-0245	40939	388165	SCREW, CAP, HEX HD, 3/4-10 X 10	4
11	PAFZZA	5365-01-551-5087	61796	1932-B31	BUSHING,RUBBER	2
12	PAFZZA	5305-01-551-4566	61796	5315-760	SCREW, CAP, HEX HD, 3/4-10 X 7-1/2	8
13	PAFZZA	3990-01-550-8467	61796	0329-000	CHUTE,2ND SUB ASSY	1
14	PAFZZA	3990-01-550-8487	61796	0330-000	CHUTE,3RD SUB ASSY	1
15	PFFZZA	5340-01-547-5671	61796	1932-259	HANDLE,GRAB,JACK	1
16	PFFZZA	5340-01-547-5527	61796	1932-B44	BRACKET,GRAB HANDLE	2
17	PAFZZA	5305-01-485-6310	45152	1882HX1	SCREW,CAP,HEXAGON HD, 3/8-16 X 1-1/2	4
18	PAFZZA	5310-00-880-0626	19207	10892331	WASHER,FLAT,3/8	20
19	PAFZZA	5310-01-129-0450	45152	351AX	WASHER,LOCK	20
20	PAFZZA	5310-01-063-8970	45152	434AX1	NUT,PLAIN,HEXAGON, 3/8-16	4
21	PAFZZA	5340-00-158-3807	58536	AA59487-2SC	PADLOCK	1
22	PAFZZA	5305-00-993-1848	80205	MS35207-265	SCREW,MACHINE, 10-32 X 3/4	1
23	PAFZZA	5310-01-361-8388	45152	1379HX	WASHER,FLAT,NO. 10	1
24	PAFZZA	5310-00-429-3127	24975	26175	NUT,HEXAGON,10-32	1
25	PAFZZA	3990-01-550-8477	61796	1932-405	CHUTE,1ST SUB ASSY	1
26	PAFFFA	5315-01-551-5170	61796	1932-420	PIN ASSEMBLY,CABLE	1
27	PAFZZA	5315-01-419-9940	50620	14-20LP	•PIN,QUICK RELEASE	1
28	PAFZZA	4030-01-258-0467	96906	MS51844-43	•SWAGING SLEEVE, WIRE ROPE	2
29	MFFZZA		61796	5610-016-01200	•CABLE,WIRE ROPE, MAKE FROM 1533100,CAGE 45152, 12 IN.	1
30	PAFZZA	5315-01-459-7340	45152	1749HX	•PIN,COTTER, 1/8 x 3/4	1
31	PFFFFA	5340-01-547-5049	61796	2059-101-00	DEFLECTOR ASSEMBLY,AGGREGATE	1
32	PFFZZA	5340-01-547-7019	61796	2059-007-00	•DEFLECTOR,AGGREGATE	1
33	PFFZZA	5340-01-547-5042	61796	2059-012-00	•GUSSET,DEFLECTOR,RH	1
34	PFFZZA	5340-01-547-7020	61796	2059-013-00	•GUSSET,DEFLECTOR,LH	1
35	PAFZZA	5306-01-056-2942	80205	MS90725-34	•SCREW,CAP,HEX HD, 5/16-18 X 1	6
36	PAFZZA	5310-00-773-7618	80205	MS15795-814	•WASHER,FLAT, 3/8	6
37	PAFZZA	5310-01-068-8446	45152	354AX	•WASHER,LOCK	8
38	PAFZZA	5310-01-478-8691	45152	1419270	•NUT,SELF-LOCKING HEX, 5/16-18	8
39	PAFZZA	5305-01-483-1144	45152	463B01	SCREW,CAP,HEXAGON HD, 1/2-13 X 1-1/2	3
40	PAFZZA	5310-01-236-1710	45152	720HX2	WASHER,FLAT,1/2	10
41	PAFZZA	5310-01-133-2130	45152	355AX	WASHER,LOCK,1/2	5
42	PAFZZA	5310-01-057-0822	45152	1768HX1	NUT,PLAIN,HEXAGON, 1/2-13	5
43	PAFFFA	5340-01-552-0277	61796	1932-B67	BRACKET,RETAINING PIN	1
44	PAFZZA	5340-01-551-8667	61796	5106-033	•ANGLE	1
45	PAFFFA	5315-01-547-5520	61796	1932-419	•CABLE ASSEMBLY,PIN	1
46	PAFZZA	5315-00-187-9384	80205	MS24665-389	••PIN,COTTER, 1/8 X 1	1

(1) ITEM NO	(2) SMR CODE	(3) NSN	(4) CAGEC	(5) PART NUMBER	(6) DESCRIPTION	(7) QTY
47	PAFZZA	4030-01-258-0467	96906	MS51844-43	••SWAGING SLEEVE, WIRE ROPE	2
48	MFFZZA		61796	5610-016-01200	••CABLE,WIRE ROPE, MAKE FROM M83420/4-002,CAGE 81349,12 IN.	1
49	PAFZZA	5315-01-453-9031	39428	98416A011	••PIN,STRAIGHT HEADED 1/4 X 1 5/8	1
50	PAFZZA	5315-01-551-6669	61796	1932-253	PIN,RETAINER LADDER STORAGE	1
51	PAFZZA	2590-01-552-4366	61796	1932-B68	RETAINER,LADDER STORAGE	1
52	PAFZZA	5440-01-551-2729	61796	1932-215	LADDER	1
53	PAFZZA	9905-01-551-9717	61796	1932-B38	PLATE,DATA, LUBRICATION	1
54	PAFZZA	7690-01-551-4507	61796	1932-B39	PLATE,DATA, MODEL/SERIAL NUMBER	1
55	PAFZZA	7690-01-551-4587	61796	1932-D39	DECAL,DANGER EAR PROTECTION REQUIRED	2
56	PAFZZA	7690-01-551-4486	61796	1932-B42	PLATE,DATA, FUEL TANK	1
57	PAFZZA	7690-01-551-4628	61796	1932-D20	DECAL,LOW FLOW ADMIX	1
58	PAFZZA	7690-01-551-3437	61796	1932-D09	DECAL,WATER PRESSURE,LOW FLOW CONTROL	1
59	PAFZZA	7690-01-551-3545	61796	1932-B41	PLATE,DATA, CALIBRATION	1
60	PAFZZA	7690-01-551-3841	61796	1932-D23	DECAL,HIGH FLOW ADMIX	1
61	PAFZZA	7690-01-551-3463	61796	1932-D44	DECAL,WARNING DO NOT GO NEAR LEAKS	1
62	PAFZZA	7690-01-551-4482	61796	1932-D40	DECAL,DANGER MOVING MACHINERY	1
63	PAFZZA	7690-01-551-4502	61796	1932-D42	DECAL,CAUTION BEFORE CLEANING	1
64	PAFZZA	7690-01-551-3493	61796	1932-D38	DECAL,DANGER DO NOT OPERATE	1
65	PAFZZA	7690-01-551-3353	61796	1932-D41	DECAL,CAUTION KEEP CLOSED WHEN	4
66	PAFZZA	7690-01-551-3501	61796	1932-D17	DECAL,GREASE	1
67	PAFZZA	7690-01-551-3811	61796	1932-D24	DECAL,CEMENT DISCHARGE	1
68	PAFZZA	7690-01-551-4545	61796	1932-D26	DECAL,ENGAGE/DISENGAGE	1
69	PAFZZA	7690-01-551-3419	61796	1932-B40	PLATE,DATA, TRANSPORT	1
70	PAFZZA	4210-00-889-2492	58536	AA393-A1D	EXTINGUISHER,FIRE 20#ABC	1
71	PAFZZA	4210-01-112-1097	20722	9314A13-1252	BRACKET,MOUNT, FIRE EXTINGUISHER	1
72	PAFZZA	5360-01-372-3824	0PZP2	1785680	SPRING,MARKER EXTENSION	2
73	PAFZZA	5306-01-512-4598	0PZP2	1790HX1	SCREW,CAP, 5/8-11 X 1-1/2	2
74	PAFZZA	5310-01-061-5301	45152	8865GX	WASHER,FLAT,5/8	2
75	PAFZZA	5310-01-061-5302	45152	318BX	WASHER,LOCK,5/8	2
76	PAFZZA	5340-01-359-6948	80063	A31566755-001	STRAP,ELASTIC,15 IN.	2
77	PAFZZA	5340-00-340-0980	0GPL7	197940	STRAP,ELASTIC	1
78	PAFZZA	5340-01-372-3866	45152	2HL806	BRACKET SET,ANGLE	2
79	PAFZZA	5315-01-372-2508	45152	1726750	PIN,QUICK RELEASE	4
80	PAFZZA	3040-01-372-8553	19207	12440542	SHAFT,SHOULDERED	2
81	PAFZZA	5340-01-421-6471	75272	124405330	WHEEL,SOLID,NONMETALLIC	2
82	PAFZZA	3040-01-423-1782	19207	12440534	COLLAR,SHAFT	2
83	PAFZZA	5315-01-422-3900	19207	12440533	PIN,SPRING	2

END OF FIGURE

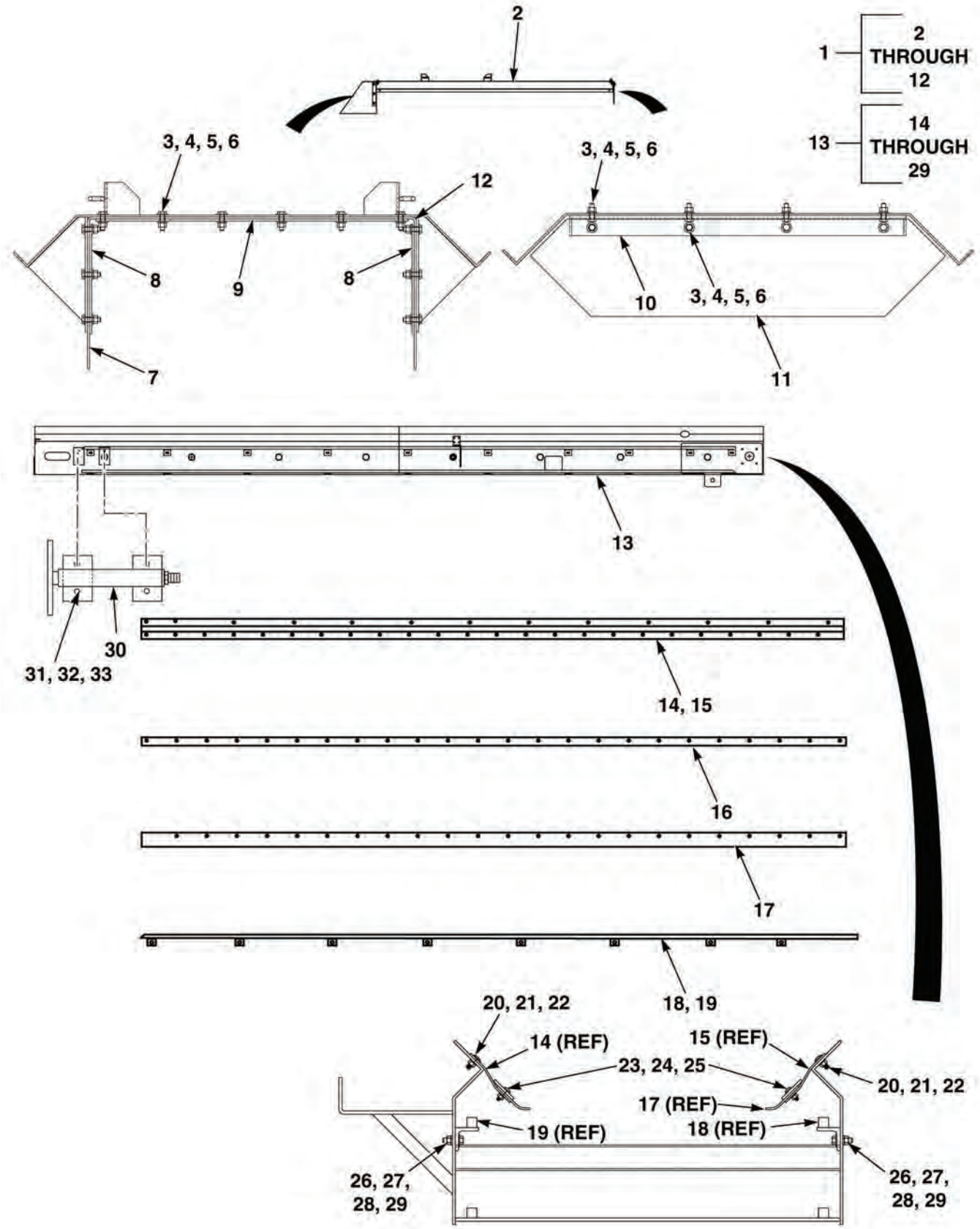

FIG. 2 CONVEYOR SHEET 1 OF 2

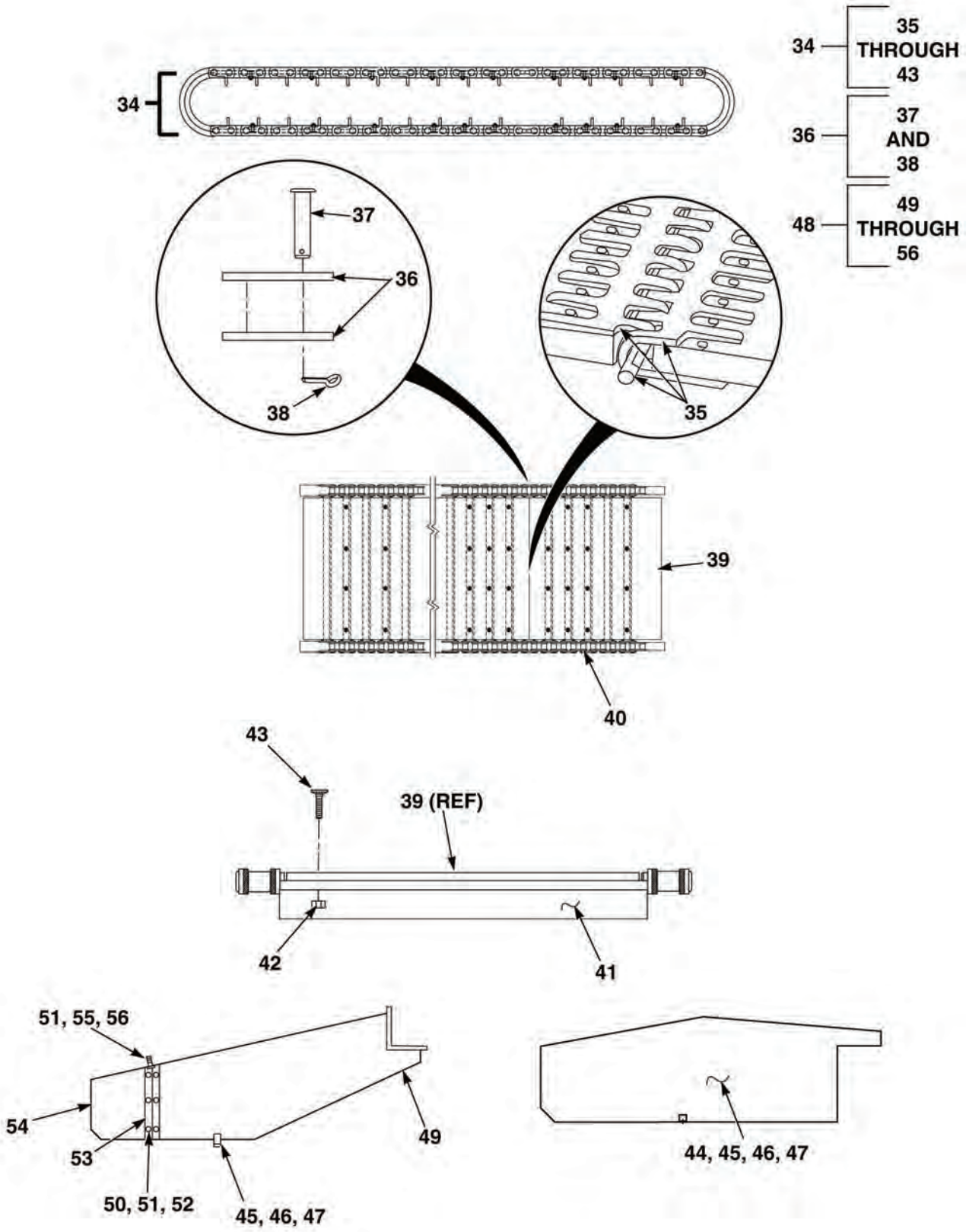

FIG. 2 CONVEYOR SHEET 2 OF 2

(1) ITEM NO	(2) SMR CODE	(3) NSN	(4) CAGEC	(5) PART NUMBER	(6) DESCRIPTION	(7) QTY
					FIG. 2 CONVEYOR	
1	PAFFFA	5340-01-551-7462	61796	1932-423	COVER ASSEMBLY, CONVEYOR	1
2	PFFZZA	5340-01-547-1839	61796	1932-244	•COVER	1
3	PAFZZA	5305-01-280-7901	45152	66420AX	•SCREW,CAP,HEXAGON HD, 1/4-20 X 1	20
4	PAFZZA	5310-00-809-4058	96906	MS27183-10	•WASHER,FLAT	40
5	PAFZZA	5310-00-582-5965	80205	MS35338-44	•WASHER,LOCK,1/4	20
6	PAFZZA	5310-00-584-5005	96906	MS35690-405	•NUT,PLAIN,HEXAGON, 1/4-20	20
7	PAFZZA	5340-01-551-5171	61796	1932-B50	•COVER,DUST, CONVEYOR DISCHARGE	1
8	PFFZZA	5340-01-547-2899	61796	1932-B48	•RETAINER,DUST COVER	2
9	PFFZZA	5340-01-547-1844	61796	1932-B47	•RETAINER,DUST COVER, TOP	1
10	PFFZZA	5340-01-547-2913	61796	1932-B52	•RETAINER,DUST FLAP	1
11	PAFZZA	5340-01-551-5075	61796	1932-B53	•FLAP,DUST, CONVEYOR COVER	1
12	PFFZZA	5340-01-547-2908	61796	1932-B51	•ANGLE,MOUNT	1
13	PAFFFA	3910-01-551-4696	61796	1932-201	CONVEYOR	1
14	PFFZZA	5340-01-547-6629	61796	1932-043	•MOUNT,GUIDE,RH	1
15	PFFZZA	5340-01-547-5412	61796	1932-044	•MOUNT,GUIDE,LH	1
16	PFFZZA	5340-01-547-4399	61796	1932-A42	•RETAINER,GUIDE	2
17	PFFZZA	5340-01-547-3485	61796	1932-A43	•GUIDE,MATERIAL	2
18	PFFZZA	2590-01-547-7051	61796	1932-218	•CHAIN RAIL,TOP,RH	1
19	PFFZZA	2590-01-547-0418	61796	1932-233	•CHAIN RAIL,TOP,LH	1
20	PAFZZA	5306-01-354-5770	45152	1898620	•BOLT,SQUARE NECK, 5/16-18 X 1	28
21	PAFZZA	5310-01-068-8446	45152	354AX	•WASHER,LOCK	28
22	PAFZZA	5310-01-478-8691	45152	1419270	•NUT,SELF-LOCKING HEX, 5/16-18	28
23	PAFZZA	5306-01-241-2645	96906	MS16207-3	•BOLT,SQUARE NECK, 1/4-20 x 1	52
24	PAFZZA	5310-00-582-5965	80205	MS35338-44	•WASHER,LOCK,1/4	52
25	PAFZZA	5310-00-584-5005	96906	MS35690-405	•NUT,PLAIN,HEXAGON 1/4-20	52
26	PAFZZA	5305-00-543-2419	80204	B1821BH038C113N	•SCREW,CAP,HEXAGON HD, 3/8-16 X 1 1/4	20
27	PAFZZA	5310-00-880-0626	19207	10892331	•WASHER,FLAT,3/8	20
28	PAFZZA	5310-01-129-0450	45152	351AX	•WASHER,LOCK	20
29	PAFZZA	5310-00-725-9479	25567	D06	•NUT,PLAIN,HEXAGON 3/8-16	20
30	PAFZZA	2920-01-552-2742	3B543	250-6-MS-SF-BP	BEARING ASSEMBLY, TAKE-UP	2
31	PAFZZA	5305-00-044-4153	80205	MS90725-109	SCREW,CAP,HEX HD, 1/2-13 X 1	8
32	PAFZZA	5310-01-133-2130	45152	355AX	WASHER,LOCK,1/2	8
33	PAFZZA	5310-01-057-0822	45152	1768HX1	NUT,PLAIN,HEXAGON 1/2-13	8
34	PAFFFA	3020-01-485-5144	61796	0370-11801	CONVEYOR BELT	1
35	PAFZZA	3030-01-551-8036	61796	5137-002	•LACER,BELT	1
36	PAFFFA	4010-01-551-3961	3S098	RS627	•LINK,CHAIN,CONVEYOR	2
37	PAFZZA	5315-01-551-4326	39428	92390A112	••PIN,CLEVIS,3/8 X 2	1
38	PAFZZA	5315-00-187-9382	80205	MS24665-385	••PIN,COTTER	1
39	PFFZZA	3030-01-547-9743	61796	5135-207	BELT,CONVEYOR	1
40	PFFZZA	3020-01-546-9199	61796	5199-004	CHAIN	1
41	PFFZZA	5340-01-547-5791	61796	0311-002	ANGLE,BELT SUPPORT	65
42	PFFZZA	5310-00-584-5005	96906	MS35690-405	NUT,PLAIN,HEXAGON, 1/4-20	260
43	PAFZZA		39428	91483A542	BOLT,ELEVATOR, 1/4-20 X 1	260
44	PFFZZA	2520-01-546-9764	61796	1932-229	SHIELD,DRIVE SPROCKET	1
45	PAFZZA	5305-01-346-3692	45152	1764650	SCREW,CAP,HEXAGON HD, 1/4-20 X 1 1/4	5
46	PAFZZA	5310-00-809-4058	96906	MS27183-10	WASHER,FLAT	5

(1) ITEM NO	(2) SMR CODE	(3) NSN	(4) CAGEC	(5) PART NUMBER	(6) DESCRIPTION	(7) QTY
47	PAFZZA	5310-00-582-5965	80205	MS35338-44	WASHER,LOCK,1/4	5
48	PAFZZA	3020-01-551-1160	61796	1932-230	SHIELD,SHEAR SPROCKET	1
49	PFFZZA	5340-01-548-9133	61796	1932-B81	•FACE,SHEAR SPROCKET	1
50	PAFZZA	5305-01-480-2359	45152	3268673	•SCREW,CAP,HEXAGON HD, 1/4-20 X 3/4	6
51	PAFZZA	5310-00-809-4058	96906	MS27183-10	•WASHER,FLAT	13
52	PAFZZA	5310-01-346-9445	45152	1600460	•NUT,SELF-LOCKING,HEX, CLINCH, 1/4-20	6
53	PAFZZA	5340-01-551-1145	61796	1932-B90	•HINGE	1
54	PFFZZA	3020-01-553-8455	61796	1932-B87	•FACE,SHEAR SPROCKET	1
55	PAFZZA	5310-00-582-5965	80205	MS35338-44	•WASHER,LOCK,1/4	1
56	PAFZZA	5310-01-064-8787	96906	MS35425-70	•NUT,PLAIN,WING, 1/4-20	1

END OF FIGURE

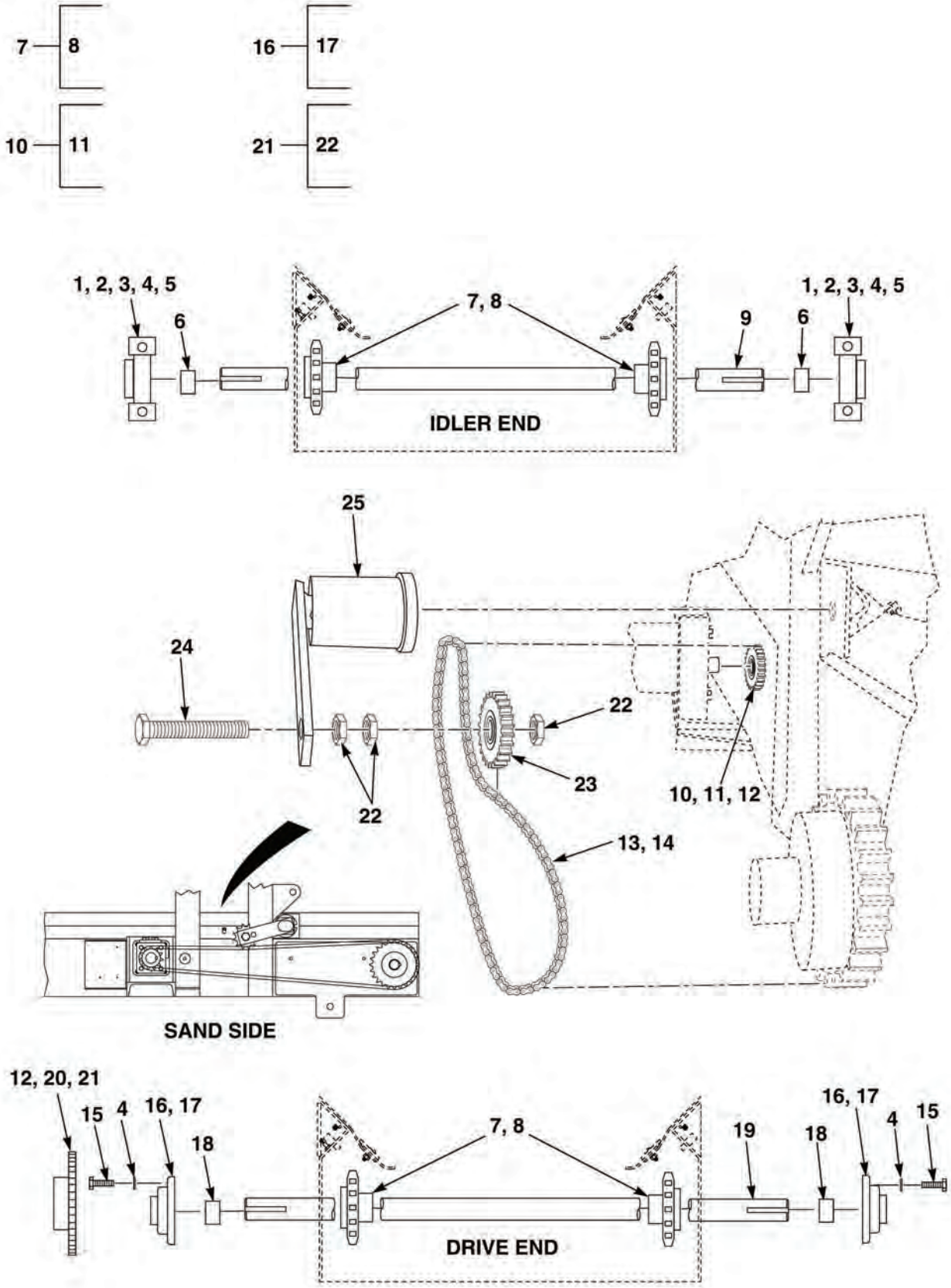

FIG. 3 CONVEYOR DRIVE

(1) ITEM NO	(2) SMR CODE	(3) NSN	(4) CAGEC	(5) PART NUMBER	(6) DESCRIPTION	(7) QTY
					FIG. 3 CONVEYOR DRIVE	
1	PAFZZA		3B543	051890	BEARING,PILLOW BLOCK	2
2	PAFZZA	5305-00-071-2072	80204	B1821BH050C225N	SCREW,CAP, HEX HD, 1/2-13 X 2 1/4	8
3	PAFZZA	5310-01-236-1710	45152	720HX2	WASHER,FLAT,1/2	8
4	PAFZZA	5310-01-133-2130	45152	355AX	WASHER,LOCK,1/2	30
5	PAFZZA	5310-01-057-0822	45152	1768HX1	NUT,PLAIN,HEXAGON, 1/2-13	14
6	PAFZZA	5365-01-551-2468	61796	1720-075	SPACER,IDLER SHAFT	2
7	PAFZZA	3020-01-450-4744	61796	5179-212B	SPROCKET,WHEEL	4
8	PAFZZA	5305-00-715-1200	80205	MS51981-71	•SETSCREW,	2
9	PAFZZA	3040-01-551-1739	61796	0627-002	SHAFT,IDLER	1
10	PAFZZA	3020-01-551-2737	61796	5176-21124	SPROCKET,DRIVE	1
11	PAFZZA	5305-00-715-1200	80205	MS51981-71	•SETSCREW	2
12	PAFZZA	5315-00-847-3531	96906	MS20066-356	KEY,MACHINE	2
13	MFFZZA		61796	5196-00021	CHAIN,DRIVE #80, MAKE FROM P/N 6261K536,CAGE 39428, 21 IN.	1
14	PAFZZA	3020-00-231-8710	96906	80-1RC2CLA	LINK,ROLLER CHAIN	1
15	PAFZZA	5305-00-044-4153	80205	MS90725-109	SCREW,CAP,HEX HD, 1/2-13 X 1	16
16	PAFZZA	3040-01-552-1828	61796	5151-128	BEARING,FLANGE	2
17	PAFZZA	5305-00-715-1207	80205	MS51981-59	•SETSCREW	4
18	PAFZZA	5365-01-551-5317	61796	5110-523-00182	SPACER 2 1/8 OD X 1 13/16 ID	2
19	PAFZZA	3040-01-551-1731	61796	0627-001	SHAFT,DRIVE CONVEYOR	1
20	PAFZZA	3020-01-551-1195	61796	5176-22428	SPROCKET	1
21	PAFZZA	5305-00-715-1200	80205	MS51981-71	•SETSCREW	2
22	PAFZZA	5310-00-061-4651	96906	M45913/3-10CG8C	NUT,SELF-LOCKING, HEX, 5/8-11	3
23	PAFZZA	3020-01-551-2815	61796	5176-812	SPROCKET,TENSIONER	1
24	PAFZZA	5305-01-552-0227	39428	91309A810	SCREW, CAP, HEX HD, 5/8-11 X 4, FULL THREAD,COARSE	1
25	PAFZZA	3950-01-551-6129	61796	5813-004	TENSIONER ASSEMBLY, CONVEYOR DRIVE	1

END OF FIGURE

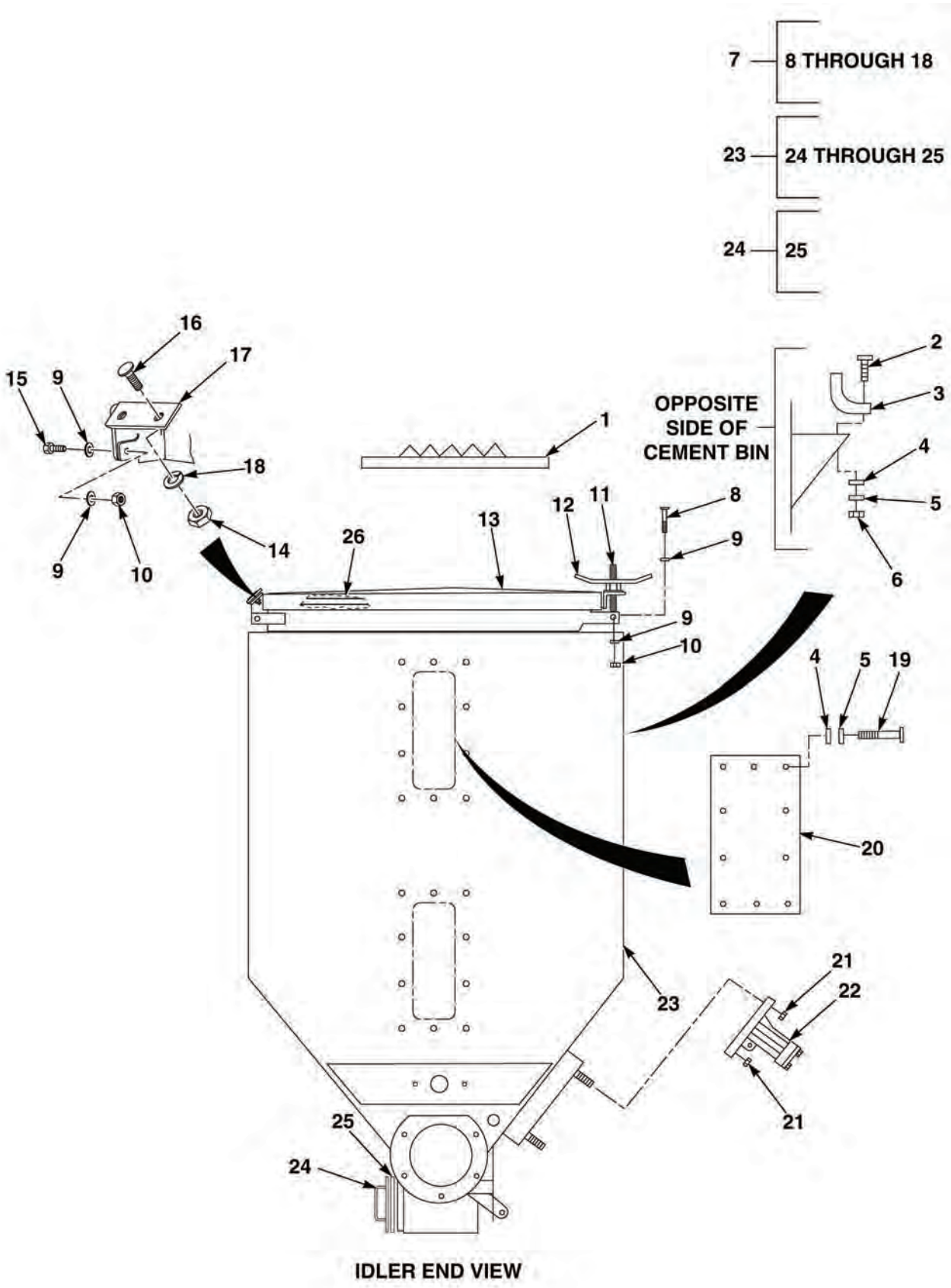

FIG. 4 CEMENT BIN SHEET 1 OF 2

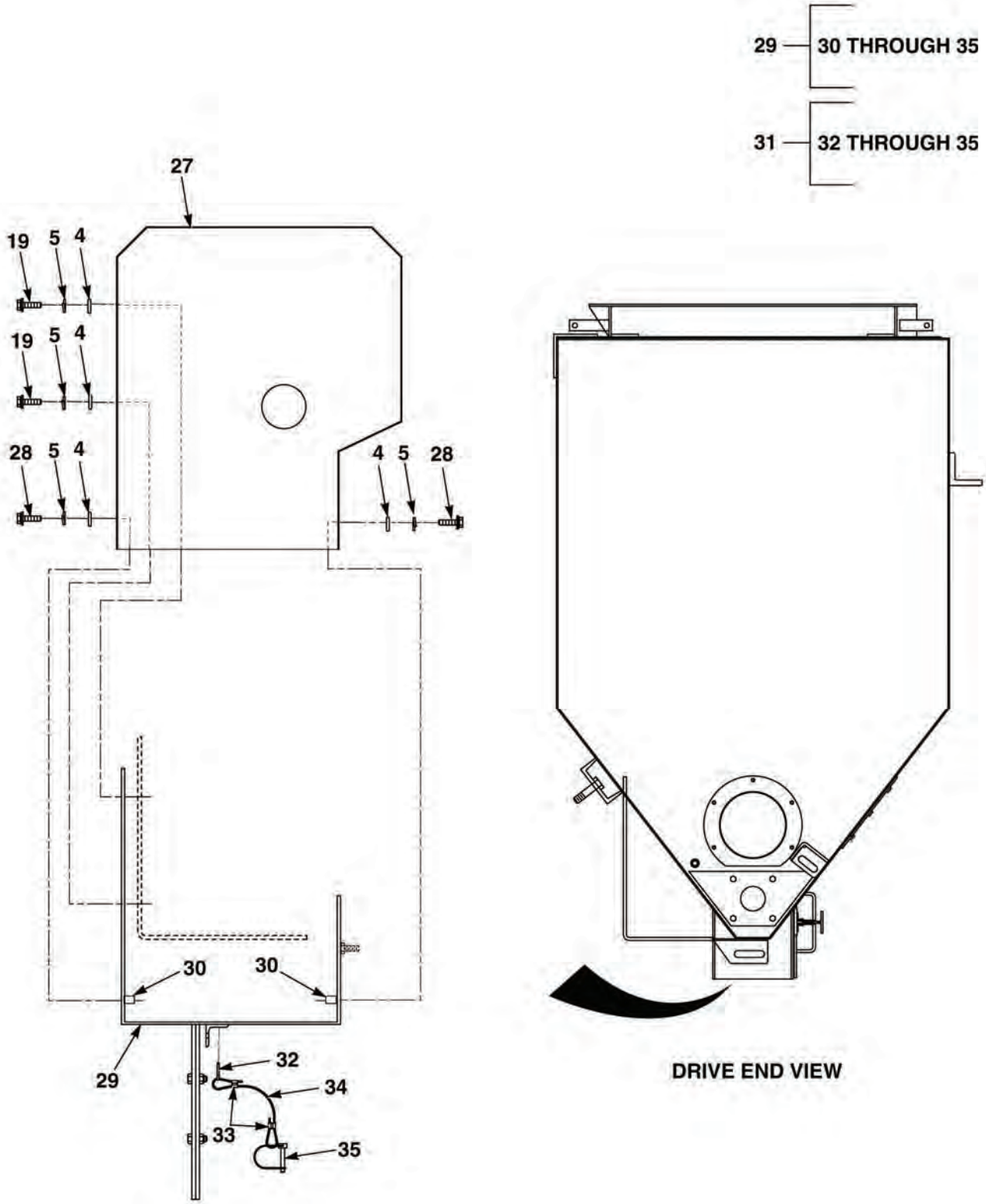

FIG. 4 CEMENT BIN SHEET 2 OF 2

(1) ITEM NO	(2) SMR CODE	(3) NSN	(4) CAGEC	(5) PART NUMBER	(6) DESCRIPTION	(7) QTY
					FIG.4 CEMENT BIN	
1	PFFZZA		61796	0592-000-00	RACK,BAG BREAKER	2
2	PAFZZA	5305-01-551-6171	61796	5350-012	BOLT,FLAT,ELEVATOR, 1/4-20 X 1 1/2	4
3	PAFZZA	5340-01-551-2465	61796	1932-B34	PAD,MIXER STOP	2
4	PAFZZA	5310-00-809-4058	96906	MS27183-10	WASHER,FLAT	43
5	PAFZZA	5310-00-582-5965	80205	MS35338-44	WASHER,LOCK,1/4	41
6	PAFZZA	5310-01-346-9445	45152	1600460	NUT,SELF-LOCKING,HEX, CLINCH, 1/4-20	4
7	PAFFFA	5340-01-551-6672	61796	1320-106-00	COVER,ACCESS CEMENT	2
8	PAFZZA	5305-00-071-2059	80204	B1821BH044C250N	•SCREW,CAP,HEX HD, 7/16-14 X 2 1/2	1
9	PAFZZA	5310-00-880-0626	19207	10892331	•WASHER,FLAT,3/8	8
10	PAFZZA	5310-00-241-6659	81349	M45913/3-7CG8C	•NUT,SELF-LOCKING, 7/16-14	3
11	PAFZZA	5306-01-551-8938	61796	1320-204	•LATCH	1
12	PAFZZA	5310-01-551-5167	61796	1320-203	•HANDLE,LATCH	1
13	XAFZZA		61796	1320-208	•LID,WELDMENT	1
14	PAFZZA	5310-00-584-5005	96906	MS35690-405	•NUT,PLAIN,HEXAGON, 1/4-20	2
15	PAFZZA	5305-01-265-4907	96906	MS51491-038	•SCREW,CAP,HEXAGON HD, 7/16-14 X 1 1/2	2
16	PAFZZA	5306-01-552-5341	39428	91488A242	•BOLT,FLAT,ELEVATOR, 1/4-20 X 1	2
17	PAFZZA	3910-01-552-1619	61796	1320-017-00	•BUMPER,RUBBER	1
18	PAFZZA	5310-00-582-5965	80205	MS35338-44	•WASHER,LOCK,1/4	31
19	PAFZZA	5305-01-480-2359	45152	3268673	SCREW,CAP,HEXAGON HD, 1/4-20 X 3/4	20
20	PAFZZA	9330-01-551-2759	61796	0669-013	WINDOW,SIGHT, 8X15	2
21	PAFZZA	5310-00-225-6408	81349	M45913/1-10FG5C	NUT,SELF-LOCKING,HEX, 5/8-18	4
22	PAFZZA	3895-01-547-0420	61796	5407-008	VIBRATOR,AIR	2
23	PFFFFA	3895-01-547-3790	61796	1932-205	BIN,CEMENT,WELDMENT	1
24	PAFZZA	5340-01-551-7229	61796	1552-401	•DOOR ASSEMBLY ACCESS	1
25	PAFZZA	9320-01-551-2738	61796	1552-005	••SEAL,ACCESS DOOR	1
26	MFFZZA		61796	1932-C06	STRIP,WEATHER, MAKE FROM P/N 93652K16,CAGE 39428,37-1/4 IN	1
27	PAFZZA	5340-01-551-1683	61796	1932-232	SHIELD,DRIVE END, CEMENT BIN	1
28	PAFZZA	5305-01-280-7901	45152	66420AX	SCREW,CAP,HEXAGON HD, 1/4-20 X 1	4
29	PAFFFA	5340-01-551-0883	61796	1932-231	COVER,LOWER REAR, CEMENT BIN	1
30	PAFZZA	5310-00-006-8291	80205	NAS1329S4E-140	•NUT,PLAIN,BLIND RIVET,1/4-20	5
31	PAFFFA	5315-01-547-5520	61796	1932-419	•CABLE ASSEMBLY,PIN	1
32	PAFZZA	5315-00-187-9384	80205	MS24665-389	••PIN,COTTER, 1/8 X 1	1
33	PAFZZA	4030-01-258-0467	96906	MS51844-43	••SWAGING SLEEVE, WIRE ROPE	2
34	MFFZZA		61796	5610-016-01200	••CABLE,WIRE ROPE,MAKE FROM M83420/4-002,CAGE 81349, 12 IN.	1
35	PAFZZA	5315-01-453-9031	39428	98416A011	••PIN,STRAIGHT HEADED, 1/4 X 1-5/8	1

END OF FIGURE

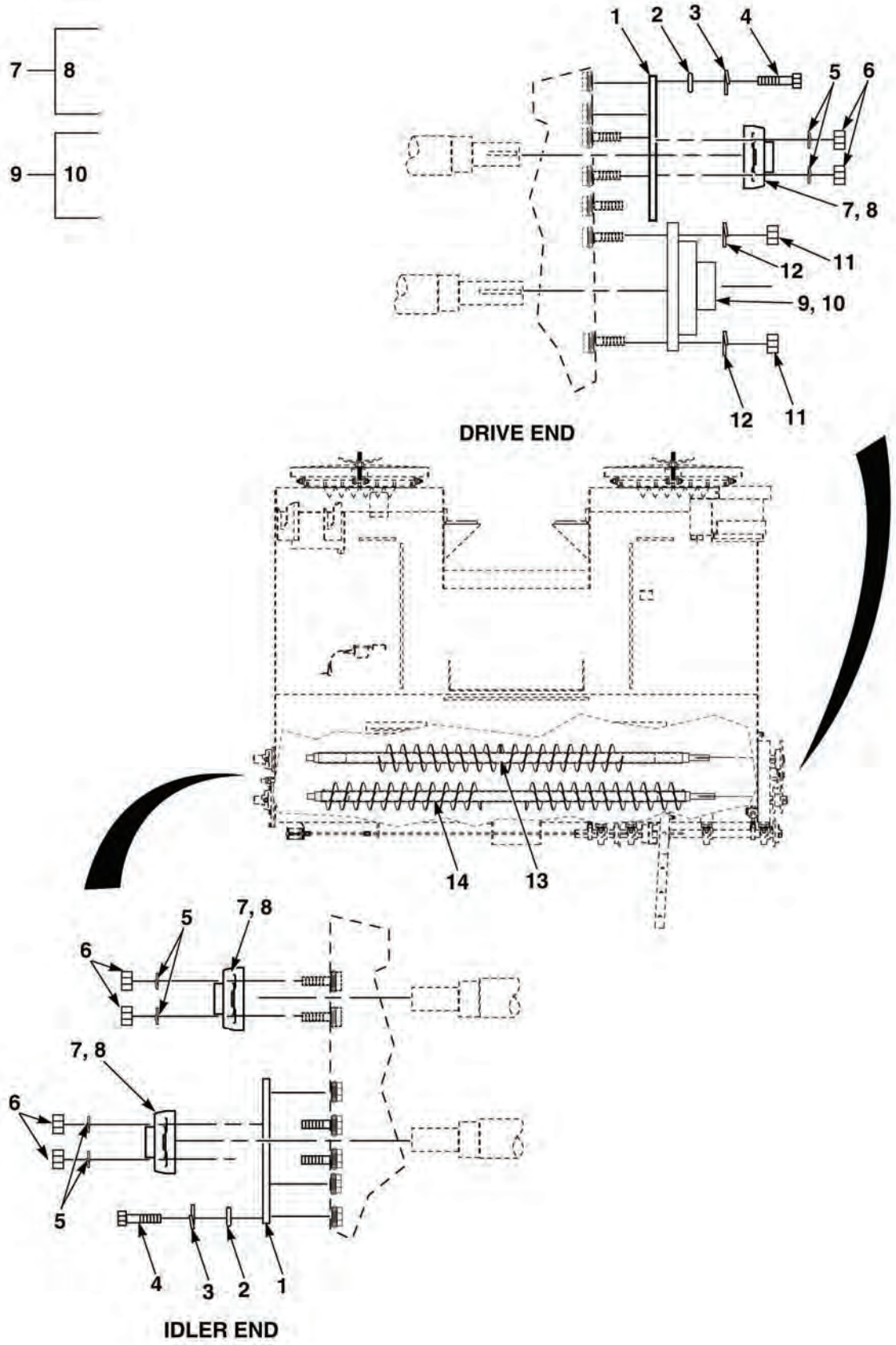

FIG. 5 CONCRETE METERING ASSEMBLY

(1) ITEM NO	(2) SMR CODE	(3) NSN	(4) CAGEC	(5) PART NUMBER	(6) DESCRIPTION	(7) QTY
					FIG. 5 CONCRETE METERING ASSEMBLY	
1	PFFZZA	3040-01-546-9020	61796	1693-018	MOUNT,BEARING	2
2	PAFZZA	5310-00-999-0424	72582	5159714	WASHER,FLAT,5/16	10
3	PAFZZA	5310-01-068-8446	45152	354AX	WASHER,LOCK	10
4	PAFZZA	5305-01-062-1017	45152	1376HX1	SCREW,CAP,HEXAGON HD, 5/16-18 X 3/4	10
5	PAFZZA	5310-01-081-1283	45152	352AX	LOCKWASHER,7/16	6
6	PAFZZA	5310-01-161-9123	45152	1334320	NUT,PLAIN,EXTENDED WASHER	6
7	PAFZZA		3B543	051888	FLANGE,BEARING	3
8	PAFZZA	5305-01-196-0351	80205	MS51964-131	•SETSCREW,1/4-28 X 3	1
9	PAFZZA	3040-01-552-1765	45152	5HB334	BEARING,FLANGE	1
10	PAFZZA	5305-01-432-3784	80205	MS18063-21	•SETSCREW, 5/16-24 X 5/16	2
11	PAFZZA	5310-01-057-0822	45152	1768HX1	NUT,PLAIN,HEXAGON 1/2-13	4
12	PAFZZA	5310-01-133-2130	45152	355AX	WASHER,LOCK,1/2	4
13	PAFZZA	3040-01-551-5074	61796	1994-246	AUGER,UPPER,BIN CEMENT	1
14	PAFZZA	3040-01-551-4646	61796	1994-247-00	AUGER,LOWER,BIN CEMENT	1

END OF FIGURE

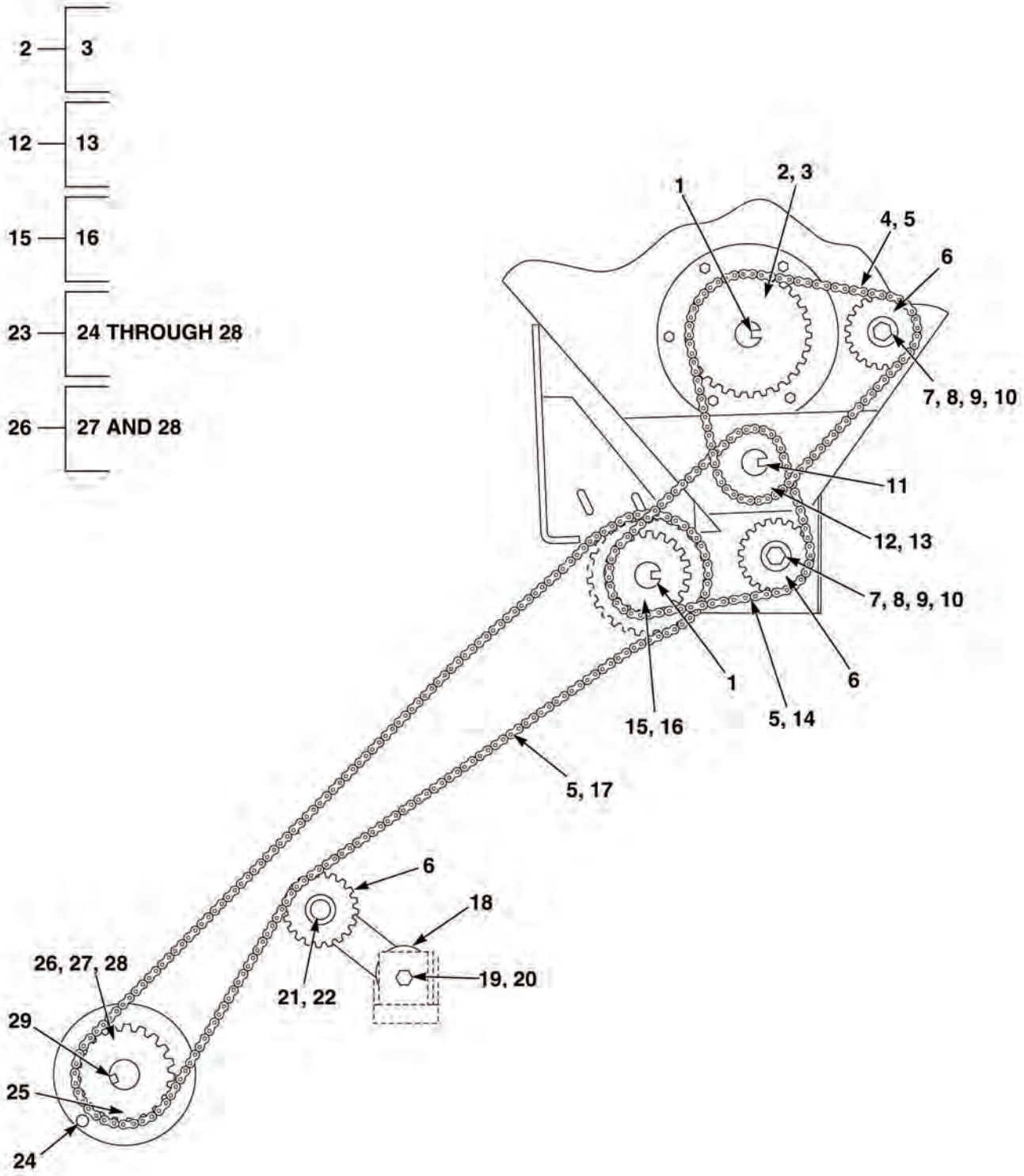

FIG. 6 CEMENT BIN DRIVE ASSEMBLY

(1) ITEM NO	(2) SMR CODE	(3) NSN	(4) CAGEC	(5) PART NUMBER	(6) DESCRIPTION	(7) QTY
					FIG. 6 CEMENT BIN DRIVE ASSMBLY	
1	PAFZZA	5315-00-780-8475	96906	MS20066-210	KEY,MACHINE, 1/4 X1/4 X 1-1/2	2
2	PAFZZA	3020-01-551-2715	61796	5174-234	SPROCKET	1
3	PAFZZA	5305-00-715-1207	80205	MS51981-59	•SETSCREW	2
4	MFFZZA		61796	5194-00010	CHAIN,AUGER DRIVE, MAKE FROM P/N 6261K534,CAGE 39428, 33-1/8 IN.	1
5	PAFZZA	3020-01-552-1779	39428	6261K194	LINK,CONNECTING #50	3
6	PAFZZA	3020-01-551-2712	61796	5174-817A	SPROCKET,IDLER	3
7	PAFZZA	5310-01-057-0822	45152	1768HX1	NUT,PLAIN,HEXAGON, 1/2-13	2
8	PAFZZA	5310-01-236-1710	45152	720HX2	WASHER,FLAT,1/2	2
9	PAFZZA	5305-00-071-2072	80204	B1821BH050C225N	SCREW,CAP, HEX HD, 1/2-13 X 2 1/4	2
10	PAFZZA	5310-01-133-2130	45152	355AX	WASHER,LOCK,1/2	2
11	PAFZZA	5340-01-551-5166	61796	5375-002-00325	KEY,MACHINE, 1/4 X1/4 X 3-1/4	1
12	PAFZZA	3020-01-551-2471	61796	5174-120A	SPROCKET	1
13	PAFZZA	5305-00-715-1207	80205	MS51981-59	•SETSCREW	2
14	MFFZZA		61796	5194-00009	CHAIN,AUGER DRIVE, MAKE FROM P/N 6261K534,CAGE 39428, 29-3/8 IN.	1
15	PAFZZA	3020-01-552-7823	61796	5174-220B	SPROCKET	1
16	PAFZZA	5305-00-715-1207	80205	MS51981-59	•SETSCREW	2
17	MFFZZA	3020-01-532-7326	98523	5027200-10	CHAIN,CEMENT DRIVE, MAKE FROM P/N 6261K534,CAGE 39428, 114 IN.	1
18	PAFZZA	3950-01-552-3966	61796	5813-003	SPROCKET,TENSIONER	1
19	PAFZZA	5305-01-480-7577	45152	1810HX1	SCREW,CAP,HEXAGON HD, 1/2-13 X 3/4	1
20	PAFZZA	5310-00-582-5965	80205	MS35338-44	WASHER,LOCK,1/4	1
21	PAFZZA	5305-00-071-2075	80204	B1821BH050C300N	SCREW,CAP,HEXAGON HD,1/2-13 X 3	2
22	PAFZZA	5310-01-081-8244	45152	60860AX	NUT,SELF-LOCKING,HE 1/2-13	1
23	PAFFFA	3020-01-551-2440	61796	1008-104-00	SPROCKET ASSEMBLY, SHEAR	1
24	PAFZZA	5306-01-479-9260	61796	5811-203	•BOLT,SHEAR	1
25	PAFZZA	3020-01-551-2730	61796	1008-202-00	•HUB,SPROCKET	1
26	PAFZZA	3040-01-551-2430	61796	1008-201-00	•HUB ASSEMBLY,DRIVE	1
27	PAFZZA	5305-00-724-6810	96906	MS51963-101	••SETSCREW,1/4-20 X 3	2
28	PAFZZA	5305-00-054-9258	96906	MS51955-2	••SETSCREW	1
29	PAFZZA	5315-00-847-3531	96906	MS20066-356	KEY,MACHINE, 3/8 X 3/8 X 2	1

END OF FIGURE

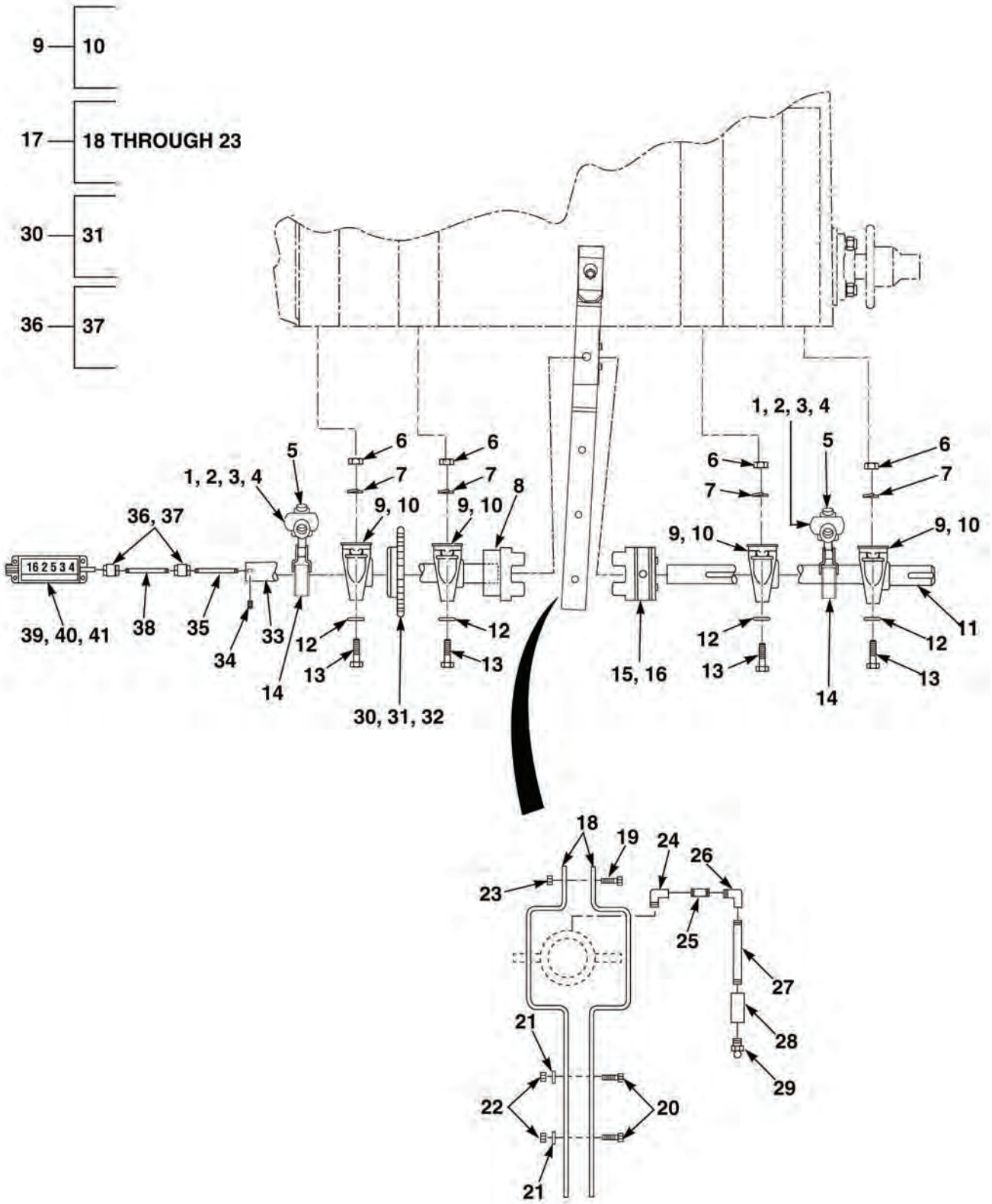

FIG. 7 CEMENT CLUTCH

(1) ITEM NO	(2) SMR CODE	(3) NSN	(4) CAGEC	(5) PART NUMBER	(6) DESCRIPTION	(7) QTY
					FIG. 7 CEMENT CLUTCH	
1	PAFZZA	5305-01-353-8268	45152	1754300	SCREW,CAP,HEXAGON HD, 3/8-16 X 2 1/2	4
2	PAFZZA	5310-00-880-0626	19207	10892331	WASHER,FLAT,3/8	8
3	PAFZZA	5310-01-129-0450	45152	351AX	WASHER,LOCK	4
4	PAFZZA	5310-00-725-9479	25567	D06	NUT,PLAIN,HEXAGON, 3/8-16	4
5	PAFZZA	3040-01-551-2555	61796	5405-001	VALVE,AIR CAM	2
6	PAFZZA	5310-01-479-0781	45152	3280591	NUT,PLAIN,HEXAGON, 1/2-13	9
7	PAFZZA	5310-01-133-2130	45152	355AX	WASHER,LOCK,1/2	8
8	PAFZZA	3010-01-551-3943	61796	0143-204-00	COUPLING,JAW,CLUTCH DRIVE	1
9	PAFZZA		3B543	051889	BEARING,PILLOW BLOCK	4
10	PAFZZA	5305-00-724-6747	96906	MS51065-65	•SETSCREW,5/16-18	2
11	PAFZZA	3040-01-551-2701	61796	1693-017-00	SHAFT,IDLER	1
12	PAFZZA	5310-01-236-1710	45152	720HX2	WASHER,FLAT,1/2	8
13	PAFZZA	5305-00-964-0589	96906	MS51095-416	SCREW, 1/2-13 X 2	8
14	PAFZZA	3040-01-551-2477	61796	1469-000	ACTUATOR,CAM VIBRATOR	2
15	PAFZZA	3020-01-551-2481	61796	0143-100-00	JAW,CLUTCH DRIVE, SINGLE SPEED	1
16	PAFZZA	5340-01-551-3135	61796	5375-002-00425	KEY,MACHINE, 1/4 X1/4 X 4-1/4	1
17	PFFFFA	3010-01-547-0587	61796	0151-101-00	HANDLE ASSEMBLY, DOG CLUTCH	1
18	XAFZZA		61796	0151-001-00	•HANDLE,DOG CLUTCH	2
19	PAFZZA	5305-00-543-2419	80204	B1821BH038C113N	•SCREW,CAP,HEXAGON HD, 3/8-16 X 1 1/4	1
20	PAFZZA	5305-01-412-4849	30226	102360	•SCREW,CAP,HEXAGON HD, 3/8-16 X 1	2
21	PAFZZA	5310-01-129-0450	45152	351AX	•WASHER,LOCK	2
22	PAFZZA	5310-00-725-9479	25567	D06	•NUT,PLAIN,HEXAGON, 3/8-16	2
23	PAFZZA	5310-01-063-8970	45152	434AX1	•NUT,PLAIN,HEXAGON, 3/8-16	1
24	PAFZZA	4730-01-211-0950	96906	MS39230-1B	ELBOW,PIPE	1
25	PAFZZA	4730-00-921-3623	96906	MS51953-1	NIPPLE,PIPE	1
26	PAFZZA	4730-01-551-6497	54578	1101-1/8	ELBOW,PIPE	1
27	PAFZZA	4730-00-196-1483	96906	MS51953-11	NIPPLE,PIPE, 1/8X3	1
28	PAFZZA	4730-00-996-8385	96906	MS14304-2C02	COUPLING,PIPE	1
29	PAFZZA	4730-00-050-4208	11083	3B8489	FITTING, LUBRICATION	1
30	PAFZZA	3020-01-551-2485	61796	5174-223	SPROCKET,DRIVE	1
31	PAFZZA	5305-00-715-1207	80205	MS51981-59	•SETSCREW	2
32	PAFZZA	5315-00-780-8475	96906	MS20066-210	KEY,MACHINE, 1/4 X 1/4 X 1-1/2	1
33	PAFZZA	3040-01-551-1338	61796	1693-016-00	SHAFT,DRIVE	1
34	PAFZZA	5305-00-724-6801	80205	MS51964-53	SETSCREW,10-32 X 1/2	1
35	PAFZZA	3040-01-551-2725	61796	5114-004-00350	SHAFT,COUNTER,FRONT 35 IN.	1
36	PAFZZA	3010-01-551-2475	61796	5807-004	U-JOINT,METER DRIVE	2
37	PAFZZA	5305-01-025-9979	80205	MS51964-121	•SETSCREW	2
38	PAFZZA	3040-01-551-3948	61796	5114-004-01100	SHAFT,COUNTER,REAR, 11 IN.	1
39	PAFZZA	6680-01-551-1227	61796	5508-018	COUNTER	1
40	PAFZZA	5305-00-993-1848	80205	MS35207-265	SCREW,MACHINE, 10-32 X 3/4	4
41	PAFZZA	5310-01-372-6378	45152	112556A	NUT,SELF-LOCKING,HEX, NO. 10-32	4

END OF FIGURE

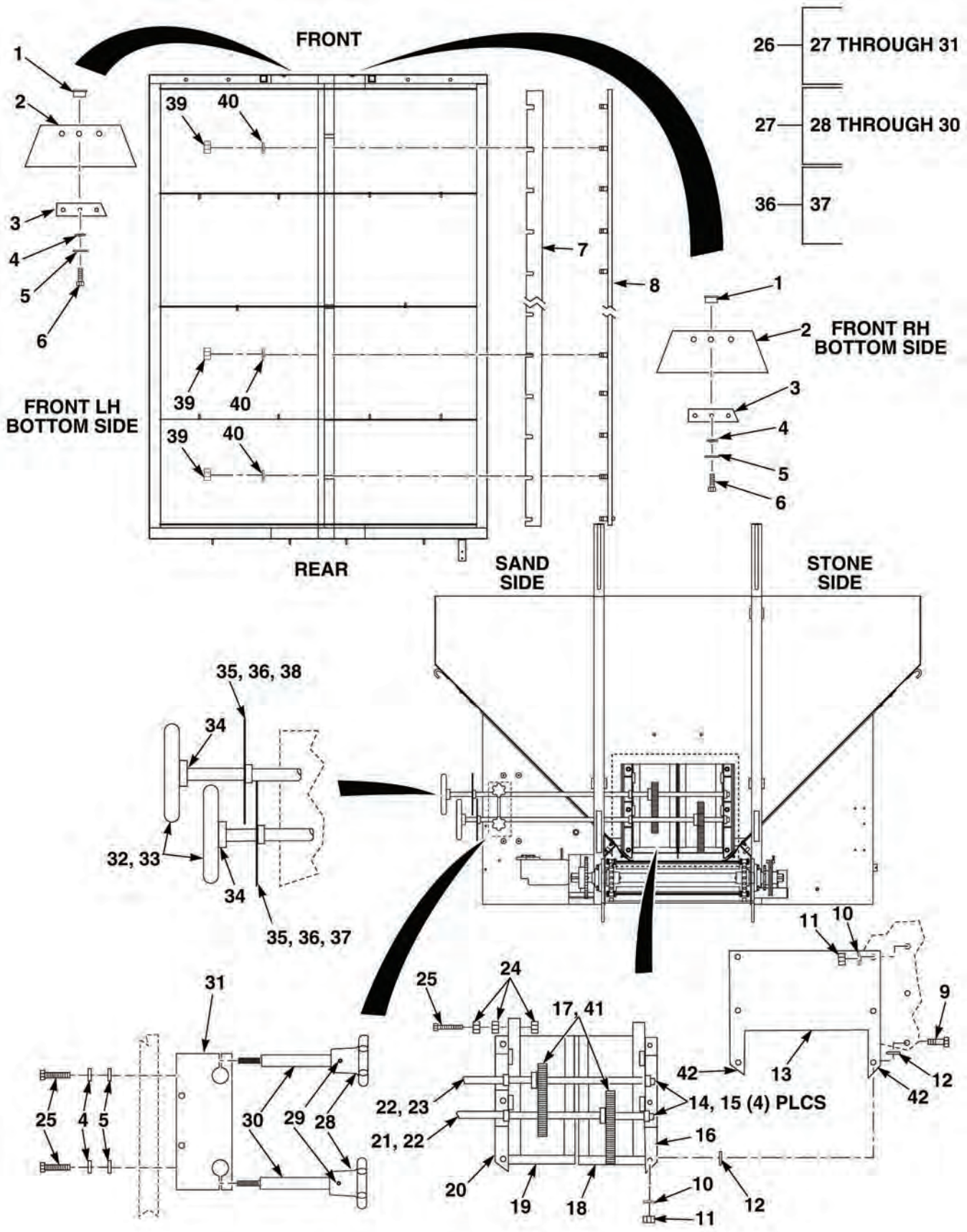

FIG. 8 AGGREGATE BIN

(1) ITEM NO	(2) SMR CODE	(3) NSN	(4) CAGEC	(5) PART NUMBER	(6) DESCRIPTION	(7) QTY
					FIG. 8 AGGREGATE BIN	
1	PAFZZA	5310-00-006-8291	80205	NAS1329S4E-140	NUT,PLAIN,BLIND RIVET,1/4-20	6
2	PFFZZA	2590-01-547-4233	61796	1932-A40	MOUNT,BELT WIPER	1
3	PFFZZA	5340-01-547-5331	61796	1932-A41	RETAINER	2
4	PAFZZA	5310-00-582-5965	80205	MS35338-44	WASHER,LOCK,1/4	8
5	PAFZZA	5310-00-809-4058	96906	MS27183-10	WASHER,FLAT	6
6	PAFZZA	5305-01-346-3692	45152	1764650	SCREW,CAP,HEXAGON HD, 1/4-20 X 1 1/4	6
7	PFFZZA	5340-01-547-5100	61796	0859-00111	GUIDE,MATERIAL	1
8	PFFZZA	5340-01-547-6751	61796	1932-221	STRIP,RETAINER	1
9	PAFZZA	5305-01-483-1144	45152	463B01	SCREW,CAP,HEXAGON HD 1/2-13 X 1-1/2	2
10	PAFZZA	5310-01-133-2130	45152	355AX	WASHER,LOCK,1/2	6
11	PAFZZA	5310-01-057-0822	45152	1768HX1	NUT,PLAIN,HEXAGON, 1/2-13	6
12	PAFZZA	5310-01-236-1710	45152	720HX2	WASHER,FLAT,1/2	8
13	PFFZZA	5340-01-547-5105	61796	1932-040	GATE,BACK PLATE SUPPORT	1
14	PAFZZA		61796	5810-014	SET COLLAR	4
15	PAFZZA	5305-01-295-1317	24975	Z111095648	SETSCREW 5/16-18 X 1/2	1
16	PFFZZA	5340-01-547-6766	61796	1932-037	GATE,HOUSING LH	1
17	PAFZZA		61796	5812-001	GEAR,SPUR	2
18	PFFZZA	2590-01-547-0415	61796	1932-207	GATE,LH AGGREGATE BIN	1
19	PFFZZA	2590-01-547-4230	61796	1932-208	GATE,RH AGGREGATE BIN	1
20	PFFZZA	5340-01-547-5325	61796	1932-038	GATE,HOUSING, RH	1
21	PFFZZA	3040-01-547-0088	61796	1932-042	GATE,SHAFT,STONE GATE	1
22	PAFZZA	5315-00-730-4564	80205	MS20066-143	KEY,MACHINE, 3/16 X 3/16 X 1	2
23	PFFZZA	3040-01-548-5282	61796	1932-041	GATE,SHAFT,SAND GATE	1
24	PAFZZA	5310-00-584-5005	96906	MS35690-405	NUT,PLAIN,HEXAGON, 1/4-20	3
25	PAFZZA	5305-00-964-0559	96906	MS51095-310	SCREW,CAP,HEXAGON, HD, 1/4-20 X 1-1/2	3
26	PAFFFA	5355-01-551-6198	61796	0963-106-00	LOCK ASSEMBLY,DUAL	1
27	PAFFFA	5355-01-551-6495	61796	0619-000-00	.KNOB/STEM ASSEMBLY, LOCKING	2
28	PAFZZA	5355-01-551-4030	61796	0619-001	..KNOB,GATE	1
29	PAFZZA	5315-00-753-3894	80205	MS16562-238	..PIN,SPRING	1
30	PAFZZA	5355-01-551-1339	61796	0619-003	..SHAFT,KNOB	1
31	PFFZZA	5340-01-547-6686	61796	0570-000-00	.BLOCK,LOCK,DOUBLE	1
32	PAFZZA	5340-01-551-2467	61796	0963-007	GATE,WHEEL	2
33	PAFZZA	5305-00-724-6810	96906	MS51963-101	SETSCREW,1/4-20 X 3	2
34	PAFZZA	5315-00-869-3664	96906	MS20066-281	KEY,MACHINE, 5/16 X 5/16 X 2	2
35	PAFFFA	5355-01-552-3981	61796	1932-260	DIAL,CONTROL MATERIAL GATE	2
36	PAFZZA	5305-01-295-1317	24975	Z111095648	SETSCREW, 5/16-18 X 1/2	1
37	PAFZZA	7690-01-551-3823	61796	1932-D36	DECAL,STONE CONTROL	1
38	PAFZZA	7690-01-551-3341	61796	1932-D37	DECAL,SAND CONTROL	1
39	PAFZZA	5310-01-478-8691	45152	1419270	NUT,SELF-LOCKING HEX, 5/16-18	14
40	PAFZZA	5310-01-068-8446	45152	354AX	WASHER,LOCK	14
41	PAFZZA	5305-00-715-1207	80205	MS51981-59	SETSCREW, 5/16-11 X 5/16	2
42	PAFZZA		61796	1932-A39	FISHPLATE,CORNER	2

END OF FIGURE

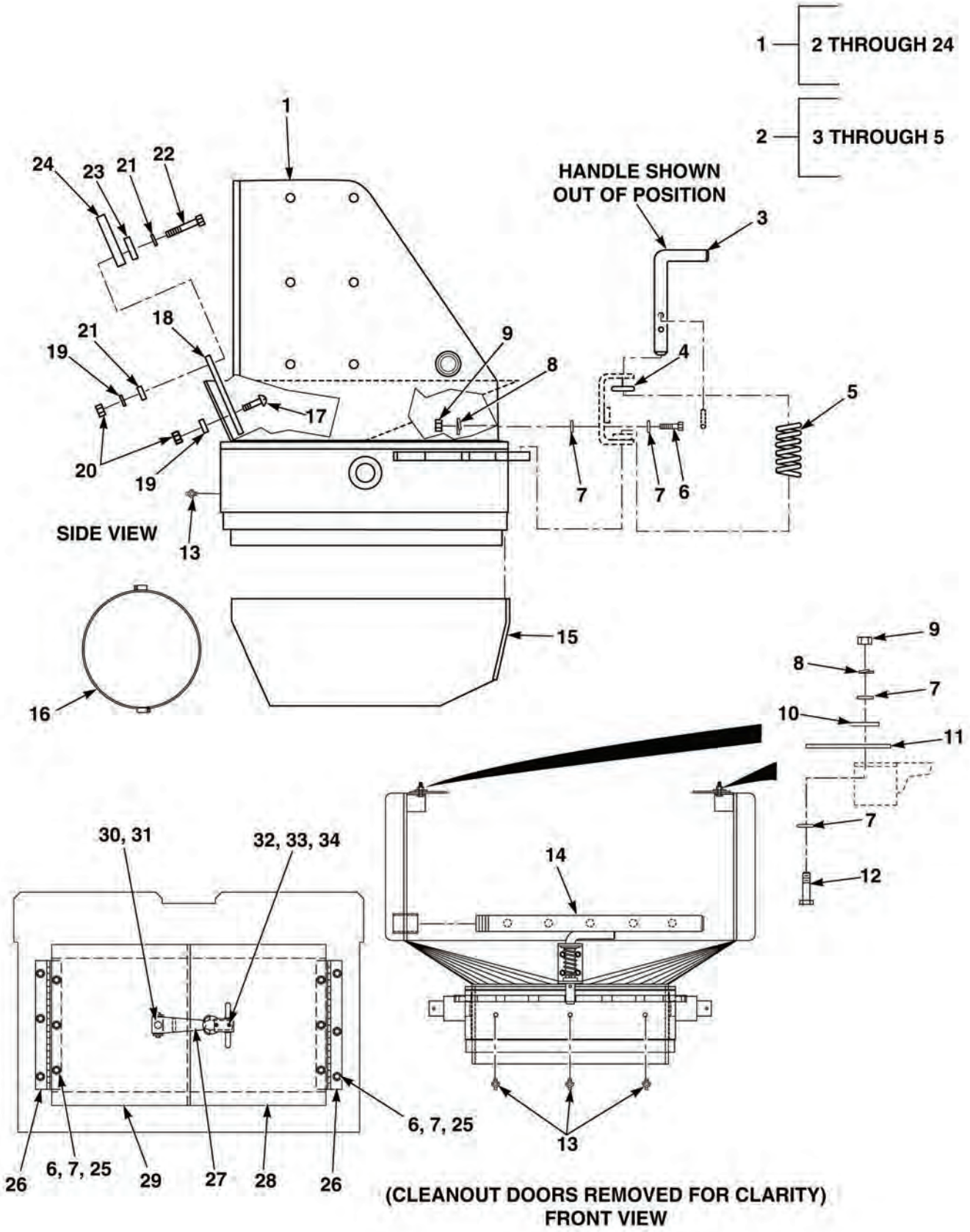
1 — 2 THROUGH 24
2 — 3 THROUGH 5
HANDLE SHOWN OUT OF POSITION
SIDE VIEW
(CLEANOUT DOORS REMOVED FOR CLARITY)
FRONT VIEW

FIG. 9 SWIVEL

(1) ITEM NO	(2) SMR CODE	(3) NSN	(4) CAGEC	(5) PART NUMBER	(6) DESCRIPTION	(7) QTY
					FIG. 9 SWIVEL	
1	PFFFFA	3895-01-482-1070	61796	1932-406	•SWIVEL HOPPER	1
2	PAFFFA	5340-01-551-2746	61796	1932-C09	•LATCH ASSEMBLY, MIXER SWIVEL	1
3	PAFZZA		61796	1932-095	••LOCKING PIN	1
4	PAFZZA	5310-00-809-8533	96906	MS27183-23	••WASHER,FLAT	1
5	PAFZZA	5360-01-551-2836	61796	5370-606-000	••SPRING,HELICAL, COMPRESSION	1
6	PAFZZA	5305-01-480-2359	45152	3268673	•SCREW,CAP,HEXAGON HD, 1/4-20 X 3/4	16
7	PAFZZA	5310-00-809-4058	96906	MS27183-10	•WASHER,FLAT	28
8	PAFZZA	5310-00-582-5965	80205	MS35338-44	•WASHER,LOCK,1/4	8
9	PAFZZA	5310-01-346-9445	45152	1600460	•NUT,SELF-LOCKING,HEX CLINCH, 1/4-20	8
10	PAFZZA	5340-01-551-2395	61796	1932-B26	•RETAINER,BAR FLAP	2
11	PAFZZA	5340-01-551-4627	61796	1932-B27	•FLAP,DUST	2
12	PAFZZA	5305-01-280-7901	45152	66420AX	•SCREW,CAP,HEXAGON HD, 1/4-20 X 1	4
13	PAFZZA	4730-00-050-4208	11083	3B8489	•FITTING, LUBRICATION	6
14	PAFZZA	4730-01-552-1628	61796	1932-219	•PIPE,EXIT	1
15	PAFZZA	4030-01-551-1286	61796	0940-002-00	•SKIRT,SWIVEL	1
16	PAFZZA		61796	5370-101	•CLAMP	1
17	PAFZZA	5306-01-354-5770	45152	1898620	•BOLT,SQUARE NECK, 5/16-18 X 1	5
18	PAFZZA	5340-01-551-2361	61796	1932-A86	•WIPER MOUNT	1
19	PAFZZA	5310-01-068-8446	45152	354AX	•WASHER,LOCK	5
20	PAFZZA	5310-01-478-8691	45152	1419270	•NUT,SELF-LOCKING HEX, 5/16-18	11
21	PAFZZA	5310-00-999-0424	45152	5159714	•WASHER,FLAT,5/16	12
22	PAFZZA	5305-01-353-8267	45152	1754220	•SCREW,CAP,HEXAGON HD, 5/16-18 X 1 1/2	6
23	PAFZZA	5340-01-551-4623	61796	1932-A87	•RETAINER	1
24	PAFZZA		61796	0395-001	•WIPER,BELT	1
25	PAFZZA	5310-01-504-5702	39428	90715A125	NUT,SELF-LOCKING,HEX, 1/4-20	12
26	PAFZZA	5340-01-551-1718	61796	1932-B25	HINGE	2
27	PAFZZA	2540-01-152-7764	45152	1324940	LATCH,HOOD,VEHICULAR	1
28	PAFZZA	5340-01-551-1209	61796	1932-B24	DOOR,CLEANOUT,RH	1
29	PAFZZA	5340-01-551-2401	61796	1932-B23	DOOR,CLEANOUT,LH	1
30	PAFZZA	5305-01-062-1017	45152	1376HX1	SCREW,CAP,HEXAGON HD, 5/16-18 X 3/4	1
31	PAFZZA	5310-01-081-5351	08928	SN-524NE-24	NUT,SELF-LOCKING,HEX, 5/16-18	1
32	PAFZZA	5340-01-271-0292	19207	12308228	BRACKET,ANGLE	1
33	PAFZZA	5305-00-993-1848	80205	MS35207-265	SCREW,MACHINE, 10-32 X 3/4	1
34	PAFZZA	5310-00-429-3127	24975	26175	NUT,HEXAGON,10-32	1

END OF FIGURE

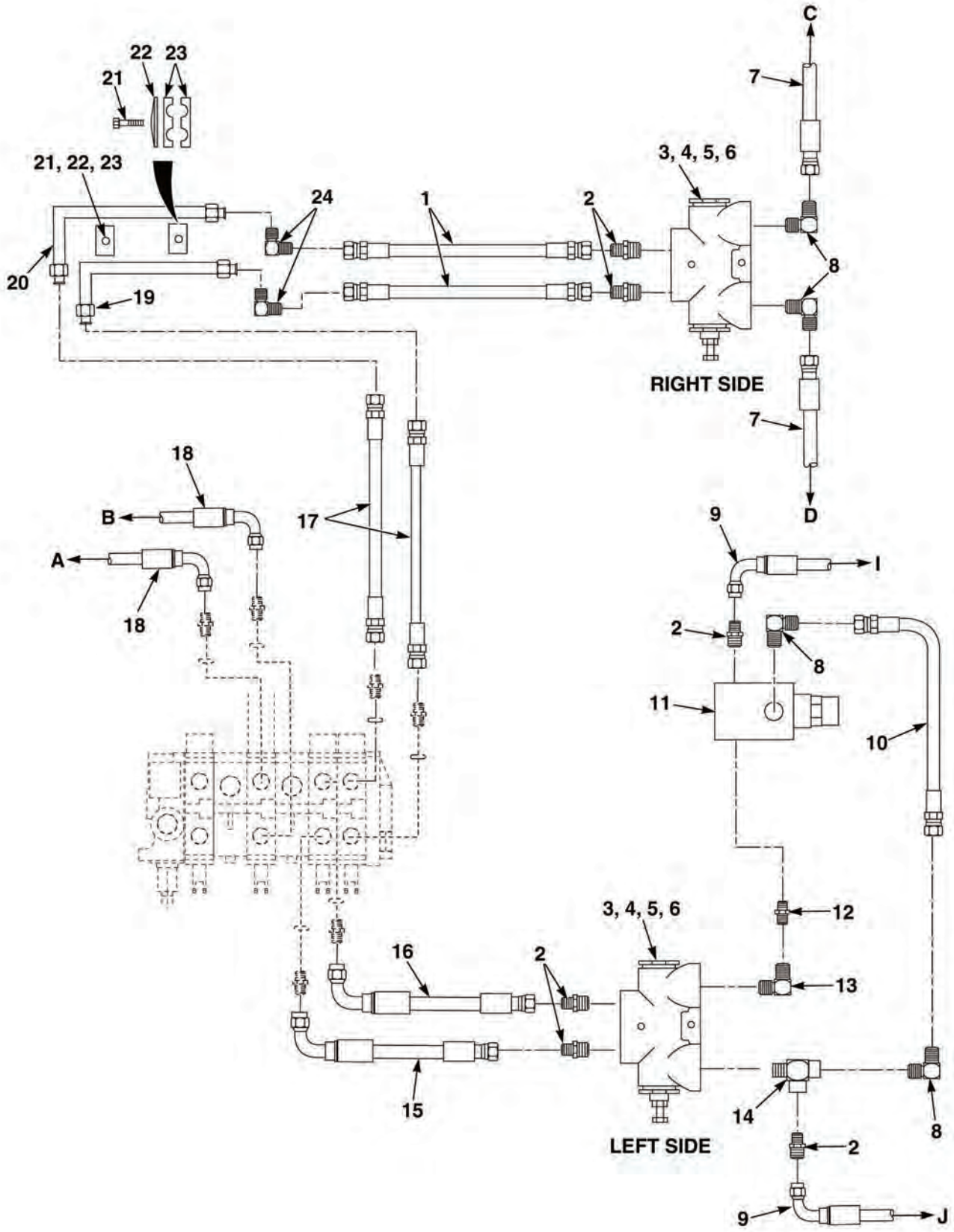

FIG. 10 MIXER SUPPORT SHEET 1 OF 4

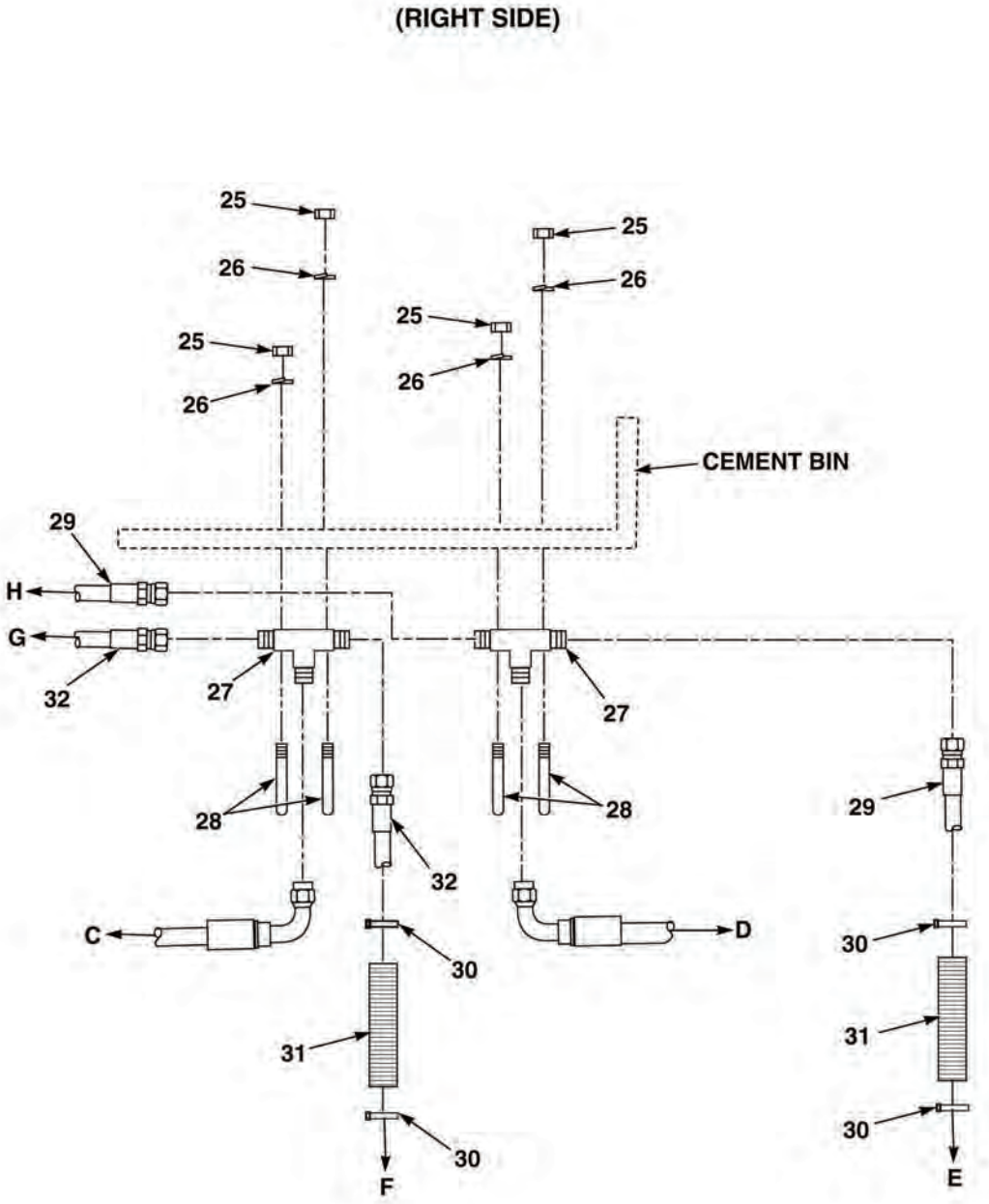

FIG. 10 MIXER SUPPORT SHEET 2 OF 4

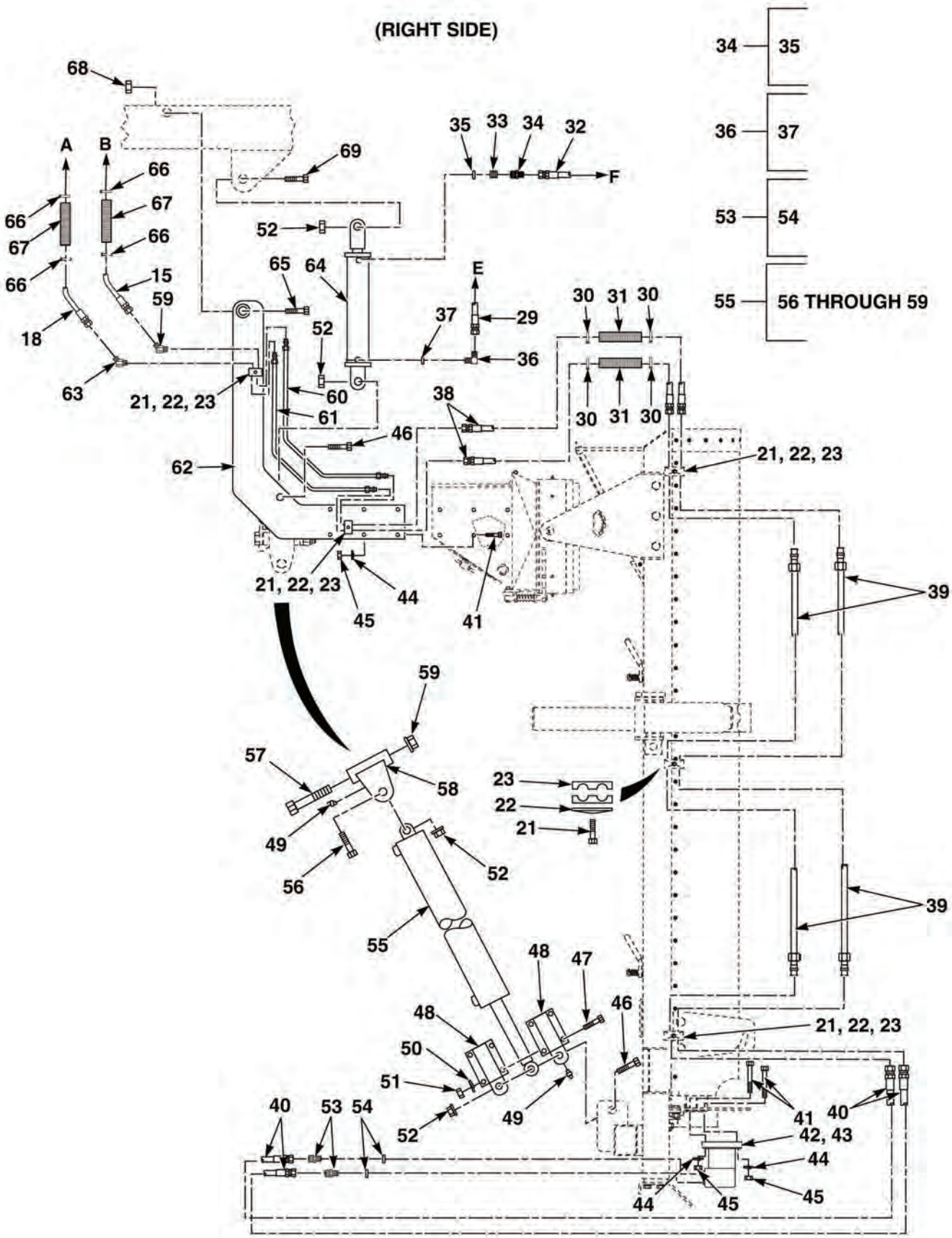

FIG. 10 MIXER SUPPORT SHEET 3 OF 4

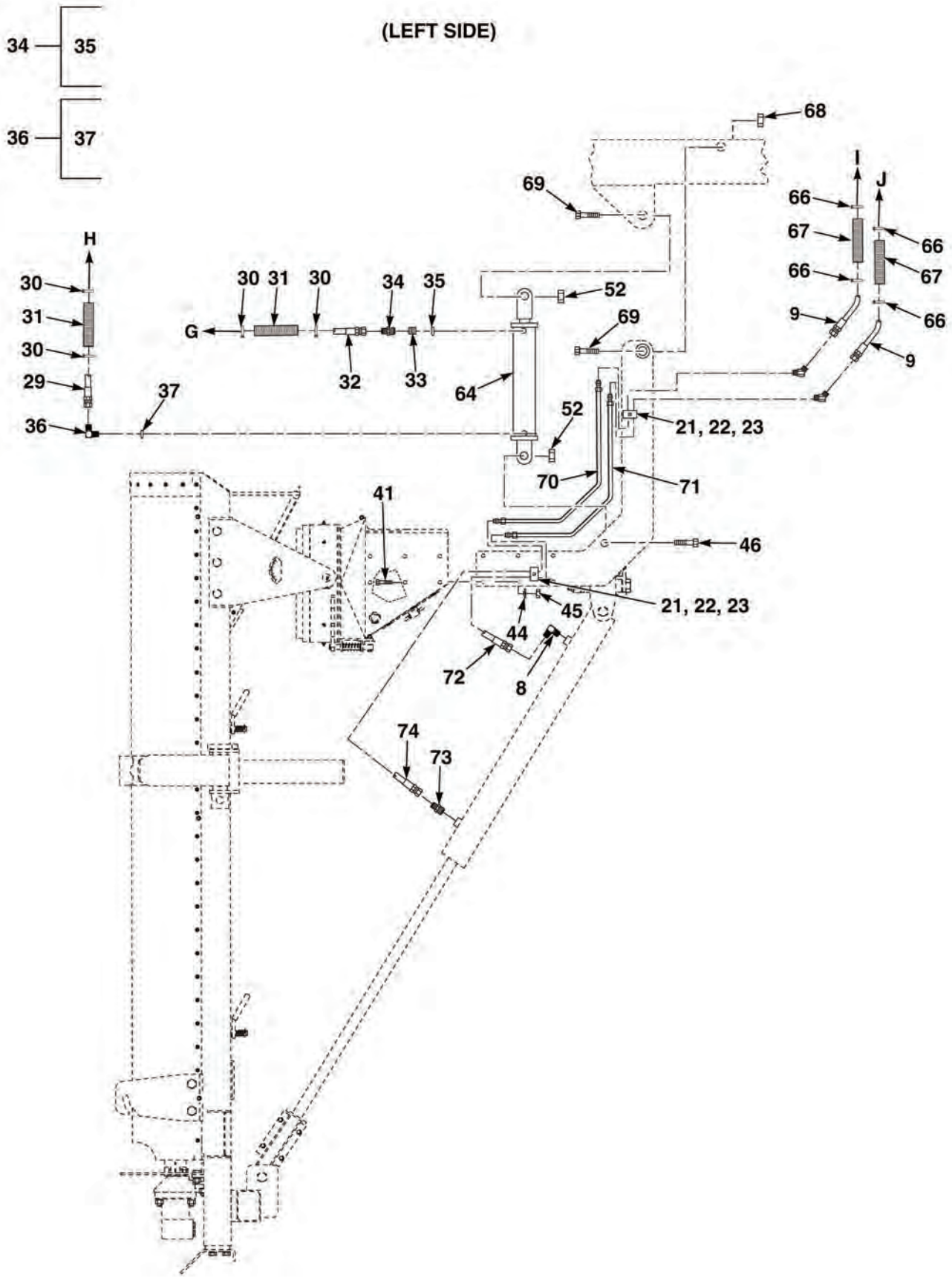

FIG. 10 MIXER SUPPORT SHEET 4 OF 4

(1) ITEM NO	(2) SMR CODE	(3) NSN	(4) CAGEC	(5) PART NUMBER	(6) DESCRIPTION	(7) QTY
					FIG. 10 MIXER SUPPORT	
1	PAFZZA	4720-01-551-1228	61796	1932-561	HOSE ASSEMBLY	2
2	PAFZZA	3040-01-552-1790	0S1H5	2404-10-08	ADAPTER,STRAIGHT, PIPE TO TUBE	6
3	PAFZZA	4820-00-449-4620	91561	DC-750-5	VALVE,LOCK	2
4	PAFZZA	5305-00-846-5703	80204	B1821BH038C300N	SCREW,CAP,HEXAGON HD	4
5	PAFZZA	5310-01-177-4625	45152	108708A	NUT,SELF-LOCKING,HEX,3/8-16	4
6	PAFZZA	5365-01-547-5082	61796	1932-A93	SPACER	4
7	PAFZZA	4720-01-551-1219	61796	1932-567	HOSE ASSEMBLY, LOCK VALVE	2
8	PAFZZA	4730-01-547-5057	0S1H5	2501-10-08	ELBOW,PIPE	4
9	PAFZZA	4720-01-551-1317	61796	1932-560	HOSE,HYDRAULIC	2
10	PAFZZA	4720-01-551-3893	61796	1932-554	HOSE,HYDRAULIC	1
11	PAFZZA	4820-01-145-9471	19184	RL-50	VALVE,SAFETY RELEASE	1
12	PAFZZA	4730-01-551-7673	0S1H5	5404-08	ADAPTER,STRAIGHT	1
13	PAFZZA	4730-01-551-6049	0S1H5	5502-08-08	ELBOW,STREET	1
14	PAFZZA	4730-01-552-1943	0S1H5	5224-5602-08	TEE,STREET	1
15	PAFZZA	4720-01-551-5085	61796	1932-555	HOSE,HYDRAULIC	1
16	PAFZZA	4720-01-551-4092	61796	1932-556	HOSE,HYDRAULIC	1
17	PAFZZA	4720-01-551-2531	61796	1932-557	HOSE, VALVE/LOCK VALVE	2
18	PAFZZA	4720-01-551-2690	61796	1932-547	HOSE,HYDRAULIC, MIXER	2
19	PAFZZA	4710-01-551-2557	61796	1932-525	TUBE,HYDRAULIC LIFT ARM	1
20	PAFZZA	4710-01-552-1158	61796	1932-524	TUBE,HYDRAULIC LIFT ARM	1
21	PAFZZA	5306-01-164-7437	45152	1849HX1	BOLT,MACHINE, 5/16-18 X 1-3/4	9
22	PAFZZA	5340-01-172-1566	53790	GD-3D	COVER,ACCESS	9
23	PAFZZA	4730-01-551-6543	53790	3190/190D-PPH	•BODY,CLAMP	18
24	PAFZZA	4730-00-834-4521	96906	MS51505A12	ELBOW,TUBE	2
25	PAFZZA	5310-00-584-5005	96906	MS35690-405	NUT,PLAIN,HEXAGON, 1/4-20	8
26	PAFZZA	5310-00-582-5965	80205	MS35338-44	WASHER,LOCK,1/4	8
27	PAFZZA	4730-01-551-1190	39428	4860K443	TEE	2
28	PAFZZA	5306-00-308-1392	39428	3043T11	BOLT,U, 1/4-20 X 3/8	4
29	PAFZZA	4720-01-551-2748	61796	1932-569	HOSE,HYDRAULIC, MIXER RETRACTOR	2
30	PAFZZA	4730-01-551-6648	61796	5222-944	CLAMP	12
31	MFFZZA	4720-01-551-1296	61796	G81800-0014HG-14	COVER,HOSE, MAKE FROM P/N G81800-0014HG-14, CAGE 24161	6
32	PAFZZA	4720-01-551-2697	61796	1932-570	HOSE,HYDRAULIC, MIXER RETRACTOR	2
33	PAFZZA	4730-00-042-8988	81348	WW-P-471-ACABUB	PLUG,PIPE	2
34	PAFZZA	4730-01-547-7018	0S1H5	6400-10-08	ADAPTER,STRAIGHT, TUBE TO BOSS	2
35	PAFZZA	5331-00-808-0794	81343	MS28778-8	•O-RING	1
36	PAFZZA	4730-01-551-8609	0S1H5	6801-10-08	ELBOW,PIPE	2
37	PAFZZA	5330-01-480-2366	45152	7HB220	•PACKING,PREFORMED	1
38	PAFZZA	4720-01-551-7435	61796	1932-550	HOSE,HYDRAULIC, HYDRAULIC MIXER	2
39	PAFZZA	4710-01-551-1208	61796	1932-515	TUBE, MIXER	2
40	PAFZZA	4720-01-551-5073	61796	1932-551	HOSE, HYDRAULIC, MIXER	2
41	PAFZZA	5305-00-964-0589	96906	MS51095-416	SCREW, 1/2-13 X 2	4
42	PAFZZA	4320-01-551-4715	9G527	105-1026-006	MOTOR,HYDRAULIC	1
43	PAFZZA	5315-01-087-1322	96906	MS20066-277	KEY,MACHINE	1
44	PAFZZA	5310-01-133-2130	45152	355AX	WASHER,LOCK,1/2	13
45	PAFZZA	5310-01-057-0822	45152	1768HX1	NUT,PLAIN,HEXAGON, 1/2-13	13
46	PAFZZA	5305-00-990-8407	80204	B1821BH100C550N	SCREW,CAP,HEXAGON HD, 1-8 X 5 1/2	3

(1) ITEM NO	(2) SMR CODE	(3) NSN	(4) CAGEC	(5) PART NUMBER	(6) DESCRIPTION	(7) QTY
47	PAFZZA	5305-00-543-2419	80204	B1821BH038C113N	SCREW,CAP,HEXAGON HD, 3/8-16 X 1 1/4	4
48	PAFZZA	5340-01-551-2880	61796	1932-220	STOP,CYLINDER, MIXER LIFT	2
49	PAFZZA	4730-00-050-4208	11083	3B8489	FITTING, LUBRICATION	2
50	PAFZZA	5310-01-129-0450	45152	351AX	WASHER,LOCK	4
51	PAFZZA	5310-01-063-8970	45152	434AX1	NUT,PLAIN,HEXAGON, 3/8-16	4
52	PAFZZA	5310-00-811-1377	81349	M45913/1-16CG5C	NUT,SELF-LOCKING,HEX, 1 -8	6
53	PAFZZA	4730-01-548-2942	0S1H5	6400-12-10	ADAPTER,STRAIGHT, TUBE TO BOSS	2
54	PAFZZA	5330-00-485-3586	45152	2CT976	•PACKING,PREFORMED	1
55	PAFZZA	3040-01-483-2966	61796	5234-13608	CYLINDER,HYDRAULIC	1
56	PAFZZA	5306-01-551-4589	61796	5315-852	•SCREW,CAP,HEXAGON HD, 1-8 X 6-1/2	1
57	PAFZZA	5306-01-551-3473	61796	5315-972	•SCREW,CAP, 1-1/4-7 X 9	1
58	PAFZZA	5340-01-551-1807	61796	1685-201	•MOUNT,CYLINDER	1
59	PAFZZA	5310-00-176-6267	81349	M45913/1-20CG5C	•NUT,SELF-LOCKING,HEX, 1-1/4-7	1
60	PAFZZA	4710-01-552-8110	61796	1932-511	TUBE,HYD,UPPER MIXER	1
61	PAFZZA	4710-01-551-6376	61796	1932-512	TUBE,HYD,LOWER MIXER	1
62	PAFZZA	2590-01-484-5333	61796	1932-407	ARM,LIFT	1
63	PAFZZA	4730-01-551-7279	01276	2504-12	ELBOW,UNION	4
64	PAFZZA	5306-01-551-4621	29260	B250120ABAAA03B	CYLINDER,HYDRAULIC	2
65	PAFZZA	5305-01-551-5076	61796	5315-956	SCREW,CAP,HEXAGON HD, 1-1/4-7 X 7	2
66	PAFZZA	4730-01-552-6223	61796	5222-954	CLAMP	8
67	MFFZZA		61796	5220-016	COVER,HOSE, MAKE FROM P/N G81800-0020HG-20, CAGE 24161	4
68	PAFZZA	5310-00-176-6267	81349	M45913/1-20CG5C	•NUT,SELF-LOCKING,HEX, 1-1/4-7	2
69	PAFZZA	5305-01-478-7409	45152	3418750	SCREW,CAP,HEXAGON HD, 1-8 X4	2
70	PAFZZA	4710-01-552-0239	61796	1932-514	TUBE,HYDRAULIC HOIST	1
71	PAFZZA	4720-01-551-6370	61796	1932-513	TUBE,HYDRAULIC HOIST	1
72	PAFZZA	4720-01-551-1306	61796	1932-565	HOSE,HYDRAULIC HOIST	1
73	PAFZZA	4730-00-202-8469	96906	MS51500A12	ADAPTER,STRAIGHT, PIPE TO TUBE	1
74	PAFZZA	4720-01-552-1194	61796	1932-566	HOSE,HYDRAULIC HOIST	1

END OF FIGURE

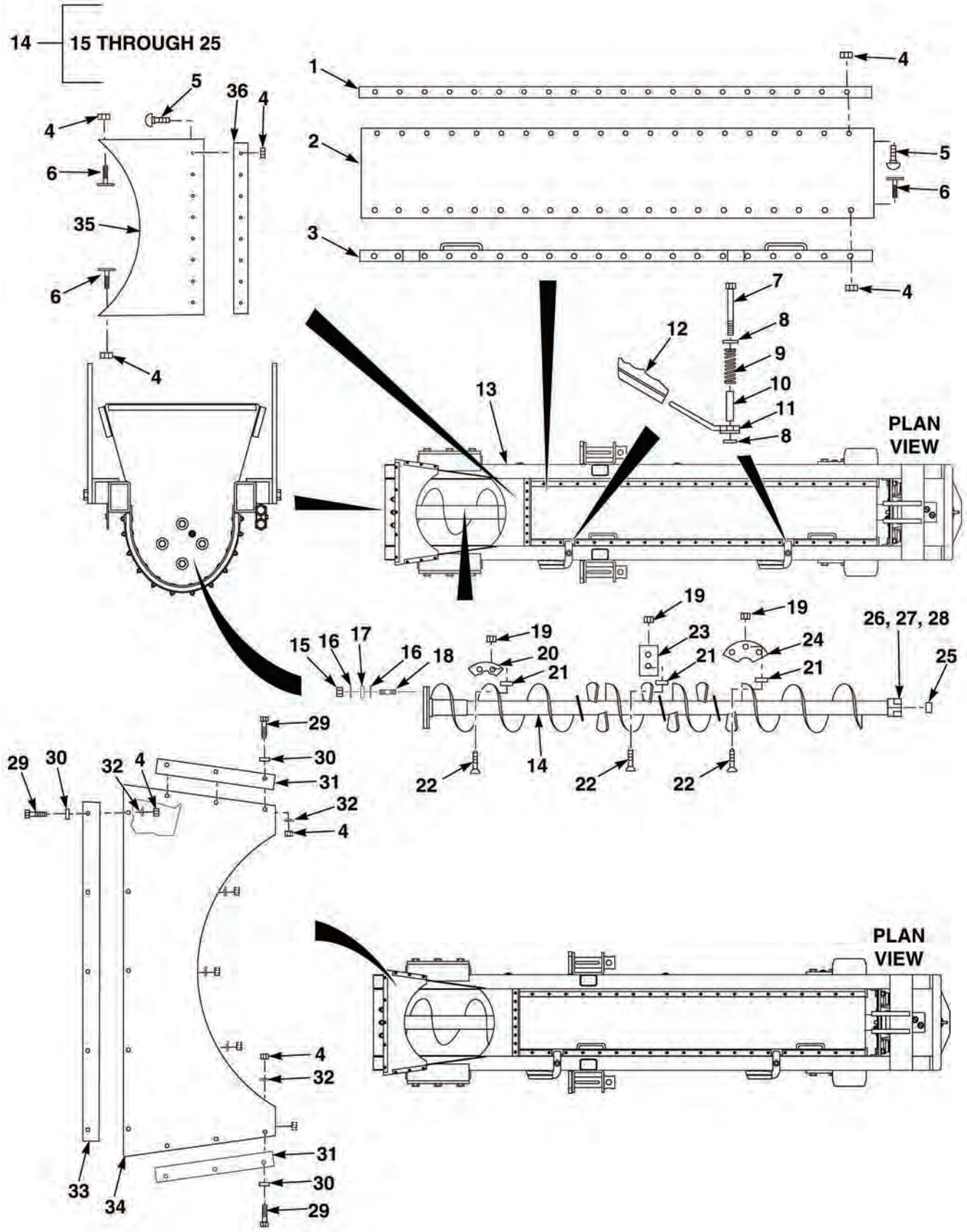

FIG. 11 MIXER SHEET 1 OF 2

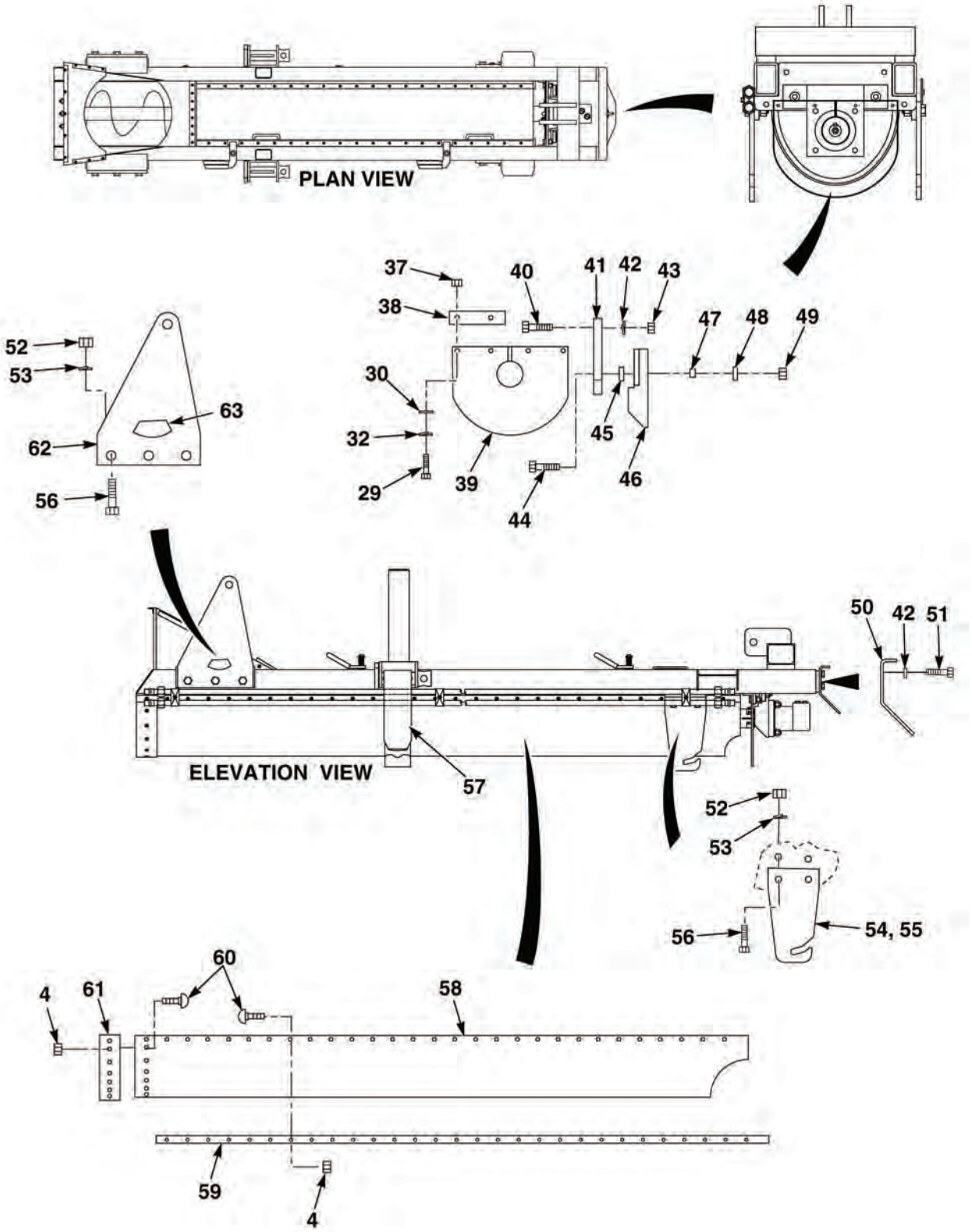

FIG. 11 MIXER SHEET 2 OF 2

(1) ITEM NO	(2) SMR CODE	(3) NSN	(4) CAGEC	(5) PART NUMBER	(6) DESCRIPTION	(7) QTY
					FIG. 11 MIXER	
1	PFFZZA	5340-01-547-5491	61796	1932-017	RETAINER,UPPER BOOT	1
2	PFFZZA	5340-01-547-5354	61796	1932-019	COVER,TOP	1
3	PFFZZA	5340-01-547-2893	61796	1932-204	RETAINER,HANDLE	1
4	PAFZZA	5310-00-584-5005	96906	MS35690-405	NUT,PLAIN,HEXAGON, 1/4-20	127
5	PAFZZA	5306-00-702-6344	80205	MS35751-15	BOLT,SQUARE NECK, 1/4-20 x 3/4	28
6	PAFZZA	5305-01-551-4007	61796	5350-005	BOLT,ELEVATOR, 1/4-20 x 5/8	22
7	PAFZZA	5305-00-071-2059	80204	B1821BH044C250N	SCREW,CAP,HEX HD, 7/16-14 X 2 1/2	2
8	PAFZZA	5310-00-809-4061	96906	MS27183-15	WASHER,FLAT	2
9	PAFZZA	5360-01-551-6130	61796	5379-031	SPRING, COMPRESSION	2
10	PAFZZA	5340-01-551-4709	61796	1561-003-00	INSERT,LATCH MIXER FRAME	2
11	PAFZZA	5340-01-551-2390	61796	1561-203	LATCH HANDLE	2
12	PAFZZA	5340-01-551-7974	39428	6962K37	HANDLE	2
13	PAFZZA	2510-01-484-7184	61796	1932-202	FRAME,MIXER STRUCTURE	1
14	PFFFFA	3040-01-546-9379	61796	1604-254-00	AUGER,MIXER	1
15	PAFZZA	5310-00-241-6659	81349	M45913/3-7CG8C	•NUT,SELF-LOCKING, 7/16-14	4
16	PAFZZA	5310-00-809-4061	96906	MS27183-15	•WASHER,FLAT	8
17	PAFZZA	5365-01-551-2774	61796	1932-C08	•RUBBER,ISOLATOR	4
18	PAFZZA	5307-01-551-1783	39428	91563A178	•STUD, 7/16-14 X 2-1/4	4
19	PAFZZA	5310-01-081-5351	08928	SN-524NE-24	•NUT,SELF-LOCKING,HEX, 5/16-18	79
20	PAFZZA	5340-01-551-4674	61796	0294-002	•WEARBLADE	23
21	PAFZZA	5310-00-999-0424	45152	5159714	•WASHER,FLAT,5/16	79
22	PAFZZA	5305-01-551-1216	39428	91266A583	•SCREW,CAP,SOCKET HD, 5/16-18 X 1	79
23	PAFZZA	5340-01-552-0251	61796	0284-003	•PADDLE	13
24	PAFZZA	5340-01-551-2408	61796	0294-001	•WEARBLADE	3
25	PAFZZA	4730-00-187-4210	96906	MS51884-9	•PLUG,PIPE	1
26	PAFZZA	5305-00-821-3869	80204	B1821BH038C175N	SCREW,CAP,HEXAGON HD, 3/8-16 X 7/8	2
27	PAFZZA	5310-01-177-4625	45152	108708A	NUT,SELF-LOCKING,HEX, 3/8-16	2
28	PAFZZA	5305-01-336-5925	4E670	8927579	SETSCREW	1
29	PAFZZA	5305-01-280-7901	45152	66420AX	SCREW,CAP,HEXAGON HD, 1/4-20 X 1	15
30	PAFZZA	5310-00-809-4058	96906	MS27183-10	WASHER,FLAT	11
31	PAFZZA	5340-01-551-4684	61796	1548-006	RETAINER	2
32	PAFZZA	5310-00-582-5965	80205	MS35338-44	WASHER,LOCK,1/4	11
33	PAFZZA	5340-01-551-1860	61796	1548-009	RETAINER	1
34	PAFZZA	5340-01-551-4679	61796	1548-007	DUST GUARD	1
35	PAFZZA	5340-01-551-4658	61796	1731-010	BOOT,HOPPER, REAR	1
36	PAFZZA	5340-01-551-9732	61796	1692-008-00	RETAINER,UPPER FRT	1
37	PAFZZA	5310-00-061-4650	96906	M45913/3-4CG8C	NUT,SELF-LOCKING,HEX, 1/4-20	4
38	PAFZZA	5340-01-551-4631	61796	1932-035	RETAINER	2
39	PAFZZA	5340-01-551-3879	61796	1932-034	RUBBER FLAP	1
40	PAFZZA	5305-01-210-2312	45152	26055AX	SCREW,CAP,HEXAGON HD, 1/2-13 X 1-1/2	4
41	PFFZZA	5340-01-547-3968	61796	1932-022	BRACKET,END	1
42	PAFZZA	5310-01-133-2130	45152	355AX	WASHER,LOCK,1/2	8
43	PAFZZA	5310-01-057-0822	45152	1768HX1	NUT,PLAIN,HEXAGON, 1/2-13	4
44	PAFZZA	5305-00-071-2075	80204	B1821BH050C300N	SCREW,CAP,HEXAGON HD, 1/2-13 X 3	2
45	PAFZZA	5340-01-551-4691	61796	0343-005	ISOLATOR	4
46	PAFZZA	5340-01-552-2208	61796	1726-204	BRACKET,MOTOR	1
47	PAFZZA	5365-01-551-4699	61796	0343-006	BUSHING	4

(1) ITEM NO	(2) SMR CODE	(3) NSN	(4) CAGEC	(5) PART NUMBER	(6) DESCRIPTION	(7) QTY
48	PAFZZA	5365-01-551-1580	61796	0343-004	ISOLATOR	2
49	PAFZZA	5310-01-479-0781	45152	3280591	NUT,PLAIN,HEXAGON, 1/2-13	2
50	PFFZZA	5340-01-547-3973	61796	1932-024	BRACKET,CHUTE ADJUSTING	1
51	PAFZZA	5305-00-044-4153	80205	MS90725-109	SCREW,CAP,HEX HD, 1/2-13 X 1	4
52	PAFZZA	5310-01-113-9811	45152	378BX1	NUT,PLAIN,HEXAGON, 5/8-11	10
53	PAFZZA	5310-01-061-5302	45152	318BX	WASHER,LOCK,5/8	10
54	PFFZZA	5340-01-547-2835	61796	1932-033	BRACKET,CHUTE,LH HANGER	1
55	PAFZZA	5340-01-545-1533	61796	1932-247	BRACKET,CHUTE,RH	1
56	PAFZZA	5306-01-513-6577	45152	1853HX1	SCREW,CAP,HEXAGON HD, 5/8-11 X 2	10
57	PAFZZA	5340-01-551-4704	61796	5609-51502	RATCHET STRAP, BOOT TENSION	2
58	PAFZZA	5340-01-551-6572	61796	1731-092-00	BOOT,BOTTOM	1
59	PAFZZA	5340-01-551-1612	61796	1932-018	RETAINER,LOWER BOOT	2
60	PAFZZA	5306-00-845-7961	80205	MS35751-16	BOLT,SQUARE NECK, 1/4-20 X 1 1/4	66
61	PAFZZA	5340-01-551-1854	61796	1932-A70	RETAINER,LOWER ARC	1
62	PAFZZA	5340-01-551-4633	61796	1932-051	BRACKET,HANGER	2
63	PAFZZA	5355-01-551-2872	61796	5910-301	INDICATOR,LEVEL	1

END OF FIGURE

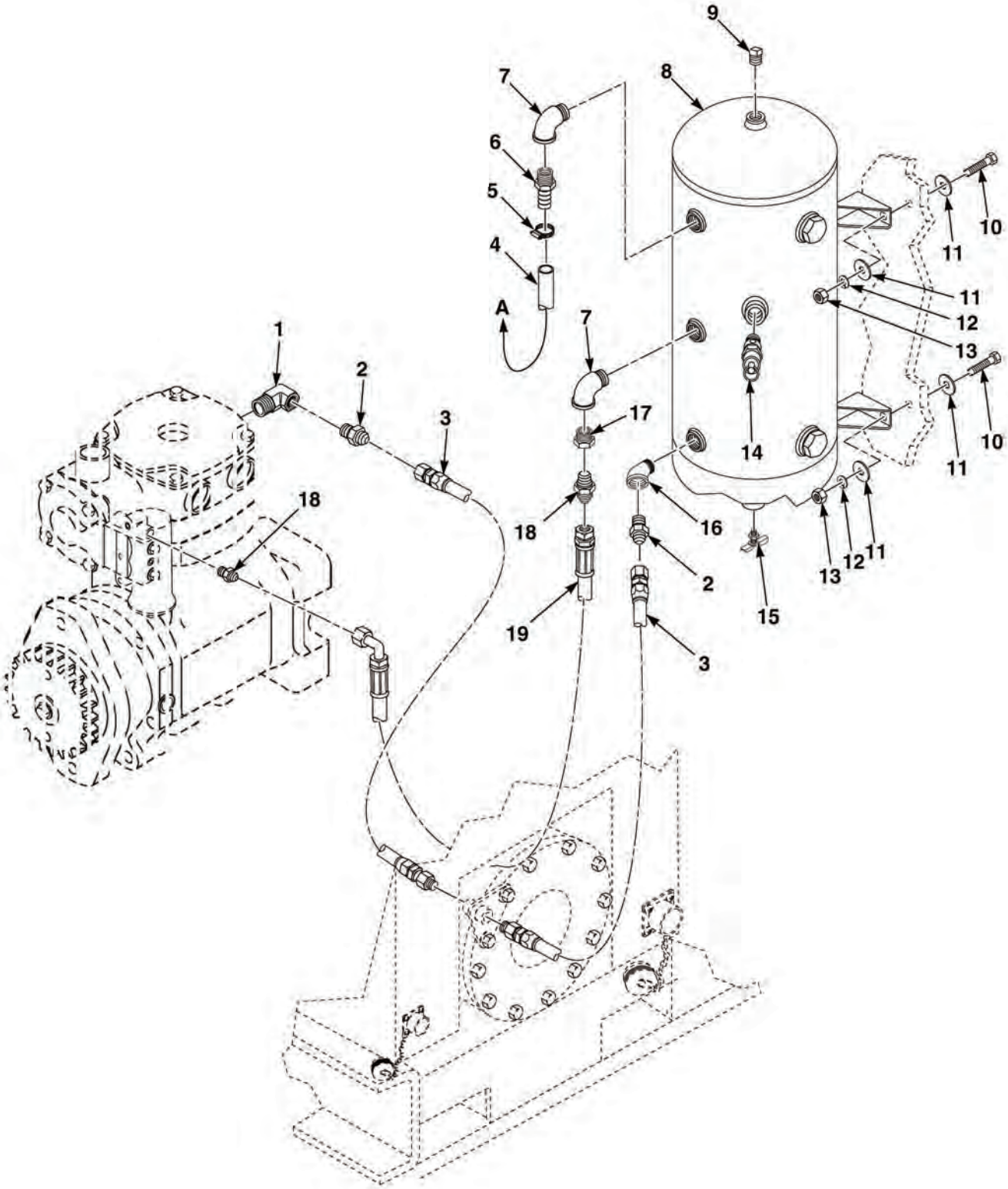

FIG. 12 AIR SYSTEM SHEET 1 OF 5

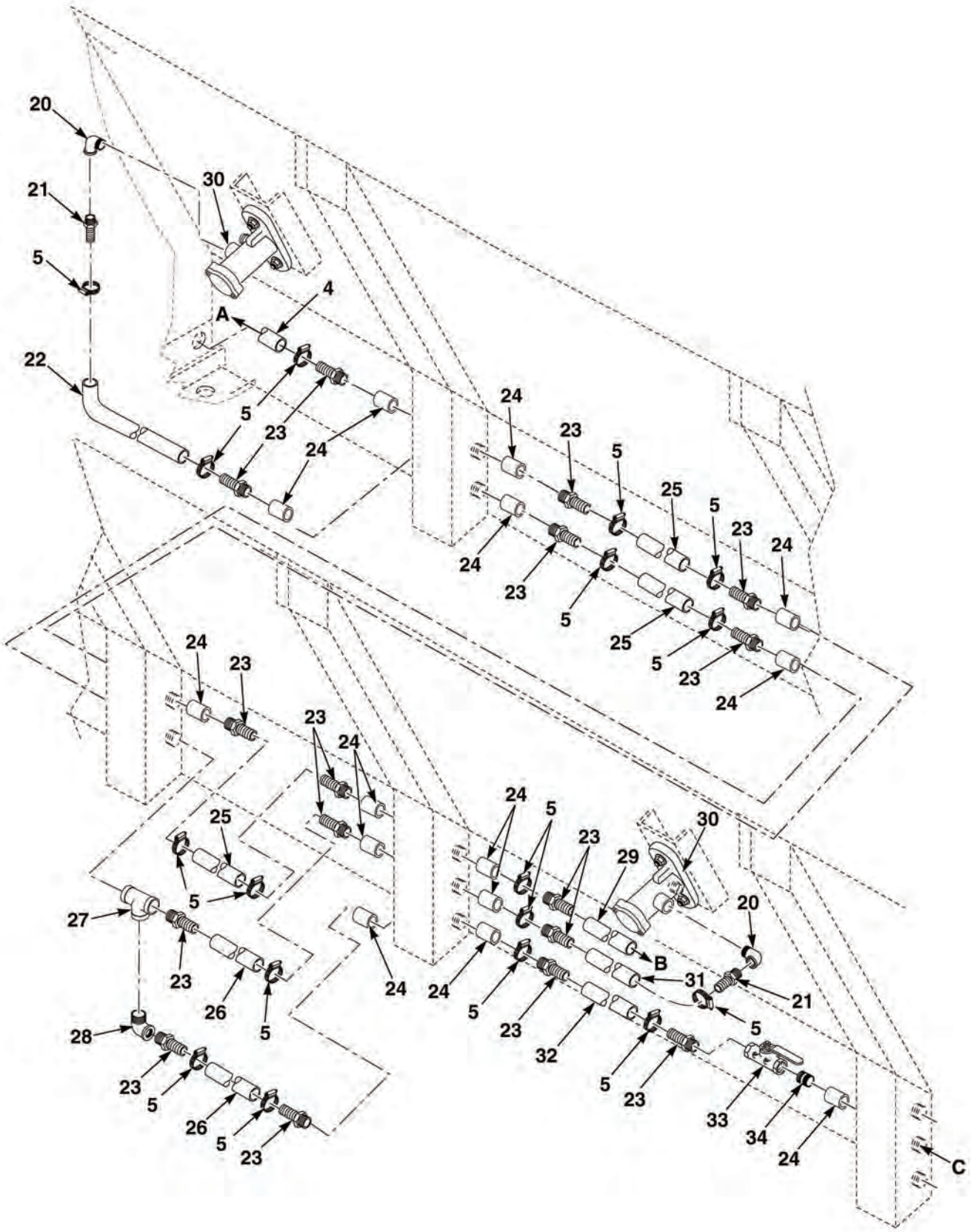

FIG. 12 AIR SYSTEM SHEET 2 OF 5

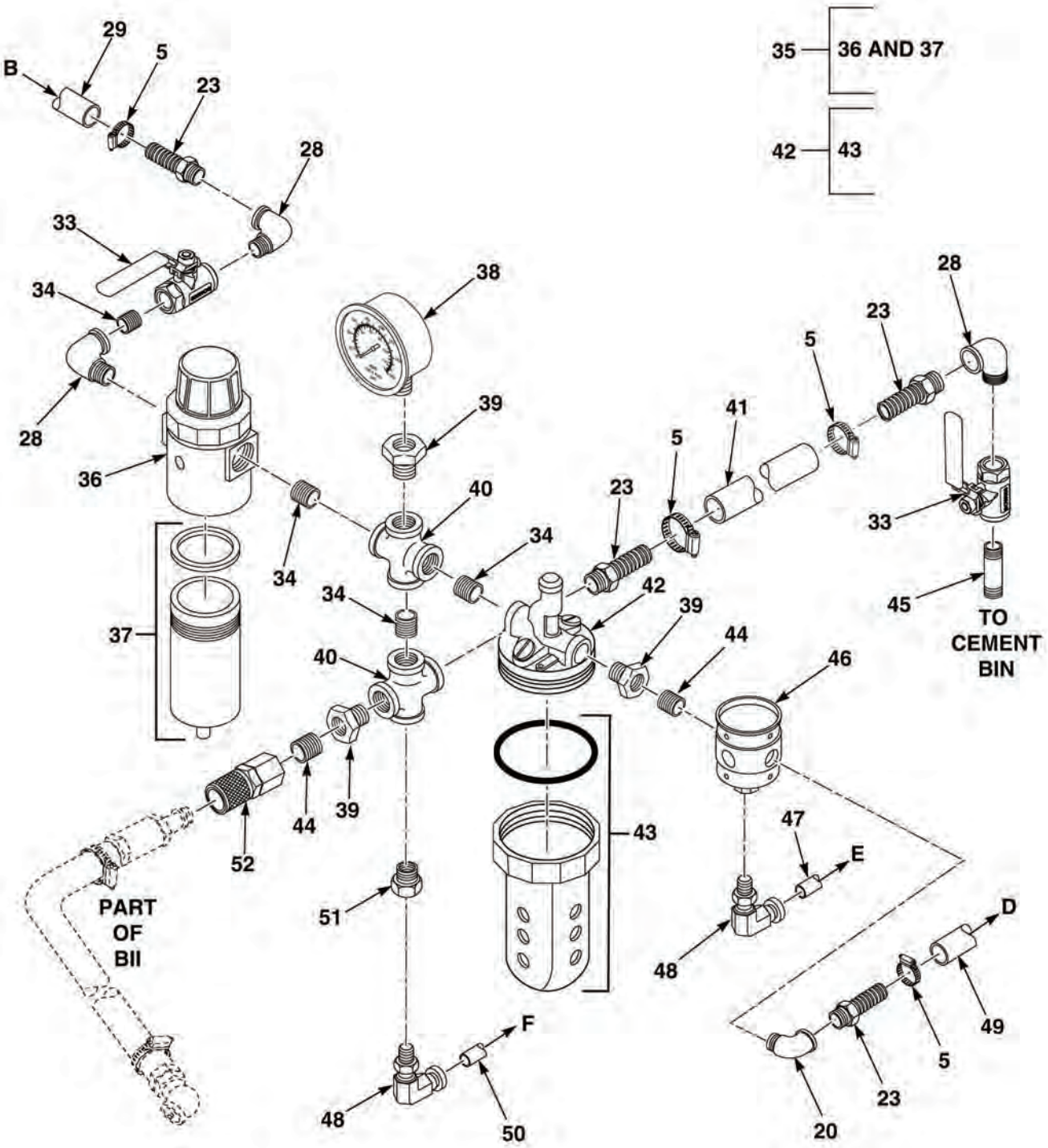

FIG. 12 AIR SYSTEM SHEET 3 OF 5

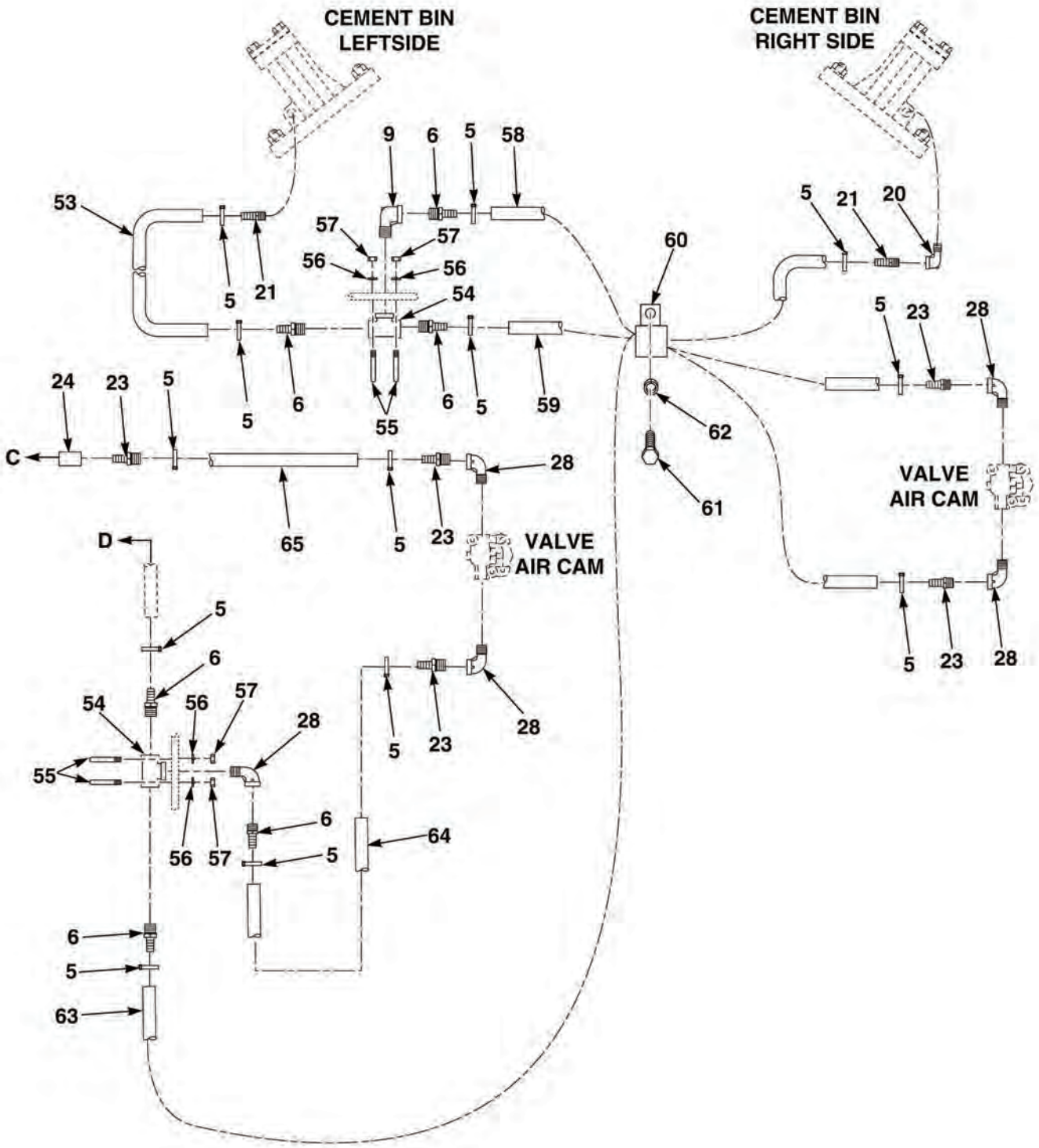

FIG. 12 AIR SYSTEM SHEET 4 OF 5

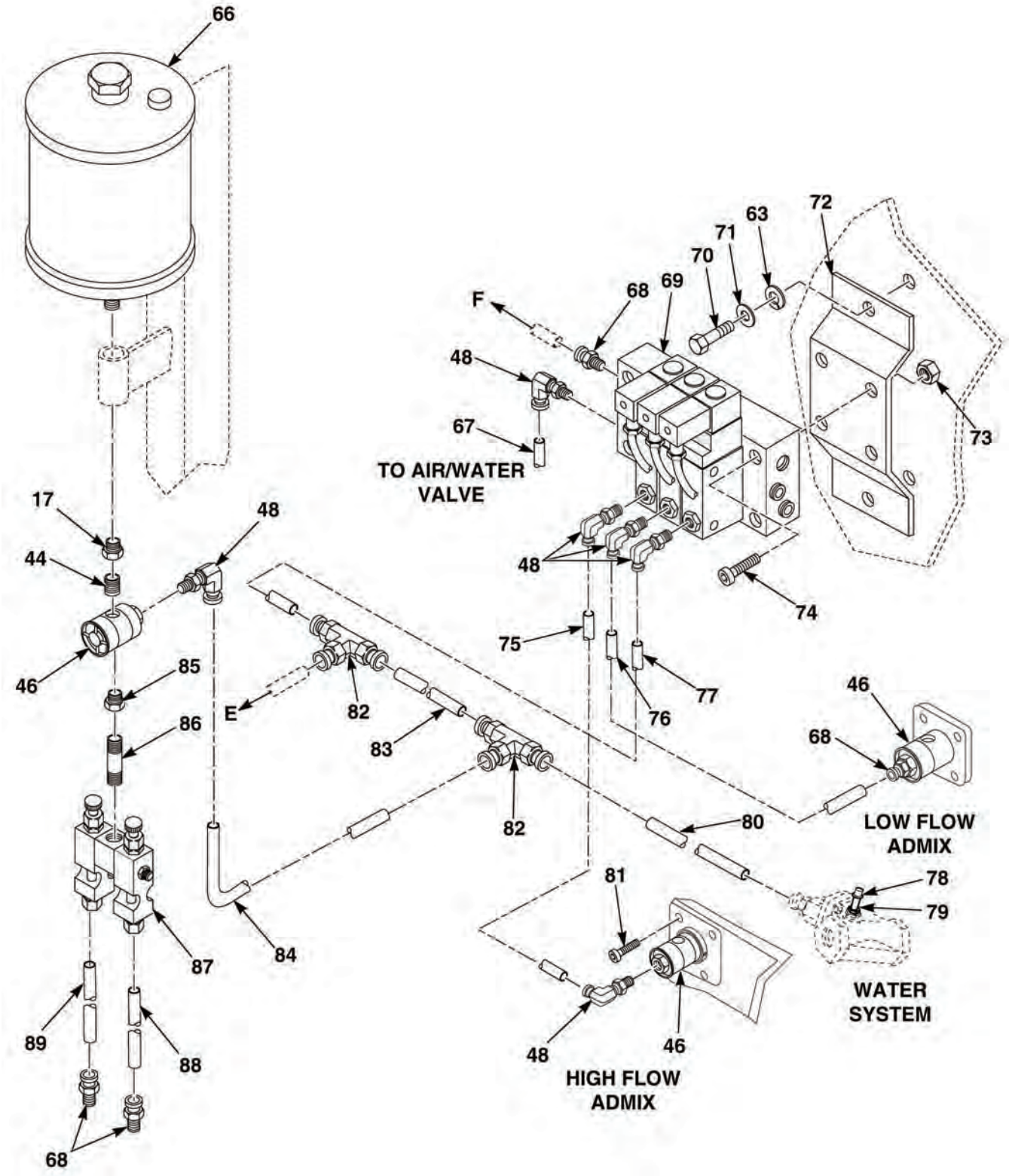

FIG. 12 AIR SYSTEM SHEET 5 OF 5

(1) ITEM NO	(2) SMR CODE	(3) NSN	(4) CAGEC	(5) PART NUMBER	(6) DESCRIPTION	(7) QTY
					FIG. 12 AIR SYSTEM	
1	PAFZZA	4730-01-551-6008	0S1H5	5502-12	ELBOW,STREET	1
2	PAFZZA	4730-00-809-9427	96906	MS51500A8-8	ADAPTER,PIPE TO TUBE	2
3	PAFZZA	4720-01-551-6542	61796	5400-084	HOSE ASSEMBLY	2
4	MFFZZA		61796	5400-081-08600	HOSE,NONMETALLIC, MAKE FROM P/N K1138-08, CAGE 3B543,86 IN.	1
5	PAFZZA	4730-01-209-3354	72582	8929756	CLAMP,HOSE	36
6	PAFZZA	4730-00-465-5928	93061	125HBL-8-8	ADAPTER,STRAIGHT	7
7	PAFZZA	4730-00-253-4414	96906	MS39230-4	ELBOW,PIPE	2
8	PAFZZA	5430-01-551-2816	0DL01	72-14-20-200	TANK,AIR	1
9	PAFZZA	4730-00-702-6932	78500	P18	PLUG,PIPE	1
10	PAFZZA	5305-01-483-1144	45152	463B01	SCREW,CAP,HEXAGON HD, 1/2-13 X 1-1/2	4
11	PAFZZA	5310-01-236-1710	45152	720HX2	WASHER,FLAT,1/2	8
12	PAFZZA	5310-01-133-2130	45152	355AX	WASHER,LOCK,1/2	4
13	PAFZZA	5310-01-057-0822	45152	1768HX1	NUT,PLAIN,HEXAGON, 1/2-13	4
14	PAFZZA	4820-01-552-0510	55635	5A714	VALVE,PRESSURE RELIEF, 165 PSI	1
15	PAFZZA	4820-01-132-6317	72582	8924140	COCK,DRAIN	1
16	PAFZZA	4730-00-249-3935	96906	MS39231-4	ELBOW,PIPE	1
17	PAFZZA	4730-00-580-7417	30780	1-2X1-4PTRS	BUSHING,PIPE	2
18	PAFZZA	4730-00-837-7073	96906	MS51500A4-4S	ADAPTER,STRAIGHT	2
19	PAFZZA	4720-01-551-6538	61796	1932-586	HOSE ASSEMBLY, FLOW CONTROL	1
20	PAFZZA	4730-00-253-4412	96906	MS39230-2	ELBOW,90 DEG	4
21	PAFZZA	4730-00-913-0762	45152	6KP152	ADAPTER,STRAIGHT	4
22	MFFZZA		61752	5400-018-02600	HOSE,NONMETALLIC, MAKE FROM P/N K1138-08, CAGE 3B543,26 IN.	1
23	PAFZZA	4730-00-913-0762	45152	6KP152	ADAPTER,STRAIGHT	24
24	PAFZZA	4730-01-281-9361	96906	MS14304-2C06	COUPLING,PIPE	15
25	MFFZZA		61796	5400-081-02450	HOSE,NONMETALLIC, MAKE FROM P/N K1138-08, CAGE 3B543,24-1/2 IN.	3
26	MFFZZA		61796	5400-081-02350	HOSE,NONMETALLIC, MAKE FROM P/N K1138-08, CAGE 3B543,21 IN.	2
27	PAFZZA	4730-01-552-1130	61796	5000-120	TEE,PIPE	1
28	PAFZZA	4730-00-253-4413	96906	MS39230-3	ELBOW,90 DEG	9
29	MFFZZA		61796	5400-081-01450	HOSE,NONMETALLIC, MAKE FROM P/N K1138-08, CAGE 3B543,14-1/2 IN.	1
30	PAFZZA	3895-01-547-0420	61796	5407-008	VIBRATOR,AIR	2
31	MFFZZA		61796	5400-081-02400	HOSE,NONMETALLIC, MAKE FROM P/N K1138-08, CAGE 3B543,24 IN.	1
32	MFFZZA		61796	5400-081-02700	HOSE,NONMETALLIC, MAKE FROM P/N K1138-08, CAGE 3B543,27 IN.	1
33	PAFZZA	4820-01-235-5643	93061	V500P-6	VALVE,BALL	3
34	PAFZZA	4730-00-019-2067	19207	10932983-3	NIPPLE,PIPE	4
35	PAFFFA	4610-01-551-4635	61796	5402-102.01	FILTER/REGULATOR	1
36	PAFZZA	4930-01-440-9861	58470	EKF10Y	ELEMENT KIT, REGULATOR	1
37	PAFZZA	4930-01-440-9864	58470	BKF11Y	KIT,BOWL REPLACEMENT	1
38	PAFZZA	6685-01-551-8504	61796	5404-104	GAUGE,PRESSURE	1
39	PAFZZA	4730-00-873-0110	5E240	5406-06-02	BUSHING,PIPE	3
40	PAFZZA	4730-01-551-4057	61796	5009-120	CROSS	2
41	MFFZZA		61796	5400-081-07000	HOSE,NONMETALLIC, MAKE FROM P/N K1138-08, CAGE3B543,70 IN.	1

(1) ITEM NO	(2) SMR CODE	(3) NSN	(4) CAGEC	(5) PART NUMBER	(6) DESCRIPTION	(7) QTY
42	PAFZZA	4930-01-012-7148	79227	606-3	LUBRICATOR, AIR SYSTEM	1
43	XAFZZA		79227	BY606Y	•BOWL	1
44	PAFZZA	4730-00-196-1485	96906	MS51953-32	NIPPLE	3
45	PAFZZA	4730-00-196-1489	96906	MS51953-55	NIPPLE	1
46	PAFZZA	4810-01-552-2205	61796	5405-103	VALVE,AIR	2
47	MFFZZA		61796	5075-204-04700	TUBING,NONMETALLIC, MAKE FROM FC350-05,CAGE 01276,47 IN.	1
48	PAFZZA	4730-01-551-6197	61796	5077-522	ELBOW,TUBE	6
49	MFFZZA		61796	5400-081-01350	HOSE,NONMETALLIC, MAKE FROM P/N K1138-08,CAGE 3B543,13-1/2 IN.	1
50	MFFZZA		61796	5075-204-04400	TUBING,NONMETALLIC, MAKE FROM FC350-05,CAGE 01276,44 IN.	1
51	PAFZZA	4730-00-278-3912	30780	3-8X1-4PTRS	BUSHING,PIPE	1
52	PAFZZA	4730-01-551-4604	61796	5401-004	COUPLER,QUICK DISCONNECT	1
53	MFFZZA		61796	5400-081-02650	HOSE,NONMETALLIC, MAKE FROM P/N K1138-08, CAGE 3B543,26-1/2 IN.	1
54	PAFZZA	4730-01-547-7017	54578	1105-1/2	TEE,PIPE	2
55	PAFZZA	5306-00-180-9323	39428	3043T15	BOLT,U	4
56	PAFZZA	5310-00-582-5965	80205	MS35338-44	WASHER,LOCK,1/4	5
57	PAFZZA	5310-00-584-5005	96906	MS35690-405	NUT,PLAIN,HEXAGON, 1/4-20	4
58	MFFZZA		61796	5400-081-02100	HOSE,NONMETALLIC, MAKE FROM P/N K1138-08, CAGE 3B543,21 IN.	1
59	MFFZZA		61796	5400-081-04300	HOSE,NONMETALLIC, MAKE FROM P/N K1138-08, CAGE 3B543,43 IN.	1
60	PAFZZA	5340-01-484-8797	96906	MS21333-89	CLAMP,LOOP	4
61	PAFZZA	5306-01-084-5390	78500	S-268-1	BOLT,MACHINE 3/8-16 X 1	1
62	PAFZZA	5310-00-880-0626	19207	10892331	WASHER,FLAT,3/8	1
63	MFFZZA		61796	5400-081-07400	HOSE,NONMETALLIC, MAKE FROM P/N K1138-08, CAGE 3B543,74 IN.	1
64	MFFZZA		61796	5400-081-04650	HOSE,NONMETALLIC, MAKE FROM P/N K1138-08, CAGE 3B543,21 IN.	1
65	MFFZZA		61796	5400-081-05450	HOSE,NONMETALLIC, MAKE FROM P/N K1138-08, CAGE 3B543,54-1/2 IN.	1
66	PAFZZA	5340-01-551-4565	61796	B-966-16	RESERVOIR,CHAIN OIL	1
67	MFFZZA		61796	5075-204-00500	TUBING,NONMETALLIC, MAKE FROM FC350-05,CAGE 01276,5 IN.	1
68	PAFZZA	4730-01-551-6487	61796	5077-422	CONNECTOR,TUBE	4
69	PAFZZA	4810-01-552-1142	61796	5405-21003	VALVE ASSEMBLY, ELECTRIC/AIR 12V	1
70	PAFZZA	5305-01-280-7901	45152	66420AX	SCREW,CAP,HEXAGON HD, 1/4-20 X 1	1
71	PAFZZA	5310-00-809-4058	96906	MS27183-10	WASHER,FLAT	2
72	PAFZZA	5340-01-551-4538	61796	1932-B37	AIR SOLENOID MOUNT	1
73	PAFZZA	5310-01-177-4625	45152	108708A	NUT,SELF-LOCKING,HEX, 3/8-16	4
74	PAFZZA	5305-01-412-4849	30226	102360	SCREW,CAP,HEXAGON HD, 3/8-16 X 1	4
75	MFFZZA		61796	5075-204-09500	TUBING,NONMETALLIC, MAKE FROM FC350-05,CAGE 01276,95 IN.	1
76	MFFZZA		61796	5075-204-10000	TUBING,NONMETALLIC, MAKE FROM FC350-05,CAGE 01276,100 IN.	1
77	MFFZZA		61796	5075-204-00350	TUBING,NONMETALLIC, MAKE FROM FC350-05,CAGE 01276,3-1/2 IN.	1
78	PAFZZA	4720-01-551-1721	39428	6146A23	AIRCHUCK	1
79	PAFZZA	4730-00-042-8988	81348	WW-P-471-ACABUB	PLUG,PIPE	1
80	MFFZZA		61796	5075-204-06700	TUBING,NONMETALLIC, MAKE FROM FC350-05,CAGE 01276,67 IN.	1

(1) ITEM NO	(2) SMR CODE	(3) NSN	(4) CAGEC	(5) PART NUMBER	(6) DESCRIPTION	(7) QTY
81	PAFZZA	5305-00-855-0971	80205	MS24629-21	SCREW,TAPPING	8
82	PAFZZA	4730-01-551-3882	61796	5077-820	TUBE TEE 3104 1/4OD	2
83	MFFZZA		61796	5075-204-02150	TUBING,NONMETALLIC, MAKE FROM FC350-05,CAGE 01276,21-1/2 IN.	1
84	MFFZZA		61796	5075-204-02600	TUBING,NONMETALLIC, MAKE FROM FC350-05,CAGE 01276,26 IN.	1
85	PAFZZA	4730-00-014-1539	30780	1-4-1-8PTRSS	BUSHING,PIPE	1
86	PAFZZA	4730-00-196-1481	96906	MS51953-9	NIPPLE,PIPE	1
87	PAFZZA	4820-01-551-6099	80885	B-3150-2-S04	CONTROL,DRIP, CHAIN OIL	1
88	MFFZZA		61796	5075-204-05300	TUBING,NONMETALLIC, MAKE FROM FC350-05,CAGE 01276,53 IN.	1
89	MFFZZA		61796	5075-204-02300	TUBING,NONMETALLIC, MAKE FROM FC350-05,CAGE 01276,23 IN.	1

END OF FIGURE

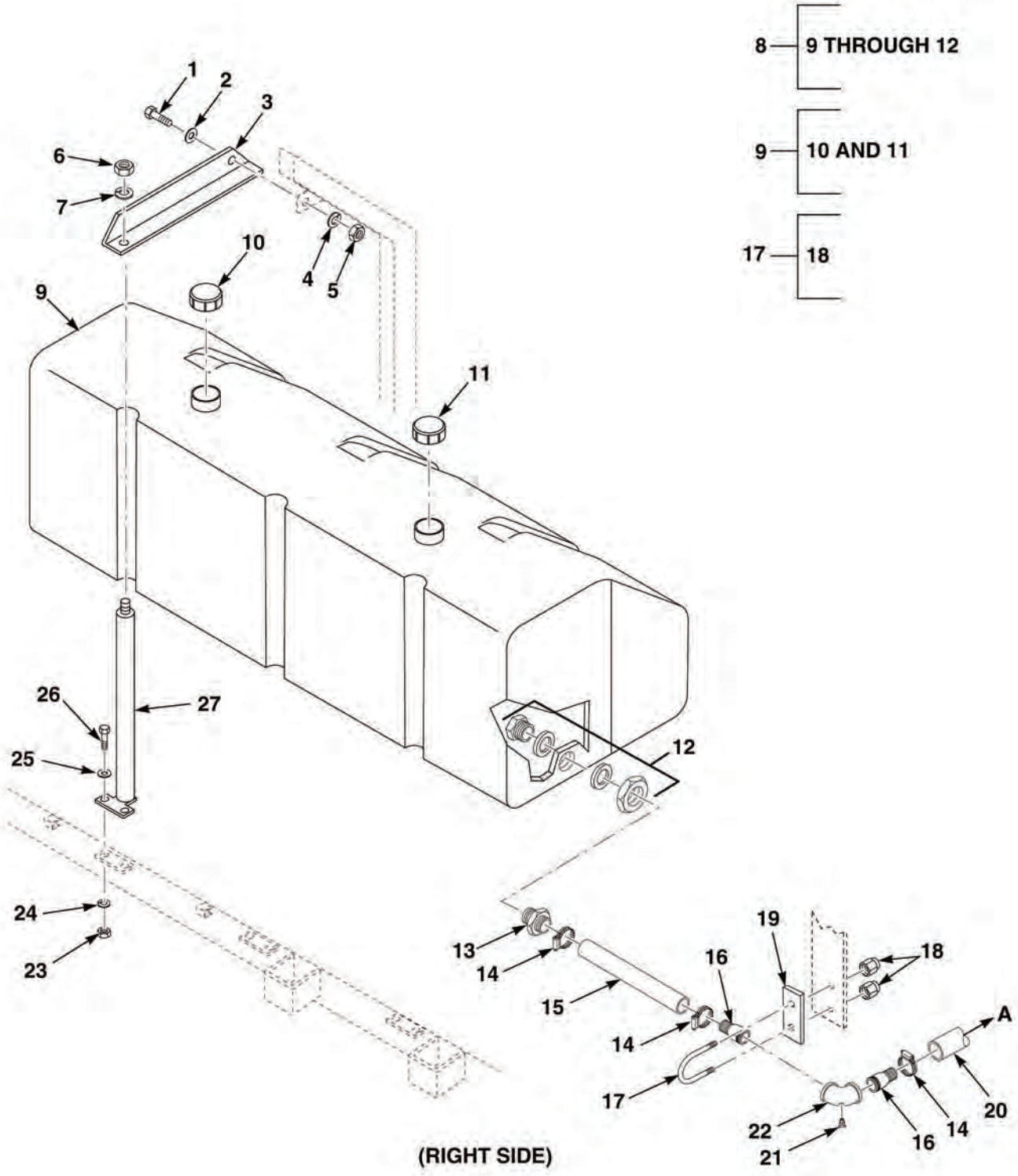

FIG. 13 WATER SYSTEM SHEET 1 OF 5

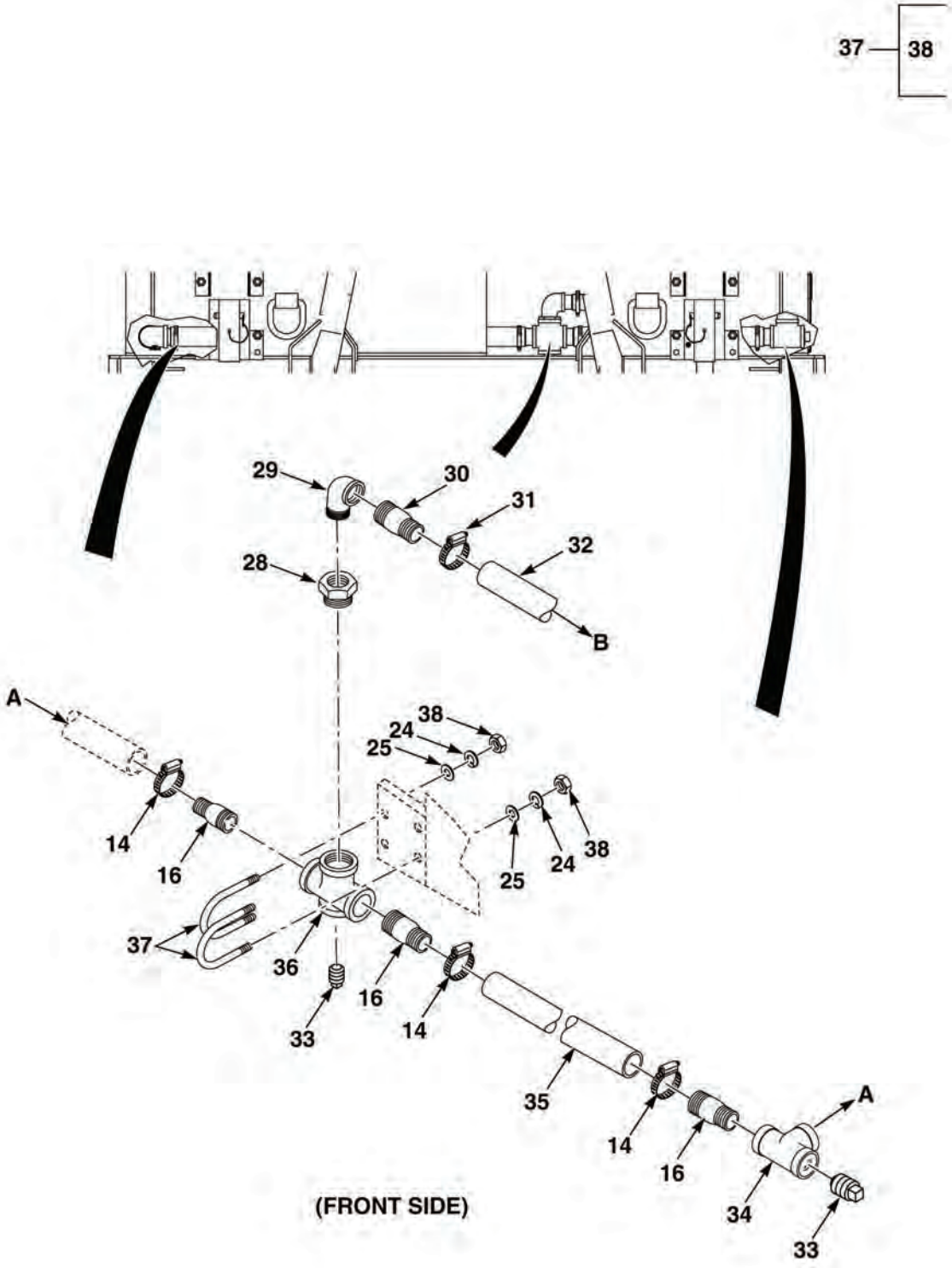

FIG. 13 WATER SYSTEM SHEET 2 OF 5

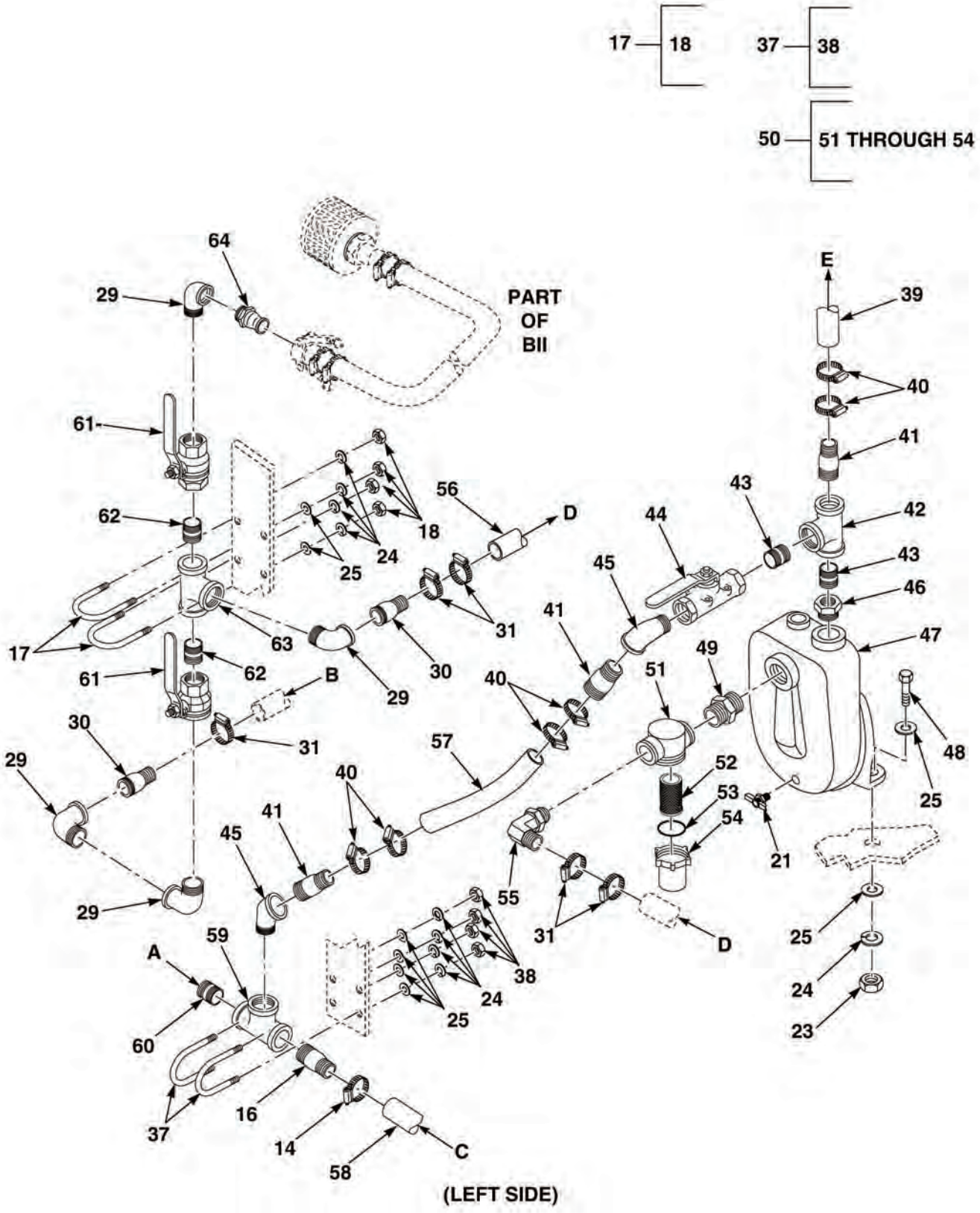

FIG. 13 WATER SYSTEM SHEET 3 OF 5

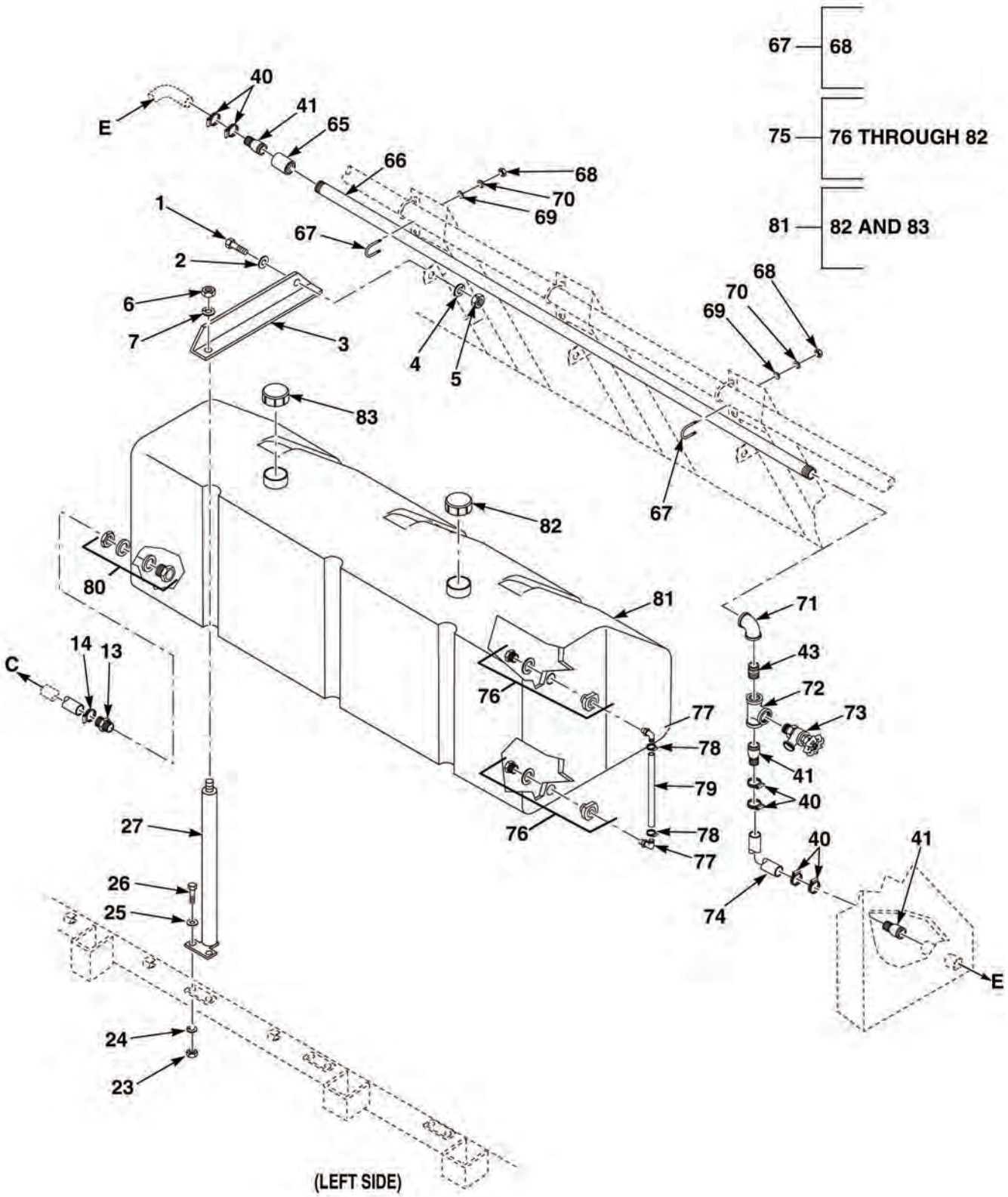

FIG. 13 WATER SYSTEM SHEET 4 OF 5

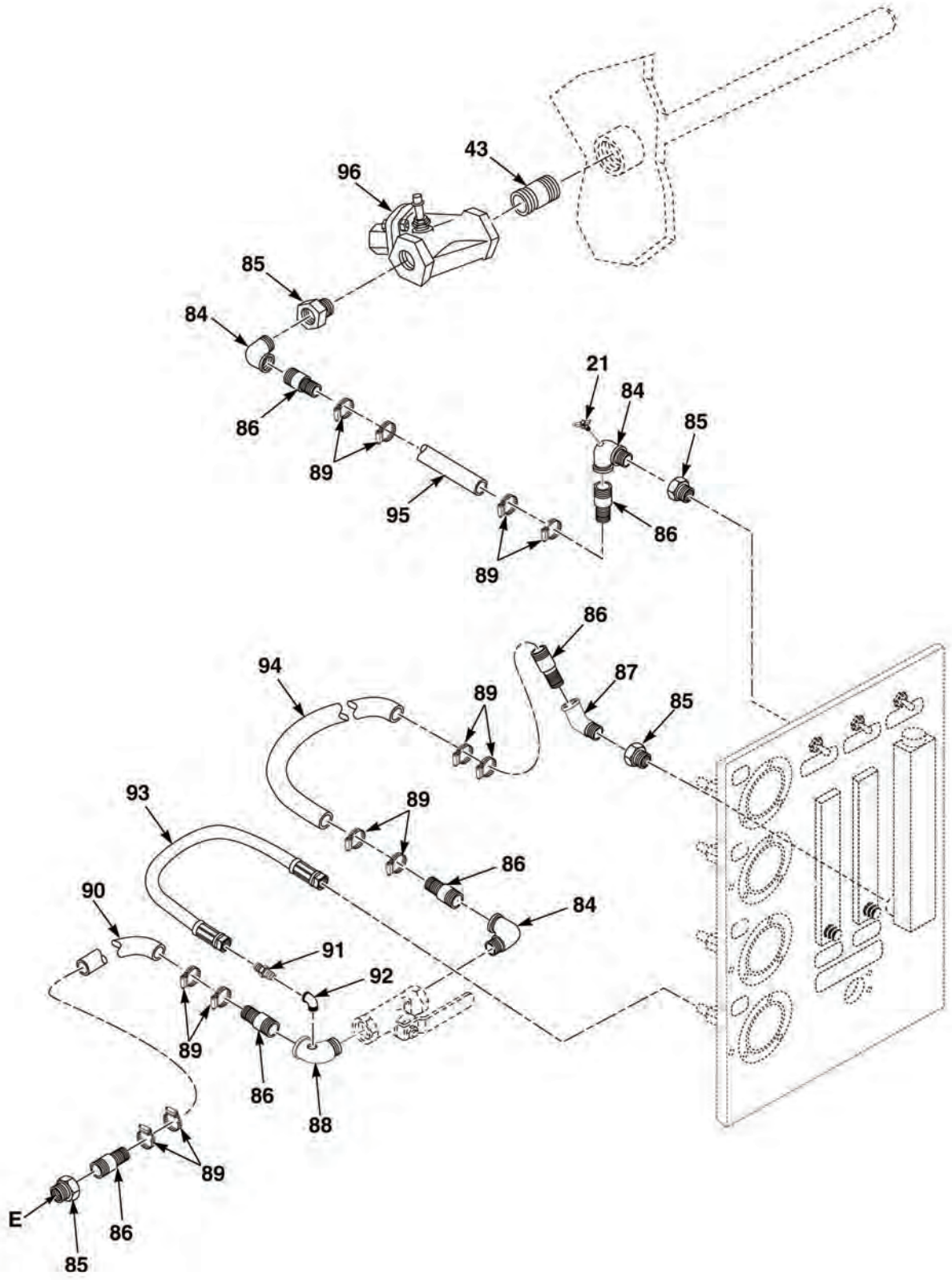

FIG. 13 WATER SYSTEM SHEET 5 OF 5

(1) ITEM NO	(2) SMR CODE	(3) NSN	(4) CAGEC	(5) PART NUMBER	(6) DESCRIPTION	(7) QTY
					FIG. 13 WATER SYSTEM	
1	PAFZZA	5305-01-483-1144	45152	463B01	SCREW,CAP,HEXAGON HD, 1/2-13 X 1-1/2	6
2	PAFZZA	5310-01-236-1710	45152	720HX2	WASHER,FLAT,1/2	6
3	PAFZZA		61796	1932-A54	ANGLE,MOUNTING, WATER TANK	6
4	PAFZZA	5310-01-133-2130	45152	355AX	WASHER,LOCK,1/2	6
5	PAFZZA	5310-01-057-0822	45152	1768HX1	NUT,PLAIN,HEXAGON, 1/2-13	6
6	PAFZZA	5310-01-113-9811	45152	378BX1	NUT,PLAIN,HEXAGON, 5/8-11	6
7	PAFZZA	5310-01-061-5302	45152	318BX	WASHER,LOCK,5/8	6
8	PAFFFA	2510-01-481-5031	61796	1932-414	TANK,WATER, RH DISTRIBUTOR	1
9	PFFZZA	2510-01-547-3789	61796	1932-C28	TANK, WATER,RH 200 GAL	1
10	PAFZZA	5340-01-547-5676	61796	5457-904	••CAP,VENTED	1
11	PAFZZA	2590-01-547-7058	61796	5457-904.01	••CAP,WATER TANK	1
12	XAFZZA		03TB7	BF32	•FITTING,BULKHEAD, WATER TANK	1
13	PAFZZA	4730-01-545-1543	03TB7	TA103232PP	BARB,HOSE	2
14	PAFZZA	4730-01-551-5092	61796	5370-536	CLAMP,HOSE	8
15	MFFZZA		61796	5400-321-01650	HOSE,NONMETALLIC, SUCTION/ DISCHG,MAKE FROM P/N 2BKONAG125 CAGE 04NP0,16-1/2 IN	1
16	PAFZZA	4730-01-026-0035	72661	STC25	ADAPTER,STRAIGHT, PIPE TO HOSE	6
17	PAFZZA	5306-00-272-3652	39428	3043T41	BOLT,U	3
18	PAFZZA	5310-00-725-9479	25567	D06	•NUT,PLAIN,HEXAGON, 3/8-16	2
19	PAFZZA	9320-01-551-2779	61796	1932-C21	PAD,RUBBER	1
20	MFFZZA		61796	5400-321-04475	HOSE,NONMETALLIC SUCTION/ DISCHG,MAKE FROM P/N 2BKONAG125,CAGE 04NP0, 44-3/4 IN	1
21	PAFZZA	4820-01-132-6317	72582	8924140	COCK,DRAIN	3
22	PAFZZA	4730-01-552-0346	40939	240672	ELBOW,PIPE, MODIFIED	1
23	PAFZZA	5310-00-725-9479	25567	D06	NUT,PLAIN,HEXAGON, 3/8-16	12
24	PAFZZA	5310-01-129-0450	45152	351AX	WASHER,LOCK	12
25	PAFZZA	5310-00-880-0626	19207	10892331	WASHER,FLAT,3/8	12
26	PAFZZA	5305-00-543-2419	80204	B1821BH038C113N	SCREW,CAP,HEXAGON HD, 3/8-16 X 1 1/4	12
27	PAFZZA		61796	1932-217	BRACKET,WATER TANK	6
28	PAFZZA	4730-01-551-6146	61796	5010-184	REDUCER	1
29	PAFZZA	4730-00-253-4418	96906	MS39230-8	ELBOW,STREET	5
30	PAFZZA	4730-01-479-2292	61796	5070-170	HOSE BARB,PIPE TO HOSE	3
31	PAFZZA	4730-01-551-6575	61796	5370-528	CLAMP,HOSE	4
32	MFFZZA		61796	5400-241-02200	HOSE,NONMETALLIC, WATER,MAKE FROM P/N 11/2BBKHORIZ200, CAGE 04NP0,22 IN	1
33	PAFZZA	4730-00-287-2184	96906	MS20913-16	PLUG,PIPE	2
34	PAFZZA		54578	1105-2	TEE,PIPE	1
35	MFFZZA		61796	5400-321-02100	HOSE,NONMETALLIC, WATER,MAKE FROM P/N 2BKONGAG125 CAGE 04NP0,21 IN	1
36	PAFZZA	4730-01-552-0358	54578	1107-2	CROSS,PIPE	1
37	PAFZZA	5306-01-212-1436	39428	3043T46	BOLT,U, 1/2-13 X 2-1/2	2
38	PAFZZA	5310-00-725-9479	25567	D06	•NUT,PLAIN,HEXAGON, 3/8-16	2
39	MFFZZA		61796	5400-161-02800	HOSE,NONMETALLIC, WATER,MAKE FROM P/N 1BKHORIZ200, CAGE 04NP0,28 IN	1

(1) ITEM NO	(2) SMR CODE	(3) NSN	(4) CAGEC	(5) PART NUMBER	(6) DESCRIPTION	(7) QTY
40	PAFZZA	4730-01-552-6236	61796	5370-516	CLAMP,HOSE	12
41	PAFZZA	4730-01-045-6011	72661	STC-10	ADAPTER,STRAIGHT, PIPE TO HOSE	6
42	PAFZZA	4730-01-552-0406	61796	5000-150	TEE,PIPE	1
43	PAFZZA	4730-00-196-1469	96906	MS51953-121	NIPPLE,PIPE	4
44	PAFZZA	4820-01-426-2472	93061	V500P-16	VALVE,BALL	1
45	PAFZZA	4730-00-254-1802	96906	MS39231-6	ELBOW,STREET	2
46	PAFZZA	5365-01-551-6510	61796	5010-162	BUSHING,HEX	1
47	PAFZZA	4320-01-551-4010	61796	5455-00700	PUMP,HYDRAULIC,WATER	1
48	PAFZZA	5305-01-485-6310	45152	1882HX1	SCREW,CAP,HEXAGON HD, 3/8-16 X 1-1/2	1
49	PAFZZA	4730-01-551-5504	03TB7	TN52424PP	ADAPTER,STRAIGHT	1
50	PAFFFA	4730-01-552-0508	03TB7	RVF24PE20C	STRAINER,WATER	1
51	PAFZZA	4730-01-551-6508	03TB7	RVF2424TP	•HEAD,STRAINER	1
52	PAFZZA	4330-01-551-4655	03TB7	RVF2424-20	•SCREEN	1
53	PAFZZA	5330-01-551-8743	03TB7	RVF1616GE	•GASKET	1
54	PAFZZA	4730-01-551-4541	03TB7	RVF1616BC	•BOWL	1
55	PAFZZA	4730-01-552-1267	03TB7	TE202424PP	ELBOW,HOSE BARB	1
56	MFFZZA		61796	5400-24200-03800	HOSE,NONMETALLIC WATER,MAKE FROM P/N11/2BKHORZ200, CAGE 04NP0,38 IN	1
57	MFFZZA		61796	5400-161-01050	HOSE,NONMETALLIC, MAKE FROM P/N 1BKORIZ200,CAGE 04NP0, 10-1/2 IN	1
58	MFFZZA		61796	5400-321-01300	HOSE,NONMETALLIC WATER,MAKE FROM P/N 1BKORIZ200,CAGE 04NP0, 13 IN	1
59	PAFZZA	4730-01-551-8584	54578	1164-2-2-1-1	TEE,PIPE,REDUCING	1
60	PAFZZA	4730-00-196-1472	81346	A733S-193CFG	NIPPLE,PIPE	1
61	PAFZZA	4820-01-426-5009	93061	V500P-24	VALVE,BALL	2
62	PAFZZA	4730-00-196-1471	96906	MS51953-169	NIPPLE,PIPE	2
63	PAFZZA	4730-01-551-5198	03TB7	1105-1-1/2	TEE,PIPE	1
64	PAFZZA	4730-01-551-7412	3S098	150-F	ADAPTER,HOSE	1
65	PAFZZA	4730-01-551-7282	61796	5007-150	COUPLING,PIPE	1
66	PAFZZA	4710-01-551-6055	61796	1932-A92	PIPE,WATER	1
67	PAFZZA	5306-01-244-8868	39428	3043T18	BOLT,U, 1/4-20 X 1	2
68	PAFZZA	5310-00-584-5005	96906	MS35690-405	•NUT,PLAIN,HEXAGON, 1/4-20	4
69	PAFZZA	5310-00-809-4058	96906	MS27183-10	WASHER,FLAT	4
70	PAFZZA	5310-00-582-5965	80205	MS35338-44	WASHER,LOCK,1/4	4
71	PAFZZA	4730-01-376-3854	72423	5001-150	ELBOW,PIPE	1
72	PAFZZA	4730-01-551-4577	61796	5012-153	TEE,REDUCING	1
73	PAFZZA	4820-01-481-4342	4X630	863-000409	VALVE,SEATLESS	1
74	MFFZZA		61796	5400-161-04200	HOSE,NONMETALLIC WATER,MAKE FROM P/N1BKORIZ200,CAGE 04NP0, 42 IN	1
75	PAFFFA	2510-01-481-5033	61796	1932-415	TANK,WATER, LH, DISTRIBUTOR	1
76	PAFZZA		58961	16401	•FITTING,TANK	2
77	PAFZZA	4730-01-551-2885	03TB7	TE2048PP	•ELBOW,HOSE BARB	2
78	PAFZZA	4730-01-209-3354	72582	8929756	•CLAMP,HOSE	2
79	MFFZZA		61796	5075-808-02050	•TUBING,NONMETALLIC, MAKE FROM P/N 59018,CAGE 27901,20-1/2 IN	1
80	XAFZZA		03TB7	BF32	•FITTING,BULKHEAD, WATER TANK	1
81	PFFZZA	2510-01-481-5033	61796	1932-415	•TANK,WATER,LH	1
82	PAFZZA	5340-01-547-5676	61796	5457-904	••CAP,VENTED	1
83	PAFZZA	2590-01-547-7058	61796	5457-904.01	••CAP,WATER TANK	1
84	PAFZZA	4730-00-261-4218	96906	MS39231-5	ELBOW,PIPE	3

(1) ITEM NO	(2) SMR CODE	(3) NSN	(4) CAGEC	(5) PART NUMBER	(6) DESCRIPTION	(7) QTY
85	PAFZZA	4730-00-278-3144	59257	HB16-12	BUSHING,PIPE	4
86	PAFZZA	4730-01-187-6880	72661	STC-5	ADAPTER,STRAIGHT	6
87	PAFZZA	4730-00-261-4218	96906	MS39231-5	ELBOW,PIPE	2
88	PAFZZA	4730-01-551-4075	61796	1932-A91	ELBOW,90 DEG	1
89	PAFZZA	4730-01-551-6536	61796	5370-512	CLAMP,HOSE	12
90	MFFZZA		61796	5400-121-03550	HOSE,NONMETALLIC, MAKE FROM P/N 16RLA,CAGE 3S098,35-1/2 IN	1
91	PAFZZA	4730-01-551-6533	61796	5224-2404-04-02	ADAPTER	1
92	PAFZZA	4730-00-287-1649	96906	MS39230-1	ELBOW,90 DEG	1
93	PAFZZA	4720-01-551-2817	61796	1932-582	HOSE,PRESSURE	1
94	MFFZZA		61796	5400-121-02900	HOSE,NONMETALLIC, MAKE FROM P/N 16RLA,CAGE 3S098,29 IN.	1
95	MFFZZA		61796	5400-121-08850	HOSE,NONMETALLIC, MAKE FROM P/N 16RLA,CAGE 3S098, 88-1/2 IN.	1
96	PAFZZA	4820-01-235-5643	93061	V500P-6	VALVE,BALL	1

END OF FIGURE

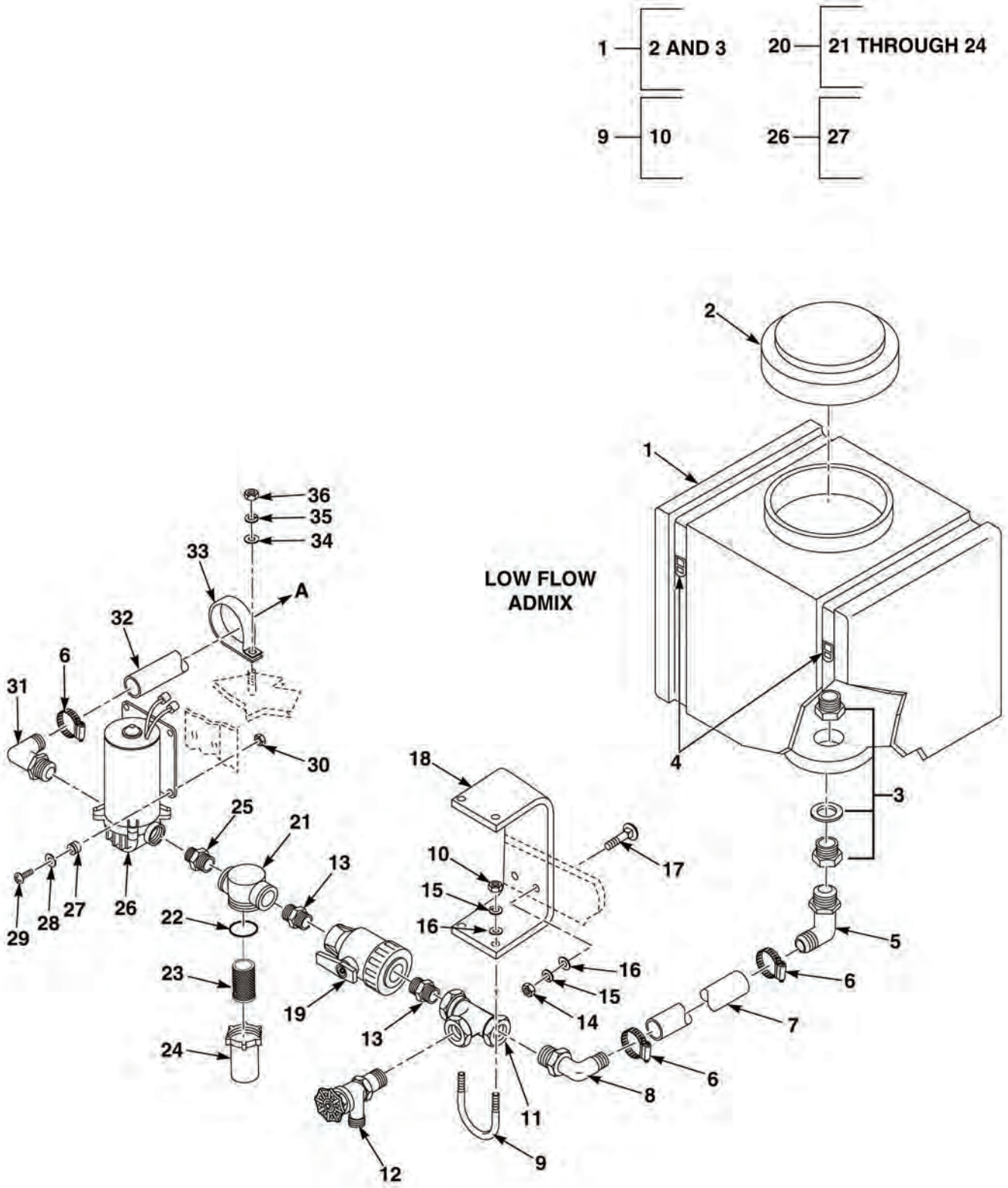

FIG. 14 WATER CONTROLS SHEET 1 OF 4

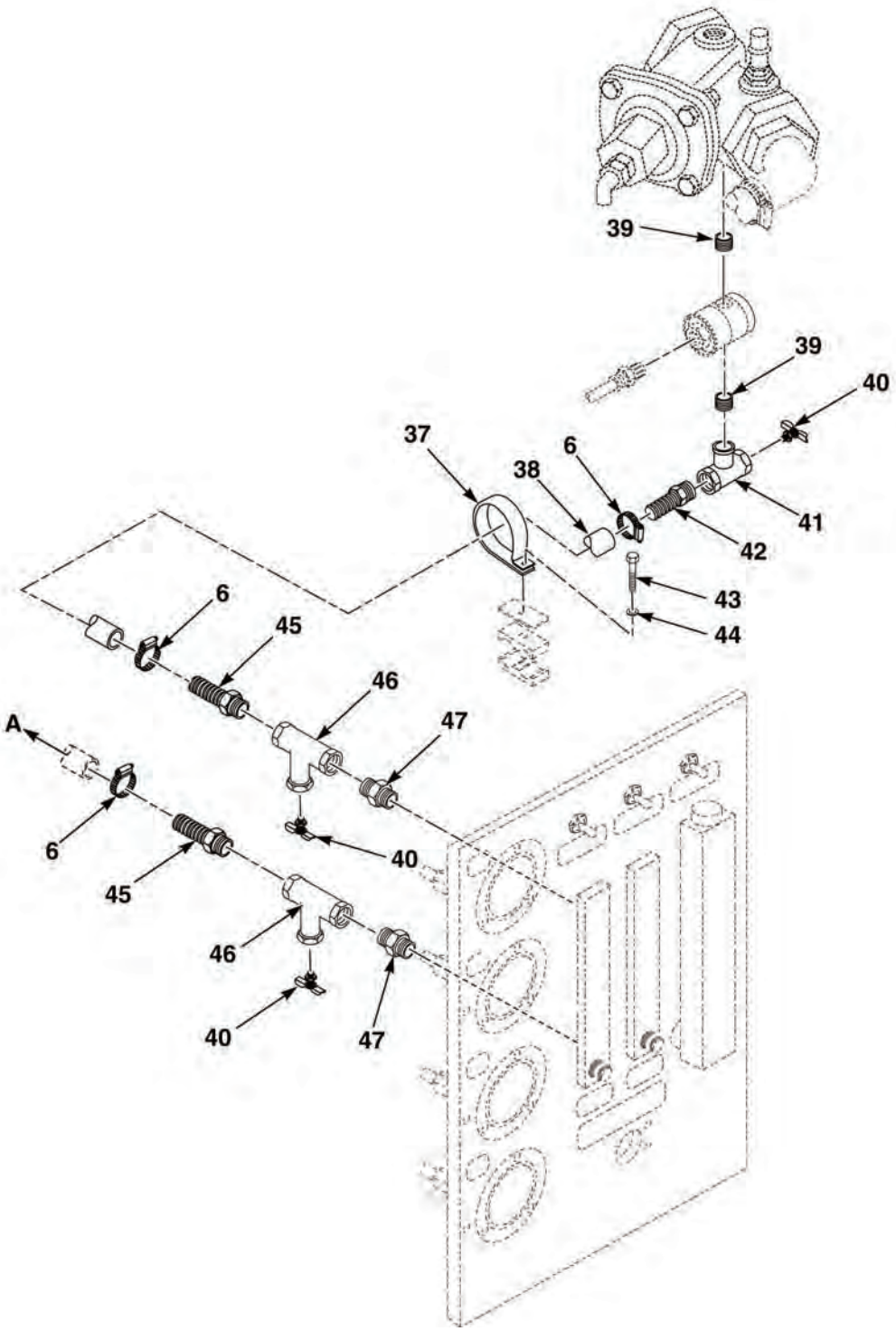

FIG. 14 WATER CONTROLS SHEET 2 OF 4

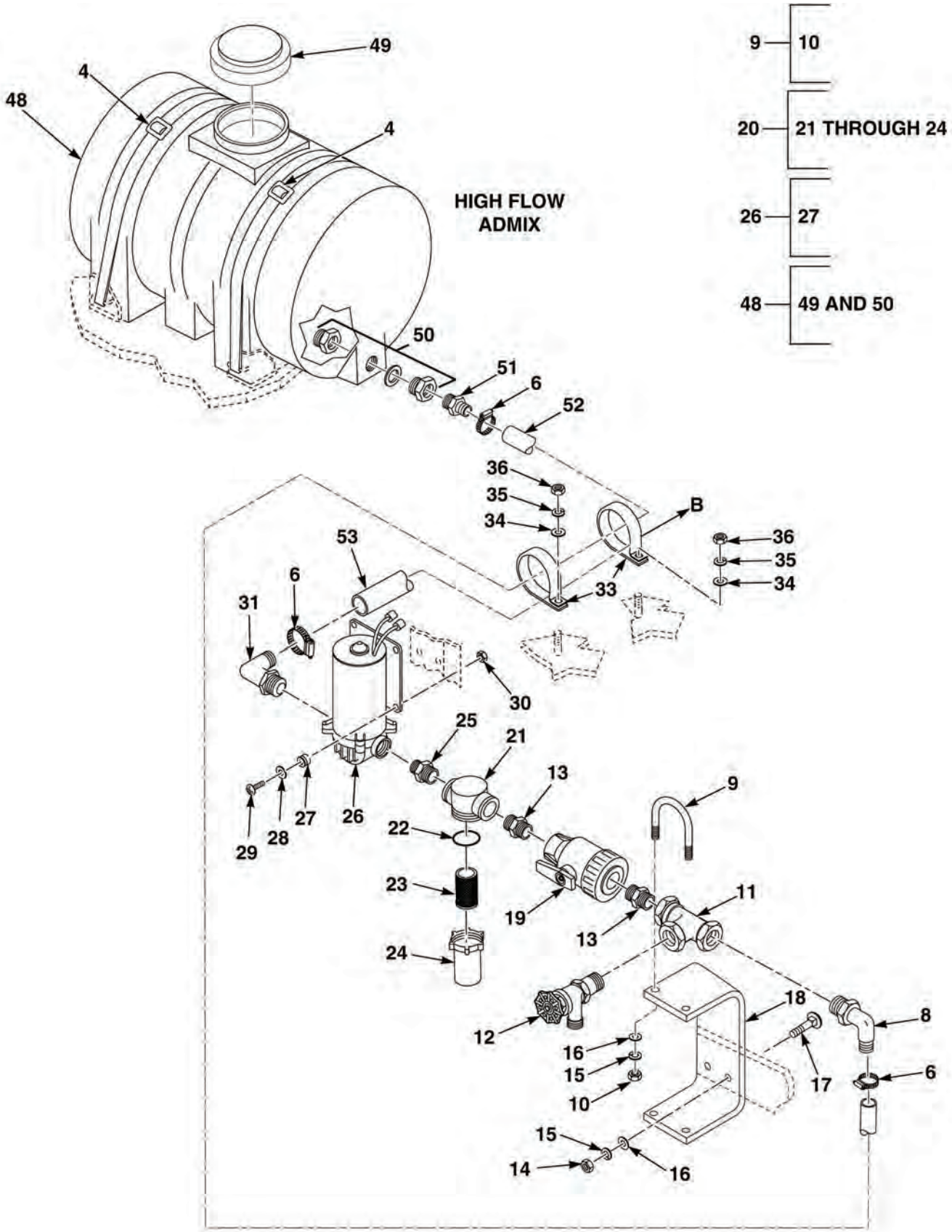

FIG. 14 WATER CONTROLS SHEET 3 OF 4

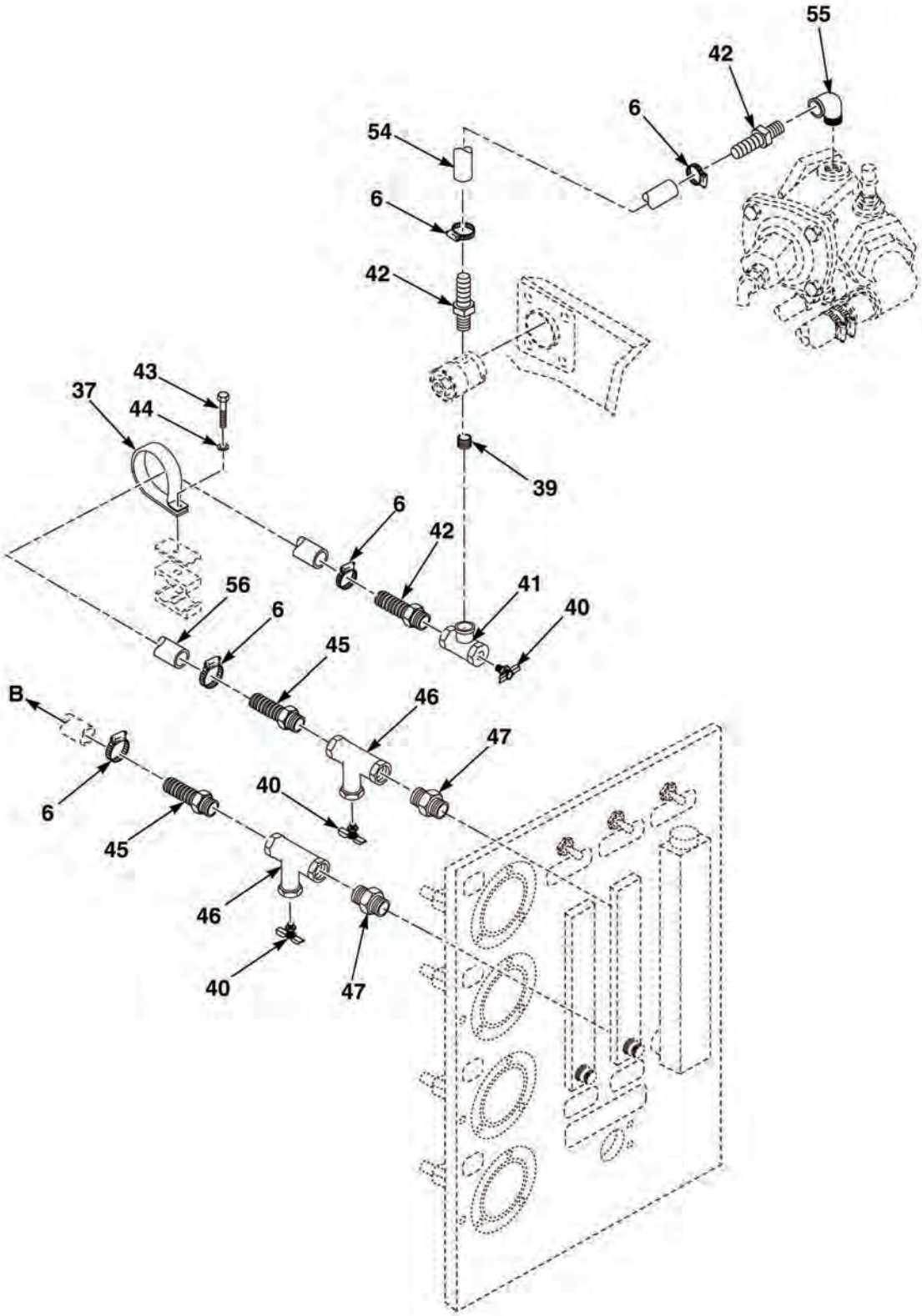

FIG. 14 WATER CONTROLS SHEET 4 OF 4

(1) ITEM NO	(2) SMR CODE	(3) NSN	(4) CAGEC	(5) PART NUMBER	(6) DESCRIPTION	(7) QTY
					FIG. 14 WATER CONTROL	
1	PAFZZA	5430-01-551-2744	61796	5457-112.00	TANK,LOW FLOW ADMIX	1
2	PAFZZA	5340-01-547-5676	61796	5457-904	•CAP,VENTED	1
3	PAFZZA		39428	36892K142	•FITTING,BULKHEAD	1
4	PAFZZA		61796	5380-509	STRAP,TANK,ADMIX	4
5	PAFZZA	4730-01-551-0882	03TB7	TE20128PP	ELBOW	1
6	PAFZZA	4730-01-209-3354	72582	8929756	CLAMP,HOSE	14
7	MFFZZA		61796	5075-808-01100	TUBING,NONMETALLIC, MAKE FROM P/N 59018,CAGE 27901,11 IN	1
8	PAFZZA	4730-01-551-2810	03TB7	TE2088PP	ELBOW	2
9	PAFZZA	5306-00-180-9323	39428	3043T15	BOLT,U	2
10	PAFZZA	5310-00-584-5005	96906	MS35690-405	•NUT,PLAIN,HEXAGON, 1/4-20	2
11	PAFZZA	4730-01-419-1420	03TB7	TT8	TEE,PIPE	2
12	PAFZZA	4820-01-481-4342	4X630	863-000409	VALVE,SEATLESS	2
13	PAFZZA	4730-01-551-6040	03TB7	TN5088PP	ADAPTER,STRAIGHT	4
14	PAFZZA	5310-00-584-5005	96906	MS35690-405	NUT,PLAIN,HEXAGON, 1/4-20	4
15	PAFZZA	5310-00-582-5965	80205	MS35338-44	WASHER,LOCK,1/4	8
16	PAFZZA	5310-00-809-4058	96906	MS27183-10	WASHER,FLAT	8
17	PAFZZA	5306-00-845-7961	80205	MS35751-16	BOLT,SQUARE NECK, 1/4-20 x 1	4
18	PAFZZA	5340-01-551-0859	61796	1932-A97	BRACKET,WATER PIPE	2
19	PAFZZA	4820-01-551-2768	61796	5456-132	VALVE,BALL	2
20	PAFFFA	4730-01-551-0863	03TB7	RVF88P	STRAINER ASSEMBLY	2
21	PAFZZA	4730-01-551-0972	03TB7	RVF88TP	•HEAD,STRAINER	1
22	PAFZZA	5330-01-551-2689	03TB7	RVF66GE	•GASKET	1
23	PAFZZA	4730-01-551-2698	03TB7	RVF6640C	•FILTER ELEMENT	1
24	XAFZZA		03TB7	RVF66BP	•BOWL	1
25	PAFZZA	4730-01-551-4609	39428	46885K301	NIPPLE,REDUCING	2
26	PAFZZA	4320-01-551-8402	61796	1932-691	PUMP ASSEMBLY	2
27	PAFZZA	5325-01-551-2788	09BX1	41-017	•GROMMET	4
28	PAFZZA	5310-01-361-8388	45152	1379HX	WASHER,FLAT,NO. 10	8
29	PAFZZA	5305-00-995-3442	80205	MS35207-268	SCREW,MACHINE, 10-32 X 1-1/4	8
30	PAFZZA	5310-00-429-3127	24975	26175	NUT,HEXAGON,10-32	8
31	PAFZZA	4730-01-551-1801	03TB7	TE2068PP	ELBOW	2
32	MFFZZA		61796	5075-808-11400	TUBING,NONMETALLIC, MAKE FROM P/N 59018,CAGE 27901,114 IN	1
33	PAFZZA	5340-01-552-0392	40939	315523	CLAMP	3
34	PAFZZA	5310-00-880-0626	19207	10892331	WASHER,FLAT,3/8	3
35	PAFZZA	5310-01-129-0450	45152	351AX	WASHER,LOCK	3
36	PAFZZA	5310-00-725-9479	25567	D06	NUT,PLAIN,HEXAGON, 3/8-16	3
37	PAFZZA	5340-01-484-8797	96906	MS21333-89	CLAMP,LOOP	2
38	MFFZZA		61796	5075-808-09450	TUBING,NONMETALLIC, MAKE FROM P/N 59018,CAGE 27901,94-1/2 IN	1
39	PAFZZA	4730-00-196-1485	96906	MS51953-32	NIPPLE	3
40	PAFZZA	4820-01-132-6317	72582	8924140	COCK,DRAIN	6
41	PAFZZA	4730-00-249-2029	54578	1105-1/4	TEE,PIPE	2
42	PAFZZA	4730-01-551-2755	61796	5401-044	ADAPTER,STRAIGHT	4
43	PAFZZA	5305-01-483-1144	45152	463B01	SCREW,CAP,HEXAGON HD, 1/2-13	2
44	PAFZZA	5310-00-999-0424	72582	5159714	WASHER,FLAT,5/16	2
45	PAFZZA	4730-01-551-1792	03TB7	TA1048PP	ADAPTER,STRAIGHT	4
46	PAFZZA	4730-01-551-6048	03TB7	TT4PP	TEE,PIPE	4
47	PAFZZA	4730-01-551-6035	03TB7	TN5044PP	NIPPLE,PIPE	4
48	PAFZZA	5430-01-551-3449	61796	5457-135.00	TANK,HIGH FLOW ADMIX	1

(1) ITEM NO	(2) SMR CODE	(3) NSN	(4) CAGEC	(5) PART NUMBER	(6) DESCRIPTION	(7) QTY
49	PAFZZA	5340-01-547-5676	61796	5457-904	•CAP,VENTED	1
50	PAFZZA		39428	36892K142	•FITTING,BULKHEAD	1
51	PAFZZA	4730-01-367-1930	39428	5372K126	NIPPLE,PIPE	1
52	MFFZZA		61796	5075-808-09800	TUBING,NONMETALLIC, MAKE FROM P/N 59018,CAGE 27901,98 IN	1
53	MFFZZA		61796	5075-808-11700	TUBING,NONMETALLIC, MAKE FROM P/N 59018,CAGE 27901,117 IN	1
54	MFFZZA		61796	5075-808-01025	TUBING,NONMETALLIC, MAKE FROM P/N 59018,CAGE 27901,10-1/2 IN	1
55	PAFZZA	4730-00-253-4412	96906	MS39230-2	ELBOW,90 DEG	1
56	MFFZZA		61796	5075-808-08850	TUBING,NONMETALLIC, MAKE FROM P/N 59018,CAGE 27901,88-1/2 IN	1

END OF FIGURE

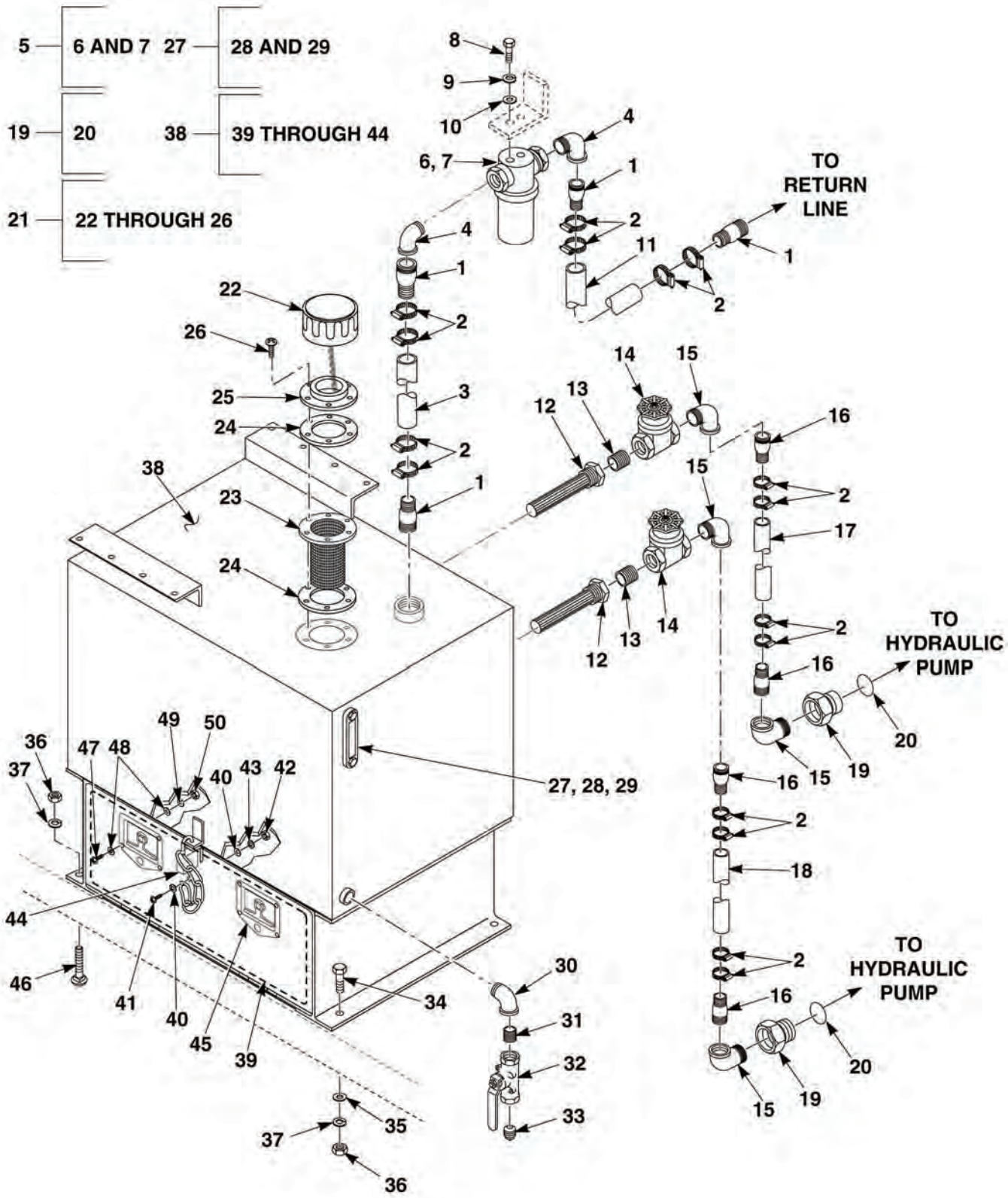

FIG. 15 HYDRAULIC TANK

(1) ITEM NO	(2) SMR CODE	(3) NSN	(4) CAGEC	(5) PART NUMBER	(6) DESCRIPTION	(7) QTY
					FIG. 15 HYDRAULIC TANK	
1	PAFZZA	4730-01-479-2292	61796	5070-170	HOSE BARB, PIPE TO HOSE	4
2	PAFZZA	4730-00-909-8627	58536	A-A-52506-F-36	CLAMP,HOSE	16
3	MFFZZA		61796	1932-A09	HOSE,NONMETALLIC,RETURN,MAKE FROM P/N 20MVXCTN,70136 CAGE 24161,18-1/2 IN	1
4	PAFZZA	4730-00-253-4418	96906	MS39230-8	ELBOW,STREET	2
5	PAFFFA	4310-01-551-8547	53790	W/SF6720	FILTER ASSEMBLY,SINGLE	1
6	XAFZZA		53790	SSF-120-25-1	•HEAD,FILTER	1
7	PAFZZA	4330-01-522-1080	53790	SF-6720	•FILTER, ELEMENT FLUID	1
8	PAFZZA	5306-01-056-2942	80205	MS90725-34	SCREW,CAP,HEX HD,5/16-18 X 1	2
9	PAFZZA	5310-01-068-8446	45152	354AX	WASHER,LOCK	2
10	PAFZZA	5310-00-773-7618	80205	MS15795-814	WASHER,FLAT, 3/8	2
11	MFFZZA		61796	5220-424-03450	HOSE,NONMETALLIC,SUCTION,MAKE FROM P/N 20MVXCTN,70136, CAGE 24161,34-1/2 IN	1
12	PAFZZA	4730-01-551-2688	7T722	TM25-100RV5	SCREEN,STRAINER	2
13	PAFZZA	4730-00-196-1470	96906	MS51953-145	NIPPLE,CLOSE	2
14	PAFZZA	4820-01-551-8925	61796	5456-305	VALVE,GATE	2
15	PAFZZA	4730-00-012-7823	96906	MS39230-7	ELBOW,PIPE	4
16	PAFZZA	4730-00-621-8357	89805	0188-24-24	BARB,HOSE, PIPE TO HOSE	4
17	MFFZZA		61796	1932-A98	HOSE,NONMETALLIC,SUCTION,MAKE FROM P/N 24GVXCTN,CAGE 61796, 36 IN	1
18	MFFZZA		61796	1932-A99	HOSE,NONMETALLIC,SUCTION,MAKE FROM P/N 24GVXCTN,CAGE 61796, 34 IN	1
19	PAFZZA	5306-01-551-2413	0S1H5	6405-20-20	ADAPTER,PIPE	2
20	PAFZZA	5331-01-507-0286	02697	2-025	•O-RING	1
21	PAFZZA	3040-01-364-8769	59838	PBB-10-5-N	BREATHER	1
22	PAFZZA	5340-01-551-6117	60342	P563419	•CAP	1
23	PAFZZA	5342-01-551-6586	60342	P563322	•BASKET	1
24	PAFZZA	5330-01-551-2687	60342	P563334	•GASKET	2
25	PAFZZA	5340-01-551-8764	60342	P563499	•MOUNT	1
26	PAFZZA	5305-00-984-6214	80205	MS35206-267	•SCREW,MACHINE	6
27	PAFZZA	6680-01-552-3303	4K739	T-LLG-5	GAGE,SIGHT LEVEL	1
28	PAFZZA	5331-00-882-9176	96906	MS9388-016	•PACKING,PREFORMED	2
29	PAFZZA	5331-00-166-0990	81343	M83248/1-01432	•PACKING,PREFORMED	2
30	PAFZZA	4730-00-253-4415	96906	MS39230-5	ELBOW,PIPE	1
31	PAFZZA	4730-00-196-1468	81343	A733S-97CFG	NIPPLE,CLOSE	1
32	PAFZZA	4820-01-008-2922	93061	V500P12	VALVE,BALL	1
33	PAFZZA	4730-00-187-4210	96906	MS51884-9	PLUG,PIPE	1
34	PAFZZA	5305-00-964-0589	96906	MS51095-416	SCREW, 1/2-13 X 2	2
35	PAFZZA	5310-00-809-4061	96906	MS27183-15	WASHER,FLAT	2
36	PAFZZA	5310-01-057-0822	45152	1768HX1	NUT,PLAIN,HEXAGON, 1/2-13	5
37	PAFZZA	5310-01-133-2130	45152	355AX	WASHER,LOCK,1/2	5
38	PAFFFA	4320-01-485-3602	61796	1932-212	RESERVOIR,HYDRAULIC	1
39	MFFZZA		61796	1932-C06	•STRIP,WEATHER, MAKE FROM P/N 93652K16,CAGE 39428,73-1/4 IN	1
40	PAFZZA	5310-01-361-8388	45152	1379HX	•WASHER,FLAT,NO. 10	2
41	PAFZZA	5305-00-993-1848	80205	MS35207-265	•SCREW,MACHINE, 10-32 X 3/4	1
42	PAFZZA	5310-00-429-3127	24975	26175	•NUT,HEXAGON,10-32	1

(1) ITEM NO	(2) SMR CODE	(3) NSN	(4) CAGEC	(5) PART NUMBER	(6) DESCRIPTION	(7) QTY
43	PAFZZA	5310-00-045-3296	80205	MS35338-43	•WASHER,LOCK,NO. 10	5
44	PAFZZA	5340-00-158-3807	58536	AA59487-2SC	•PADLOCK	1
45	PAFZZA	5340-01-551-5163	61796	5370-61500	LATCH,T-HANDLE,FLUSH	2
46	PAFZZA	5306-00-069-5427	80205	MS35751-139	BOLT,SQUARE NECK, 1/2-13 x 5	2
47	PAFZZA	5305-00-993-1848	80205	MS35207-265	SCREW,MACHINE, 10-32 X 3/4	8
48	PAFZZA	5310-01-361-8388	45152	1379HX	WASHER,FLAT,NO. 10	16
49	PAFZZA	5310-00-045-3296	80205	MS35338-43	WASHER,LOCK,NO. 10	5
50	PAFZZA	5310-00-429-3127	24975	26175	NUT,HEXAGON,10-32	8

END OF FIGURE

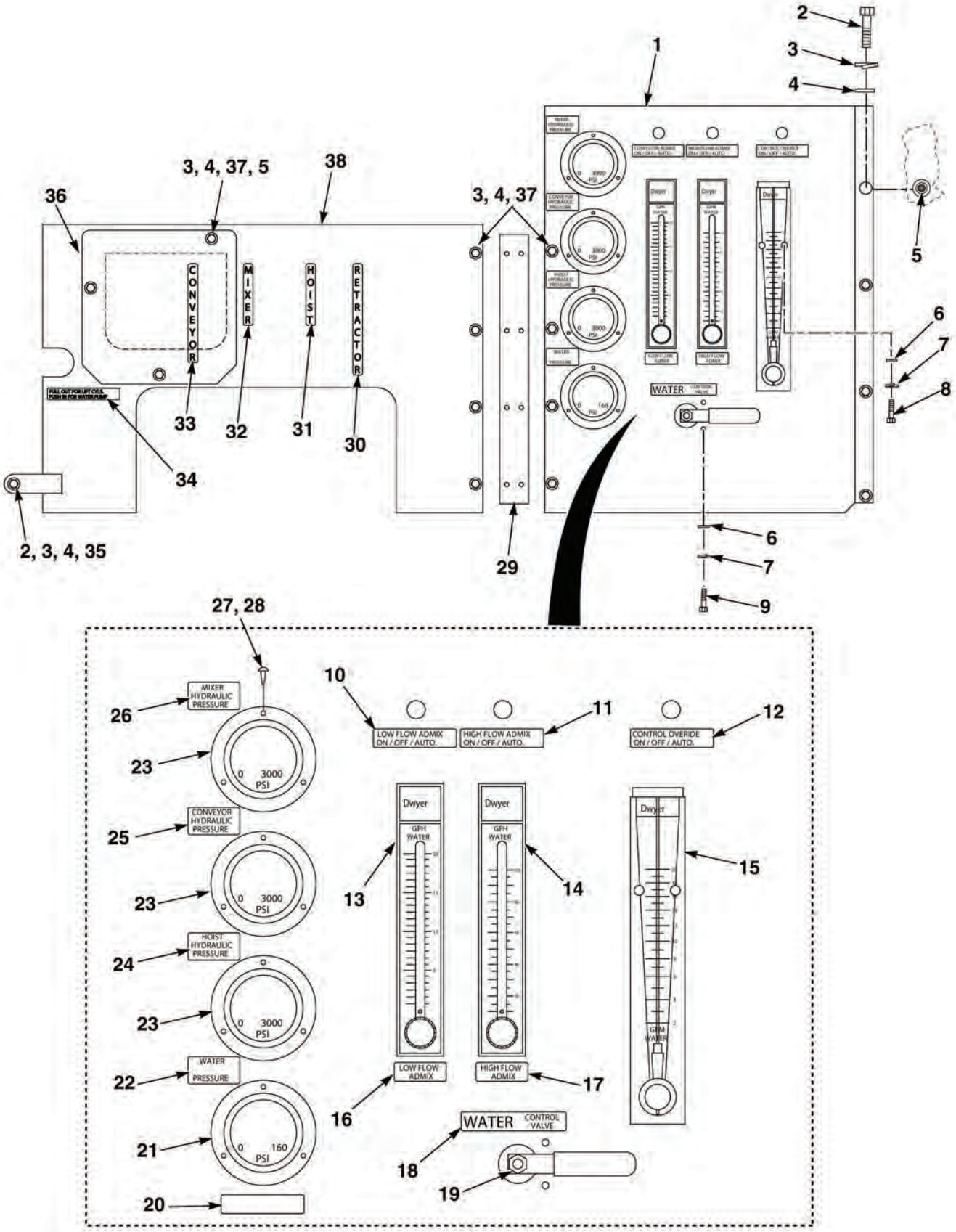

FIG. 16 CONTROL PANEL (SHEET 1 OF 2)

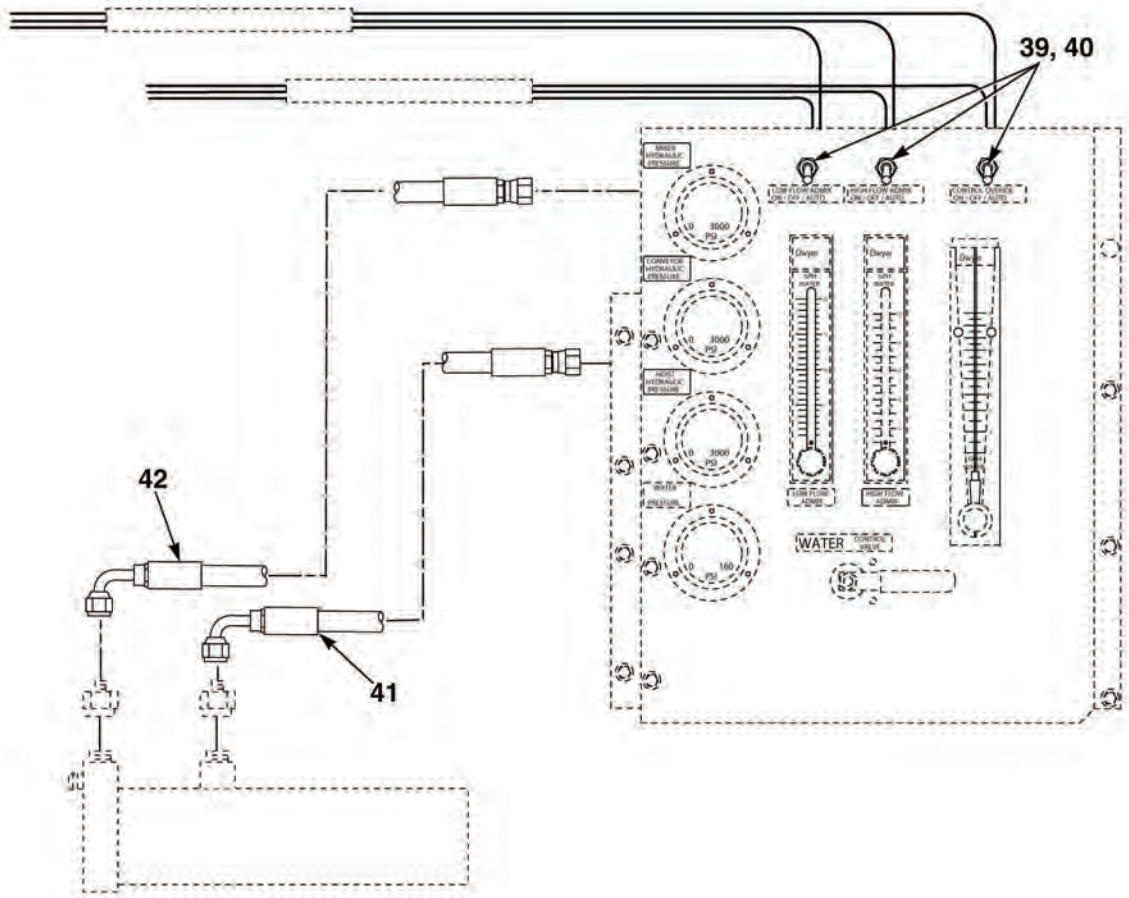

FIG. 16 CONTROL PANEL (SHEET 2 OF 2)

(1) ITEM NO	(2) SMR CODE	(3) NSN	(4) CAGEC	(5) PART NUMBER	(6) DESCRIPTION	(7) QTY
					FIG. 16 CONTROL PANEL	
1	PFFZZA	2510-01-547-7044	61796	1932-B01	CONTROL PANEL,FLOW METER	1
2	PAFZZA	5305-00-964-0559	96906	MS51095-310	SCREW,CAP,HEXAGON, H 1/4-20 X 1-1/2	5
3	PAFZZA	5310-00-582-5965	80205	MS35338-44	WASHER,LOCK,1/4	16
4	PAFZZA	5310-00-809-4058	96906	MS27183-10	WASHER,FLAT	16
5	PAFZZA	5310-00-006-8291	80205	NAS1329S4E-140	NUT,PLAIN,BLIND RIVET,1/4-20	3
6	PAFZZA	5310-01-361-8388	45152	1379HX	WASHER,FLAT,NO. 10	5
7	PAFZZA	5310-00-045-3296	80205	MS35338-43	WASHER,LOCK,NO. 10	5
8	PAFZZA	5305-00-984-7363	96906	MS35191-272	SCREW,MACHINE,NO. 10-32 X 1/2	3
9	PAFZZA	5305-01-280-7669	24234	200941	SCREW,MACHINE,NO. 10-32 X 3/8	2
10	PAFZZA	7690-01-551-4530	61796	1932-D10	DECAL,LOW FLOW ADMIX,ON/OFF/ AUTO	1
11	PAFZZA	7690-01-551-4584	61796	1932-D11	DECAL,HIGH FLOW ADMIX,ON/OFF/ AUTO	1
12	PAFZZA	7690-01-551-4488	61796	1932-D05	DECAL,CONTROL OVER RIDE,ON/ OFF/AUTO	1
13	PAFZZA	6680-01-351-1128	85274	RMB-83-SSV	GAUGE,LOW FLOW MASTER	1
14	PAFZZA	6680-01-551-1249	85274	57-167515-00	METER,FLOW,ADMIX	1
15	PAFZZA	6680-01-390-8633	85274	VFC-143	METER,FLOW RATE INDICATING	1
16	PAFZZA	7690-01-551-4522	61796	1932-D07	DECAL,LOW FLOW ADMIX	1
17	PAFZZA	7690-01-551-3817	61796	1932-D08	DECAL,HIGH FLOW ADMIX	1
18	PAFZZA	7690-01-551-3306	61796	1932-D13	DECAL,WATER CONTROL VALVE	1
19	PAFZZA	4820-01-551-5079	93061	XV502P-12	VALVE BALL,3/4	1
20	PAFZZA	7690-01-551-4632	61796	1932-D25	DECAL,MIXING,OPERATIONS	1
21	PAFZZA	6685-01-551-7201	61796	5404-109	GAUGE,WATER PRESS	1
22	PAFZZA	7690-01-551-3809	61796	1932-D19	DECAL,WATER	1
23	PAFZZA	6685-01-552-3309	61796	5231-021	GAUGE,HYDRAULIC 3000PSI	3
24	PAFZZA	7690-01-551-3309	61796	1932-D14	DECAL,HOIST HYDRAULIC PRESSURE	1
25	PAFZZA	7690-01-551-3526	61796	1932-D16	DECAL,CONVEYOR HYDRAULIC PRESSURE	1
26	PAFZZA	7690-01-551-4496	61796	1932-D15	DECAL,MIXER HYDRAULIC PRESSURE	1
27	PAFZZA	5305-00-059-4553	80205	MS35190-238	SCREW,MACHINE NO.6-32 X 1/2	3
28	PAFZZA	5310-00-176-6341	96906	MS17830-06C	NUT,LOCK, #6-32 NO.6-32	3
29	PAFZZA	5340-01-551-2406	61796	1932-B08	BRACKET CONTROL PANEL	1
30	PAFZZA	7690-01-551-3453	61796	1932-D04	DECAL,RETRACTOR	1
31	PAFZZA	7690-01-551-3365	61796	1932-D03	DECAL,HOIST	1
32	PAFZZA	7690-01-551-4483	61796	1932-D02	DECAL,MIXER	1
33	PAFZZA	7690-01-551-3066	61796	1932-D01	DECAL,CONVEYOR	1
34	PAFZZA	7690-01-551-3129	61796	1932-D12	DECAL,WATER PUMP	1
35	PAFZZA	5310-00-584-5005	96906	MS35690-405	NUT,PLAIN,HEXAGON 1/4-20	1
36	PAFZZA	5340-01-551-1316	61796	1932-B03	DOOR,ACCESS	1
37	PAFZZA	5305-01-280-7901	45152	66420AX	SCREW,CAP,HEXAGON HD, 1/4-20 X 1	11
38	PFFZZA	5340-01-547-1837	61796	1932-228	PANEL,CONTROL	1
39	PAFZZA	5930-01-551-2878	61796	5522-407	SWITCH,TOGGLE 3 POSITION	3
40	PAFZZA	5930-01-551-6309	61796	5522-204	BOOT,SWITCH	3
41	PAFZZA	4720-01-551-2740	61796	1932-543	HOSE CONTROL VALVE	1
42	PAFZZA	4720-01-551-7281	61796	1932-545	HOSE CONTROL VALVE	1

END OF FIGURE

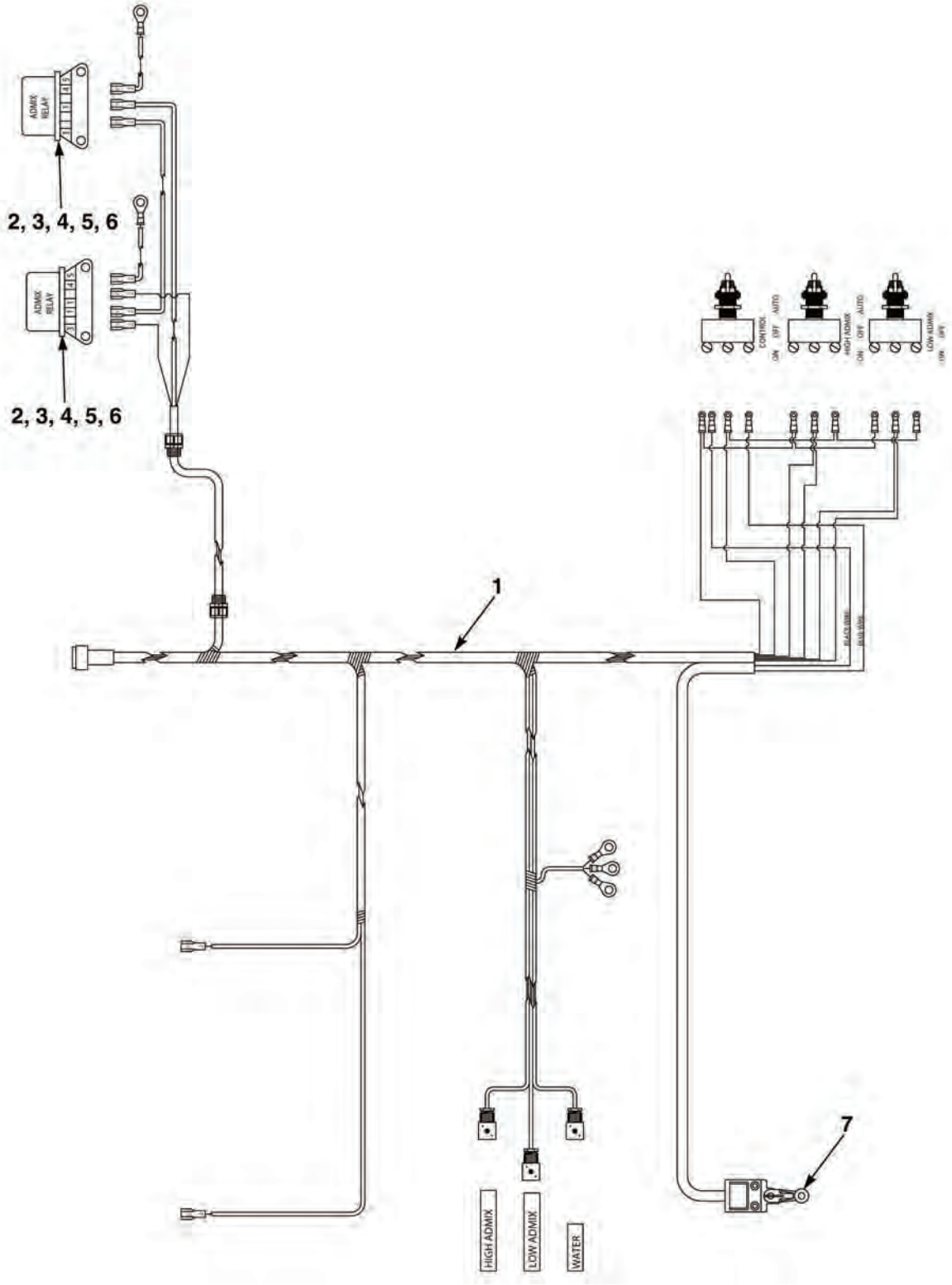

FIG. 17 CONTROL PANEL WIRING HARNESS

(1) ITEM NO	(2) SMR CODE	(3) NSN	(4) CAGEC	(5) PART NUMBER	(6) DESCRIPTION	(7) QTY
					FIG. 17 CONTROL PANEL WIRING HARNESS	
1	PAFZZA	6150-01-551-7445	61796	1932-601	HARNESS,WIRING,UNIT CONTROL	1
2	PAFZZA	5945-01-551-3507	0FRE0	150-902	RELAY,ELECTROMAGNET	2
3	PAFZZA	5305-01-480-2359	45152	3268673	SCREW,CAP,HEXAGON HD, 1/4-20 X 3/4	4
4	PAFZZA	5310-00-809-4058	96906	MS27183-10	WASHER,FLAT	4
5	PAFZZA	5310-00-582-5965	80205	MS35338-44	WASHER,LOCK,1/4	4
6	PAFZZA	5310-00-584-5005	96906	MS35690-405	NUT,PLAIN,HEXAGON, 1/4-20	4
7	PAFZZA	5930-01-551-3898	61796	5522-305	SWITCH,ROLLER	1

END OF FIGURE

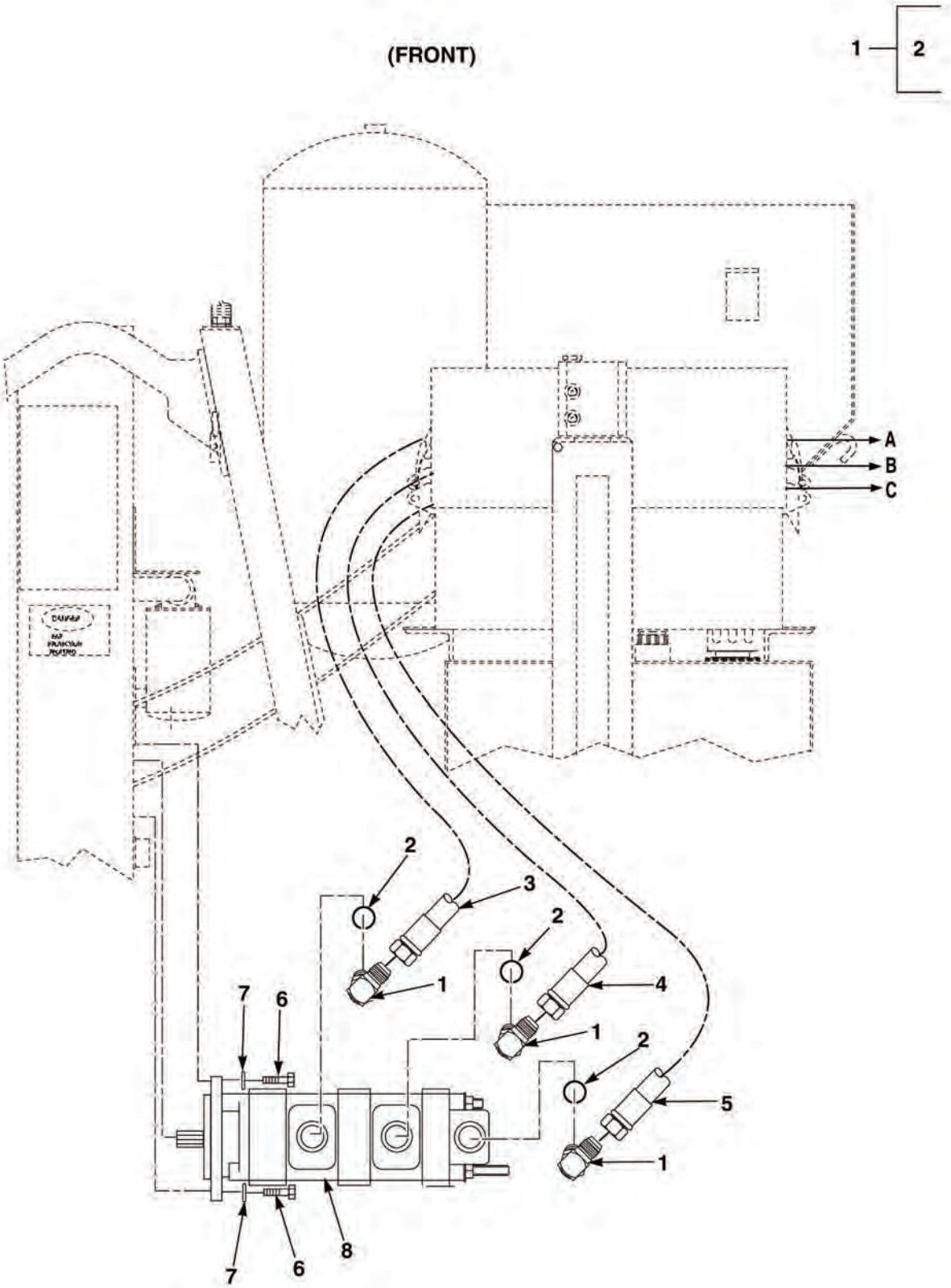

FIG. 18 HYDRAULICS SHEET 1 OF 4

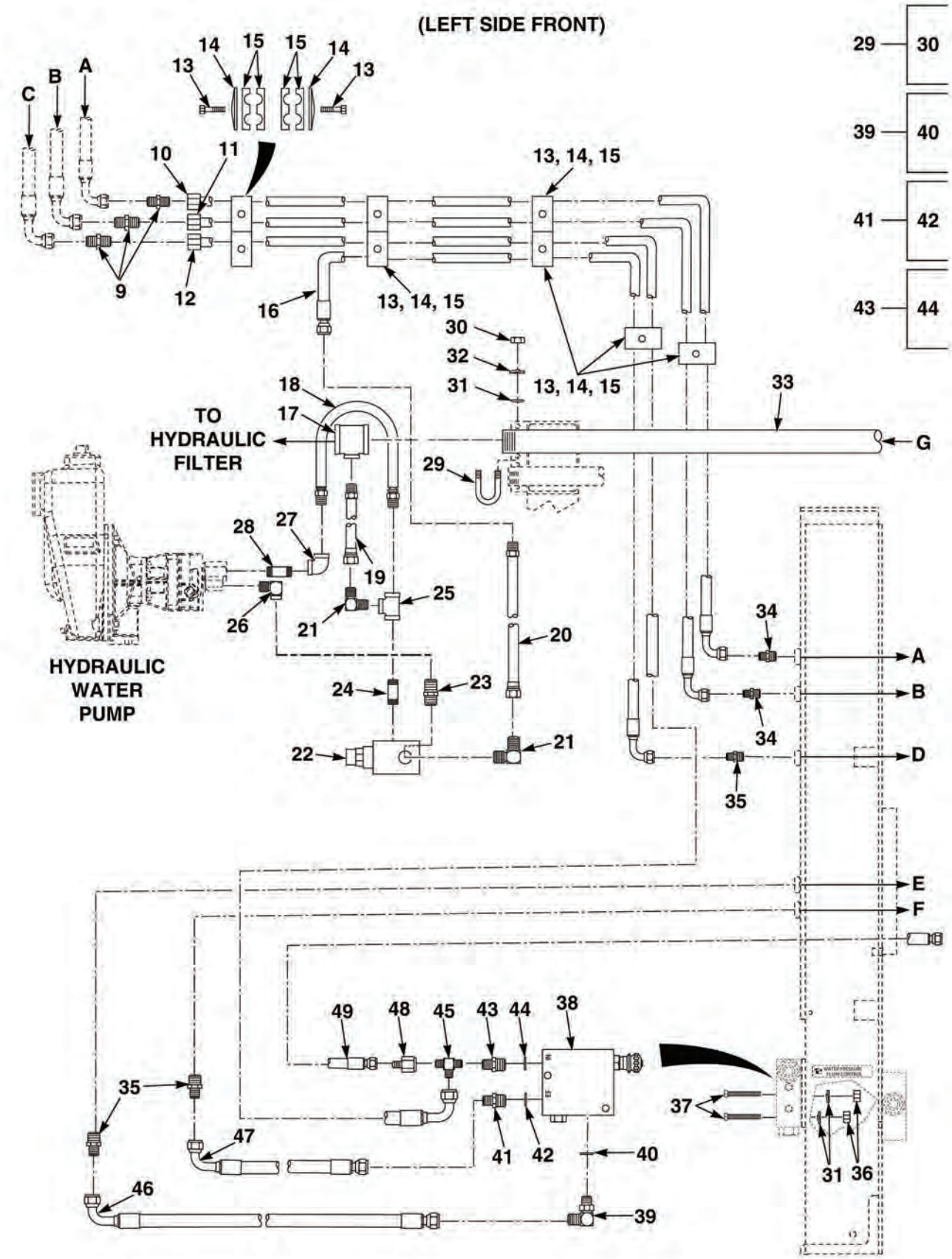

FIG. 18 HYDRAULICS SHEET 2 OF 4

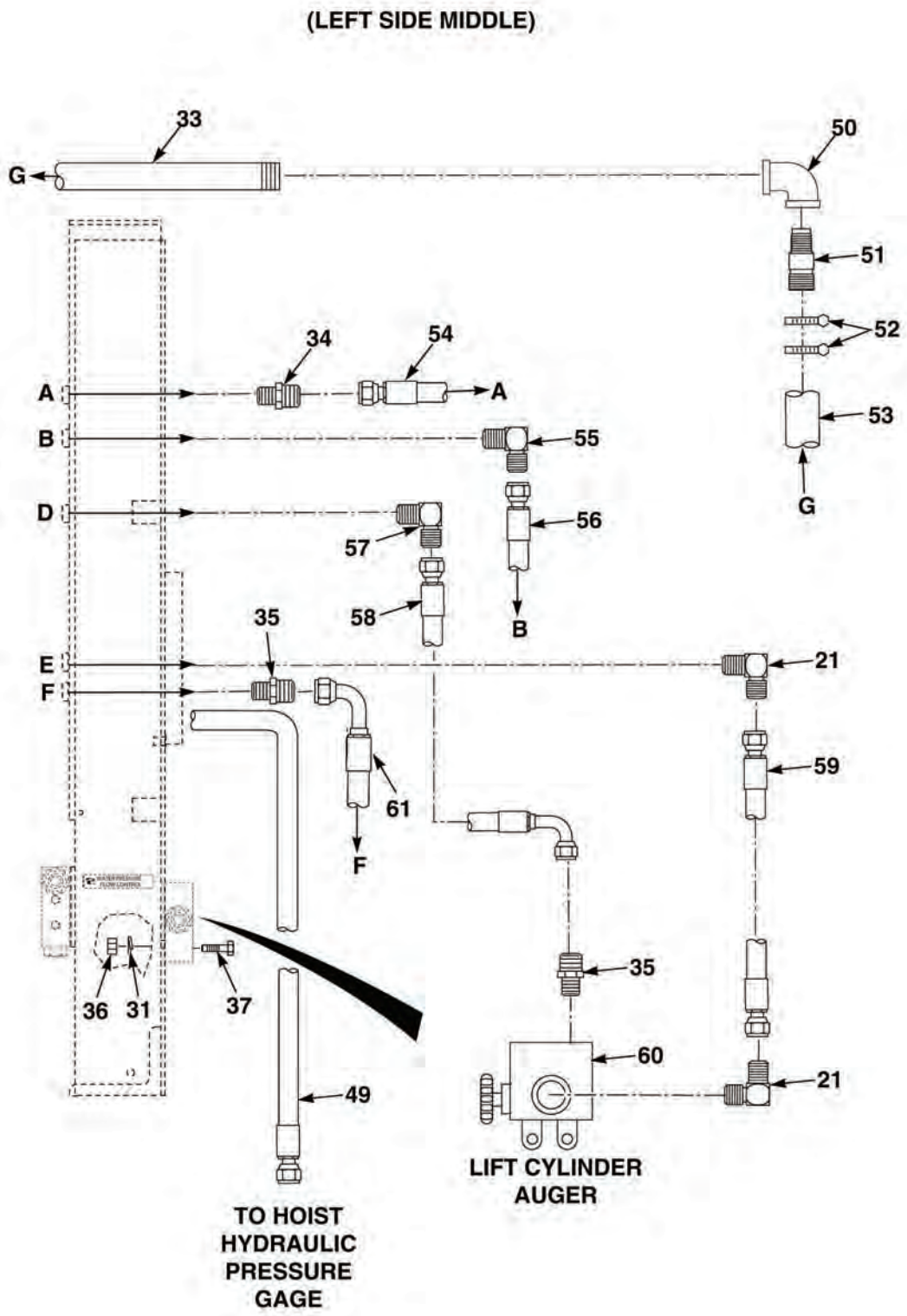

FIG. 18 HYDRAULICS SHEET 3 OF 4

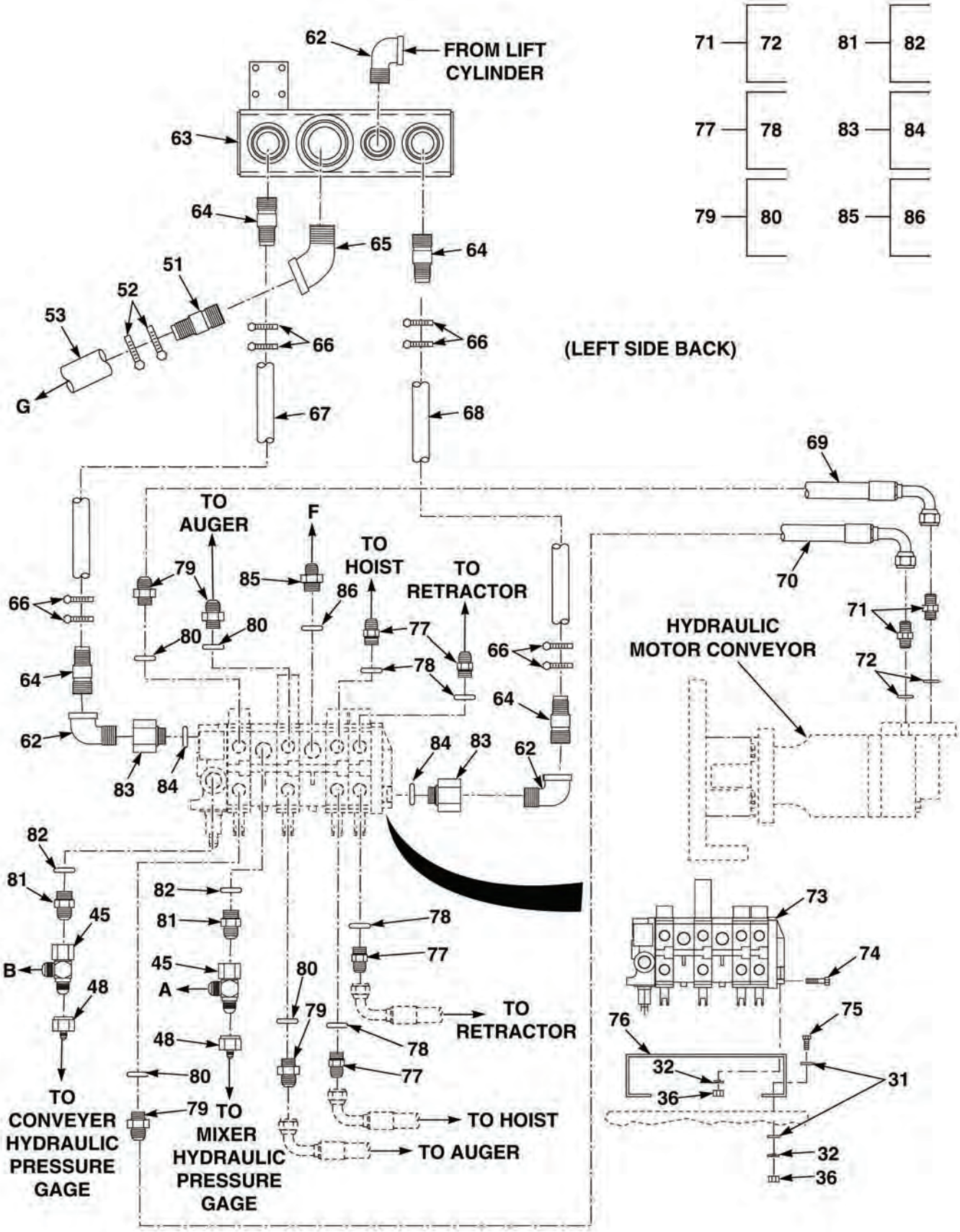

FIG. 18 HYDRAULICS SHEET 4 OF 4

(1) ITEM NO	(2) SMR CODE	(3) NSN	(4) CAGEC	(5) PART NUMBER	(6) DESCRIPTION	(7) QTY
					FIG. 18 HYDRAULICS	
1	PAFZZA	4730-01-011-7736	96906	MS51527A12	ELBOW,PIPE	3
2	PAFZZA	5330-01-480-2366	45152	7HB220	•PACKING,PREFORMED	1
3	PAFZZA	4720-01-551-2355	61796	1932-534	HOSE, MIXER	1
4	PAFZZA	4720-01-551-2710	61796	1932-535	HOSE, CONVEYOR	1
5	PAFZZA	4720-01-551-1253	61796	1932-536	HOSE, HOIST/WTR PMP/LIFT CYL	1
6	PAFZZA	5305-00-732-0511	80205	B1821BH050C113N	SCREW,CAP,HEXAGON HD, 1/2-13 X 1 1/4	4
7	PAFZZA	5310-01-133-2130	45152	355AX	WASHER,LOCK,1/2	8
8	PAFZZA		61796	5232-03800	PUMP,HYDRAULIC, MAIN UNIT	1
9	PAFZZA	4730-00-849-7155	96906	MS50501A12	NIPPLE,TUBE	3
10	PAFZZA	4710-01-551-4616	61796	1932-519	TUBE, CONVEYOR	1
11	PAFZZA	4710-01-552-1701	61796	1932-518	TUBE, MIXER	1
12	PAFZZA	4710-01-551-1149	61796	1932-517	TUBE	1
13	PAFZZA	5306-01-164-7437	45152	1849HX1	BOLT,MACHINE, 5/16-18 X 1-3/4	8
14	PAFZZA	5340-01-172-1566	53790	GD-3D	COVER,ACCESS	8
15	PAFZZA	4730-01-551-6543	53790	3190/190D-PPH	BODY,CLAMP	16
16	PAFZZA	4710-01-551-2745	61796	1932-516	HOSE, WATER PUMP	1
17	PAFZZA	4730-01-551-9375	54578	1105R-1-1/2 X 1/	TEE,REDUCING	1
18	PAFZZA	4720-01-551-2811	61796	1932-589	HOSE ASSY,RETURN WATER PUMP	1
19	PAFZZA	4720-01-551-6434	61796	1932-590	HOSE ASSY,RETURN WATER PUMP	1
20	PAFZZA	4720-01-551-3916	61796	1932-568	HOSE, WATER, PUMP MOTOR	1
21	PAFZZA	4730-01-547-5057	0S1H5	2501-10-08	ELBOW,PIPE	4
22	PAFZZA	4820-01-145-9471	19184	RL-50	VALVE,SAFETY RELEASE	1
23	PAFZZA	4730-00-595-3108	72983	23325X8	NIPPLE,PIPE	1
24	PAFZZA	4730-00-196-1467	81346	A733S-73CFG	NIPPLE,PIPE	1
25	PAFZZA	4730-01-547-7017	54578	1105-1/2	TEE,PIPE	1
26	PAFZZA	4730-00-289-2357	36621	2102-8-8	ELBOW,PIPE	1
27	PAFZZA	4730-01-296-2937	72423	1001-100	ELBOW,PIPE	1
28	PAFZZA	4730-00-196-1493	96906	MS51953-78	NIPPLE,PIPE	1
29	PAFZZA	5306-01-268-9089	39428	3043T29	BOLT,U, 1-1/2 X 5/16-18	2
30	PAFZZA	5310-01-105-7229	45152	369AX1	•NUT,PLAIN,HEXAGON, 5/16-18	2
31	PAFZZA	5310-00-773-7618	80205	MS15795-814	WASHER,FLAT, 3/8	2
32	PAFZZA	5310-01-068-8446	45152	354AX	WASHER,LOCK	2
33	PAFZZA	4720-01-551-6504	61796	5019-170-11500	PIPE	1
34	PAFZZA	4730-00-202-8469	96906	MS51500A12	ADAPTER,STRAIGHT, PIPE TO TUBE	3
35	PAFZZA	3040-01-552-1790	0S1H5	2404-10-08	ADAPTER,STRAIGHT, PIPE TO TUBE	4
36	PAFZZA	5310-01-105-7229	45152	369AX1	NUT,PLAIN,HEXAGON, 5/16-18	2
37	PAFZZA	5306-00-816-5272	80205	MS35305-340	BOLT,MACHINE	4
38	PAFZZA	4820-01-552-0300	9R702	4151-547-005	VALVE,FLOW CONTROL	1
39	PAFZZA		0S1H5	6801-10-08	ELBOW,PIPE	1
40	PAFZZA	5331-00-808-0794	81343	MS28778-8	•O-RING	1
41	PAFZZA	4730-01-547-7018	0S1H5	6400-10-08	ADAPTER,STRAIGHT, TUBE TO BOSS	1
42	PAFZZA	5331-00-808-0794	81343	MS28778-8	•O-RING	1
43	PAFZZA	3040-01-552-7818	0S1H5	6400-12-08	ADAPTER,STRAIGHT	1
44	PAFZZA	5330-00-485-3586	45152	2CT976	•PACKING,PREFORMED	1
45	PAFZZA	4730-01-104-7503	96906	MS51523A12	TEE,TUBE	3
46	PAFZZA	4720-01-552-0241	61796	1932-541	HOSE, FLOW CONTROL	1
47	PAFZZA	4720-01-551-6384	61796	1932-542	HOSE, FLOW CONTROL	1
48	PAFZZA	4730-00-719-2789	96906	MS51534A12-4S	REDUCER,TUBE	3
49	PAFZZA	4720-01-551-2794	61796	1932-540	HOSE,PRESSURE	1

(1) ITEM NO	(2) SMR CODE	(3) NSN	(4) CAGEC	(5) PART NUMBER	(6) DESCRIPTION	(7) QTY
50	PAFZZA	4730-00-261-4218	96906	MS39231-5	ELBOW,PIPE	1
51	PAFZZA	4730-01-479-2292	61796	5070-170	HOSE BARB,PIPE TO HOSE	2
52	PAFZZA	4730-00-909-8627	58536	A-A-52506-F-36	CLAMP,HOSE	8
53	PAFZZA	4720-01-552-0323	3N872	70136	HOSE,HYDRAULIC SUCTION	1
54	PAFZZA	4720-01-551-4685	61796	1932-546	HOSE, CONTROL VALVE	1
55	PAFZZA	4730-00-289-4912	96906	MS51504A12	ELBOW,PIPE	1
56	PAFZZA	4720-01-551-4678	61796	1932-544	HOSE CONTROL VALVE	1
57	PAFZZA	4730-01-547-5057	0S1H5	2501-10-08	ELBOW,PIPE	1
58	PAFZZA	4720-01-551-3331	61796	1932-559	HOSE, SELECTOR VALVE	1
59	PAFZZA	4720-01-551-6426	61796	1932-553	HOSE,HYDRAULIC	1
60	PAFZZA	4820-01-551-7383	61796	5227-009	VALVE,SELECTOR	1
61	PAFZZA	4720-01-551-2559	61796	1932-552	HOSE, VALVE	1
62	PAFZZA	4730-00-253-4415	96906	MS39230-5	ELBOW,PIPE 90,.75	3
63	PAFZZA	4730-01-551-4676	61796	1932-234	MANIFOLD,HYDRAULIC RETURN	1
64	PAFZZA	4730-01-045-6011	72661	STC-10	ADAPTER,STRAIGHT, PIPE TO HOSE	4
65	PAFZZA	4730-00-261-4219	96906	MS39231-8	ELBOW,PIPE	1
66	PAFZZA	4730-01-191-9701	39428	5416K16	CLAMP,HOSE	8
67	PAFZZA		61796	5220-516-01500	HOSE,HYDRAULIC SUCTION	1
68	PAFZZA	4720-01-551-4615	61796	5220-516-01800	HOSE,HYDRAULIC SUCTION	1
69	PAFZZA	4720-01-551-6409	61796	1932-548	HOSE, CONVEYOR MOTOR	1
70	PAFZZA	4720-01-551-2733	61796	1932-549	HOSE, CONVEYOR MOTOR	1
71	PAFZZA	4730-00-173-1881	96906	MS51500A12-16	ADAPTER,STRAIGHT, TUBE TO BOSS	2
72	PAFZZA	5331-00-404-4619	62983	263500	•O-RING	1
73	PAFZZA	4730-01-552-1344	61796	5227-30420	VALVE,HYDRAULIC, 4 SPOOL	1
74	PAFZZA	5305-01-063-9898	45152	1492HX	BOLT,MACHINE, 5/16-18 X 2	3
75	PAFZZA	5306-01-056-2942	80205	MS90725-34	SCREW,CAP,HEX HD, 5/16-18 X 1	8
76	PAFZZA		61796	1932-225	BRACKET	1
77	PAFZZA	4730-00-623-3889	96906	MS51525A10Z	ADAPTER,STRAIGHT, TUBE TO BOSS	4
78	PAFZZA	5330-00-485-3586	45152	2CT976	•PACKING,PREFORMED	1
79	PAFZZA	4730-01-548-2942	0S1H5	6400-12-10	ADAPTER,STRAIGHT, TUBE TO BOSS	4
80	PAFZZA	5330-00-485-3586	45152	2CT976	•PACKING,PREFORMED	1
81	PAFZZA	4730-00-710-5571	96906	MS51525A12	ADAPTER,STRAIGHT, TUBE TO BOSS	2
82	PAFZZA	5330-01-480-2366	45152	7HB220	•PACKING,PREFORMED	1
83	PAFZZA	4730-01-551-1323	61796	6405-12-16	ADAPTER,STRAIGHT, TUBE TO BOSS	2
84	PAFZZA	5330-01-480-2366	45152	7HB220	•PACKING,PREFORMED	1
85	PAFZZA	4730-01-027-8261	01276	202702-12-10S	ADAPTER,STRAIGHT	1
86	PAFZZA	5330-01-480-2366	45152	7HB220	•PACKING,PREFORMED	1

END OF FIGURE

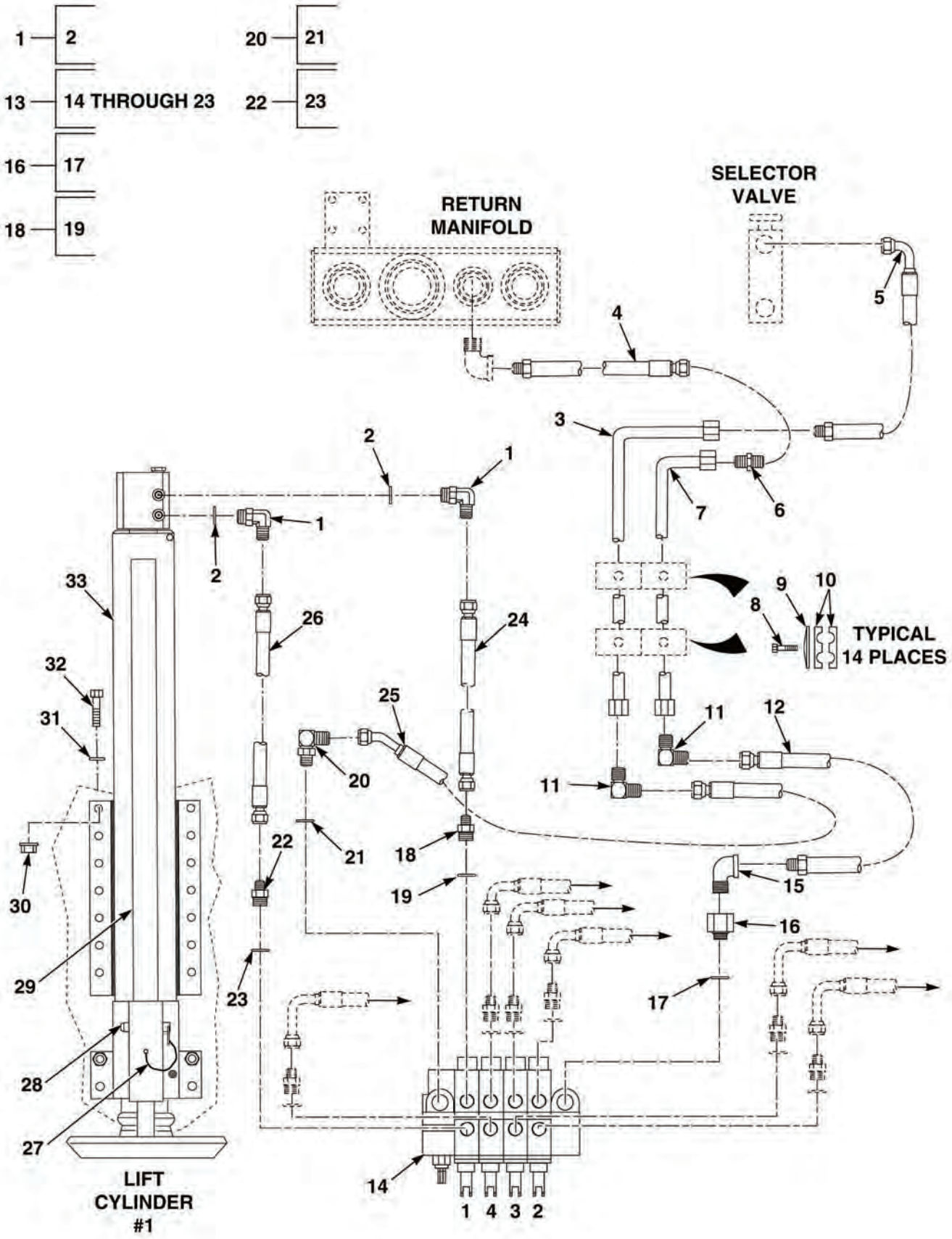

FIG. 19 LIFT CYLINDERS AND CONTROL VALVES SHEET 1 OF 4

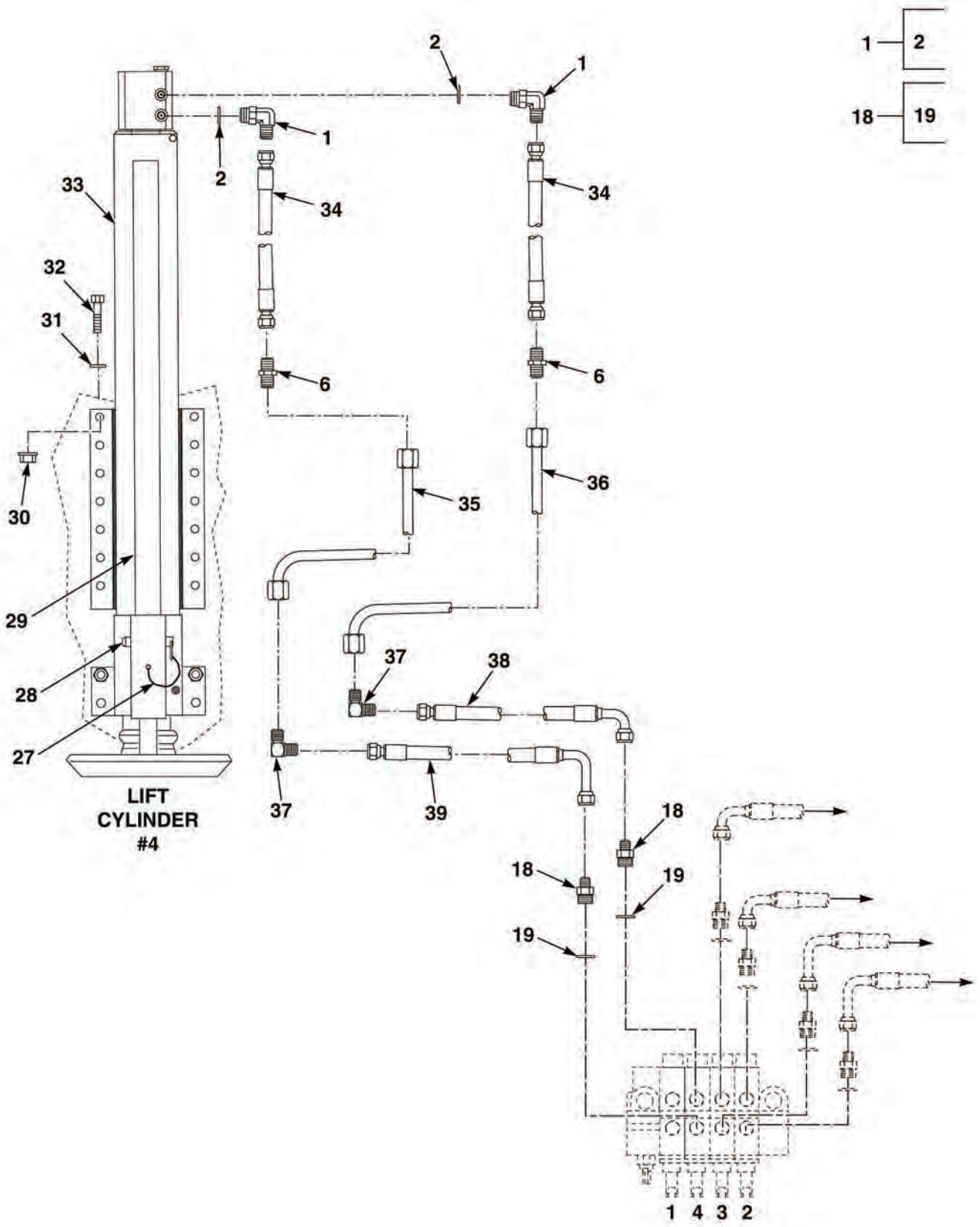

FIG. 19 LIFT CYLINDERS AND CONTROL VALVES SHEET 2 OF 4

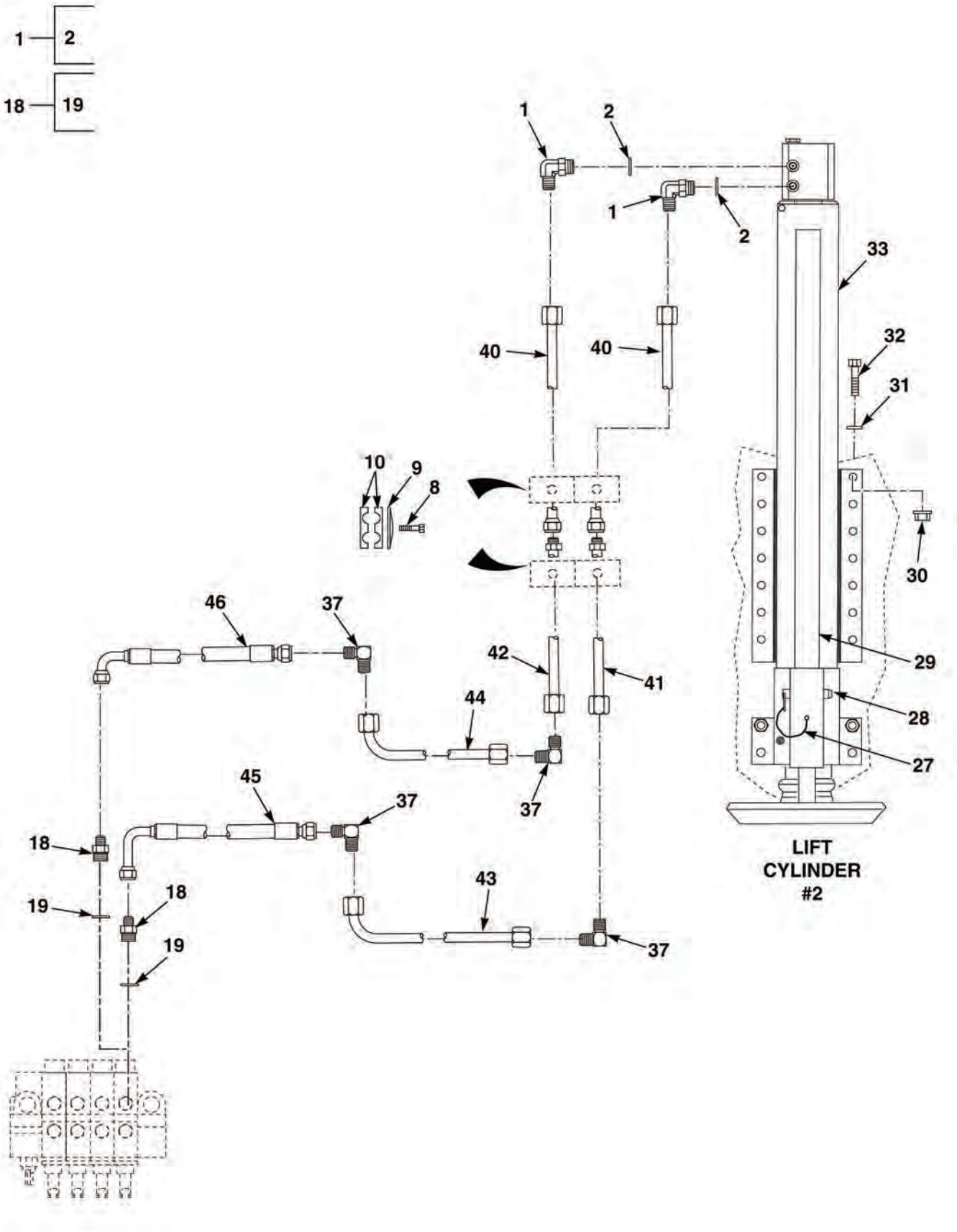

FIG. 19 LIFT CYLINDERS AND CONTROL VALVES SHEET 3 OF 4

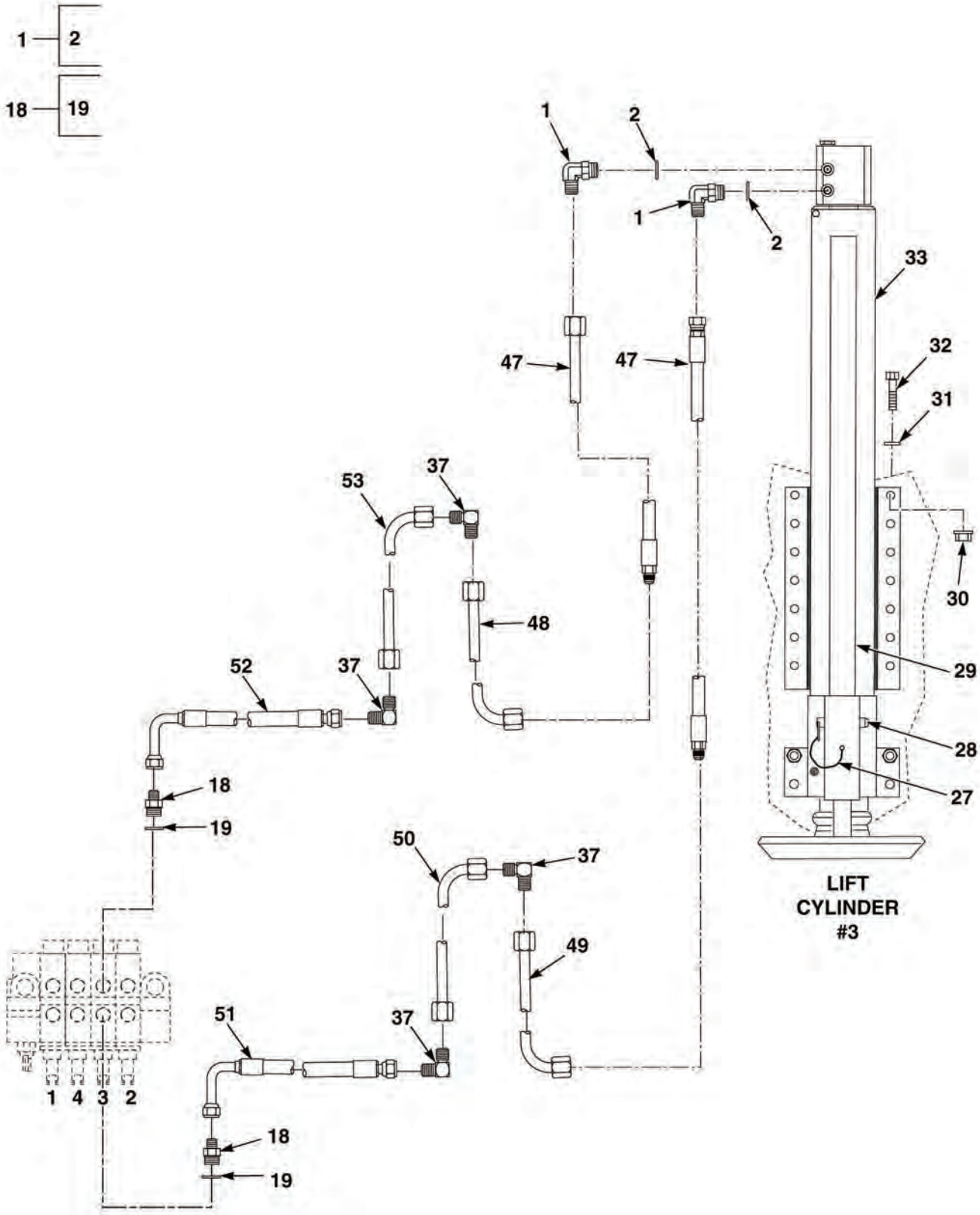

FIG. 19 LIFT CYLINDERS AND CONTROL VALVES SHEET 4 OF 4

(1) ITEM NO	(2) SMR CODE	(3) NSN	(4) CAGEC	(5) PART NUMBER	(6) DESCRIPTION	(7) QTY
					FIG. 19 LIFT CYLINDERS AND CONTROL VALVES	
1	PAFZZA	4730-00-143-3941	96906	MS51527A6	ELBOW,TUBE TO BOSS	8
2	PAFZZA	5330-01-481-0888	45152	7HB219	•O-RING	1
3	PAFZZA	4720-01-551-6417	61796	1932-523	TUBE, LIFT CYLINDER	1
4	PAFZZA	4720-01-551-6441	61796	1932-591	HOSE,HYDRAULIC, LIFT CYLINDER VALVE	1
5	PAFZZA	4720-01-551-6420	61796	1932-558	HOSE, SELECTOR VALVE	1
6	PAFZZA	4730-00-849-7155	96906	MS50501A12	NIPPLE,TUBE	3
7	PAFZZA	4710-01-551-4042	61796	1932-522	TUBE,HYDRAULIC LIFT CYLINDER	1
8	PAFZZA	5306-01-164-7437	45152	1849HX1	BOLT,MACHINE, 5/16-18 X 1-3/4	1
9	PAFZZA	5340-01-172-1566	53790	GD-3D	COVER,ACCESS	1
10	PAFZZA	4730-01-551-6543	53790	3190/190D-PPH	BODY,CLAMP	1
11	PAFZZA	4730-00-834-4521	96906	MS51505A12	ELBOW,TUBE	2
12	PAFZZA	4720-01-551-6488	61796	1932-592	HOSE,HYDRAULIC, LIFT CYLINDER VALVE	1
13	PAFFFA	4730-01-551-4682	61796	1932-587	VALVE ASSEMBLY, JACK CONTROL	1
14	PAFZZA	4730-01-551-8546	61796	5227-30400	•VALVE,HYDRAULIC, 4 SPOOL	1
15	PAFZZA	4730-00-253-4415	96906	MS39230-5	•ELBOW,PIPE	1
16	PAFZZA	4730-01-254-9868	30780	0502-10-12	•ADAPTER,10M-ORNG X 12	1
17	PAFZZA		30780	3-910 N0552	••O-RING	1
18	PAFZZA	3040-01-552-1744	0S1H5	2404-06-08	•ADAPTER,STRAIGHT	7
19	PAFZZA	5330-01-481-0888	45152	7HB219	••O-RING	1
20	PAFZZA	4730-00-623-3889	96906	MS51525A10Z	•ADAPTER,STRAIGHT TUBE TO BOSS	1
21	PAFZZA		30780	3-910 N0552	••O-RING	1
22	PAFZZA	4730-01-551-1224	61796	1932-585	•ADAPTER,ORIFICE	1
23	PAFZZA		30780	3-908 N0552	••O-RING	1
24	PAFZZA	4720-01-551-4634	61796	1932-571	HOSE, LIFT CYLINDER	1
25	PAFZZA	4720-01-551-6402	61796	1932-563	HOSE, VALVE/LIFT CYLINDER	1
26	PAFZZA	4720-01-551-2514	61796	1932-572	HOSE, LIFT CYLINDER	1
27	PAFZZA	4010-01-551-2692	61796	5234-13611	CABLE	4
28	PAFZZA	5315-01-552-2365	61796	5234-13610	PIN	4
29	PAFZZA	5340-01-552-4543	61796	5234-13609	LEG,STABILIZER	4
30	PAFZZA	5310-00-269-4040	81349	M45913/1-10CG5C	NUT,SELF-LOCKING,HEX,5/8-11	68
31	PAFZZA	5310-00-823-8803	96906	MS27183-21	WASHER,FLAT	64
32	PAFZZA	5305-00-724-7224	80204	B1821BH063C250N	SCREW,CAP,HEXAGON HD, 5/8-11 X 2-1/2	68
33	PAFZZA	3040-01-483-2966	61796	5234-13608	CYLINDER,HYDRAULIC	4
34	PAFZZA	4720-01-551-2523	61796	1932-581	HOSE, LIFT CYLINDER	2
35	PAFZZA	4710-01-552-0246	61796	1932-520	TUBE, LIFT CYLINDER	1
36	PAFZZA	4710-01-551-6362	61796	1932-521	TUBE, LIFT CYLINDER	1
37	PAFZZA	4730-00-901-1289	96906	MS51505A6	ELBOW,TUBE	10
38	PAFZZA	4720-01-551-1166	61796	1932-578	HOSE, LIFT CYLINDER	1
39	PAFZZA	4720-01-551-2691	61796	1932-577	HOSE, LIFT CYLINDER	1
40	PAFZZA	4720-01-551-5093	61796	1932-579	HOSE, LIFT CYLINDER	2
41	PAFZZA	4710-01-551-5195	61796	1932-530	TUBE, LIFT CYLINDER	1
42	PAFZZA	4710-01-551-4056	61796	1932-531	TUBE, HYDRAULIC, LIFT CYLINDER	1
43	PAFZZA	4710-01-551-2695	61796	1932-526	TUBE, LIFT CYLINDER	1
44	PAFZZA	4710-01-551-6544	61796	1932-527	TUBE, HYDRAULIC, LIFT CYLINDER	1
45	PAFZZA	4720-01-551-2747	61796	1932-574	HOSE, LIFT CYLINDER	1
46	PAFZZA	4720-01-552-7312	61796	1932-573	HOSE, LIFT CYLINDER	1

(1) ITEM NO	(2) SMR CODE	(3) NSN	(4) CAGEC	(5) PART NUMBER	(6) DESCRIPTION	(7) QTY
47	PAFZZA	4720-01-551-4035	61796	1932-580	HOSE, LIFT CYLINDER	2
48	PAFZZA	4710-01-552-1244	61796	1932-532	TUBE, LIFT CYLINDER	1
49	PAFZZA	4710-01-551-2541	61796	1932-533	TUBE, HYDRAULIC, LIFT CYLINDER	1
50	PAFZZA	4710-01-551-5181	61796	1932-529	TUBE, LIFT CYLINDER	1
51	PAFZZA	4720-01-551-3899	61796	1932-576	HOSE, LIFT CYLINDER	1
52	PAFZZA	4720-01-551-6698	61796	1932-575	HOSE, LIFT CYLINDER	1
53	PAFZZA	4710-01-551-2702	61796	1932-528	TUBE, HYDRAULIC, LIFT CYLINDER	1

END OF FIGURE

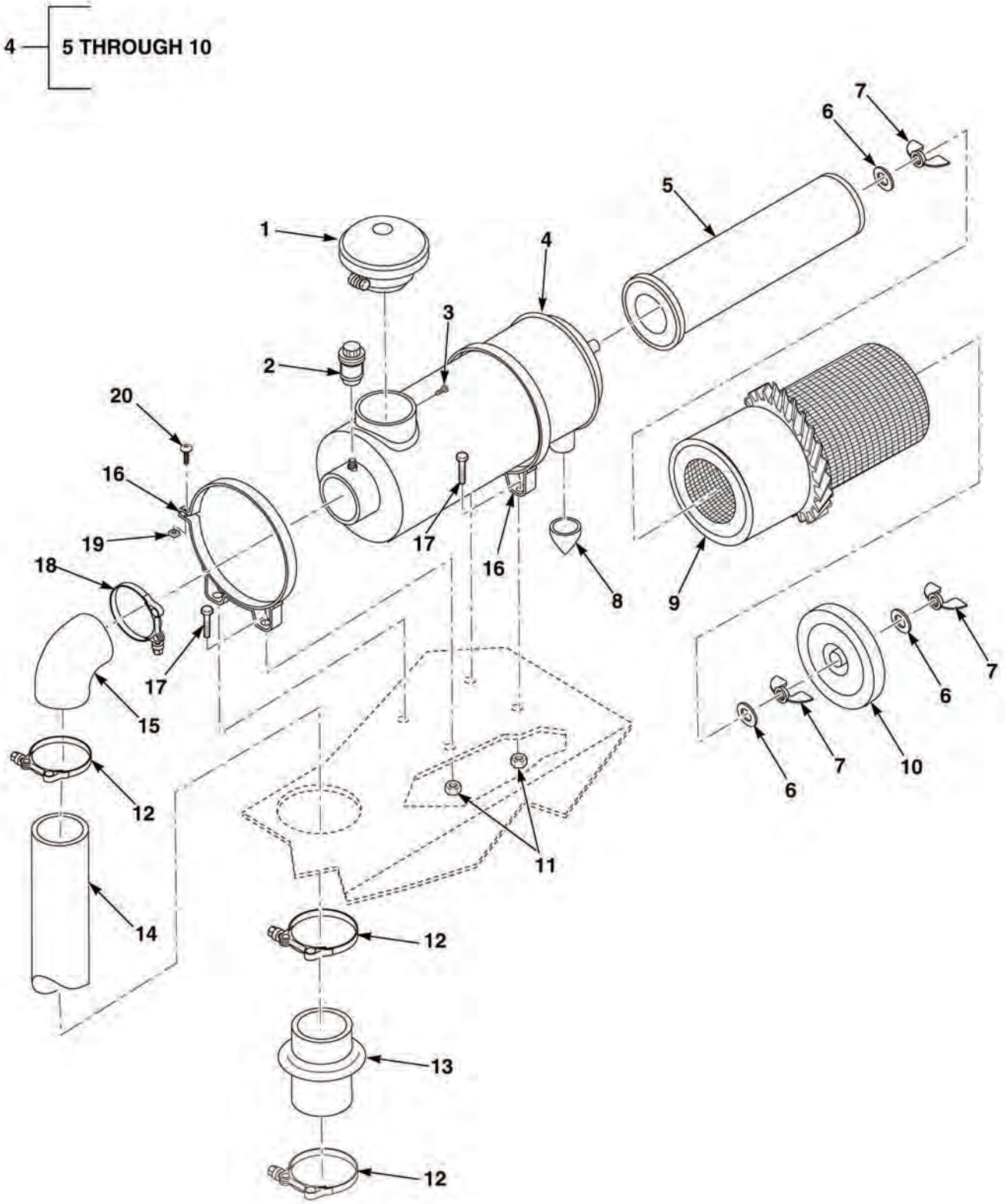

FIG. 20 AIR CLEANER

(1) ITEM NO	(2) SMR CODE	(3) NSN	(4) CAGEC	(5) PART NUMBER	(6) DESCRIPTION	(7) QTY
					FIG. 20 AIR CLEANER	
1	PAFZZA		15434	10000019	RAIN CAP (USED ON S/N 8RDCD301513HC THRU 8RDCD301619HC)	1
1	PAFZZA	5340-01-551-5686	33457	3946458S	HOOD,WEATHER (USED ON S/N 8RDCD301620HC AND SUBSEQUENT)	1
2	PAFZZA	2940-01-226-2773	18265	RBX00-2251	AIR RESTRICTION INDICATING	1
3	PAFZZA	5305-01-551-7305	39428	90054A410	SCREW,TAPPING, 5/16-18 X 3/4	1
4	PAFFFA		15434	10000143	AIR CLEANER (USED ON S/N 8RDCD301513HC THRU 8RDCD301619HC)	1
4	PAFFFA	2940-01-552-4504	33457	AH19267	AIR CLEANER ASSY (USED ON S/N 8RDCD301620HC AND SUBSEQUENT)	1
5	PAFZZA	2940-00-111-2621	74069	AF103	•ELEMENT,FILTER SECONDARY	1
6	PAFZZA	5330-01-280-9392	76700	Q66993	•GASKET,WASHER	3
7	PAFZZA	5310-01-375-6044	76700	Q-56268	•NUT,PLAIN,WING	3
8	PAFZZA	4820-01-282-0165	76700	Q59400	•VALVE,FLAPPER	1
9	PAFZZA	2940-01-375-5489	76700	70334-L	•FILTER ELEMENT (USED ON S/N 8RDCD301513HC THRU 8RDCD301619HC)	1
9	PAFZZA	2940-01-082-0096	18265	P11-9363	•ELEMENT,FILTER INTAKE (USED ON S/N 8RDCD301620HC AND SUBSEQUENT)	1
10	PAFZZA	2940-01-551-7671	76700	Q302039	•COVER,AIR CLEANER	1
11	PAFZZA	5310-01-340-5671	45152	1333510	NUT,SELF-LOCKING, HEX	4
12	PAFZZA	5340-01-551-1653	33457	3316657S	CLAMP,T-BOLT	3
13	PAFZZA	4720-01-551-2324	33457	3316607S	HOSE,HUMP,3 X 3 IN.	1
14	PAFZZA		15434	33911003	AIR INTAKE TUBE	1
15	PAFZZA	4730-01-551-1814	33457	3316567S	ELBOW,RUBBER	1
16	PAFZZA	4730-01-551-1822	33457	3918222S	BRACKET,MOUNTING	2
17	PAFZZA	5305-01-344-5532	45152	1846HX1	SCREW,CAP,HEXAGON HD, 5/16-18 X 1	4
18	PAFZZA	5340-01-551-1649	33457	3316658S	CLAMP,T-BOLT	1
19	PAFZZA	5310-01-551-6695	39428	90043A029	NUT,HEX,1/4-20	2
20	PAFZZA	5305-00-988-1171	96906	MS35206-285	SCREW, MACHINE, 1/4-20 X 1-1/2	2

END OF FIGURE

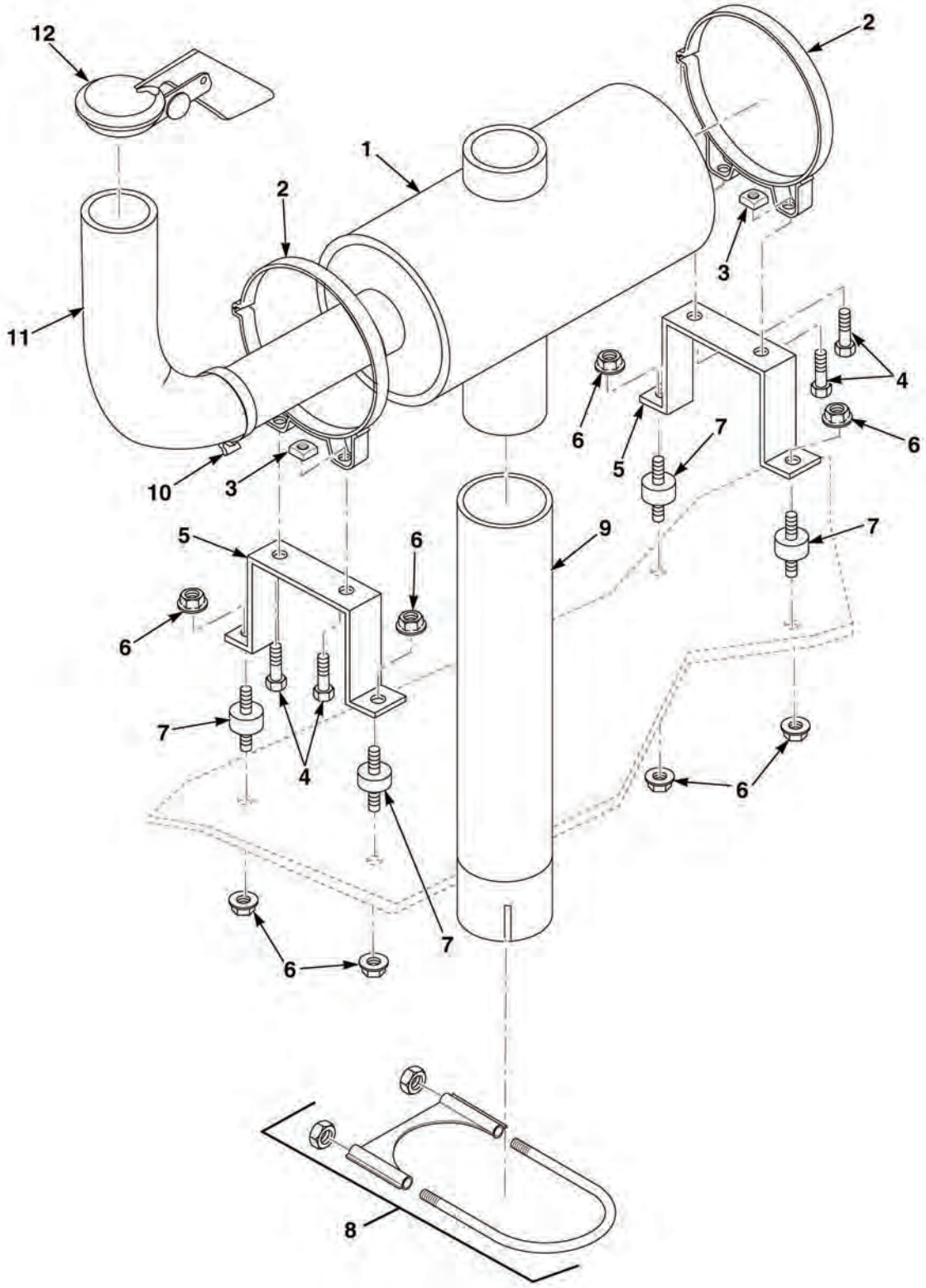

FIG. 21 EXHAUST SYSTEM

(1) ITEM NO	(2) SMR CODE	(3) NSN	(4) CAGEC	(5) PART NUMBER	(6) DESCRIPTION	(7) QTY
					FIG. 21 EXHAUST SYSTEM	
1	PAFZZA		33457	15582N	MUFFLER	1
2	PAFZZA	5340-01-551-7667	33457	Q186112	EXHAUST SUPPORT	2
3	PAFZZA	5310-01-551-6691	39428	90043A030	NUT,HEX,5/16-18	4
4	PAFZZA	5305-01-355-1428	45152	50619AX	SCREW,CAP, HEXAGON, 5/16-18 X 1/2	4
5	PAFZZA		33457	MBK24701	MUFFLER BRACKET	2
6	PAFZZA	5310-01-346-9445	45152	1600460	NUT,SELF-LOCKING,HEX, CLINCH, 1/4-20 (USED ON S/N 8RDCD301513HC THRU 8RDCD301619HC)	8
6	PAFZZA	5310-01-340-5671	45152	1333510	NUT,SELF-LOCKING, HEX (USED ON S/N 8RDCD301620HC AND SUBSEQUENT)	4
7	PAFZZA	5342-01-252-2984	76005	J-4624-32	MOUNT,RESILIENT (USED ON S/N 8RDCD301513HC THRU 8RDCD301619HC)	4
7	PAFZZA	5305-01-203-8360	12361	7115141450	SCREW,CAP,HEXAGON HD, 5/16-18 X 3/4 (USED ON S/N 8RDCD301620HC AND SUBSEQUENT)	4
8	PAFZZA	5340-01-272-8387	58536	A-A-52406-165A	CLAMP,LOOP	1
9	PAFZZA	4710-01-551-8630	33457	89211A	EXHAUST EXTENSION	1
10	PAFZZA	5340-01-342-7879	76700	89545-K	CLAMP,LOOP	1
11	PAFZZA	4730-01-164-4657	30422	22012	ELBOW	1
12	PAFZZA	2990-01-210-0438	76700	89430A	CAP ASSEMBLY, PROTECTION (USED ON S/N 8RDCD301513HC THRU 8RDCD301619HC)	1
12	PAFZZA	2990-00-018-6318	29215	60625	RAIN CAP ASSEMBLY, PROTECTION (USED ON S/N 8RDCD301620HC AND SUBSEQUENT)	1

END OF FIGURE

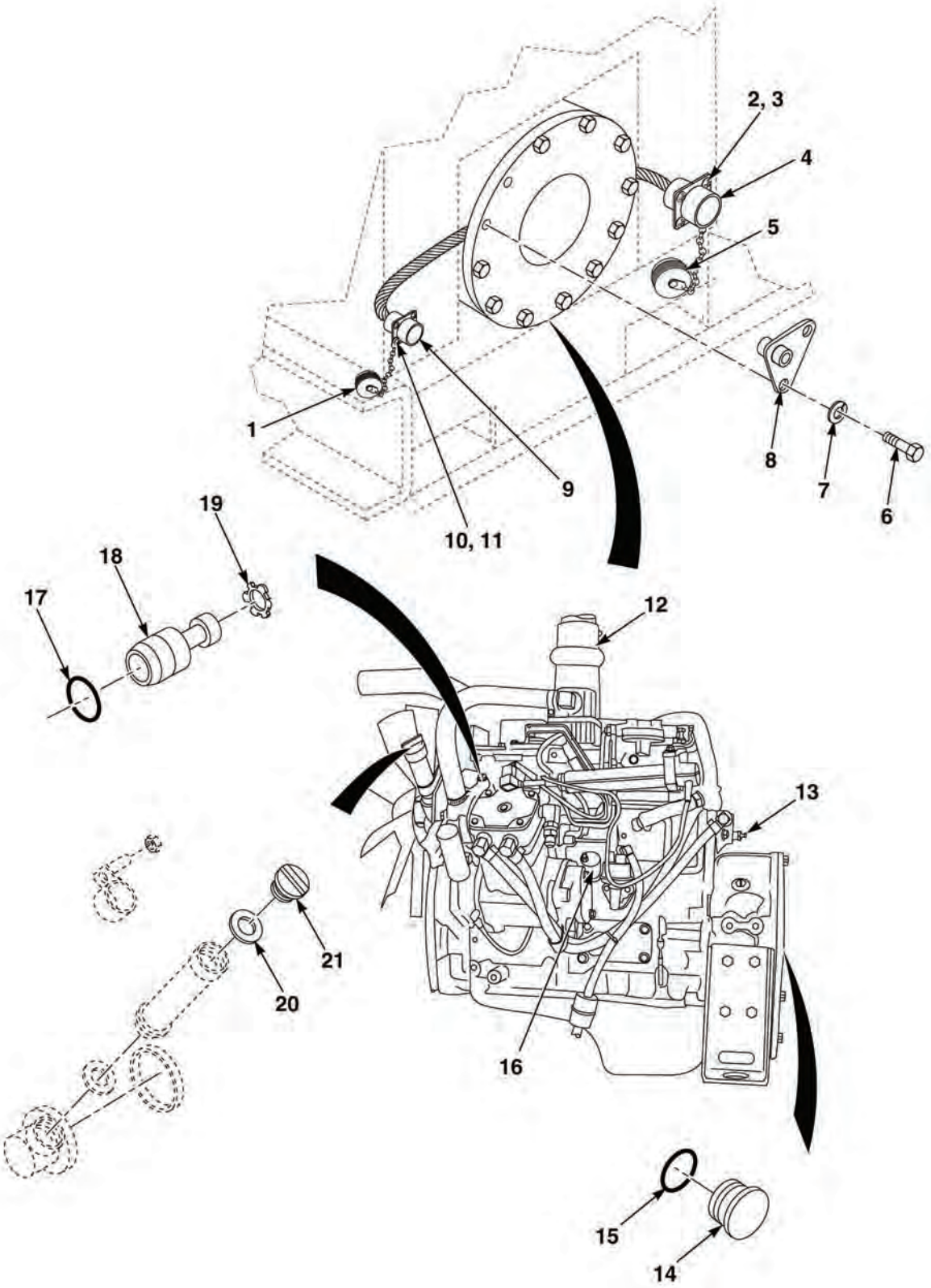

FIG. 22 ENGINE

(1) ITEM NO	(2) SMR CODE	(3) NSN	(4) CAGEC	(5) PART NUMBER	(6) DESCRIPTION	(7) QTY
					FIG. 22 ENGINE	
1	PAFZZA	5935-00-238-6419	96906	MS25043-12DA	COVER,ELECTRICAL CONNECTOR	1
2	PAFZZA	5305-00-978-9352	96906	MS16997-24	SCREW,CAP,SOCKET HD,NO. 6-32 X 1	4
3	PAFZZA	5310-01-120-9097	39428	90675A007	NUT,SELF-LOCKING ASSEMBLED WASHER,NO. 6-32	4
4	PAFZZA	5935-01-551-3427	61796	97-4102A28-20S	CONNECTOR,CONTROL	1
5	PAFZZA	5935-00-174-5365	06845	C234586-3	COVER,ELECTRICAL	1
6	PAFZZA	5305-01-466-6474	39428	91280A634	SCREW,CAP,HEXAGON HD, M10-1.25 X 30MM	1
7	PAFZZA	5310-01-238-3206	96906	MS51415-8	WASHER,LOCK 10MM	1
8	PAFZZA	5340-01-551-8548	61796	1932-A81	BRACKET,AIR LINE	1
9	PAFZZA	5935-01-551-3482	61796	97-3100A-12S-3S	PLUG, SOCKET	1
10	PAFZZA	5305-00-978-9345	96906	MS16997-13	SCREW,CAP,SOCKET HD, NO. 4-40 X 3/4	4
11	PAFZZA	5310-01-396-3883	39428	90675A005	NUT,SELF-LOCKING ASSEMBLED WASHER,NO. 4-40	4
12	PAFZZA	2815-01-455-1631	61796	5830-48000	ENGINE 4B3.9C(80) 4B3.9C(80) (USED ON S/N 8RDCD301513HC THRU 8RDCD301619HC)	1
12	PAFLLZ	2815-01-544-1313	15434	80HP B4.5-80PU	ENGINE,DIESEL B4.5-P80 (USED ON S/N 8RDCD301620HC AND SUBSEQUENT)	1
13	PAFZZA	6685-01-551-6642	03479	EST-250/300-1/2	SENDING UNIT TEMPERATURE	1
14	PAFZZA	2815-01-273-0571	15434	3910248	PLUG,FLYWHEEL HOUSING	1
15	PAFZZA	5330-01-272-1124	15434	3910260	PACKING,PREFORMED	1
16	PAFZZA	6685-01-551-8544	03479	ESP-100	SENDING UNIT PRESSURE	1
17	PAFZZA	5330-01-291-6537	15434	3913994	PACKING,PREFORMED	1
18	PAFZZA	3040-01-189-1760	15434	3903924	SHAFT,SHOULDER	1
19	PAFZZA	5325-00-598-1297	15434	3904849	RING,RETAINING	1
20	PAFZZA	5330-01-199-6159	15434	3936876	SEAL,PLAIN	1
21	PAFZZA	5342-01-319-2079	15434	3914136	CAP,FILLER OPENING	1

END OF FIGURE

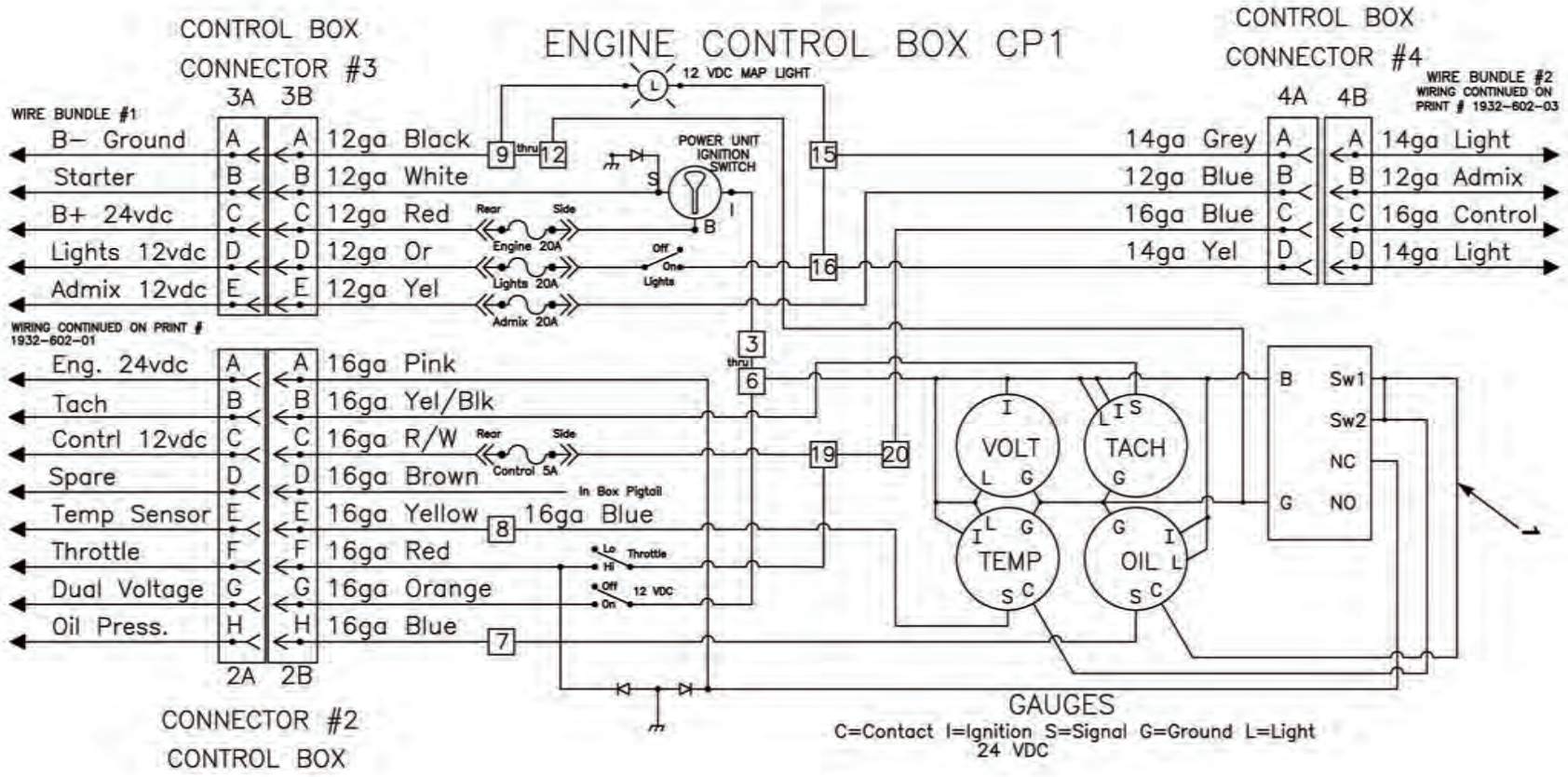

FIG. 23 CONTROL BOX WIRING HARNESS

(1) ITEM NO	(2) SMR CODE	(3) NSN	(4) CAGEC	(5) PART NUMBER	(6) DESCRIPTION	(7) QTY
					FIG. 23 CONTROL BOX WIRING HARNESS	
1	PAFZZA	6150-01-552-3314	61796	1932-602-01	HARNESS ASSEMBLY,ENGINE	1

END OF FIGURE

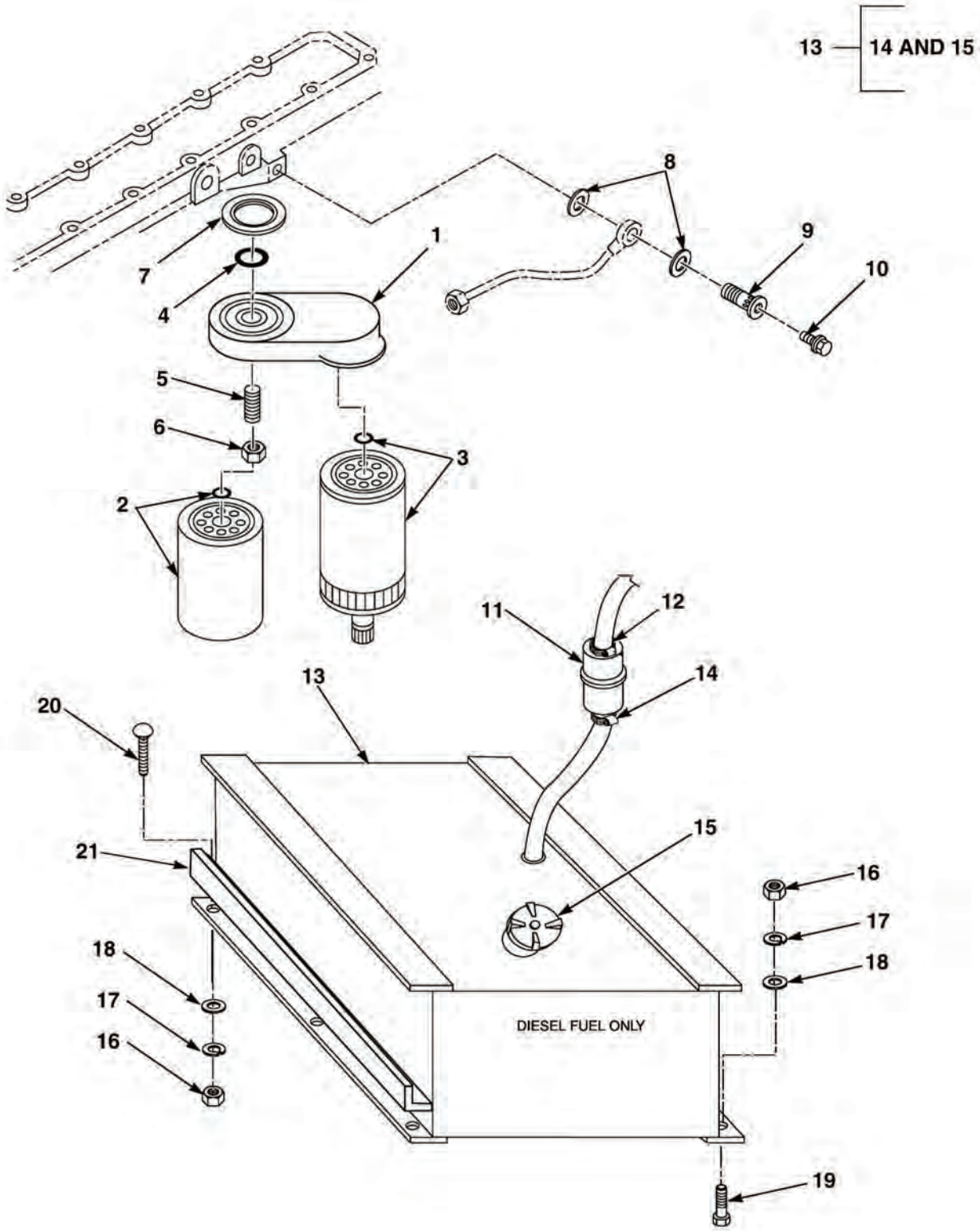

FIG. 24 FLUID FILTER (USED ON S/N 8RDCD301513HC THRU 8RDCD301619HC)

(1) ITEM NO	(2) SMR CODE	(3) NSN	(4) CAGEC	(5) PART NUMBER	(6) DESCRIPTION	(7) QTY
					FIG. 24 FLUID FILTER (USED ON S/N 8RDCD301513HC THRU 8RDCD301619HC)	
1	PAFZZA	4330-01-341-2506	15434	3936315	HEAD,FLUID FILTER	1
2	PAFZZA	2910-00-238-0033	15434	3903640	FILTER ELEMENT, FLUID	1
3	PAFZZA	2910-01-192-4622	15434	3930942	FILTER, ELEMENT, FLUID FUEL/WATER	1
4	PAFZZA	5331-01-281-8998	15434	3906695	O-RING	1
5	PAFZZA	5307-01-196-4246	15434	3925955	STUD,CONTINUOUS THREAD	1
6	PAFZZA	5310-01-241-1373	15434	3903293	NUT,JAM	1
7	PAFZZA	5330-01-267-2981	15434	3906694	PACKING,PREFORMED	1
8	PAFZZA	5310-01-195-1441	15434	3963983	WASHER	4
9	PAFZZA	5305-01-272-1333	15434	3911446	SCREW, CAP, HEX HD	1
10	PAFZZA	5305-01-266-3271	15434	3905403	SCREW ASSY, PANEL	1
11	PAFZZA	4330-01-309-6189	33457	FF0507900	FILTER,FLUID	1
12	PAFZZA	4730-01-209-3354	72582	8929756	CLAMP	1
13	PAFFFA	2910-01-551-7233	61796	1932-206	FUEL TANK, 50 GAL	1
14	PAFZZA	4730-01-209-3354	72582	8929756	•CLAMP,HOSE	4
15	PAFZZA	5430-01-552-4002	61796	5457-90201	•CAP,FUEL TANK	1
16	PAFZZA	5310-01-057-0822	45152	1768HX1	NUT,PLAIN,HEXAGON, 1/2-13	5
17	PAFZZA	5310-01-133-2130	45152	355AX	WASHER,LOCK,1/2	5
18	PAFZZA	5310-00-809-4061	96906	MS27183-15	WASHER,FLAT	3
19	PAFZZA	5305-00-964-0589	96906	MS51095-416	SCREW, 1/2-13 X 2	1
20	PAFZZA	5306-00-069-5427	80205	MS35751-139	BOLT,SQUARE NECK, 1/2-13 X 5	1
21	PFFZZA		61796	1932-255	BRACKET	1

END OF FIGURE

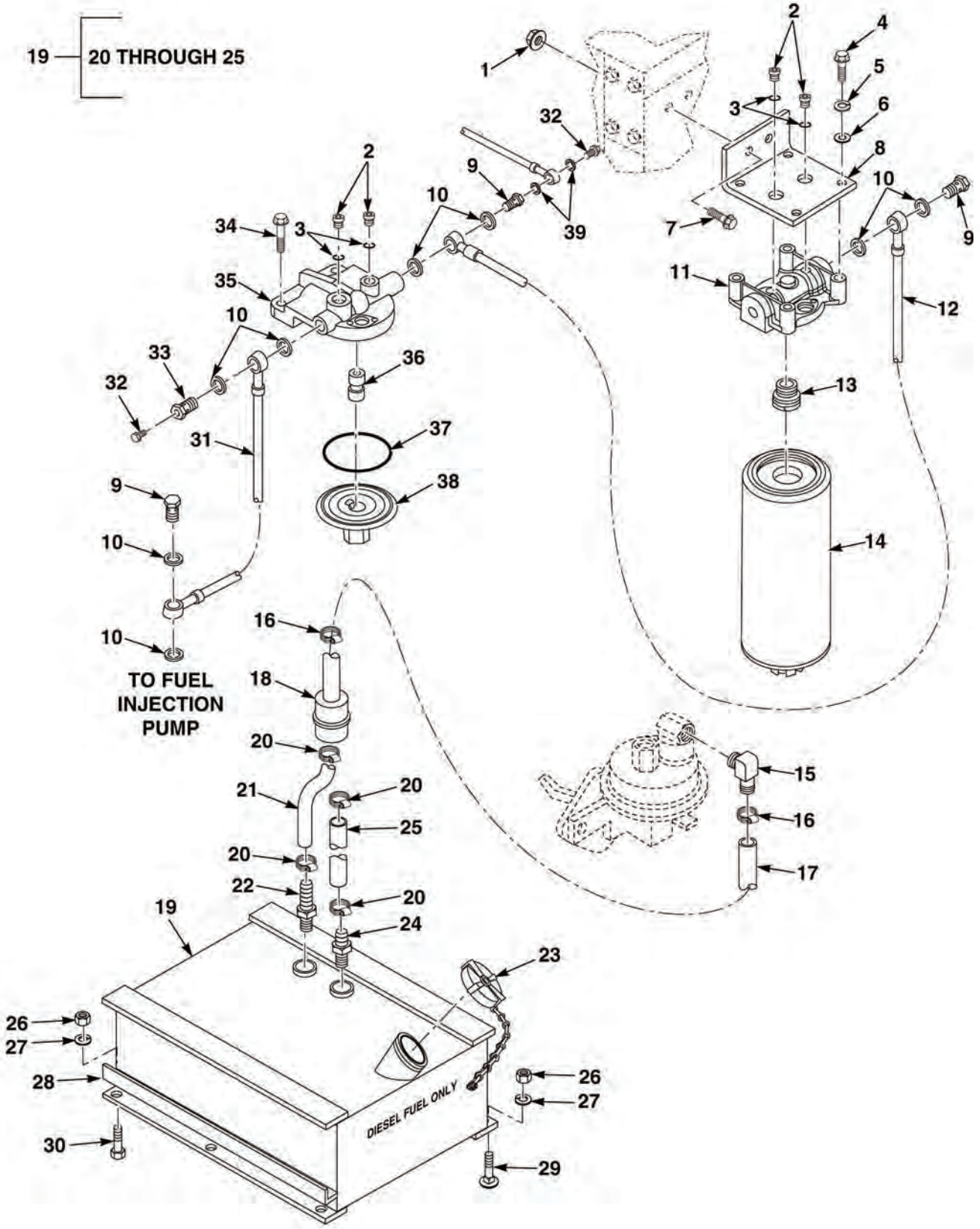

FIG. 25 FLUID FULTER (USED ON S/N 8RDCD301620HC AND SUBSEQUENT)

(1) ITEM NO	(2) SMR CODE	(3) NSN	(4) CAGEC	(5) PART NUMBER	(6) DESCRIPTION	(7) QTY
					FIG. 25 FLUID FILTER (USED ON S/N 8RDCD301620HC AND SUBSEQUENT)	
1	PAFZZA	5310-01-280-6538	78422	5340910	NUT,SELF-LOCKING HEX, 5/16	2
2	PAFZZA	5365-01-454-5474	15434	3678923	PLUG,MACHINE THREAD	4
3	PAFZZA	5331-01-481-2514	15434	3678925	O-RING	
4	PAFZZA	5305-01-379-6073	15434	3920400	SCREW,CAP,HEXAGON HD, 5/16 X 3/4	4
5	PAFZZA	5310-00-184-9562	96906	MS35335-62	WASHER,LOCK, 5/16	4
6	PAFZZA	5310-00-081-4219	96906	MS27183-12	WASHER,FLAT, 5/16	4
7	PAFZZA	5305-01-340-0225	45152	1754210	SCREW,CAP,HEXAGON HD, 5/16-18 X 1 1/2	2
8	PAFZZA		15434	MBK03901	BRACKET	1
9	PAFZZA	5305-01-207-7243	15434	3903035	SCREW,BANJO CONNECT	3
10	PAFZZA	5310-01-195-1441	15434	3963983	WASHER	8
11	PAFZZA	2940-01-530-6814	15434	3969680	HEAD,FUEL FILTER	1
12	PAFZZA	4720-01-551-8390	0B8S3	3944458	HOSE ASSEMBLY	1
13	PAFZZA	4730-01-551-5081	15434	3966405	ADAPTER,FILTER HEAD	1
14	PAFZZA	2910-01-543-6435	15434	3966406	FILTER,FUEL	1
15	PAFZZA	4730-01-437-4215	6M148	3915488	ELBOW,HOSE	1
16	PAFZZA	4730-01-209-3354	72582	8929756	CLAMP,HOSE	2
17	MFFZZA	4720-01-551-2762	61796	5400-042-03000	HOSE ASSEMBLY	1
18	PAFZZA	4330-01-309-6189	33457	FF0507900	FILTER,FLUID	1
19	PAFFFA	2910-01-551-7233	61796	1932-206	FUEL TANK, 50 GAL	1
20	PAFZZA	4730-01-209-3354	72582	8929756	•CLAMP,HOSE.75-1.12	4
21	PAFZZA	4720-01-551-2762	61796	5400-042-03000	•HOSE ASSEMBLY, FUEL LINE	1
22	PAFZZA	4730-01-551-6626	61796	5401-043	•ADAPTER,STRAIGHT	1
23	PAFZZA	5430-01-552-4002	61796	5457-90201	•CAP,FUEL TANK	1
24	PAFZZA	4730-01-551-8917	0S1H5	5401-064	•ADAPTER,STRAIGHT	1
25	PAFZZA	4720-01-551-2462	61796	5400-061-00600	•HOSE,NONMETALLIC, FUEL LINE	1
26	PAFZZA	5310-01-057-0822	45152	1768HX1	NUT,PLAIN,HEXAGON, 1/2-13	6
27	PAFZZA	5310-01-133-2130	45152	355AX	WASHER,LOCK,1/2	6
28	PFFZZA		61796	1932-255	BRACKET	1
29	PAFZZA	5305-00-964-0589	96906	MS51095-416	SCREW,CAP,HEX HD	5
30	PAFZZA	5306-00-069-5427	80205	MS35751-139	BOLT,SQUARE NECK, 1/2-13 X 5	3
31	PAFZZA	4710-01-551-1217	15434	3969709	TUBE,FUEL SUPPLY	1
32	PAFZZA	5310-01-507-0906	15434	3939570	SCREW,CAPTIVE WASHER	2
33	PAFZZA	5305-01-272-1333	15434	3911446	SCREW, CAP, HEX HD	1
34	PAFZZA	5305-01-239-7202	15434	3900632	SCREW,CAP,HEXAGON HD, M8-1.25 X 35	2
35	PAFZZA	2910-01-537-0757	0B8S5	3967401	HEAD,FUEL FILTER	1
36	PAFZZA	4730-01-432-9904	15434	3925954	ADAPTER,FILTER	1
37	PAFZZA	5331-01-190-1837	15434	3903546	O-RING	1
38	PAFZZA	2910-01-552-6289	15434	3835487	COVER,FILTER HEAD	1
39	PAFZZA	5310-01-195-1441	15434	3935171	WASHER, SEALING	2

END OF FIGURE

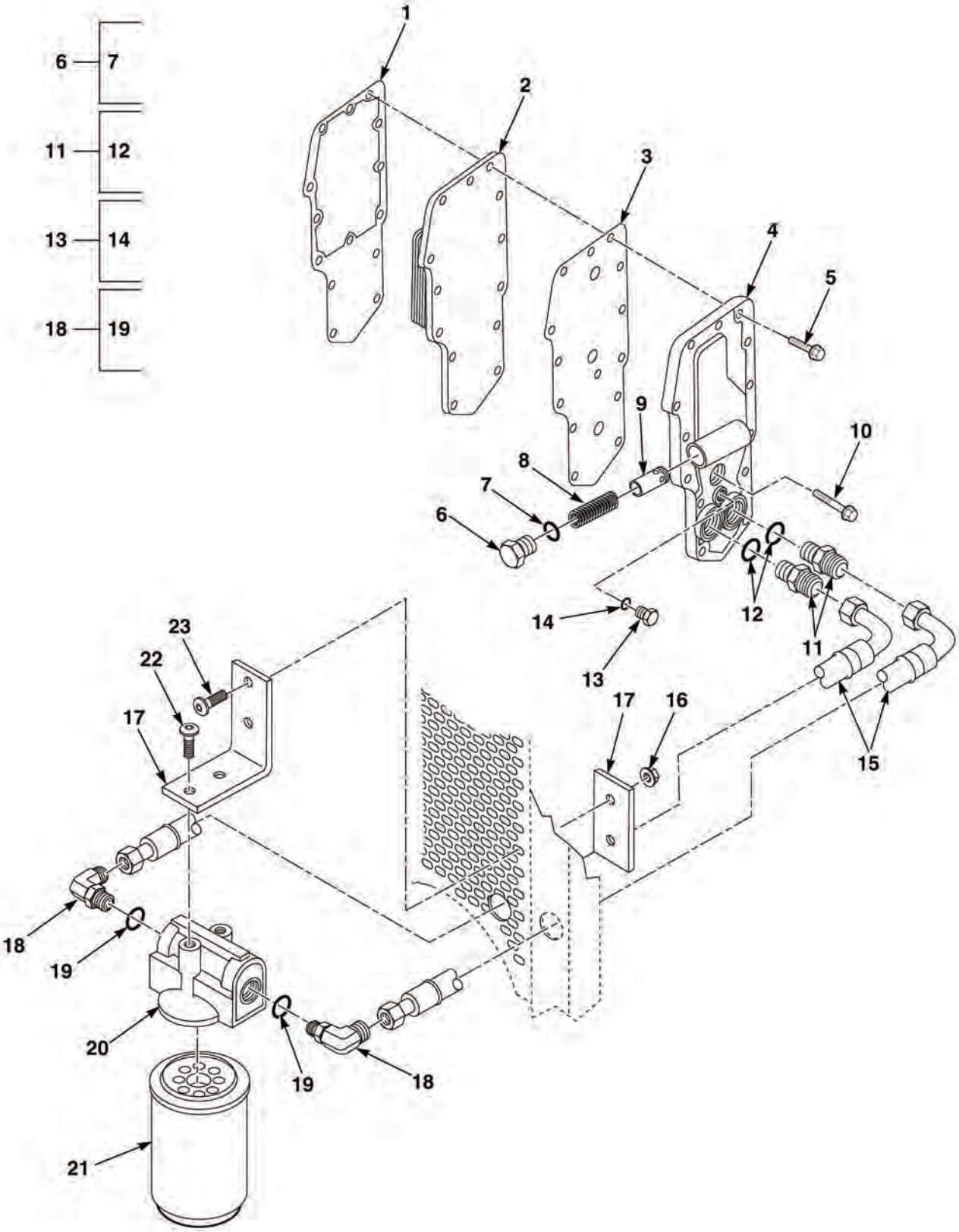

FIG. 26 OIL FILTER

(1) ITEM NO	(2) SMR CODE	(3) NSN	(4) CAGEC	(5) PART NUMBER	(6) DESCRIPTION	(7) QTY
					FIG. 26 OIL FILTER	
1	PAFZZA	5330-01-453-7147	15434	3929791	GASKET	1
2	PAFZZA	2930-01-196-3475	15434	3957543	CORE,COOLER	1
3	PAFZZA	5330-01-356-9972	15434	3929792	GASKET,FILTER HEAD	1
4	PAFZZA	2815-01-502-2686	0B8S3	3284170	COVER,OIL COOLER	1
5	PAFZZA	5305-01-239-7202	15434	3900632	SCREW,CAP,HEXAGON HD, M8-1.25 X 35	13
6	PAFZZA	5365-01-502-2681	0B8S3	3284164	PLUG,THREADED	1
7	PAFZZA	5331-01-453-7141	15434	3929457	•O-RING	1
8	PAFZZA	5360-01-207-7341	15434	3918427	SPRING,HELICAL,COMPRESSION	1
9	PAFZZA	2815-01-194-4321	15434	391842800	PLUNGER,PRESSURE	1
10	PAFZZA	5305-01-271-5850	15434	3901445	SCREW,HEX,FLANGE HD, M13 X 1.25 X 45	1
11	PAFZZA	4730-01-096-9138	96906	MS39324-12-10	ADAPTER,STRAIGHT,TUBE TO BOSS	2
12	PAFZZA	5330-01-292-6138	53424	2-016	•PACKING,PREFORMED	2
13	PAFZZA	5365-01-475-3484	15434	3919686	PLUG,MACHINE	1
14	PAFZZA	5331-01-331-9293	15434	3037236	•O-RING	1
15	PAFZZA	4720-01-552-5816	0S1H5	12GMV-12FJX-12FJX90-37	HOSE,HYDRAULIC	2
16	PAFZZA	5310-00-891-1709	96906	MS35691-9	NUT,PLAIN,HEXAGON, 5/16-18	2
17	PAFZZA		15434	MBK03901	BRACKET	2
18	PAFZZA	4730-01-394-8793	30780	G39066-018Y	CONNECTOR,MULTIPLE, FLUID PRESSURE LINE	2
19	PAFZZA	5330-01-292-6138	53424	2-016	•PACKING,PREFORMED	2
20	PAFZZA	2940-01-387-6665	15434	3923357	HEAD,FLUID FILTER	1
21	PAFZZA	2940-01-508-0515	0B8S3	3934429	ELEMENT,FILTER	1
22	PAFZZA	5305-01-551-7318	39428	91306A379	SCREW,CAP,SOCKET HD, 1/4-20 X 3/4	2
23	PAFZZA	5305-01-551-1170	39428	91306A391	SCREW,CAP,SOCKET HD, 5/16-18 X 1	2

END OF FIGURE

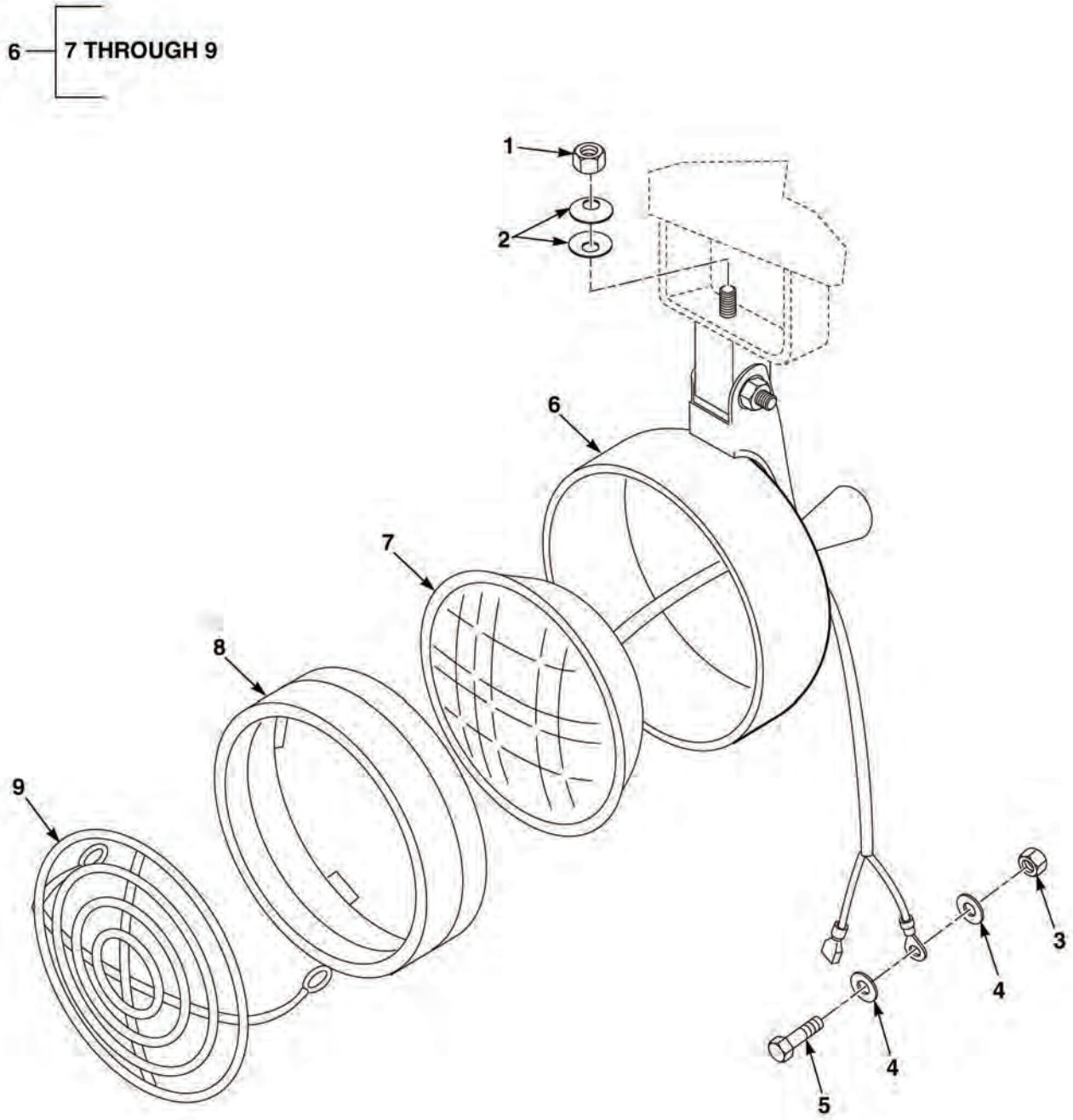

FIG. 27 WORKLIGHT

(1) ITEM NO	(2) SMR CODE	(3) NSN	(4) CAGEC	(5) PART NUMBER	(6) DESCRIPTION	(7) QTY
					FIG. 27 WORKLIGHT	
1	PAFZZA	5310-01-478-8691	45152	1419270	NUT,SELF-LOCKING HEX, 5/16-18	1
2	PAFZZA	5310-00-999-0424	45152	5159714	WASHER,FLAT,5/16	2
3	PAFZZA	5310-00-274-4546	24975	3249	WASHER,FLAT,1/4	4
4	PAFZZA	5310-01-058-3183	45152	767HX1	NUT,PLAIN,HEXAGON, 1/4-20	2
5	PAFZZA	5305-01-346-3692	45152	1764650	SCREW,CAP,HEXAGON HD, 1/4-20 X 1-1/4	2
6	PAFZZA	6230-01-551-1128	61796	1932-690	WORKLIGHT ASSEMBLY, WIRED	2
7	PAFZZA	6240-00-836-2079	08108	4411	•LAMP,INCANDESCENT	1
8	XAFZZA		78442	4207790	•MOUNT,SHOCK	1
9	XAFZZA		78442	5209900	•GUARD	1

END OF FIGURE

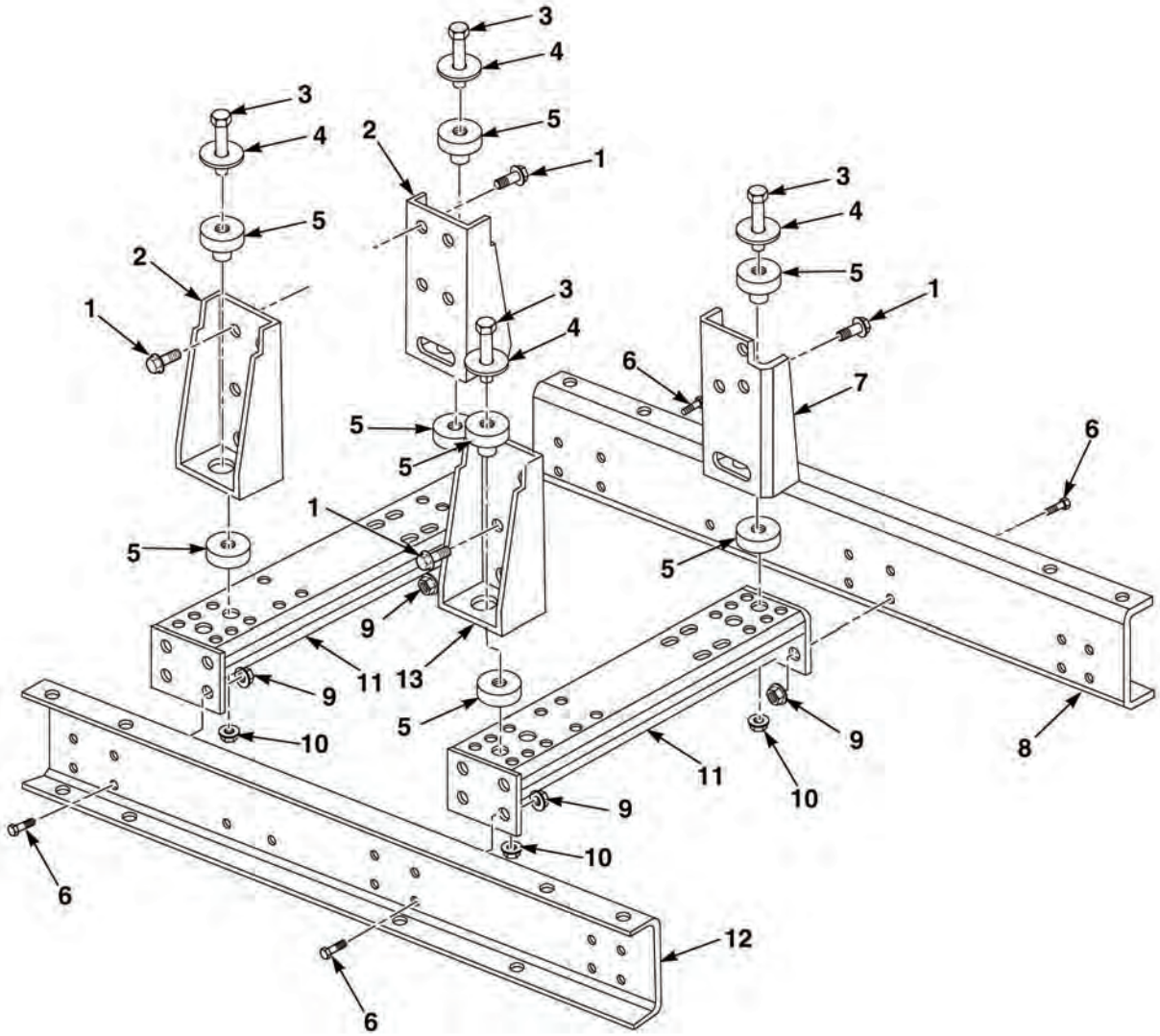

FIG. 28 ENGINE MOUNTING (USED ON S/N 8RDCD301513HC THRU 8RDCD301619HC)

(1) ITEM NO	(2) SMR CODE	(3) NSN	(4) CAGEC	(5) PART NUMBER	(6) DESCRIPTION	(7) QTY
					FIG. 28 ENGINE MOUNTING (USED ON S/N 8RDCD301513HC THRU 8RDCD301619HC)	
1	PAFZZA	5306-01-547-2941	15434	8100023	BOLT, M12-1.75 X 30MM	12
2	PAFZZA		15434	70000080	REAR ENGINE MOUNT	4
3	PAFZZA	5305-00-726-2555	80204	B1821BH063F300N	SCREW,CAP, HEX HD, 5/8-18 X 3	4
4	PAFZZA	5310-01-547-5449	15434	11000038	CINCH WASHER	4
5	PAFZZA	5310-01-545-8592	8A334	3905185	WASHER,FLAT	4
6	PAFZZA	5305-00-269-3211	80205	MS90725-60	SCREW,CAP,HEXAGON HD, 3/8-16 X 1	16
7	PAFZZA		15434	70003080	FRONT ENGINE MOUNT, LH	2
8	PAFZZA		15434	70008730	BASE RAIL,LH	1
9	PAFZZA	5310-00-935-9021	96906	MS51943-35	NUT,LOCK, 3/8-16	16
10	PAFZZA	5310-00-241-6664	96906	M45913/3-10FG8C	NUT,SELF-LOCKING HEX, 5/8-18	4
11	PAFZZA		15434	70004130	CROSSMEMBER	2
12	PAFZZA		15434	70008720	BASE RAIL-R.H.	1
13	PAFZZA		15434	70003090	FRONT ENGINE MOUNT RH	1

END OF FIGURE

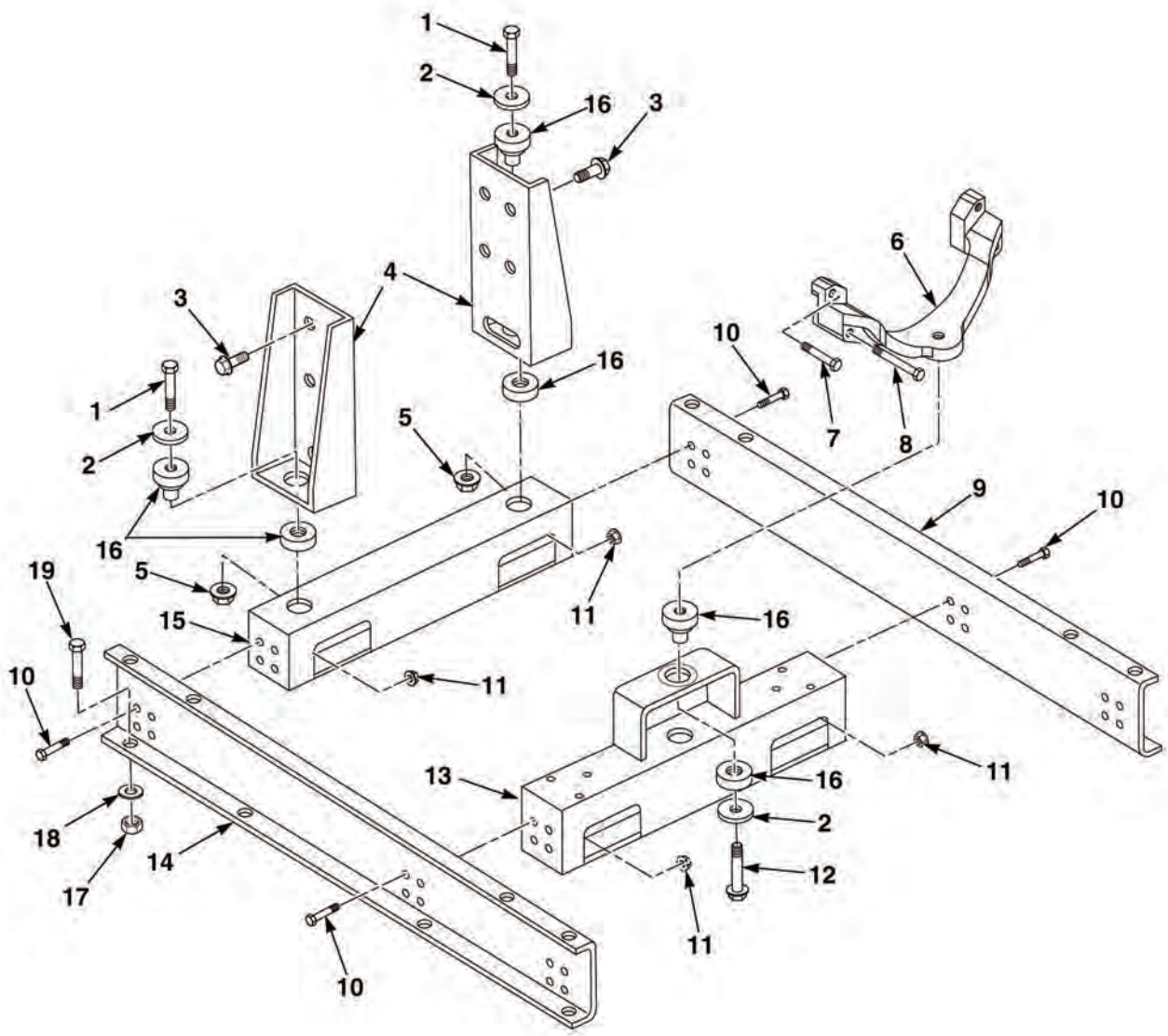

FIG. 29 ENGINE MOUNTING (USED ON S/N 8RDCD301620HC AND SUBSEQUENT)

(1) ITEM NO	(2) SMR CODE	(3) NSN	(4) CAGEC	(5) PART NUMBER	(6) DESCRIPTION	(7) QTY
					FIG. 29 ENGINE MOUNTING (USED ON S/N 8RDCD301620HC AND SUBSEQUENT)	
1	PAFZZA	5305-00-726-2555	80204	B1821BH063F300N	SCREW,CAP, HEX HD, 5/8-18 X 3	2
2	PAFZZA	5310-01-547-5449	15434	11000038	CINCH WASHER	2
3	PAFZZA	5306-01-547-2941	15434	8100023	BOLT, M12-1.75 X 30MM	2
4	PBFZZA		15434	70000080	REAR ENGINE MOUNT	2
5	PAFZZA	5310-00-225-6408	81349	M45913/1-10FG5C	NUT,SELF-LOCKING,HEX, 5/8-18	2
6	PAFZZA		15434	3943638	SUPPORT,FRONT ENGINE	1
7	PAFZZA	5305-01-551-9816	39428	93635A538	SCREW,CAP,HEXAGON HD, M12 X 1.75 X 60	2
8	PAFZZA	5305-01-551-8089	39428	95327A501	SCREW,CAP,HEXAGON HD, M12 X 1.75 X 70	2
9	PAFZZA		15434	70021320	RAIL,BASE,LH	1
10	PAFZZA	5305-01-487-2265	45152	1333170	SCREW,CAP HEXAGON HD, 3/8-16 X 1	16
11	PAFZZA	5310-01-288-1116	45152	1437220	NUT,SELF-LOCKING HEX, 3/8-16	16
12	PAFZZA		15434	80000345	BOLT,HEXAGON HD, M16-2.0 X 73MM	1
13	PAFZZA		15434	70014410	CROSSMEMBER ASSY, FRONT	1
14	PAFZZA		15434	70021310	RAIL,BASE,RH	1
15	PBFZZA		15434	70004130	CROSSMEMBER	1
16	PAFZZA	5310-01-545-8592	8A334	11000037	WASHER,FLAT	3
17	PAFZZA	5310-01-057-0822	45152	1768HX1	NUT,PLAIN,HEXAGON, 1/2-13	8
18	PAFZZA	5310-01-133-2130	45152	355AX	WASHER,LOCK,1/2	8
19	PAFZZA	5305-01-483-1144	45152	463B01	SCREW,CAP,HEXAGON HD, 1/2-13 X 1-1/2	8

END OF FIGURE

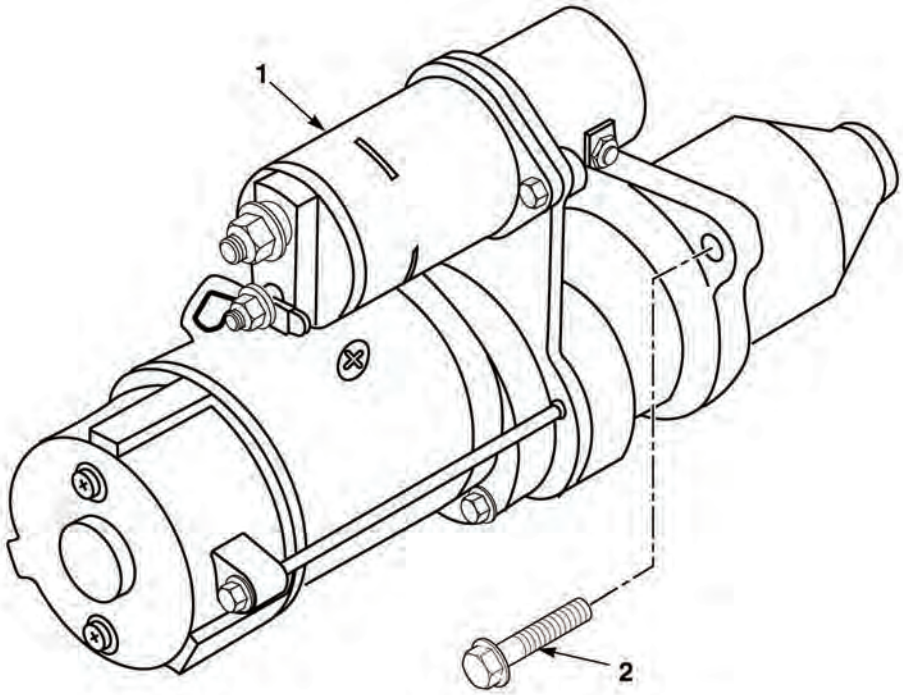

FIG. 30 STARTER (USED ON S/N 8RDCD301513HC THRU 8RDCD301619HC)

(1) ITEM NO	(2) SMR CODE	(3) NSN	(4) CAGEC	(5) PART NUMBER	(6) DESCRIPTION	(7) QTY
					FIG. 30 STARTER (USED ON S/N 8RDCD301513HC THRU 8RDCD301619HC)	
1	PAFZZA	2920-01-297-5198	15434	3916854	STARTER ENGINE,ELECTRICAL	1
2	PAFZZA	5306-01-240-1783	15434	3903834	BOLT,MACHINE, 12PT.10X1.5X35MM	2

END OF FIGURE

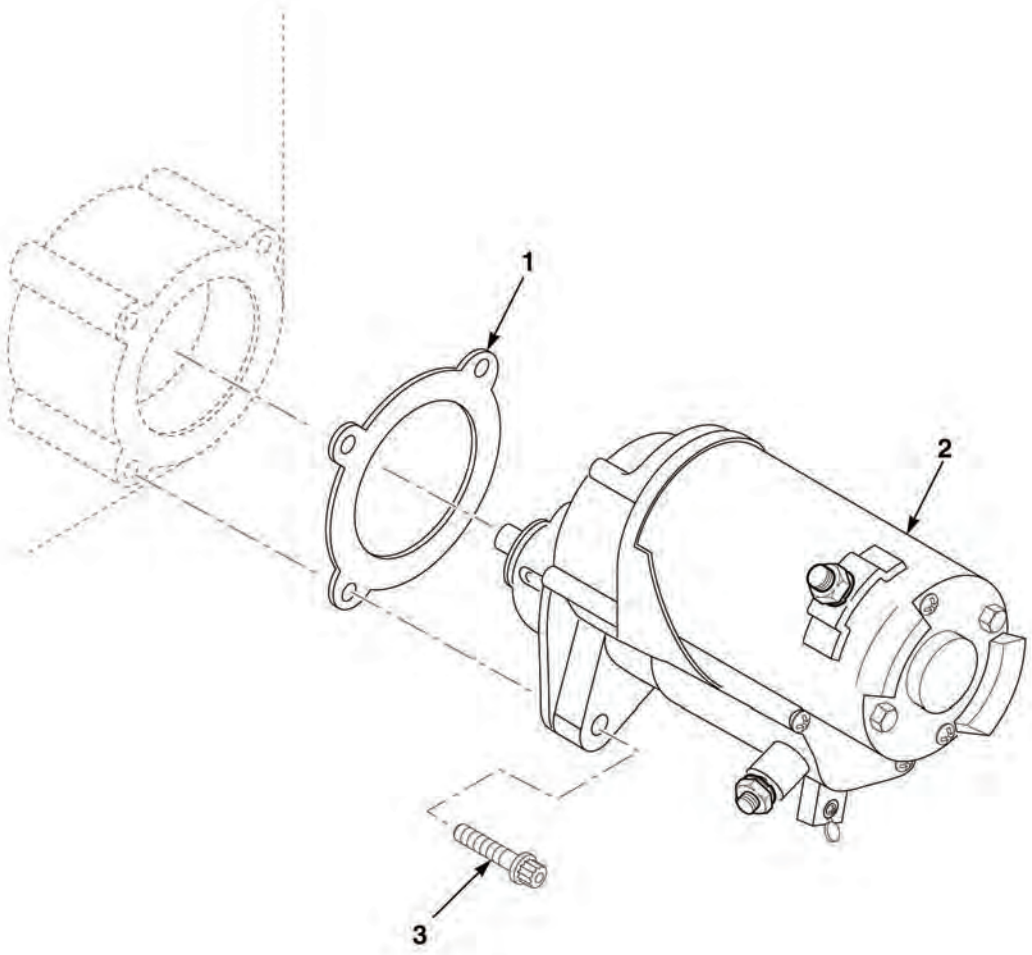

FIG. 31 STARTER (USED ON S/N 8RDCD301620HC AND SUBSEQUENT)

(1) ITEM NO	(2) SMR CODE	(3) NSN	(4) CAGEC	(5) PART NUMBER	(6) DESCRIPTION	(7) QTY
					FIG. 31 STARTER (USED ON S/N 8RDCD301620HC AND SUBSEQUENT)	
1	PAFZZA	5365-01-552-0528	15434	3965057	SPACER,STARTER MOTOR	1
2	PAFZZA	2920-01-407-4857	0E5W9	228000-6641	STARTER,ENGINE ELECTRICAL	1
3	PAFZZA	5305-01-547-2501	15434	3968470	SCREW,TWELVE POINT, M10 X 1.50 X 35	2

END OF FIGURE

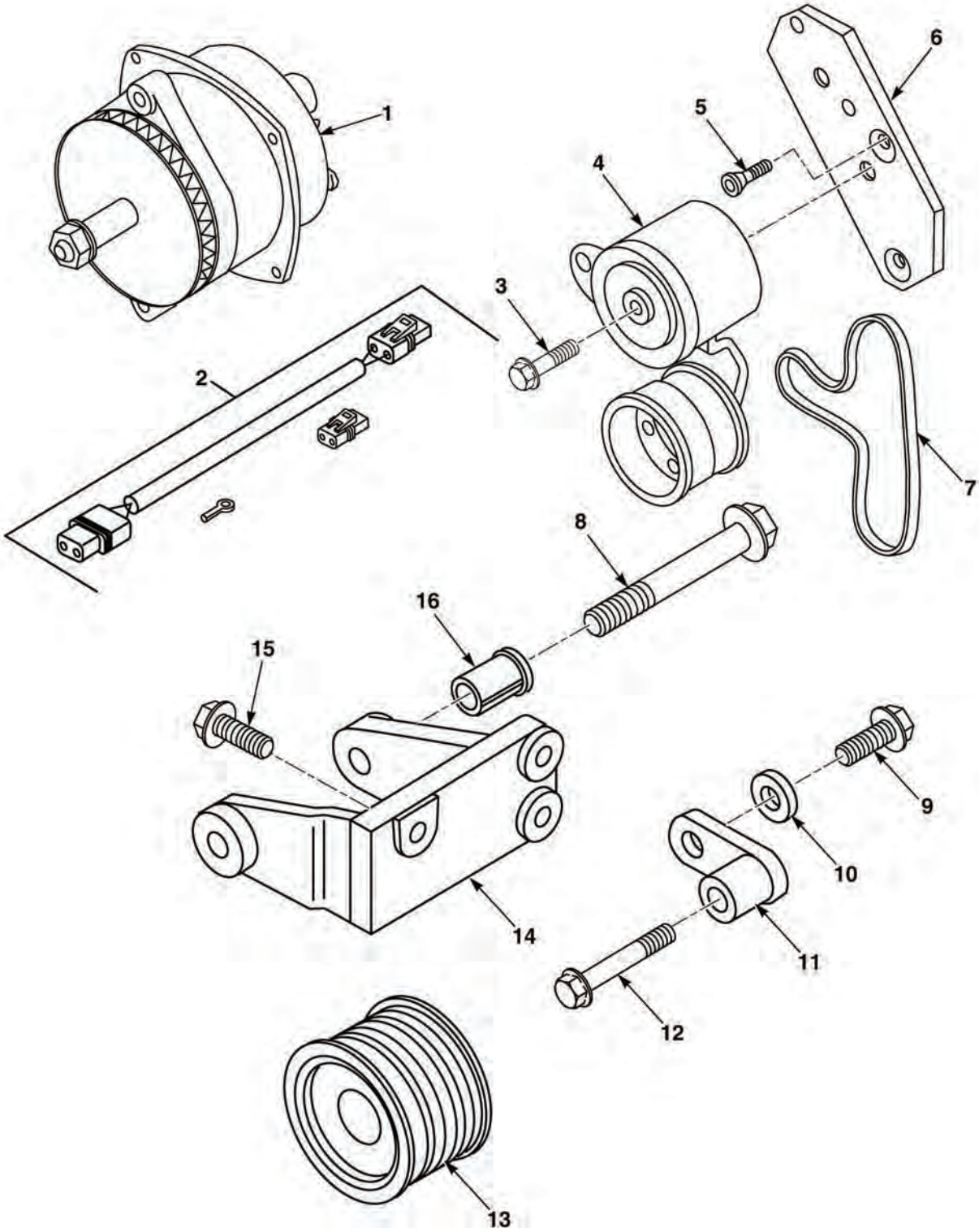

FIG. 32 ALTERNATOR (USED ON S/N 8RDCD301513HC THRU 8RDCD301619HC)

(1) ITEM NO	(2) SMR CODE	(3) NSN	(4) CAGEC	(5) PART NUMBER	(6) DESCRIPTION	(7) QTY
					FIG. 32 ALTERNATOR (USED ON S/N 8RDCD301513HC THRU 8RDCD301619HC)	
1	PAFZZA		15434	3934777	ALTERNATOR	1
2	PAFZZA		15434	3934808	WIRE HARNESS ASSY	1
3	PAFZZA	5305-01-271-6448	15434	3081346	SCREW,CAP,HEXAGON HD	1
4	PAFZZA	3020-01-341-2477	15434	3937553	PULLEY,FLAT	1
5	PAFZZA	5305-01-406-9457	15434	3925186	SCREW,MACHINE	2
6	PAFZZA	5340-01-432-7351	15434	3919736	BRACKET,BELT TENSIONER	1
7	PAFZZA	3030-01-242-2918	15434	391156000	BELT,V	2
8	PAOZZA	5306-01-284-2991	56161	10503951	BOLT,MACHINE, M10X1.50X95	1
9	PAFZZA	5305-01-191-2409	15434	3902460	SCREW,HEX FLANGED, M10 X 1.50 X 25	1
10	PAFZZA		15434	3934501	SPACER,MOUNTING	1
11	PAFZZA		15434	3934518	BRACE,ALTERNATOR	1
12	PAFZZA	5305-01-271-5850	15434	3901445	SCREW,HEX,FLANGE HD, M13 X 1.25 X 45	1
13	PAFZZA	3020-01-281-6003	15434	391827500	PULLEY,GROOVE	1
14	PAFZZA		15434	3934548	SUPPORT,ALTERNATOR	1
15	PAFZZA	5305-01-193-4506	15434	3900631	SCREW,CAP,HEXAGON HD, M8X1.25X25	3
16	PAFZZA	5365-01-284-9543	15434	3910715	SPACER,SLEEVE	1

END OF FIGURE

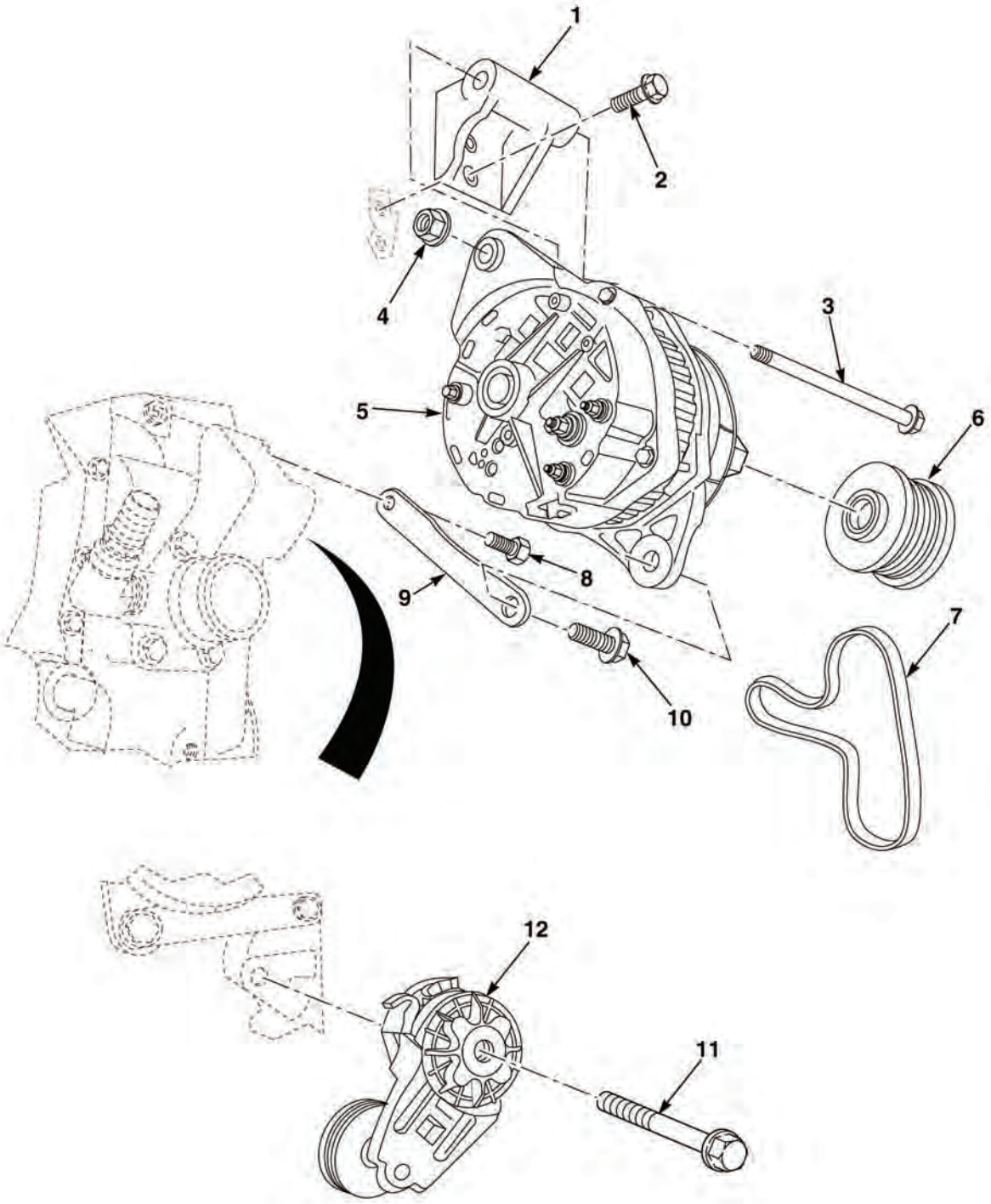

FIG. 33 ALTERNATOR (USED ON S/N 8RDCD301620HC AND SUBSEQUENT)

(1) ITEM NO	(2) SMR CODE	(3) NSN	(4) CAGEC	(5) PART NUMBER	(6) DESCRIPTION	(7) QTY
					FIG. 33 ALTERNATOR (USED ON S/N 8RDCD301620HC AND SUBSEQUENT)	
1	PAFZZA	5340-01-508-3773	15434	3921737	BRACKET,MOUNTING	1
2	PAFZZA	5305-01-193-4506	15434	3900631	SCREW,CAP,HEXAGON HD, M8X1.25X25	2
3	PAFZZA	5305-01-237-9894	15434	3903105	SCREW,CAP,HEXAGON HD, M12 X 1.75 X 150	1
4	PAFZZA	5310-01-293-2893	10988	J903210	NUT,PLAIN,EXTENDED WASHER, M12 X 1.75	1
5	PAFZZA	2920-01-544-5270	15434	3935530	ALTERNATOR	1
6	PAFZZA	3020-01-508-4951	0B8S3	3925852	PULLEY,TIMING BELT	1
7	PAFZZA	3030-01-539-5803	15434	3289113	BELT	1
8	PAFZZA	5305-00-071-2066	80204	B1821BH050C100N	SCREW,CAP,HEXAGON HD, 1/2 - 13 X 1	1
9	PAFZZA	2920-01-508-3974	0B8S3	3939905	ARM,ADJUSTING,BELT TENSION	1
10	PAFZZA	5305-01-191-2409	15434	3902460	SCREW,HEX, FLANGED, M10 X 1.50 X 25	1
11	PAFZZA	5305-01-425-3446	15434	3282081	SCREW,CAP,HEXAGON HD, M10 X 1.50 X 75	1
12	PAFZZA	3950-01-503-4617	15434	3936213	TENSIONER PULLEY ASSEMBLY	1

END OF FIGURE

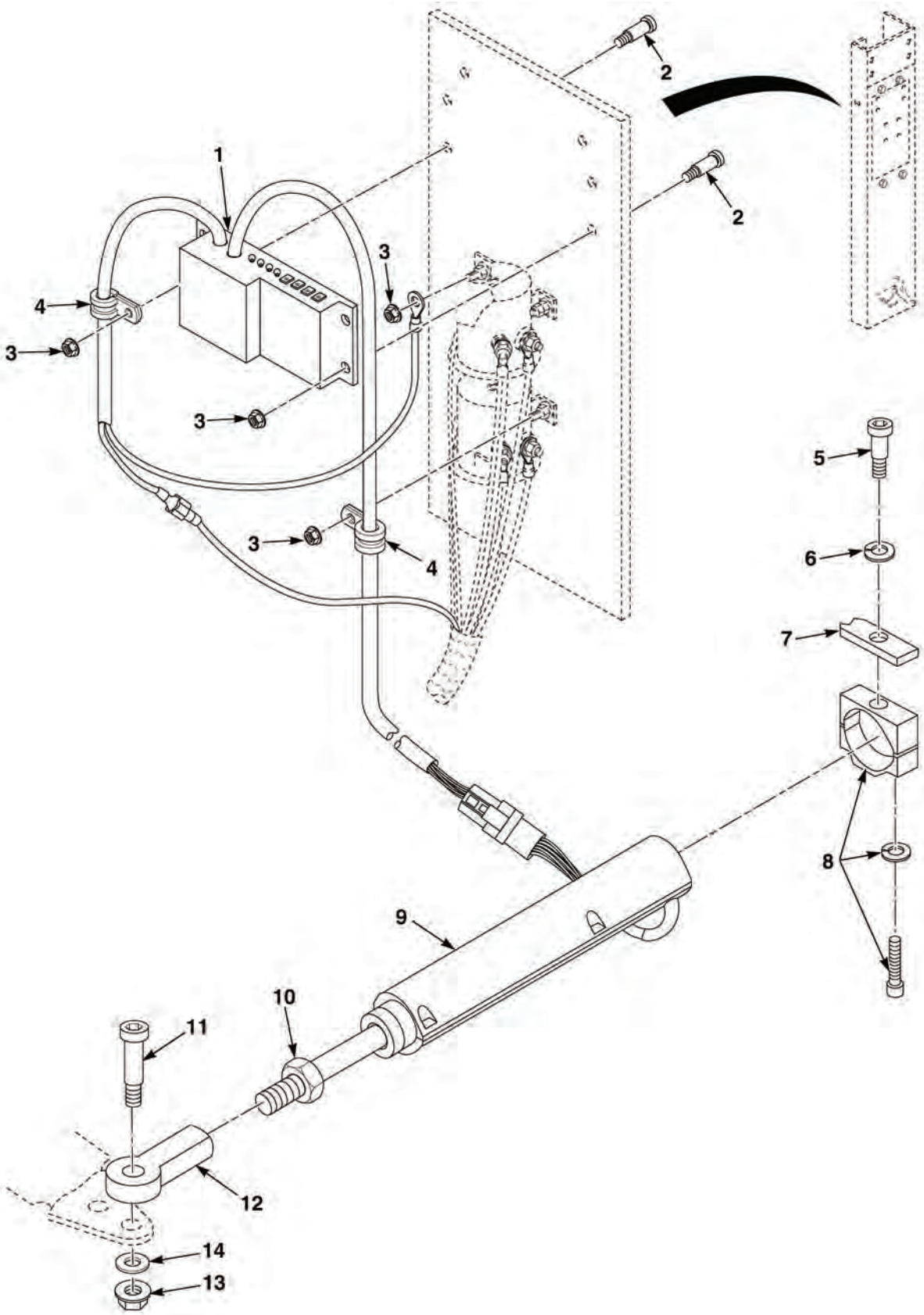

FIG. 34 THROTTLE CONTROL

(1) ITEM NO	(2) SMR CODE	(3) NSN	(4) CAGEC	(5) PART NUMBER	(6) DESCRIPTION	(7) QTY
					FIG. 34 THROTTLE CONTROL	
1	PAFZZA	2590-01-551-2330	66173	001-4621	CONTROLLER-ERC ELECTRICAL	1
2	PAFZZA	5305-01-335-9277	39428	91255A540	SCREW,CAP,SOCKET HD, 1/4-20 X 3/4	4
3	PAFZZA	5310-01-346-9445	45152	1600460	NUT,SELF-LOCKING,HEX, CLINCH, 1/4-20	6
4	PAFZZA	5340-01-479-9054	45152	2290HX	CLAMP,LOOP	2
5	PAFZZA	5305-01-551-3422	39428	94035A403	SCREW,CAP,SOCKET HD, 5/16-18 X 1	1
6	PAFZZA	5310-01-068-8446	45152	354AX	WASHER,LOCK, 5/16	1
7	PAFZZA	5340-01-551-1257	15434	MTB02201	BRACKET,THROTTLE	1
8	PAFZZA	4730-01-551-2437	66173	001-2409	CLAMP KIT	1
9	PAFZZA	3010-01-551-8035	66173	001-4619	THROTTLE ACTUATOR W/ CONNECTOR	1
10	PAFZZA	5310-01-105-7229	45152	369AX1	NUT,PLAIN,HEXAGON, 5/16-18	1
11	PAFZZA	5305-01-552-5149	39428	94035A404	SCREW,SOCKET,SHOULDER, 5/16 X 18 X 5/8	1
12	PAFZZA		66173	001-1698	ROD END	1
13	PAFZZA	5310-01-340-5671	45152	1333510	NUT,SELF-LOCKING, HEX	1
14	PAFZZA	5310-00-999-0424	45152	5159714	WASHER,FLAT,5/16	1

END OF FIGURE

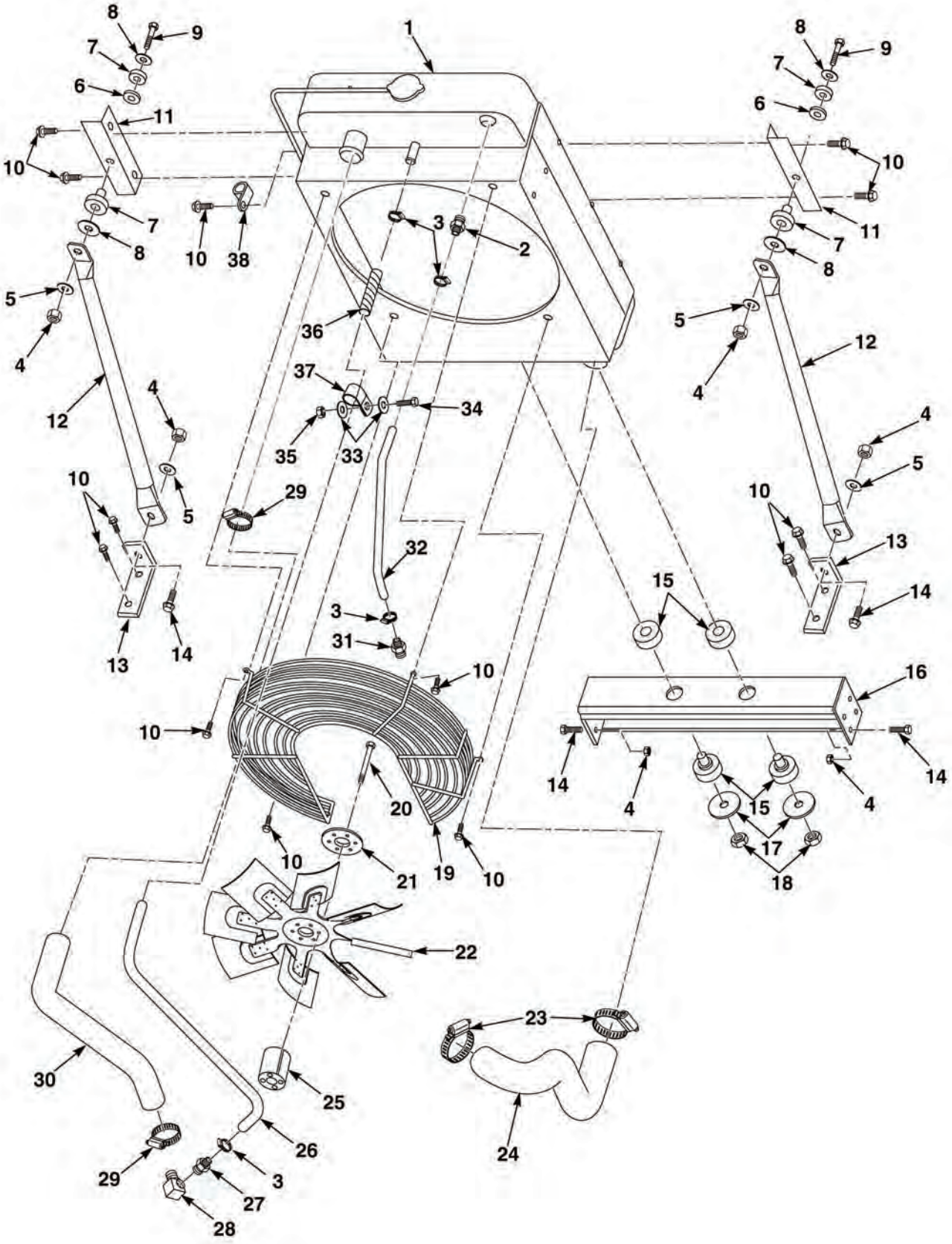

FIG. 35 COOLING SYSTEM (USED ON S/N 8RDCD301513HC THRU 8RDCD301619HC)

(1) ITEM NO	(2) SMR CODE	(3) NSN	(4) CAGEC	(5) PART NUMBER	(6) DESCRIPTION	(7) QTY
					FIG. 35 COOLING SYSTEM (USED ON S/N 8RDCD301513HC THRU 8RDCD301619HC)	
1	PBFZZA		15434	10000167	RADIATOR ASSEMBLY	1
2	PAFZZA	4730-01-547-1834	15434	33910142	HOSE BARB	1
3	PAFZZA	4730-01-398-8329	7Z588	CT-9410	CLAMP,HOSE	4
4	PAFZZA	5310-00-935-9021	96906	MS51943-35	NUT,LOCK, 3/8-16	12
5	PAFZZA	5310-00-773-7618	80205	MS15795-814	WASHER,FLAT, 3/8	4
6	PAFZZA		15434	70003320	SPACER WASHER	2
7	PAFZZA	5340-01-547-3027	15434	11000182	ISOLATOR	2
8	PAFZZA	5310-01-551-1229	15434	70003210	CINCH WASHER	4
9	PAFZZA	5305-00-543-2866	80204	B1821BH038C250N	SCREW,CAP, HEX HD, 3/8-16 X 2-1/2	2
10	PAFZZA	5305-01-090-3012	96906	MS51851-106	SCREW,TAPPING, 5/16-18 X 3/4	13
11	PAFZZA		15434	70004210	STRUT PLATE	2
12	PAFZZA		15434	70004230	STRUT	2
13	PAFZZA		15434	70004540	STRUT PLATE	2
14	PAFZZA	5306-01-056-2942	80205	MS90725-34	SCREW,CAP,HEX HD, 5/16-18 X 1	10
15	PAFZZA	5310-01-545-8592	15434	11000037	ISOLATOR	2
16	PAFZZA	2510-01-547-3791	15434	70004200	RADIATOR MOUNT	1
17	PAFZZA	5310-01-547-5449	15434	11000038	CINCH WASHER	2
18	PAFZZA	5310-00-061-4651	96906	M45913/3-10CG8C	NUT,SELF-LOCKING HEX, 5/8-11	2
19	PBFZZA	6105-01-548-3158	15434	11000022	FAN, FINGER GUARD	1
20	PAFZZA		15434	80000006	BOLT,FLANGE,HEX HD	1
21	PAFZZA		15434	33915490	CLAMP PLATE, FAN	1
22	PAFZZA	4140-01-546-8849	15434	33912751	FAN, SUCKER, 20 IN.	4
23	PAFZZA	4730-01-207-5985	7Z588	CT 300 L B	CLAMP,HOSE	2
24	PAFZZA		15434	50000042	LOWER RADIATOR HOSE	1
25	PAFZZA		15434	6100986	FAN SPACER	1
26	PAFZZA	4720-00-682-7920	01276	FC318-12	HOSE,NONMETALLIC, 36 IN.	1
27	PAFZZA	4730-01-547-1830	15434	80000011	HOSE BARB	1
28	PAFZZA		15434	1100143	ELBOW,45 DEG	1
29	PAFZZA	4730-01-329-9151	19207	12414507-006	CLAMP,HOSE	2
30	PAFZZA	4720-01-547-2834	15434	50000040	TOP RADIATOR HOSE	1
31	PAFZZA	4730-01-551-9382	15434	50000079	HOSE BARB	1
32	PAFZZA	4720-01-255-6187	61424	GPH-6	HOSE,NONMETALLIC, 24 IN.	1
33	PAFZZA	5310-00-625-5756	80205	MS15795-812	WASHER,FLAT	2
34	PAFZZA	5306-00-226-4827	80204	B1821BH031C100N	SCREW,CAP, HEX HD, 5/16-18 X 1	1
35	PAFZZA	5310-00-814-0673	81349	M45913/3-5CG8C	NUT,LOCK, 5/18-18	1
36	PAFZZA	9330-01-548-4037	15434	11000125	PLASTIC COIL SLEEVE	1
37	PAFZZA		15434	33107460	P-CLAMP,1 INCH	1
38	PAFZZA		15434	8100310	P CLAMP	1

END OF FIGURE

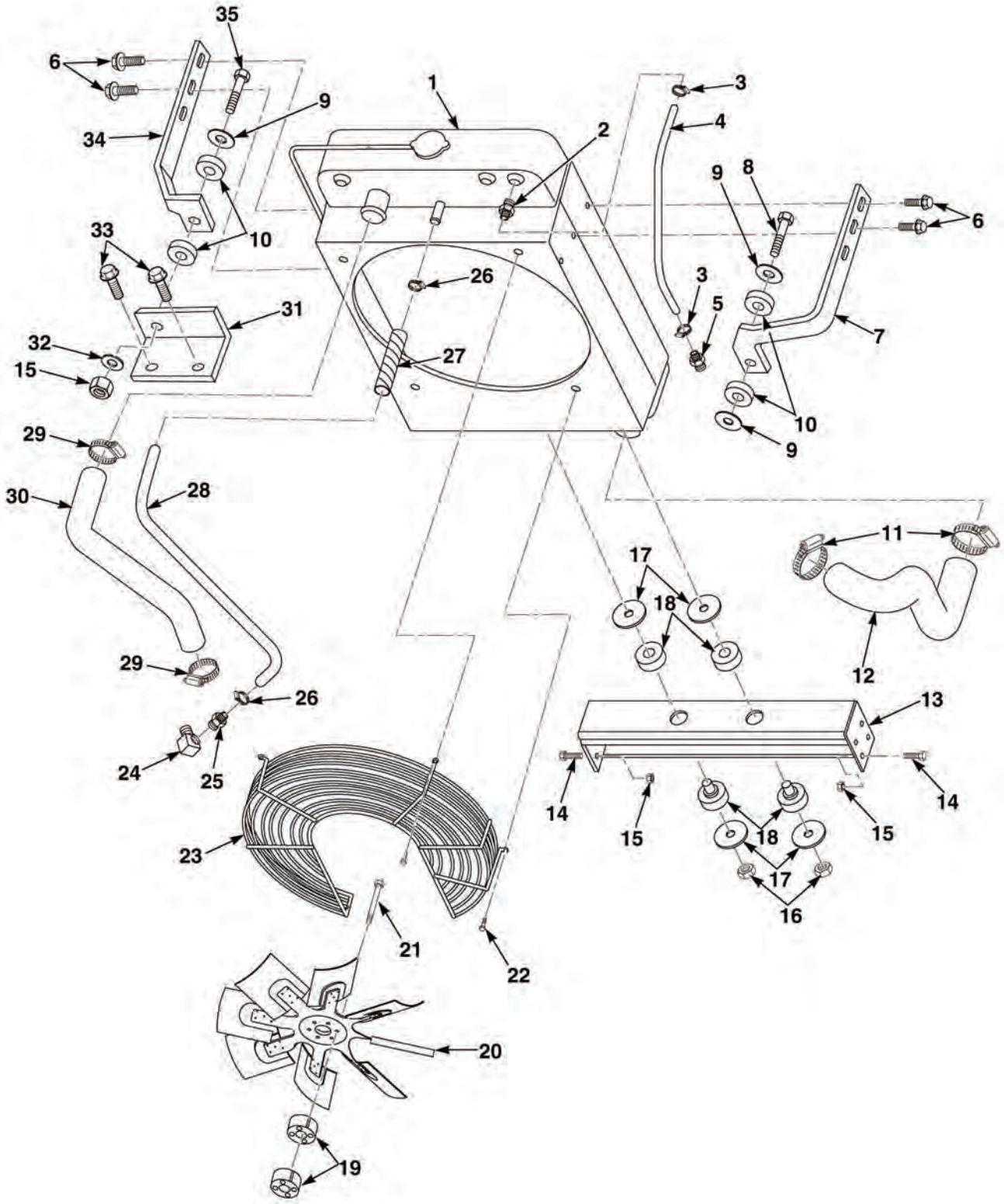

FIG. 36 COOLING SYSTEM (USED ON S/N 8RDCD301620HC AND SUBSEQUENT)

(1) ITEM NO	(2) SMR CODE	(3) NSN	(4) CAGEC	(5) PART NUMBER	(6) DESCRIPTION	(7) QTY
					FIG. 36 COOLING SYSTEM (USED ON S/N 8RDCD301620HC AND SUBSEQUENT)	
1	PBFZZA		15434	10000167	RADIATOR/SHROUD ASSEMBLY	1
2	PAFZZA	4730-01-547-1834	15434	33910142	HOSE BARB	1
3	PAFZZA	4730-01-398-8329	7Z588	CT-9410	CLAMP,HOSE	2
4	PAFZZA	4720-01-551-7970	15434	50000499-19-5	HOSE,NONMETALLIC, 19-1/2 IN.	1
5	PAFZZA	4730-01-551-9382	15434	50000079	HOSE BARB	1
6	PAFZZA	5305-01-344-5532	45152	1846HX1	SCREW,CAP,HEXAGON HD, 5/16-18 X 1	4
7	PAFZZA	5340-01-551-7972	15434	70018140	BRACKET	1
8	PAFZZA	5306-01-551-5157	15434	80000184	BOLT, M8-1.25 X 60MM	1
9	PAFZZA	5310-01-551-1229	15434	70003210	CINCH WASHER	3
10	PAFZZA	5340-01-547-3027	15434	11000182	ISOLATOR	2
11	PAFZZA	4730-01-551-7973	15434	8100270	CLAMP,HOSE	2
12	PAFZZA	4720-01-551-1615	15434	50000629	TUBE,FORMED	1
13	PBFZZA	2510-01-547-3791	15434	70004200	RADIATOR MOUNT	1
14	PAFZZA	5305-01-487-2265	45152	1333170	SCREW,CAP HEXAGON HD, 3/8-16 X 1	8
15	PAFZZA	5310-01-288-1116	45152	1437220	NUT,SELF-LOCKING HEX, 3/8-16	9
16	PAFZZA	5310-01-061-5678	45152	60861A	NUT,SELF-LOCKING HEX, 5/8-11	2
17	PAFZZA	5310-01-547-5449	15434	11000038	CINCH WASHER	4
18	PAFZZA	5310-01-545-8592	8A334	11000037	WASHER,FLAT	2
19	PAFZZA	5365-01-551-1865	15434	33910129	SPACER,FAN	2
20	PAFZZA	4140-01-546-8849	15434	33912751	FAN,SUCKER, 20 IN.	1
21	PAFZZA	5306-01-551-1857	15434	80000124	BOLT, M10-1.5 X 100	4
22	PAFZZA	5305-01-344-5532	45152	1846HX1	SCREW,CAP,HEXAGON HD, 5/16-18 X 1	4
23	PBFZZA	6105-01-548-3158	15434	11000022	FAN, FINGER GUARD	1
24	PAFZZA	4730-01-551-1699	15434	50000150	FITTING,ELBOW	1
25	PAFZZA	4730-01-547-1830	15434	80000011	HOSE BARB	1
26	PAFZZA	4730-01-551-8085	15434	8100273	CLAMP,HOSE	2
27	PAFZZA	9330-01-548-4037	15434	11000125	PLASTIC COIL SLEEVE	1
28	PAFZZA	4720-01-551-2318	15434	50000491	HOSE, 3 IN.	1
29	PAFZZA		8A334	8100000	CLAMP,HOSE	2
30	PAFZZA	4720-01-547-2834	15434	50000040	TOP RADIATOR HOSE	1
31	PBFZZA	5340-01-547-1828	15434	70014980	BRACKET,RADIATOR	1
32	PAFZZA	5310-01-062-3379	45152	362AX	WASHER,FLAT, 3/8	1
33	PAFZZA	5306-01-552-1301	15434	8100187	BOLT, M10-150 X 25MM	2
34	PBFZZA	5340-01-547-3020	15434	70018150	BRACKET,RADIATOR	1
35	PAFZZA	5306-01-157-3777	72582	9414215	BOLT,MACHINE, 3/8-16 X 2 1/2	1

END OF FIGURE

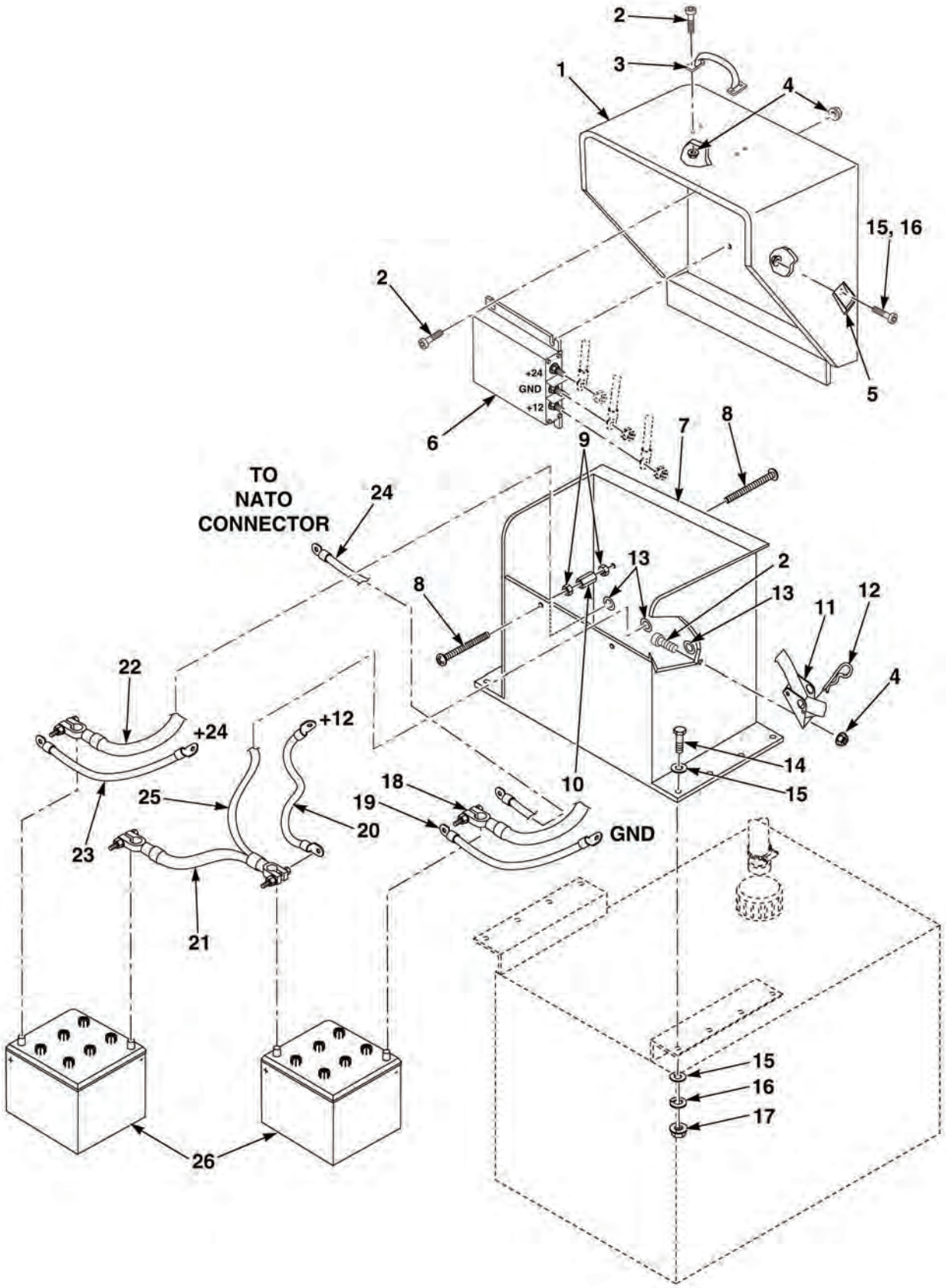

FIG. 37 BATTERIES AND ACCESSORIES

(1) ITEM NO	(2) SMR CODE	(3) NSN	(4) CAGEC	(5) PART NUMBER	(6) DESCRIPTION	(7) QTY
					FIG. 37 BATTERIES AND ACCESSORIES	
1	PAFZZA	6160-01-551-6233	15434	MBE00101	BATTERY BOX COVER	1
2	PAFZZA	5305-01-335-9277	39428	91255A540	SCREW,CAP,SOCKET HD, 1/4-20 X 3/4	14
3	PAFZZA	5340-01-551-8401	39428	1646A27	HANDLE	1
4	PAFZZA	5310-01-346-9445	45152	1600460	NUT,SELF-LOCKING,HE CLINCH, 1/4-20	14
5	PAFZZA	5340-01-547-5844	0YM38	97-77-104-11	KEEPER,LATCH	2
6	PAFZZA		2V497	60-50A	EQUALIZER,BATTERY (USED ON S/N 8RDCD301513 THRU 8RDCD301619HC)	1
6	PAFZZA	5998-01-546-5468	2V497	65-60	EQUALIZER,BATTERY (USED ON S/N 8RDCD301620HC AND SUBSEQUENT)	1
7	PAFZZA	6160-01-551-7334	OUA25	MBE00203	BATTERY BOX	1
8	PAFZZA	5306-01-551-1595	39428	93549A607	SCREW,SQUARE NECK, 5/16-18 X 6	4
9	PAFZZA	5310-01-105-7229	45152	369AX1	NUT,PLAIN,HEXAGON, 5/16-18	4
10	PAFZZA	4730-01-551-7325	39428	90977A150	NUT,COUPLING HEXAGON, 5/16-18	2
11	PAFZZA	5340-01-547-9462	15434	10000264	LATCH,DRAW	2
12	PAFZZA	5315-01-067-9597	96652	21-06	PIN,LOCK	2
13	PAFZZA	5325-01-467-2485	15434	9600K52	GROMMET	3
14	PAFZZA	5305-01-058-0611	45152	715HX1	SCREW,CAP,HEXAGON, DH, 3/8-16 X 1-1/4	8
15	PAFZZA	5310-01-062-3379	45152	362AX	WASHER,FLAT, 3/8	16
16	PAFZZA	5310-01-129-0450	45152	351AX	WASHER,LOCK, 3/8	8
17	PAFZZA	5310-01-063-8970	45152	434AX1	NUT,PLAIN,HEXAGON, 5/16-18	8
18	PAFZZA	6150-01-551-4712	15434	MWH01301-08	CABLE ASSY, POS	1
19	PAFZZA	6150-01-551-5160	15434	MWH01301-07	CABLE,GROUND	1
20	PAFZZA	6150-01-551-5574	15434	MWH01301-05	CABLE,12 V CONNECTI	1
21	PAFZZA	6150-01-551-5260	15434	MWH01301-06	CABLE ASSY, NEG	1
22	PAFZZA	6150-01-551-6539	15434	MWH01301-03	CABLE ASSY, JUMPER	1
23	PAFZZA	6150-01-551-6369	15434	MWH01301-04	CABLE, 24 V	1
24	PAFZZA	6150-01-551-5669	15434	MWH01301-09	CABLE,NATO	1
25	PAFZZA	6150-01-551-6485	15434	MWH01301-01	CABLE,RELAY	1
26	PAFZZA	6140-01-446-9498	04055	6TMFDFP	BATTERY	2

END OF FIGURE

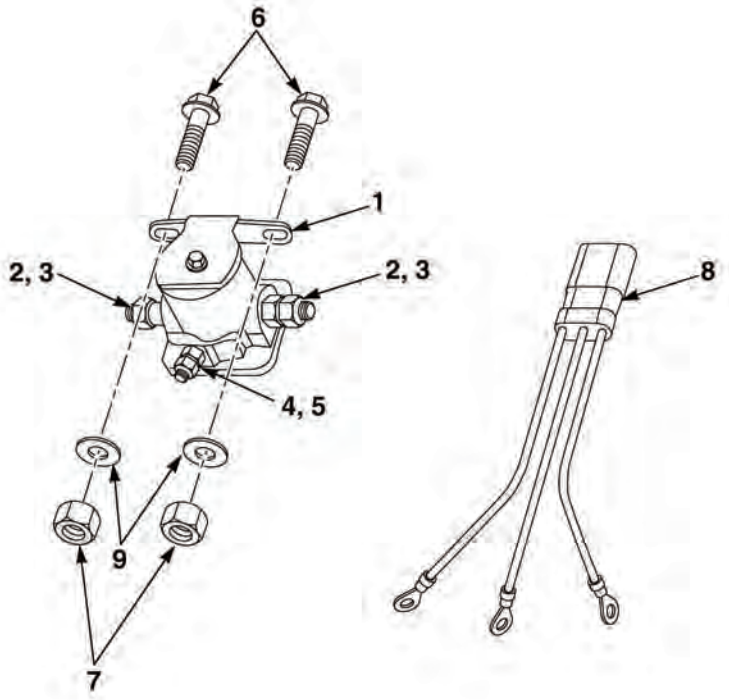

FIG. 38 MAGNETIC START SWITCH (USED ON S/N 8RDCD301513HC THRU 8RDCD301619HC)

(1) ITEM NO	(2) SMR CODE	(3) NSN	(4) CAGEC	(5) PART NUMBER	(6) DESCRIPTION	(7) QTY
					FIG. 38 MAGNETIC START SWITCH (USED ON S/N 8RDCD301513HC THRU 8RDCD301619HC)	
1	PAFZZA	5945-00-489-1788	33476	11231	SWITCH,MAGNETIC	1
2	PAOZZ	5310-01-061-3321	45152	372AX1	NUT,PLAIN,HEXAGON	2
3	PAOZZ	5310-00-407-9566	80205	MS35338-45	WASHER,LOCK,5/16	2
4	PAOZZ	5310-00-934-9751	80205	MS35650-302	NUT,PLAIN,HEX,NO. 10	1
5	PAOZZ	5310-00-045-3296	80205	MS35338-43	WASHER,LOCK,NO. 10	1
6	PAOZZ	5305-00-068-0500	57498	95423653	SCREW,CAP,HEX HD, 1/4-20 X 1/2	2
7	PAFZZA	5310-00-061-4650	96906	M45913/3-4CG8C	NUT,SELF-LOCKING,HEX, 1/4-20	2
8	PAFZZA		15434	90000039	HARNESS,ALTERNATOR	1
9	PAFZZA	5310-00-809-4058	96906	MS27183-10	WASHER,FLAT	2

END OF FIGURE

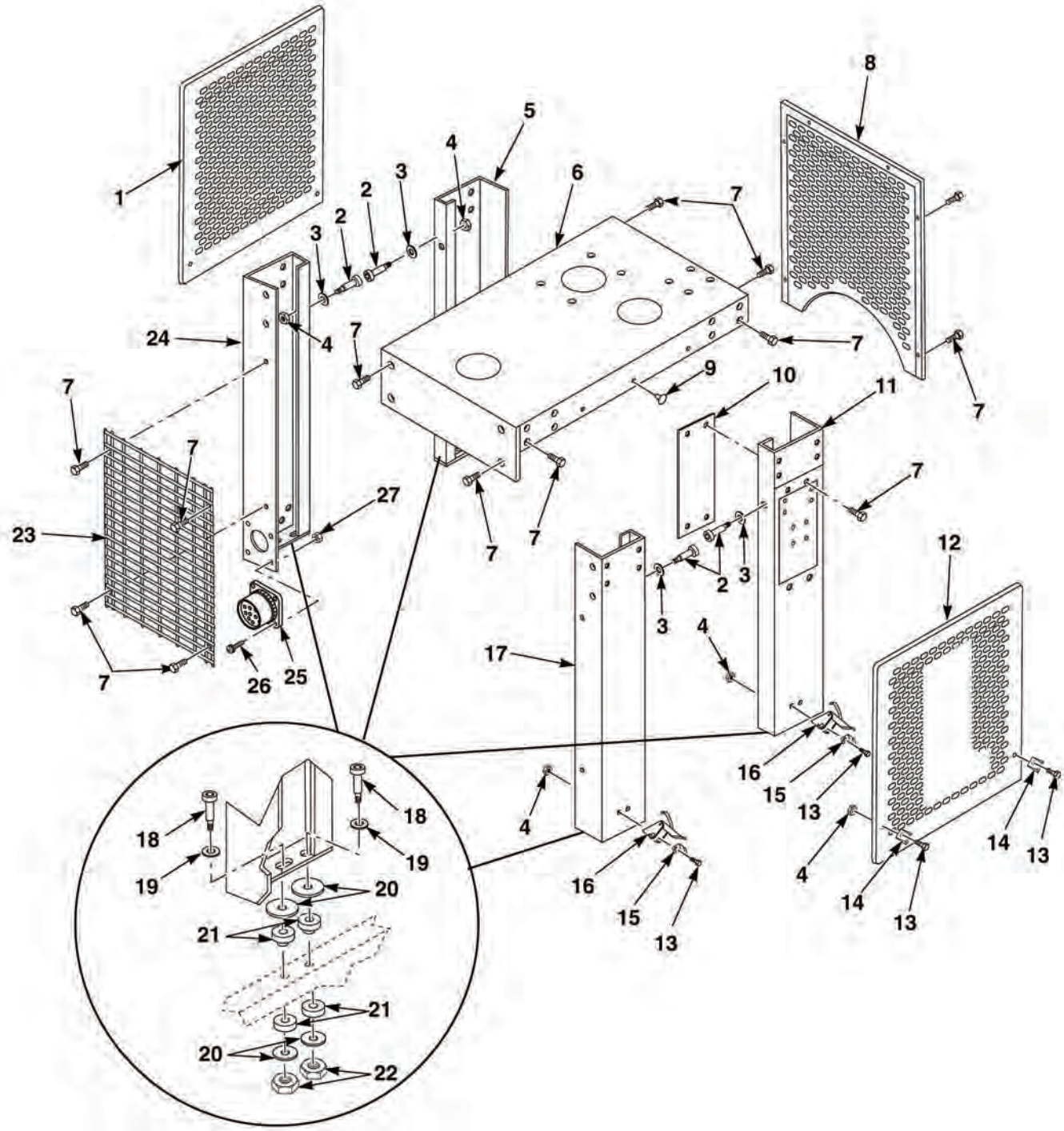

FIG. 39 ENGINE ENCLOSURE

(1) ITEM NO	(2) SMR CODE	(3) NSN	(4) CAGEC	(5) PART NUMBER	(6) DESCRIPTION	(7) QTY
					FIG. 39 ENGINE ENCLOSURE	
1	PAFZZA	5340-01-551-9307	15434	70007700	DOOR	1
2	PAFZZA	5306-01-552-2357	15434	80000127	BOLT,SHOULDERED, 5/16	4
3	PAFZZA	5310-01-061-7452	45152	1804HX	WASHER,FLAT, 5/16	4
4	PAFZZA	5310-01-346-9445	45152	1600460	NUT,SELF-LOCKING,HEX, CLINCH, 1/4-20	16
5	PAFZZA		15434	70007690	CORNER,REAR, RH (USED ON S/N 8RDCD301513HC THRU 8RDCD301619HC)	1
5	PAFZZA		15434	70015450	CORNER,REAR RH (USED ON S/N 8RDCD301620HC AND SUBSEQUENT)	1
6	PFFZZA	5340-01-547-1825	15434	70004350	COVER,TOP	1
7	PAFZZA	5305-01-062-1017	45152	1367HX1	SCREW,CAP,HEXAGON HD, 5/16-18 X 3/4	36
8	PAFZZA		15434	70004990	COVER,REAR (USED ON S/N 8RDCD301513HC THRU 8RDCD301619HC)	1
8	PAFZZA		15434	70015480	PANEL,REAR (USED ON S/N 8RDCD301620HC AND SUBSEQUENT)	1
9	PAFZZA	5340-01-551-1220	15434	80000083	BUMPER	18
10	PAFZZA		15434	70004340	COVER PLATE,INSTRUM	1
11	PAFZZA		15434	70007680	CORNER,REAR, LEFT (USED ON S/N 8RDCD301513HC THRU 8RDCD301619HC)	1
11	PAFZZA		15434	70015440	CORNER,REAR, LH (USED ON S/N 8RDCD301620HC AND SUBSEQUENT)	1
12	PAFZZA		61796	1932-B95	COVER,ENGINE MODIFIED	1
13	PAFZZA	5305-01-337-9120	45152	1754140	SCREW,CAP HEXAGON HD, 1/4-20 X 1	12
14	PAFZZA	5340-01-547-5844	15434	10000265	KEEPER,LATCH	4
15	PAFZZA	5340-01-551-7396	15434	10000357	LATCH,SECONDARY KEEPER	4
16	PAFZZA	5340-01-547-9462	15434	10000264	LATCH,DRAW	4
17	PAFZZA		15434	70007660	CORNER,FRONT LEFT	1
18	PAFZZA	5306-01-551-7407	15434	80000166	BOLT,SHOULDERED, 3/8	8
19	PAFZZA	5310-01-062-3379	45152	362AX	WASHER,FLAT, 3/8	8
20	PAFZZA	5310-01-551-1229	15434	70003210	CINCH WASHER	16
21	PAFZZA	5310-01-551-1223	15434	11000328	ISOLATOR	8
22	PAFZZA	5310-00-225-6408	81349	M45913/1-10FG5C	NUT,SELF-LOCKING,HEX, 5/8-18	8
23	PFFZZA		15434	11000195	STONE GUARD	1
24	PAFZZA		15434	70007670	CORNER,FRONT RIGHT	1
25	PAFZZA	5935-01-044-8382	19207	11682345	CONNECTOR,RECEPTACLE, ELECTRICAL	1
26	PAFZZA	5305-00-978-9352	96906	MS16997-24	SCREW,CAP,SOCKET HD, NO. 6-32 X 1	4
27	PAFZZA	5310-01-120-9097	39428	90675A007	NUT,SELF-LOCKING, ASSEMBLED WASHER,NO. 6-32	4

END OF FIGURE

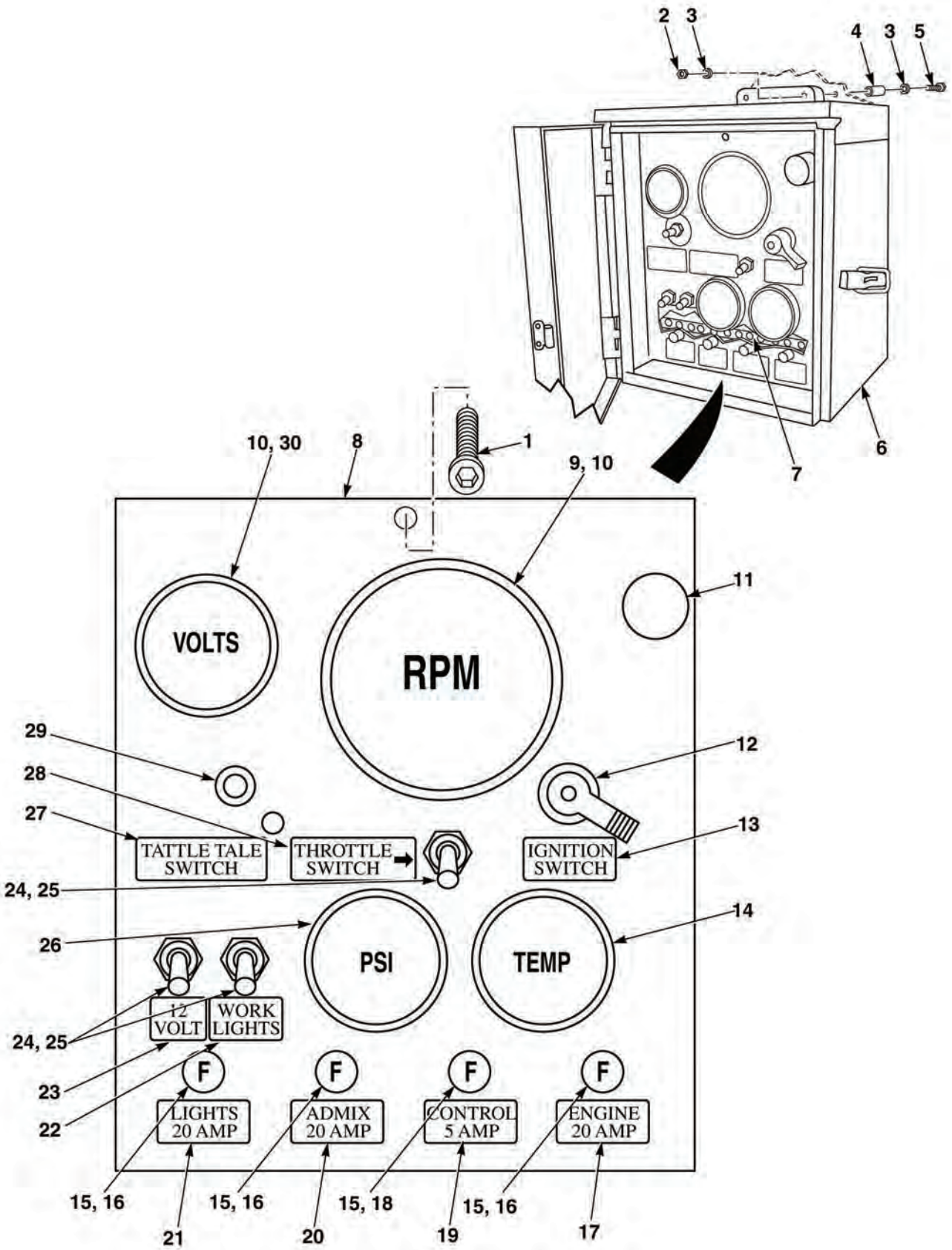

FIG. 40 CONTROL PANEL

(1) ITEM NO	(2) SMR CODE	(3) NSN	(4) CAGEC	(5) PART NUMBER	(6) DESCRIPTION	(7) QTY
					FIG. 40 CONTROL PANEL	
1	PAFZZA	5305-01-335-9277	39428	91255A540	SCREW,CAP,SOCKET HD, 1/4-20 X 3/4	1
2	PAFZZA	5310-01-478-8691	45152	1419270	NUT,SELF-LOCKING HEX, 5/16-18	4
3	PAFZZA	5310-00-999-0424	45152	5159714	WASHER,FLAT,5/16	8
4	PAFZZA	5365-01-547-5082	61796	1932-A93	SPACER	4
5	PAFZZA	5306-00-226-4835	80204	B1821BH031C250N	BOLT,MACHINE	4
6	PAFZZA	5999-01-551-3911	1WSN4	A12R106HCR	BOX,ELECTRICAL	1
7	PAFZZA	5940-01-551-3960	1FV21	607-1274	STRIP,TERMINAL	1
8	PAFZZA	2510-01-551-8738	15434	MCP00901	CONTROL PANEL	1
9	PAFZZA		16476	103755	TACHOMETER/HOURMETER	1
10	PAFZZA	6240-01-201-6965	08805	585	BULB	2
11	PAFZZA	6210-00-150-2005	13445	M-458	PANEL LAMP	1
12	PAFZZA	2920-01-024-3709	13445	95521-01	KEYSWITCH,LEVER TYPE	1
13	PAFZZA	7690-01-551-3322	61796	1932-D33	DECAL,IGNITION SWITCH	1
14	PAFZZA	6685-01-551-8619	03479	EGS21T-250-24	SWITCHGAGE,COOLANT	1
15	PAFZZA		15434	845-4802	FUSEHOLDER	4
16	PAFZZA	5920-01-048-0548	71400	AGC20	FUSE,CARTRIDGE	2
17	PAFZZA	7690-01-551-3859	61796	1932-D32	DECAL,ENGINE 20 AMP	1
18	PAFZZA	5920-00-757-9140	71400	AGC5	FUSE,CARTRIDGE	1
19	PAFZZA	7690-01-551-3558	61796	1932-D31	DECAL,CONTROL 5 AMP	1
20	PAFZZA	7690-01-551-3458	61796	1932-D30	DECAL,ADMIX 20 AMP	1
21	PAFZZA	7690-01-551-4555	61796	1932-D29	DECAL,LIGHT 20 AMP	1
22	PAFZZA	7690-01-551-3124	61796	1932-D28	DECAL,WORK LIGHT	1
23	PAFZZA	7690-01-551-3852	61796	1932-D27	DECAL,12 VOLT	1
24	PAFZZA		15434	757-8701	SWITCH,TOGGLE	3
25	PAFZZA		15434	760-0001	SEAL,TOGGLE SWITCH	3
26	PAFZZA		03479	EGS21P-100-24	SWITCHGAGE,OIL PRESSURE	1
27	PAFZZA	7690-01-551-4528	61796	1932-D34	DECAL,TATTLE TALE SWITCH	1
28	PAFZZA	7690-01-551-3397	61796	1932-D35	DECAL	1
29	PAFZZA	5945-01-551-8646	03479	518APH-24-D8	RELAY,SHUTDOWN,24V PUSH TO PULL TO START	1
30	PAFZZA	6625-01-552-3306	16476	101911	VOLTMETER,24VDC LIGHTED	1

END OF FIGURE

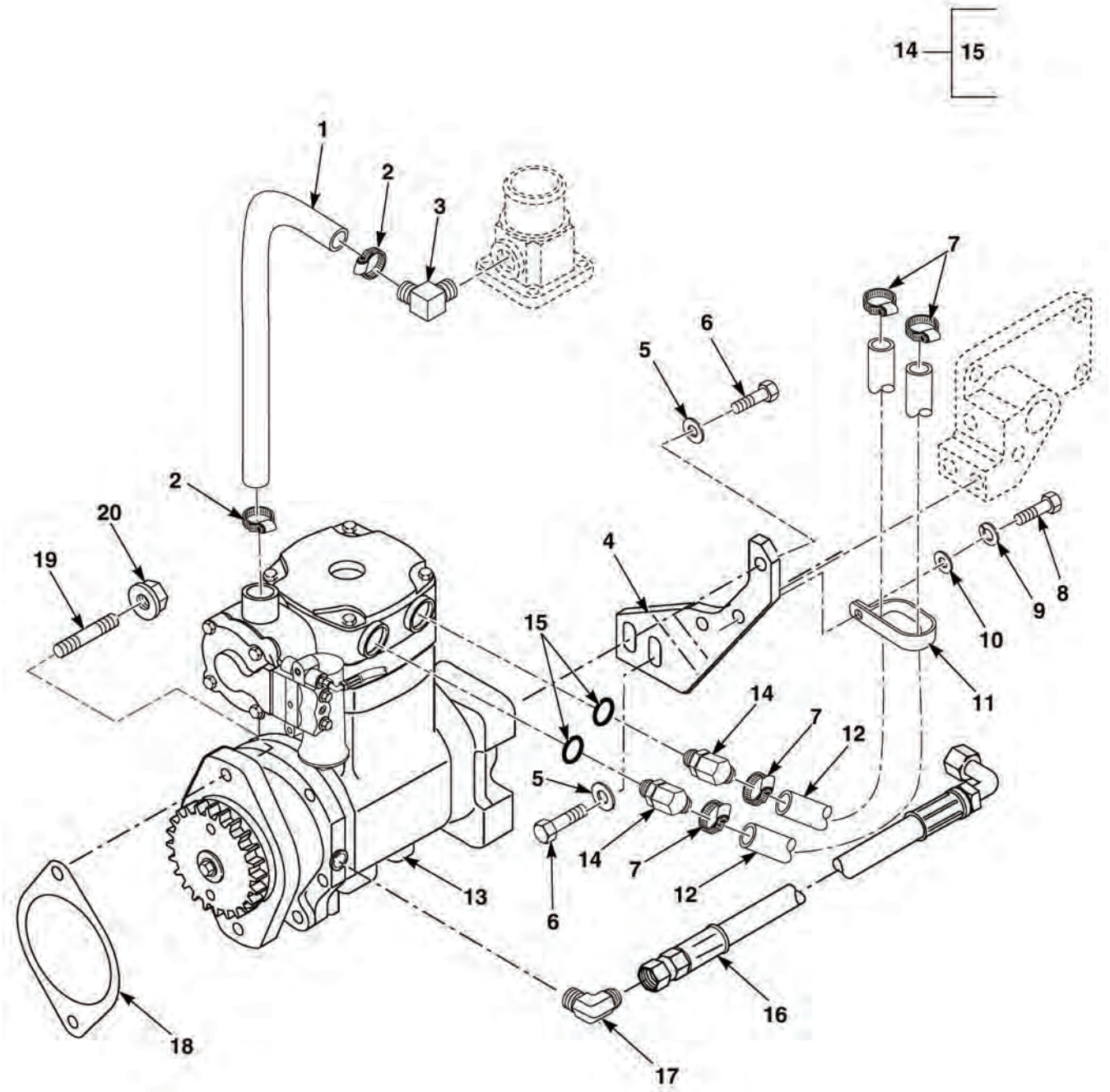

FIG. 41 AIR COMPRESSOR

(1) ITEM NO	(2) SMR CODE	(3) NSN	(4) CAGEC	(5) PART NUMBER	(6) DESCRIPTION	(7) QTY
					FIG. 41 AIR COMPRESSOR	
1	PAFZZA	4720-01-474-6479	15434	3928679	HOSE,NONMETALLIC	2
2	PAFZZA	4730-00-555-8263	53496	556-1-1-2A	CLAMP,HOSE	2
3	PAFZZA	4730-01-551-6548	15434	3936169	COUPLING,ELBOW	1
4	PAFZZA	5340-01-481-6465	15434	3926229	BRACE, AIR COMPRESSOR	1
5	PAFZZA	5310-01-481-2498	15434	3009330	WASHER, PLAIN	4
6	PAFZZA	5305-01-551-8397	39428	9365A424	SCREW,CAP,HEXAGON HD M10 X 1.50 X 30	4
7	PAFZZA	4730-01-481-6564	15434	3923369	CLAMP,HOSE	4
8	PAFZZA	5305-01-193-4506	15434	3900631	SCREW,CAP,HEXAGON HD M8 X 1.25 X 25	1
9	PAFZZA	5310-01-129-0450	45152	351AX	WASHER,LOCK	1
10	PAFZZA	5310-01-467-2838	15434	S602	WASHER,FLAT,3/8	1
11	PAFZZA	5340-01-502-6857	15434	3925720	CLAMP,LOOP	1
12	PAFZZA	4720-01-474-6480	15434	3927327	HOSE,NONMETALLIC	2
13	PAFZZA	4310-01-551-1281	15434	CP9153	COMPRESSOR,AIR (USED ON S/N 8RDCD301513HC THRU 8RDCD301619HC)	1
13	XOFZZA		15434	CP9154	AIR COMPRESSOR (USED ON S/N 8RDCD301620HC AND SUBSEQUENT)	1
14	PAFZZA	4730-01-474-6475	15434	3927325	ELBOW,PIPE TO HOSE	2
15	PAFZZA	5331-01-072-8984	15434	3046201	.O-RING	1
16	PAFZZA	4720-01-447-6021	15434	3924867	HOSE ASSY, NONMETALLIC	1
17	PAFZZA	4730-01-142-8524	15434	68139	ELBOW, PIPE TO TUBE	1
18	PAFZZA	5330-01-190-7444	15434	3008400	GASKET,HYD PUMP (USED ON S/N 8RDCD301513HC THRU 8RDCD301619HC)	1
18	PAFZZA	5330-01-450-6040	15434	3929751	GASKET (USED ON S/N 8RDCD301620HC AND SUBSEQUENT)	2
19	PAFZZA	5307-01-551-1179	39428	93275A057	STUD,PLAIN, M12 X 1.75 (USED ON S/N 8RDCD301513HC THRU 8RDCD301619HC)	2
19	PAFZZA	5307-01-287-0855	7U263	3913370	STUD, PLAIN, M12-1.75 X 55 (USED ON S/N 8RDCD301620HC AND SUBSEQUENT)	2
20	PAFZZA	5310-01-293-2893	79343	3903210	NUT,PLAIN,EXT WASHER, M12 X 1.75	2

END OF FIGURE

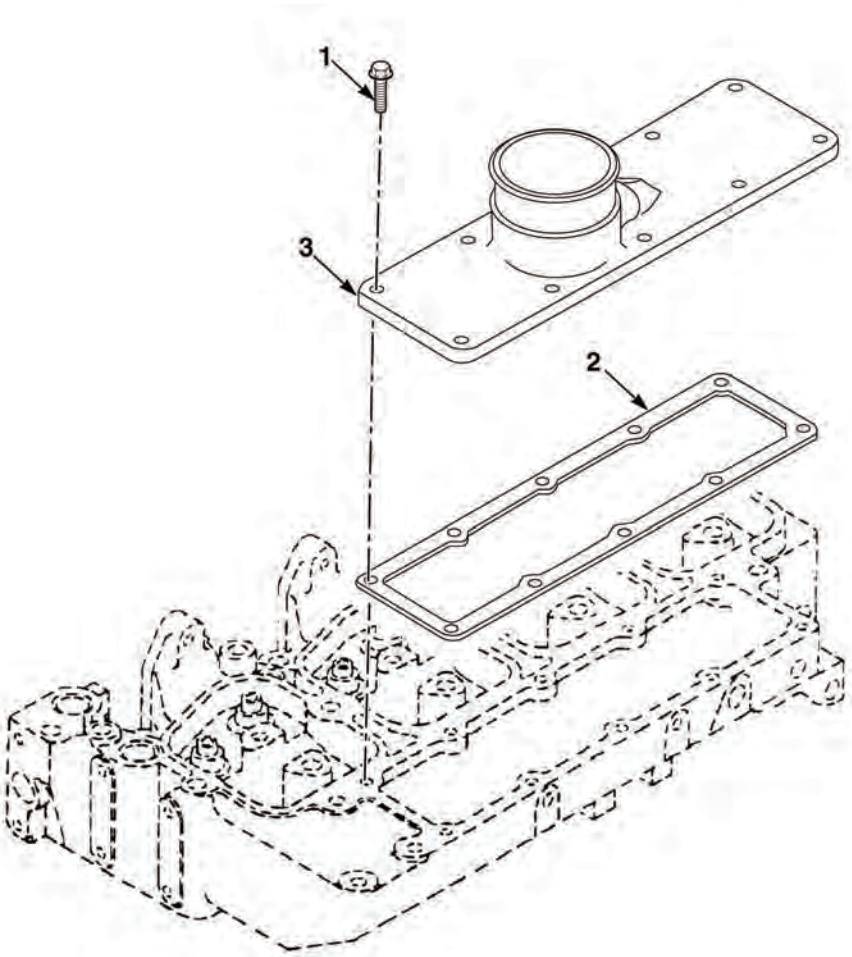

FIG. 42 AIR INTAKE CONNECTION USED ON (S/N 8RDCD301513HC THRU 8RDCD301619HC)

(1) ITEM NO	(2) SMR CODE	(3) NSN	(4) CAGEC	(5) PART NUMBER	(6) DESCRIPTION	(7) QTY
					FIG. 42 AIR INTAKE CONNECTION (USED ON S/N 8RDCD301513HC THRU 8RDCD301619HC)	
1	PAFZZA	5305-01-245-3192	15434	3918109	SCREW,CAP,HEXAGON HD, M8 X 1.25 X 25	10
2	PAFZZA	5330-01-474-0844	15434	3931605	GASKET, COVER	1
3	PAFZZA	2990-01-263-0070	15434	3908083	HOUSING,MECH DRIVE	1

END OF FIGURE

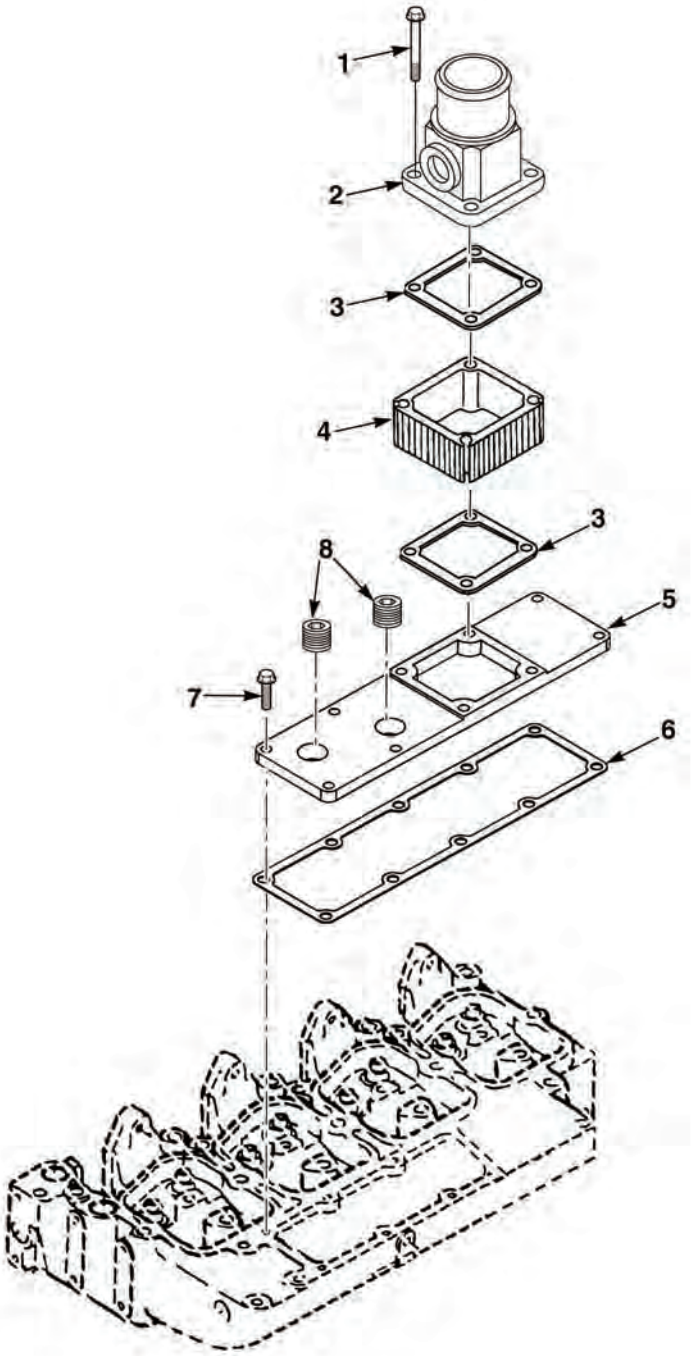

FIG. 43 AIR INTAKE CONNECTION (USED ON S/N 8RDCD301620HC AND SUBSEQUENT)

(1) ITEM NO	(2) SMR CODE	(3) NSN	(4) CAGEC	(5) PART NUMBER	(6) DESCRIPTION	(7) QTY
					FIG. 43 AIR INTAKE CONNECTION (USED ON S/N 8RDCD301620HC AND SUBSEQUENT)	
1	PAFZZA	5305-01-508-4962	0B8S3	3919864	SCREW,CAP,HEXAGON HD, M8 X 1.25 X 80	4
2	PAFZZA		15434	3975583	CONNECTION,AIR INTAKE	1
3	PAFZZA	5330-01-452-7282	0B8S3	3938158	GASKET	2
4	PAFZZA	5365-01-440-3532	15434	3922484	SPACER,SLEEVE	1
5	PAFZZA	5340-01-495-6541	0B8S3	3921500	COVER,ACCESS	1
6	PAFZZA	5330-01-502-7611	0B8S3	3938153	GASKET	1
7	PAFZZA	5305-01-245-3192	15434	3918109	SCREW,CAP,HEXAGON HD, M8 X 1.25 X 25	6
8	PAFZZA	4730-99-214-1783	K4843	3008468	PLUG,PIPE	2

END OF FIGURE

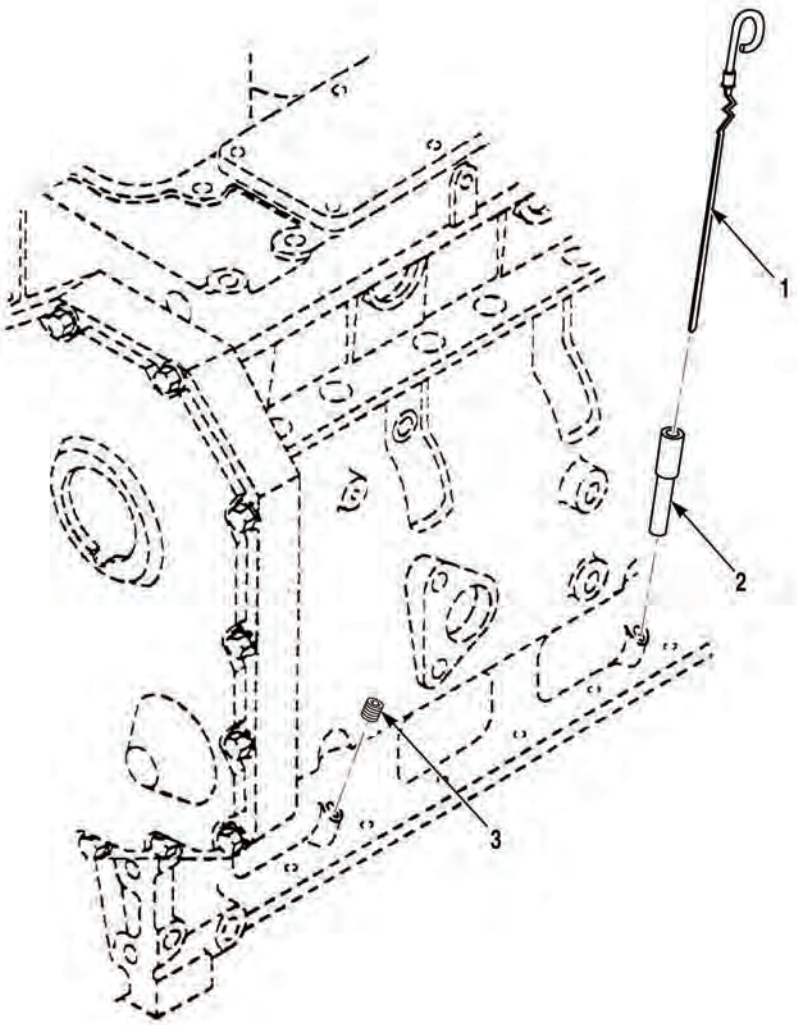

FIG. 44 OIL LEVEL GAGE

(1) ITEM NO	(2) SMR CODE	(3) NSN	(4) CAGEC	(5) PART NUMBER	(6) DESCRIPTION	(7) QTY
					FIG. 44 OIL LEVEL GAGE	
1	PAFZZA	6680-01-379-1669	15434	3905782	GAGE ROD-CAP,OIL LEVEL	1
2	PAFZZA	2590-01-317-1479	15434	3279104	FILLER NECK, VEHICULAR	1
3	PAFZZA	5340-01-239-8607	15434	3900955	PLUG,EXPANSION	1

END OF FIGURE

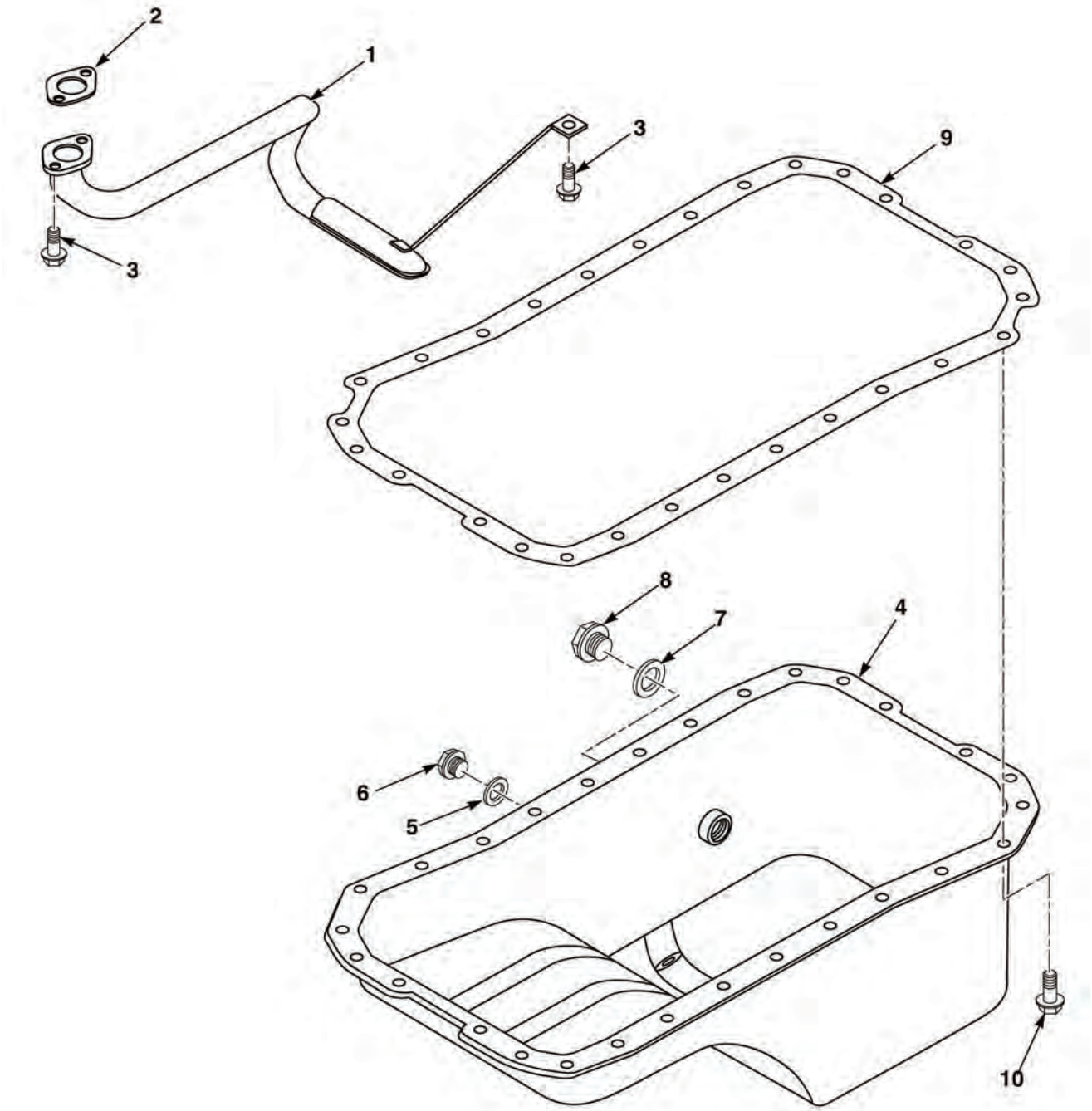

FIG. 45 OIL PAN (USED ON S/N 8RDCD301513HC THRU 8RDCD301619HC)

(1) ITEM NO	(2) SMR CODE	(3) NSN	(4) CAGEC	(5) PART NUMBER	(6) DESCRIPTION	(7) QTY
					FIG. 45 OIL PAN (USED ON S/N 8RDCD301513HC THRU 8RDCD301619HC)	
1	PAFZZA	2815-01-358-8623	15434	3905206	STRAINER,OIL PUMP	1
2	PAFZZA	5330-01-453-7145	15434	3938157	GASKET	1
3	PAFZZA	5305-01-234-3755	15434	3900630	SCREW,CAP,HEXAGON HD, M8X1.25X20	3
4	PAFZZA	2520-01-502-6682	0B8S3	3901049	PAN,OIL	1
5	PAFZZA	5310-01-381-5774	15434	3920773	WASHER,SEALING	1
6	PAFZZA	5365-01-412-6322	15434	3924147	PLUG,MACHINE THREAD	1
7	PAFZZA	5310-01-209-0508	15434	3902425	WASHER,FLAT	1
8	PAFZZA	5365-01-412-6321	15434	3924148	PLUG, THREADED	1
9	PAFZZA	5330-01-305-9414	15434	3931602	GASKET	1
10	PAFZZA	5305-01-379-6073	15434	3920400	SCREW,CAP,HEXAGON HD, M8 X 1.25 X 21	28

END OF FIGURE

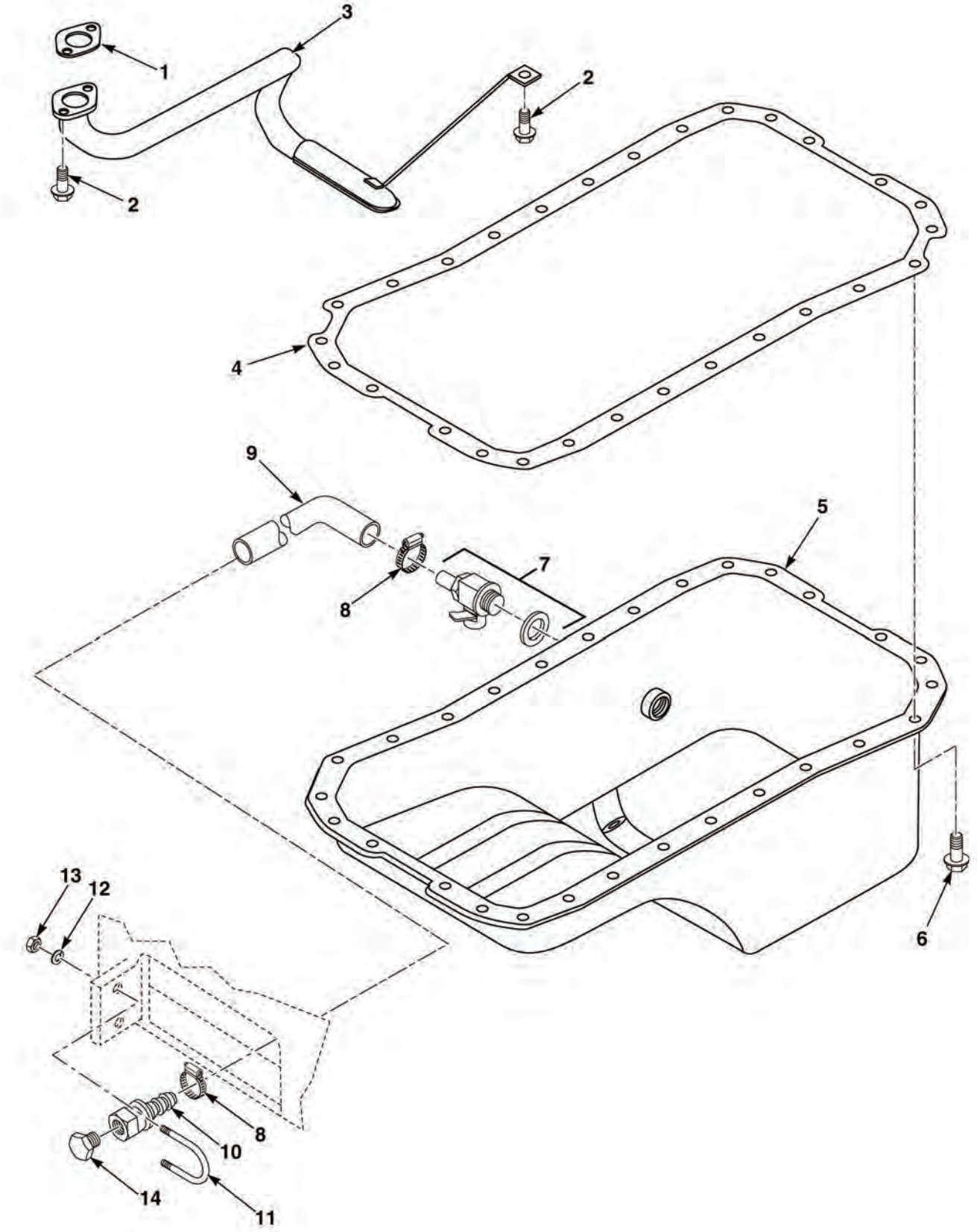

FIG. 46 OIL PAN (USED ON S/N 8RDCD301620HC AND SUBSEQUENT)

(1) ITEM NO	(2) SMR CODE	(3) NSN	(4) CAGEC	(5) PART NUMBER	(6) DESCRIPTION	(7) QTY
					FIG. 46 OIL PAN USED ON (S/N 8RDCD301620HC AND SUBSEQUENT)	
1	PAFZZA	5330-01-453-7145	15343	3938157	GASKET	1
2	PAFZZA	5305-01-234-3755	15434	3900630	SCREW,CAP,HEXAGON HD, M8X1.25X20	3
3	PAFZZA	2815-01-358-8623	15434	3905206	STRAINER,OIL PUMP	1
4	PAFZZA	5330-01-305-9414	15434	3938162	GASKET	1
5	PAFZZA	2520-01-502-6682	0B8S3	3901049	PAN,OIL	1
6	PAFZZA	5305-01-379-6073	15434	3920400	SCREW,CAP,HEXAGON HD, M8 X 1.25 X 21	28
7	PAFZZA	4820-01-552-0181	046Z0	F104	VALVE,DRAIN	1
8	PAFZZA	4730-01-209-3354	72582	8929756	CLAMP,HOSE	2
9	MFFZZA		39428	5633K23	HOSE,NONMETALLIC, MAKE FROM HOSE P/N 5633K23, CAGE 39428,40 IN.	1
10	PAFZZA	4730-01-551-5314	39428	91465K351	FITTING,BARBED X FEMALE PIPE	1
11	PAFZZA	5306-01-552-1622	39428	3043T12	BOLT,U	1
12	PAFZZA	5310-00-582-5965	80205	MS35338-44	WASHER,LOCK,1/4	2
13	PAFZZA	5310-01-058-3183	45152	767HX1	NUT,PLAIN,HEXAGON, 1/4-20	2
14	PAFZZA	4730-01-552-0174	39428	9171K49	PLUG,HEX HEAD	1

END OF FIGURE

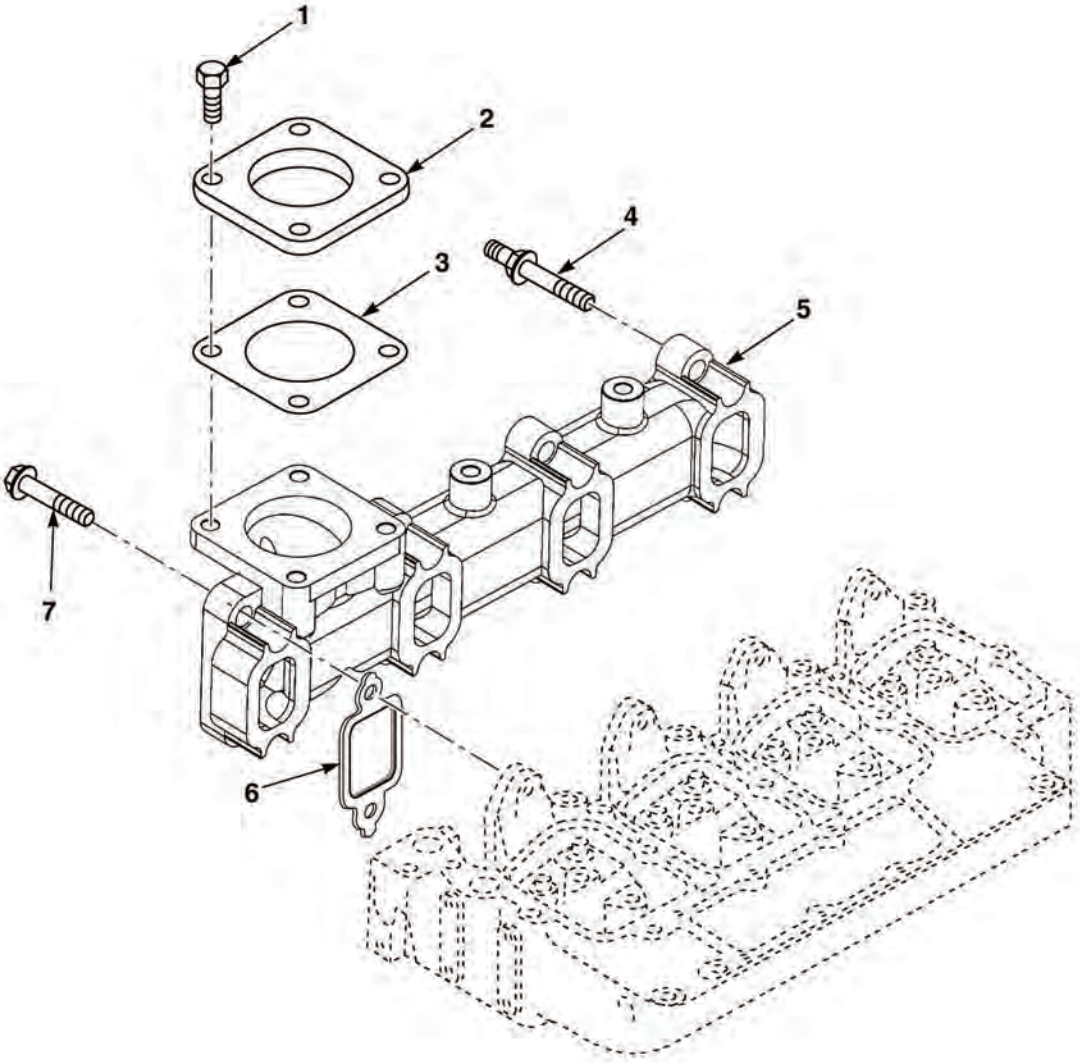

FIG. 47 EXHAUST MANIFOLD

(1) ITEM NO	(2) SMR CODE	(3) NSN	(4) CAGEC	(5) PART NUMBER	(6) DESCRIPTION	(7) QTY
					FIG. 47 EXHAUST MANIFOLD	
1	PAFZZA	5305-01-158-0827	44940	718-1054	SCREW,CAP,HEXAGON HD, M10-1.50 X 25	4
2	PAFZZA	4730-01-551-3324	15434	3904054	FLANGE,WELD	1
3	PAFZZA	5330-01-243-9455	15434	3912220	GASKET	1
4	PAFZZA	5307-01-507-4178	15434	3930250	STUD,SHOULDERED (USED ON S/N 8RDCD301513HC THRU 8RDCD301619HC)	1
5	PAFZZA	2805-01-234-1845	15434	390122300	MANIFOLD,EXHAUST	1
6	PAFZZA	5330-01-218-1201	15434	3927154	GASKET, MANIFOLD	4
7	PAFZZA	5305-01-194-4522	81495	205273	SCREW,CAP HEXAGON HD, M10-1.50 X 65 (USED ON S/N 8RDCD301513HC THRU 8RDCD301619HC)	8
7	PAFZZA	5305-01-508-4946	0B8S3	3930249	SCREW,CAP HEXAGON HD, M10-1.50 X 65 (USED ON S/N 8RDCD301620HC AND SUBSEQUENT)	7

END OF FIGURE

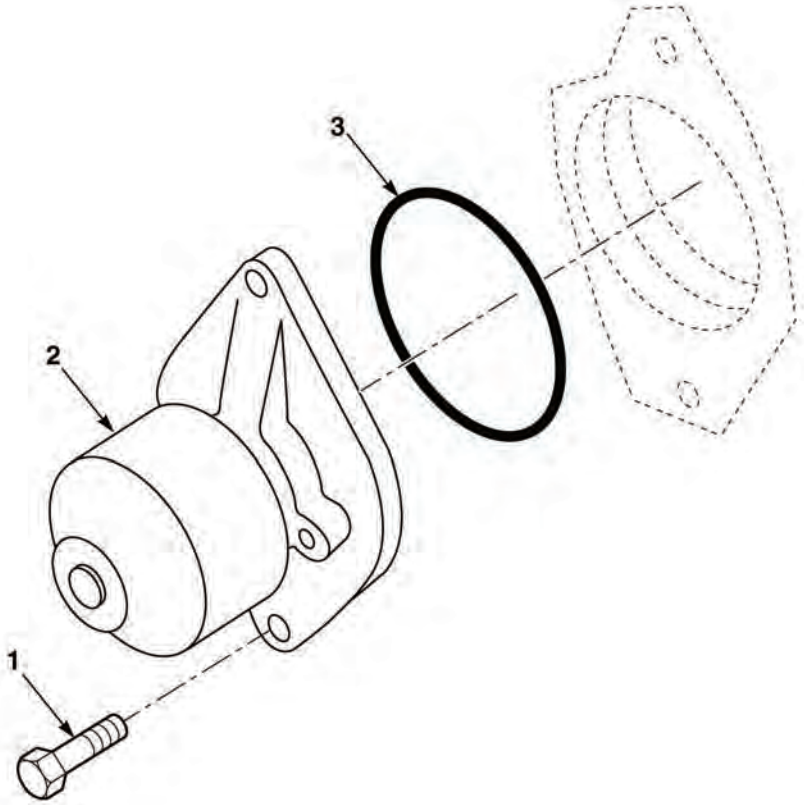

FIG. 48 WATER PUMP

(1) ITEM NO	(2) SMR CODE	(3) NSN	(4) CAGEC	(5) PART NUMBER	(6) DESCRIPTION	(7) QTY
					FIG. 48 WATER PUMP	
1	PAFZZA	5305-01-495-6560	0B8S3	3941981	SCREW,CAP,HEXAGON HD	2
2	PAFZZA	2930-01-502-6529	0B8S3	3285411	PARTS KIT,ENGINE WATER PUMP (USED ON S/N 8RDCD301620HC AND SUBSEQUENT)	1
2	PAFZZA	2930-01-467-6421	15434	3286275	PUMP,COOLING SYSTEM, (USED ON S/N 8RDCD301513HC THRU 8RDCD301619HC)	1
3	PAFZZA	5330-01-297-6308	15434	3906698	GASKET	1

END OF FIGURE

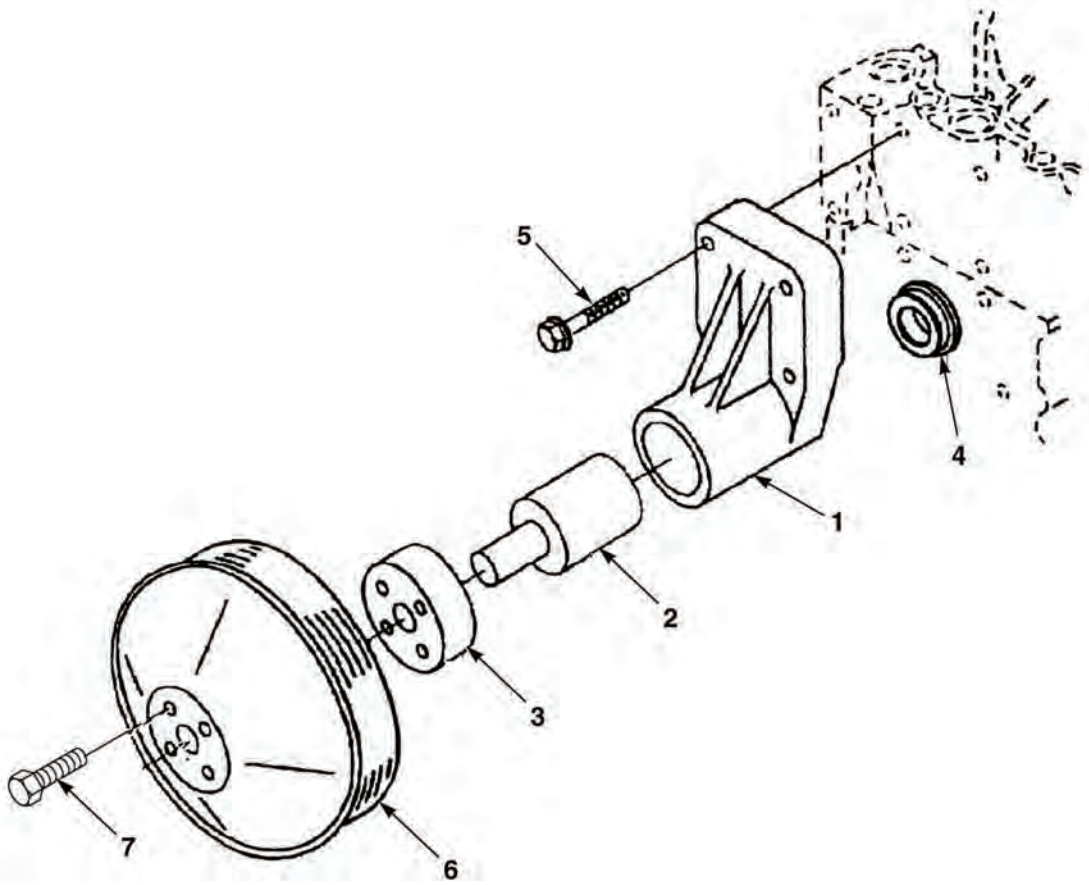

FIG. 49 FAN DRIVE (USED ON S/N 8RDCD301513HC THRU 8RDCD301619HC)

(1) ITEM NO	(2) SMR CODE	(3) NSN	(4) CAGEC	(5) PART NUMBER	(6) DESCRIPTION	(7) QTY
					FIG. 49 FAN DRIVE (USED ON S/N 8RDCD301513HC THRU 8RDCD301619HC)	
1	PAFZZA	5342-01-242-2998	15343	3909888	SUPPORT,FAN ACCESSORY	1
2	PAFZZA	2930-01-386-2440	15434	3908164	SHAFT, FAN DRIVE	1
3	PAFZZA	2930-01-237-6359	15434	3901364	HUB,FAN CLUTCH	1
4	PAFZZA	3120-01-359-4568	15434	3909887	BUSHING,SLEEVE	1
5	PAFZZA	5306-01-472-9328	15434	3928873	BOLT,ASSEMBLED WASHER,8 X 1.25 X 40	4
6	PAFZZA	3020-01-237-0497	15434	3902709	PULLEY,GROOVE	1
7	PAFZZA	5305-01-234-3755	15434	3900630	SCREW,CAP,HEXAGON HD, M8X1.25X20	4

END OF FIGURE

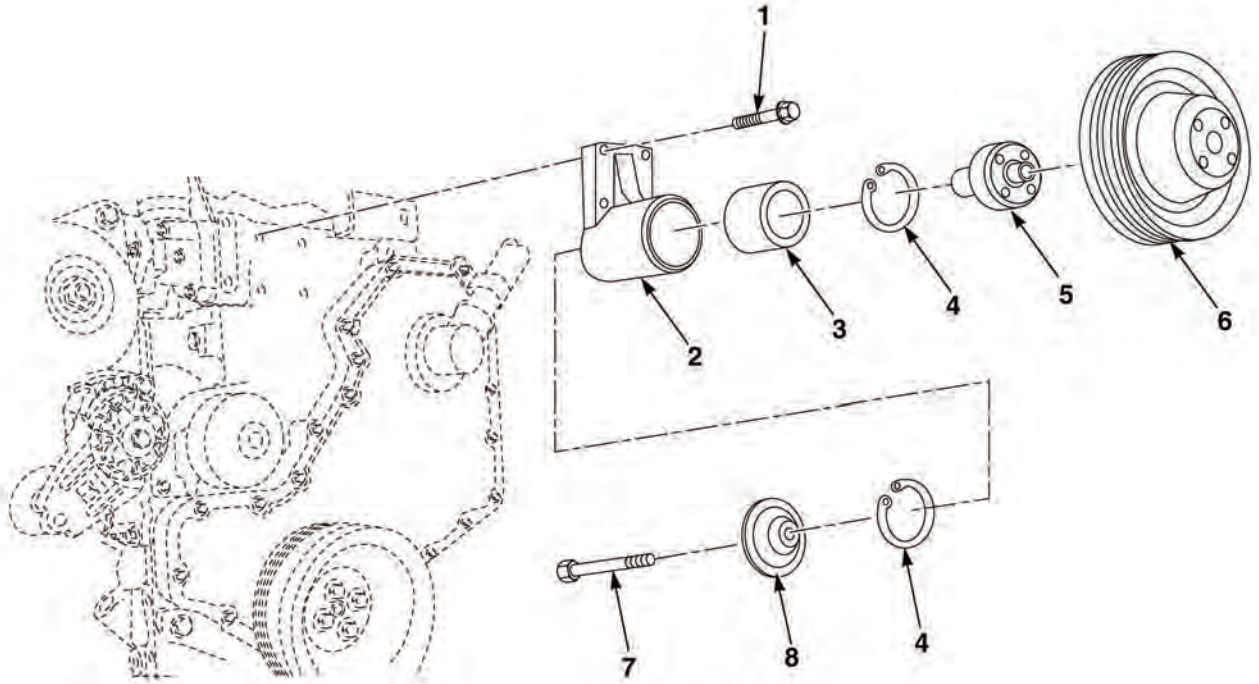

FIG. 50 FAN DRIVE (USED ON S/N 8RDCD301620HC AND SUBSEQUENT)

(1) ITEM NO	(2) SMR CODE	(3) NSN	(4) CAGEC	(5) PART NUMBER	(6) DESCRIPTION	(7) QTY
					FIG. 50 FAN DRIVE (S/N 8RDCD301620HC AND SUBSEQUENT)	
1	PAFZZA	5306-01-472-9328	15434	3928873	BOLT,ASSEMBLED WASHER, M8 X 1.25 X 40	4
2	PAFZZA	2835-01-481-4207	15434	3913434	SUPPORT,FAN	1
3	PAFZZA	3110-01-281-7030	15434	3910739	ROLLER,BEARING	1
4	PAFZZA	5325-01-284-7966	15434	3035960	RING,RETAINING	2
5	PAFZZA	2930-01-281-1077	15434	3911924	HUB,FAN CLUTCH	1
6	PAFZZA	3020-01-507-5706	0B8S3	3914459	PULLEY,GROOVE	1
7	PAFZZA	5305-01-280-5630	15434	3907769	SCREW,CAP HEXAGON HD, M10 X 1.75 X 70	1
8	PAFZZA	5330-01-481-2507	15434	3923044	GASKET	1

END OF FIGURE

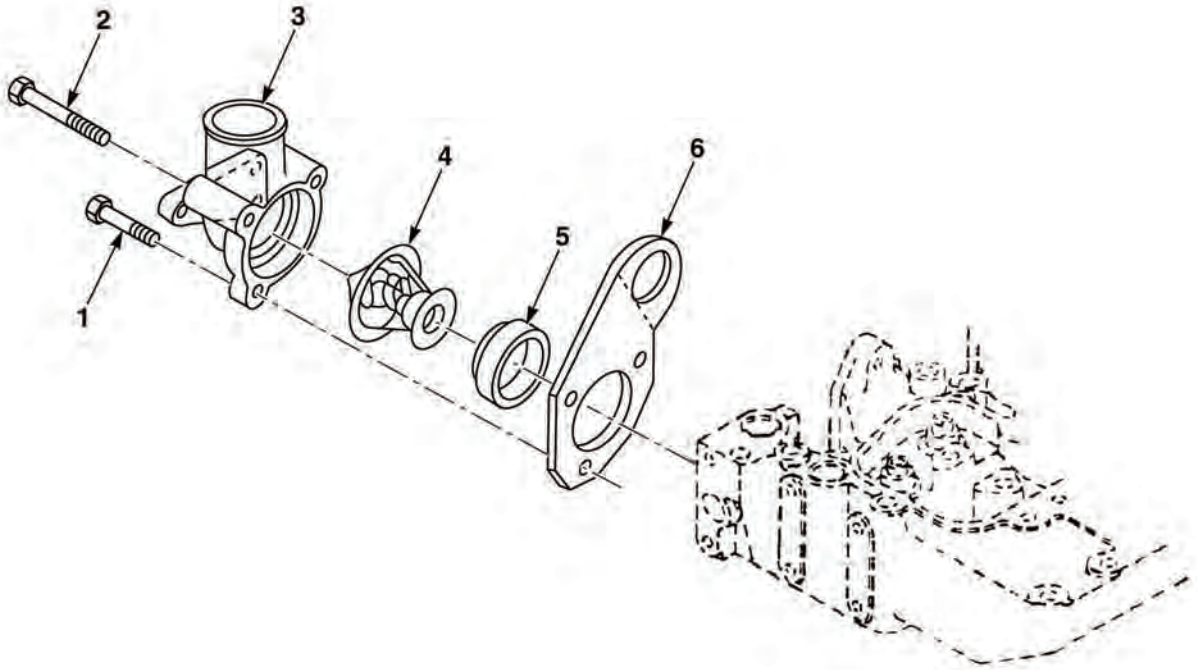

FIG. 51 THERMOSTAT

(1) ITEM NO	(2) SMR CODE	(3) NSN	(4) CAGEC	(5) PART NUMBER	(6) DESCRIPTION	(7) QTY
					FIG. 51 THERMOSTAT	
1	PAFZZA	5305-01-239-7202	15434	3900632	SCREW,CAP,HEXAGON HD, M8-1.25 X 35	1
2	PAFZZA	5305-01-441-3203	15434	3926972	SCREW,CAP,HEXAGON HD, M8-1.25 x 70	2
3	PAFZZA	2930-01-313-8028	15434	3285102	OUTLET,WATER,ENGINE	1
4	PAFZZA	6685-01-343-1572	15434	39173240	THERMOSTAT, FLOW CONTROL	1
5	PAFZZA	5330-01-190-1904	10988	J923331	GASKET	1
6	PAFZZA	5340-01-551-7453	15434	3281246	BRACKET,ANGLE (USED ON S/N 8RDCD301620HC AND SUBSEQUENT)	1
6	PAFZZA	5342-01-191-9383	15434	3903757	BRACKET,ENGINE LIFT (USED ON S/N 8RDCD301513HC THRU 8RDCD301619HC)	1

END OF FIGURE

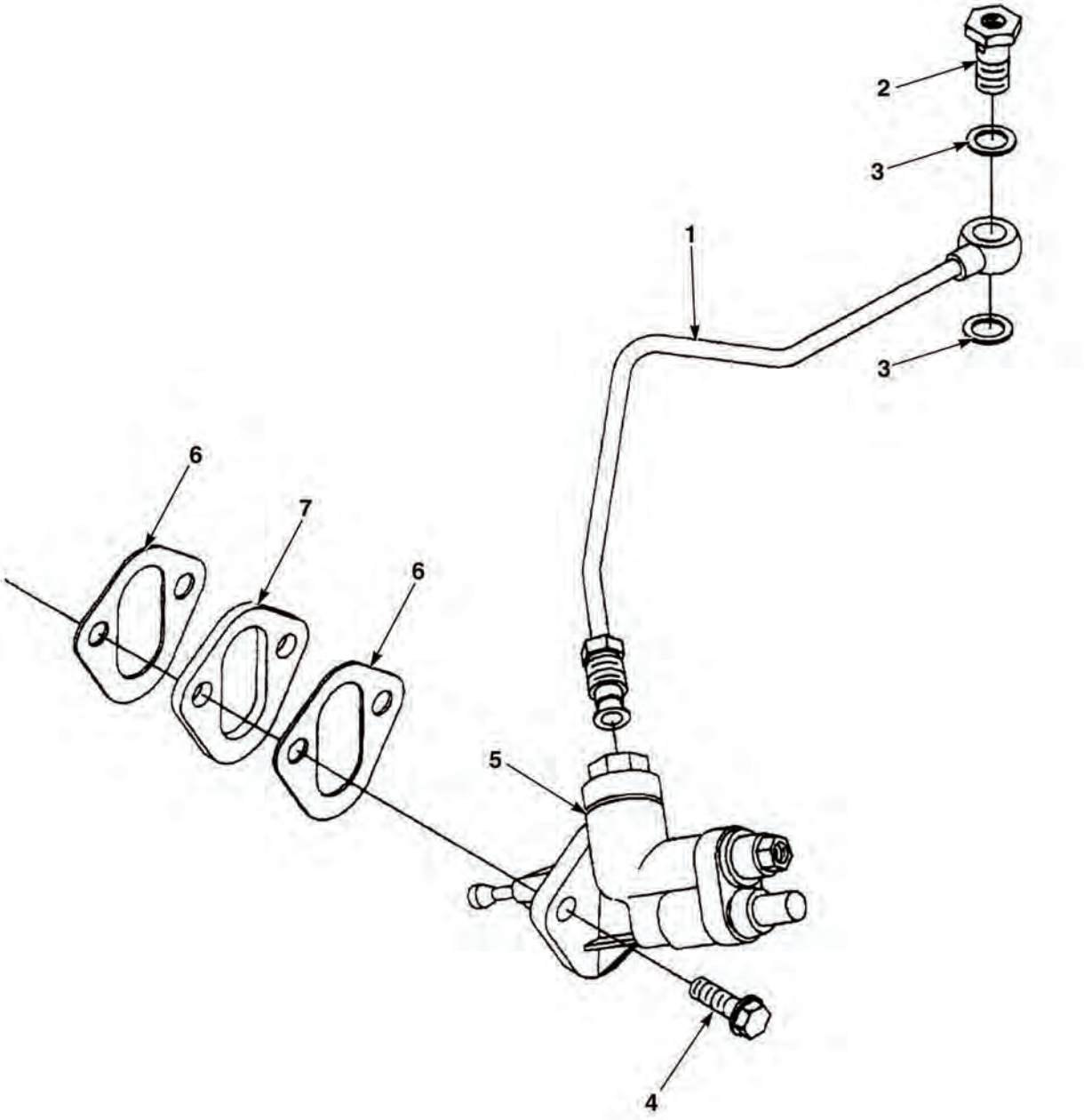

FIG. 52 FUEL SYSTEM ACCESSORIES (USED ON S/N 8RDCD301513HC THRU 8RDCD301619HC)

(1) ITEM NO	(2) SMR CODE	(3) NSN	(4) CAGEC	(5) PART NUMBER	(6) DESCRIPTION	(7) QTY
					FIG. 52 FUEL SYSTEM ACCESSORIES (USED ON S/N 8RDCD301513HC THRU 8RDCD301619HC)	
1	PAFZZA	4710-01-434-3531	15434	3917280	TUBE ASSY, METAL	2
2	PAFZZA	5305-01-414-1415	15434	3916361	SCREW, MACHINE	2
3	PAFZZA	5310-01-195-1441	15434	3963983	WASHER	2
4	PAFZZA	5305-01-193-4506	15434	3900631	SCREW,CAP,HEXAGON HD, M8X1.25X25	2
5	PAFZZA	2910-01-268-8736	15434	3936318	PUMP,FUEL TRANSFER	1
6	PAFZZA	5340-01-490-5737	0B8S3	3939258	GASKET	2
7	PAFZZA	5365-01-387-6578	15434	3914284	SPACER, PLATE	1

END OF FIGURE

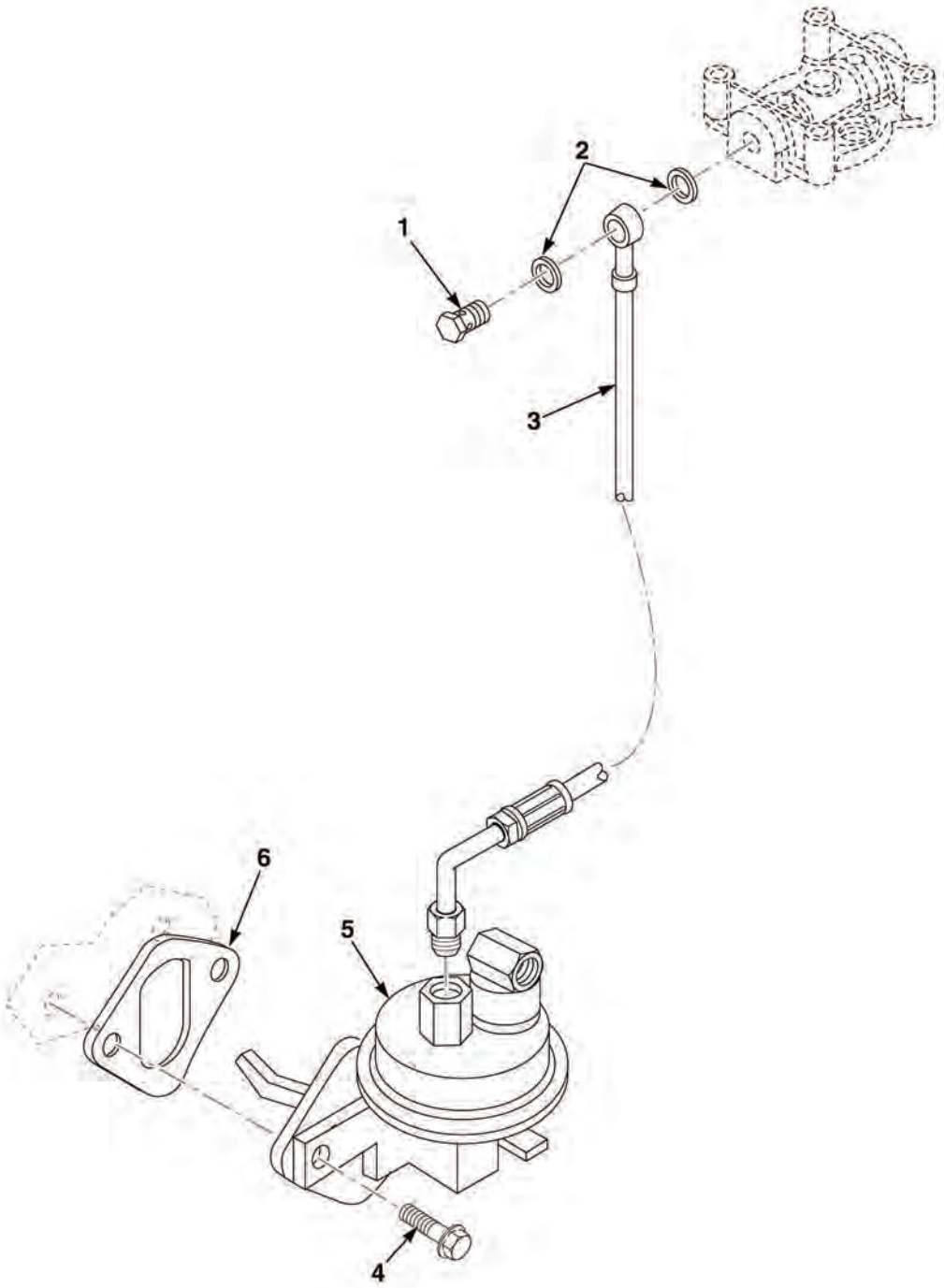

FIG. 53 FUEL SYSTEM ACCESSORIES (USED ON S/N 8RDCD301620HC AND SUBSEQUENT)

(1) ITEM NO	(2) SMR CODE	(3) NSN	(4) CAGEC	(5) PART NUMBER	(6) DESCRIPTION	(7) QTY
					FIG. 53 FUEL SYSTEM ACCESSORIES (USED ON S/N 8RDCD301620HC AND SUBSEQUENT)	
1	PAFZZA	5305-01-414-1415	15434	3916361	SCREW, MACHINE	1
2	PAFZZA	5310-01-195-1441	15434	3963983	WASHER	2
3	PAFZZA	4720-01-551-1841	15434	3970375	HOSE ASSEMBLY	1
4	PAFZZA	5305-01-193-4506	15434	3900631	SCREW,CAP,HEXAGON HD, M8X1.25X25	2
5	PAFZZA	2915-01-508-3517	0B8S3	3966156	PUMP, FUEL TRANSFER	1
6	PAFZZA	5340-01-490-5737	0B8S3	3939258	GASKET	1

END OF FIGURE

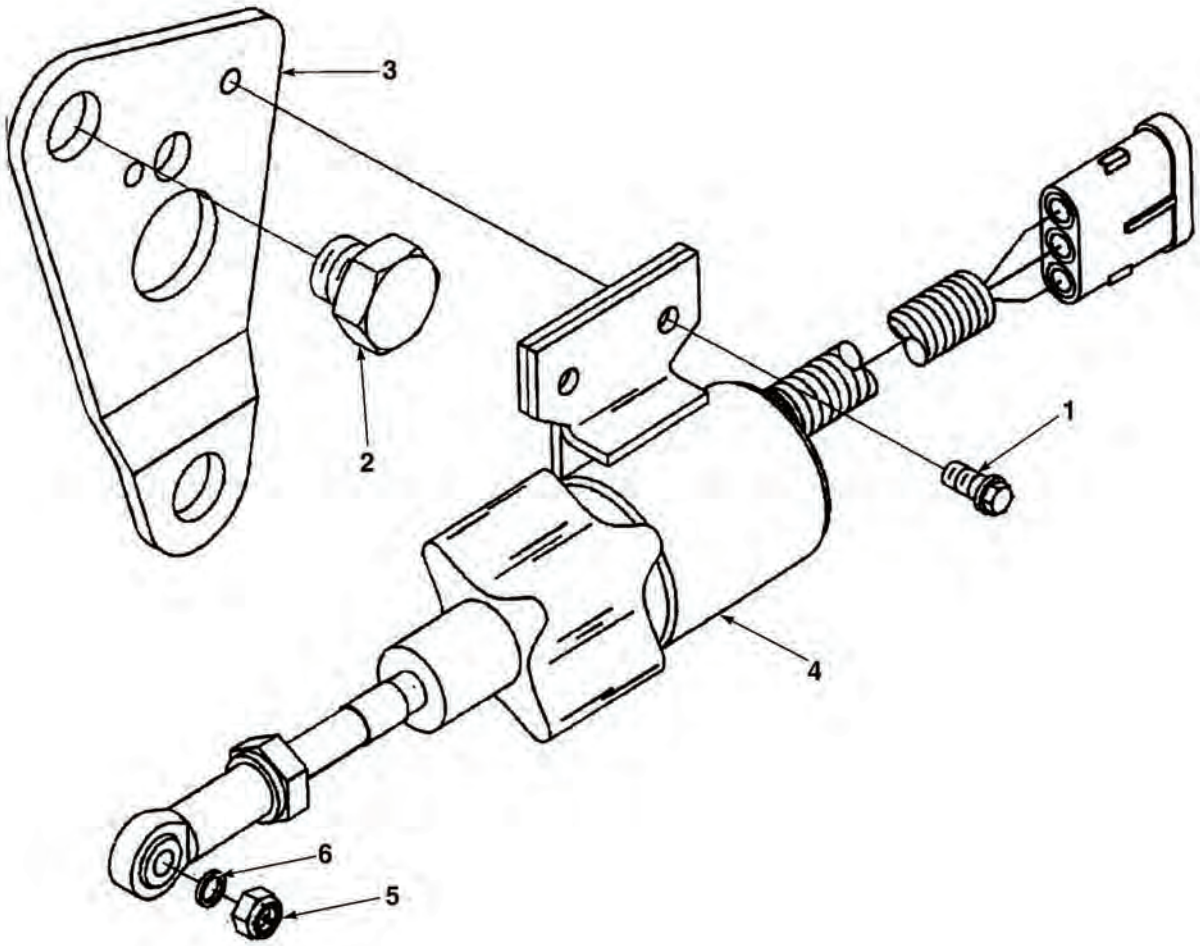

FIG. 54 FUEL SHUTOFF VALVE

(1) ITEM NO	(2) SMR CODE	(3) NSN	(4) CAGEC	(5) PART NUMBER	(6) DESCRIPTION	(7) QTY
					FIG. 54 FUEL SHUTOFF VALVE	
1	PAFZZA	5305-01-234-3757	15434	3900626	SCREW,CAP,HEXAGON HD, M6X1.00X12	2
2	PAFZZA	5305-01-502-8165	0B8S3	3991132	SCREW,CAP,HEXAGON HD	1
3	PAFZZA	5975-01-495-6552	0B8S3	3930590	MOUNTING BASE,ELECTRICAL	8
4	PAFZZA		15434	3932529	SOLENOID,ELECTRICAL	1
5	PAFZZA	5310-01-495-6556	15434	3934021	NUT,PLAIN,HEXAGON	2
6	PAFZZA	5310-01-495-6557	15434	3934022	WASHER,FLAT	1

END OF FIGURE

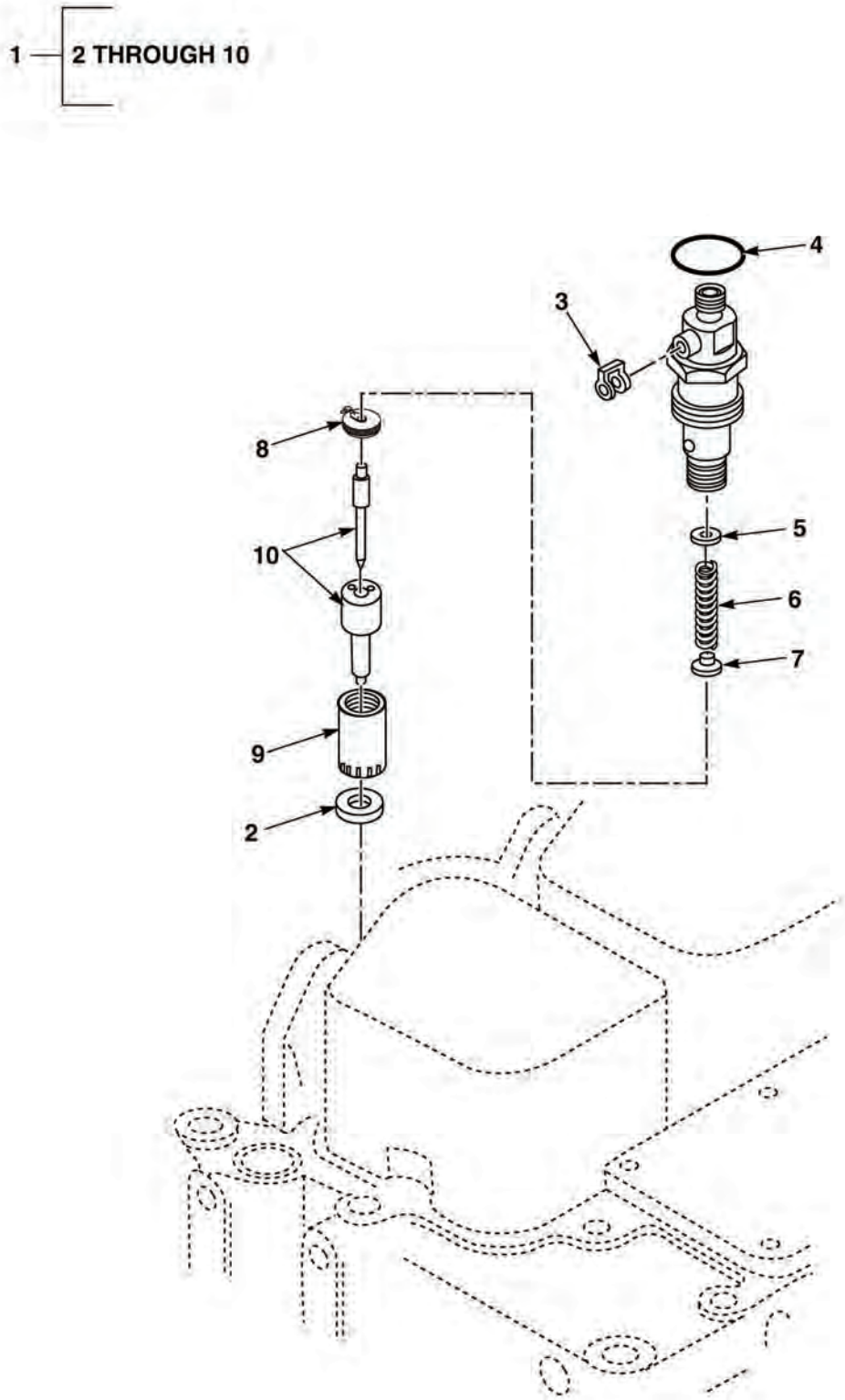

FIG. 55 FUEL INJECTOR (USED ON S/N 8RDCD301513HC THRU 8RDCD301619HC)

(1) ITEM NO	(2) SMR CODE	(3) NSN	(4) CAGEC	(5) PART NUMBER	(6) DESCRIPTION	(7) QTY
					FIG. 55 FUEL INJECTOR (USED ON S/N 8RDCD301513HC THRU 8RDCD301619HC)	
1	PAFFFA	4730-01-551-1814	33457	3316567S	INJECTOR,FUEL, 7MM TIP	4
2	PAFZZA	5310-01-270-8417	15434	3906659	•WASHER,SADDLE	1
3	PAFZZA	5330-01-195-5268	15434	3903380	•SEAL,BANJO CONNECT CONNECTOR	1
4	PAFZZA	5330-01-267-2985	15434	3909356	•GASKET	1
5	PAFZZA	5365-01-189-9028	15434	3905172	•SHIM,1.54 MM	1
5	PAFZZA	5365-01-189-7804	15434	3905163	•SHIM,1.24 MM	1
5	PAFZZA	5310-01-189-5407	15434	3905165	•SHIM,1.30 MM	1
5	PAFZZA	5365-01-188-1056	15434	3905175	•SHIM,1.64 MM	1
5	PAFZZA	5365-01-191-3535	15434	3905178	•SHIM,1.74 MM	1
5	PAFZZA	5365-01-189-9026	15434	3905167	•SHIM,1.38 MM	1
5	PAFZZA	5365-01-191-0775	15434	3905168	•SHIM,1.40 MM	1
5	PAFZZA	5310-01-191-7512	15434	3905169	•SHIM,1.44 MM	1
5	PAFZZA	5365-01-189-9027	15434	3905171	•SHIM,1.50 MM	1
5	PAFZZA	5365-01-189-9029	15434	3905173	•SHIM,1.58 MM	1
5	PAFZZA	5365-01-189-9030	15434	3905174	•SHIM,1.60 MM	1
5	PAFZZA	5365-01-191-3534	15434	3905164	•SHIM,1.28 MM	1
5	PAFZZA	5365-01-191-0774	15434	3905162	•SHIM,1.20 MM	1
5	PAFZZA	5310-01-191-6333	15434	3905170	•SHIM,1.48 MM	1
5	PAFZZA	5310-01-189-7499	15434	3905183	•SHIM,1.88 MM	1
5	PAFZZA	5310-01-189-5408	15434	3905176	•SHIM,1.68 MM	1
5	PAFZZA	5365-01-191-2413	15434	3905160	•SHIM,1.14 MM	1
5	PAFZZA	5365-01-191-3533	15434	3905161	•SHIM,1.18 MM	1
5	PAFZZA	5310-01-189-5413	15434	3905186	•SHIM,1.98 MM	1
5	PAFZZA	5310-01-191-2494	15434	3905166	•SHIM,1.34 MM	1
5	PAFZZA	5310-01-189-5411	15434	3905184	•SHIM,1.90 MM	1
5	PAFZZA	5310-01-189-5410	15434	3905182	•SHIM,1.84 MM	1
5	PAFZZA	5310-01-189-5409	15434	3905181	•SHIM,1.80 MM	1
5	PAFZZA	5365-01-191-2411	15434	3905180	•SHIM,1.78 MM	1
5	PAFZZA	5365-01-191-0776	15434	3905177	•SHIM,1.70 MM	1
5	PAFZZA	5365-01-188-1054	15434	3905156	•SHIM,1.00 MM	1
5	PAFZZA	5365-01-190-2131	15434	3905157	•SHIM,1.04 MM	1
5	PAFZZA	5365-01-188-1055	15434	3905158	•SHIM,1.08 MM	1
5	PAFZZA	5365-01-191-3532	15434	3905159	•SHIM,1.10 MM	1
5	PAFZZA	5310-01-189-5412	15434	3905185	•SHIM,1.94 MM	1
6	PAFZZA	5360-01-195-0554	15434	3905152	•SPRING,HELICAL, COMPRESSION	4
7	PAFZZA	5340-01-428-7590	15434	3917945	•SEAT,HELICAL,COMPRESSION SPRING	4
8	PAFZZA	5340-01-428-7589	15434	3917946	•SEAT,HELICAL,COMPRESSION SPRING	4
9	PAFZZA	2910-01-210-5088	15434	3905155	•RETAINER,INJECTION	4
10	PAFZZA	2910-01-495-6541	15434	3929492	•NOZZLE,INJECTOR	4

END OF FIGURE

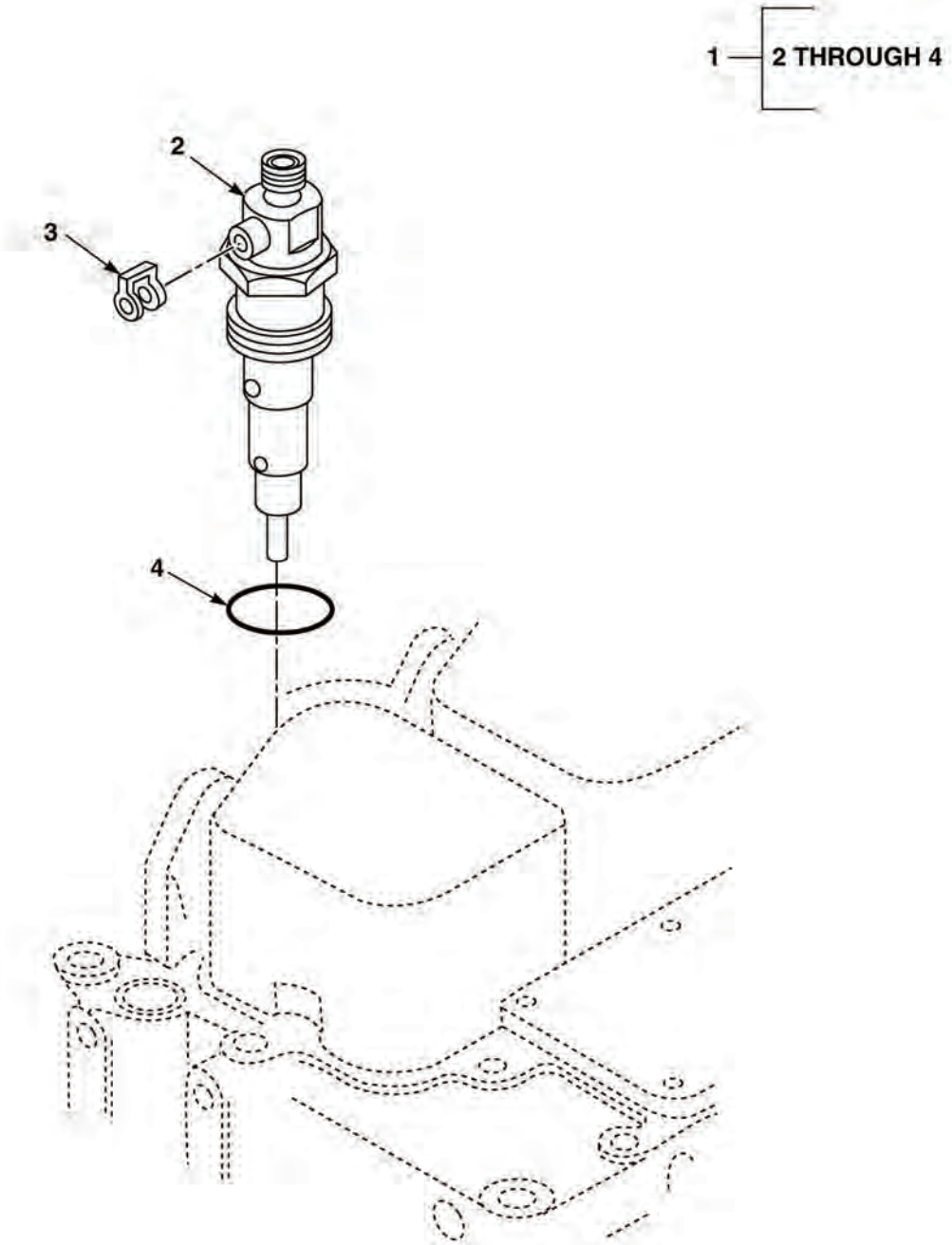

FIG. 56 FUEL INJECTOR (USED ON S/N 8RDCD301620HC AND SUBSEQUENT)

(1) ITEM NO	(2) SMR CODE	(3) NSN	(4) CAGEC	(5) PART NUMBER	(6) DESCRIPTION	(7) QTY
					FIG. 56 FUEL INJECTOR (USED ON S/N 8RDCD301620HC AND SUBSEQUENT)	
1	PAFZZA	4910-01-551-3953	15434	4089728	KIT,INJECTOR	4
2	XAFZZA		15434	3961868	•INJECTOR	1
3	PAFZZA	5330-01-195-5268	15434	3903380	•SEAL,BANJO CONNECT CONNECTOR	1
4	PAFZZA	5330-01-267-2985	15434	3909356	•GASKET	1

END OF FIGURE

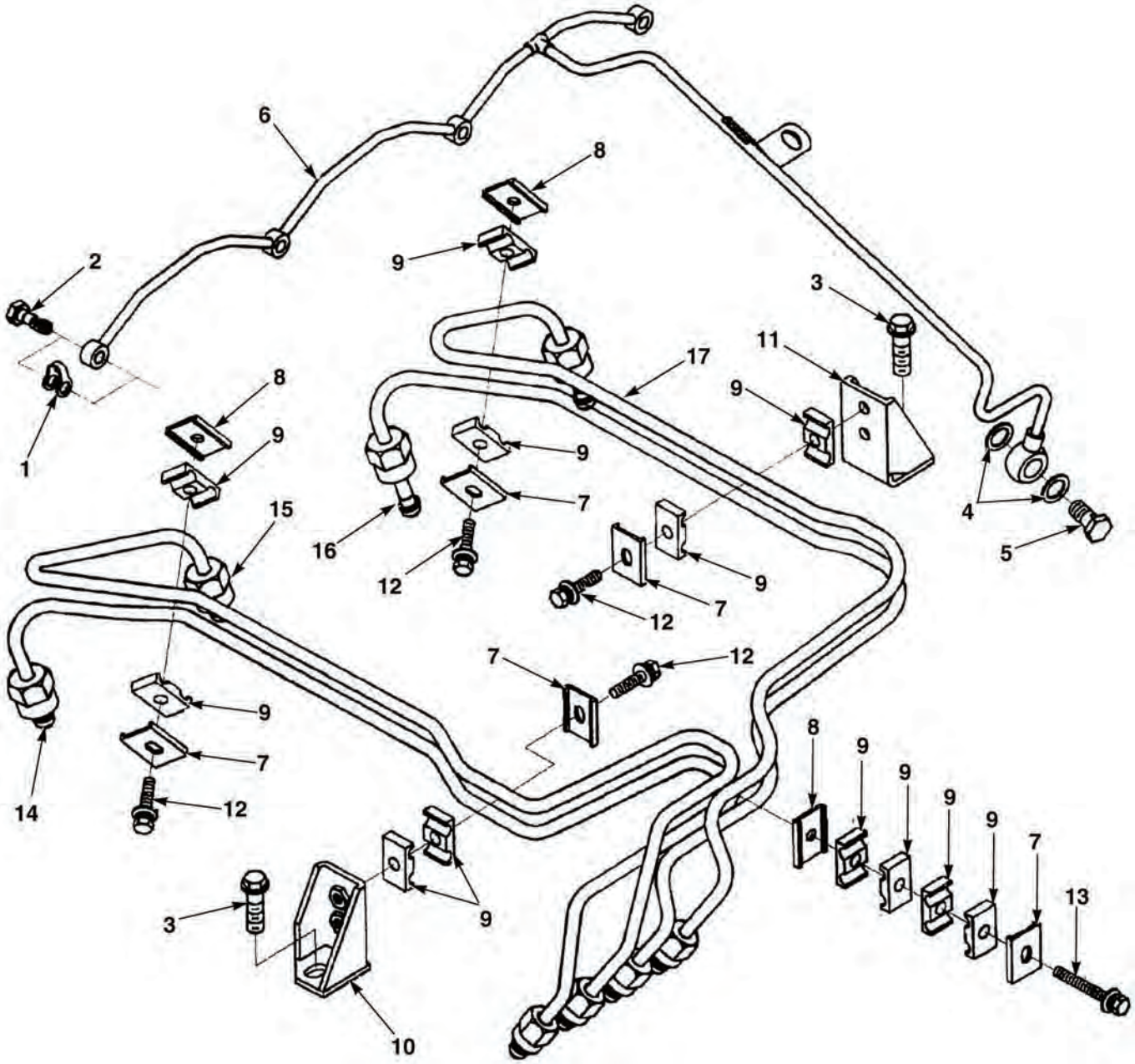

FIG. 57 FUEL PLUMBING (USED ON S/N 8RDCD301513HC THRU 8RDCD301619HC)

(1) ITEM NO	(2) SMR CODE	(3) NSN	(4) CAGEC	(5) PART NUMBER	(6) DESCRIPTION	(7) QTY
					FIG. 57 FUEL PLUMBING (USED ON S/N 8RDCD301513HC THRU 8RDCD301619HC)	
1	PAFZZA	5330-01-195-5268	15434	3903380	SEAL,BANJO CONNECT CONNECTOR	4
2	PAFZZA	4730-01-195-0825	15434	3905307	BOLT,FLUID PASSAGE	4
3	PAFZZA	5305-01-245-3192	15434	3918109	SCREW,CAP,HEXAGON HD, M8 X 1.25 X 25	2
4	PAFZZA	5310-01-381-5769	15434	3918188	WASHER,FLAT	2
5	PAFZZA	4820-01-383-5527	15434	3924726	VALVE, CHECK	1
6	PAFZZA		15434	3927633	MANIFOLD, FUEL	1
7	PAFZZA	5340-01-240-2696	15434	3904711	BRACKET,DOUBLE ANGLE	5
8	PAFZZA	5340-01-372-0328	15434	391771700	HANGER,PIPE	3
9	PAFZZA	5340-01-424-1807	15434	3917746	BUMPER,NONMETALLIC	12
10	PAFZZA	5342-01-407-2757	15434	3282942	FAIRLEAD,BLOCK	1
11	PAFZZA	5340-01-424-1808	15434	328294200	BRACKET,ANGLE	1
12	PAFZZA	5305-01-340-8396	15434	3920854	SCREW,CAP,HEXAGON HD, M5-0.80X20	4
13	PAFZZA	5305-01-495-6543	15434	3920855	SCREW,MACHINE	1
14	PAFZZA	4710-01-495-6548	0B8S3	3932157	TUBE, INJ FUEL LINE, NO. 1 CYLINDER	1
15	PAFZZA	4710-01-495-6548	15434	3932158	TUBE, INJ FUEL LINE, NO. 2 CYLINDER	1
16	PAFZZA	4710-01-495-6548	15434	3932159	TUBE, INJ FUEL LINE, NO. 3 CYLINDER	1
17	PAFZZA	4710-01-495-6548	15434	3932160	TUBE,INJ FUEL LINE, NO. 4 CYLINDER	1

END OF FIGURE

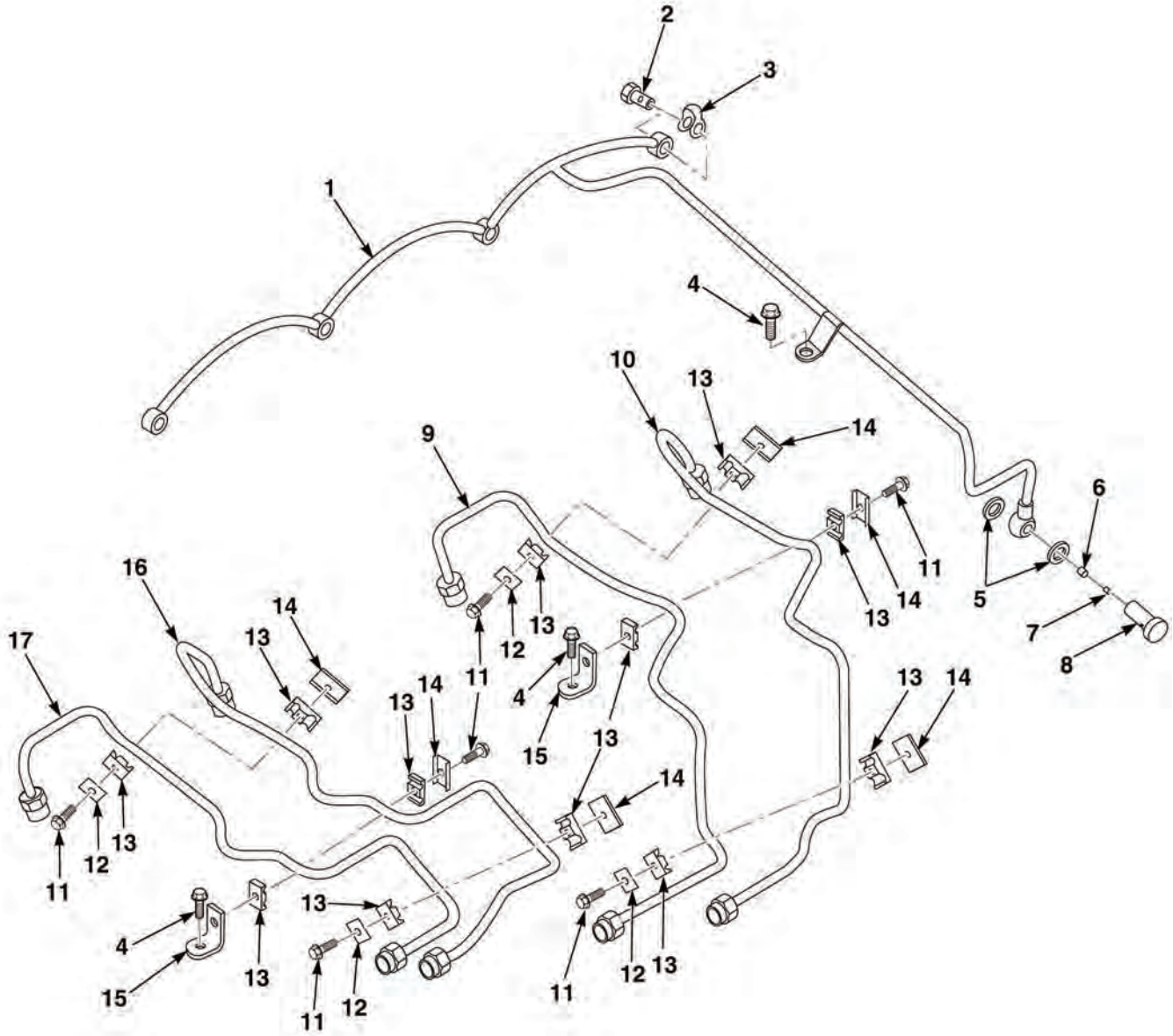

FIG. 58 FUEL PLUMBING (USED ON S/N 8RDCD301620HC AND SUBSEQUENT)

(1) ITEM NO	(2) SMR CODE	(3) NSN	(4) CAGEC	(5) PART NUMBER	(6) DESCRIPTION	(7) QTY
					FIG. 58 FUEL PLUMBING (USED ON S/N 8RDCD301620HC AND SUBSEQUENT)	
1	PAFZZA	2805-01-508-3525	0B8S3	3966863	MANIFOLD,INTAKE	1
2	PAFZZA	4730-01-195-0825	15434	3905307	BOLT,FLUID PASSAGE	4
3	PAFZZA	5330-01-195-5268	15434	3903380	SEAL,BANJO CONNECT CONNECTOR	4
4	PAFZZA	5305-01-245-3192	15434	3918109	SCREW,CAP,HEXAGON HD, M8 X 1.25 X 25	3
5	PAFZZA	5310-01-381-5769	15434	3918188	WASHER,FLAT	2
6	PAFZZA	5315-01-551-5102	15434	3916895	PIN,ROLL	1
7	PAFZZA	4820-01-070-9710	15434	167157	BALL,CHECK	1
8	PAFZZA	5305-01-551-8090	15434	3924723	SCREW,BANJO CONNECTOR	1
9	PAFZZA	4710-01-551-1842	15434	3968456	TUBE ASSEMBLY,METAL	1
10	PAFZZA	4710-01-551-1241	15434	3968458	TUBE ASSEMBLY,METAL	1
11	PAFZZA	5305-01-340-8396	15434	3920854	SCREW,CAP,HEXAGON HD, M5-0.80X20	6
12	PAFZZA	5340-01-551-1244	15434	3991276	BRACE,TUBE	6
13	PAFZZA	5340-01-424-1807	15434	3917746	BUMPER,NONMETALLIC	6
14	PAFZZA	5340-01-551-6342	15434	3991277	BRACE,TUBE	6
15	PAFZZA	5340-01-551-1248	15434	3935746	BRACE,TUBE	2
16	PAFZZA	4710-01-551-1251	15434	3968453	TUBE ASSEMBLY,METAL	1
17	PAFZZA	4710-01-551-7278	15434	3968451	TUBE ASSEMBLY,METAL	1

END OF FIGURE

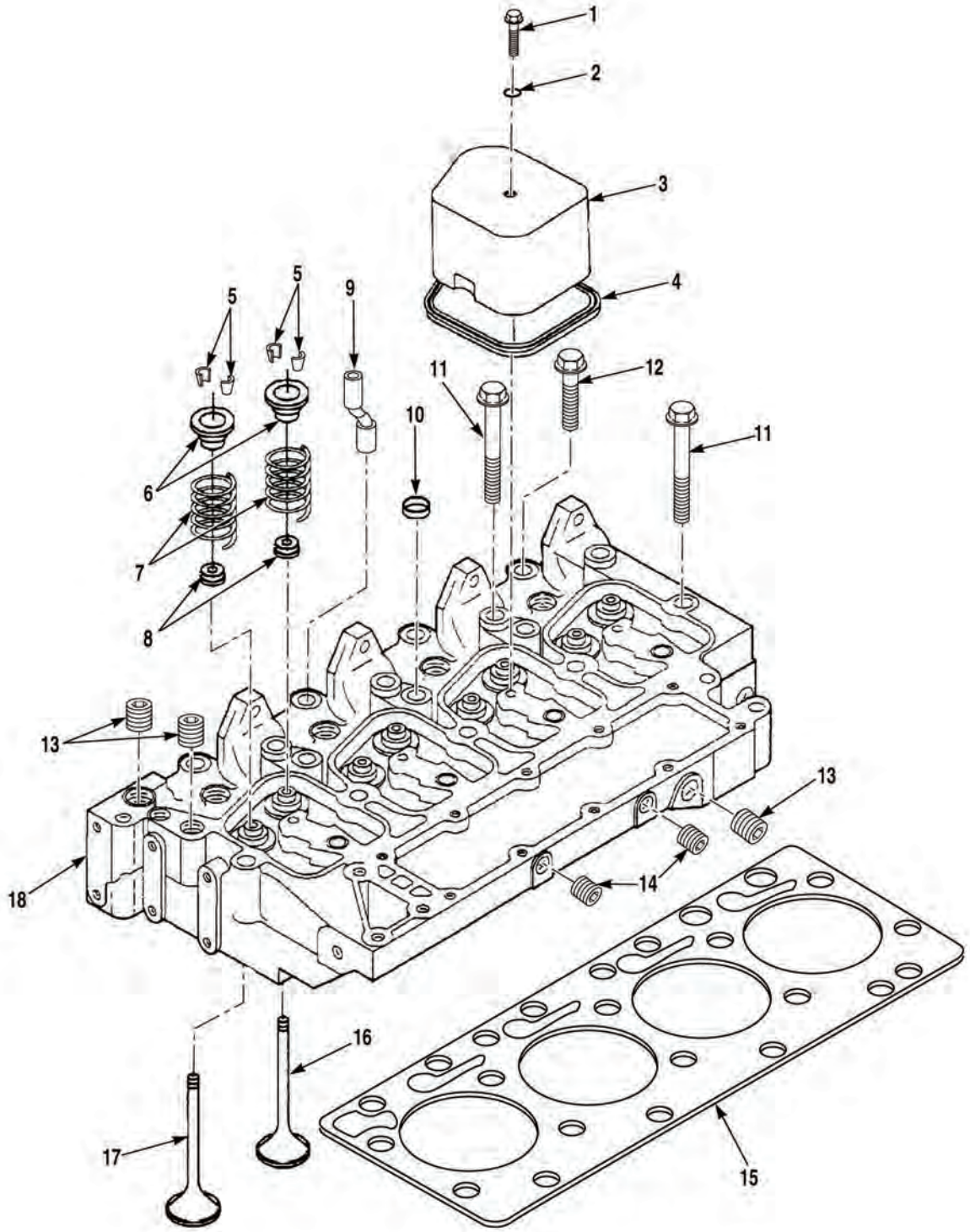

FIG. 59 CYLINDER HEAD

(1) ITEM NO	(2) SMR CODE	(3) NSN	(4) CAGEC	(5) PART NUMBER	(6) DESCRIPTION	(7) QTY
					FIG. 59 CYLINDER HEAD	
1	PAFZZA	5305-01-266-8569	15434	3907049	SCREW,CAP,HEXAGON HD, M8 X1.25 X 21	3
2	PAFZZA	5330-01-492-7729	15434	3935449	GASKET	3
3	PAFZZA	5340-01-455-2947	15434	3928404	COVER,ACCESS	3
4	PAFZZA	5330-01-453-7148	15434	3930906	GASKET,VALVE COVER	3
5	PAFZZA	2815-01-199-0448	15434	3900250	COLLET,VALVE	16
6	PAFZZA	2815-01-194-3775	15434	3900299	RETAINER,VALVE SPRING (USED ON S/N 8RDCD301513HC THRU 8RDCD301619HC)	8
6	PAFZZA	5340-01-547-2843	15434	3957913	RETAINER,VALVE SPRING (USED ON S/N 8RDCD301620HC AND SUBSEQUENT)	8
7	PAFZZA	2805-01-502-6984	0B8S3	3932453	SPRING,VALVE RETAINER	8
8	PAFZZA	5330-01-502-6750	0B8S3	3901097	SEAL,VALVE STEM	8
8	PAFZZA	5330-01-525-8639	15434	395791200	SEAL,PLAIN	8
9	PAFZZA	4310-01-502-7207	0B8S3	3934712	TUBE,AFTERCOOLER	2
10	PAFZZA	5340-01-386-1802	15434	3922073	PLUG,EXPANSION (USED ON S/N 8RDCD301513HC THRU 8RDCD301619HC)	2
10	PAFZZA	5340-01-386-1802	15434	3922073	PLUG,EXPANSION (USED ON S/N 8RDCD301620HC AND SUBSEQUENT)	1
11	PAFZZA	5306-01-340-8971	15434	3920780	BOLT,MACHINE, M12-1.75 X 120	2
12	PAFZZA	5305-01-342-5585	15434	3920779	SCREW,CAP,HEXAGON HD, M12 X 1.75 X 70	4
13	PAFZZA	4730-99-214-1783	K4843	3008468	PLUG,PIPE	3
14	PAFZZA	4730-01-292-4386	15434	3906619	PLUG,PIPE	2
15	PAFZZA	5330-01-551-1713	15434	3283569	GASKET,CYLINDER HEAD (USED ON S/N 8RDCD301513HC THRU 8RDCD301619HC)	1
15	PAFZZA	5330-01-311-5981	15434	3283333	GASKET,CYLINDER HD HEAD (USED ON S/N 8RDCD301620HC AND SUBSEQUENT)	1
16	PAFZZA	2815-01-340-9220	15434	3802356	VALVE,POPPET,ENGINE	2
17	PAFZZA	2815-01-340-9219	15434	3802355	VALVE,POPPET,ENGINE	2
18	PAFZZA		15434	3933419	HEAD,CYLINDER (USED ON S/N 8RDCD301513HC THRU 8RDCD301619HC)	1
18	PAFZZA	2815-01-552-2741	15434	3966448	HEAD,CYLINDER (USED ON S/N 8RDCD301620HC AND SUBSEQUENT)	1

END OF FIGURE

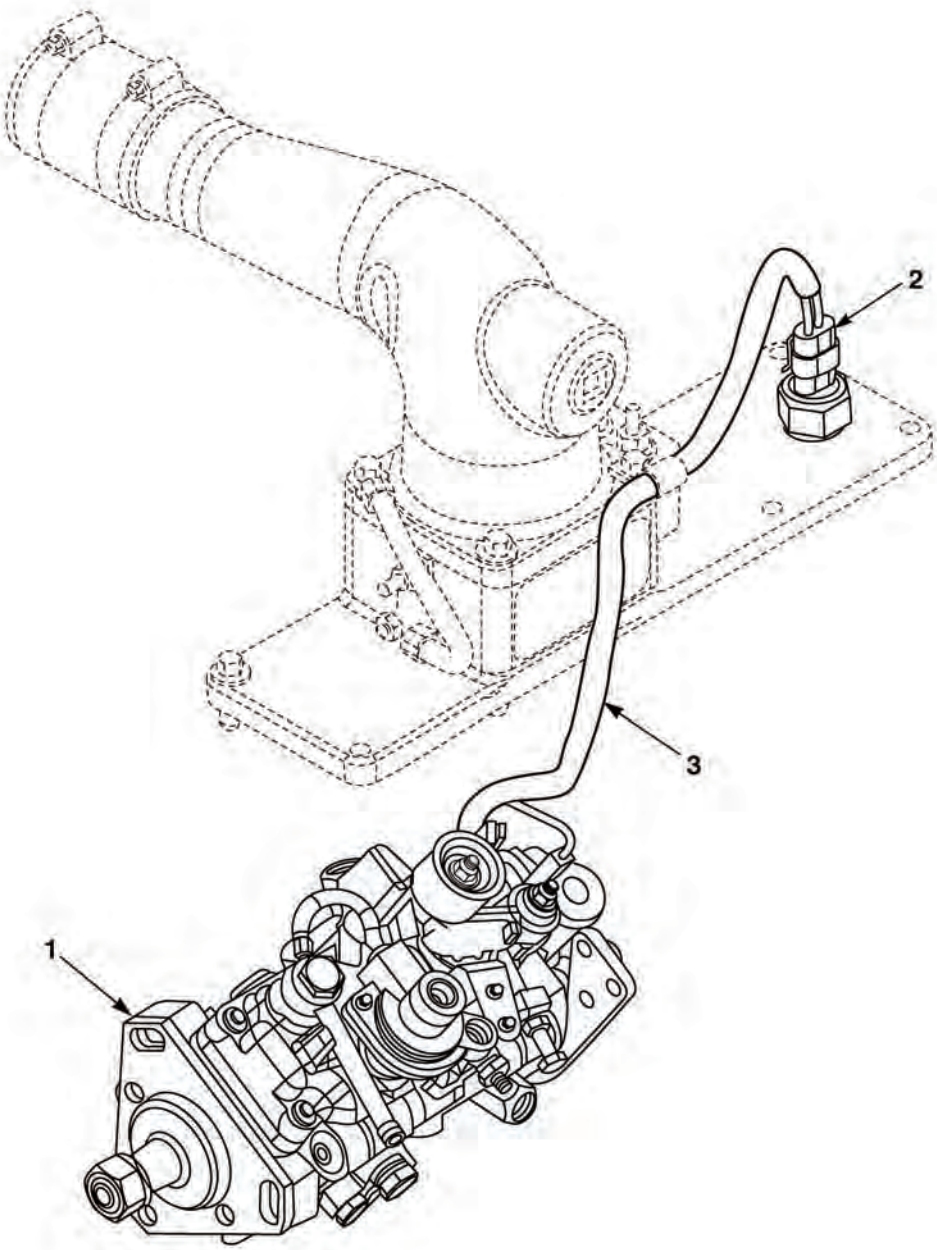

FIG. 60 FUEL PUMP

(1) ITEM NO	(2) SMR CODE	(3) NSN	(4) CAGEC	(5) PART NUMBER	(6) DESCRIPTION	(7) QTY
					FIG. 60 FUEL PUMP	
1	PAFZZA	5930-01-551-2868	15434	3915945	SWITCH,THERMO	1
2	PAFZZA	6150-01-551-5329	15434	3969393	HARNESS,WIRE	1
3	PAFZZA	2910-01-551-1638	15434	3957710	PUMP,FUEL INJECTION	1

END OF FIGURE

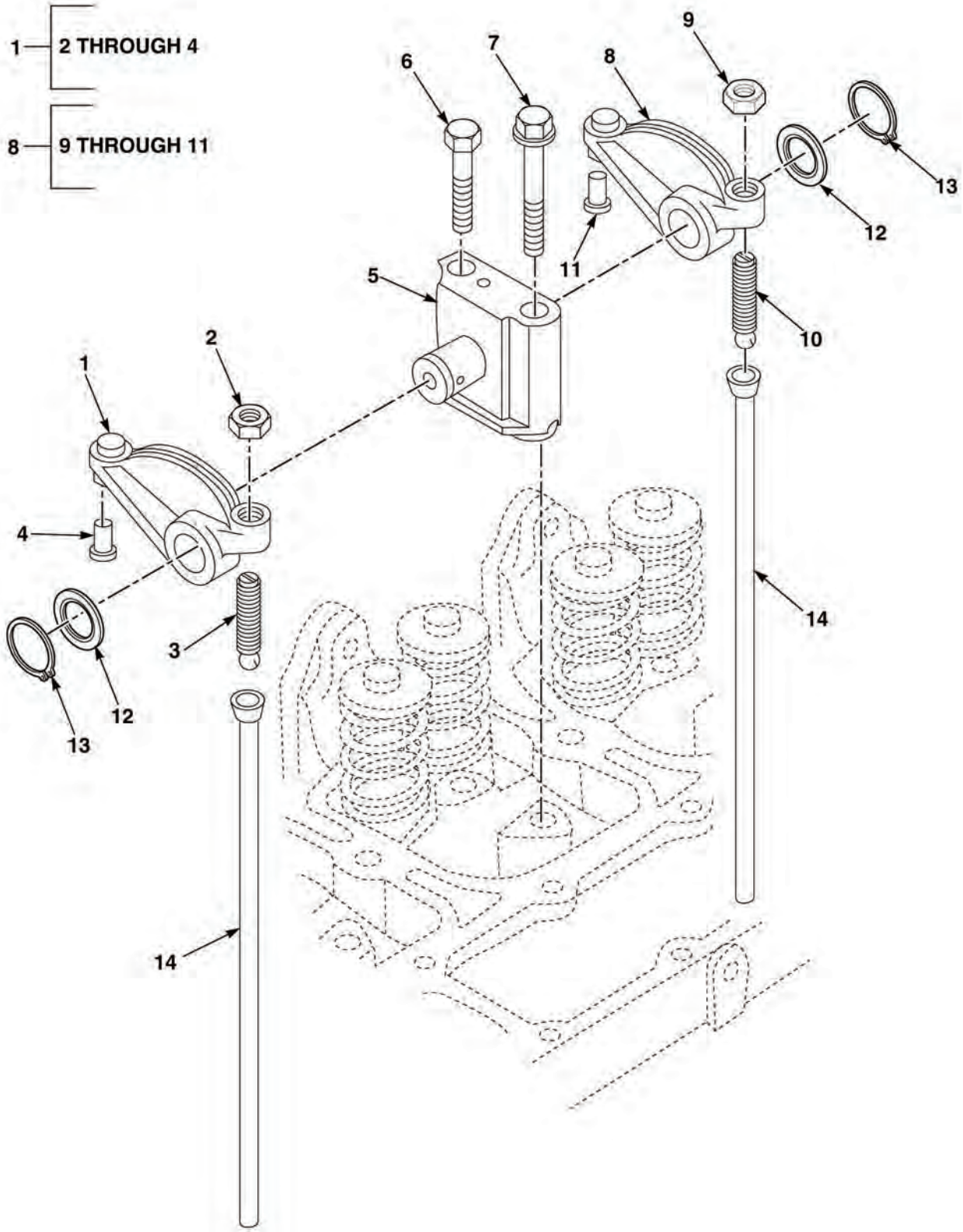

FIG. 61 ROCKER LEVERS

(1) ITEM NO	(2) SMR CODE	(3) NSN	(4) CAGEC	(5) PART NUMBER	(6) DESCRIPTION	(7) QTY
					FIG. 61 ROCKER LEVERS	
1	PAFZZA	2815-01-297-9113	15434	3910811	ROCKER ARM,ENGINE PO	1
2	PAFZZA	5310-01-440-6752	15434	3927692	•NUT, PL HEX, 3/8-24	1
3	PAFZZA	5305-01-508-8103	0B8S3	3937438	•SETSCREW	1
4	XAFZZA	5365-01-543-0715	15434	3900705	BUSHING BLANK	1
5	PAFZZA	2815-01-438-2910	15434	3922488	SUPPORT,ROCKER LEVER	4
6	PAFZZA	5305-01-191-2140	15434	3901221	SCREW,CAP,HEXAGON HD, M8 X 1.25 X75	4
7	PAFZZA	5305-01-340-8393	0B8S3	3920781	SCREW,CAP,HEXAGON HD	4
8	PAFZZA	2815-01-307-0096	15434	3910810	LEVER,ROCKER, POPPET VALVE	4
9	PAFZZA	5310-01-440-6752	15434	3927692	•NUT, PLAIN HEX, 3/8-24	1
10	PAFZZA	5305-01-508-8103	0B8S3	3937438	•SETSCREW	1
11	XAFZZA	5365-01-543-0715	15434	3900705	BUSHING BLANK	1
12	PAFZZA	5310-01-202-3054	15434	3900245	WASHER,FLAT	8
13	PAFZZA	5325-01-320-1021	15434	3900242	RING,RETAINING	8
14	PAFZZA	2815-01-194-3884	15434	3923262	PUSH ROD,ENGINE POPPET	8

END OF FIGURE

(1) ITEM NO	(2) SMR CODE	(3) NSN	(4) CAGEC	(5) PART NUMBER	(6) DESCRIPTION	(7) QTY
					BULK ITEMS	
1	PAFZZA	4720-01-551-1307	24164	24GMVXCTN,70136	HOSE,NONMETALLIC 100 FT ROLL	1
2	PAFZZA	5680-01-133-9783	39428	93625K16	STRIP,WEATHER 50 FT ROLL	1
3	PAFZZA	4720-01-323-4276	01276	FC350-05	HOSE,NONMETALLIC	1
4	PAFZZA	4720-01-551-6386	27901	59018	TUBING,NONMETALLIC	1
5	PAFZZA	3020-01-532-7326	39428	6261K534	CHAIN,ROLLER	1
6	PAFZZA	3020-01-551-1201	39428	6261K536	CHAIN,ROLLER	1
7	PAFZZA	4720-01-551-1296	24161	G81800-0014HG-14	SLEEVE,NYLON 300 FT ROLL	6
8	PAFZZA	4720-01-552-0527	24161	G81800-0020HG-20	SLEEVE,NYLON 300 FT ROLL	4
9	PAFZZA	4720-01-552-1170	24161	20GMVXCTN,70186	HOSE,NONMETALLIC 100 FT ROLL	1
10	PAFZZA	4720-01-551-6567	01276	FC466-04	HOSE,NONMETALLIC	1
11	PAFZZA	4720-01-552-5162	3B543	K1138-08	HOSE,NONMETALLIC	1
12	PAFZZA	4720-01-551-6570	3S098	16RLA	HOSE,NONMETALLIC	1
13	PAFZZA	4720-01-551-1313	04NP0	1BKHORIZ200	HOSE,NONMETALLIC 450 FT ROLL	1
14	PAFZZA	4720-01-551-6527	04NP0	11/2BKHORIZ200	HOSE,NONMETALLIC 300 FT ROLL	1
15	PAFZZA	4720-01-551-6563	62600	390SDBK1-1/2	HOSE,NONMETALLIC 100 FT ROLL	1
16	PAFZZA	4720-01-552-1322	04NP0	2BKCONAG125	HOSE,NONMETALLIC 100 FT LENGTH	1
17	PAFZZA	4010-00-451-3533	81349	M83420/4-002	CABLE,WIRE ROPE	1
18	PAFZZA	4720-01-551-7333	39428	5633K23	HOSE,NONMETALLIC	1

END OF FIGURE

APPENDIX F

TORQUE LIMITS

F-1. SCOPE.

This section provides general torque limits for the screws, hoses and fittings used on the truck. Special torque limits are listed in the maintenance procedures for applicable components. The general torque limits given in this appendix shall be used when specific torque limits are not indicated in the maintenance procedure. These general torque limits cannot be applied to screws that retain rubber components. The rubber components will be damaged before the torque limit is reached. If a special torque limit is not given in the maintenance instructions, tighten the screw or nut until it touches the metal bracket then tighten it one more turn.

F-2. TORQUE LIMITS.

Table F-1 lists the torque limits for wet flange nuts. Table F-2 lists the torque limits for wet socket head capscrews. Table F-3 lists dry torque limits for capscrews. Dry torque limits are used on screws that do not have high pressure lubricants applied to the threads. Table F-4 lists wet torque limits for capscrews. Wet torque limits are used on screws that have high pressure lubricants applied to the threads. Table F-5 lists the torque limits for SAE 37 degree flare hose connections. Table F-6 lists the torque limits for SAE 45 degree flare hose connections. Table F-7 lists the torque limits for ORS preformed packing face seal hose connections. Table F-8 lists the torque limits for NPSM swivel connections.

F-3. HOW TO USE TORQUE TABLE.

a. Screws and Nuts.

(1) Measure the diameter of the screw you are installing with a ruler.

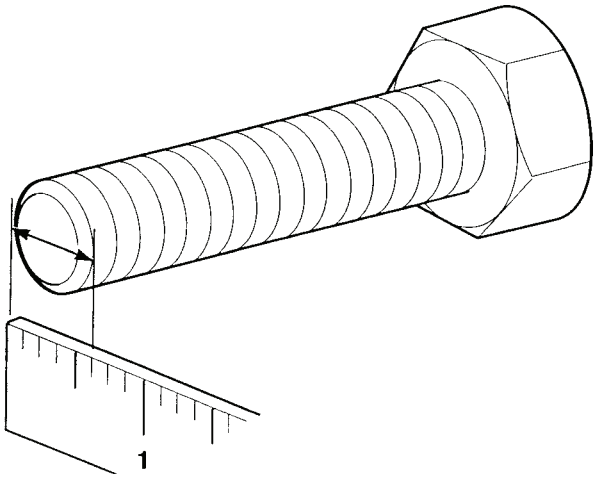

F-3. HOW TO USE TORQUE TABLE (CONT).

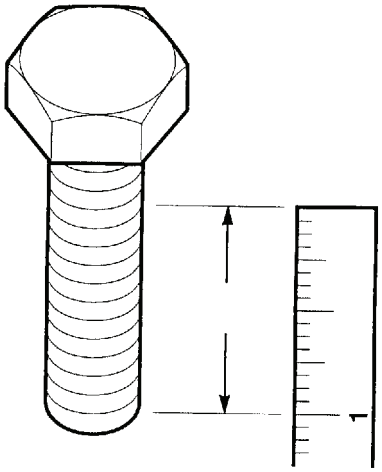

(2) Measure out one inch with a ruler and count the number of threads per inch.

(3) Under the heading SIZE, look down the left hand column until you find the diameter of the screw you are installing (there will usually be two lines beginning with the same size).

(4) In the second column under SIZE, find the number of threads per inch that matches the number of threads per inch you counted in Step 2. (Not required for metric screws.)

(5) To find the grade screw you are installing, match the markings on the head to the correct picture of CAPSCREW HEAD MARKINGS on the torque table.

(6) Look down the column under the picture you found in Step 5 until you find the torque limit (lb-ft or N·m) for the diameter and threads per inch of the screw you are installing.

(7) Use wet torque values.

CAPSCREW HEAD MARKINGS

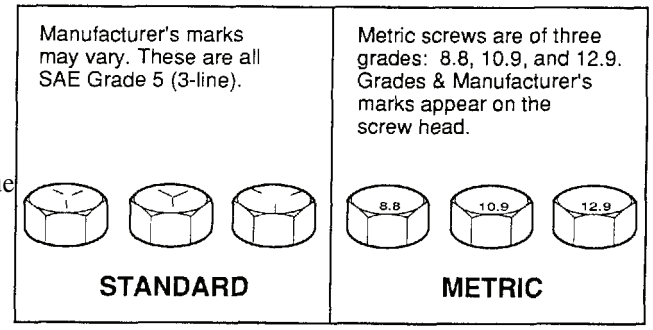

Table F-1. Torque Limits For Wet Flange Nuts

SPIRALOCK FLANGE NUT MARKINGS GRADE 8	DIAMETER IN.	DIAMETER MM	THREADS PER INCH	TORQUE LB-FT	TORQUE N·m
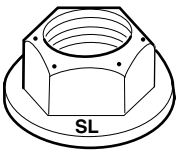	1/4	6.35	20	15	20
	5/16	7.94	18	25	34
	3/8	9.65	16	45	61
	1/2	12.70	13	110	149
	5/8	15.87	11	210	285
	3/4	19.05	10	375	508

Table F-2. Torque Limits For Wet Socket Head Cap Screws

	TORQUE IN FT. LBS. (CAP SCREWS) LUBED		
SOC HEAD/12 PT. 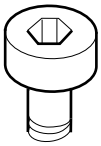	SIZE	SOC HD OR 12 PT	SOC FLAT HD
	.10-24	5	2.5
	.25-20	12	6
	.31-18	25	12
	.38-16	44	22
	.50-13	70	36
SOC FLAT HEAD 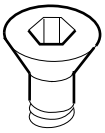	.56-12	106	53
	.62-11	212	106
	.75-10	375	187
	1.00-8	781	

b. Hoses and Fittings.

NOTE

Most fluid piping system sizes are measured by dash numbers. These are universally used abbreviations for the size of the component expressed as the numerator of the fraction with the denominator always being 16. For example, a -04 port is 4/16 or 1/4-inch. Dash numbers are usually nominal (in name only) and are abbreviations that make ordering of components easier.

(1) Measure the I.D./O.D. diameter with a caliper as shown.

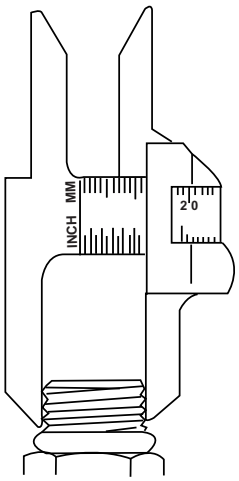

O.D.
(MALE THREADS)

(2) Under the heading MALE THREAD O.D. and FEMALE THREAD I.D., match the measurements with the row in table to determine proper torque.

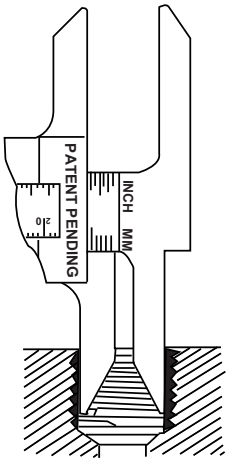

I.D.
(FEMALE THREADS)

(3) To find the sealing surface angle, use a protractor and measure the sealing surface parallel to the center line of the fitting.

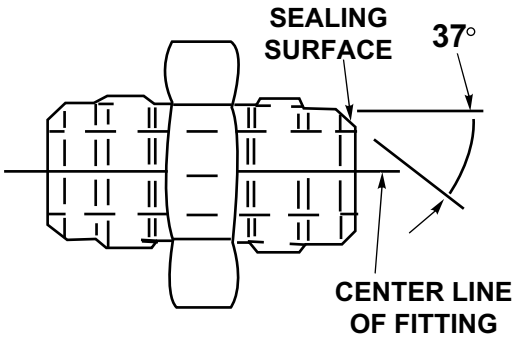

Table F-3. Torque Limits For Dry Fasteners

CAPSCREW HEAD MARKINGS

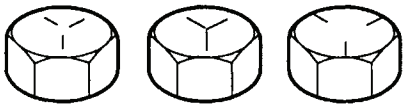

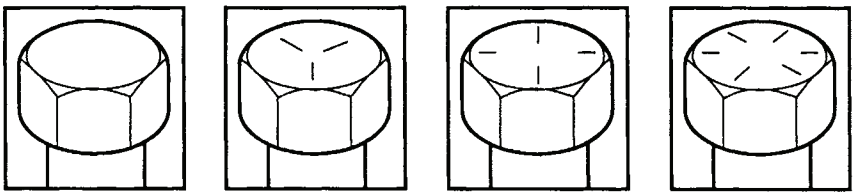

Manufacturer's marks may vary.
These are all SAE Grade 5 (3-line).

SIZE			TORQUE							
			SAE GRADE NO. 2		SAE GRADE NO. 5		SAE GRADE NO. 6 or 7		SAE GRADE NO. 8	
DIA. INCHES	THREADS PER INCH	MILLIMETERS	POUNDS FEET	NEWTON METERS	POUNDS FEET	NEWTON METERS	POUNDS FEET	NEWTON METERS	POUNDS FEET	NEWTON METERS
1/4	20	6.35	5	7	8	11	10	14	12	16
1/4	28	6.35	6	9	10	14	12	16	14	19
5/16	18	7.94	11	15	17	23	21	28	25	34
5/16	24	7.94	12	16	19	26	24	33	25	34
3/8	16	9.53	20	27	30	41	40	54	45	61
3/8	24	9.53	23	31	35	47	45	61	50	68
7/16	14	11.11	30	41	50	68	60	81	70	95
7/16	20		35	47	55	75	70	95	80	108
1/2	13	12.70	50	68	75	102	95	129	110	149
1/2	20		55	75	90	122	100	136	120	163
9/16	12	14.29	65	88	110	149	135	183	150	203
9/16	18		75	102	120	163	150	203	170	231
5/8	11	15.88	90	122	150	203	190	258	220	298
5/8	18		100	136	180	244	210	285	240	325
3/4	10	19.05	160	217	260	353	320	434	380	515
3/4	16		180	244	300	407	360	488	420	570
7/8	9	22.23	140	190	400	542	520	705	600	814
7/8	14		155	210	440	597	580	786	660	895
1	8	25.40	220	298	580	786	800	1085	900	1220
1	12		240	325	640	868	860	1166	1000	1356
1-1/8	7	25.58	300	407	800	1085	1120	1519	1280	1736
1-1/8	12		340	461	880	1193	1260	1709	1440	1953
1-1/4	7	31.75	420	570	1120	1519	1580	2142	1820	2468
1-1/4	12		460	624	1240	1681	1760	2387	2000	2712
1-3/8	6	34.93	560	759	1460	1980	2080	2820	2380	3227
1-3/8	12		640	868	1680	2278	2380	3227	2720	3688
1-1/2	6	38.10	740	1003	1940	2631	2780	3770	3160	4285
1-1/2	12		840	1139	2200	2983	3100	4204	3560	4827

Table F-4. Torque Limits For Wet Fasteners

CAPSCREW HEAD MARKINGS

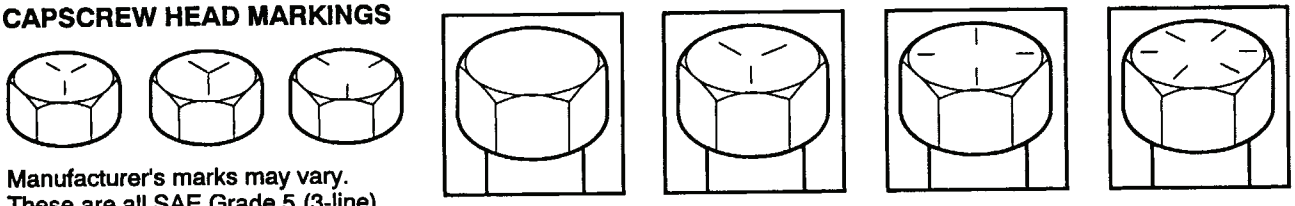

Manufacturer's marks may vary.
These are all SAE Grade 5 (3-line).

SIZE			TORQUE							
			SAE GRADE NO. 2		SAE GRADE NO. 5		SAE GRADE NO. 6 or 7		SAE GRADE NO. 8	
DIA. INCHES	THREADS PER INCH	MILLIMETERS	POUNDS FEET	NEWTON METERS	POUNDS FEET	NEWTON METERS	POUNDS FEET	NEWTON METERS	POUNDS FEET	NEWTON METERS
1/4	20	6.35	4	6	6	8	8	11	9	12
1/4	28	6.35	5	7	7	9	9	12	10	14
5/16	18	7.94	8	11	13	18	16	22	18	24
5/16	24	7.94	9	12	14	19	18	24	20	27
3/8	16	9.53	15	20	23	31	30	41	35	47
3/8	24	9.53	17	23	25	34	30	41	35	47
7/16	14	11.11	24	33	35	47	45	61	55	75
7/16	20		25	34	40	54	50	68	60	81
1/2	13	12.70	35	47	55	75	70	95	80	108
1/2	20		40	54	65	88	80	108	90	122
9/16	12	14.29	50	68	80	108	100	136	110	149
9/16	18		55	75	90	122	110	149	130	176
5/8	11	15.88	70	95	110	149	140	190	170	231
5/8	18		80	108	130	176	160	217	180	244
3/4	10	19.05	120	163	200	271	240	325	280	380
3/4	16		140	190	220	298	280	380	320	434
7/8	9	22.23	110	149	300	407	400	542	460	624
7/8	14		120	163	320	434	440	597	500	678
1	8	25.40	160	217	440	597	600	814	680	922
1	12		170	231	480	651	660	895	740	1003
1-1/8	7	25.58	220	298	600	814	840	1139	960	1320
1-1/8	12		260	353	660	895	940	1275	1080	1464
1-1/4	7	31.75	320	434	840	1139	1100	1492	1360	1844
1-1/4	12		360	488	920	1248	1320	1790	1500	2034
1-3/8	6	34.93	420	570	1100	1492	1560	2115	1780	2414
1-3/8	12		460	624	1260	1709	1780	2414	2040	2776
1-1/2	6	38.10	560	760	1460	1980	2080	2820	2360	3200
1-1/2	12		620	841	1640	2224	2320	3146	2660	3607

Table F-5. Torque Limits For 37 Degree Flare Hose Connections

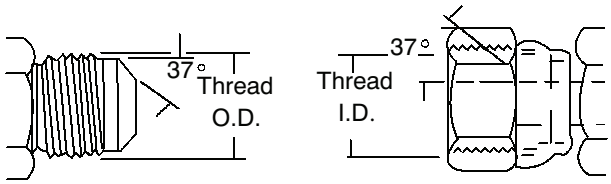

Male Half **Female Half**

INCH SIZE	DASH NO.	THREAD SIZE	TORQUE LB.FT.	TORQUE N·m
1/4	04	7/16-20	11-12	15-16
3/8	06	9/16-18	18-21	24-28
1/2	08	3/4-16	36-39	49-53
5/8	10	7/8-14	57-62	77-84
3/4	12	1 1/16-12	79-87	107-118
7/8	14	1 3/16-12	83-91	113-123
1	16	1 5/16-12	108-113	146-153
1 1/4	20	1 5/8-12	127-133	172-180
1 1/2	24	1 7/8-12	158-167	214-224
2	32	2 1/2-12	245-258	332-350

Table F-6. Torque Limits For 45 Degree Flare Hose Connections

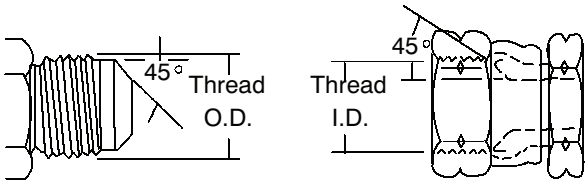

Male Half **Female Half**

INCH SIZE	DASH NO.	THREAD SIZE	TORQUE LB.FT.	TORQUE N·m
1/4	04	7/16-20	8-9	11-12
3/8	06	5/8-18	18-20	24-27
1/2	08	3/4-16	36-38	49-51
5/8	10	7/8-14	52-54	70-73
3/4	12	1 1/16-14	71-74	97-100

Table F-7. Torque Limits For ORS Preformed Packing Face Seal Hose Connections

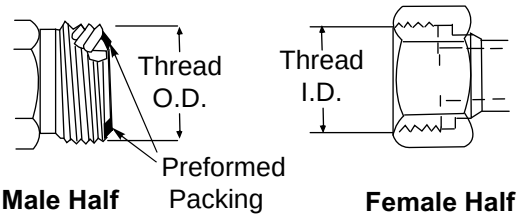

INCH SIZE	DASH NO.	THREAD SIZE	TORQUE LB.FT.	TORQUE N·m
1/4	04	9/16-18	10-12	14-16
3/8	06	11/16-16	18-20	24-27
1/2	08	13/16-16	32-35	43-47
5/8	10	1-14	46-50	62-68
3/4	12	1 3/16-12	65-70	88-95
1	16	1 7/16-12	108-113	146-153
1 1/4	20	1 11/16-12	127-133	172-180
1 1/2	24	2-12	158-167	214-226

Table F-8. Torque Limits For NPSM Swivel Connections

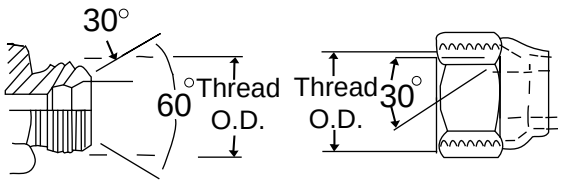

INCH SIZE	DASH NO.	NOMINAL THREAD SIZE	TORQUE LB.FT.	TORQUE N·m
1/8	02	1/8-27	3-4	4-5
1/4	04	1/4-18	10-11	14-15
3/8	06	3/8-18	16-18	22-24
1/2	08	1/2-14	25-27	34-37
3/4	12	3/4-14	46-48	62-65
1	16	1-11/2	80-83	108-113
1 1/4	20	1 1/4-11/2	130-134	176-182
1 1/2	24	1 1/2-11/2	160-164	217-222
2	32	2-11/2	170-174	231-240

APPENDIX G

MAINTENANCE ALLOCATION CHART (MAC)

Para	Contents	Page

G-1 General G-1
G-2 Maintenance Functions G-1
G-3 Explanation of Columns in Section II G-2
G-4 Explanation of Columns in Tool and Test Equipment Requirements, Section III G-3
G-5 Explanation of Columns in Remarks, Section IV G-4

Section I. Introduction

G-1. GENERAL.

a. This section provides a general explanation of all maintenance and repair functions authorized at various maintenance levels.

b. The Maintenance Allocation Chart (MAC) in Section II designates overall authority and responsibility for the performance of maintenance functions on the identified end item or component. The application of the maintenance functions to the end item or component will be consistent with the capacities and capabilities of the designated maintenance levels.

Field – includes two columns: Unit maintenance and Direct Support Maintenance. The Unit Maintenance column is divided again into two more subcolumns, C for Operator or Crew and O for Unit maintenance.

Sustainment – includes two subcolumns: General Support (H) and Depot (D).

c. Section III lists the tools and test equipment required for each maintenance function as referenced from Section II.

d. Section IV lists remarks (identified by an alphabetic code in Column 6 of the MAC) to provide a ready reference to the definition of the remark.

G-2. MAINTENANCE FUNCTIONS.

Maintenance functions will be limited to and defined as follows:

a. ***Inspect.*** To determine the serviceability of an item by comparing its physical, mechanical, and/or electrical characteristics with established standards through examination (e.g., by sight, sound, or feel).

b. ***Test.*** To verify serviceability by measuring the mechanical, pneumatic, hydraulic, or electrical characteristics of an item and comparing those characteristics with prescribed standards.

c. ***Service.*** Operations required periodically to keep an item in proper operating condition, i.e., to clean (includes decontaminate, when required), to preserve, to drain, to paint, or to replenish fuel, lubricants, chemical fluids, or gases.

d. ***Adjust.*** To maintain or regulate, within prescribed limits, by bringing into proper or exact position, or by setting the operating characteristics to specified parameters.

G-2. MAINTENANCE FUNCTIONS (CONT).

e. Align. To adjust specified variable elements of an item to bring about optimum or desired performance.

f. Calibrate. To determine and cause corrections to be made or to be adjusted on instruments or test, measuring, and diagnostic equipments used in precision measurement. Consists of comparisons of two instruments, one of which is a certified standard of known accuracy, to detect and adjust any discrepancy in the accuracy of the instrument being compared.

g. Remove/Install. To remove and install the same item when required to perform service or other maintenance functions. Install may be the act of emplacing, seating, or fixing into position a spare, repair part, or module (component or assembly) in a manner to allow the proper functioning of an equipment or system.

h. Replace. To remove an unserviceable item and install a serviceable counterpart in its place. "Replace" is authorized by the MAC and is shown as the 3rd position code of the SMR code.

i. Repair. The application of maintenance services, including fault location/troubleshooting, removal/installation, and disassembly/assembly procedures, and maintenance actions to identify troubles and restore serviceability to an item by correcting specific damage, fault, malfunction, or failure in a part, subassembly, module (component or assembly), end item, or system.

(1) Service includes inspection, testing, service, adjustment, alignment, calibration and/or replacement.

(2) Fault locate/troubleshooting is the process of investigating and detecting the cause of equipment malfunctioning; the act of isolating a fault within a system or Unit Under Test (UUT).

(3) Disassemble/Assemble encompasses the step-by-step taking apart (or breakdown) of a spare/functional group coded item to the level of its least componency identified as maintenance significant (i.e., assigned an SMR code) for the category of maintenance under consideration.

(4) Actions include welding, grinding, riveting, straightening, facing, remachining and/or resurfacing.

j. Overhaul. The maintenance effort (service/action) prescribed to restore an item to a completely serviceable/operational condition as required by maintenance standards in appropriate technical publications (i.e., DMWR). Overhaul is normally the highest degree of maintenance performed by the Army. Overhaul does not normally return an item to like new condition.

k. Rebuild. Consists of those services/actions necessary for the restoration of unserviceable equipment to a like new condition in accordance with original manufacturing standards. Rebuild is the highest degree of material maintenance applied to Army equipment. The rebuild operation includes the act of returning to zero those age measurements (hours/miles, etc.) considered in classifying Army equipment/components.

G-3. EXPLANATION OF COLUMNS IN SECTION II.

a. Column 1, Group Number. Column 1 lists functional group code numbers, the purpose of which is to identify maintenance significant components, assemblies, subassemblies, and modules with the next higher assembly. End item group number shall be "OO."

b. Column 2, Component/Assembly. Column 2 contains the names of components, assemblies, subassemblies, and modules for which maintenance is authorized.

c. Column 3, Maintenance Function. Column 3 lists the functions to be performed on the item listed in Column 2.

d. Column 4, Maintenance Level. Column 4 specifies, by the listing of a work time figure in the appropriate subcolumn(s), the level of maintenance authorized to perform the function listed in Column 3. This figure represents the active time required to perform that maintenance function at the indicated level of maintenance. If the number or complexity of the tasks within the listed maintenance function vary at different maintenance levels, appropriate work time figures will be shown for each level. The work time figure represents the average time required to restore an item (assembly, subassembly, component, module, end item, or system) to a serviceable condition under typical field operating conditions. This time includes preparation time (including any necessary disassembly/assembly time), troubleshooting/fault location time, and quality assurance/quality control time in addition to the time required to perform the specific tasks identified for the maintenance functions authorized in the Maintenance Allocation Chart (MAC). The symbol designations for the various maintenance levels are as follows:

Field:

C Operator or Crew Maintenance
O Unit Maintenance
F Direct Support Maintenance

Sustainment:

H General Support Maintenance
D Depot Maintenance

*Asterisk indicates level of maintenance authorized to complete this function. No time is established.

e. Column 5, Tools and Equipment. Column 5 specifies, by code, those common tool sets (not individual tools) and special tools, TMDE, and support equipment required to perform the designated function.

f. Column 6, Remarks. This column shall, when applicable, contain a letter code in alphabetic order, which shall be keyed to the remarks contained in Section IV.

G-4. EXPLANATION OF COLUMNS IN TOOL AND TEST EQUIPMENT REQUIREMENTS, SECTION III.

a. Column 1, Reference Code. The tool and test equipment reference code correlates with a code used in the MAC, Section II, Column 5.

b. Column 2, Maintenance Level. The lowest category of maintenance authorized to use the tool or test equipment.

c. Column 3, Nomenclature. Name or identification of the tool or test equipment.

d. Column 4, National Stock Number. The national stock number of the tool or test equipment.

e. Column 5, Tool Number. The manufacturer's part number.

G-5. EXPLANATION OF COLUMNS IN REMARKS, SECTION IV.

a. Column 1, Reference Code. An alphabetic code listed in the sixth column of the MAC and first column of the Remarks section to identify remarks made to the MAC.

b. Column 2, Remarks. The complete text of the remarks made to the MAC.

Section II. MAINTENANCE ALLOCATION CHART

(1) GROUP NUMBER	(2) COMPONENT/ ASSEMBLY	(3) MAINTENANCE FUNCTION	(4) MAINTENANCE LEVEL					(5) TOOLS AND TEST EQUIPMENT	(6) REMARKS CODE
			FIELD			SUSTAINMENT			
			UNIT		DS	GS	DEPOT		
			C	O	F	H	D		
0100	Engine	Replace		3.5				1,2,4,5	
0100	Engine	Service		0.5				1	
0100	Engine Access Panels	Replace		0.5				1	
0100	Top Engine Cover	Replace		0.4				1	
0101	Oil Pan	Replace		0.5				1	
0101	Cylinder Head	Replace			4.0			1,2	
0105	Push Rod Cover	Replace			5.4			1	
0127	Oil Filter	Replace		0.1				1,2	
0127	Oil Filter Head	Replace		0.1				1,2	
0301	Fuel Pump Solenoid	Replace		0.1				1	
0301	Fuel Pump Thermo Switch	Replace		0.2				1	
0301	Inline Fuel Filter	Replace		0.1				1	
0301	Fuel Lines	Service		*				1	A
0301	Fuel Lines	Replace		*				1	A
0301	Fuel Injector	Replace			3.2			1,2	
0301	Fuel Tank	Replace		1.0				1	
0302	Fuel Injector Pump	Replace		0.5				1,2	
0302	Fuel Transfer Pump	Replace		0.5				1	
0304	Engine Air Intake Assy	Replace		0.6				1	
0304	Engine Air Intake Filter	Replace		0.1				1	
0304	Air Filter	Replace		0.1				1	
0309	Fuel Filter	Replace		0.1				1,2	
0309	Fuel Filter and Filter Head	Replace		0.3					
0401	Exhaust Assy	Replace		0.5				1	
0501	Radiator	Replace		1.2				1,2	
0501	Radiator	Service		0.3				1	

Section II. MAINTENANCE ALLOCATION CHART

(1) GROUP NUMBER	(2) COMPONENT/ ASSEMBLY	(3) MAINTENANCE FUNCTION	(4) MAINTENANCE LEVEL					(5) TOOLS AND TEST EQUIPMENT	(6) REMARKS CODE
			FIELD			SUSTAINMENT			
			UNIT		DS	GS	DEPOT		
			C	O	F	H	D		
0503	Thermostat	Replace		0.3				1	
0504	Water Pump	Replace		0.3				1	
0505	Fan Blade	Replace		0.2				1	
0601	Alternator	Replace		0.8				1	
0601	Fan Drive Belt	Replace		0.6				1	
0601	Fan Drive Belt Tensioner	Replace		0.2				1	A
0601	Temperature Sensor	Replace		0.3				1	
0601	Pressure Switch	Replace		0.4				1	
0601	High Idle Control Module	Replace		0.6				1	
0603	Main Wire Harness	Replace		1.1				1	
0603	Roller Switch Wire Harness	Replace		0.5				1	
0603	Control Wire Harness	Replace		3.0				1	
0603	Engine Wire Harness	Replace		3.5				1	
0603	Control Box Wire Harness (8-Pin Connector)	Replace		0.5				1	
0603	Control Box Wire Harness (5-Pin Connector)	Replace		0.5				1	
0603	Control Box Wire Harness (4-Pin Connector)	Replace		0.5				1	
0603	Battery Equalizer	Replace		0.5				1	
0603	Slave Receptacle Cable	Replace		1.0					
0603	Starter	Replace		0.9				1,2	
0605	Ignition Switch	Replace		0.2				1	
0606	Tattle Tale Switch	Replace		0.2				1	
0607	Gage	Replace		0.2				1	
0607	Low-flow/High-flow Meter	Replace		0.3				1	
0607	Magnetic Switch (Battery Equalizer)	Replace		0.5				1	

Section II. MAINTENANCE ALLOCATION CHART (CONT).

(1) GROUP NUMBER	(2) COMPONENT/ ASSEMBLY	(3) MAINTENANCE FUNCTION	(4) MAINTENANCE LEVEL					(5) TOOLS AND TEST EQUIPMENT	(6) REMARKS CODE
			FIELD			SUSTAINMENT			
			UNIT		DS	GS	DEPOT		
			C	O	F	H	D		
0607	Magnetic Switch (Starter)	Replace		0.5				1	
0607	Toggle Switch	Replace		0.1				1	
0607	Control Box	Replace		0.8				1	
0608	Fuse	Replace		0.1				1	
0608	Fuse Holder	Replace		0.3				1,3	
0608	Slave Receptacle	Replace		1.0				1	
0609	Control Box Light	Replace		0.1				1	
0609	Work Light	Replace		0.5				1	
0609	Wire	Repair		*					
0610	Throttle Actuator	Replace		1.3				1	
0610	Throttle Actuator	Adjust		0.6				1	
0612	Battery	Service		0.3				1	
0612	Battery	Replace		0.5				1,2	
0612	Battery Box	Replace		0.6				1	
0612	Battery Equalizer	Replace		0.4				1	
0804	Reservoir Filler Cap	Replace		0.1				1	
1209	Air Compressor	Replace		1.5				1	
1808	Admix Cover	Replace		0.2				1	
1808	Chain Drive Cover	Replace		0.2				1	
1808	Auger Stowage Pad	Replace		0.7				1	
1808	Pin	Replace		0.1				1	
1808	Pad Lock	Replace		0.1				1	
1808	Grab Handle	Replace		0.1				1	
1808	Cement Bin Cover	Replace		0.1				1	
1808	Cement Bin Latch	Replace		0.2				1	
4300	Hydraulic Water Pump	Replace		1.5				1,2	
4301	Hydraulic Filter	Replace		0.5				1,2	
4301	Hydraulic Filter Head	Replace		0.2				1,2	
4302	Hydraulic Pump	Replace		2.0				1,2	
4307	Hydraulic Cylinder (Hoist)	Replace		1.6				1,2	

Section II. MAINTENANCE ALLOCATION CHART (CONT).

(1) GROUP NUMBER	(2) COMPONENT/ ASSEMBLY	(3) MAINTENANCE FUNCTION	(4) MAINTENANCE LEVEL					(5) TOOLS AND TEST EQUIPMENT	(6) REMARKS CODE
			FIELD			SUSTAINMENT			
			UNIT		DS	GS	DEPOT		
			C	O	F	H	D		
4307	Hydraulic Cylinder (Retractor)	Replace		1.6				1	
4307	Retractor Cylinders Double Check Valve	Replace		1.5				1	
4307	Hoist Cylinder Relief Valve	Replace		0.5				1	
4307	Hoist Cylinder Double Check Valve	Replace		0.5				1	
4307	Hydraulic Reservoir Strainer	Service		0.1				1	
4308	Hydraulic Hose and Tube	Replace		*				1	A
4308	Hydraulic Reservoir	Replace		1.0				1,2	
4308	Hydraulic Reservoir	Service		0.1				1,2	
4309	Hydraulic Control Valve (Lift Cylinder)	Replace		1.3				1,2	
4317	Air Filter Regulator/Lubricator	Replace		0.5				1	
4317	Air Solenoid	Replace		0.3				1	
4318	Air Vibrators	Replace		0.2				1	
4318	Air Cam Valve	Replace		0.5				1	
4318	Cement Fluffer Control Valve	Replace		0.4				1	
4318	Air Line	Replace		*				1	A
4321	Air Reservoir	Replace		1.0				1	
4701	Hydraulic/Water Pressure Gage	Replace		0.1				1	
4701	Water Meter	Replace		0.1				1	
7300	Water Valve	Replace		0.2				1	
7300	Ball Valve (Water)	Replace		0.4				1	
7300	Water Hose and Pipe	Replace		*				1	
7300	Admix Tank	Replace		0.3				1	
7300	Concrete Mobile Mixer	Inspect	0.1						
7300	Concrete Mobile Mixer	Service	0.2						
7300	Control Overide Switch	Replace		0.2				1	

Section II. MAINTENANCE ALLOCATION CHART (CONT).

(1) GROUP NUMBER	(2) COMPONENT/ ASSEMBLY	(3) MAINTENANCE FUNCTION	(4) MAINTENANCE LEVEL					(5) TOOLS AND TEST EQUIPMENT	(6) REMARKS CODE
			FIELD			SUSTAINMENT			
			UNIT		DS	GS	DEPOT		
			C	O	F	H	D		
7300	Lift Cylinder Assy	Replace		1.5				1	
7300	Admix Strainer Assy	Replace		0.4				1	
7300	Admix Pump Relay	Replace		0.2				1	
7300	Admix Pump	Replace		0.6				1	
7300	Admix Solution Valve	Replace		0.2				1	
7300	Admix Valve	Replace		0.3				1	
7300	Admix Tube	Replace		*				1	A
7300	Aggregate Deflector Assy	Replace		0.2				1	
7300	Aggregate Bin Gate	Replace		4.0				1	
7300	Cement Bin Clutch	Replace		2.6				1	
7309	Chain Oiler	Replace		1.0				1,2	
7309	Conveyor Belt	Replace		4.0				1	
7309	Cement Metering Counter	Replace		0.5				1	
7309	Conveyor Belt Hydraulic Motor	Replace		1.5				1	
7309	Conveyor Belt Speed	Adjust		0.8				1	
7309	Conveyor Belt Wipers	Replace		0.8				1	
7309	Lower Cement Bin Auger & Bearing	Service		0.5				1	
7309	Lower Auger Cement Bin & Bearing	Replace		1.0				1	
7309	Mixing Auger Hydraulic Motor	Replace		1.0				1,2	
7309	Upper Cement Bin Auger & Bearing	Replace		0.5				1	
7309	Lower Cement Bin Auger & Bearing	Replace		1.0				1	
7309	Wear Blades	Replace		1.0				1	
7309	Auger Shaft & Lower Bearing	Replace		1.0				1	
7309	Auger Lower Bearing Shaft	Service		0.3				1	
7309	Shear Pin	Replace	0.1					1,2	

Section II. MAINTENANCE ALLOCATION CHART (CONT).

(1) GROUP NUMBER	(2) COMPONENT/ ASSEMBLY	(3) MAINTENANCE FUNCTION	(4) MAINTENANCE LEVEL					(5) TOOLS AND TEST EQUIPMENT	(6) REMARKS CODE
			FIELD			SUSTAINMENT			
			UNIT		DS	GS	DEPOT		
			C	O	F	H	D		
7319	Water Pressure Flow Control Valve	Replace		0.3				1,2	
7319	Water Pump/Lift Cylinder Control Valve	Replace		1.5				1	
7319	Water System Strainer	Replace		0.5				1	
7319	Water Tank	Replace		0.3				1	

Section III. TOOLS AND TEST EQUIPMENT REQUIREMENTS

Reference Code	Maintenance Level	Nomenclature	NSN	Tool Part Number
1	O	Tool Kit, General Mechanics	5180-00-177-7033	SC 5180-95-CL-N26
2	O	Shop Equipment, Common No. 2	4910-00-754-0650	SC 4910-95-A72HR
3	O	Tool Kit, Electrical	5180-00-876-9336	7550526
4	O	Stand, Maintenance, Engine	4910-00-808-3372	J29109

Section IV. REMARKS

Reference Code	Remarks
A	No specific times established. Time required for replacement or repair will depend on extent of work required.

APPENDIX H

EXPENDABLE SUPPLIES AND MATERIALS LIST

SECTION I. INTRODUCTION

H-1. SCOPE.

This appendix lists expendable supplies and materials you will need to operate and maintain the Concrete Mobile Mixer. These items are authorized to you by CTA50-970, Expendable Items (Except Medical, ClassV, Repair parts and Heraldic Items) or CTA8-100, Army Medical Department Expendable/Durable Items.

H-2. EXPLANATION OF COLUMNS.

a. Column (1) – Item Number. This number is assigned to the entry in the listing and is referenced in the narrative task box to identify the material (e.g., "Compound, Cleaning, Item 5, Appendix C").

b. Column (2) – Level. This is the maintenance level approved to use the item listed.

c. Column (3) – National Stock Number. This is the National Stock Number assigned to the item; use it to request or requisition the item.

d. Column (4) – Description. Indicates the federal item name and if required, a description to identify the item. The last line for each item indicates the Commercial and Government Entity (CAGE) code in parentheses followed by the part number.

e. Column (5) – Unit of Measure. Indicates the measure used in performing the actual maintenance function. This measure is expressed by a two-character alphabetical abbreviation (e.g., ea., in. or pr.). If the unit of measure differs from the unit of issue, requisition the lowest unit of issue that will satisfy your requirements.

SECTION II. EXPENDABLE SUPPLIES AND MATERIALS LIST

(1) Item No.	(2) Level	(3) National Stock Number	(4) Description	(5) U/M
1	O		Antifreeze (81349) MIL-L-46153	
		6850-00-181-7920	1 gallon bottle	Gl
		6850-00-181-7940	55 gallon drum	Gl
2	O		Cable Ties (96906) MS3367-3	
		5975-01-273-8133	12 inches long, 100 per package	Pk
3	O	7510-00-537-6426	Chalk, Marking, White (83030) 1400	Ea

SECTION II. EXPENDABLE SUPPLIES AND MATERIALS LIST (CONT).

(1) Item No.	(2) Level	(3) National Stock Number	(4) Description	(5) U/M
4	O		Corrosion Preventive Compound	
			(81349) MIL-C-16173	
		8030-00-062-6980	Grade 1 – 1 quart can	Qt
		8030-01-149-1731	Grade 2 – 1 quart can	Qt
		8030-00-837-6557	Grade 3 – 1 pint can	Pt
		8030-00-903-0931	Grade 4 – 1 pint can	Pt
5	O		Hydraulic Oil,	
			OE/HDO 10 (81349) MIL-L-2104	
		9150-00-189-6267	1 quart can	Qt
		9150-01-177-3988	12 quart box	Qt
		9150-00-191-2772	55 gallon drum	Gl
		9150-00-183-7807	bulk	Gl
			OE/HDO 30 (81349) MIL-L-2104	
		9250-00-186-6681	1 quart can	Qt
		9150-00-188-9858	5 gallon can	Gl
		9150-00-189-6729	55 gallon drum	Gl
6	O		Lubricating Oil, Engine OE/HDO 15/40	
			(81349) MIL-L-2104	
		9150-01-152-4117	1 quart can	Qt
		9150-01-178-4725	12 quart box	Qt
		9150-01-152-4118	5 gallon can	Gl
		9150-00-152-4119	55 gallon drum	Gl
7	O		Lubrication Oil, Tire	
			(96980) AA20	
		2640-00-256-5529	5 gallon can	Gl
8	O		Oil, Fuel, Diesel	
			(81348) VVF800GRADEDF2RE	
		9140-00-286-5294	Bulk	Gl
9	O		Rags, Wiping	
			(58536) A-A-531	
		7920-00-205-1711	50 pound bale	Lb
10	O		Rope, Fibrous	
			(19207) CPR102915	
		7920-00-205-1711	75 foot roll	Ft

(1) Item No.	(2) Level	(3) National Stock Number	(4) Description	(5) U/M
11	O		Sealing Compound (05972) Loctite #567	
		8030-01-054-0740	50 ml bottle	Ml
		8030-01-166-0675	50 ml tube	Ml
		8030-00-204-9149	250 ml tube	Ml
12	O		Solvent, Dry-cleaning (58536) A-A-711	
		6850-00-664-5685	1 quart can	Qt
			(81348) P-D-680	
		6850-00-264-9038	5 gallon can	Gl
			(Environmentally Compliant Solvent) (0K209) Breakthrough	
		6850-01-378-0679	5 gallon can	Gl
13	O		Tags, Identification (16956) 12-105	
		9905-00-720-3577	white	Ea
14	O		Adhesive (71984) RTV732	
		8040-00-701-9546	5 oz kit	Oz
			(Z8X80) 04327909	
		8040-01-010-8758	12 oz kit	Oz
			(71984) 732, RTV, Clear	
			12 oz	Oz
15	O		Anti-seize Compound (81349) M.L-A-907	
		8030-00-155-6444	16 oz kit	Oz
16	O		Lubricating Oil, Gear Go (81349) M2105-2-80W90	GL
		9150-01-313-2191	1 gallon can	
17	O		Sealing Compound (96169) 8575-012PC55 (81349) mil-S-15204	
		8030-00-246-0931	5 oz tube	Oz
18	O	5330-01-125-5704	Preformed Packing, (Packing Assortment) C-7-88	Ea
19	O	4720-01-218-3376	Hose, Nonmetallic (01276) FC160-08	
			3 ft. (92 cm)	Ft

SECTION II. EXPENDABLE SUPPLIES AND MATERIALS LIST (CONT).

(1) Item No.	(2) Level	(3) National Stock Number	(4) Description	(5) U/M
20	O	8030-01-479-9260	Tape, Teflon 1/2 in. wide (58536) AA58092-2-2	Ea
21	O	9150-01-197-7688 9150-01-197-7690 9150-01-197-7689	Grease, Automotive and Artillery (70878) 5542P (81349) MIL-G-10924 2.25 oz tube 1.75 lb can 6.5 lb can	Oz lb lb
22	O	5306-01-479-9260	Shear Pin (3p [Qty 5]) (61796) 5811-230	Ea
23	O		Wear Blade Spare 0924-001	Ea
24	O		Wear Blade Spare 0924-002	Ea
25	O		Paddle 0284-003	Ea
26	O		Wear Blade Hardware 5320-SPL	Ea

APPENDIX I

TOOL IDENTIFICATION LIST

SECTION I. INTRODUCTION

I-1. SCOPE.

This appendix lists all the tools needed to repair the Concrete Mobile Mixer.

I-2. GENERAL.

This appendix is a list of tools, both common and special, test equipment and tool kits used at unit level and direct support maintenance to repair the Concrete Mobile Mixer. This list is arranged alphabetically and shows the Description, CAGE, Part Number (Para No.), and National Stock Number (NSN). The item number (Item No.) corresponds to the item number found in the task box of maintenance procedures.

SECTION II. COMMON TOOLS, TEST EQUIPMENT AND TOOL KITS

Item No.	Description	CAGE	Part No.	NSN
1	Apron, Utility	58536	A-A-55063	8415-00-082-6108
2	Brush, Injector cleaning	08853	3822509	7920-01-381-6132
3	Cap and Plug Set	19207	10935405	5340-00-450-5718
4	Chain (5 ft)	07BY4	3592T15	
5	Crimping Tool		J35123	5120-01-355-0844
6	Drum, Storage 57 gallon		MIL-D-6054	8110-00-082-2626
7	Gloves, Chemical Oil Protective	81348	ZZ-G-381	8415-00-641-4601
8	Gloves, Heavy Duty	80204	A-A-50022	8415-00-268-7859
9	Goggles, Industrial	79805	ANSI 287.1	4140-00-269-7912
10	Jackstand, Trestle		306	4910-00-251-8013

I-2. GENERAL (CONT).

Item No.	Description	CAGE	Part No.	NSN
11	Multimeter	80058	ANURM105C	6625-00-999-6282
12	Pan, Drain (4 gal.)	36540	17942	4940-00-387-9592
13	Plate, Adapter, Engine		J39898	
14	Puller Kit, Universal	45225	1677	5180-00-423-1596
15	Puller, Mechanical	08853	3823276	5720-01-389-5917
16	Removal Tool, Oil Filter	08292	3003	5120-00-865-0933
17	Stand, Maintenance, Engine	33287	J29109-A	4910-00-808-3372
18	Tool, Engine Turnover	0B8S3	3824591	5120-01-285-5193
19	Tool Kit, General Mechanic's: Automotive	50980	SC-5180-90-CL-N26	5180-00-177-7033
20	Winch, Cable, Hand Operating	80020	415526-1	3950-00-079-1202
21	Wrench, Combination 1 3/8 in.	05506	1176	5120-00-228-9519
22	Wrench, Combination 1 1/2 in.	05047	B107.100	5120-00-277-8834
23	Wrench, Combination 1 5/8 in.	05506	1180	5120-01-016-7144
24	Wrench, Pipe 3 1/2 in. Opening	80244	GGG-W-651	5120-00-277-1485
25	Wrench, Torque (0 to 175 lb-ft [0-407 N·m])		1753 LDF	5120-00-640-6364
26	Wrench, Torque, 3/8 in. Drive (0 to 60 N·m)	55719	TES 160	5120-01-112-9531

RECOMMENDED CHANGES TO PUBLICATIONS AND BLANK FORMS For use of this form, see AR 25-30; the proponent agency is ODISC4.	Use Part II *(reverse)* for Repair Parts and Special Tool Lists (RPSTL) and Supply Catalogs/Supply Manuals (SC/SM).	DATE Date you filled out this form.
TO: *(Forward to proponent of publication or form) (Include ZIP Code)* AMSTA-LC-LMPP / TECH PUBS, TACOM-RI 1 Rock Island Arsenal Rock Island, IL 61299-7630	FROM: *(Activity and location) (Include ZIP Code)* Your mailing address	

PART I – ALL PUBLICATIONS (EXCEPT RPSTL AND SC/SM) AND BLANK FORMS

PUBLICATION/FORM NUMBER	DATE	TITLE
TM 9-3990-258-13&P-2	30 June 2008	Concrete Mobile Mixer, M5, Operator, Unit and DS Maintenance Manual & RPSTL

ITEM NO.	PAGE NO.	PARA-GRAPH	LINE NO. *	FIGURE NO.	TABLE NO.	RECOMMENDED CHANGES AND REASON (Provide exact wording of recommended changes, if possible).
	0004 00-2	4-7				Wrong POC is listed.

SAMPLE

**Reference to line numbers within the paragraph or subparagraph.*

TYPED NAME, GRADE OR TITLE	TELEPHONE EXCHANGE/AUTOVON, PLUS EXTENSION	SIGNATURE
Your Name		Your Signature

TO: (*Forward direct to addressee listed in publication*) AMSTA-LC-LMPP / TECH PUBS, TACOM-RI 1 Rock Island Arsenal Rock Island, IL 61299-7630	FROM: (*Activity and location) (Include ZIP Code)* Your address	DATE Date you filled out this form

PART II – REPAIR PARTS AND SPECIAL TOOL LISTS AND SUPPLY CATALOGS/SUPPLY MANUALS

PUBLICATION NUMBER	DATE	TITLE
TM 9-3990-258-13&P-2	30 June 2008	Concrete Mobile Mixer, M5, Operator, Unit and DS Maintenance Manual & RPSTL

PAGE NO.	COLM NO.	LINE NO.	NATIONAL STOCK NUMBER	REFERENCE NO.	FIGURE NO.	ITEM NO.	TOTAL NO. OF MAJOR ITEMS SUPPORTED	RECOMMENDED ACTION

PART III – REMARKS (*Any general remarks or recommendations, or suggestions for improvement of publications and blank forms. Additional blank sheets may be used if more space is needed.)*

TYPED NAME, GRADE OR TITLE	TELEPHONE EXCHANGE/AUTOVON, PLUS EXTENSION	SIGNATURE
Your Name		Your Signature

USAPPC V3.00

RECOMMENDED CHANGES TO PUBLICATIONS AND BLANK FORMS For use of this form, see AR 25-30; the proponent agency is ODISC4.	Use Part II *(reverse)* for Repair Parts and Special Tool Lists (RPSTL) and Supply Catalogs/Supply Manuals (SC/SM).	DATE
TO: *(Forward to proponent of publication or form) (Include ZIP Code)* AMSTA-LC-LMPP / TECH PUBS, TACOM-RI 1 Rock Island Arsenal Rock Island, IL 61299-7630	FROM: *(Activity and location) (Include ZIP Code)*	

PART I – ALL PUBLICATIONS (EXCEPT RPSTL AND SC/SM) AND BLANK FORMS

PUBLICATION/FORM NUMBER	DATE	TITLE
TM 9-3990-258-13&P-2	30 June 2008	Concrete Mobile Mixer, M5, Operator, Unit and DS Maintenance Manual & RPSTL

ITEM NO.	PAGE NO.	PARA-GRAPH	LINE NO. *	FIGURE NO.	TABLE NO.	RECOMMENDED CHANGES AND REASON *(Provide exact wording of recommended changes, if possible).*

**Reference to line numbers within the paragraph or subparagraph.*

TYPED NAME, GRADE OR TITLE	TELEPHONE EXCHANGE/AUTOVON, PLUS EXTENSION	SIGNATURE

DA FORM 2028, FEB 74 REPLACES DA FORM 2028, 1 DEC 68, WHICH WILL BE USED. USAPPC V3.00

TO: (*Forward direct to addressee listed in publication*) AMSTA-LC-LMPP / TECH PUBS, TACOM-RI 1 Rock Island Arsenal Rock Island, IL 61299-7630	FROM: (*Activity and location) (Include ZIP Code)*	DATE

PART II – REPAIR PARTS AND SPECIAL TOOL LISTS AND SUPPLY CATALOGS/SUPPLY MANUALS

PUBLICATION NUMBER	DATE	TITLE
TM 9-3990-258-13&P-2	30 June 2008	Concrete Mobile Mixer, M5, Operator, Unit and DS Maintenance Manual & RPSTL

PAGE NO.	COLM NO.	LINE NO.	NATIONAL STOCK NUMBER	REFERENCE NO.	FIGURE NO.	ITEM NO.	TOTAL NO. OF MAJOR ITEMS SUPPORTED	RECOMMENDED ACTION

PART III – REMARKS (*Any general remarks or recommendations, or suggestions for improvement of publications and blank forms. Additional blank sheets may be used if more space is needed.)*

TYPED NAME, GRADE OR TITLE	TELEPHONE EXCHANGE/AUTOVON, PLUS EXTENSION	SIGNATURE

USAPPC V3.00

RECOMMENDED CHANGES TO PUBLICATIONS AND BLANK FORMS For use of this form, see AR 25-30; the proponent agency is ODISC4.	Use Part II *(reverse)* for Repair Parts and Special Tool Lists (RPSTL) and Supply Catalogs/Supply Manuals (SC/SM).	DATE
TO: *(Forward to proponent of publication or form) (Include ZIP Code)* AMSTA-LC-LMPP / TECH PUBS, TACOM-RI 1 Rock Island Arsenal Rock Island, IL 61299-7630	FROM: *(Activity and location) (Include ZIP Code)*	

PART I – ALL PUBLICATIONS (EXCEPT RPSTL AND SC/SM) AND BLANK FORMS

PUBLICATION/FORM NUMBER	DATE	TITLE
TM 9-3990-258-13&P-2	30 June 2008	Concrete Mobile Mixer, M5, Operator, Unit and DS Maintenance Manual & RPSTL

ITEM NO.	PAGE NO.	PARA-GRAPH	LINE NO. *	FIGURE NO.	TABLE NO.	RECOMMENDED CHANGES AND REASON *(Provide exact wording of recommended changes, if possible).*

**Reference to line numbers within the paragraph or subparagraph.*

TYPED NAME, GRADE OR TITLE	TELEPHONE EXCHANGE/AUTOVON, PLUS EXTENSION	SIGNATURE

DA FORM 2028, FEB 74 REPLACES DA FORM 2028, 1 DEC 68, WHICH WILL BE USED. USAPPC V3.00

TO: (*Forward direct to addressee listed in publication*) AMSTA-LC-LMPP / TECH PUBS, TACOM-RI 1 Rock Island Arsenal Rock Island, IL 61299-7630	FROM: (*Activity and location) (Include ZIP Code)*	DATE

PART II – REPAIR PARTS AND SPECIAL TOOL LISTS AND SUPPLY CATALOGS/SUPPLY MANUALS

PUBLICATION NUMBER	DATE	TITLE
TM 9-3990-258-13&P-2	30 June 2008	Concrete Mobile Mixer, M5, Operator, Unit and DS Maintenance Manual & RPSTL

PAGE NO.	COLM NO.	LINE NO.	NATIONAL STOCK NUMBER	REFERENCE NO.	FIGURE NO.	ITEM NO.	TOTAL NO. OF MAJOR ITEMS SUPPORTED	RECOMMENDED ACTION

PART III – REMARKS (*Any general remarks or recommendations, or suggestions for improvement of publications and blank forms. Additional blank sheets may be used if more space is needed.)*

TYPED NAME, GRADE OR TITLE	TELEPHONE EXCHANGE/AUTOVON, PLUS EXTENSION	SIGNATURE

USAPPC V3.00

By Order of the Secretary of the Army:

Official:

GEORGE W. CASEY, JR.
General, United States Army
Chief of Staff

JOYCE E. MORROW
Administrative Assistant to the
Secretary of the Army

0812302

DISTRIBUTION: To be distributed in accordance with the Initial Distribution Number IDN: 381108, requirements for TM 9-3990-258-13&P-2.

THE METRIC SYSTEM AND EQUIVALENTS

LINEAR MEASURE
1 Centimeter=10 Millimeters=0.01 Meters=0.3937 Inches
1 Meter=100 Centimeters=1000 Millimeters=39.37 Inches
1 Kilometer=1000 Meters=0.621 Miles

WEIGHTS
1 Gram=0.001 Kilograms=1000 Milligrams=0.035 Ounces
1 Kilogram=1000 Grams=2.2 Lb
1 Metric Ton=1000 Kilograms=1 Megagram=1.1 Short Tons

LIQUID MEASURE
1 Milliliter=0.001 Liters=0.0338 Fluid Ounces
1 Liter=1000 Milliliters=33.82 Fluid Ounces

SQUARE MEASURE
1 Sq Centimeter=100 Sq Millimeters=0.155 Sq Inches
1 Sq Meter=10,000 Sq Centimeters=10.76 Sq Feet
1 Sq Kilometer=1,000,000 Sq Meters=0.386 Sq Miles

CUBIC MEASURE
1 Cu Centimeter=1000 Cu Millimeters=0.06 Cu Inches
1 Cu Meter=1,000,000 Cu Centimeters=35.31 Cu Feet

TEMPERATURE
5/9 (°F − 32) = °C
212° Fahrenheit is equivalent to 100° Celsius
90° Fahrenheit is equivalent to 32.2° Celsius
32° Fahrenheit is equivalent to 0° Celsius
9/5 C° + 32 = F°

APPROXIMATE CONVERSION FACTORS

TO CHANGE	TO	MULTIPLY BY
Inches	Centimeters	2.540
Feet	Meters	0.305
Yards	Meters	0.914
Miles	Kilometers	1.609
Square Inches	Square Centimeters	6.451
Square Feet	Square Meters	0.093
Square Yards	Square Meters	0.836
Square Miles	Square Kilometers	2.590
Acres	Square Hectometers	0.405
Cubic Feet	Cubic Meters	0.028
Cubic Yards	Cubic Meters	0.765
Fluid Ounces	Milliliters	29.573
Pints	Liters	0.473
Quarts	Liters	0.946
Gallons	Liters	3.785
Ounces	Grams	28.349
Pounds	Kilograms	0.454
Short Tons	Metric Tons	0.907
Pound-Feet	Newton-Meters	1.356
Pounds/Sq Inch	Kilopascals	6.895
Miles per Gallon	Kilometers per Liter	0.425
Miles per Hour	Kilometers per Hour	1.609

TO CHANGE	TO	MULTIPLY BY
Centimeters	Inches	0.394
Meters	Feet	3.280
Meters	Yards	1.094
Kilometers	Miles	0.621
Sq Centimeters	Square Inches	0.155
Square Meters	Square Feet	10.764
Square Meters	Square Yards	1.196
Square Kilometers	Square Miles	0.386
Sq Hectometers	Acres	2.471
Cubic Meters	Cubic Feet	35.315
Cubic Meters	Cubic Yards	1.308
Milliliters	Fluid Ounces	0.034
Liters	Pints	2.113
Liters	Quarts	1.057
Liters	Gallons	0.264
Grams	Ounces	0.035
Kilograms	Pounds	2.205
Metric Tons	Short Tons	1.102
Newton-Meters	Pound-Feet	0.738
Kilopascals	Pounds per Sq Inch	0.145
Km per Liter	Miles per Gallon	2.354
Km per Hour	Miles per Hour	0.621

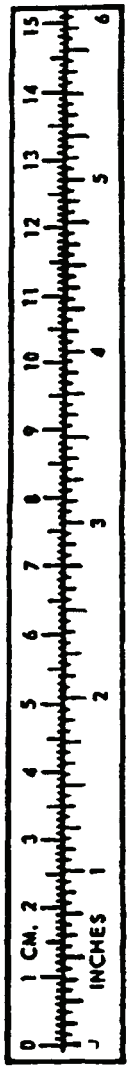

PIN: 084868-000