*TM 9-3990-258-13&P-1

*This manual supersedes TM 9-3990-258-13&P, dated 1 November 2000

TECHNICAL MANUAL

OPERATOR, UNIT AND DIRECT SUPPORT MAINTENANCE MANUAL AND REPAIR PARTS AND SPECIAL TOOLS LIST (RPSTL)

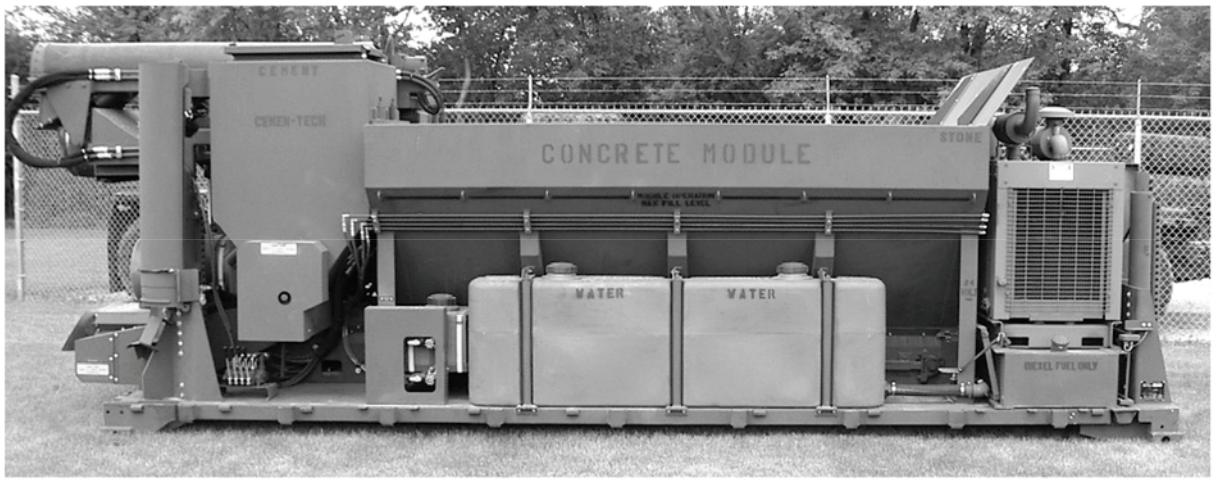

CONCRETE MOBILE MIXER MODULE

MODEL M5

(NSN 3990-01-444-5196) (EIC: BDN)

DISTRIBUTION STATEMENT A:
Approved for public release; distribution is unlimited.

HEADQUARTERS, DEPARTMENT OF THE ARMY

JUNE 2008

WARNING SUMMARY

The following is a list of warnings that appear in this manual. Concrete Mobile Mixer operators and mechanics must become familiar with all warnings. Severe injury or death can be avoided by operators and mechanics who understand the vehicle and are alert to possible dangers.

WARNING

- Freshly mixed grout or concrete may cause skin irritation. Avoid direct contact where possible and wash exposed skin area promptly with water. If any of cementitious material gets into eyes, rinse immediately with water. Failure to comply could result in serious injury to personnel.
- Always start and operate engine in a well ventilated area. If in an enclosed area, vent exhaust to outside. Failure to comply could result in serious injury or death to personnel.
- Do not idle engine for long periods without maintaining adequate ventilation in personnel compartments and immediate areas. Failure to comply could result in serious injury or death to personnel.
- Do not modify or tamper with exhaust system. Failure to comply could result in serious injury or death to personnel.
- Do not operate any vehicle with inspection plates, cover plates, or engine compartment doors removed unless it is necessary for maintenance purposes. Failure to comply could result in serious injury or death to personnel.
- Dry-cleaning solvent (P-D-680) is TOXIC and flammable. Wear protective goggles, face shield, and gloves; use only in a well-ventilated area; avoid contact with skin, eyes, and clothes, and do not breathe vapors. Keep away from heat or flame. Never smoke when using solvent. The flashpoint for Type II dry-cleaning solvent is 140°F (60°C) and Type III dry-cleaning solvent is 200°F (93°C). Failure to do so may result in serious injury or death to personnel.
- Avoid contact with wet concrete. It may cause skin irritation and burns. If skin is exposed directly or through saturated clothing, wash thoroughly with water. If any concrete gets into eyes, flush immediately with water and get prompt medical attention. Failure to comply could result in serious injury to personnel.
- Operator will be working with auger guard raised. Be careful not to catch your fingers or clothing in auger. Carelessness may cause severe injury to personnel.
- During loading operations or at any time there is cement dust in air, take precautions to avoid direct inhalation of dust. If you must be in immediate vicinity of dust, wear a dust mask, or if none is available, cover your nose and mouth with a cloth. Cement dust can cause serious lung problems. Failure to comply could result in serious injury or death to personnel.
- When working in area of serpentine on main drive, cement and dry admix chain drives, or mixing trough auger, be extremely careful to avoid contact with or catching clothing in moving parts. Failure to comply could result in serious injury or death to personnel.
- Ensure all personnel are clear of area around Concrete Mobile Mixer lowering or raising auger. Failure to comply could result in serious injury or death to personnel.

WARNING

- Cement dust can cause serious lung problems. During loading operations or any time there is cement dust in air, take precautions to avoid direct inhalation of dust. If you must be in immediate vicinity of dust, wear a dust mask, or if none is available, cover nose and mouth with a cloth. Failure to comply could result in serious illness to personnel.
- Single level hearing protection is required for personnel within 39 ft. 4 in. (12 m) of Concrete Mobile Mixer during operations that require use of high idle engine speed. Failure to comply may result in hearing loss to personnel.
- Single level hearing protection is required for personnel within 3 ft. 4 in. (1 m) of Concrete Mobile Mixer during operations that require use of low idle engine speed. Failure to comply may result in hearing loss to personnel.
- Auger will rotate with engine on and controls off. Extreme care should be taken when around auger area. Failure to comply may result in severe injury or death to personnel.
- Ensure Concrete Mobile Mixer engine is off and cement clutch is disengaged prior to installing breaker bar and socket on cement auger shaft. Failure to comply could result in injury or death to personnel.
- Ensure breaker bar and socket are removed from auger shaft prior to engaging cement bin clutch, if Concrete Mobile Mixer engine is on. Failure to comply could result in injury or death to personnel.
- Extreme care should be taken to prevent loss of balance while removing or installing delivery to chutes. Failure to comply could result in injury or death to personnel.
- Ensure hand crank is removed from auger shaft prior to engaging cement bin clutch if Concrete Mobile Mixer engine is on. Failure to comply could result in injury or death to personnel.
- Ensure Concrete Mobile Mixer engine is off and cement auger does not rotate prior to installing breaker bar and socket on cement auger shaft. Failure to comply could result in injury or death to personnel.
- Adhesives, solvents, and sealing compounds can burn easily, can give off harmful vapors, and are harmful to skin and clothing. To avoid injury or death, keep away from open fire and use in well-ventilated area. If adhesives, solvent, or sealing compound gets on skin or clothing, wash immediately with soap and water.
- If mixing auger is in stowed position, gravity could cause mixing auger to lower. Prior to performing this procedure, ensure mixing auger is secured with storage pin. Failure to comply could result in serious injury.
- Engine weighs 800 lb (363kg). Position engine on engine stand with adapter plate to support. Keep lift device connected for added stability. Failure to comply could result in serious injury or death to personnel.
- When manually rotating cement chain drive, be extremely careful to avoid contact with or catching clothing on moving parts. Failure to comply could result in injury to personnel.
- Fuel line pressure can penetrate skin and cause serious bodily harm. Do not allow any part of body to get in line of fuel spray. Failure to comply could result in serious injury or death to personnel.
- To prevent slipping or falling, ensure PLS ladder is setting on firm, level ground and evenly supported against PLS trailer. Failure to comply could result in serious injury or death to personnel.

WARNING

- Fuel is very flammable and can explode easily. To avoid serious injury or death, keep fuel away from open fire and keep fire extinguisher within easy reach when working with fuel. Do not work on fuel system when engine is hot. Fuel can be ignited by a hot engine.
- Radiator, radiator cap, coolant, and hoses are very hot and pressurized during truck operation. Let radiator cool before checking hoses. Failure to do so may result in serious burns to personnel.
- Ensure engine is cool before performing this task or injury to personnel may result.
- It is necessary to put the engine in the "run" position. Because the engine may start, be sure to follow all safety precautions. Use the normal engine starting procedures. Failure to comply could result in serious injury or death to personnel.
- While cranking engine, ensure personnel stay clear of moving parts. Failure to comply could result in serious injury or death to personnel.
- Concrete Mobile Mixer has a very high center of gravity (CG). A higher CG limits cornering and side slope operations. Limit side slope operations and transportation to no more than a 20 percent side slope angle when Concrete Mobile Mixer is loaded onto PLS truck and/or PLS trailer (PLST). Failure to comply may result in vehicle rollover causing injury or death to personnel.
- If operating Concrete Mobile Mixer on PLS trailer (PLST), ensure PLST turntable is LOCKED. Concrete Mobile Mixer has a very high center of gravity (CG) and PLST is unstable when front tires are not facing straight ahead and turntable is unlocked. Failure to comply may result in vehicle rollover causing injury or death to personnel.
- Air compressor weighs 60 lb (27.2 kg). Do not attempt to move or lift air compressor without the aid of an assistant. Failure to comply could result in serious injury to personnel.
- Cylinder head weighs 80 lb (36 kg). Do not attempt to lift or move without use of a suitable lifting device and aid of an assistant. Failure to comply could result in serious injury to personnel.
- Radiator weighs 175 lb (79.4 kg). Do not attempt to lift or move radiator without the aid of an assistant and suitable lifting device. Failure to comply could result in serious injury to personnel.
- Hoist must be secured before removing bypass hose. Failure to comply may result in serious injury or death to personnel or damage to equipment.
- Engine and engine support assembly weigh 1200 lb (545 kg). Do not attempt to move or lift engine and support assembly without aid of an assistant and suitable lifting device. Failure to comply could result in serious injury or death to personnel.
- Delivery chutes are heavy. Take care to keep hands away from slots when installing chutes. Failure to comply could result in injury to personnel.
- Batteries are connected during adjustment process. Magnetic switch connections are exposed 12 and 24 volts. Take care not to make contact with magnetic switch connections and engine enclosure. Failure to comply may result in serious injury to personnel and/or damage to equipment.

LIST OF EFFECTIVE PAGES Insert latest changed pages. Destroy superceded pages.

NOTE

The portion of the text affected by the changes is indicated by a vertical line in the outer margin of the page. Added or revised illustrations are indicated by a vertical line in the outer margin, adjacent to the illustration.

Dates of issue for original and changed pages are:

Original . . . . . 30 JUNE 2008

TOTAL NUMBER OF PAGES IN THIS PUBLICATION IS 1176 CONSISTING OF THE FOLLOWING:

Page No.	*Change No.
Cover	0
Blank	0
a thru c	0
d blank	0
i thru iii	0
iv blank	0
1-1 thru 1-12	0
2-1 thru 2-141	0
2-142 blank	0
3-1 thru 3-623	0
3-624 blank	0
4-1 thru 4-377	0

* Zero In This Column Indicates An Original Page.

TECHNICAL MANUAL
No. 9-3990-258-13&P-1

HEADQUARTERS
DEPARTMENT OF THE ARMY
Washington, D.C., *30 June 2008*

OPERATOR, UNIT AND DIRECT SUPPORT MAINTENANCE MANUAL AND REPAIR PARTS AND SPECIAL TOOLS LIST (RPSTL) FOR CONCRETE MOBILE MIXER MODULE MODEL M5 (NSN 3990-01-444-5196) (EIC: BDN)

Current as of 30 June 2008

REPORTING OF ERRORS AND RECOMMENDING IMPROVEMENTS

You can help improve this publication. If you find any errors, or if you would like to recommend any improvements to the procedures in this publication, please let us know. The preferred method is to submit your DA Form 2028 (Recommended Changes to Publications and Blank Forms) through the Internet, on the Army Electronic Product Support (AEPS) website. The Internet address is https://aeps.ria.army.mil. The DA Form 2028 is located under the Public Applications section in the AEPS Public Home Page. Fill out the form and click on SUBMIT. Using this form on AEPS will enable us to respond quicker to your comments and better manage the DA Form 2028 program. You may also mail, e-mail, or fax your comments or DA Form 2028 directly to the U.S. Army TACOM Life Cycle Management Command. The postal mailing address is U.S. Army TACOM Life Cycle Management Command, ATTN: AMSTA-LC-LMPP / TECH PUBS, 1 Rock Island Arsenal, Rock Island, IL 61299-7630. The e-mail address is tacomlcmc.daform2028@us.army.mil. The fax number is DSN 793-0726 or Commercial (309) 782-0726.

TABLE OF CONTENTS

Page

CHAPTER 1 INTRODUCTION 1-1

CHAPTER 2 OPERATING AND MAINTENANCE INSTRUCTIONS 2-1

CHAPTER 3 UNIT AND DIRECT SUPPORT MAINTENANCE INSTRUCTIONS 3-1

CHAPTER 4 UNIT MAINTENANCE TROUBLESHOOTING INSTRUCTIONS 4-1

Approved for public release; distribution is unlimited.

This manual supersedes TM 9-3990-258-13&P, dated 1 November 2000.

TABLE OF CONTENTS

Page

APPENDIX A ADMIXTURE A-1
APPENDIX B HYDRAULIC OIL B-1
APPENDIX C BASIC ISSUE ITEMS (BII) C-1
APPENDIX D ACCU-VANE D-1
APPENDIX E REPAIR PARTS AND SPECIAL TOOLS LIST (RPSTL) E-1
APPENDIX F TORQUE LIMITS F-1
APPENDIX G MAINTENANCE ALLOCATION CHART (MAC) G-1
APPENDIX H EXPENDABLE SUPPLIES AND MATERIALS LIST H-1
APPENDIX I TOOL IDENTIFICATION LIST I-1

HOW TO USE THIS MANUAL

This manual is designed to help operate and maintain the Concrete Mobile Mixer, Model M5, NSN 3990-01-444-5196, Part Number 87T0039. Listed below are some of the features included in this manual to help locate and use the needed information:

- Warning, caution and note headings, subject headings and other essential information are printed in bold type, making them easier to see.
- In addition to text, there are digital photos and some line art illustrations showing how to take a component off and put it back on. Cleaning and inspection criteria are also included where necessary.
- Chapter 1 of this manual describes the Concrete Mobile Mixer and provides equipment data.
- Chapter 2 of this manual covers Operator's Controls and Indicators, General Maintenance Procedures, Preventive Maintenance Checks and Services (PMCS), Operator Instructions and Lubrication Instructions.
- Chapter 3 of this manual covers General Maintenance Procedures and Unit and Direct Support Maintenance Instructions.
- Chapter 4 of this manual covers Unit Maintenance Troubleshooting Instructions.
- Appendix A of this manual covers Admixtures.
- Appendix B of this manual covers Hydraulic Oil Specifications.
- Appendix C of this manual covers Basic Issue Items (BII).
- Appendix D of this manual covers Accu-Vane Calibrations and Calculations.
- Appendix E of this manual covers a Repair Parts and Special Tools List (RPSTL) for the Concrete Mobile Mixer.
- Appendix F of this manual covers Torque Limits.
- Appendix G of this manual provides a Maintenance Allocation Chart (MAC).
- Appendix H of this manual provides an Expendable Supplies and Materials List.
- Appendix I of this manual provides a Tool Identification List.

Follow these guidelines when using this manual:

- The operator must read through this manual and become familiar with the contents before attempting to operate the Concrete Mobile Mixer.
- Read all WARNINGS, CAUTIONS and NOTES prior to performing any procedure.
- Concrete Mobile Mixer TM is used in conjunction with Palletized Load System (PLS) TM 9-2320-364 Manual Series.

CHAPTER 1

INTRODUCTION

Para	Contents	Page
1-1	General Operating Information	1-1
1-2	Equipment Characteristics, Capabilities, and Features	1-3
1-3	Location and Description of Major Components	1-4
1-4	Major Systems	1-8
1-5	Equipment Data	1-9
1-6	Principles of Operation	1-10
1-7	Handling and Transportation Procedures	1-10
1-8	Warranty Information	1-11
1-9	Maintenance Concept	1-11
1-10	Repair and Parts Support	1-11
1-11	Maintenance Forms and Records	1-12
1-12	Corrosion Prevention and Control (CPC)	1-12
1-13	Destruction of Army Materiel To Prevent Enemy Use	1-12
1-14	Reporting Equipment Improvement Recommendations (EIRs)	1-12

Section I. GENERAL INFORMATION

1-1. GENERAL OPERATING INFORMATION.

a. Change in Formula.

NOTE

- Whenever deviating from the mix setting chart formulas, be warned that there can be no guaranteed assurance of the strength of the concrete.
- Always work closely with your cement supplier's concrete technician or technical staff to develop concrete design formulas.
- Consult your Cement Supplier's Laboratory, Technical Department, or the Independent Laboratory that provided original concrete design formulas. In emergencies, recalculate your own mix settings by adjusting mix proportion weights, using the procedures listed below in Steps (1) and (2).

(1) For each bag of cement that is added—subtract 80 lb (36.3 kg) of aggregate (sand and/or stone, combined).

(2) For each bag of cement taken out of the mix—add 80 lb (36.3 kg) of aggregate (sand and/or stone, combined).

1-1. GENERAL OPERATING INFORMATION (CONT).

b. Changing from Regular to Air-Entrained Cement.

(1) When air-entrained cement is used, the strength of the concrete usually will be changed: mixes rich in air-entrained cement can be expected to lose some strength; mixes lean in air-entrained cement may lose no strength, and in some cases will gain strength.

(2) To maintain the same relative strength of concrete when air-entrained cement is to be used instead of regular cement, reduce the water content of the concrete by 1/4 gal. (0.94 l) per bag of cement in the mix and reduce sand by 10 lb (4.54 kg) per bag of cement in the mix. This will increase the relative amount of cement in the mix.

(3) To maintain the cement factor when changing from regular to air-entrained cement, reduce water in the mix by 1/4 gal. (0.94 l) and reduce sand in the mix by 5 lb (7.26 kg) for each 1% of air-entrained cement.

c. Decreasing Slump.

NOTE

- Decreasing the slump will change the ultimate strength of the concrete.
- Subtract 1 gal. (3.79 l) of water per cubic yard (0.77 cubic m) of concrete to decrease slump about 1 in. (25.4 mm).

d. Maintaining Constant Yield When Water Content of a Mix is Changed.

(1) For each gal. (3.79 l) of water taken from a mix (changed from mix settings chart formula), add 22 lb (9.98 kg) of sand per cubic yard (0.77 cubic m) of concrete.

(2) For each gal. (3.79 l) of water added to a mix (changed from mix settings chart formula), add 18.8 lb (8.53 kg) of cement or 1/5 bag, and subtract 13 lb (5.90 kg) of sand and 25 lb (11.34 kg) of stone.

e. Complaints About Workability of Concrete.

(1) If mix is unworkable and harsh, increase sand by 50 lb (26.8 kg) per cubic yard (0.77 cubic m) and decrease stone by 50 lb (26.8 kg) per cubic yard (0.77 cubic m). If still more sand is requested, repeat change by adding 50 more lb (26.8 more kg) of sand and again subtracting 50 lb (26.8 kg) of stone for each cubic yard (0.77 cubic m) of concrete. This procedure may be repeated, but always work with 50 lb (26.8 kg) increments.

(2) The workability of a mix containing too much sand may be changed by following the above procedure in reverse: adding 50 lb (26.8 kg) of stone and taking away 50 lb (26.8 kg) of sand from each cubic yard (0.77 cubic m) of concrete. It is important to always check yield and strength of a mix when either of these procedures has been followed.

(3) Any adjustments that involve changes of more than 50 lb (26.8 kg) per cubic yard (0.77 cubic m) requires recalculation of mix settings.

Section II. EQUIPMENT DESCRIPTION

1-2. EQUIPMENT CHARACTERISTICS, CAPABILITIES, AND FEATURES.

a. Introduction.

The Palletized Load System (PLS) Concrete Mobile Mixer is a combination materials transporter and mobile concrete mixing plant, that carries sufficient unmixed, dry, bulk cement, sand and coarse aggregate and water to any job site or pour point to produce fresh concrete, mixed to design specifications on a continuous or intermittent basis as required, and delivers it via conventional chute. The Concrete Mobile Mixer is a precisely calibrated mechanism that enables a competent operator to produce concrete that will meet or exceed ACI or ASTM standards for design strength.

With the PLS Concrete Mobile Mixer, concrete can be produced in the exact quantity needed, as it is needed, right at the job (within the load carrying capacity limits of the unit being used). The operator can deliver concrete made to more than one design or specification without moving the concrete module or causing any delay.

b. Characteristics.

The PLS Concrete Mobile Mixer is a demountable unit, with a self-contained power supply, capable of repeated use with the PLS Load Handling System (LHS) and compatible for transport and operation on the PLS truck and/or the PLS trailer (PLST). The Concrete Mobile Mixer also operates as a stand-alone unit without assistance from the PLS truck. The Concrete Mobile Mixer will provide a means to carry raw materials for concrete in separate compartments for mixing on the job site. The mix design can be controlled by the operator according to a pre-determined mix design chart. With the Concrete Mobile Mixer, the operator can adjust the slump either up or down as the concrete is produced. A meter shows the amount of concrete produced.

c. Capabilities.

With the PLS Concrete Mobile Mixer, cement, sand, and coarse aggregate are carried in separate or divided bins mounted on the unit. Sand and coarse aggregate are carried in a large divided bin, sand on the left side and coarse aggregate on the right. Cement is carried in a separate bin mounted at the rear of the large double aggregate bin. The three bins all load from the top. The cement bin is equipped with two hinged covers (with clamps for holding them tightly in place). A tarp is provided to cover both aggregate bins. Water is carried in two tanks, mounted at either side of the aggregate bin of the PLS Concrete Mobile Mixer.

The dry ingredients are accurately proportioned by volume that is computed on the known dry weights of each of the specific aggregates being used. The three basic dry ingredients simultaneously drop into the charging end of the mixing auger at the rear of the unit. At this point, a predetermined metered flow of water and admixes also enter the mixer. Action of the combined auger and paddle mixer rapidly, thoroughly, and continuously mixes the dry ingredients and water to produce a continuous flow of uniform quality concrete in which all surfaces of all the particles, both large and small, are completely covered by paste and all the spaces between particles are filled with paste.

The “custom-made” concrete then is discharged by means of a chute into forms, wheelbarrows, etc., and is placed immediately. The materials blending-mixing action is continuous and may proceed until the ingredient bins are empty. On the other hand, the mixing action, and “delivery” of concrete through the chute, may be stopped almost instantaneously, then started again at the will of the operator. This permits production to be balanced to the demand of the crew that is placing the concrete and to other job requirements.

The proportioning and blending mechanisms of the Concrete Mobile Mixer are all powered by a diesel engine. The entire operation is under the positive control of the operator at all times.

1-2. EQUIPMENT CHARACTERISTICS, CAPABILITIES, AND FEATURES (CONT).

The PLS Concrete Mobile Mixer has an 8 cubic yard (6.12 cubic m) capacity and when being reloaded continuously, is capable of producing 30 cubic yards (22.94 cubic m) of concrete over a 1-hour period.

When loaded on the PLS truck, the Concrete Mobile Mixer is capable of being loaded and unloaded on any PLS truck and/or trailer. A fully loaded Concrete Mobile Mixer can be transferred from one PLS to another.

d. Features.

- 8 cubic yard (6.12 cubic m) capacity module with a 30 cubic yard (22.94 cubic m) per hour pouring capacity
- Self-contained power supply (four-cylinder Cummins diesel engine)
- Aggregate proportioning system
- Cement feeding system
- Mixer system
- Water system
- Liquid admixture systems
- Diesel power system
- Work light system
- Compressed air system

1-3. LOCATION AND DESCRIPTION OF MAJOR COMPONENTS.

Major components and accessories found on the Concrete Mobile Mixer Module are listed below.

a. Aggregate Bins (1).

The aggregate bins and center divider are fabricated from mild carbon steel of a minimum of 10-gauge thickness. The walls of the aggregate bins are angled to allow for proper flow of sand and gravel. Both sides of the bins are equipped with a rubber bin guide which runs the full length of the bin. Two vibrators are installed on the sand side of the aggregate bin to prevent bridging to ensure a constant flow of material

b. Conveyor (2).

A 24 in. (60.96 cm.) wide main conveyor meters and conveys aggregates to the discharge at the rear of the unit. The conveyor is enclosed by shields and guards, where practical, to reduce dust.

c. Strike-Off Gates (3).

Strike-off gates control the amount of aggregate that is discharged and are located at the discharge of each aggregate from its respective bin. Gate height is controlled by a positive drive rack and pinion system with position indicator.

d. Mixer (4).

The mixer is a 7 ft. (2.13 m) long, 9 in. (229 mm) diameter continuous mixer. It is designed to thoroughly mix a wide range of mixes, from zero slump mixes to very high slump slurry mixes. The mixer is equipped with bolt on replaceable, cast wear resistant Ni-Hard steel, auger wear blades.

e. Low-Flow Admix Tank (5).

A plastic, translucent container used to store low-flow admixture.

f. High-Flow Admix Tank (6).

A plastic, translucent container used to store high-flow admixture.

g. Cement Bin (Qty 2) (7).

A watertight, 10-gauge steel cement bin is located on each side of the Concrete Mobile Mixer. Each bin has an 18 in. (45.7 cm) x 26 in. (66.0 cm) weatherproof top hatch provided for loading the cement bin and a clear polycarbonate waterproof visual level.

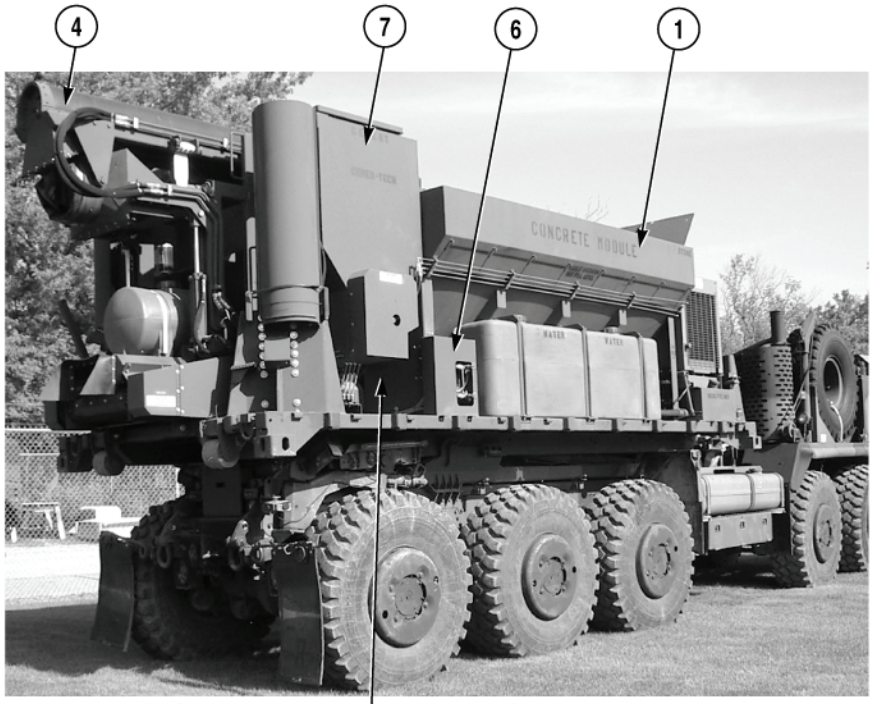
4
7
6
1
CONCRETE MODULE
WATER
WATER

1
3
7
4
5
2
CONCRETE MODULE
CEMENT
CEMEX-TECH
WATER
WATER

1-3. LOCATION AND DESCRIPTION OF MAJOR COMPONENTS (CONT).

h. Power Supply (8).

Hydraulic, electric, and pneumatic power is provided by a 2500-rpm, 4-cylinder, 80-hp diesel engine with a 4-bolt drive coupling. The diesel engine is equipped with a muffler with a rain cap. The engine is operable on JP-8 fuel as well as standard diesel fuel. The engine is equipped with a starting panel, safety shutdown, and key switch. Two 12-volt batteries are included to provide 12-volt and 24-volt power for all electrical requirements of the Concrete Mobile Mixer.

i. Water Tank (Qty 2) (9).

A water tank is located on each side of the Concrete Mobile Mixer. Each tank is equipped with a strainer to filter contaminants when the tank is being filled from a non-portable water supply.

j. Hydraulic Reservoir (10).

The hydraulic reservoir is located on the front left side of the Concrete Mobile Mixer. The reservoir is equipped with a mesh strainer and a return line, 10-micron spin-on type filter. The hydraulic reservoir stores and cools oil used in the hydraulic system.

k. Delivery Chutes (11).

Three 4 ft. (1.2 m) long delivery chutes can be attached to the end of the mixing auger. All three delivery chutes are stored on the rear of the Concrete Mobile Mixer.

l. Stowage Boxes (12).

Stowage boxes are used to stow Basic Issue Items (BII).

m. Hook Bar (13).

The hook bar is used to load and unload the Concrete Mobile Mixer on the PLS.

n. Work Lights (14).

Two 12-volt halogen work lights, located on the rear of the Concrete Mobile Mixer, promote and facilitate night operations of the Concrete Mixer.

o. Lift Cylinders/Support Legs (15).

The lift cylinders/support legs are capable of lifting the Concrete Mobile Mixer to working height, and supporting the Concrete Mixer, when loaded to gross weight, for stationary operations.

p. Fire Extinguisher (16).

The fire extinguisher is located behind the low-flow admix tank used to extinguish fires. The fire extinguisher is a 20 lb, A, B, C type fire extinguisher.

q. Battery Box (17).

The battery box is used to house and store two batteries used for operations of Concrete Mobile Mixer.

r. Shovel (18).

The shovel is used to aid in moving the cement mixture along the delivery chutes.

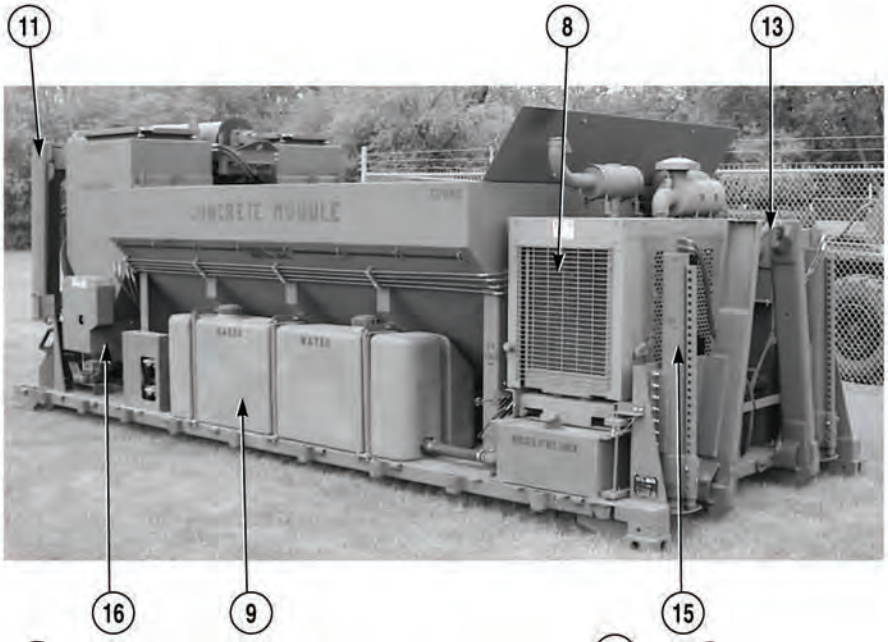
11
8
13
16
9
15

17
11
14
9
18
6
10
15
12

1-4. MAJOR SYSTEMS.

a. Aggregate Proportioning System.

The Concrete Mobile Mixer is equipped with a longitudinally split bin for use with fine and coarse aggregates. As the aggregate exits the bin, a calibrated, adjustable strike-off gate proportions the correct amount of material per the mix design formula. The aggregate bins are top loaded; the most common way to load aggregates is with a front end loader. A 3 in. x 3 in. (76 mm x 76 mm) opening grate system is provided in each aggregate bin. The level of the gate is the level to load the bin for transporting on the PLS truck/trailer. This level is the 5-yard-capacity level. There are two pneumatic vibrators mounted on the sand side of the aggregate bin. These vibrators automatically cycle whenever the conveyor is in operation. A manual shut-off valve is provided so that the vibrators can be shut off during calibration of the cement. The cycling of the vibrators is controlled by a mechanically actuated cam valve.

b. Cement Feed System.

A cement bin is located behind the aggregate bins. The top loaded bin has two weather proof lids that should only be opened when filling with cement. Only dry, loose cement should ever enter this bin. The cement bin is equipped with a “accu-vane” cement feeding system that volumetrically meters the cement onto the aggregates on the conveyor belt. The cement feeding system is connected to the conveyor belt drive shaft for positive, accurate metering. A sheer pin is located in the lower drive sprocket located on the conveyor driveshaft. This shear pin is installed to protect the “accu-vane” feeder should foreign material enter the cement bin. The feeder is equipped with a clutch so the “accu-vane” can be disconnected. This allows aggregates to be emptied without discharging cement. There are two pneumatic vibrators mounted on the side of the cement bin. The vibrators automatically cycle whenever the conveyor is in operation. A manual shut-off valve is provided so that the vibrators can be shut off during calibration of the aggregates. The cycling of the vibrators is controlled by a mechanically actuated cam valve. The vibrators prevent bridging of material to ensure accurate/uniform delivery of the cement.

c. Mixer System.

The mixer system consists of a mixing auger with replaceable wear blades, hydraulic motor, angle indicator, and mixer frame with replaceable top and bottom rubber boots. The mixing auger’s minimum mix angle is 15 degrees. The limiting height is controlled by the slump on the concrete. The higher the slump, the longer the concrete is kept in the mixer and the lower the angle needed to discharge out of the mixer. The mixer should be run as high as possible to retain the material being delivered into the mixer. The mixer is mounted to a swivel assembly. The swivel has a positive lock to hold the mixer in one position. The lock can be released so the operator can move the mixer left and right. To stow the mixer in the travel position, you must have the mixer in the straight rearward position in line with the conveyor.

d. Water System.

Water is stored in two water tanks on the sides of the Concrete Mobile Mixer. A hydraulic powered centrifugal water pump provides both pressure and flow for concrete production and cleanup. The mix water flows through a flow control valve and a flow meter before it enters the continuous mixer. An air-operated, quick-acting valve automatically starts and stops the water flow in conjunction with the operation of the conveyor control. Water flow may also be manually turned on for washout by positioning the system control switch in the “ON” position.

Water pressure is controlled by a hydraulic flow control valve located at the operator’s control area. During normal operation, the water pressure should be set to 40 psi (276 kPa) in a static condition (with no water flowing). This allows easier adjustment of water flow into the mixer by the operator to produce the proper slump in the concrete. For washup purposes, the static water pressure can be increased to 80–100 psi (552–690 kPa) to aid in cleaning by adjusting the hydraulic flow control. There is a water pressure gage located on the control panel. Always return the water pressure to 40 psi (276 kPa) after washup. If the operator leaves the pressure in high pressure, it will be difficult to control the added water to the concrete mix.

There is a 25 ft. (7.62 m) long, 1.5 in. (38.1 mm) diameter suction hose that can be attached to the suction side of the pump to enable the operator to fill the water tanks from a pond or river. Always have the suction strainer attached to the hose to filter the water going into the pump. There is an in line strainer on the pump that will need to be cleaned if the pump is not pumping enough water. The operator can also fill the tanks by removing one of the caps on the top of the tanks and inserting a fill hose from another tank and pumping it into the tanks. There is a cross-over hose that connects the two tanks together.

e. Liquid Admixture Systems.

The Concrete Mobile Mixer is equipped with two liquid admixture systems. The two systems are the "high-flow" and "low-flow" systems. Each system has one plastic tank to store the liquid. Each system uses a different 12 volt DC chemical pump to provide the pressure and flow to inject the admix:

- The high-flow system is normally used for accelerating admixtures and some high dosage water reducing agents (1 to 6 quarts/min.).
- The low-flow system is used for air-entraining agents and many water-reducing agents (10 to 50 oz/min.).

Since the flow rates depend upon a visual indicator in a flow meter, dark colored admixtures will have to be diluted to enable the operator to see the indicator. They may also have to be diluted to improve the viscosity of thick admixes.

Both pumps are self priming. A switch located at the flow meter controls the admix system. The switch is a three position electrical switch: "ON," "OFF," and "AUTO."

1-5. EQUIPMENT DATA.

Refer to the following tables for specific equipment data.

Table 1-1. Dimensions

	Feet/Inches	Meters
Length of Concrete Mixer Only	22/7	6.87
Width of Concrete Mixer Only	8/0	2.44
Height of Concrete Mixer Only (w/Rollers Installed)	8/0	2.44
Length of Loaded PLS w/Concrete Mixer	37/9	11.51
Width of Loaded PLS w/Concrete Mixer	8/0	2.44
Height of Loaded PLS w/Concrete Mixer	12/8	3.86
Length of Loaded PLS Trailer w/Concrete Mixer	26/4	8.03
Width of Loaded PLS Trailer w/Concrete Mixer	8/0	2.44
Height of Loaded PLS Trailer w/Concrete Mixer	12/1	3.68

Table 1-2. Weights

	Pounds	Kilograms
Weight of Empty Concrete Mixer	16,740	7593
Weight of PLS w/Empty Concrete Mixer	65,000	29,484
Weight of w/Full Concrete Mixer (Mobile/5 cubic yards [3.82 cubic m])	85,170	38,632
Weight of Permissible Load (Mobile/5 cubic yards [3.82 cubic m])	20,160	9144
Weight of Permissible Load (Stationary/8 cubic yards [6.12 cubic m])	31,610	14,338

Table 1-3. Capacities

	Capacity
Cement Bin	63 cubic ft. (1.78 cubic m)
Sand Bin	128 cubic ft. (3.62 cubic m)
Stone Bin	182 cubic ft. (5.15 cubic m)
Water Tank	460 gal. (1741 l)
High-Flow Admix Tank	35 gal. (132.4 l)
Low-Flow Admix Tank	12 gal. (45.4 l)
Fuel Tank	55 gal. (208 l)
Hydraulic Tank	50 gal. (189 l)
Chain Oiler	2 qts (1.89 l)

1-6. PRINCIPLES OF OPERATION.

Electrical, pneumatic, and hydraulic power are provided to the module through an onboard power supply (Para 1-3h).

1-7. HANDLING AND TRANSPORTATION PROCEDURES.

The Concrete Mobile Mixer at transport weight (16,740 lb [7,593 kg]) is capable of being loaded or unloaded on any PLS truck and/or PLST. A fully loaded Concrete Mobile Mixer can be transferred from one PLS to another. The flatrack portion of the Concrete Mobile Mixer contains rail transport pins for securing during rail transport. ISO corner castings are used to interconnect the modules.

1-8. WARRANTY INFORMATION.

Except as provided below, and provided the Concrete Mobile Mixer has been placed into service within one (1) year after shipment from the factory, as established by the date on DD Form 250, or a period of twelve (12) months after delivery to the first user, Oshkosh Truck Corporation warrants the Engineering Mission Modules (EMMs) are free from defects in material and workmanship. This limited warranty shall apply only if the module is properly maintained and used in service which is normal for the particular module. Normal service means service which does not subject the module to stresses or impacts greater than normally result from the careful use of the module or chassis. Oshkosh makes no warranty whatsoever as to: (1) Any module, chassis, or component, part, attachment, or accessory damaged by misuse, neglect, or accident; (2) Any module, chassis, or component, part, attachment, or accessory which shall have been repaired, module altered or assembled in any way by others than Oshkosh which, in the sole judgement of Oshkosh, affects the performance, stability, or purpose for which it was manufactured; (3) Frames or crossmembers which have been subject to welding, heat treatment, or corrosion caused by the use of acids after delivery to the first user; (4) Products or parts which are not defective, but which may wear out and have to be replaced during the warranty period including, but not limited to, fluids, gaskets, and light bulbs.

If the Unit discovers a defect or nonconformity, it must notify Oshkosh within ten (10) days after the date of discovery. Notification of a defect can be made by telephone or in writing, providing the details of the claim. If you have any questions, call the Oshkosh Defense Service Department at (920) 235-9151, extension 2681.

Warranty replacement parts are shipped directly to the Unit within five (5) days of notification. Oshkosh arranges to correct the claim. Warranty claims are corrected in the field or at an Oshkosh service dealer. If it becomes necessary to return a module to a service dealer or our plant for repair, Oshkosh arranges and pays transportation to the facility.

1-9. MAINTENANCE CONCEPT.

The Unit operating the Concrete Mobile Mixer should replace the components and replacement parts covered in this manual. Major systems, major components, and items that are not covered in the maintenance tasks or illustrated within the parts list can be repaired by an Oshkosh service representative or designated technician.

Worn components will be rebuilt to manufacturer's specification either by component manufacturer, at an Oshkosh service facility, or a qualified component rebuild facility. Oshkosh will maintain an inventory of rebuilt components to ship to the field to support immediate supply requirements.

1-10. REPAIR AND PARTS SUPPORT.

Oshkosh will provide parts delivery for all unique PLS Engineering Mission Module (EMM) parts in five (5) business days or less.

Oshkosh shall provide parts support the EMM-unique items and will ship the part directly to the ordering Unit or activity. Overseas locations will be shipped to a designated containerization point for transshipment on military aircraft/vessel to the originator.

Oshkosh will apply bar-coded labels to every shipment made under this contract.

Oshkosh will supply new, quality parts and ensure complete customer satisfaction through a parts warranty. Quality standards will be maintained through the use of the ISO 9002 quality system or equivalent standards, or certified Original Equipment Manufacturer (OEM) replacement parts. Oshkosh will reimburse customers for any parts they returned in unused condition that were found damaged upon receipt. Parts may be returned due to incorrect part number or incorrect order quantity received.

Replacement and repair parts information can be found in the replacement parts Appendix of this manual. Any parts not identified in the replacement parts Appendix will also be supported and supplied through Oshkosh. If a part is unidentifiable, an Oshkosh representative will assist in identifying that part. If you have any questions, or to obtain parts that are under warranty, call the Oshkosh Defense Service Department at (920) 235-9151, extension 2681.

1-11. MAINTENANCE FORMS AND RECORDS.

Department of the Army forms and procedures used for equipment maintenance will be those prescribed by DA PAM 738-750, The Army Maintenance Management System (TAMMS) (Maintenance Management UPDATE).

1-12. CORROSION PREVENTION AND CONTROL (CPC).

The Concrete Mobile Mixer has a total service life of 10 years which allows for extended periods of operation in a corrosive environment. A corrosive environment includes exposure to high humidity, salt spray, road-deicing chemicals, gravel, and atmospheric contamination. No action beyond normal washing and repair of damaged areas is necessary to control corrosion. To prevent moisture accumulation, drain holes are provided on structural and sheet metal areas where necessary. Stowage boxes are provided with seals and baffled drains.

1-13. DESTRUCTION OF ARMY MATERIEL TO PREVENT ENEMY USE.

Refer to TM 750-244-6, Procedures for Destruction of Tank Automotive Equipment to Prevent Enemy Use.

1-14. REPORTING EQUIPMENT IMPROVEMENT RECOMMENDATIONS (EIRs).

If your Concrete Mobile Mixer needs improvement, let us know. Send us an EIR. You, the user, are the only one who can tell us what you don't like about your equipment. Let us know why you don't like the design or performance. Put it on a SF 368 (Product Quality Deficiency Report). Mail it to us at: Commander, U.S. Army Tank-automotive and Armaments Command, ATTN.: AMSTA-TR-E-MPA, Warren, MI 48397-5000. We'll send you a reply.

CHAPTER 2

OPERATING AND MAINTENANCE INSTRUCTIONS

Para	Contents	Page

2-1 Location and Use of Controls and Indicators 2-2
2-2 Handling and Transportation Procedures 2-18
2-3 Initial Guidelines 2-18
2-4 Preparation For Operation 2-18
2-5 Loading and Unloading Concrete Mobile Mixer On PLS Truck 2-19
2-6 Preventive Maintenance Checks and Services (PMCS) 2-20
2-7 General Maintenance Procedures 2-20
2-8 Fluid Leakage 2-21
2-9 Preventive Maintenance Checks and Services (PMCS) Table 2-21
2-10 General Lubricating Instructions 2-52
2-11 Special Lubricating Instructions 2-56
2-12 Water Tanks Drain/Fill 2-57
2-13 Aggregate Bin(s) Fill/Empty 2-63
2-14 Cement Bin Fill/Empty 2-66
2-15 High-Flow Admix Tank Dilute/Fill/Drain/Flush 2-68
2-16 Low-Flow Admix Tank Dilute/Fill/Drain/Flush 2-75
2-17 Aggregate Bin Cover (Tarp) Installation/Removal 2-81
2-18 Setting Controls 2-82
2-19 Engine Starting/Stopping 2-85
2-20 Operations Starting/Stopping 2-87
2-21 Slump Check 2-92
2-22 Cement Bin Clutch Disengaging/Engaging 2-94
2-23 Mixing Auger Deploy/Stow 2-96
2-24 Mixing Auger Shaft Test 2-107
2-25 Mixing Auger Wear Blade Check 2-108
2-26 Delivery Chutes Attaching/Detaching 2-109
2-27 Workstation Platform Installation/Removal 2-115
2-28 Lift Cylinders Raise/Lower 2-120
2-29 Rear Roller Stow/Unstow 2-125
2-30 Stow and Use Ladder 2-127
2-31 Cleanup 2-128
2-32 Clean Admix Strainer 2-132
2-33 Clean Water Strainer 2-134
2-34 Operation in Cold Weather 2-135
2-35 Cold and Freezing Weather Procedures For Draining Water and Admix Systems 2-135
2-36 Operation in Hot Weather 2-140
2-37 Operation in Humid Weather 2-141

Section I. DESCRIPTION AND USE OF OPERATOR'S CONTROLS AND INDICATORS

2-1. LOCATION AND USE OF CONTROLS AND INDICATORS.

Know the location and proper use of all controls and indicators before operating the Concrete Mobile Mixer. Use this paragraph to learn how each control and indicator is to be used. Separate illustrations, with keys, are provided in this paragraph.

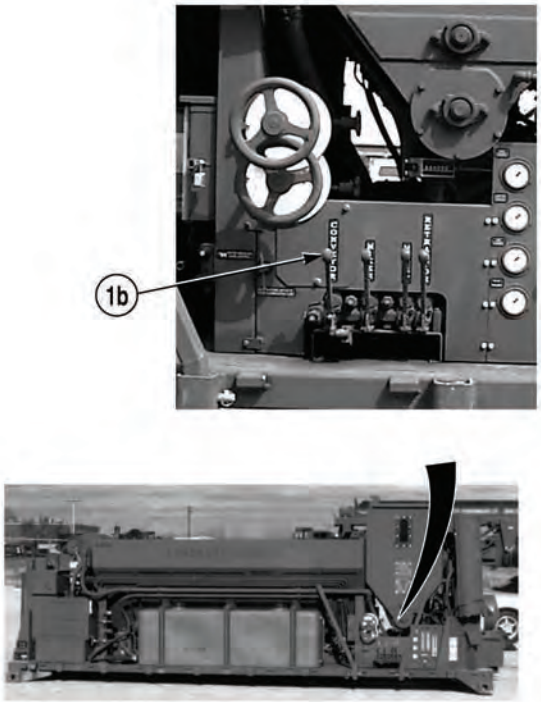

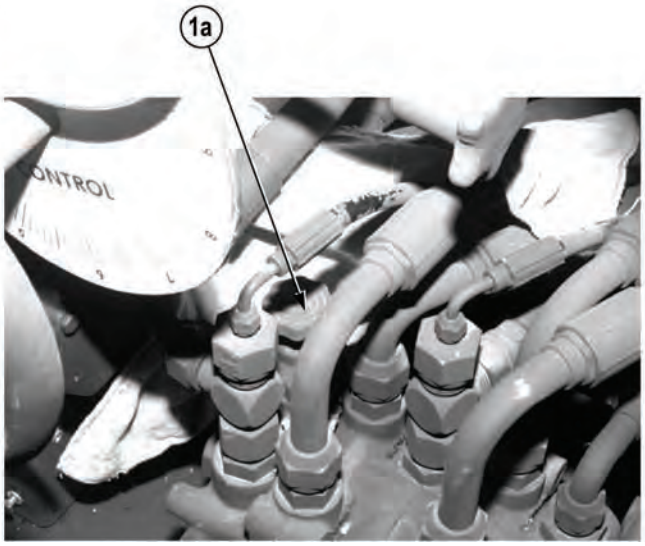

Key	Control or Indicator	Function
1	Conveyor Control	**a.** The first section of the conveyor control valve is a flow control for the conveyor. By turning the knob, the operator can change the speed of the conveyor belt: turning the knob clockwise will slow the conveyor belt and turning it counter-clockwise will increase the belt speed. **b.** The second section of the control valve is for the conveyor "ON/OFF." The handle is pulled out to turn the conveyor "ON" and pushed in to turn the conveyor "OFF." When the handle is pulled, it activates an electrical switch that turns on the water and admix system. It also turns on the air for the vibrators and the chain oiler for the conveyor chain. When the conveyor is turning it also turns the accu-vane to discharge cement.

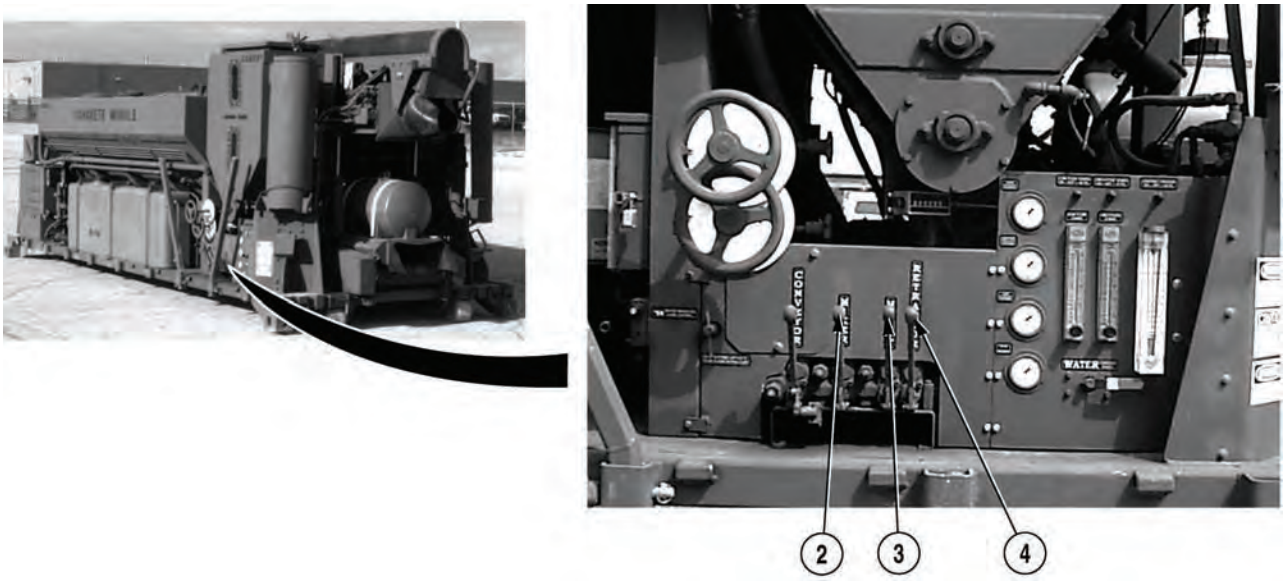

Key	Control or Indicator	Function
2	MIXER Control	The MIXER control is an “ON,” “OFF,” and “REVERSE” control valve for the mixer. The handle on the MIXER control is pulled out to run the mixer to produce concrete. The handle is detented in this position to hold the valve in the “ON” position. Pushing the handle to the center position will turn the mixer “OFF.” Pushing the handle “IN” pass center will reverse mixer rotation. This position will only be used for wash out or if the mixer is plugged.
3	HOIST Control	The HOIST control is used to raise “OUT” and lower “IN” the mixer via a hydraulic cylinder. The control is spring centered so if the operator releases the valve handle, the mixer stops moving and is locked into position.
4	RETRACTOR Control	The RETRACTOR control is used to raise and lower the mixer assembly to/from a stowed position for traveling with the PLS truck/trailer. The control is spring centered so if the operator releases the valve handle, the mixer stops moving and is locked into position. To raise the mixer assembly up for storage, push the handle “IN” and hold “IN” until the mixer is stored. To lower the mixer assembly, pull the handle “OUT.”

2-1. LOCATION AND USE OF CONTROLS AND INDICATORS (CONT).

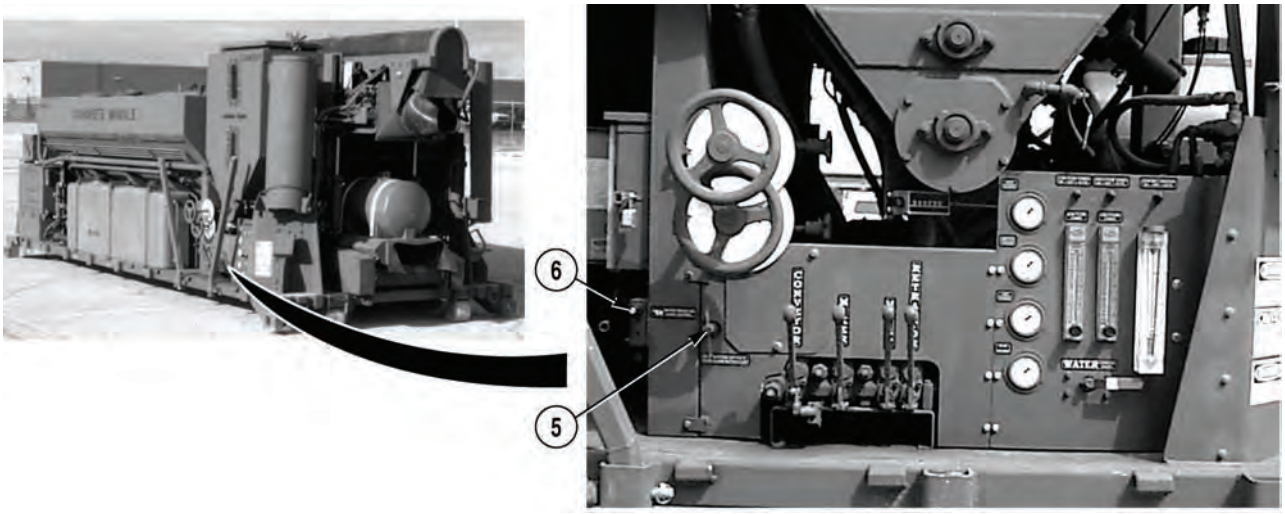

Key	Control or Indicator	Function
5	WATER PUMP/LIFT CYLINDER Control	The WATER PUMP/LIFT CYLINDER control is located to the left of the unit control area. Pull out the handle of control to operate the lift jacks and push in to operate the water pump.
6	WATER PRESSURE/LIFT CYLINDER Control Valve	The control valve is an adjustable flow control valve to change the hydraulic oil flow to the hydraulic pump motor or the water pressure to the water pump. **a**. This control valve operates the water pump pressure when the water pump/lift cylinder control knob is pushed in and operates the hydraulic pump lift cylinders when the water pump/lift cylinder control knob is pulled out. **b**. Turn the knob counter-clockwise to increase the water pressure/hydraulic pressure and clockwise to lower the pressure, or turn it all the way in to turn off the pump.

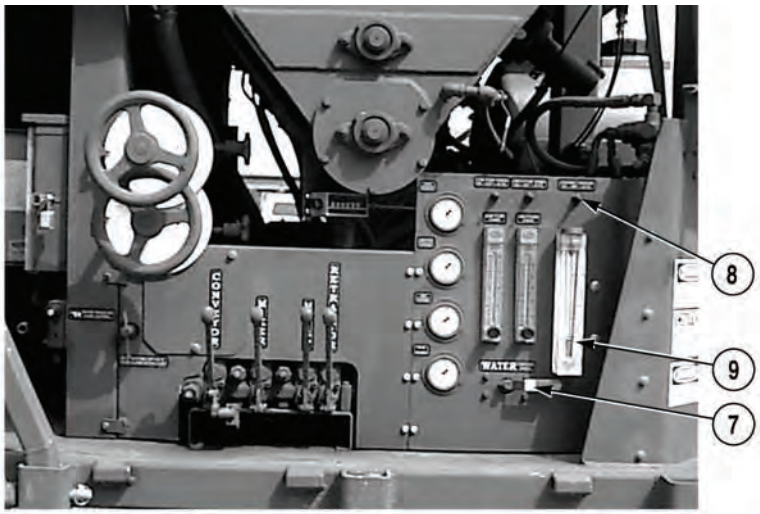

Key	Control or Indicator	Function
7	WATER CONTROL VALVE	The WATER CONTROL VALVE is an adjustable water flow control valve located by the unit hydraulic control valve. This valve adjusts the amount of water added to control the slump of the concrete mix. The water flow is turned “ON” or “OFF” with an air operated valve. This valve is controlled by an electrical switch with “ON,” “OFF,” and “AUTO” positions. This allows the operator to turn the water “ON” for washout without running the conveyor. In the “OFF” position the water will not turn on. In “AUTO” position, the water will turn “ON” when the conveyor is turned “ON,” and “OFF” when the conveyor is turned “OFF.”
8	CONTROL OVERIDE Switch	The CONTROL OVERIDE switch is mounted on the control panel on the left rear area of the Concrete Mobile Mixer. The switch has three positions: “ON,” “OFF,” and “AUTO.” The “ON” position will open the water on/off valve and any admix system that is in the “AUTO” position. The CONTROL OVERIDE switch also will start the chain oil to start dripping, and open the air valve that allows air to the vibrators. The “OFF” position will turn all of the electrical system off that runs the different systems. The “AUTO” position allows all the systems to start and stop with the conveyor control valve. To turn “ON” the 12-volt power for the system, you must turn “ON” the 12 VOLT switch located in the engine control panel.
9	Water Flow Gage	The gage monitors the gallons per minute of water being pumped into the mix for concrete. Read scale at large diameter of float.

2-1. LOCATION AND USE OF CONTROLS AND INDICATORS (CONT).

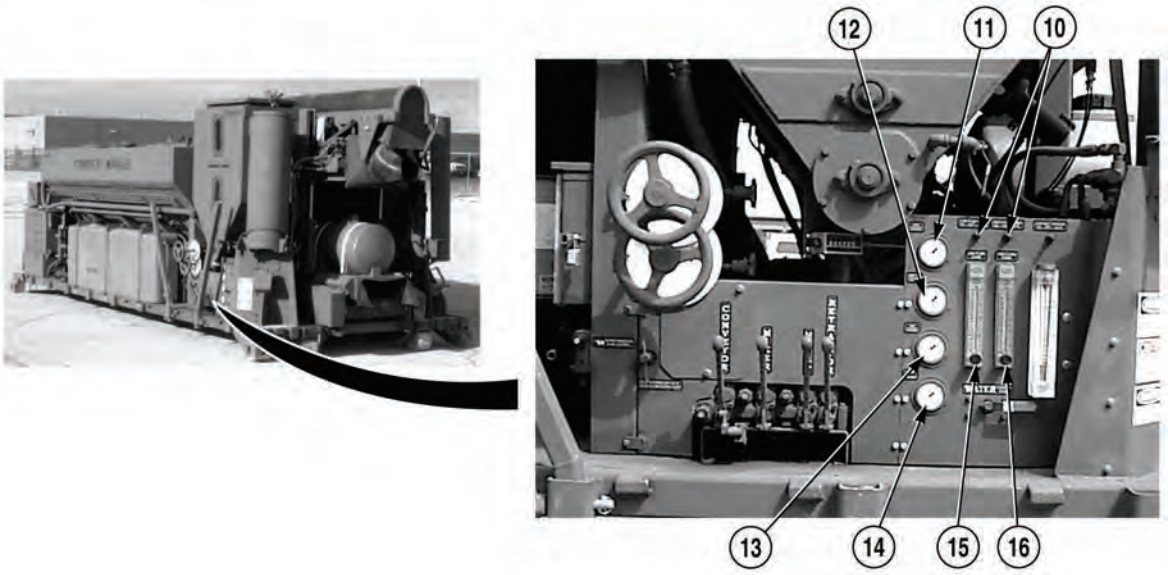

Key	Control or Indicator	Function
10	Admix Control Switch(es)	The admix control switch(es) are a set of two switches mounted on the control panel on the left rear area of the Concrete Mobile Mixer. The two switches control the “LOW” and “HIGH” flow admix system. Both switches operate the same with three positions: “ON,” “OFF,” and “AUTO.” The “ON” position will open the air operated valve and start the electric admix pump. The “AUTO” position allows the pump and air operated valve to start and stop with conveyor control valve. The “OFF” position will turn off the system.
11	MIXER HYDRAULIC PRESSURE Gage	Monitors hydraulic pressure of mixer.
12	CONVEYOR HYDRAULIC PRESSURE Gage	Monitors hydraulic pressure of conveyor.
13	HOIST HYDRAULIC PRESSURE Gage	Monitors hydraulic pressure of hoist.
14	WATER PRESSURE Gage	Monitors pressure of water system.
15	LOW FLOW ADMIX Regulator	Regulates flow of low-flow admixture. Turn dial clockwise to increase flow and counterclockwise to decrease flow of admixture.
16	HIGH FLOW ADMIX Regulator	Regulates flow of high-flow admixture. Turn dial clockwise to increase flow and counterclockwise to decrease flow of admixture.

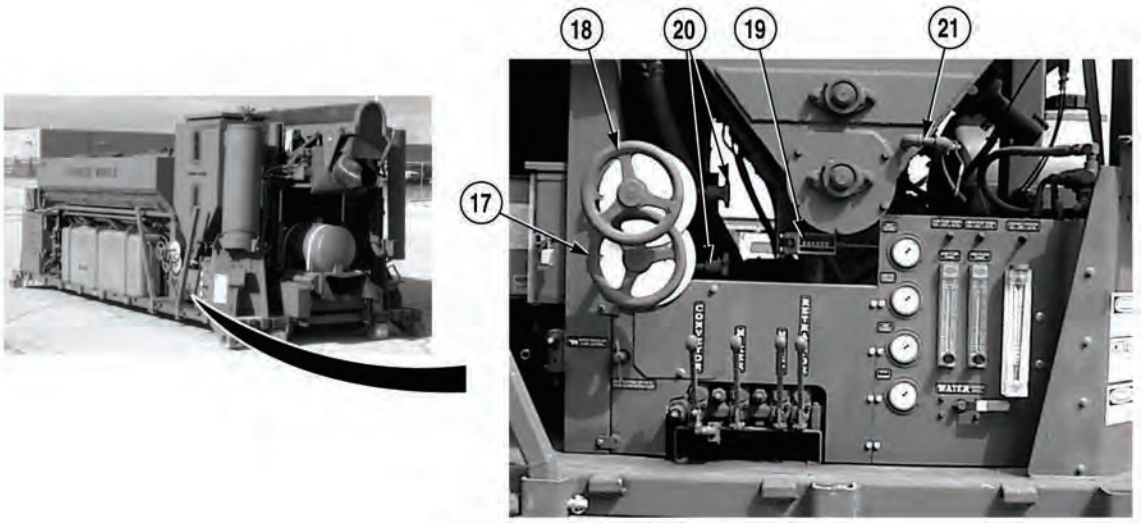

Key	Control or Indicator	Function
17	STONE CONTROL Dial	The STONE CONTROL dial wheel raises and lowers the stone gate to allow more or less stone to be added to the mix. A pointer is connected to the control wheel shaft and moves over the dial face as the control wheel is turned. The dial setting is obtained from the mix settings chart. A stop-screw locks the gate to prevent movement after the setting is made.
18	SAND CONTROL Dial	The SAND CONTROL dial wheel raises and lowers the sand gate, allowing more or less sand to be added to the mix. A pointer is connected to the control wheel shaft and moves over the dial faces as the control wheel is turned. The dial setting is obtained from the mix settings chart. A stop-screw locks the gate to prevent movement after the setting is made.
19	Meter Register System	The meter register is driven from the cement feeding system. The meter will turn any time that the conveyor is turning and the conveyor drive clutch is engaged. The meter will allow the operator to record the amount of concrete produced at each concrete pour. The meter has six digits that will record a number that is produced. From the mix design work sheet the operator will have a total count per yard that can be divided into total counts delivered to determine total yards delivered.Example: 150 Counts = 1 Bag of cement or 90 lbs (41 kg)
20	Aggregate Control Locking Knobs	The aggregate locking knobs secure the aggregate gates in position once the correct sand and/or stone dial setting has been obtained. The upper knob secures the sand gate and the lower knob secures the stone gate. Turn aggregate locking knobs clockwise to loosen and counterclockwise to tighten.
21	Cement Fluffer Valve	The cement fluffer valve is an adjustable valve used to provide compressed air into the cement bin to prevent or loosen compacted cement.

2-1. LOCATION AND USE OF CONTROLS AND INDICATORS (CONT).

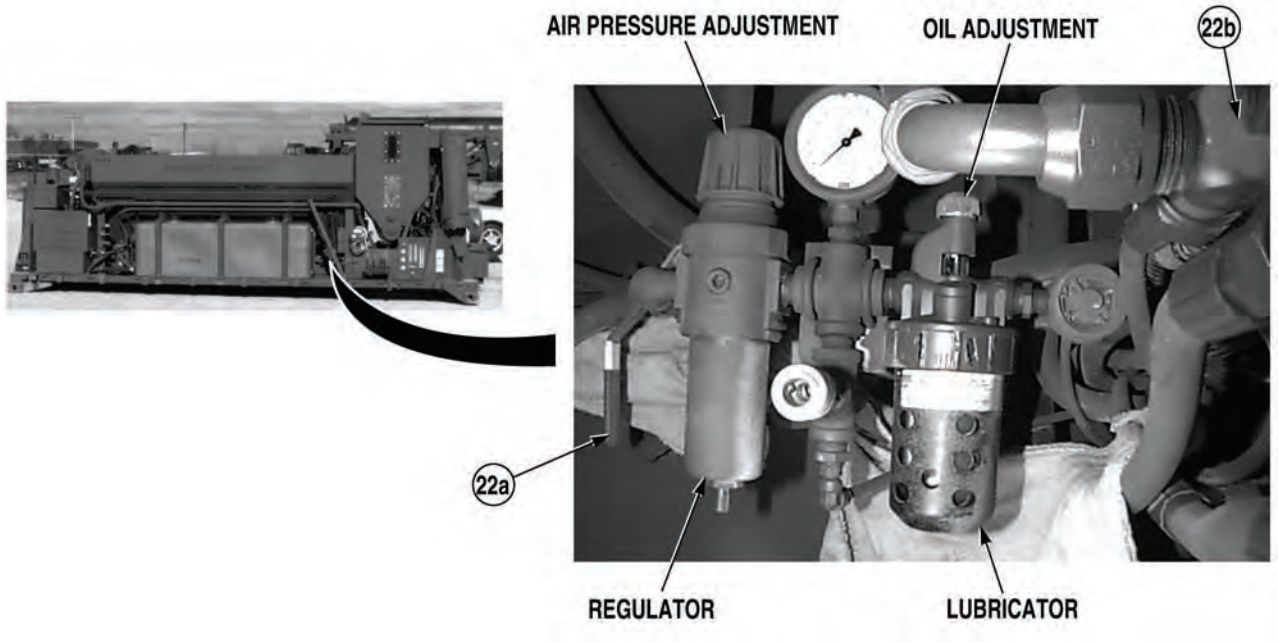

Key	Control or Indicator	Function
22	Air System Controls	**a.** Main air supply valve is used for control of air operated valves and operation of air vibrators. Compressed air is supplied by the auxiliary air compressor mounted on the engine. If the air pressure is not available for any reason, the unit will not operate properly. The air reservoir is located above the hydraulic tank. The tank should be drained daily. Maximum air pressure is 100 psi (690 kPa). Most units will operate at 80 psi (552 kPa). The higher the pressure the louder the vibrators will be. There is a combination water trap and pressure regulator in the system. This water trap should be drained daily. The air line lubricator is to add a fine mist of oil to the air system to lubricate valves and vibrators. The oil is regulated by adjusting a knob on top of the lubricator. Adjust this knob so there is one drop of oil per 1 or 2 cycles on the vibrators. You can view the oil by looking at the small plastic view tube below the adjustment knob. A good indication that the oiler is set too high, is when you begin to see oil on the side of the unit around the vibrators. Use a good quality 10 weight oil in the lubricator. This should be checked daily. **b.** Air vibrator valve is used to operate the air vibrators on the sand bin.

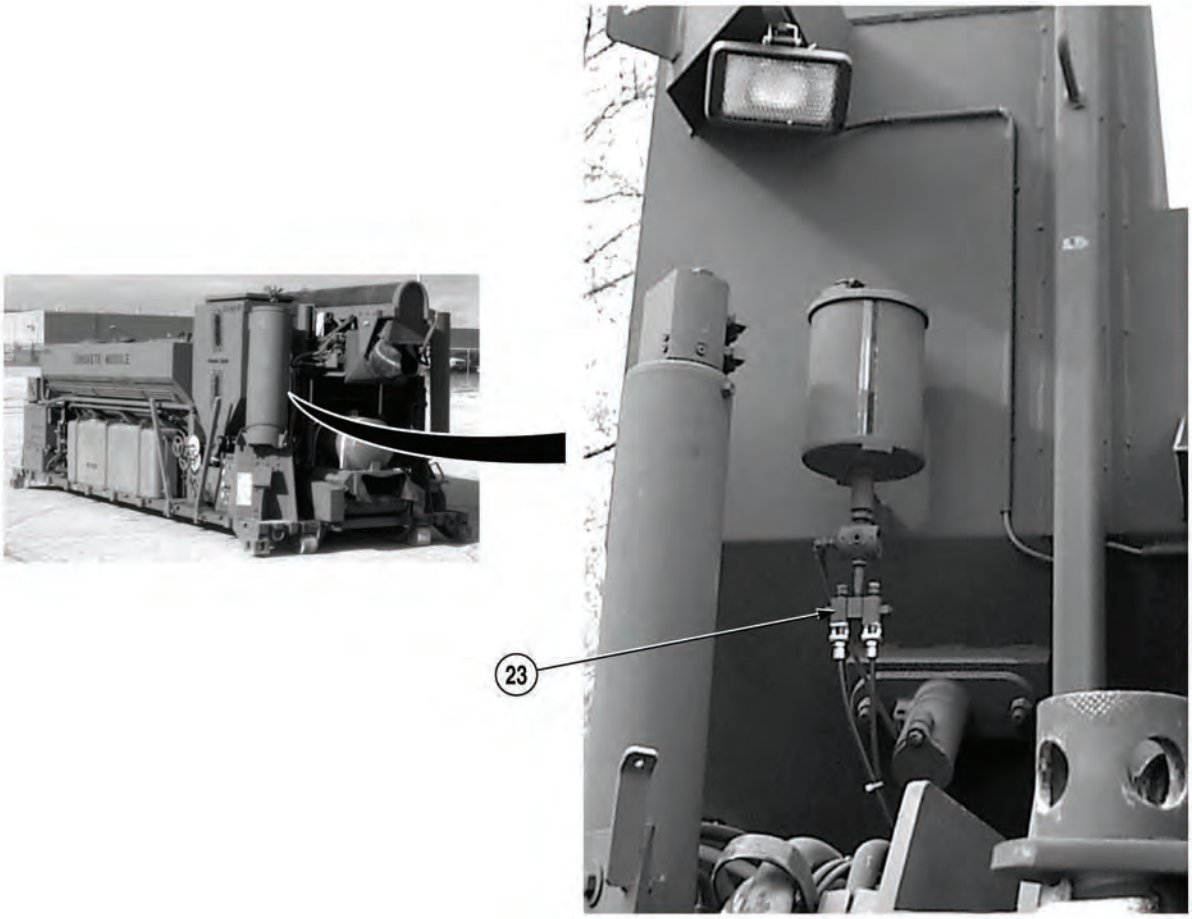

Key	Control or Indicator	Function
23	Conveyor Chain Oiler Control	The aggregate conveyor belt is mounted to a roller chain and crossbar assembly. This roller chain is lubricated by an automatic oiler system. Whenever the conveyor control is actuated, and the electrical switch is in the “AUTO” position, an air operated valve opens allowing oil to flow to the chain. The system is gravity flow; an adjustable drip controls the amount of oil onto the chain. Use a good quality 10 weight oil to lubricate the chain. The drip rate should be set approximately 1 drip per 2 to 3 seconds. Visual observation is a good indicator of proper drip rate. If the chain appears dry, increase the drip rate. If there is oil running down onto the ground, the drip rate is too high.

2-1. LOCATION AND USE OF CONTROLS AND INDICATORS (CONT).

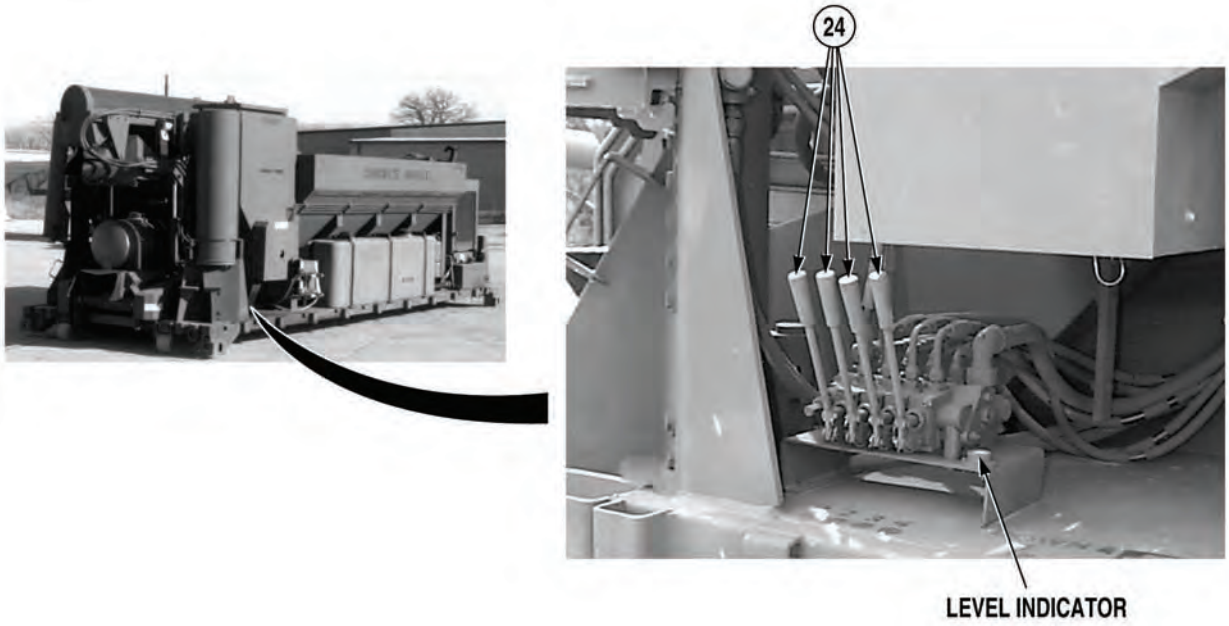

Key	Control or Indicator	Function
24	Lift Cylinder(s) Control	The lift cylinder(s) control is mounted on the right side of unit across from unit control valve. This control valve consists of four handles. Each handle controls one lift jack. The controls are spring centered so if operator releases the valve handle, the lift jack stops moving and is locked into that position. When the operator pushes the handle “IN” the lift jack will retract or lower the unit. When the handle is pulled “OUT” the lift jack will raise the unit to operating level. The unit must be setting on the ground before it can be loaded onto the PLS truck/trailer for transporting. The four lift jacks work independently of each other. To activate, the valve selector valve mounted on the left side must be pulled “OUT” to divert the hydraulic oil to operate the jacks. Before the lift jacks are lowered, the operator must pull the pin on each safety bar located on each jack. This way the rod will lower with the jack. After the jack is lowered, the operator will need to insert the pin to lock safety rod in place. NOTE that the pin will need to be pulled BEFORE jacks are lowered.

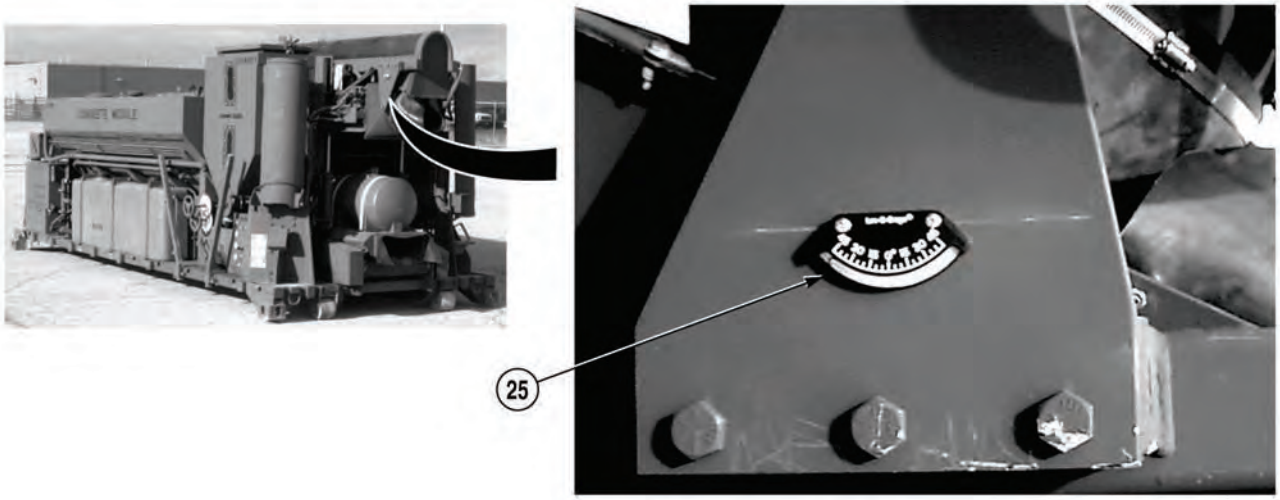

Key	Control or Indicator	Function
25	Angle Meter	The angle meter is mounted to the mixer frame. The angle of inclination during the mixing process should be a minimum of 15 degrees. There is no maximum mix angle; however, maximum mix angle will be determined by the mixers ability to discharge the concrete.

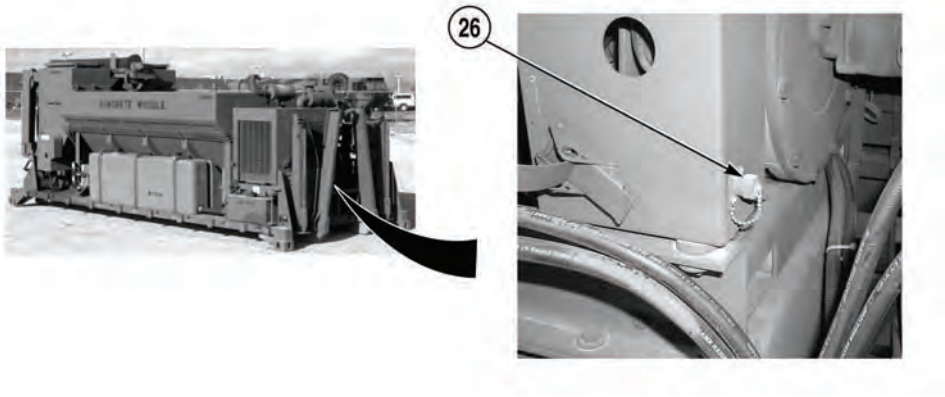

Key	Control or Indicator	Function
26	Two Pin Connector	An electrical connection for use with PLS work lights, (TM 9-2320-364-10).

2-1. LOCATION AND USE OF CONTROLS AND INDICATORS (CONT).

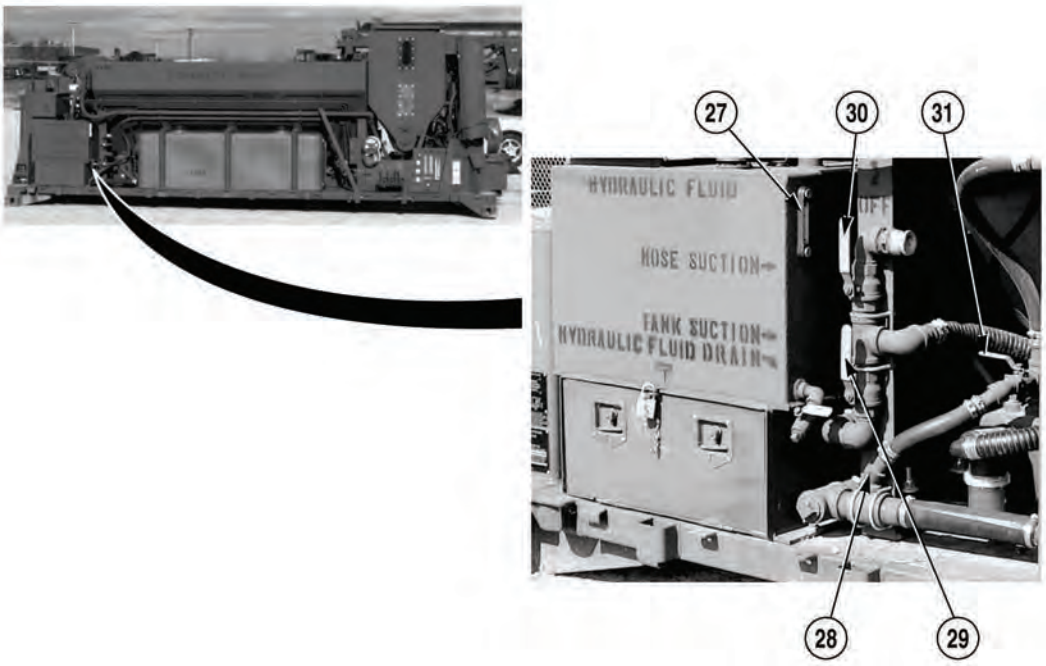

Key	Control or Indicator	Function
27	Hydraulic Reservoir Gage	Located on the hydraulic reservoir, the gage monitors the level and temperature of hydraulic fluid in the reservoir. Maximum oil temperature is 180°F (82°C).
28	Water Tank Drain	Removing drain plug allows water to drain from water tank.
29	TANK SUCTION Valve	Used in conjunction with the washout valve (32), to drain the water tanks while the engine is running. When the valve is in the horizontal position, valve is open. When valve is in vertical position, valve is closed.
30	HOSE SUCTION Valve	Used in conjunction with the water pump valve (31), to fill the water tanks from a pond or lake, with the engine running. When the valve is in the horizontal position, valve is open. When valve is in vertical position, valve is closed.
31	Water Pump Valve	Used in conjunction with HOSE SUCTION valve (30), to fill the water tanks from a pond or lake, with the engine running. When the valve is positioned to the right, valve is open. When valve is positioned to the left, valve is closed.

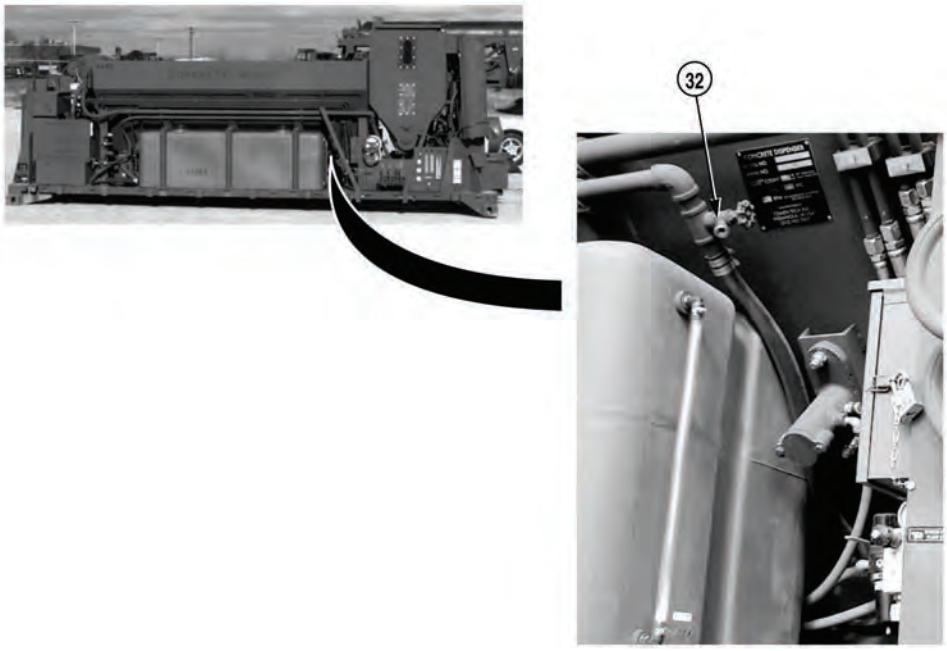

Key	Control or Indicator	Function
32	Washout Valve	Used in conjunction with the TANK SUCTION valve (29), to drain the water tanks while the engine is running.

2-1. LOCATION AND USE OF CONTROLS AND INDICATORS (CONT).

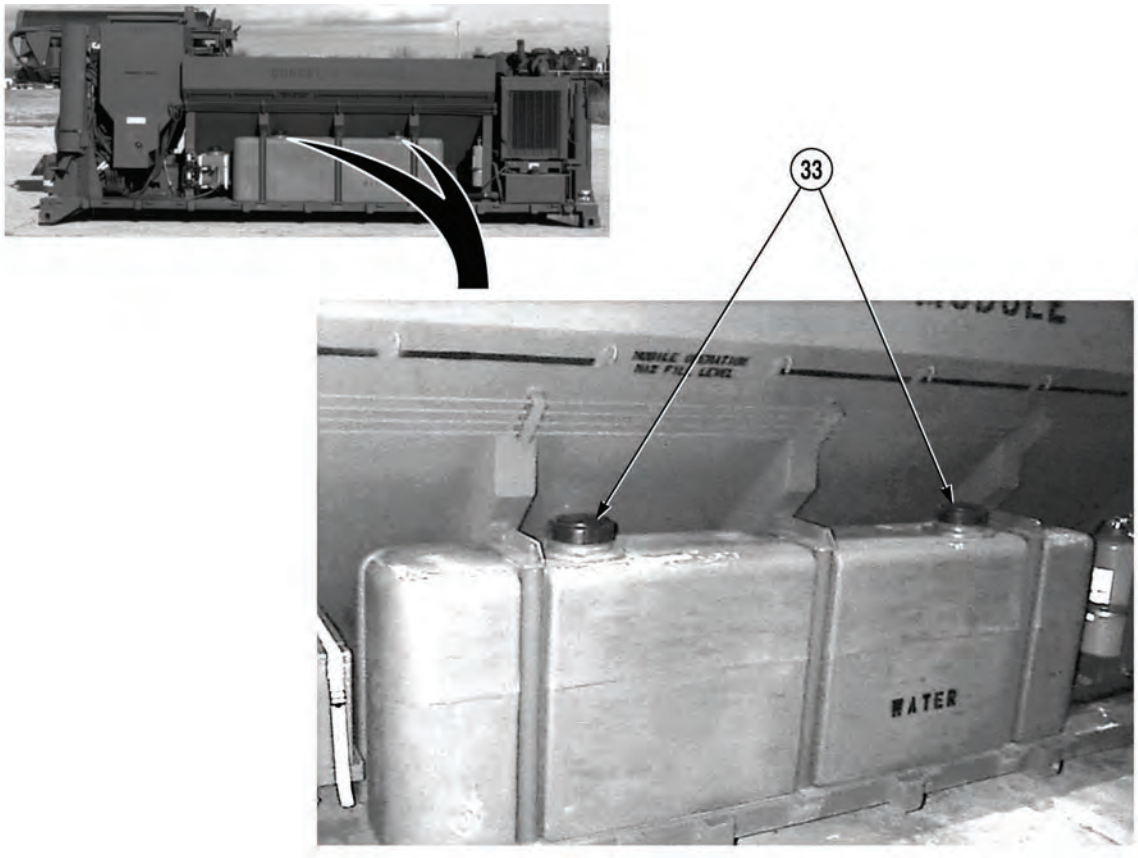

Key	Control or Indicator	Function
33	Water Tank Fill	Allows access to water tank to allow for filling operations. Water tanks can be filled through the fill caps or by installing a fill hose to the fill line in the water line system of the module.

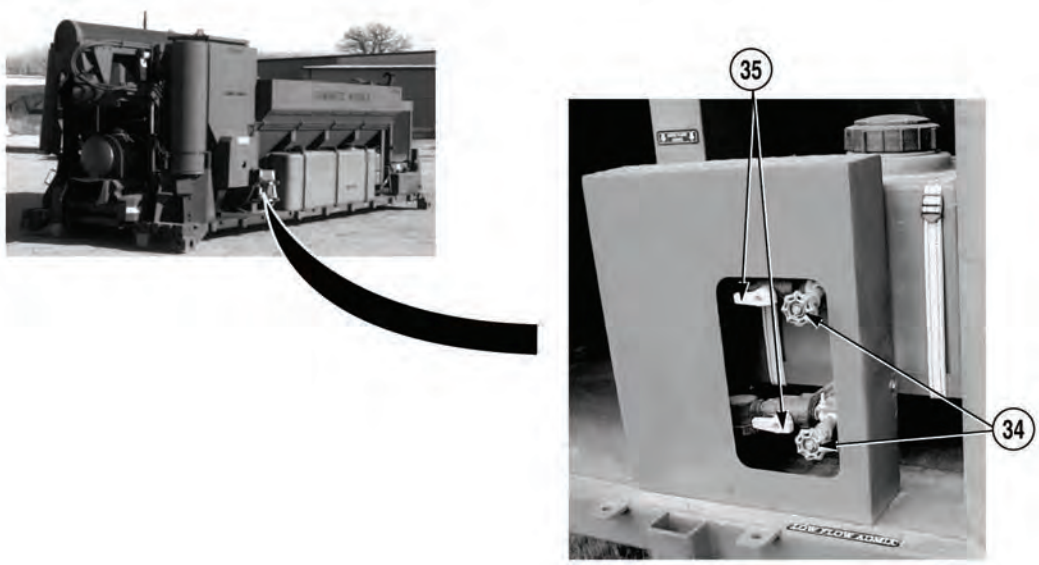

Key	Control or Indicator	Function
34	Low-Flow/High-Flow Admix Valves	These valves allow drainage of admix from the system. Turn the valve counterclockwise to drain the admix and turn the valve clockwise to close.
35	Low-Flow/High-Flow Solution Valves	Controls the flow of low-flow and high-flow admix. Valves are closed to service filters. When the valve is in the horizontal position, valve is open. When valve is in vertical position, valve is closed.

2-1. LOCATION AND USE OF CONTROLS AND INDICATORS (CONT).

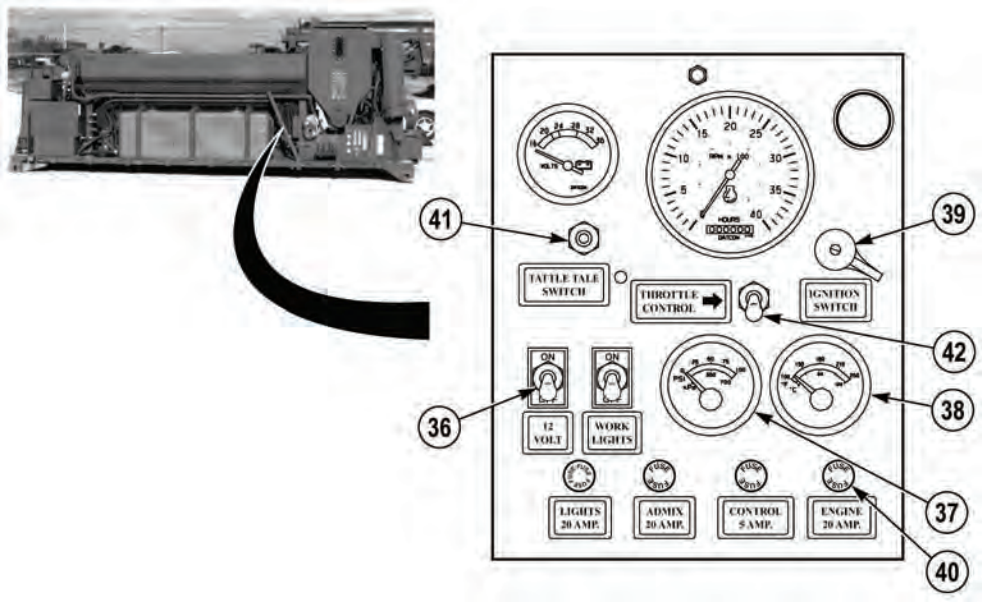

Key	Control or Indicator	Function
36	12 VOLT On/Off Switch	Provides power to accessory components (i.e., work lights). Ignition switch must be in the “ON” position or the “ACCESSORY” position for switch to operate.
37	Oil Pressure Gage	Shows the engine oil pressure (in psi and kPa).
38	Water Temperature Gage	Shows engine coolant temperature (in °F and °C).
39	IGNITION SWITCH	Turns the ignition to ON/OFF/ACCESSORY positions.
40	Engine 20 AMP Fuse Holder	Holds 20-amp fuse for starting engine (ignition switch).
41	TATTLE TALE SWITCH (Engine Override Switch)	TATTLE TALE SWITCH must be pushed in and held until oil pressure reaches 20 psi during the engine start. If oil pressure drops below 20 psi, engine will shut off.
42	THROTTLE CONTROL (High Idle Switch)	Raises and latches the engine speed at a high idle for Concrete Mobile Mixer operations.

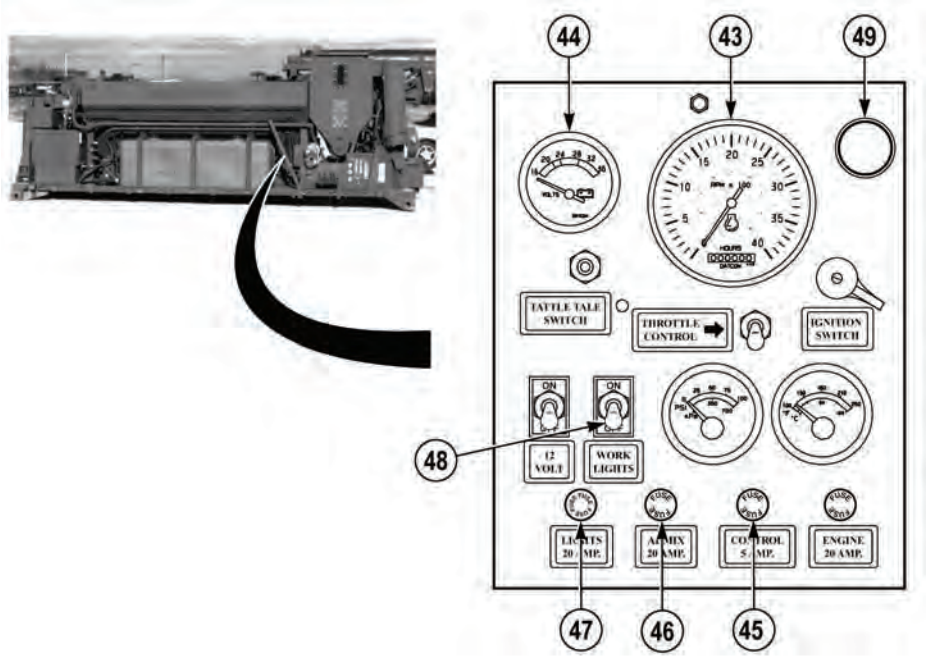

Key	Control or Indicator	Function
43	Tachometer/ Hour-meter	Shows the engine operating speed (rpm x 100) and total operating time (HOURS).
44	Voltmeter (24V)	Shows the state charge of the batteries and voltage level in the 24-volt system.
45	5 AMP Fuse Holder	Holds 5-amp fuse for control panel.
46	Admix 20 AMP fuse Holder	Holds 20-amp fuse for admix circuit.
47	Lights 20 AMP Fuse Holder.	Holds 20-amp fuse for auxiliary lights.
48	Work Light Switch	Turns Concrete Mobile Mixer work lights and control panel lights on and off.
49	Control Panel Light	Illuminates control panel.

Section II. OPERATION UNDER USUAL CONDITIONS

2-2. HANDLING AND TRANSPORTATION PROCEDURES.

The Concrete Mobile Mixer is capable of being loaded or unloaded on any PLS truck and/or PLS trailer (PLST). The flatrack portion of the module contains rail transport pins for securing during rail transport. Lift pockets are also provided for forklift handling.

2-3. INITIAL GUIDELINES.

Before operating the Concrete Mobile Mixer, the operator should:

a. Perform Before (B) Preventive Maintenance Checks and Services (PMCS). If necessary, notify Organizational Maintenance of problems.

b. Know how to use the Concrete Mobile Mixer safely and efficiently.

c. Be sure you know what ingredient and what mix design you should use.

2-4. PREPARATION FOR OPERATION.

a. Refer to TM 9-2320-364-10 for Preparing for Operation of PLS truck.

b. Inspect Concrete Mobile Mixer for damage that may have occurred during transport.

c. Check and tighten all fasteners, body tie-down bolts, pipe and circulating line connections, etc., that may have loosened during transit.

2-5. LOADING AND UNLOADING CONCRETE MOBILE MIXER ON PLS TRUCK.

a. Loading.

WARNING

- Concrete Mobile Mixer has a very high center of gravity (CG). A higher CG limits cornering and side slope operations. Limit side slope operations and transportation to no more than a 20 percent side slope angle when Concrete Mobile Mixer is loaded onto PLS truck and/or PLS trailer (PLST). Failure to comply may result in vehicle rollover causing injury or death to personnel.
- If operating Concrete Mobile Mixer on PLS trailer (PLST), ensure PLST turntable is LOCKED. Concrete Mobile Mixer has a very high center of gravity (CG) and PLST is unstable when front tires are not facing straight ahead and turntable is unlocked. Failure to comply may result in vehicle rollover causing injury or death to personnel.

(1) Ensure lift cylinders are retracted (stowed) and locked, (Para 2-28).

(2) Ensure engine is “OFF,” (Para 2-19).

(3) Ensure that sand and gravel is not above Mobile Operation Maximum Fill Level.

(4) Ensure rear rollers are installed, (Para 2-29).

(5) Ensure all stowage box doors are closed, and panels, delivery chutes, and mixing auger are stowed and secure.

(6) To load a Concrete Mobile Mixer on a PLS truck, refer to the PLS Operator’s Manual, TM 9-2320-364-10, “Picking Up a Flatrack in Auto Mode.”

(7) To load a Concrete Mobile Mixer on a PLS trailer (PLST), refer to PLS Operator’s Manual, TM 9-2320-364-10, “Normal Transfer of Flatrack to Trailer.”

b. Unloading.

(1) Ensure lift cylinders are retracted (stowed) and locked, (Para 2-28).

(2) Ensure engine is “OFF,” (Para 2-19).

(3) Ensure that sand and gravel is not above Mobile Operation Maximum Fill Level.

(4) Ensure rear rollers are installed, (Para 2-29).

(5) Ensure all stowage box doors are closed and, panels, delivery chutes, and mixing auger are stowed and secure.

(6) To unload a Concrete Mobile Mixer from a PLS truck, refer to the PLS Operator’s Manual, TM 9-2320-364-10, “Off-Loading a Flatrack in Auto Mode.”

(7) To unload a Concrete Mobile Mixer from a PLS trailer, refer to the PLS Operator’s Manual, TM 9-2320-364-10, “Normal Removal of Flatrack from Trailer.”

Section II. OPERATOR/CREW PREVENTIVE MAINTENANCE CHECKS AND SERVICES (PMCS)

2-6. PREVENTIVE MAINTENANCE CHECKS AND SERVICES (PMCS).

To ensure that the PLS Concrete Mobile Mixer is ready for operation at all times, it must be inspected on a regular basis so that defects may be found before they result in serious damage, equipment failure, or injury to personnel. This section contains Preventive Maintenance Checks and Services (PMCS) requirements.

2-7. GENERAL MAINTENANCE PROCEDURES.

WARNING

Dry-cleaning Solvent (P-D-680) is TOXIC and flammable. Wear protective goggles, face shield, and gloves; use only in a well-ventilated area; avoid contact with skin, eyes, and clothes, and do not breathe vapors. Keep away from heat or flame. Never smoke when using solvent. The flashpoint for Type II Dry-cleaning Solvent is 140°F (60°C) and Type III Dry-cleaning Solvent is 200°F (93°C). Failure to do so may result in injury or death to personnel.

a. Cleanliness. The Concrete Mobile Mixer body will operate practically trouble free if the proper emphasis is placed on cleaning and lubricating. Hardened cement will cause operational problems, as will improper lubrication. Cleanup is relatively easy if done immediately after shutting down the unit but becomes much more difficult if it is put off. Dirt, grease, oil, and debris only get in the way and may cover up a serious problem. Use dry-cleaning solvent (P-D-680) on all metal surfaces.

b. Bolts, Nuts and Screws. Check them all for obvious looseness, missing, bent, or broken condition. Look for chipped paint, bare metal, or rust around bolt heads. If you find something is loose, tighten it, or report it Organizational Maintenance.

c. Welds. Look for loose or chipped paint, rust or gaps where parts are welded together. If a weld is cracked, report it Organizational Maintenance.

d. Electrical Wires and Connectors. Look for cracked or broken insulation, bare wires and loose or broken connectors. Tighten loose connectors and make sure the wires are in good shape.

e. Fluid Hoses, Tubes and Fittings. Look for wear, damage and leaks. Make sure clamps and fittings are tight. Wet spots show leaks, of course, but a stain around a fitting or connection can mean a leak also. If a leak comes form a loose fitting or connector, tighten it. If something is broken or worn out, report it to Organizational Maintenance.

2-8. FLUID LEAKAGE.

It is necessary for the operator to know how fluid leakage affects the status of the hydraulic system. The following are definitions of the types/classes of leakage you need to know to be able to determine the status of the mixer. Learn, then be familiar with them and remember—when in doubt, notify your supervisor.

Leakage definitions for crew/operator PMCS:

CAUTION

- Equipment operation is allowable with minor leaks (Class I or II). Consideration must be given to the fluid capacity in the item/system being checked/inspected. When in doubt, notify your supervisor. Failure to comply could result in damage to equipment.
- When operating with Class I or II leaks, continue to check fluid levels as required in your PMCS. Failure to comply could result in damage to equipment.
- Class III should be reported to your supervisor or Unit Maintenance.

Class I—Seepage of fluid (as indicated by wetness or discoloration) not great enough to form drops.

Class II—Leakage of fluid great enough to form drops but not enough to cause drops to drip from item being checked/inspected.

Class III—Leakage of fluid great enough to form drops that fall from the item being checked/inspected.

2-9. PREVENTIVE MAINTENANCE CHECKS AND SERVICES (PMCS) TABLE.

a. Do the BEFORE (B) PREVENTIVE MAINTENANCE just before you operate the Concrete Mobile Mixer. Pay attention to the CAUTIONS and WARNINGS.

b. Do the DURING (D) PREVENTIVE MAINTENANCE while the Concrete Mobile Mixer and/or its component systems are in operation.

c. Do the AFTER (A) PREVENTIVE MAINTENANCE right after operating the Concrete Mobile Mixer. Pay attention to the CAUTIONS and WARNINGS.

d. Do the WEEKLY (W) PREVENTIVE MAINTENANCE weekly.

e. Do the MONTHLY (M) PREVENTIVE MAINTENANCE monthly.

f. Do the SEMIANNUAL (SA) PREVENTIVE MAINTENANCE once every six months and/or every 250 hours, whichever comes first.

g. Do the ANNUAL (AN) PREVENTIVE MAINTENANCE once every year and/or every 500 hours, whichever comes first.

h. Always do the PREVENTIVE MAINTENANCE in the same order until it gets to be a habit. Once practiced, it will be easy to spot anything wrong in a hurry. Perform the checks and services listed in Table 2-1 in the order listed.

2-9. PREVENTIVE MAINTENANCE CHECKS AND SERVICES (PMCS) TABLE. (CONT).

i. If something does not work, troubleshoot using instructions in Unit Maintenance Troubleshooting Instructions, Chapter 4, of this manual.

j. When doing preventive maintenance, take along the tools and supplies needed to make all the checks, including a clean cloth or two.

k. The following is a breakdown of the PMCS table:

(1) **"Item No." column.** Checks and services are numbered in a logical order for moving around the module. The item number column is used as a source of item numbers for the TM Number Column on the DA Form 2404 or 5888E, Equipment Inspection and Maintenance Worksheet, for recording results of PMCS.

(2) **"Interval" column.** The column identifies when the PMCS should be performed. Lubrication services should coincide with the module's Semiannual Preventive Maintenance Service. For this purpose, a 10 percent tolerance (variation) in specified lubrication point hours is permissible. Those modules not accumulating 250 hours in a 6-month period will be lubricated at the time of the Semiannual Preventive Maintenance Service.

(3) **"Item To Be Inspected"** column. This column identifies the item to be inspected.

(4) **"Procedure"** column. This column contains all the information required to do the check/inspection. A digital photo is supplied to aid the user in identifying items. Whenever replacement is recommended, reference is made to the applicable maintenance instructions.

(5) **"Not Mission Capable If"** column. This column contains a brief statement of the condition that would cause the vehicle to be less than fully ready to perform it's assigned mission.

- If the module must be kept in continuous operation, do only the procedures that can be done without disturbing operation. Make complete checks and services when the module is shut down.
- Oil filters must be serviced/cleaned/changed as applicable, when they are known to be contaminated or clogged and at prescribed intervals.

Table 2-1. Unit Preventive Maintenance Checks and Services (PMCS)

B - Before D - During A - After W - Weekly M - Monthly SA - Semiannual AN - Annual

Item No.	Interval	Item to Be Inspected	Procedure	Not Mission Capable If:
1	B	Body	Check for evidence of leakage (engine oil, coolant and hydraulic fluid) on or under module.	Class III leaks are evident.
			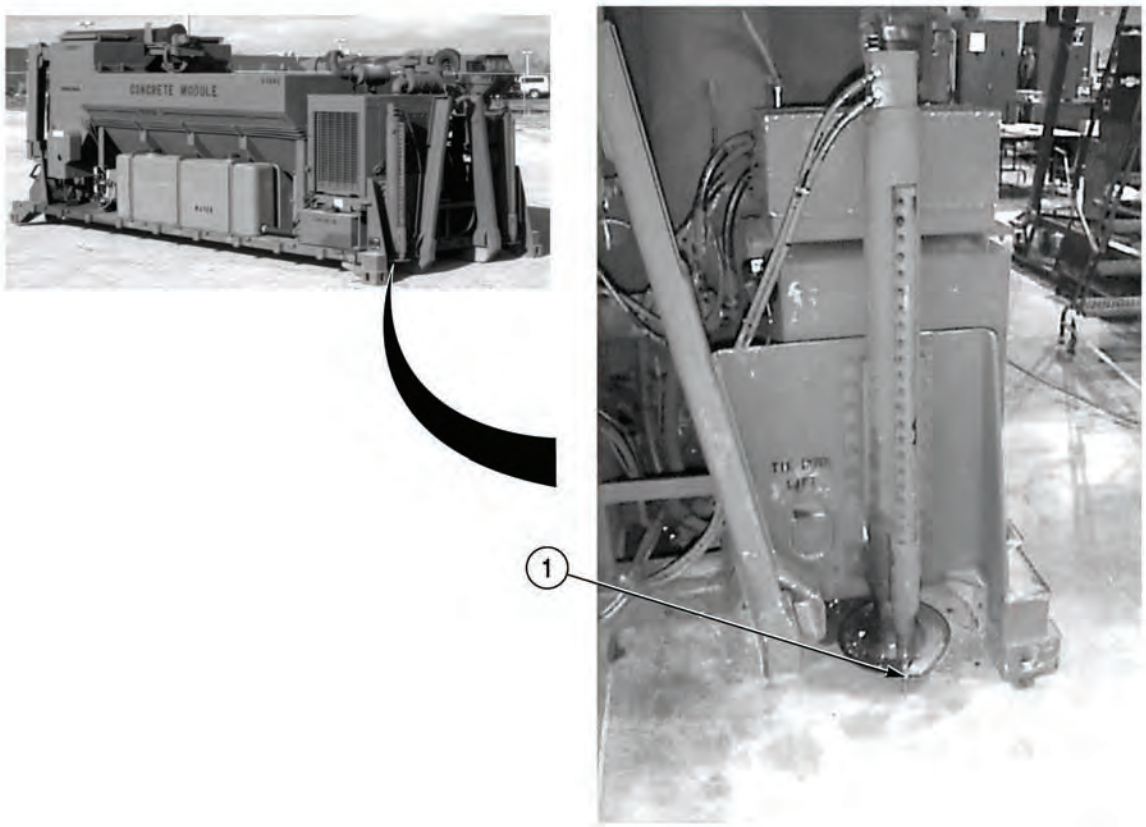	
2	B	Body	Check for missing or damaged safety rod pins (1).	Mission requires module to be off loaded and pins are missing or damaged.

Table 2-1. Unit Preventive Maintenance Checks and Services (PMCS) (CONT)

B - Before D - During A - After W - Weekly M - Monthly SA - Semiannual AN - Annual

Item No.	Interval	Item to Be Inspected	Procedure	Not Mission Capable If:
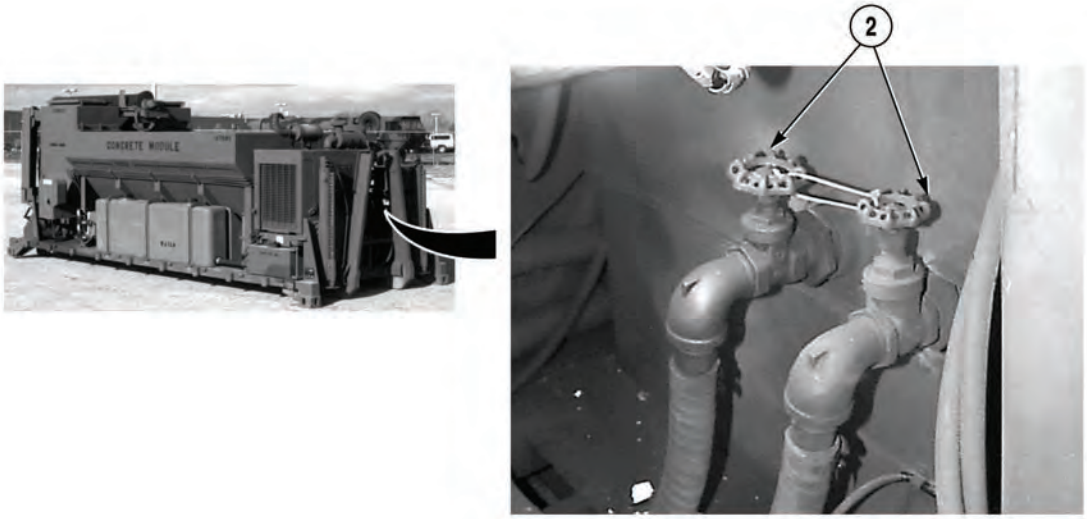				
3	B	Body	Check for missing tie strap between hydraulic reservoir suction valves (2). If strap is missing, ensure valves are in the open position and replace tie strap.	
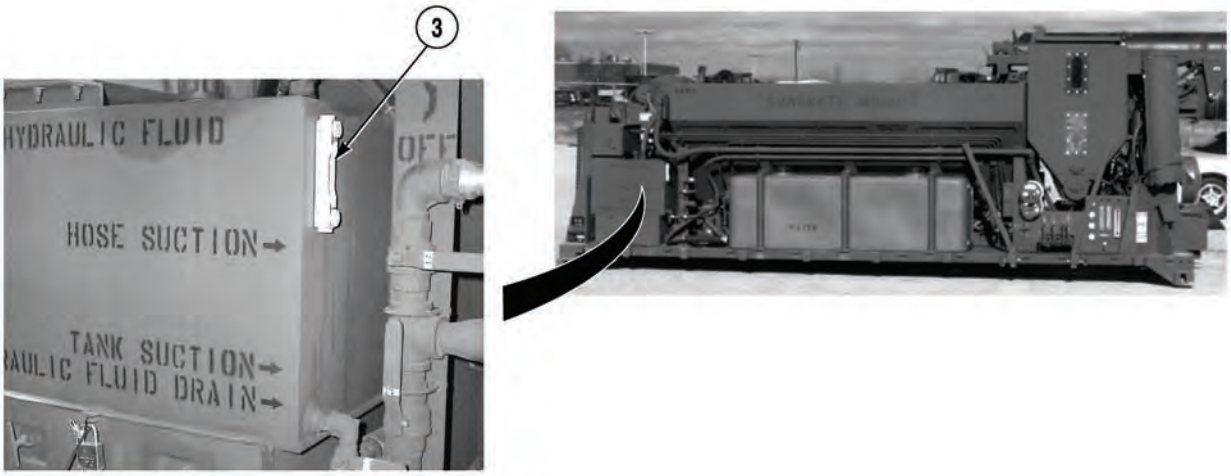				
4	B	Body	Check oil level with sight glass (3) and add as necessary, (Para 2-10).	

Table 2-1. Unit Preventive Maintenance Checks and Services (PMCS) (CONT)

B - Before D - During A - After W - Weekly M - Monthly SA - Semiannual AN - Annual

Item No.	Interval	Item to Be Inspected	Procedure	Not Mission Capable If:
			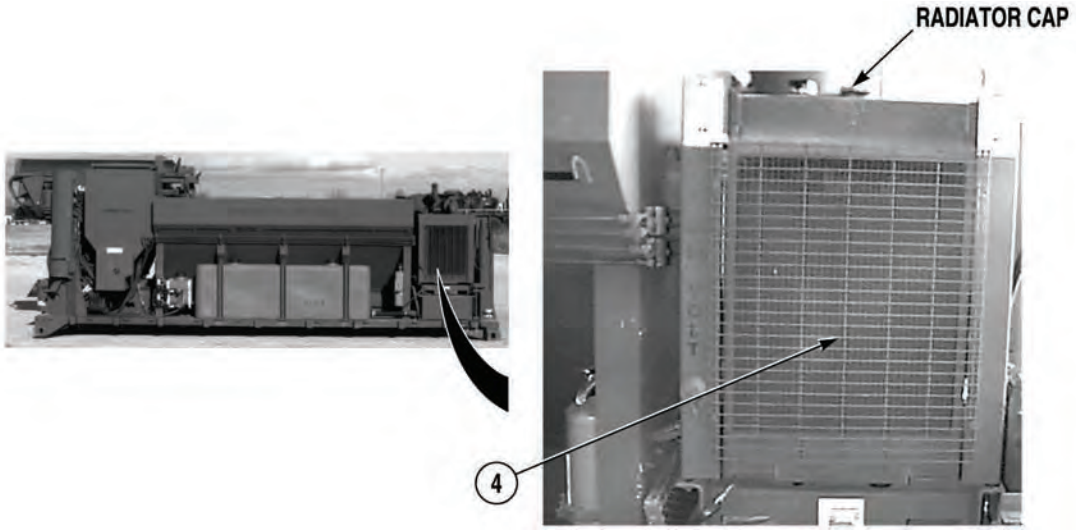	
			WARNING Do not remove radiator when engine is hot; steam and hot coolant can escape and burn personnel.	
5	B	Radiator Coolant	Check level of coolant in radiator (4) and fill as required.	
6	B	Fire Extinguisher	Check for missing, damaged and loose fire extinguisher (5). Check for proper pressure.	Fire extinguisher is missing or damaged Pressure gage needle in red area.

Table 2-1. Unit Preventive Maintenance Checks and Services (PMCS) (CONT)

B - Before D - During A - After W - Weekly M - Monthly SA - Semiannual AN - Annual

Item No.	Interval	Item to Be Inspected	Procedure	Not Mission Capable If:
7	B	Electrical System	Ensure all work lights (6) are working.	
8	B	Engine	Check engine oil level, (Para 2-10). Fill as required.	
9	B	Engine	Start engine, (Para 2-19) and check:	
			a. Oil pressure - check that engine oil pressure is at least 20 psi (138 kPa).	Engine oil pressure is below 20 psi (138 kPa).
			b. Battery voltage - check that voltmeter reads between 22 to 28 volts.	Voltmeter does not read between 22 to 28 volts.
			c. Water temperature - run engine for 5 minutes and check that water temperature is not above 210°F.	Water temperature gage reads above 210°F.
			d. Air pressure–check that air pressure gage reads between 80-100 psi (552 - 690 kPa).	Air pressure gage does not read between 80-100 psi (552 - 690 kPa)

Table 2-1. Unit Preventive Maintenance Checks and Services (PMCS) (CONT)

B - Before D - During A - After W - Weekly M - Monthly SA - Semiannual AN - Annual

Item No.	Interval	Item to Be Inspected	Procedure	Not Mission Capable If:
10	B	Liquid Admix (When Used)	Check low-flow (7) and high-flow (8) admix tanks for leaks.	Class III leak is evident.
11	B	Liquid Admix (When Used)	Check low-flow (7) and high-flow (8) admix tanks to ensure fill caps are in place and secure.	

Table 2-1. Unit Preventive Maintenance Checks and Services (PMCS) (CONT)

B - Before D - During A - After W - Weekly M - Monthly SA - Semiannual AN - Annual

Item No.	Interval	Item to Be Inspected	Procedure	Not Mission Capable If:
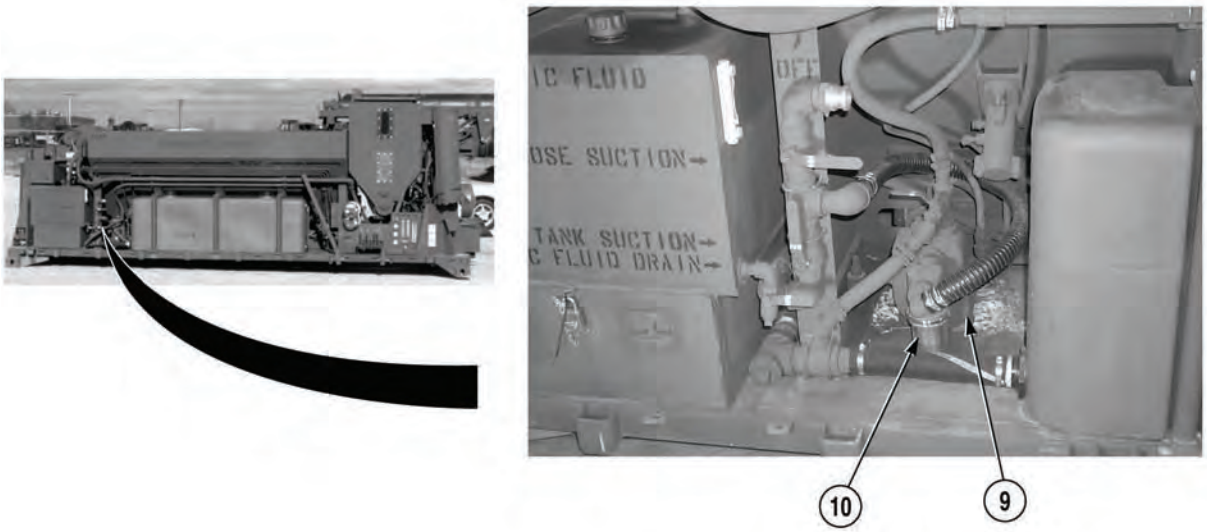				
12	D	Water System	Check water pump (9) for leaks.	Class III leak is evident.
13	D	Water System	Check water system strainer (10). Clean strainer as required.	Class III leak is evident or damage that would impair mission.

Table 2-1. Unit Preventive Maintenance Checks and Services (PMCS) (CONT)

B - Before D - During A - After W - Weekly M - Monthly SA - Semiannual AN - Annual

Item No.	Interval	Item to Be Inspected	Procedure	Not Mission Capable If:
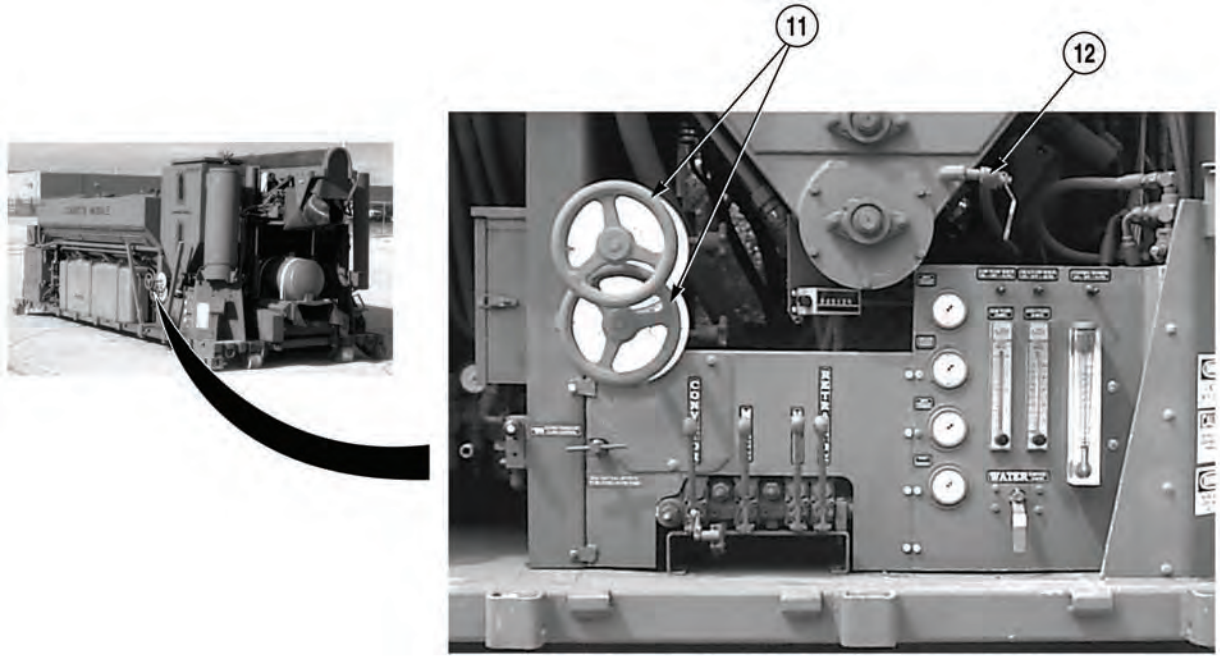				
			WARNING Bins must be empty during the following check.	
14	D	Sand and Stone Bins	Check sand and stone gates (11) for ease of operation.	Sand and stone gates will not adjust to proper setting.
15	D	Cement Bin	Check that cement bin vibrator bolts and fittings are tight. Check operation.	
16	D	Cement Bin	Check that fluffer control valve (12) lets in air to fluff cement.	
17	D	Cement Bin	Check cement bin clutch for ease of operation.	Cement clutch will not engage.

Table 2-1. Unit Preventive Maintenance Checks and Services (PMCS) (CONT)

B - Before D - During A - After W - Weekly M - Monthly SA - Semiannual AN - Annual

Item No.	Interval	Item to Be Inspected	Procedure	Not Mission Capable If:
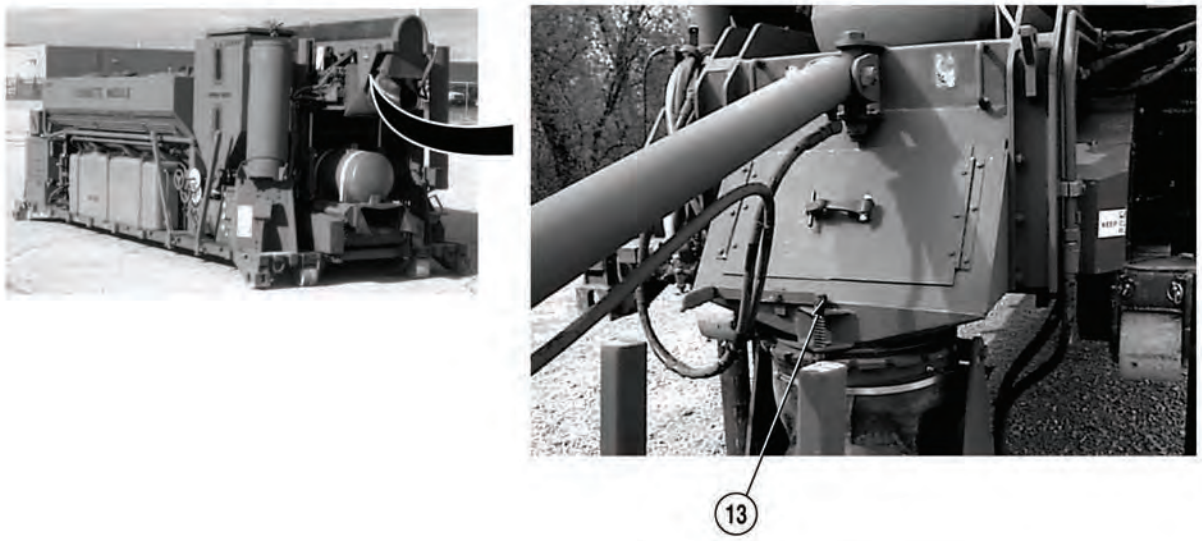				
18	D	Mixing Trough	Check that swivel lock (13) is working and secure; and that incline meter ball moves freely.	

Table 2-1. Unit Preventive Maintenance Checks and Services (PMCS) (CONT)

B - Before D - During A - After W - Weekly M - Monthly SA - Semiannual AN - Annual

Item No.	Interval	Item to Be Inspected	Procedure	Not Mission Capable If:
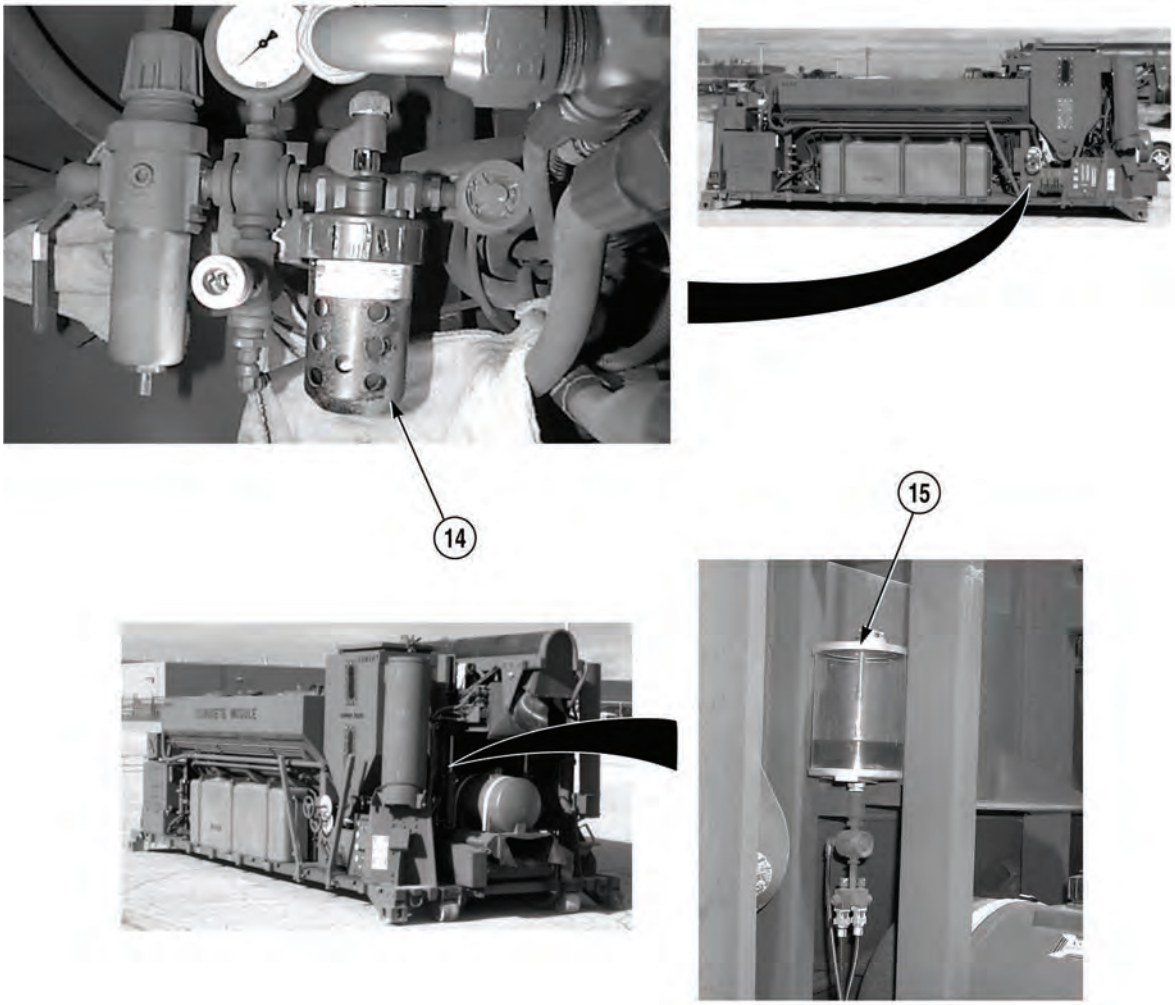				
19	D	Air System	Check air lubricator (14) for leaks with vibrator operating, there should be a drop of oil every third vibration. Fill if oil is not visible in sight glass, (Para 2-10).	Air lubrication inoperable.
20	D	Air System	Check chain oiler (15) for leaks. Check that oiler will operate with one drop every 2 to 3 seconds.	Chain oiler inoperable.

Table 2-1. Unit Preventive Maintenance Checks and Services (PMCS) (CONT)

B - Before D - During A - After W - Weekly M - Monthly SA - Semiannual AN - Annual

Item No.	Interval	Item to Be Inspected	Procedure	Not Mission Capable If:
			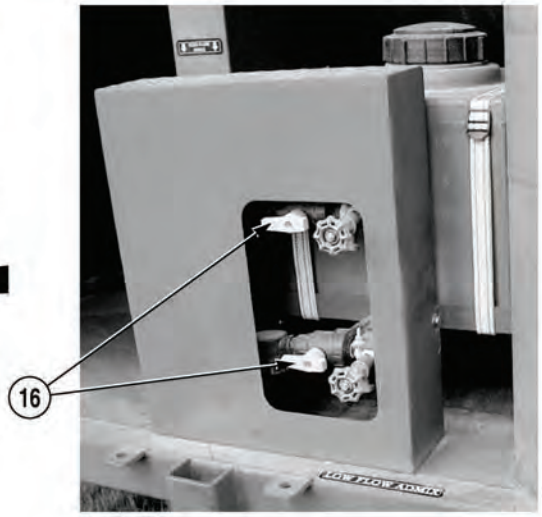 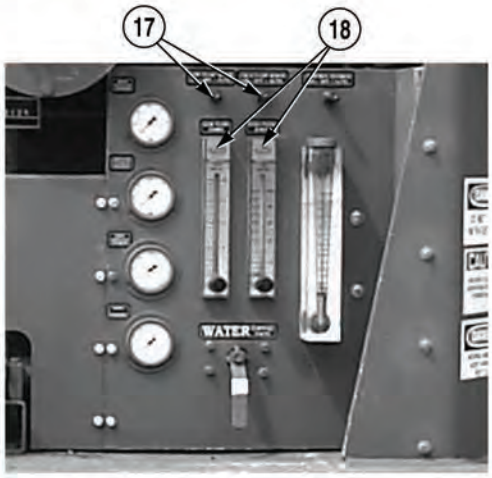	
21	D	Liquid Admix (When Used)	Check solution valves (16) for leaks and ease of operation.	Class III leak is evident.
22	D	Liquid Admix (When Used)	Turn ADMIX control switches (17) ON and check flow meter(s) (18) for operation.	Flowmeter(s) inoperable.

Table 2-1. Unit Preventive Maintenance Checks and Services (PMCS) (CONT)

B - Before D - During A - After W - Weekly M - Monthly SA - Semiannual AN - Annual

Item No.	Interval	Item to Be Inspected	Procedure	Not Mission Capable If:
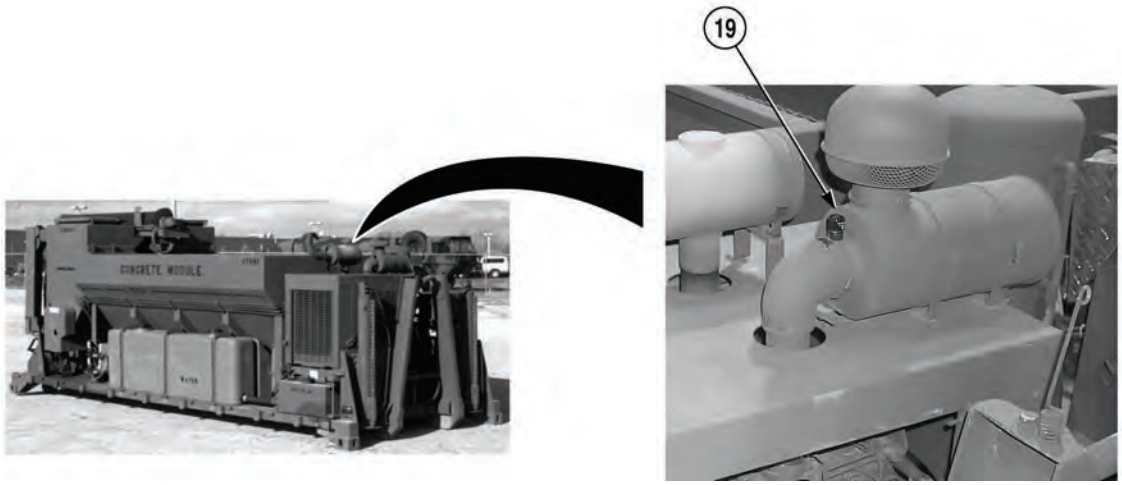				
23	D	Air Restriction Indicator	Check that air filter restriction indicator (19) does not show red band in sight glass. If red band in sight glass is present, press reset button on top of air restriction indicator and recheck.	Red band on indicator is visible after resetting.
24	A	Electrical System	Visually inspect wiring and connectors for obvious damage, breaks or fraying.	Damage that would impair operation.

Table 2-1. Unit Preventive Maintenance Checks and Services (PMCS) (CONT)

B - Before D - During A - After W - Weekly M - Monthly SA - Semiannual AN - Annual

Item No.	Interval	Item to Be Inspected	Procedure	Not Mission Capable If:
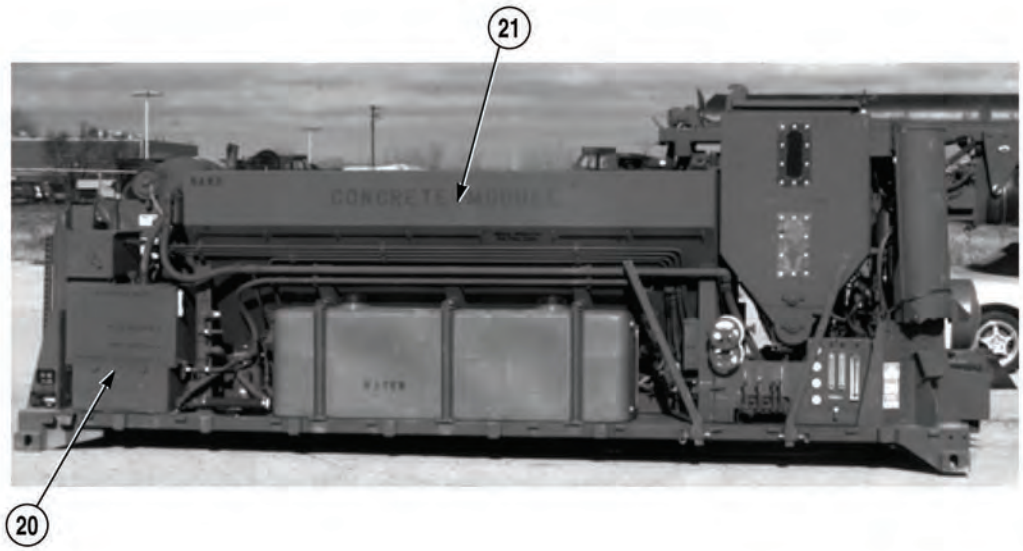				
25	A	Body	Visually inspect hydraulic reservoir (20) and aggregate bins (21) for obvious damage and weld breaks.	Cracked, broken welds.
26	A	Hydraulic System	Check all hydraulic lines (22), hydraulic reservoir (20), oil filter (23), and pump (24) for evidence of leaking.	Class III leak is evident.

Table 2-1. Unit Preventive Maintenance Checks and Services (PMCS) (CONT)

B - Before D - During A - After W - Weekly M - Monthly SA - Semiannual AN - Annual

Item No.	Interval	Item to Be Inspected	Procedure	Not Mission Capable If:
			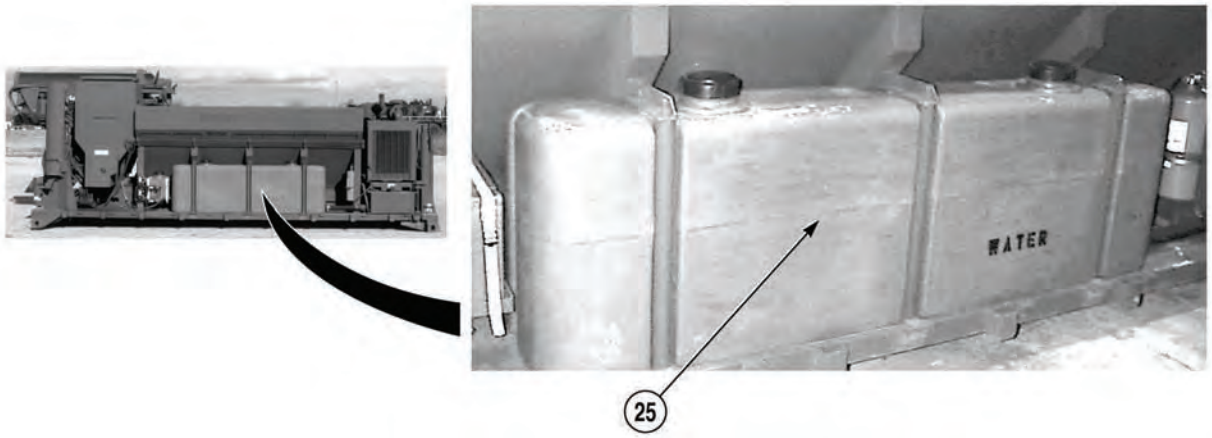	
27	A	Water Tanks	Check water tanks (25) for leaks.	Leak exists that would impair mission.
			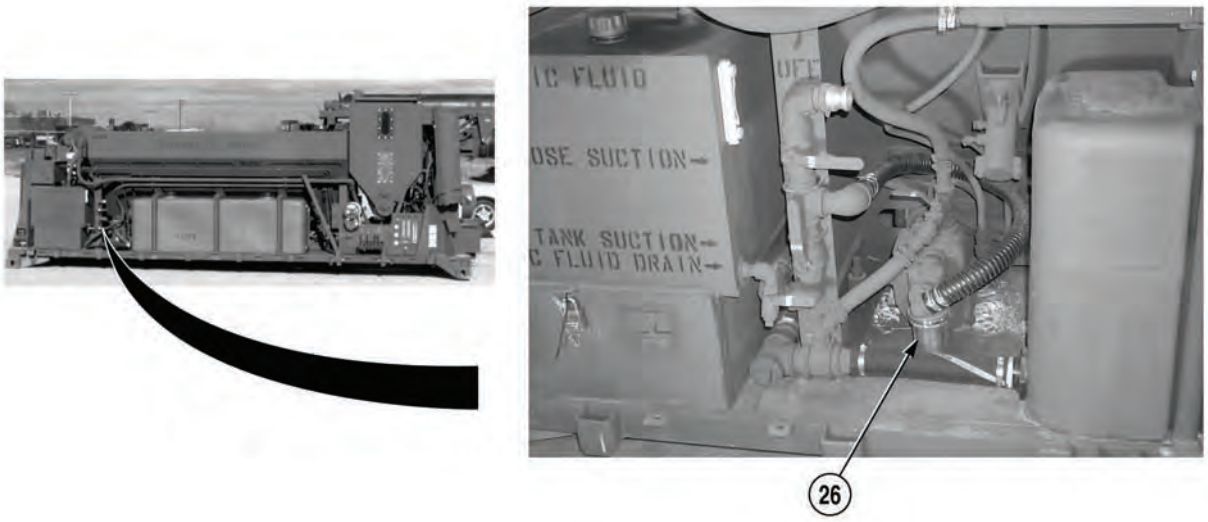	
28	A	Water System	Clean water strainer (26), (Para 2-33).	

Table 2-1. Unit Preventive Maintenance Checks and Services (PMCS) (CONT)

B - Before D - During A - After W - Weekly M - Monthly SA - Semiannual AN - Annual

Item No.	Interval	Item to Be Inspected	Procedure	Not Mission Capable If:
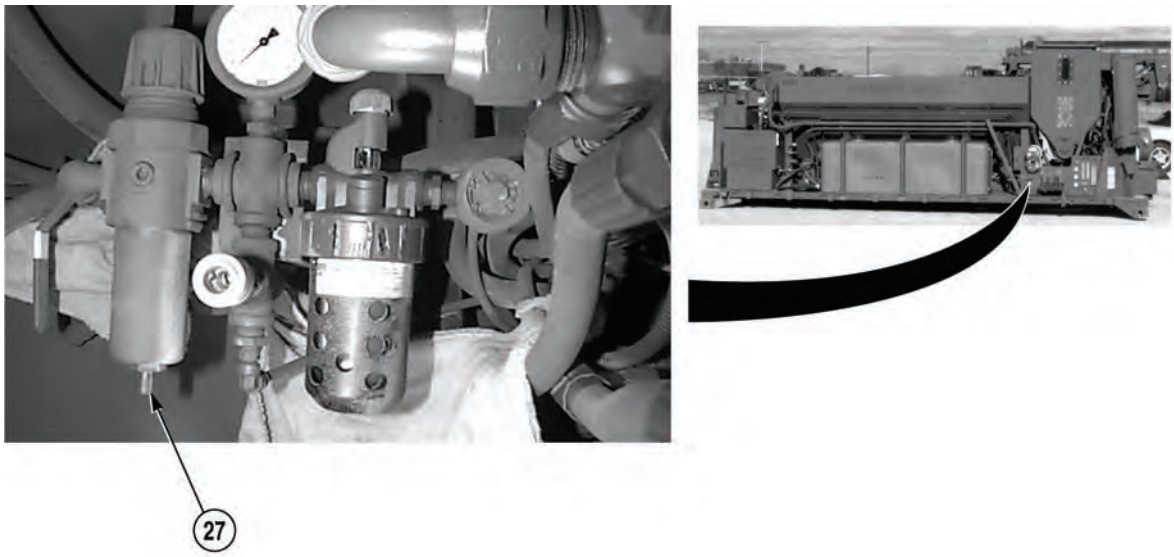				
29	A	Air System	Drain air system filter (27). Turn clockwise to open and counterclockwise to close.	
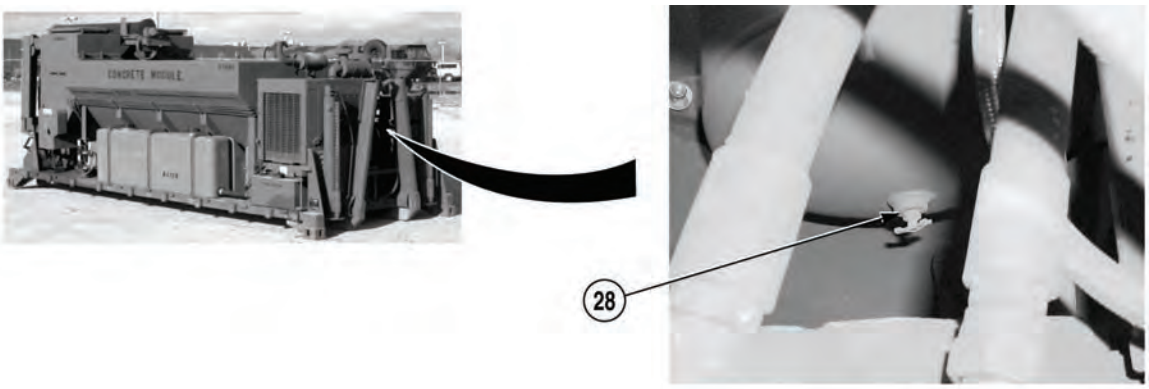				
30	A	Air System	Drain air reservoir (28). Turn counterclockwise to close and clockwise to open.	

Table 2-1. Unit Preventive Maintenance Checks and Services (PMCS) (CONT)

B - Before D - During A - After W - Weekly M - Monthly SA - Semiannual AN - Annual

Item No.	Interval	Item to Be Inspected	Procedure	Not Mission Capable If:
			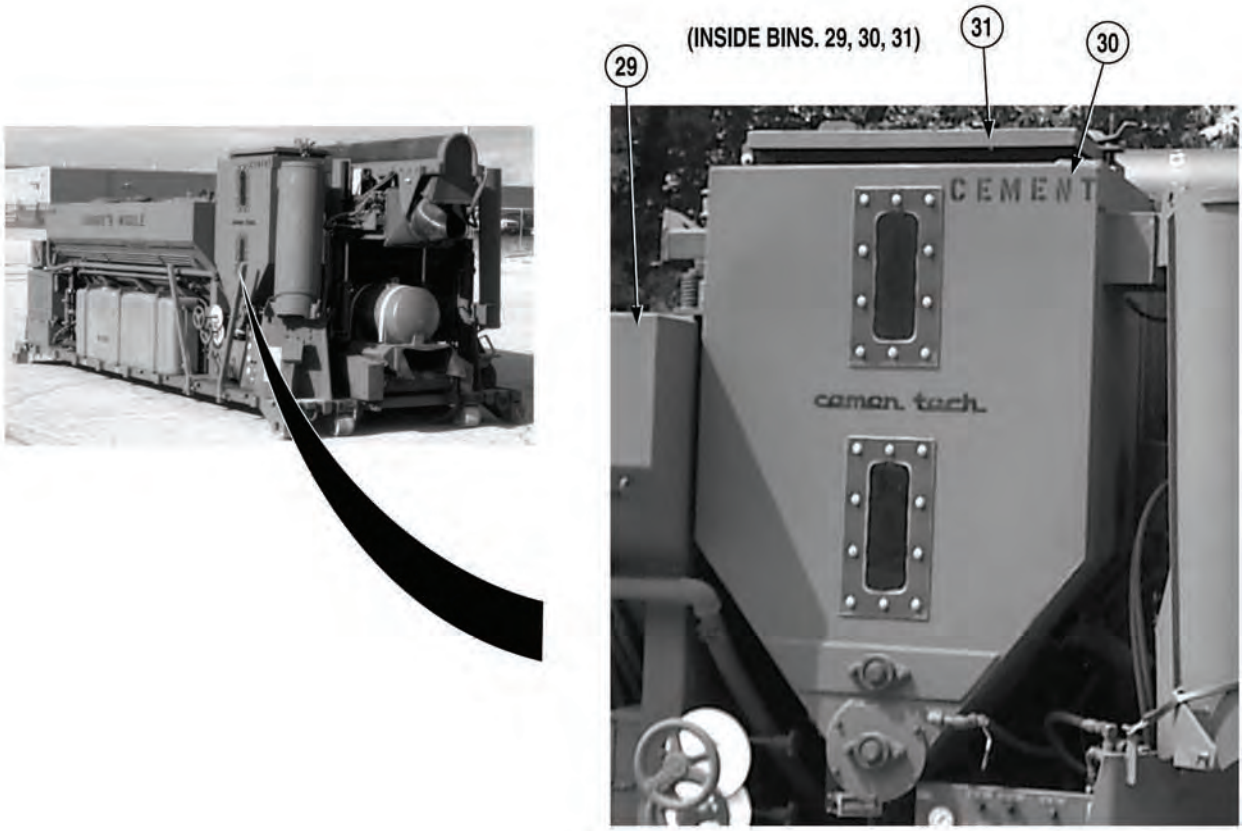	
31	A	Sand and Stone Bins	Check screens (29) for broken rods and enlarged openings.	
32	A	Cement Bin	Check that top of cement bin (30) and cement screen are clean.	
33	A	Cement Bin	Check that hopper lid (31) seals tight on both sides.	

Table 2-1. Unit Preventive Maintenance Checks and Services (PMCS) (CONT)

B - Before D - During A - After W - Weekly M - Monthly SA - Semiannual AN - Annual

Item No.	Interval	Item to Be Inspected	Procedure	Not Mission Capable If:
			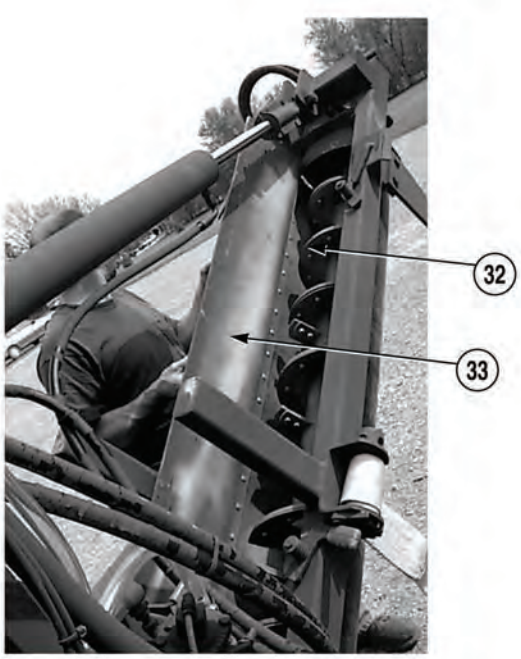 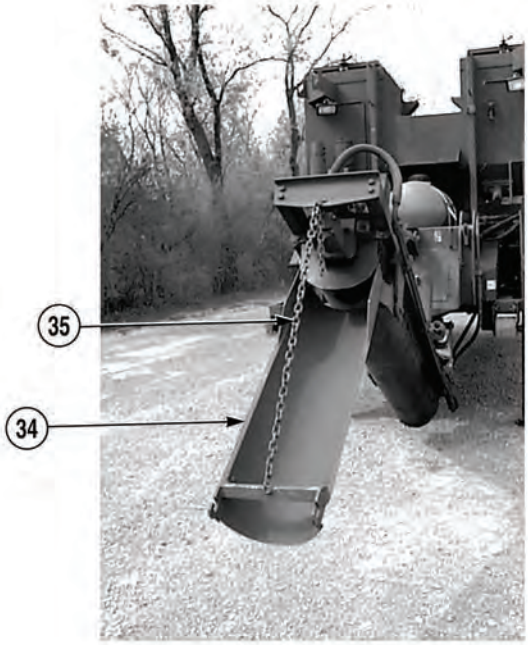	
34	A	Mixing Trough	Check mixer auger wear blades (32) for wear and obvious damage to auger.	Wear blades are damaged or worn past allowable tolerance, (Para 2-25).
35	A	Mixing Trough	Check mixing auger bottom boot (33) for rips and damage. Check that guards and latches operate freely.	Tears or damage that would impair operation.
36	A	Mixing Trough	Check delivery chutes (34) for cracks. Check chain (35) for cracked or broken links.	

Table 2-1. Unit Preventive Maintenance Checks and Services (PMCS) (CONT)

B - Before D - During A - After W - Weekly M - Monthly SA - Semiannual AN - Annual

Item No.	Interval	Item to Be Inspected	Procedure	Not Mission Capable If:
			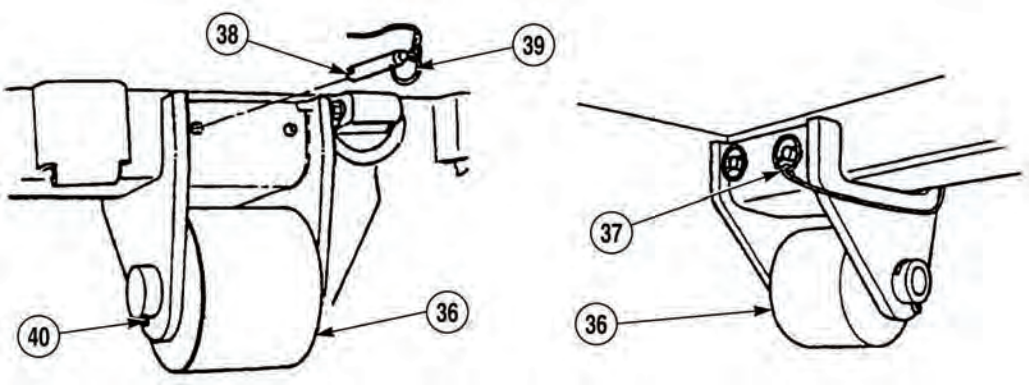 **WARNING** Roller must be supported while removing retaining pins or roller may drop causing injury to personnel.	
37	B	Rear Rollers	Two rollers a. Hold roller (36) in place. Remove holding pin (37) from each retaining pin (38). Lift on ring (39), pull retaining pin out far enough to ensure it is removable, then push back in. Perform same with other pin. b. Ensure that roller (36) will rotate. c. Ensure roll pins (40) are not damaged.	Neither roller functions correctly.
			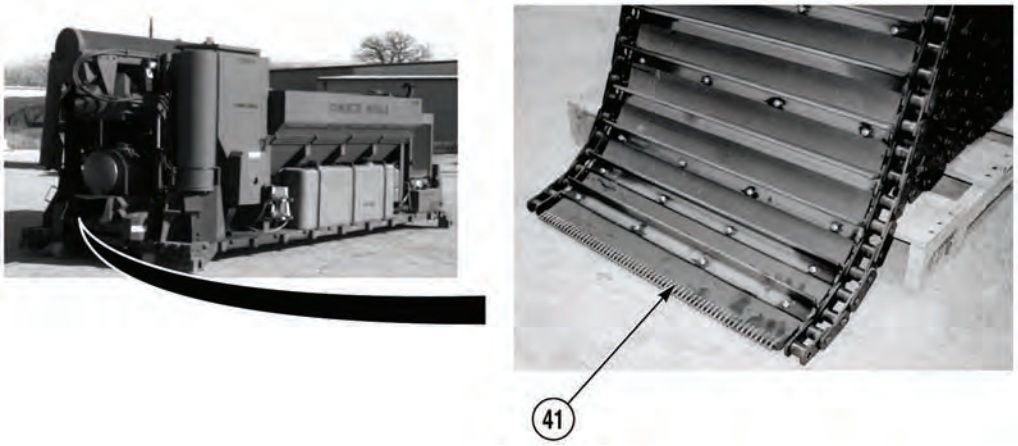	
38	B	Conveyor Belt	Check belt lacer (41) for loose or broken prongs.	Any separation between belt lacer and belt/hinge.

Table 2-1. Unit Preventive Maintenance Checks and Services (PMCS) (CONT)

B - Before D - During A - After W - Weekly M - Monthly SA - Semiannual AN - Annual

Item No.	Interval	Item to Be Inspected	Procedure	Not Mission Capable If:
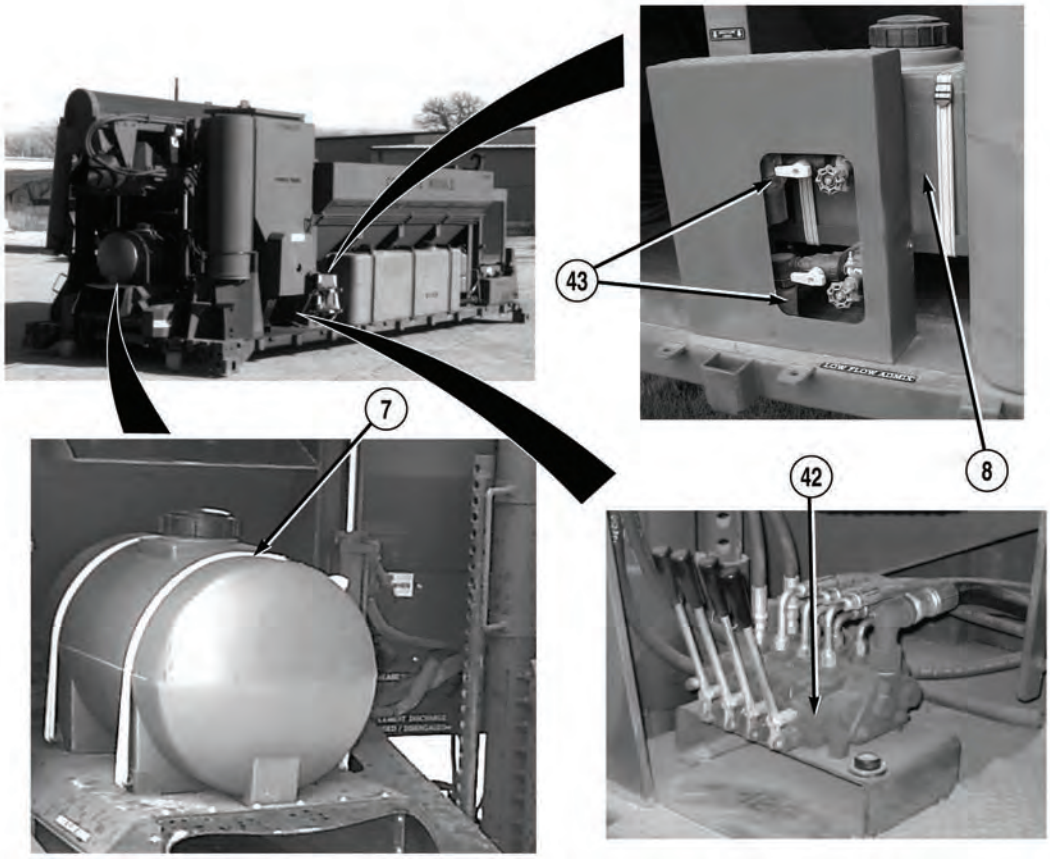				
39	A	Lift Cylinder Valve Banks	Check lift cylinder valve banks (42) for leaks.	Class III leak is evident and module is to be off-loaded for mission.
			CAUTION Liquid admix tanks must be flushed at end of day. Failure to comply may result in damage to equipment.	
40	A	Liquid Admix (When Used)	Drain and flush liquid admix tanks (7) & (8) at end of day (Para 2-15 and 2-16).	
41	A	Liquid Admix (When Used)	Clean admix strainers (43) (Para 2-32).	

Table 2-1. Unit Preventive Maintenance Checks and Services (PMCS) (CONT)

B - Before D - During A - After W - Weekly M - Monthly SA - Semiannual AN - Annual

Item No.	Interval	Item to Be Inspected	Procedure	Not Mission Capable If:
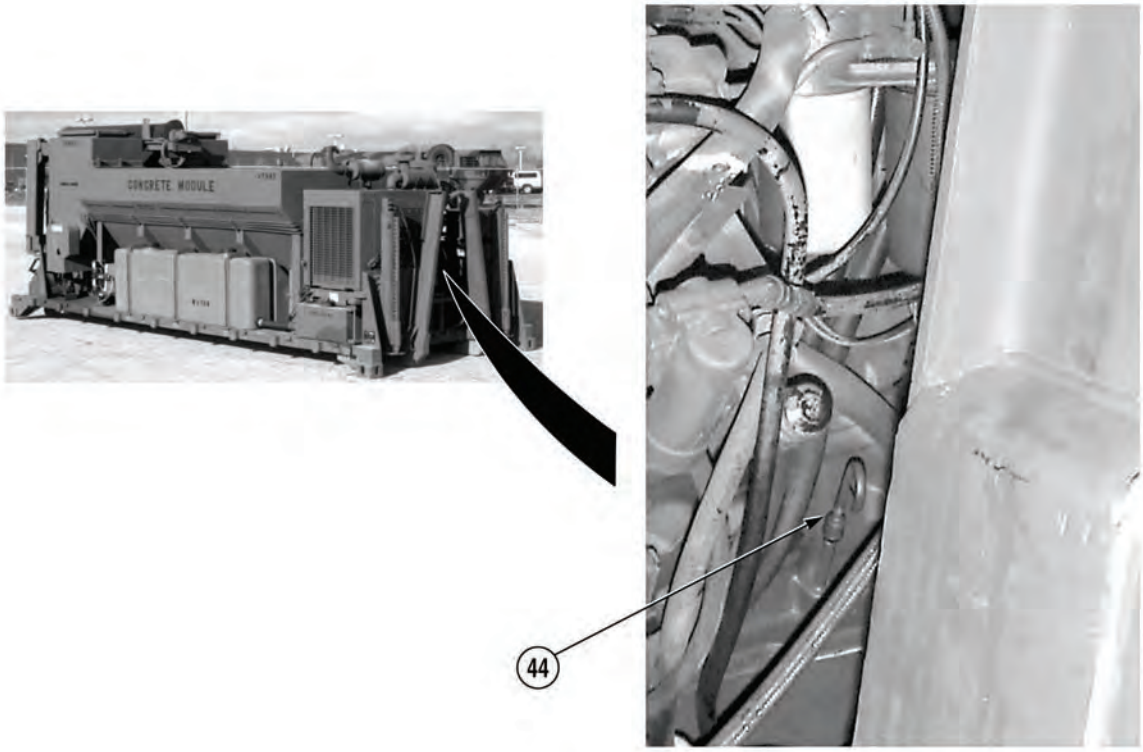				
42	A	Engine Oil Level	Check that engine oil level is between Low (L) and Full (F) on dipstick (44). If below Low (L), fill as required.	Oil level is not between Low (L) and Full (F) on dipstick or Class III leak is evident.

Table 2-1. Unit Preventive Maintenance Checks and Services (PMCS) (CONT)

B - Before D - During A - After W - Weekly M - Monthly SA - Semiannual AN - Annual

Item No.	Interval	Item to Be Inspected	Procedure	Not Mission Capable If:
			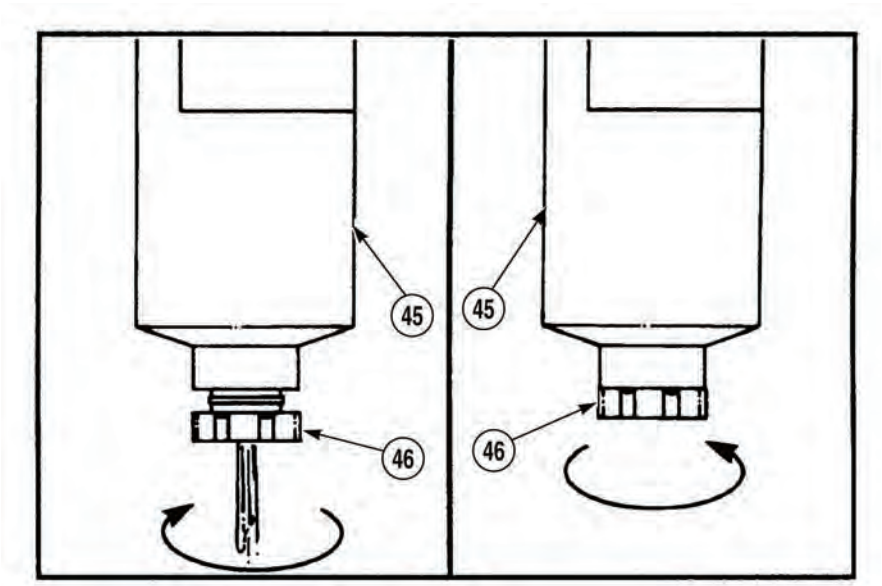	
43	A	Fuel/Water Separator	Drain water and sediment from fuel/water separator (45) into suitable container. Shut off engine and open drain valve (46) four complete turns until valve drops down 1 in. (2.54 cm). Drain the filter sump of water until clear fuel is visible.	

Table 2-1. Unit Preventive Maintenance Checks and Services (PMCS) (CONT)

B - Before D - During A - After W - Weekly M - Monthly SA - Semiannual AN - Annual

Item No.	Interval	Item to Be Inspected	Procedure	Not Mission Capable If:
			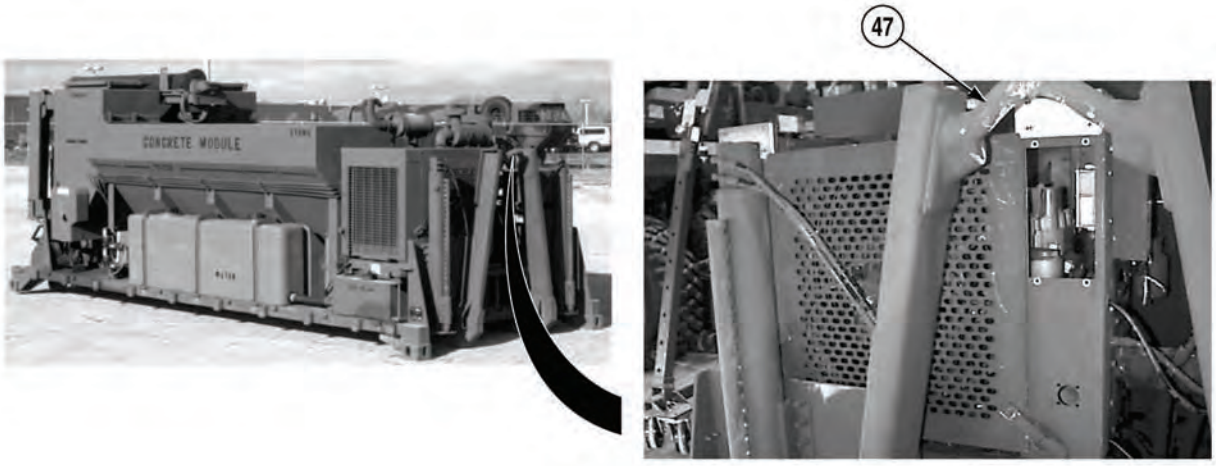	
			WARNING Hook bar may have metal slivers or sharp edges. Wear gloves if handling or injury to personnel could result.	
44	A	Hook Bar	Check hook bar (47) for cracks and bent bar.	Hook bar has cracks or is bent.
45	W	Hydraulic Cylinders	Check lift cylinders, hoist cylinders, and auger cylinder for oil leaks, pitting, and damage that would impair operation.	Class III leak is evident.

Table 2-1. Unit Preventive Maintenance Checks and Services (PMCS) (CONT)

B - Before D - During A - After W - Weekly M - Monthly SA - Semiannual AN - Annual

Item No.	Interval	Item to Be Inspected	Procedure	Not Mission Capable If:
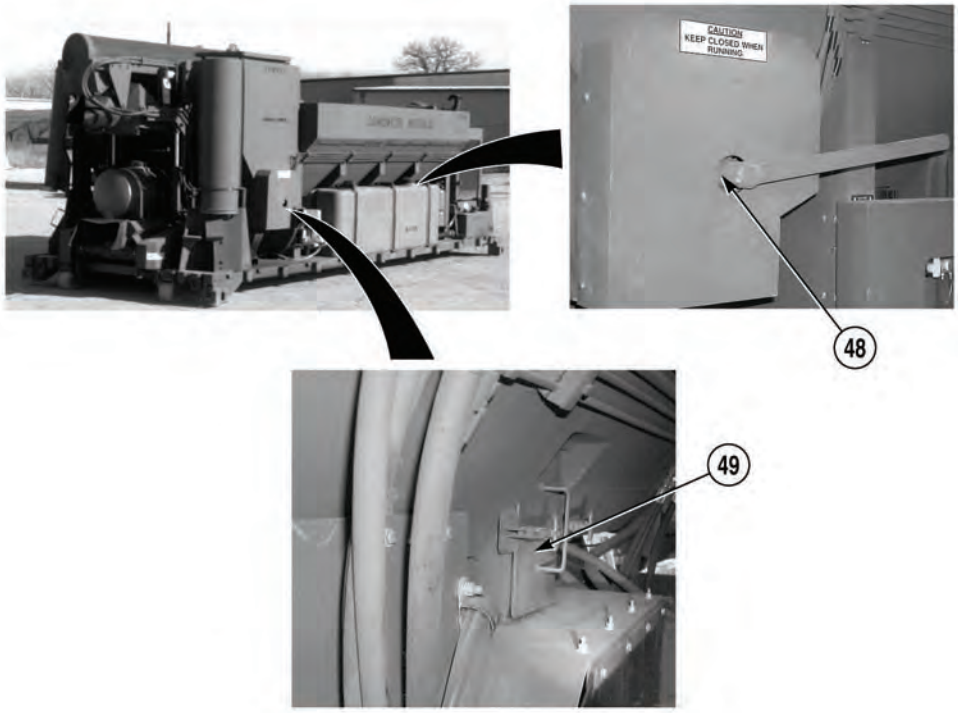				
46	W	Cement Bin	Check that cement feeder (48) works freely. Using hand crank, give wheel one full turn.	Cement feeder does not work freely.
47	W	Cement Bin	Remove access door (49) and check cement outlet area for cement buildup.	Cement outlet plugged.

Table 2-1. Unit Preventive Maintenance Checks and Services (PMCS) (CONT)

B - Before D - During A - After W - Weekly M - Monthly SA - Semiannual AN - Annual

Item No.	Interval	Item to Be Inspected	Procedure	Not Mission Capable If:
			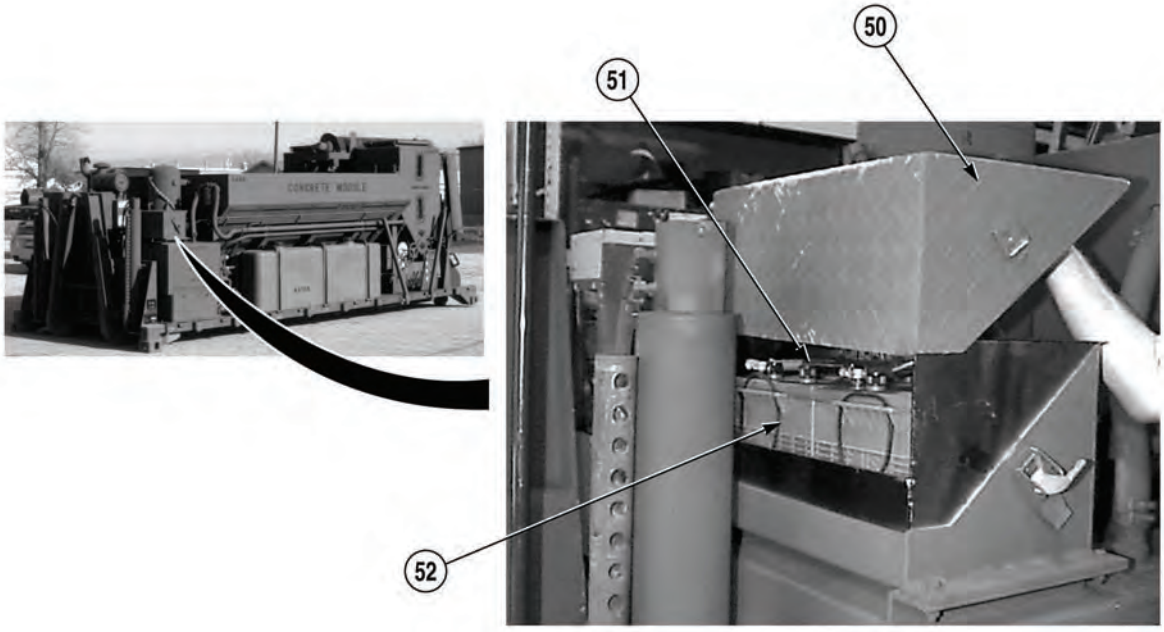 **WARNING** Remove all jewelry such as rings, dog tags, bracelets, etc. If jewelry or tools contact positive electrical circuits, a direct short may occur. Damage to equipment, injury or death to personnel may result.	
48	W	Batteries	Remove battery box cover (50) and check for cracks and damage.	Battery box has damage that could allow battery box to separate from module.
49	W	Battery Box	Visually check for missing battery caps (51). Check electrolyte level. Electrolyte should be filled to approximately 1/8 in. (3.2 mm) below level/split ring in the battery filler opening (vent). Visually inspect batteries (52) for cracked and leaking casing, broken, loose, burned, and corroded terminal posts, loose or missing hold downs, and loose or missing battery equalizer mounting hardware. Install battery box cover (50).	Battery is unserviceable, missing, leaking, terminals or cables are loose, corroded, burnt or hold down is not secure.

Table 2-1. Unit Preventive Maintenance Checks and Services (PMCS) (CONT)

B - Before D - During A - After W - Weekly M - Monthly SA - Semiannual AN - Annual

Item No.	Interval	Item to Be Inspected	Procedure	Not Mission Capable If:
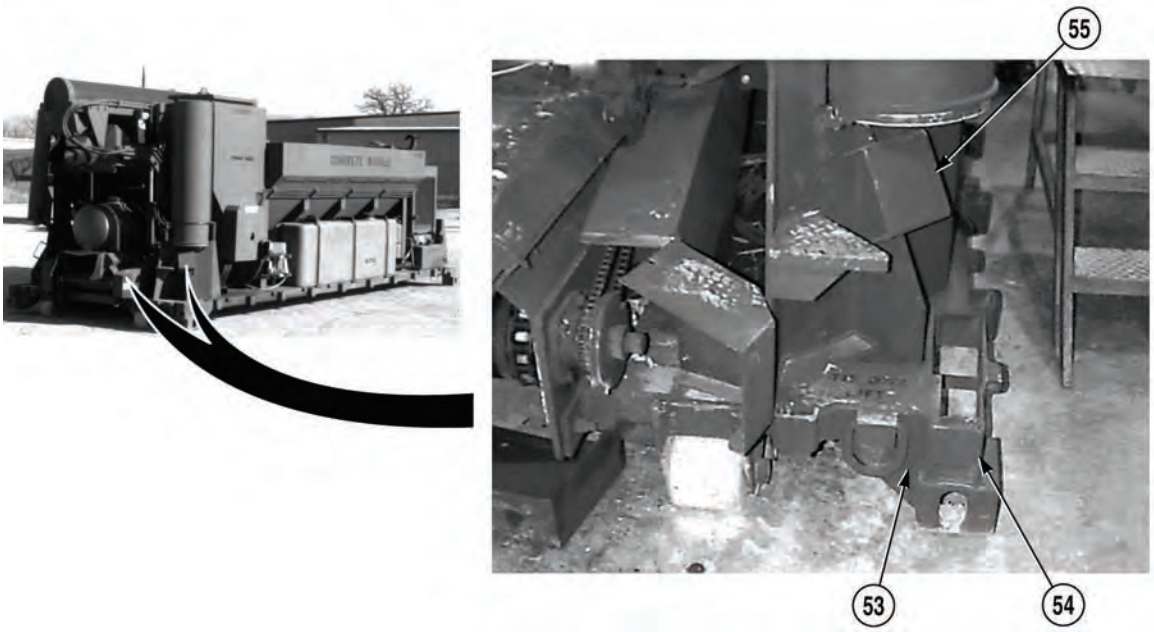				
50	SA	Sheet Metal and Frame	Inspect sheet metal and frame (53) for evidence of corrosion damage such as surface color change, surface separation, blistered paint, rust through or other evidence of damage.	Sheet metal is to the point that it creates a safety hazard or impairs operation.
51	SA	Frame	Check broken frame rails (54), crossmembers or cracked welds on undercarriage.	Damaged rails, crossmembers or cracked welds are found.
52	SA	Mounting Brackets	Check mounting brackets (55) for cracks, breaks, rust or looseness.	Mounting brackets are damaged or missing.

Table 2-1. Unit Preventive Maintenance Checks and Services (PMCS) (CONT)

B - Before D - During A - After W - Weekly M - Monthly SA - Semiannual AN - Annual

Item No.	Interval	Item to Be Inspected	Procedure	Not Mission Capable If:
			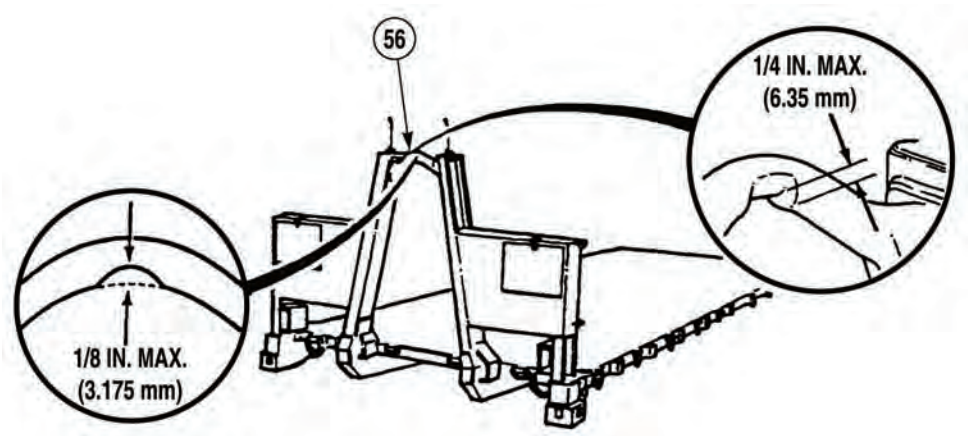	
53	SA	Hook Bar	Check hook bar (56) for wear. If wear at lower back side of hook bar is greater than 1/4 in. (6.35 mm) or greater than 1/8 in. (3.175 mm) at bottom of hook bar, notify Supervisor.	
			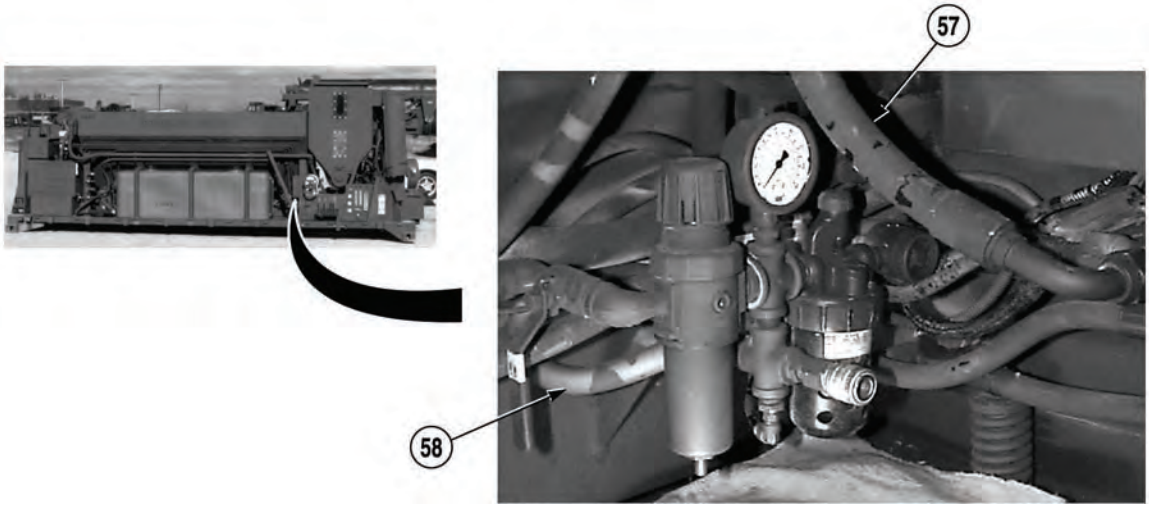	
54	SA	Hydraulic Hoses and Tubes	Follow routing of all hydraulic hoses (57) and tubes (58). Inspect for loose fittings, excessive chafing, cracks and leaks.	Loose fittings, cracks, leaks or excessive chafing is found.

Table 2-1. Unit Preventive Maintenance Checks and Services (PMCS) (CONT)

B - Before D - During A - After W - Weekly M - Monthly SA - Semiannual AN - Annual

Item No.	Interval	Item to Be Inspected	Procedure	Not Mission Capable If:
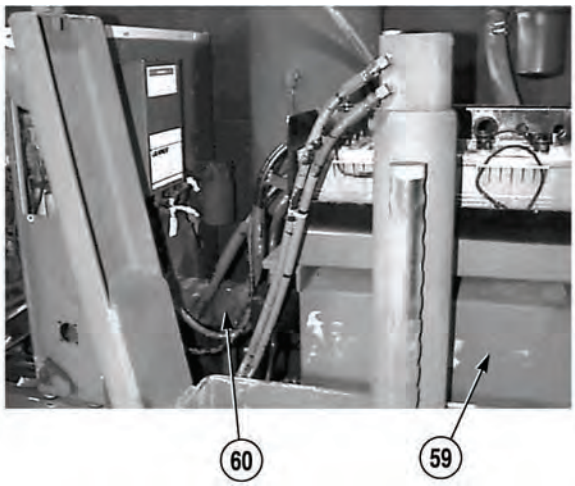				
			NOTE When oil is cold, do not add or fill beyond "FULL".	
55	SA	Hydraulic Reservoir	a. Check hydraulic reservoir (59) for cracks, leaks or obvious damage. b. Check hydraulic oil level and fill as required, (Para 2-10).	Class III leak is evident.
56	SA	Hydraulic Pump	Inspect hydraulic pump (60) for leaks or loose parts.	Any class III leak, loose parts, or damage is found.

Table 2-1. Unit Preventive Maintenance Checks and Services (PMCS) (CONT)

B - Before D - During A - After W - Weekly M - Monthly SA - Semiannual AN - Annual

Item No.	Interval	Item to Be Inspected	Procedure	Not Mission Capable If:
			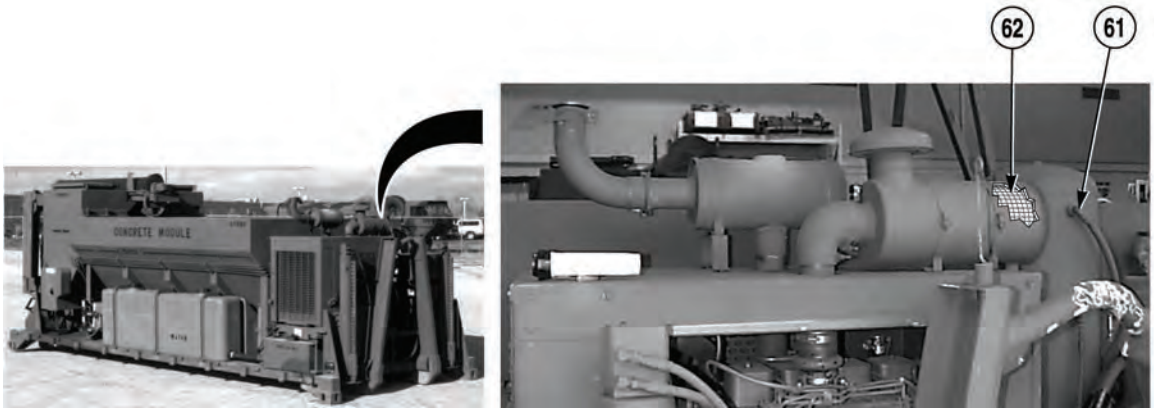	
57	SA	Air Intake	Check air intake hoses (61) for proper installation, cracks, breaks, or loose connections that could let unfiltered air into air intake system. Tighten loose parts.	Air intake hoses are cracked or broken.
58	SA	Air Intake Filter	Inspect and replace engine air intake filter (62) as required (Para 3-4).	
			NOTE Check engine oil level with Concrete Mobile Mixer on level ground and engine off and cool. Do not overfill crankcase. Drain crankcase when hot.	
59	SA	Engine Oil	Drain engine oil from crankcase every 250 hours or semiannually, whichever comes first. Refill with OE/HDO as required, (Para 2-10).	Class III leak is evident.

Table 3-1. Field Preventive Maintenance Checks and Services (PMCS) (CONT)

B - Before D - During A - After W - Weekly M - Monthly SA - Semiannual AN - Annual

Item No.	Interval	Item to Be Inspected	Procedure	Not Mission Capable If:
			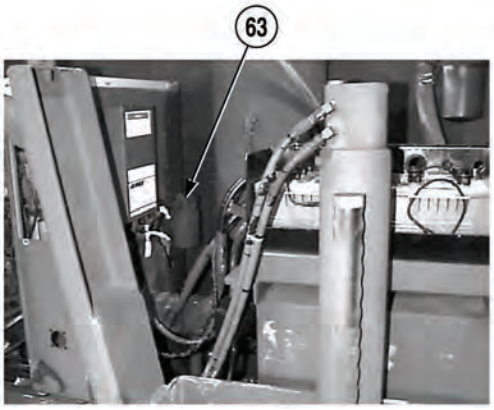	
			NOTE After installing new filter, fill crankcase, operate engine for 5 minutes and check filter for leaks. Shut down engine, check crankcase level and bring to "FULL."	
60	SA	Engine Oil Filter	Replace engine oil filter (63) every 250 hours or semiannually, (Para 3-14).	Class III leak is evident.
			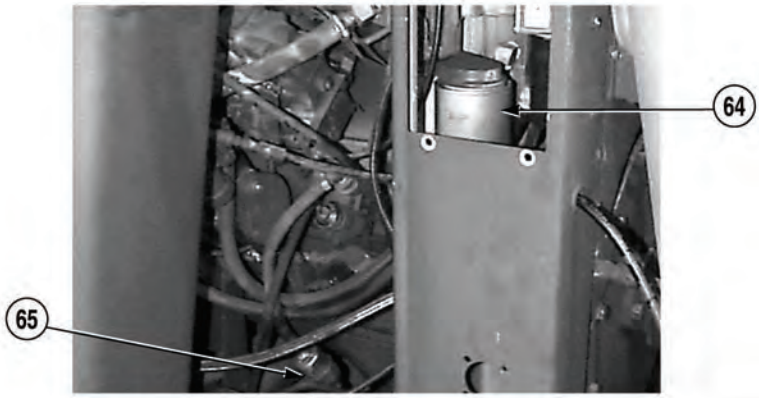	
61	SA	Fuel Filters	Change fuel filters (64) every 250 hours or semiannually, whichever comes first. Clean area around fuel filter head. Remove filters. Clean gasket surface of filter head. Replace preformed packing, (Para 3-27 or Para 3-28).	Class III leak is evident.
62	SA	In-Line Fuel Filter	Replace in-line fuel filter (65) every 250 hours or semiannually, whichever comes first (Para 3-29).	Class III leak is evident.

Table 3-1. Field Preventive Maintenance Checks and Services (PMCS) (CONT)

B - Before D - During A - After W - Weekly M - Monthly SA - Semiannual AN - Annual

Item No.	Interval	Item to Be Inspected	Procedure	Not Mission Capable If:
			NOTE When oil is cold, do not add or fill above black line on sight gage.	
63	AN	Hydraulic Reservoir	a. Drain and refill hydraulic reservoir every 500 hours or annually, whichever comes first (Para 3-84). b. Replace hydraulic oil filter (66) annually, (Para 3-35).	Class III leak is evident.
			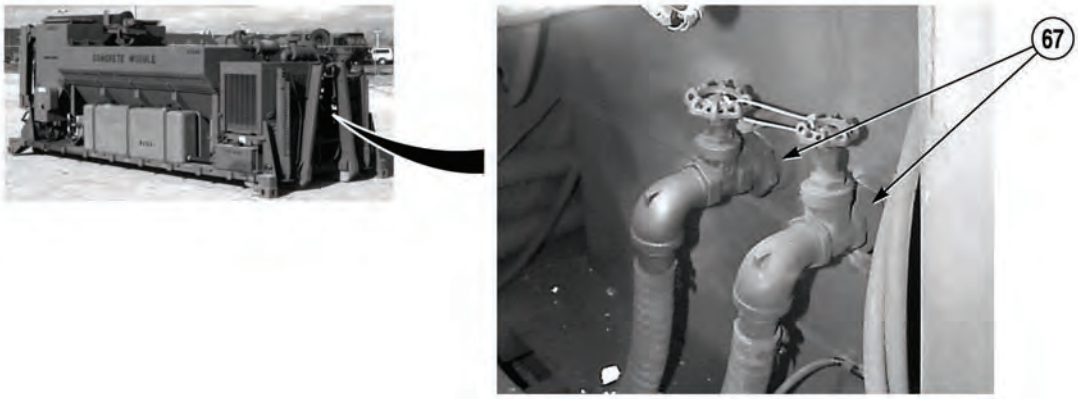	
64	AN	Hydraulic Reservoir Strainer	Check and clean suction strainer (67) in suction line located in hydraulic reservoir at suction line exit, (Para 3-86).	Class III leak is evident.
65	AN	Mixing Auger Lower Bearing	Check cement mixing auger lower bearing oil level, (Para 3-92).	Oil level is not within specification.

Section II. LUBRICATING INSTRUCTIONS

2-10. GENERAL LUBRICATING INSTRUCTIONS.

a. Daily.

CAUTION

Using petroleum distillates (diesel fuel, oil, etc.) on concrete dispenser to aid in removing concrete build-up is not recommended. Rubber auger boot, door covers, and conveyor belting are attacked by petroleum products. This weakens material and causes premature failure of rubber components. Failure to comply could result in damage to equipment.

NOTE

Refer to Appendix B for more information regarding lube specifications.

(1) Fill air system lubricator (add 10W oil).

NOTE

For lubrication of conveyor chain, an automatic chain oiler system is included. It automatically activates when conveyor is running. Adjust drip controls so one drop of oil drips for every 2 or 3 seconds. Ensure both sides of chain oiler are lubricated.

(2) Fill conveyor chain oiler (add 10W oil, 2 qt [1.89 l]).

(3) Check engine oil for proper levels; add engine oil if required. (Refer to Cummins Manual, page V-12.)

(4) Grease mixer swivel assembly (auger deployed) (6 grease zerks) (GAA).

(5) Check oil level of hydraulic tank. Fill if needed, (Para 2-10).

b. Monthly/80 hours Operation, whichever comes first.

(1) Grease mixer hoist swivel mount (auger deployed) (GAA).

(2) Grease cement clutch (GAA).

(3) Lightly oil cement clutch chain, conveyor drive chain, and two cement bin auger chains (10W oil).

(4) Coat hydraulic lift cylinders with grease (Concrete Mobile Mixer raised) (GAA).

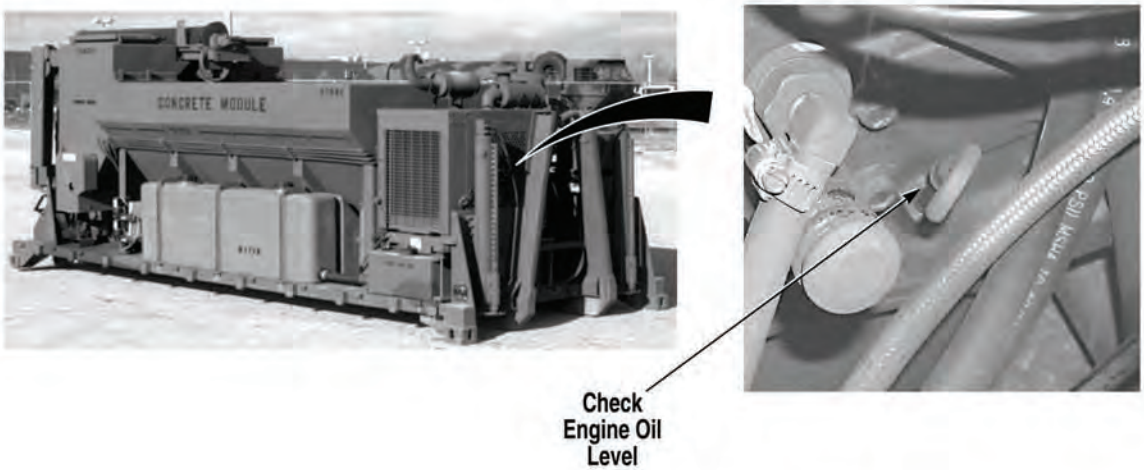
CONCRETE MODULE
Check
Engine Oil
Level

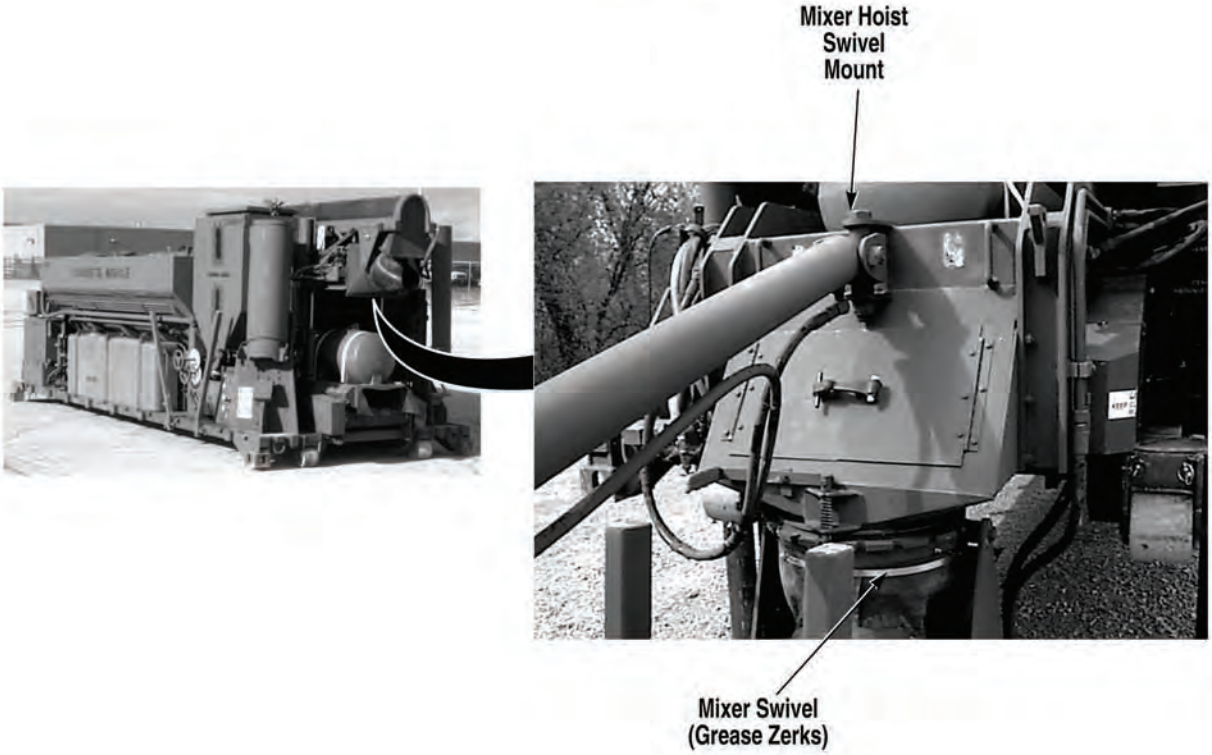
Mixer Hoist
Swivel
Mount
Mixer Swivel
(Grease Zerks)

2-10. GENERAL LUBRICATING INSTRUCTIONS (CONT).

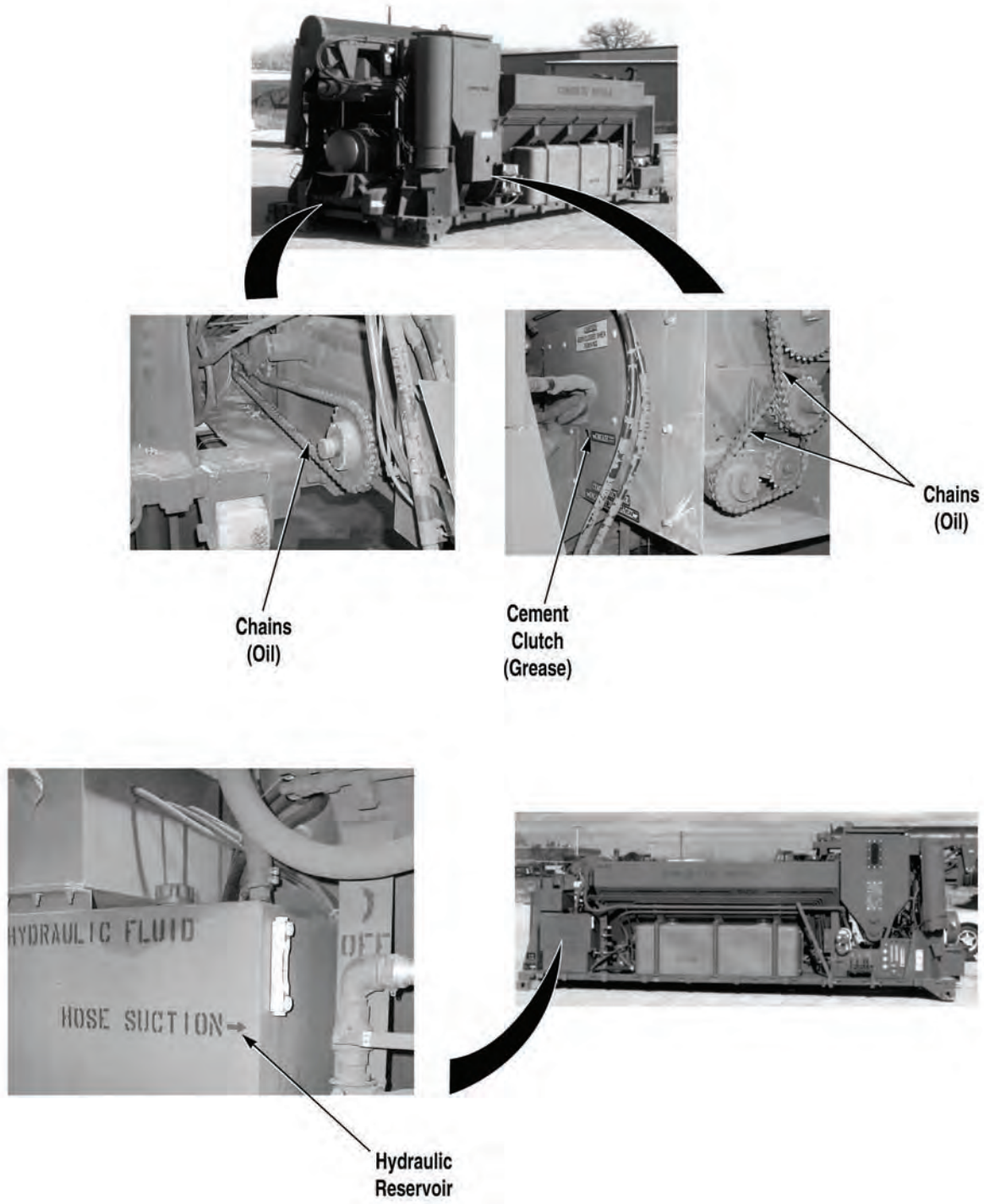

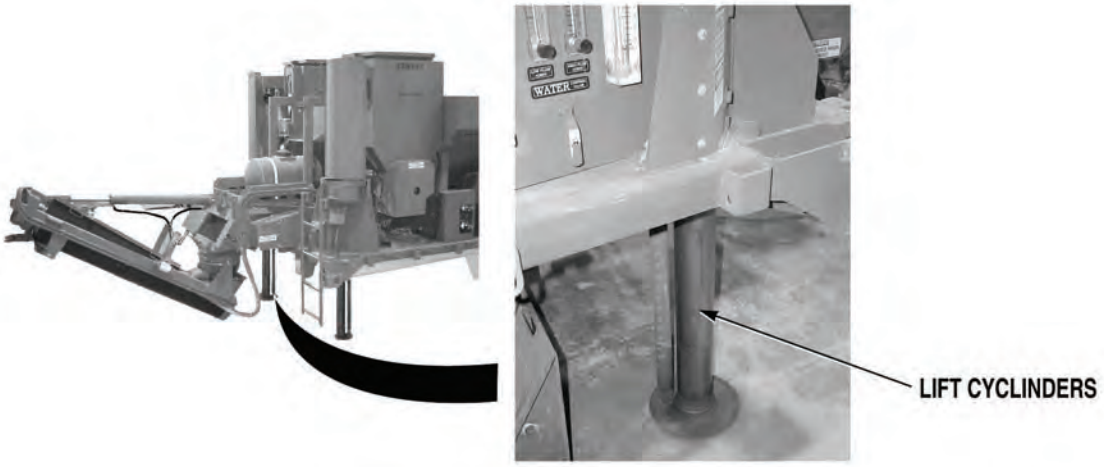

HYDRAULIC RESERVOIR

EXPECTED TEMPERATURE																		
¡F	-50	-40	-30	-20	-10	0	10	20	30	40	50	60	70	80	90	100	110	120
¡C	-46	-40	-34	-29	-23	-18	-12	-7	-1	4	10	16	21	27	32	38	44	49
												OE/HDO-30						
						OE/HDO-10												

LUBRICANTS: OE/HDO LUBRICATING OIL, ICE, TACTICAL (MIL-L-2104)

2-11. SPECIAL LUBRICATING INSTRUCTIONS.

a. Chain Oiler.

The chain oiler should dispense oil at the rate of one drop every 2 to 3 seconds. This rate may be checked by observing sight glass on bottom of unit. Knurled knob above sight glass adjusts drip rate. Turn to left (counterclockwise) to increase drip rate. Turn to right (clockwise) to decrease drip rate. If chain appears dry, increase drip rate. If there is oil running down onto ground, then drip rate is too high. For more information, refer to Appendix B.

b. Vibrator Air Lubricator.

The vibrator air lubricator should dispense approximately one drop of oil every third vibration. This rate may be checked by observing sight glass on top of unit. To adjust flow rate, turn screw on top of unit to the right (clockwise) to slow down oil flow or to the left (counterclockwise) to speed up oil flow. Check sight gage on side of reservoir to determine when reservoir requires filling. Filling is only required when oil is not visible in sight gage. To fill reservoir, unscrew knurled cap on top of unit and pour in oil. Observe sight gage to determine when reservoir is full. Install and tighten knurled cap finger tight. For more information, refer to Appendix B.

c. Hydraulic Reservoir.

The hydraulic reservoir should be checked daily. Check sight gage on side of reservoir to determine when reservoir requires filling. Filling is only required when oil is not above red line in sight gage. To fill reservoir remove screw and cap from breather assembly. Remove breather assembly from hydraulic reservoir. Fill reservoir to full mark (black line) on gage. Capacity of hydraulic reservoir is 50 gal. (189.3 l). Recommended oil for hydraulic reservoir is MIL-PRF-2104 or equivalent. For more information, refer to Appendix B.

2-12. WATER TANKS DRAIN/FILL.

NOTE

- Concrete Mobile Mixer may be either loaded or unloaded from PLS for filling the water tanks. If unloading Concrete Mobile Mixer from PLS, (Para 2-5).
- For cold weather operations, (Para 2-34 and 2-35).

a. Drain Water Tanks Without Engine Running.

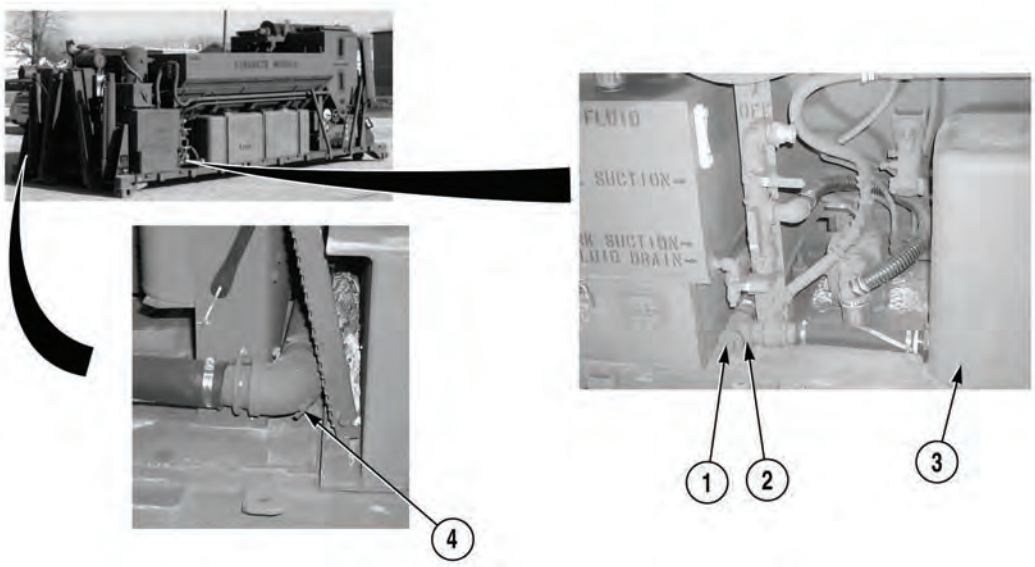

NOTE

- Removing plug will drain both water tanks.
- Water tanks may contain 460 gallons (1742 liters) of water.

(1) Remove plug (1) from tee (2).

(2) Let water run until tanks (3) are drained.

(3) Open drain cock (4).

NOTE

Perform Step (4) after tanks and hoses are completely drained.

(4) Install plug (1) on tee (2).

2-12. WATER TANKS DRAIN/FILL (CONT).

b. Drain Tanks With Engine Running.

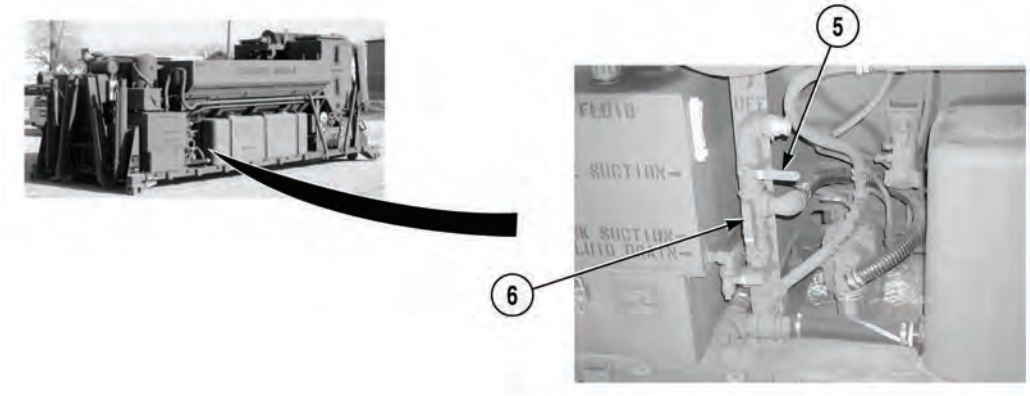

(1) Turn HOSE SUCTION valve (5) to “OFF” position.

(2) Turn TANK SUCTION valve (6) to “ON” position.

(3) Remove drain/fill hose from stowage box (7) and attach to washout valve (8).

(4) Position drain/fill hose away from Concrete Mobile Mixer.

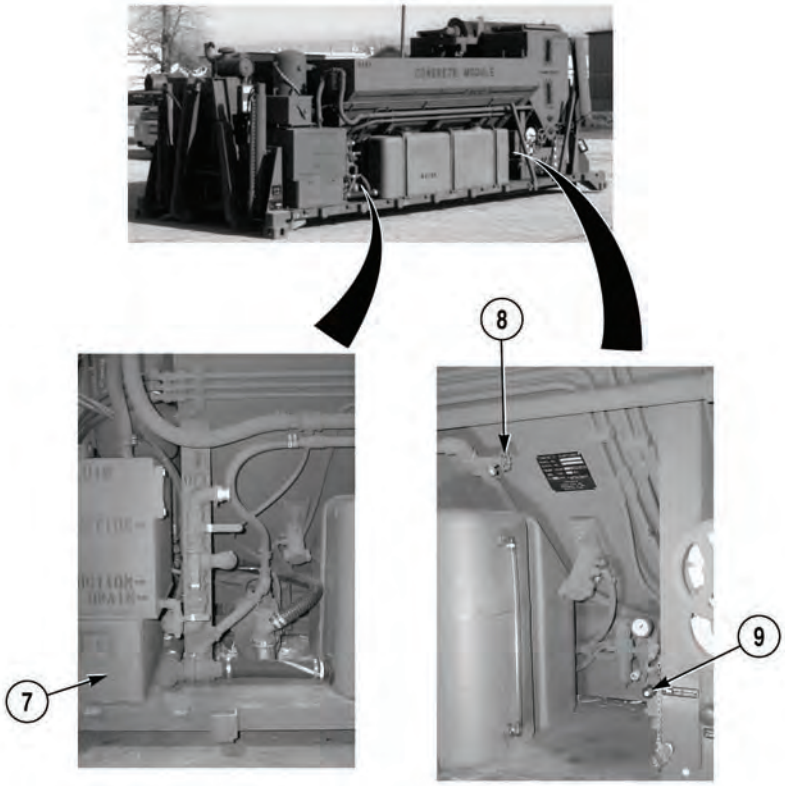

NOTE

Removing the spray nozzle from water hose will allow water to run freely.

(5) Start engine, (Para 2-19).

(6) Open washout valve (8).

CAUTION

Shut Concrete Mobile Mixer engine off when tanks are empty. Failure to comply could result in damage to equipment.

NOTE

Let engine run until water tanks are completely emptied.

(7) Adjust water pressure valve (9) to increase or decrease water flow.

(8) Shut off engine, (Para 2-19).

2-12. WATER TANKS DRAIN/FILL (CONT).

c. Fill Water Tanks.

CAUTION

Front tank caps have an open vent. Rear tank caps have a spring vent. Ensure caps are installed on proper tank. Failure to comply could result in damage to equipment.

NOTE

- Ensure drain cock is closed.
- Ensure that hose drain valve is closed.
- Both tanks are interconnected so filling one tank will fill both to the same level.

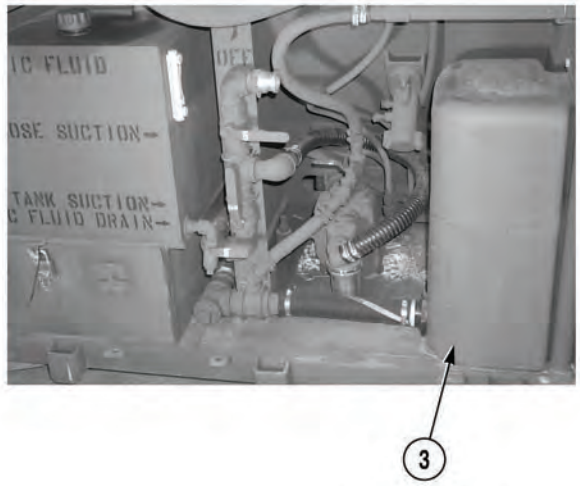

(1) Remove cap from tank (3) and fill water tanks.

(2) Replace fill cap.

d. Fill Water Tanks From Pond or Lake.

CAUTION

Always have suction strainer attached to suction hose when drawing water from a pond or lake. This will prevent large weeds, etc., from getting into Concrete Mobile Mixer system. Failure to comply could result in damage to equipment.

NOTE

- Suction hose is 25 ft. (7.62 m) long x 1-1/2 in. (38.1 mm) diameter, with attached suction strainer.
- If filling operations appear slow or sluggish, clean water strainer as required, (Para 2-33).
- Perform Steps (1) through (3) if pump priming is required.

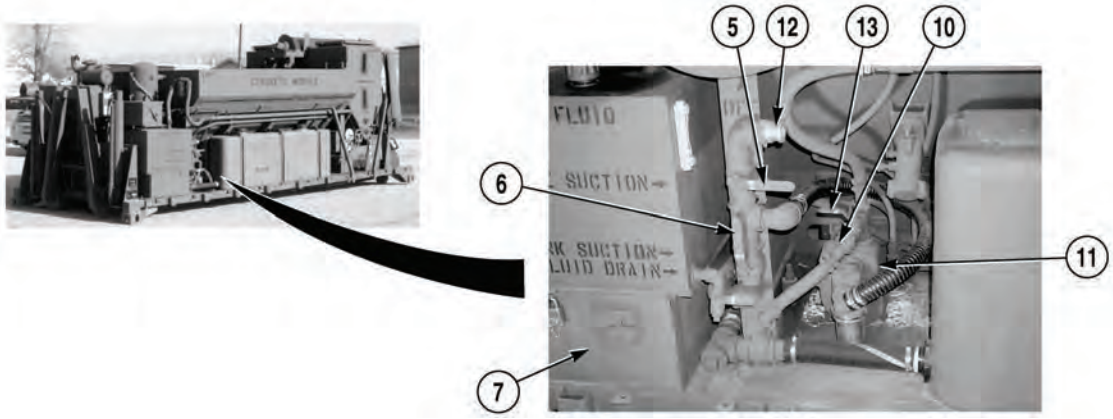

(1) Remove plug (10) from pump (11).

(2) Fill pump (11) with water.

(3) Install plug (10) on pump (11).

(4) Remove suction hose from stowage box (7).

(5) Attach suction hose to hose suction fitting (12).

(6) Turn TANK SUCTION valve (6) to “OFF” position.

(7) Turn HOSE SUCTION valve (5) to “ON” position.

(8) Turn water pump valve (13) to “ON” position.

2-12. WATER TANKS DRAIN/FILL (CONT).

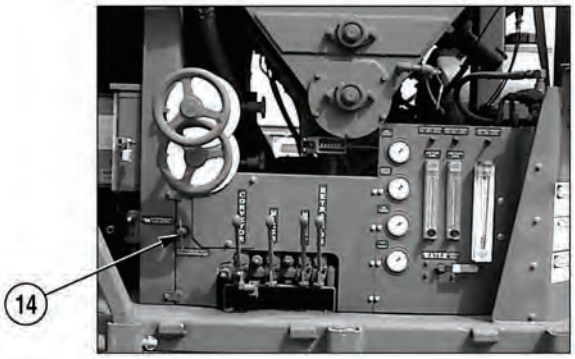

(9) Push LIFT CYLINDERS/WATER PUMP control valve (14) “IN.”

(10) Start engine, (Para 2-19).

NOTE

- Increase pressure at pump flow control to increase suction for faster priming/filling
- When sight tube located on rear of water tank is full, stop filling water tanks.

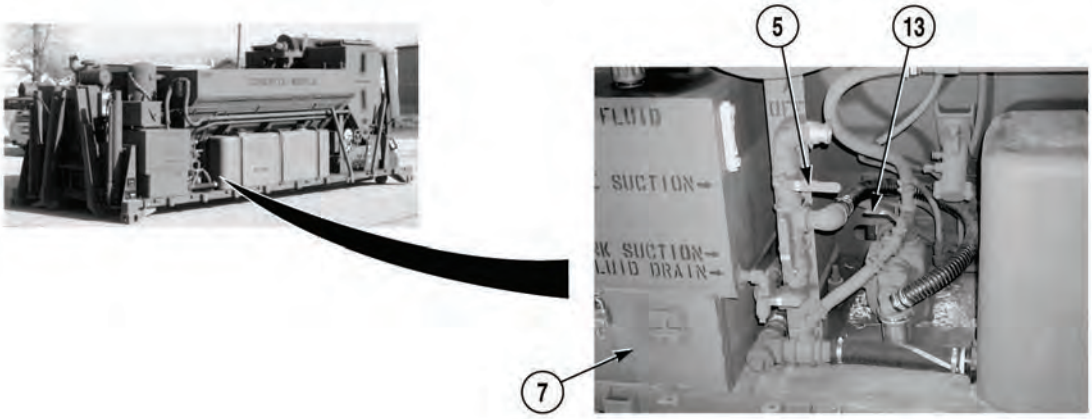

(11) When full, shut off engine, (Para 2-19).

(12) Turn HOSE SUCTION valve (5) to “OFF” position.

(13) Turn water pump valve (13) to “OFF” position.

(14) Remove suction hose and return to stowage box (7).

2-13. AGGREGATE BIN(S) FILL/EMPTY.

a. Fill Aggregate (Sand/Stone) Bin(s).

CAUTION

Ensure there is enough clearance above bins to load aggregates (sand or stone). Ensure that aggregates fall into correct bins. Sand is loaded in left bin and stone is loaded in right bin. Failure to comply could result in damage to equipment.

(1) Remove tarp from Concrete Mobile Mixer, (Para 2-17).

CAUTION

Do not over-fill bins. During transport, bins should not be filled above maximum fill line on outside of bins. Do not fill past grate on inside of bins. If bins are over-filled, weight will exceed maximum for loading and unloading Concrete Mobile Mixer from PLS. Also, if bins are over-filled, bins will spill when at maximum angle during off-loading. Failure to comply could result in damage to equipment.

NOTE

Use front end loader to dump sand or stone through screens into bin(s). These screens keep large rocks and other foreign matter out of bin(s).

(2) Fill bin(s).

NOTE

Inspect bin(s) for large objects on screens that may not have passed through. If there are any large objects, remove them.

(3) When bin(s) are full, install tarp over bin(s), (Para 2-17).

b. Empty Aggregate (Sand/Stone) Bin(s).

NOTE

Whenever possible, empty stone bin first. Emptying stone bin first will cause less wear on conveyor belt.

(1) Start engine, (Para 2-19).

2-13 AGGREGATE BIN(S) FILL/EMPTY (CONT).

(2) Stow mixing auger, (Para 2-23).

NOTE

Disengaging cement clutch will prevent cement from dispersing.

(3) Disengage cement clutch, (Para 2-22).

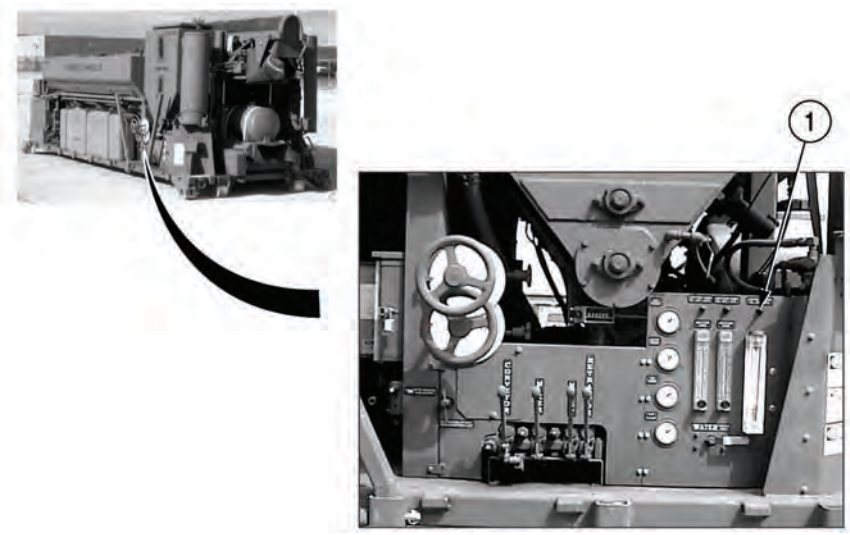

CAUTION

Ensure chain oiler is on whenever conveyor belt is operated. Failure to comply could result in damage to equipment.

(4) Place CONTROL OVERIDE switch (1) in “AUTO” position, and check chain oiler operation, (Para 2-11).

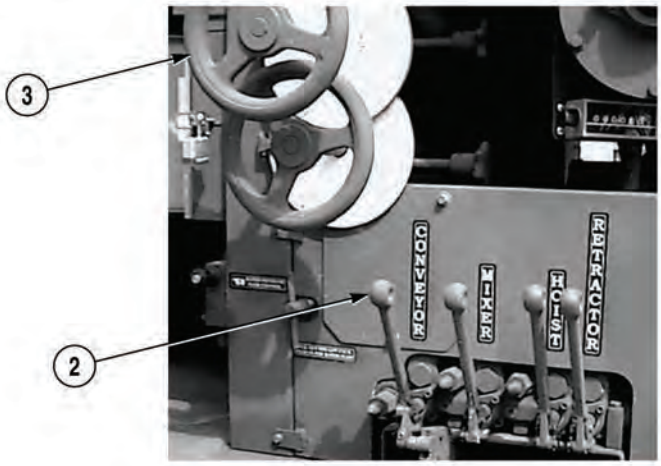

CAUTION

Do not close strike off gates completely. Always allow 1/8” clearance to prevent damage and reduce wear on the conveyor belt.

(5) Open strike off gate (3) of aggregate bin being emptied (sand/stone).

(6) Pull CONVEYOR control (2) out to “ON” position.

(7) Allow aggregate (sand/stone) to empty out.

(8) Push CONVEYOR control (2) into “OFF” position.

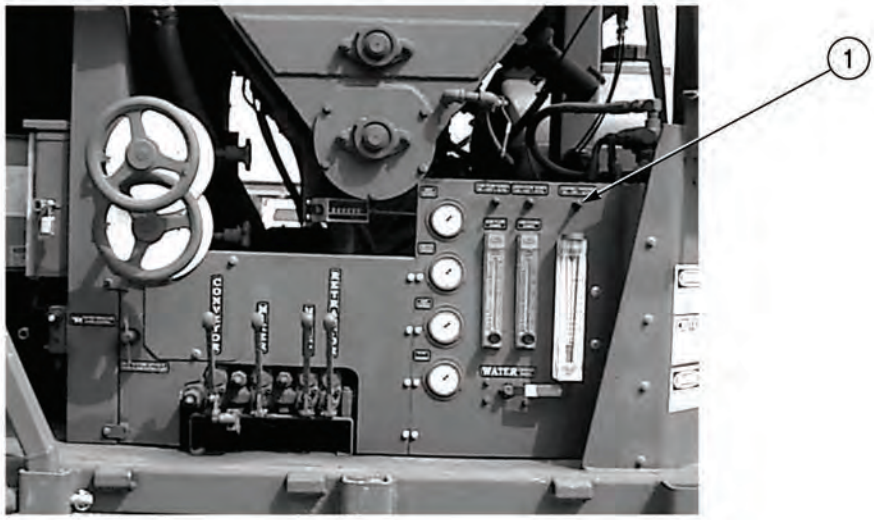

NOTE

When bin(s) are empty, engage cement clutch.

(9) Engage cement clutch, (Para 2-22).

(10) Reset strike off gates to normal operating settings.

(11) Turn CONTROL OVERIDE switch (1) to “OFF” position.

2-14. CEMENT BIN FILL/EMPTY.

a. Fill Cement Bin.

WARNING

Cement dust can cause serious lung problems. During loading operations or any time there is cement dust in the air, take precautions to avoid direct inhalation of dust. If you must be in immediate vicinity of dust, wear a dust mask, or if none is available, cover nose and mouth with a cloth. Failure to comply could result in serious illness to personnel.

NOTE

- There are two hopper lids for the cement hopper on the Concrete Mobile Mixer and they are both filled the same way.
- If using bag cement for filling cement bin, grating inside aggregate bin may be used to support operator.

(1) Loosen screw (1) and open hopper lid (2).

NOTE

Cement bin grate has a series of peaks which may be used to split open cement bags when positioned up.

(2) Fill hopper with cement.

NOTE

- Ensure hopper lids are securely closed to prevent moisture from getting into hoppers. If cement becomes moist, it will harden and be unusable.
- Hopper lids will close properly with peaks on cement bin grates facing up.

(3) Close hopper lid (2) and tighten screw (1).

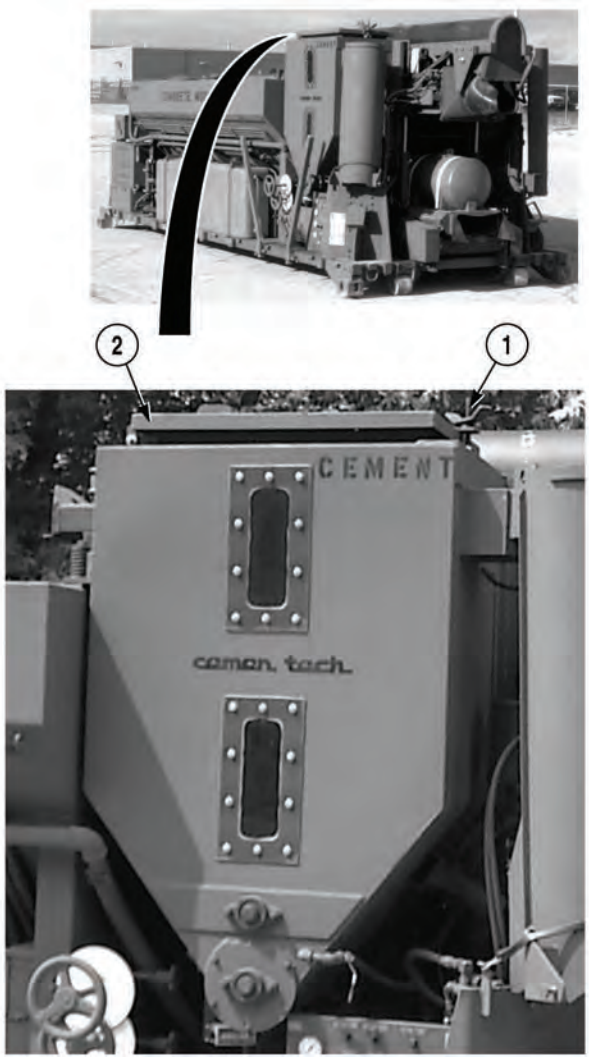

b. Empty Cement Bin.

WARNING

Cement dust can cause serious lung problems. During loading or at any time there is cement dust in the air, take precautions to avoid direct inhalation of dust. If you must be in the immediate vicinity of dust, wear a dust mask, or if none is available, cover nose and mouth with a cloth. Failure to comply could result in serious illness to personnel.

NOTE

Aggregate bins should be empty before performing this procedure, (Para 2-13).

(1) Start engine, (Para 2-19).

(2) Stow mixing auger, (Para 2-23).

(3) Engage cement clutch, (Para 2-22).

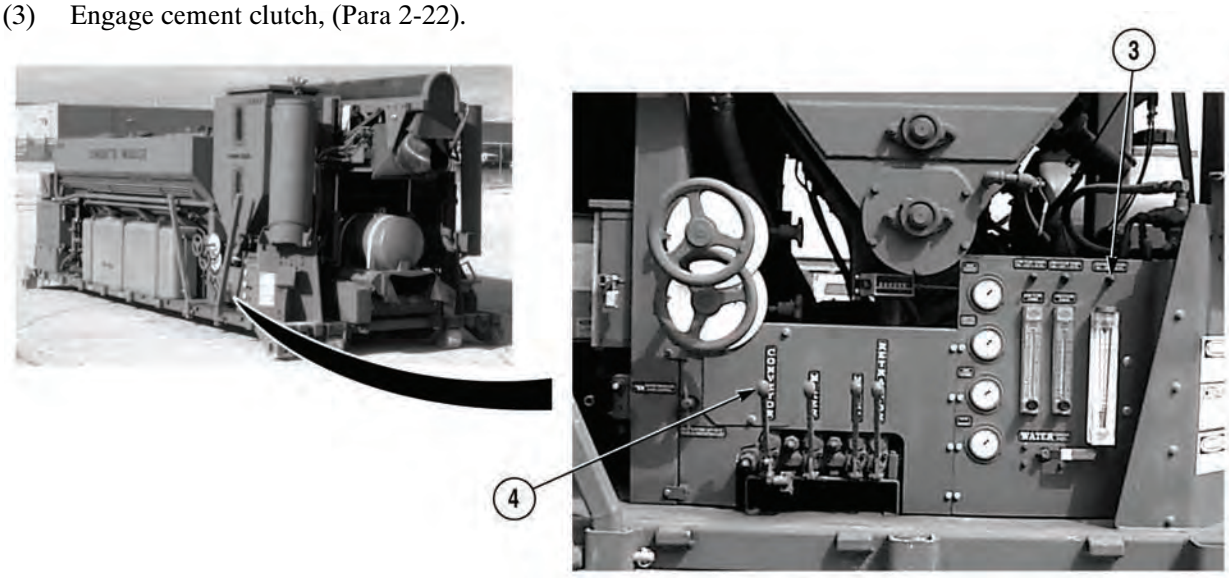

CAUTION

Ensure chain oiler is on whenever conveyor belt is operated. Failure to do so could result in damage to equipment.

(4) Place CONTROL OVERIDE switch (3) in “AUTO” position and check chain oiler operation.

(5) Pull CONVEYOR control (4) out to “ON” position.

(6) Allow cement to empty out.

(7) When bin is empty, push CONVEYOR control into “OFF” position.

(8) Disengage cement clutch, (Para 2-22).

(9) Shut off engine, (Para 2-19).

(10) Turn CONTROL OVERIDE switch (3) to “OFF” position.

2-15. HIGH-FLOW ADMIX TANK DILUTE/FILL/DRAIN/FLUSH.

CAUTION

Always prepare admix solutions in a separate container. Never mix solutions in tank. Never put undiluted admix in tanks. Failure to comply could result in damage to equipment.

NOTE

- For this procedure a clean container calibrated in quarts is needed. It must be large enough to hold amount of solution being mixed.
- Unmixed or clumped admix material will clog admix pump strainer.
- For more information on calibrating admixtures, (Appendix D, Para D-4).

a. Preparing Calcium Chloride Concentrated Solution.

(1) Weigh out required number of pounds of dry calcium chloride.

(2) Put calcium chloride in clean container.

(3) Add water until number of quarts of solution equals number of pounds of calcium chloride.

Example: If you used 45 lb (20.4 kg) of calcium chloride, add water until you have 45 qt (42.6 l) of solution.

b. Dilute Liquid Admixtures for the High-Flow System.

(1) Check mix design to see how much concentrated admix is required per bag of cement. Multiply by number of bags of cement to be used.

NOTE

A clean, large container should be used to ensure concentrated admix is thoroughly mixed.

(2) Put this amount of concentrated admix (enough for as many bags of cement as will be used) into clean, large container.

(3) Add clean water until number of quarts of solution equals number of bags of cement.

Example: If you need 7 oz. (207 ml.) admix per bag, and expect to use 60 bags of cement, put 420 oz. (12,419 ml.) of admix in the container. Add enough clean water (approximately 47 quarts [44.5 l]) to make 60 quarts (56.8 l) of diluted solution.

c. Fill High-Flow Admix Tank.

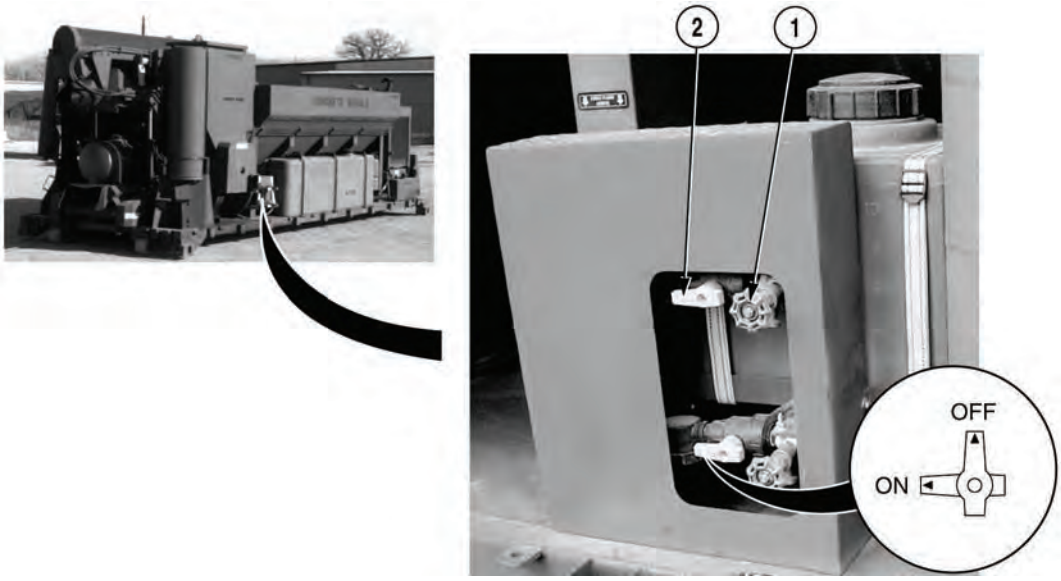

NOTE

Close all drain cocks before filling tank.

(1) Close drain valve (1) and solution valve (2).

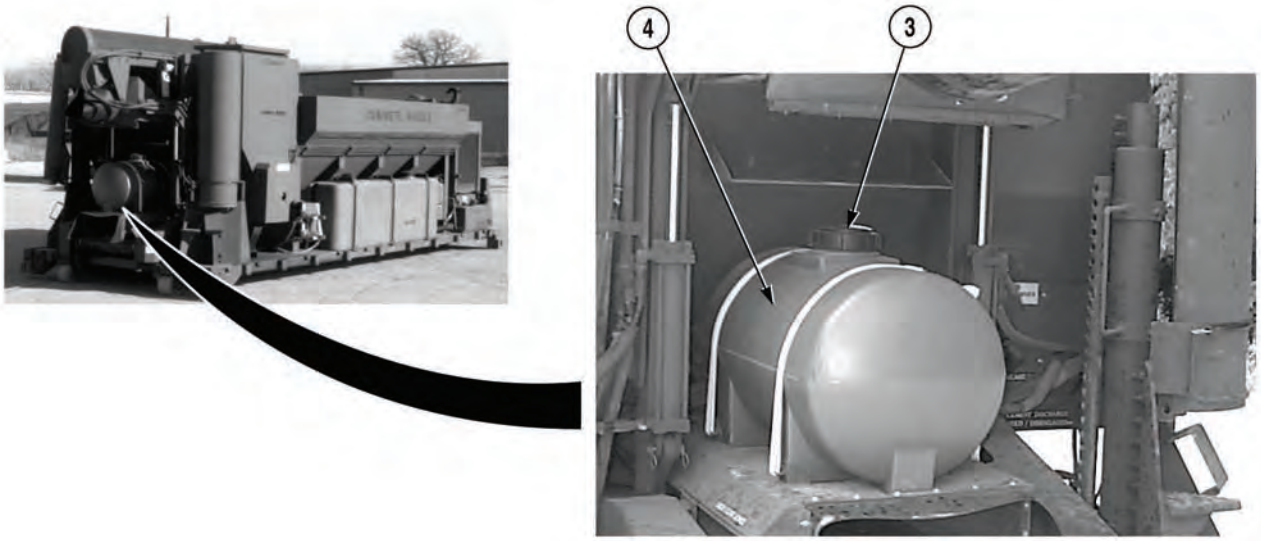

(2) Remove fill cap (3).

NOTE

- Do not over-fill admix tank. High-flow admix tank has a capacity of 35 gal. (132.5 l).
- Once admix solution is poured into tank, do not add any more water.

(3) Check that solution (prepared in Para **b.**) is thoroughly mixed, then pour solution into tank (4).

(4) Replace fill cap (3) and hand-tighten.

2-15. HIGH-FLOW ADMIX TANK DILUTE/FILL/DRAIN/FLUSH (CONT).

d. Drain High-Flow Admix Tank.

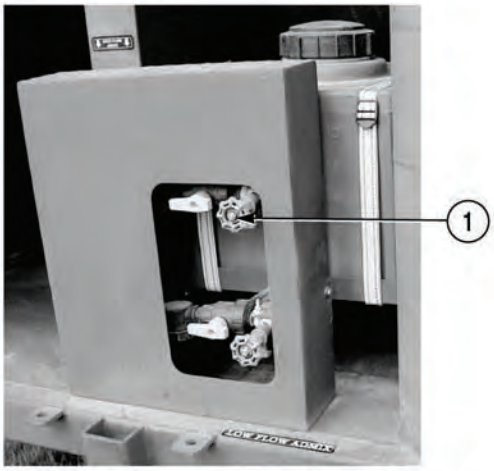

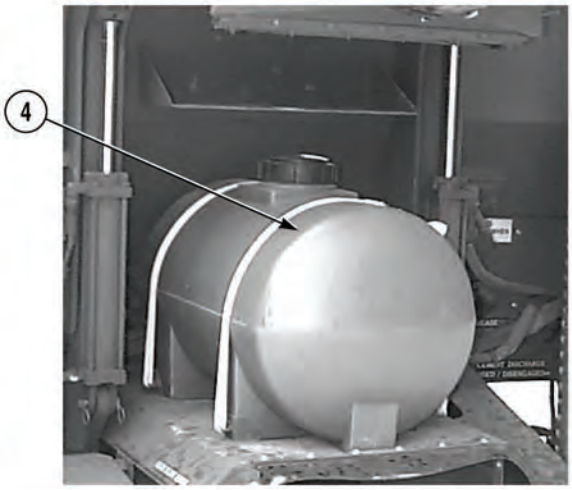

CAUTION

Always drain and flush liquid admix tanks at end of day. Many liquid admixtures will spoil, settle, or clog lines and valve. In temperatures below 32°F (0°C), many admixtures will freeze. Failure to comply could result in damage to equipment.

NOTE

- Drain/fill hose on Concrete Mobile Mixer may be attached to drain valve on admix tank to assist in draining admixture away from Concrete Mobile Mixer. If drain/fill hose is not attached, admixture will flow on Concrete Mobile Mixer.
- Perform Step (1) if drain/fill hose is to be used.

(1) Remove drain/fill hose from storage box and attach to drain valve (1).

(2) Open drain valve (1) and allow all admixture to drain from tank (4).

(3) Close drain valve (1).

e. Flush High-Flow Admix Tank.

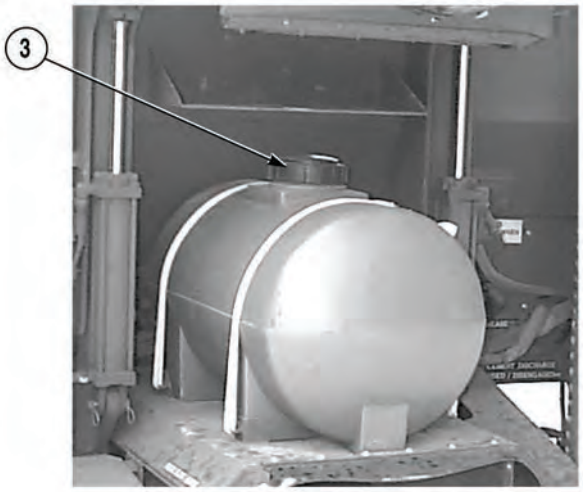

CAUTION

If you flush admix system with cleaning agent, operator should flush it again with clear water. In freezing weather, operator should blow all moisture out of system, (Para 2-35). Failure to comply could result in damage to equipment.

NOTE

- Flushing system will clean admixture from filter, motor, and hoses of admix system.
- After flushing, open drain cocks located by air valves and gages to drain out any excess water.
- Some admixtures require a special cleaning agent. If you used one of these admixtures, flush system with cleaning agent, then flush with water.

(1) Drain High-Flow admix tank, (2-15**d**).

(2) Extend lift cylinders, (Para 2-28).

(3) Deploy auger, (Para 2-23).

(4) Remove fill cap (3).

2-15. HIGH-FLOW ADMIX TANK DILUTE/FILL/DRAIN/FLUSH (CONT).

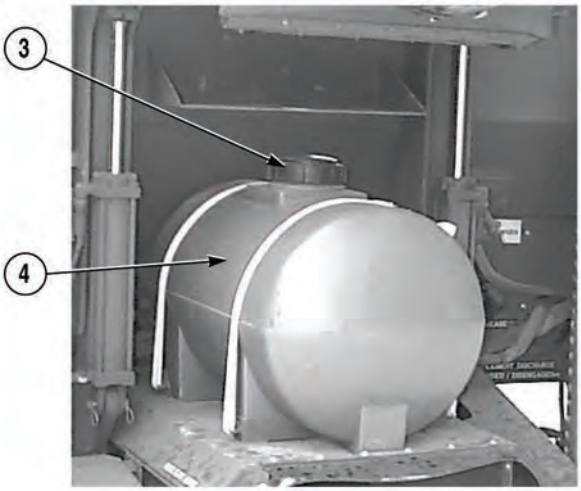

NOTE

Fill admix tank about 1/3 full.

(5) Pour cleaning agent or water into tank (4).

(6) Replace fill cap (3) and hand-tighten.

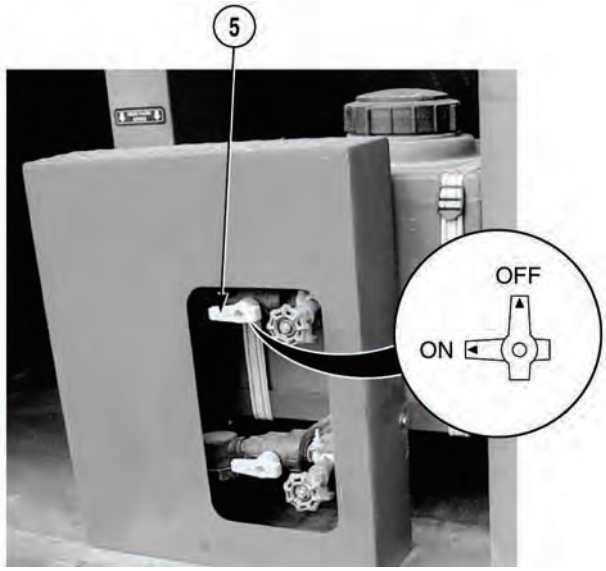

(7) Turn solution valve (5) to “ON” position.

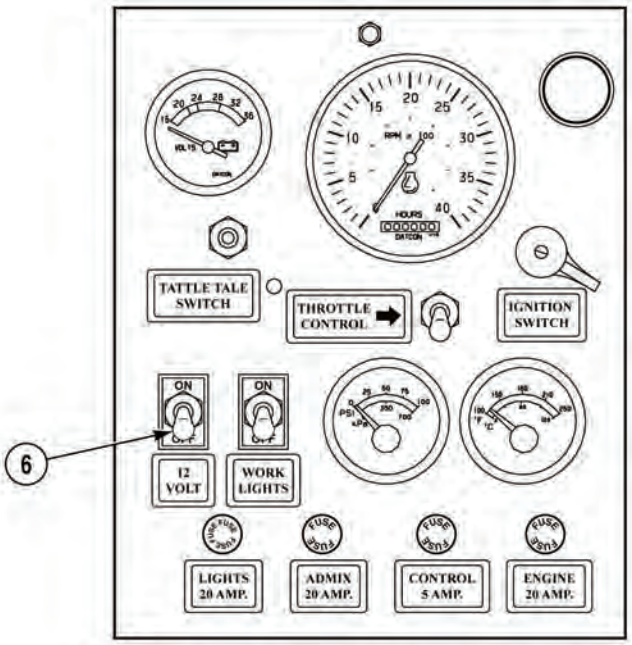

(8) Start engine, (Para 2-19).

(9) Ensure 12 VOLT switch (6) is in “ON” position.

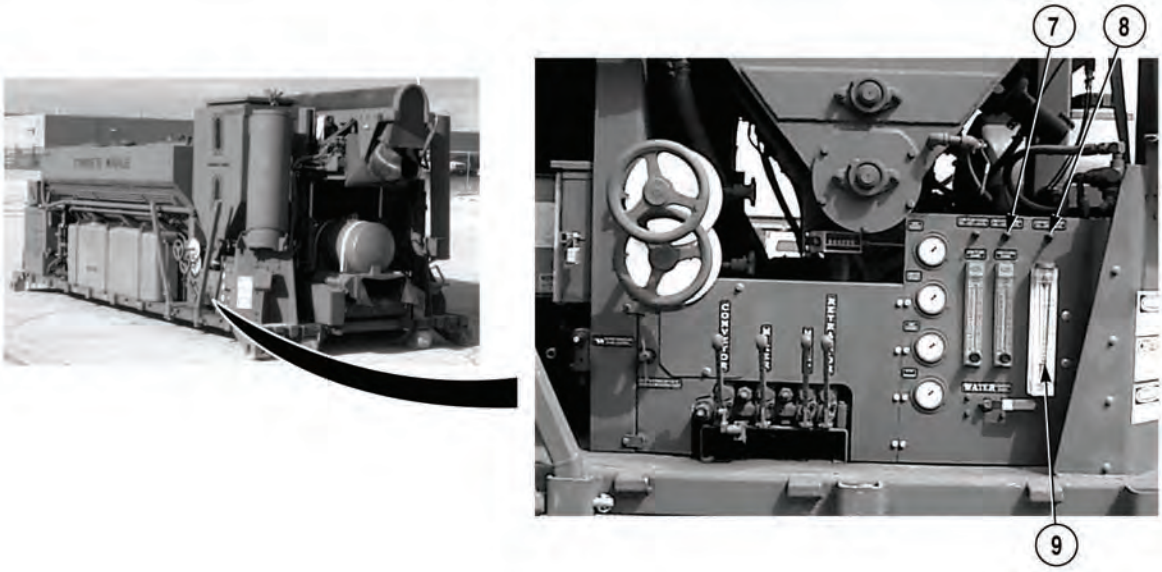

(10) At control panel, switch function selector switch (7) for system being flushed to “ON” position.

(11) Turn CONTROL OVERIDE switch (8) to “ON” position.

2-15. HIGH-FLOW ADMIX TANK DILUTE/FILL/DRAIN/FLUSH (CONT).

(12) Open two drain cocks on back of flowmeter (9).

(13) Open drain cock (10) on aquatic valve and T-fitting.

(14) Open drain valve (11). Allow cleaning agent or water to drain completely.

(15) Turn CONTROL OVERIDE switch to "OFF" position.

(16) At rear control panel, turn function selector switch (7) for system flushed to "OFF" position.

(17) Shut off engine, (Para 2-19).

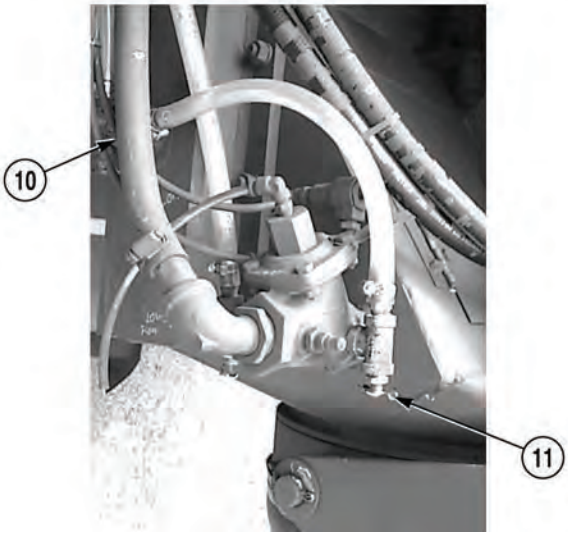

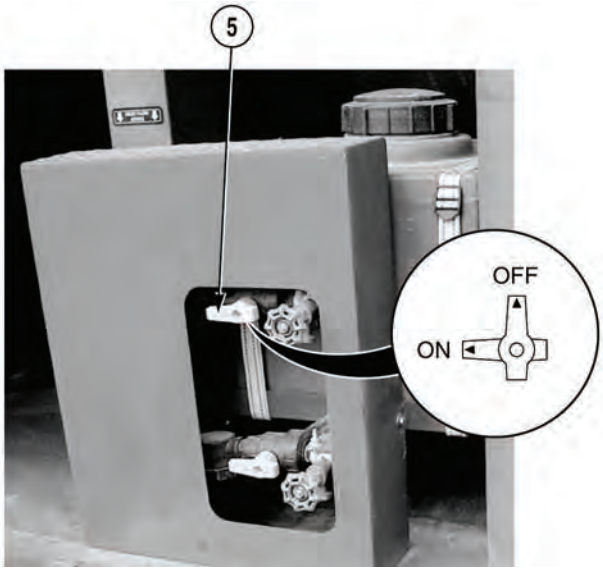

(18) Turn solution valve (5) to "OFF" position.

2-16. LOW-FLOW ADMIX TANK DILUTE/FILL/DRAIN/FLUSH.

a. Dilute Liquid Admixtures for the Low-Flow System.

CAUTION

Always prepare admix solutions in a separate container. Never mix solutions in tank. Never put undiluted admix in tanks. Failure to comply could result in damage to equipment.

NOTE

- For this procedure, a clean container calibrated in quarts is needed. It must be large enough to hold amount of solution being mixed. A clean container to measure admixture is also needed.
- Unmixed or clumped admix material will clog admix pump strainer.
- For more information on calibrating admixtures, (Appendix D, Para D-4).

(1) Check mix design to see how much admix is required per bag of cement.

(2) Put this amount of admix (enough for as many bags of cement as will be used) into clean large container.

NOTE

No matter what you use to measure the admix, use five parts of water to each part of admix. (Example: If you need 2 oz. [59 ml.] of admix per bag, and expect to use 32 bags of cement, put 64 oz. [1892 ml.] [2 qt] [1.89 l] of admix in container. Add 10 qt [9.46 l] clean water.)

(3) Add five times that amount of water.

2-16. LOW-FLOW ADMIX TANK DILUTE/FILL/DRAIN/FLUSH (CONT).

b. Fill Low-Flow Admix Tank.

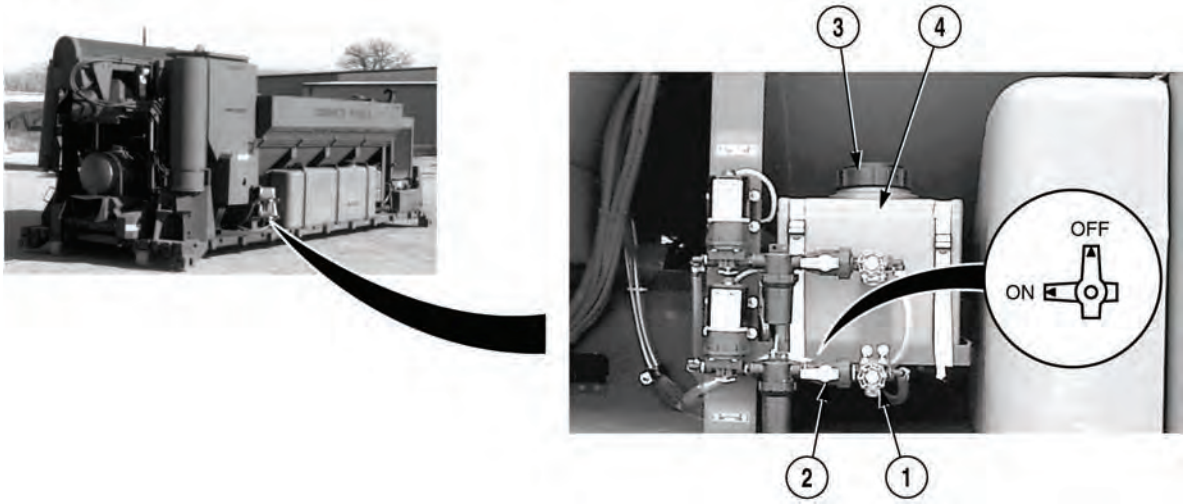

NOTE

Close all drain cocks before filling tank.

(1) Close drain valve (1) and solution valve (2).

(2) Remove fill cap (3).

NOTE

Do not over-fill admix tank. Low-flow admix tank has a capacity of 12 gal. (45.4 l).

(3) Check that solution is thoroughly mixed. Pour into tank (4).

(4) Replace fill cap (3) and hand tighten.

c. Drain Low-Flow Admix Tank.

CAUTION

Always drain and flush liquid admix tanks at the end of the day. Many liquid admixtures will spoil, settle, or clog lines and valve. In temperatures below 32°F (0°C), many admixtures will freeze. Failure to comply could result in damage to equipment.

NOTE

Drain/fill hose on Concrete Mobile Mixer may be attached to drain valve on admix tank to assist in draining admixture away from Concrete Mobile Mixer. If drain/fill hose is not attached, admixture will flow on Concrete Mobile Mixer.

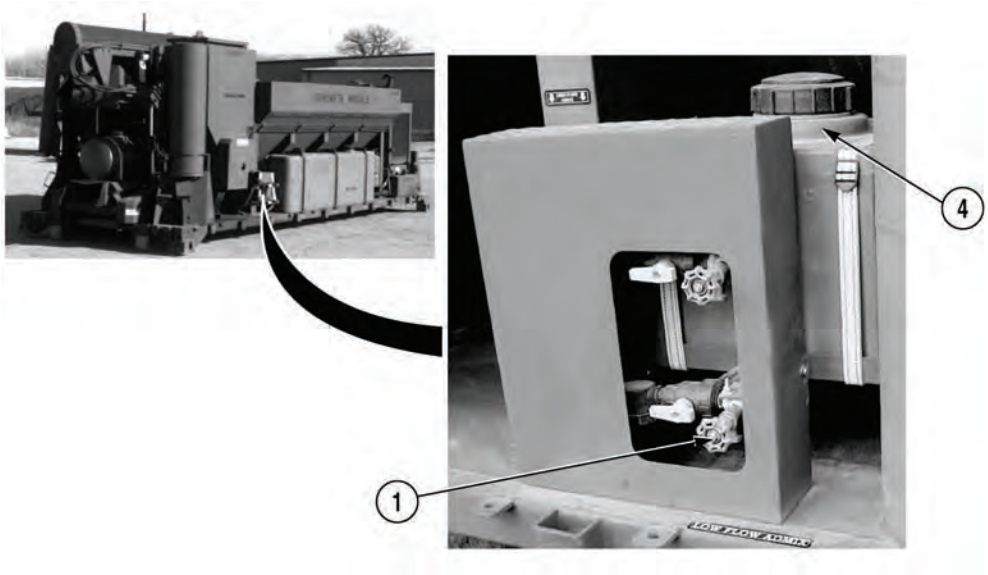

NOTE

Perform Step (1) if drain/fill hose is to be used.

(1) Remove drain/fill hose from stowage box and attach to drain valve (1).

(2) Open drain valve (1) and allow all admixture to drain from tank (4).

(3) Close drain valve (1).

d. Flush Low-Flow Admix Tank.

CAUTION

If you flush admix system with cleaning agent, operator should flush it again with clear water. In freezing weather, operator should blow all moisture out of system, (Para 2-35). Failure to comply could result in damage to equipment.

NOTE

- Flushing system will clean admixture from filter, motor, and hoses of admix system.
- After flushing, open drain cocks located by air valves and gages to drain out any excess water.
- Some admixtures require a special cleaning agent. If you used one of those admixtures, flush system with cleaning agent, then flush with water.

(1) Drain low-flow admix tank, (Para 2-16).

(2) Extend lift cylinders, (Para 2-28).

(3) Deploy auger, (Para 2-23).

2-16. LOW-FLOW ADMIX TANK DILUTE/FILL/DRAIN/FLUSH (CONT).

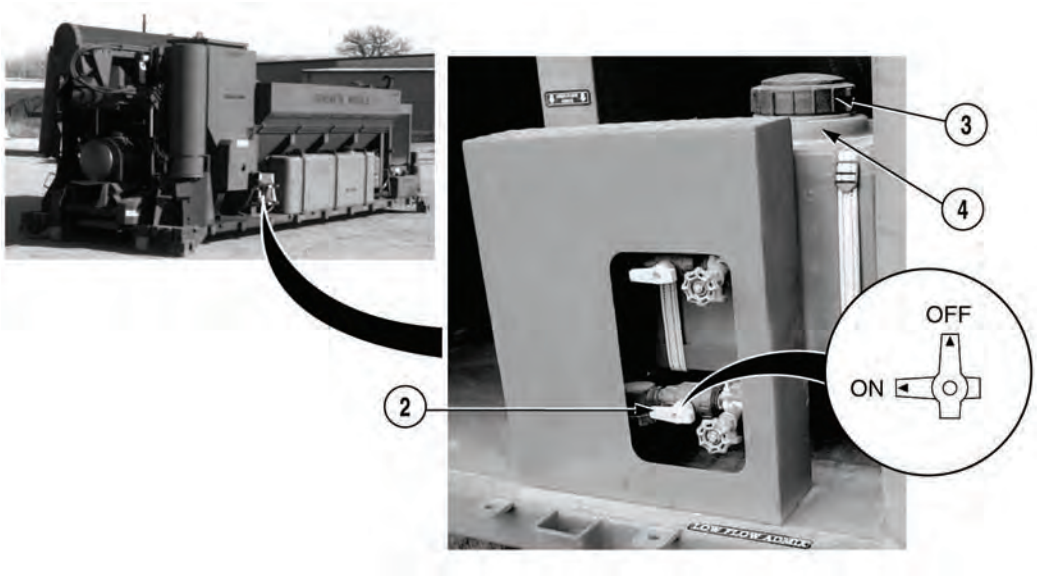

(4) Remove fill cap (3).

NOTE

Fill admix tank about 1/3 full.

(5) Pour cleaning agent or water into tank (4).

(6) Replace fill cap (3) and hand-tighten.

(7) Turn solution valve (2) to “ON” position.

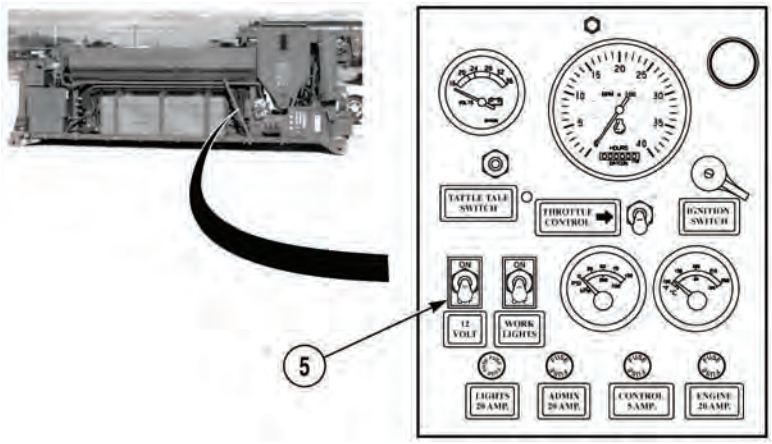

(8) Start engine, (Para 2-19).

(9) Ensure 12 VOLT switch (5) is in “ON” position.

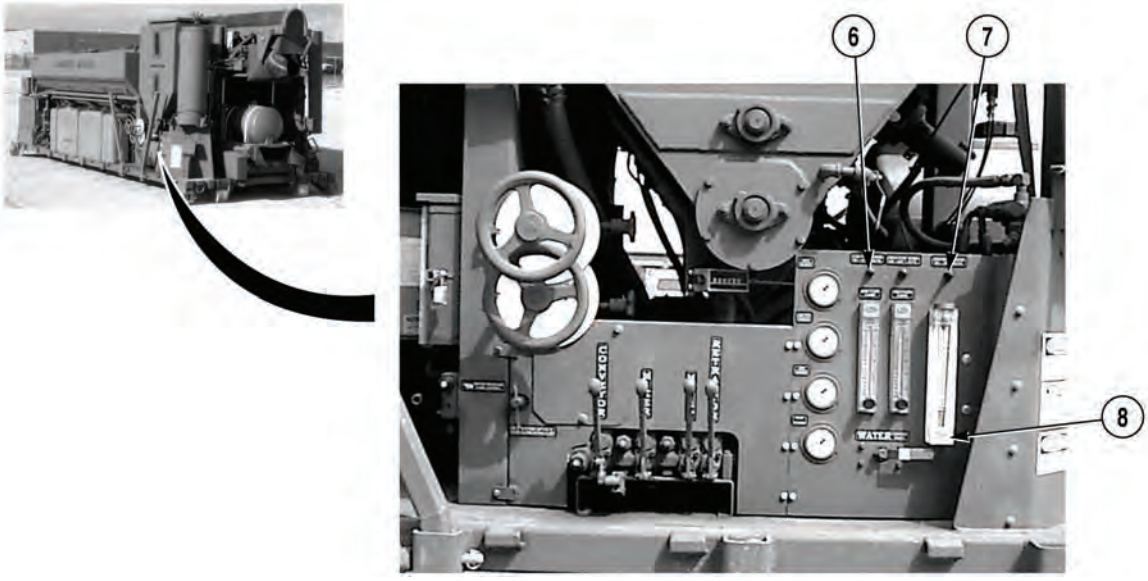

(10) At control panel, turn function selector switch (6) for the system being flushed to “ON” position.

(11) Turn CONTROL OVERIDE switch (7) to “ON” position.

(12) Open two drain cocks on back of flowmeter (8).

2-16. LOW-FLOW ADMIX TANK DILUTE/FILL/DRAIN/FLUSH (CONT).

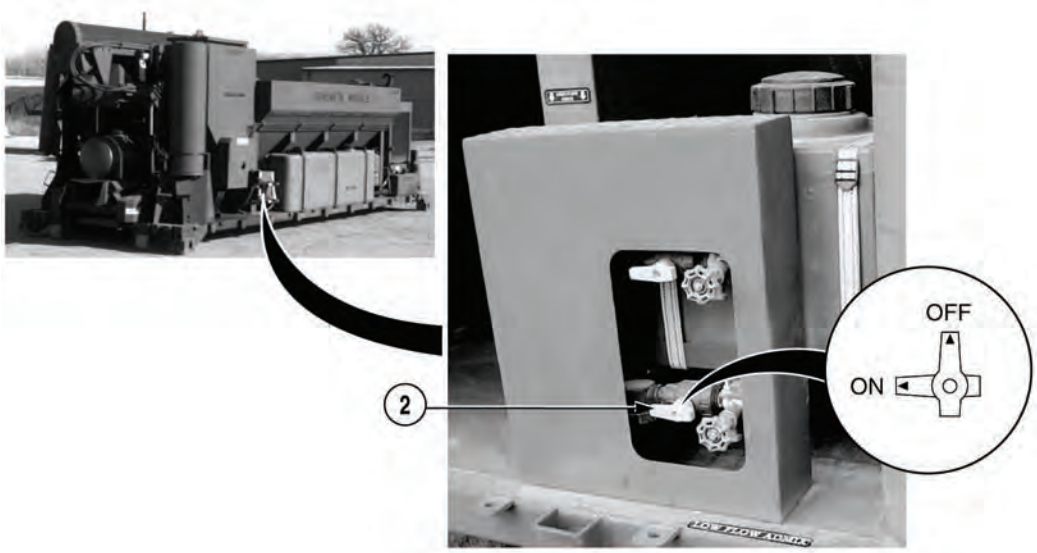

(13) Open drain valve (9). Allow cleaning agent or water to drain completely.

(14) Turn CONTROL OVERIDE switch (7) to “OFF” position.

(15) At control panel, turn function selection switch (6) for system being flushed to “OFF” position.

(16) Shut off engine, (Para 2-19).

(17) Turn solution valve (2) to “OFF” position.

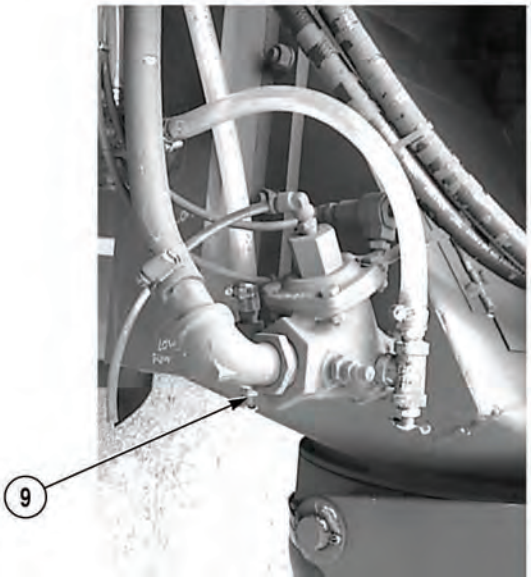

2-17. AGGREGATE BIN COVER (TARP) INSTALLATION/REMOVAL.

a. Aggregate Cover Installation.

NOTE

- Tarp furnished with mixer is to be installed at all times except when loading sand and stone bins.
- Tarp keeps excess moisture out of bins which may affect amount of water needed for specific mix settings. It prevents blowing and freezing when truck is in transit.

(1) With the aid of an assistant, stretch tarp (1) over bins.

(2) Secure tie down ropes over hooks (2) tightly.

b. Aggregate Cover (Tarp) Removal.

(1) Loosen tie down ropes from hooks (2) on Concrete Mobile Mixer.

(2) With the aid of an assistant, pull tarp (1) off bins and stow in stowage box.

2-18. SETTING CONTROLS.

a. Water Controls.

NOTE

For more information on mix settings, refer to Appendix D.

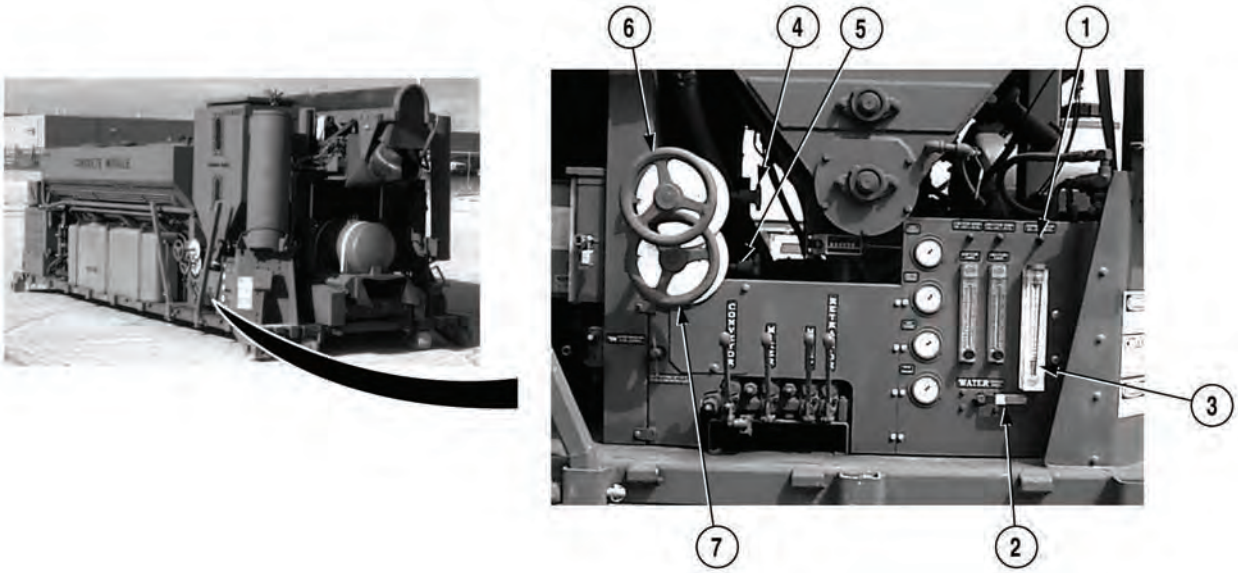

(1) Place CONTROL OVERIDE switch (1) in “ON” position.

NOTE

Adjust WATER CONTROL VALVE until meter reads setting operator has been given.

(2) Open or close water control valve (2) until desired setting is reached on water flow meter (3).

b. Sand/Stone Dials.

NOTE

When setting dials for a lower setting, it may become necessary to actuate conveyor belt slightly. This procedure will prevent stones or sand from binding aggregate gates.

(1) Loosen stop-screws (4) and (5) to adjust SAND/STONE control dials (6) and (7).

NOTE

- Always adjust setting upwards. If moving from a higher setting to a lower setting, move control wheel below new setting, then back up to desired setting.
- Adjust control wheel until dial reads setting operator has been given.
- Although a calculated concrete mix is the preferred method. SAND/STONE control dials are notched at SAND 5.2 and STONE 5.7 to provide an approximate 5 lb bag/2500 psi mix.

(2) Turn SAND/STONE control dials (6) and (7) until desired setting is reached on dials.

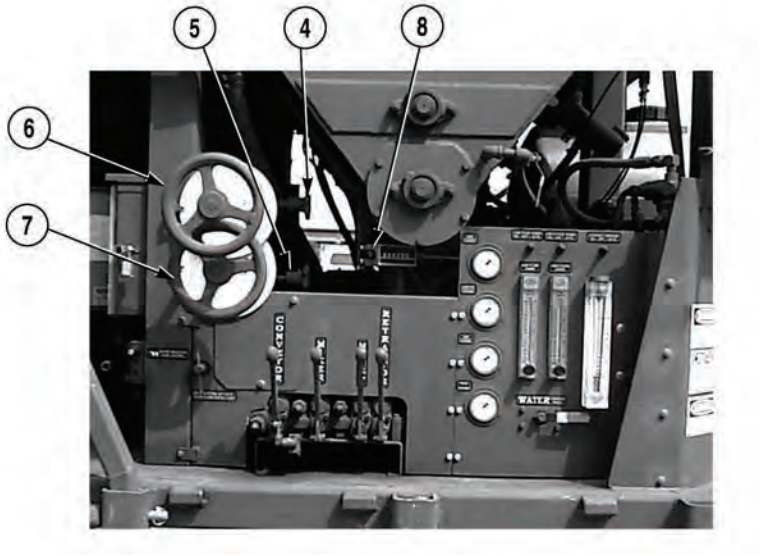

(3) Once setting has been reached, tighten stop-screws (4) and (5) on SAND/STONE control dials (6) and (7).

c. Setting Meter Register to Zero.

CAUTION

Never reset meter register while it is operating. Turn reset knob until it comes to a full stop. Failure to comply could result in damage to equipment.

NOTE

Ensure register meter reads all zeros (0 0 0 0 0 0).

(1) Turn knob (8) counterclockwise until it reads all zeros.

2-18. SETTING CONTROLS (CONT).

d. Setting Admix Controls.

NOTE

- Only one admix solution can be set at a time. Ensure admix control is in “OFF” position for admix system not being set.
- Ensure solution valves are open during operations and closed for filling and storage.

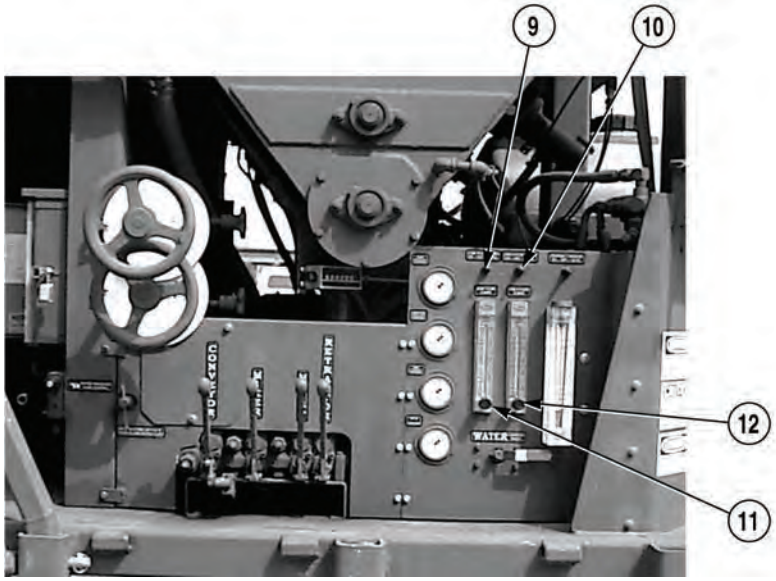

(1) Position LOW/HIGH FLOW METER switch (9) or (10) to “ON” position.

(2) Adjust LOW/HIGH FLOW METER (11) and (12) until float is at setting operator has been given.

(3) Position LOW/HIGH FLOW ADMIX switch (9) or (10) to “AUTO” position.

2-19. ENGINE STARTING/STOPPING.

a. Starting Engine.

WARNING

- Single level hearing protection is required for personnel within 39 ft. 4 in. (12 m) of Concrete Mobile Mixer during operations that require use of high idle engine speed. Failure to comply may result in hearing loss to personnel.
- Single level hearing protection is required for personnel within 3 ft. 4 in. (1 m) of Concrete Mobile Mixer during operations that require use of low idle engine speed. Failure to comply may result in hearing loss to personnel.
- Auger will rotate with engine on and controls off. Extreme care should be taken when around auger area. Failure to comply may result in serious injury or death to personnel.

NOTE

- If Concrete Mobile Mixer is loaded on PLS, truck should be in neutral with parking brake set and wheels chocked. Refer to PLS Operator's Manual, TM 9-2320-364-10.
- Concrete Mobile Mixer is a stand-alone unit and does not need PLS power to run.
- Engine on Concrete Mobile Mixer will start, but will not remain running unless oil pressure gage reads approximately 20 psi (138 kPa). Continue depressing TATTLE TALE switch until oil pressure gage reads approximately 20 psi (138 kPa).

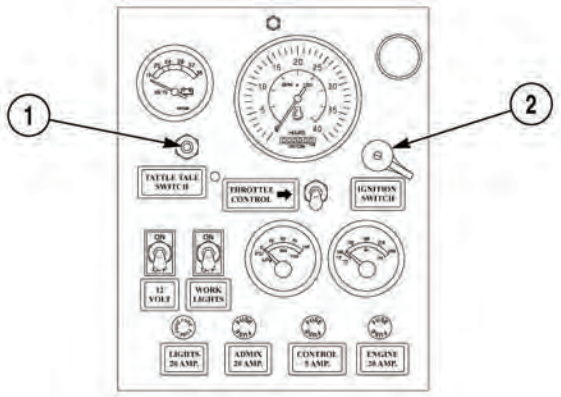

(1) Depress TATTLE TALE switch (1).

NOTE

Ignition switch is spring loaded and will automatically switch to "ON" position when released.

(2) While depressing TATTLE TALE switch (1), turn IGNITION switch (2) to engine start position.

2-19. ENGINE STARTING/STOPPING (CONT).

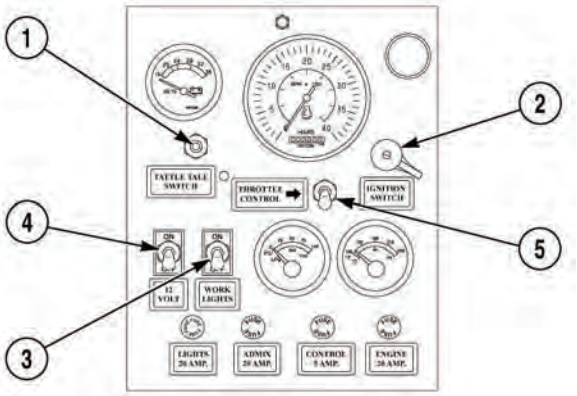

NOTE

TATTLE TALE switch must remain depressed until oil pressure gage reads approximately 20 psi (138 kPa).

(3) While still depressing TATTLE TALE override switch (1), release IGNITION switch (2) when engine starts.

(4) Turn WORK LIGHT switch (3) and 12 VOLT switch (4) to “ON” position.

NOTE

Engine high idle is required for all operations of Concrete Mobile Mixer except for cleaning operation.

(5) Turn THROTTLE CONTROL switch (5) to “ON” position to raise engine to operating RPM.

b. Shutting Off Engine.

NOTE

Prior to shutting off engine, turn THROTTLE CONTROL switch to low idle and let engine idle on low for approximately 5 minutes.

(1) Turn THROTTLE CONTROL switch (5) to “OFF” position.

(2) Turn WORK LIGHT switch (3) and 12 VOLT switch (4) to “OFF” position.

(3) Turn IGNITION switch (2) to “OFF” position.

2-20. OPERATIONS STARTING/STOPPING.

a. Starting Operation.

CAUTION

Before operating unit, remove all foreign materials from inside of aggregate and cement bins. Failure to comply could result in damage to equipment.

NOTE

- For information on calibrating accu-vane, refer to Appendix D.
- Ensure all drain cocks and drain valves in the liquid admix systems are closed.

(1) Fill water tanks, (Para 2-12).

(2) Fill aggregate bins, (Para 2-13).

(3) Fill cement bin, (Para 2-14).

NOTE

When filling admix tanks, (Para 2-15) for high-flow admix tank and, (Para 2-16) for low-flow admix tank.

(4) Fill admix mix tanks.

(5) Perform Before (B) PMCS, (Para 2-6).

(6) Start engine, (Para 2-13).

NOTE

If Concrete Mobile Mixer is off loaded from PLS truck/trailer, perform Step (7).

(7) Raise Concrete Mobile Mixer to operating level, (Para 2-28).

WARNING

If operating Concrete Mobile Mixer on PLS trailer (PLST), ensure PLST turntable is LOCKED. Concrete Mobile Mixer has a very high center of gravity (CG) and PLST is unstable when front tires are not facing straight ahead and turntable is unlocked. Failure to comply may result in vehicle rollover causing injury or death to personnel.

NOTE

Perform Step (8) if Concrete Mobile Mixer is loaded on PLS truck/trailer.

(8) Install workstation platform on Concrete Mobile Mixer, (Para 2-27).

(9) Unstow mixing auger, (Para 2-23).

(10) Attach delivery chutes as required, (Para 2-26).

2-20. OPERATIONS STARTING/STOPPING (CONT).

NOTE

Pushing in on LIFT CYLINDER/WATER PUMP control valve will operate water pump, pulling out will operate the lift cylinders.

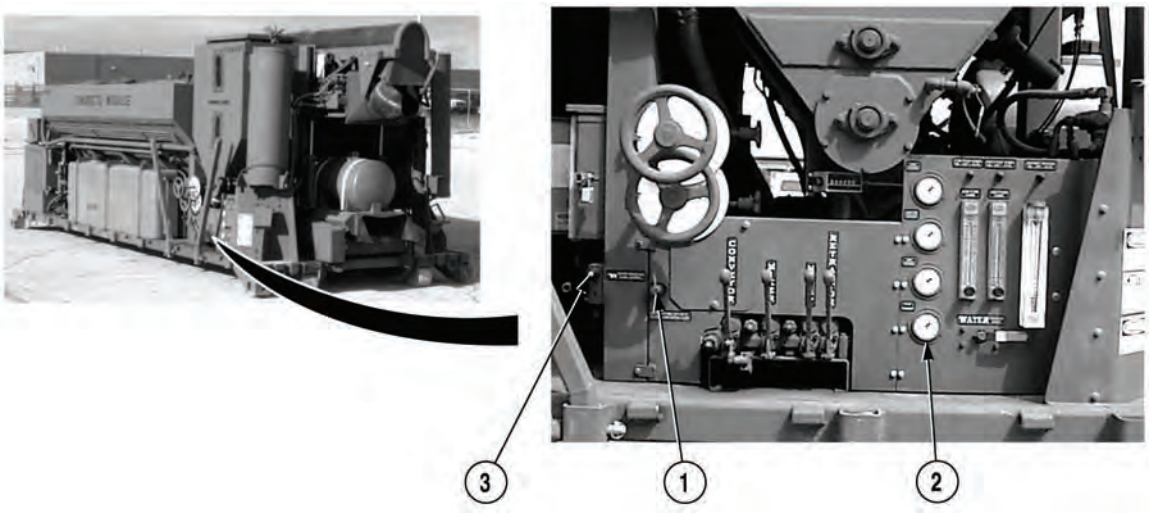

(11) Push LIFT CYLINDER/WATER PUMP control valve (1) “IN.”

(12) Adjust WATER PRESSURE gage (2) to 40 psi (276 kPa) using WATER PRESSURE valve (3).

NOTE

- Ensure water has been drained from moisture trap on air filter/regulator. Turn clockwise to open and counterclockwise to close.
- Mixing system needs 80 psi (552 kPa) air pressure to operate properly.

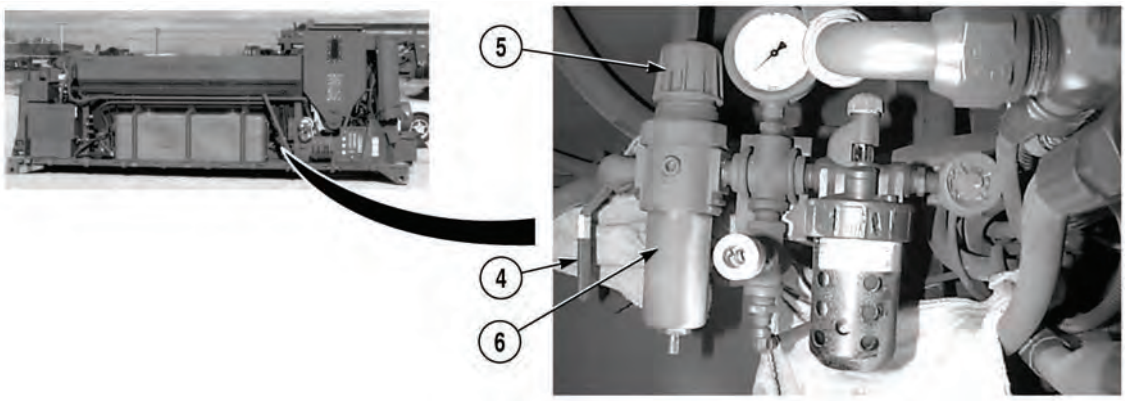

(13) Turn main air valve (4) to “ON” position.

(14) Turn knob (5) on top of air filter/regulator (6) to adjust air pressure to 80 psi (552 kPa).

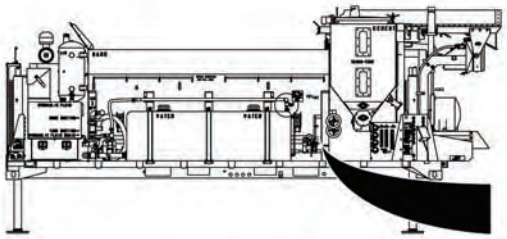

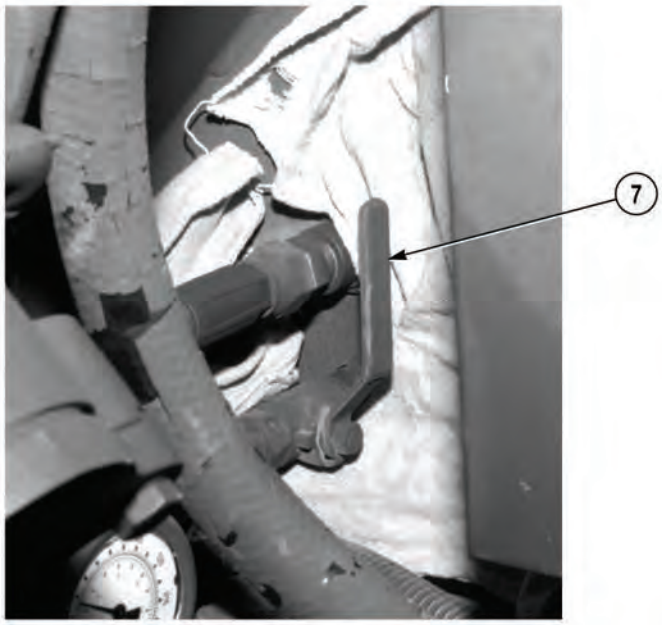

(15) Turn sand bin air vibrator valve (7) to “ON” position.

(16) Set mix control dial, (Para 2-18).

CAUTION

Cement can become packed during transport. Air fluffer blows air through pads into cement bin and loosens packed cement. It is very important to fluff cement as compacted cement can cause damage to equipment.

NOTE

- Air fluffer needs to be turned “ON” and “OFF” several times to effectively loosen cement.
- If material will not fluff, disengage cement drive at clutch and manually spin cement augers with socket/handle in storage box. Once cement loosens up, store socket/handle in storage box and re-engage cement bin drive augers.

2-20. OPERATIONS STARTING/STOPPING (CONT).

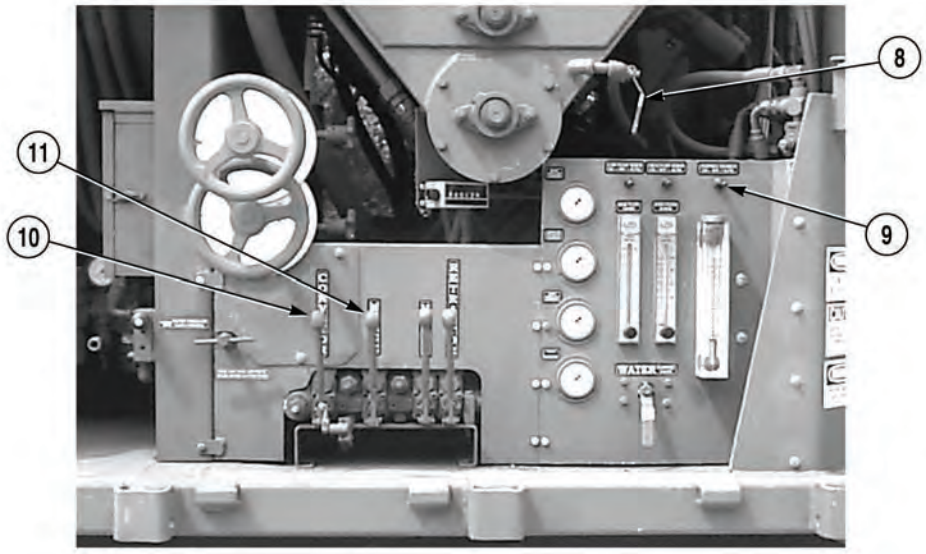

(17) Turn air fluff control valve (8) “ON” and “OFF” several times.

CAUTION

Ensure chain oiler is operating when conveyor belt is running. Failure to comply could result in damage to equipment.

NOTE

Chain oiler should operate automatically with conveyor operation when override switch is in “AUTO” position.

(18) Place CONTROL OVERIDE switch (9) in “ON” position and check chain oiler operation.

(19) Place CONTROL OVERIDE switch (9) in “AUTO” position.

(20) Pull MIXER control (11) out to “ON” position.

(21) Pull CONVEYOR control (10) out to “ON” position.

(22) Perform During (D) PMCS.

b. Stopping Operation.

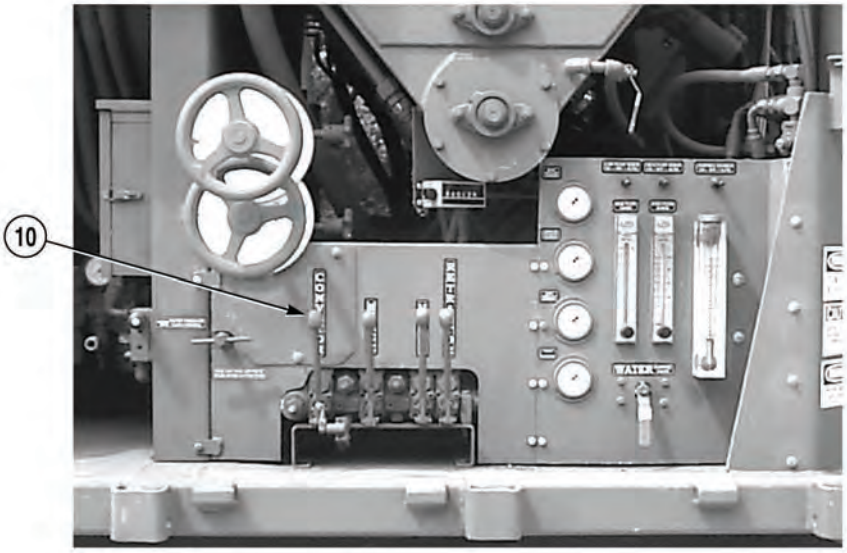

CAUTION

If operation is stopped temporarily for any reason, and shut down time will exceed set-up time of mix being used, auger trough must be emptied. Failure to comply could result in damage to equipment.

NOTE

- To temporarily interrupt production perform Steps (1) and (2).
- Pushing CONVEYOR control lever to “OFF” will stop ingredient delivery and conveyor operation. Chain oiler will shut off at same time you push conveyor control level to “OFF” position.

(1) Push CONVEYOR control (10) to “OFF” position.

(2) Allow MIXING auger to empty mixed ingredients.

(3) Clean up mixing auger, (Para 2-31).

(4) Empty aggregate bins, (Para 2-13).

(5) Empty cement bin, (Para 2-14).

(6) Perform After (A) PMCS, (Para 2-6).

(7) Shut off engine, (Para 2-19).

2-21. SLUMP CHECK.

a. Slump Measurements.

NOTE

Slump is a measure of how wet or dry concrete is. The concrete mix design specifies desired slump. The mix settings chart will show two water settings, one for dry sand and one for normal sand. The correct water setting needed will be some where between the two. Adjust water setting until slump matches mix design specification. If operator cannot get correct slump with a setting somewhere between the DRY and NORMAL setting:

(1) Perform Before (B) PMCS, (Para 2-6). Then recheck slump.

(2) If slump is still not within specifications, refer problems to mix designer.

b. Preparation.

(1) Place slump cone on a flat level surface and moisten cone.

(2) Set all controls to settings as calculated for mix design using a water setting halfway between normal sand and dry sand setting.

(3) Prepare module for concrete production, (Para 2-20).

c. Testing.

(1) Begin concrete production and discard initial production (approximately a shovel full) until a stabilized, uniform concrete mix is being produced, then swing mix auger for discharge into wheel barrow. Fill wheel barrow with mixed concrete.

(2) Using concrete in wheel barrow, fill slump cone 1/3 full.

(3) Using rounded end of steel rod, rod concrete 25 strokes.

(4) Add concrete to slump cone until it is 2/3 full.

NOTE

Rod must penetrate second layer with each stroke.

(5) Rod concrete 25 strokes.

(6) Add concrete to fill slump cone.

NOTE

- Rod must penetrate second layer with each stroke. Concrete must be level with top of cone when rodding is completed.
- Checking height of concrete cone with steel rod must be performed immediately after removing slump cone from concrete.

(7) Rod 25 strokes.

(8) Carefully remove cone by lifting straight up.

(9) Place slump cone next to cone of concrete.

(10) Place one end of steel rod on top of slump cone with other end over cone of concrete.

(11) Using a ruler, measure the difference in height between top of slump cone and top of cone of concrete. This difference (in inches) is the slump. For general concrete construction, this slump is 3 in. (76.2 mm).

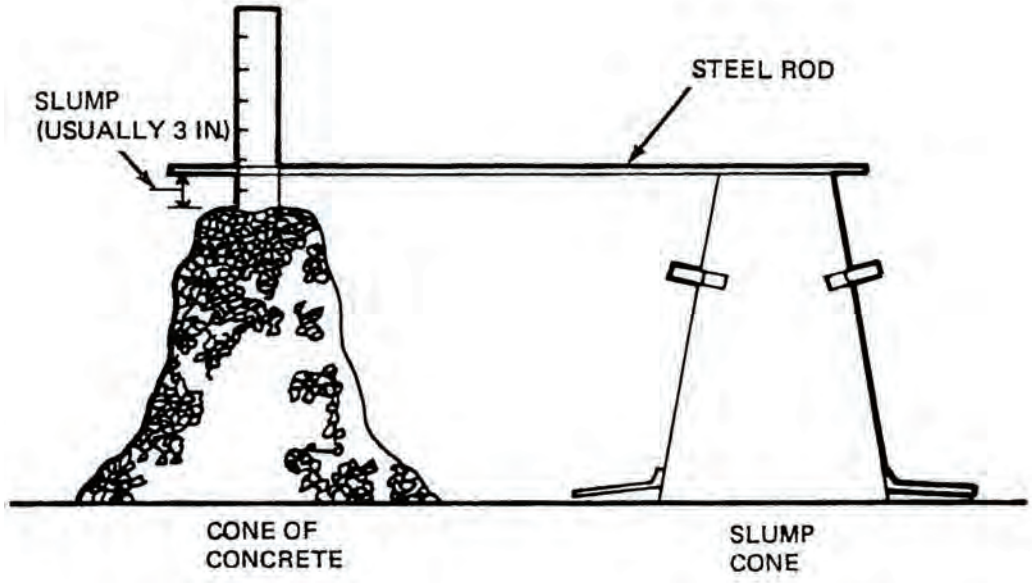

(12) If slump is not within mix design specification, slightly decrease or increase water setting. To increase slump, increase water; to decrease slump, decrease water. Recheck slump.

(13) If you cannot get slump within design specifications, notify mix designer.

d. Yield Check.

NOTE

This check should only be performed after slump check has been performed.

(1) Determine cement meter count for 1/4 cubic yard (0.19 cubic m) of concrete by dividing cement meter count cubic yard by four. (Example 392 ÷ 4 = 98.)

(2) With sand and stone dials properly set, start mixer and produce concrete until all systems are full and mixed concrete is being discharged at full rate from mixer auger. Then stop mixer auger and conveyor simultaneously with all concrete systems full.

(3) Place quarter yard box on level surface, (Refer to Appendix D-4 construction of box).

(4) Set cement meter to zero, (Para 2-18).

(5) Discharge concrete into quarter yard box until cement meter reads 7 and stop mixer auger and conveyor simultaneously.

(6) Screen concrete. Concrete should be just level with top of box.

(7) If box is not full, or if it overflows, repeat check twice more and average results.

(8) If box is consistently too full or not full enough, recheck calculations and settings. If these are correct, notify mix designer.

2-22. CEMENT BIN CLUTCH DISENGAGING/ENGAGING.

a. Disengage Cement Bin Clutch.

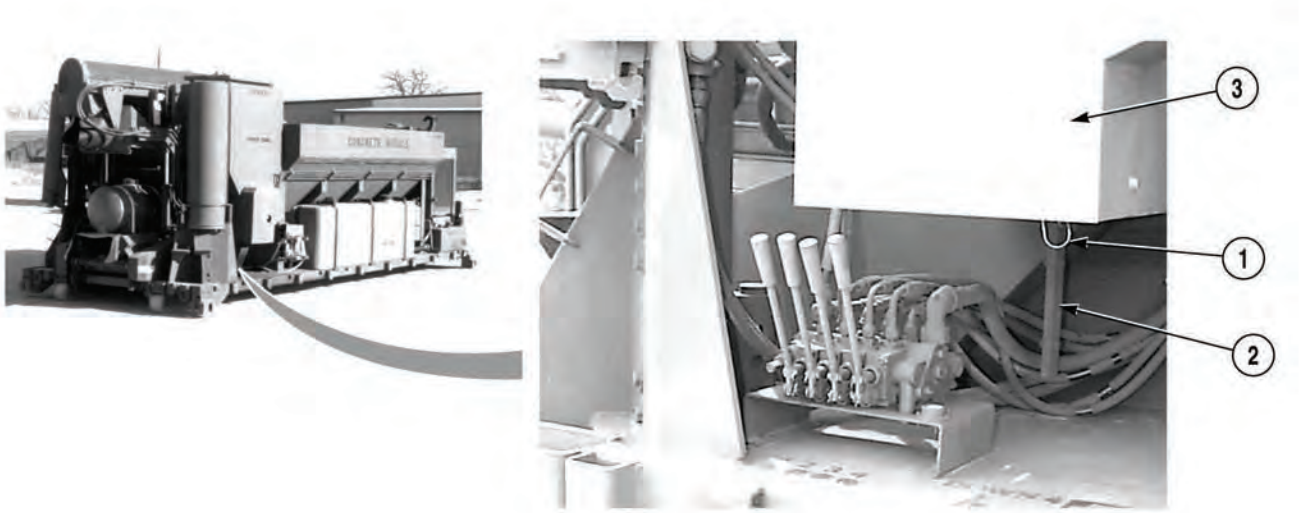

NOTE

Cement bin clutch enables operator to disconnect accu-vane feeder. This allows aggregate bins (sand/stone) to be emptied without dispersing cement.

(1) Remove latch pin (1) from cement bin clutch handle (2) and Concrete Mobile Mixer (3).

NOTE

Pulling clutch handle outward will disengage cement bin clutch.

(2) Pull clutch handle (2) outward.

b. Manually Rotating Cement Bin Augers To Loosen Up Cement.

WARNING

Ensure Concrete Mobile Mixer engine is off and cement clutch is disengaged prior to installing breaker bar on cement bin auger shaft. Failure to comply could result in injury or death to personnel.

NOTE

Perform Steps (1) and (2) if cement bin clutch will not disengage.

(1) Position breaker bar and socket (4) on end of cement bin auger shaft (5).

(2) Rotate cement bin auger shaft (5) until cement bin clutch handle (2) can be disengaged.

(3) Continue to rotate cement bin auger shaft (5) until cement is loosened and cement bin auger shaft (5) rotates freely.

c. Engaging Cement Bin Clutch.

(1) Rotate cement bin auger shaft (5) until cement clutch handle (2) can be engaged.

(2) Push cement bin clutch handle (2) inward.

(3) Remove breaker bar and socket (4) from cement bin auger shaft (5).

(4) Install latch pin (1) on Concrete Mobile Mixer (3) and cement bin clutch handle (2).

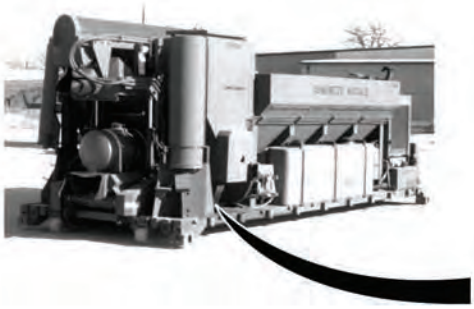

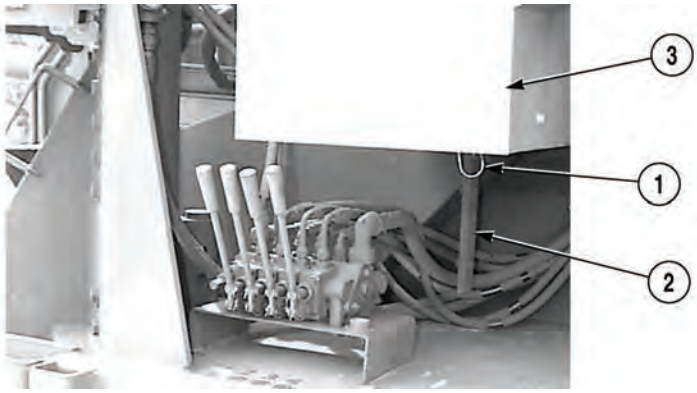

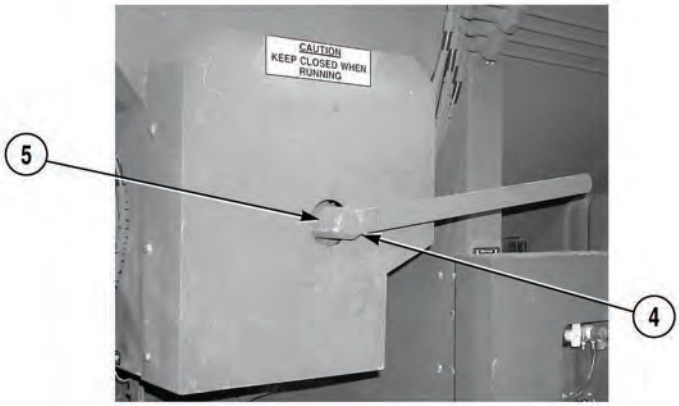

2-23. MIXING AUGER DEPLOY/STOW.

a. Deploy Mixing Auger.

WARNING

- Ensure all personnel are clear of area around Concrete Mobile Mixer before lowering and raising mixing auger. Failure to comply could result in serious injury or death to personnel.
- To prevent slipping or falling, ensure PLS ladder is setting on firm, level ground and evenly supported against PLS trailer. Failure to comply could result in serious injury or death to personnel.

CAUTION

Concrete Mobile Mixer must be on PLS truck, PLS trailer (PLST), or raised on lift cylinders. Failure to comply could result in damage to equipment.

(1) Unstow ladder, (Para 2-30), and position in right rear brackets.

NOTE

- Perform Step (2) to deploy mixing auger if Concrete Mobile Mixer is on PLS trailer.
- PLS ladder is required to access mixing auger hold down straps.

(2) Position PLS ladder on level ground and rest against right rear corner or left rear side of PLS trailer.

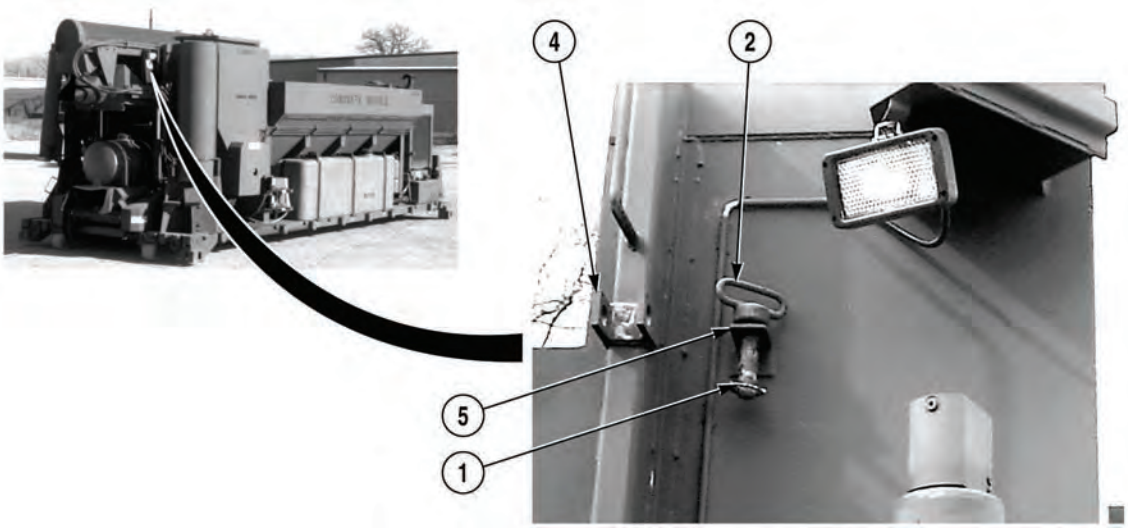

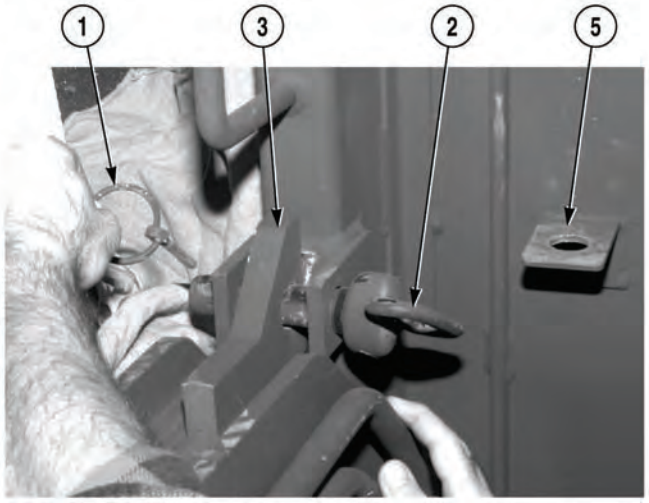

(3) Start engine, (Para 2-19).

(4) Remove clevis pin (1) from latch T-pin (2).

NOTE

Retractor controls may need to be operated to remove T-pin.

(5) Remove T-pin (2) from auger (3) and bracket (4).

(6) Position T-pin (2) in stow bracket (5) and install clevis pin (1).

2-23. MIXING AUGER DEPLOY/STOW (CONT).

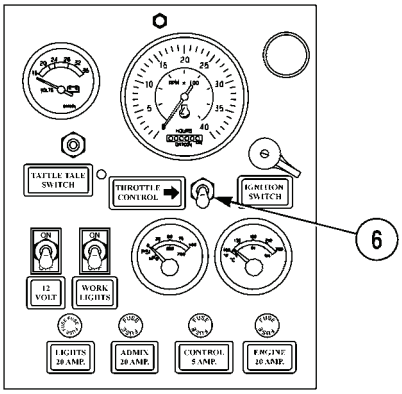

(7) Turn THROTTLE CONTROL switch to high (6).

CAUTION

Ensure that hoses are not pinched when lowering or raising auger.

(8) Pull RETRACTOR control (7), and lower mixing auger from stowed position.

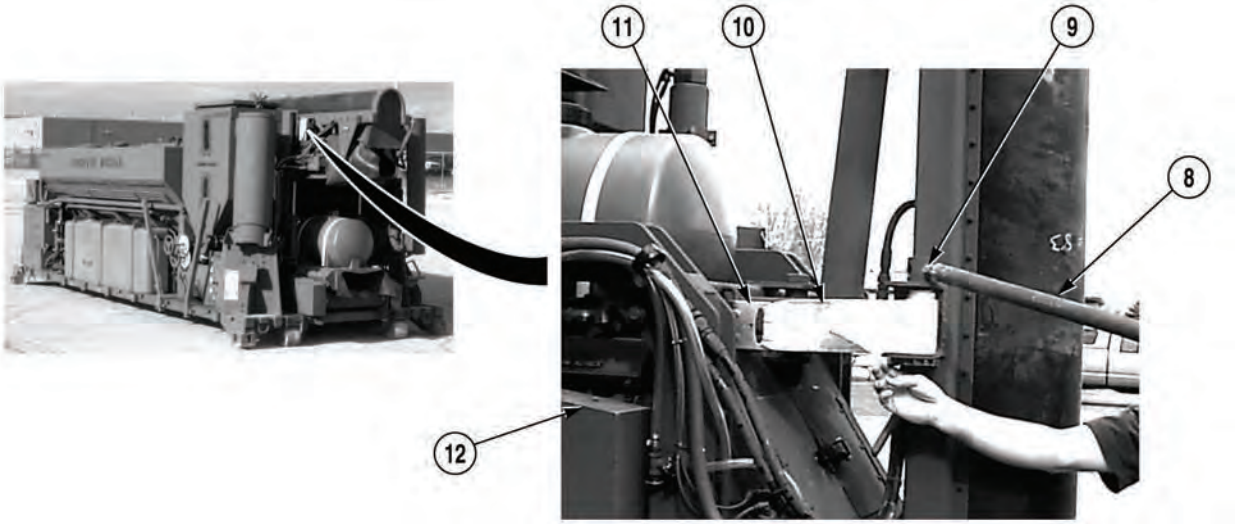

NOTE

There are two safety belt hooks on mixing auger. Release one side at a time.

(9) Remove handle (8) from stowage box and position into tension release (9), turn handle enough to loosen tension on safety belts (10).

(10) Remove safety belt hooks (11) from Concrete Mobile Mixer (12).

(11) Wrap safety belts tight.

2-23. MIXING AUGER DEPLOY/STOW (CONT).

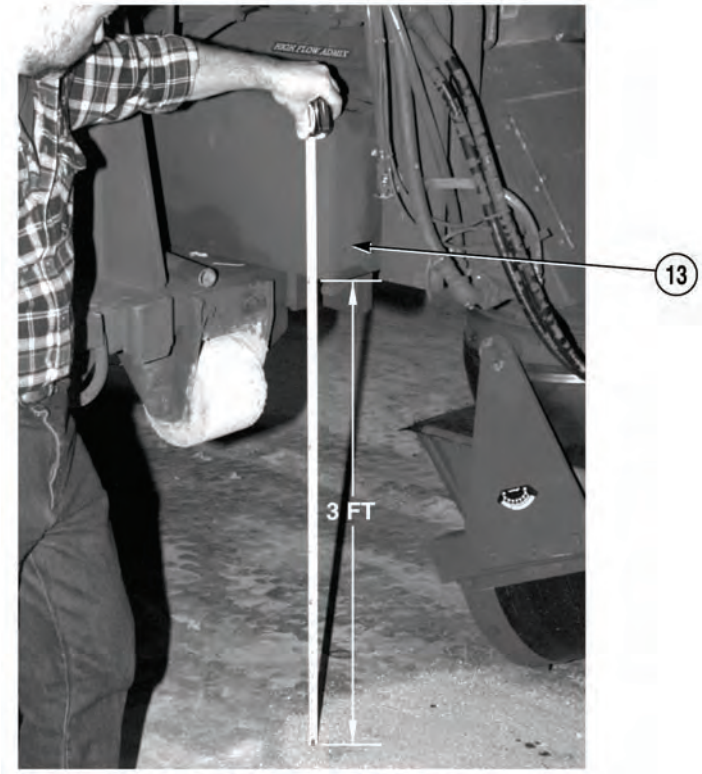

CAUTION

There must be a minimum of 3 ft. (91 cm.) from ground and chain guard, auger chute may contact ground and damage to Concrete Mobile Mixer may occur.

(12) Ensure that there is a minimum clearance of 3 ft. (91 cm.) from ground and chain guard (13).

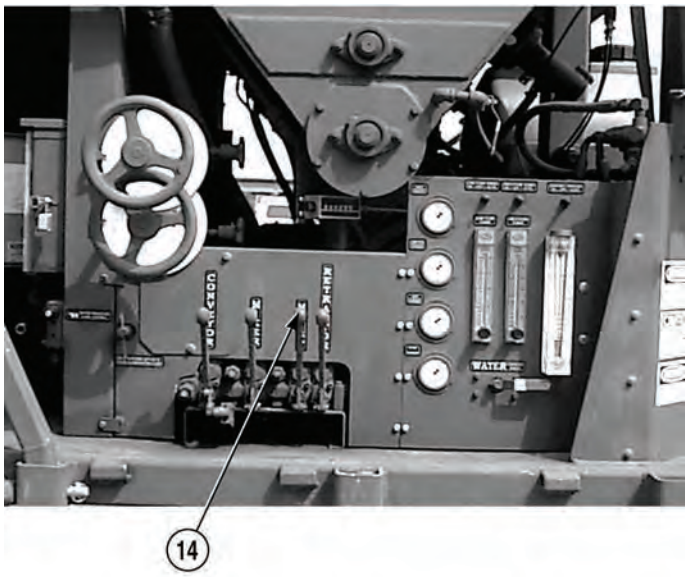

(13) Pull HOIST control (14), and lower mixing auger.

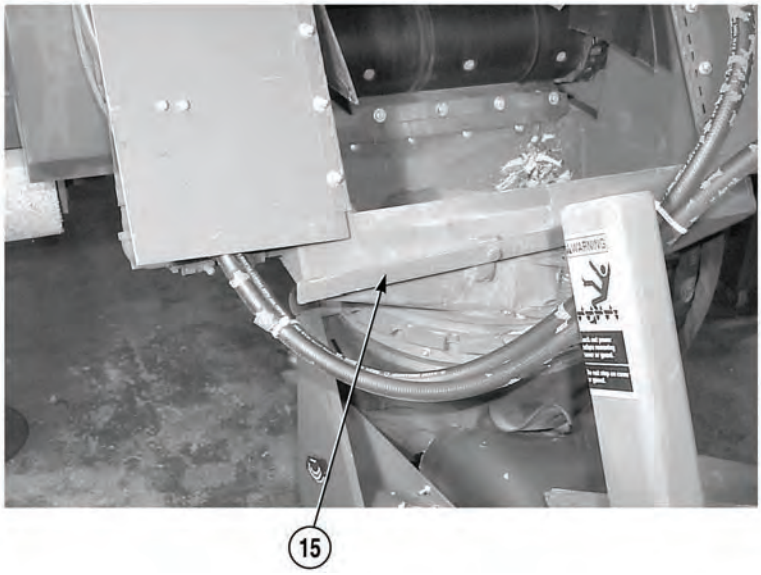

NOTE

Release lockarm by lowering lockarm handle. Once lockarm has been released, operator may position mixing auger right or left as required.

(14) Release lockarm (15) and swing mixing auger left or right as required.

(15) Shut off engine, (Para 2-19).

(16) Stow ladder, (Para 2-30).

2-23. MIXING AUGER DEPLOY/STOW (CONT).

b. Stowing Mixing Auger.

CAUTION

Mixing auger must be in center position before stowing. Failure to comply could result in damage to equipment.

(1) Stow delivery chutes, (Para 2-26).

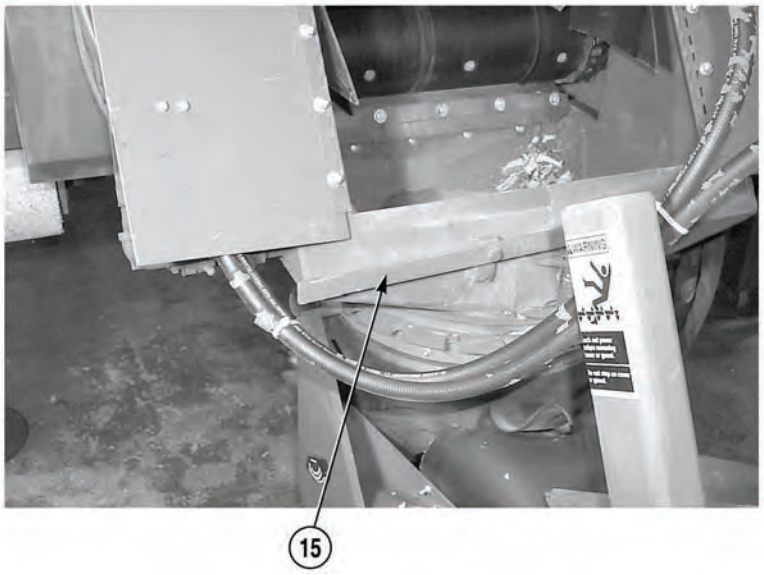

(2) Unstow ladder, (Para 2-30), and position in right rear brackets.

NOTE

Release lockarm by lowering lockarm handle. Once lockarm has been released, operator may position mixing auger right or left as required.

(3) Release lockarm (15) and swing mixing auger to center position.

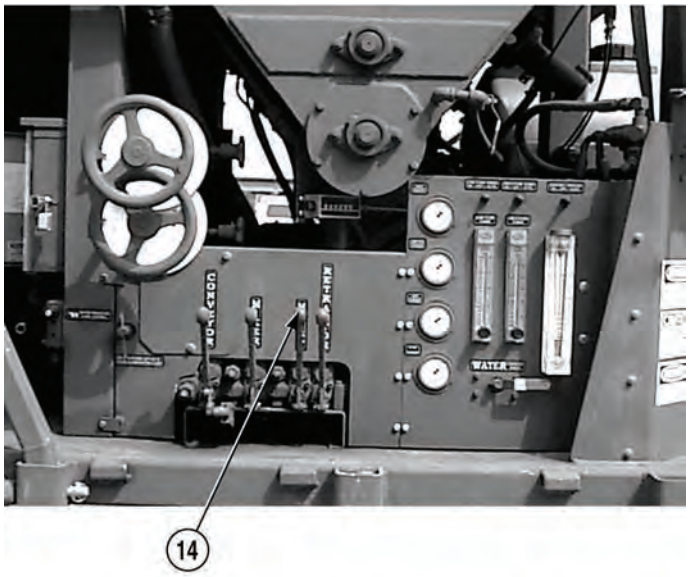

(4) Start engine, (Para 2-19).

CAUTION

Ensure that hoses are not pinched when lowering or raising auger.

(5) Push HOIST control (14), and fully raise mixing auger.

2-23. MIXING AUGER DEPLOY/STOW (CONT).

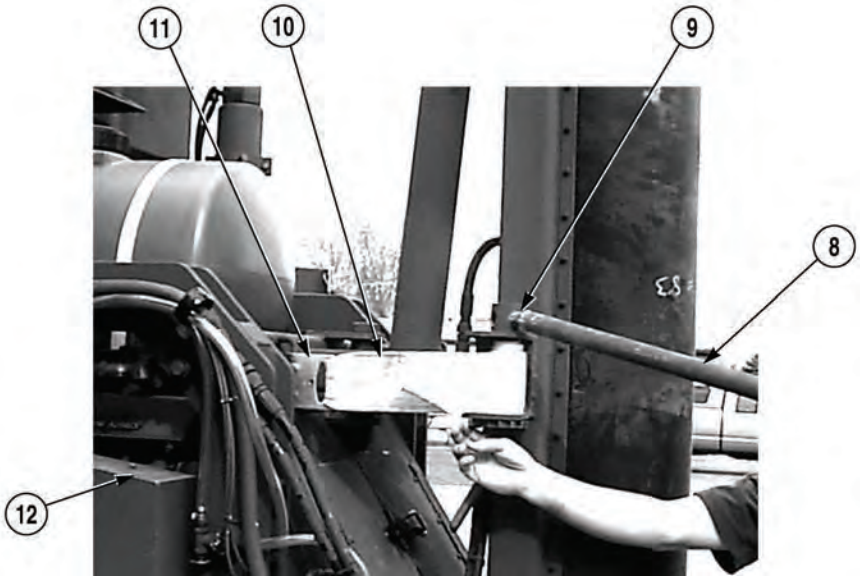

WARNING

Ensure all personnel are clear of area around Concrete Mobile Mixer before lowering or raising mixing auger. Failure to comply could result in serious injury or death to personnel.

NOTE

Ensure both right and left safety belts are hooked and tightened.

(6) Install safety belt hooks (11) on Concrete Mobile Mixer (12).

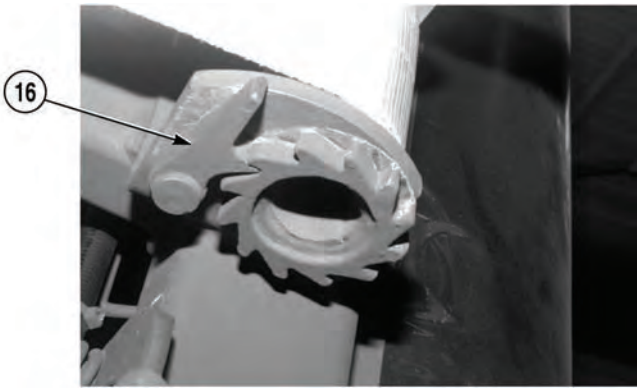

(7) Remove handle (8) from stowage box and position into tension release (9), turn handle enough to tighten safety belts (10) and engage safety belt locks (16).

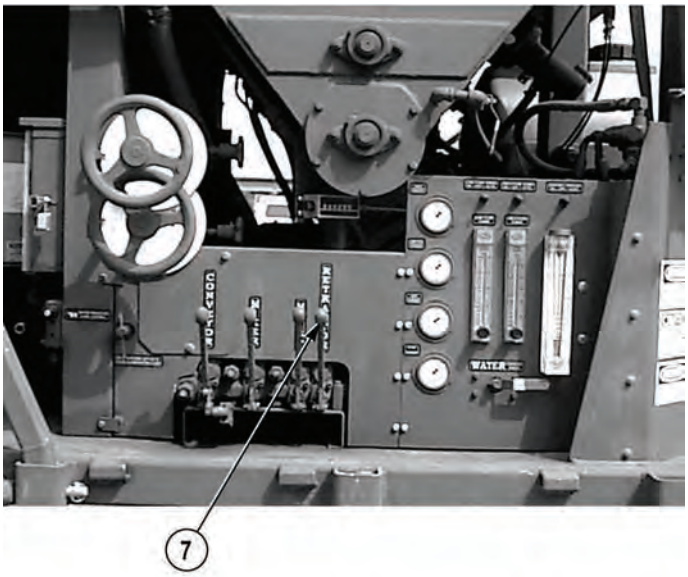

(8) Push RETRACTOR control (7), and raise mixing auger to stowed position.

WARNING

To prevent slipping or falling, ensure PLS ladder is setting on firm, level ground and evenly supported against PLS trailer. Failure to comply could result in serious injury or death to personnel.

NOTE

- Perform Step (9) to deploy mixing auger if Concrete Mobile Mixer is on PLS trailer.
- PLS ladder is required to access mixing auger hold down straps.

(9) Position PLS ladder on level ground and rest against right rear corner or left rear side of PLS trailer.

2-23. MIXING AUGER DEPLOY/STOW (CONT).

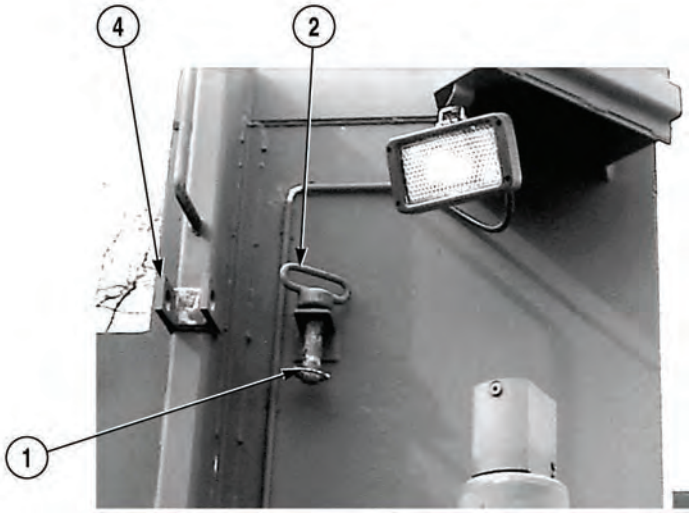

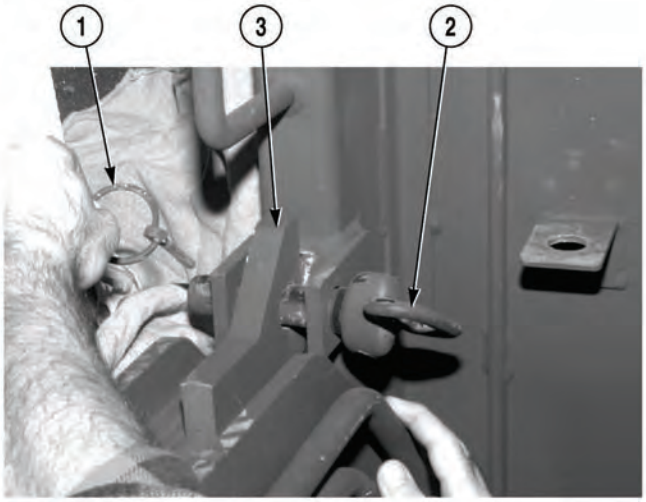

(10) Remove clevis pin (1) and T-pin (2) from stowed position.

(11) Position T-pin (2) in bracket (4) and auger (3).

CAUTION

If T-pin is not installed, auger may deploy during loading or transport of Concrete Mobile Mixer due to gravity. Failure to comply may result in damage to equipment.

(12) Install clevis pin (1) in T-pin (2).

(13) Shut off engine, (Para 2-19).

(14) Stow ladder, (Para 2-30).

2-24. MIXING AUGER SHAFT TEST.

NOTE

Up-and-down or side-to-side movement of hydraulic motor is usually caused by a bent auger shaft. Operator can visually check for a bent shaft by performing Steps (1) through (3).

(1) Start engine, (Para 2-19).

(2) Deploy auger, (Para 2-23).

(3) Pull MIXER control (1) “OUT.”

(4) Operate mixer auger at a low rpm.

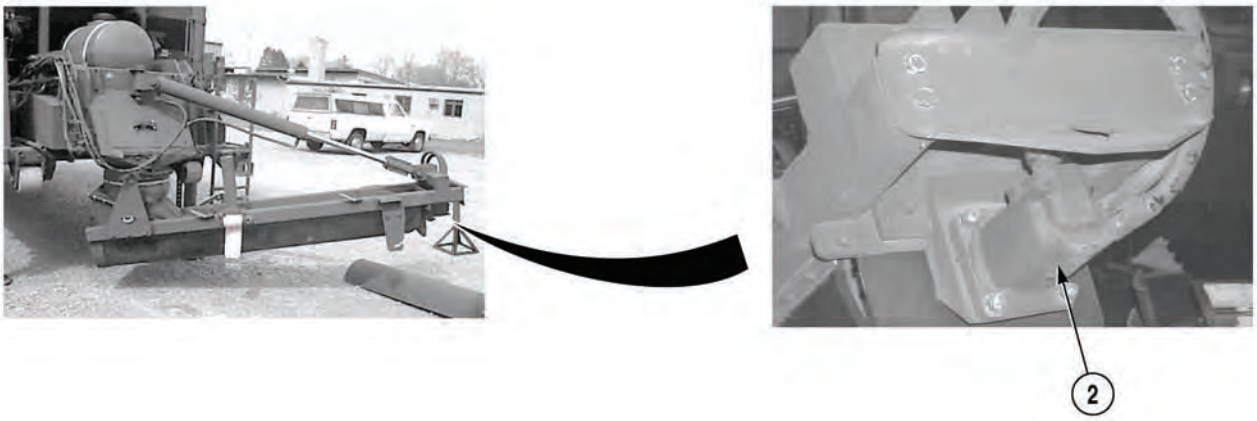

(5) Closely watch hydraulic motor (2).

(6) If movement of motor up-and-down or side-to-side exceeds 1/8 in. (3.18 mm), notify Unit Maintenance.

(7) Push MIXER control (1) to “OFF” (center) position.

(8) Stow auger, (Para 2-23).

(9) Shut off engine, (Para 2-19).

2-25. MIXING AUGER WEAR BLADE CHECK.

Check Wear.

NOTE

- Blade wear is dependent upon hardness and abrasiveness of materials used. Blades are cast from hardest steel practical to use. Only experience will determine life expectancy. The best maintenance is to clean mixing trough thoroughly after each use and to replace blades before wear becomes excessive.
- Mixing auger has three types of wear blades. Procedure for checking wear is the same for all wear blades. Number and types of wear blades are as follows: 13 paddles; 23 wear blades with 2 screws; and 3 wear blades with 3 screws.
- Use diagram below as a template to make wear gage.

(1) Deploy auger, (Para 2-23).

(2) Raise trough guards.

(3) Using wear gage, place bottom edge of long leg against auger shaft and end of short leg against wear blade.

(4) If blade is worn below lower edge of short leg, blade must be replaced, notify Unit Maintenance.

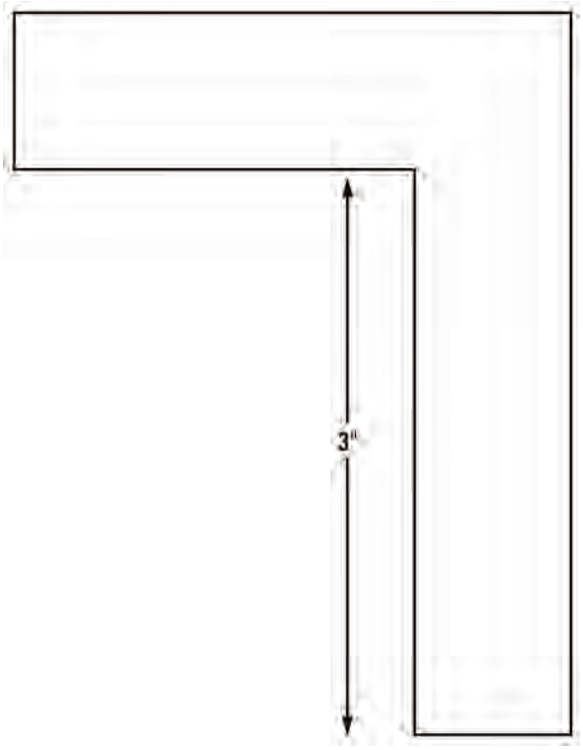

2-26. DELIVERY CHUTES ATTACHING/DETACHING.

a. Attaching Delivery Chutes.

(1) Auger deployed, (Para 2-23).

(2) Shut off engine, (Para 2-19).

WARNING

Extreme care should be taken to prevent loss of balance while removing or installing delivery chutes. Failure to comply could result in serious injury or death to personnel.

NOTE

- Use one, two, or three delivery chutes as required. This unit may also be used without any additional delivery chutes being attached.
- First chute has a chain attached to it.

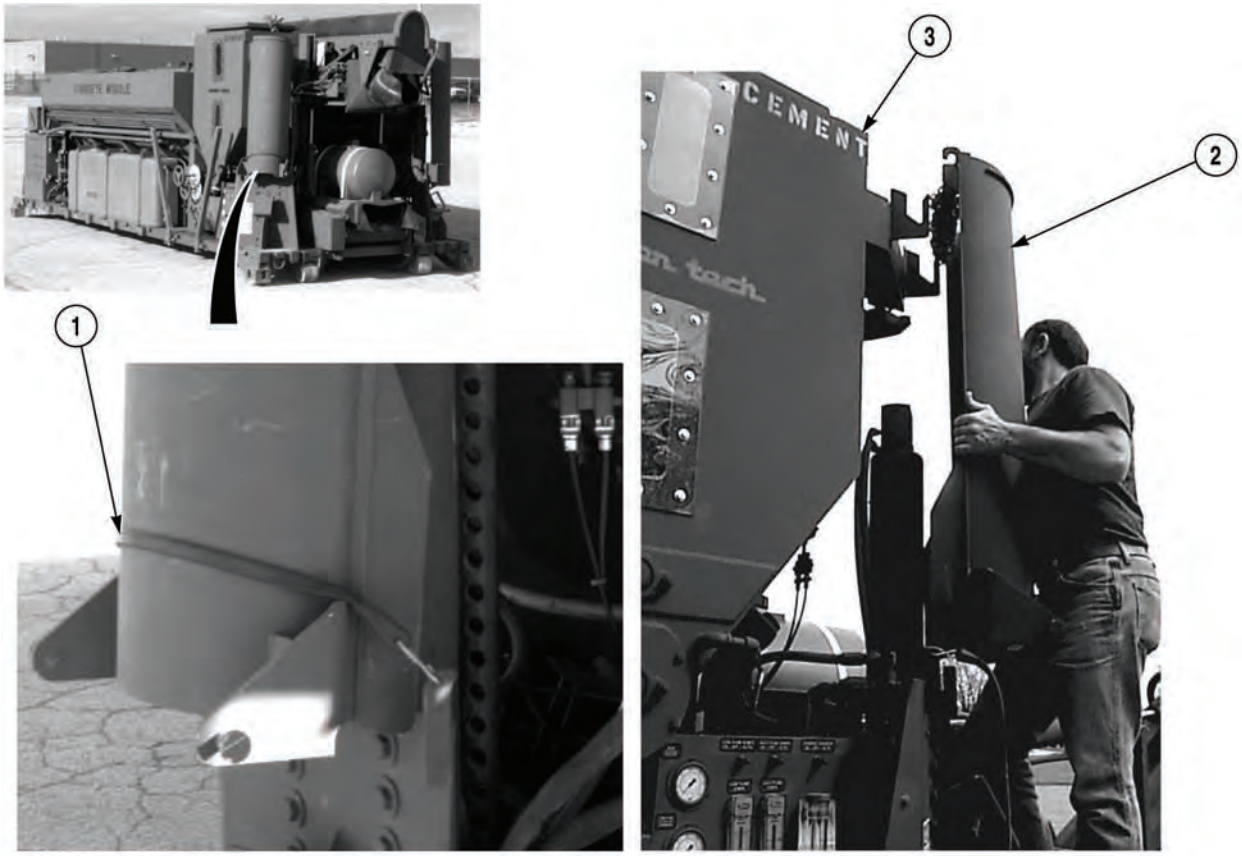

(3) With the aid of an assistant, remove strap (1) from bracket and unstow first delivery chute (2) from left side of Concrete Mobile Mixer (3).

2-26. DELIVERY CHUTES ATTACHING/DETACHING (CONT).

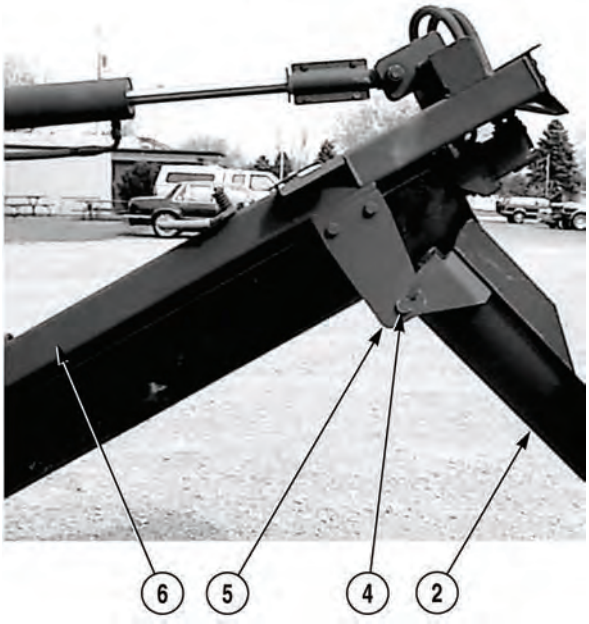

(4) Hook pins (4) of upper portions of first chutes (2) into slots (5) of mixing auger (6).

(5) Hold chute (2) at desired angle by inserting chain (7) into slot (8) of mixing auger (6).

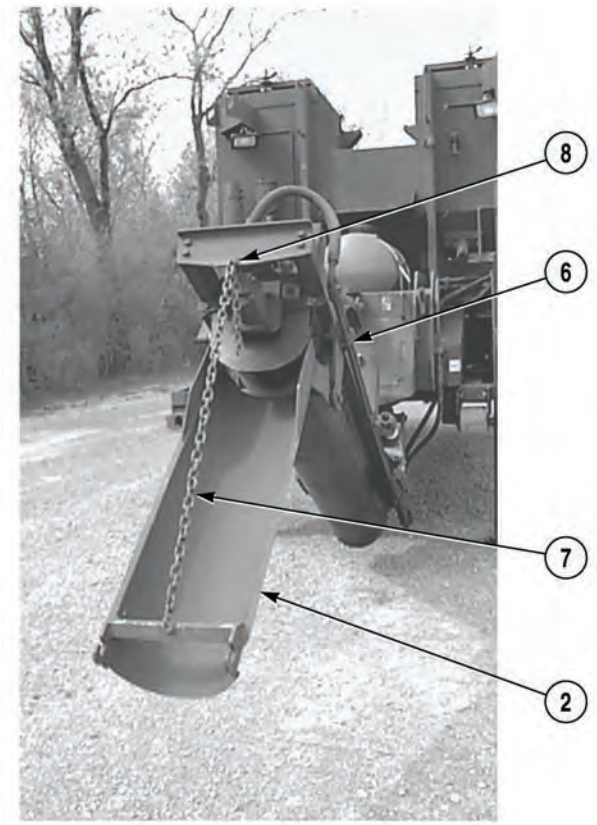

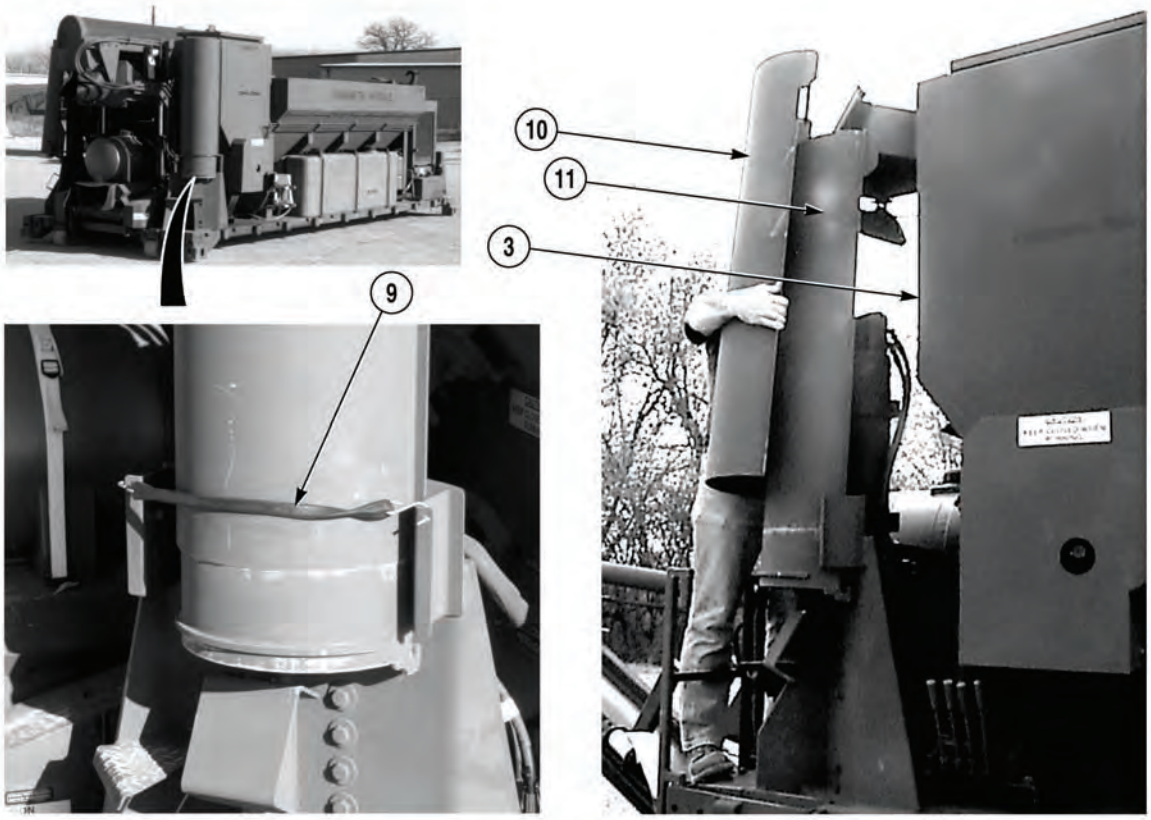

NOTE

- Second chute has a bar across both ends.
- Third chute has a bar across one end.
- If using only two chutes, use first and third chutes.

(6) With the aid of an assistant, remove strap (9) from bracket and unstow remaining two chutes (10) and/or (11), as required, from right side of Concrete Mobile Mixer (3).

2-26. DELIVERY CHUTES ATTACHING/DETACHING (CONT).

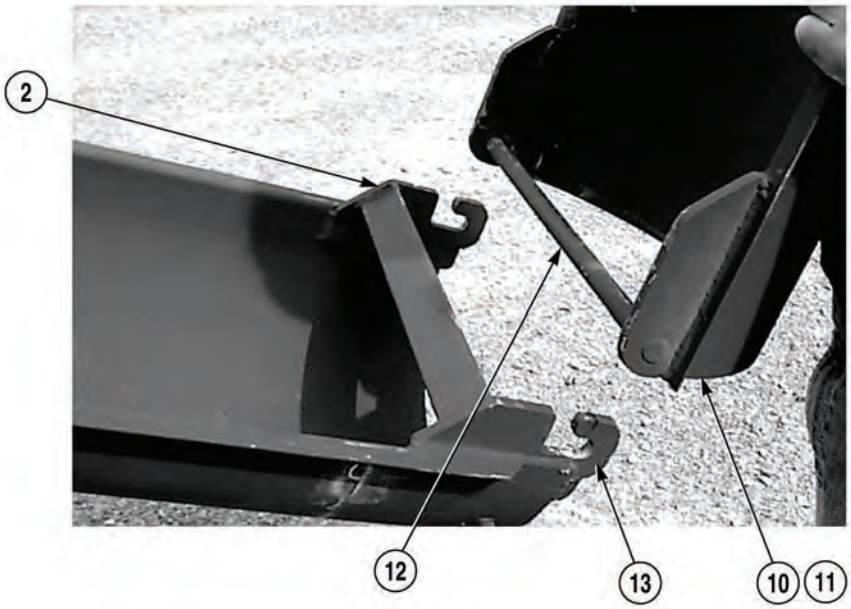

WARNING

Delivery chutes are heavy. Take care to keep hands away from slots when installing delivery chutes. Failure to comply could result in injury to personnel.

(7) Slide bar (12) on lower chute(s) (11) and/or (10) into slots (13) of first chute (2).

b. Detaching Delivery Chutes.

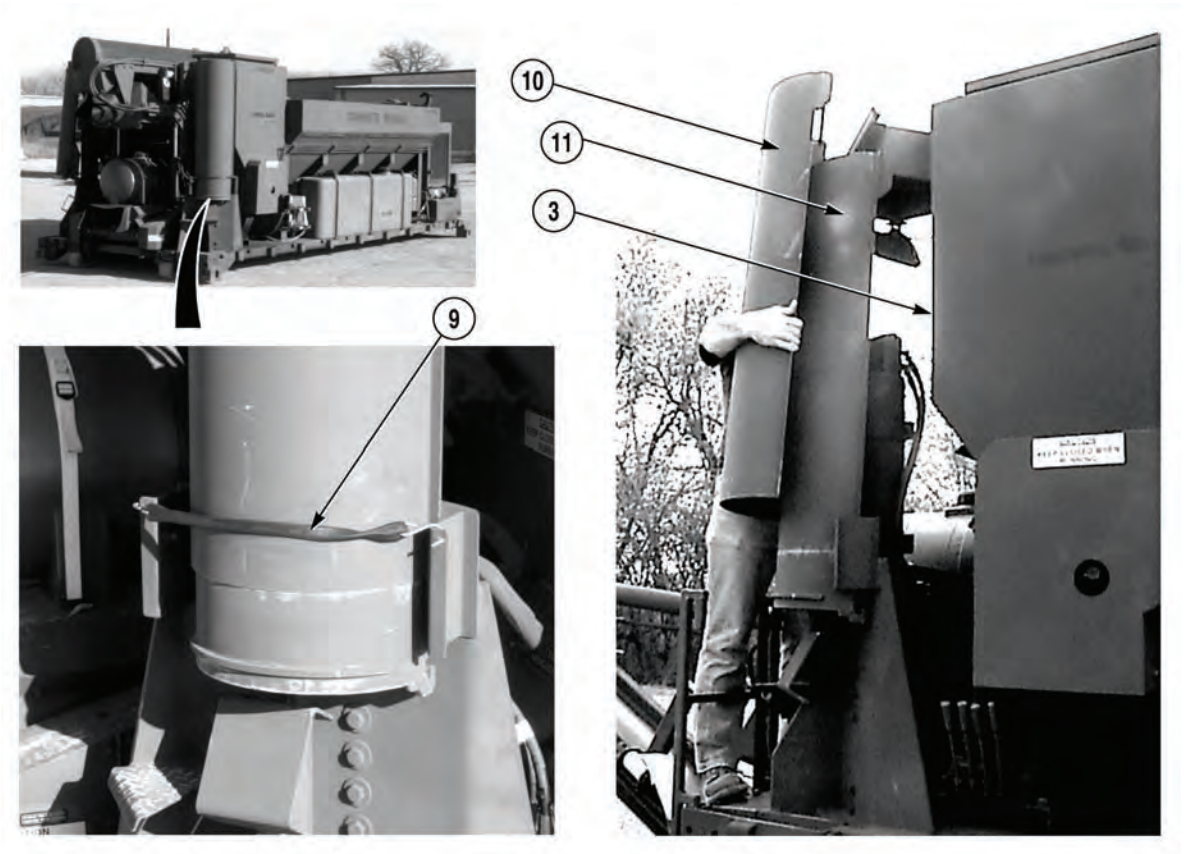

WARNING

- Extreme care should be taken to prevent loss of balance while removing or installing delivery chutes. Failure to comply could result in serious injury or death to personnel.
- Third and second chutes must be stowed with round bar to top. Failure to comply may result in chutes dropping suddenly and causing injury or death to personnel.

NOTE

- The number of chutes to be removed will depend on how many chutes were used.
- If no delivery chutes were used, skip Steps (1) and (2).

(1) With the aid of an assistant, remove third and/or second delivery chute (10) and/or (11), and stow on right side of Concrete Mobile Mixer (3). Attach strap (9).

2-26. DELIVERY CHUTES ATTACHING/DETACHING (CONT).

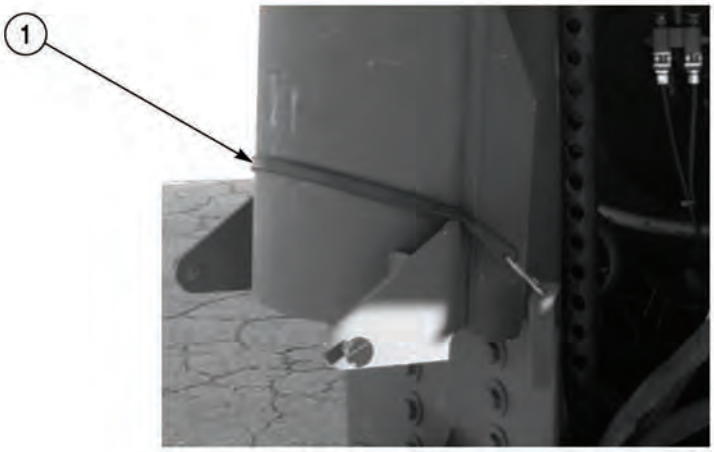

(2) Remove chain (7) on first delivery chute (2) from slot (8) of mixing auger (6) and stow on left side of Concrete Mobile Mixer (3). Attach strap (1).

2-27. WORKSTATION PLATFORM INSTALLATION/REMOVAL.

a. Installation.

NOTE

Workstation platform can only be attached when Concrete Mobile Mixer is loaded on a PLS truck/trailer. It cannot be attached to a mixer that is positioned on lift cylinders.

(1) Unstow PLS ladder, (TM 9-2320-364-10).

(2) Position PLS ladder in brackets.

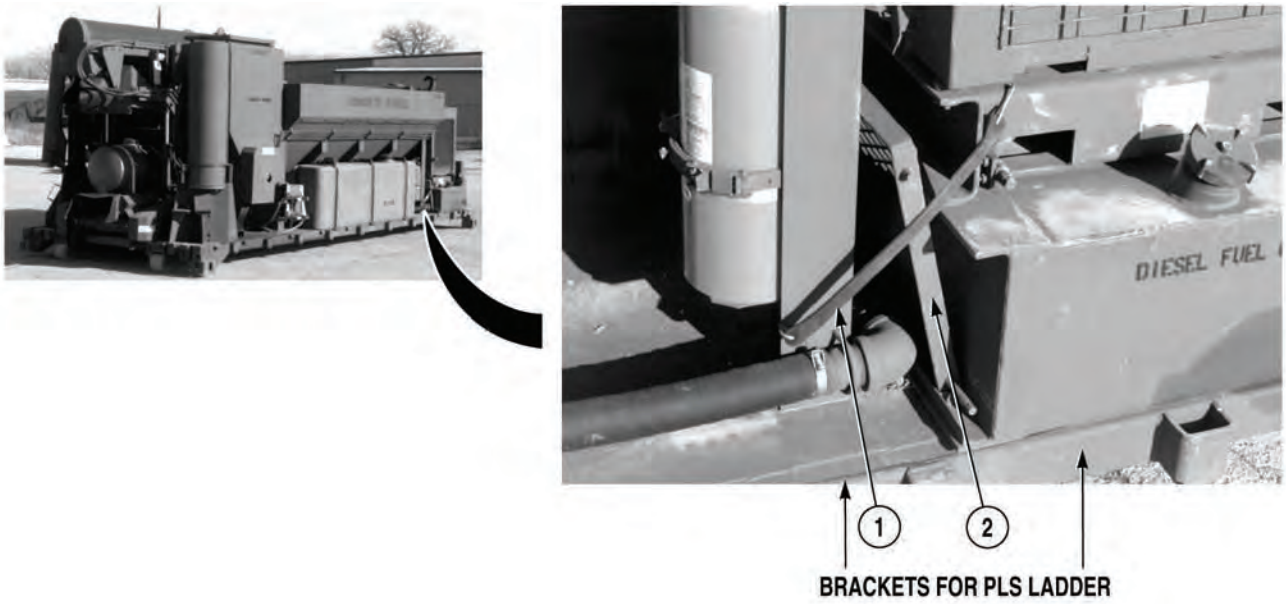

(3) With the aid of an assistant, unhook strap (1) and remove platform (2) from Concrete Mobile Mixer.

2-27. WORKSTATION PLATFORM INSTALLATION/REMOVAL (CONT).

(4) Remove two brackets (3) and six spring pins (4) from stowage box.

(5) Remove two lynch pins (5), T-pins (6), and legs (7) from stowed position.

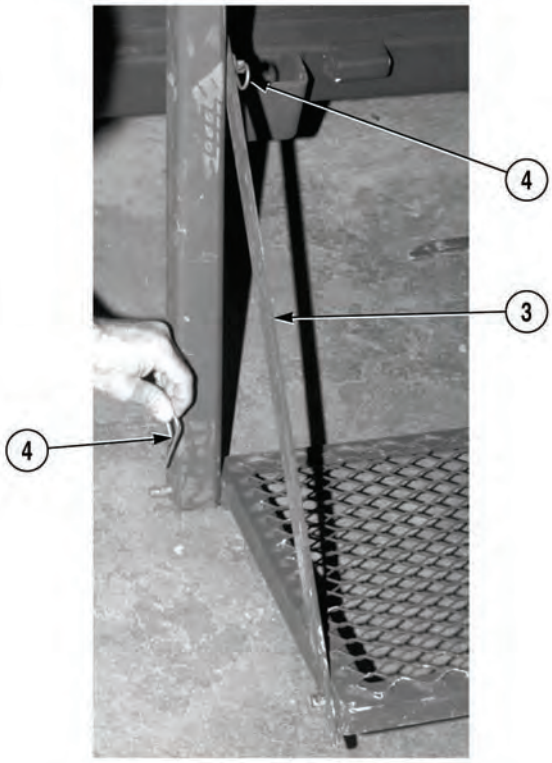

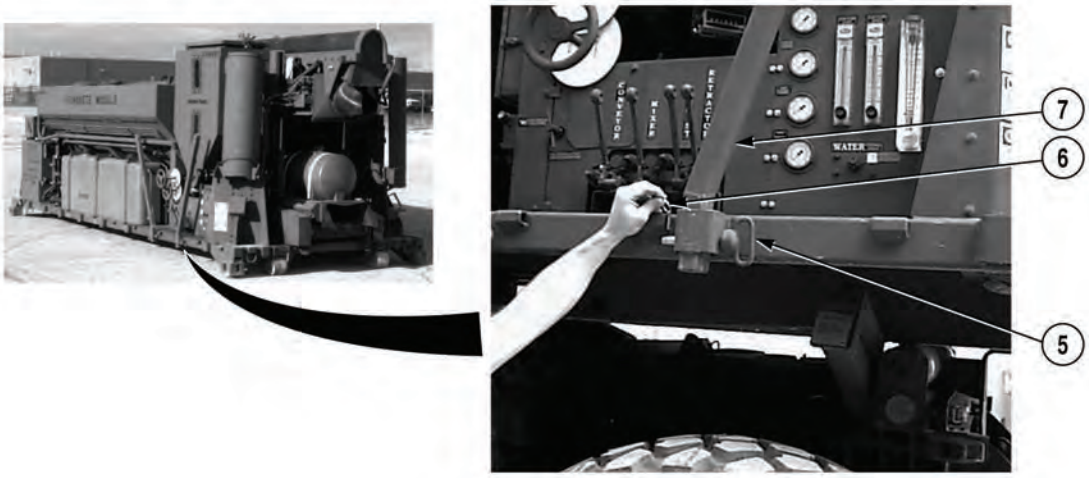

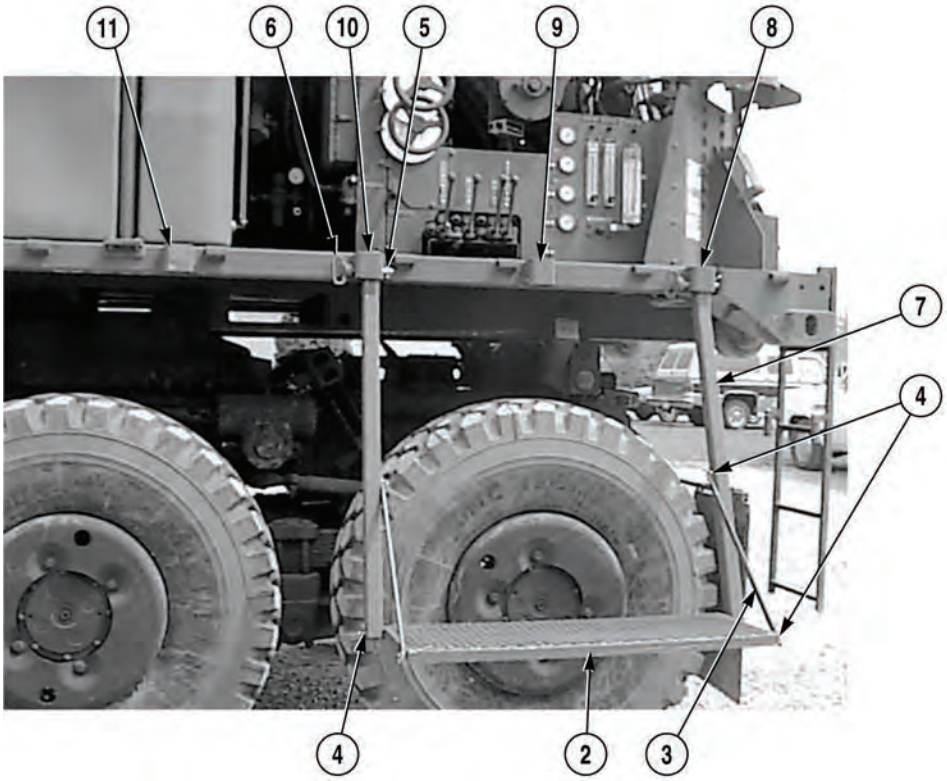

NOTE

- Four mounting brackets are provided on flatrack to position workstation platform. When positioning legs, space legs two pockets apart.
- When installing legs, position pegs face inward.

(6) Install two legs (7), T-pins (6), and lynch pins (5) on two mounting brackets (8) and (10), or (9) and (11).

(7) Position platform (2) on two legs (7) and install two spring pins (4).

(8) Position two brackets (3) on two legs (7) and platform (2) and install four spring pins (4).

b. Removal.

(1) Remove four spring pins (4) and two brackets (3) from two legs (7).

(2) Remove two spring pins (4) and platform (2) from two legs (7).

(3) Remove two lynch pins (5), T-pins (6), and legs (7) from two mounting brackets (8) and (10), or (9) and (11).

2-27. WORKSTATION PLATFORM INSTALLATION/REMOVAL (CONT).

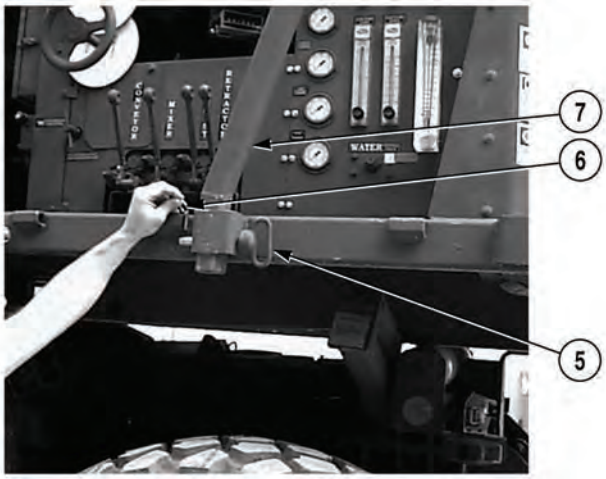

CAUTION

Stow legs with pegs facing away from Concrete Mobile Mixer. Failure to comply may result in damage to water tank.

(4) Stow two lynch pins (5), T-pins (6), and legs (7).

(5) Stow two brackets (3) and six spring pins (4) in stowage box.

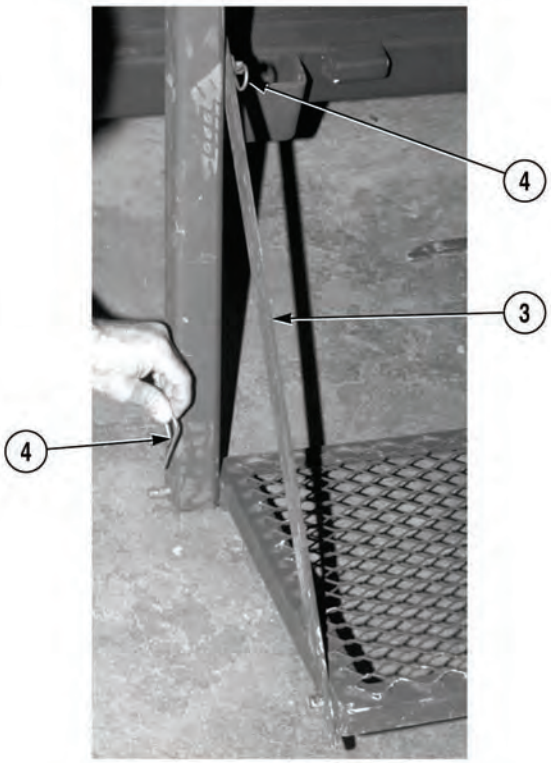

(6) With the aid of an assistant, stow platform (2) and hook strap (1).

(7) Remove PLS ladder from brackets and stow on truck, (TM 9-2320-364-10).

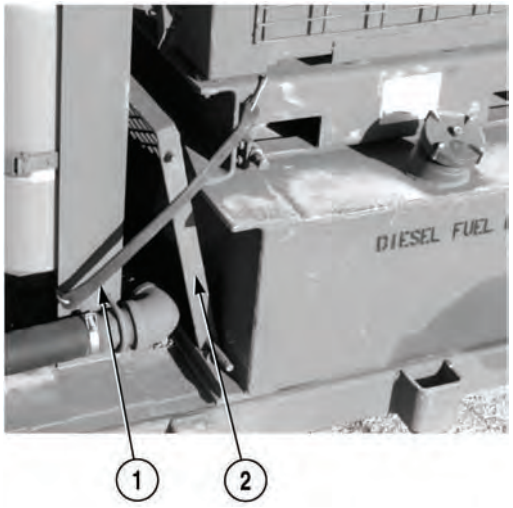

2-28. LIFT CYLINDERS RAISE/LOWER.

a. Raising (Extended).

NOTE

- In order to use lift cylinder, Concrete Mobile Mixer must be off-loaded from PLS truck/trailer. To unload a Concrete Mobile Mixer from a PLS truck or PLS trailer, refer to PLS Operator's Manual, (TM 9-2320-364-10).
- Ensure Concrete Mobile Mixer is positioned on a level surface.

(1) Start engine, (Para 2-19).

NOTE

Pulling out lift cylinder/water pump selector valve will engage lift cylinders. Pushing valve in will engage water pump.

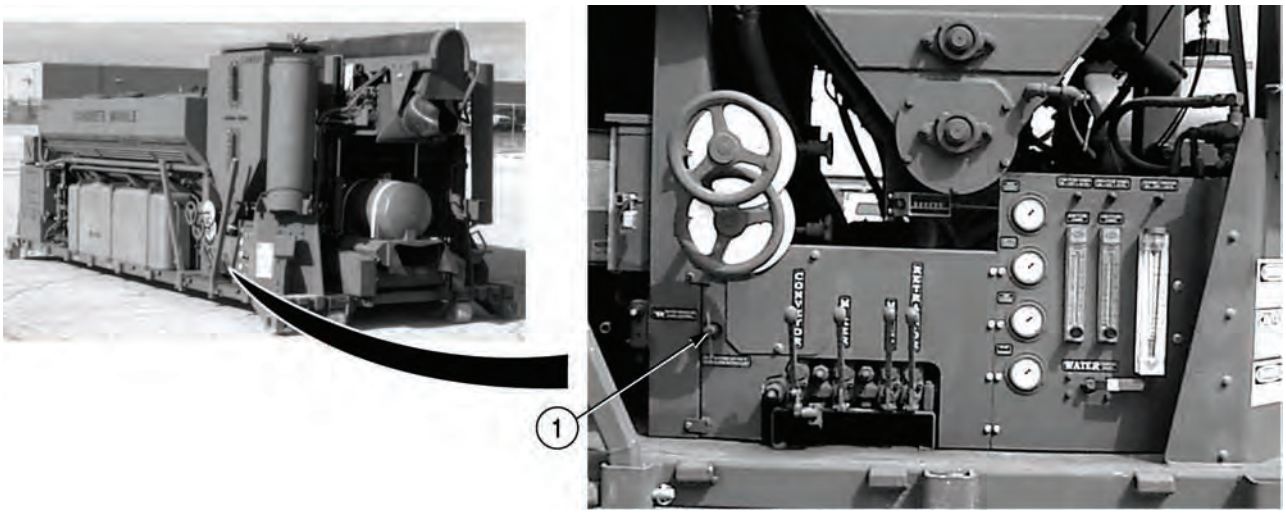

(2) Pull out lift cylinder/water pump selector valve (1).

(3) Remove safety pins (2) from four safety rods (3) and brackets (4).

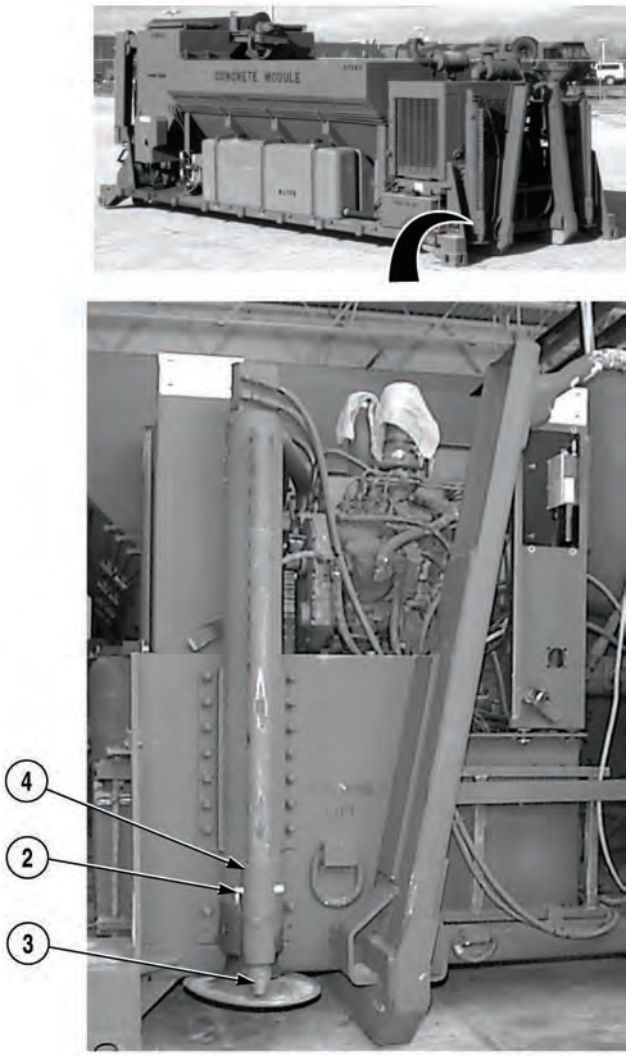

2-28. LIFT CYLINDERS RAISE/LOWER (CONT).

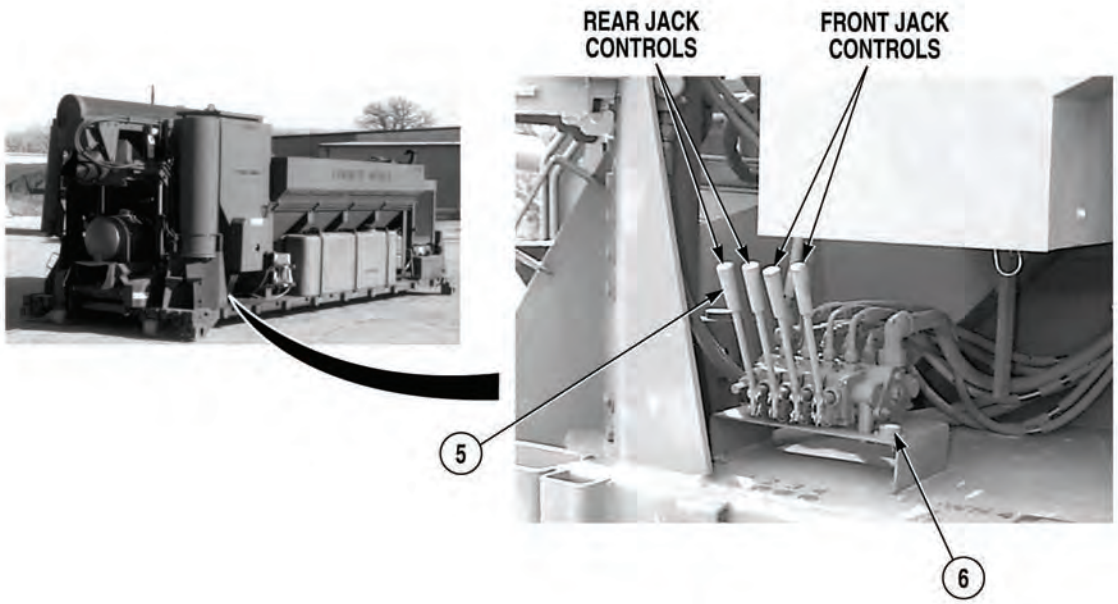

CAUTION

- Hydraulic control levers control four lift cylinders independently of each other. Keep Concrete Mobile Mixer as level as possible while raising by watching the bubble level mounted on hydraulic controls bracket. Failure to comply may result in damage to equipment.
- Ensure lift cylinders are clean prior to raising Concrete Mobile Mixer to prevent damage to equipment.
- Raise the front by actuating the controls for the front jacks. Raise the rear by actuating the controls for the rear jacks. Only actuate the front jacks or rear jacks-not all jacks at once. Raising Concrete Mobile Mixer by actuating all four jacks at once may cause damage due to uneven jack leg length causing frame to twist. Adjust jack controls independently to level side to side on uneven ground. Raising the unit in other ways may damage the unit.

NOTE

If increased flow to lift cylinders is required, rotate knob on water pressure control valve counterclockwise.

(4) Using hydraulic control levers (5), and while observing bubble level (6), raise Concrete Mobile Mixer to working level desired. It is recommended that Concrete Mobile Mixer be lifted in stages, alternating between front and rear until working level is reached.

NOTE

- Insert safety pin in bracket and cylinder through closest hole. Ensure you install safety pins in all four safety rods.
- It may be necessary to raise safety rod slightly to install safety pin.

(5) Once Concrete Mobile Mixer is raised to desired height, install safety pins (2) through brackets (4) and safety rods (3).

(6) Shut off engine, (Para 2-19).

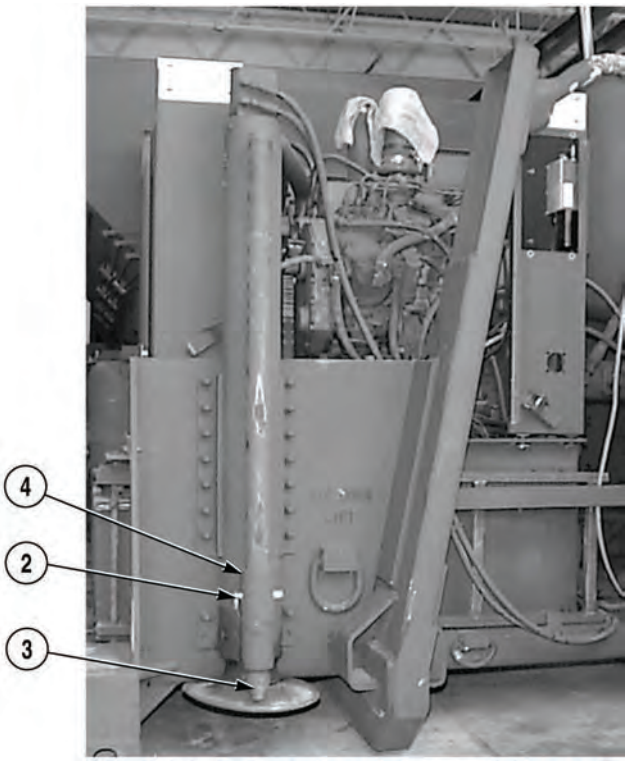

b. Lower (Stowed).

NOTE

- When lowering lift cylinders, it is not necessary to position lift cylinder/water pump selector valve back to water pump function unless Concrete Mobile Mixer will be put back in operation immediately.
- After lift cylinders are completely stowed, Concrete Mobile Mixer is ready to be loaded onto PLS truck, (Para 2-5). To load Concrete Mobile Mixer, refer to PLS Operator's Manual, (TM 9-2320-364-10).

(1) Start engine, (Para 2-19).

(2) Remove safety pins (2) from safety rods (3) and brackets (4).

WARNING

Ensure area under Concrete Mobile Mixer is clear of personnel, equipment, debris and obstructions prior to lowering to avoid injury to personnel and damage to equipment.

CAUTION

Ensure lift cylinders are clean prior to lowering Concrete Mobile Mixer to prevent damage to equipment.

2-28. LIFT CYLINDERS RAISE/LOWER (CONT).

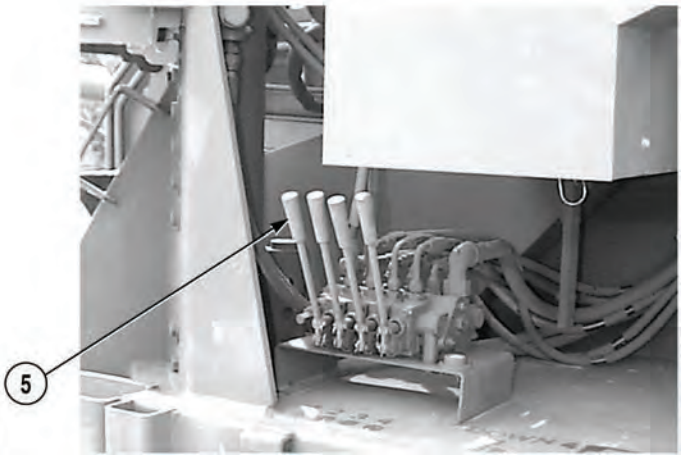

CAUTION

- The unit should be lowered with the front jacks or rear jacks at a time. Lowering unit by actuating all four jacks at once could cause damage to the unit due to uneven jack leg length causing the module to twist.
- Failure to remove safety pins (2) before lowering unit will damage pads on jack cylinders.

(3) Using hydraulic control levers (5), lower Concrete Mobile Mixer to transport position.

(4) When Concrete Mobile Mixer is completely lowered and lift cylinders are completely retracted, install safety pins (2) on safety rods (3) and brackets (4).

(5) Shut off engine, (Para 2-19).

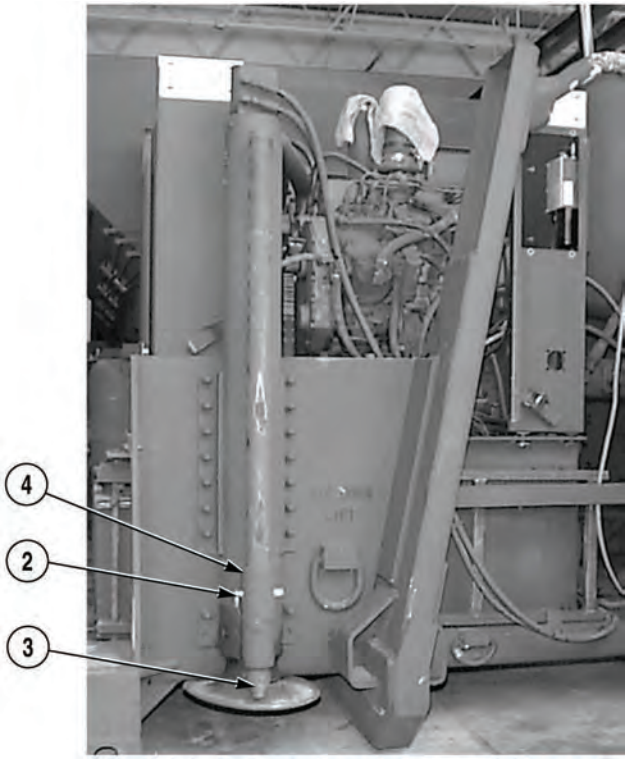

2-29. REAR ROLLER STOW/UNSTOW.

a. Stow.

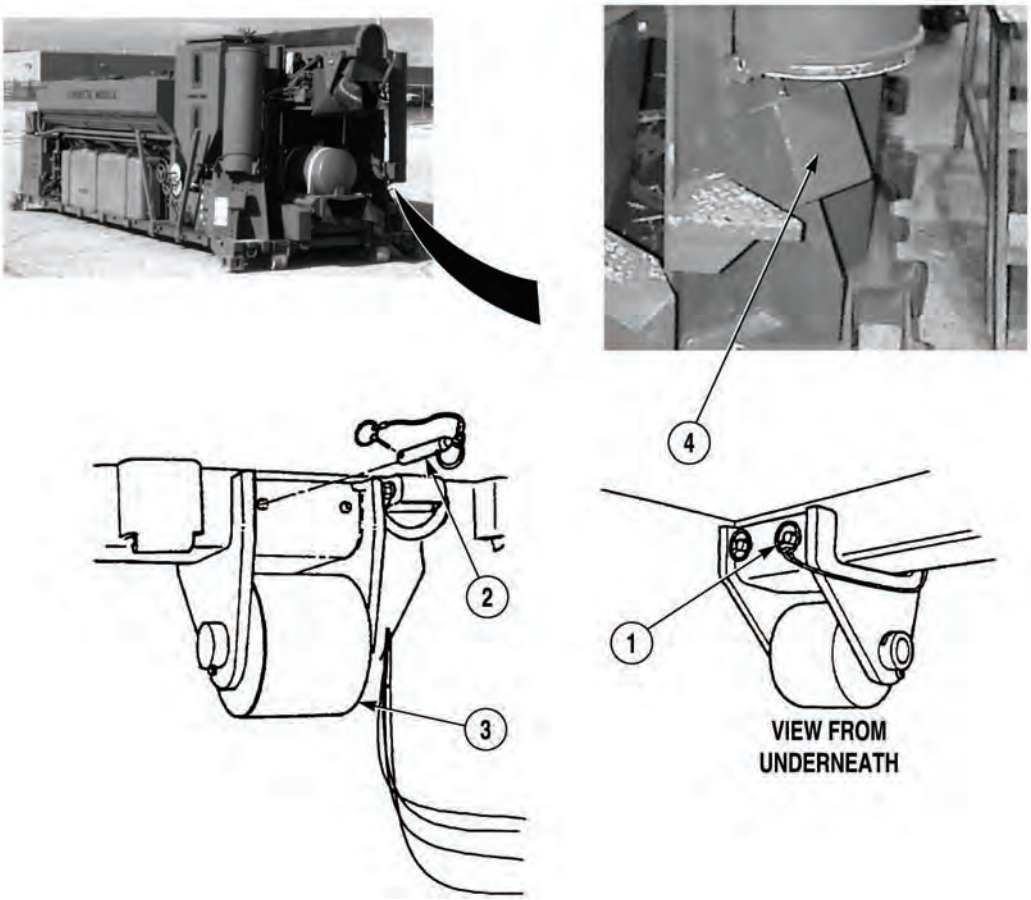

(1) Load Concrete Mobile Mixer, (Para 2-5).

WARNING

Support roller while removing retaining pins or roller may drop causing injury to personnel.

NOTE

This procedure shows replacement of one roller. Replacement is the same for both rollers.

(2) Remove two holding pins (1) from retaining pins (2).

(3) Support roller (3) and remove two retaining pins (2). Remove roller (3) from Concrete Mobile Mixer.

NOTE

When installing right side roller on stowage bracket, ensure roller is facing downward.

(4) Position roller (3) on roller stowage bracket (4) and install two retaining pins (2).

(5) Install two holding pins (1) in retaining pins (2).

2-29. REAR ROLLER STOW/UNSTOW (CONT).

b. Unstow.

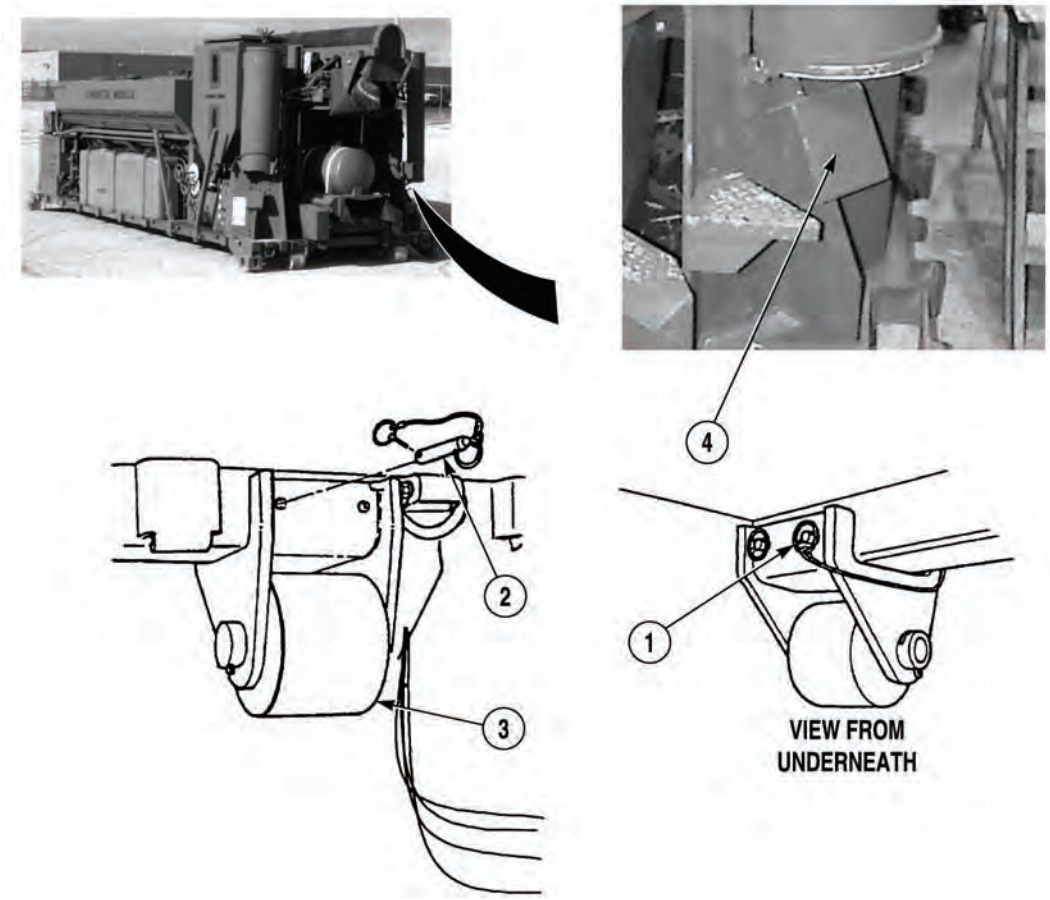

(1) Remove two holding pins (1) from retaining pins (2).

(2) Support roller (3) and remove two retaining pins (2) and roller (3) from roller stowage bracket (4).

(3) Install roller (3) on Concrete Mobile Mixer using two retaining pins (2).

(4) Install two holding pins (1) in retaining pins (2).

(5) Unload Concrete Mobile Mixer, (Para 2-5).

2-30. STOW AND USE LADDER.

a. Remove Ladder.

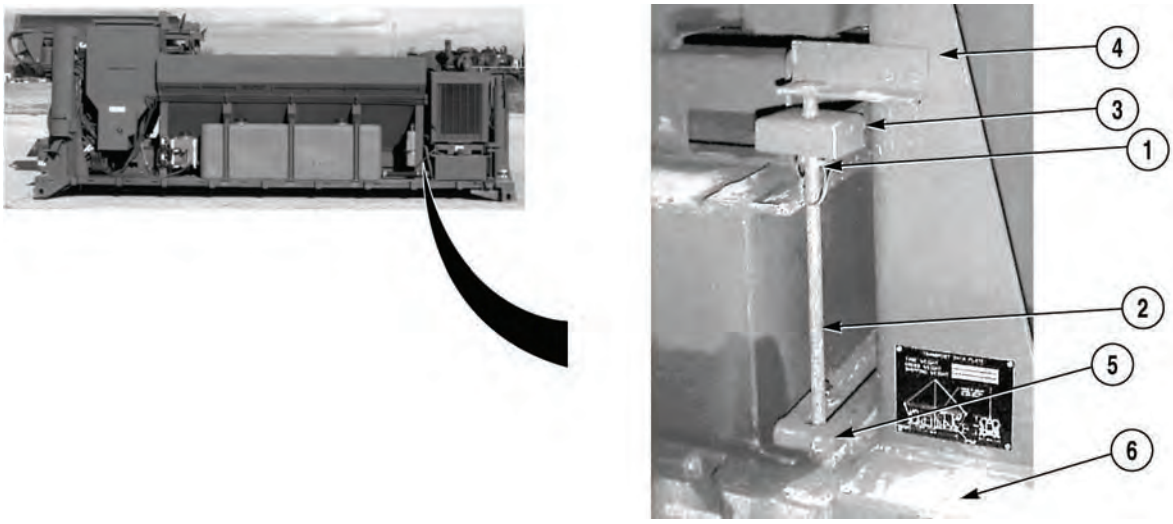

(1) Remove lock pin (1), pin (2) and bracket (3) from bracket (4).

(2) Remove ladder (5) from Concrete Mobile Mixer (6).

(3) Install bracket (3), pin (2) and lock pin (1) in bracket (4).

NOTE

There are two sets of ladder pockets at rear of Concrete Mobile Mixer on right and left side.

(4) Position ladder (5) in pockets on rear of Concrete Mobile Mixer (6).

b. Stow.

(1) Remove ladder (5) from pockets on Concrete Mobile Mixer (6).

(2) Remove lock pin (1), pin (2) and bracket (3) from bracket (4).

NOTE

Ladder is positioned on Concrete Mobile Mixer with hooks of ladder facing engine.

(3) Position ladder (5) on Concrete Mobile Mixer (6).

NOTE

Ensure pin is installed through inside of hooks of ladder.

(4) Install bracket (3), pin (2) and lock pin (1) in bracket (4) and through hooks of ladder (5).

2-31. CLEANUP.

WARNING

- Avoid contact with wet concrete. It may cause skin irritation and burns. If skin is exposed directly or through saturated clothing, wash thoroughly with water. If any concrete gets into eyes, flush immediately with water and get prompt medical attention. Failure to comply could result in serious injury to personnel.
- Operator will be working with auger guard raised. Take extreme care not to catch fingers or clothing in auger. Failure to comply may cause severe injury to personnel.

CAUTION

- Do not use water to clean inside of cement bin. Failure to comply could result in damage to equipment.
- Do not get water on conveyor belt. Failure to comply could result in damage to equipment.
- Thorough cleaning is extremely important. A buildup of concrete will cause major problems in operation such as equipment failures, and the need for frequent maintenance. Also cleaning becomes more difficult if not done well each time.
- Avoid getting water in sand, stone, and cement bins. Do not get water on electrical wiring or conveyor belt. Failure to comply could result in damage to equipment.
- Use of petroleum distillates (diesel fuels, oils, etc.) on Concrete Mobile Mixer to aid in removing concrete build-up is not recommended. Rubber auger boot, door covers, and conveyor belting are attached by petroleum products. This weakens the material and causes premature failure of rubber components.

NOTE

- Mixing auger is difficult to clean because it receives a heavy accumulation of concrete. It is important to clean it thoroughly. Recommended cleaning procedures are to wash the concrete dispenser daily with a high-pressure washer.
- When washing swivel ring area, pay particular attention to rear belt wiper within swivel ring.
- On areas where concrete is not easily removed, use a cleanup brush or scraper.
- Remember to remove spatters of concrete from axles, wheels, and hydraulic cylinders.

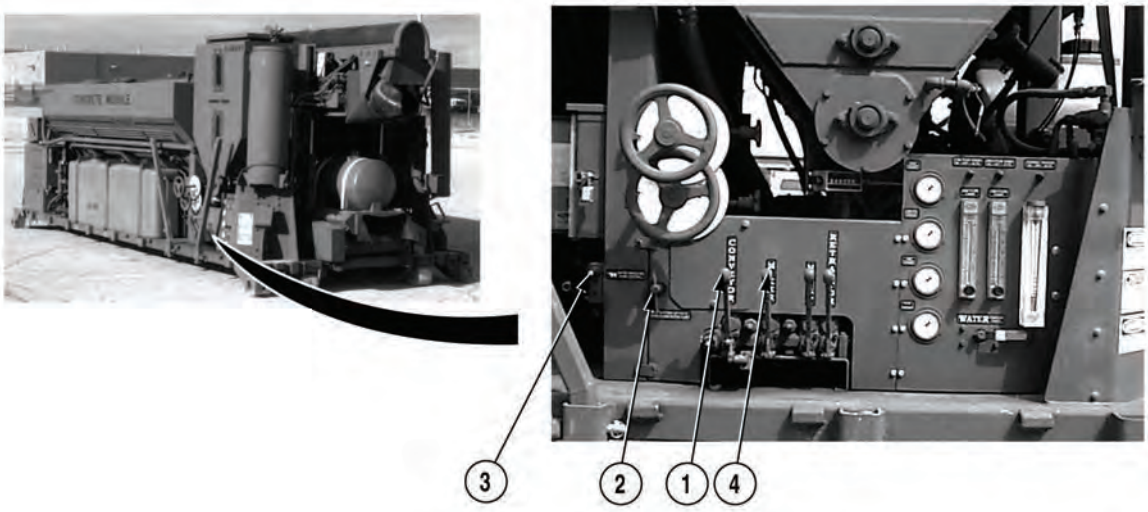

(1) Push CONVEYOR control (1) to “OFF” position.

(2) Start engine, (Para 2-19).

(3) Push WATER PUMP LIFT CYLINDER control (2) in.

(4) Remove drain/fill hose from storage box and install on washout valve (3).

(5) Open washout valve (3).

(6) Turn MIXER control (4) to “ON” position. Allow mixing auger (5) to empty mixed ingredients.

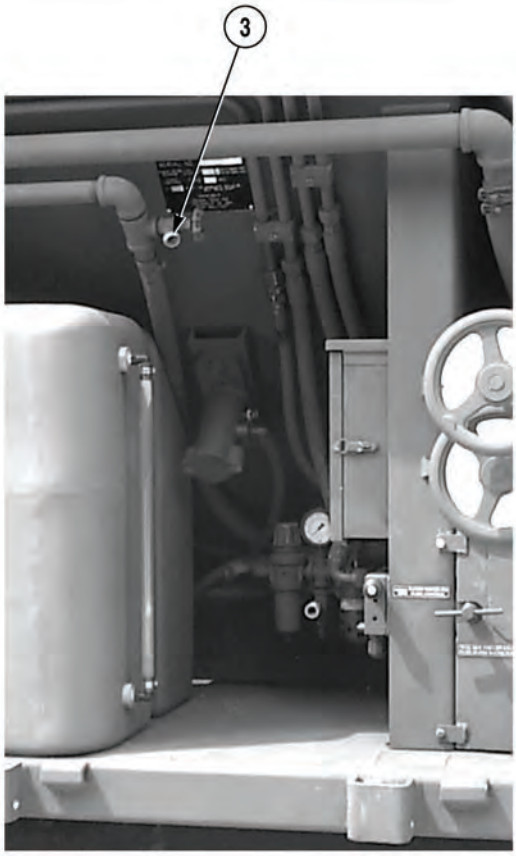

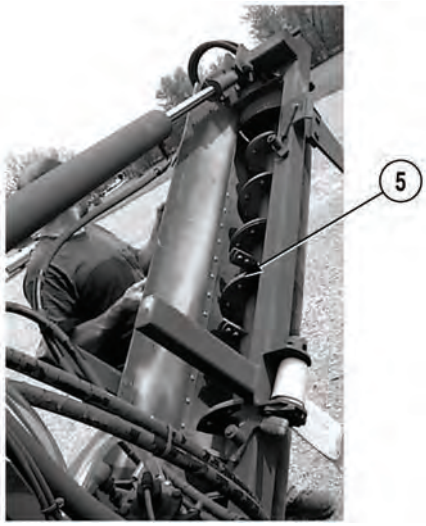

(7) Adjust water pressure valve (6) to increase or decrease water flow.

2-31. CLEANUP (CONT).

(8) With drain/fill hose, rinse away wet concrete.

(9) Remove and wash delivery chutes.

(10) Wash swivel ring area (7).

NOTE

Position auger so water and debris will flow out of end.

(11) Lower mixing auger (5).

(12) Raise mixing auger guards (8).

(13) Wash both inside and outside of mixing auger (5).

(14) Ensure all areas are rinsed thoroughly.

(15) Close mixing auger guard (8).

(16) Raise mixing auger (5) and clean underside of auger chute and motor.

(17) Rinse remaining areas that require cleaning.

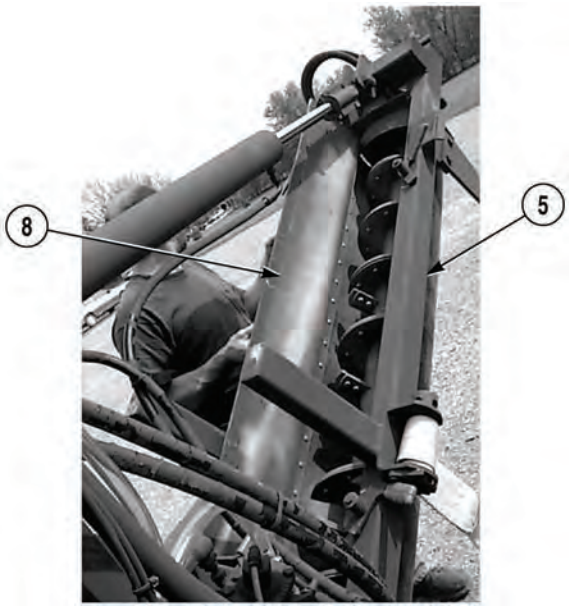

(18) If WATER PRESSURE valve (6) was changed, reset to 40 psi (276 kPa).

(19) Close washout valve (3).

(20) Stow drain/fill hose in stowage box.

(21) Shut off engine, (Para 2-19).

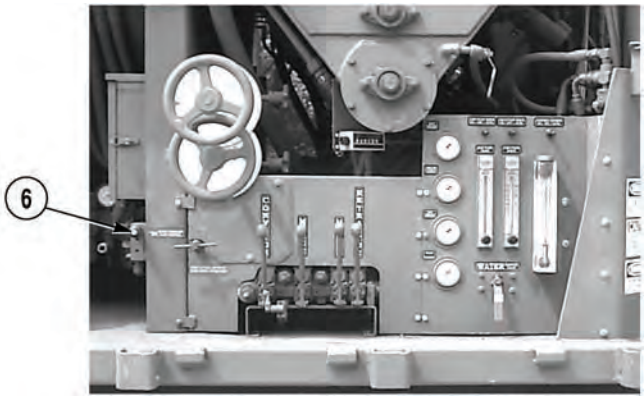

2-32. CLEAN ADMIX STRAINER.

a. Cleaning.

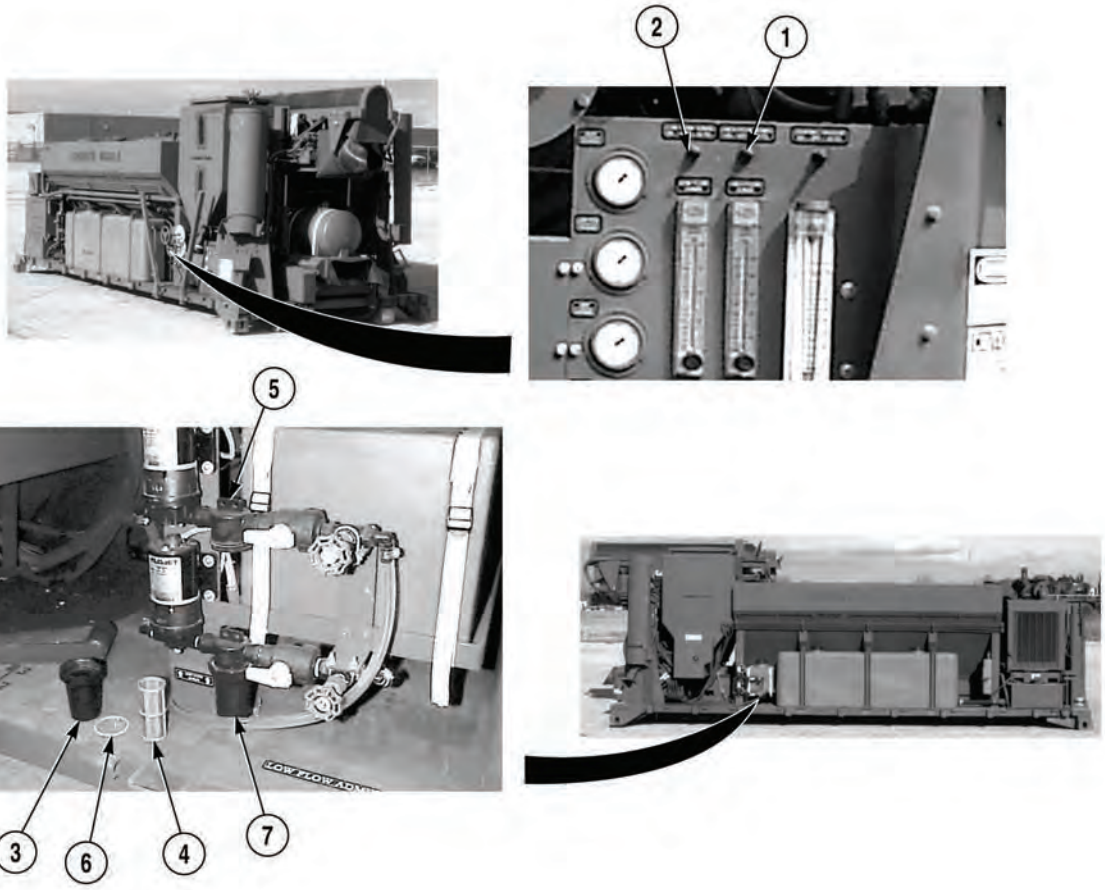

(1) Shut off engine, (Para 2-19).

(2) Remove admix cover, (Para 3-88).

NOTE

There is a high-flow and low-flow admix strainer on the Concrete Mobile Mixer. Both strainers are cleaned the same way.

(3) Turn HIGH FLOW ADMIX switch (1) to “OFF” position.

(4) Turn LOW FLOW ADMIX switch (2) to “OFF” position.

(5) Remove high-flow admix cannister (3) and strainer (4) from head (5).

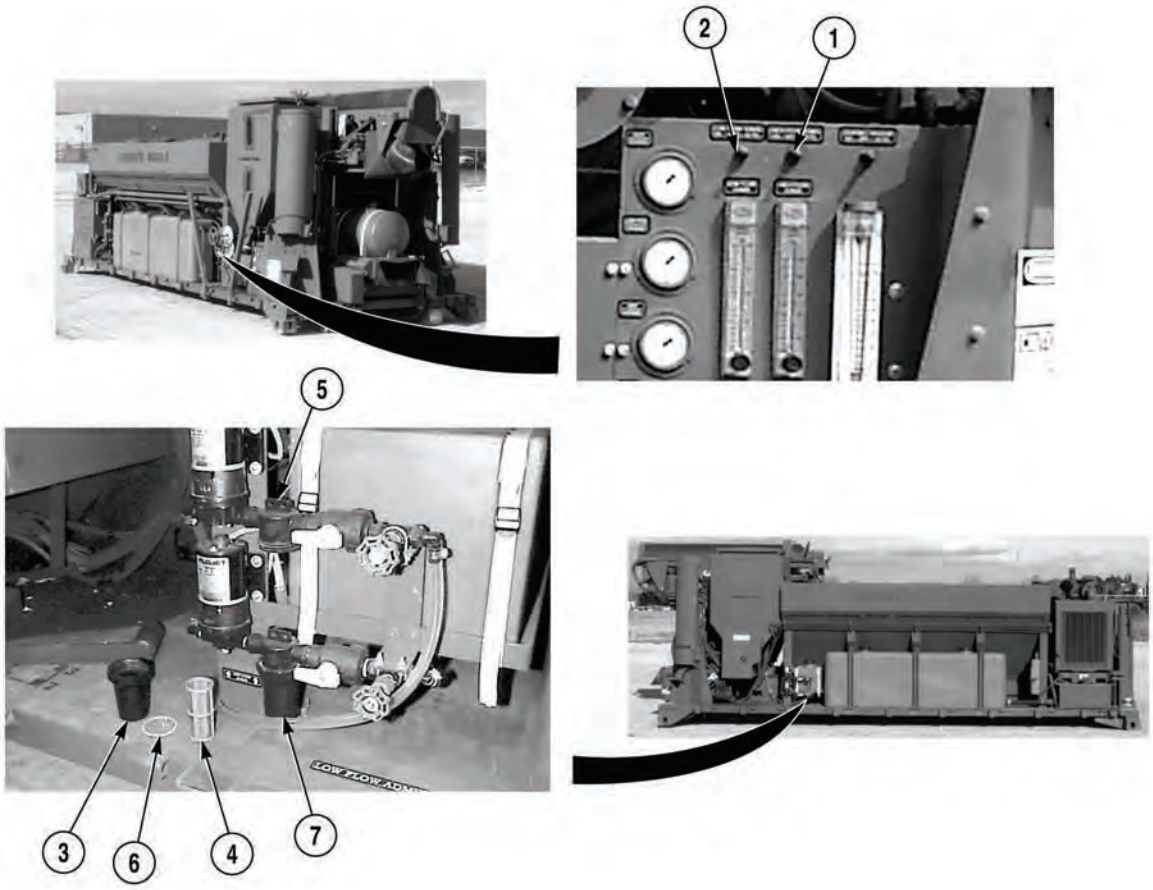

(6) Empty contents of high-flow admix cannister (3). Rinse thoroughly with clean water.

(7) Inspect seal (6) for wear or damage. Replace seal if worn or damaged.

(8) Clean all debris from strainer (4) and rinse thoroughly with clean water.

(9) Install strainer (4) and high-flow admix cannister (3) on head (5). Hand tighten cannister.

(10) Repeat Steps (3) through (7) for low-flow admix strainer (7).

2-33. CLEAN WATER STRAINER.

a. Cleaning.

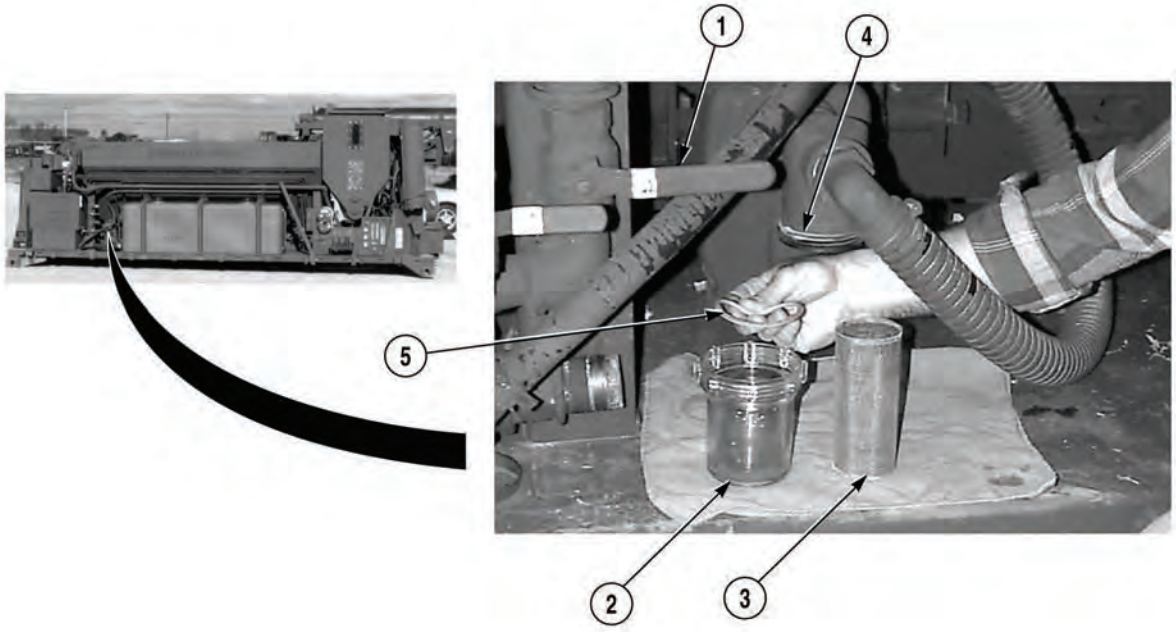

(1) Shut off engine, (Para 2-19).

(2) Turn TANK SUCTION valve (1) to “OFF” position.

(3) Remove cannister (2) and water strainer (3) from head (4).

(4) Empty water from cannister (2). Rinse thoroughly with clean water.

(5) Inspect seal (5) for wear and damage. Replace seal if worn or damaged.

(6) Clean all debris from water strainer (3) and rinse thoroughly with clean water.

(7) Install water strainer (3) and cannister (2) in head (4). Hand tighten cannister.

(8) Turn TANK SUCTION valve (1) to “ON” position.

Section II. OPERATION UNDER UNUSUAL CONDITIONS

2-34. OPERATION IN COLD WEATHER.

Cold weather operation is limited by the restrictions of the materials used to produce concrete.

2-35. COLD AND FREEZING WEATHER PROCEDURES FOR DRAINING WATER AND ADMIX SYSTEMS.

a. Water System.

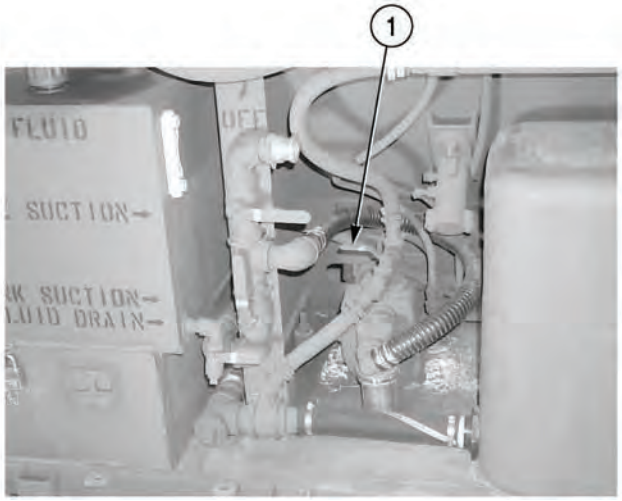

NOTE

Engine must remain running after water tanks are drained.

(1) Drain water tanks, (Para 2-12).

(2) Turn 12 VOLT switch to “ON” position.

(3) Shut off water supply valve (1) at water pump.

2-35. COLD AND FREEZING WEATHER PROCEDURES FOR DRAINING WATER AND ADMIX SYSTEMS (CONT).

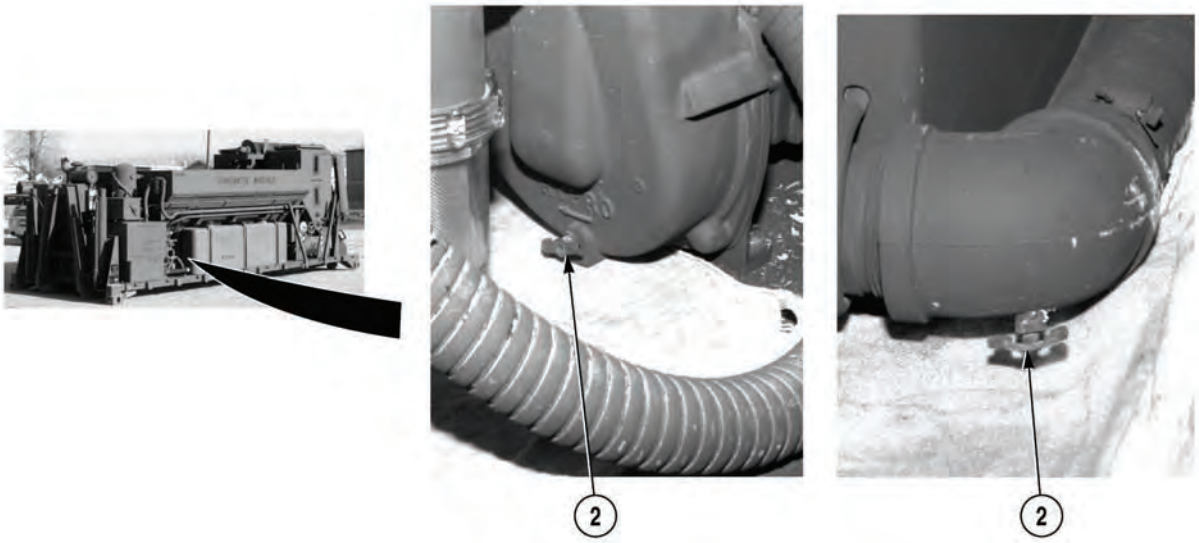

(4) Open two drain cocks (2) on water pump and right side elbow.

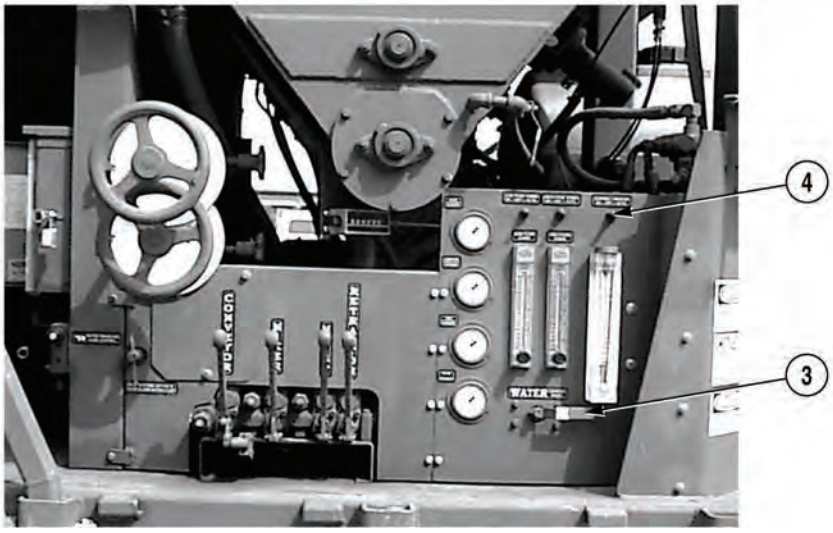

NOTE

Ensure mixing auger assembly is fully lowered when performing Step (5).

(5) Close WATER CONTROL VALVE (3) and turn CONTROL OVERIDE switch (4) to “ON” position.

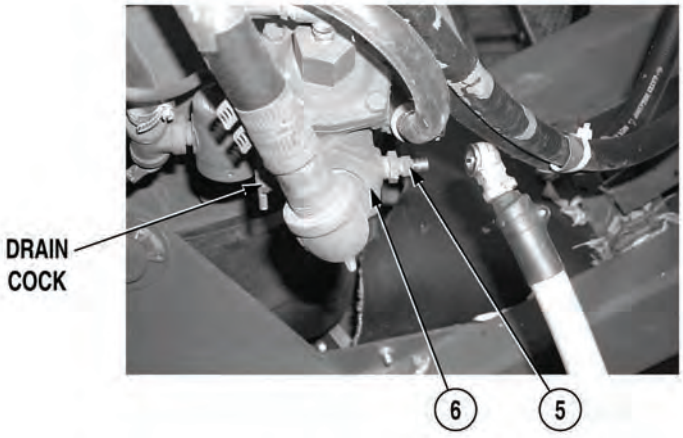

(6) Using air hose, pressurize water system at valve stem (5) located on aquatic water air valve (6) located on swivel hopper. Pressurize until all water is out of the hopper water supply tube.

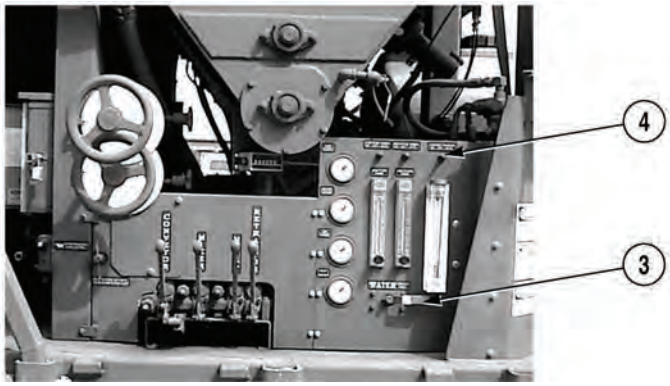

(7) While keeping pressure in system, turn CONTROL OVERIDE switch (4) to “OFF” position, and open WATER CONTROL VALVE (3), pressurize until all water is out of the system.

(8) Open drain cock on aquatic water valve (6).

CAUTION

Continue pressurizing system until all water is drained from pump. Failure to comply could result in damage to equipment.

(9) After all water is drained from the system, leave drain cocks open until next use.

2-35. COLD AND FREEZING WEATHER PROCEDURES FOR DRAINING WATER AND ADMIX SYSTEMS (CONT).

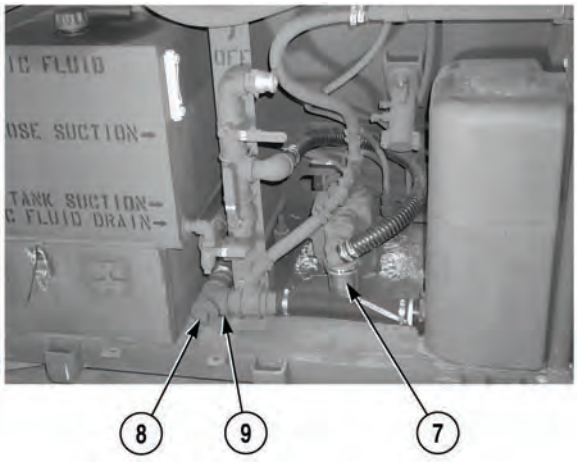

(10) Remove and drain water strainer (7).

(11) Remove plug (8) from tee (9).

(12) Lower front of mixer to drain tank, (Para 2-28).

(13) Shut off engine, (Para 2-19).

(14) Some hoses may be required to be removed to ensure that all water is drained.

(15) When water is drained, install plug (8) on tee (9).

(16) Reinstall strainer. (7).

(17) Open water/separator filter drain cock.

(18) Open hose suction valve, tank suction valve, water supply valve, and wash out valve.

b. Admix System.

NOTE

During cold weather conditions, perform Steps (1) through (9) daily.

(1) Ensure solution valves (1) are open.

(2) Remove admix cover, (Para 3-88).

(3) Drain tanks of admix, (Para 2-15 and Para 2-16).

(4) Remove and drain strainer cannisters (4) and drain water.

(5) Turn ADMIX controls to the “ON” position for 30 seconds, (Para 2-1).

(6) Turn ADMIX controls to the “OFF” position.

NOTE

Lift hoses above drain valves to assist in draining hoses.

(7) Disconnect hose(s) (2) so admix will empty out of lines. Reinstall hose(s).

(8) Open all drain cocks (3) behind flow meters.

(9) Ensure all admix is drained out of system.

(10) Install admix cover, (Para 3-88).

(11) After all water is drained from the system, leave drain cocks open until next use.

(12) Install strainer cannisters (4).

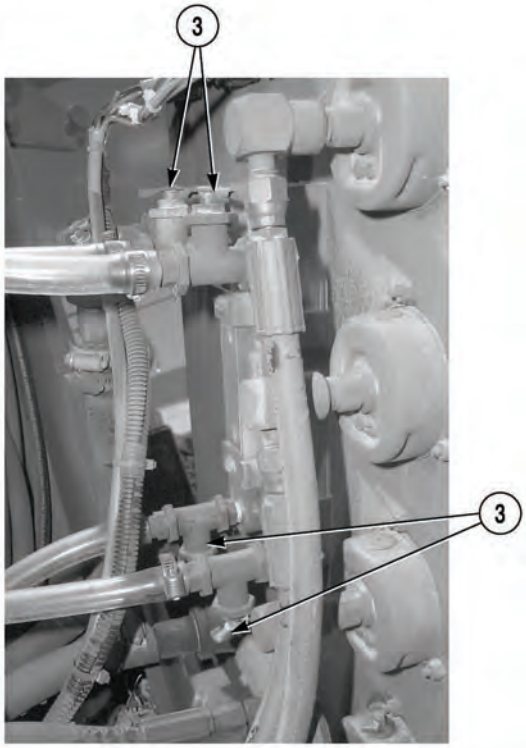

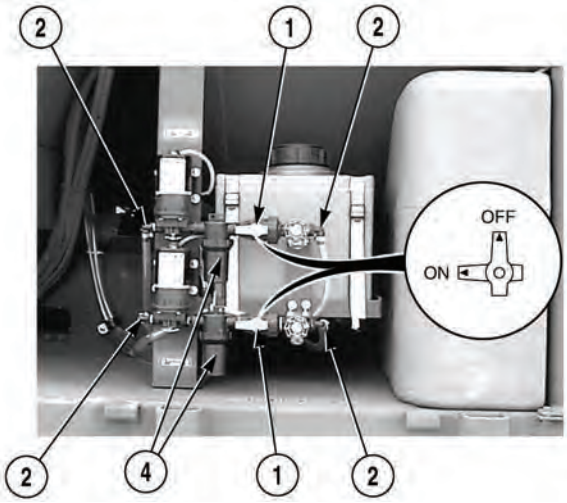

2-36. OPERATION IN HOT WEATHER.

NOTE

Follow these guidelines when operating mixer in hot weather.

(1) Keep tarp (1) over sand and stone bins to keep aggregates from drying out.

(2) Check with supervisor to see if water setting should be increased.

NOTE

Concrete sets faster in warm weather and may harden on mixer.

(3) Clean up immediately when operation is complete, (Para 2-31).

2-37. OPERATION IN HUMID WEATHER.

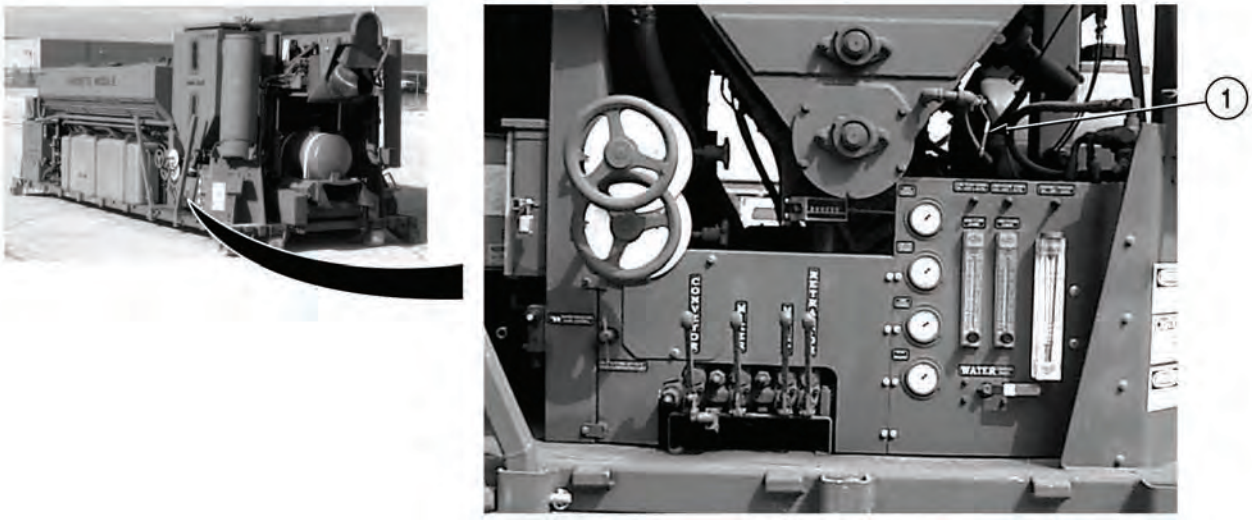

(1) Ensure hopper lid is completely closed and secured, (Para 2-14).

(2) Use fluffer valve (1) to fluff cement frequently.

NOTE

If cement does not fluff or cement augers do not rotate, (Para 2-22b).

(3) Empty the cement bin at the end of the day.

CHAPTER 3

FIELD MAINTENANCE INSTRUCTIONS

Para	Contents	Page
3-1	Introduction	3-4
3-2	General Maintenance Procedures	3-4
3-3	Engine Air Intake Assembly Replacement	3-6
3-4	Engine Air Intake Filter Replacement	3-8
3-5	Exhaust Assembly Replacement	3-10
3-6	Throttle Actuator Replacement (S/N 8RDCD301513HC thru S/N 8RDCD301619HC)	3-12
3-7	Throttle Actuator Replacement (S/N 8RDCD301620HC and Subsequent)	3-15
3-8	Fuel System Bleeding	3-20
3-9	Shear Pin Replacement	3-21
3-10	Batteries Disconnect/Connect	3-23
3-11	Battery Replacement	3-26
3-12	Battery Box Replacement	3-28
3-13	Battery Equalizer Replacement	3-30
3-14	Oil Filter Replacement	3-32
3-15	Oil Filter Head Replacement	3-34
3-16	Magnetic Switch Replacement (Battery Equalizer) (S/N 8RDCD301513HC thru S/N 8RDCD301619HC)	3-36
3-17	Magnetic Switch Replacement (Battery Equalizer) (S/N 8RDCD301620HC and Subsequent)	3-39
3-18	Magnetic Switch Replacement (Starter) (S/N 8RDCD301513HC thru S/N 8RDCD301619HC)	3-43
3-19	Magnetic Switch Replacement (Starter) (S/N 8RDCD301620HC and Subsequent)	3-46
3-20	Radiator Replacement (S/N 8RDCD301513HC thru S/N 8RDCD301619HC)	3-49
3-21	Radiator Replacement (S/N 8RDCD301620HC and Subsequent)	3-59
3-22	Slave Connector and Cable Replacement	3-68
3-23	Starter Replacement (S/N 8RDCD301513HC thru S/N 8RDCD301619HC)	3-74
3-24	Starter Replacement (S/N 8RDCD301620HC and Subsequent)	3-77
3-25	Alternator Replacement (S/N 8RDCD301513HC thru S/N 8RDCD301619HC)	3-81
3-26	Alternator Replacement (S/N 8RDCD301620HC and Subsequent)	3-87
3-27	Fuel Filter(s) Replacement (S/N 8RDCD301513HC thru S/N 8RDCD301619HC)	3-90
3-28	Fuel Filter and Filter Head Replacement (S/N 8RDCD301620HC and Subsequent)	3-95
3-29	Inline Fuel Filter Replacement	3-98
3-30	Engine Replacement (S/N 8RDCD301513HC thru S/N 8RDCD301619HC)	3-100
3-31	Engine Replacement (S/N 8RDCD301620HC and Subsequent)	3-115
3-32	Work Light Replacement	3-130
3-33	Air Reservoir Replacement	3-132
3-34	Hydraulic Pump Replacement	3-135
3-35	Hydraulic Filter Replacement	3-141
3-36	Hydraulic Filter Head Replacement	3-143
3-37	Hydraulic Reservoir Replacement	3-146
3-38	Hydraulic Water Pump Replacement	3-157
3-39	Admix Tank Replacement	3-161
3-40	Water System Strainer Replacement	3-164
3-41	Air Filter Replacement	3-167
3-42	Water Tank Replacement	3-170
3-43	Lift Cylinder Assembly Replacement	3-172
3-44	Admix Strainer Replacement	3-177
3-45	Admix Pumps, Strainer Assemblies, and Solution Valves Replacement	3-179
3-46	Admix Pump Relay(s) Replacement	3-185

Para	Contents	Page

3-47 Air Filter Regulator/Lubricator Assembly Replacement 3-187
3-48 Air Vibrator(s) Replacement 3-194
3-49 Air Cam Valve(s) Replacement 3-196
3-50 Chain Oiler Replacement 3-203
3-51 Hydraulic Control Valve Replacement (Concrete Mobile Mixer Operations) 3-205
3-52 Cement Metering Counter Replacement 3-210
3-53 CONTROL OVERIDE Switch Replacement 3-212
3-54 Gage(s) Replacement 3-214
3-55 Control Box Light Replacement 3-217
3-56 Ignition Switch Replacement 3-220
3-57 Toggle Switch(es) Replacement 3-223
3-58 Fuse(s) and Fuse Holder(s) Replacement 3-226
3-59 Cement Bin Cover and Latch Replacement 3-229
3-60 Override Switch (Tattle Tale Switch) Replacement 3-233
3-61 Hydraulic/Water Pressure Gage(s) Replacement 3-236
3-62 Low-Flow/High-Flow Meter Replacement 3-239
3-63 Water Meter Replacement 3-244
3-64 Air Solenoid Replacement 3-249
3-65 Conveyor Belt Hydraulic Motor Replacement 3-253
3-66 Water Pressure Flow Control Valve Replacement 3-262
3-67 Water Pump/Lift Cylinder Control Valve Replacement 3-264
3-68 Upper Cement Bin Auger and Bearing Replacement 3-268
3-69 Lower Cement Bin Auger and Bearing Replacement 3-274
3-70 Hydraulic Control Valve (Lift Cylinders) Replacement 3-281
3-71 Hydraulic Cylinder Replacement (Hoist) 3-285
3-72 Mixing Auger Hydraulic Motor Replacement 3-288
3-73 Wear Blade(s) Replacement 3-292
3-74 Water Valve Replacement 3-294
3-75 Conveyor Belt Replacement 3-299
3-76 Conveyor Belt Wiper Replacement 3-308
3-77 Conveyor Belt Speed Adjustment 3-319
3-78 Front Engine Access Panel Replacement 3-323
3-79 Side Engine Access Panel Replacement (S/N 8RDCD301513HC thru S/N 8RDCD301619HC) 3-325
3-80 Side Engine Access Panel Replacement (S/N 8RDCD301620HC and Subsequent) 3-328
3-81 Rear Engine Access Panel Replacement 3-330
3-82 Engine Oil Drain/Fill 3-331
3-83 Radiator Drain/Fill 3-333
3-84 Hydraulic Reservoir Drain/Fill 3-335
3-85 Hydraulic Reservoir Filler Cap Replacement 3-337
3-86 Hydraulic Reservoir Strainer Service 3-339
3-87 Retractor Hydraulic Cylinder Replacement 3-342
3-88 Admix and Chain Drive Cover(s) Replacement 3-344
3-89 Grab Handle Replacement 3-346
3-90 Control Box Replacement 3-348
3-91 Auger Shaft and Lower Bearing Replacement 3-350
3-92 Auger Lower Bearing Service 3-357
3-93 Top Engine Cover Replacement 3-361
3-94 Auger Stowage Pad Replacement 3-362
3-95 Pin Replacement 3-363
3-96 Padlock Replacement 3-364
3-97 Fuel Transfer Pump Replacement (S/N 8RDCD301513HC thru S/N 8RDCD301619HC) 3-365
3-98 Fuel Transfer Pump Replacement (S/N 8RDCD301620HC and Subsequent) 3-369
3-99 Thermostat Replacement (S/N 8RDCD301513HC thru S/N 8RDCD301619HC) 3-372
3-100 Thermostat Replacement (S/N 8RDCD301620HC and Subsequent) 3-375

Para	Contents	Page

3-101 Fan Blade Replacement (S/N 8RDCD301513HC thru S/N 8RDCD301619HC) 3-378
3-102 Fan Blade Replacement (S/N 8RDCD301620HC and Subsequent) 3-380
3-103 Oil Pan Replacement 3-382
3-104 Water Pump Replacement (S/N 8RDCD301513HC thru S/N 8RDCD301619HC) 3-385
3-105 Water Pump Replacement (S/N 8RDCD301620HC and Subsequent) 3-387
3-106 Fan Drive Belt Replacement (S/N 8RDCD301513HC thru S/N 8RDCD301619HC) 3-389
3-107 Fan Drive Belt Replacement (S/N 8RDCD301620HC and Subsequent) 3-392
3-108 Fan Drive Belt Tensioner Replacement (S/N 8RDCD301620HC and Subsequent) 3-395
3-109 Air Compressor Replacement (S/N 8RDCD301513HC thru S/N 8RDCD301619HC) 3-396
3-110 Air Compressor Replacement (S/N 8RDCD301620HC and Subsequent) 3-403
3-111 Fuel Pump Solenoid Replacement (S/N 8RDCD301513HC thru S/N 8RDCD301619HC) 3-411
3-112 Fuel Pump Thermo Switch Replacement (S/N 8RDCD301620HC and Subsequent) 3-412
3-113 Aggregate Deflector Assembly Replacement 3-414
3-114 High-Flow/Low-Flow Admix Valve(s) Replacement 3-416
3-115 Fuel Injector Replacement 3-421
3-116 Fuel Injector Pump Replacement (S/N 8RDCD301513HC thru S/N 8RDCD301619HC) 3-426
3-117 Fuel Injector Pump Replacement (S/N 8RDCD301620HC and Subsequent) 3-439
3-118 Fuel Tank Replacement (S/N 8RDCD301620HC and Subsequent) 3-453
3-119 Cement Bin Clutch Replacement 3-457
3-120 Aggregate Bin(s) Gate Replacement 3-470
3-121 Cement Fluffer Control Valve Replacement 3-484
3-122 Retractor Cylinders Double Check Valve Replacement 3-487
3-123 Hoist Cylinder Relief and Double Check Valve Replacement 3-489
3-124 Pressure Switch Replacement (S/N 8RDCD301620HC and Subsequent) 3-493
3-125 Temperature Sensor Replacement (S/N 8RDCD301620HC and Subsequent) 3-495
3-126 Ball Valve(s) (Water) Replacement 3-497
3-127 High Idle Control Module Replacement 3-502
3-128 Timing Pin Replacement (S/N 8RDCD301620HC and Subsequent) 3-508
3-129 Hydraulic Hose and Tube Replacement 3-510
3-130 Admix Tube Replacement 3-519
3-131 Water Hose and Pipe Replacement 3-521
3-132 Air Line Replacement 3-524
3-133 Fuel Lines Replacement (S/N 8RDCD301620HC and Subsequent) 3-529
3-134 Main Wire Harness Replacement 3-531
3-135 Roller Switch and Control Wire Harness Replacement 3-536
3-136 Engine Wire Harness Replacement (S/N 8RDCD301620HC and Subsequent) 3-550
3-137 Control Box Wire Harness (8-Pin Connector) Replacement 3-566
3-138 Control Box Wire Harness (5-Pin Connector) Replacement 3-572
3-139 Control Box Wire Harness (4-Pin Connector) Replacement 3-575
3-140 Battery Equalizer and Slave Receptacle Cable Replacement (S/N 8RDCD301620HC and Subsequent) 3-578
3-141 Wire Repair 3-582
3-142 Cylinder Head Replacement (S/N 8RDCD301513HC thru S/N 8RDCD301619HC) 3-584
3-143 Push Rod Cover Replacement (S/N 8RDCD301513HC thru S/N 8RDCD301619HC) 3-604
3-144 Hydraulic Schematics 3-607
3-145 Pneumatic Schematics 3-613
3-146 Electric Schematics 3-615
3-147 Water Schematics 3-623

3-1. INTRODUCTION.

This section contains Unit and Direct Support Maintenance Instructions for the Concrete Mobile Mixer. To ensure the Concrete Mobile Mixer is ready for operation at all times, it must be inspected on a regular basis so defects may be found before they result in serious damage, equipment failure, or injury to personnel.

3-2. GENERAL MAINTENANCE PROCEDURES.

WARNING

- Dry-cleaning solvent (P-D-680) is TOXIC and flammable. Wear protective goggles, face shield, and gloves; use only in a well-ventilated area; avoid contact with skin, eyes, and clothes, and do not breathe vapors. Keep away from heat or flame. Never smoke when using solvent. The flashpoint for Type II dry-cleaning solvent is 140°F (60°C) and Type III dry-cleaning solvent is 200°F (93°C). Failure to do so may result in serious injury or death to personnel.
- If personnel become dizzy while using cleaning solvent, immediately get fresh air and medical help. If solvent contacts skin or clothes, flush with cold water. If solvent contacts eyes, immediately flush eyes with water and get immediate medical attention.

a. ***Cleanliness.*** Dirt, grease, oil, and debris only get in the way and may cover up a serious problem. Use dry-cleaning solvent on metal surfaces and soapy water on rubber.

b. ***Bolts, Nuts, and Screws.*** Check bolts, nuts, and screws for obvious looseness, missing, bent or broken condition, and tighten or replace as necessary. If they cannot be checked with a tool, look for chipped paint, bare metal, or rust around bolt heads.

c. ***Welds.*** Look for loose or chipped paint, rust, or gaps where parts are welded together. If a cracked weld is found, notify the supervisor.

d. ***Electric Wires and Connectors.*** Look for cracked or broken insulation, bare wires, and loose or broken connectors. Tighten loose connectors and make sure the wires are in good shape.

e. ***Fluid Hoses, Tubes, and Fittings.*** Look for wear, damage, leaks, and make sure clamps and fittings are tight. Wet spots show leaks, but a stain around a fitting or connector may indicate a leak. If connector or fitting is loose, tighten it. If something is broken or worn out, repair or replace per applicable procedure.

f. ***Fluid Leakage.*** It is necessary to know how fluid leakage affects the status of fuel, oil, coolant, and the hydraulic system. The following are definitions of the type/classes of leakage necessary to know in order to determine the status of the module. Learn, then be familiar with them, and REMEMBER—WHEN IN DOUBT, NOTIFY THE SUPERVISOR!

CAUTION

Equipment operation is allowable with minor leakage (Class I or II). Consideration must be given to the fluid capacity in the item/system being checked/inspected. When in doubt, notify the supervisor. When operating with Class I or II leaks, continue to check fluid levels as required in the PMCS. Class III leaks should be repaired per the applicable procedure.

(1) Class I. Seepage of fluid as indicated by wetness or discoloration not great enough to form drops.

(2) Class II. Leakage of fluid great enough to form drops but not enough to cause drops that fall from item being checked/inspected.

(3) Class III. Leakage of fluid great enough to form drops that fall from the item being checked/inspected.

g. Air System Components. Look for worn, damaged, or leaking components. Make sure clamps and fittings are tight. If a leak comes from a loose fitting or connector, tighten it. If something is broken or worn out, either repair or replace it.

h. Damage. Damage is defined as any condition that affects safety or would make the truck unserviceable for mission requirements.

3-3. ENGINE AIR INTAKE ASSEMBLY REPLACEMENT.

This task covers:

a. Removal b. Installation c. Follow-On Maintenance

INITIAL SETUP

Tools and Special Tools
Tool Kit, General Mechanic's: Automotive (Item 19, Appendix I)

Materials/Parts
Locknut (4) (MS51943-33)
Screw, Self-Tapping (B71-10015-002)

Equipment Condition
Concrete Mobile Mixer unloaded, (Para 2-5)
Front engine access panel removed, (Para 3-78)

a. Removal.

WARNING

Ensure air intake assembly is cool before performing this task. Failure to comply could result in serious burns to personnel.

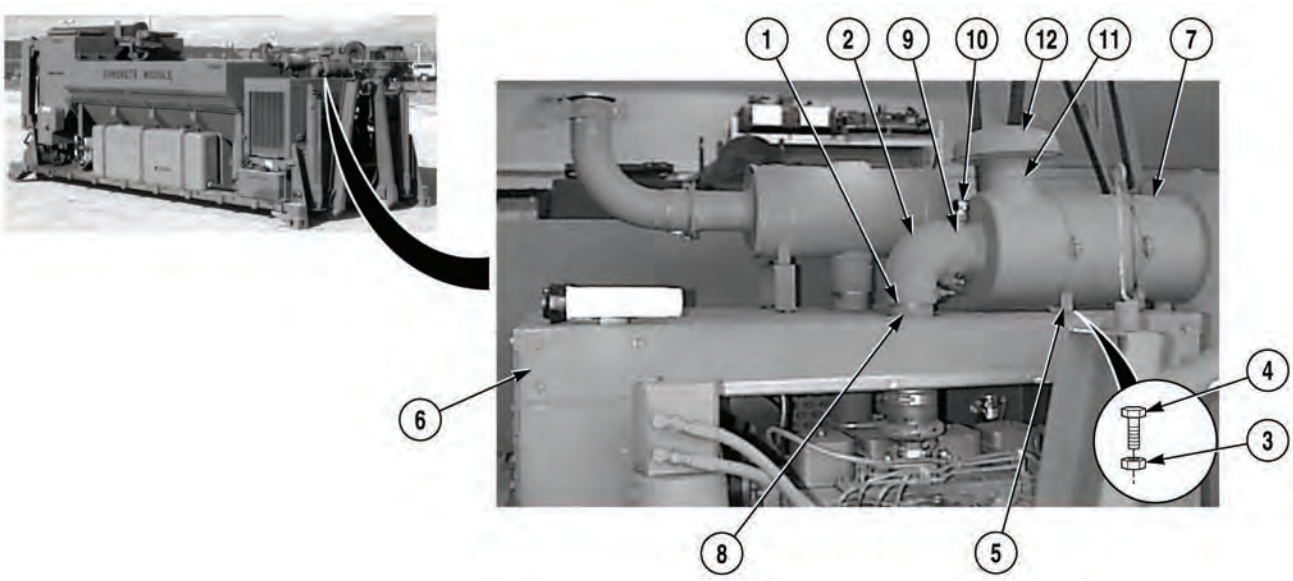

(1) Loosen clamp (1) on elbow (2) and slide clamp down.

(2) Remove four locknuts (3), screws (4), and two brackets (5) from upper engine cover (6). Discard locknuts.

(3) Remove air intake assembly (7) and elbow (2) from air intake tube (8).

(4) Loosen clamp (9) on elbow (2), and remove clamp (9) and elbow (2) from air intake assembly (7).

(5) Remove air restriction indicator (10) from air intake assembly (7).

(6) Remove self-tapping screw (11) and rain cap (12) from air intake assembly (7). Discard self-tapping screw (11).

b. Installation.

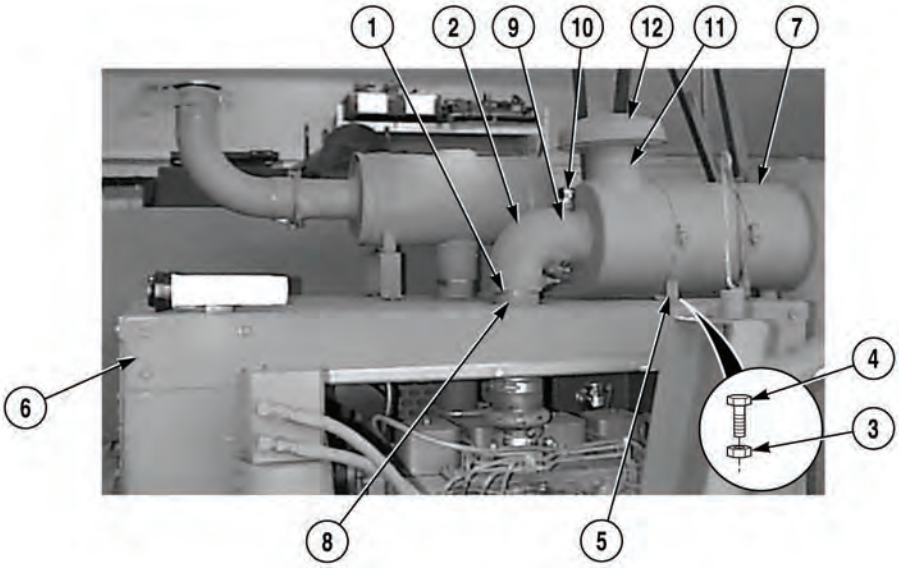

(1) Install rain cap (12) on air intake assembly (7) with self-tapping screw (11).

(2) Install air restriction indicator (10) on air intake assembly (7).

(3) Position elbow (2) and clamp (9) on air intake assembly (7). Do not tighten clamp.

(4) Position elbow (2) and clamp (1) on air intake tube (8). Do not tighten clamp.

(5) Install two brackets (5) on upper engine cover (6) with four screws (4) and locknuts (3).

(6) Tighten two clamps (1) and (9) on elbow (2).

c. Follow-On Maintenance:

- Install front engine access panel, (Para 3-78).

END OF TASK

3-4. ENGINE AIR INTAKE FILTER REPLACEMENT.

This task covers:

a. Removal b. Installation

INITIAL SETUP

Tools and Special Tools
Tool Kit, General Mechanic's: Automotive (Item 19, Appendix I)

Equipment Condition
Engine OFF, (Para 2-19)

a. Removal.

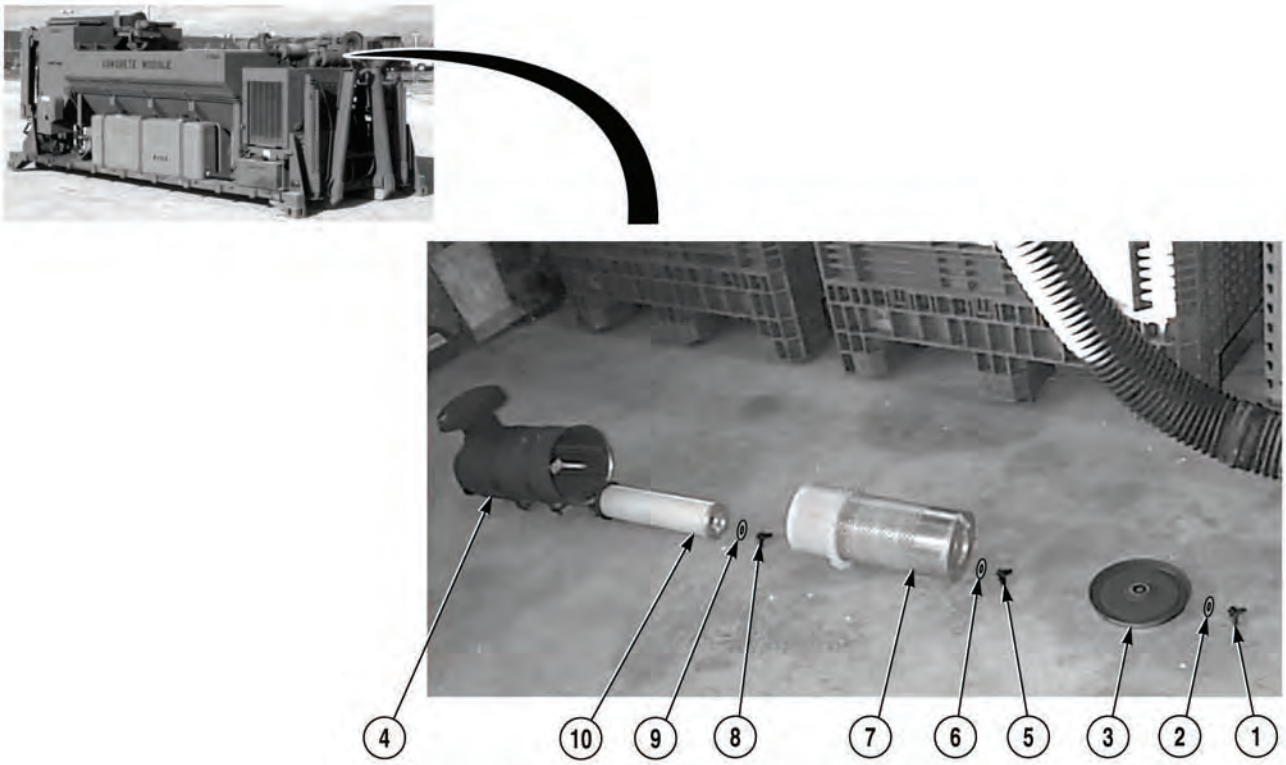

(1) Remove nut (1), rubber washer (2), and cover (3) from air intake (4).

(2) Remove nut (5), rubber washer (6), and primary filter (7) from air intake (4). Discard primary filter.

(3) Remove nut (8), rubber washer (9), and secondary filter (10) from air intake (4). Discard secondary filter.

b. Installation.

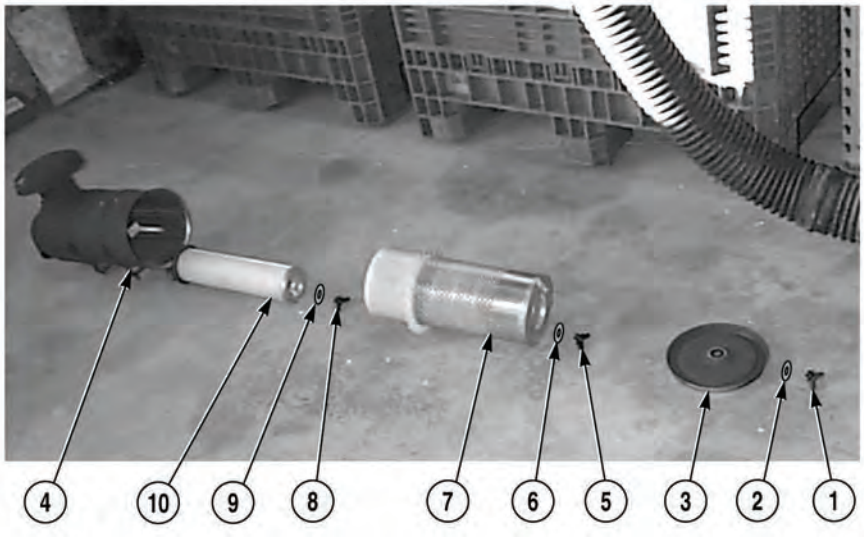

(1) Install secondary filter (10) in air intake (4) with rubber washer (9) and nut (8).

(2) Install primary filter (7) in air intake (4) with rubber washer (6) and nut (5).

(3) Install cover (3) on air intake (4) with rubber washer (2) and nut (1).

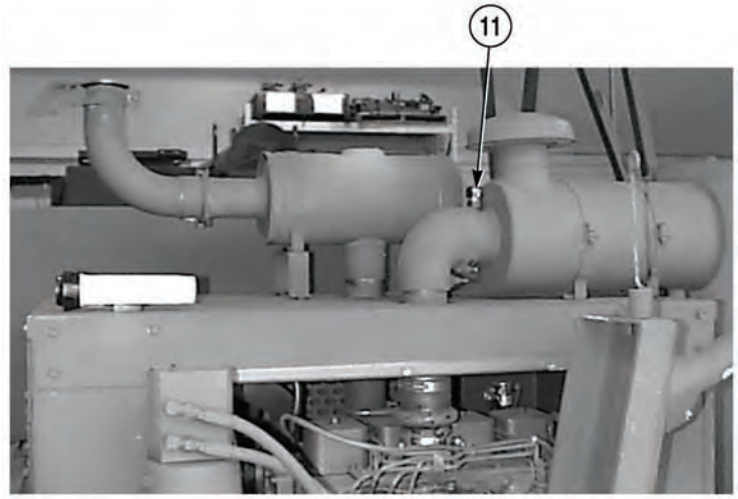

(4) Reset air restriction indicator (11) if necessary.

END OF TASK

3-5. EXHAUST ASSEMBLY REPLACEMENT.

This task covers:

a. Removal b. Installation c. Follow-On Maintenance

INITIAL SETUP

Tools and Special Tools
Tool Kit, General Mechanic's: Automotive
(Item 19, Appendix I)

Materials/Parts
Locknut (4) (NS51943-33)

Equipment Condition
Concrete Mobile Mixer unloaded, (Para 2-5)
Front engine access panel removed, (Para 3-78)

a. Removal.

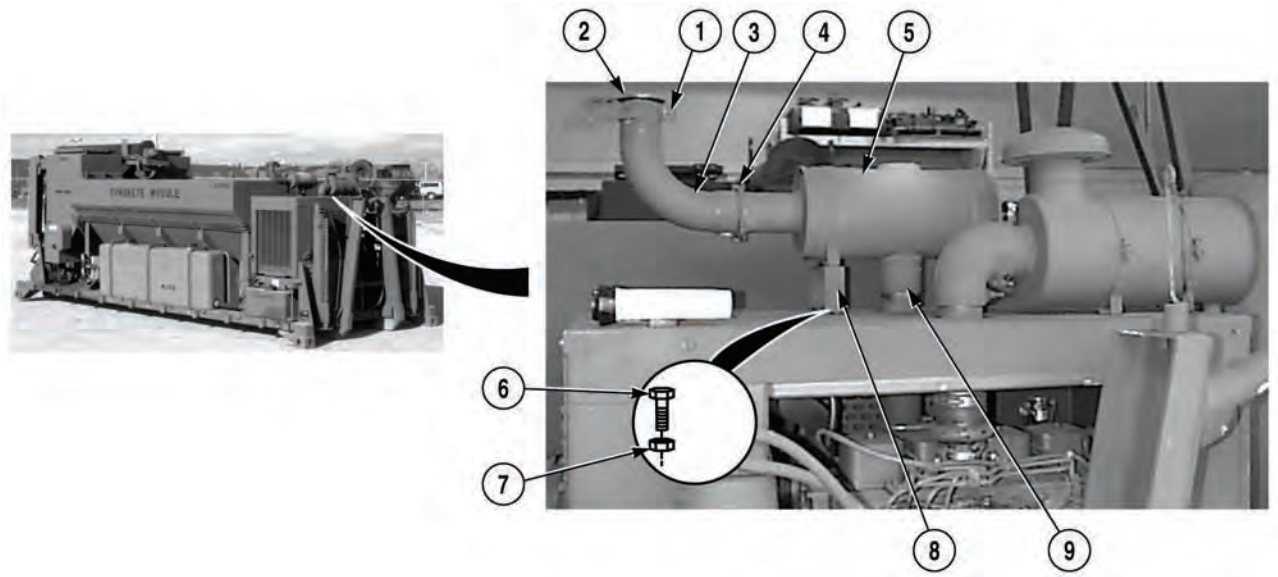

WARNING

Ensure exhaust assembly is cool before performing this task. Failure to comply could result in serious burns to personnel.

(1) Loosen clamp (1) and remove rain cap (2) from elbow (3).

(2) Loosen clamp (4) and remove elbow (3) and clamp (4) from exhaust assembly (5).

NOTE

Some models have stud with bushing.

(3) Remove four screws (6) and locknuts (7) from two brackets (8) and exhaust assembly (5). Discard locknuts.

(4) Remove exhaust assembly (5) from two brackets (8) and exhaust pipe (9).

b. Installation.

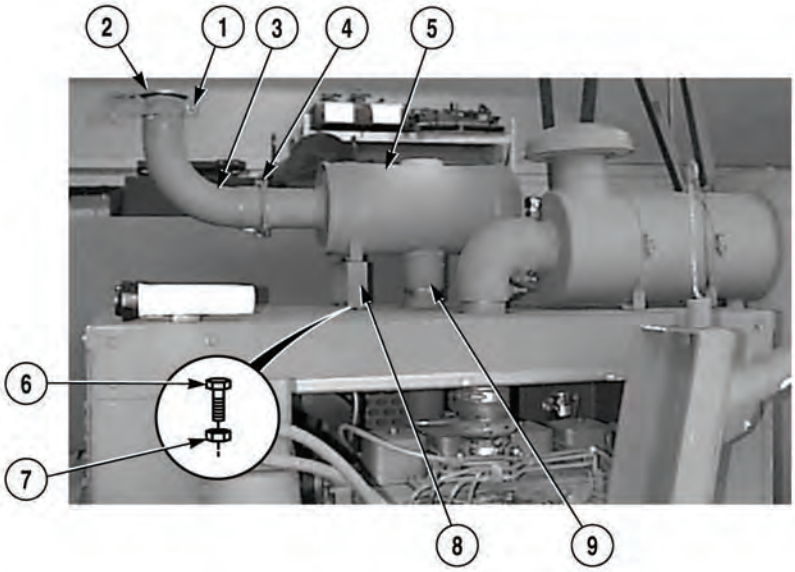

(1) Position exhaust assembly (5) on two brackets (8) and exhaust pipe (9).

(2) Install four screws (6) and locknuts (7) on two brackets (8) and exhaust assembly (5).

(3) Install elbow (3) and clamp (4) on exhaust assembly (5). Tighten clamp (4).

(4) Install rain cap (2) and clamp (1) on elbow (3). Tighten clamp (1).

c. Follow-On Maintenance:

- Install front engine access panel, (Para 3-78).

END OF TASK

3-6. THROTTLE ACTUATOR REPLACEMENT (S/N 8RDCD301513HC THRU S/N 8RDCD301619HC).

This task covers:

a. Removal b. Installation c. Follow-On Maintenance

INITIAL SETUP

Tools and Special Tools
Tool Kit, General Mechanic's: Automotive (Item 19, Appendix I)

Materials/Parts
Cable Ties (Item 2, Appendix H)
Locknut (MS51922-9)

Equipment Condition
Batteries disconnected, (Para 2-19)
Front engine access panel removed, (Para 3-78)

a. Removal.

NOTE

Connector is removed by gently prying on tabs.

(1) Remove connector (1) from connector (2).

NOTE

- Note position of fuel injection pump control lever prior to removal.
- Note position of drain hole on throttle actuator's rubber boot prior to removal.
- Remove cable ties as required.

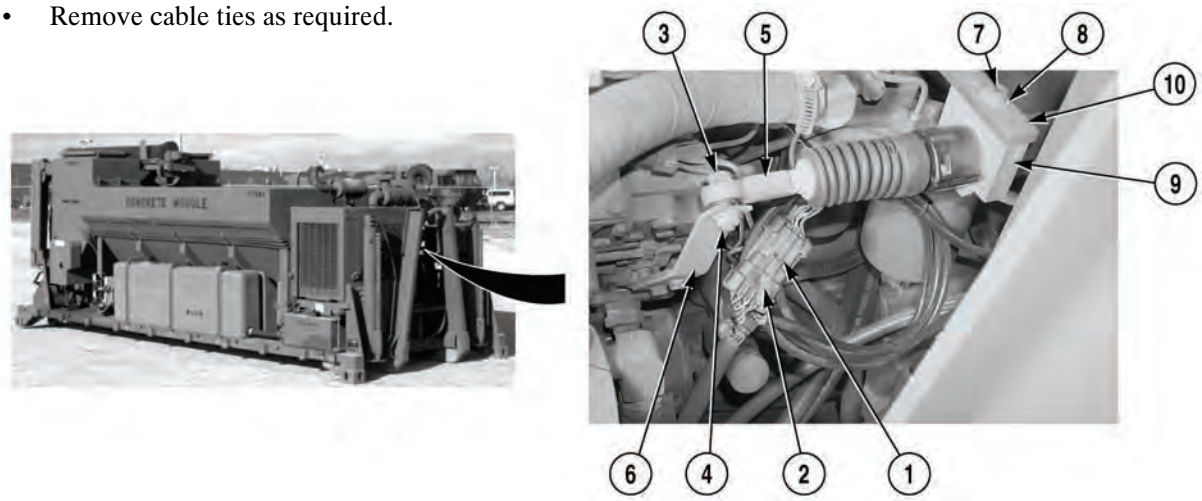

(2) Remove screw (3), locknut (4) and throttle actuator (5) from fuel injection pump control lever (6). Discard locknut.

(3) Remove screw (7), washer (8), bracket (9) and throttle actuator (5) from bracket (10).

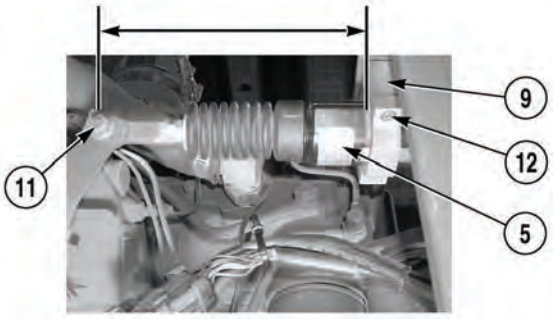

(4) Measure distance between bracket (9) and eyelet (11).

(5) Remove screw (12) and throttle actuator (5) from bracket (9).

b. Installation.

NOTE

- Install cable ties as required.
- Ensure drain hole on throttle actuator's rubber boot in the down position.

(1) Position throttle actuator (5) on bracket (9) with screw (12). Do not tighten screw.

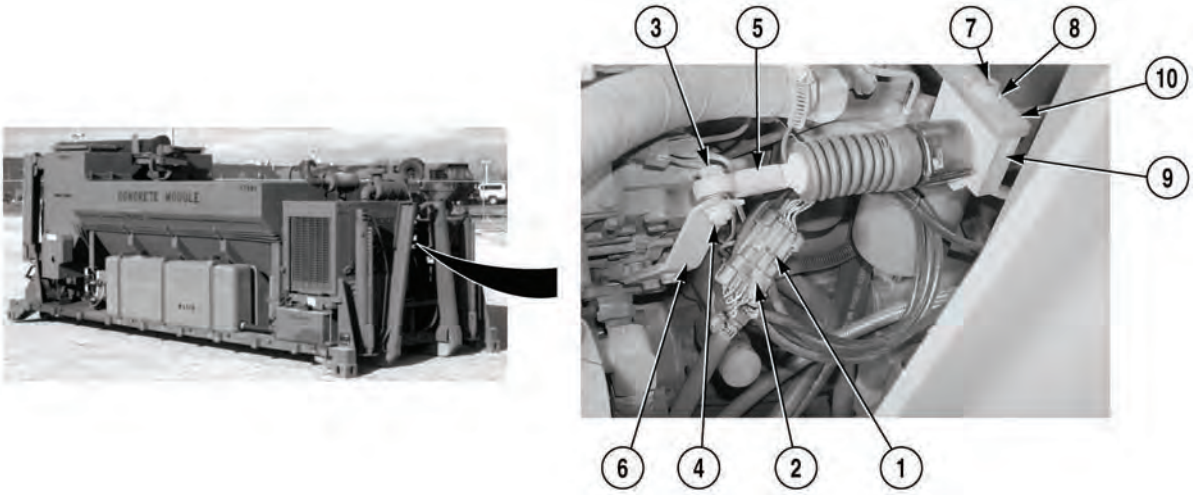

(2) Install throttle actuator (5) and bracket (9) on bracket (10) with washer (8) and screw (7).

(3) Install throttle actuator (5) on fuel injection pump control lever (6) with locknut (4) and screw (3).

NOTE

- Ensure fuel injection pump control lever is fully retracted toward the throttle actuator.
- Use measurement of throttle actuator as recorded during removal.

(4) Adjust throttle actuator (5) on bracket (9) and tighten screw (12).

(5) Install connector (2) on connector (1).

3-6. THROTTLE ACTUATOR REPLACEMENT (S/N 8RDCD301513HC THRU S/N 8RDCD301619HC) (CONT).

c. Follow-On Maintenance:

- Connect Batteries, (Para 3-10).
- Start engine, (Para 2-19).
- Check operation.
- Shut off engine, (Para 2-19).
- Install front engine access panel, (Para 3-78).

END OF TASK

3-7. THROTTLE ACTUATOR REPLACEMENT (S/N 8RDCD301620HC AND SUBSEQUENT).

This task covers:

a. Removal
b. Installation
c. Adjustment
d. Follow-On Maintenance

INITIAL SETUP

Tools and Special Tools
Tool Kit, General Mechanic's: Automotive (Item 19, Appendix I)

Materials/Parts
Cable Ties (Item 2, Appendix H)
Locknut (MS51922-9)

Equipment Condition
Batteries disconnected, (Para 3-10)
Front engine access panel removed, (Para 3-78)

a. Removal.

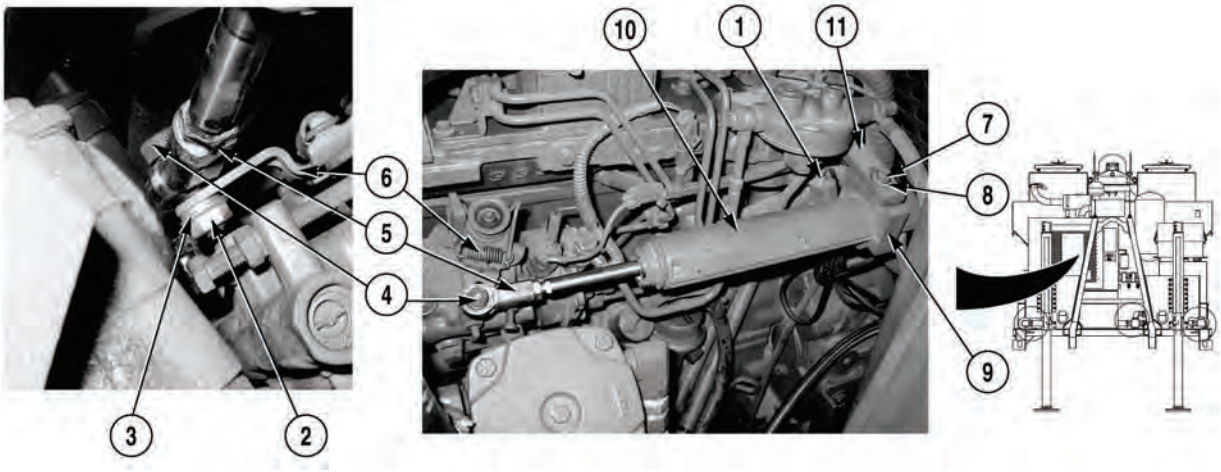

(1) Disconnect connector (1).

NOTE

- Note position of fuel injector pump control lever prior to removal.
- Remove cable ties as required.

(2) Remove locknut (2), washer (3), screw (4), and rod end (5) from throttle lever (6). Discard locknut.

(3) Remove screw (7), washer (8), bracket (9), and throttle actuator (10) from bracket (11).

3-7. THROTTLE ACTUATOR REPLACEMENT (S/N 8RDCD301620HC AND SUBSEQUENT) (CONT).

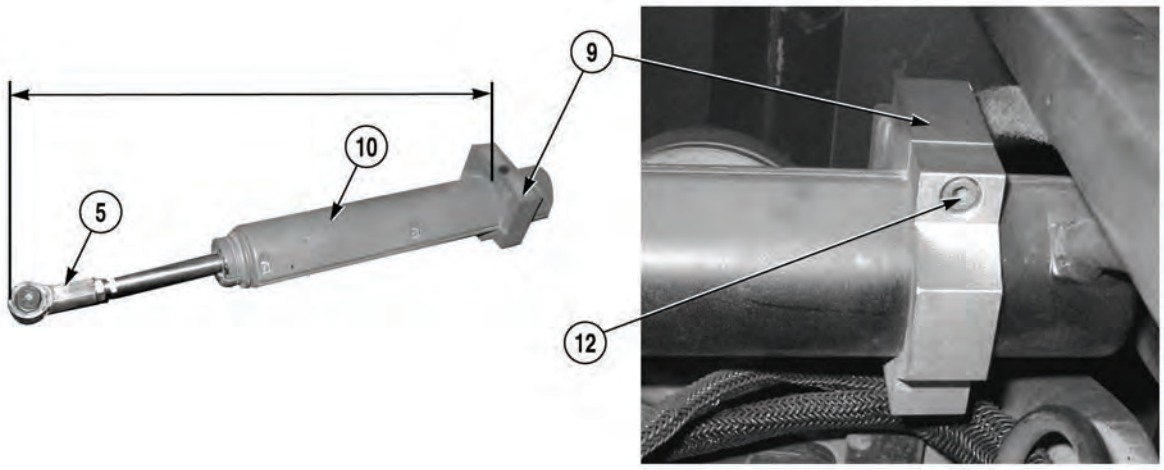

(4) Measure distance between end of rod end (5) and where bracket (9) contacts throttle actuator (10).

(5) Remove screw (12) and throttle actuator (10) from bracket (9).

b. Installation.

NOTE

Install cable ties as required.

(1) Position throttle actuator (10) on bracket (9) with screw (12). Do not tighten screw.

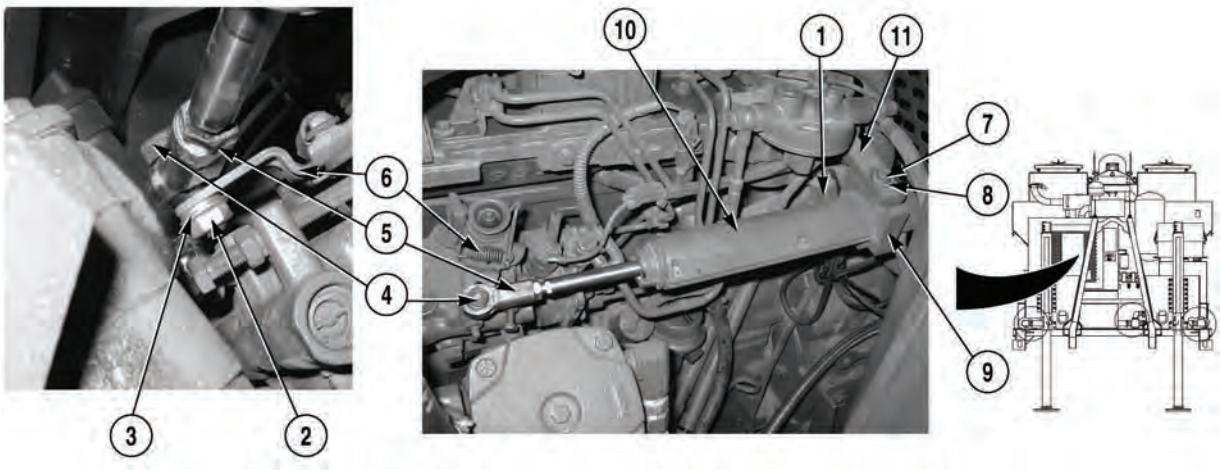

(2) Install throttle actuator (10) and bracket (9) on bracket (11) with washer (8) and screw (7).

(3) Install rod end (5) on throttle lever (6) with screw (4), washer (3), and locknut (2).

(4) Connect connector (1).

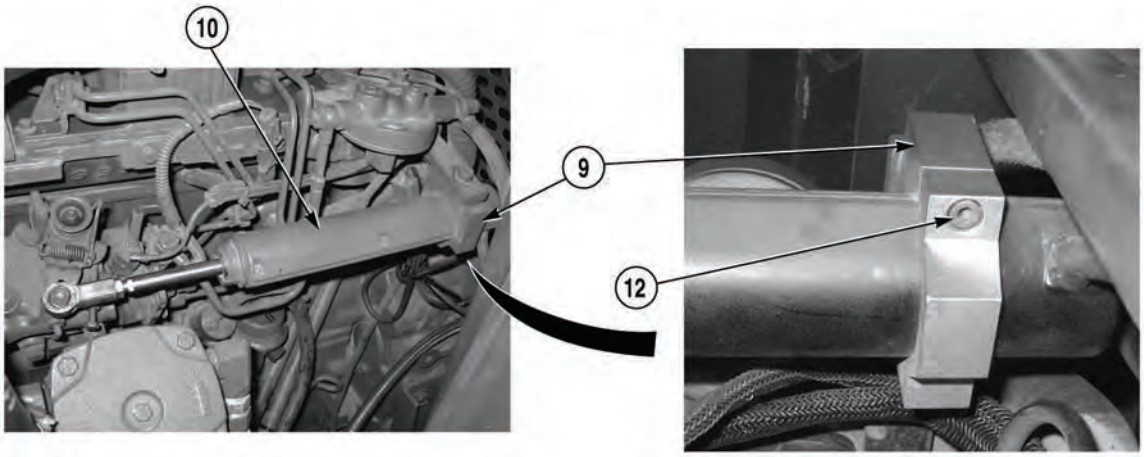

NOTE

- Ensure fuel injector pump control lever is fully retracted toward the throttle actuator.
- Use measurement of throttle actuator as recorded during removal.

(5) Tighten throttle actuator (10) on bracket (9) with screw (12).

c. Adjustment.

(1) Connect batteries, (Para 3-10).

(2) Start engine, (Para 2-19).

NOTE

Engine high idle must run at 2250 RPM. Perform Steps (3) and (4) to determine correct RPM.

(3) Operate engine at high idle, (Para 2-19).

(4) Determine engine RPM, (Para 2-1).

(5) Shut off engine, (Para 2-19).

3-7. THROTTLE ACTUATOR REPLACEMENT (S/N 8RDCD301620HC AND SUBSEQUENT) (CONT).

NOTE

If engine RPM does not run at 2250 RPM perform Steps (6) through (10) to adjust throttle actuator to run at correct RPM.

WARNING

Batteries are connected during adjustment process. Magnetic switch connections are exposed 12 and 24 volts. Take care not to make contact with magnetic switch connections and engine enclosure. Failure to comply may result in serious injury to personnel and/or damage to equipment.

NOTE

Position cover through engine enclosure to access high idle control module.

(6) Remove four screws (13) and cover (14) from engine enclosure (15).

(7) Start engine, (Para 2-19).

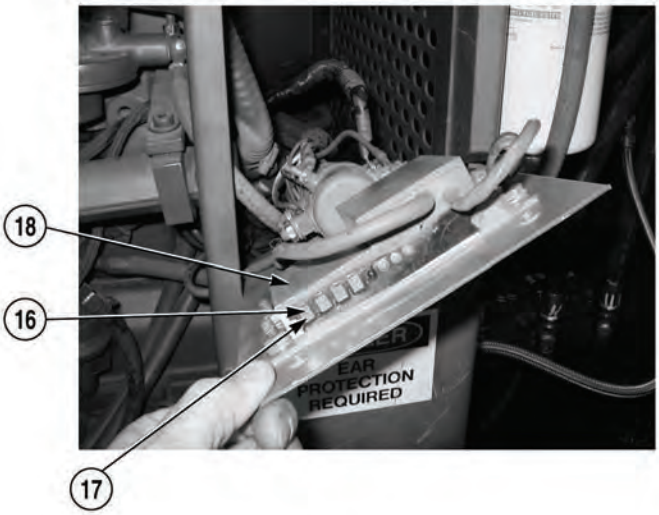

(8) Adjust screw (16) on trimmer pot (17) of high idle control module (18) until 2250 RMM is achieved.

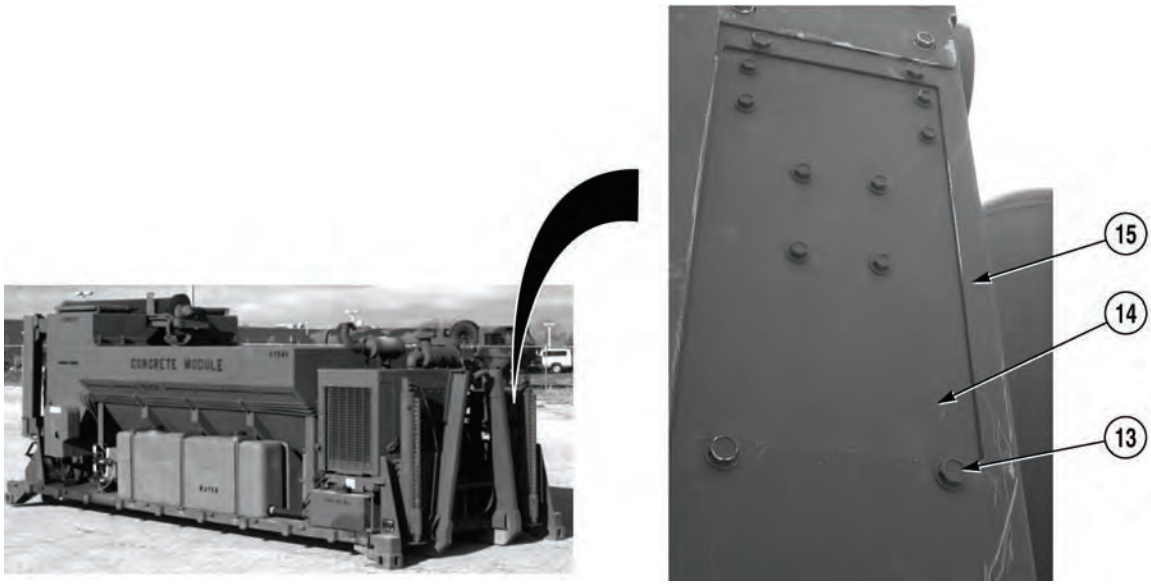

(9) Shut off engine, (Para 2-19).

(10) Install cover (14) on engine enclosure (15) with four screws (13).

d. Follow-On Maintenance:

- Install front engine access panel, (Para 3-78).

END OF TASK

3-8. FUEL SYSTEM BLEEDING.

This task covers:

a. Bleeding

b. Follow-On Maintenance

INITIAL SETUP

Equipment Condition

Front access panel removed, (Para 3-78).

a. Bleeding

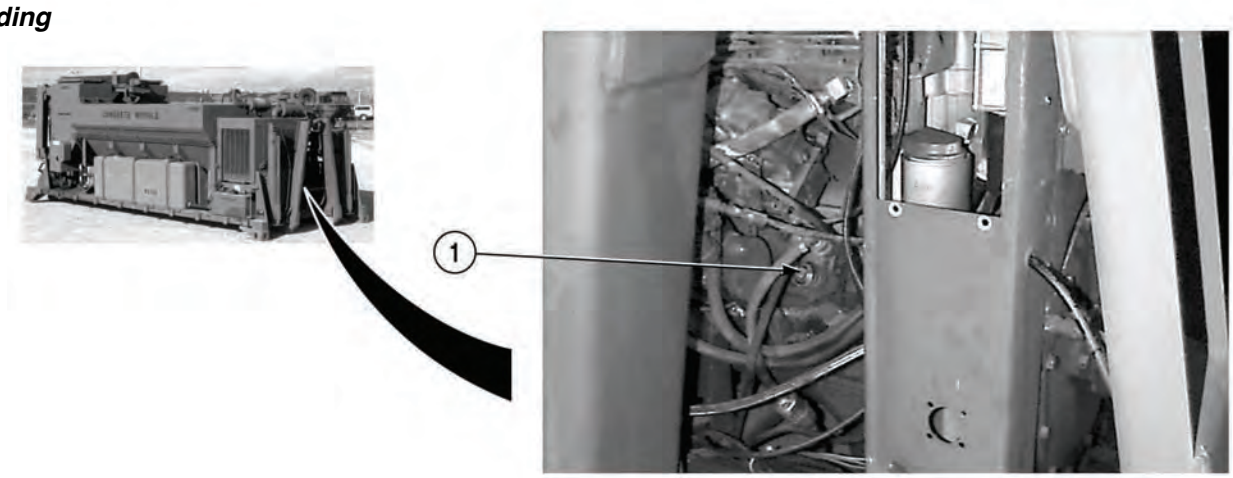

NOTE

Manual bleeding is required if:

- Fuel filter is not filled prior to installation.
- Injection pump is replaced.
- High pressure fuel line connectors are loosened or lines replaced.
- Initial start up or start up after an extended period of no engine operation.
- Concrete Mobile Mixer fuel tank has run empty.

(1) Pump manual priming pump (1) for approximately 15 seconds.

(2) Start engine, (Para 2-19).

(3) If engine fails to start, repeat Steps (1) and (2) until startup is accomplished. If engine fails to start after several attempts, notify Unit Maintenance.

(4) Shut off engine, (Para 2-19).

b. Follow-on Maintenance

- Install front access panel, (Para 3-78).

END OF TASK

3-9. SHEAR PIN REPLACEMENT.

This task covers:

a. Removal b. Installation c. Follow-On Maintenance

INITIAL SETUP

Materials/Parts
Shear pin (5811-203)

Equipment Condition
Engine OFF, (Para 2-19)
Cement bin clutch disengaged, (Para 2-22)

a. Removal.

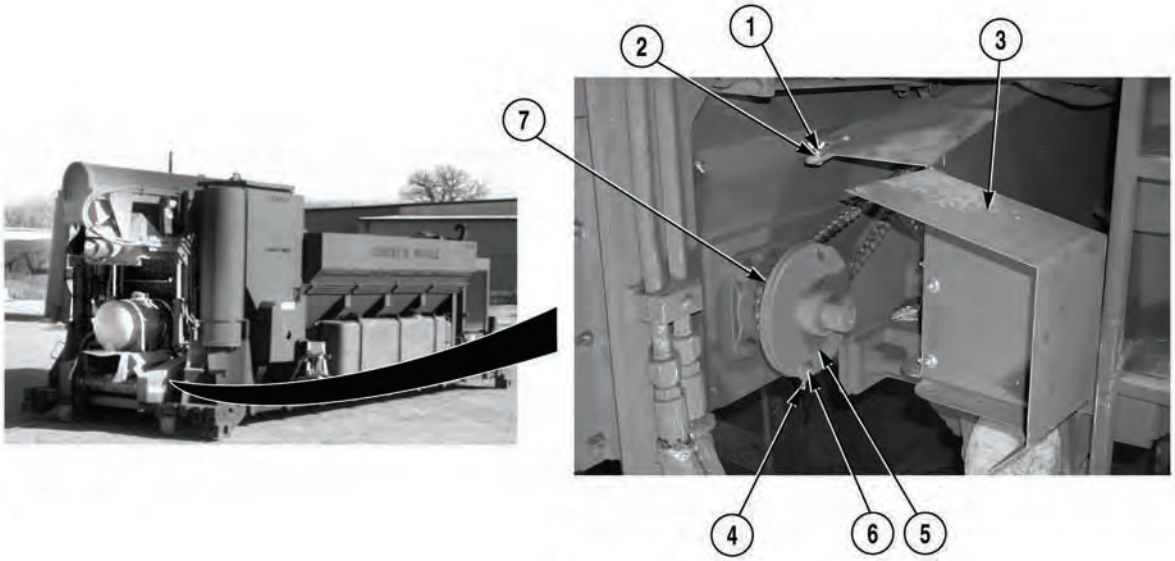

(1) Loosen wing nut (1) on stud (2) and open cover (3).

(2) Loosen screw (4) on drive plate (5).

(3) Remove shear pin (6) from drive plate (5) and driven plate (7). Discard shear pin.

3-9. SHEAR PIN REPLACEMENT (CONT).

b. Installation.

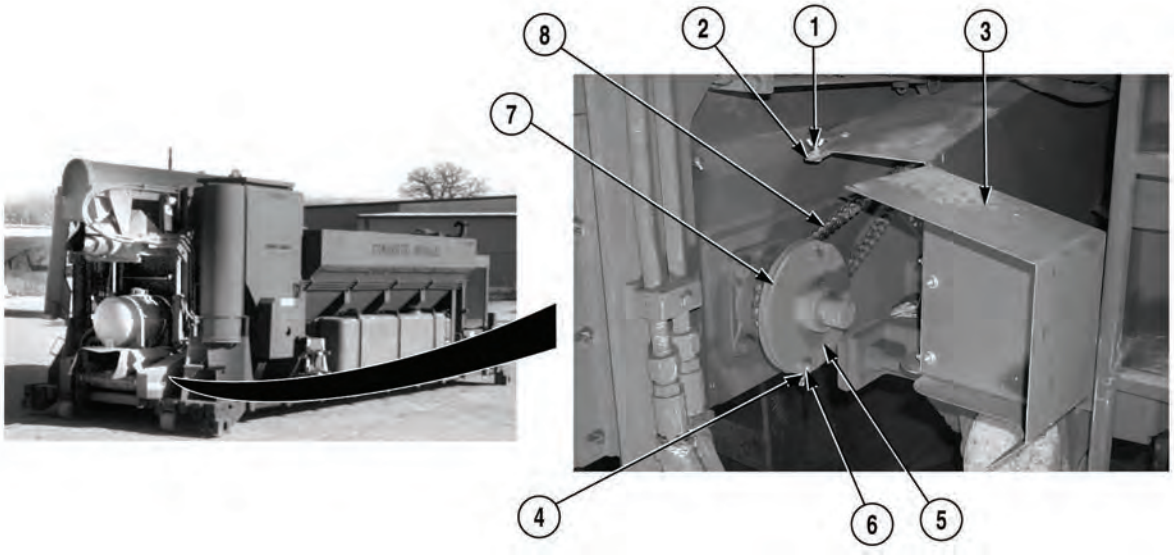

(1) Manually rotate chain (8) until shear pin hole in driven plate (7) aligns with shear pin hole in drive plate (5).

CAUTION

Ensure groove of shear pin is positioned between drive plate and driven plate. Failure to comply may result in damage to equipment.

(2) Install shear pin (6) on drive plate (5) and driven plate (7).

(3) Tighten screw (4) on drive plate (5).

NOTE

Position cover under washers and wing nut.

(4) Close cover (3) and tighten wing nut (1) on stud (2).

c. Follow-On Maintenance:

- Engage cement bin clutch, (Para 2-22).
- Start engine, (Para 2-19).
- Check operation.
- Shut off engine, (Para 2-19).

END OF TASK

3-10. BATTERIES DISCONNECT/CONNECT.

This task covers:

a. Removal b. Installation

INITIAL SETUP

Tools and Special Tools
- Tool Kit, General Mechanic's: Automotive (Item 19, Appendix I)
- Apron, Utility (Item 1, Appendix I)
- Gloves, Chemical and Oil Protective (Item 7, Appendix I)
- Goggles, Industrial (Item 9, Appendix I)

Materials/Parts
- Cable Ties (Item 2, Appendix H)
- Compound, Corrosion Preventive (Item 4, Appendix H)
- Tags, Identification (Item 13, Appendix H)

Equipment Condition
- Engine OFF, (Para 2-19)
- Concrete Mobile Mixer unloaded, (Para 2-5)

a. Removal.

WARNING

- Battery acid (electrolyte) is extremely harmful. Always wear safety goggles and rubber gloves, and do not smoke when performing maintenance on batteries. Injury will result if acid contacts skin or eyes. Wear rubber apron to prevent clothing being damaged.
- Remove all jewelry such as rings, dog tags, bracelets, etc. If jewelry or tools contact positive electrical circuits, a direct short may result. Failure to comply may result in damage to equipment, personnel injury, or death.

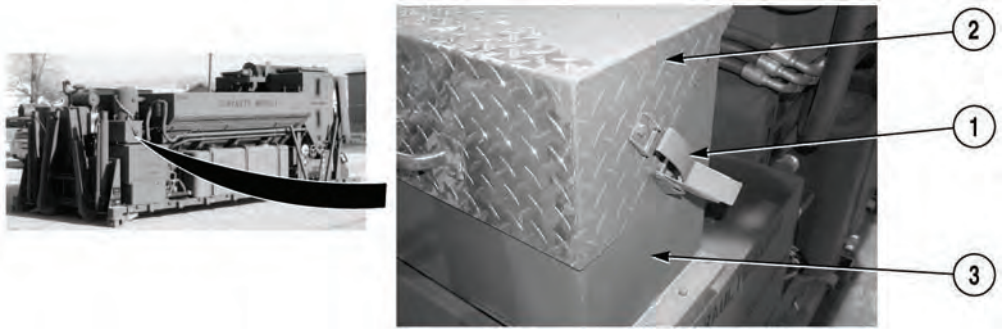

(1) Loosen two clamps (1) and remove cover (2) from battery box (3).

3-10. BATTERIES DISCONNECT/CONNECT (CONT).

WARNING

Upon removal of all wires and cables, ensure no contact is made with battery terminals or other wires and cables. Strap wires and cables away from battery terminals and other wires and cables as required to prevent damage to parts, personnel injury, or death.

NOTE

Tag and mark terminals prior to removal.

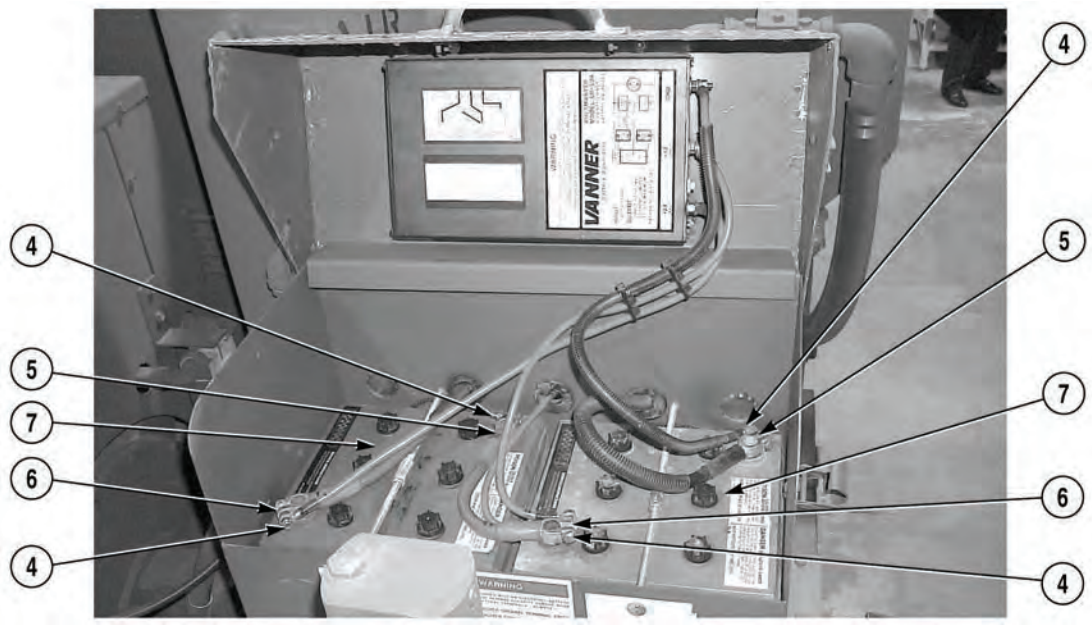

(2) Loosen four nuts (4) and remove two negative terminals (5) and two positive terminals (6) from batteries (7).

b. Installation.

WARNING

Upon installation of all wires and cables, ensure no contact is made with battery terminals or other wires and cables. Strap wires and cables away from battery terminals and other wires and cables as required to prevent damage to parts, personnel injury, or death.

NOTE

Ensure terminals are installed in same position as noted prior to removal.

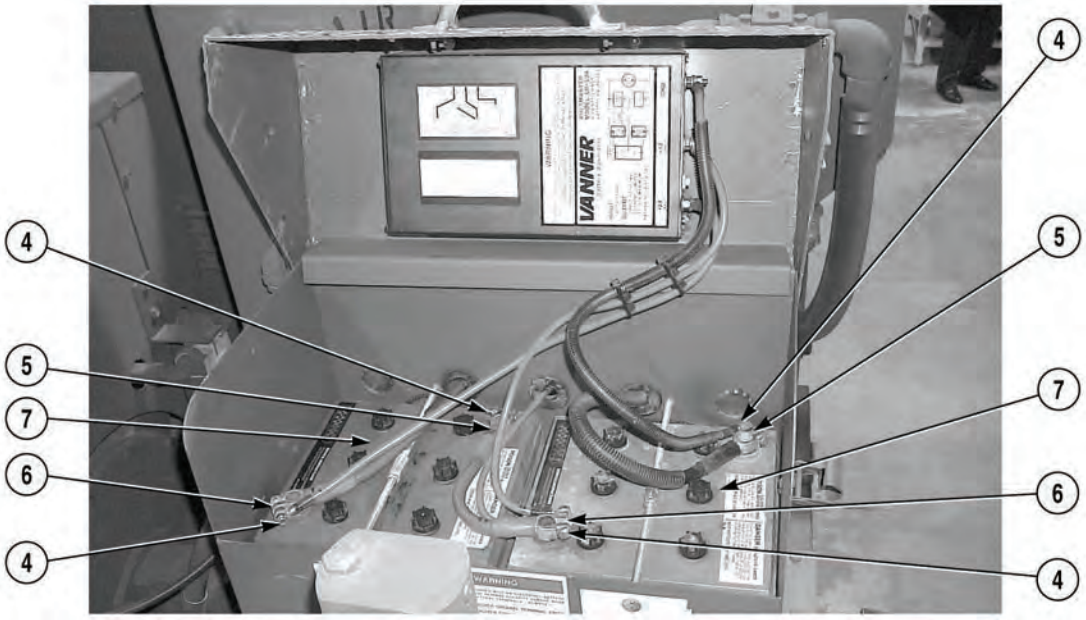

(1) Install two positive terminals (6) and two negative terminals (5) on batteries (7) and tighten four nuts (4).

(2) Apply corrosion preventive compound to two positive terminals (6) and two negative terminals (5).

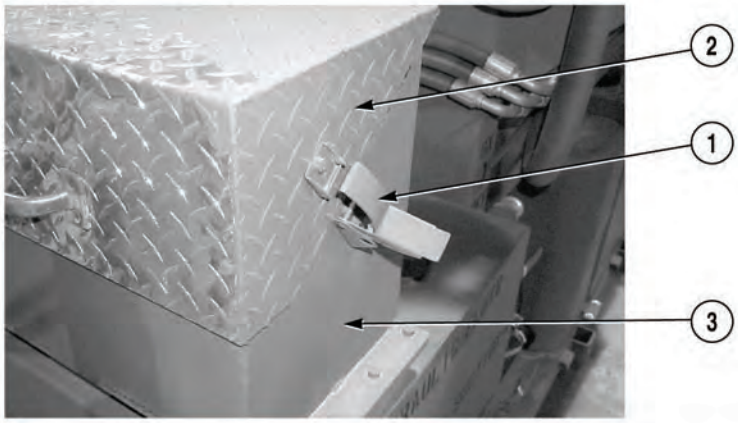

(3) Position cover (2) on battery box (3) and tighten two clamps (1).

END OF TASK

3-11. BATTERY REPLACEMENT.

This task covers:

a. Removal b. Installation c. Follow-On Maintenance

INITIAL SETUP

Tools and Special Tools
Tool Kit, General Mechanic's: Automotive (Item 19, Appendix I)
Apron, Utility (Item 1, Appendix I)
Gloves, Chemical and Oil Protective (Item 7, Appendix I)
Goggles, Industrial (Item 9, Appendix I)

Materials/Parts
Tags, Identification (Item 13, Appendix H)

Personnel Required
Two

Equipment Condition
Batteries disconnected, (Para 3-10)

a. Removal.

WARNING

- Battery acid (electrolyte) is extremely harmful. Always wear safety goggles and rubber gloves, and do not smoke when performing maintenance on batteries. Injury will result if acid contacts skin or eyes. Wear rubber apron to prevent clothing being damaged.
- Remove all jewelry such as rings, dog tags, bracelets, etc. If jewelry or tools contact positive electrical circuits, a direct short may result. Failure to comply may result in damage to equipment, personnel injury, or death.

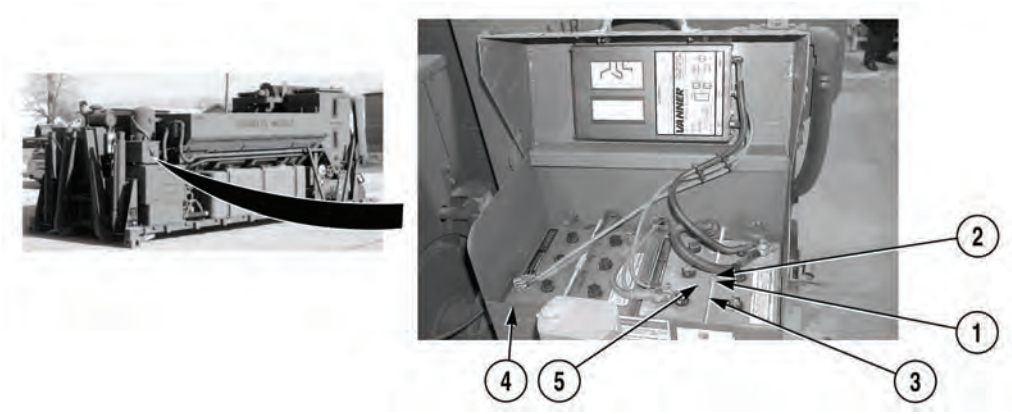

(1) Remove four nuts (1) and two coupling nuts (2) from four hold down screws (3).

(2) Remove four hold down screws (3) from battery box (4).

(3) With the aid of an assistant, remove batteries (5) from battery box (4).

b. Installation.

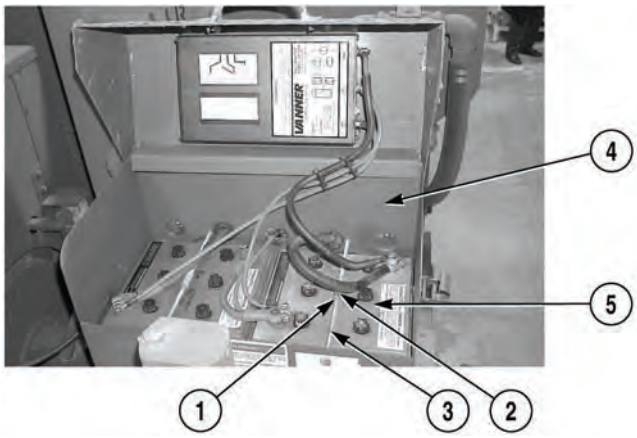

(1) With the aid of an assistant, install batteries (5) in battery box (4).

(2) Install four battery hold-down screws (3) in battery box (4).

(3) Install four nuts (1) and two coupling nuts (2) on four battery hold down screws (3).

c. Follow-On Maintenance:

- Connect batteries, (Para 3-10).

END OF TASK

3-12. BATTERY BOX REPLACEMENT.

This task covers:

a. Removal b. Installation c. Follow-On Maintenance

INITIAL SETUP

Tools and Special Tools
Tool Kit, General Mechanic's: Automotive (Item 19, Appendix I)

Materials/Parts
Locknut (8) (MS 51922-17)
Tenz Nut (8) (1244954-2)
Tenz Nut (4) (1571850)

Equipment Condition
Batteries removed, (Para 3-11)
Battery equalizer removed, (Para 3-13 or Para 3-140)

a. Removal.

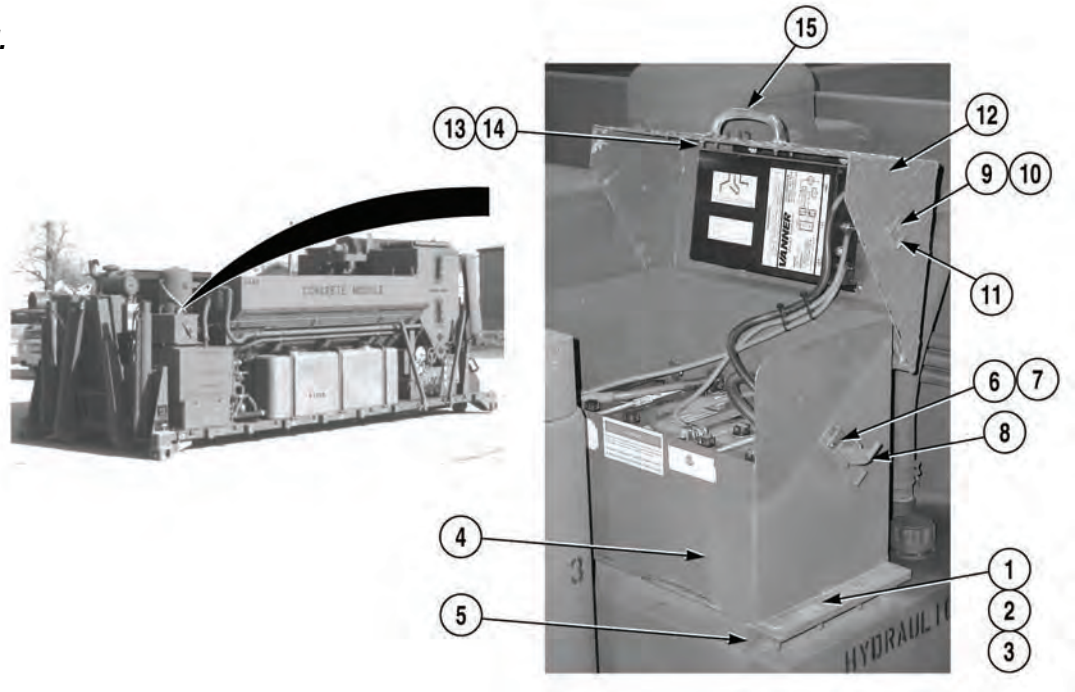

NOTE

Some models have 16 washers.

(1) Remove eight locknuts (1), washers (2), screws (3), and battery box (4) from two battery box mounting brackets (5). Discard locknuts.

(2) Remove four tenz nuts (6), socket head screws (7), and two clamps (8) from battery box (4). Discard tenz nuts.

(3) Remove four tenz nuts (9), socket head screws (10), and two latches (11) from battery box cover (12). Discard tenz nuts.

(4) Remove four tenz nuts (13), socket head screws (14), and handle (15) from battery box cover (12). Discard tenz nuts.

b. Installation.

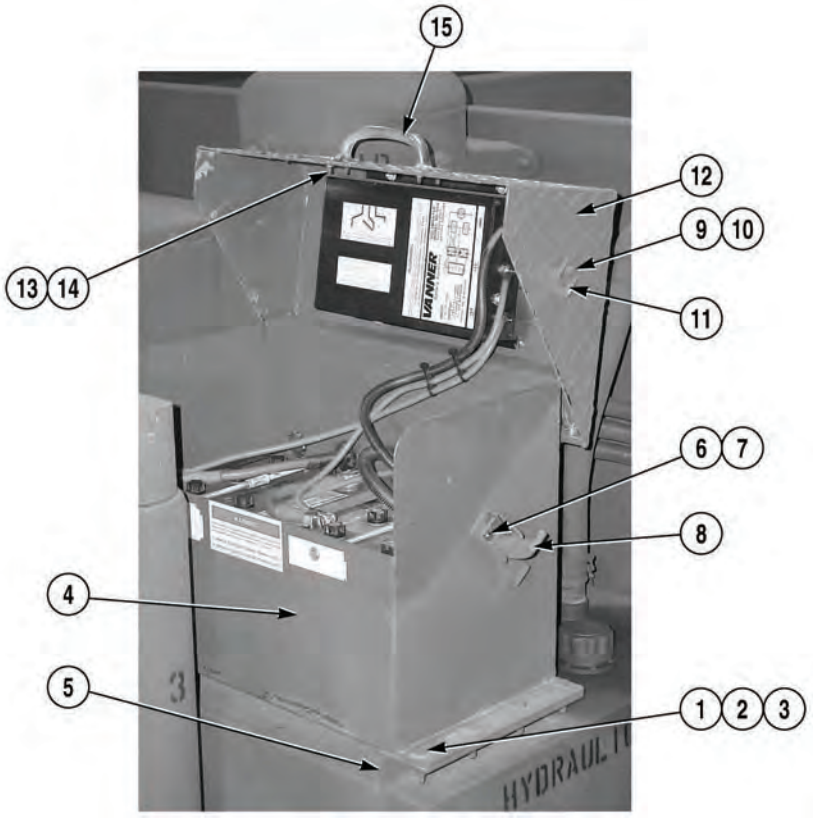

(1) Install handle (15) on battery box cover (12) with four socket head screws (14) and tenz nuts (13).

(2) Install two latches (11) on battery box cover (12) with four socket head screws (10) and tenz nuts (9).

(3) Install two clamps (8) on battery box (4) with four socket head screws (7) and tenz nuts (6).

(4) Install battery box (4) on battery box mounting brackets (5) with eight screws (3), washers (2), and locknuts (1).

c. Follow-On Maintenance:

- Install battery equalizer, (Para 3-13 or Para 3-140).
- Install batteries, (Para 3-11).

END OF TASK

3-13. BATTERY EQUALIZER REPLACEMENT.

This task covers:

a. Removal b. Installation c. Follow-On Maintenance

INITIAL SETUP

Tools and Special Tools
Tool Kit, General Mechanic's: Automotive (Item 19, Appendix I)

Materials/Parts
Tags, Identification (4) (Item 13, Appendix H)
Lockwasher (3) (MS 35338-44)
Locknut (4) (MS 51943-31)

Equipment Condition
Concrete Mobile Mixer unloaded, (Para 2-5)
Batteries disconnected, (Para 3-10)

a. Removal.

WARNING

Battery equalizer employs components that tend to produce arcs and sparks. To prevent fire or explosion, do not install in compartments containing batteries or flammable material. Failure to comply could result in injury or death to personnel, or damage to equipment.

CAUTION

- Battery equalizer should not be exposed to rain or high-pressure wash. Failure to comply could result in damage to equipment.
- To avoid reverse polarity damage when disconnecting equalizer battery wires, always remove equalizer ground wire first, and replace equalizer ground wire last. Failure to comply could result in damage to equipment.

NOTE

Tag and mark wires prior to removal.

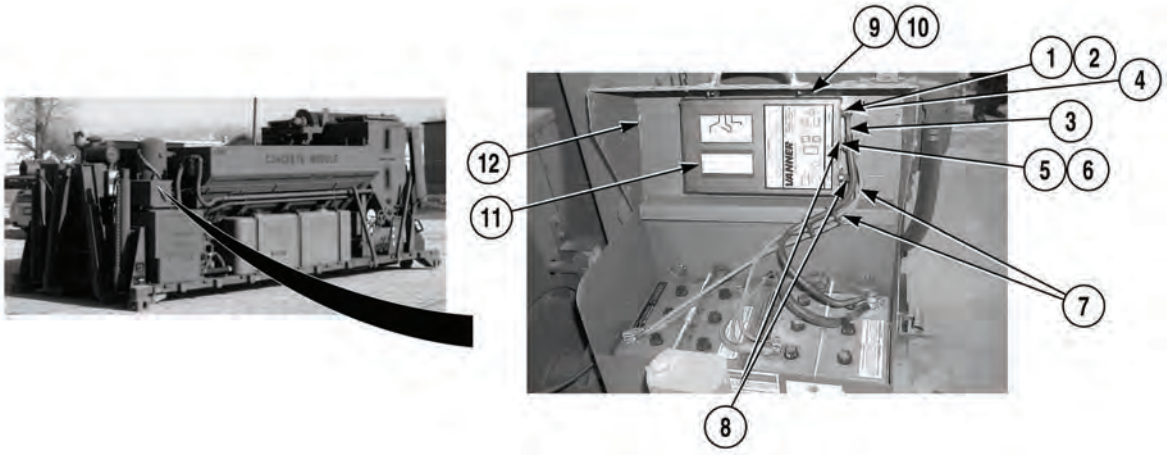

(1) Remove nut (1), lockwasher (2), and ground wire (3) from terminal (4). Discard lockwasher.

(2) Remove two nuts (5), lockwashers (6), and wires (7) from terminals (8). Discard lockwashers.

(3) Remove four locknuts (9), screws (10), and battery equalizer (11) from battery box cover (12). Discard locknuts.

b. Installation.

(1) Install battery equalizer (11) on battery box cover (12) with four screws (10) and locknuts (9).

(2) Install two wires (7) on terminals (8) with two lockwashers (6) and nuts (5).

CAUTION

To avoid reverse polarity damage when connecting equalizer battery wires, always remove equalizer ground wire first, and replace equalizer ground wire last.

(3) Install ground wire (3) on terminal (4) with lockwasher (2) and nut (1).

c. Follow-On Maintenance:

- Connect batteries, (Para 3-10).

END OF TASK

3-14. OIL FILTER REPLACEMENT.

This task covers:

a. Removal b. Installation c. Follow-On Maintenance

INITIAL SETUP

Tools and Special Tools
Tool Kit, General Mechanic's: Automotive (Item 19, Appendix I)
Pan, Drain (Item 12, Appendix I)
Removal Tool, Oil Filter (Item 16, Appendix I)

Materials/Parts
Lubricating Oil, 15W40 (Item 6, Appendix H)

Equipment Condition
Engine OFF, (Para 2-19)
Concrete Mobile Mixer unloaded, (Para 2-5)

a. Removal.

WARNING

If the engine has not been shut off for a long period of time, oil will be hot. Hot oil can cause serious burns to personnel.

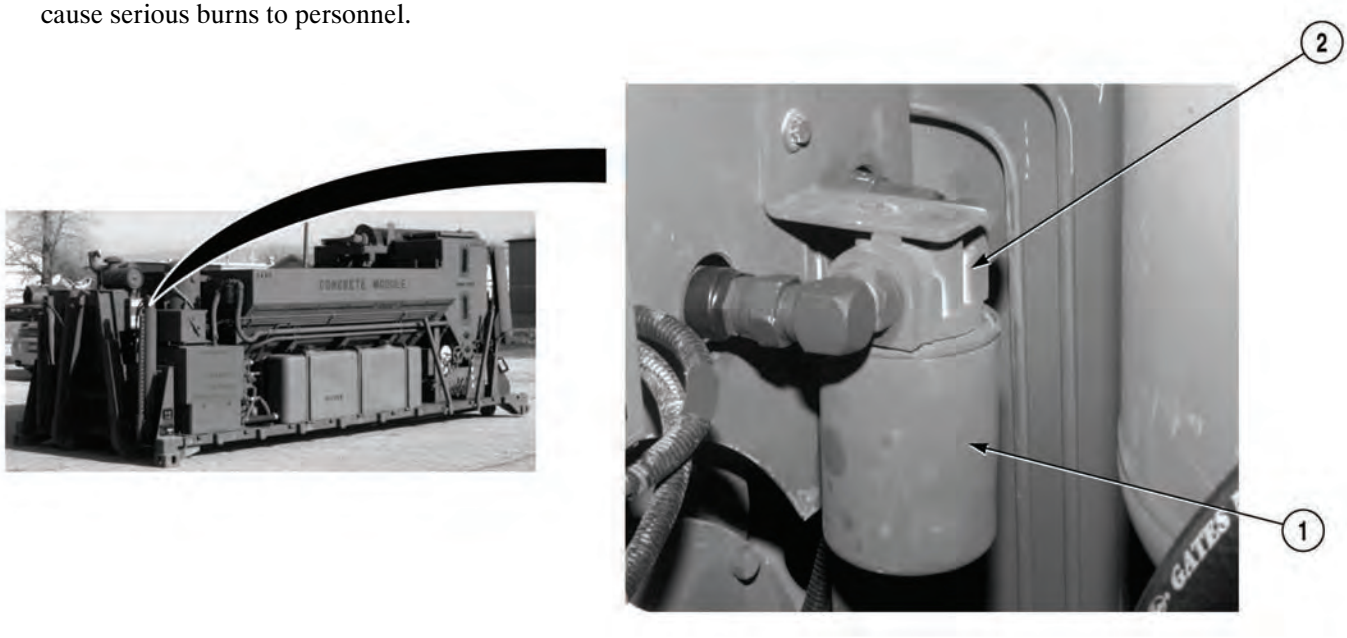

(1) Position drain pan under filter (1).

(2) Remove and discard oil filter (1) and gasket from filter head assembly (2).

b. Installation.

CAUTION

When installing oil filter on filter head assembly, do not over-tighten. Over-tightening can distort threads or damage filter element seal.

NOTE

- Apply a light film of engine oil to gasket sealing surface before installing filter.
- Gasket can stick on filter head. Ensure gasket is removed and sealing surface is clean before installing new filter.

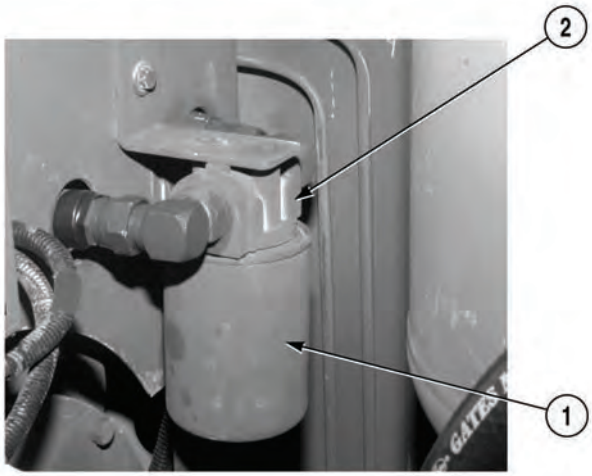

(1) Fill oil filter with clean engine oil.

NOTE

Tighten filter element 3/4 to 1 full turn once gasket makes contact with filter head.

(2) Install oil filter (1) and gasket on filter head assembly (2).

c. Follow-On Maintenance:

- Start engine, (Para 2-19).
- Check for leaks.
- Shut off engine, (Para 2-19).
- Check engine oil level, (Para 2-10).

END OF TASK

3-15. OIL FILTER HEAD REPLACEMENT.

This task covers:

a. Removal b. Installation c. Follow-On Maintenance

INITIAL SETUP

Tools and Special Tools
Tool Kit, General Mechanic's: Automotive (Item 19, Appendix I)
Cap and Plug Set (Item 3, Appendix I)
Pan, Drain (Item 12, Appendix I)

Materials/Parts
Lubricating Oil, 15W40 (Item 6, Appendix H)
Preformed Packing (Item 18, Appendix H)

Materials/Parts (Continued)
Tags, Identification (Item 13, Appendix H)
Lockwasher (2) (MS35338-45)

Equipment Condition
Oil filter removed, (Para 3-14)
Front engine access panel removed, (Para 3-78)

a. Removal.

NOTE

- Tag and mark hoses prior to removal.
- Cap and plug all hoses and fittings prior to removal.

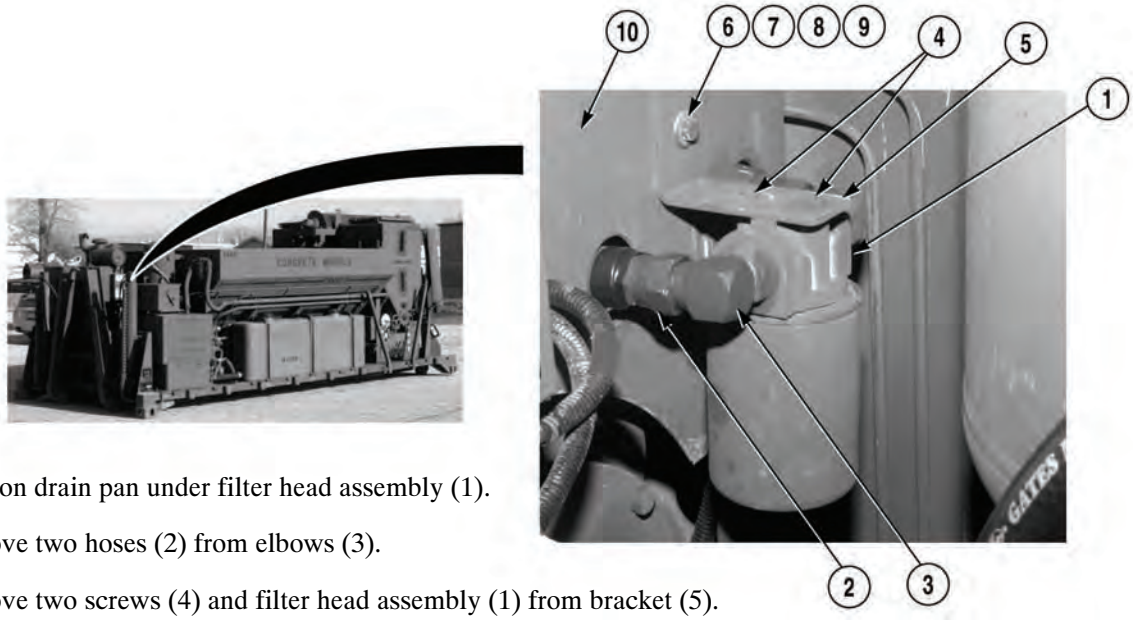

(1) Position drain pan under filter head assembly (1).

(2) Remove two hoses (2) from elbows (3).

(3) Remove two screws (4) and filter head assembly (1) from bracket (5).

NOTE

- Some models do not have nuts, lockwashers, and washers.
- Some models have locknuts and back plate behind engine cover.

(4) Remove two nuts (6), lockwashers (7), four washers (8), two screws (9), and bracket (5) from side engine cover (10). Discard lockwashers.

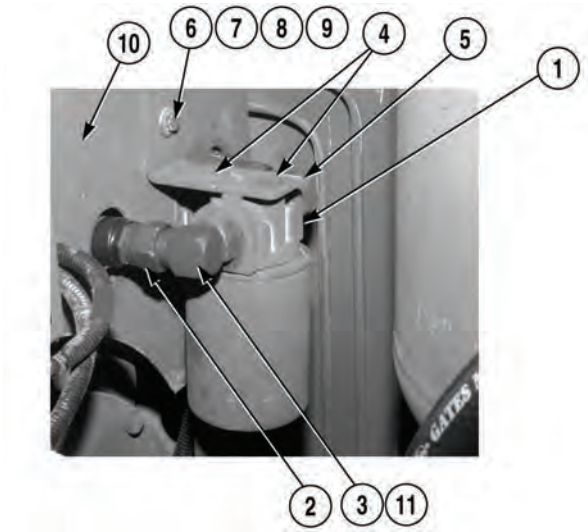

NOTE

- Note location of elbows prior to removal.
- Perform Step (5) if elbows are damaged.

(5) Remove two elbows (3) and preformed packings (11) from filter head assembly (1). Discard preformed packings.

b. Installation.

NOTE

- Perform Steps (1) and (2) if elbows were removed.
- Install elbows as noted prior to removal.

(1) Apply oil to two preformed packings (11).

(2) Install two preformed packings (11) and elbows (3) on filter head assembly (1).

(3) Install bracket (5) on side engine cover (10) with two screws (9), four washers (8), two lockwashers (7), and nuts (6).

(4) Install filter head assembly (1) on bracket (5) with two screws (4).

(5) Install two hoses (2) on elbows (3).

c. Follow-On Maintenance:

- Install oil filter, (Para 3-14).
- Start engine, (Para 2-19).
- Check for leaks.
- Shut off engine, (Para 2-19).
- Install front engine access panel, (Para 3-78).

END OF TASK

3-16. MAGNETIC SWITCH REPLACEMENT (BATTERY EQUALIZER (S/N 8RDCD301513HC THRU S/N 8RDCD301619HC).

This task covers:

a. Removal b. Installation c. Follow-On Maintenance

INITIAL SETUP

Tools and Special Tools
Tool Kit, General Mechanic's: Automotive (Item 19, Appendix I)

Materials/Parts
Tags, Identification (Item 13, Appendix H)
Lockwasher (2) (MS 35338-45)
Lockwasher (MS 35338-42)

Equipment Condition
Batteries disconnected, (Para 3-10)
Front engine access panel removed, (Para 3-78)

a. Removal.

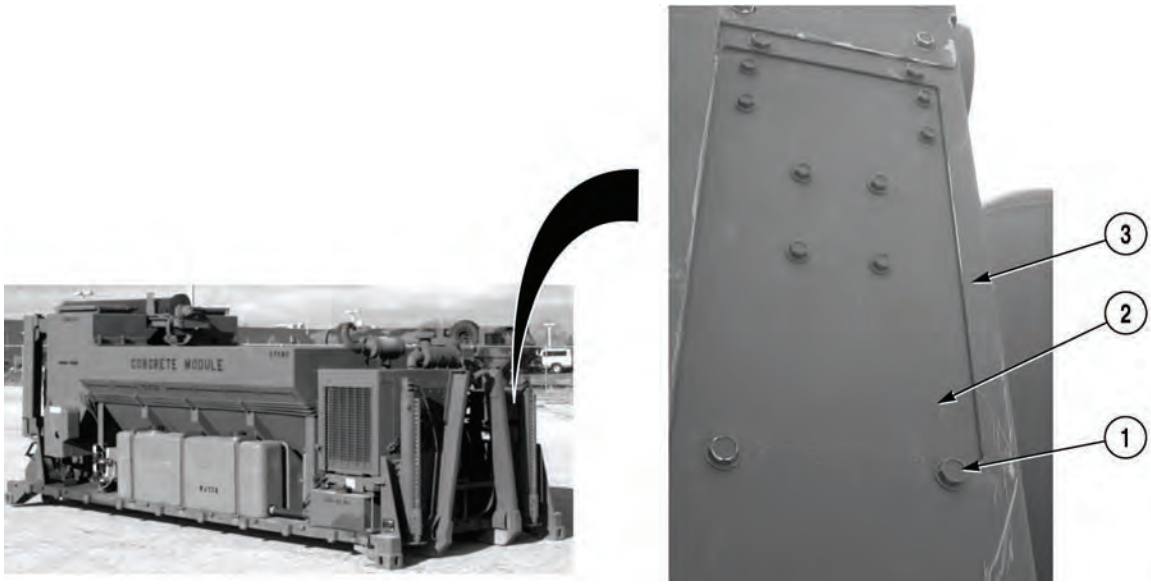

NOTE

Position cover through engine enclosure to access magnetic switch.

(1) Remove four screws (1) and cover (2) from engine enclosure (3).

NOTE

Tag and mark wires prior to removal.

(2) Remove nut (4), two wires (5) and (6), and lockwasher (7) from stud (8). Discard lockwasher.

(3) Remove nut (9), wire (10), and lockwasher (11) from stud (12). Discard lockwasher.

(4) Remove nut (13), wire (14), and lockwasher (15) from stud (16). Discard lockwasher.

NOTE

Note position of wires prior to removal.

(5) Remove two nuts (17), wires (18), screws (19), and magnetic switch (20) from cover (2).

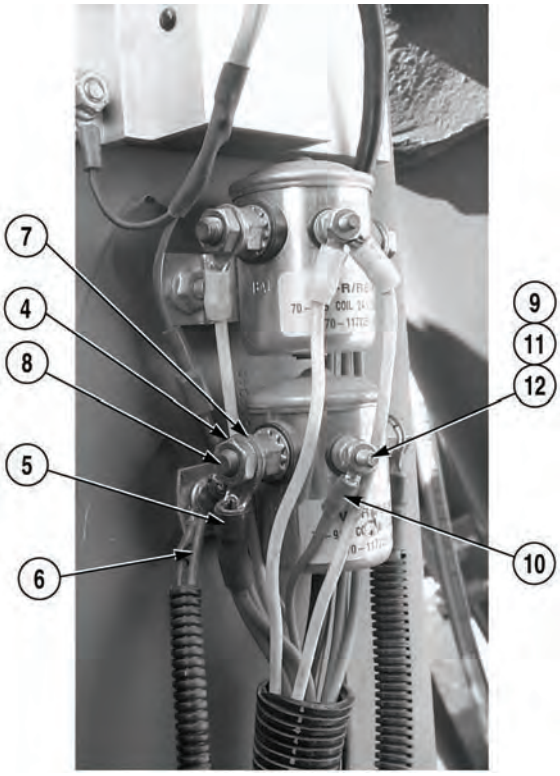

b. Installation.

NOTE

Ensure wires are installed in same position as noted prior to removal.

(1) Install magnetic switch (20) and two wires (18) on cover (2) with two screws (19) and nuts (17).

(2) Install lockwasher (15) and wire (14) on stud (16) with nut (13).

(3) Install lockwasher (11) and wire (10) on stud (12) with nut (9).

(4) Install lockwasher (7) and two wires (5) and (6) on stud (8) with nut (4).

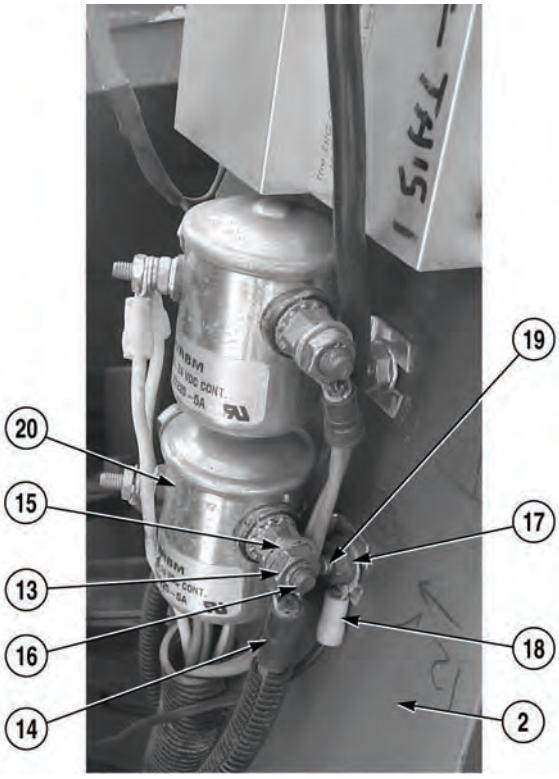

3-16. MAGNETIC SWITCH REPLACEMENT (BATTERY EQUALIZER) (S/N 8RDCD301513HC THRU S/N 8RDCD301619HC) (CONT).

(5) Install cover (2) on engine enclosure (3) with four screws (1).

c. Follow-On Maintenance.

- Install front engine access panel, (Para 3-78).
- Connect batteries, (Para 3-10).

END OF TASK

3-17. MAGNETIC SWITCH REPLACEMENT (BATTERY EQUALIZER) (S/N 8RDCD301620HC AND SUBSEQUENT).

This task covers:

a. Removal b. Installation c. Follow-On Maintenance

INITIAL SETUP

Tools and Special Tools
Tool Kit, General Mechanic's: Automotive (Item 19, Appendix I)

Materials/Parts
Tags, Identification (Item 13, Appendix H)
Lockwasher (2) (MS 35338-45)
Lockwasher (MS 35338-43)
Locknut (4) (MS 51943-31)

Equipment Condition
Batteries disconnected, (Para 3-10)

a. Removal.

NOTE

Position cover through engine enclosure to access magnetic switch.

(1) Remove four screws (1) and cover (2) from engine enclosure (3).

3-17. MAGNETIC SWITCH REPLACEMENT (BATTERY EQUALIZER) (S/N 8RDCD301620HC AND SUBSEQUENT) (CONT).

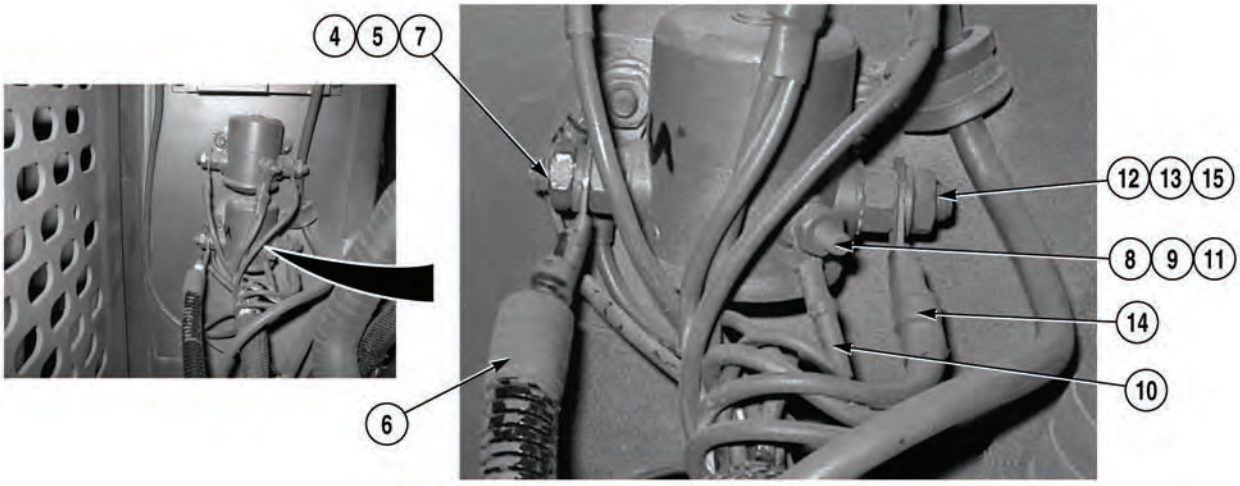

NOTE

Tag and mark wires prior to removal.

(2) Remove nut (4), lockwasher (5), and wire (6) from stud (7). Discard lockwasher.

(3) Remove nut (8), lockwasher (9), and wire (10) from stud (11). Discard lockwasher.

NOTE

Four wires are attached to ring terminal.

(4) Remove nut (12), lockwasher (13), and ring terminal (14) from stud (15). Discard lockwasher.

(5) Remove locknut (16) and two wires (17) and (18) from screw (19). Discard locknut.

(6) Remove locknut (20) and screw (19) from magnetic switch (21) and cover (2). Discard locknut.

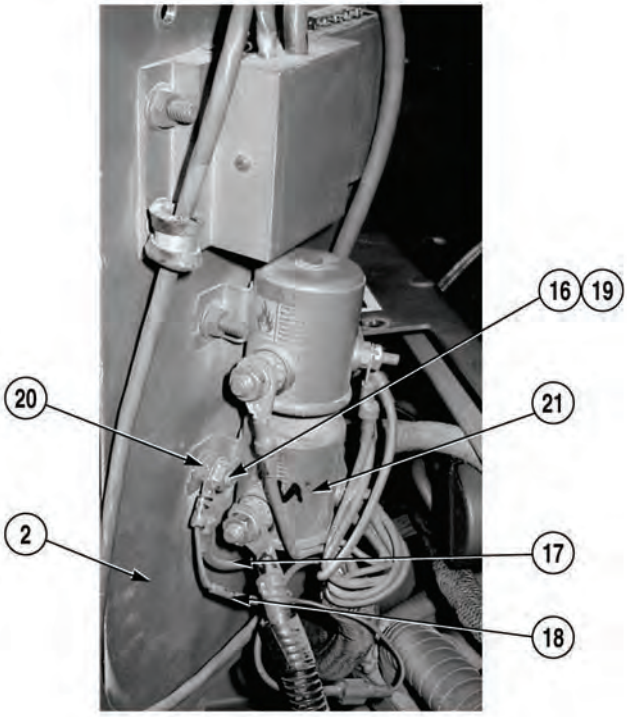

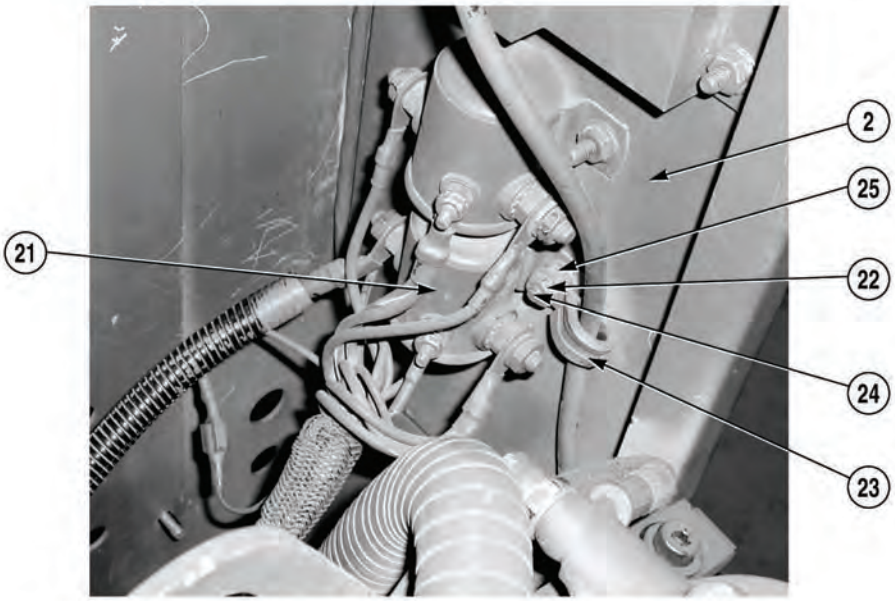

(7) Remove locknut (22) and cushion clip (23) from screw (24). Discard locknut.

(8) Remove locknut (25), screw (24), and magnetic switch (21) from cover (2). Discard locknut.

b. Installation.

(1) Install magnetic switch (21) on cover (2) with screw (24) and locknut (25).

(2) Install cushion clip (23) on screw (24) with locknut (22).

(3) Install screw (19) and locknut (20) on cover (2) and magnetic switch (21).

(4) Install two wires (17) and (18) on screw (19) with locknut (16).

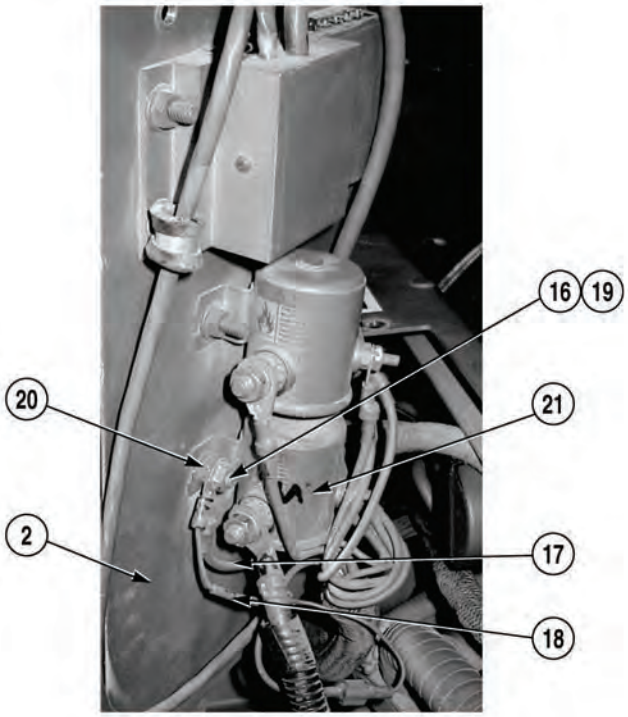

3-17. MAGNETIC SWITCH REPLACEMENT (BATTERY EQUALIZER) (S/N 8RDCD301620HC AND SUBSEQUENT) (CONT).

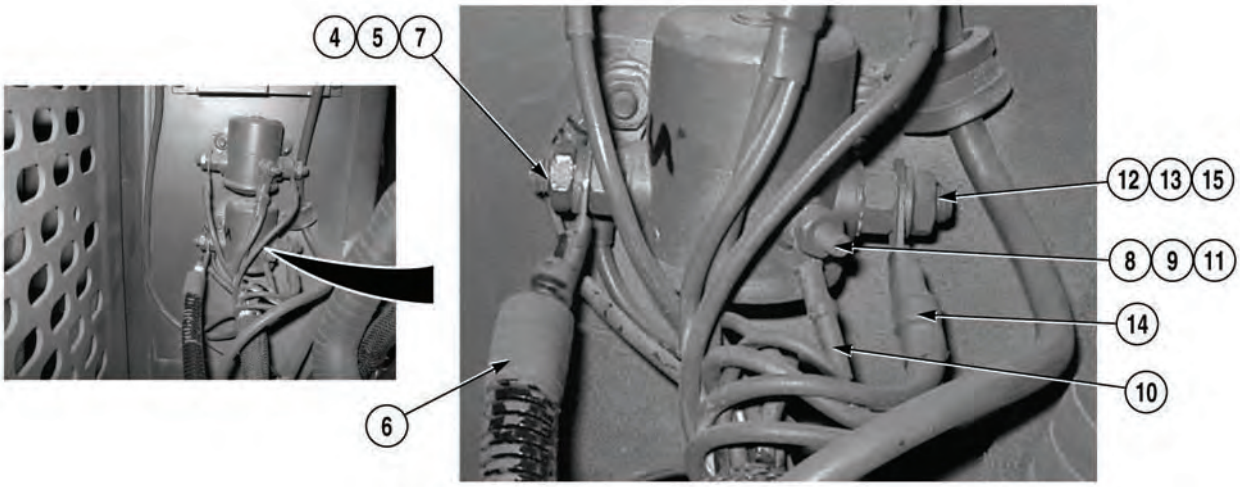

(5) Install ring terminal (14) on stud (15) with lockwasher (13) and nut (12).

(6) Install wire (10) on stud (11) with lockwasher (9) and nut (8).

(7) Install wire (6) on stud (7) with lockwasher (5) and nut (4).

(8) Install cover (2) on engine enclosure (3) with four screws (1).

c. Follow-On Maintenance:

- Connect batteries, (Para 3-10).

END OF TASK

3-18. MAGNETIC SWITCH REPLACEMENT (STARTER) (S/N 8RDCD301513HC THRU S/N 8RDCD301619HC).

This task covers:

a. Removal b. Installation c. Follow-On Maintenance

INITIAL SETUP

Tools and Special Tools
Tool Kit, General Mechanic's: Automotive (Item 19, Appendix)

Materials/Parts
Tags, Identification (Item 13, Appendix H)
Lockwasher (2) (MS 35338-45)
Lockwasher (MS 35338-42)

Equipment Condition
Batteries disconnected, (Para 3-10)
Front engine access panel removed, (Para 3-78)

a. Removal.

NOTE

Position cover through engine enclosure to access magnetic switch.

(1) Remove four screws (1) and cover (2) from engine enclosure (3).

3-18. MAGNETIC SWITCH REPLACEMENT (STARTER) (S/N 8RDCD301513HC THRU S/N 8RDCD301619HC) (CONT).

NOTE

Tag and mark wires prior to removal.

(2) Remove nut (4), wire (5), and lockwasher (6) from stud (7). Discard lockwasher.

(3) Remove nut (8), two wires (9) and (10), and lockwasher (11) from stud (12). Discard lockwasher.

(4) Remove nut (13), wire (14), and lockwasher (15) from stud (16). Discard lockwasher.

(5) Remove two nuts (17), screws (18), and magnetic switch (19) from cover (2).

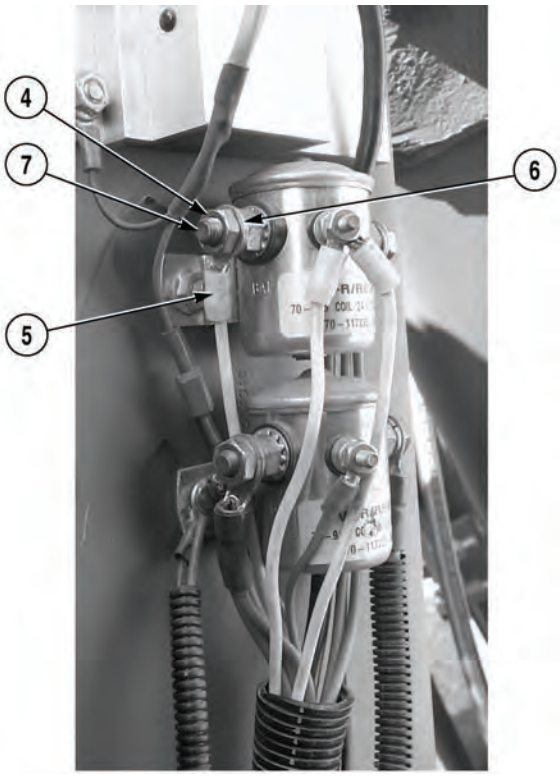

b. Installation.

(1) Install magnetic switch (19) on cover (2) with two screws (18) and nuts (17).

(2) Install lockwasher (15) and wire (14) on stud (16) with nut (13).

(3) Install lockwasher (11) and two wires (9) and (10) on stud (12) with nut (8).

(4) Install lockwasher (6) and wire (5) on stud (7) with nut (4).

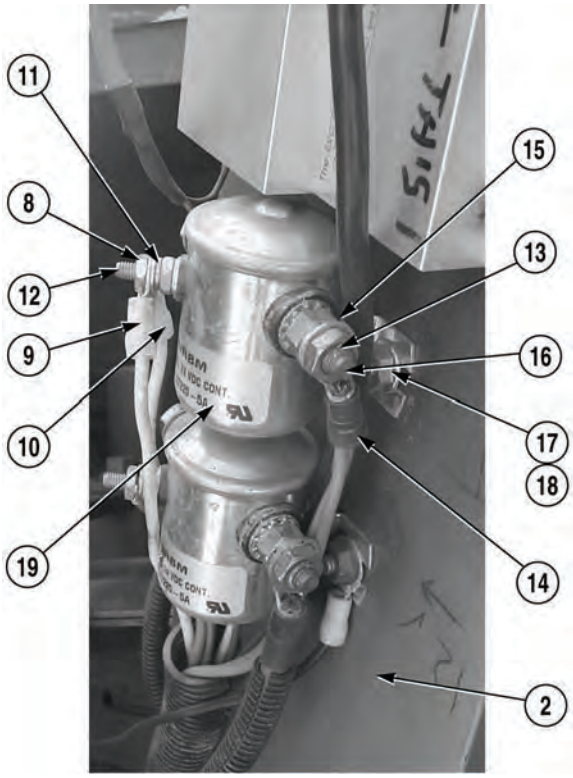

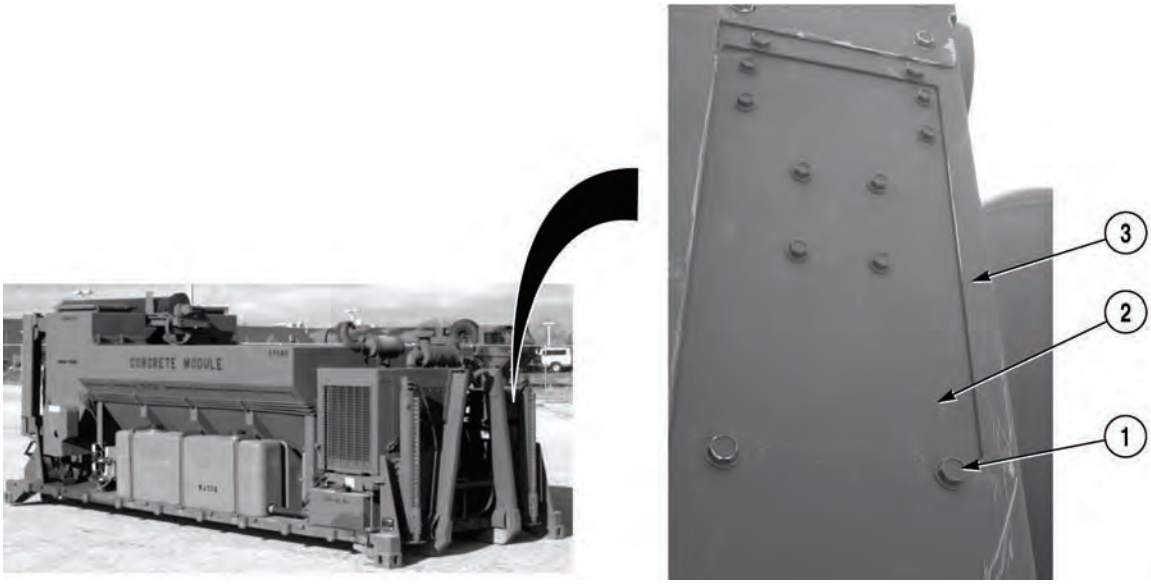

(5) Install cover (2) on engine enclosure (3) with four screws (1).

c. Follow-On Maintenance:

- Install front engine access panel, (Para 3-78).
- Connect batteries, (Para 3-10).

END OF TASK

3-19. MAGNETIC SWITCH REPLACEMENT (STARTER) (S/N 8RDCD301620HC AND SUBSEQUENT).

This task covers:

a. Removal b. Installation c. Follow-On Maintenance

INITIAL SETUP

Tools and Special Tools
Tool Kit, General Mechanic's: Automotive (Item 19, Appendix I)

Materials/Parts
Tags, Identification (Item 13, Appendix H)
Lockwasher (2) (MS 35338-45)
Lockwasher (MS 35338-43)
Locknut (2) (MS 51943-31)

Equipment Condition
Batteries disconnected, (Para 3-10)

a. Removal.

NOTE

Position cover through engine enclosure to access magnetic switch.

(1) Remove four screws (1) and cover (2) from engine enclosure (3).

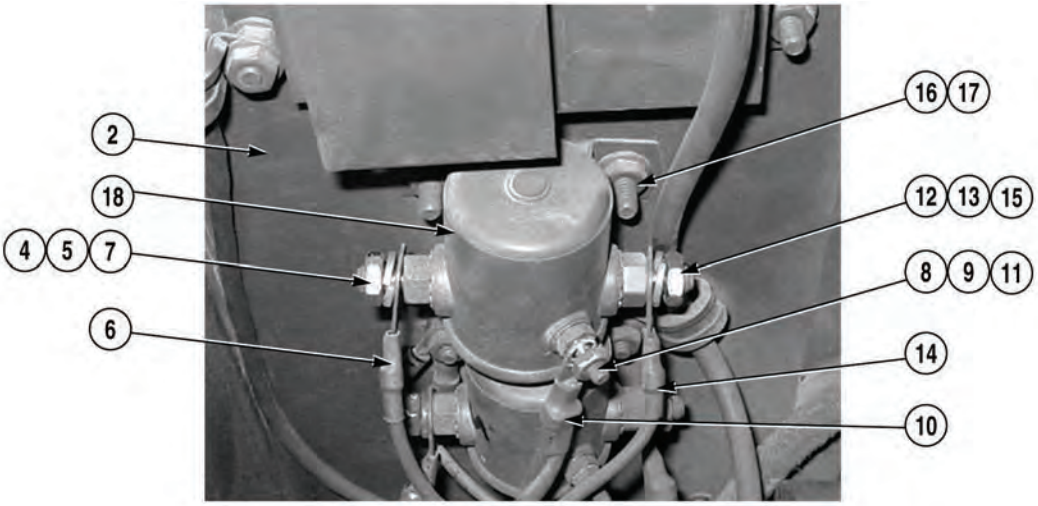

NOTE

Tag and mark wires prior to removal.

(2) Remove nut (4), lockwasher (5), and wire (6) from stud (7). Discard lockwasher.

NOTE

Two wires are attached to ring terminal.

(3) Remove nut (8), lockwasher (9), and ring terminal (10) from stud (11). Discard lockwasher.

(4) Remove nut (12), lockwasher (13), and wire (14) from stud (15). Discard lockwasher.

(5) Remove two locknuts (16), screws (17), and magnetic switch (18) from cover (2). Discard locknuts.

b. Installation.

(1) Install magnetic switch (18) on cover (2) with two screws (17) and locknuts (16).

(2) Install wire (14) on stud (15) with lockwasher (13) and nut (12).

(3) Install ring terminal (10) on stud (11) with lockwasher (9) and nut (8).

(4) Install wire (6) on stud (7) with lockwasher (5) and nut (4).

3-19. MAGNETIC SWITCH REPLACEMENT (STARTER) (S/N 8RDCD301620HC AND SUBSEQUENT) (CONT).

(5) Install cover (2) on engine enclosure (3) with four screws (1).

c. Follow-On Maintenance:

- Connect batteries, (Para 3-10).

END OF TASK

3-20. RADIATOR REPLACEMENT (S/N 8RDCD301513HC THRU S/N 8RDCD301619HC).

This task covers:

a. Removal b. Installation c. Follow-On Maintenance

INITIAL SETUP

Tools and Special Tools
Tool Kit, General Mechanic's: Automotive (Item 19, Appendix I)

Materials/Parts
Locknut (2) (MS 51943-35)
Screw, Self-Tapping (32) (MS 51851-106)
Locknut (2) (MS 51943-43)
Lockwasher (6) (MS 35338-45)

Personnel Required
Two

Equipment Condition
Batteries disconnected, (Para 3-10)
Engine air intake assembly removed, (Para 3-3)
Exhaust assembly removed, (Para 3-5)
Side engine access panel removed, (Para 3-79)

a. Removal.

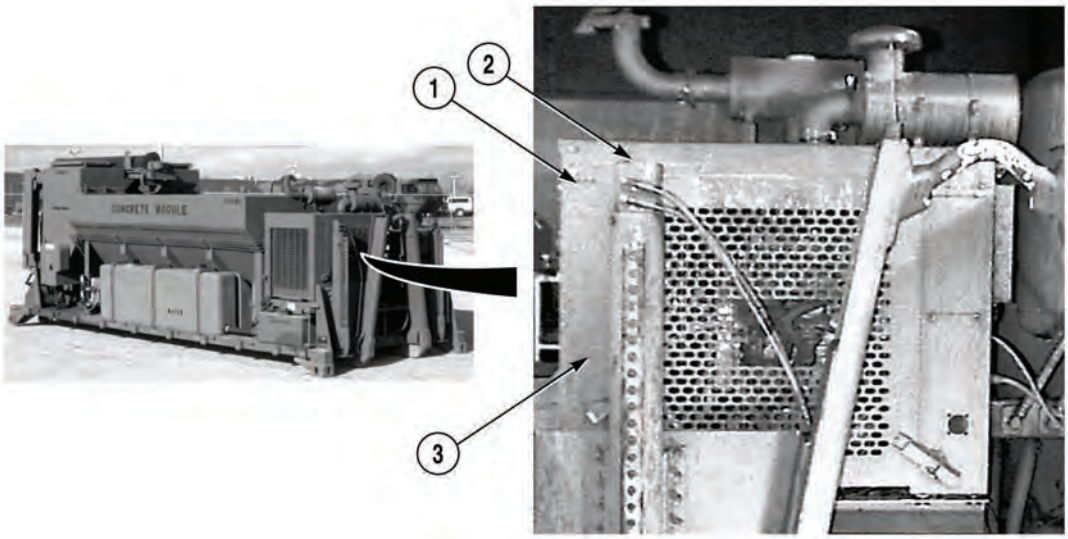

WARNING

Top engine cover weighs 65 lb (29.5 kg). Do not attempt to move or lift cover without aid of an assistant. Failure to comply could result in serious injury to personnel.

(1) With aid of an assistant, remove 24 self-tapping screws (1) and top engine shroud cover (2) from engine shroud (3). Discard self-tapping screws.

3-20. RADIATOR REPLACEMENT (S/N 8RDCD301513HC THRU S/N 8RDCD301619HC) (CONT).

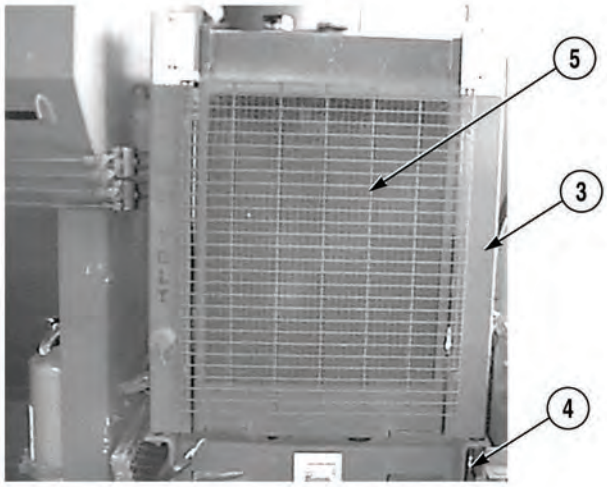

WARNING

Radiator, radiator cap, coolant, and hoses are very hot and pressurized during operation. Let radiator cool before draining coolant or removing hoses. Failure to comply could result in serious burns to personnel.

(2) Remove four self-tapping screws (4) and grille (5) from engine shroud (3). Discard self-tapping screws.

(3) Drain coolant, (Para 3-83).

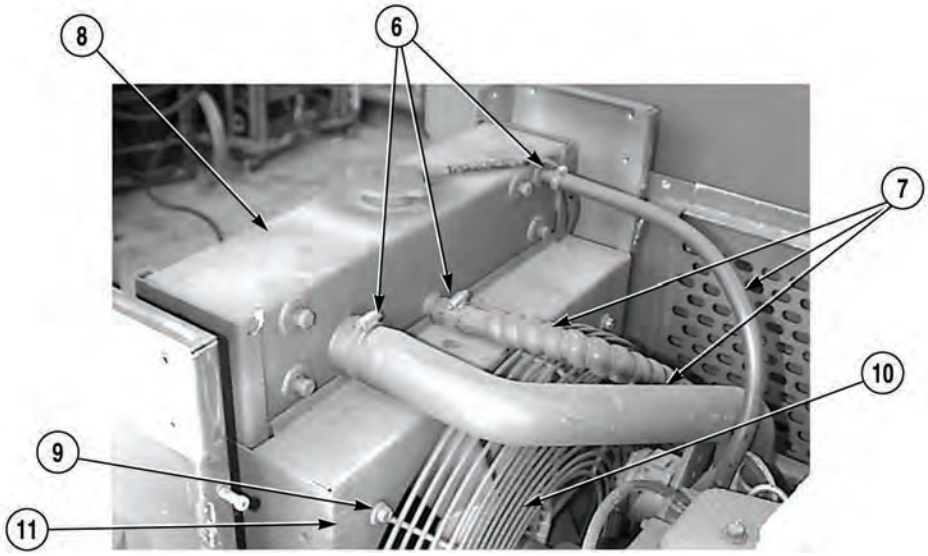

NOTE

Lower radiator hose (not shown).

(4) Loosen four clamps (6) and remove four hoses (7) from radiator assembly (8).

(5) Remove four self-tapping screws (9) and fan guard (10) from fan shroud (11). Discard self-tapping screws.

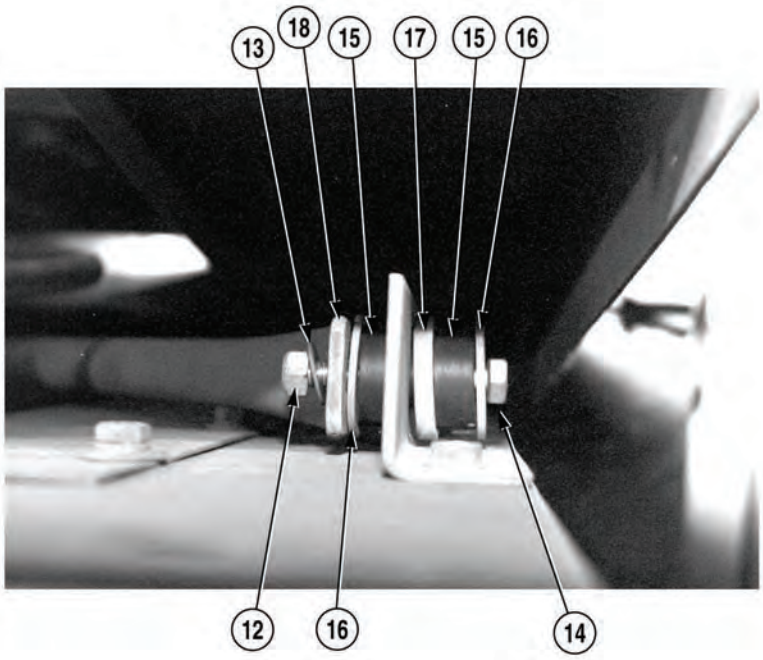

CAUTION

Have assistant support radiator upon removal of screws from support or radiator may contact fan blade and damage may result.

(6) With the aid of an assistant, remove two locknuts (12), washers (13), screws (14), four grommets (15), washers (16), and two spacers (17) from support (18) and radiator assembly (8). Discard locknuts.

3-20. RADIATOR REPLACEMENT (S/N 8RDCD301513HC THRU S/N 8RDCD301619HC) (CONT).

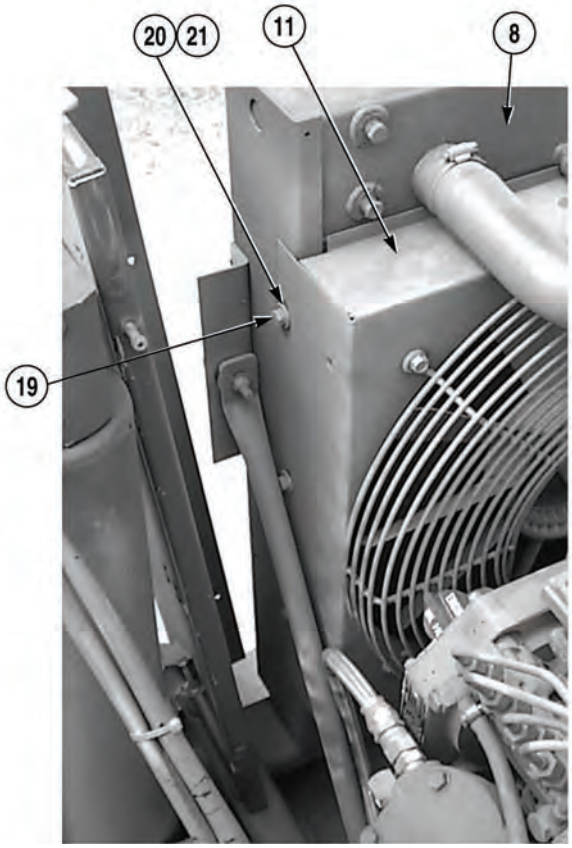

(7) Attach lifting device to radiator assembly (8).

(8) Remove six screws (19), lockwashers (20), washers (21), and fan shroud (11) from radiator assembly (8). Discard lockwashers.

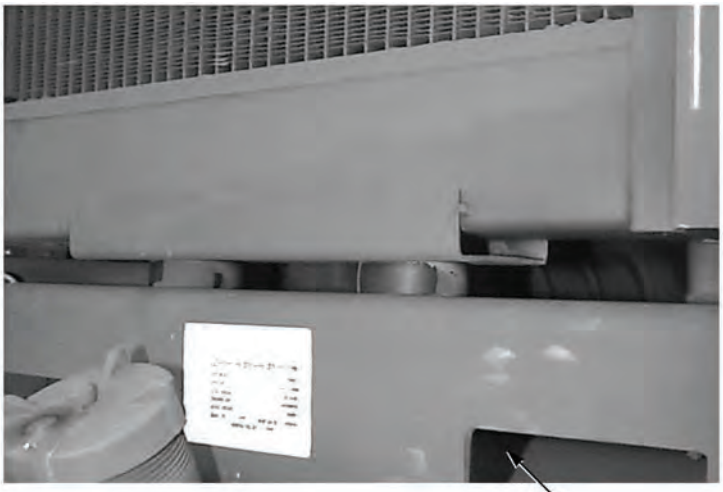

22 THRU 25
NOT SHOWN

22 THRU 25 UNDER HERE

(9) Remove two locknuts (22), washers (23), and lower grommets (24) from lower mounting studs (25). Discard locknuts.

WARNING

Radiator weighs 175 lb (79.4 kg). Do not attempt to lift or move radiator without aid of an assistant and suitable lifting device. Failure to comply could result in serious injury to personnel.

(10) With the aid of an assistant, and using a suitable lifting device, remove radiator assembly (8) from supports (18) and position on the ground.

(11) Remove lifting device from radiator assembly (8).

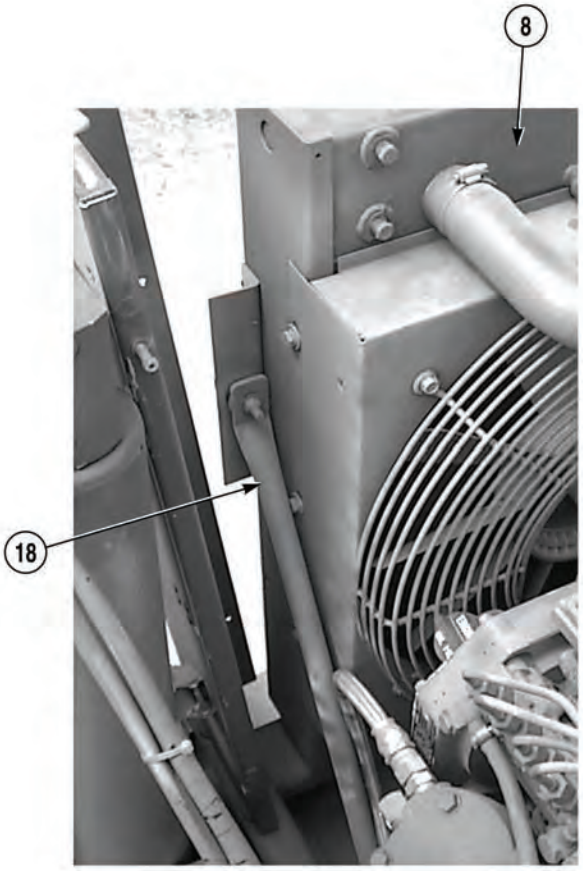

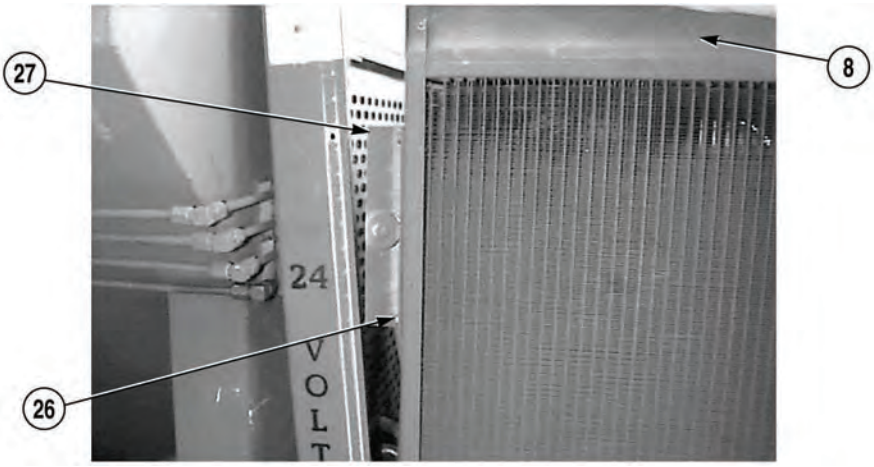

(12) Remove four self-tapping screws (26) and two brackets (27) from radiator assembly (8). Discard self-tapping screws.

3-20. RADIATOR REPLACEMENT (S/N 8RDCD301513HC THRU S/N 8RDCD301619HC) (CONT).

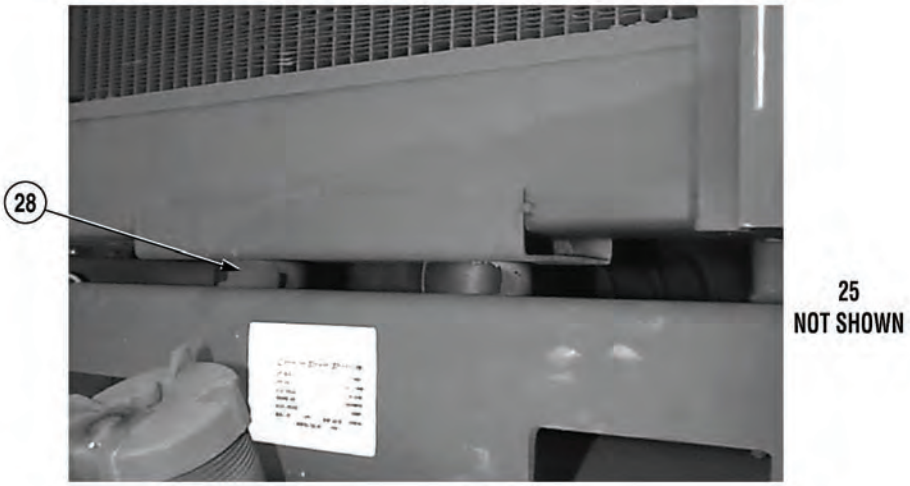

(13) Remove two upper grommets (28) from mounting studs (25).

b. Installation.

(1) Install two upper grommets (28) on mounting studs (25).

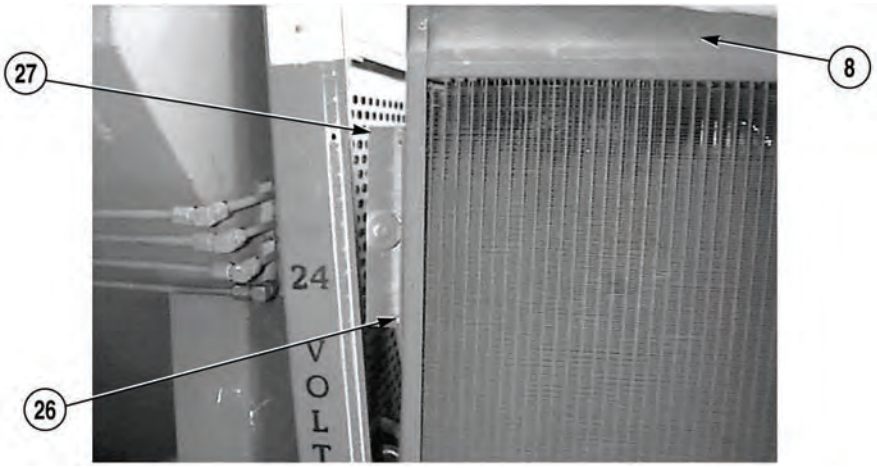

(2) Install two brackets (27) on radiator assembly (8) with four self-tapping screws (26).

WARNING

Radiator weighs 175 lb (79.4 kg). Do not attempt to lift or move radiator without aid of an assistant and suitable lifting device. Failure to comply could result in serious injury to personnel.

(3) Attach lifting device to radiator assembly (8).

(4) With the aid of an assistant and using the lifting device, position radiator assembly (8) on support (18).

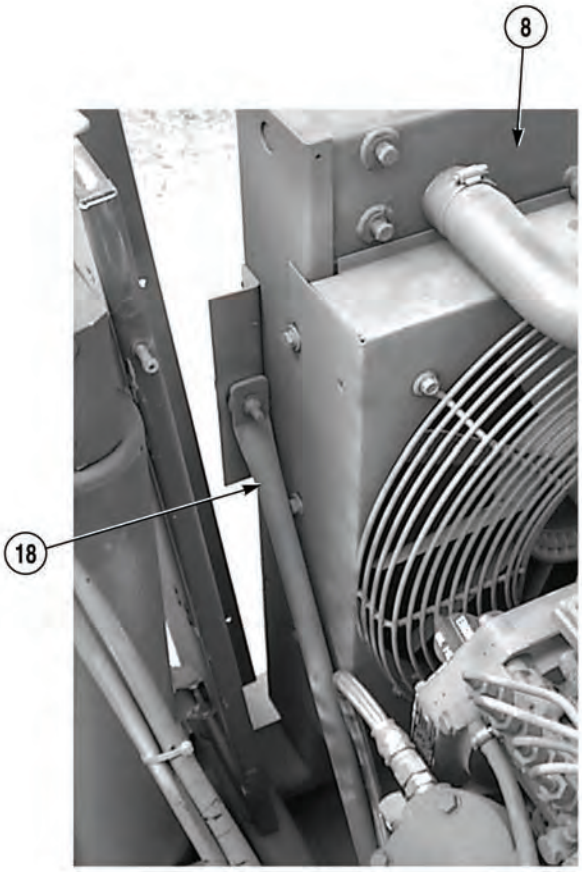

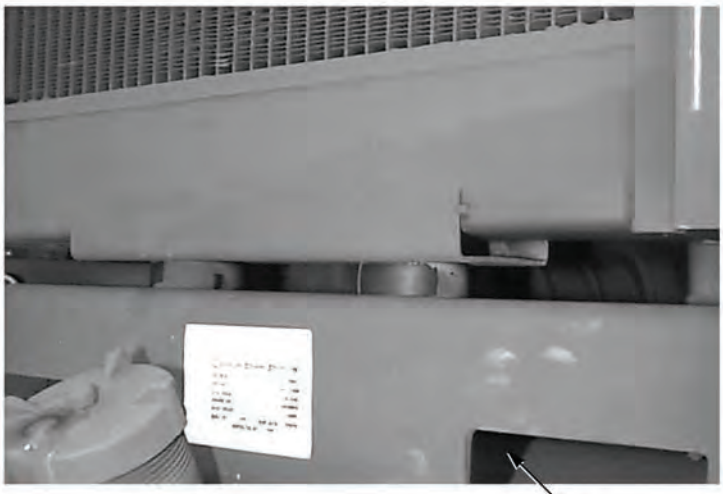

22 THRU 25
NOT SHOWN

22 THRU 25 UNDER HERE

(5) Install lower grommets (24), two washers (23), and locknuts (22) on lower mounting studs (25).

3-20. RADIATOR REPLACEMENT (S/N 8RDCD301513HC THRU S/N 8RDCD301619HC) (CONT).

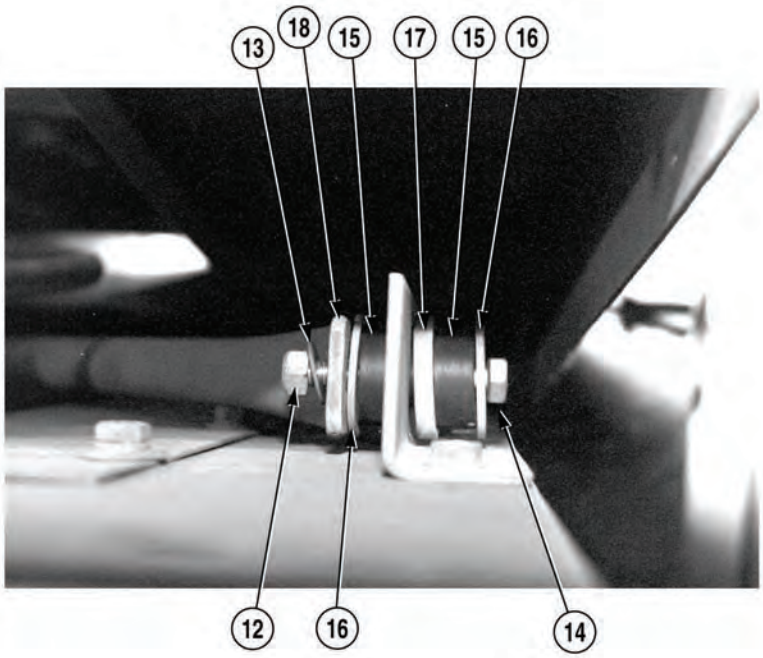

(6) With the aid of an assistant, install two spacers (17), two washers (16), four grommets (15), two screws (14), washers (13), and locknuts (12) on support (18) and radiator assembly (8).

(7) Remove lifting device from radiator assembly (8).

(8) Install fan shroud (11) on radiator assembly (8) with six washers (21), lockwashers (20), and screws (19).

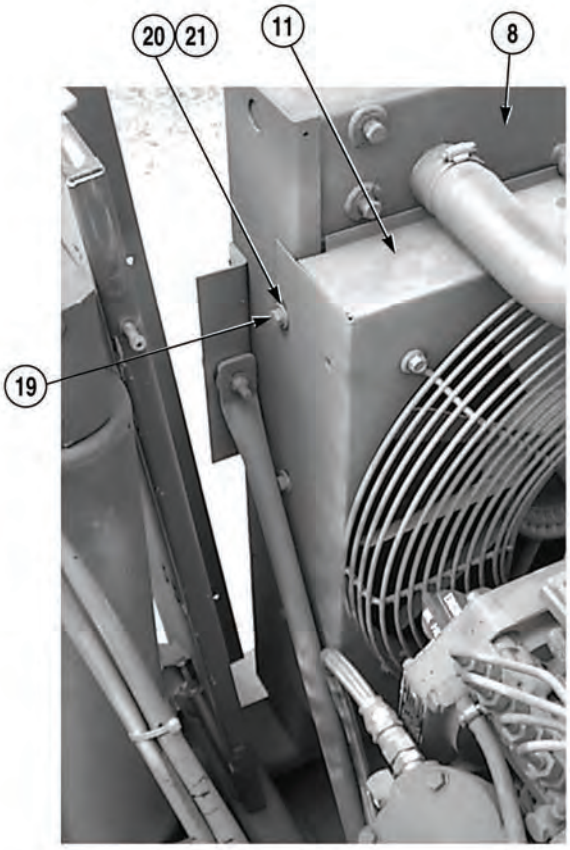

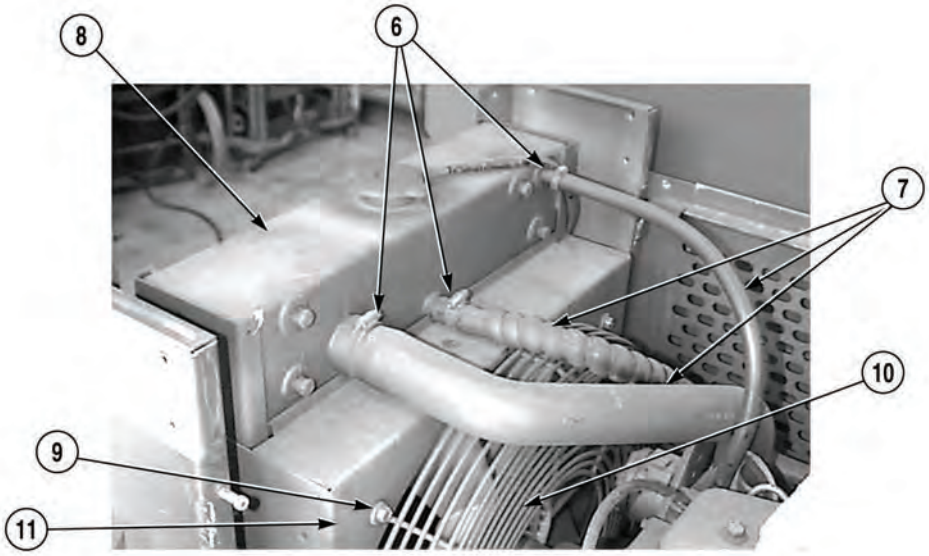

(9) Install fan guard (10) on fan shroud (11) with four self-tapping screws (9).

NOTE

Ensure hoses are installed in same position as noted prior to removal.

(10) Position four hoses (7) on radiator assembly (8) and tighten clamps (6).

NOTE

Ensure drain petcock is closed prior to filling radiator.

(11) Fill radiator assembly (8), (Para 3-83).

(12) Install grille (5) on engine shroud (3) with four self-tapping screws (4).

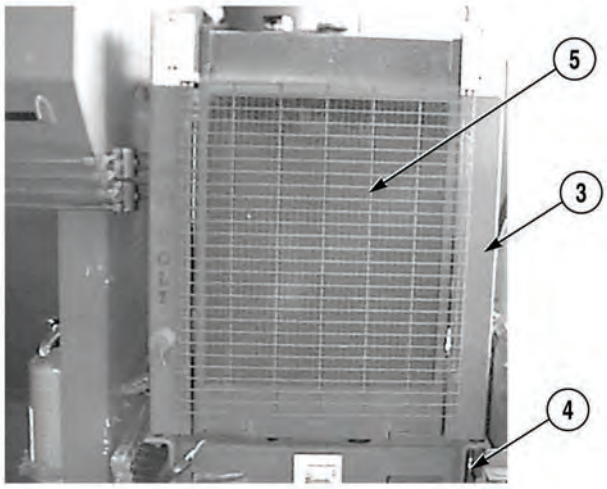

3-20. RADIATOR REPLACEMENT (S/N 8RDCD301513HC THRU S/N 8RDCD301619HC) (CONT).

WARNING

Top engine shroud cover weighs 65 lb (29.5 kg). Do not attempt to move or lift cover without aid of an assistant. Failure to comply could result in serious injury to personnel.

(13) With aid of an assistant, install top engine shroud cover (2) on engine shroud (3) with 24 self-tapping screws (1).

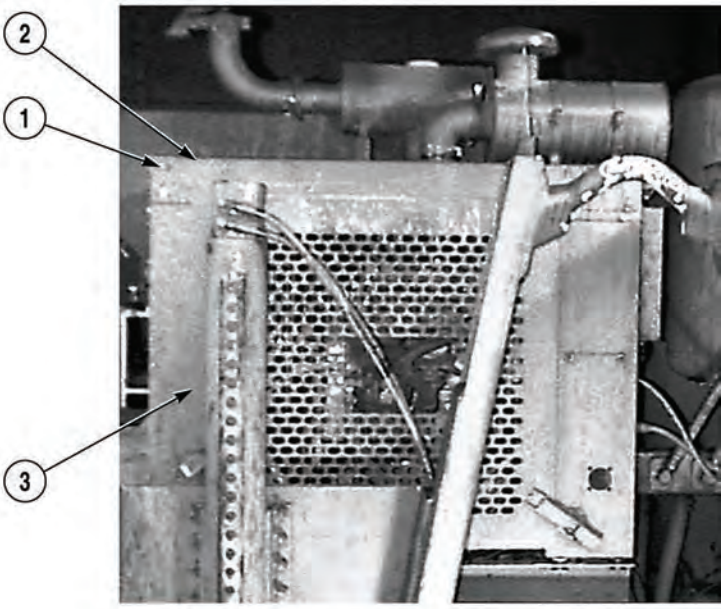

c. Follow-On Maintenance:

- Install engine air intake assembly, (Para 3-3).
- Install exhaust assembly, (Para 3-5).
- Fill radiator, (Para 3-83).
- Connect batteries, (Para 3-10).
- Start engine, (Para 2-19).
- Check for leaks.
- Shut off engine, (Para 2-19).
- Install side engine access panel, (Para 3-79).

END OF TASK

3-21. RADIATOR REPLACEMENT (S/N 8RDCD301620HC AND SUBSEQUENT).

This task covers:

a. Removal b. Installation c. Follow-On Maintenance

INITIAL SETUP

Tools and Special Tools
Tool Kit, General Mechanic's: Automotive (Item 19, Appendix I)

Materials/Parts
Screw, Self-Tapping (4) (1367HX1)
Locknut (1437220)
Locknut (2) (60861A)
Sealing Compound (Item 11, Appendix H)

Personnel Required
Two

Equipment Condition
Front engine access panel removed, (Para 3-78)
Top engine cover removed, (Para 3-93)
Radiator drained, (Para 3-83)

a. Removal.

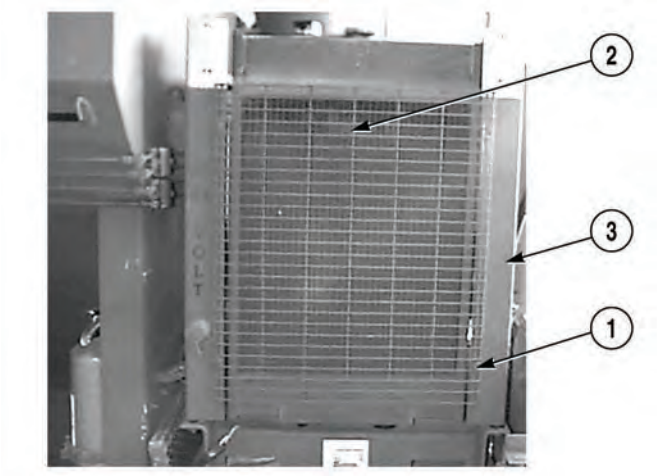

WARNING

Radiator, radiator cap, coolant, and hoses are very hot and pressurized during operation. Let radiator cool before draining coolant or removing hoses. Failure to comply could result in serious burns to personnel.

(1) Remove four self-tapping screws (1) and grille (2) from engine shroud (3). Discard self-tapping screws.

(2) Drain coolant, (Para 3-83).

3-21. RADIATOR REPLACEMENT (S/N 8RDCD301620HC AND SUBSEQUENT) (CONT).

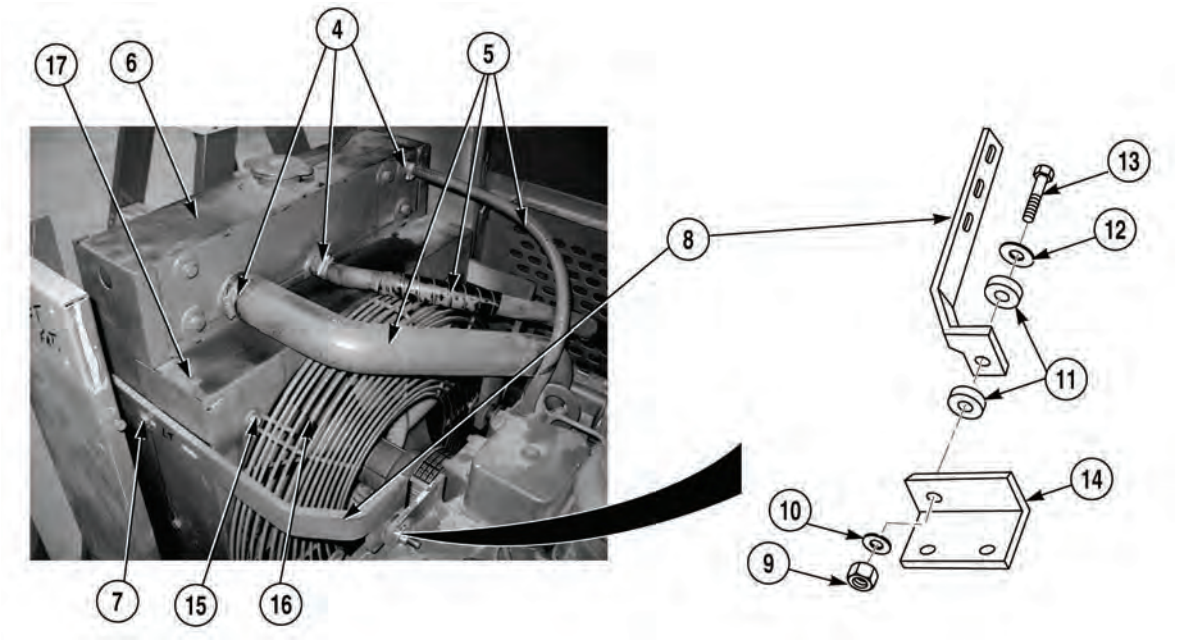

(3) Loosen three clamps (4) and remove hoses (5) from radiator (6).

(4) Remove two screws (7) from bracket (8) and radiator (6).

NOTE

Note position of isolators prior to removal to ensure proper installation.

(5) Remove locknut (9), washer (10), two isolators (11), cinch washer (12), screw (13), and bracket (8) from bracket (14). Discard locknut.

(6) Remove four screws (15) and fan guard (16) from cover (17).

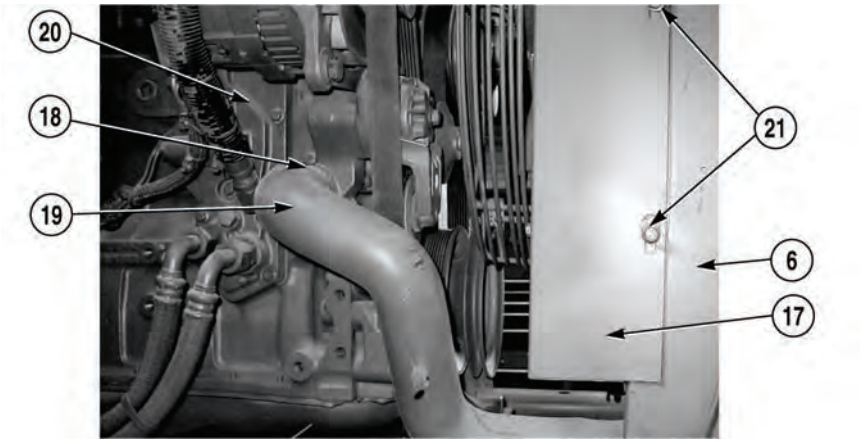

(7) Loosen clamp (18) and remove lower radiator hose (19) from engine (20).

(8) Remove four screws (21) from cover (17) and radiator (6).

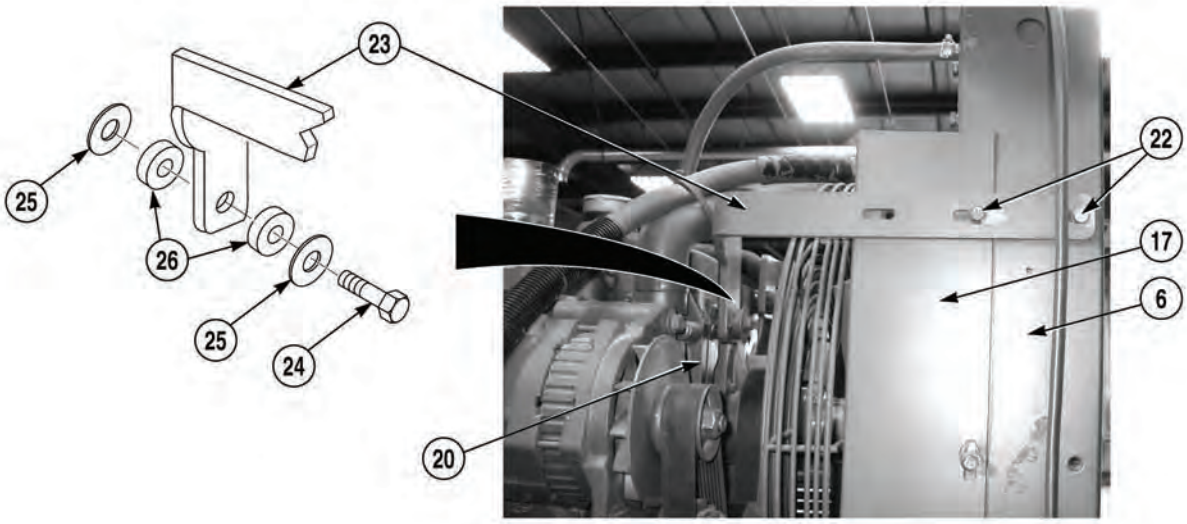

CAUTION

Have assistant support radiator upon removal of screws from support or radiator may contact fan blade and damage may result.

(9) With the aid of an assistant, remove two screws (22) from bracket (23), cover (17), radiator (6), and position cover (17) towards engine (20).

NOTE

Note position of isolators prior to removal to ensure proper installation.

(10) Remove screw (24), two cinch washers (25), isolators (26), and bracket (23) from engine (20).

(11) Attach lifting device to radiator (6).

3-21. RADIATOR REPLACEMENT (S/N 8RDCD301620HC AND SUBSEQUENT) (CONT).

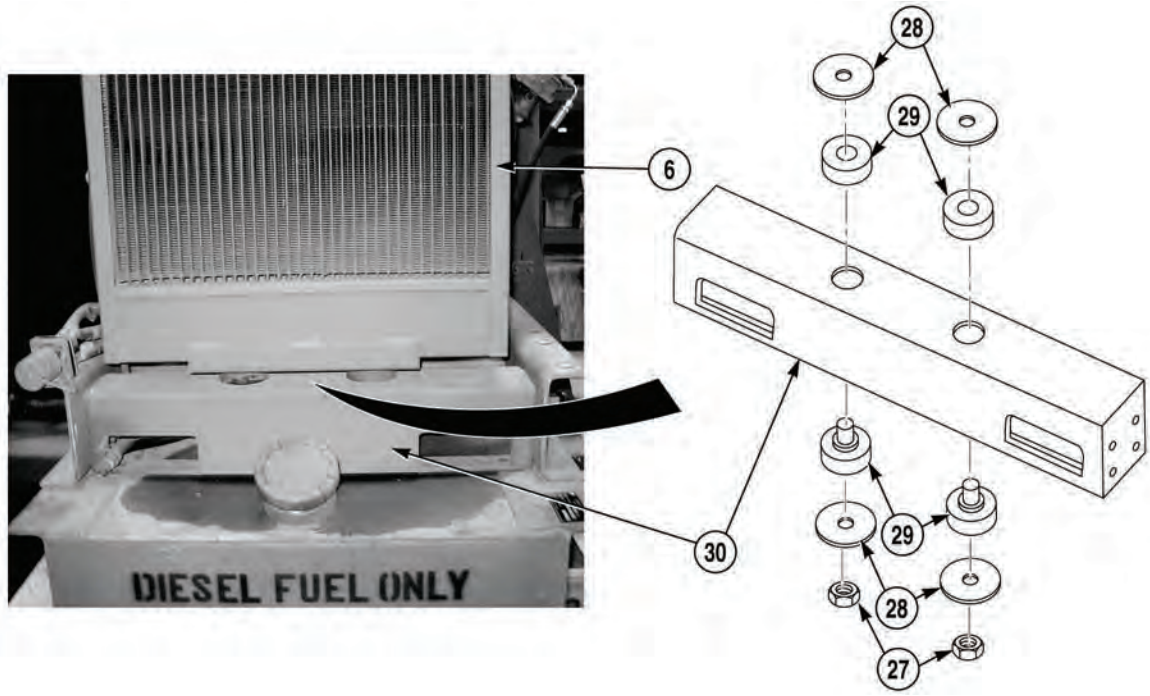

WARNING

Radiator weighs 175 lb (79.4 kg). Do not attempt to lift or move radiator without the aid of an assistant and suitable lifting device. Failure to comply could result in serious injury to personnel.

NOTE

Note position of isolators prior to removal to ensure proper installation.

(12) With the aid of an assistant and suitable lifting device, remove two locknuts (27), four cinch washers (28), isolators (29), and radiator (6) from crossmember (30). Discard locknuts.

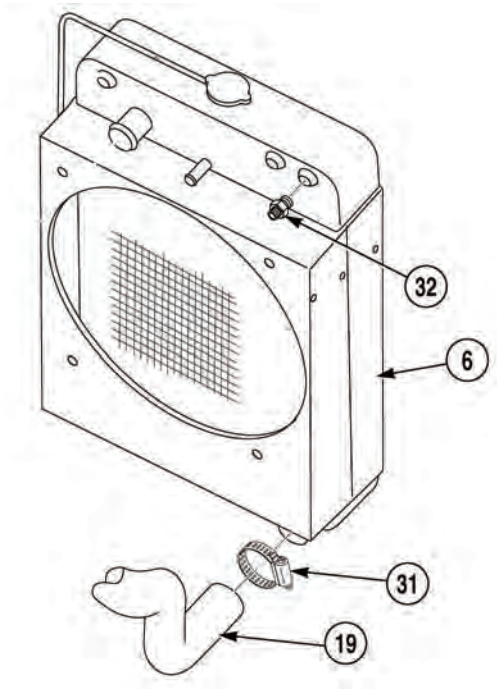

(13) Loosen clamp (31) and remove hose (19) from radiator (6).

(14) Remove fitting (32) from radiator (6).

b. Installation.

WARNING

Adhesives, solvents, and sealing compounds can burn easily, give off harmful vapors, and are harmful to skin and clothing. To avoid injury or death, keep away from open fire and use in well-ventilated area. If adhesives, solvent, or sealing compound gets on skin or clothing, wash immediately with soap and water.

(1) Apply sealing compound to threads of fitting (32).

(2) Install fitting (32) on radiator (6).

(3) Install hose (19) on radiator (6) and tighten clamp (31).

3-21. RADIATOR REPLACEMENT (S/N 8RDCD301620HC AND SUBSEQUENT) (CONT).

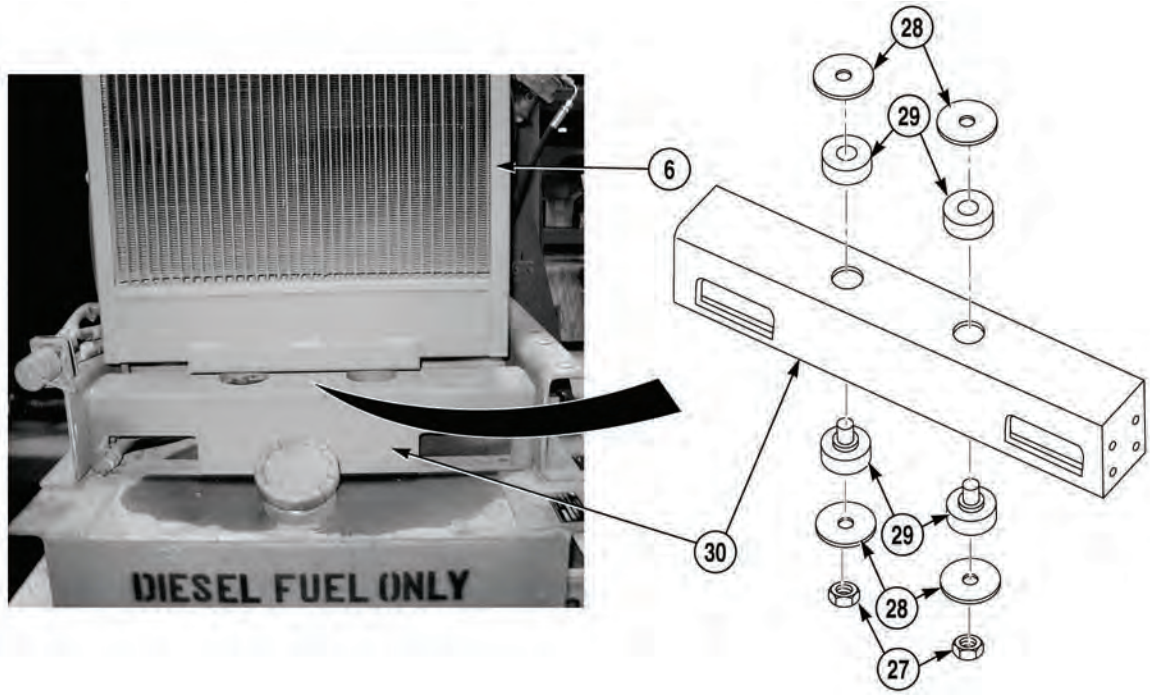

WARNING

Radiator weighs 175 lb (79.4 kg). Do not attempt to lift or move radiator without the aid of an assistant and suitable lifting device. Failure to comply could result in serious injury to personnel.

NOTE

Install isolators as noted prior to removal.

(4) With the aid of an assistant and suitable lifting device, install radiator (6) on crossmember (30) with four cinch washers (28), isolators (29), and two locknuts (27).

(5) Remove lifting device from radiator (6).

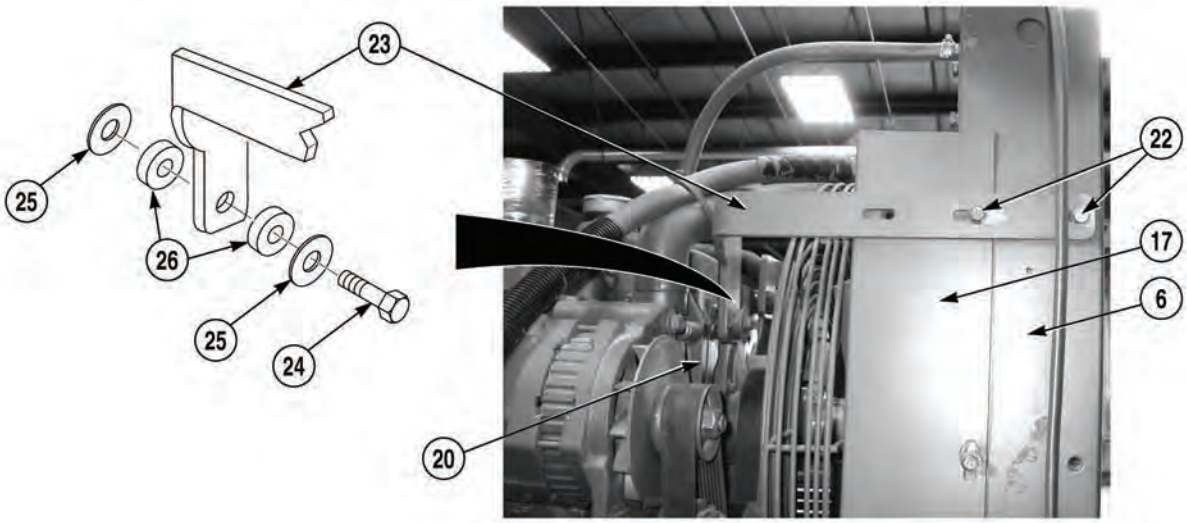

(6) Install bracket (23) on engine (20) with two cinch washers (25), isolators (26), and screw (24).

(7) Install bracket (23) on cover (17) and radiator (6) with two screws (22).

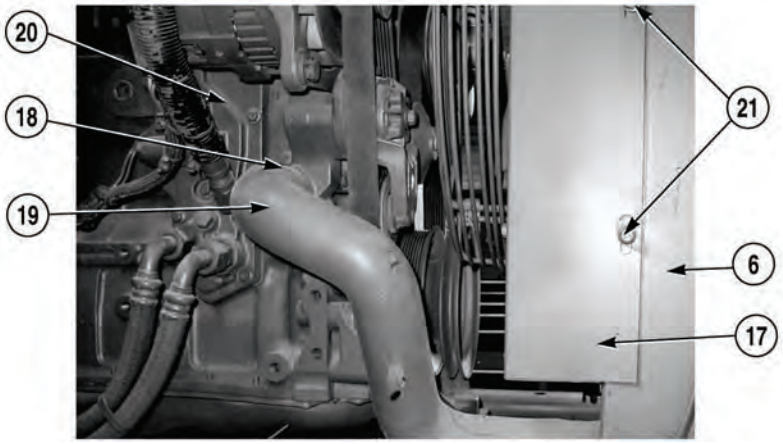

(8) Install four screws (21) on cover (17) and radiator (6).

(9) Install lower radiator hose (19) on engine (20) and tighten clamp (18).

3-21. RADIATOR REPLACEMENT (S/N 8RDCD301620HC AND SUBSEQUENT) (CONT).

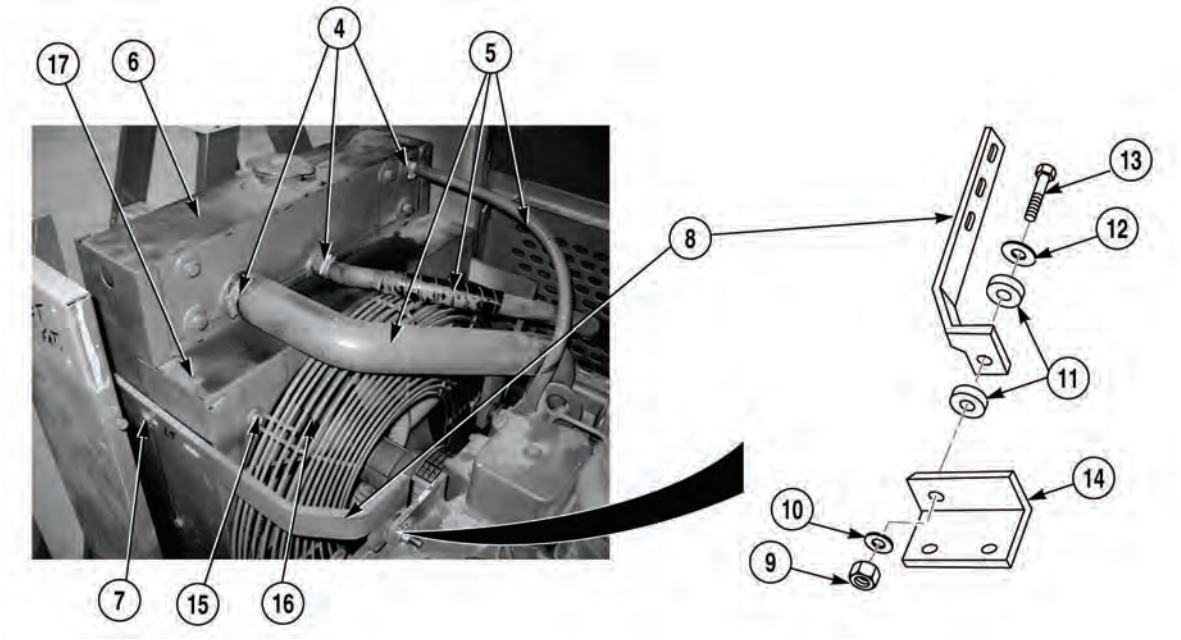

(10) Install fan guard (16) on cover (17) with four screws (15).

NOTE

Install isolators as noted prior to removal.

(11) Install bracket (8) on bracket (14) with screw (13), cinch washer (12), two isolators (11), washer (10), and locknut (9).

(12) Install bracket (8) on radiator (6) with two screws (7).

(13) Install three hoses (5) on radiator (6) and tighten three clamps (4).

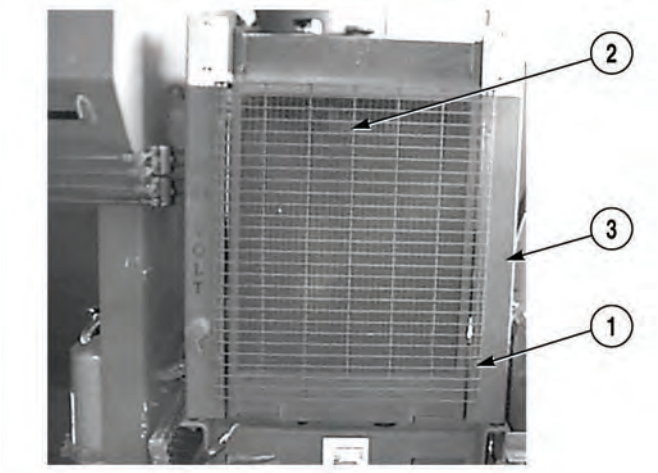

NOTE

Ensure drain petcock is closed prior to filling radiator.

(14) Install grille (2) on engine shroud (3) with four self-tapping screws (1).

c. Follow-On Maintenance:

- Fill radiator, (Para 3-83).
- Install top engine cover, (Para 3-93).
- Start engine, (Para 2-19).
- Check for leaks.
- Shut off engine, (Para 2-19).
- Install front engine access panel, (Para 3-78).

END OF TASK

3-22. SLAVE CONNECTOR AND CABLE REPLACEMENT.

This task covers:

a. Removal b. Installation c. Follow-On Maintenance

INITIAL SETUP

Tools and Special Tools
Tool Kit, General Mechanic's: Automotive (Item 19, Appendix I)

Materials/Parts
Tags, Identification (Item 13, Appendix H)
Lockwasher (2) (MS 35333-42)
Self-Tapping Screw (28) (MS 51851-106)
Tenz Nut (4) (MS 51960-65)

Personnel Required
Two

Equipment Condition
Batteries disconnected, (Para 3-10)
Engine air intake assembly removed, (Para 3-3)
Exhaust assembly removed, (Para 3-5)
Rear engine access panel removed, (Para 3-81)

a. Removal.

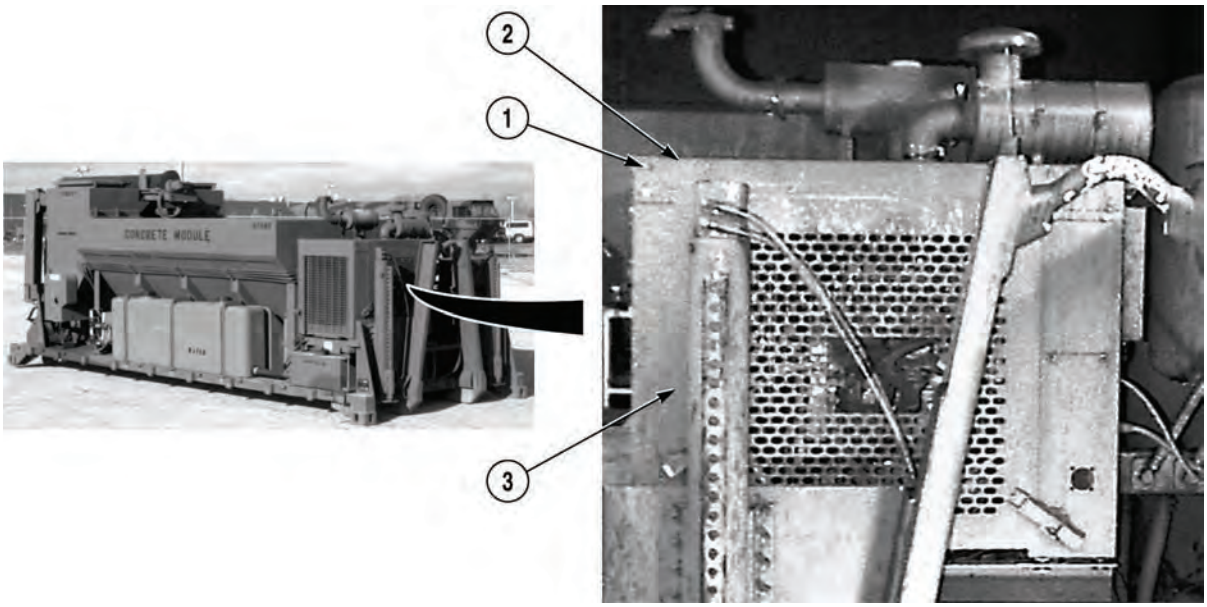

WARNING

Top engine cover weighs 65 lb (29.5 kg). Do not attempt to move or lift cover without aid of an assistant. Failure to comply could result in serious injury to personnel.

NOTE

Tag and mark wires prior to removal.

(1) With aid of an assistant, remove 24 self-tapping screws (1) and top engine shroud cover (2) from engine shroud (3). Discard self-tapping screws.

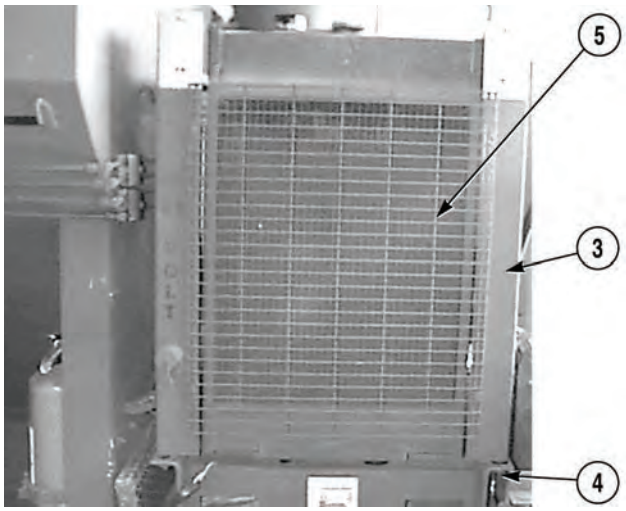

(2) Remove four self-tapping screws (4) and grille (5) from engine shroud (3). Discard self-tapping screws.

3-22. SLAVE CONNECTOR AND CABLE REPLACEMENT (CONT).

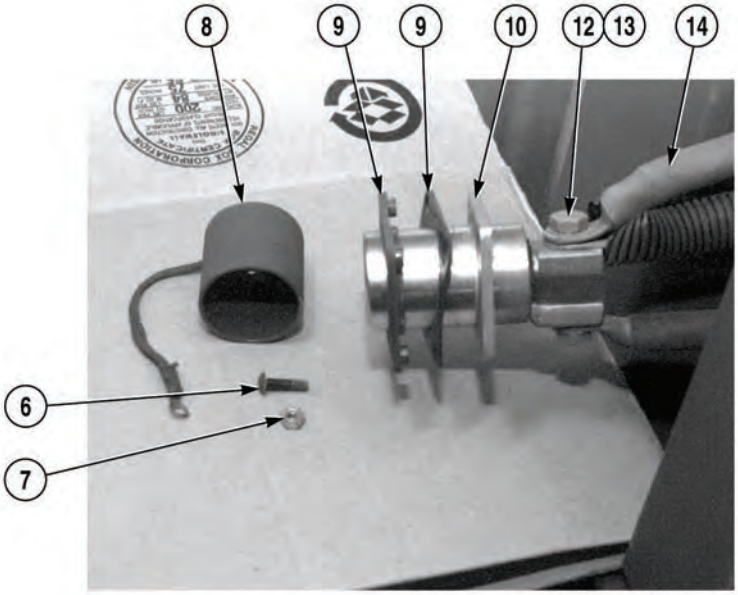

(3) Remove four socket head screws (6), tenz nuts (7), cover assembly (8), mounting plate (9) and receptacle assembly (10) from engine shroud (11). Discard tenz nuts.

(4) Remove two screws (12), lockwashers (13), and three cables (14) from receptacle assembly (10). Discard lockwashers.

b. Installation.

NOTE

Ensure cables are installed in same position as noted prior to removal.

(1) Install three cables (14) on receptacle assembly (10) with two lockwashers (13) and screws (12).

(2) Install receptacle assembly (10), mounting plate (9), and cover assembly (8) on engine shroud (11) with four tenz nuts (7) and socket head screws (6).

3-22. SLAVE CONNECTOR AND CABLE REPLACEMENT (CONT).

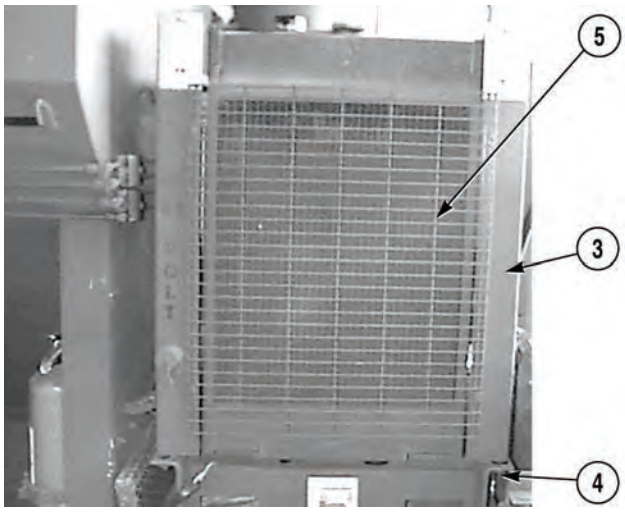

(3) Install grille (5) on engine shroud (3) with four self-tapping screws (4).

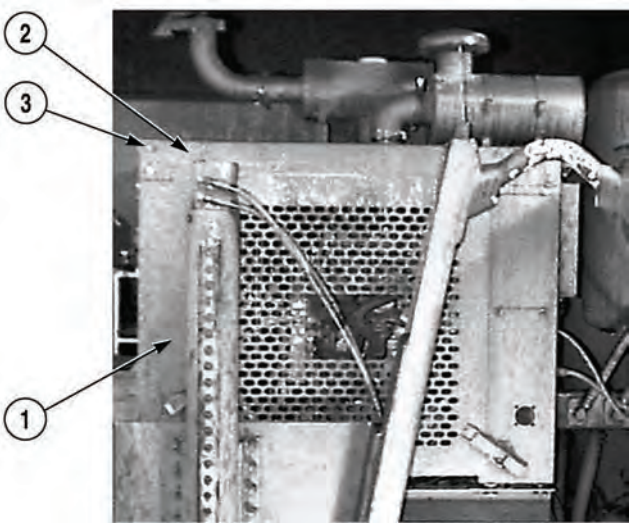

WARNING

Top engine cover weighs 65 lb (29.5 kg). Do not attempt to move or lift cover without aid of an assistant. Failure to comply could result in serious injury to personnel.

(4) With aid of an assistant, install top engine shroud cover (2) on engine shroud (3) with 24 self-tapping screws (1).

c. Follow-On Maintenance:

- Install rear engine access panel, (Para 3-81).
- Install exhaust assembly, (Para 3-5).
- Install engine air intake assembly, (Para 3-3).
- Connect batteries, (Para 3-10).

END OF TASK

3-23. STARTER REPLACEMENT (S/N 8RDCD301513HC THRU S/N 8RDCD301619HC).

This task covers:

a. Removal b. Installation c. Follow-On Maintenance

INITIAL SETUP

Tools and Special Tools
Tool Kit, General Mechanic's: Automotive (Item 19, Appendix I)

Materials/Parts
Tags, Identification (Item 13, Appendix H)
Self-Tapping Screw (24) (MS51851-106)

Personnel Required
Two

Equipment Condition
Batteries disconnected, (Para 3-10)
Engine air intake assembly removed, (Para 3-4)
Exhaust assembly removed, (Para 3-5)
Side engine access panel removed (S/N 8RDCD301513HC thru S/N 8RDCD301619HC), (Para 3-79)
Rear engine access panel removed, (Para 3-81)

a. Removal.

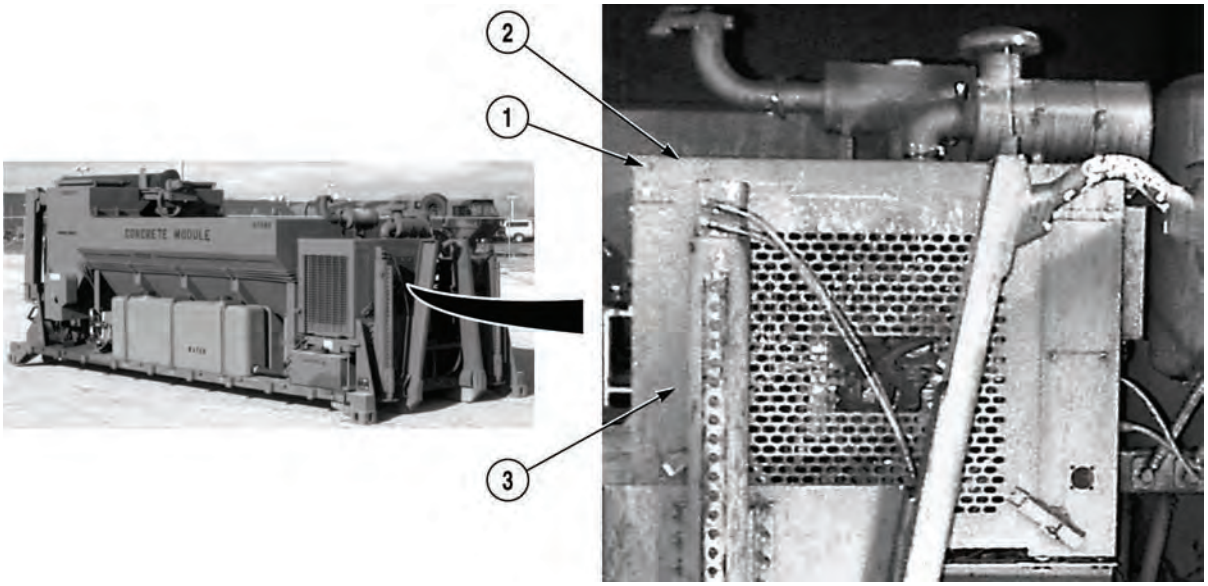

WARNING

- Ensure engine is cool before performing this task or severe burns may result.
- Top engine cover weighs 65 lb (29.5 kg). Do not attempt to move or lift cover without the aid of an assistant. Failure to comply could result in serious injury to personnel.

(1) With the aid of an assistant, remove 24 self-tapping screws (1) and top engine shroud cover (2) from engine shroud (3). Discard self-tapping screws.

NOTE

Tag and mark wires prior to removal.

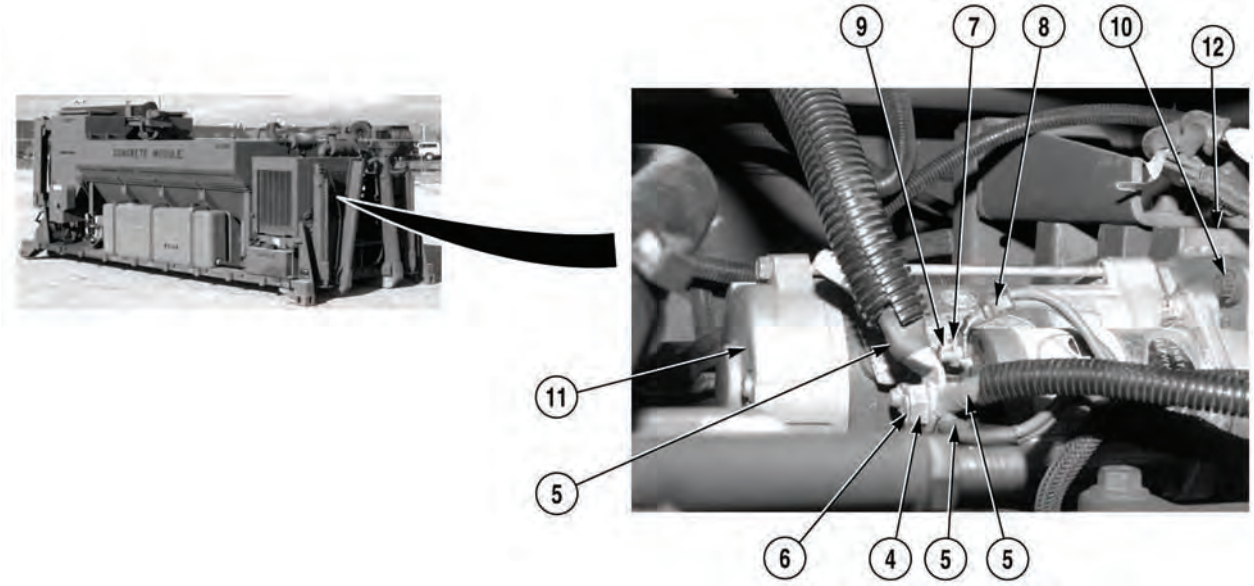

(2) Remove locknut (4) and three wires (5) from terminal (6).

(3) Remove nut (7) and wire (8) from terminal (9).

WARNING

Starter weighs 65 lb (29.5 kg). Do not attempt to move or lift starter without the aid of an assistant. Failure to comply could result in serious injury to personnel.

(4) With the aid of an assistant, remove three screws (10) and starter (11) from flywheel housing (12).

b. Installation.

WARNING

Starter weighs 65 lb (29.5 kg). Do not attempt to move or lift starter without the aid of an assistant. Failure to comply could result in serious injury to personnel.

(1) With the aid of an assistant, install starter (11) on flywheel housing (12) with three screws (10). Tighten screws to 32 lb-ft (43.4 N·m).

NOTE

Install wires as noted prior to removal.

(2) Install wire (8) on terminal (9) with nut (7).

(3) Install three wires (5) on terminal (6) with locknut (4).

3-23. STARTER REPLACEMENT (S/N 8RDCD301513HC THRU S/N 8RDCD301619HC) (CONT).

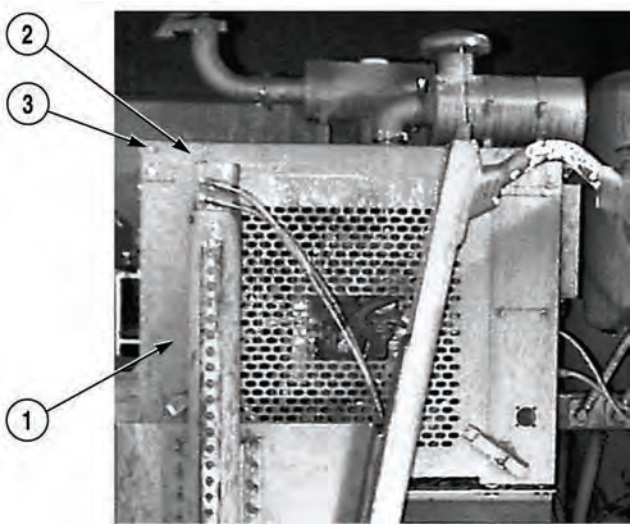

WARNING

Top engine cover weighs 65 lb (29.5 kg). Do not attempt to move or lift top engine cover without the aid of an assistant. Failure to comply could result in serious injury to personnel.

(4) With the aid of an assistant, install top engine shroud cover (2) on engine shroud (3) with 24 self-tapping screws (1).

c. Follow-On Maintenance:

- Install rear engine access panel, (Para 3-81).
- Install side engine access panel (S/N 8RDCD301513HC thru S/N 8RDCD301619HC), (Para 3-79).
- Install engine air intake assembly, (Para 3-4).
- Install exhaust assembly, (Para 3-5).
- Connect batteries, (Para 3-10).

END OF TASK

3-24. STARTER REPLACEMENT (S/N 8RDCD301620HC AND SUBSEQUENT).

This task covers:

a. Removal b. Installation c. Follow-On Maintenance

INITIAL SETUP

Tools and Special Tools
Tool Kit, General Mechanic's: Automotive (Item 19, Appendix I)

Personnel Required
Two

Materials/Parts
Tags, Identification (Item 13, Appendix H)
Screw, Self-Tapping (24) (MS 51851-106)

Equipment Condition
Batteries disconnected, (Para 3-10)
Engine air intake assembly removed, (Para 3-3)
Exhaust assembly removed, (Para 3-5)
Top engine cover removed, (Para 3-93)

a. Removal.

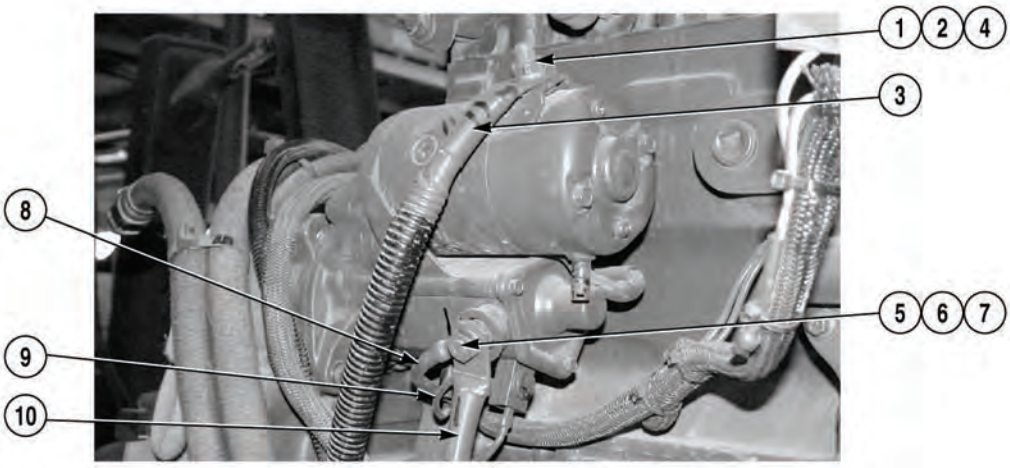

WARNING

Ensure engine is cool before performing this task or severe burns may result.

NOTE

Tag and mark wires prior to removal.

(1) Remove nut (1), lockwasher (2) and wire (3) from terminal (4).

(2) Remove nut (5), lockwasher (6) and three wires (7), (8), and (9) from terminal (10).

3-24. STARTER REPLACEMENT (S/N 8RDCD301620HC AND SUBSEQUENT) (CONT).

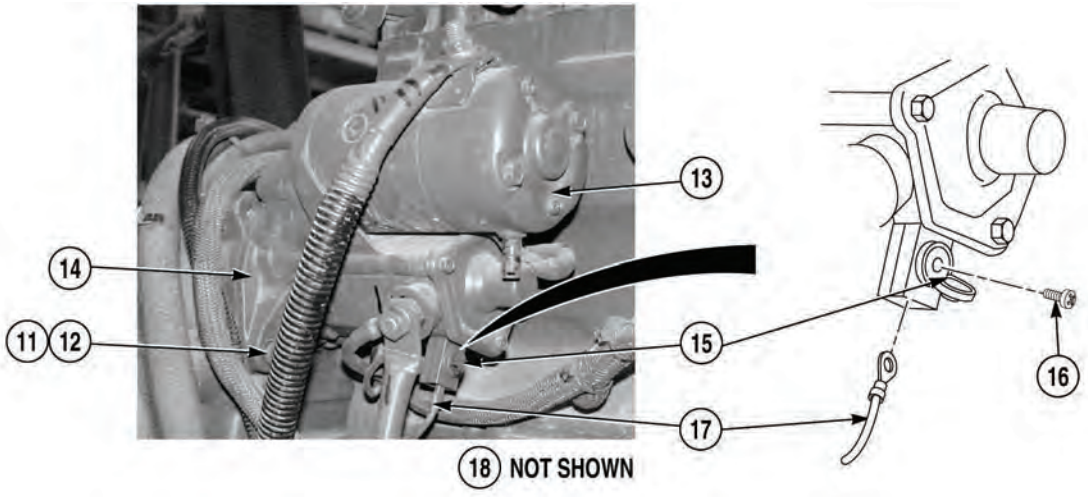

CAUTION

Last remaining wire on starter can only be removed by first removing starter from engine. Starter is heavy and must be supported when removing last wire. Failure to comply may result in damage to equipment.

NOTE

Bottom wire is fastened with a Phillips screw, and is removed by opening an access port with a small flat blade screwdriver. Have Phillips and flat blade screwdrivers ready before removing starter from engine.

(3) Remove two screws (11), spacer (12), and starter (13) from engine (14).

(4) Open access port (18).

(5) Remove screw (19) and wire (20) from terminal (21).

b. Installation.

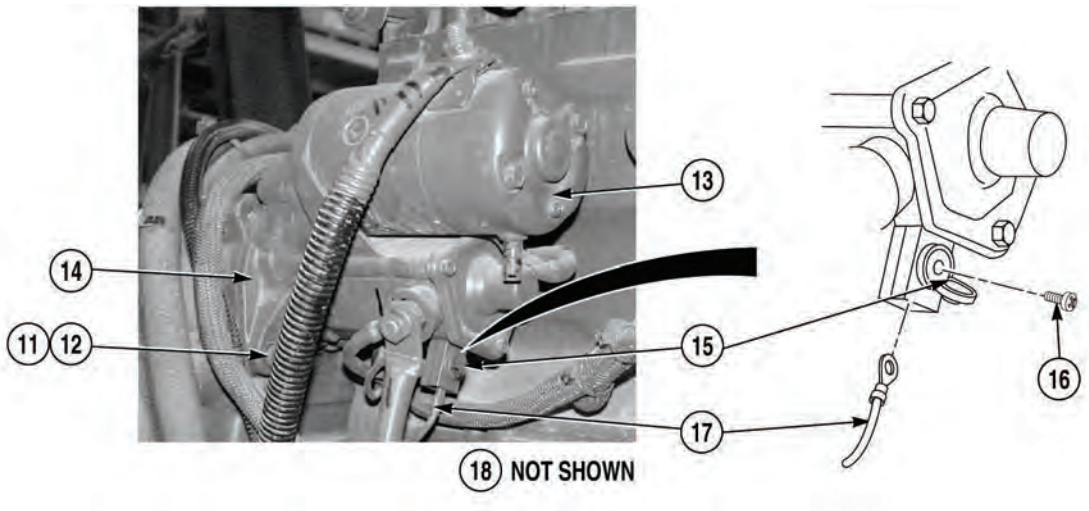

NOTE

Install bottom wire on starter before installing starter on engine.

(1) Install wire (17) on terminal (18) with screw (16).

(2) Close access port (15).

(3) Install spacer (12) and starter (13) on engine (14) with two screws (11).

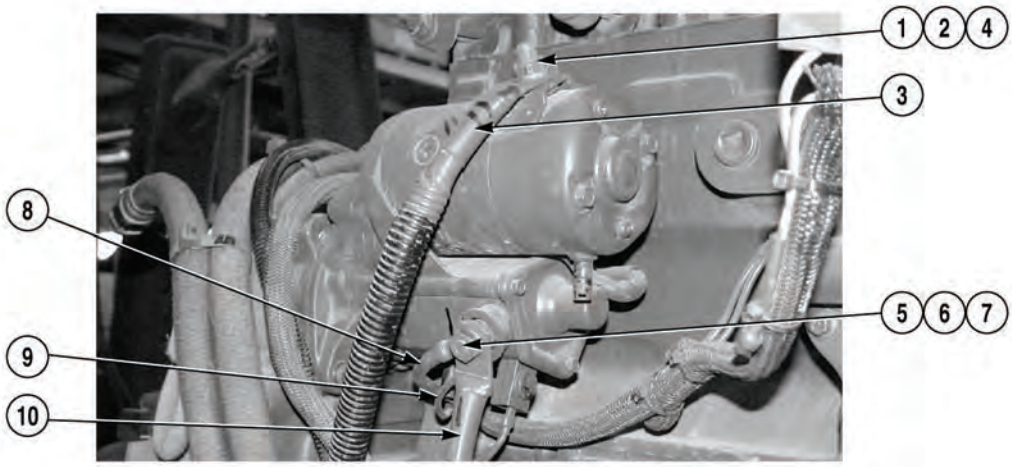

(4) Install three wires (7), (8), and (9) on terminal (10) with lockwasher (6) and nut (5).

(5) Install wire (3) on terminal (4) with lockwasher (2) and nut (1).

3-24. STARTER REPLACEMENT (S/N 8RDCD301620HC AND SUBSEQUENT) (CONT).

c. Follow-On Maintenance:

- Install top engine cover, (Para 3-93).
- Install engine air intake assembly, (Para 3-3).
- Install exhaust assembly, (Para 3-5).
- Connect batteries, (Para 3-10).

END OF TASK

3-25. ALTERNATOR REPLACEMENT (S/N 8RDCD301513HC THRU S/N 8RDCD301619HC).

This task covers:

a. Removal b. Installation c. Follow-On Maintenance

INITIAL SETUP

Tools and Special Tools
Tool Kit, General Mechanic's: Automotive (Item 19, Appendix I)

Materials/Parts
Tags, Identification (Item 13, Appendix H)
Self-Tapping Screw (24) (MS51851-106)
Lockwasher (MS35338-44)
Locknut (TLF9 14X2)

Personnel Reequired
Two

Equipment Condition
Batteries disconnected, (Para 3-10)
Engine air intake assembly removed, (Para 3-3)
Exhaust assembly removed, (Para 3-5)
Rear engine access panel removed, (Para 3-81)

a. Removal.

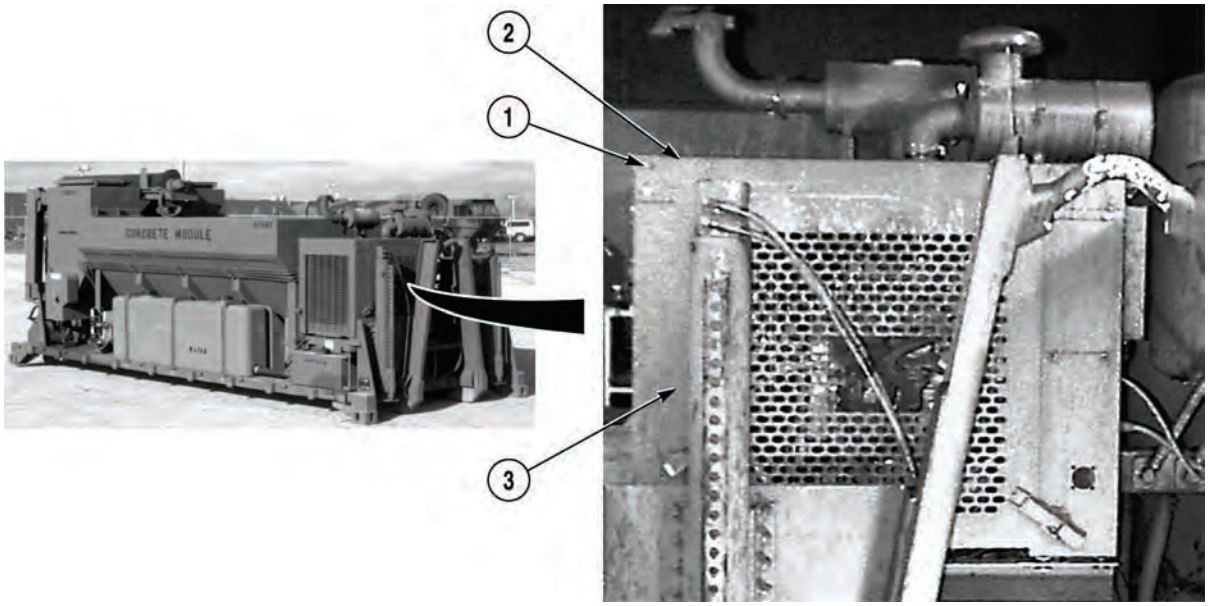

WARNING

- Ensure engine is cool before performing this task or severe burns may result.
- Top engine cover weighs 65 lb (29.5 kg). Do not attempt to move or lift cover without the aid of an assistant. Failure to comply could result in serious injury to personnel.

(1) With the aid of an assistant, remove 24 self-tapping screws (1) and top engine shroud cover (2) from engine shroud (3). Discard self-tapping screws.

3-25. ALTERNATOR REPLACEMENT (S/N 8RDCD301513HC THRU S/N 8RDCD301619HC) (CONT).

CAUTION

Applying excessive force in opposite direction of wind-up to positive stop can cause tensioner arm to break.

NOTE

Belt tensioner winds in direction that spring tang is bent over tensioner body. To loosen tension on belt, rotate tensioner to wind spring tighter.

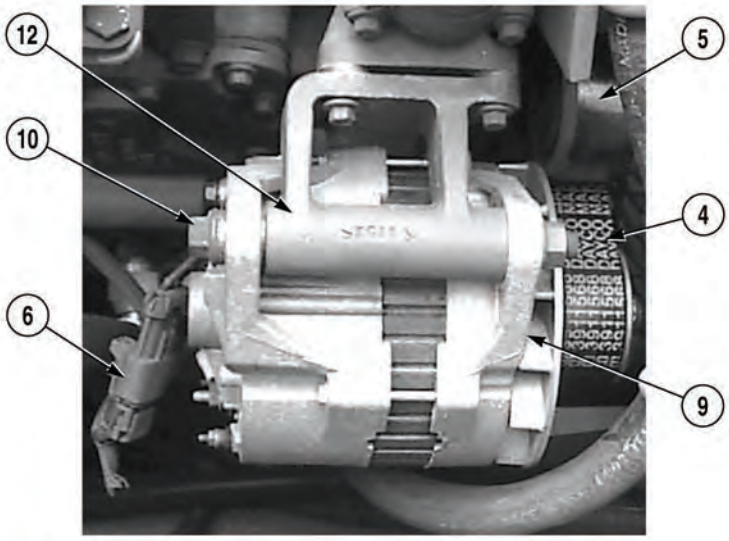

(2) Release tension on fan belt (4) and remove fan belt from belt tensioner (5).

(3) Disconnect electrical connector (6).

(4) Remove screw (7) from bracket (8) and alternator (9).

WARNING

Alternator weighs 65 lb (29.5 kg). Do not attempt to lift or move alternator without the aid of an assistant. Failure to comply could result in injury to personnel.

(5) With the aid of an assistant, remove screw (10), locknut (11) and alternator (9) from mounting bracket (12). Discard locknut.

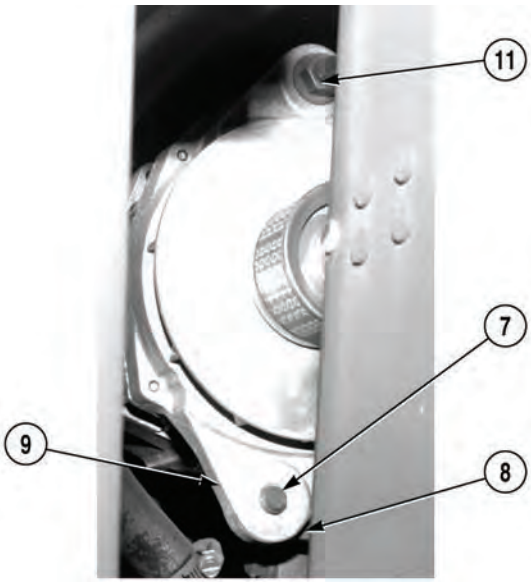

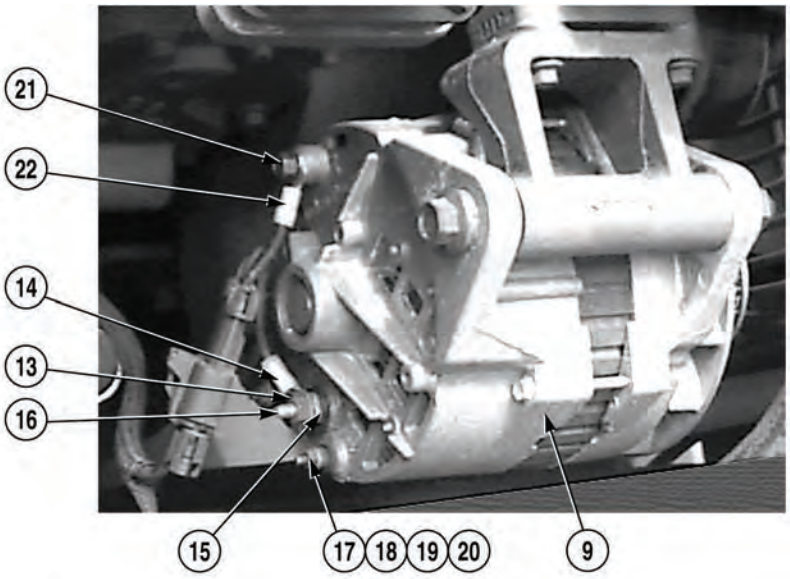

NOTE

Tag and mark wires prior to removal.

(6) Remove nut (13), wire (14), and lockwasher (15) from terminal (16). Discard lockwasher.

(7) Remove nut (17), wire (18), and washer (19) from terminal (20).

(8) Remove screw (21) and wire (22) from alternator (9).

b. Installation.

NOTE

Install wires in position as noted prior to removal.

(1) Install wire (22) on alternator (9) with screw (21).

(2) Install washer (19), wire (18), and nut (17) on terminal (20).

(3) Install lockwasher (15), wire (14), and nut (13) on terminal (15).

3-25. ALTERNATOR REPLACEMENT (S/N 8RDCD301513HC THRU S/N 8RDCD301619HC) (CONT).

WARNING

Alternator weighs 65 lb (29.5 kg). Do not attempt to lift or move alternator without aid of an assistant. Failure to comply could result in injury to personnel.

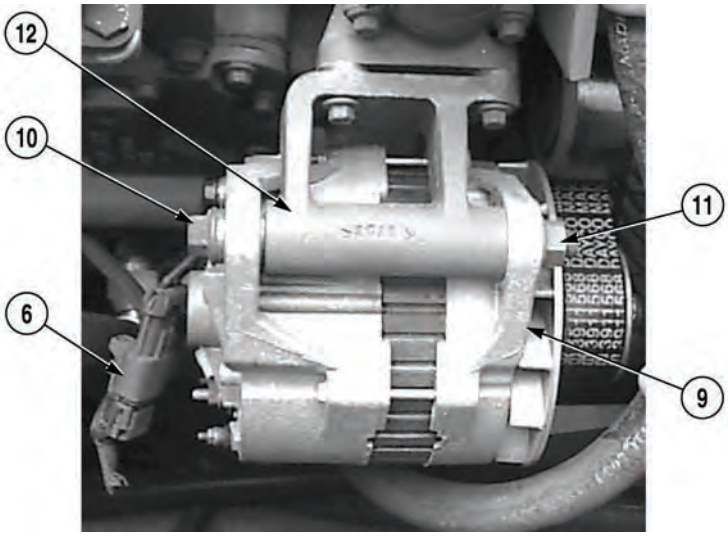

(4) With aid of an assistant, position alternator (9) on mounting bracket (12) with screw (10) and locknut (11).

(5) Install screw (7) on bracket (8) and alternator (9).

(6) Connect electrical connector (6).

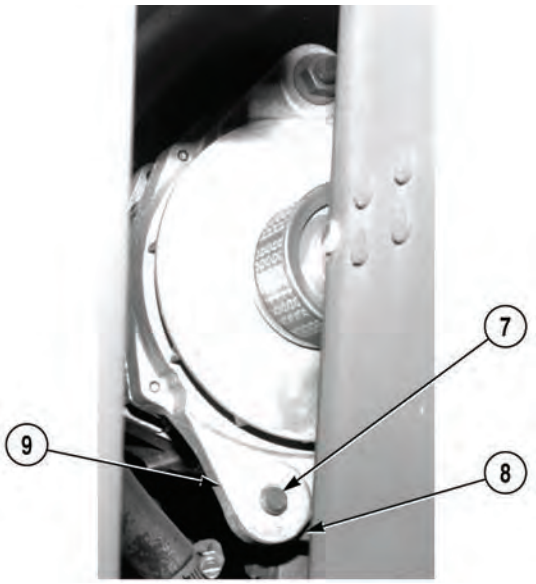

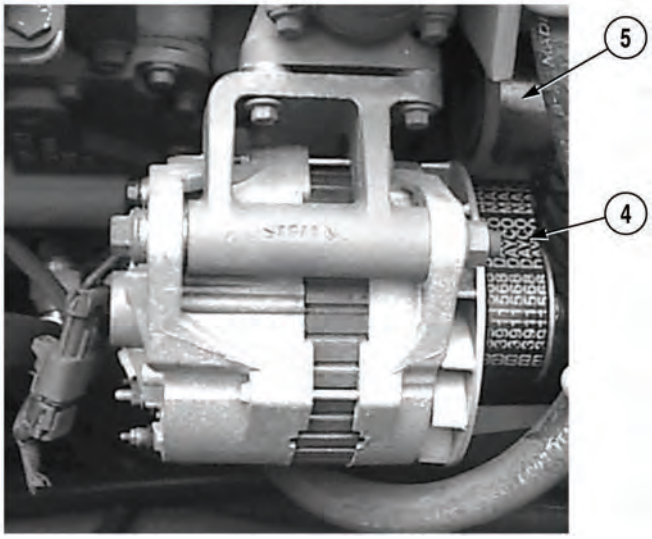

CAUTION

Applying excessive force in opposite direction of wind-up to positive stop can cause tensioner arm to break.

NOTE

Belt tensioner winds in direction that spring tang is bent over tensioner body. To loosen tension on belt, rotate tensioner to wind spring tighter.

(7) Release tension on belt tensioner (5) and install fan belt (4) on belt tensioner.

3-25. ALTERNATOR REPLACEMENT (S/N 8RDCD301513HC THRU S/N 8RDCD301619HC) (CONT).

WARNING

Top engine cover weighs 65 lb (29.5 kg). Do not attempt to move or lift cover without the aid of an assistant. Failure to comply could result in serious injury to personnel.

(8) With the aid of an assistant, install top engine shroud cover (2) on engine shroud (3) with 24 self-tapping screws (1).

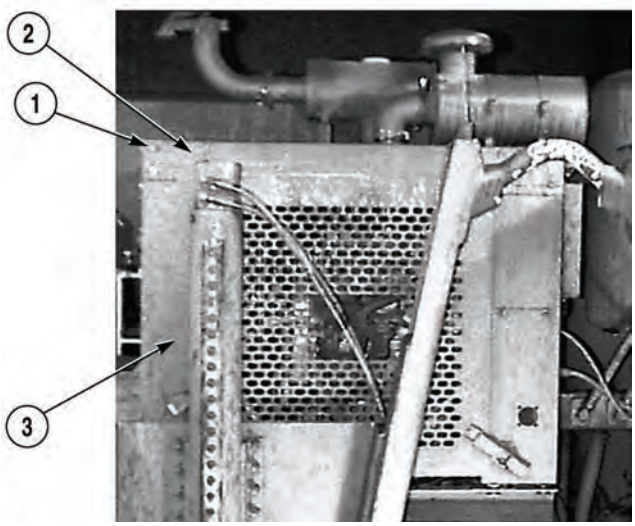

c. Follow-On Maintenance:

- Install rear engine access panel, (Para 3-81).
- Install engine air intake assembly, (Para 3-3).
- Install exhaust assembly, (Para 3-5).
- Connect batteries, (Para 3-10).

END OF TASK

3-26. ALTERNATOR REPLACEMENT (S/N 8RDCD301620HC AND SUBSEQUENT).

This task covers:

a. Removal b. Installation c. Follow-On Maintenance

INITIAL SETUP

Tools and Special Tools
Tool Kit, General Mechanic's: Automotive (Item 19, Appendix I)

Personnel Required
Two

Materials/Parts
Tags, Identification (Item 13, Appendix H)

Equipment Condition
Batteries disconnected, (Para 3-10)
Fan drive belt removed (S/N 8RDCD301620HC and subsequent), (Para 3-107)

a. Removal.

NOTE

Tag and mark wires prior to removal.

(1) Remove nut (1), lockwasher (2), and wire (3) from terminal (4).

(2) Remove nut (5), lockwasher (6), and wire (7) from terminal (8).

(3) Remove nut (9), lockwasher (10), and wire (11) from terminal (12).

NOTE

Screw has a captive lockwasher.

(4) Remove screw (13), lockwasher (14), and wire (15) from alternator (16).

3-26. ALTERNATOR REPLACEMENT (S/N 8RDCD301620HC AND SUBSEQUENT) (CONT).

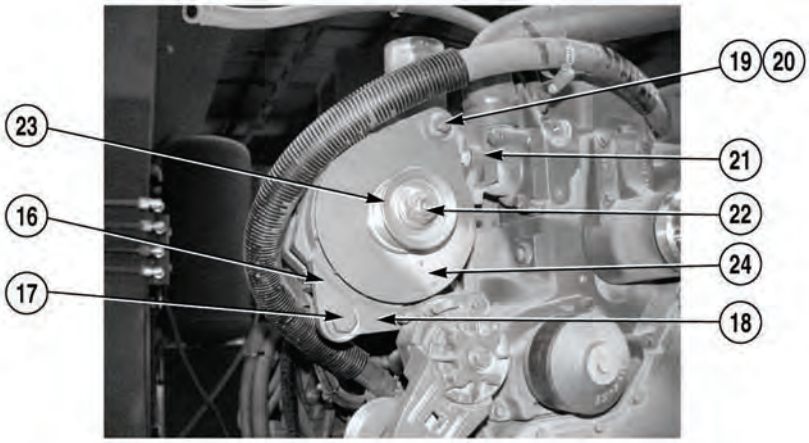

(5) Remove screw (17) from mounting bracket (18) and alternator (16).

WARNING

Alternator is heavy. Do not attempt to lift or move alternator without the aid of an assistant. Failure to comply could result in injury to personnel.

(6) With the aid of an assistant, remove nut (19), screw (20), and alternator (16) from mounting bracket (21).

(7) Remove locknut (22), pulley (23), and fan (24) from alternator (16). Discard locknut.

b. Installation.

(1) Install fan (24) and pulley (23) on alternator (16) with locknut (22).

WARNING

Alternator is heavy. Do not attempt to lift or move alternator without the aid of an assistant. Failure to comply could result in injury to personnel.

(2) With the aid of an assistant, install alternator (16) on mounting bracket (21) with screw (20) and nut (19). Do not tighten screw.

(3) Install screw (17) on mounting bracket (18) and alternator (16).

(4) Tighten nut (19) on screw (20).

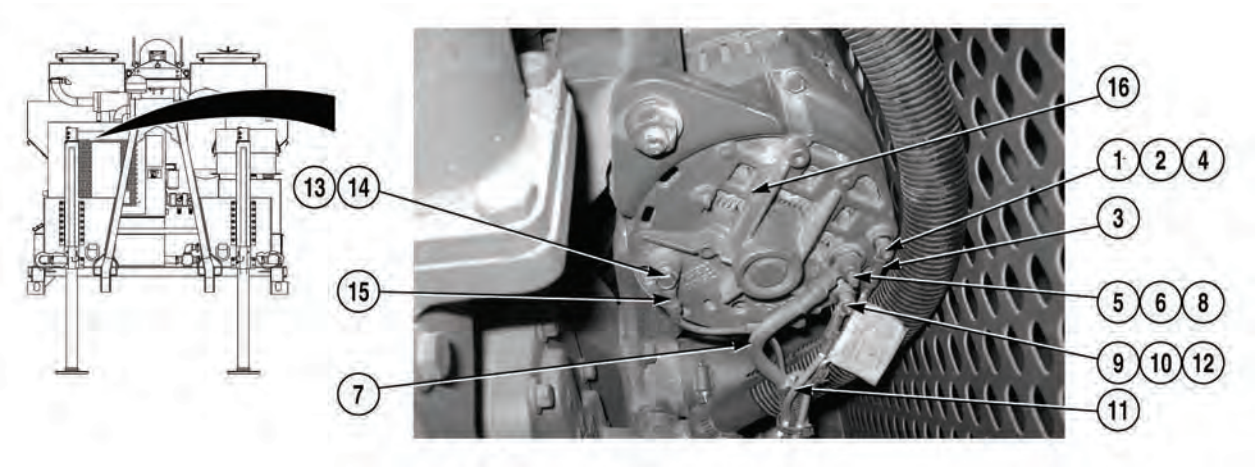

(5) Install wire (15) on alternator (16) with lockwasher (14) and screw (13).

(6) Install wire (11) on terminal (12) with lockwasher (10) and nut (9).

(7) Install wire (7) on terminal (8) with lockwasher (6) and nut (5).

(8) Install wire (3) on terminal (4) with lockwasher (2) and nut (1).

c. Follow-On Maintenance:

- Install fan drive belt (S/N 8RDCD301620HC and Subsequent), (Para 3-107).
- Connect batteries, (Para 3-10).

END OF TASK

3-27. FUEL FILTER(S) REPLACEMENT (S/N 8RDCD301513HC THRU S/N 8RDCD301619HC).

This task covers:

a. Removal b. Installation c. Follow-On Maintenance

INITIAL SETUP

Tools and Special Tools
Tool Kit, General Mechanic's: Automotive (Item 19, Appendix I)
Pan, Drain (Item 12, Appendix I)
Removal Tool, Oil Filter (Item 16, Appendix I)

Materials/Parts
Lubricating Oil, 15W40 (Item 6, Appendix H)
Oil, Fuel, Diesel (Item 8, Appendix H)

Equipment Condition
Concrete Mobile Mixer unloaded, (Para 2-5)
Front engine access panel removed, (Para 3-78)

a. Removal.

WARNING

Diesel fuel is flammable. Do not perform this procedure near fire, flame, or sparks. Failure to comply could result in injury or death to personnel.

NOTE

- There are two fuel filters. Both filters are replaced the same way.
- Fuel filter—used as secondary filter.
- Fuel/water separators filter—used as primary filter.
- Ensure gasket is removed with fuel filter.
- Position drain pan under fuel filters.

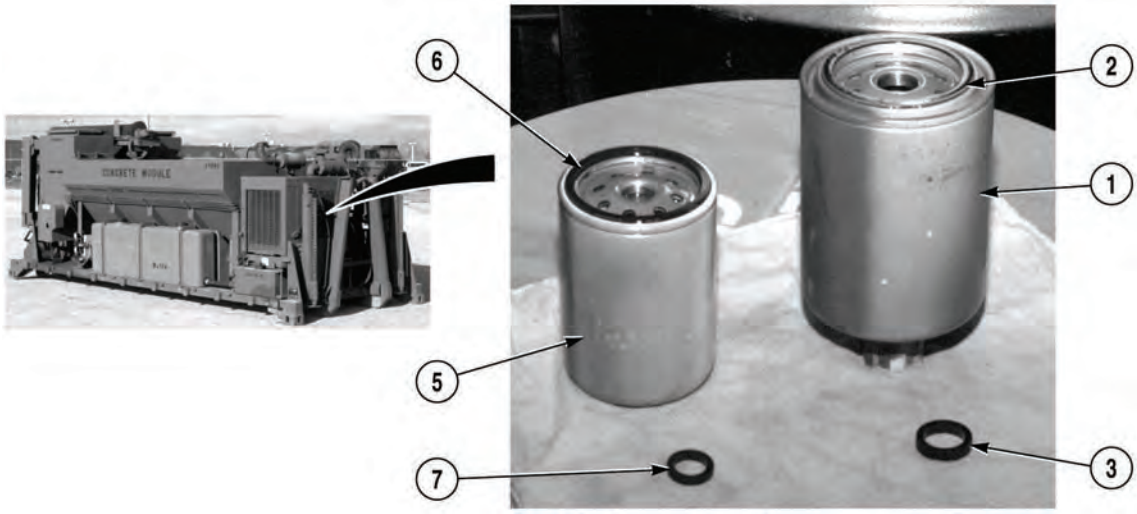

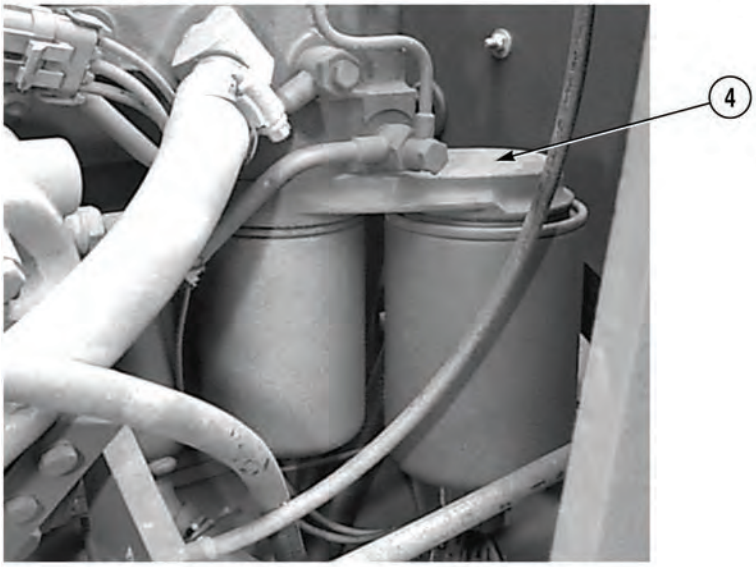

(1) Remove and discard fuel/water separator filter (1), gasket (2), and preformed packing (3) from filter housing (4).

(2) Remove and discard fuel filter (5), gasket (6), and preformed packing (7) from filter housing (4).

3-27. FUEL FILTER(S) REPLACEMENT (S/N 8RDCD301513HC THRU S/N 8RDCD301619HC) REPLACEMENT (CONT).

b. Installation.

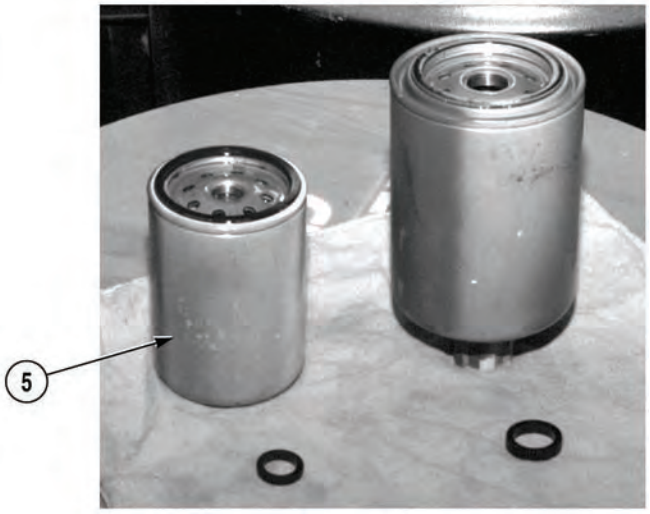

CAUTION

Mechanical tightening will distort threads, filter gasket, or filter—only hand tighten. Failure to comply could result in damage to equipment.

(1) Fill fuel filter (5) with clean diesel fuel.

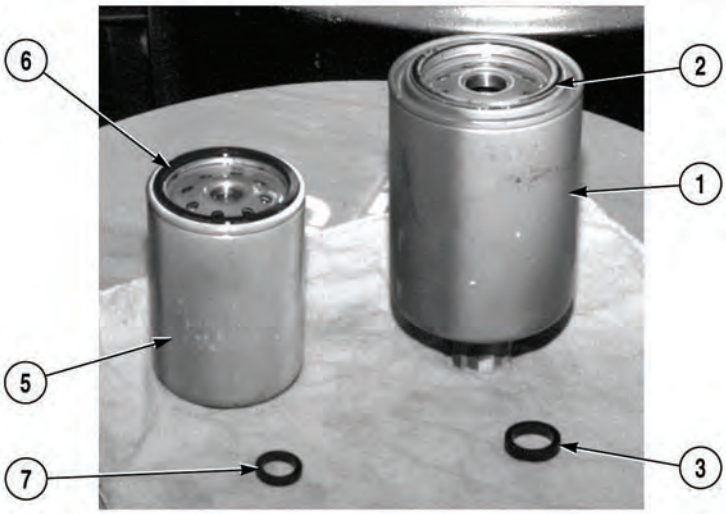

NOTE

- Apply a light film of engine oil to gasket sealing surface before installing filter.
- Gasket can stick on filter head. Ensure gasket is removed and sealing surface is clean before installing new filter.

(2) Apply clean oil to fuel filter gasket (6) and preformed packing (7).

(3) Install fuel filter (5) on filter housing (4).

(4) Fill fuel/water separator filter (1) with clean diesel fuel.

(5) Apply clean oil to fuel/water separator filter gasket (2) and preformed packing (3).

(6) Install fuel/water separator filter (1), gasket (2), and preformed packing (3) on filter housing (4).

3-27. FUEL FILTER(S) REPLACEMENT (S/N 8RDCD301513HC THRU S/N 8RDCD301619HC) REPLACEMENT (CONT).

c. Follow-On Maintenance:

- Start engine, (Para 2-19).
- Check for leaks.
- Shut off engine, (Para 2-19).
- Install front engine access panel, (Para 3-78).

END OF TASK

3-28. FUEL FILTER AND FILTER HEAD REPLACEMENT (S/N 8RDCD301620HC AND SUBSEQUENT).

This task covers:

a. Removal b. Installation c. Follow-On Maintenance

INITIAL SETUP

Tools and Special Tools
Tool Kit, General Mechanic's: Automotive (Item 19, Appendix I)
Pan, Drain (Item 12, Appendix I)
Removal Tool, Oil Filter (Item 16, Appendix I)

Materials/Parts
Lubricating Oil, 15W40 (Item 6, Appendix H)
Oil, Fuel, Diesel (Item 8, Appendix H)
Lockwasher (4) (MS 35335-62)

Materials/Parts (Continued)
Preformed Packing (2) (3678925)
Locknut (2) (5340910)
Filter, Fuel (3966406)

Equipment Condition
Engine OFF, (Para 2-19)

a. Removal.

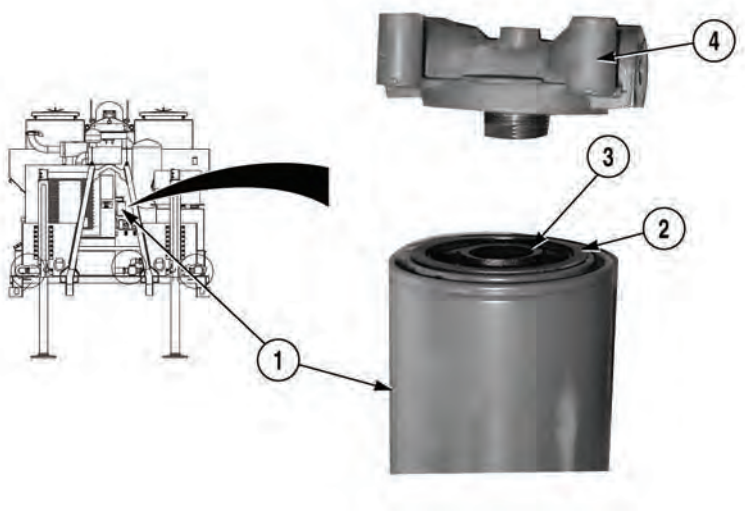

WARNING

Diesel fuel is flammable. Do not perform this procedure near fire, flame, or sparks. Failure to comply could result in injury or death to personnel.

NOTE

- Ensure gasket is removed with fuel filter.
- Position drain pan under fuel filter.

(1) Remove and discard filter (1), gasket (2), and preformed packing (3) from filter head (4).

3-28. FUEL FILTER AND FILTER HEAD REPLACEMENT (S/N 8RDCD301620HC AND SUBSEQUENT) (CONT).

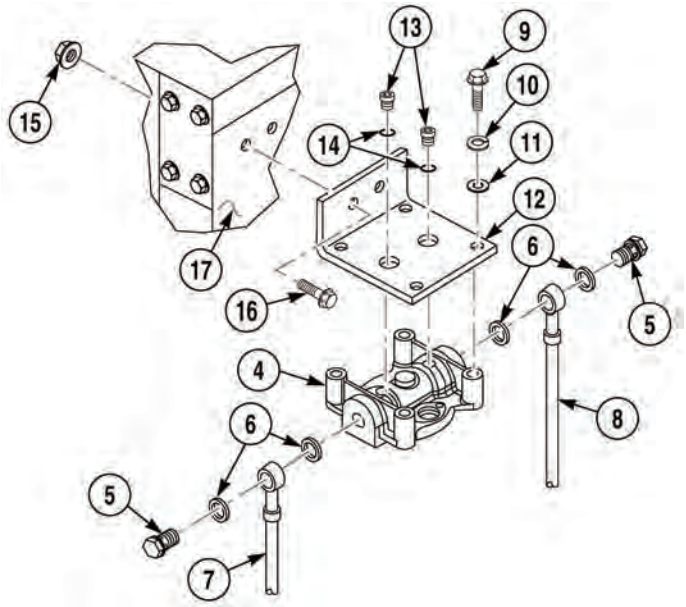

NOTE

Perform Steps (2) through (5) if filter head and bracket need to be removed.

(2) Remove two screws (5), four seals (6), and two fuel lines (7) and (8) from filter head (4).

(3) Remove four screws (9), lockwashers (10), washers (11), and filter head (4) from bracket (12). Discard lockwashers.

(4) Remove two plugs (13) and preformed packings (14) from filter head (4). Discard preformed packings.

(5) Remove two locknuts (15), screws (16), and bracket (12) from corner bracket (17). Discard locknuts.

b. Installation.

NOTE

Perform Steps (1) through (5) if bracket and filter head were removed.

(1) Install bracket (12) on corner bracket (17) with two screws (16) and locknuts (15).

(2) Apply lubricating oil to two preformed packings (14).

(3) Install two preformed packings (14) and plugs (13) on filter head (4).

(4) Install filter head (4) on bracket (12) with four washers (11), lockwashers (10), and screws (9).

(5) Install two fuel lines (7) and (8) on filter head (4) with four seals (6) and two screws (5).

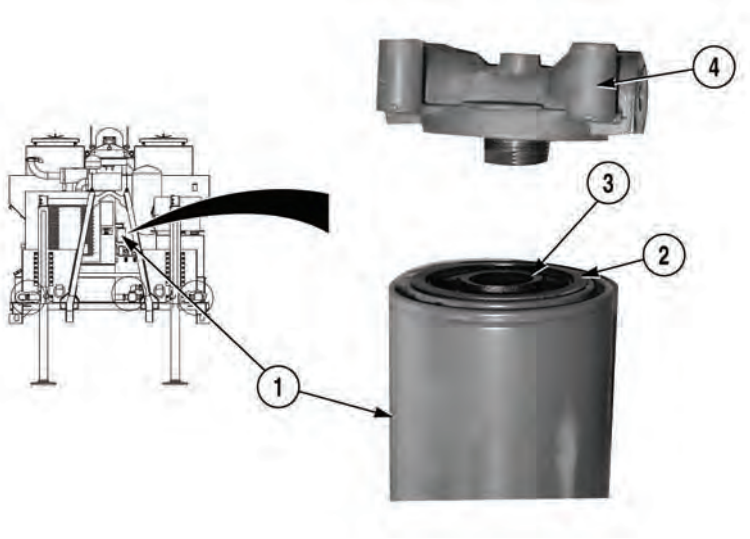

NOTE

Gasket can stick on filter head. Ensure gasket is removed and sealing surface is clean before installing new filter.

(6) Apply lubricating oil to gasket (2) and preformed packing (3).

(7) Fill filter element with fuel.

(8) Install preformed packing (3), gasket (2), and filter (1) on filter head (4).

c. Follow-On Maintenance:

- Start engine, (Para 2-19).
- Check for leaks.
- Shut off engine (Para 2-19).

END OF TASK

3-29. INLINE FUEL FILTER REPLACEMENT.

This task covers:

a. Removal b. Installation c. Follow-On Maintenance

INITIAL SETUP

Tools and Special Tools
Tool Kit, General Mechanic's: Automotive (Item 19, Appendix I)
Cap and Plug Set (Item 3, Appendix I)
Pan, Drain (Item 12, Appendix I)

Equipment Condition
Concrete Mobile Mixer unloaded, (Para 2-5)
Front engine access panel removed, (Para 3-78)

a. Removal.

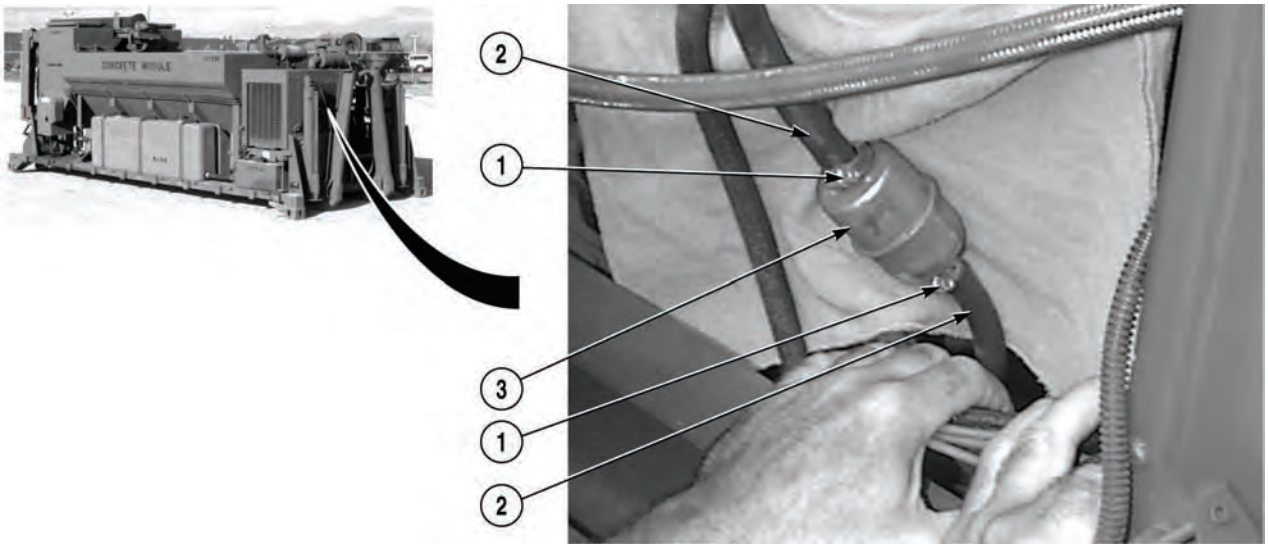

WARNING

Diesel fuel is flammable. Do not perform this procedure near fire, flame, or sparks. Failure to comply could result in injury or death to personnel.

NOTE

- Note direction of arrow on inline fuel filter prior to removal.
- Cap and plug all hoses upon removal.
- Position drain pan under inline fuel filter.

(1) Loosen two clamps (1) and remove two hoses (2) from inline fuel filter (3). Discard inline fuel filter.

b. Installation.

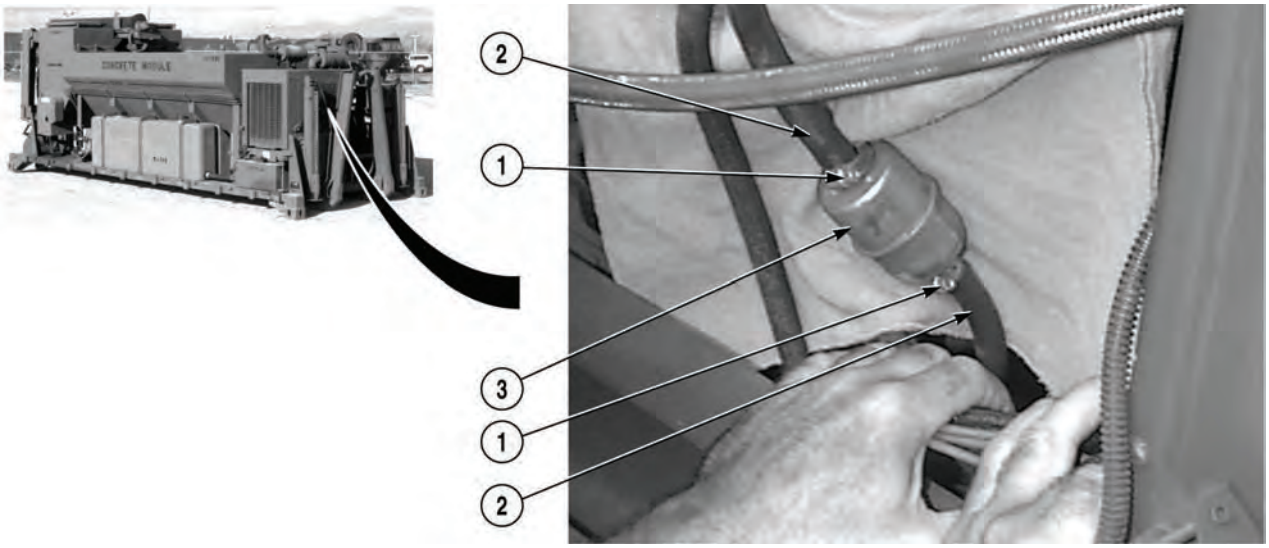

NOTE

Install inline fuel filter with arrow in direction as noted prior to removal.

(1) Install two hoses (2) on inline fuel filter (3) with two clamps (1).

c. Follow-On Maintenance:

- Start engine, (Para 2-19).
- Check for leaks.
- Shut off engine, (Para 2-19).
- Install front engine access panel, (Para 3-78).

END OF TASK

3-30. ENGINE REPLACEMENT (S/N 8RDCD301513HC THRU S/N 8RDCD301619HC).

This task covers:

a. Removal b. Installation c. Follow-On Maintenance

INITIAL SETUP

Tools and Special Tools
- Tool Kit, General Mechanic's: Automotive (Item 19, Appendix I)
- Cap and Plug Set (Item 3, Appendix I)
- Pan, Drain (Item 12, Appendix I)
- Lifting Device, Minimum Capacity 800 lb (363 kg)

Materials/Parts
- Cable Ties (Item 2, Appendix H)
- Tags, Identification (Item 13, Appendix H)
- Locknut (4) (MS51943-33)
- Lockwasher (2) (MS51415-8)
- Locknut (4) (MS51943-44)
- Lockwasher (3) (MS35338-44)
- Lockwasher (1) (MS35338-43)
- Lockwasher (1) (2239H)

Personnel Required
- Two

Equipment Condition
- Top engine cover removed, (Para 3-93)
- Side engine access panel removed, (Para 3-79)
- Throttle actuator removed, (Para 3-6)
- Oil filter head assembly removed, (Para 3-15)
- Magnetic switch removed (battery equalizer), (Para 3-16)
- Magnetic switch removed (starter), (Para 3-18)
- Radiator removed, (Para 3-20)
- Slave connector removed, (Para 3-22)
- Hydraulic pump removed, (Para 3-34)

a. Removal.

NOTE

- Remove cable ties as required.
- Tag and mark hoses, wires and connectors prior to removal.
- Position drain pan under hoses prior to removal.

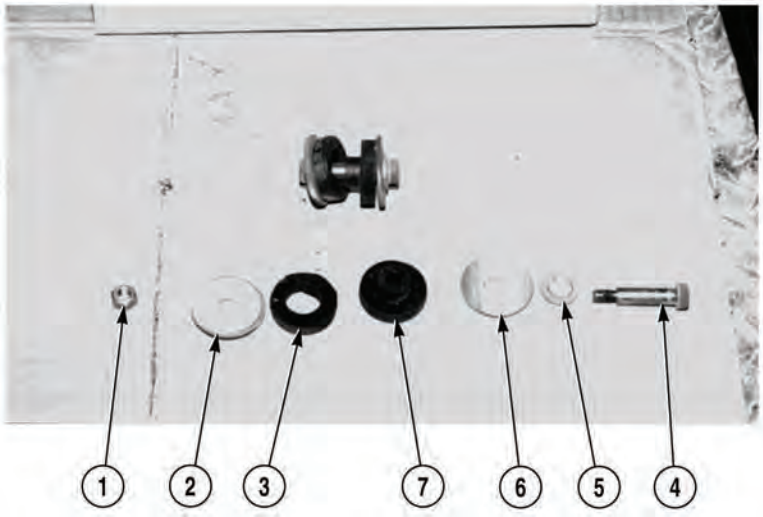

NOTE

Both front engine corners are removed the same way.

(1) Remove two locknuts (1), washers (2), isolators (3), screws (4), washers (5), washers (6), isolators (7), and engine cover corner (8) from crossmember (9). Discard locknuts.

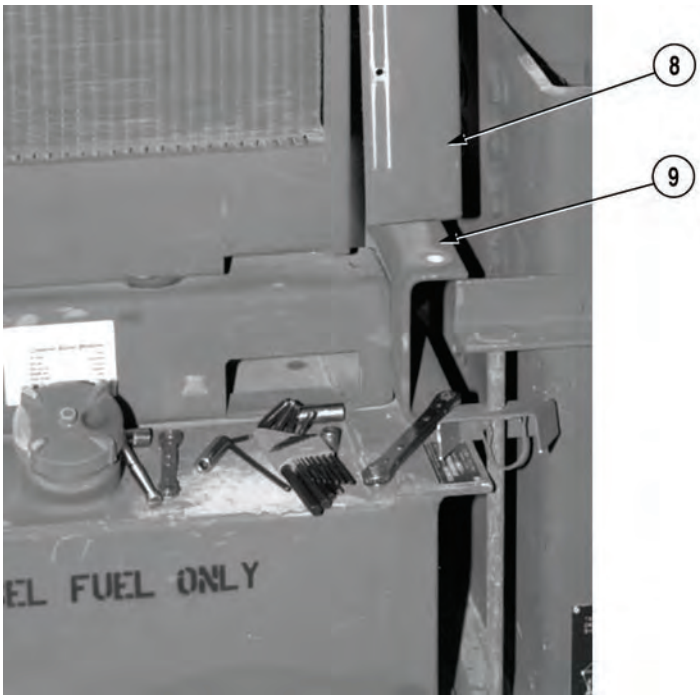

3-30. ENGINE REPLACEMENT (S/N 8RDCD301513HC THRU S/N 8RDCD301619HC) (CONT).

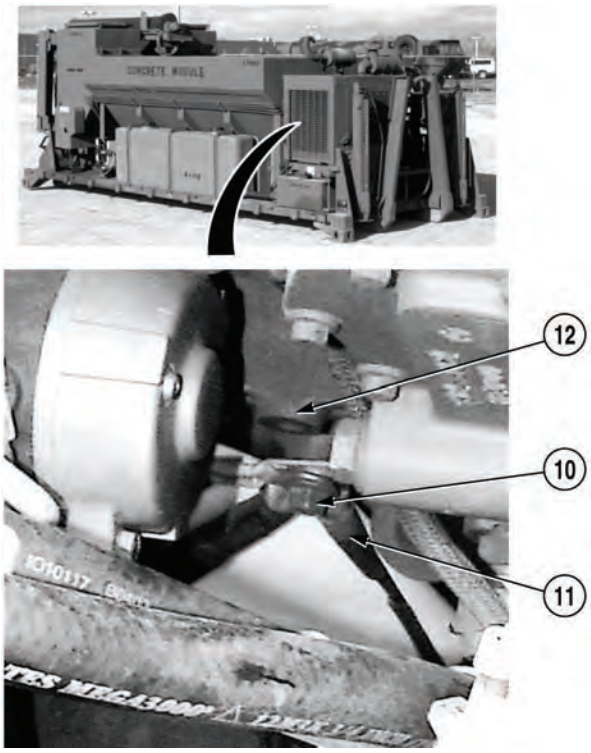

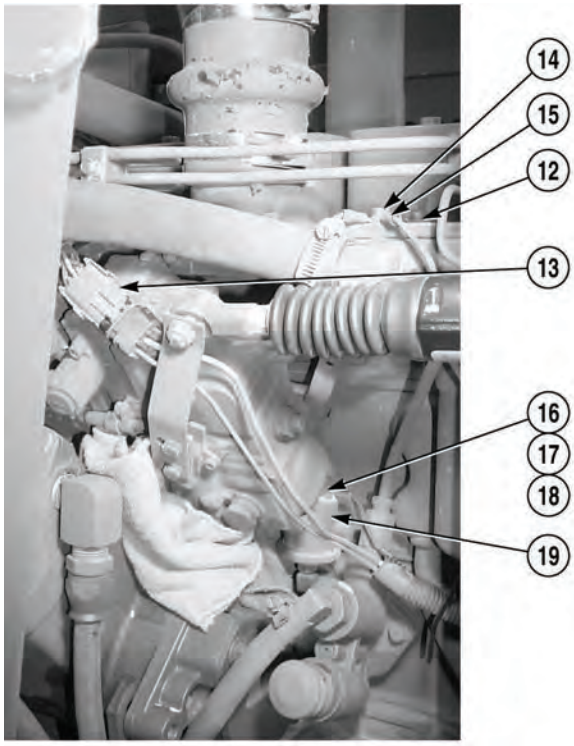

(2) Remove screw (10) and three ground cables (11) from engine (12).

NOTE

Connector is removed by gently prying on tabs.

(3) Disconnect connector (13).

(4) Remove screw (14) and two wires (15) from engine (12).

(5) Remove nut (16), wire (17), and lockwasher (18) from sending unit (19). Discard lockwasher.

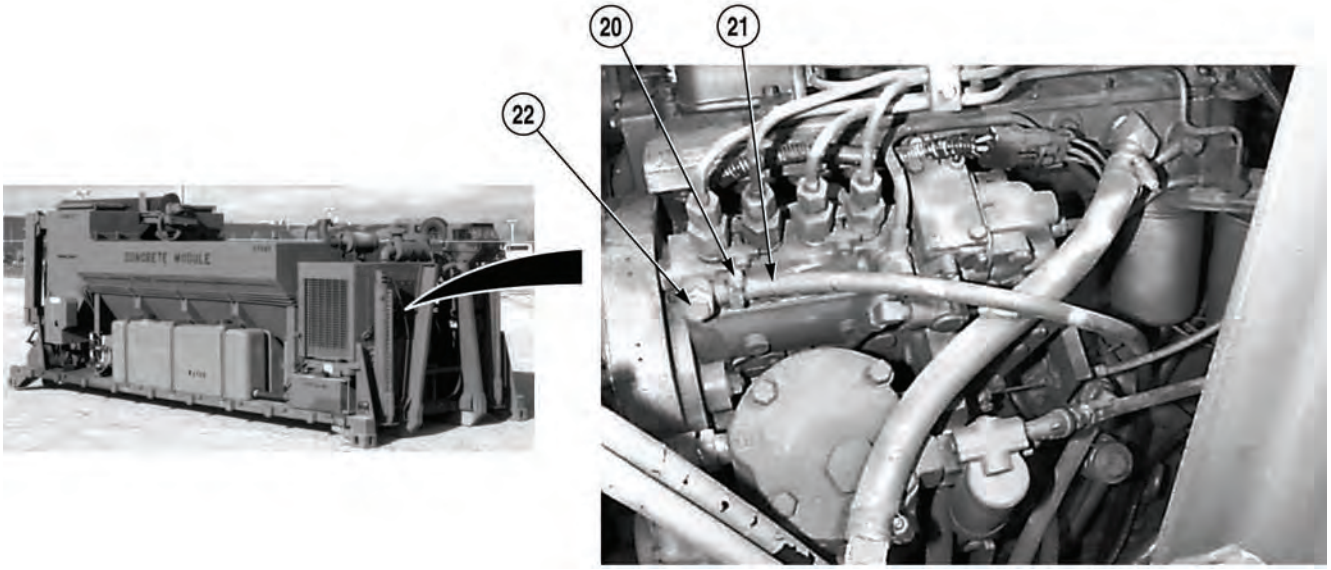

NOTE

Cap and plug hoses upon removal.

(6) Loosen clamp (20) and remove hose (21) from fuel injector pump (22).

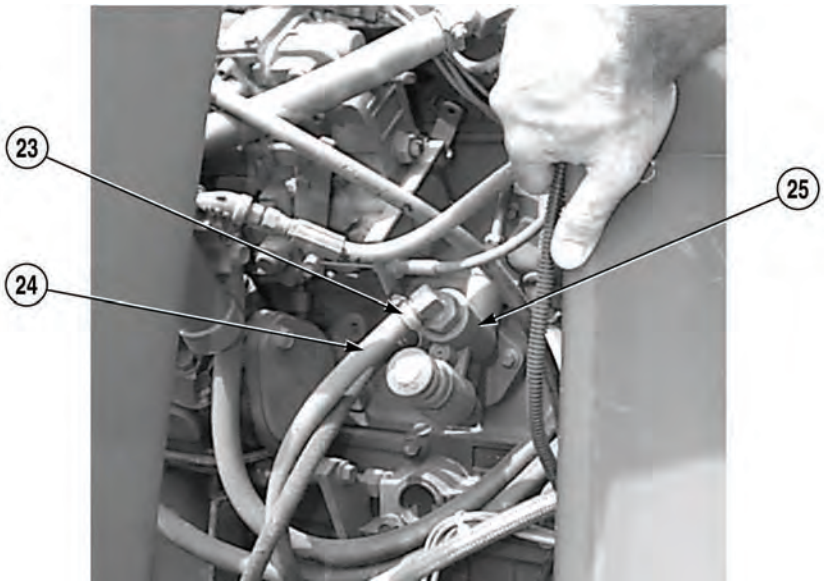

(7) Loosen clamp (23) and remove hose (24) from primer pump (25).

3-30. ENGINE REPLACEMENT (S/N 8RDCD301513HC THRU S/N 8RDCD301619HC) (CONT).

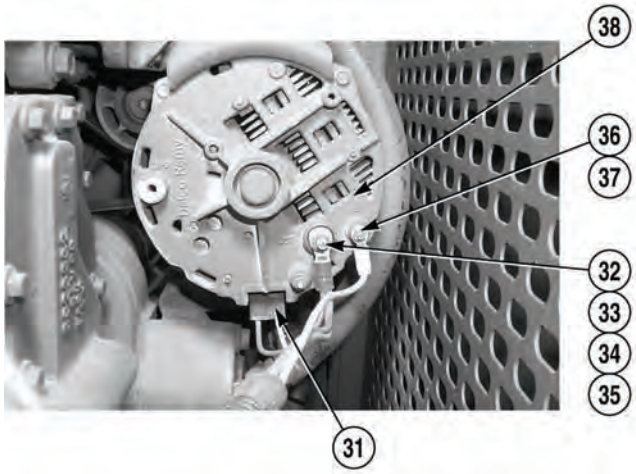

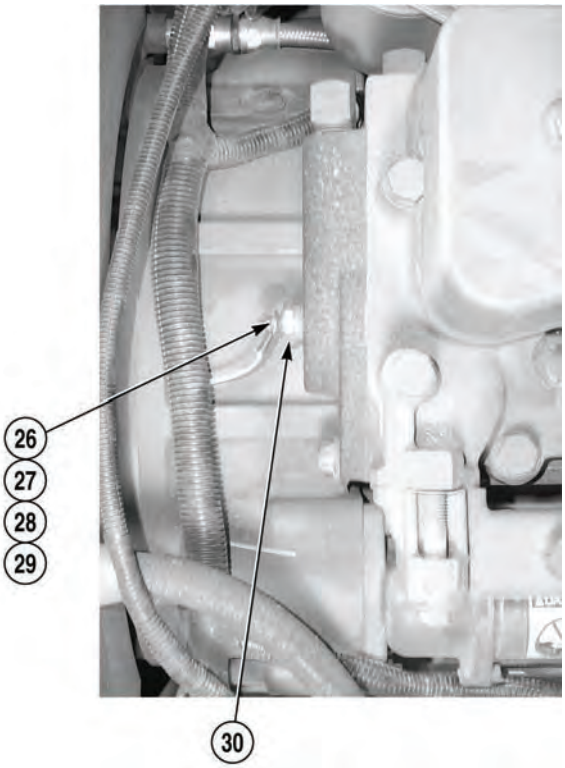

(8) Remove nut (26), lockwasher (27), wire (28), and washer (29) from sensor (30). Discard lockwasher.

(9) Disconnect connector (31).

(10) Remove nut (32), wire (33), and lockwasher (34) from terminal (35). Discard lockwasher.

(11) Remove nut (36) and wire (37) from alternator (38).

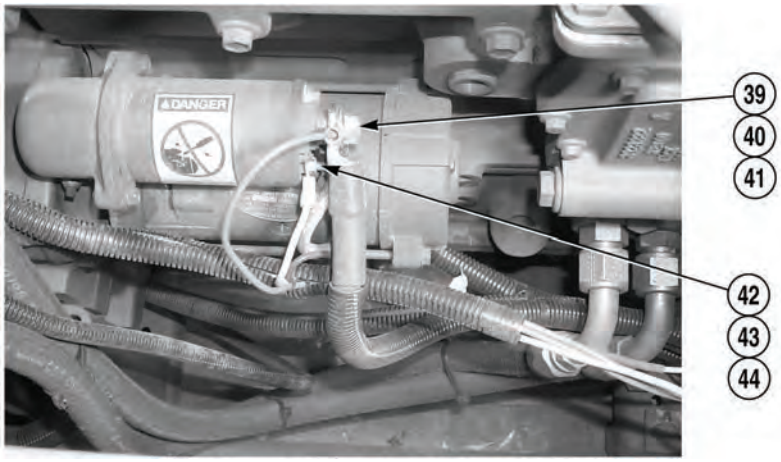

(12) Remove nut (39) and two wires (40) from terminal (41).

(13) Remove nut (42) and wire (43) from terminal (44).

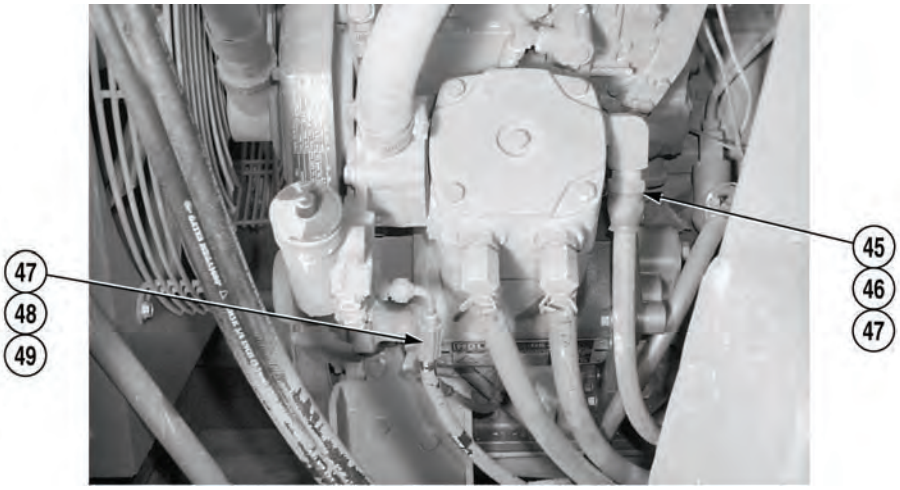

(14) Remove hose (45) from fitting (46) on air compressor (47).

(15) Remove hose (48) from fitting (49) on air compressor (47).

3-30. ENGINE REPLACEMENT (S/N 8RDCD301513HC THRU S/N 8RDCD301619HC) (CONT).

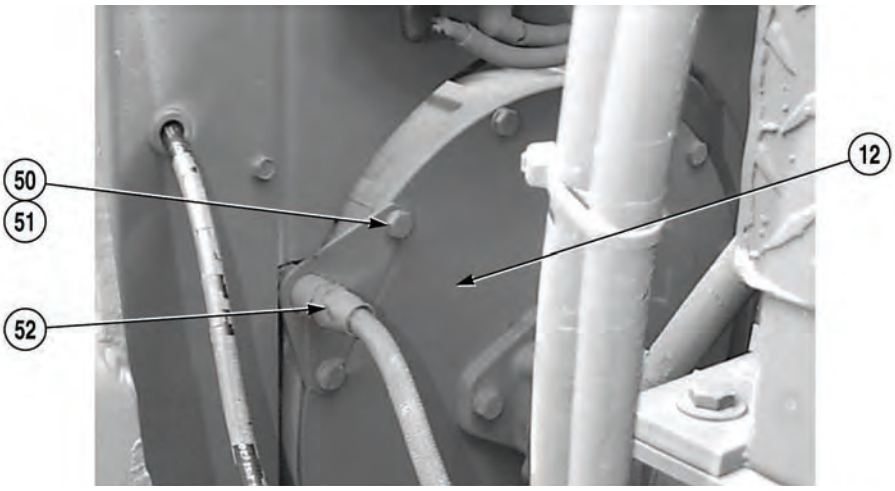

(16) Remove two screws (50), lockwashers (51), and bracket (52) from engine (12). Discard lockwashers.

(17) Remove two nuts (53), lockwashers (54), clamp (55), and hose (56) from front crossmember (57). Discard lockwashers.

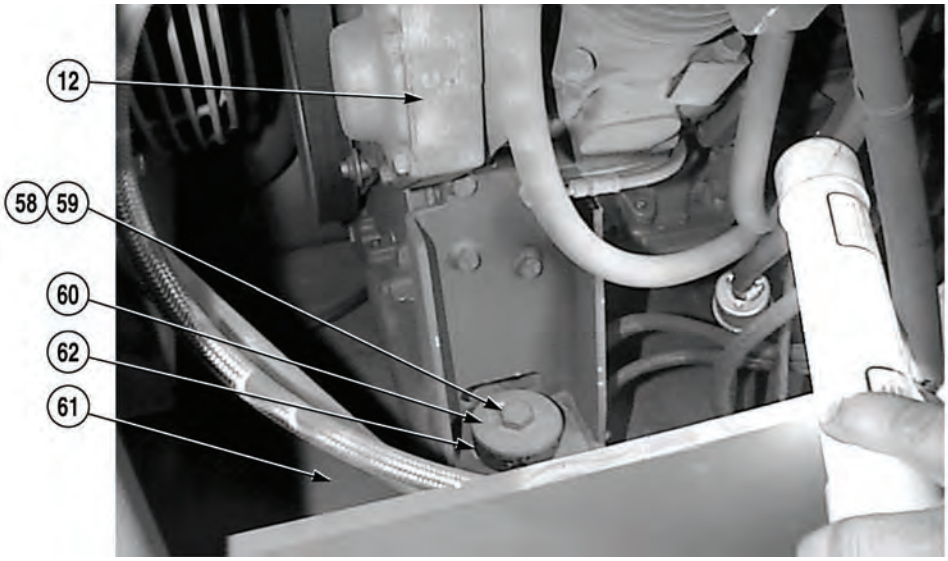

WARNING

Engine weighs 800 lb (363 kg). Do not attempt to move or lift engine without aid of an assistant and a lifting device. Failure to comply could result in serious injury or death to personnel.

(18) Attach lifting device to engine (12).

(19) With the aid of an assistant and using a lifting device, remove four locknuts (58), screws (59), washers (60), isolators (61), and engine (12) from two crossmembers (62). Discard locknuts.

3-30. ENGINE REPLACEMENT (S/N 8RDCD301513HC THRU S/N 8RDCD301619HC) (CONT).

b. Installation.

WARNING

Engine weighs 800 lb (363 kg). Do not attempt to move or lift engine without aid of an assistant and a lifting device. Failure to comply could result in serious injury or death to personnel.

NOTE

- Install wires and connectors as noted prior removal.
- Install cable ties as noted prior to removal.

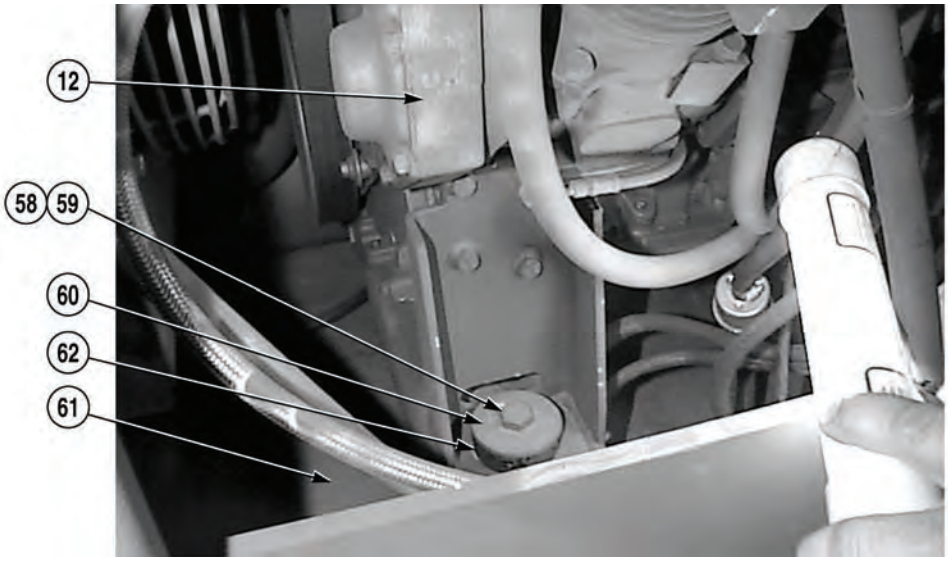

(1) Attach lifting device to engine (12).

(2) With the aid of an assistant and using a lifting device, install engine (12) on two crossmembers (62) with four isolators (61), washers (60), screws (59), and locknuts (58).

(3) Install hose (56) on front crossmember (57) with clamp (55), two lockwashers (54), and nuts (53).

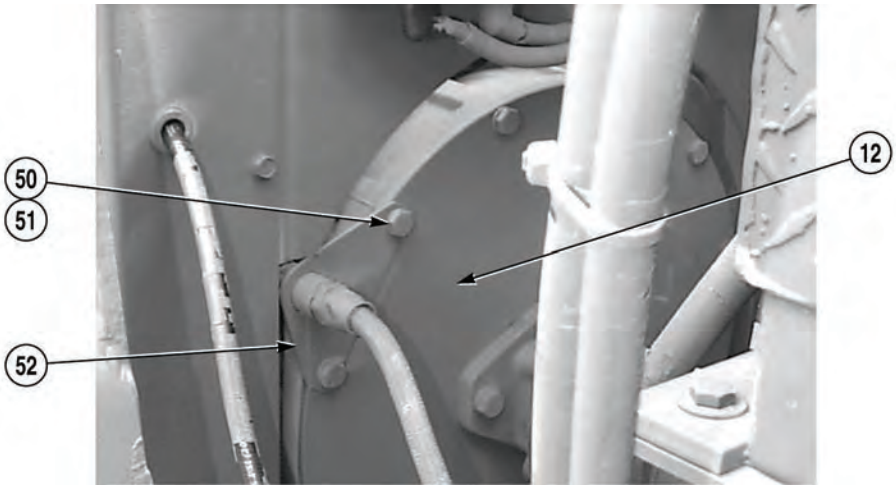

(4) Install bracket (52) on engine (12) with two screws (50) and lockwashers (51).

3-30. ENGINE REPLACEMENT (S/N 8RDCD301513HC THRU S/N 8RDCD301619HC) (CONT).

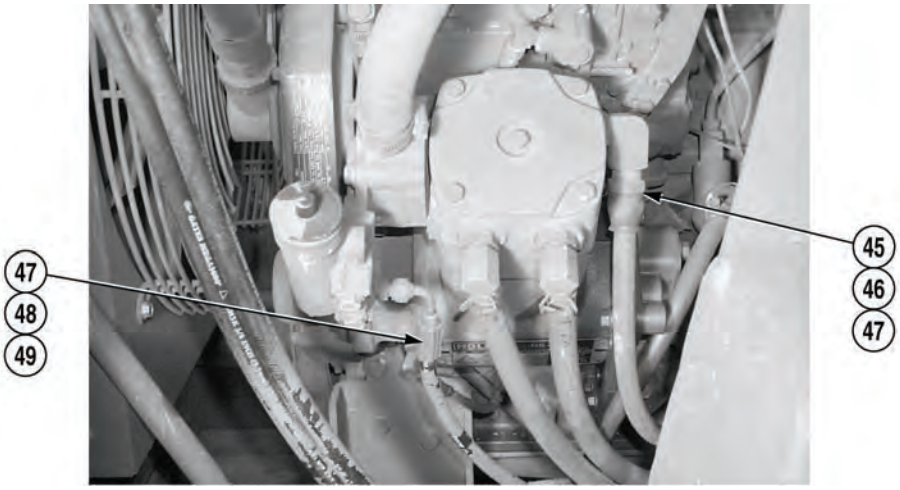

(5) Install hose (48) on fitting (49) on air compressor (47).

(6) Install hose (45) on fitting (46) on air compressor (47).

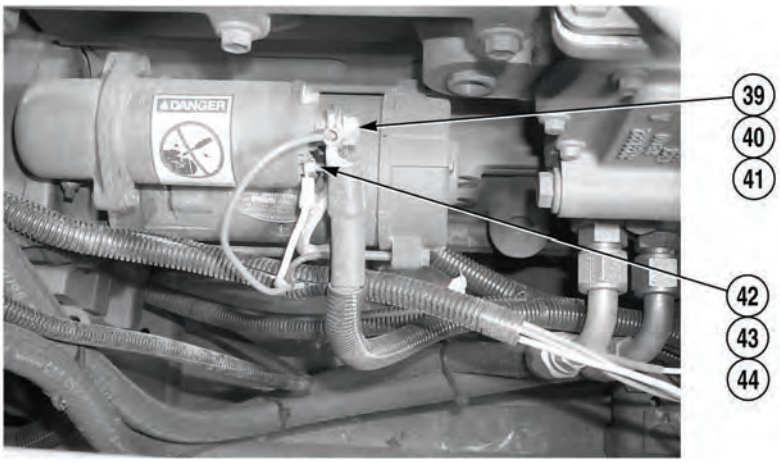

(7) Install wire (43) on terminal (44) with nut (42).

(8) Install two wires (40) on terminal (41) with nut (39).

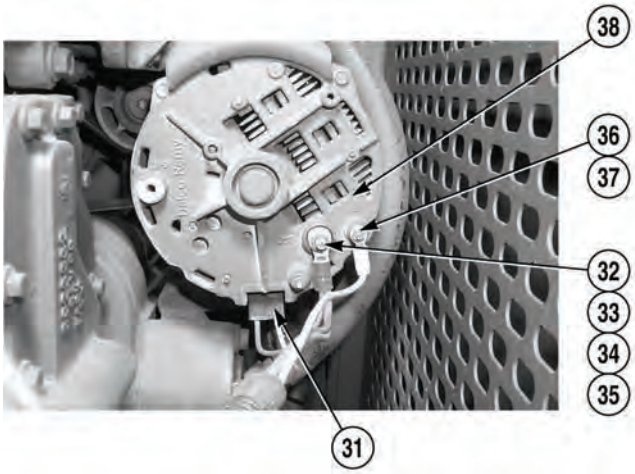

(9) Install wire (37) on alternator (38) with nut (36).

(10) Install lockwasher (34), wire (33), and nut (32) on terminal (35).

(11) Connect connector (31).

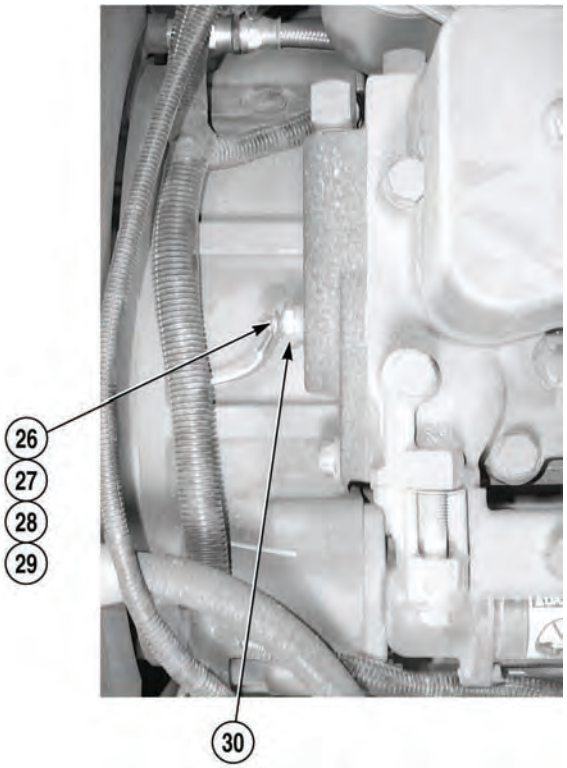

(12) Install washer (29), wire (28) and lockwasher (27) with nut (26) on sensor (30).

3-30. ENGINE REPLACEMENT (S/N 8RDCD301513HC THRU S/N 8RDCD301619HC) (CONT).

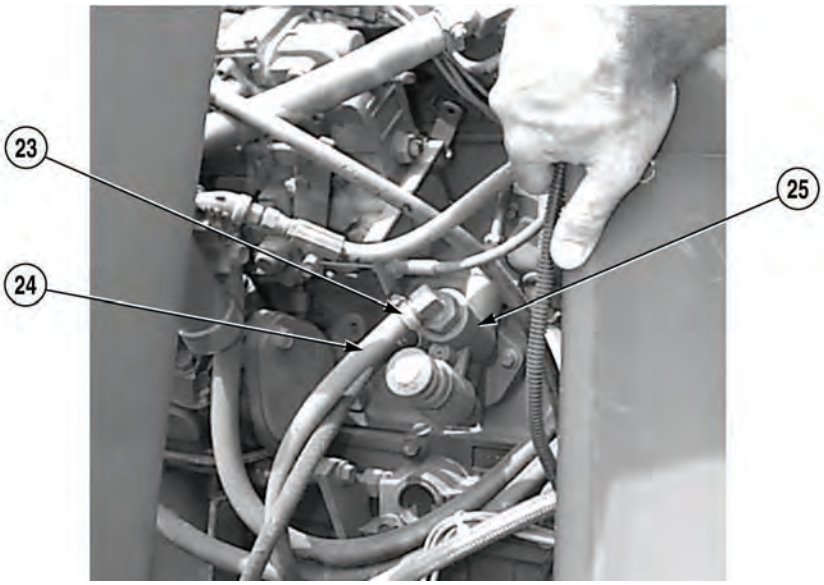

(13) Install hose (24) on primer pump (25) and tighten clamp (23).

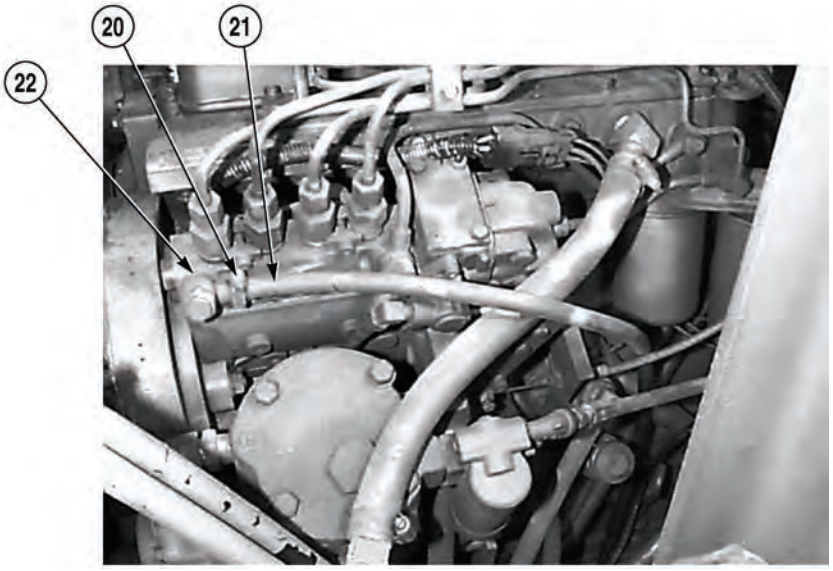

(14) Install hose (21) on fuel injector pump (22) and tighten clamp (20).

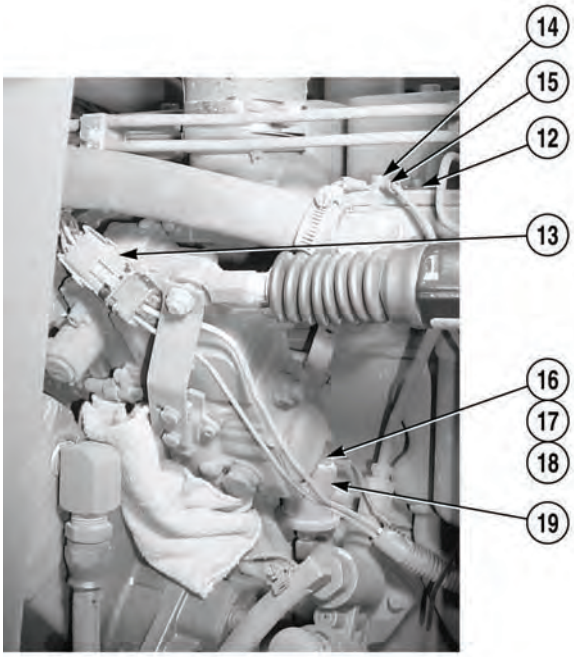

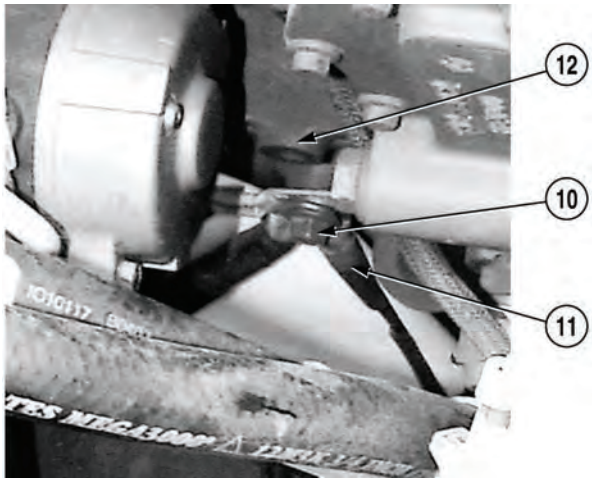

(15) Install lockwasher (18) and wire (17) on sending unit (19) with nut (16).

(16) Install two wires (15) with screw (14) on engine (12).

(17) Connect connector (13).

(18) Install three ground cables (11) on engine (12) with screw (10).

3-30. ENGINE REPLACEMENT (S/N 8RDCD301513HC THRU S/N 8RDCD301619HC) (CONT).

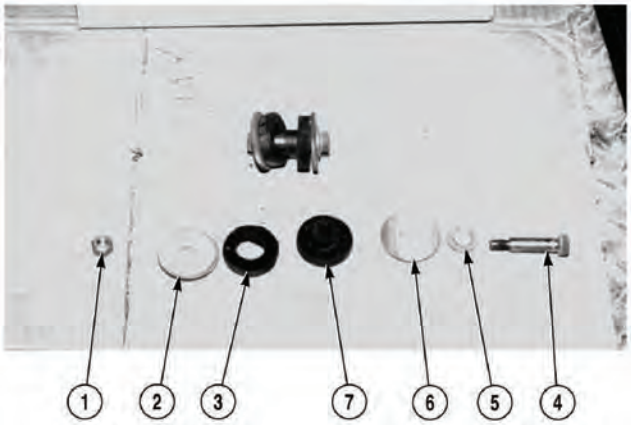

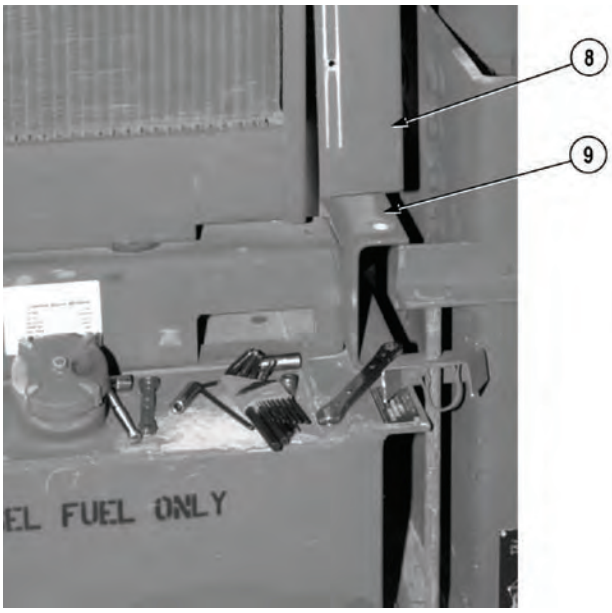

NOTE

Both front engine corners are installed the same way.

(19) Install engine cover corner (8) on crossmember (9) with isolators (7), washers (6), washers (5), screws (4), isolators (3), washers (2), and two locknuts (1).

c. Follow-On Maintenance:

- Install hydraulic pump, (Para 3-34).
- Install slave connector, (Para 3-22).
- Install radiator, (Para 3-20).
- Install magnetic switch (starter), (Para 3-18).
- Install magnetic switch (battery equalizer), (Para 3-16).
- Install oil filter head assembly, (Para 3-15).
- Install throttle actuator, (Para 3-6).
- Install side engine access panel, (Para 3-79).
- Install top engine cover, (Para 3-93).
- Check engine oil level, (Para 3-82).
- Start engine, (Para 2-19).
- Check for leaks.
- Shut off engine, (Para 2-19).
- Check engine oil level, (Para 3-82).

END OF TASK

3-31. ENGINE REPLACEMENT (S/N 8RDCD301620HC AND SUBSEQUENT).

This task covers:

a. Removal b. Installation c. Follow-On Maintenance

INITIAL SETUP

Tools and Special Tools
- Tool Kit, General Mechanic's: Automotive (Item 19, Appendix I)
- Cap and Plug Set (Item 3, Appendix I)
- Pan, Drain (Item 12, Appendix I)
- Lifting Device, Minimum Capacity 1,000 lb (545 kg)

Materials/Parts
- Tags, Identification (Item 13, Appendix H)
- Cable Ties (Item 2, Appendix H)
- Lockwasher (2) (MS 51415-8)
- Lockwasher (2) (355AX)
- Lockwasher (MS 35338-45)
- Lockwasher (8) (210104-85)
- Sealing Washer (4) (3963983)

Materials/Parts (Continued)
- Lockwasher (MS 35338-44)
- Locknut (4) (MS 45913/1-10FG5C)

Personnel Required
- Two

Equipment Condition
- Concrete Mixer unloaded, (Para 2-5)
- Lift cylinders raised, (Para 2-28)
- Batteries disconnected, (Para 3-10)
- Radiator removed (S/N 8RDCD301620HC and Subsequent), (Para 3-21)
- Ladder unstowed, (Para 2-30)

a. Removal.

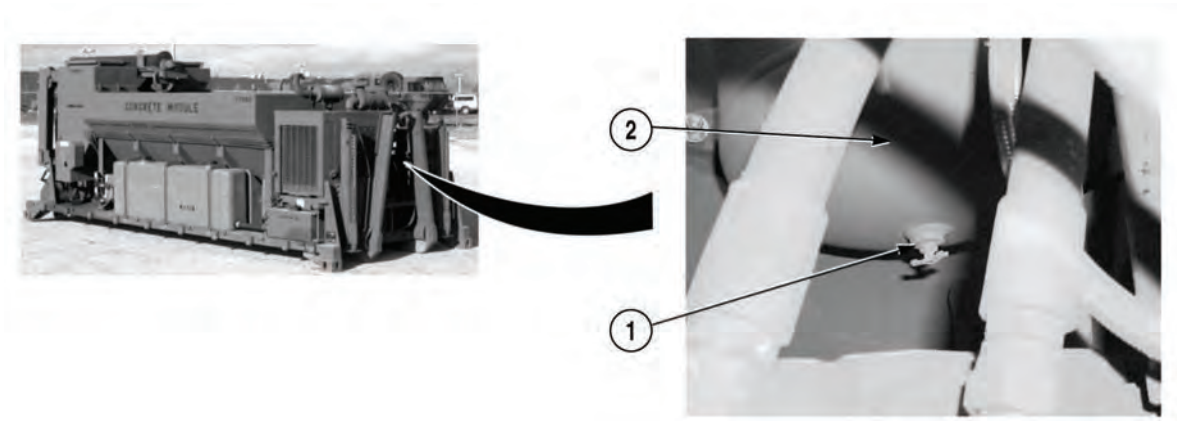

NOTE

- Remove cable ties and cushion clips as required.
- Tag and mark hoses, wires, and connectors prior to removal.
- Cap and plug hoses prior to removal.
- Position drain pan under hoses prior to removal.

(1) Open drain cock (1) on air reservoir (2) and drain air.

3-31. ENGINE REPLACEMENT (S/N 8RDCD301620HC AND SUBSEQUENT) (CONT).

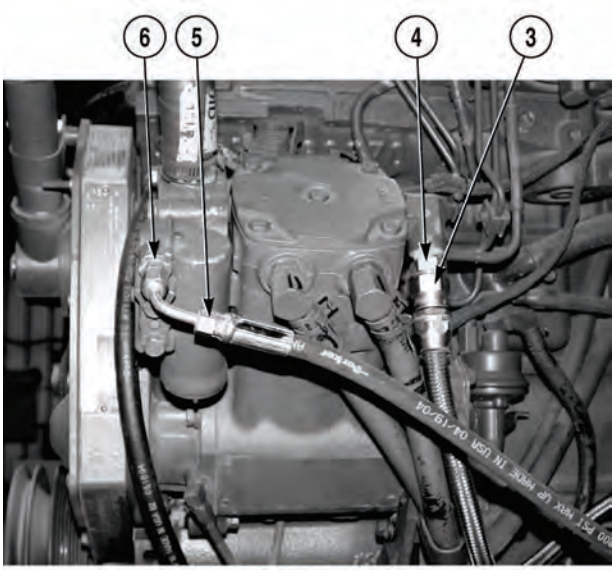

(2) Remove air line (3) from fitting (4).

(3) Remove air line (5) from fitting (6).

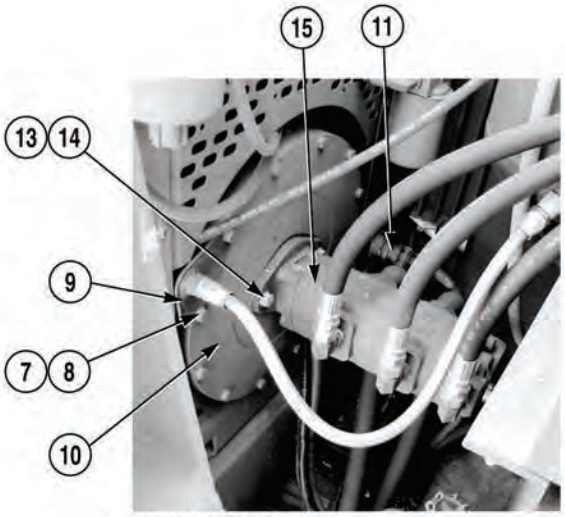

12 NOT SHOWN

(4) Remove two screws (7), lockwashers (8), and bracket (9) from engine (10). Discard lockwashers.

(5) Disconnect connector (11).

(6) Install cap (12) on frame mounted portion of connector (11).

WARNING

Hydraulic pump weighs 100 lb (45.4 kg). Do not attempt to lift or move hydraulic pump without the aid of an assistant and lifting device. Failure to comply could result in serious injury to personnel.

NOTE

Hydraulic pump should be removed and supported by straps during engine removal.

(7) With the aid of an assistant and suitable lifting device, remove two screws (13), lockwashers (14), and hydraulic pump (15) from engine (10) while supporting hydraulic pump (15). Discard lockwashers.

WARNING

Diesel fuel is flammable. Do not perform this procedure near fire, flame, or sparks. Failure to comply could result in injury or death to personnel.

(8) Loosen two clamps (16) and remove fuel lines (17) and (18) from two fittings (19).

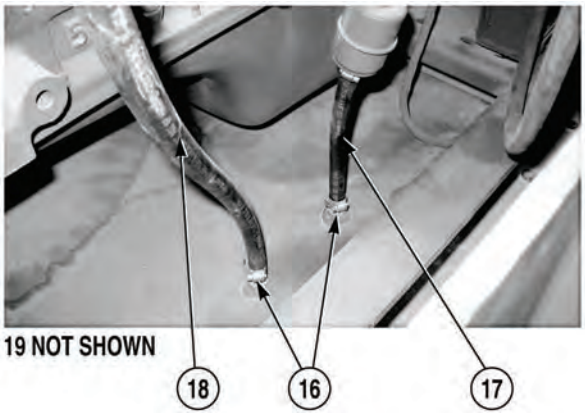

(9) Remove screw (20) and two wires (21) and (22) from terminal (23).

(10) Remove nut (24), lockwasher (25), and wire (26) from starter (27). Discard lockwasher.

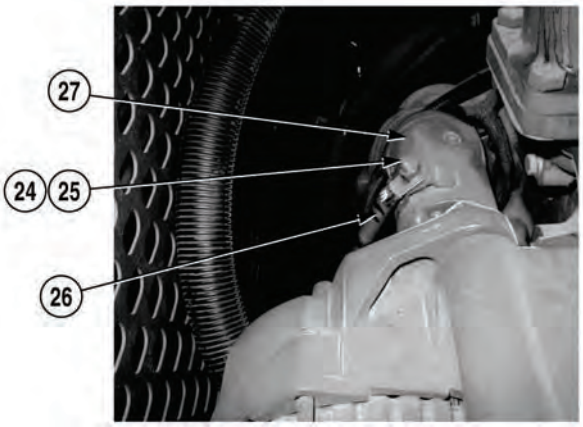

3-31. ENGINE REPLACEMENT (S/N 8RDCD301620HC AND SUBSEQUENT) (CONT).

(11) Remove nut (28), lockwasher (29), and wire (30) from magnetic switch (31). Discard lockwasher.

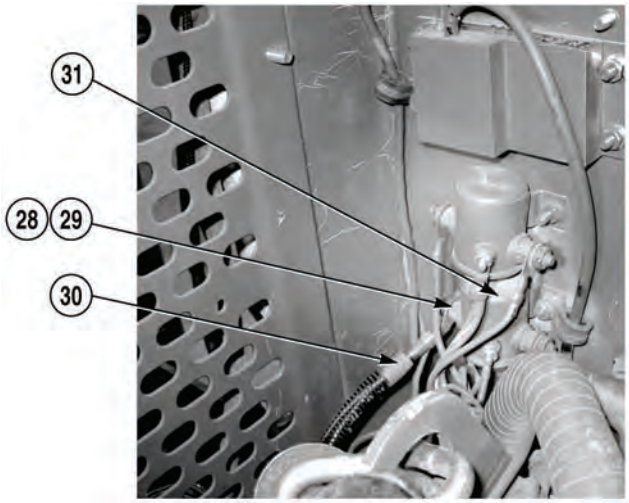

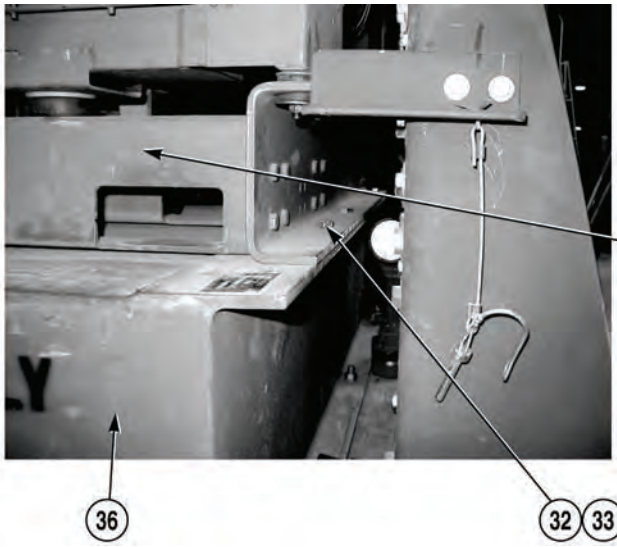

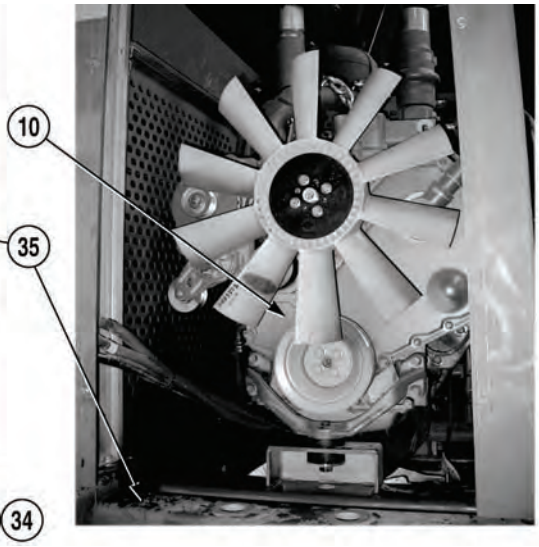

NOTE

Engine and engine support assembly are removed from fuel tank as an assembly.

(12) Remove eight nuts (32), lockwashers (33), and screws (34) from engine support assembly (35) and fuel tank (36). Discard lockwashers.

WARNING

Engine and engine support assembly weigh 1,200 lb (545 kg). Do not attempt to move or lift engine and support assembly without aid of an assistant and suitable lifting device. Failure to comply could result in serious injury or death to personnel.

(13) With the aid of an assistant and suitable lifting device, remove engine (10) and engine support assembly (35) from fuel tank (36).

(14) Remove engine wire harness, (Para 3-136).

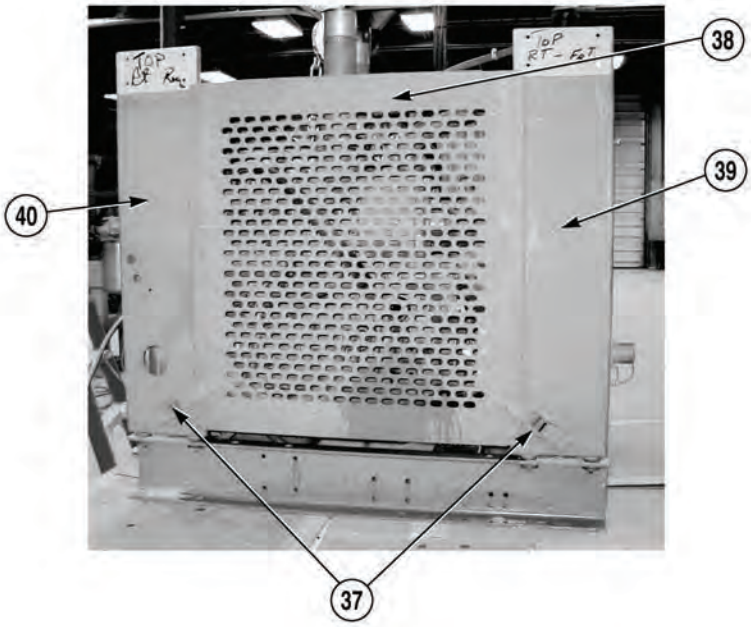

(15) Open two latches (37) and remove rear engine cover (38) from two corner supports (39) and (40).

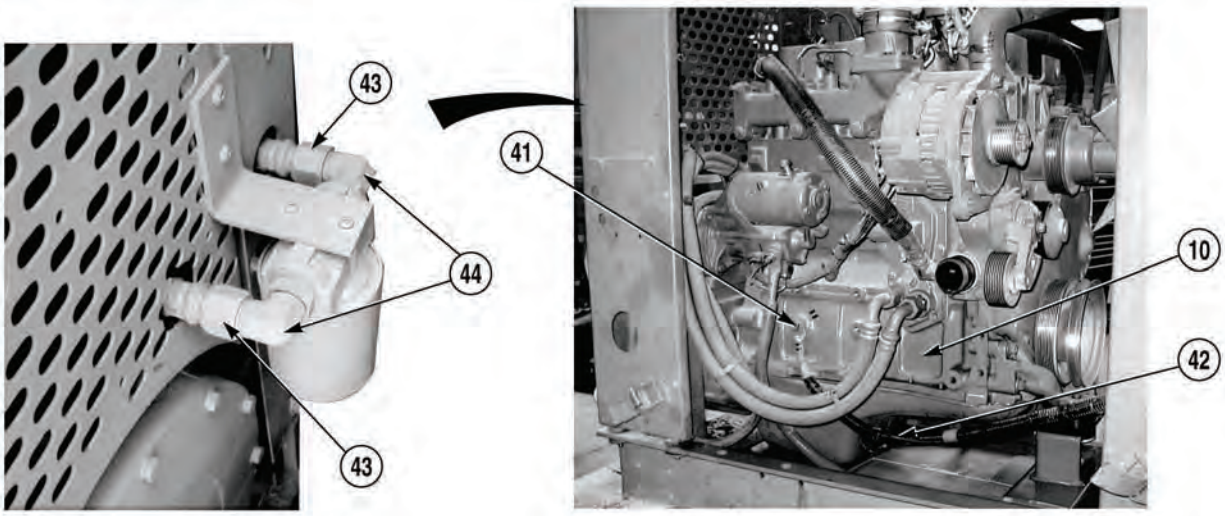

(16) Remove screw (41) and wire (42) from engine (10).

(17) Remove two hoses (43) from elbows (44).

3-31. ENGINE REPLACEMENT (S/N 8RDCD301620HC AND SUBSEQUENT) (CONT).

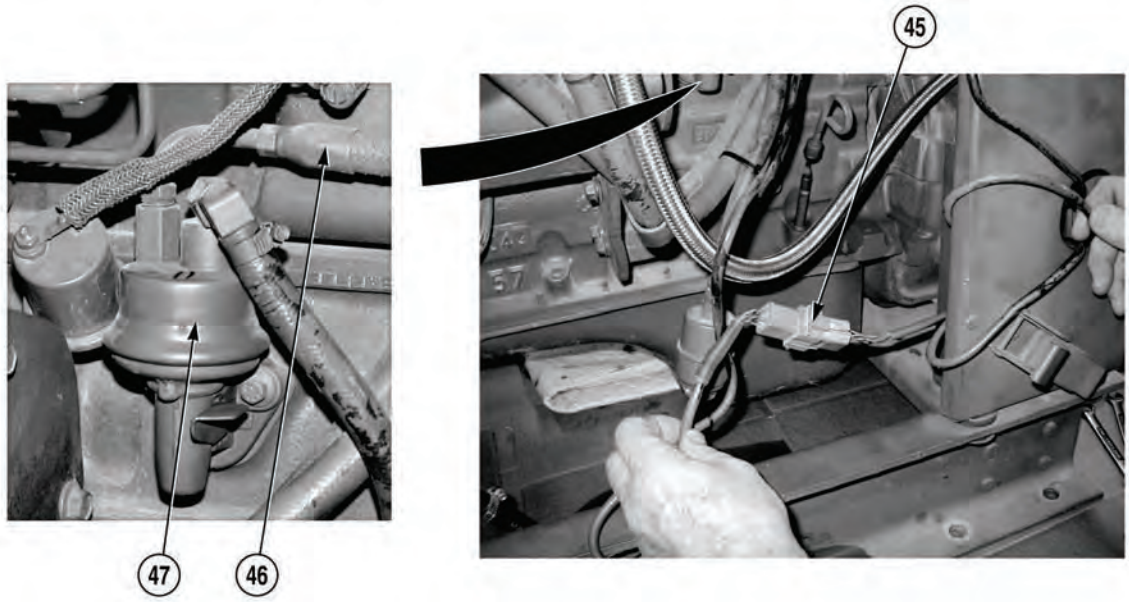

(18) Disconnect connector (45).

(19) Remove fuel line (46) from fuel pump (47).

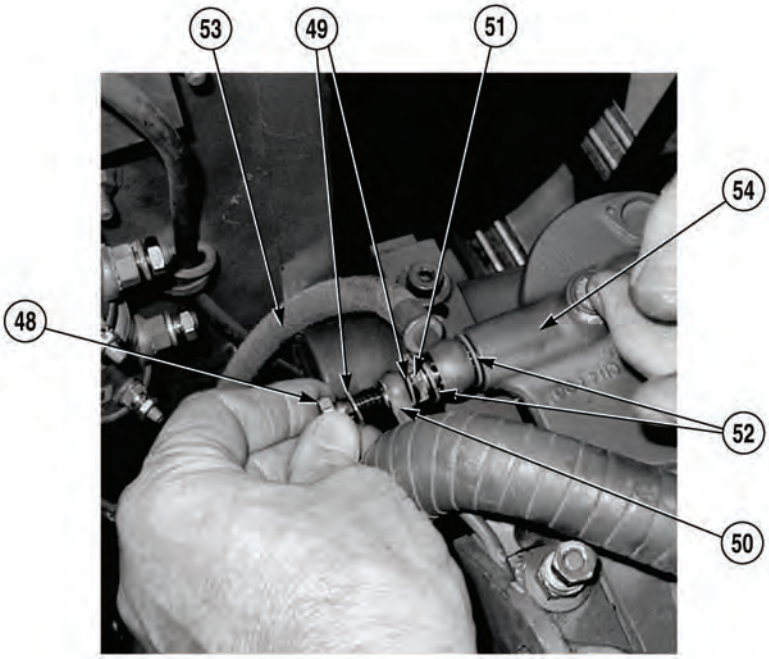

(20) Remove bleed screw (48) and two sealing washers (49) from fuel line (50) and screw (51). Discard sealing washers.

(21) Remove screw (51), two sealing washers (52), and fuel line (53) from head (54).

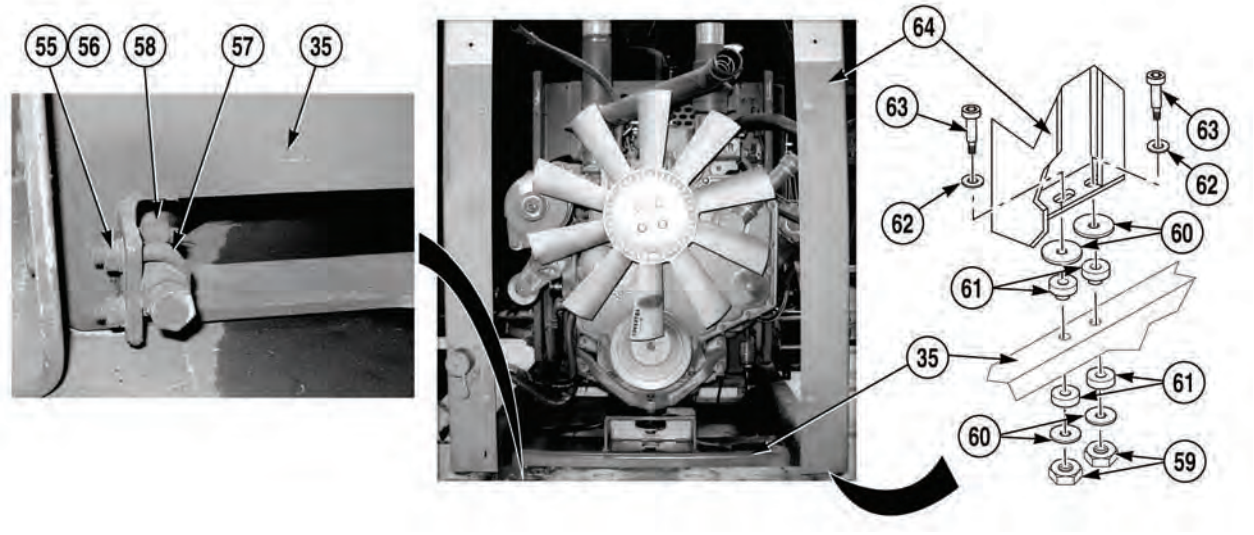

(22) Remove two nuts (55), lockwashers (56), U-bolt (57), and oil drain hose (58) from engine support assembly (35). Discard lockwashers.

NOTE

Note position of isolators prior to removal.

(23) Remove two locknuts (59), four cinch washers (60), isolators (61), two washers (62), screws (63), and corner support (64) from engine support assembly (35). Discard locknuts.

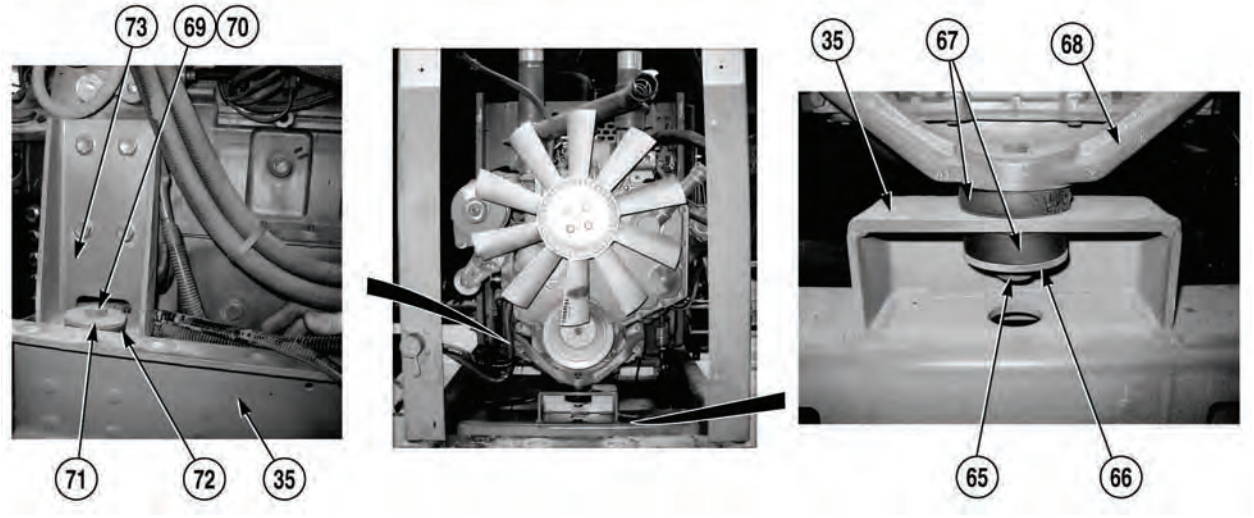

NOTE

Note position of isolators prior to removal.

(24) Remove screw (65), washer (66), and two isolators (67) from engine support assembly (35) and front engine support (68).

(25) Remove two locknuts (69), screws (70), washers (71), and four isolators (72) from two side engine support brackets (73) and engine support assembly (35). Discard locknuts.

3-31. ENGINE REPLACEMENT (S/N 8RDCD301620HC AND SUBSEQUENT) (CONT).

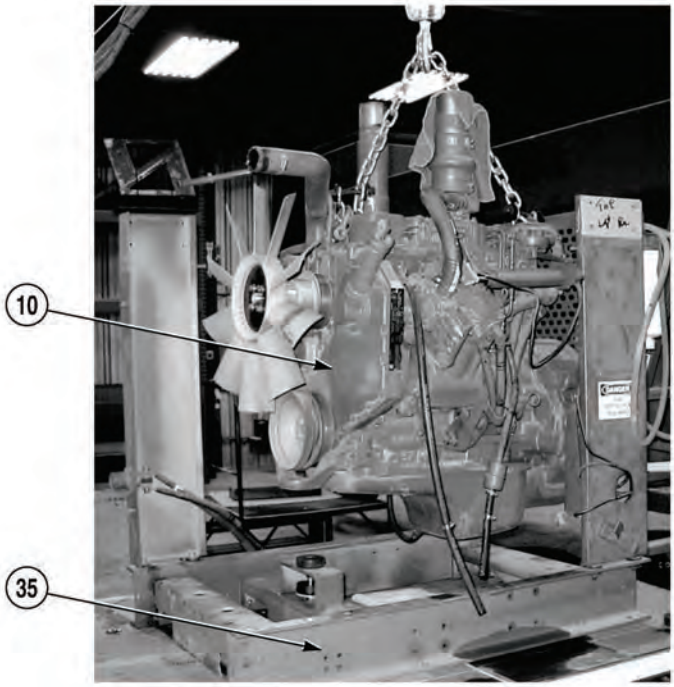

WARNING

Engine weighs 800 lb (363 kg). Do not attempt to move or lift engine without the aid of an assistant and a lifting device. Failure to comply could result in serious injury or death to personnel.

(26) With the aid of an assistant and suitable lifting device, remove engine (10) from engine support assembly (35).

b. Installation.

WARNING

Engine weighs 800 lb (363 kg). Do not attempt to move or lift engine without the aid of an assistant and a lifting device. Failure to comply could result in serious injury or death to personnel.

NOTE

Install cable ties and cushion clips as required.

(1) With the aid of an assistant and suitable lifting device, position engine (10) on engine support assembly (35).

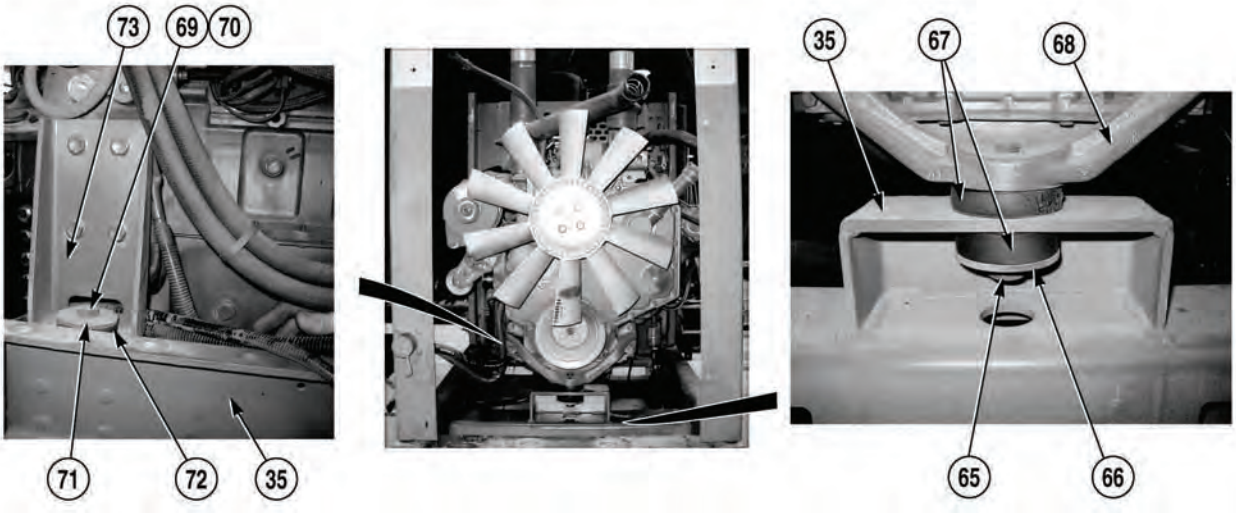

NOTE

Install isolators as noted prior to removal.

(2) Install two screws (70), washers (71), four isolators (72), and two locknuts (69) on two side engine support brackets (73) and engine support assembly (35).

(3) Install two isolators (67), washer (66), and screw (65) on engine support assembly (35) and front engine support (68).

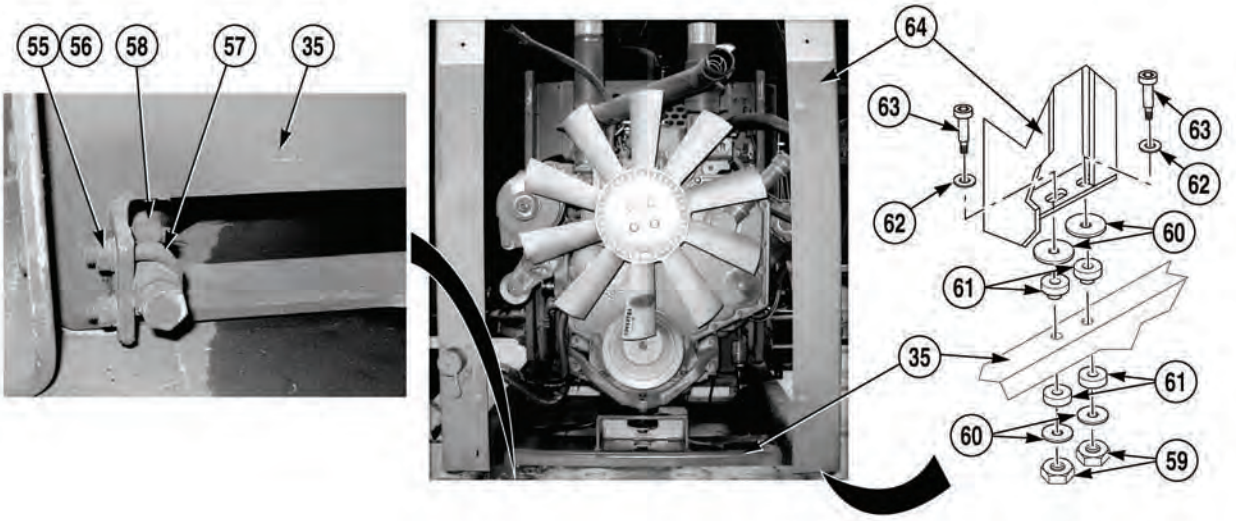

(4) Install corner support (64) on engine support assembly (35) with two screws (63), washers (62), four cinch washers (60), isolators (61), and two locknuts (59).

(5) Install oil drain hose (58) on engine support assembly (35) with U-bolt (57), two lockwashers (56), and nuts (55).

3-31. ENGINE REPLACEMENT (S/N 8RDCD301620HC AND SUBSEQUENT) (CONT).

WARNING

Diesel fuel is flammable. Do not perform this procedure near fire, flame, or sparks. Failure to comply could result in injury or death to personnel.

(6) Install fuel line (53) on head (54) with two sealing washers (52) and screw (51).

(7) Install fuel line (50) on screw (51) with two sealing washers (49) and bleed screw (48).

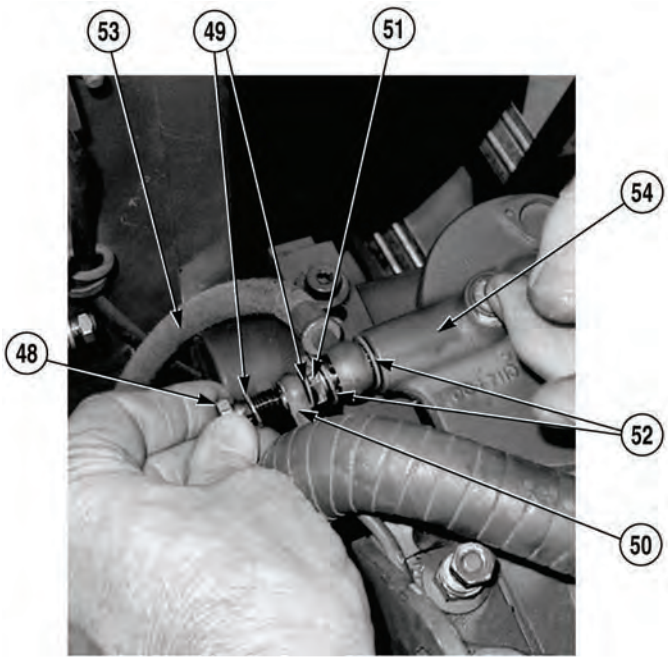

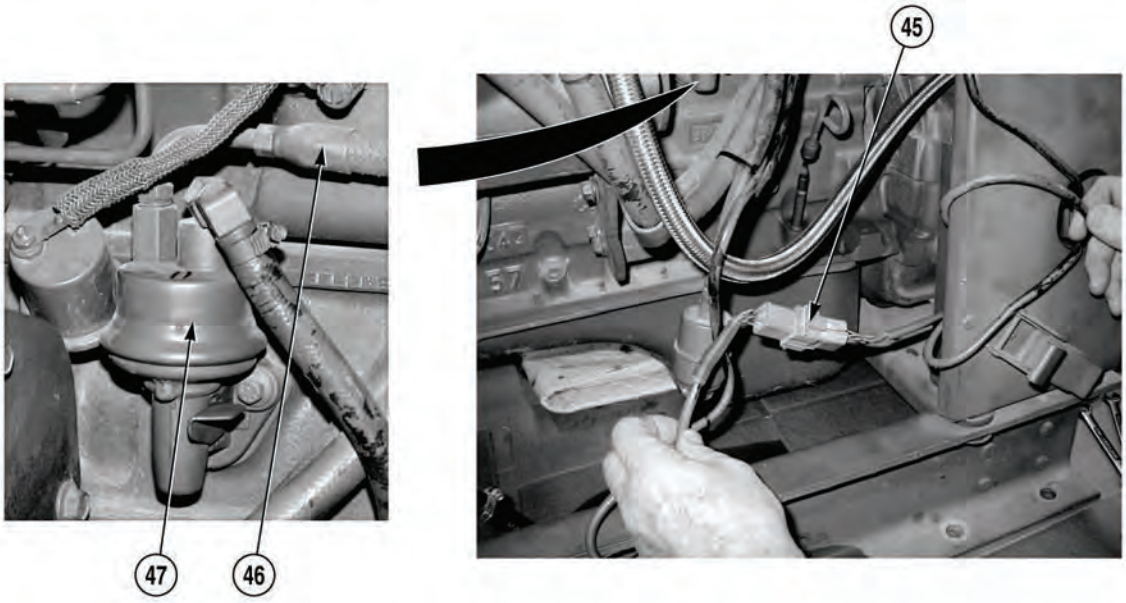

(8) Install fuel line (46) on fuel pump (47).

(9) Connect connector (45).

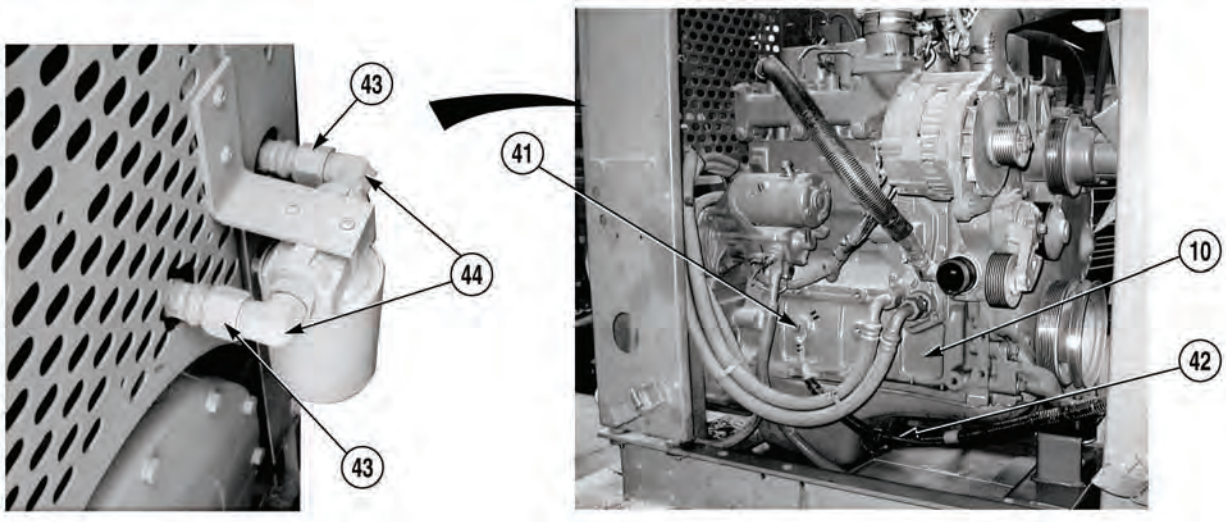

(10) Install two hoses (43) on elbows (44).

(11) Install wire (42) on engine (10) with screw (41).

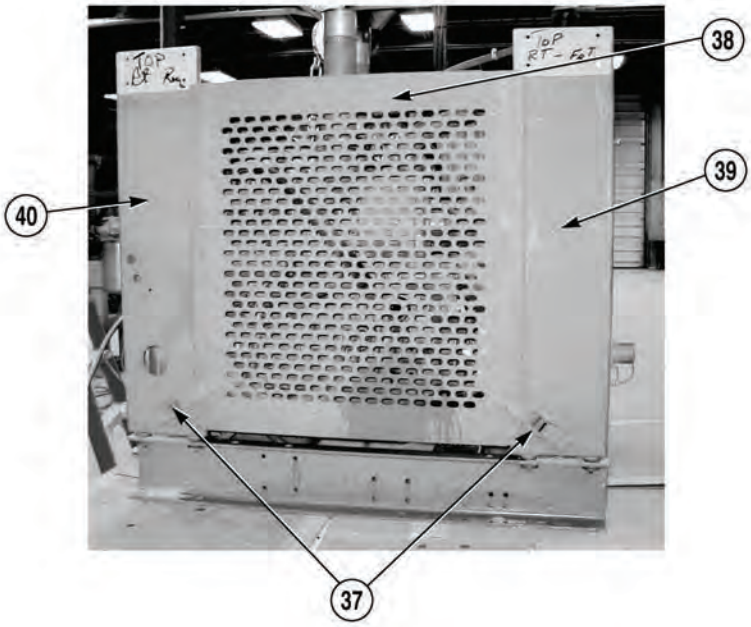

(12) Install rear engine cover (38) on two corner supports (39) and (40) and secure two latches (37).

3-31. ENGINE REPLACEMENT (S/N 8RDCD301620HC AND SUBSEQUENT) (CONT).

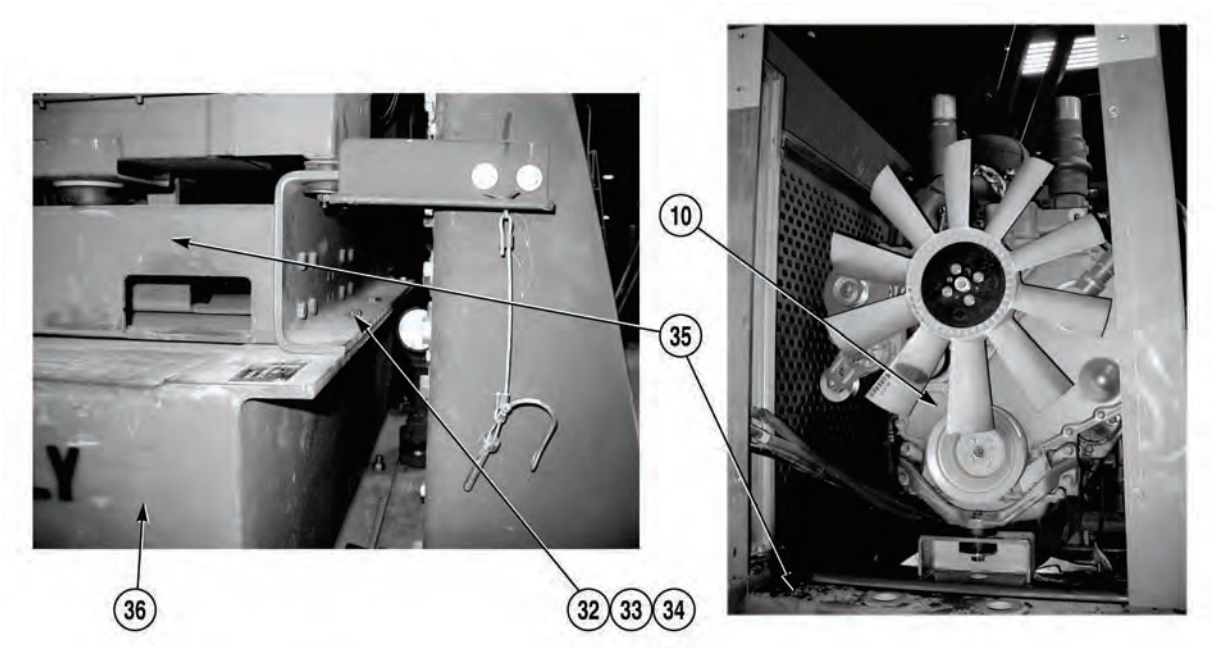

(13) Install engine wire harness, (Para 3-136).

WARNING

Engine and engine support assembly weigh 1,200 lb (545 kg). Do not attempt to move or lift engine and support assembly without aid of an assistant and suitable lifting device. Failure to comply could result in serious injury or death to personnel.

(14) With the aid of an assistant and suitable lifting device, install engine (10) and engine support assembly (35) on fuel tank (36) with eight screws (34), lockwashers (33), and nuts (32).

(15) Install wire (30) on magnetic switch (31) with lockwasher (29) and nut (28).

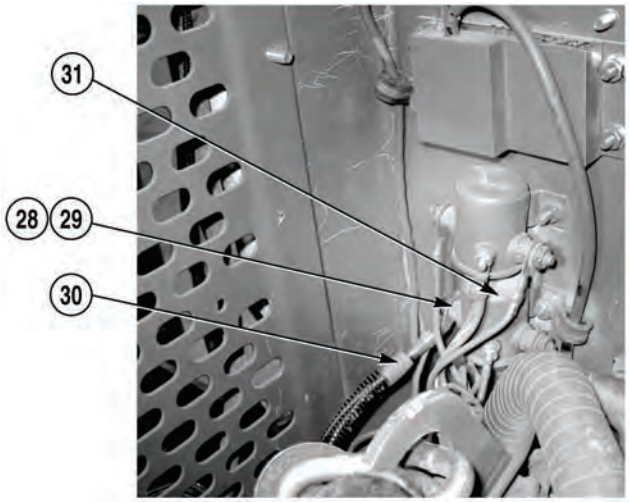

(16) Install wire (26) on starter (27) with lockwasher (25) and nut (24).

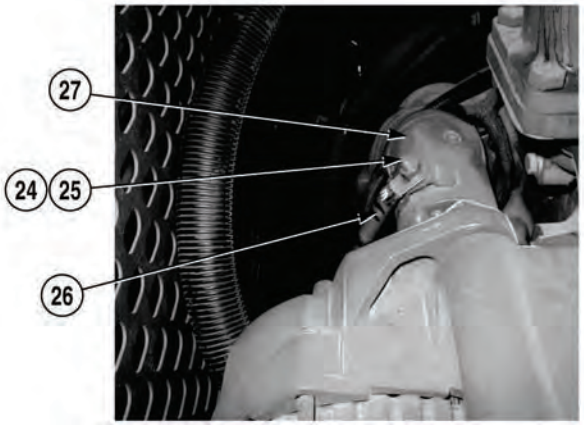

(17) Install two wires (21) and (22) on terminal (23) with screw (20).

3-31. ENGINE REPLACEMENT (S/N 8RDCD301620HC AND SUBSEQUENT) (CONT).

(18) Install two fuel lines (17) and (18) on fittings (19) and tighten two clamps (16).

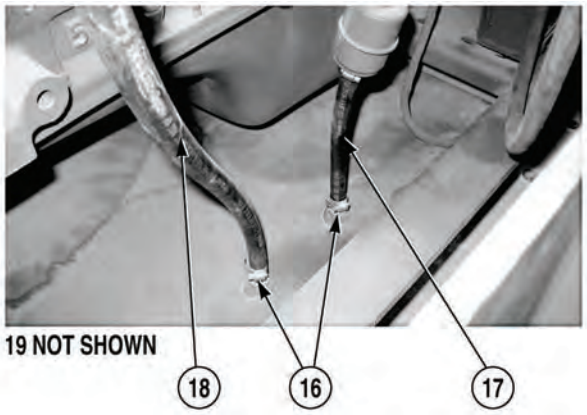

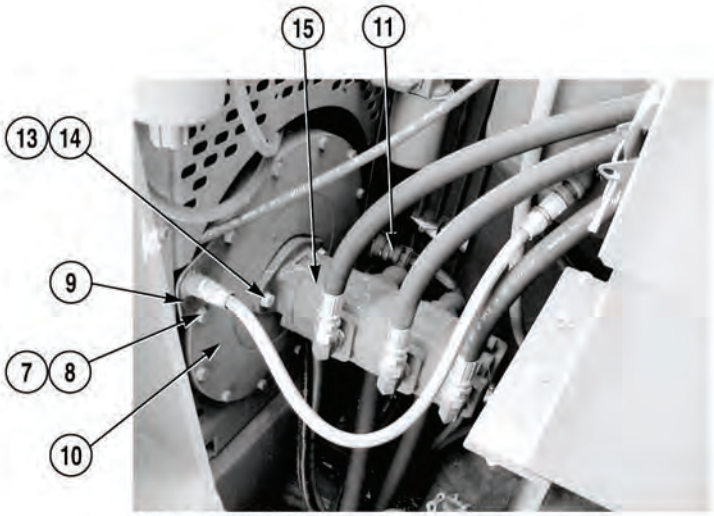

12 NOT SHOWN

WARNING

Hydraulic pump weighs 100 lb (45.4 kg). Do not attempt to lift or move hydraulic pump without the aid of an assistant and lifting device. Failure to comply could result in serious injury to personnel.

(19) With the aid of an assistant and suitable lifting device, install hydraulic pump (15) on engine (10) with two lockwashers (14) and screws (13).

(20) Remove cap (12) from frame mounted portion of connector (11).

(21) Connect connector (11).

(22) Install bracket (9) on engine (10) with two lockwashers (8) and screws (7).

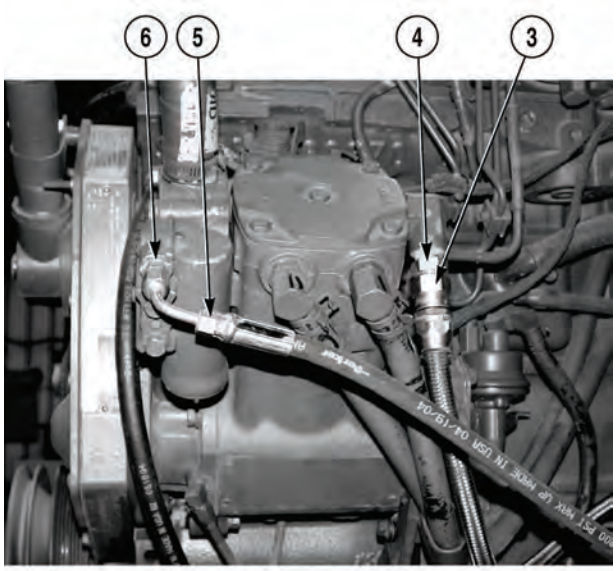

(23) Install air line (5) on fitting (6).

(24) Install air line (3) on fitting (4).

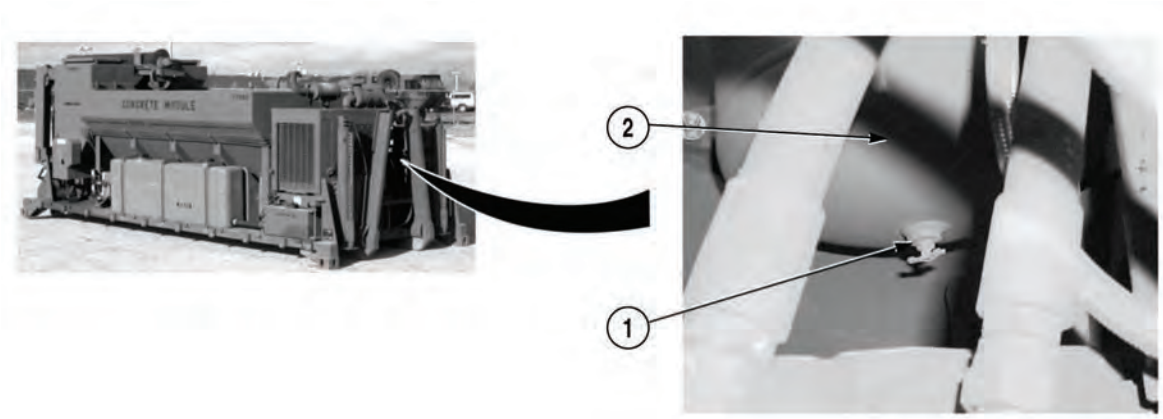

(25) Close drain cock (1) on air reservoir (2).

c. Follow-On Maintenance:

- Stow ladder, (Para 2-30).
- Install radiator (S/N 8RDCD301620HC and Subsequent), (Para 3-21).
- Connect batteries, (Para 3-10).

END OF TASK

3-32. WORK LIGHT REPLACEMENT.

This task covers:

a. Removal b. Installation c. Follow-On Maintenance

INITIAL SETUP

Tools and Special Tools
Tool Kit, General Mechanic's: Automotive (Item 19, Appendix I)

Materials/Parts
Locknut (2INE-040)
Locknut (MS51922-17)
Cable Ties (Item 2, Appendix H)
Adhesive, RTV (Item 14, Appendix H)

Equipment Condition
Concrete Mobile Mixer unloaded, (Para 2-5)
Batteries disconnected, (Para 3-10)

a. Removal.

NOTE

- There are two work lights. Both are removed the same way.
- Remove cable ties as required.

(1) Disconnect connector (1).

(2) Remove locknut (2), two washers (3), wire (4), and screw (5) from Concrete Mobile Mixer (6). Discard locknut.

NOTE

Some work lights use a screw installed directly into work light.

(3) Remove locknut (7), two washers (8), and work light (9) from Concrete Mobile Mixer (6). Discard locknut.

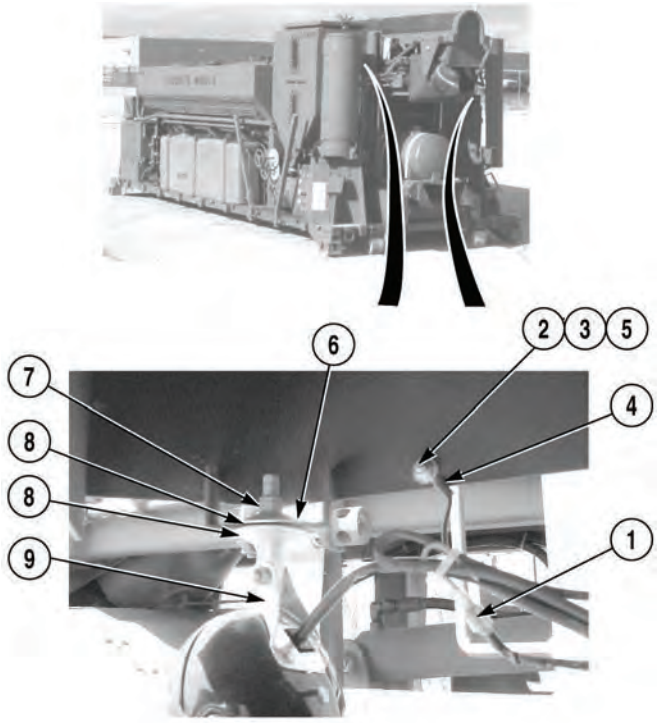

3-32. WORK LIGHT REPLACEMENT (CONT).

b. Installation.

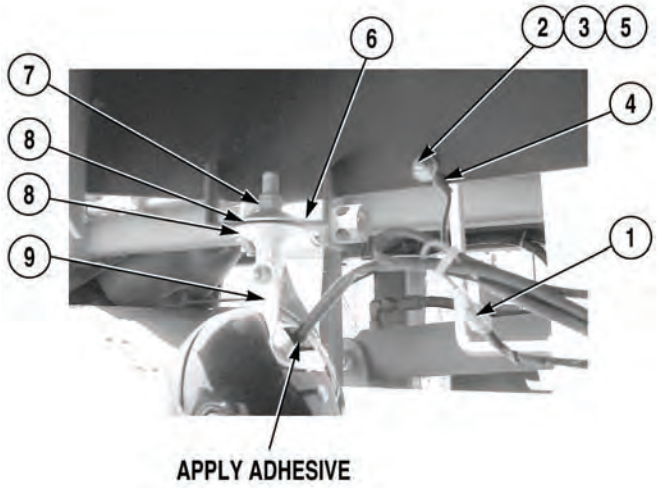

(1) Install work light (9) on Concrete Mobile Mixer (6) with two washers (8) and locknut (7).

(2) Install wire (4) on Concrete Mobile Mixer (6) with screw (5), two washers (3), and locknut (2).

(3) Connect connector (1).

WARNING

Adhesives, solvents, and sealing compounds can burn easily, can give off harmful vapors, and are harmful to skin and clothing. To avoid injury or death, keep away from open fire and use in well-ventilated area. If adhesives, solvent, or sealing compound gets on skin or clothing, wash immediately with soap and water.

(4) Apply adhesive to rear of work light (9) where wire (4) enters work light (9).

c. Follow-On Maintenance:

- Connect batteries, (Para 3-10).
- Check operation of work light.

END OF TASK

3-33. AIR RESERVOIR REPLACEMENT.

This task covers:

a. Removal b. Installation c. Follow-On Maintenance

INITIAL SETUP

Tools and Special Tools
Tool Kit, General Mechanic's: Automotive (Item 19, Appendix I)

Materials/Parts
Sealing Compound (Item 11, Appendix H)
Tags, Identification (Item 13, Appendix H)
Lockwasher (4) (MS35338-48)

Personnel Required
Two

Equipment Condition
Concrete Mobile Mixer unloaded, (Para 2-5)
Engine OFF, (Para 2-19)

a. Removal.

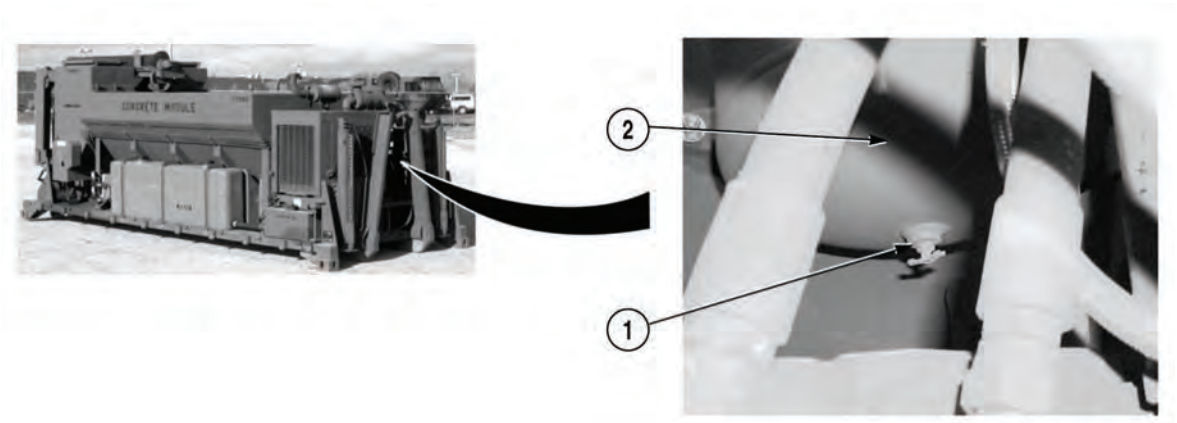

(1) Open drain cock (1) on air reservoir (2) and drain air reservoir (2).

(2) Close drain cock (1).

NOTE

- Note position and location of elbows and fittings prior to removal.
- Tag and mark hoses prior to removal.

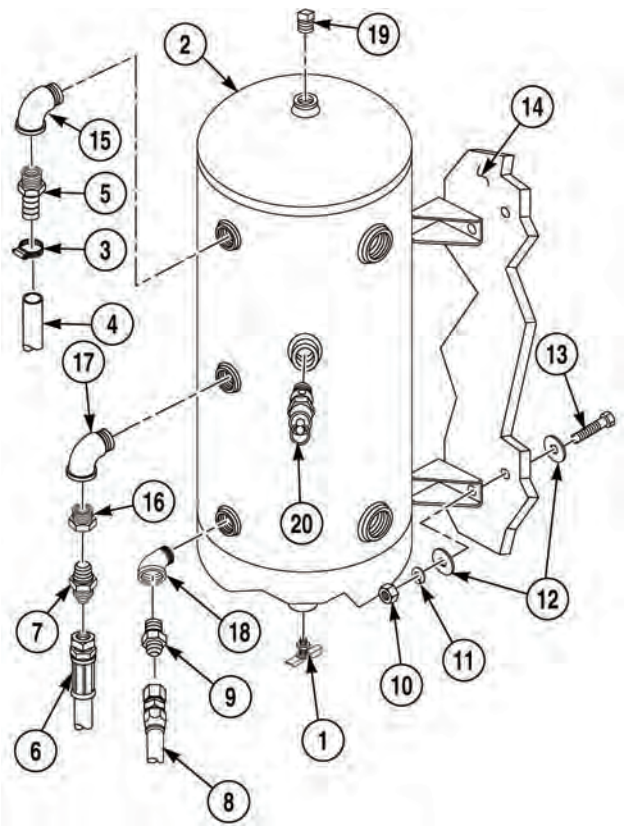

(3) Loosen clamp (3) and remove hose (4) from fitting (5).

(4) Remove hose (6) from fitting (7).

(5) Remove hose (8) from fitting (9).

WARNING

Air tank weighs 50 lb (22.7 kg). Do not attempt to lift or move air tank without the aid of an assistant. Failure to comply could result in serious injury to personnel.

(6) With the aid of an assistant, remove four nuts (10), lockwashers (11), eight washers (12), four screws (13), and air reservoir (2) from Concrete Mobile Mixer (14).

(7) Remove fitting (5) and elbow (15) from air reservoir (2).

(8) Remove fitting (7), reducer (16), and elbow (17) from air reservoir (2).

(9) Remove fitting (9) and elbow (18) from air reservoir (2).

NOTE

Safety relief valve may or may not be removed from an elbow.

(10) Remove drain cock (1), plug (19), and safety relief valve (20) from air reservoir (2).

b. Installation.

WARNING

Adhesives, solvents, and sealing compounds can burn easily, can give off harmful vapors, and are harmful to skin and clothing. To avoid injury or death, keep away from open fire and use in well-ventilated area. If adhesives, solvent, or sealing compound gets on skin or clothing, wash immediately with soap and water.

NOTE

Install elbows and fittings as noted prior to removal.

(1) Apply sealing compound to threads of safety relief valve (20), plug (19), drain cock (1), three elbows (15), (17), and (18), reducer (16), and three fittings (5), (7), and (9).

3-33. AIR RESERVOIR REPLACEMENT (CONT).

(2) Install safety relief valve (20), plug (19), and drain cock (1) on air reservoir (2).

(3) Install fitting (9) and elbow (18) on air reservoir (2).

(4) Install fitting (7), reducer (16), and elbow (17) on air reservoir (2).

(5) Install fitting (5) and elbow (15) on air reservoir (2).

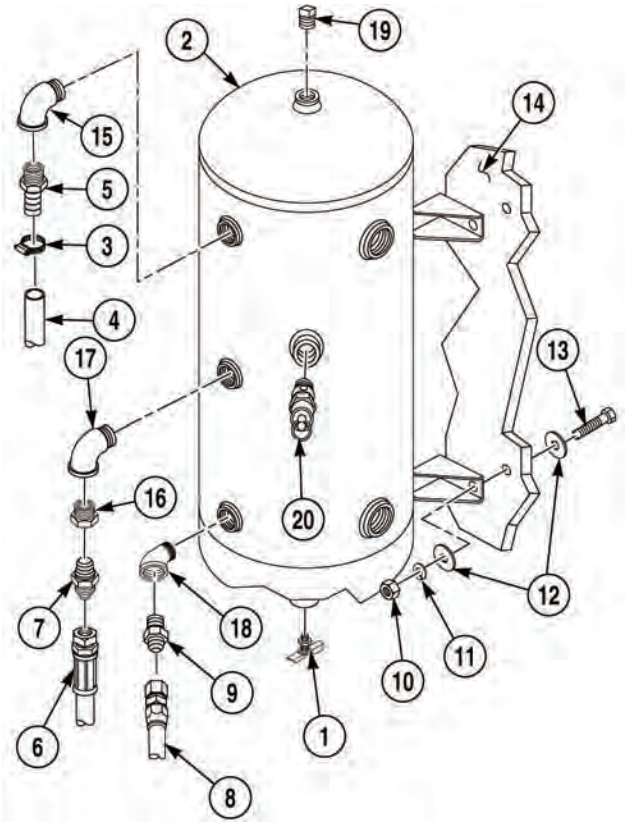

WARNING

Air tank weighs 50 lb (22.7 kg). Do not attempt to lift or move air tank without the aid of an assistant. Failure to comply could result in serious injury to personnel.

(6) With the aid of an assistant, install air reservoir (2) on Concrete Mobile Mixer (14) with four screws (13), eight washers (12), four lockwashers (11), and nuts (10).

(7) Install hose (8) on fitting (9).

(8) Install hose (6) on fitting (7).

(9) Install hose (4) on fitting (5) and tighten clamp (3).

c. Follow-On Maintenance:

- Start engine, (Para 2-19).
- Build up air pressure to 100 psi (690 kPa).
- Shut off engine, (Para 2-19).
- Check for leaks.

END OF TASK

3-34. HYDRAULIC PUMP REPLACEMENT.

This task covers:

a. Removal b. Installation c. Follow-On Maintenance

INITIAL SETUP

Tools and Special Tools
Tool Kit, General Mechanic's: Automotive (Item 19, Appendix I)
Cap and Plug Set (Item 3, Appendix I)
Pan, Drain (Item 12, Appendix I)
Lifting Device, Minimum Capacity 200 lb (91 kg)

Materials/Parts
Cable Ties (Item 2, Appendix H)
Sealing Compound (Item 11, Appendix H)
Tags, Identification (Item 13, Appendix H)
Lockwasher (2) (MS35338-48)

Personnel Required
Two

Equipment Condition
Concrete Mobile Mixer unloaded, (Para 2-5)
Engine OFF, (Para 2-19)

a. Removal.

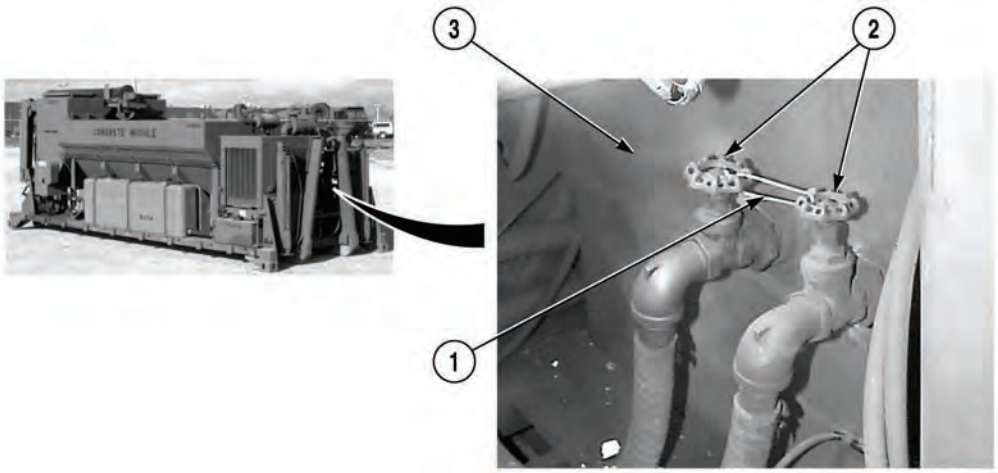

(1) Cut and remove cable ties (1) from two valves (2).

(2) Close two valves (2) on hydraulic reservoir (3).

3-34. HYDRAULIC PUMP REPLACEMENT (CONT).

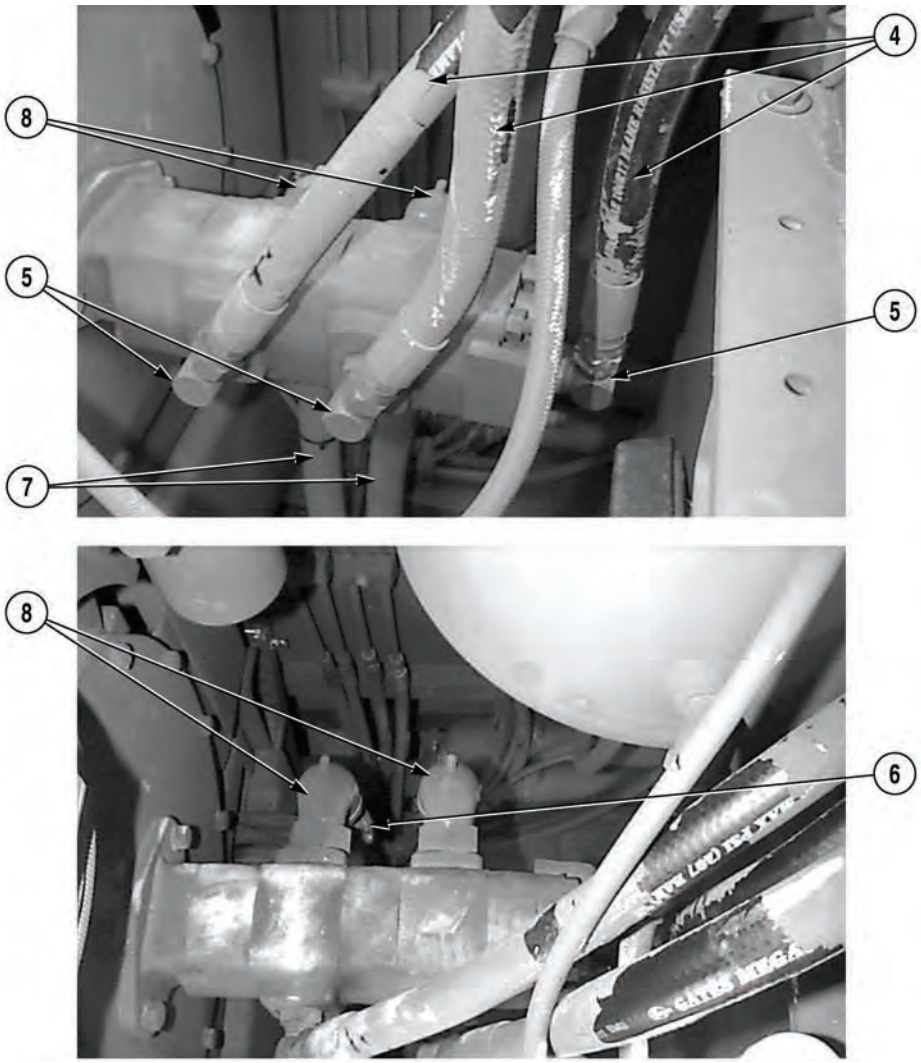

NOTE

- Tag and mark hoses prior to removal.
- Cap and plug all hoses and fittings upon removal.

(3) Position drain pan under hoses.

(4) Remove three hoses (4) from elbows (5).

(5) Loosen four clamps (6) and remove two hoses (7) from adapters (8).

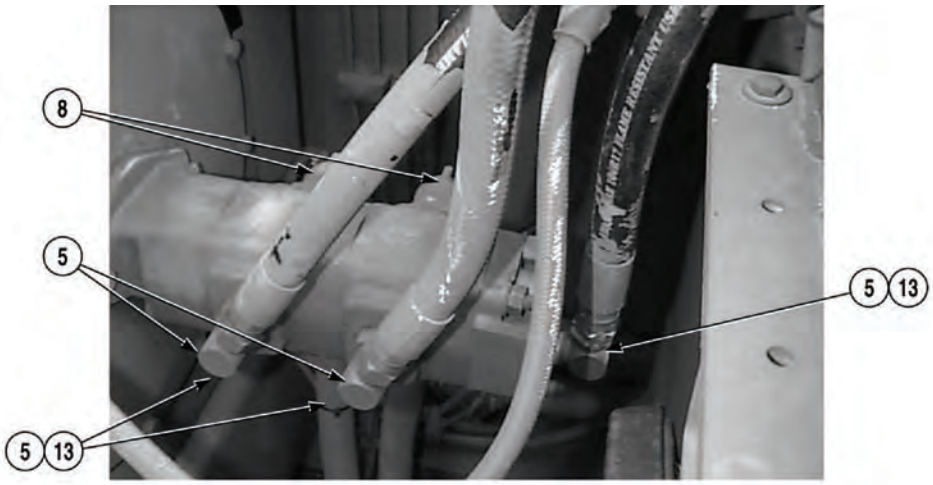

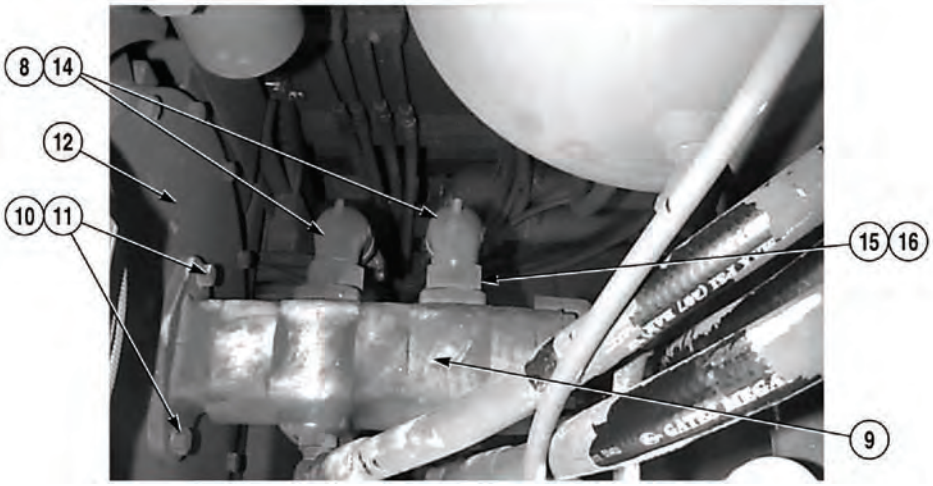

WARNING

Hydraulic pump weighs 100 lb (45.4 kg). Do not attempt to lift or move hydraulic pump without the aid of an assistant and lifting device. Failure to comply could result in serious injury to personnel.

(6) Attach lifting device to hydraulic pump (9).

(7) With the aid of an assistant and using lifting device, remove two screws (10), lockwashers (11), and hydraulic pump (9) from engine (12). Discard lockwashers.

(8) Remove lifting device from hydraulic pump (9).

NOTE

- Note location and position of elbows, adapters, and reducers prior to removal.
- Perform Steps (9) and (10) if elbows are damaged.

(9) Remove three elbows (5) and preformed packings (13) from hydraulic pump (9). Discard preformed packings.

(10) Remove two adapters (8), elbows (14), reducers (15), and preformed packings (16) from hydraulic pump (9). Discard preformed packings.

3-34. HYDRAULIC PUMP REPLACEMENT (CONT).

b. Installation.

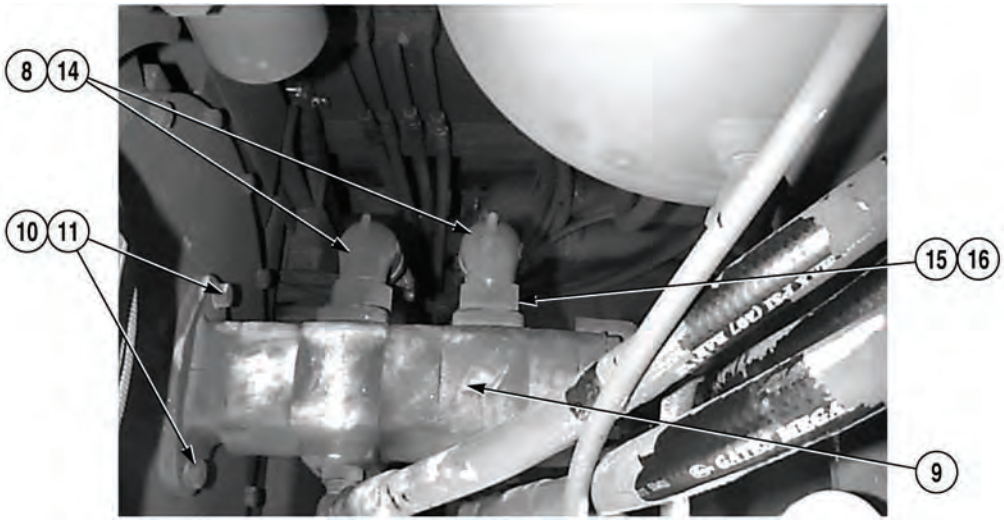

WARNING

Hydraulic pump weighs 100 lb (45.4 kg). Do not attempt to lift or move hydraulic pump without the aid of an assistant and lifting device. Failure to comply could result in serious injury to personnel.

NOTE

Install hoses, adapters, elbows, and reducers as noted prior to removal.

(1) Install two reducers (15) and preformed packings (16) on hydraulic pump (9).

WARNING

Adhesives, solvents, and sealing compounds can burn easily, can give off harmful vapors, and are harmful to skin and clothing. To avoid injury or death, keep away from open fire and use in well-ventilated area. If adhesives, solvent, or sealing compound gets on skin or clothing, wash immediately with soap and water.

(2) Apply sealing compound to threads of two elbows (14) and adapters (8).

(3) Install two elbows (14) and adapters (8) on hydraulic pump (9).

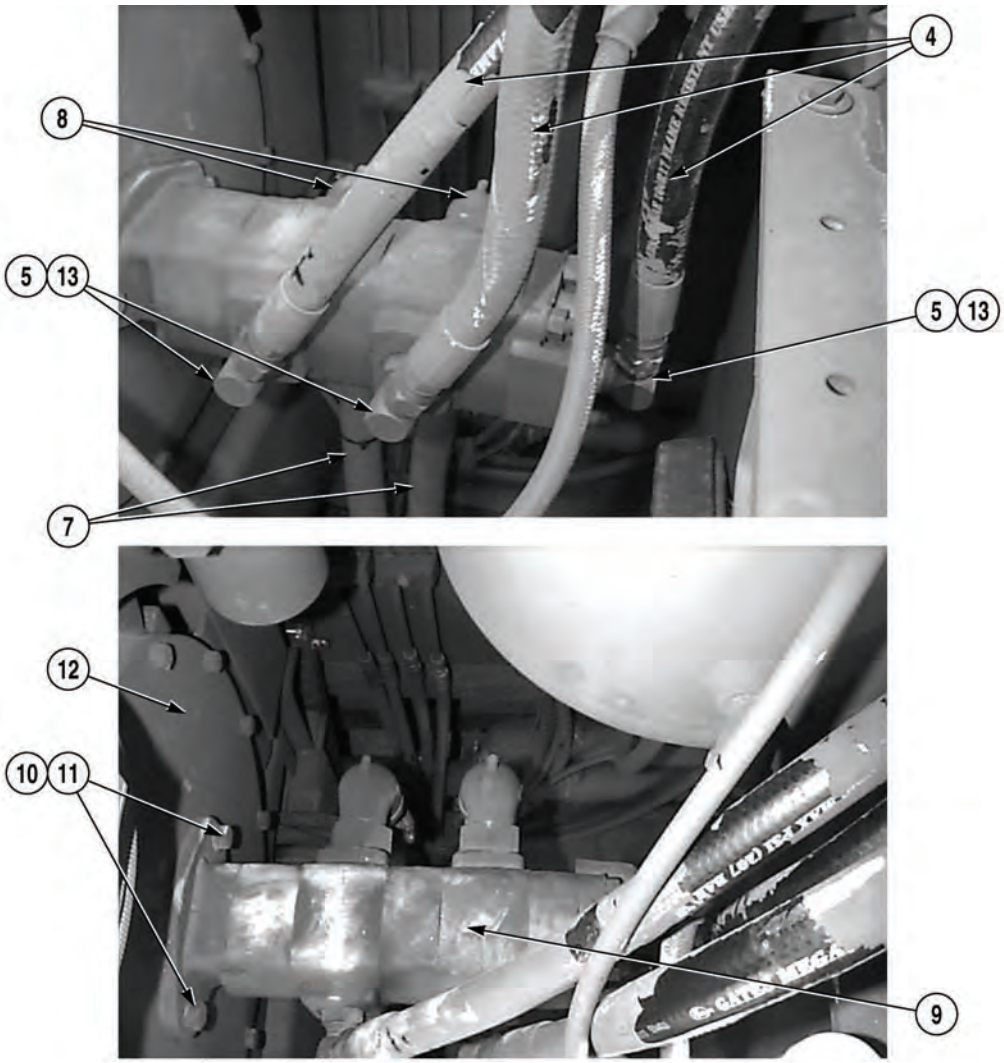

(4) Install three elbows (5) and preformed packings (13) on hydraulic pump (9).

(5) Attach lifting device to hydraulic pump (9).

(6) With the aid of an assistant and using lifting device, install hydraulic pump (9) on engine (12) with two screws (10) and lockwashers (11).

NOTE

Ensure hoses are installed in same position as noted during removal.

(7) Position two hoses (7) on adapters (8) and tighten four clamps (6).

(8) Install three hoses (4) on elbows (5).

3-34. HYDRAULIC PUMP REPLACEMENT (CONT).

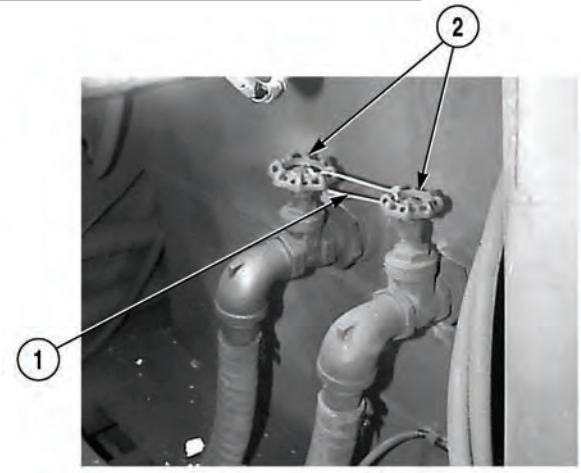

(9) Open two valves (2).

(10) Install cable ties (1) between valve (2) handles.

c. Follow-On Maintenance:

- Start engine, (Para 2-19).
- Check for oil leaks.
- Shut off engine, (Para 2-19).
- Check hydraulic reservoir oil level, (Para 2-10).

END OF TASK

3-35. HYDRAULIC FILTER REPLACEMENT.

This task covers:

a. Removal b. Installation c. Follow-On Maintenance

INITIAL SETUP

Tools and Special Tools
Tool Kit, General Mechanic's: Automotive (Item 19, Appendix I)
Pan, Drain (Item 12, Appendix I)
Removal Tool, Oil Filter (Item 16, Appendix I)

Materials/Parts
Hydraulic Oil (Item 5, Appendix H)

Equipment Condition
Concrete Mobile Mixer unloaded, (Para 2-5)
Engine OFF, (Para 2-19)

a. Removal.

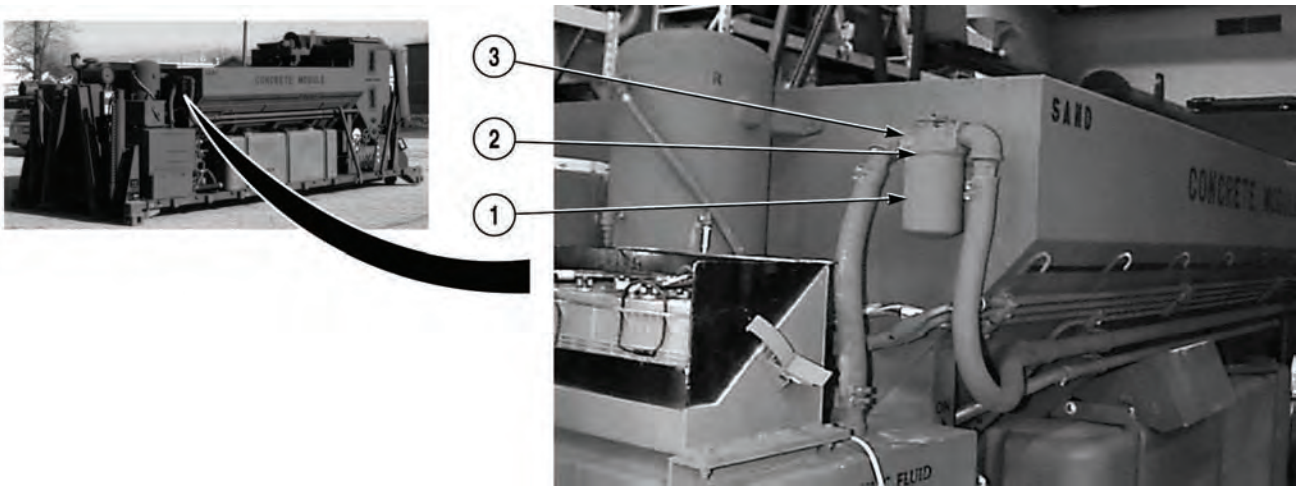

(1) Position drain pan under filter (1).

NOTE

- Gasket may stay on filter or housing.
- Filter is removed by turning counterclockwise.

(2) Remove and discard filter (1) and gasket (2) from housing (3).

3-35. HYDRAULIC FILTER REPLACEMENT (CONT).

b. Installation.

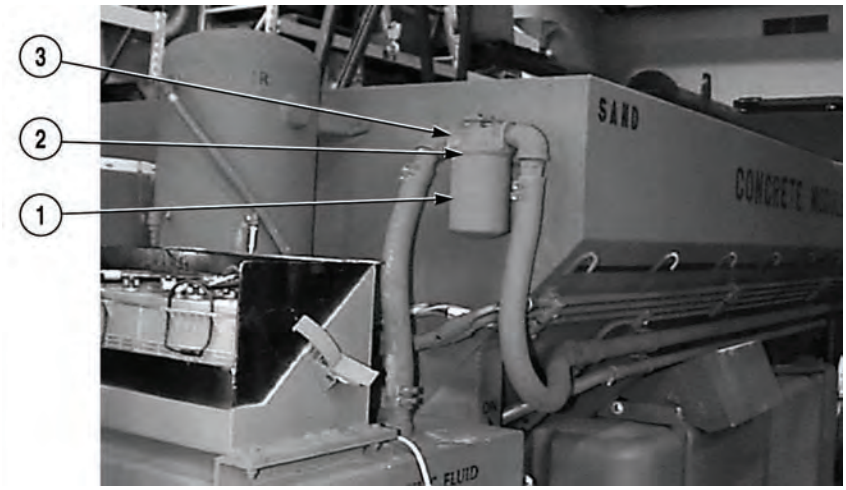

(1) Coat gasket (2) with clean hydraulic oil.

(2) Install gasket (2) in housing (3).

(3) Fill filter (1) with clean hydraulic oil.

CAUTION

Tighten filter only 3/4 to 1 full turn after filter contacts housing. Failure to comply may result in damage to equipment.

NOTE

Gasket can stick on filter head. Ensure gasket is removed and sealing surface is clean before installing new filter.

(4) Install filter (1) on housing (3). Tighten filter 3/4 to 1 full turn.

c. Follow-On Maintenance:

- Start engine, (Para 2-19).
- Check for leaks.
- Shut off engine, (Para 2-19).
- Check hydraulic reservoir oil level, (Para 3-37).

END OF TASK

3-36. HYDRAULIC FILTER HEAD REPLACEMENT.

This task covers:

a. Removal b. Installation c. Follow-On Maintenance

INITIAL SETUP

Tools and Special Tools
Tool Kit, General Mechanic's: Automotive (Item 19, Appndix I)
Cap and Plug Set (Item 3, Appendix I)
Wrench, Combination, 1-5/8 in. (Item 23, Appendix I)
Wrench, Pipe (Item 24, Appendix I)

Materials/Parts
Hydraulic Oil (Item 5, Appendix H)
Sealing Compound (Item 11, Appendix H)
Tags, Identification Oil (Item 13, Appendix H)
Lockwasher (2) (MS35338-45)

Equipment Condition
Hydraulic filter removed, (Para 3-35)

a. Removal.

NOTE

- Tag and mark all hydraulic hoses prior to removal.
- Cap and plug all hydraulic hoses upon removal.

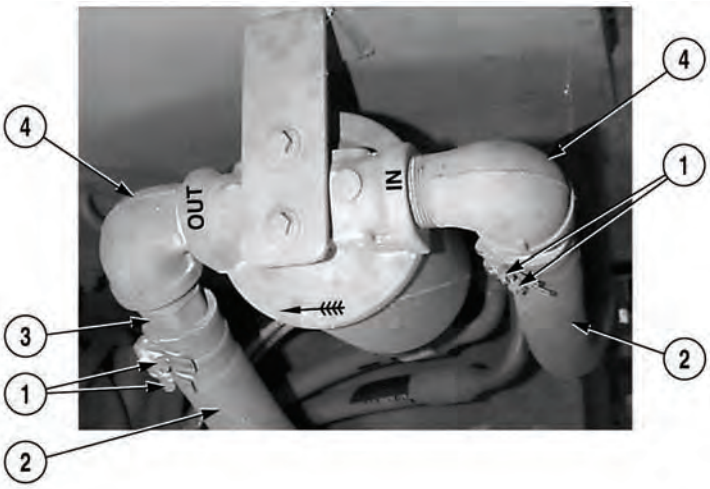

(1) Loosen four clamps (1) and remove two hoses (2) from adapters (3).

(2) Remove two adapters (3) from elbows (4).

3-36. HYDRAULIC FILTER HEAD REPLACEMENT (CONT).

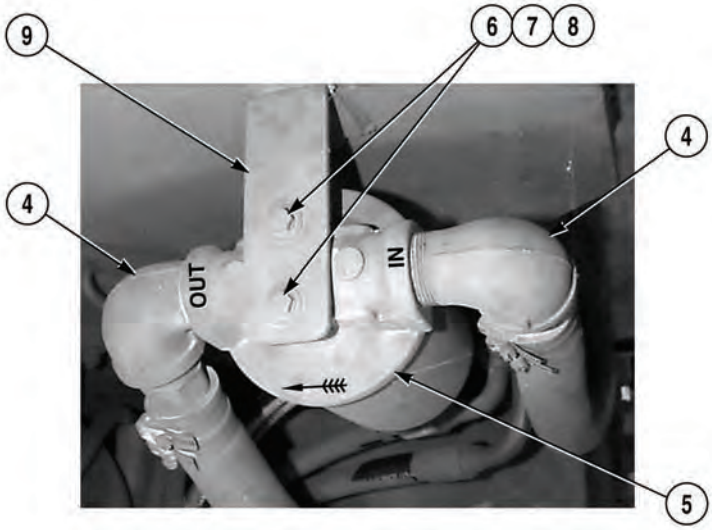

NOTE

Note position of elbows prior to removal.

(3) Remove two elbows (4) from filter head (5).

NOTE

Note position of words “IN” and “OUT” on top of hydraulic filter head.

(4) Remove two screws (6), lockwashers (7), washers (8), and filter head (5) from mounting bracket (9). Discard lockwashers.

b. Installation.

NOTE

Install filter head in position as noted prior to removal.

(1) Install filter head (5) on mounting bracket (9) with two washers (8), lockwashers (7), and screws (6).

WARNING

Adhesives, solvents, and sealing compounds can burn easily, can give off harmful vapors, and are harmful to skin and clothing. To avoid injury or death, keep away from open fire and use in well-ventilated area. If adhesives, solvent, or sealing compound gets on skin or clothing, wash immediately with soap and water.

NOTE

Install elbows in position as noted prior to removal.

(2) Apply sealing compound to threads of two elbows (4).

(3) Install two elbows (4) on filter head (5).

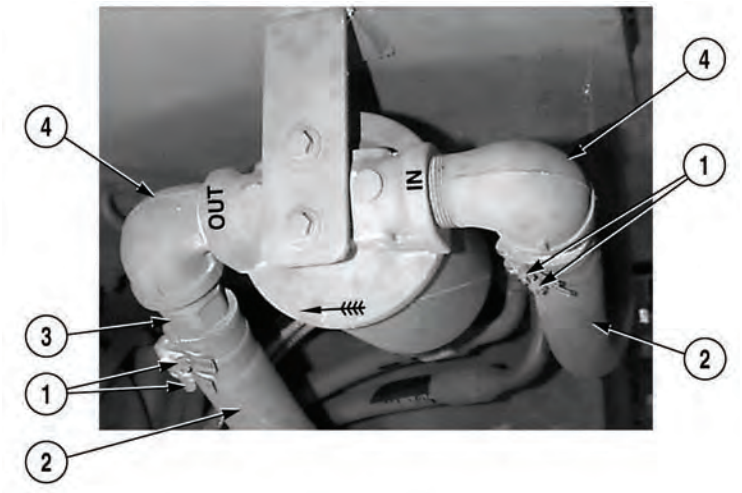

WARNING

Adhesives, solvents, and sealing compounds can burn easily, can give off harmful vapors, and are harmful to skin and clothing. To avoid injury or death, keep away from open fire and use in well-ventilated area. If adhesives, solvent, or sealing compound gets on skin or clothing, wash immediately with soap and water.

(4) Apply sealing compound to threads of two adapters (3).

(5) Install two adapters (3) on elbows (4).

(6) Install two hoses (2) on adapters (3) and tighten four clamps (1).

c. Follow-On Maintenance:

- Install hydraulic filter, (Para 3-35).

END OF TASK

3-37. HYDRAULIC RESERVOIR REPLACEMENT.

This task covers:

a. Removal b. Installation c. Follow-On Maintenance

INITIAL SETUP

Tools and Special Tools
- Tool Kit, General Mechanic's: Automotive (Item 19, Appendix I)
- Cap and Plug Set (Item 3, Appendix I)
- Pan, Drain (Item 12, Appendix I)
- Wrench, Combination, 1-3/8 in. (Item 21, Appendix I)
- Wrench, Pipe (Item 24, Appendix I)
- Lifting Device, Minimum Capacity 150 lb (68kg)

Materials/Parts
- Cable Ties (Item 2, Appendix H)
- Hydraulic Oil (Item 5, Appendix H)
- Sealing Compound (Item 11, Appendix H)
- Tags, Identification (Item 13, Appendix H)
- Lockwasher (4) (MS35338-48)
- Preformed Packing Kit, (Item 18, Appendix H)

Personnel Required
- Two

Equipment Condition
- Battery box removed, (Para 3-12)
- Hydraulic reservoir drained, (Para 3-84)
- Hydraulic reservoir fill cap removed, (Para 3-85)

a. Removal.

NOTE

- Tag and mark hoses prior to removal.
- Cap and plug hoses upon removal.
- Position drain pan under hoses prior to removal.

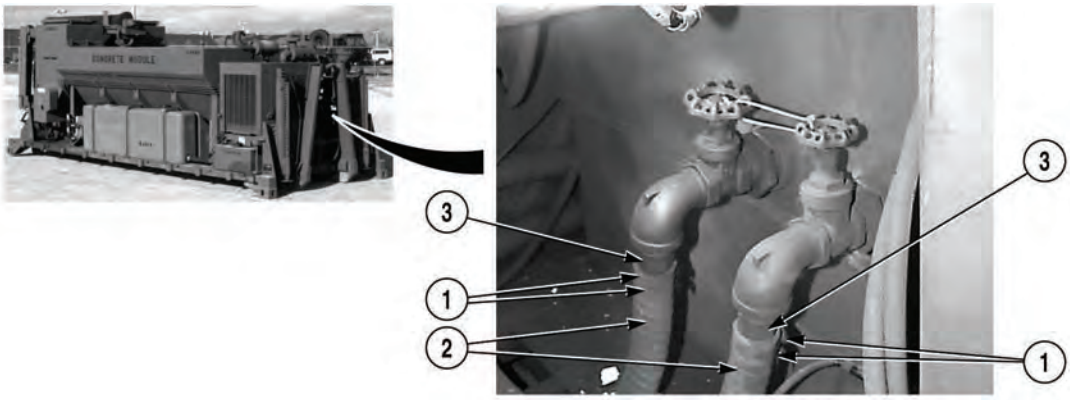

(1) Loosen four clamps (1) and remove two hoses (2) from adapters (3).

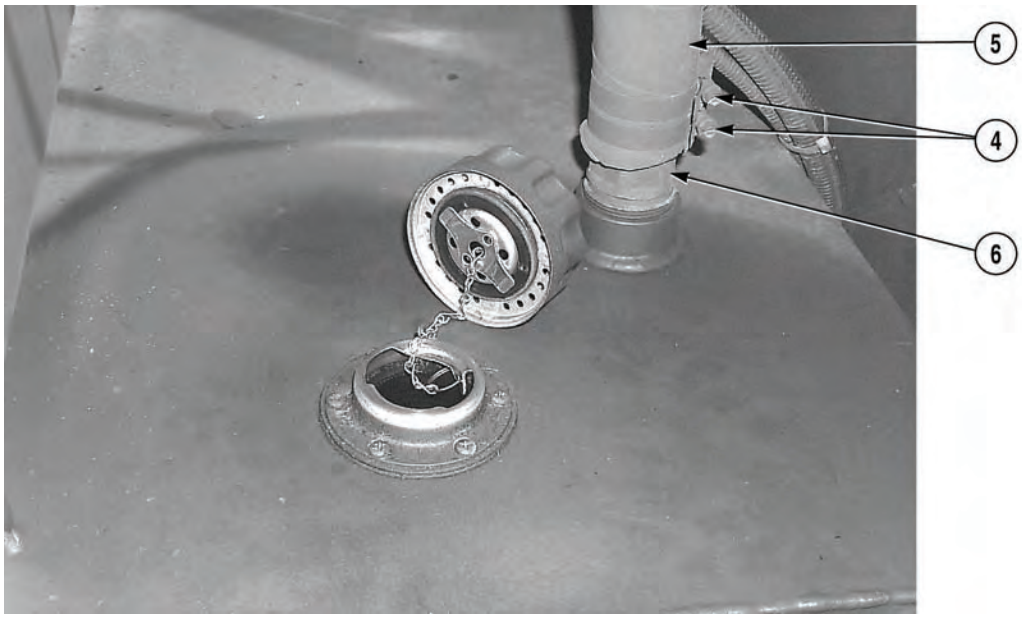

(2) Loosen two clamps (4) and remove hose (5) from adapter (6).

3-37. HYDRAULIC RESERVOIR REPLACEMENT (CONT).

WARNING

Hydraulic reservoir weighs 150 lb (68 kg). Do not attempt to move or lift reservoir without a suitable lifting device and aid of an assistant. Failure to comply could result in serious injury to personnel.

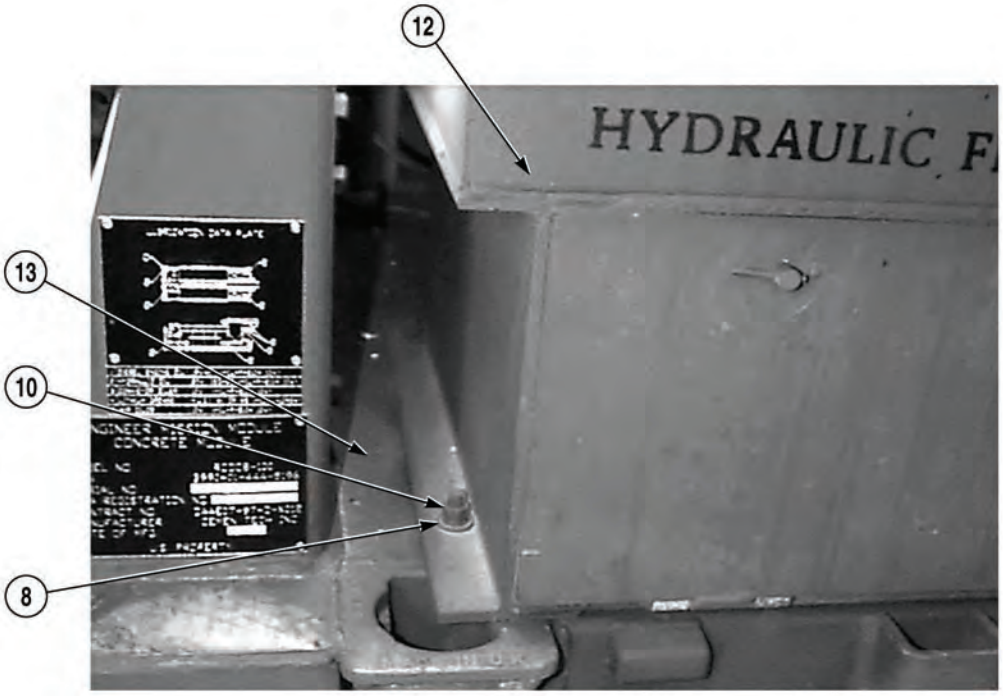

NOTE

Some models have only two washers.

(3) With the aid of an assistant and a suitable lifting device, remove four nuts (7), lockwashers (8), eight washers (9), two screws (10), two screws (11), and hydraulic reservoir (12) from frame (13). Discard lockwashers.

NOTE

Some models have four preformed packings and two washers.

(4) Remove two screws (14), preformed packings (15), and sight glass (16) from hydraulic reservoir (12). Discard preformed packings.

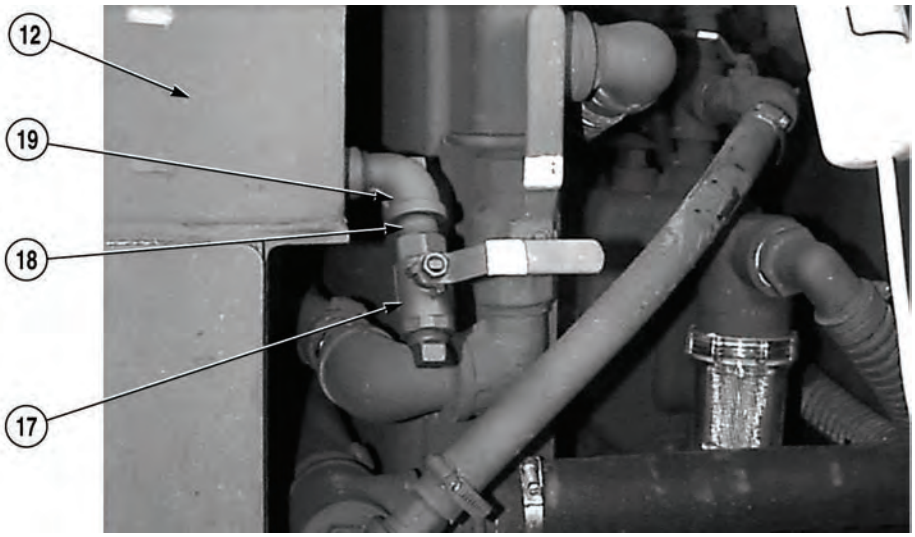

NOTE

Note position of elbows and fittings prior to removal.

(5) Remove ball valve (17), nipple (18), and elbow (19) from hydraulic reservoir (12).

3-37. HYDRAULIC RESERVOIR REPLACEMENT (CONT).

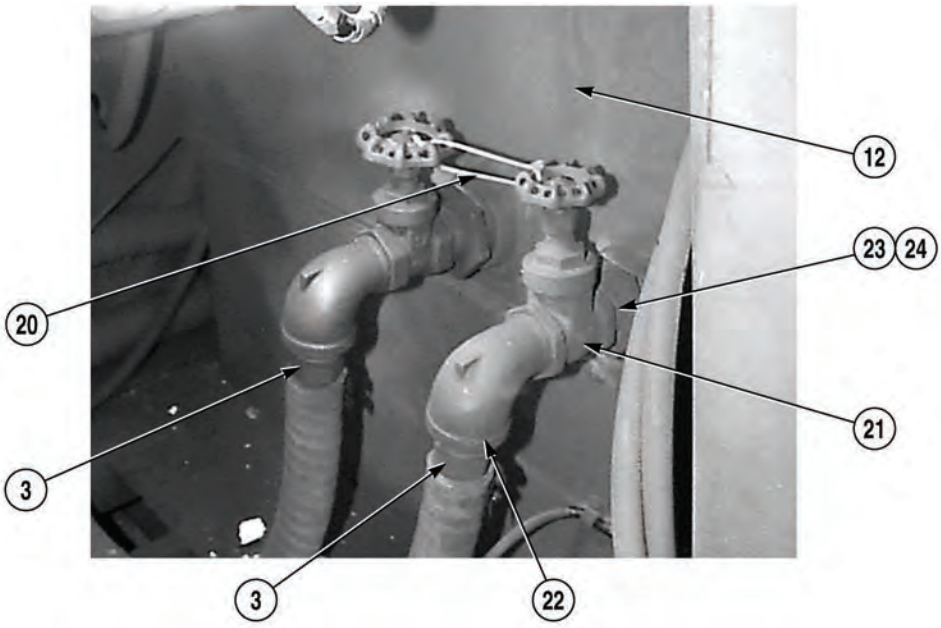

(6) Cut and remove cable tie (20) from valve (21).

(7) Remove two adapters (3), elbows (22), valves (21), nipples (23), and strainers (24) from hydraulic reservoir (12).

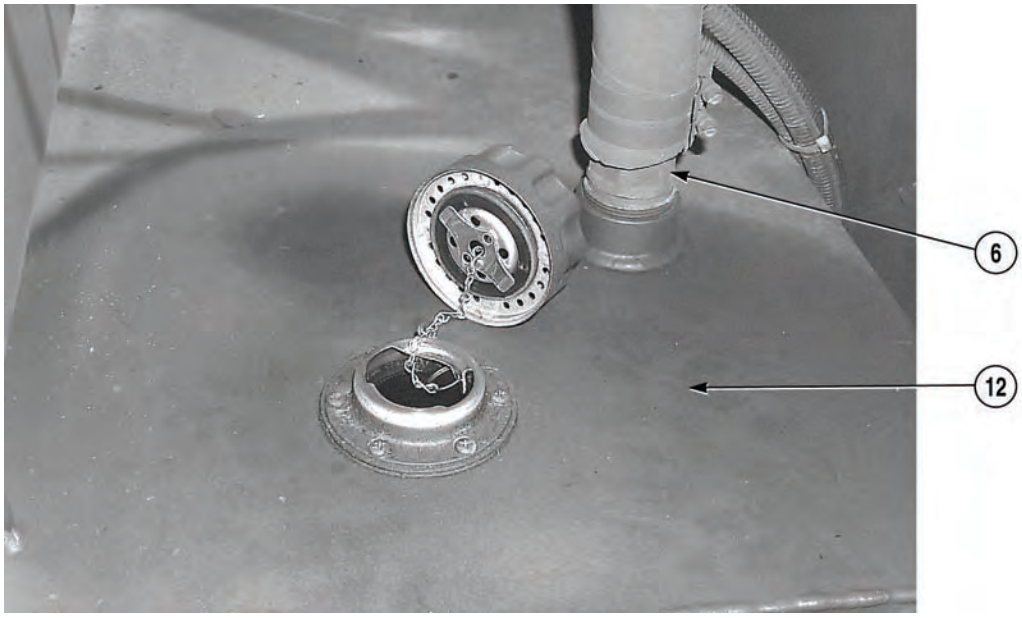

(8) Remove adapter (6) from hydraulic reservoir (12).

b. Installation.

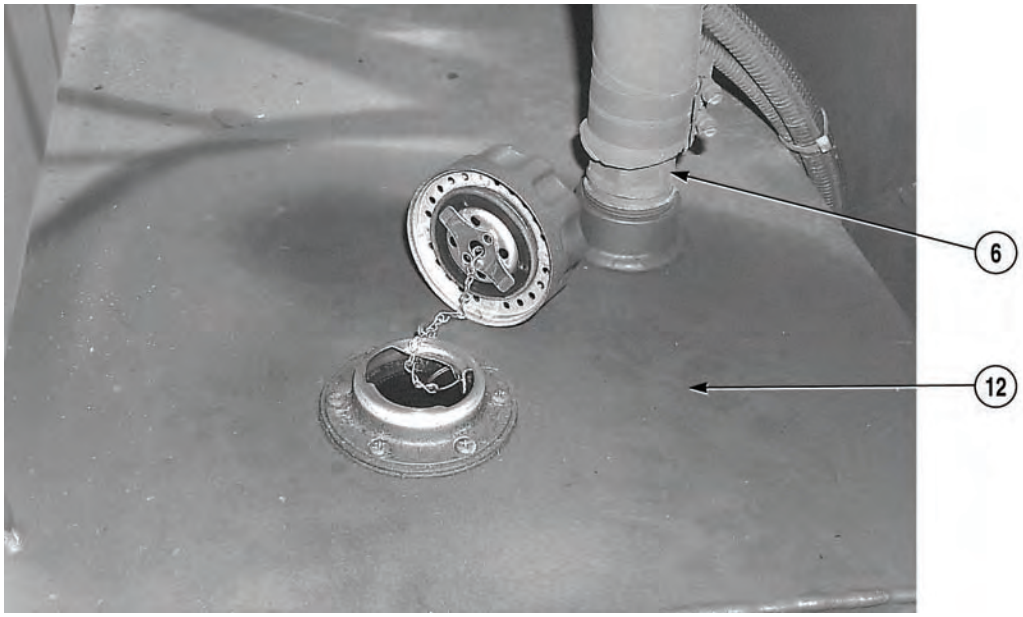

WARNING

Adhesives, solvents, and sealing compounds can burn easily, can give off harmful vapors, and are harmful to skin and clothing. To avoid injury or death, keep away from open fire and use in well-ventilated area. If adhesives, solvent, or sealing compound gets on skin or clothing, wash immediately with soap and water.

NOTE

Install elbows and fittings as noted prior to removal.

(1) Apply sealing compound to threads of adapter (6).

(2) Install adapter (6) on hydraulic reservoir (12).

3-37. HYDRAULIC RESERVOIR REPLACEMENT (CONT).

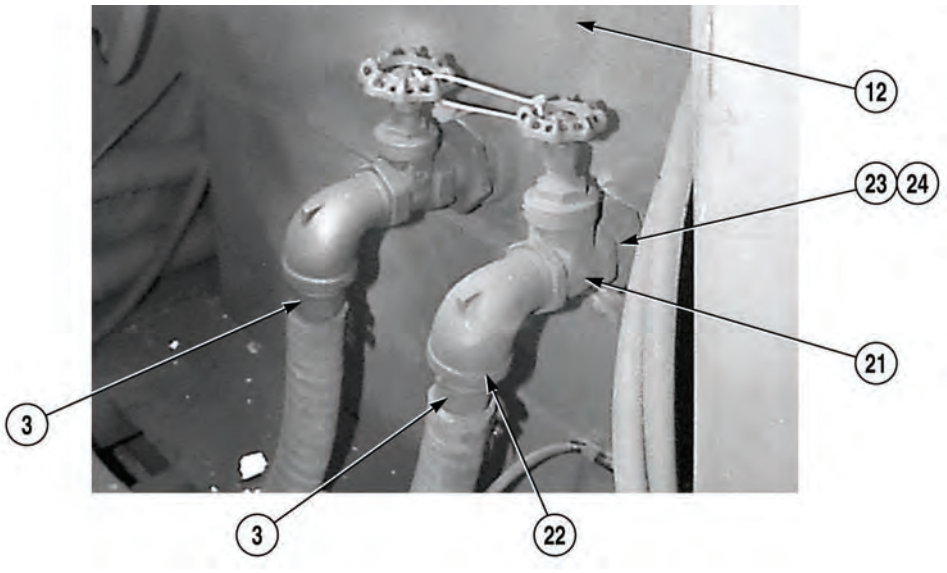

WARNING

Adhesives, solvents, and sealing compounds can burn easily, can give off harmful vapors, and are harmful to skin and clothing. To avoid injury or death, keep away from open fire and use in well-ventilated area. If adhesives, solvent, or sealing compound gets on skin or clothing, wash immediately with soap and water.

(3) Apply sealing compound to threads of two strainers (24), nipples (23), valves (21), elbows (22), and adapters (3).

(4) Install two strainers (24), nipples (23), valves (21), elbows (22), and adapters (3) on hydraulic reservoir (12).

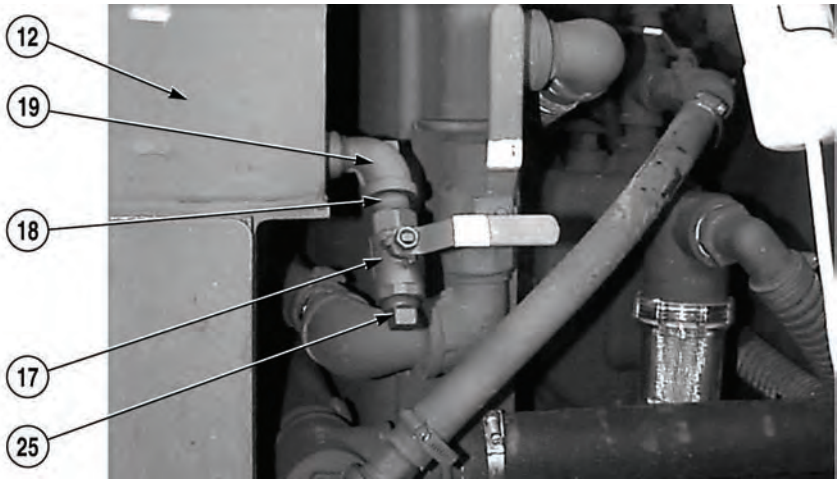

(5) Apply sealing compound to threads of elbow (19), nipple (18), ball valve (17), and plug (25).

(6) Install elbow (19), nipple (18), ball valve (17), and plug (25) on hydraulic reservoir (12).

(7) Install sight glass (16) and two preformed packings (15) on hydraulic reservoir (12) with two screws (14).

3-37. HYDRAULIC RESERVOIR REPLACEMENT (CONT).

WARNING

Hydraulic reservoir weighs 150 lb (68 kg). Do not attempt to move or lift reservoir without a suitable lifting device and aid of an assistant. Failure to comply could result in serious injury to personnel.

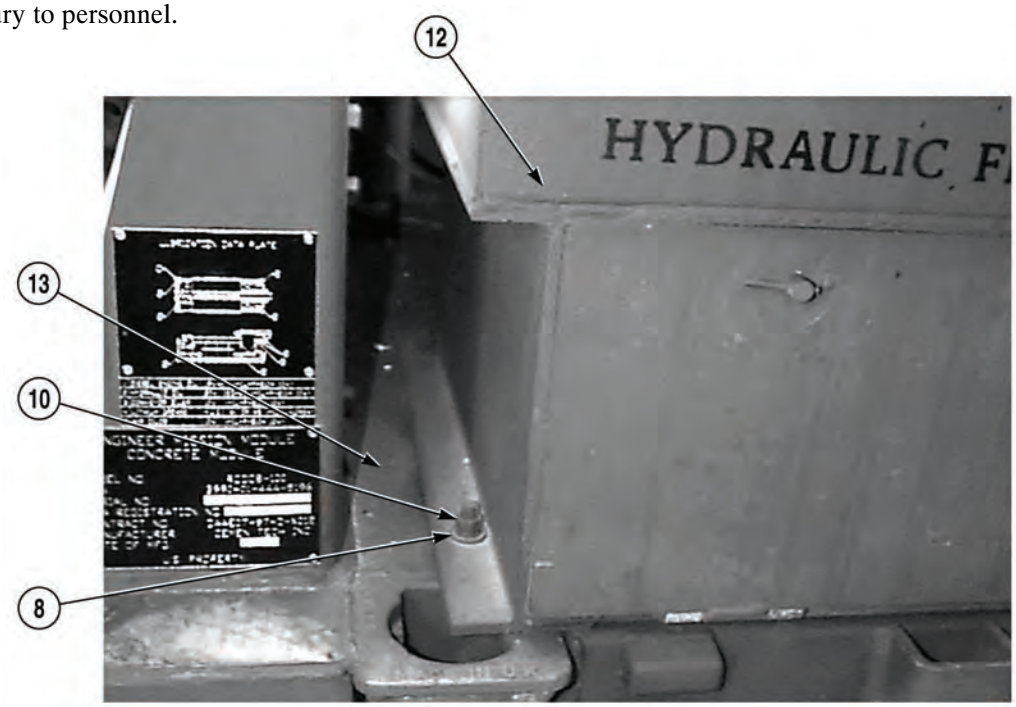

(8) With the aid of an assistant and a lifting device, install hydraulic reservoir (12) on frame (13) with two screws (10), two screws (11), eight washers (9), four lockwashers (8), and nuts (7).

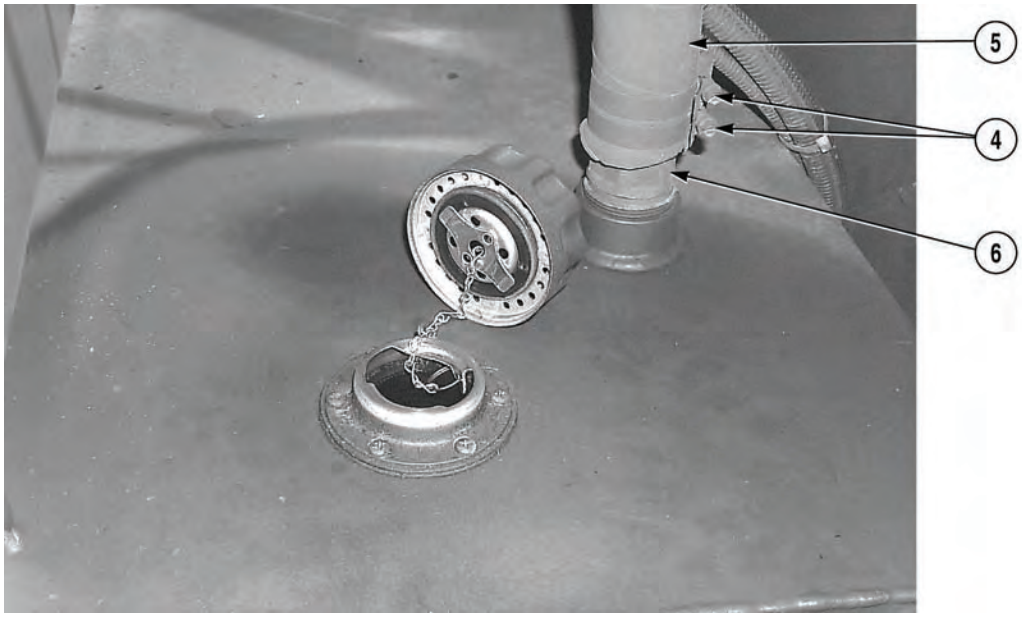

(9) Position hose (5) on adapter (6) and tighten two clamps (4).

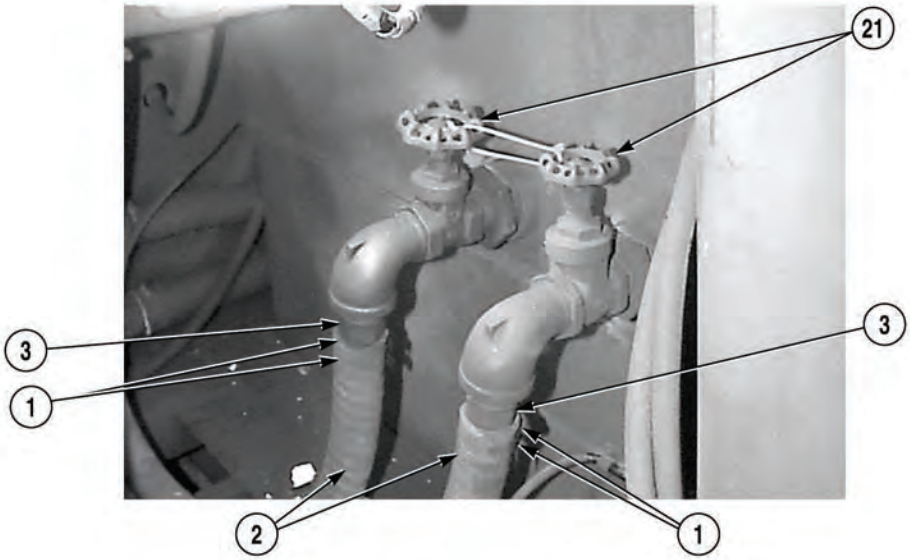

(10) Position two hoses (2) on adapters (3) and tighten four clamps (1).

CAUTION

Failure to open both valves may result in damage to hydraulic pump.

(11) Open two valves (21).

(12) Install cable tie (20) between two valves (21).

3-37. HYDRAULIC RESERVOIR REPLACEMENT (CONT).

c. Follow-On Maintenance:

- Install battery box, (Para 3-12).
- Install hydraulic reservoir fill cap, (Para 3-85).
- Fill hydraulic reservoir, (Para 3-84).
- Start engine, (Para 2-19).
- Check for leaks.
- Shut off engine, (Para 2-19).
- Check hydraulic reservoir oil level, (Para 3-84).

END OF TASK

3-38. HYDRAULIC WATER PUMP REPLACEMENT.

This task covers:

a. Removal b. Installation c. Follow-On Maintenance

INITIAL SETUP

Tools and Special Tools
Tool Kit, General Mechanic's: Automotive (Item 19, Appendix I)
Cap and Plug Set (Item 3, Appendix I)
Pan, Drain (Item 12, Appendix I)

Materials/Parts
Sealing Compound (Item 11, Appendix H)
Tags, Identification (Item 13, Appendix H)
Locknut (2) (MS 17830-6C)

Equipment Condition
Engine OFF, (Para 2-19)
Water tanks drained, (Para 2-12)
Concrete Mobile Mixer unloaded, (Para 2-5)

a. Removal.

NOTE

- Tag and mark hoses prior to removal.
- Note location and position of elbows, adapters, valves, and nipples prior to removal.
- Cap and plug hoses upon removal.
- Hydraulic oil may leak from hoses being removed. Position drain pan under flatrack to catch excess oil.
- Some models have two clamps holding hoses on elbows and fittings instead of one.

(1) Loosen clamp (1) and remove hose (2) from elbow (3).

3-38. HYDRAULIC WATER PUMP REPLACEMENT (CONT).

(2) Loosen clamp (4) and remove hose (5) from adapter (6).

(3) Loosen clamp (7) and remove hose (8) from adapter (9).

NOTE

- Some models do not have adapter.
- Hose may be removed from adapter or elbow.

(4) Remove hose (10) from adapter (11).

(5) Remove hose (12) from elbow (13).

NOTE

Some models have lockwashers and nuts.

(6) Remove two screws (14), four washers (15), two locknuts (16), and hydraulic water pump (17) from Concrete Mobile Mixer. Discard locknuts.

(7) Remove elbow (3), strainer (18), and adapter (19) from hydraulic water pump (17).

(8) Remove adapter (6), elbow (20), valve (21), and nipple (22) from tee (23).

(9) Remove adapter (9), tee (23), nipple (24), and reducer (25) from hydraulic water pump (17).

(10) Remove drain cock (26) from hydraulic water pump (17).

(11) Remove hose (27) from tee (28) and elbow (29).

(12) Remove adapter (11) and elbow (30) from tee (28).

(13) Remove tee (28) and nipple (31) from relief valve (32).

(14) Remove elbow (29) and nipple (33) from hydraulic water pump (17).

(15) Remove relief valve (32) and nipple (34) from elbow (35).

(16) Remove elbow (35) from hydraulic water pump (17).

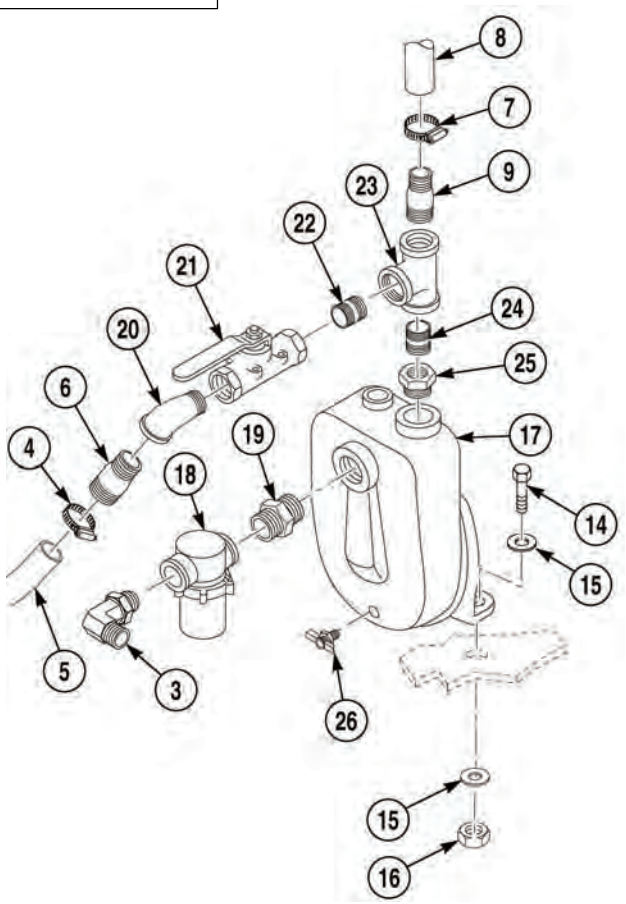

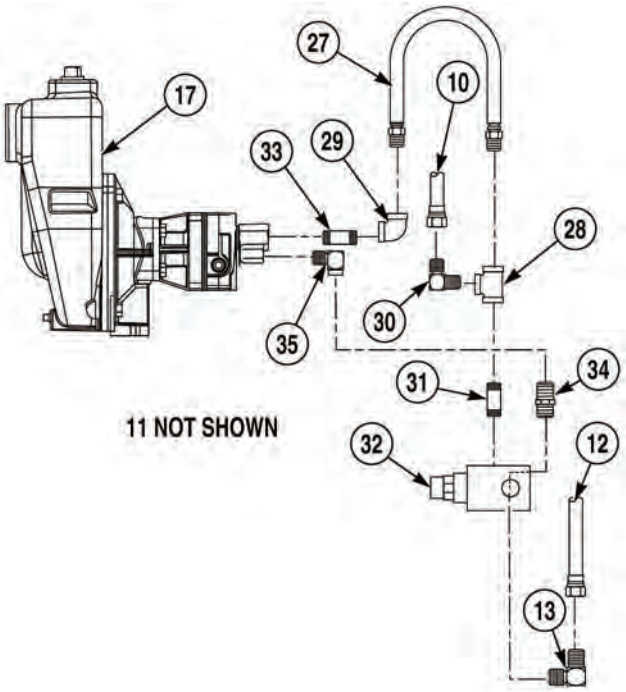

b. Installation.

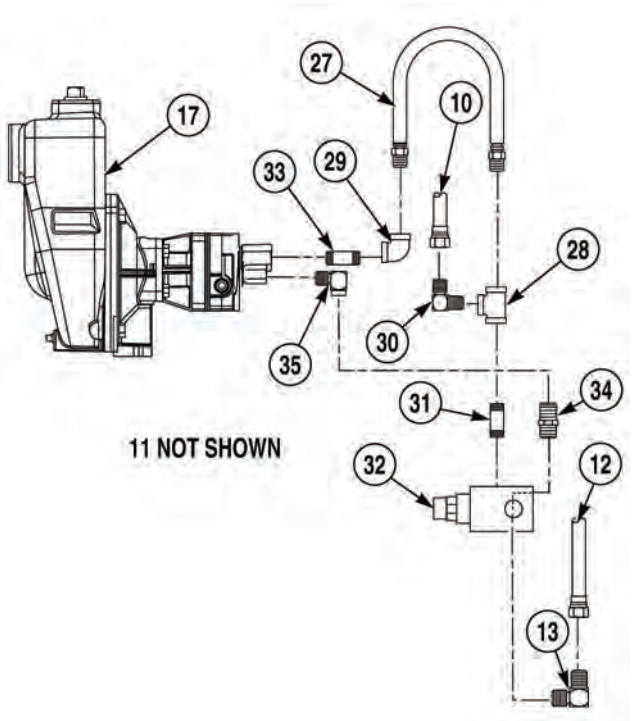

WARNING

Adhesives, solvents, and sealing compounds can burn easily, can give off harmful vapors, and are harmful to skin and clothing. To avoid injury or death, keep away from open fire and use in well-ventilated area. If adhesives, solvent, or sealing compound gets on skin or clothing, wash immediately with soap and water.

NOTE

Install elbows, adapters, valves, and nipples in location as noted prior to removal.

(1) Apply sealing compound to threads of adapter (11), hose (27), three elbows (29), (30), and (35), and nipples (31), (33), and (34).

(2) Install elbow (35) on hydraulic water pump (17).

(3) Install relief valve (32) and nipple (34) on elbow (35).

(4) Install elbow (29) and nipple (33) on hydraulic water pump (17).

(5) Install tee (28) and nipple (31) on relief valve (32).

(6) Install adapter (11) and elbow (30) on tee (28).

(7) Install hose (27) on elbow (29) and tee (28).

(8) Install hose (10) on adapter (11).

(9) Install hose (12) on elbow (13).

3-38. HYDRAULIC WATER PUMP REPLACEMENT (CONT).

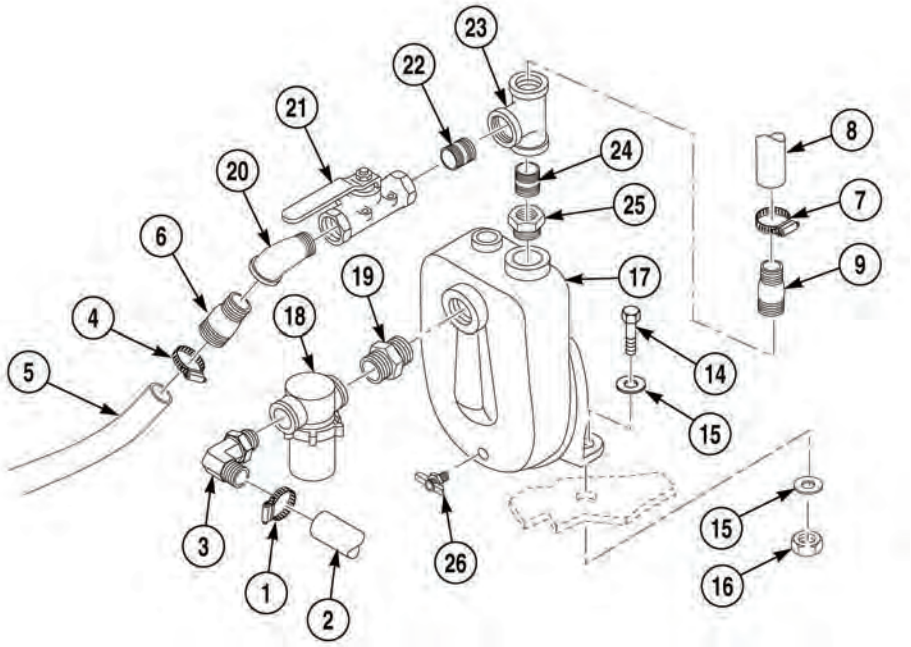

(10) Apply sealing compound to threads of two elbows (3) and (20), three adapters (6), (9), and (19), two nipples (22) and (24), reducer (25), and drain cock (26).

(11) Install drain cock (26) on hydraulic water pump (17).

(12) Install reducer (25), nipple (24), tee (23), and adapter (9) on hydraulic water pump (17).

(13) Install adapter (6), elbow (20), valve (21), and nipple (22) on tee (23).

(14) Install elbow (3), strainer (18), and adapter (19) on hydraulic water pump (17).

(15) Install hydraulic water pump (17) on Concrete Mobile Mixer using two locknuts (16), four washers (15), and two screws (14).

NOTE

Hose may be installed on adapter or elbow.

(16) Position hose (8) on adapter (9) and tighten clamp (7).

(17) Position hose (5) on adapter (6) and tighten clamp (4).

(18) Position hose (2) on elbow (3) and tighten clamp (1).

c. Follow-On Maintenance:

- Fill water tanks, (Para 2-12).
- Start engine, (Para 2-19).
- Check for oil leaks.
- Shut off engine, (Para 2-19).

END OF TASK

3-39. ADMIX TANK REPLACEMENT.

This task covers:

a. Removal b. Installation c. Follow-On Maintenance

INITIAL SETUP

Tools and Special Tools
Tool Kit, General Mechanic's: Automotive
(Item 19, Appendix I)

Equipment Condition
Drain admix tank, (Para 2-15 or 2-16)
Admix cover removed, (Para 3-88)

3-39. ADMIX TANK REPLACEMENT (CONT).

a. Removal.

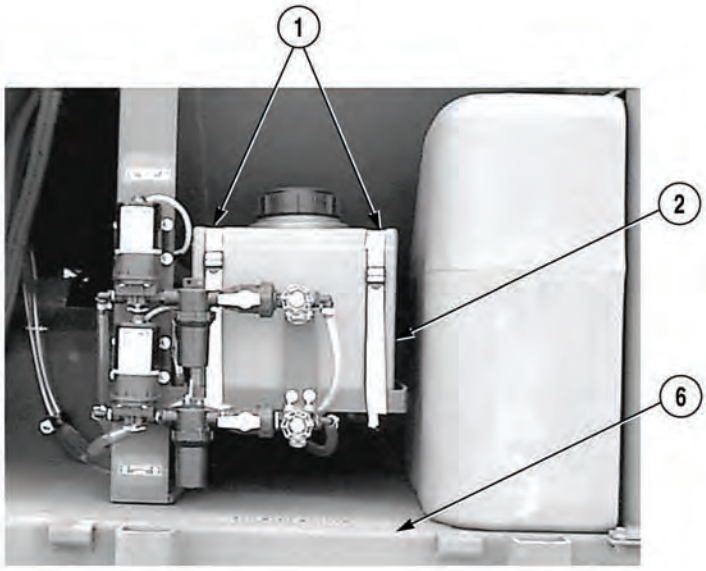

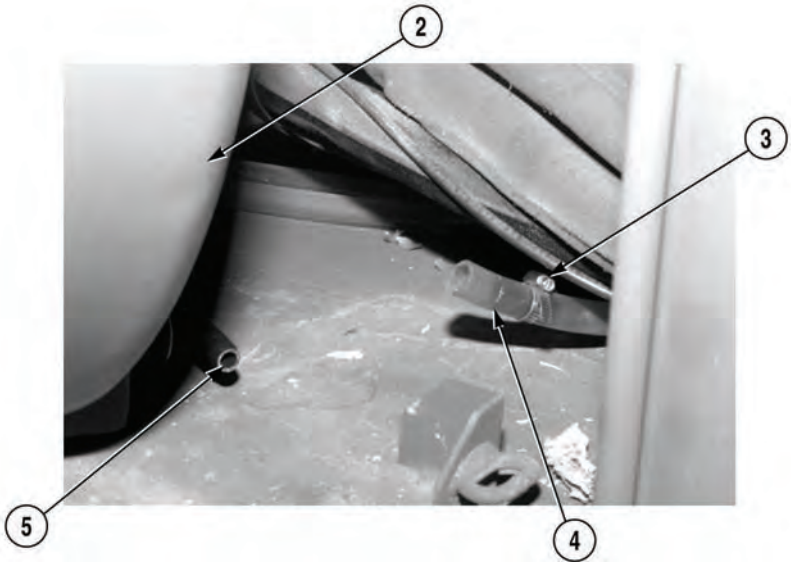

NOTE

There are two admix tanks: a low-flow admix tank and a high-flow admix tank. Both tanks are removed same way.

(1) Remove straps (1) from admix tank (2).

NOTE

Hose on low-flow admix tank is on bottom of tank. Hose on high-flow admix tank is on rear of tank.

(2) Loosen clamp (3) and remove hose (4) from fitting (5) on admix tank (2).

(3) Remove admix tank (2) from Concrete Mobile Mixer (6).

b. Installation.

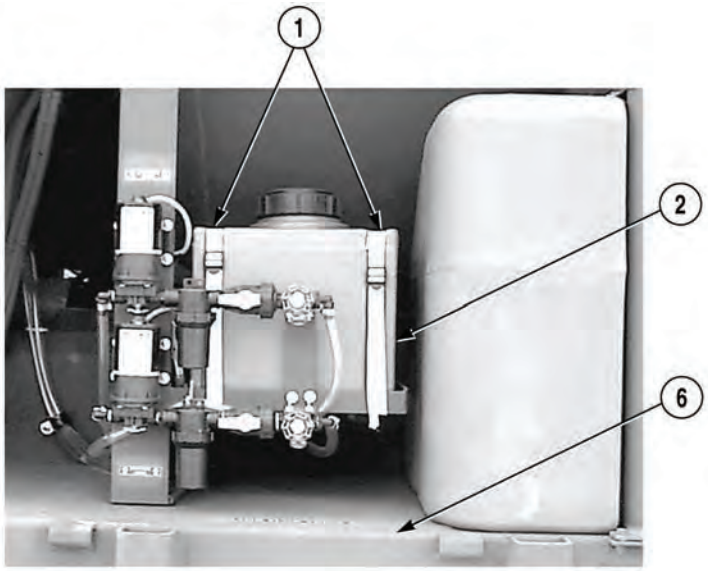

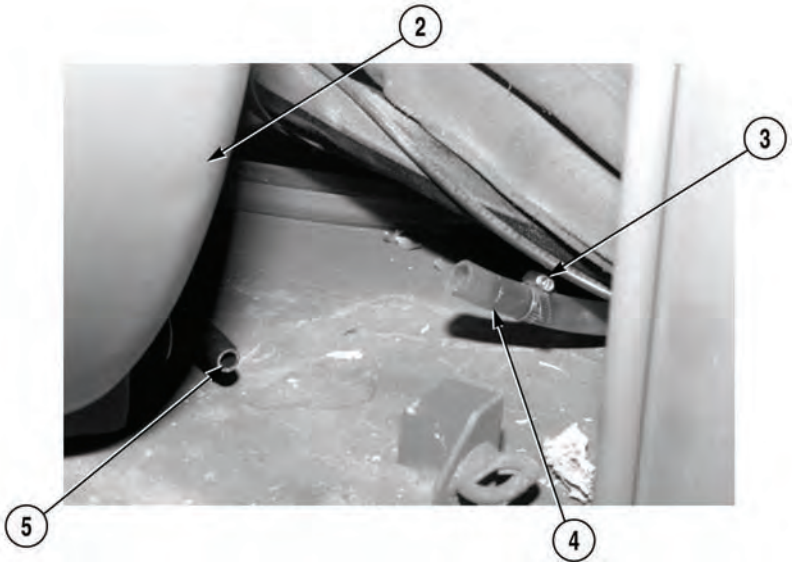

(1) Install admix tank (2) on Concrete Mobile Mixer (6).

(2) Position hose (4) on fitting (5) on admix tank (2), and tighten clamp (3).

(3) Install straps (1) on admix tank (2).

c. Follow-On Maintenance:

- Fill admix tank, (Para 2-15 or 2-16).
- Check for leaks.
- Install admix cover (Para 3-88).

END OF TASK

3-40. WATER SYSTEM STRAINER REPLACEMENT.

This task covers:

a. Removal b. Installation c. Follow-On Maintenance

INITIAL SETUP

Tools and Special Tools
Tool Kit, General Mechanic's: Automotive (Item 19, Appendix I)

Equipment Condition
Engine OFF, (Para 2-19)

a. Removal.

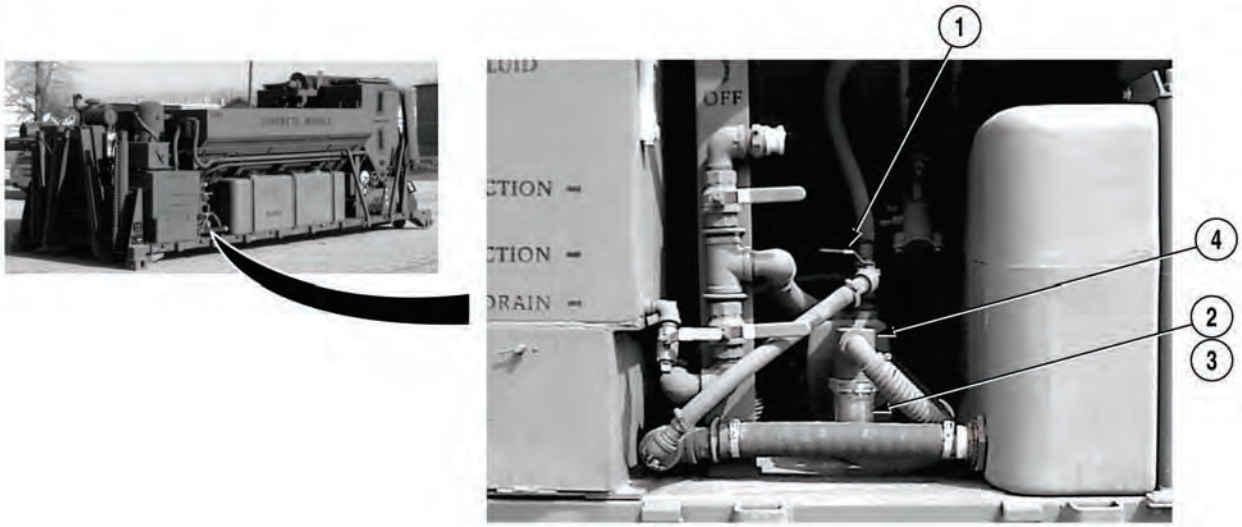

(1) Close water valve (1).

(2) Remove strainer canister (2) and gasket (3) from strainer housing (4).

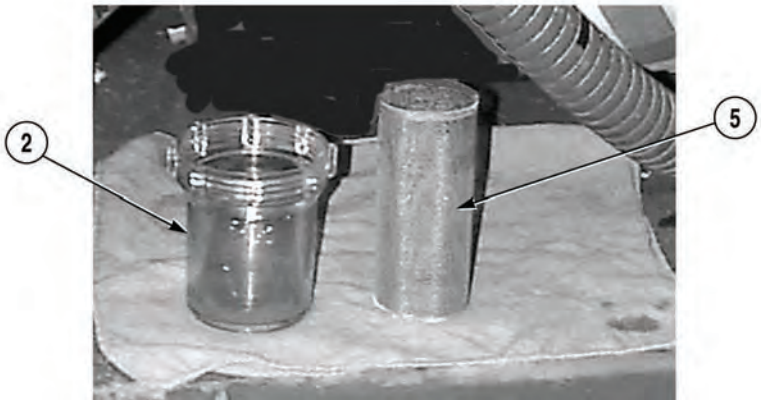

(3) Remove strainer (5) from strainer canister (2).

b. Installation.

(1) Install strainer (5) in strainer canister (2).

NOTE

Replace gasket if worn or damaged.

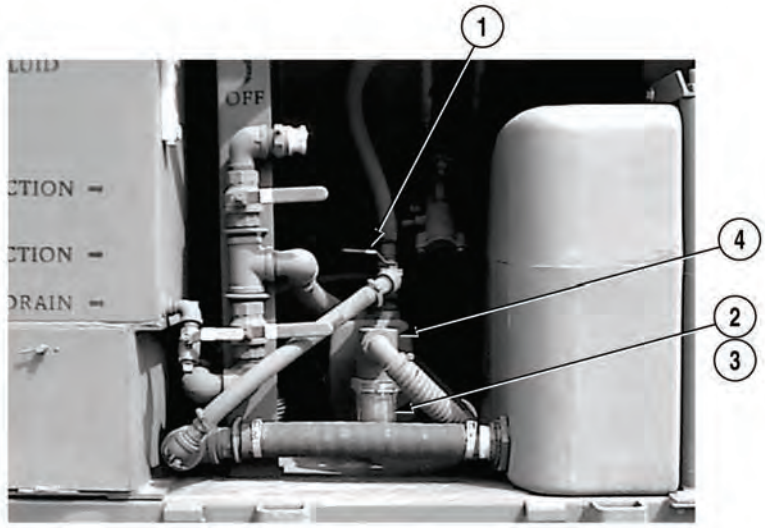

(2) Install strainer canister (2) and gasket (3) on strainer housing (4).

(3) Open water valve (1).

3-40. WATER SYSTEM STRAINER REPLACEMENT (CONT).

c. Follow-On Maintenance:

- Start engine, (Para 2-19).
- Check for leaks.
- Shut off engine, (Para 2-19).

END OF TASK

3-41. AIR FILTER REPLACEMENT.

This task covers:

a. Removal b. Installation c. Follow-On Maintenance

INITIAL SETUP

Tools and Special Tools
Tool Kit, General Mechanic's: Automotive (Item 19, Appendix)

Materials/Parts
Hydraulic Oil (Item 5, Appendix H)
Preformed Packing Kit (Item 18, Appendix H)

Equipment Condition
Engine OFF, (Para 2-19)
Concrete Mobile Mixer unloaded, (Para 2-5)

a. Removal.

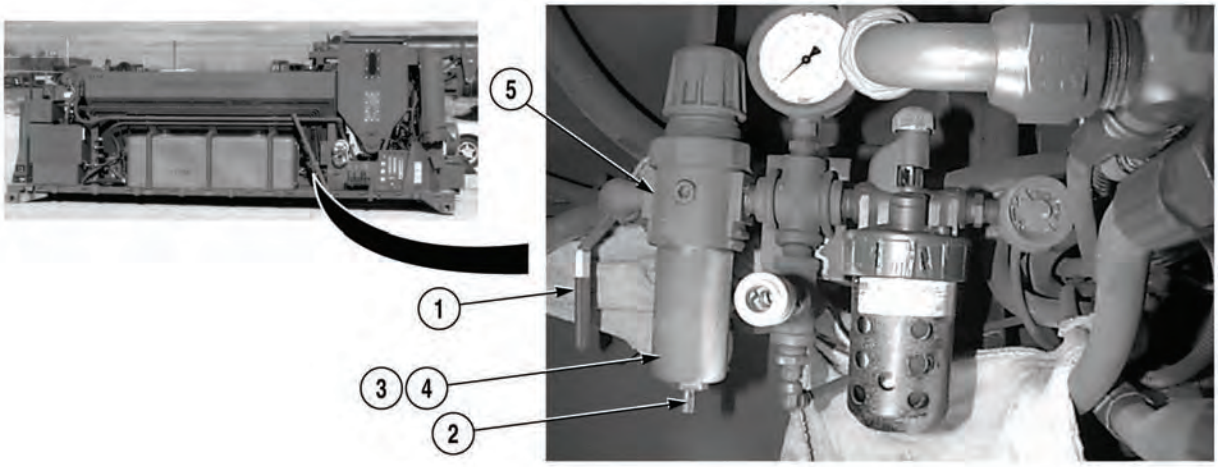

(1) Turn off air shutoff valve (1).

(2) Open drain valve (2).

(3) Remove filter canister (3) and preformed packing (4) from filter housing (5). Discard preformed packing.

3-41. AIR FILTER REPLACEMENT (CONT).

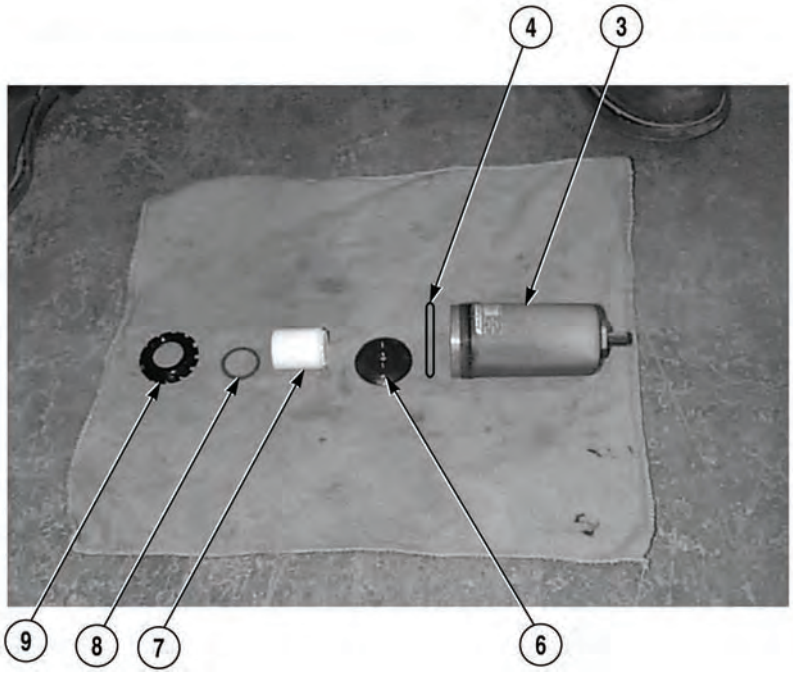

NOTE

- Note location and position of end caps, gaskets, and filter prior to removal.
- End cap is removed by turning to the left (counterclockwise).

(4) Remove end cap (6), filter (7), and gasket (8) from end cap (9). Discard filter and gasket.

b. Installation.

NOTE

Install end caps, gaskets, and filter in location and position as noted prior to removal.

(1) Apply oil to gasket (8).

(2) Install gasket (8), filter (7), and end cap (6) on end cap (9).

(3) Install filter (7) on filter housing (5).

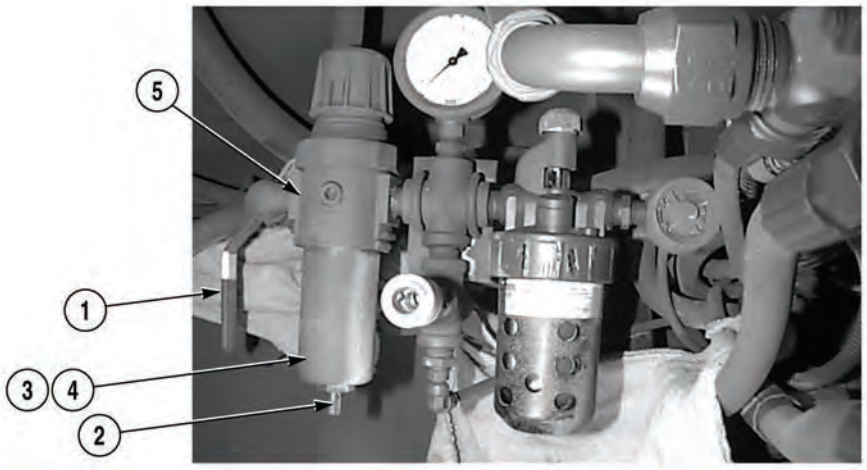

(4) Apply oil to preformed packing (4).

(5) Install filter canister (3) and preformed packing (4) on filter housing (5).

(6) Close drain valve (2).

(7) Turn on air shutoff valve (1).

c. Follow-On Maintenance:

- Start engine, (Para 2-19).
- Check for leaks.
- Shut off engine, (Para 2-19).

END OF TASK

3-42. WATER TANK REPLACEMENT.

This task covers:

a. Removal b. Installation c. Follow-On Maintenance

INITIAL SETUP

Tools and Special Tools
Tool Kit, General Mechanic's: Automotive (Item 19, Appendix I)

Materials/Parts
Lockwasher (3) (MS35338-48)
Lockwasher (6) (MS35338-47)

Personnel Required
Two

Equipment Condition
Concrete Mobile Mixer unloaded, (Para 2-5)
Water tank drained, (Para 2-12)
Engine OFF, (Para 2-19)

a. Removal.

NOTE

There are two water tanks on Concrete Mobile Mixer. Both water tanks are removed the same way.

(1) Remove three screws (1), washers (2), lockwashers (3), and nuts (4) from brackets (5) and Concrete Mobile Mixer (6). Discard lockwashers.

(2) Remove six screws (7), washers (8), lockwashers (9), nuts (10), and three brackets (5) from Concrete Mobile Mixer (6). Discard lockwashers.

(3) Loosen clamp (11) and remove hose (12) from fitting (13).

WARNING

Water tanks weighs 150 lb (68 kg) each. Do not attempt to lift or move water tanks without the aid of an assistant. Failure to comply could result in injury to personnel.

(4) With the aid of an assistant, remove water tank (14) from Concrete Mobile Mixer (6).

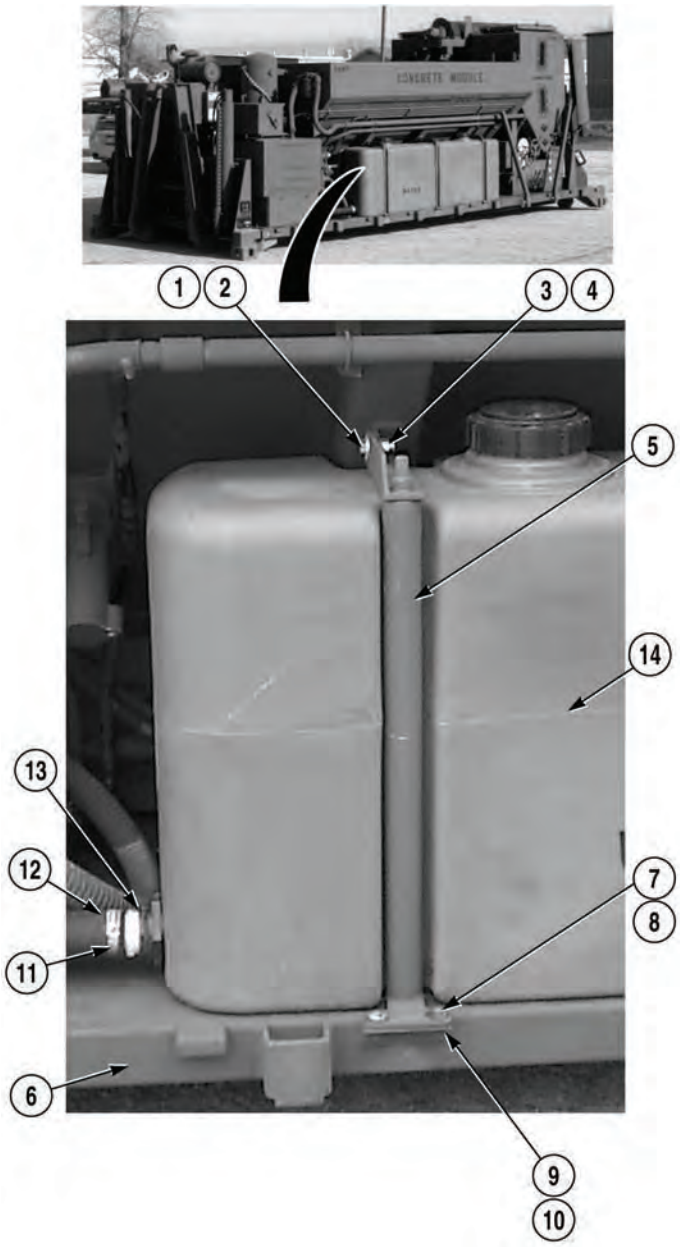

b. Installation.

WARNING

Water tanks weighs 150 lb (68 kg) each. Do not attempt to lift or move water tanks without the aid of an assistant. Failure to comply could result in injury to personnel.

(1) With the aid of an assistant, position water tank (14) on Concrete Mobile Mixer (6).

(2) Install hose (12) on fitting (13) and tighten clamp (11).

(3) Install three brackets (5) on Concrete Mobile Mixer (6) with six washers (8), screws (7), lockwashers (9), and nuts (10).

(4) Install three washers (2), screws (1), lockwashers (3), and nuts (4) on brackets (5).

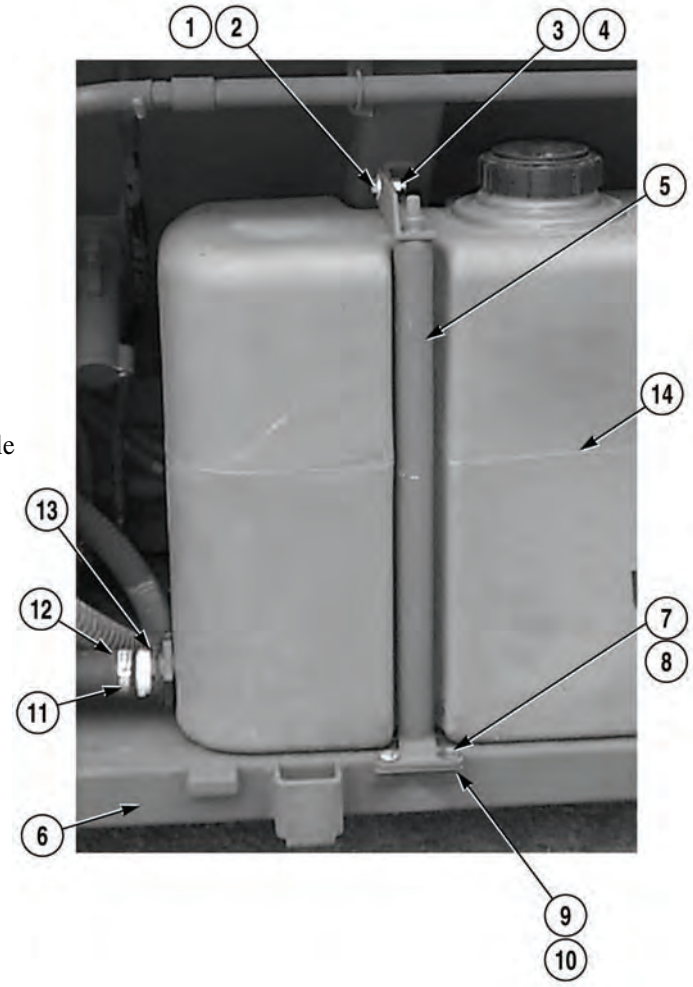

c. Follow-On Maintenance:

- Fill water tanks, (Para 2-12).
- Check for leaks.

END OF TASK

3-43. LIFT CYLINDER ASSEMBLY REPLACEMENT.

This task covers:

a. Removal b. Installation c. Follow-On Maintenance

INITIAL SETUP

Tools and Special Tools
- Tool Kit, General Mechanic's: Automotive (Item 19, Appendix I)
- Cap and Plug Set (Item 3, Appendix I)
- Pan, Drain (Item 12, Appendix I)
- Lifting Device, Minimum Capacity 200 lb (91 kg)

Materials/Parts
- Hydraulic Oil (Item 5, Appendix H)
- Tags, Identification (Item 13, Appendix H)
- Locknut (16) (MS51943-43)
- Lockwasher (2) (MS35338-45)
- Preformed Packing Kit (Item 18, Appendix H)

Personnel Required
- Two

Equipment Condition
- Delivery chutes removed (rear lift cylinders only), (Para 2-26)
- Work light removed (rear lift cylinders only), (Para 3-32)
- Grab Handle removed (right, rear lift cylinder only), (Para 3-89)

a. Removal.

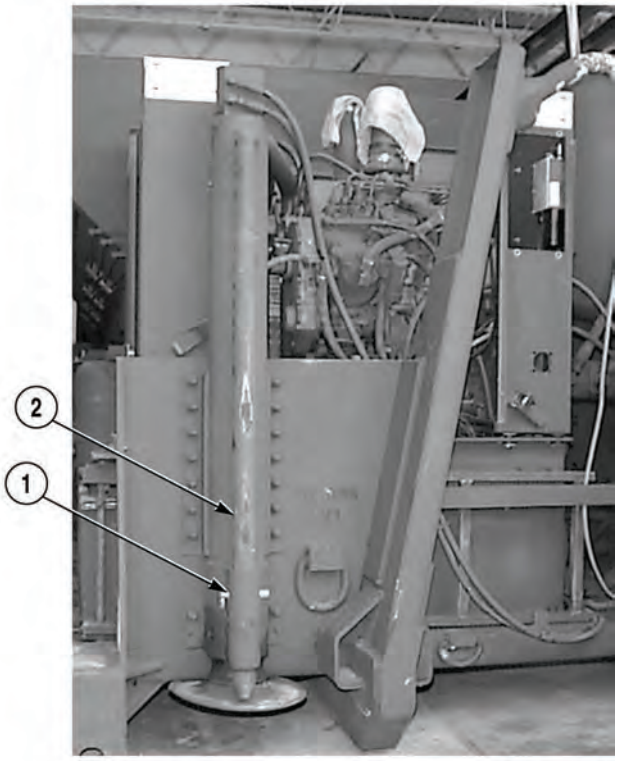

NOTE

- There are four lift cylinders on Concrete Mobile Mixer. All four lift cylinders are removed in the same manner.
- Tag and mark hoses prior to removal.
- Cap and plug all hoses upon removal.
- It may be necessary to extend lift cylinder slightly to relieve binding for removal.

(1) Install pin (1) in safety rod (2).

3-43. LIFT CYLINDER ASSEMBLY REPLACEMENT (CONT).

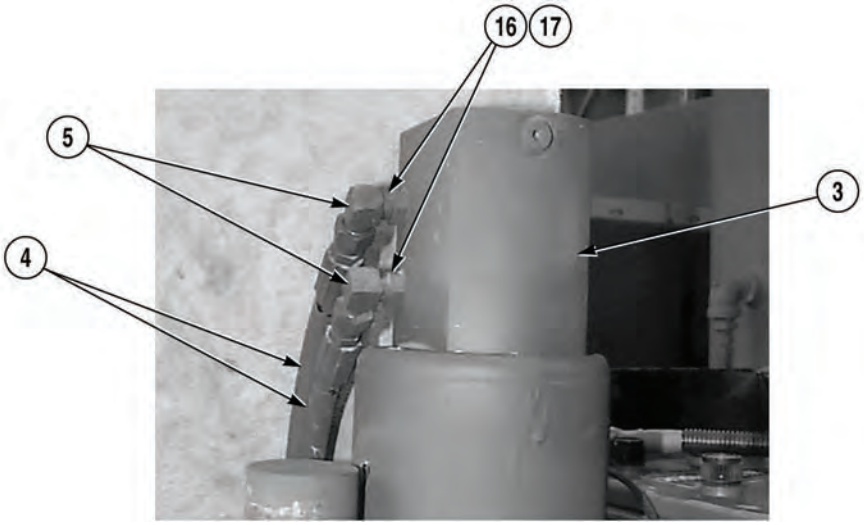

(2) Position drain pan under lift cylinder assembly (3).

(3) Remove two hoses (4) from elbows (5).

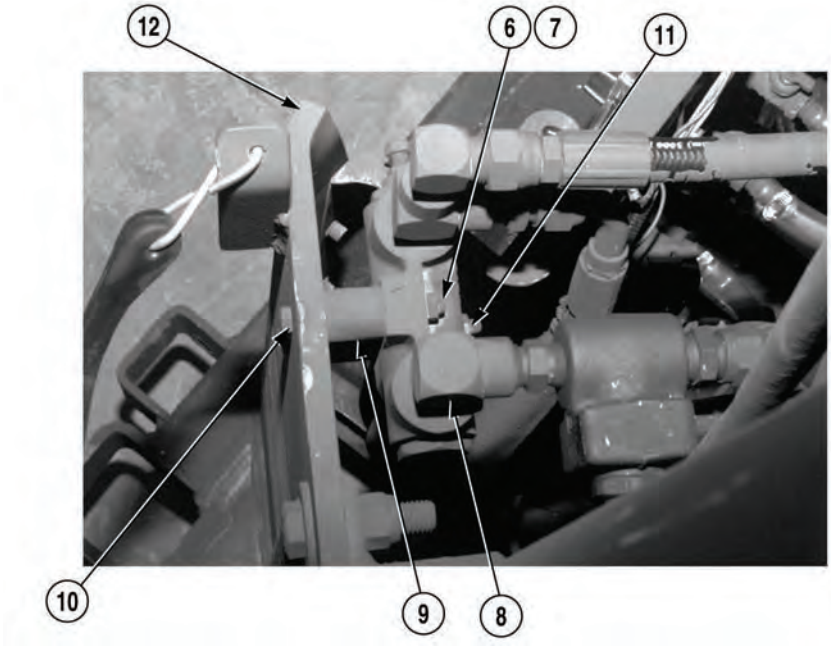

NOTE

- Perform Step (4) only if removing rear lift cylinders.
- Some models have locknuts.

(4) Remove two nuts (6) lockwashers (7), valve (8), two spacers (9), screw (10), and screw (11) from Concrete Mobile Mixer (12). Discard lockwashers.

(5) Position valve (8) out of the way.

(6) Attach lifting device to lift cylinder assembly (3).

WARNING

Leg assembly weighs 183 lb (83 kg). Do not attempt to lift or move leg assembly without use of a suitable lifting device and aid of an assistant. Failure to comply could result in serious injury to personnel.

NOTE

Rear lift cylinders will have 18 screws, washers, and locknuts in Step (7).

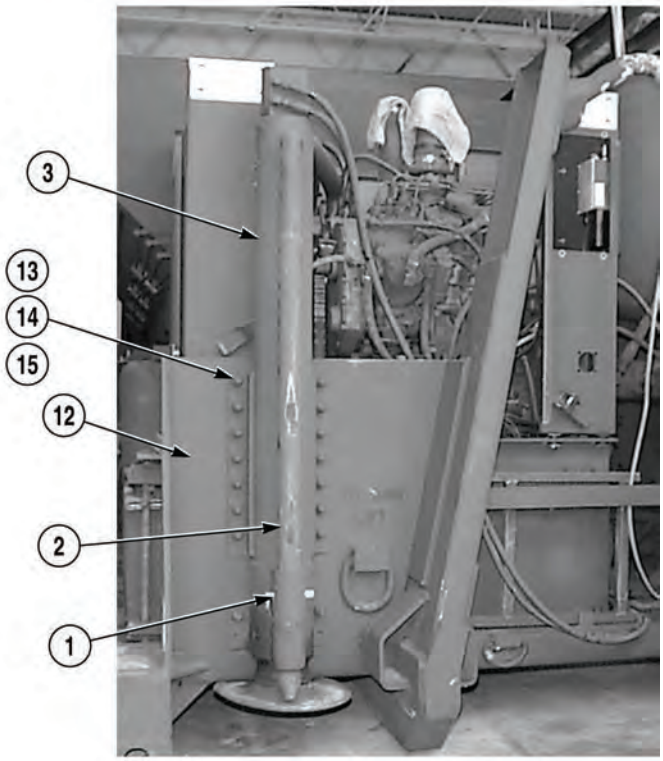

(7) With the aid of an assistant and using lifting device, remove 16 screws (13), washers (14), locknuts (15), and lift cylinder assembly (3) from Concrete Mobile Mixer (12). Discard locknuts.

(8) Remove lifting device from lift cylinder assembly (3).

NOTE

Note location and position of elbows prior to removal.

(9) Loosen two nuts (16) and remove elbows (5) and preformed packing (17) from lift cylinder assembly (3). Discard preformed packing.

b. Installation.

(1) Install pin (1) in safety rod (2).

(2) Apply oil to two preformed packings (17).

NOTE

Install elbows in positions as noted prior to removal.

(3) Position two elbows (5) and preformed packings (17) on lift cylinder assembly (3) and tighten nuts (16).

3-43. LIFT CYLINDER ASSEMBLY REPLACEMENT (CONT).

(4) Attach lifting device to lift cylinder assembly (3).

WARNING

Leg assembly weighs 183 lb (83 kg). Do not attempt to lift or move leg assembly without use of a suitable lifting device and aid of an assistant. Failure to comply could result in serious injury to personnel.

(5) With the aid of an assistant and using a lifting device, install lift cylinder assembly (3) on Concrete Mobile Mixer (12) with 16 washers (14), screws (13), and locknuts (15).

(6) Remove lifting device for lift cylinder assembly (3).

NOTE

Perform Step (7) for rear lift cylinders only.

(7) Install valve (8) on Concrete Mobile Mixer (12) with screw (11), screw (10), two spacers (9), lockwashers (7), and nuts (6).

(8) Install two hoses (4) on elbows (5).

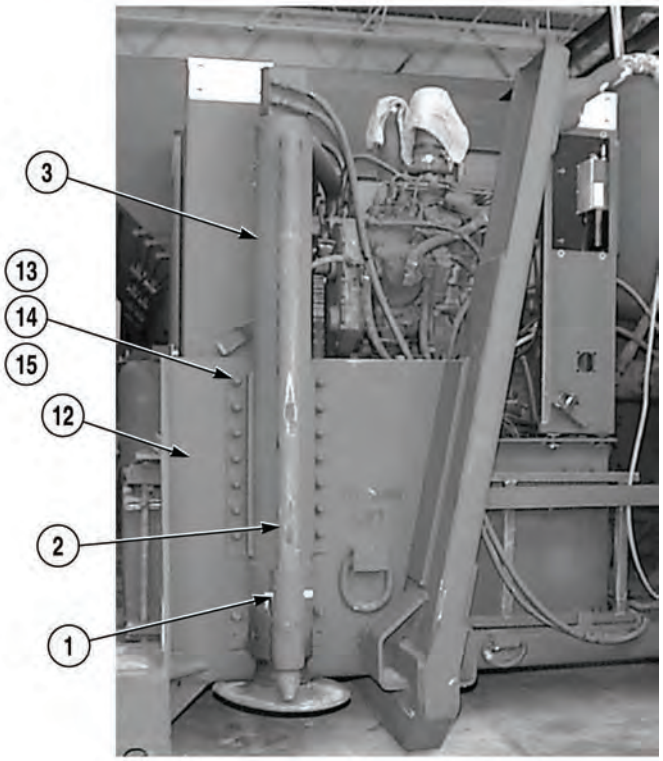

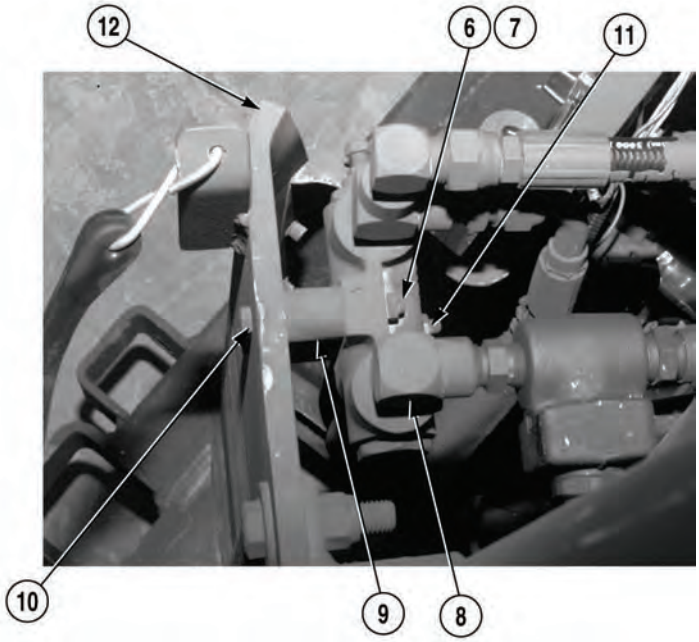

c. *Follow-On Maintenance:*

- Start engine, (Para 2-19).
- Operate lift cylinders, (Para 2-28).
- Shut off engine, (Para 2-19).
- Check for leaks.
- Check hydraulic reservoir oil level, (Para 3-37).
- Install grab handle (right, rear lift cylinder only), (Para 3-89).
- Install work light (rear left cylinders only), (Para 3-32).
- Install delivery chute (rear left cylinders only), (Para 2-26).

END OF TASK

3-44. ADMIX STRAINER REPLACEMENT.

This task covers:

a. Removal b. Installation c. Follow-On Maintenance

INITIAL SETUP

Tools and Special Tools
Tool Kit, General Mechanic's: Automotive (Item 19, Appendix I)

Equipment Condition
Engine OFF, (Para 2-19)
Concrete Mobile Mixer unloaded, (Para 2-5)
Admix and chain drive cover(s) removed, (Para 3-88)

a. Removal.

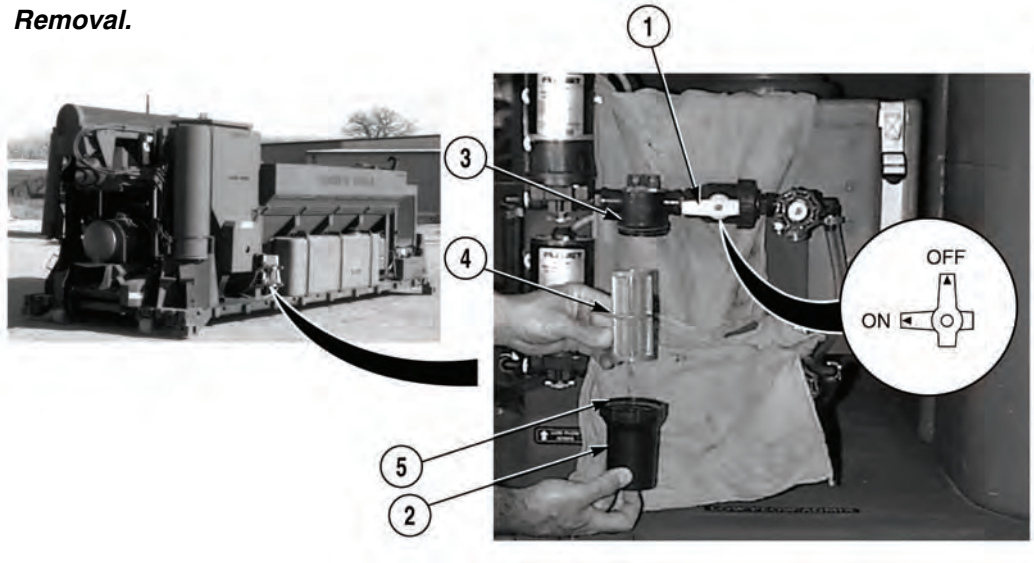

NOTE

- Strainer screen for the hi-flow and low-flow admix systems are replaced the same way.
- Vertical position on solution valve is closed. Horizontal position is opened.

(1) Close solution valve (1).

(2) Remove strainer canister (2) from strainer housing (3).

(3) Remove strainer (4) and gasket (5) from strainer canister (2).

3-44. ADMIX STRAINER REPLACEMENT (CONT).

b. Installation.

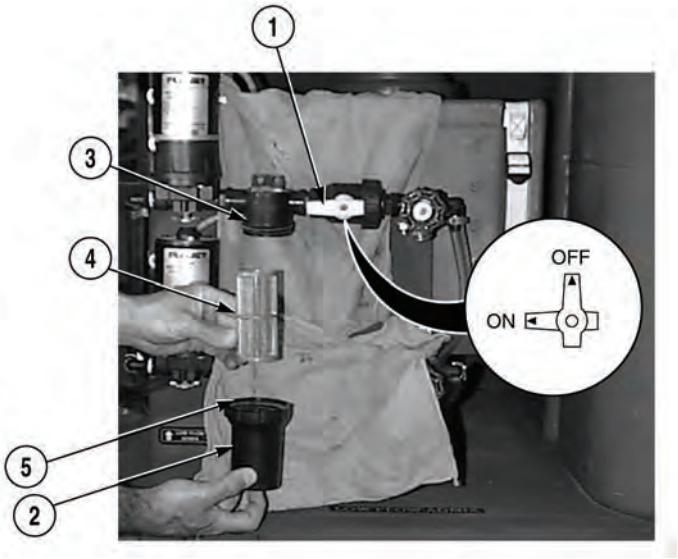

NOTE

Replace gasket if worn or damaged.

(1) Install gasket (5) and strainer (4) on strainer canister (2).

(2) Install strainer canister (2) on strainer housing (3).

NOTE

Vertical position on solution valve is closed. Horizontal position is opened.

(3) Open solution valve (1).

c. Follow-On Maintenance:

- Check for leaks.
- Install admix and chain drive cover(s), (Para 3-88).

END OF TASK

3-45. ADMIX PUMPS, STRAINER ASSEMBLIES, AND SOLUTION VALVES REPLACEMENT.

This task covers:

a. Removal b. Installation c. Follow-On Maintenance

INITIAL SETUP

Tools and Special Tools
Tool Kit, General Mechanic's: Automotive (Item 19, Appendix I)

Equipment Condition
Admix cover removed, (Para 3-88)
Batteries disconnected, (Para 3-10)

Materials/Parts
Locknut (M4591313-4CG8C)
Lockwasher (2) (353AX)
Locknut (4) (AN365-1024A)
Tags, Identification (Item 13, Appendix H)
Tape, Teflon (Item 20, Appendix H)

a. Removal.

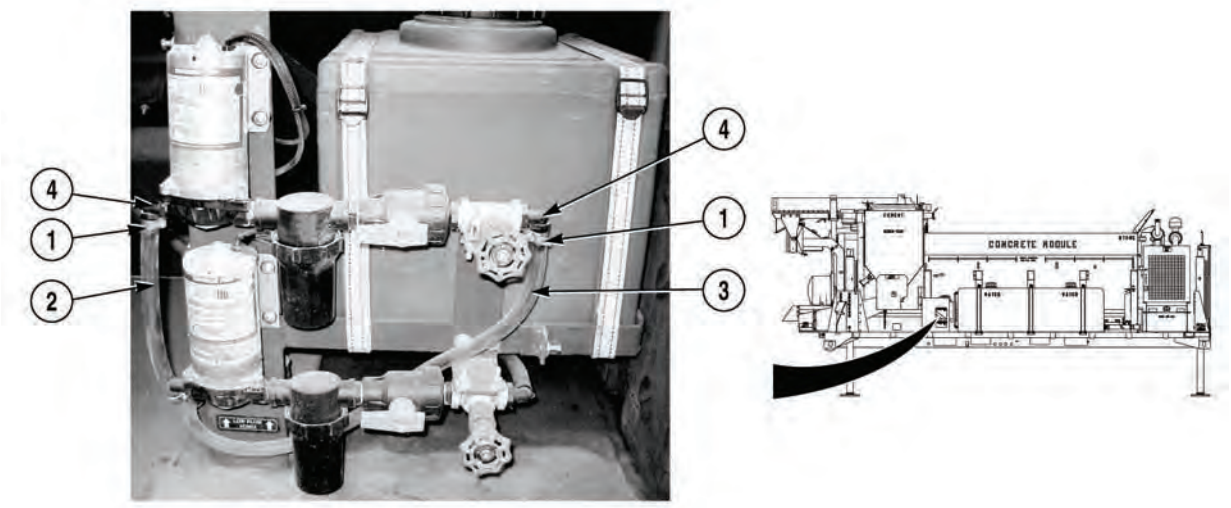

NOTE

- Tag and mark wires and tubes prior to removal.
- Both admix pumps, strainer assemblies, and solution valves are removed the same way, high-flow admix pump shown.

(1) Loosen two clamps (1) and remove tubes (2) and (3) from elbows (4).

3-45. ADMIX PUMPS, STRAINER ASSEMBLIES, AND SOLUTION VALVES REPLACEMENT (CONT).

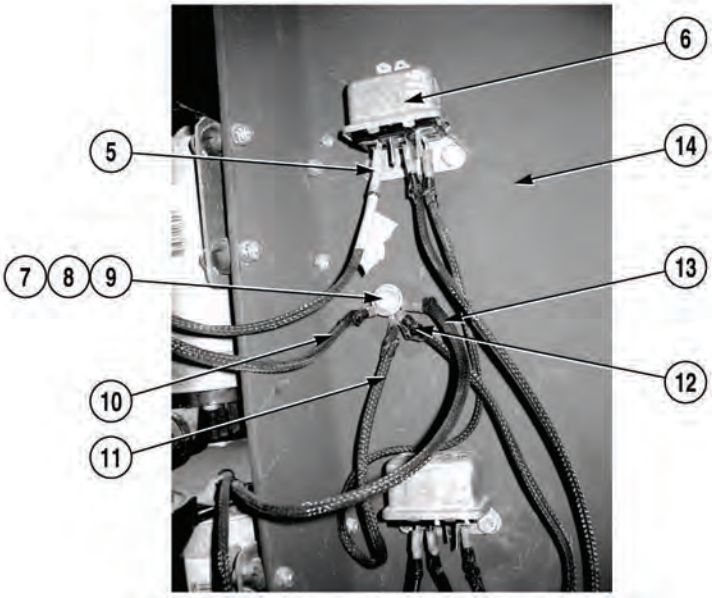

(2) Disconnect wire (5) from relay (6).

(3) Remove locknut (7), two washers (8), screw (9), and four wires (10), (11), (12), and (13) from support (14). Discard locknut.

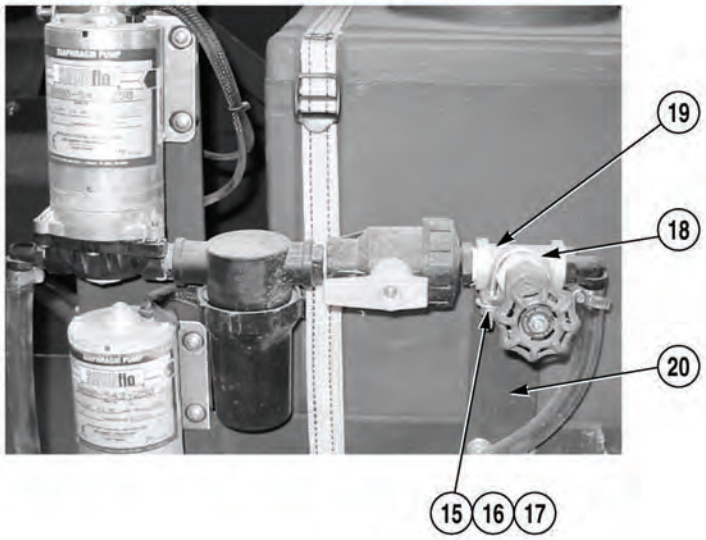

NOTE

In order to remove admix pump, entire assembly must be removed from module.

(4) Remove two nuts (15), lockwashers (16), washers (17), and U-bolt (18) from tee (19) and bracket (20). Discard lockwasher.

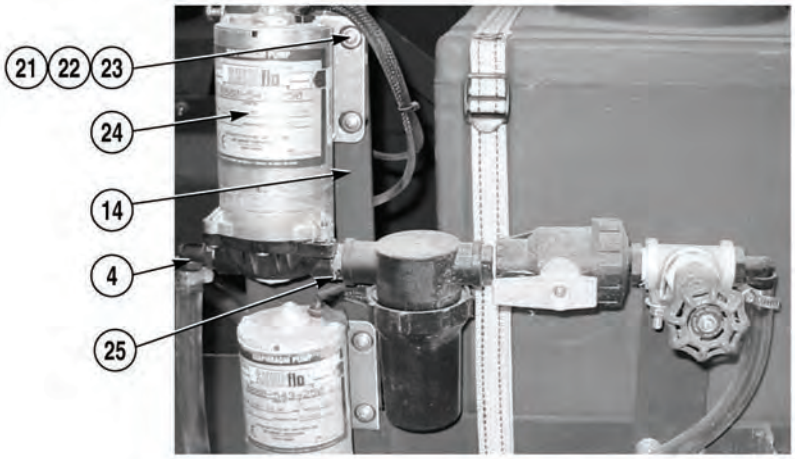

(5) Remove four locknuts (21), washers (22), screws (23), and admix pump (24) from support (14). Discard locknuts.

(6) Remove admix pump (24) from nipple (25).

NOTE

Note position of elbow prior to removal.

(7) Remove elbow (4) from admix pump (24).

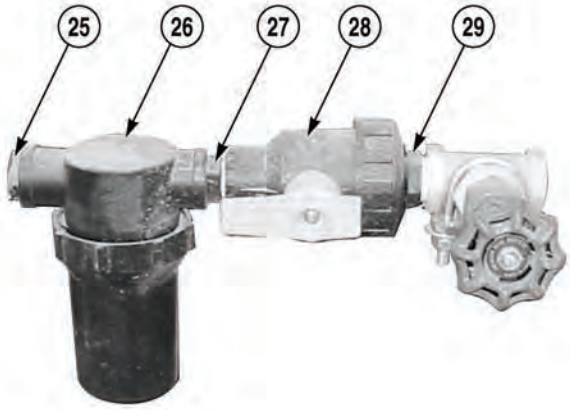

NOTE

Perform Steps (8) and (9) if strainer assembly needs to be removed.

(8) Remove strainer assembly (26) from nipple (27).

(9) Remove nipple (25) from strainer assembly (26).

3-45. ADMIX PUMPS, STRAINER ASSEMBLIES, AND SOLUTION VALVES REPLACEMENT (CONT).

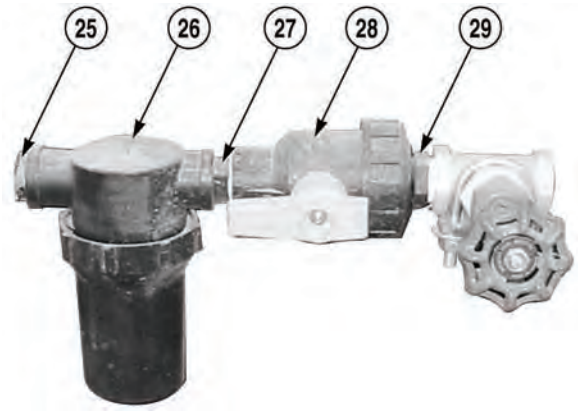

NOTE

Perform Steps (10) and (11) if ball valve needs to be removed.

(10) Remove ball valve (28) from nipple (29).

(11) Remove nipple (27) from ball valve (28).

b. Installation.

NOTE

Perform Steps (1) through (3) if ball valve needs to be installed.

(1) Apply several wraps of teflon tape on two nipples (27) and (29).

(2) Install nipple (27) on ball valve (28).

(3) Install ball valve (28) on nipple (29).

NOTE

Perform Steps (4) through (6) if strainer assembly needs to be installed.

(4) Apply several wraps of teflon tape on two nipples (25) and (27).

(5) Install nipple (25) on strainer assembly (26).

(6) Install strainer assembly (26) on nipple (27).

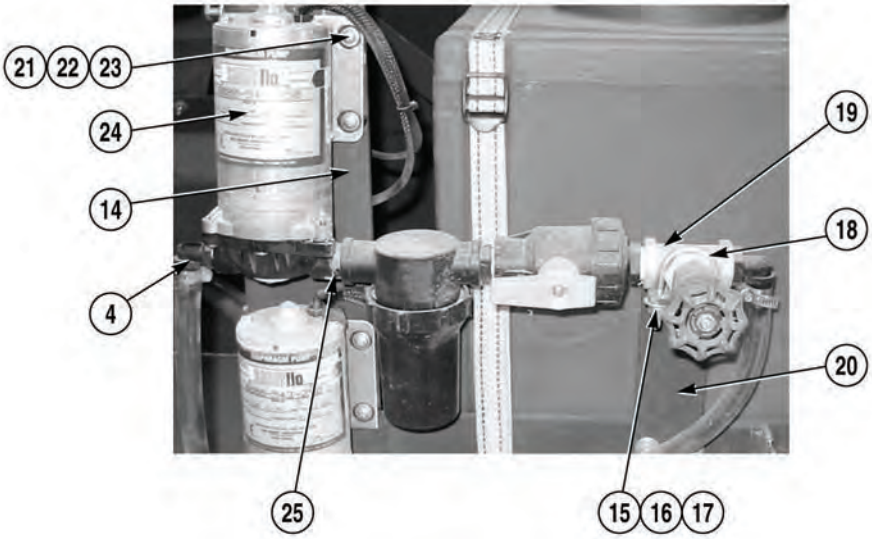

(7) Apply several wraps of teflon tape on elbow (4) and nipple (25).

NOTE

Install elbow and fitting as noted prior to removal.

(8) Install elbow (4) and nipple (25) on admix pump (24).

(9) Install admix pump (24) on support (14) with four screws (23), washers (22), and locknuts (21).

(10) Install tee (19) on bracket (20) with U-bolt (18), two washers (17), lockwashers (16), and nuts (15).

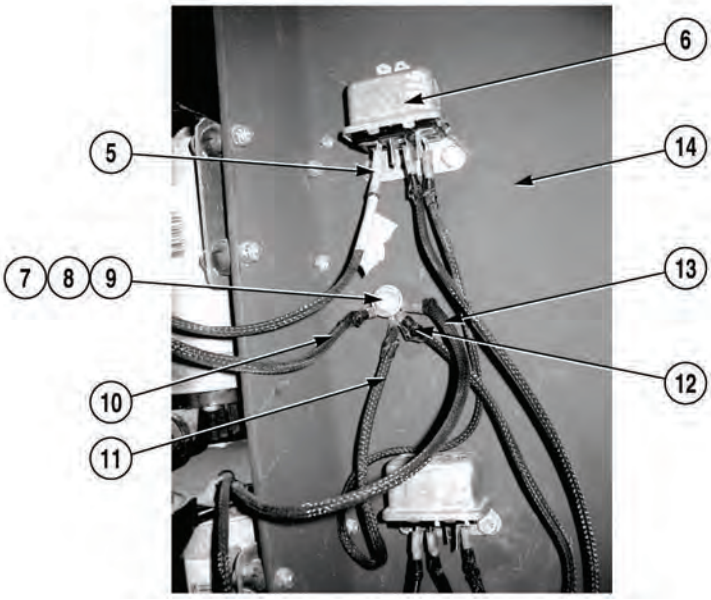

(11) Install four wires (10), (11), (12), and (13) on support (14) with screw (9), two washers (8), and locknut (7).

(12) Connect wire (5) on relay (6).

3-45. ADMIX PUMPS, STRAINER ASSEMBLIES, AND SOLUTION VALVES REPLACEMENT (CONT).

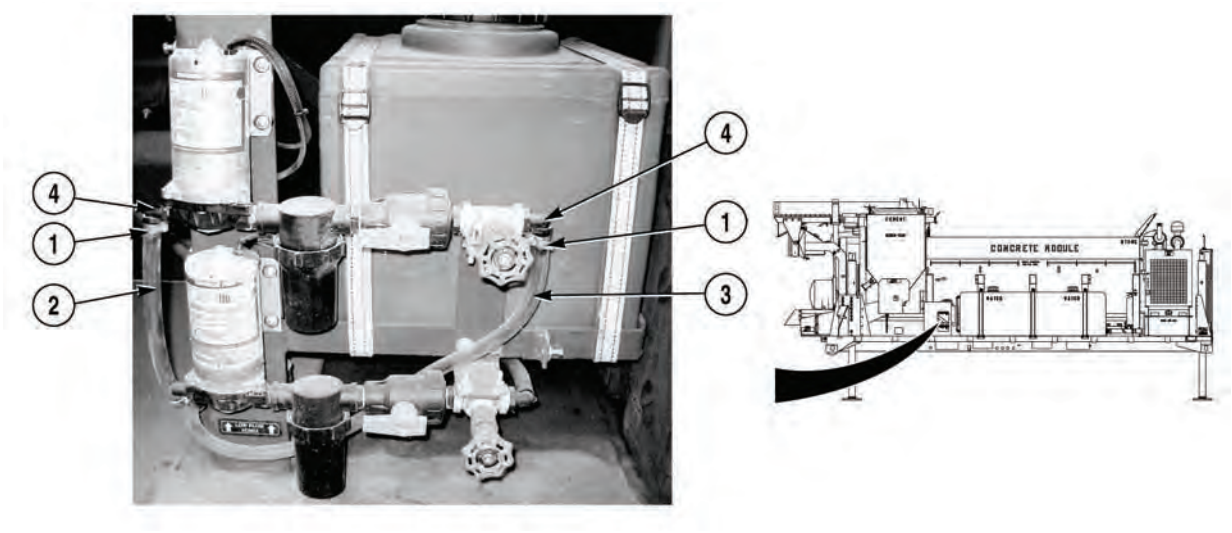

(13) Install two tubes (2) and (3) on elbows (4) and tighten two clamps (1).

c. Follow-On Maintenance:

- Install admix cover, (Para 3-88).
- Connect batteries, (Para 3-10).

END OF TASK

3-46. ADMIX PUMP RELAY(S) REPLACEMENT.

This task covers:

a. Removal b. Installation c. Follow-On Maintenance

INITIAL SETUP

Tools and Special Tools
Tool Kit, General Mechanic's: Automotive (Item 19, Appendix I)

Materials/Parts
Tags, Identification (Item 13, Appendix H)
Lockwasher (2) (MS 35338-44)

Equipment Condition
Batteries disconnected, (Para 3-10)
Admix and chain drive cover removed (admix cover only), (Para 3-88)

a. Removal.

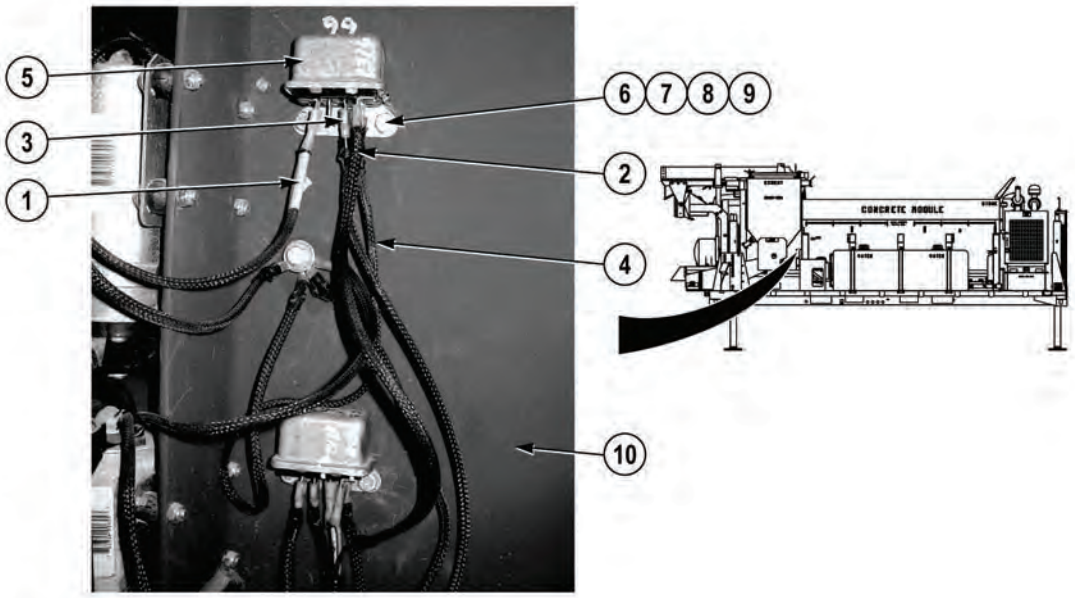

NOTE

- Tag and mark wires prior to removal.
- High-flow admix pump has four wires attached. Low-flow admix pump has five wires attached.
- Both admix pump relays are removed the same way. High-flow admix pump relay shown.

(1) Remove four wires (1), (2), (3), and (4) from relay (5).

(2) Remove two nuts (6), lockwashers (7), washers (8), screws (9), and relay (5) from Concrete Mobile Mixer (10). Discard lockwashers.

3-46. ADMIX PUMP RELAY(S) REPLACEMENT (CONT).

b. Installation.

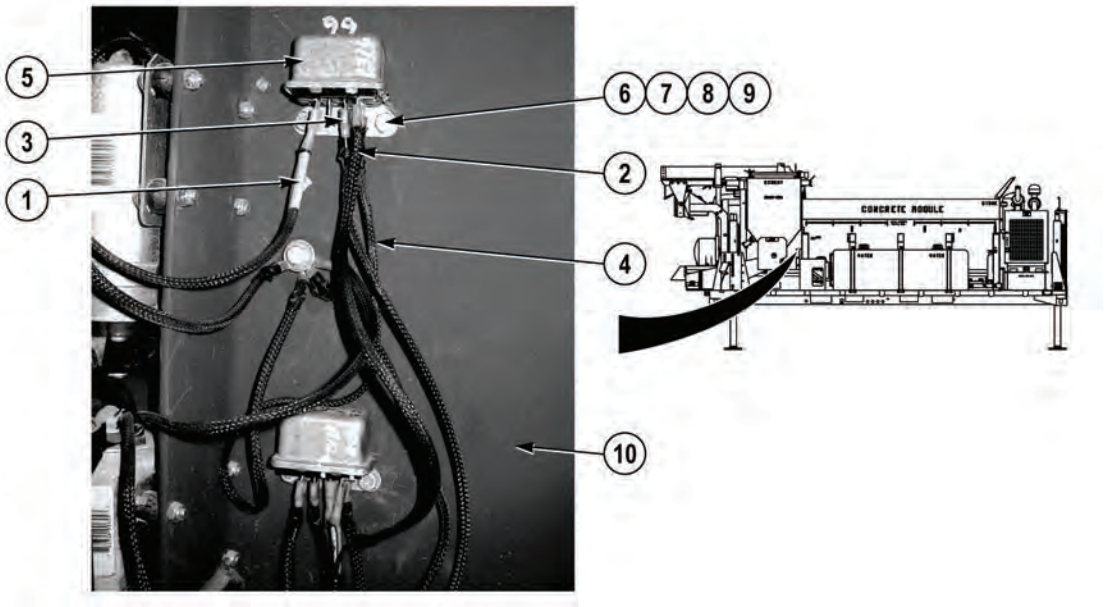

(1) Install relay (5) on Concrete Mobile Mixer (10) with two screws (9), washers (8), lockwashers (7), and nuts (6).

(2) Install four wires (1), (2), (3), and (4) on relay (5).

c. Follow-On Maintenance:

- Install admix and chain drive cover (admix cover only), (Para 3-88).
- Connect batteries, (Para 3-10).

END OF TASK

3-47. AIR FILTER REGULATOR/LUBRICATOR ASSEMBLY REPLACEMENT.

This task covers:

a. Removal b. Installation c. Follow-On Maintenance

INITIAL SETUP

Tools and Special Tools
Tool Kit, General Mechanic's: Automotive (Item 19, Appendix I)

Materials/Parts
Tags, Identification (Item 13, Appendix H)
Sealing Compound (Item 11, Appendix H)
Lockwasher (4) (MS35338-44)

Equipment Condition
Engine OFF, (Para 2-19)
Concrete Mobile Mixer unloaded, (Para 2-5)

a. Removal.

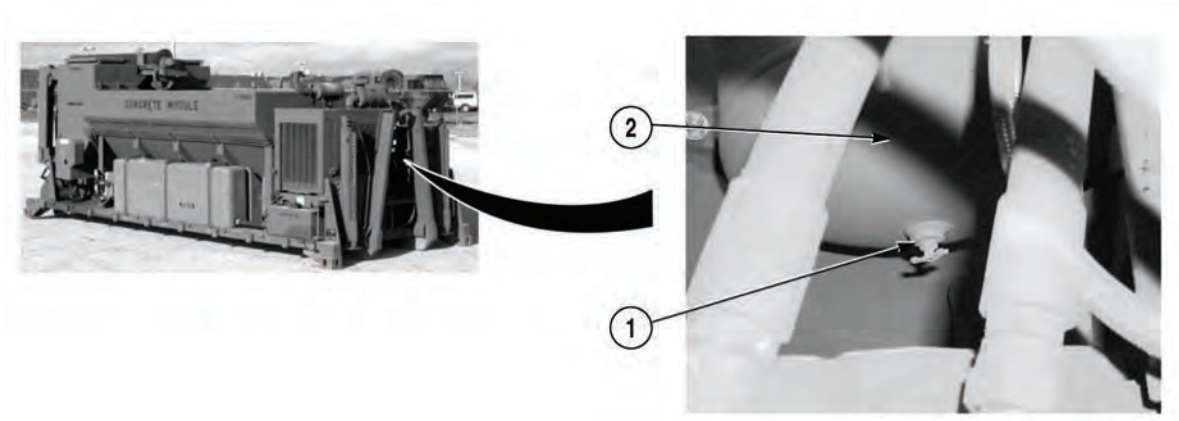

NOTE

- Tag and mark hoses and air lines prior to removal.
- Note location and position of elbows, adapters, and nipples prior to removal.

(1) Open drain cock (1) or air reservoir (2) and drain air reservoir (2).

(2) Close drain cock (1).

3-47. AIR FILTER REGULATOR/LUBRICATOR ASSEMBLY REPLACEMENT (CONT).

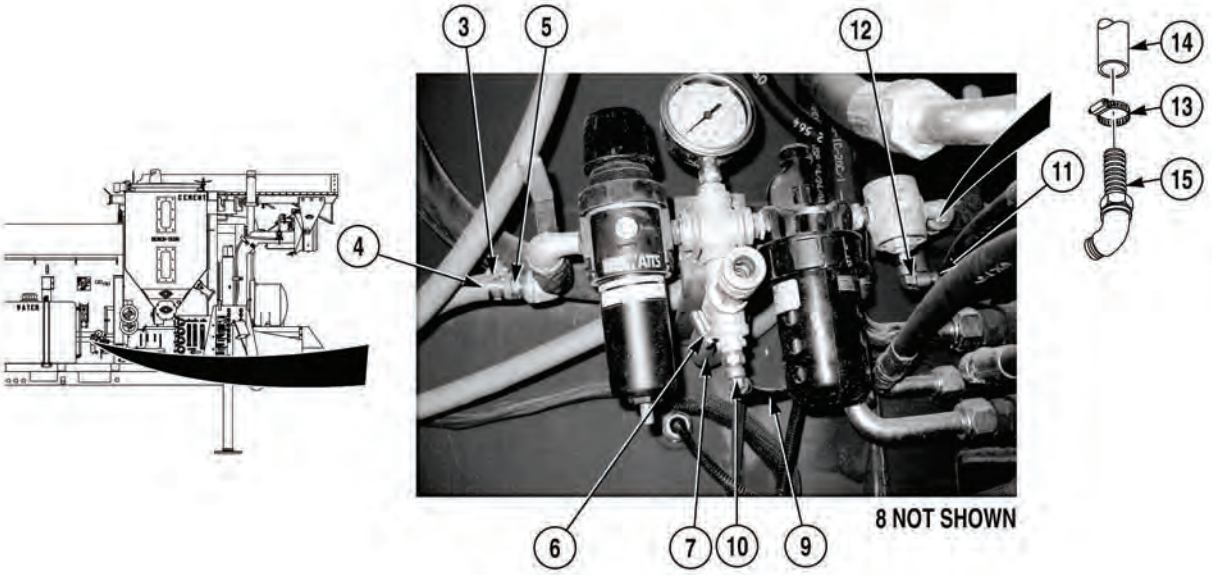

(3) Loosen clamp (3) and remove hose (4) from fitting (5).

(4) Loosen clamp (6) and remove hose (7) from fitting (8).

(5) Remove air line (9) from elbow (10).

(6) Remove air line (11) from elbow (12).

(7) Loosen clamp (13) and remove hose (14) from fitting (15).

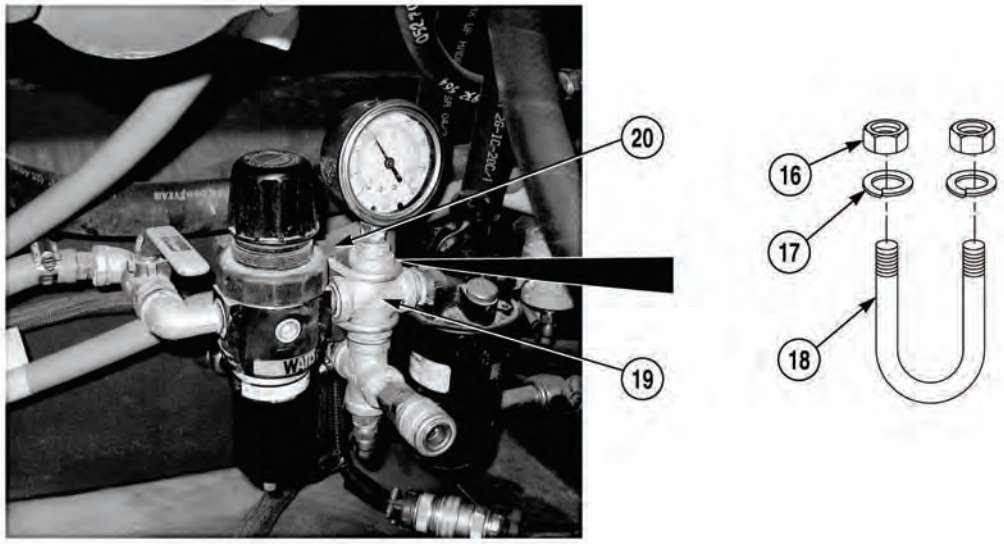

(8) Remove four nuts (16), lockwashers (17), two U-bolts (18), and cross (19) from bracket (20). Discard lockwashers.

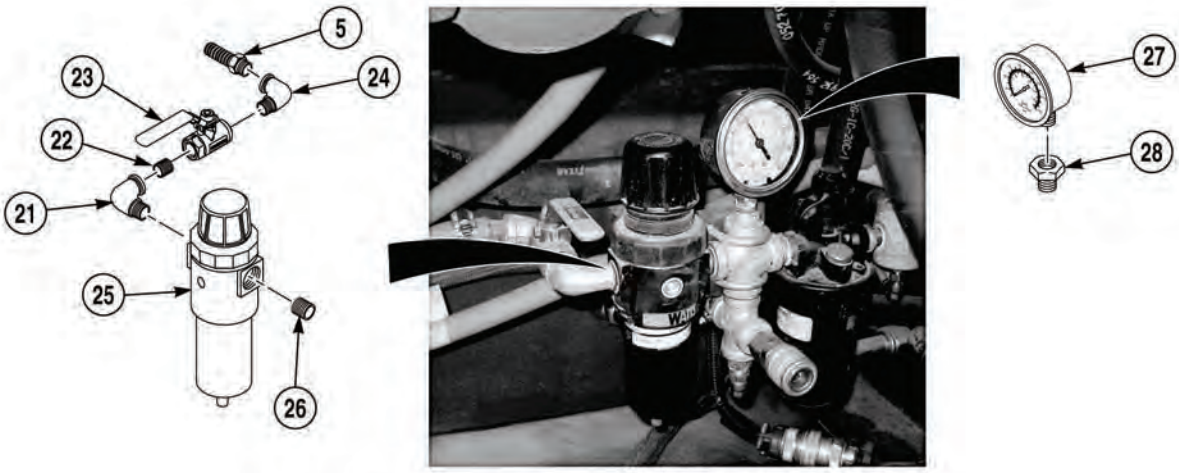

(9) Remove elbow (21), nipple (22), ball valve (23), elbow (24), and fitting (5) from air filter regulator (25).

(10) Remove air filter regulator (25) from nipple (26).

(11) Remove air gage (27) from reducer (28).

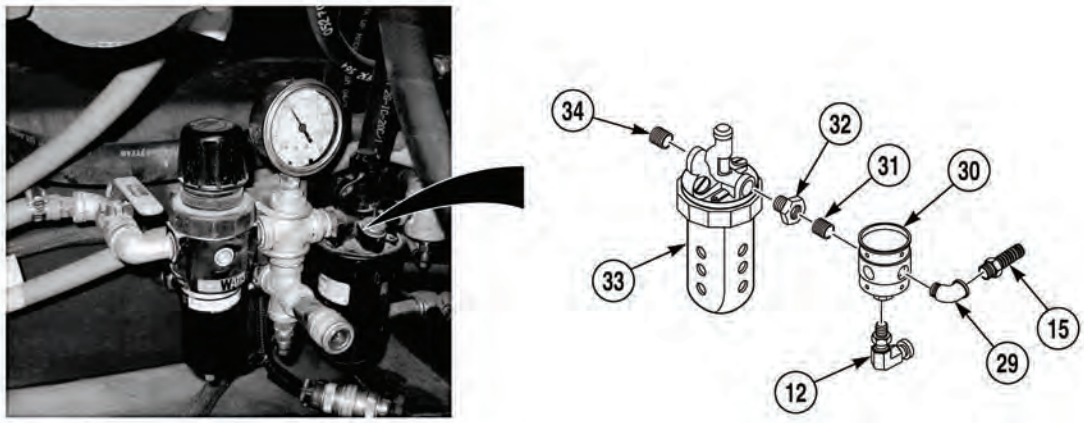

(12) Remove elbow (29) and fitting (15) from air valve (30).

(13) Remove elbow (12) from air valve (30).

(14) Remove air valve (30) from nipple (31).

(15) Remove reducer (32) and nipple (31) from lubricator (33).

(16) Remove lubricator (33) from nipple (34).

3-47. AIR FILTER REGULATOR/LUBRICATOR ASSEMBLY REPLACEMENT (CONT).

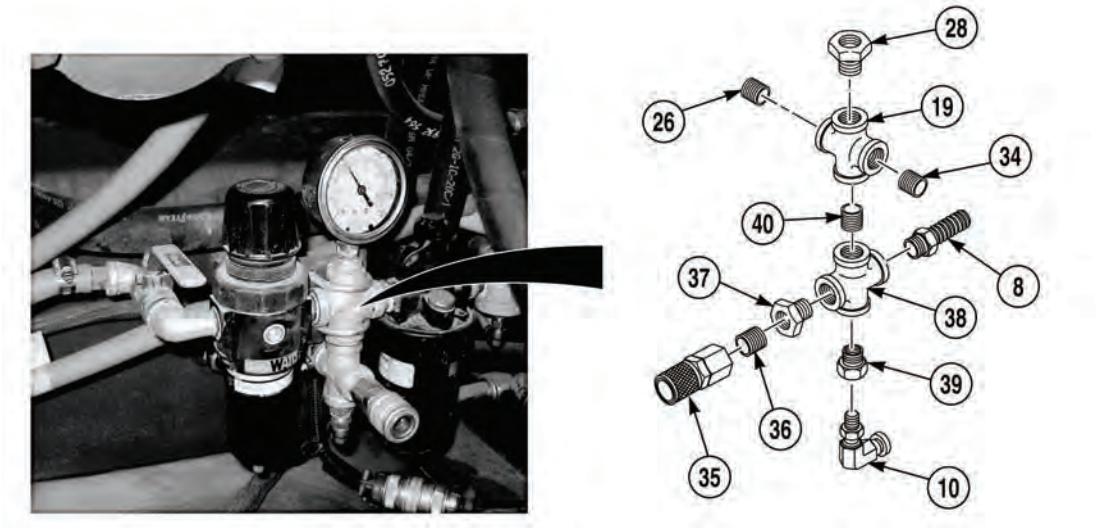

(17) Remove quick disconnect coupling (35), nipple (36), and reducer (37) from cross (38).

(18) Remove elbow (10) and reducer (39) from cross (38).

(19) Remove fitting (8) from cross (38).

(20) Remove nipple (26), reducer (28), nipple (34), cross (19), and nipple (40) from cross (38).

b. Installation.

WARNING

Adhesives, solvents, and sealing compounds can burn easily, can give off harmful vapors, and are harmful to skin and clothing. To avoid injury or death, keep away from open fire and use in well-ventilated area. If adhesives, solvent, or sealing compound gets on skin or clothing, wash immediately with soap and water.

NOTE

Install elbows, adapters, and nipples as noted prior to removal.

(1) Apply sealing compound to threads of fitting (8), elbow (10), four nipples (26), (34), (36) and (40), and three reducers (28), (37), and (39).

(2) Install three nipples (26), (34), and (40), reducer (28) and cross (19) on cross (38).

(3) Install fitting (8) on cross (38).

(4) Install reducer (39) and elbow (10) on cross (38).

(5) Install reducer (37), nipple (36), and quick disconnect coupling (35) on cross (38).

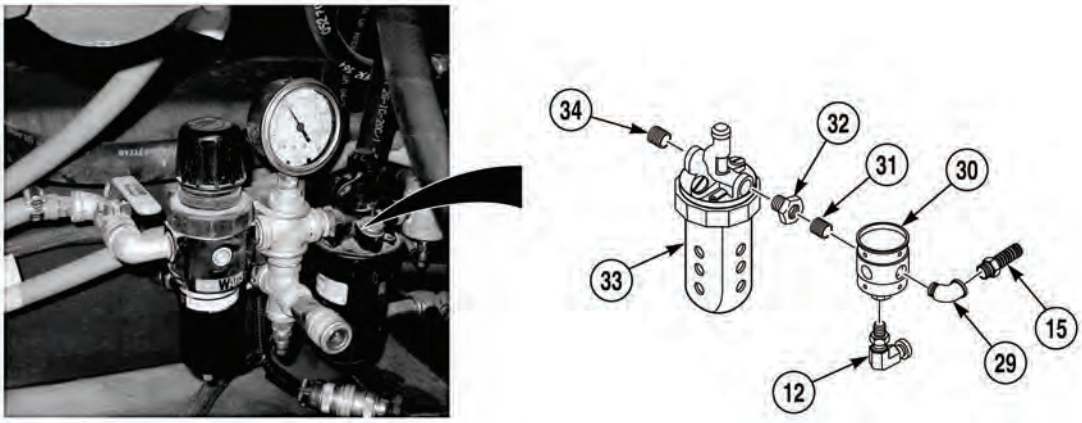

(6) Apply sealing compound to threads of fitting (15), two elbows (12) and (29), three nipples (31) and (34), and reducer (32).

(7) Install lubricator (33) on nipple (34).

(8) Install reducer (32) and nipple (31) on lubricator (33).

(9) Install air valve (30) on nipple (31).

(10) Install elbow (12) on air valve (30).

(11) Install elbow (29) and fitting (15) on air valve (30).

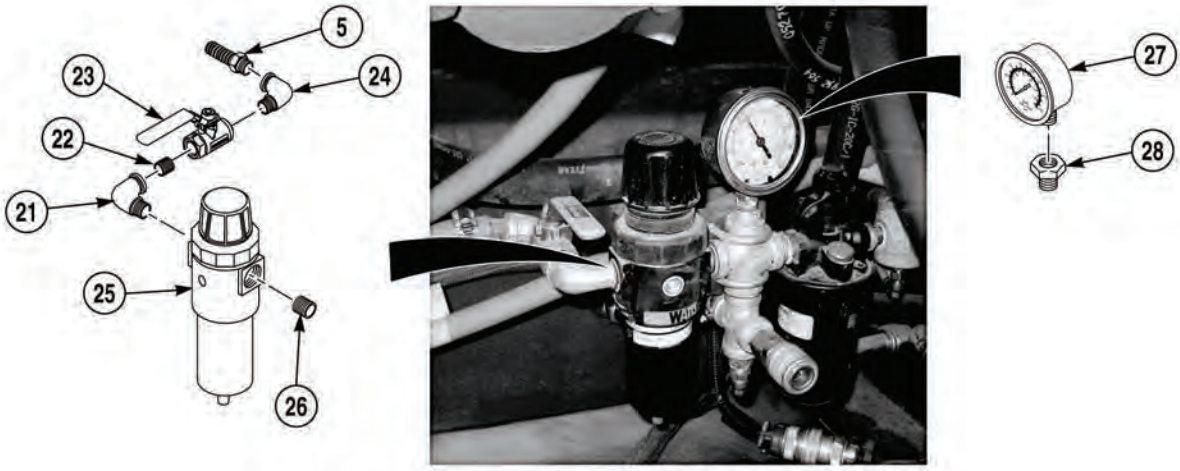

(12) Apply sealing compound to threads of fitting (5), two elbows (21) and (24), nipples (22) and (26), reducer (28), and air gage (27).

(13) Install air gage (27) on reducer (28).

(14) Install air filter regulator (25) on nipple (26).

(15) Install elbow (21), nipple (22), ball valve (23), elbow (24), and fitting (5) on air regulator (25).

3-47. AIR FILTER REGULATOR/LUBRICATOR ASSEMBLY REPLACEMENT (CONT).

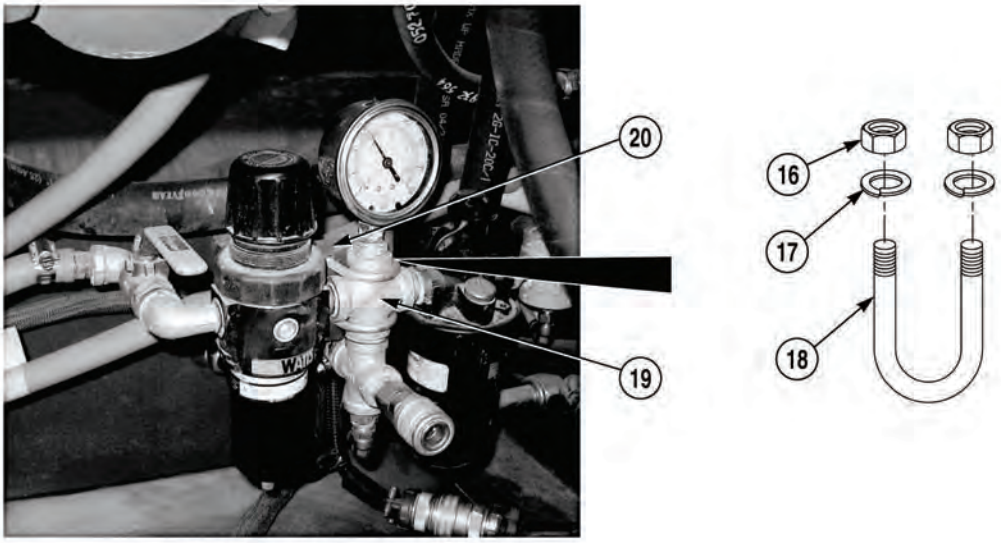

(16) Install cross (19) on bracket (20) with two U-bolts (18), four lockwashers (17), and nuts (16).

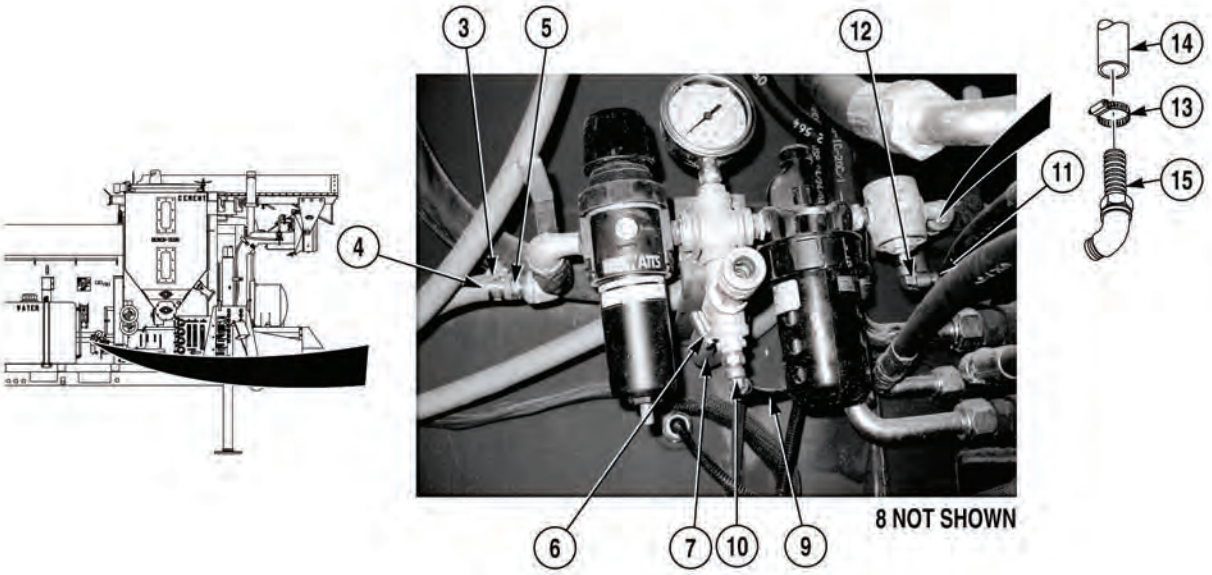

(17) Install hose (14) on fitting (15) and tighten clamp (13).

(18) Install air line (11) on elbow (12).

(19) Install air line (9) on elbow (10).

(20) Install hose (7) on fitting (8) and tighten clamp (6).

(21) Install hose (4) on fitting (5) and tighten clamp (3).

c. Follow-On Maintenance:

- Start engine and build up air pressure, (Para 2-19).
- Check for leaks.
- Shut off engine, (Para 2-19).

END OF TASK

3-48. AIR VIBRATOR(S) REPLACEMENT.

This task covers:

a. Removal b. Installation c. Follow-On Maintenance

INITIAL SETUP

Tools and Special Tools
Tool Kit, General Mechanic's: Automotive
(Item 19, Appendix I)

Materials/Parts
Locknut (2) (MS51922-54)

Equipment Condition
Engine OFF, (Para 2-19)
Concrete Mobile Mixer unloaded, (Para 2-5)

a. Removal.

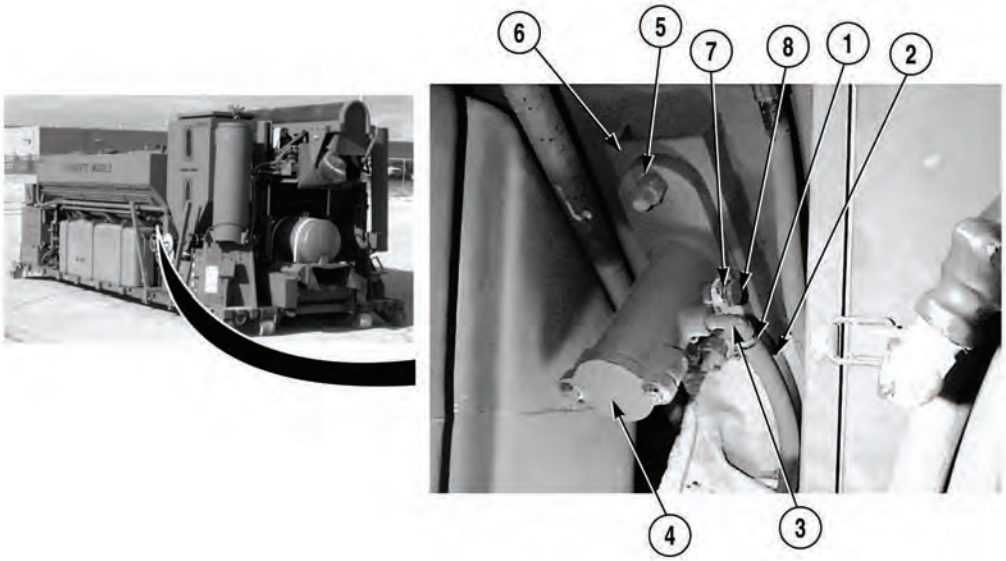

NOTE

- Note position of elbow prior to removal.
- There are four air vibrators on Concrete Mobile Mixer. All four of them are replaced the same way.
- Two air vibrators are located on sand bin and two air vibrators are located on cement bin.

(1) Loosen clamp (1) and remove hose (2) from elbow (3).

(2) Remove elbow (3) from air vibrator (4).

(3) Remove two locknuts (5), and air vibrator (4) from Concrete Mobile Mixer (6). Discard locknuts.

(4) Record number of preformed packings (7) on exhaust valve (8).

3-48. AIR VIBRATOR(S) REPLACEMENT (CONT).

b. Installation.

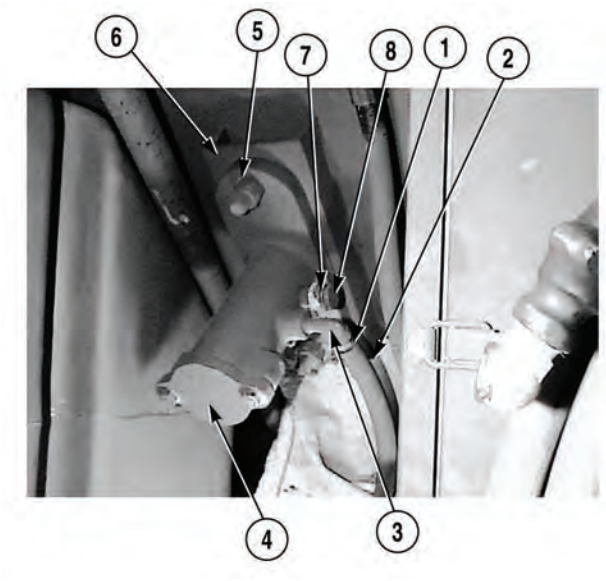

NOTE

Ensure same number of preformed packings are installed as noted prior to removal.

(1) Add or remove preformed packings (7) on exhaust valve (8).

(2) Install air vibrator (4) on Concrete Mobile Mixer (6) with two locknuts (5).

NOTE

Install elbows in positions as noted prior to removal.

(3) Install elbow (3) on air vibrator (4).

(4) Position hose (2) on elbow (3) and tighten clamp (1).

c. Follow-On Maintenance:

- Start engine, (Para 2-19).
- Check vibrator operation, (Para 2-20).
- Shut off engine, (Para 2-19).

END OF TASK

3-49. AIR CAM VALVE(S) REPLACEMENT.

This task covers:

a. Removal b. Installation Follow-On Maintenance

INITIAL SETUP

Tools and Special Tools
Tool Kit, General Mechanic's: Automotive (Item 19, Appendix I)
Cap and Plug Set (Item 3, Appendix I)

Materials/Parts
Tags, Identification, (Item 13, Appendix H)
Lockwasher (3) (MS 35338-46)
Lockwasher (13) (353AX)
Sealing Compound (Item 11, Appendix H)

Equipment Condition
Admix and chain drive cover(s) removed (chain drive cover only), (Para 3-88)

a. Removal.

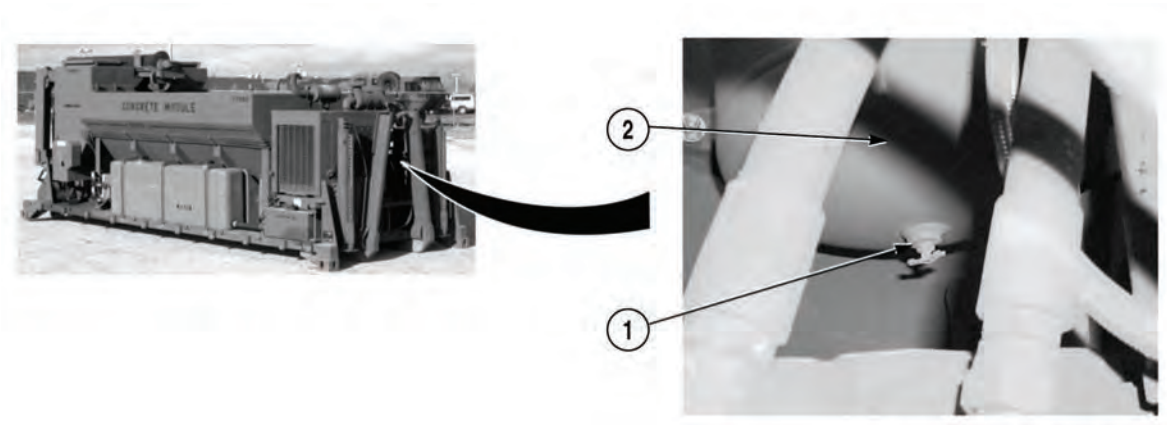

(1) Loosen drain cock (1) on air reservoir (2) and drain air.

(2) Close drain cock (1).

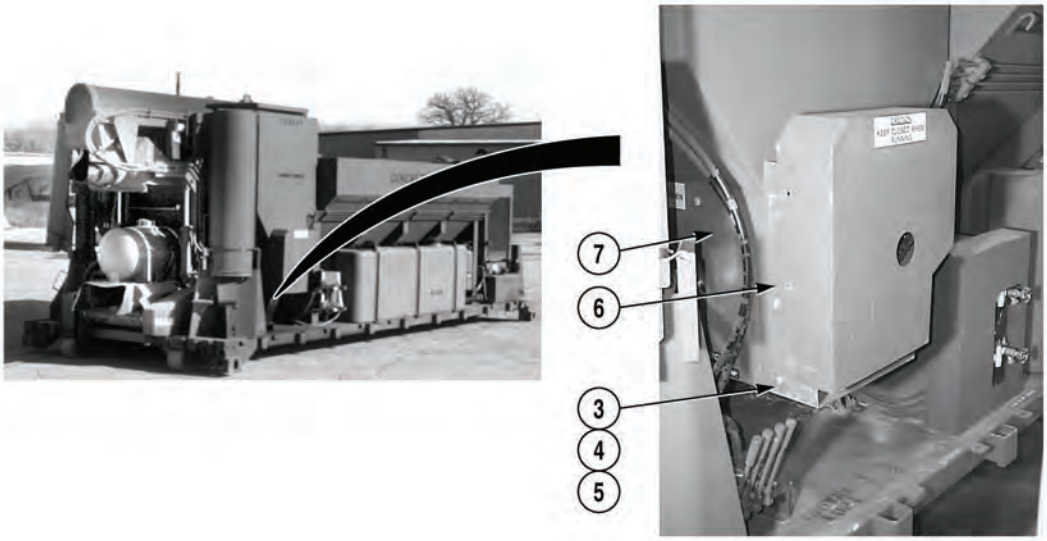

NOTE

Perform Steps (3) through (10) to remove air cam valve controlling cement bin air vibrators.

(3) Remove four screws (3), lockwashers (4), washers (5), and cover (6) from cover (7). Discard lockwashers.

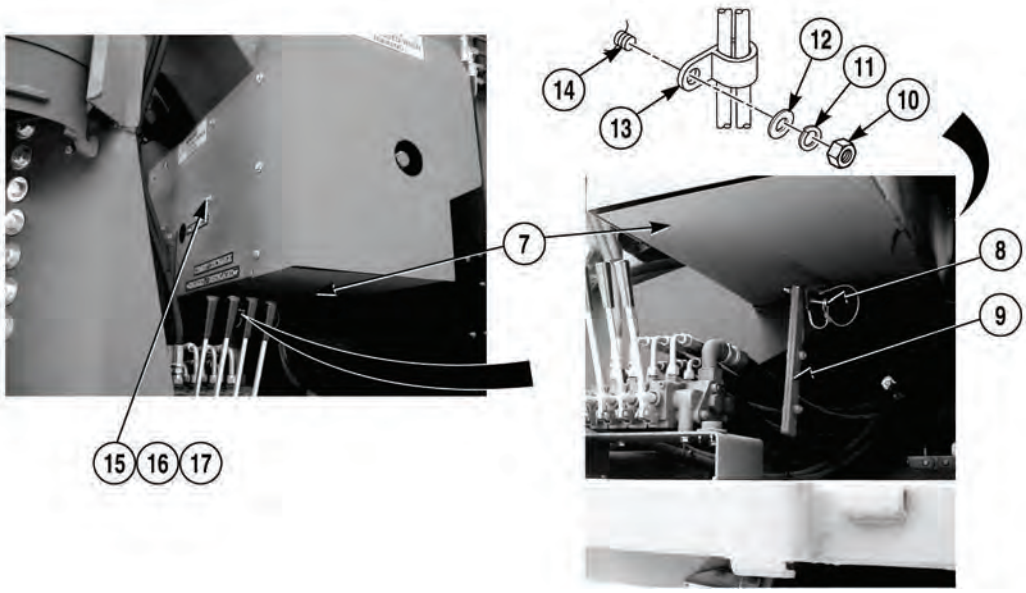

(4) Remove lock pin (8) from handle (9) and cover (7).

(5) Remove nut (10), lockwasher (11), washer (12), and cushion clip (13) from stud (14). Discard lockwasher.

(6) Remove nine screws (15), lockwashers (16), washer (17), and cover (7) from Concrete Mobile Mixer. Discard lockwashers.

3-49. AIR CAM VALVE(S) REPLACEMENT (CONT).

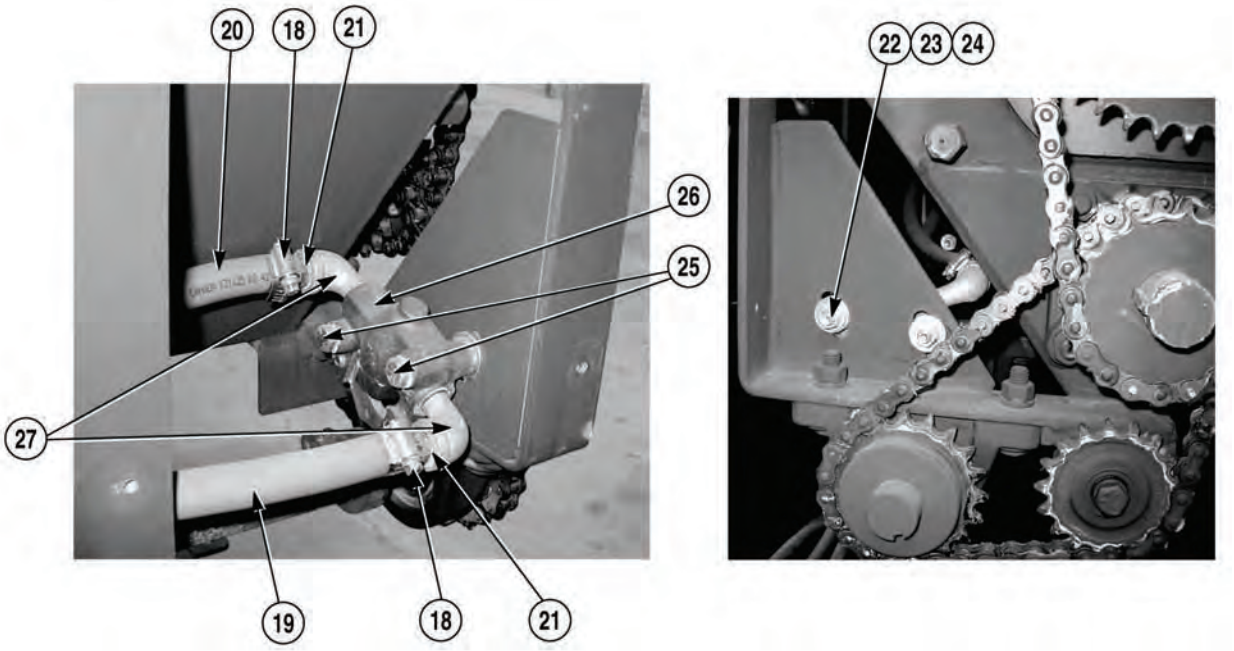

(7) Loosen two clamps (18) and remove air lines (19) and (20) from two fittings (21).

(8) Remove two nuts (22), lockwashers (23), four washers (24), two screws (25), and air cam valve (26) from Concrete Mobile Mixer. Discard lockwashers.

NOTE

Note position of elbows prior to removal.

(9) Remove two elbows (27) from air cam valve (26).

(10) Remove two fittings (21) from elbows (27).

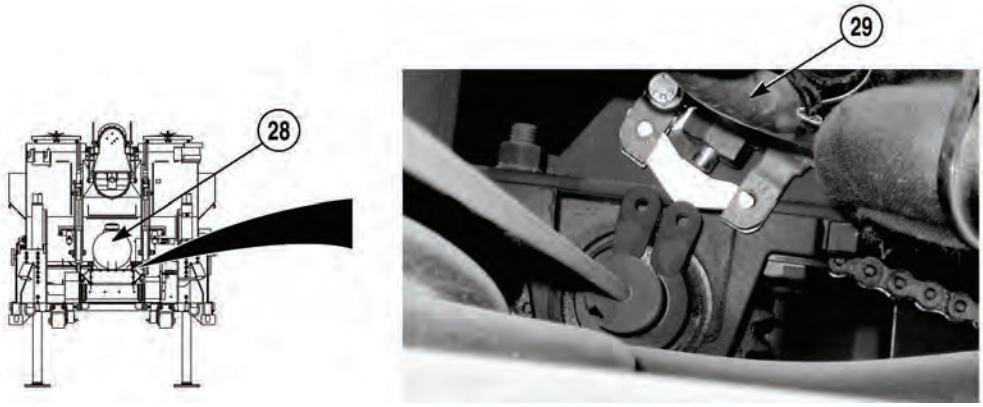

NOTE

Perform Steps (11) and (12) to remove air cam valve controlling sand bin air vibrators.

(11) Remove high-flow liquid admix tank (28), (Para 3-39).

(12) Repeat Steps (3) through (10) to remove air cam valve (29).

b. Installation.

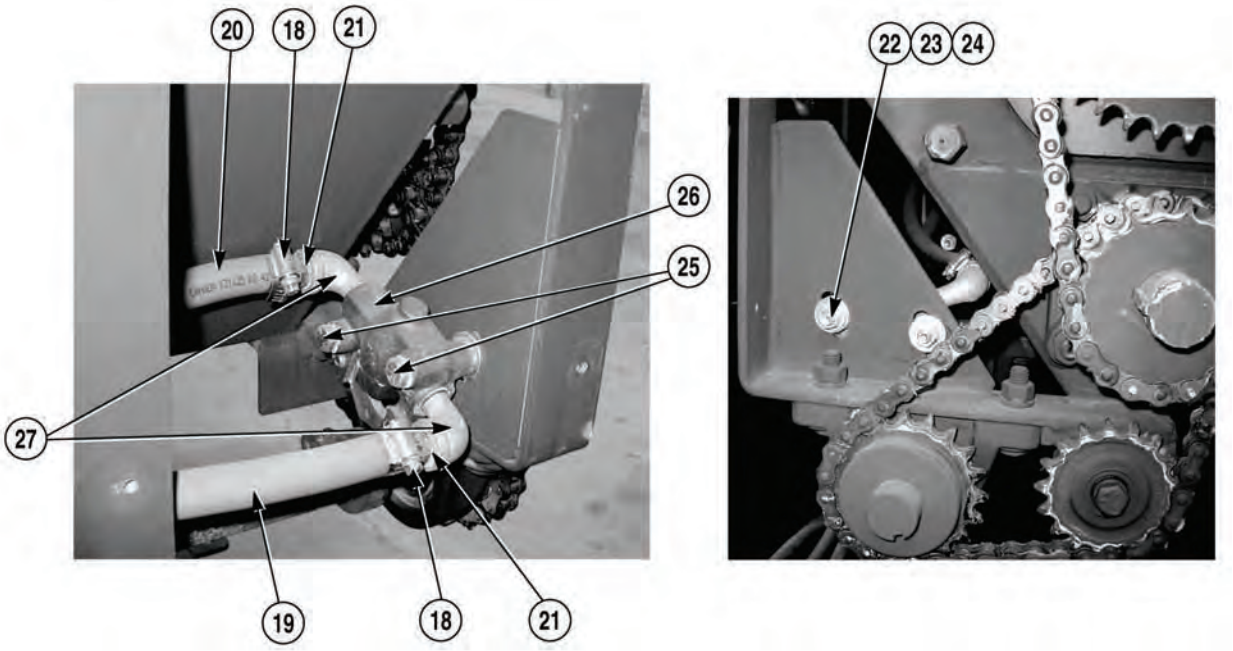

NOTE

Perform Steps (1) through (5) to install both air cam valves.

WARNING

Adhesives, solvents, and sealing compounds can burn easily, can give off harmful vapors, and are harmful to skin and clothing. To avoid injury or death, keep away from open fire and use in well-ventilated area. If adhesives, solvent, or sealing compound gets on skin or clothing, wash immediately with soap and water.

(1) Apply sealing compound to the threads of two fittings (21) and elbows (27).

(2) Install two fittings (21) on elbows (27).

NOTE

Install elbows as noted prior to removal.

(3) Install two elbows (27) on air cam valve (26).

(4) Install air cam valve (26) on Concrete Mobile Mixer with two screws (25), four washers (24), two lockwashers (23), and nuts (22). Do not tighten screws.

(5) Position two air lines (19) and (20) on fittings (21) and tighten clamps (18).

3-49. AIR CAM VALVE(S) REPLACEMENT (CONT).

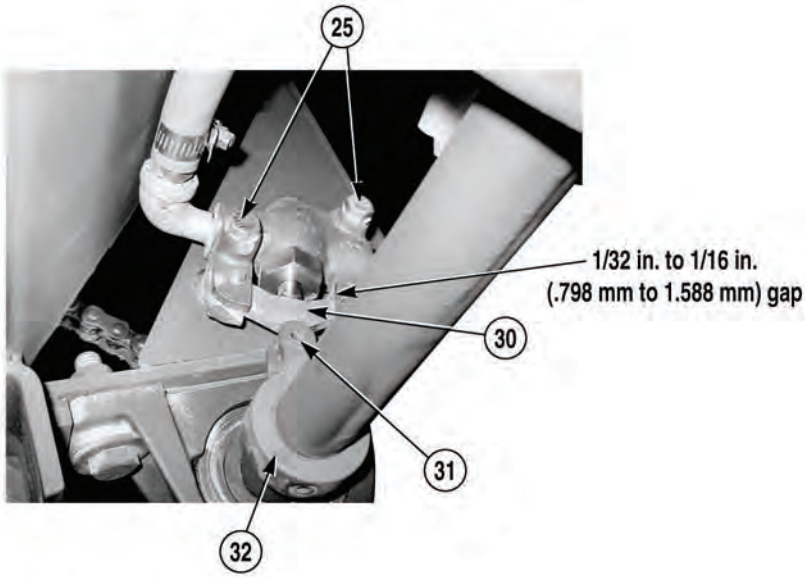

CAUTION

Air cam valve must be tightened when air cam valve pivot contacts rotating lugs on shaft collar. Failure to comply may result in damage to equipment.

NOTE

Perform Steps (6) through (8) to adjust air cam valve controlling cement bin air vibrators.

(6) Disengage cement bin clutch, (Para 2-22).

(7) Manually rotate cement bin auger, (Para 2-22) until air cam valve pivot (30) contacts either lug (31) on cam actuator (32).

(8) Tighten two screws (25).

NOTE

- Perform Steps (9) through (14) to adjust air cam valve controlling sand bin vibrators.
- Sheer pin must be removed in order to manually rotate cam actuator.

(9) Remove sheer pin, (Para 3-9).

(10) Engage cement bin clutch, (Para 2-22).

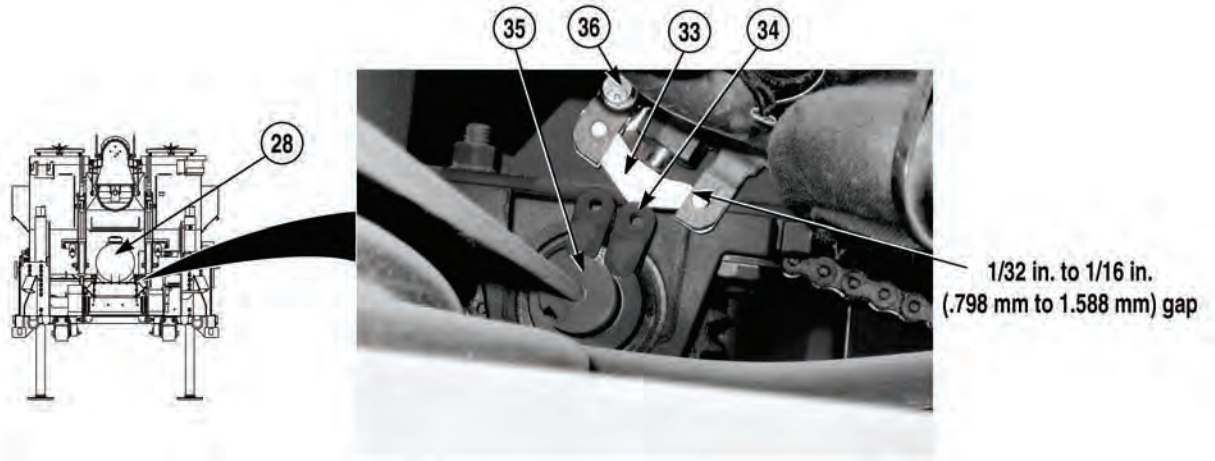

(11) Manually rotate cement bin auger, (Para 2-22) until air cam valve pivot (33) contacts either lug (34) on cam actuator (35).

(12) Tighten two screws (36).

(13) Install high-flow liquid admix tank (28), (Para 3-39).

(14) Install sheer pin, (Para 3-9).

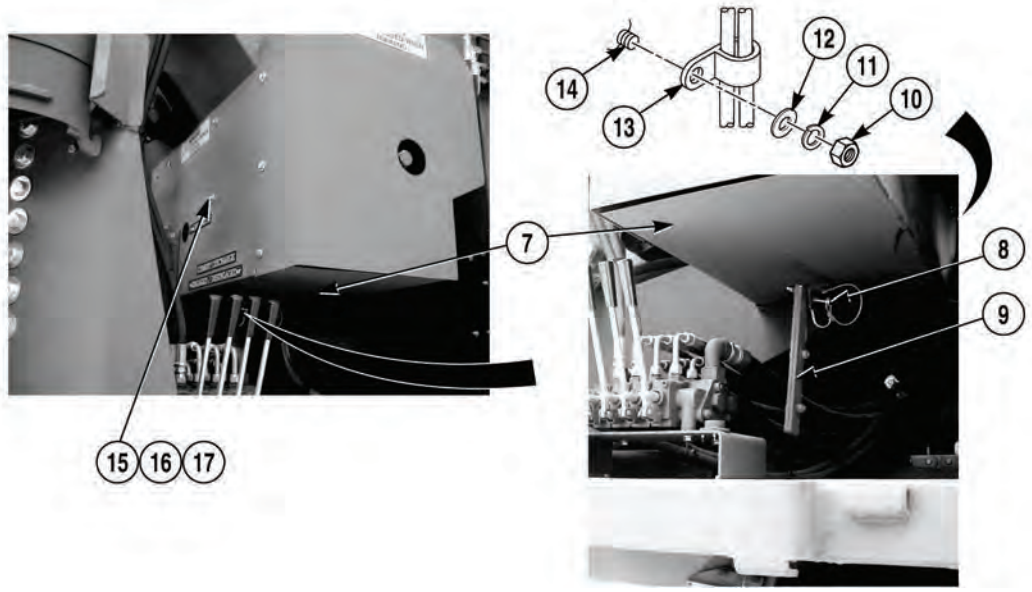

NOTE

Perform Steps (15) through (18) to install covers.

(15) Install cover (7) on Concrete Mobile Mixer with nine screws (15), lockwashers (16), and washers (17).

(16) Install cushion clip (13) on stud (14) with washer (12), lockwasher (11), and nut (10).

(17) Install lock pin (8) on cover (7) and handle (9).

3-49. AIR CAM VALVE(S) REPLACEMENT (CONT).

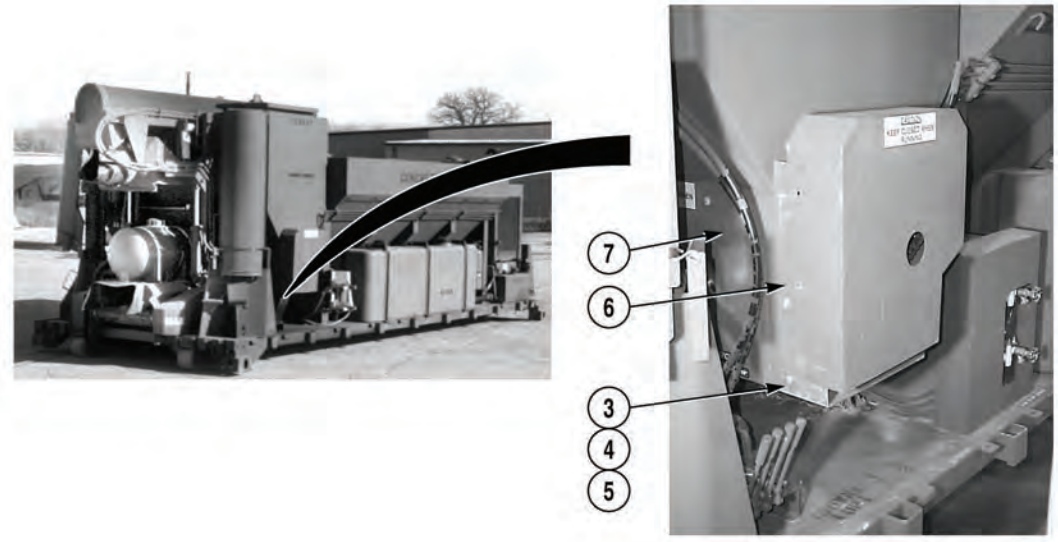

(18) Install cover (6) on cover (7) with four screws (3), lockwashers (4), and washers (5).

c. Follow-On Maintenance:

- Install admix and chain drive cover(s) (chain drive cover only), (Para 3-88).

END OF TASK

3-50. CHAIN OILER REPLACEMENT.

This task covers:

a. Removal b. Installation c. Follow-On Maintenance

INITIAL SETUP

Tools and Special Tools
Tool Kit, General Mechanic's: Automotive (Item 19, Appendix I)
Pan, Drain (Item 12, Appendix I)

Materials/Parts
Lubricating Oil, 15W40 (Item 6, Appendix H)
Sealing Compound (Item 11, Appendix H)

Equipment Condition
Concrete Mobile Mixer unloaded, (Para 2-5)
Engine OFF, (Para 2-19)

a. Removal.

(1) Push in collar (1) and remove hose (2) from elbow (3).

(2) Loosen two nuts (4) and remove two hoses (5) from oilers (6).

(3) Position drain pan under chain oiler reservoir (7).

(4) Remove reducer (8) with assembly from chain oil reservoir (7) and drain oil.

(5) Remove two oilers (6) from nipple (9).

(6) Remove nipple (9) and reducer (10) from air valve (11).

(7) Remove reducer (8) and nipple (12) from air valve (11).

(8) Remove elbow (3) from air valve (11).

(9) Remove chain oiler reservoir (7) from bracket (13).

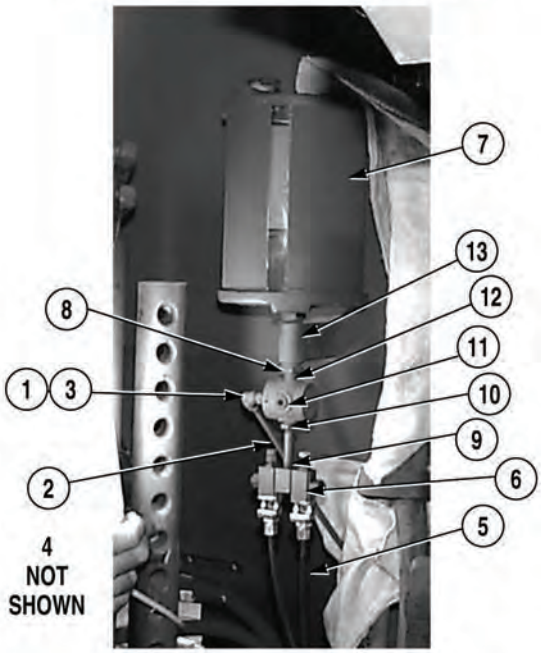

3-50. CHAIN OILER REPLACEMENT (CONT).

b. Installation.

WARNING

Adhesives, solvents, and sealing compounds can burn easily, can give off harmful vapors, and are harmful to skin and clothing. To avoid injury or death, keep away from open fire and use in well-ventilated area. If adhesives, solvent, or sealing compound gets on skin or clothing, wash immediately with soap and water.

(1) Apply sealing compound to threads of chain oiler reservoir (7).

(2) Install chain oiler reservoir (7) on bracket (13).

(3) Apply sealing compound to threads of elbow (3).

(4) Install elbow (3) on air valve (11).

(5) Apply sealing compound to threads of reducer (8) and nipple (12).

(6) Install reducer (8) and nipple (12) on air valve (11).

(7) Apply sealing compound to threads of reducer (10) and nipple (9).

(8) Install reducer (10) and nipple (9) on air valve (11).

(9) Install two oilers (6) on nipple (9).

(10) Install two hoses (5) on oilers (6). Tighten two nuts (4).

(11) Push in collar (1) and install hose (2) on elbow (3).

(12) Fill chain oiler, (Para 3-5).

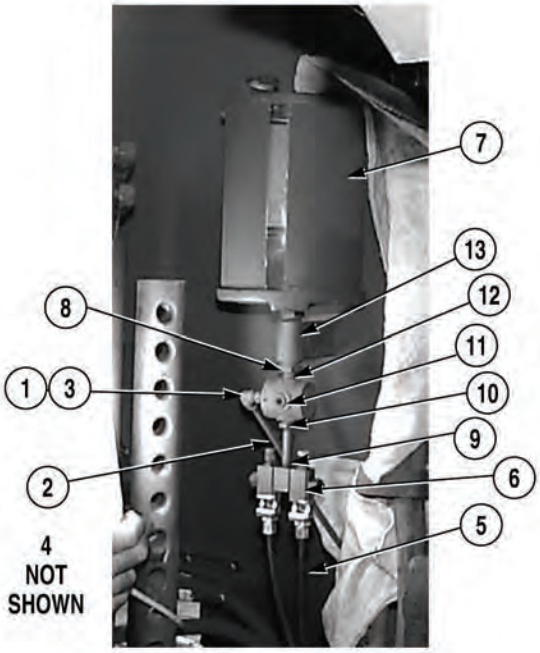

c. Follow-On Maintenance:

- Start engine, (Para 2-19).
- Visually check for proper drip, (Para 2-6).
- Shut off engine, (Para 2-19).

END OF TASK

3-51. HYDRAULIC CONTROL VALVE REPLACEMENT (CONCRETE MOBILE MIXER OPERATIONS).

This task covers:

a. Removal b. Installation c. Follow-On Maintenance

INITIAL SETUP

Tools and Special Tools
Tool Kit, General Mechanic's: Automotive (Item 19, Appendix I)
Cap and Plug Set (Item 3, Appendix I)
Pan, Drain (Item 12, Appendix I)

Materials/Parts
Lubricating Oil, 15W40 (Item 5, Appendix H)
Rags, Wiping (Item 9, Appendix H)
Sealing Compound (Item 11, Appendix H)
Tags, Identification (Item 13, Appendix H)
Preformed Packing Kit (Item 18, Appendix H)
Locknut (3) (MS51943-33)
Lockwasher (8) (MS35338-44)

Equipment Condition
Engine OFF, (Para 2-19)

a. Removal.

NOTE

- Tag and mark all hoses prior to removal.
- Cap and plug all hoses upon removal.
- Position rags around hydraulic control valve to catch oil from hoses and fittings.

3-51. HYDRAULIC CONTROL VALVE REPLACEMENT (CONCRETE MOBILE MIXER OPERATIONS) (CONT).

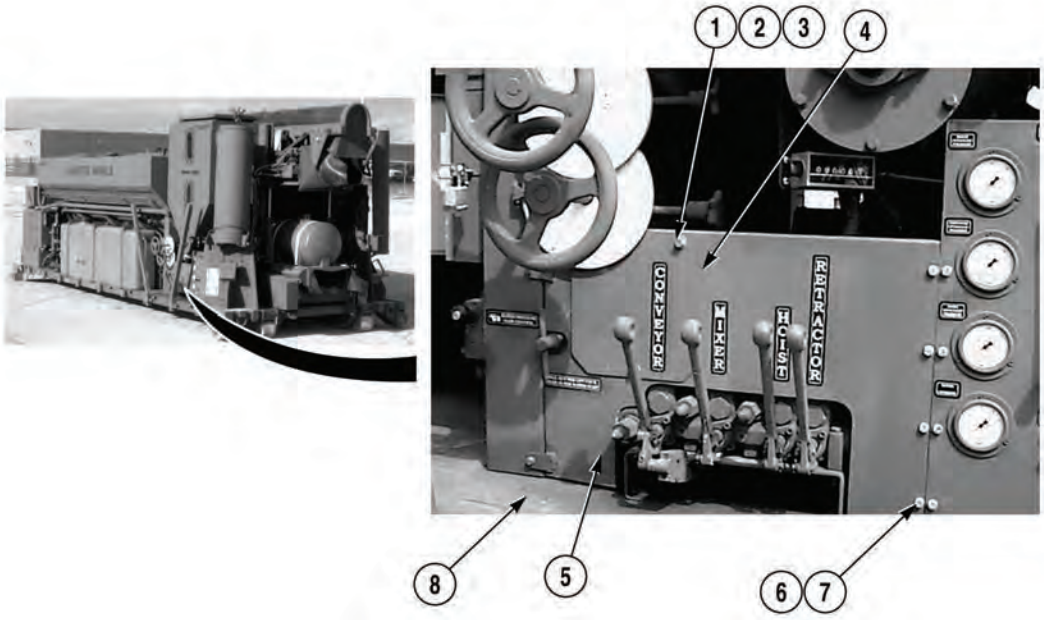

NOTE

Some models have three screws, lockwashers, and nuts.

(1) Remove two screws (1), lockwashers (2), washers (3), and panel (4) from panel (5). Discard lockwashers.

NOTE

Some models have washers.

(2) Remove six screws (6), lockwashers (7), and panel (5) from Concrete Mobile Mixer (8). Discard lockwashers.

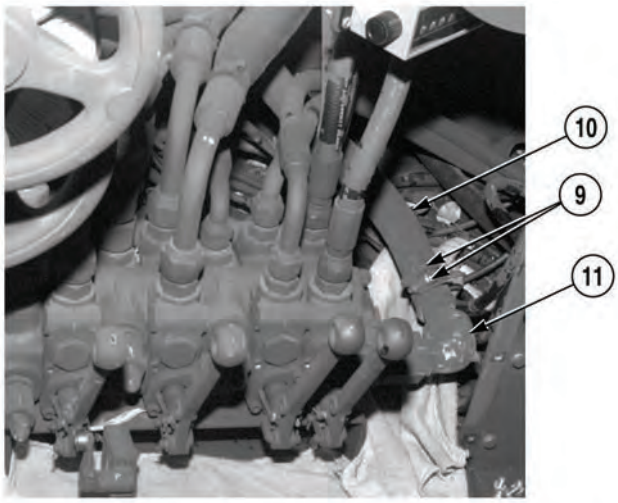

NOTE

Some models have hoses removed from fittings.

(3) Loosen four clamps (9) and remove hoses (10) from elbows (11).

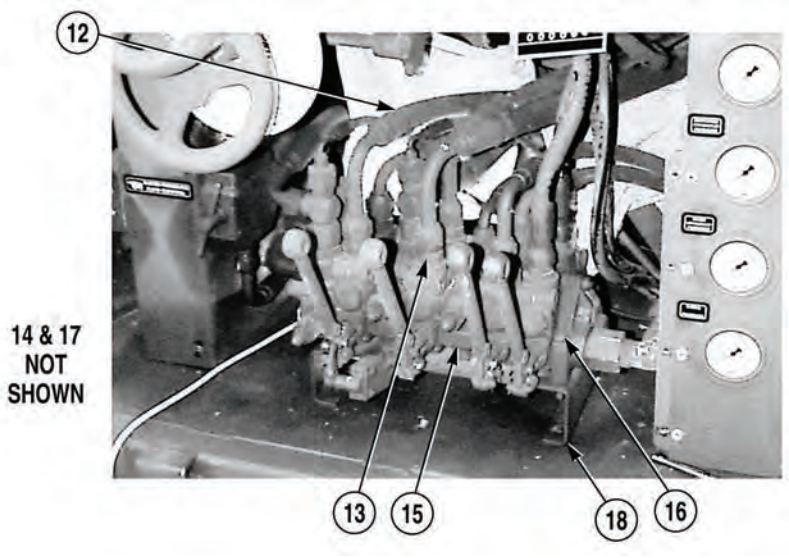

(4) Remove 13 hoses (12) from 13 fittings (13).

NOTE

Note location and position of elbows and fittings prior to removal.

(5) Remove 11 fittings (13) and preformed packings (14) from hydraulic control valve (15). Discard preformed packings.

NOTE

Some models have lockwasher and nut.

(6) Remove three screws (16), locknuts (17), and hydraulic control valve (15) from mounting bracket (18). Discard locknuts

b. Installation.

(1) Install hydraulic control valve (15) on mounting bracket (18) with three screws (16) and locknuts (17).

NOTE

Install elbows and fittings in position as noted prior to removal.

(2) Apply hydraulic oil to 11 preformed packings (14).

(3) Install 11 preformed packings (14) and fittings (13) on hydraulic control valve (15).

NOTE

Install hoses as noted prior to removal.

(4) Install 13 hoses (12) on 13 fittings (13).

3-51. HYDRAULIC CONTROL VALVE REPLACEMENT (CONCRETE MOBILE MIXER OPERATIONS) (CONT).

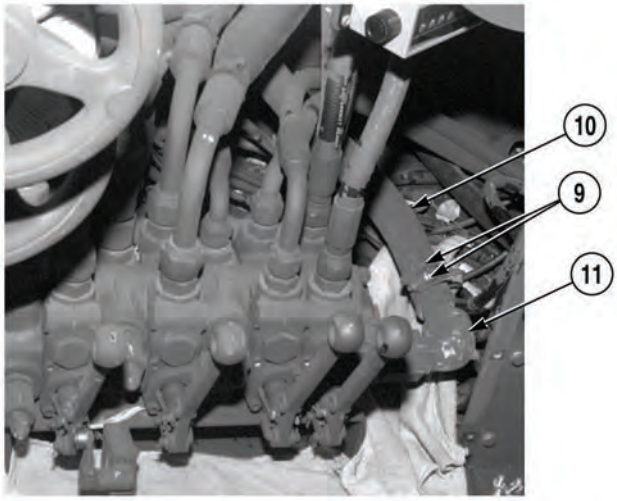

(5) Position two hoses (10) on elbows (11) and tighten four clamps (9).

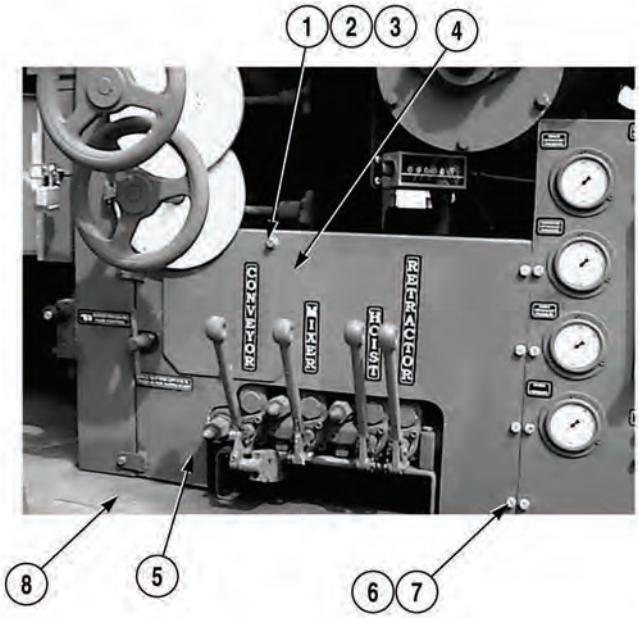

NOTE

When installing panels, ensure control levers on hydraulic control valve are pulled forward for easier installation.

(6) Install panel (5) on Concrete Mobile Mixer (8) with six screws (6) and lockwashers (7).

(7) Install panel (4) on panel (5) with two screws (1), lockwashers (2), and washers (3).

c. Follow-On Maintenance:

- Start engine, (Para 2-19).
- Check for leaks.
- Adjust conveyor belt speed, (Para 3-77).
- Shut off engine, (Para 2-19).

END OF TASK

3-52. CEMENT METERING COUNTER REPLACEMENT.

This task covers:

a. Removal b. Installation

INITIAL SETUP

Tools and Special Tools
Tool Kit, General Mechanic's: Automotive (Item 19, Appendix I)

Equipment Condition
Engine OFF, (Para 2-19)

Materials/Parts
Locknut (4) (MS20365-1032)

a. Removal.

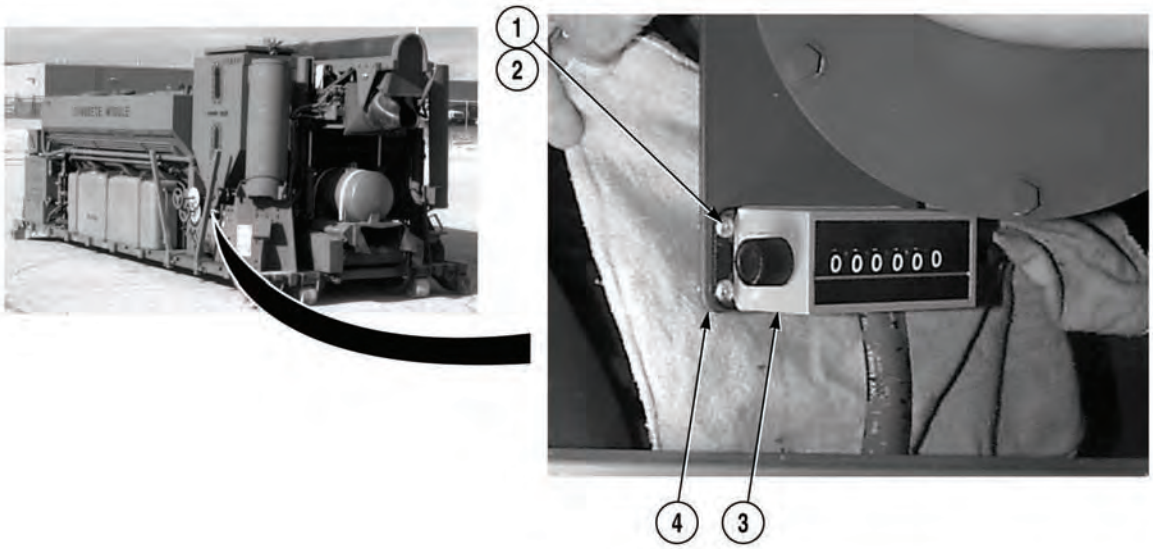

(1) Remove four screws (1), locknuts (2), and counter (3) from mounting bracket (4). Discard locknuts.

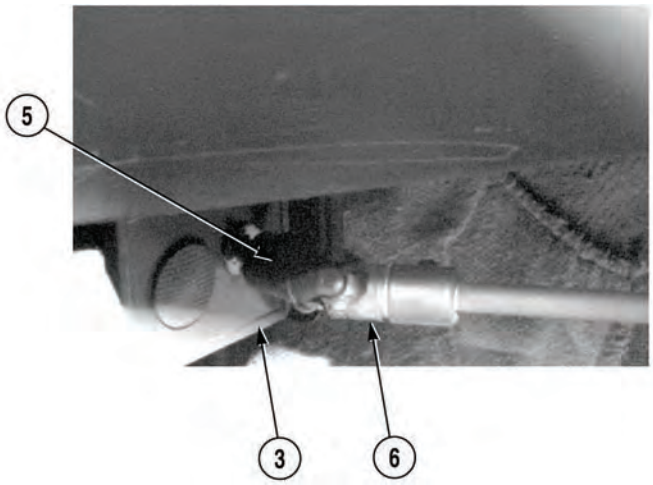

(2) Loosen setscrew (5) and remove swivel joint (6) from counter (3).

b. Installation.

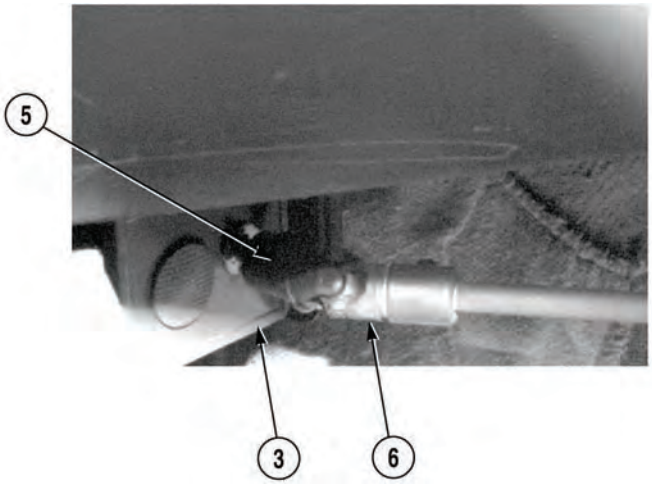

(1) Install swivel joint (6) on counter (3) and tighten setscrew (5).

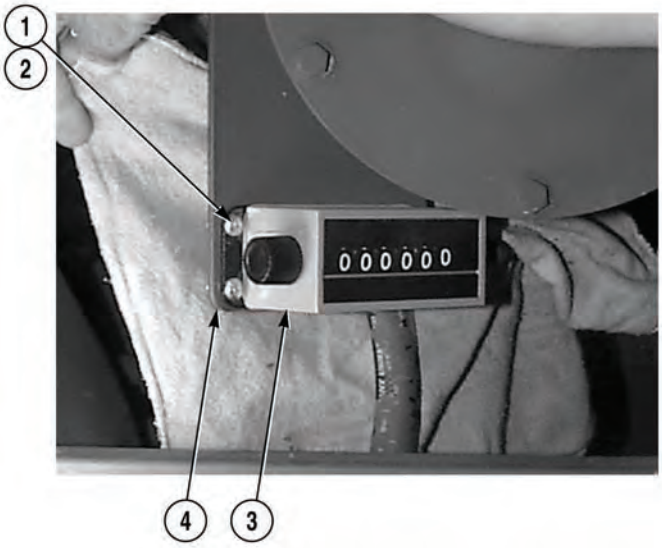

(2) Install counter (3) on mounting bracket (4) with four locknuts (2) and screws (1).

END OF TASK

3-53. CONTROL OVERIDE SWITCH REPLACEMENT.

This task covers:

a. Removal b. Installation c. Follow-On Maintenance

INITIAL SETUP

Tools and Special Tools
Tool Kit, General Mechanic's: Automotive (Item 19, Appendix I)

Materials/Parts
Corrosion Preventive Compound (Item 4, Appendix H)
Tags, Identification (Item 13, Appendix H)

Equipment Condition
Batteries disconnected, (Para 3-10)
Concrete Mobile Mixer unloaded, (Para 2-5)

a. Removal.

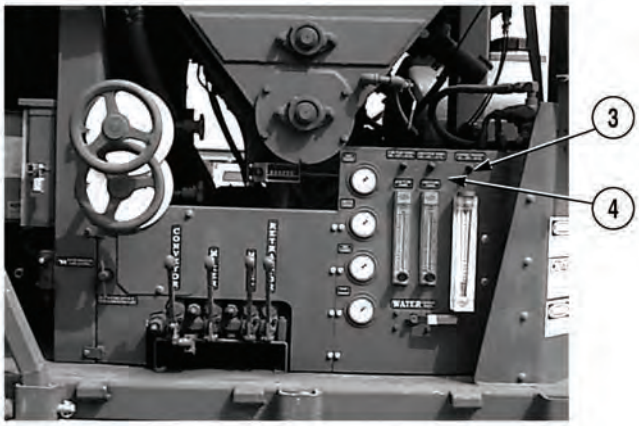

(1) Remove cover (1), nut (2), and CONTROL OVERIDE switch (3) from mounting bracket (4).

NOTE

Tag and mark all wires prior to removal.

(2) Remove three screws (5) and five wires (6) from CONTROL OVERIDE switch (3).

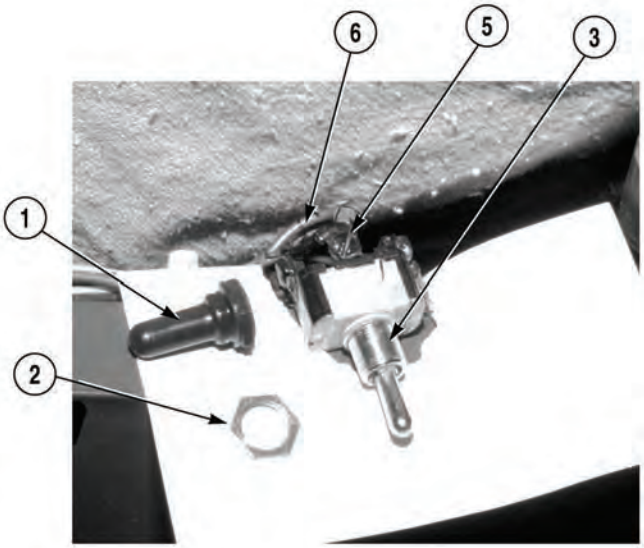

3-53. CONTROL OVERIDE SWITCH REPLACEMENT (CONT).

b. Installation.

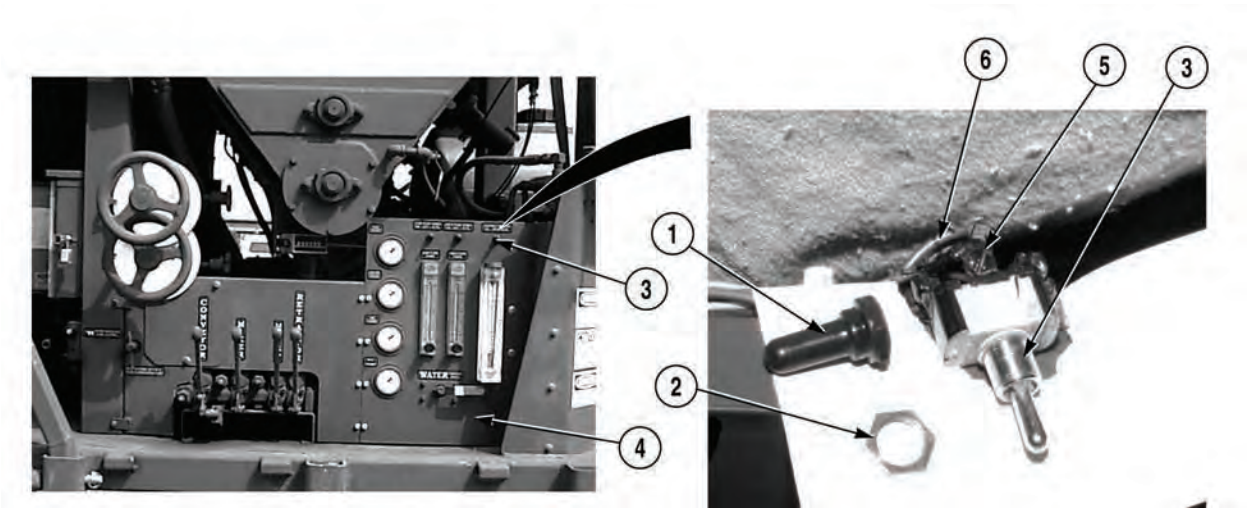

(1) Install five wires (6) on CONTROL OVERIDE switch (3) with three screws (5).

WARNING

Corrosion inhibitor contains alkali. Do not get in eyes; wear goggles/safety glasses when using. Avoid contact with skin. In case of contact, immediately wash area with soap and water. If eyes are contacted, flush eyes with large amounts of water for at least 15 minutes and get immediate medical attention.

NOTE

Install wires as noted during removal.

(2) Apply anti-corrosion compound to wires (6) and screws (5).

(3) Install CONTROL OVERIDE switch (3) on mounting bracket (4) with nut (2) and cover (1).

c. Follow-On Maintenance:

- Connect batteries, (Para 3-10).

END OF TASK

3-54. GAGE(S) REPLACEMENT.

This task covers:

a. Removal b. Installation c. Follow-On Maintenance

INITIAL SETUP

Tools and Special Tools
Tool Kit, General Mechanic's: Automotive (Item 19, Appendix I)

Materials/Parts
Tags, Identification (Item 13, Appendix H)
Locknuts (117607A)
Lockwasher (2) (MS35338-42)

Equipment Condition
Concrete Mobile Mixer unloaded, (Para 2-5)
Control box removed, (Para 3-90)

a. Removal.

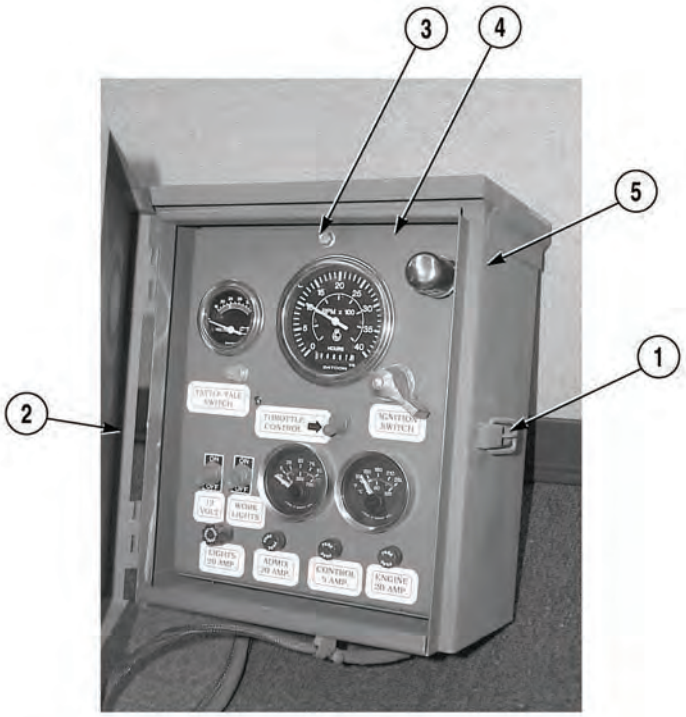

(1) Release latch (1) and open control box door (2).

NOTE

Gently tip control panel forward for access to wires.

(2) Remove screw (3), from control panel (4) and control box (5).

NOTE

- Perform Steps (3) and (4) for voltmeter and tachometer.
- Perform Steps (5) and (6) for oil pressure gage and water pressure gage.
- Voltmeter has two wires and one light socket wire and tachometer has five wires.
- Tag and mark wires prior to removal.

(3) Remove locknuts (6) and wires (7) from terminals (8). Discard locknuts.

(4) Remove two nuts (9), lockwashers (10), bracket (11), and gage (12) from control panel (4). Discard lockwashers.

(5) Remove connector (13) from gage (14).

(6) Remove collar (15) and gage (14) from control panel (4).

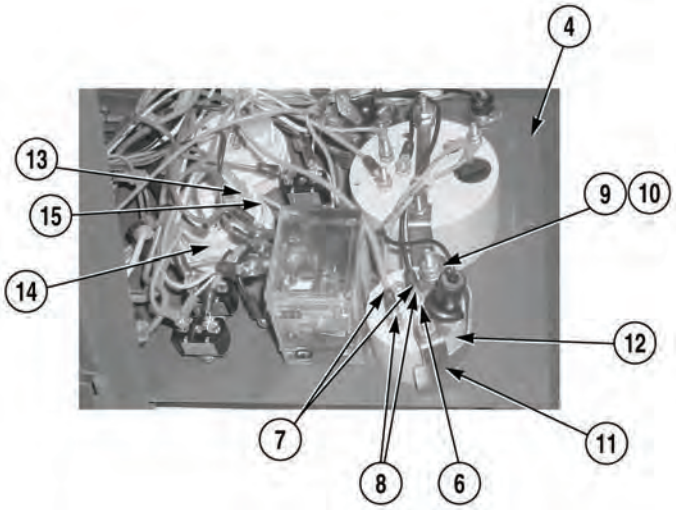

b. Installation.

NOTE

- Perform Steps (1) and (2) for oil pressure gage and water pressure gage.
- Perform Steps (3) and (4) for voltmeter and tachometer.

(1) Install gage (14) on control panel (4) with collar (15).

(2) Install connecter (13) on gage (14).

(3) Install gage (12) on control panel (4) with bracket (11), two lockwashers (10) and nuts (9).

NOTE

Install wires as noted prior to removal.

(4) Install wires (7) on terminals (8) with locknuts (6).

3-54. GAGE(S) REPLACEMENT (CONT).

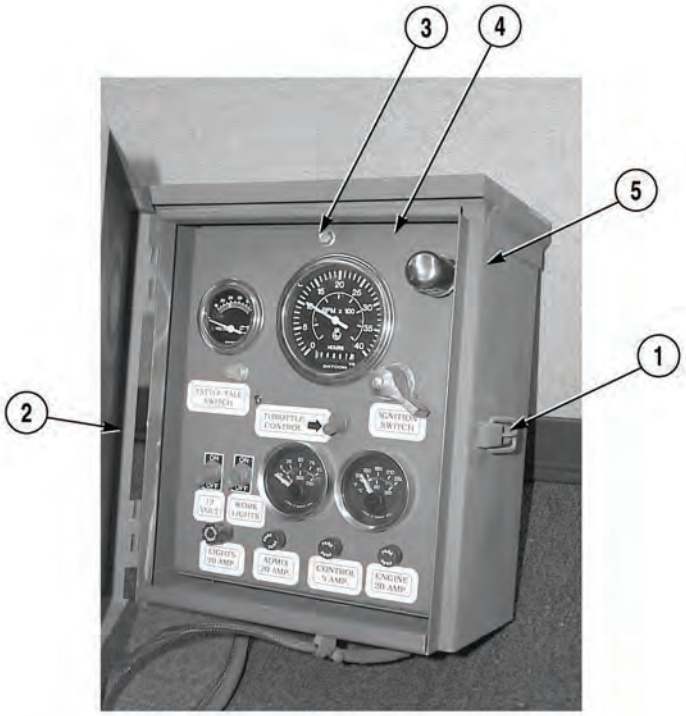

(5) Install control panel (4) on control box (5) with screw (3).

(6) Close control box door (2) and secure latch (1).

c. Follow-On Maintenance:

- Install control box (Para 3-90).

END OF TASK

3-55. CONTROL BOX LIGHT REPLACEMENT.

This task covers:

a. Removal b. Installation c. Follow-On Maintenance

INITIAL SETUP

Tools and Special Tools
Tool Kit, General Mechanic's: Automotive (Item 19, Appendix I)

Materials/Parts
Tags, Identification (Item 13, Appendix H)
Lockwasher (MS3533-46)

Equipment Condition
Concrete Mobile Mixer unloaded, (Para 2-5)
Control box removed, (Para 3-90)

a. Removal.

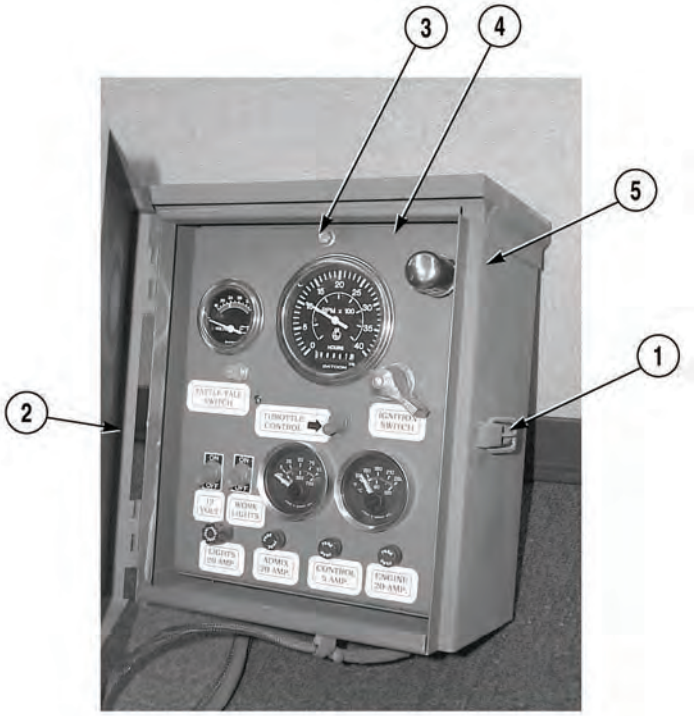

(1) Release latch (1) and open control box door (2).

NOTE

Gently tip control panel forward for access to wires.

(2) Remove screw (3), and control panel (4) from control box (5).

3-55. CONTROL BOX LIGHT REPLACEMENT (CONT).

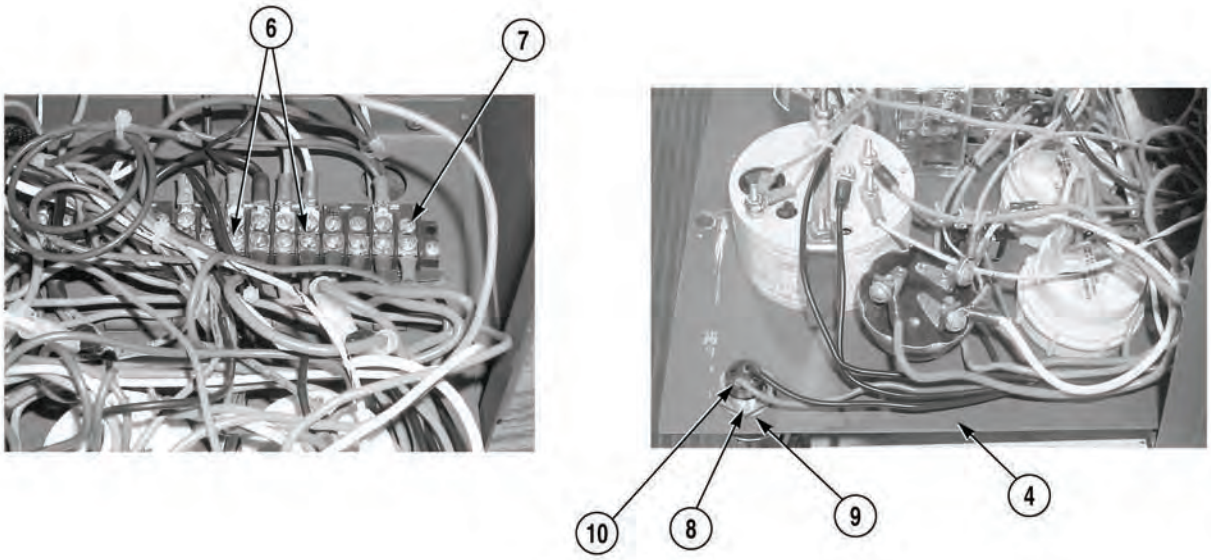

NOTE

Tag and mark wires prior to removal.

(3) Remove two wires (6) from terminal strip (7).

(4) Remove nut (8), lockwasher (9) and light (10) from control panel (4). Discard Lockwasher.

b. Installation.

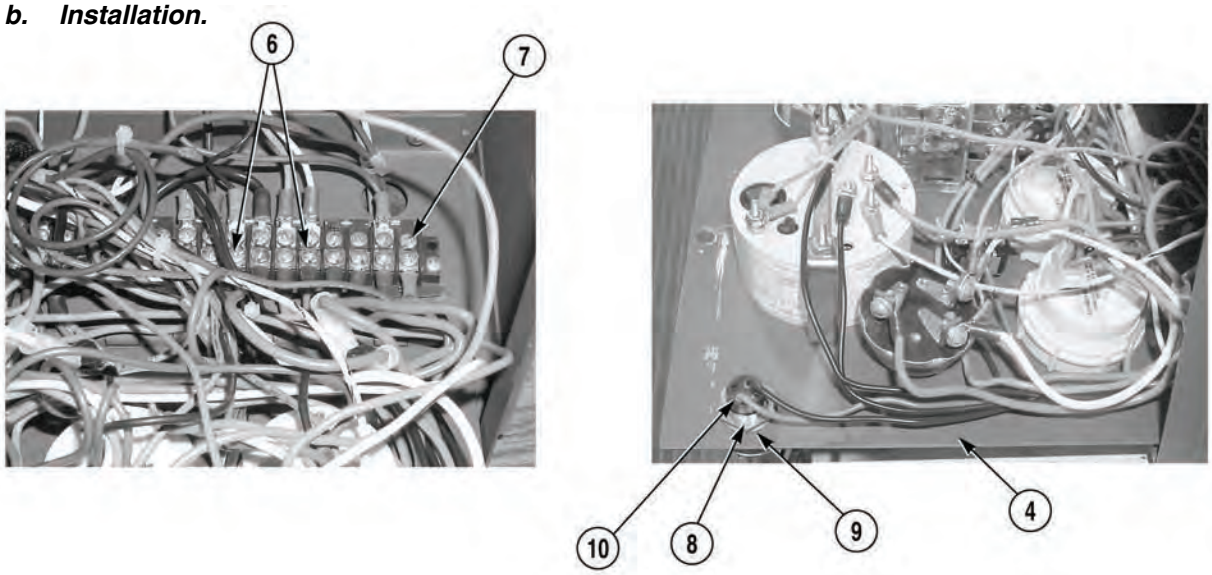

(1) Install light (10) on control panel (4) with lockwasher (9) and nut (8).

NOTE

Install wires as noted prior to removal.

(2) Install two wires (6) on terminal strip (7).

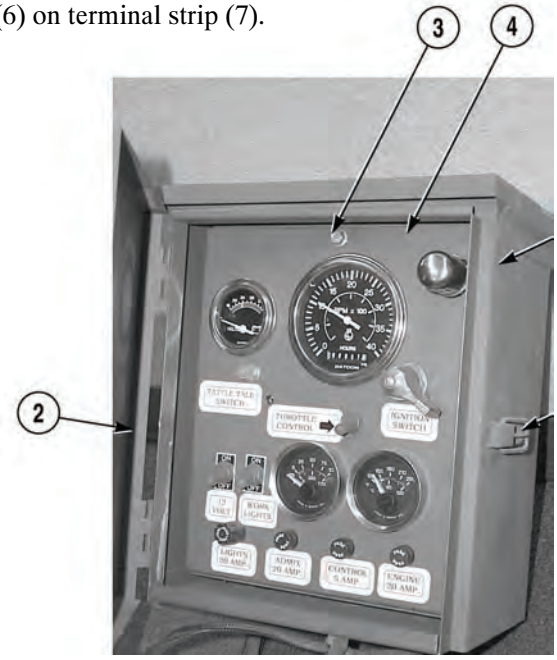

(3) Install control panel (4) on control box (5) with screw (3).

(4) Close control box door (2) and secure latch (1).

c. Follow-On Maintenance:

- Install control box, (Para 3-90).

END OF TASK

3-56. IGNITION SWITCH REPLACEMENT.

This task covers:

a. Removal b. Installation c. Follow-On Maintenance

INITIAL SETUP

Tools and Special Tools
Tool Kit, General Mechanic's: Automotive (Item 19, Appendix I)

Materials/Parts
Tags, Identification (Item 13, Appendix H)
Lockwasher (3) (MS35338-43)
Lockwasher (MS35333-46)

Equipment Condition
Concrete Mobile Mixer unloaded, (Para 2-5)
Control box removed, (Para 3-90)

a. Removal.

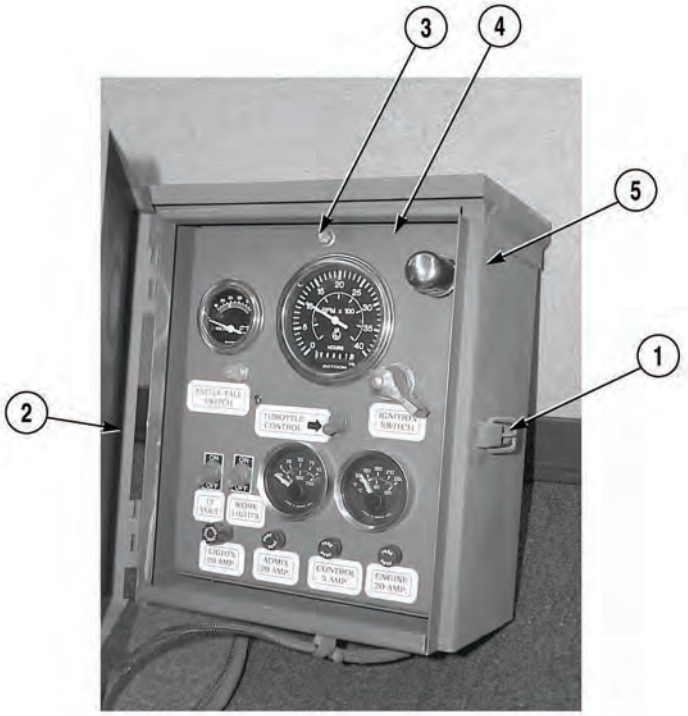

(1) Release latch (1) and open control box door (2).

NOTE

Gently tip control panel forward for access to wires.

(2) Remove screw (3) and control panel (4) from control box (5).

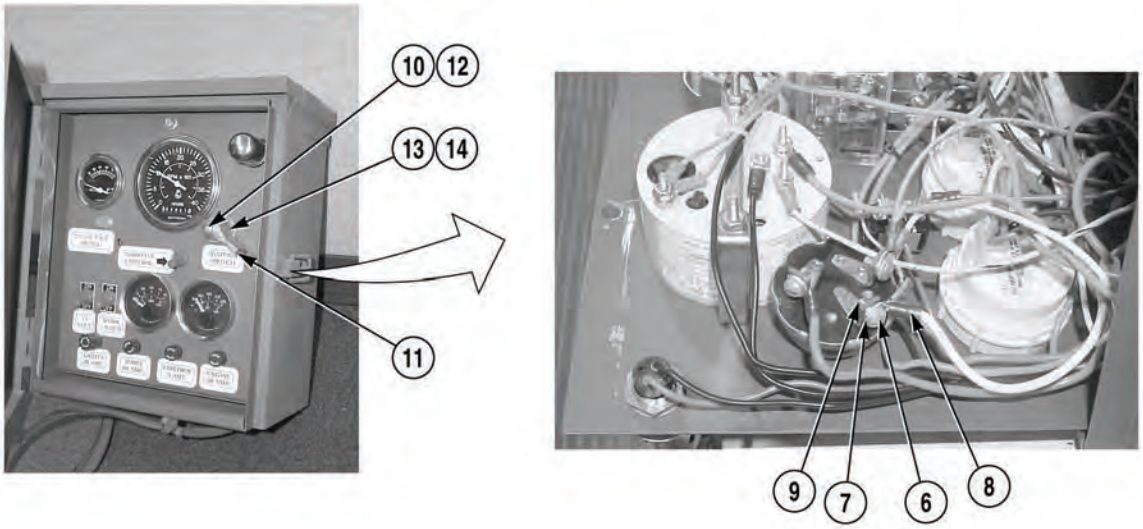

NOTE

Tag and mark all wires prior to removal.

(3) Remove three screws (6) lockwashers (7), and five wires (8) from three terminals (9). Discard lockwashers.

(4) Remove screw (10) and knob (11) from ignition switch (12).

(5) Remove nut (13), lockwasher (14), and ignition switch (12) from control panel (4). Discard lockwasher.

b. Installation.

NOTE

Install wires as noted prior to removal.

(1) Install ignition switch (12) on control panel (4) with lockwasher (14) and nut (13).

(2) Install five wires (8) on three terminals (9) with lockwashers (7) and screws (6).

(3) Install knob (11) on ignition switch (12) with screw (10).

3-56. IGNITION SWITCH REPLACEMENT (CONT).

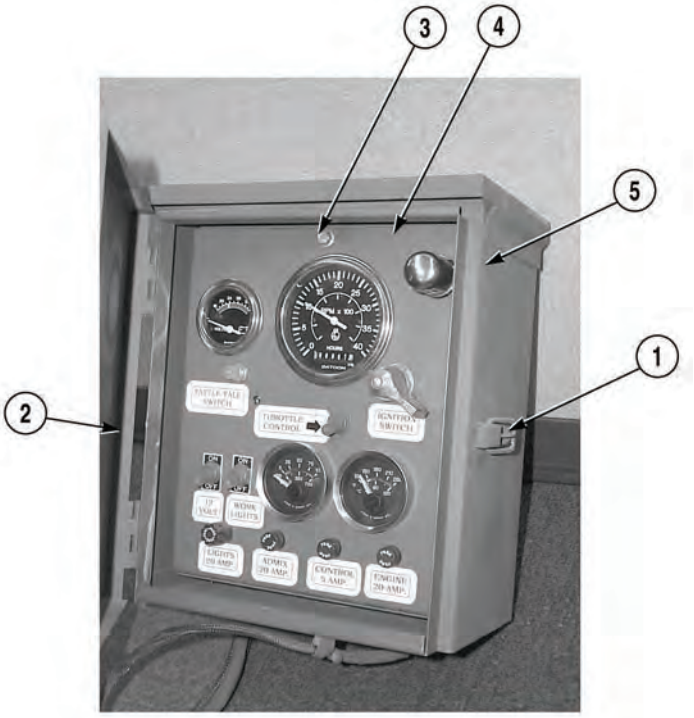

(4) Install control panel (4) on control box (5) with screw (3).

(5) Close control box door (2) and secure latch (1).

c. *Follow-On Maintenance:*

- Install control box. (Para 3-90).

END OF TASK

3-57. TOGGLE SWITCH(ES) REPLACEMENT.

This task covers:

a. Removal b. Installation c. Follow-On Maintenance

INITIAL SETUP

Tools and Special Tools
Tool Kit, General Mechanic's: Automotive (Item 19, Appendix I)

Materials/Parts
Tags, Identification (Item 13, Appendix H)
Lockwasher (2) (1978HX)

Equipment Condition
Concrete Mobile Mixer unloaded, (Para 2-5)
Control box removed, (Para 3-90)

a. Removal.

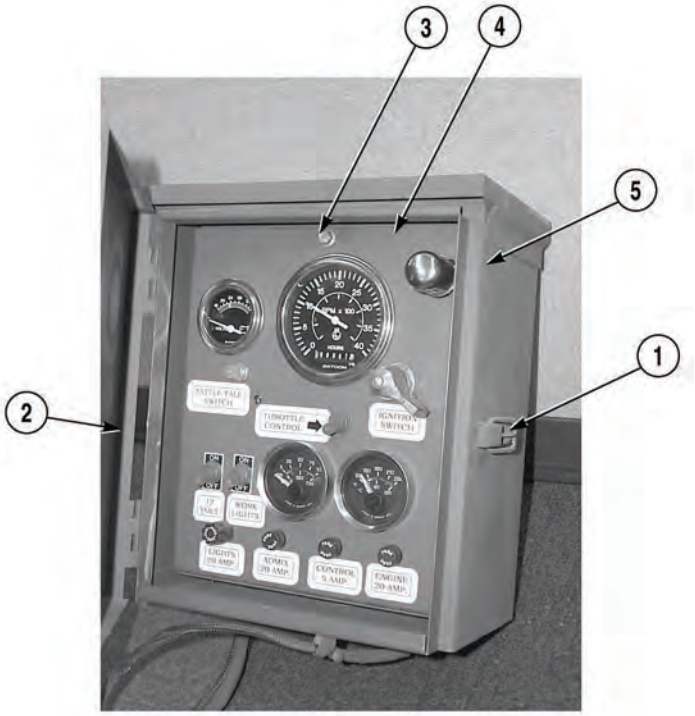

NOTE

- There are three toggle switches in the control box: throttle control switch, on/off 12-volt switch, and work lights. All toggle switches are removed the same way.
- Tag and mark all wires prior to removal.

(1) Release latch (1) and open control box door (2).

NOTE

Gently tip control panel forward for access to wires.

(2) Remove screw (3) and control panel (4) from control box (5).

3-57. TOGGLE SWITCH(ES) REPLACEMENT (CONT).

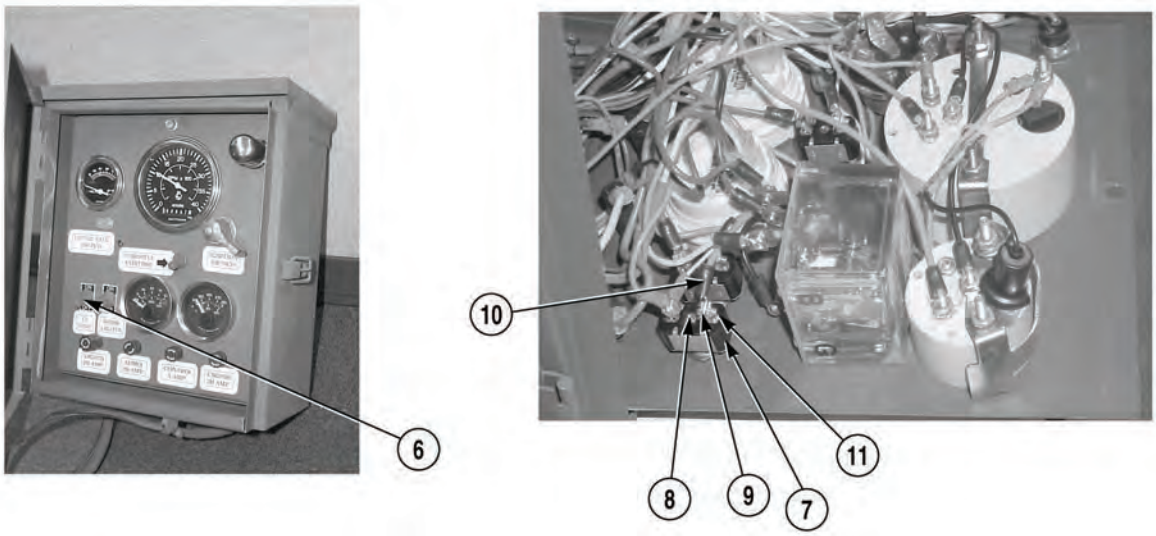

(3) Remove boot (6) and switch (7) from control panel (4).

NOTE

Number of wires may vary.

(4) Remove two screws (8), lockwashers (9), and wires (10) from terminals (11). Discard lockwashers.

b. Installation.

NOTE

Install wires as noted prior to removal.

(1) Install wires (10) on terminals (11) with two lockwashers (9) and screws (8).

(2) Install switch (7) on control panel (4) with boot (6).

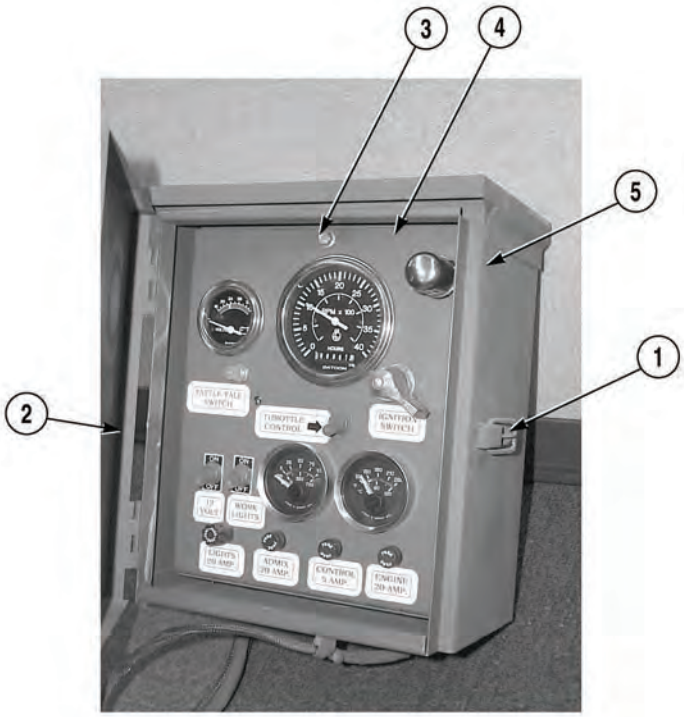

(3) Install control panel (4) on control box (5) with screw (3).

(4) Close control box door (2) and secure latch (1).

c. Follow-On Maintenance:

- Install control box, (Para 3-90).

END OF TASK

3-58. FUSE(S) AND FUSE HOLDER(S) REPLACEMENT.

This task covers:

a. Removal b. Installation c. Follow-On Maintenance

INITIAL SETUP

Tools and Special Tools
Tool Kit, General Mechanic's: Automotive (Item 19, Appendix I)

Materials/Parts
Tags, Identification (Item 13, Appendix H)

Equipment Condition
Concrete Mobile Mixer unloaded, (Para 2-5)
Control box removed, (Para 3-90)

a. Removal.

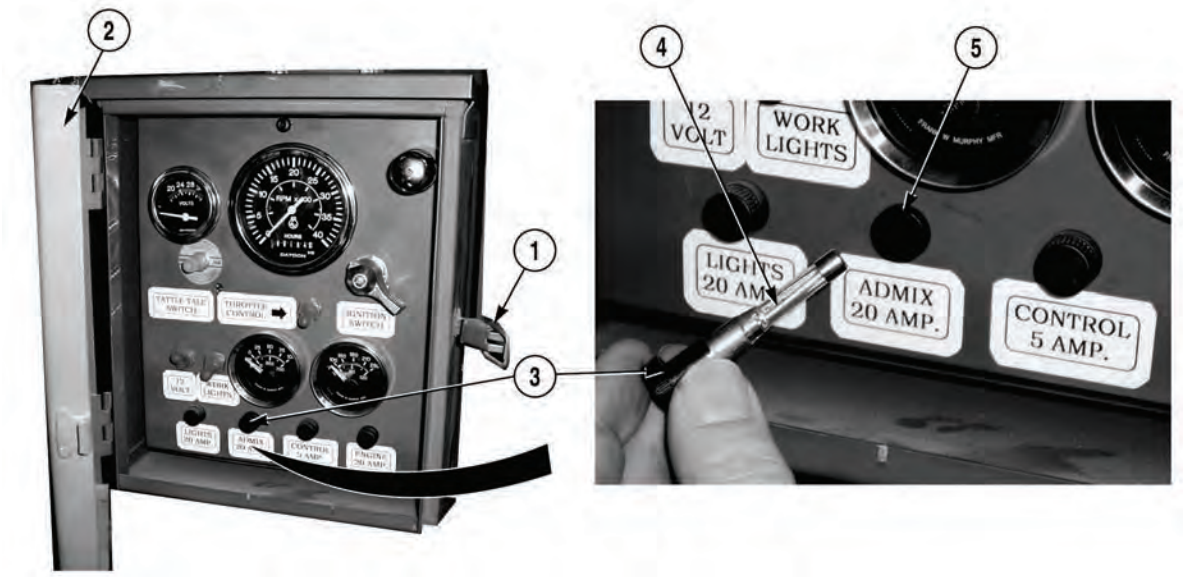

(1) Release latch (1) and open control box door (2).

NOTE

- There are four fuses and fuse holders in control box. All fuses and fuse holders are removed the same way.
- Tag and mark all wires prior to removal.
- Fuse cover is removed by pushing in and rotating fuse cover to the left.

(2) Open fuse cover (3) and remove fuse cover (3) and fuse (4) from fuse holder (5).

(3) Remove fuse (4) from fuse cover (3).

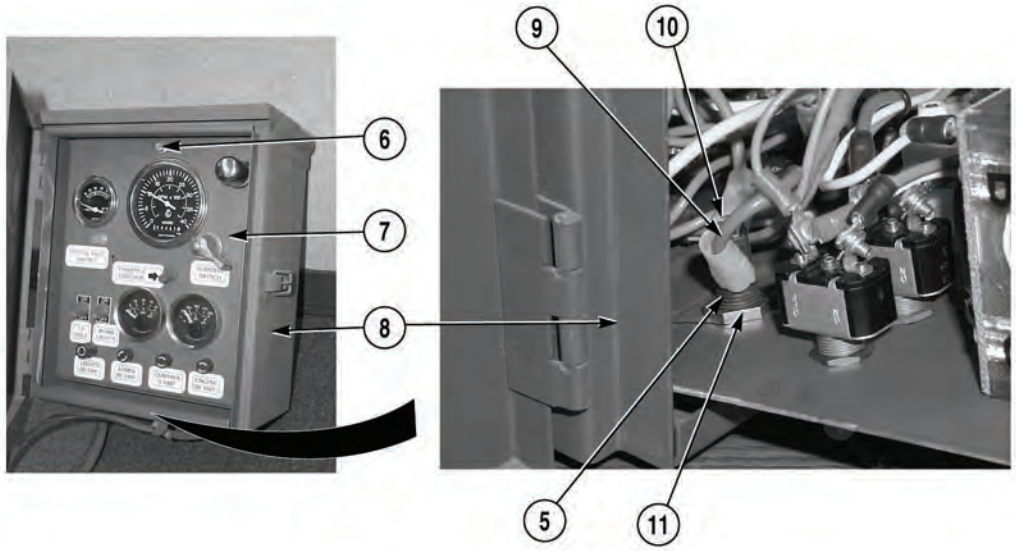

NOTE

Gently tip control panel forward for access to wires.

(4) Remove screw (6) and control panel (7) from control box (8).

NOTE

Fuse holder for lights shown.

(5) Remove two wires (9) from terminals (10).

(6) Remove nut (11) and fuse holder (5) from control panel (7).

b. Installation.

(1) Install fuse holder (5) on control panel (7) with nut (11).

NOTE

Install wires as noted prior to removal.

(2) Install two wires (9) on terminals (10).

3-58. FUSE(S) AND FUSE HOLDER(S) REPLACEMENT (CONT).

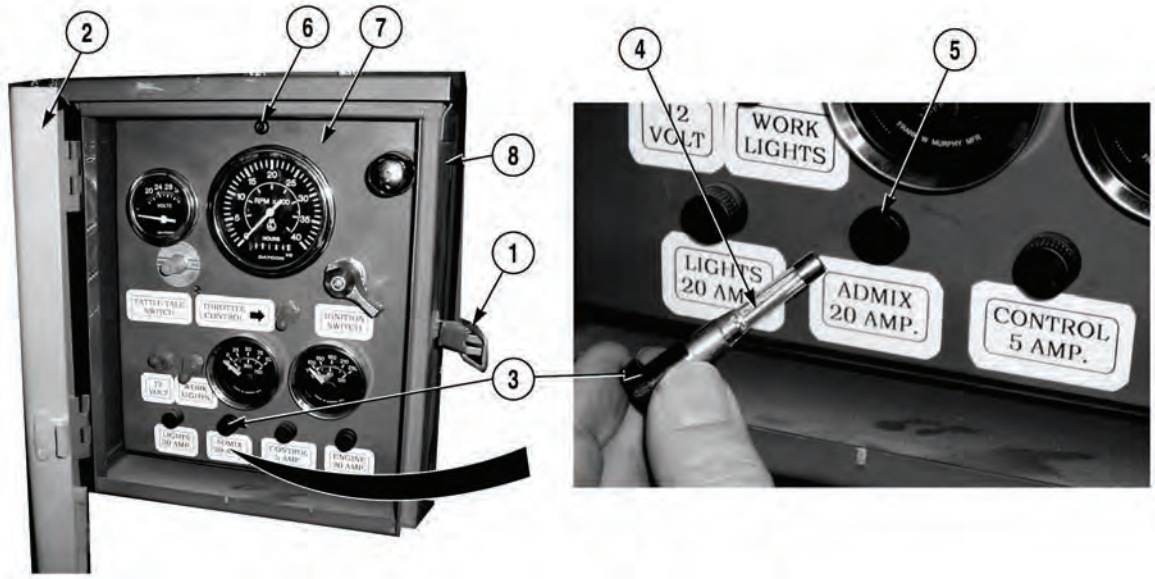

(3) Install control panel (7) on control box (8) with screw (6).

(4) Install fuse (4) on fuse cover (3).

(5) Install fuse (4) and fuse cover (3) on fuse holder (5).

(6) Close control box door (2) and secure latch (1).

c. Follow-On Maintenance:

- Install control box, (Para 3-90).

END OF TASK

3-59. CEMENT BIN COVER AND LATCH REPLACEMENT.

This task covers:

a. Removal b. Installation

INITIAL SETUP

Tools and Special Tools
Tool Kit, General Mechanic's: Automotive (Item 19, Appendix I)

Materials/Parts
Locknut (3) (MS51943-37)
Lockwasher (2) (MS35338-44)
Solvent, Dry-cleaning (Item 12, Appendix H)

Equipment Condition
Engine OFF, (Para 2-19)
Concrete Mobile Mixer unloaded, (Para 2-5)

a. Removal.

NOTE

There are two cement bin covers on Concrete Mobile Mixer. Both are replaced the same way.

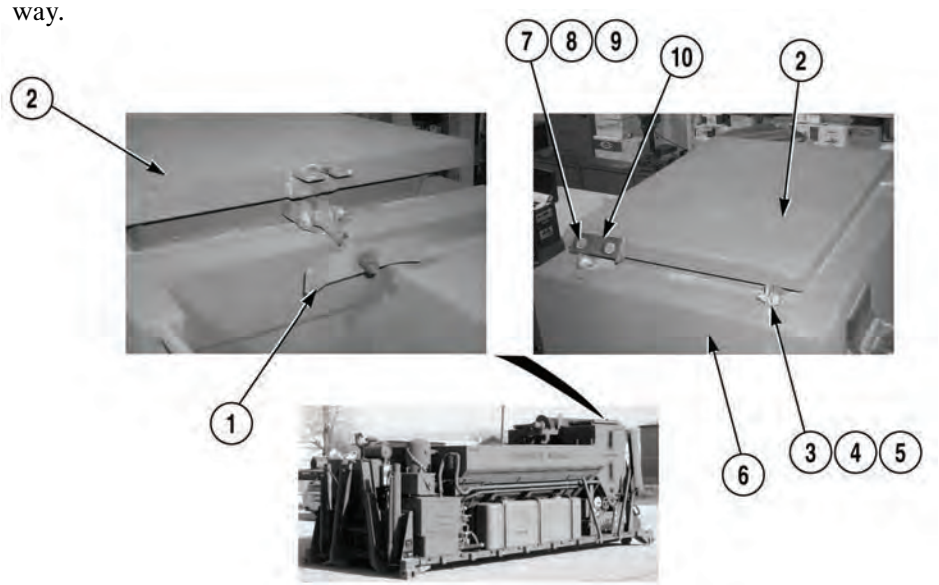

(1) Loosen latch handle (1) and remove from cement bin cover (2).

NOTE

- Note position and number of washers prior to removal.
- Some models have only four washers.

(2) Remove two screws (3), six washers (4), two locknuts (5), and cement bin cover (2) from cement bin (6). Discard locknuts.

(3) Remove two screws (7), lockwashers (8), nuts (9), and stop (10) from cement bin cover (2). Discard lockwashers.

3-59. CEMENT BIN COVER AND LATCH REPLACEMENT (CONT).

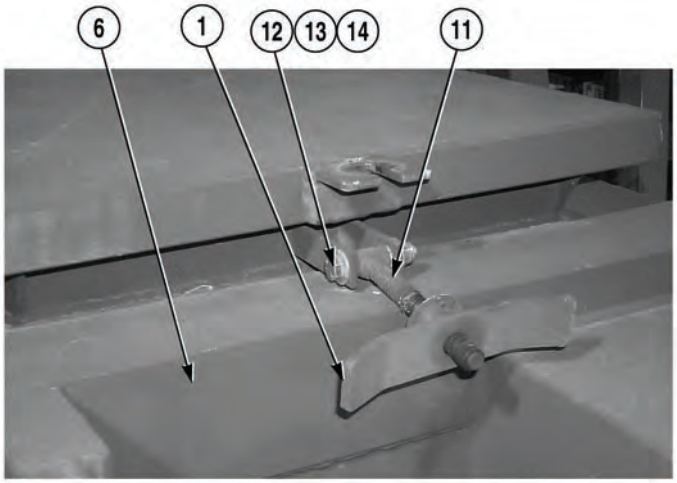

(4) Remove latch handle (1) from latch (11).

(5) Remove screw (12), two washers (13), locknut (14), and latch (11) from cement bin (6). Discard locknut.

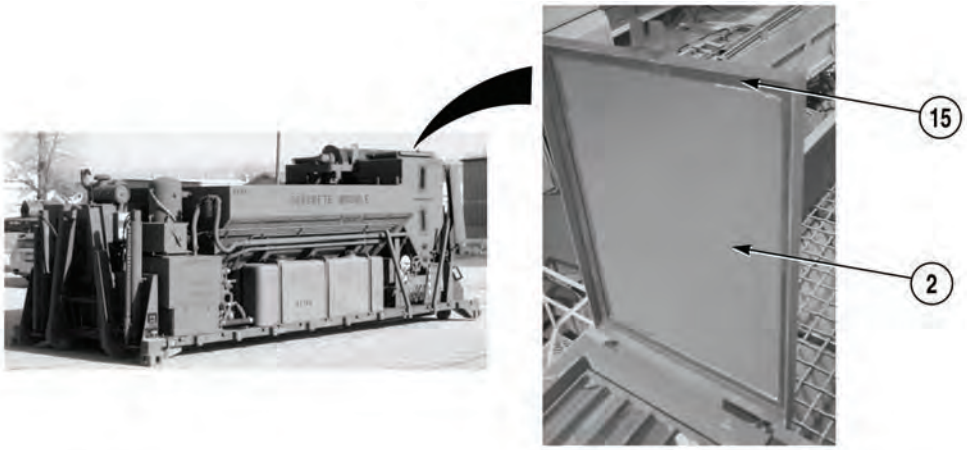

WARNING

Dry-cleaning solvent (P-D-680) is toxic and flammable. Wear protective goggles, face shield and gloves; use only in a well-ventilated area; avoid contact with skin, eyes and clothes. Do not breath vapors. Keep from heat or flame. Never smoke when using solvent. The flashpoint for Type II dry-cleaning solvent is 140°F (60°C) and Type III dry-cleaning solvent is 200°F (93°C). Failure to do so may result in serious injury or death to personnel.

NOTE

Perform Steps (6) and (7) if seal is damaged.

(6) Remove seal (15) from cement bin cover (2).

(7) Clean cement bin cover (2) with dry cleaning solvent and allow to air dry.

b. Installation.

CAUTION

Ensure that cement bin cover is free of old seal, dirt and cement. Failure to comply will result in premature failure.

NOTE

- To aid in installation, position seal in place prior to removing backing.
- When installing seal, firmly press uniformly over entire surface.
- Perform Step (1) if seal was removed.

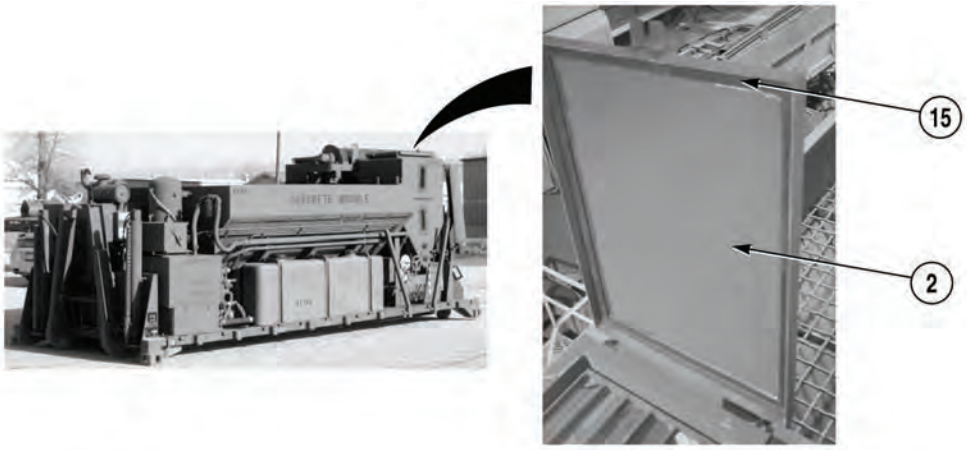

(1) Position seal (15) on cement bin cover (2). Remove backing from seal and press seal in place.

3-59. CEMENT BIN COVER AND LATCH REPLACEMENT (CONT).

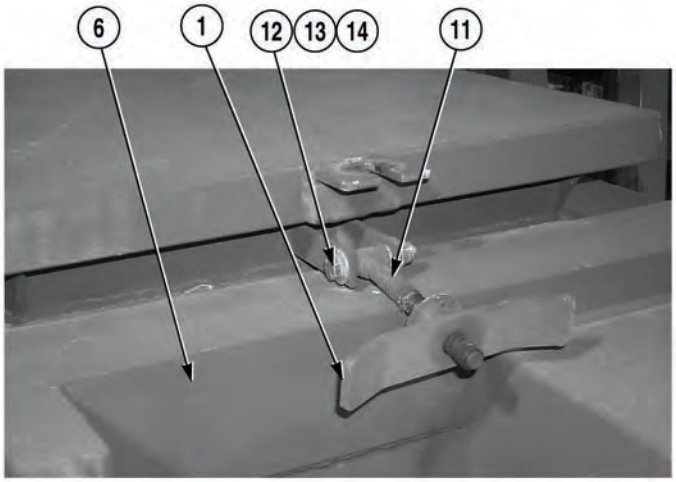

(2) Install latch (11) on cement bin (6) with screw (12), two washers (13), and locknut (14).

(3) Install latch handle (1) on latch (11).

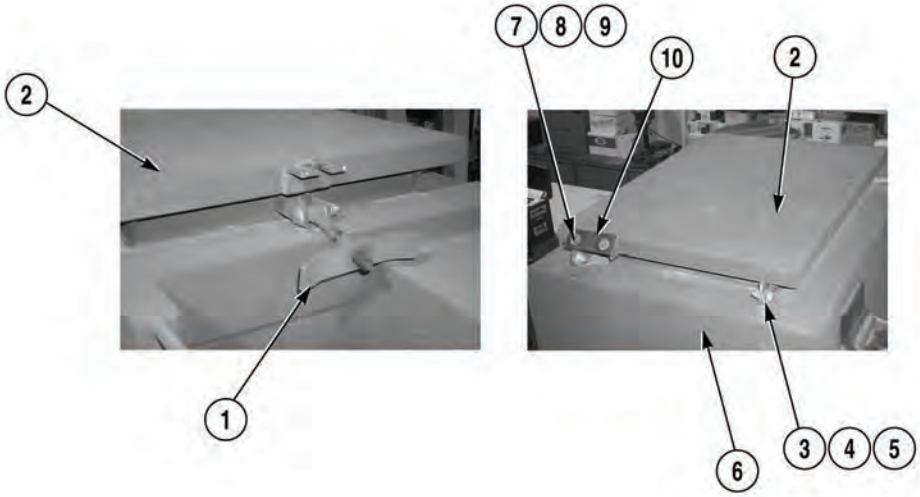

(4) Install stop (10) on cement box cover (2) with two nuts (9), lockwashers (8), and screws (7).

NOTE

Install washers as noted prior to removal.

(5) Install cement bin cover (2) on cement bin (6) with two screws (3), six washers (4), and two locknuts (5).

(6) Secure cement bin cover (2) with latch handle (1).

END OF TASK

3-60. OVERRIDE SWITCH (TATTLE TALE SWITCH) REPLACEMENT.

This task covers:

a. Removal b. Installation c. Follow-On Maintenance

INITIAL SETUP

Tools and Special Tools
Tool Kit, General Mechanic's: Automotive (Item 19, Appendix I)

Materials/Parts
Cable Ties (Item 2, Appendix H)
Tags, Identification (Item 13, Appendix H)

Equipment Condition
Concrete Mobile Mixer unloaded, (Para 2-5)
Control box removed, (Para 3-90)

a. Removal.

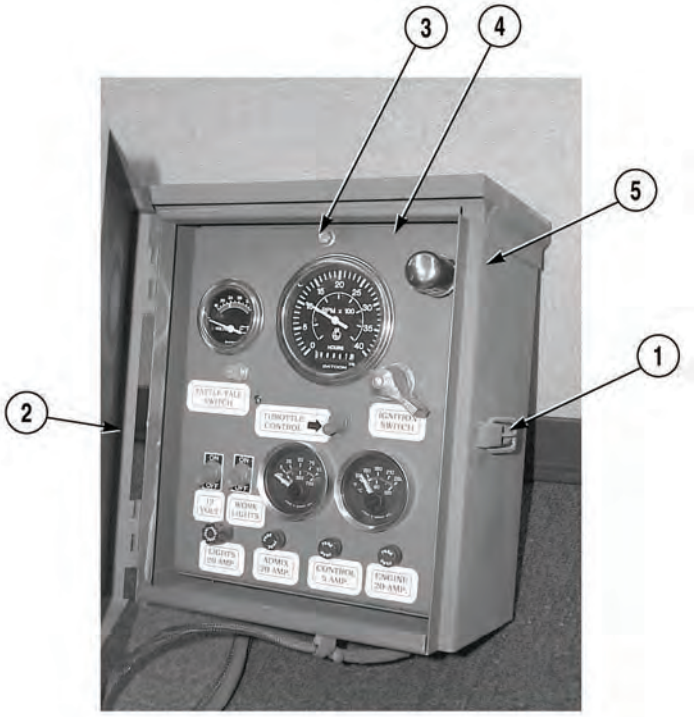

NOTE

- Tag and mark all wires prior to removal.
- Remove cable ties as required.
- Gently tip control panel forward for access to wires.

(1) Release latch (1) and open control box door (2).

(2) Remove screw (3) and control panel (4) from control box (5).

3-60. OVERRIDE SWITCH (TATTLE TALE SWITCH) REPLACEMENT (CONT).

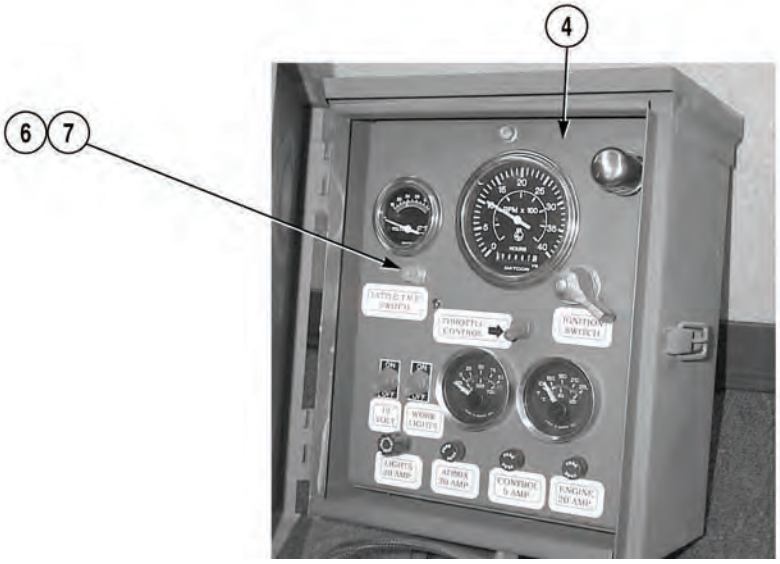

(3) Remove boot (6) and override switch (7) from control panel (4).

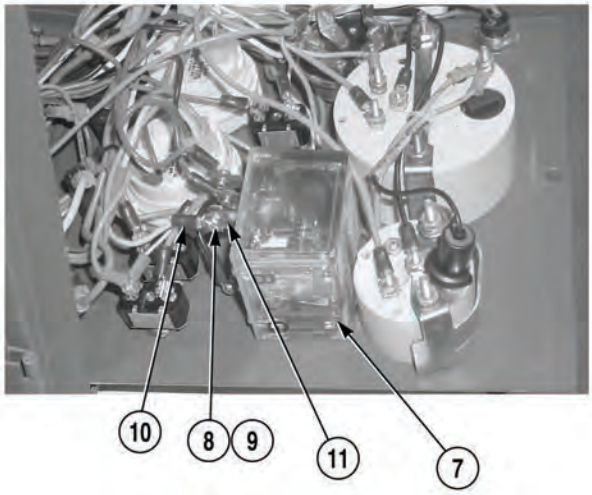

(4) Remove five screws (8), washers (9), and wires (10) from terminals (11).

b. Installation.

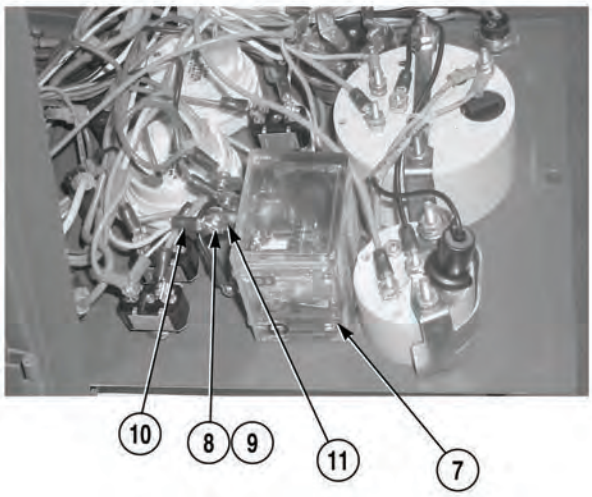

(1) Install five wires (10) on terminals (11) with five washers (9) and screws (8).

(2) Install override switch (7) on control panel (4) with boot (6).

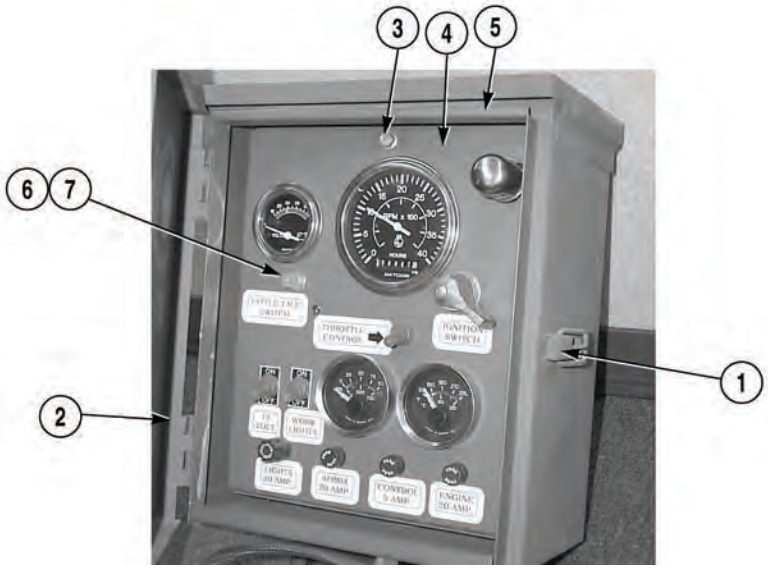

(3) Install control panel (4) on control box (5) with screw (3).

(4) Close control box door (2) and secure latch (1).

c. Follow-On Maintenance:

- Install control box, (Para 3-90).

END OF TASK

3-61. HYDRAULIC/WATER PRESSURE GAGE(S) REPLACEMENT.

This task covers:

a. Removal b. Installation c. Follow-On Maintenance

INITIAL SETUP

Tools and Special Tools
Tool Kit, General Mechanic's: Automotive (Item 19, Appendix I)
Cap and Plug Set, (Item 3, Appendix I)

Materials/Parts
Sealing Compound (Item 11, Appendix H)
Locknut (3) (MS17828-3C)

Materials/Parts (Continued)
Lockwasher (14) (MS35338-44)

Equipment Condition
Batteries disconnected, (Para 3-10)
Concrete Mobile Mixer unloaded, (Para 2-5)

a. Removal.

CAUTION

Use extreme care when removing panel from Concrete Mobile Mixer. Wires and hoses will still be connected to gages. Failure to comply may result in damage to equipment.

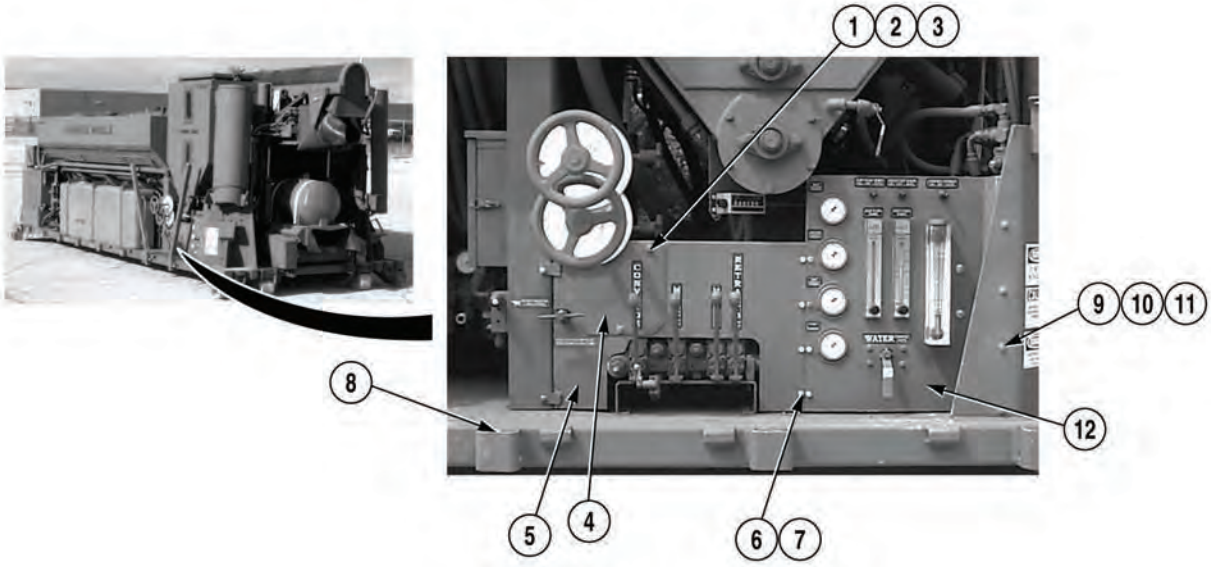

(1) Remove three screws (1), lockwashers (2), washers (3), and panel (4) from panel (5). Discard lockwashers.

NOTE

Some models have washers.

(2) Remove six screws (6), lockwashers (7), and panel (5) from Concrete Mobile Mixer (8). Discard lockwashers.

NOTE

Some models have four screws, lockwashers, and washers.

(3) Remove five screws (9), lockwashers (10), washers (11), and panel (12) from Concrete Mobile Mixer (8). Discard lockwashers.

NOTE

- There are four pressure gages on panel. All four gages are removed the same way.
- Cap and plug hoses upon removal.

(4) Remove hose (13) from elbow (14).

(5) Remove three screws (15), locknuts (16), and gage (17) from panel (12). Discard locknuts.

(6) Remove elbow (14) from gage (17).

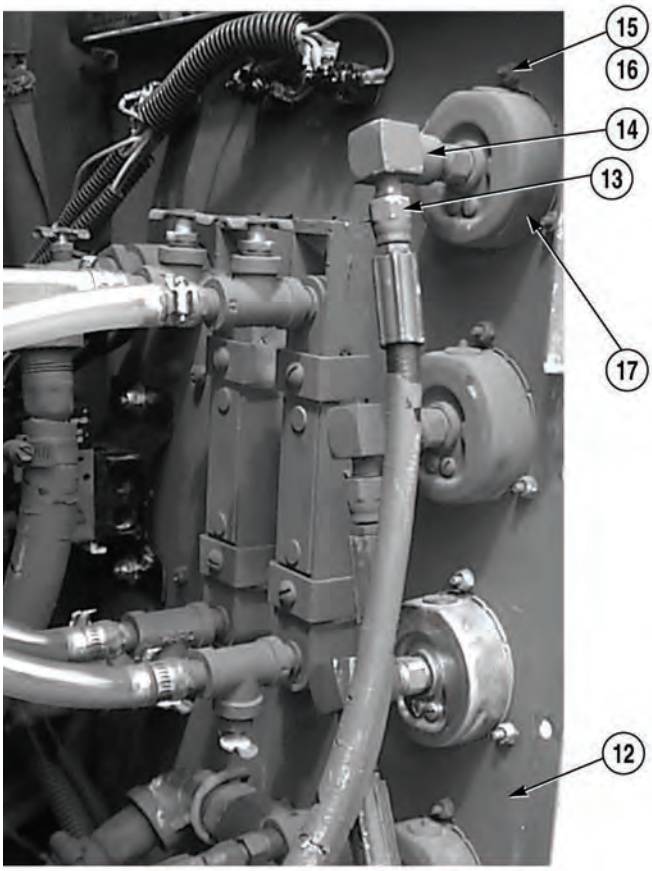

b. Installation.

WARNING

Adhesives, solvents, and sealing compounds can burn easily, can give off harmful vapors, and are harmful to skin and clothing. To avoid injury or death, keep away from open fire and use in well-ventilated area. If adhesives, solvent, or sealing compound gets on skin or clothing, wash immediately with soap and water.

(1) Apply sealing compound to threads of gage (17).

(2) Install elbow (14) on gage (17).

(3) Install gage (17) on panel (12) with three screws (15) and locknuts (16).

(4) Install hose (13) on elbow (14).

3-61. HYDRAULIC/WATER PRESSURE GAGE(S) REPLACEMENT (CONT).

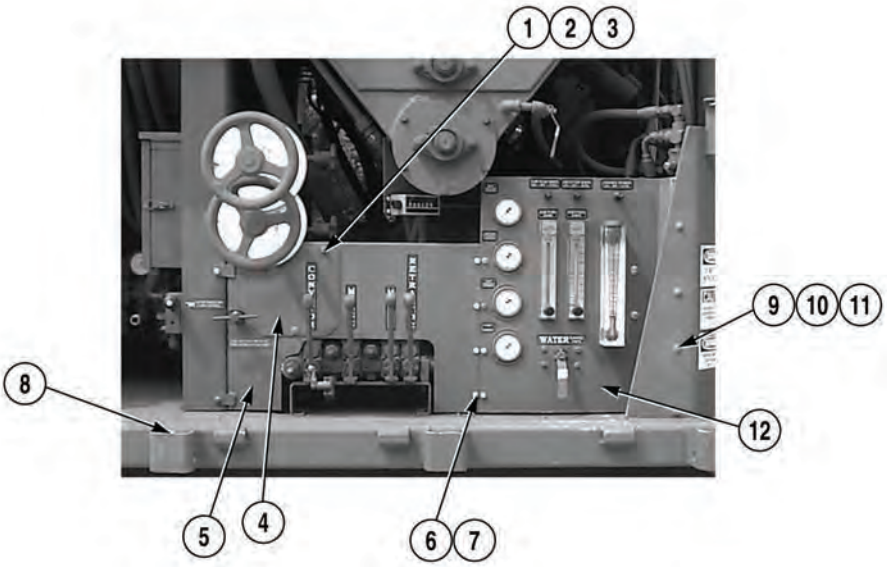

(5) Install panel (12) on Concrete Mobile Mixer (8) with five screws (9), lockwashers (10), and washers (11).

(6) Install panel (5) on Concrete Mobile Mixer (8) with six screws (6) and lockwashers (7).

(7) Install panel (4) on panel (5) with three screws (1), lockwashers (2), and washers (3).

c. Follow-On Maintenance:

- Connect batteries, (Para 3-10).
- Start engine, (Para 2-19).
- Check for leaks.
- Shut off engine, (Para 2-19).

END OF TASK

3-62. LOW-FLOW/HIGH-FLOW METER REPLACEMENT.

This task covers:

a. Removal b. Installation c. Follow-On Maintenance

INITIAL SETUP

Tools and Special Tools
Tool Kit, General Mechanic's: Automotive (Item 19, Appendix I)

Equipment Condition
Engine OFF, (Para 2-19)
Concrete Mobile Mixer unloaded, (Para 2-5)

a. Removal.

CAUTION

Use extreme care when removing panel from Concrete Mobile Mixer. Hoses will still be connected to gages and meters. Failure to comply may result in damage to equipment.

NOTE

There is a low-flow and a high-flow meter on the Concrete Mobile Mixer. Both meters are removed the same way.

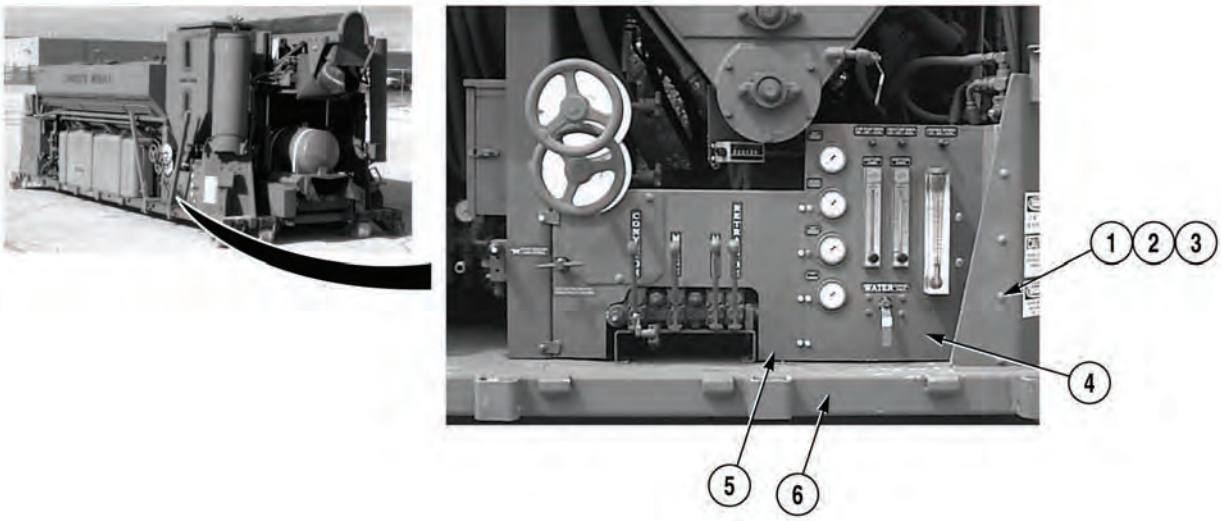

(1) Remove nine screws (1), lockwashers (2), washers (3), and panel (4) from panel (5) and Concrete Mobile Mixer (6).

3-62. LOW-FLOW/HIGH-FLOW METER REPLACEMENT (CONT).

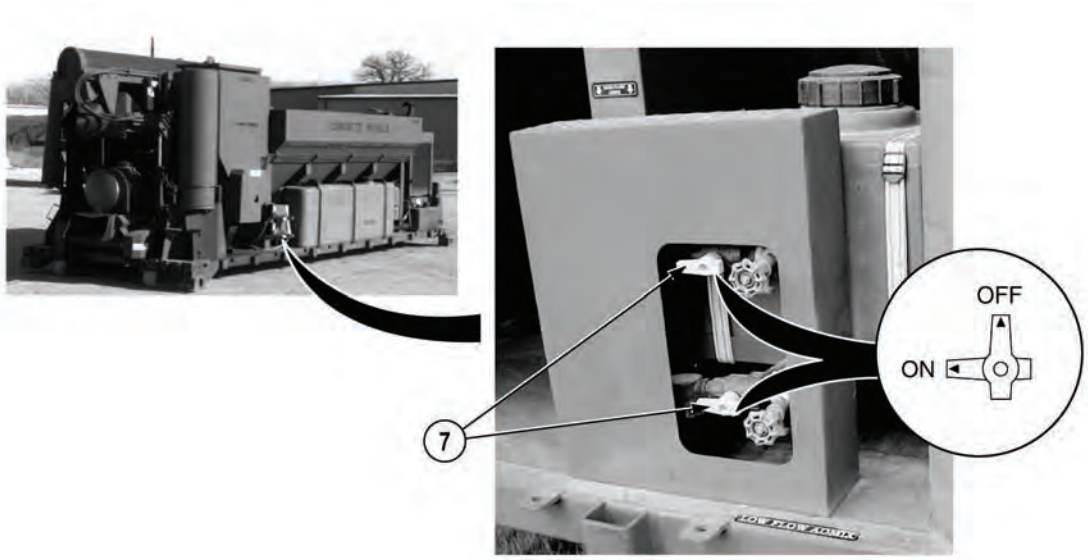

(2) Close two solution valves (7).

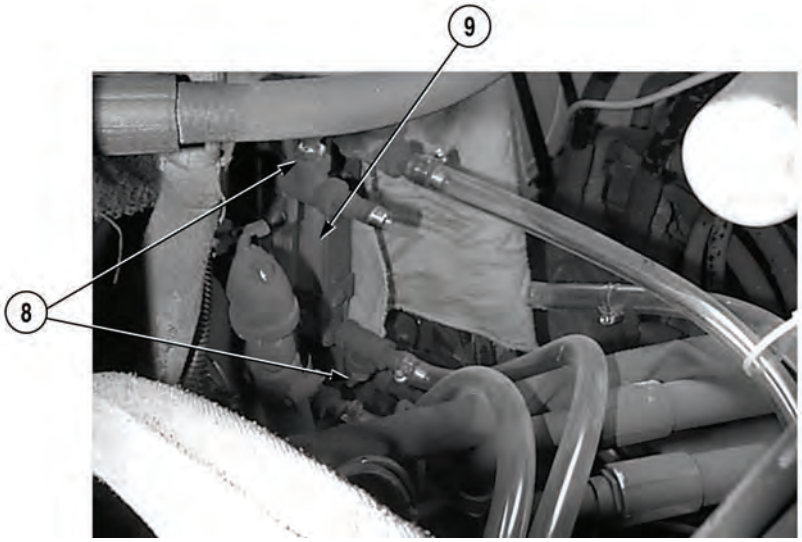

(3) Open two drain cocks (8) on flow meter (9).

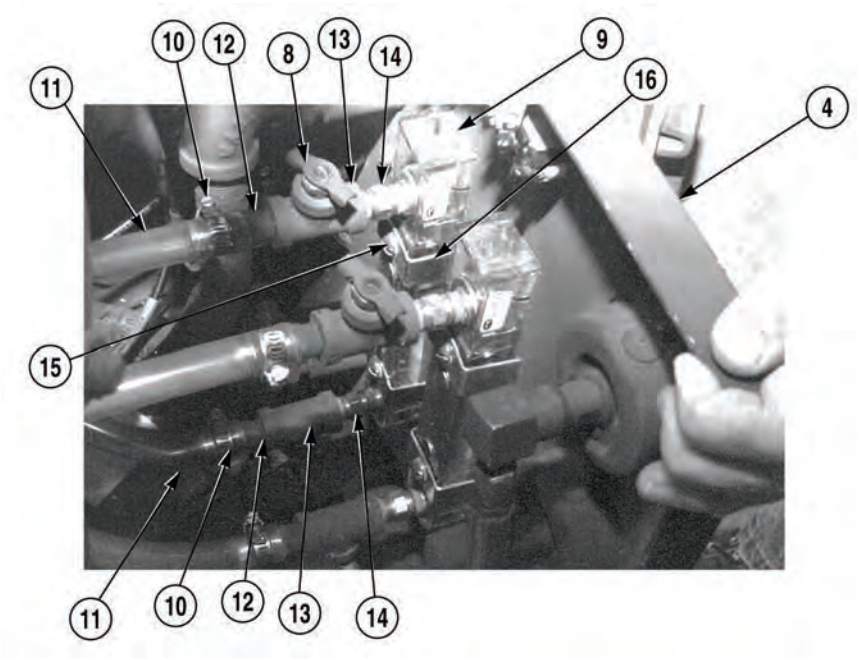

NOTE

- Tag and mark all hoses prior to removal.
- Note location and position of tees and fittings prior to removal.

(4) Loosen two clamps (10) and remove hoses (11) from fittings (12).

(5) Remove two fittings (12), tees (13), drain cocks (8), and fittings (14) from flow meter (9).

(6) Remove two screws (15), bracket (16), and flow meter (9) from panel (4).

b. Installation.

(1) Install flow meter (9) on panel (4) with bracket (16) and two screws (15).

WARNING

Adhesives, solvents, and sealing compounds can burn easily, can give off harmful vapors, and are harmful to skin and clothing. To avoid injury or death, keep away from open fire and use in well-ventilated area. If adhesives, solvent, or sealing compound gets on skin or clothing, wash immediately with soap and water.

NOTE

- Install hoses as noted during removal.
- Install tees and fittings as noted prior to removal.

(2) Apply sealing compound to threads of two fittings (14), drain cocks (8), tees (13), and fittings (12).

(3) Install two fittings (14), drain cocks (8), tees (13), and fittings (12) on flow meter (9).

(4) Install two hoses (11) on fittings (12) and tighten clamps (10).

3-62. LOW-FLOW/HIGH-FLOW METER REPLACEMENT (CONT).

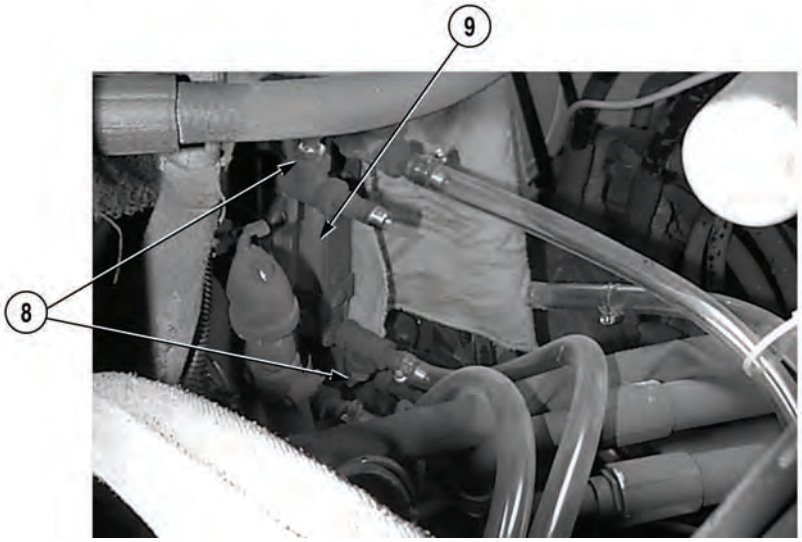

(5) Close two drain cocks (8) on flow meter (9).

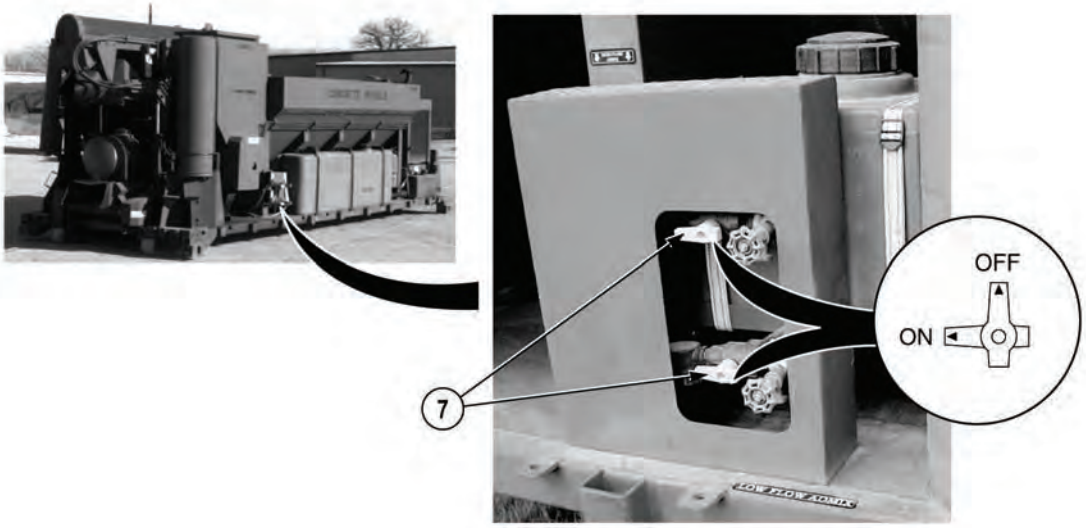

(6) Open two solution valves (7).

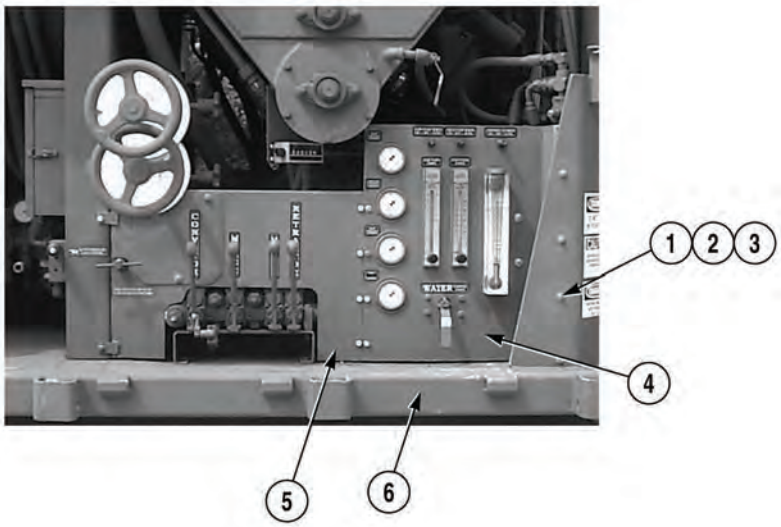

(7) Install panel (4) on Concrete Mobile Mixer (6) and panel (5) with nine screws (1), lockwashers (2), and washers (3).

c. Follow-On Maintenance:

- Start engine, (Para 2-19).
- Check for leaks.
- Shut off engine, (Para 2-19).

END OF TASK

3-63. WATER METER REPLACEMENT.

This task covers:

a. Removal b. Installation c. Follow-On Maintenance

INITIAL SETUP

Tools and Special Tools
Tool Kit, General Mechanic's: Automotive (Item 19, Appendix I)
Cap and Plug Set (Item 3, Appendix I)

Materials/Parts
Sealing Compound (Item 11, Appendix H)
Tags, Identification (Item 13, Appendix H)
Lockwasher (9) (MS35338-44)

Equipment Condition
Engine OFF, (Para 2-19)
Concrete Mobile Mixer unloaded, (Para 2-5)

a. Removal.

CAUTION

Use extreme care when removing panel from Concrete Mobile Mixer. Hoses will still be connected to gages and meters. Failure to comply could result in damage to equipment.

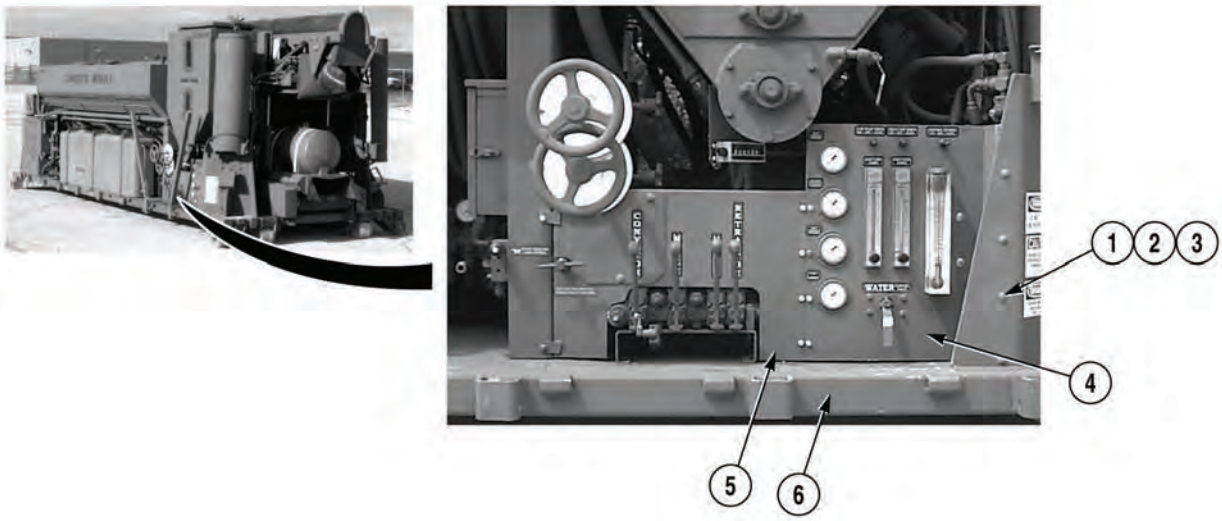

(1) Remove nine screws (1), lockwashers (2), washers (3), and panel (4) from panel (5) and Concrete Mobile Mixer (6). Discard lockwashers.

NOTE

- Tag and mark all hoses prior to removal.
- Cap and plug hoses upon removal.
- Some models have four clamps.

(2) Loosen two clamps (7) and remove two hoses (8) from fittings (9).

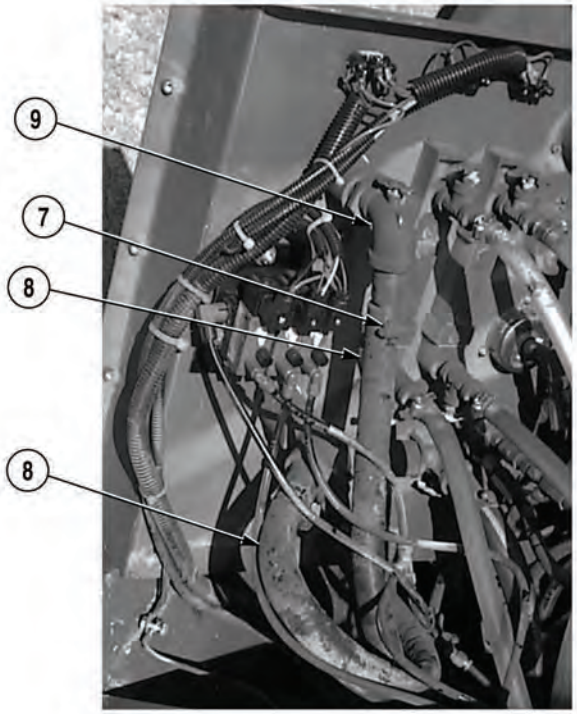

3-63. WATER METER REPLACEMENT (CONT).

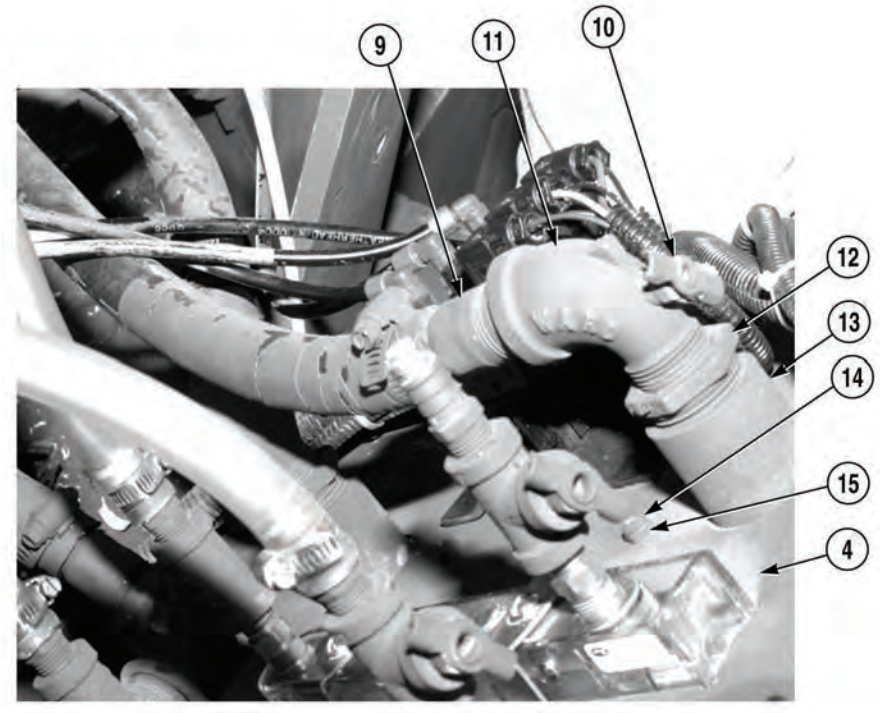

NOTE

Note location and position of elbows and reducers prior to removal.

(3) Remove two fittings (9) drain cocks (10), elbows (11), and reducer bushings (12) from water meter (13).

NOTE

Some models have washers and lockwashers.

(4) Remove three screws (14), nuts (15), and water meter (13) from panel (4).

b. Installation.

(1) Install water meter (13) on panel (14) with three screws (14) and nuts (15).

WARNING

Adhesives, solvents, and sealing compounds can burn easily, can give off harmful vapors, and are harmful to skin and clothing. To avoid injury or death, keep away from open fire and use in well-ventilated area. If adhesives, solvent, or sealing compound gets on skin or clothing, wash immediately with soap and water.

(2) Apply sealing compound to threads of two fittings (9), drain cocks (10), elbows (11), and reducer bushings (12).

NOTE

Install elbows and reducers in position as noted prior to removal.

(3) Install two fittings (9), drain cocks (10), elbows (11), and reducer bushings (12) on water meter (13).

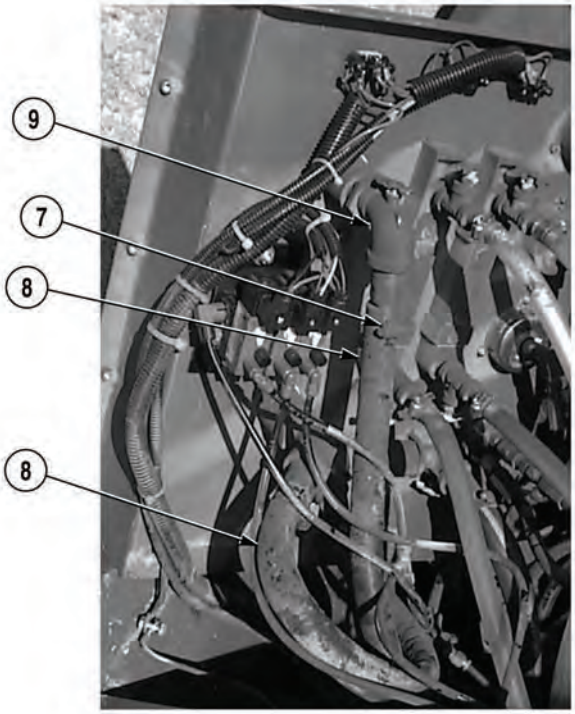

NOTE

Install hoses as noted prior to removal.

(4) Position two hoses (8) on fittings (9) and tighten clamps (7).

3-63. WATER METER REPLACEMENT (CONT).

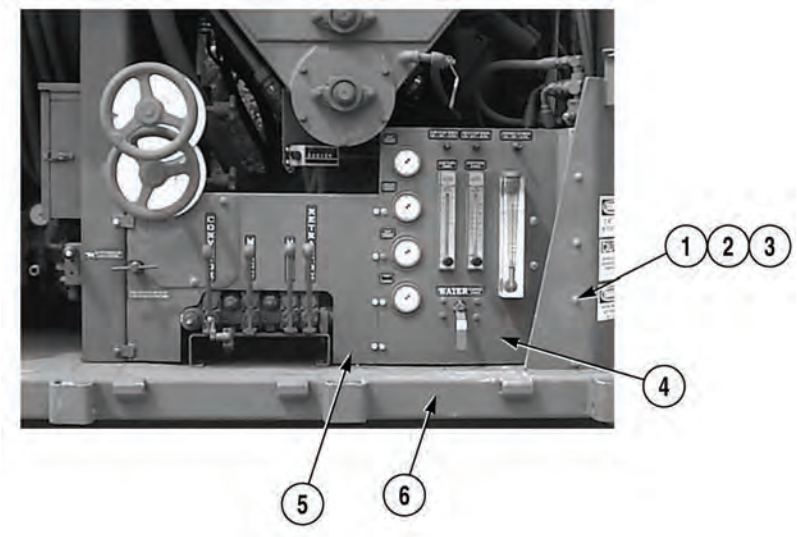

(5) Install panel (4) on panel (5) on Concrete Mobile Mixer (6) with nine screws (1), lockwashers (2), and washers (3).

c. Follow-On Maintenance:

- Start engine, (Para 2-19).
- Check for leaks.
- Shut off engine, (Para 2-19).

END OF TASK

3-64. AIR SOLENOID REPLACEMENT.

This task covers:

a. Removal b. Installation c. Follow-On Maintenance

INITIAL SETUP

Tools and Special Tools
Tool Kit, General Mechanic's: Automotive (Item 19, Appendix I)

Materials/Parts
Sealing Compound (Item 11, Appendix H)
Tags, Identification (Item 13, Appendix H)
Lockwasher (13) (MS35338-44)
Locknut (4) (MS51943-31)

Equipment Condition
Engine OFF, (Para 2-19)
Concrete Mobile Mixer unloaded, (Para 2-5)

a. Removal.

CAUTION

Use extreme care when removing panel from Concrete Mobile Mixer. Hoses will still be connected to gages and meters. Failure to comply may result in damage to equipment.

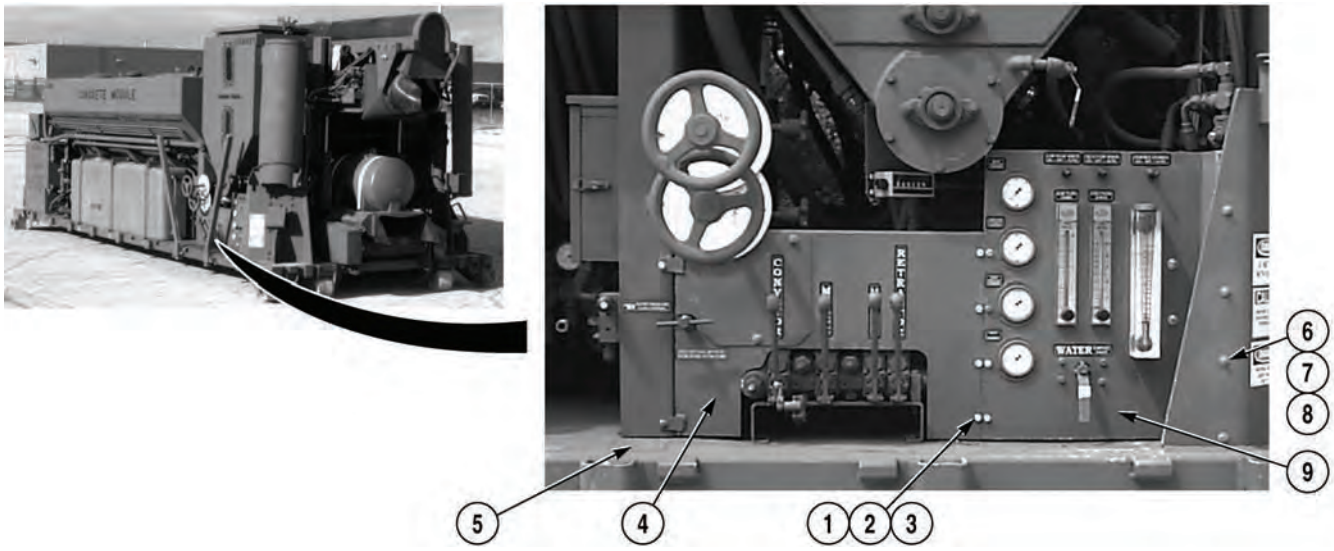

NOTE

Some models have five screws, lockwashers, and washers.

(1) Remove six screws (1), lockwashers (2), washers (3), and panel (4) from Concrete Mobile Mixer (5). Discard lockwashers.

NOTE

Some models have four screws, lockwashers, and washers.

(2) Remove five screws (6), lockwashers (7), washers (8), and panel (9) from Concrete Mobile Mixer (5). Discard lockwashers.

3-64. AIR SOLENOID REPLACEMENT (CONT).

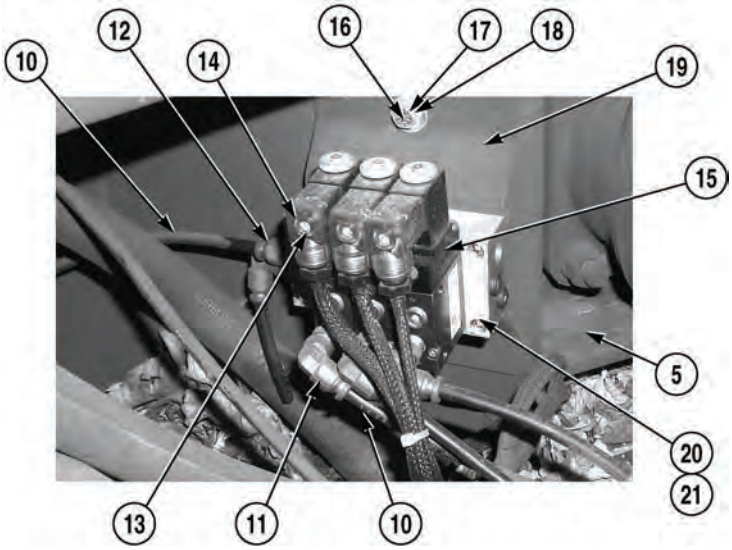

NOTE

- Tag and mark all hoses and connectors prior to removal.
- To remove hose, push collar of fitting in while pulling hose out.

(3) Remove five hoses (10) from four elbows (11) and fitting (12).

(4) Loosen three screws (13) and remove connectors (14) from air solenoid valve (15).

(5) Remove two screws (16), lockwashers (17), washers (18), and bracket (19) from Concrete Mobile Mixer (5). Discard lockwashers.

(6) Remove four locknuts (20), screws (21), and air solenoid valve (15) from bracket (19). Discard locknuts.

(7) Remove four elbows (11) and fitting (12) from air solenoid valve (15).

b. Installation.

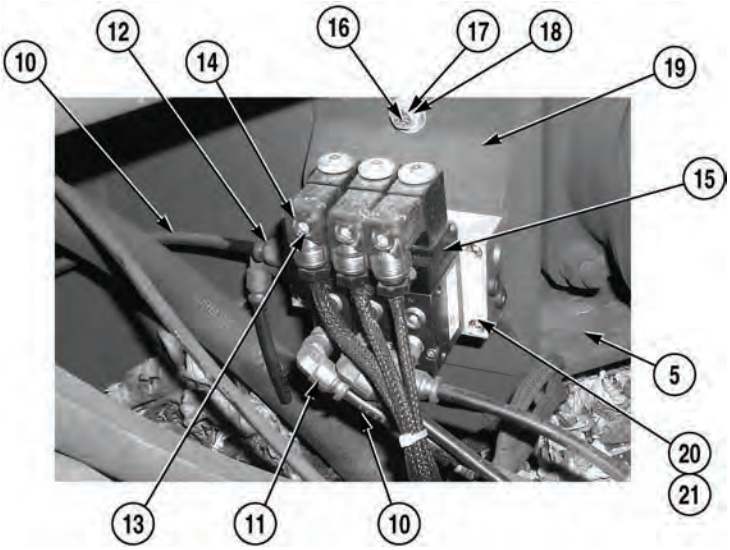

WARNING

Adhesives, solvents, and sealing compounds can burn easily, can give off harmful vapors, and are harmful to skin and clothing. To avoid injury or death, keep away from open fire and use in well-ventilated area. If adhesives, solvent, or sealing compound gets on skin or clothing, wash immediately with soap and water.

(1) Apply sealing compound to threads of four elbows (11) and fitting (12).

(2) Install four elbows (11) and fitting (12) on air solenoid valve (15).

(3) Install air solenoid valve (15) on bracket (19) with four screws (21) and locknuts (20).

(4) Install bracket (19) on Concrete Mobile Mixer (5) with two screws (16), lockwashers (17), and washers (18).

NOTE

Install connectors and hoses as noted prior to removal.

(5) Install three connectors (14) on air solenoid valve (15) and tighten three screws (13).

(6) Install five hoses (10) on four elbows (11) and fitting (12).

3-64. AIR SOLENOID REPLACEMENT (CONT).

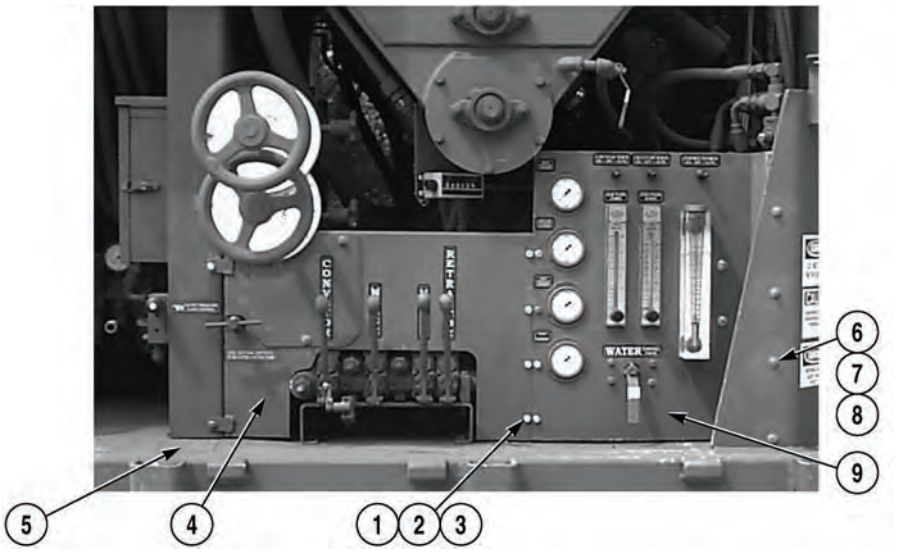

(7) Install panel (9) on Concrete Mobile Mixer (5) with five screws (6), lockwashers (7) and washers (8).

(8) Install panel (4) on Concrete Mobile Mixer (5) with six screws (1), lockwashers (2) and washers (3).

c. Follow-On Maintenance:

- Start engine, (Para 2-19).
- Check for leaks.
- Shut off engine, (Para 2-19).

END OF TASK

3-65. CONVEYOR BELT HYDRAULIC MOTOR REPLACEMENT.

This task covers:

a. Removal b. Installation c. Follow-On Maintenance

INITIAL SETUP

Tools and Special Tools
Tool Kit, General Mechanic's: Automotive (Item 19, Appendix I)
Cap and Plug Set (Item 3, Appendix I)
Pan, Drain (Item 12, Appendix I)

Personnel Required
Two

Materials/Parts
Hydraulic Oil (Item 5, Appendix H)
Tags, Identification (Item 13, Appendix H)
Preformed Packing Kit (Item 18, Appendix H)
Locknut (4) (MS51922-33)
Lockwasher (15) (MS35338-44)

Equipment Condition
Engine OFF, (Para 2-19)
Concrete Mobile Mixer unloaded, (Para 2-5)

a. Removal.

CAUTION

Use extreme care when removing panel from Concrete Mobile Mixer. Hoses will still be connected to gages and meters. Failure to comply may result in damage to equipment.

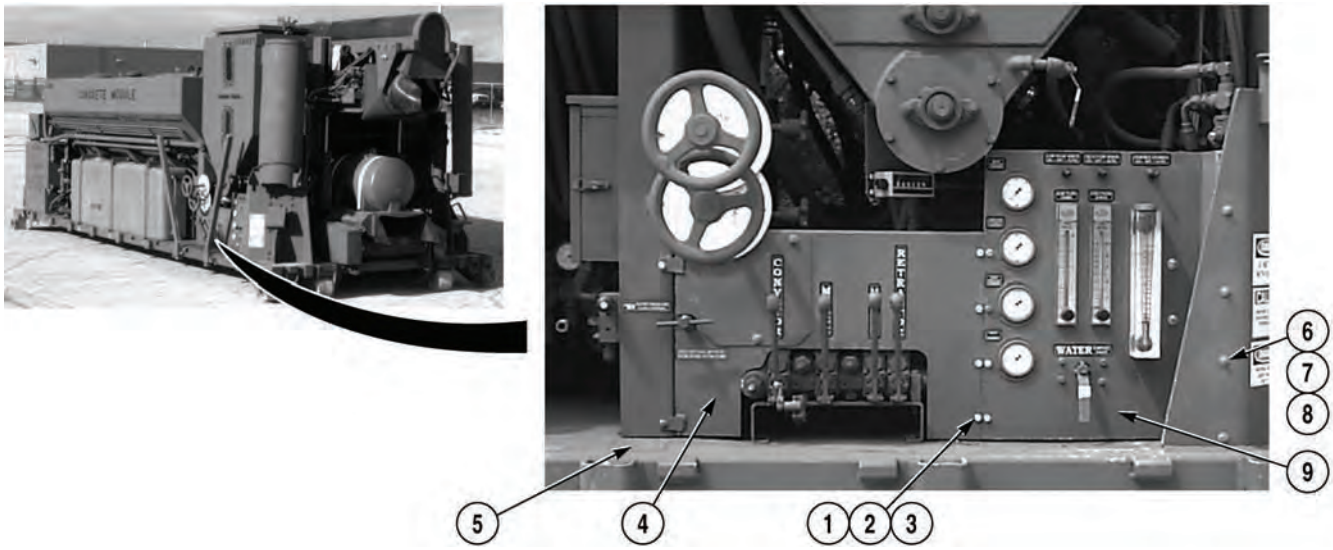

NOTE

Some models have five screws, lockwashers, and washers.

(1) Remove six screws (1), lockwashers (2), washers (3), and panel (4) from Concrete Mobile Mixer (5). Discard lockwashers.

NOTE

Some models have four screws, lockwashers, and washers.

(2) Remove five screws (6), lockwashers (7), washers (8), and panel (9) from Concrete Mobile Mixer (5). Discard lockwashers.

3-65. CONVEYOR BELT HYDRAULIC MOTOR REPLACEMENT (CONT).

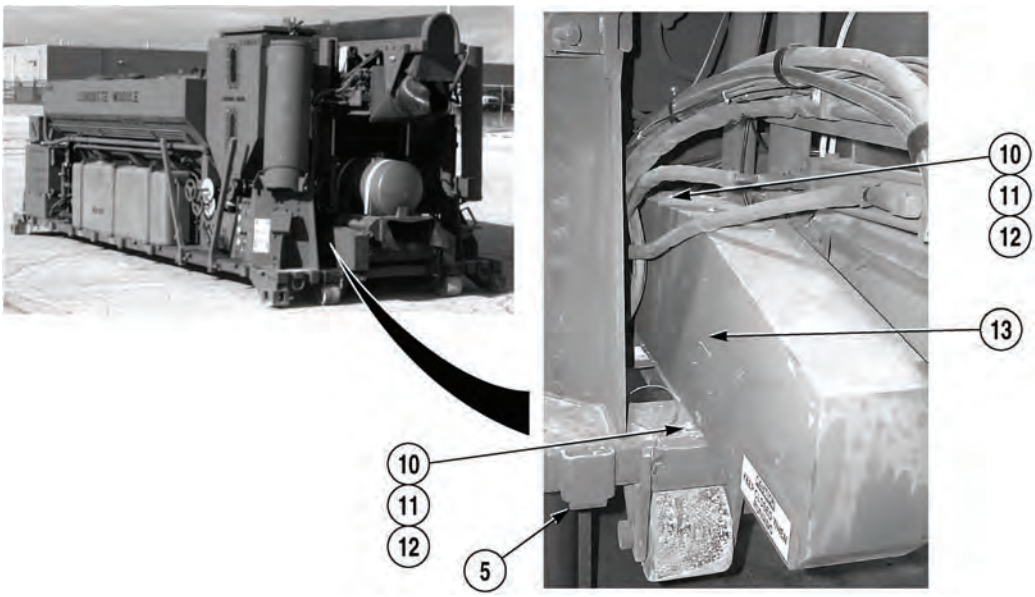

(3) Remove four screws (10), lockwashers (11), washers (12), and guard (13) from Concrete Mobile Mixer (5). Discard lockwashers.

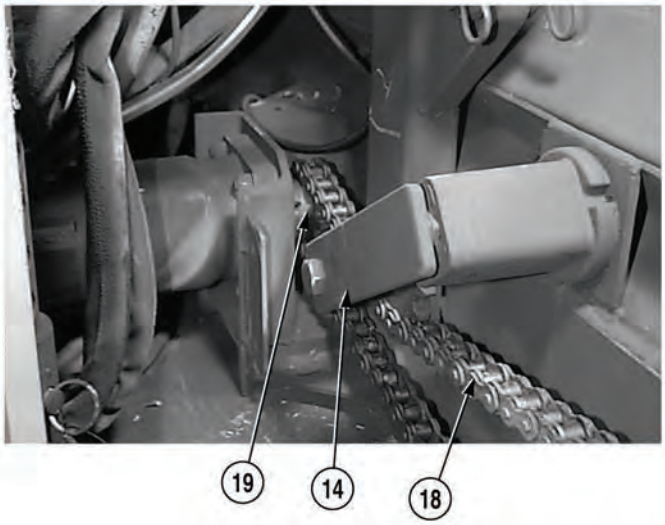

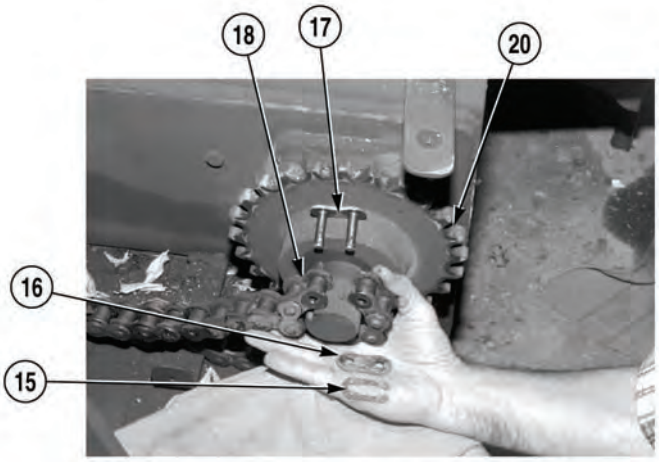

NOTE

- Pry up on tension arm to release tension on chain.
- Note position of chain prior to removal.
- It may be necessary to rotate conveyor to access master link.

(4) With the aid of an assistant, pry tension arm (14) up and remove clip (15), plate (16), master link (17), and chain (18) from sprocket (19), and sprocket (20).

3-65. CONVEYOR BELT HYDRAULIC MOTOR REPLACEMENT (CONT).

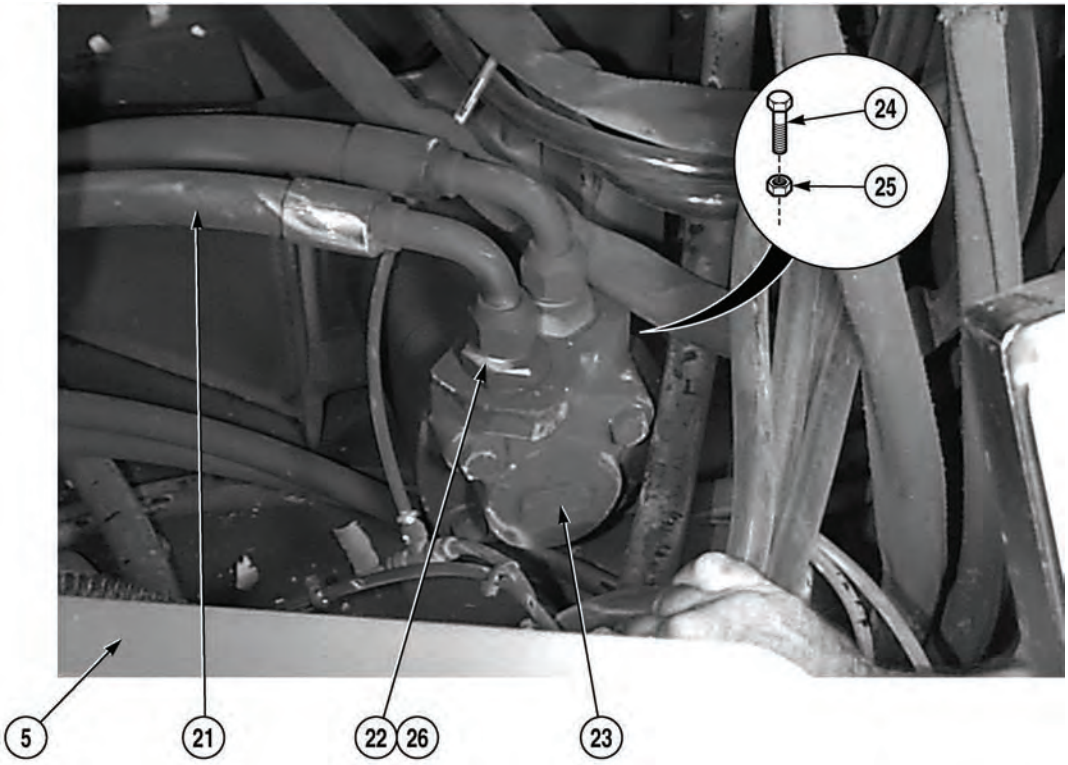

NOTE

- Tag and mark hoses prior to removal.
- Note position of fittings prior to removal.
- Position drain pan under hoses to catch excess oil.
- Cap and plug hoses upon removal.

(5) Remove two hoses (21) from fittings (22).

WARNING

Hydraulic motor weighs approximately 75 lb (34 kg). Do not attempt to lift or move hydraulic motor without the aid of an assistant and a lifting device. Failure to comply could result in serious injury to personnel.

(6) Attach lifting device to hydraulic motor (23).

(7) With the aid of an assistant, remove four screws (24), locknuts (25), and hydraulic motor (23) from Concrete Mobile Mixer (5). Discard locknuts.

(8) Remove lifting device from hydraulic motor (23).

(9) Remove two fittings (22) and preformed packings (26) from hydraulic motor (23). Discard preformed packings.

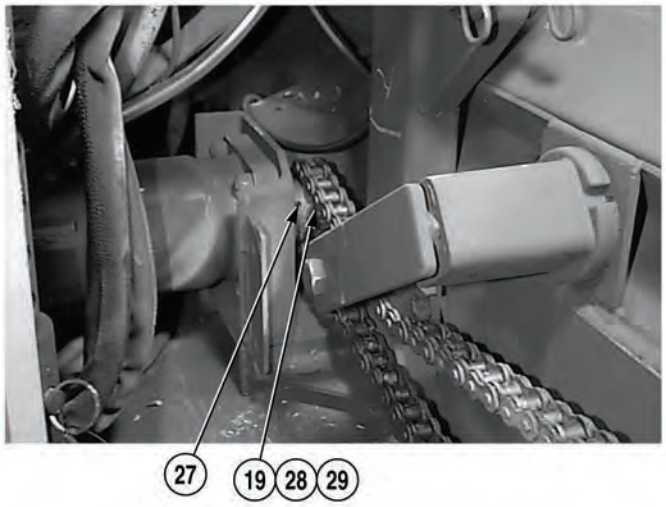

CAUTION

Note position of sprocket prior to removal. There needs to be a minimum of 1/8 in. (3.18 mm) clearance between sprocket and Concrete Mobile Mixer. Failure to comply could result in damage to equipment.

(10) Loosen two set screws (27) and remove sprocket (19) from hydraulic motor shaft (28) and key (29).

b. Installation.

CAUTION

When installing sprocket, ensure there is a minimum of 1/8 in. (3.18 mm) clearance between sprocket and Concrete Mobile Mixer. Failure to comply would cause sprocket to rub against Concrete Mobile Mixer causing damage to equipment.

NOTE

Install sprocket in position as noted prior to removal.

(1) Position sprocket (19) on hydraulic motor shaft (28) and key (29). Tighten two set screws (27).

3-65. CONVEYOR BELT HYDRAULIC MOTOR REPLACEMENT (CONT).

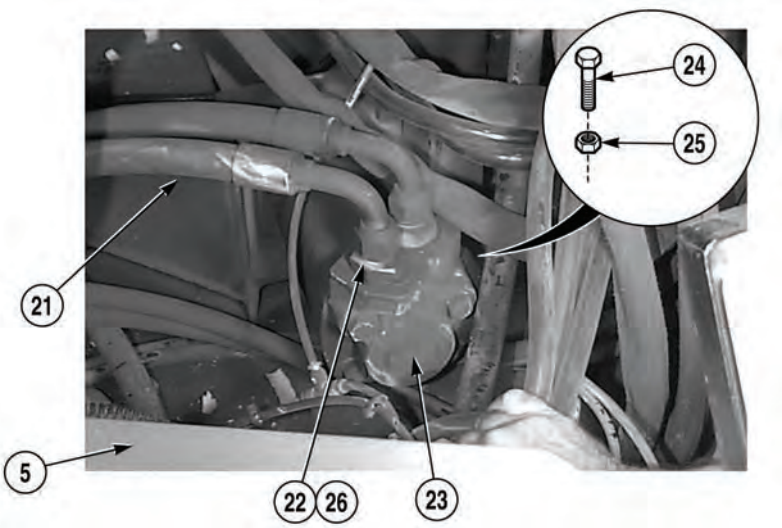

(2) Apply lubricating oil to two preformed packings (26).

(3) Install two preformed packings (26) and fittings (22) on hydraulic motor (23).

WARNING

Hydraulic motor weighs approximately 75 lb (34 kg). Do not attempt to lift or move hydraulic motor without the aid of an assistant and a lifting device. Failure to comply could result in serious injury to personnel.

(4) Attach lifting device to hydraulic motor (23).

(5) With the aid of an assistant, install hydraulic motor (23) on Concrete Mobile Mixer (5) with four screws (24) and locknuts (25).

(6) Remove lifting device from hydraulic motor (23).

NOTE

Ensure hoses and fittings installed in same position as noted prior to removal.

(7) Install two hoses (21) on fittings (22).

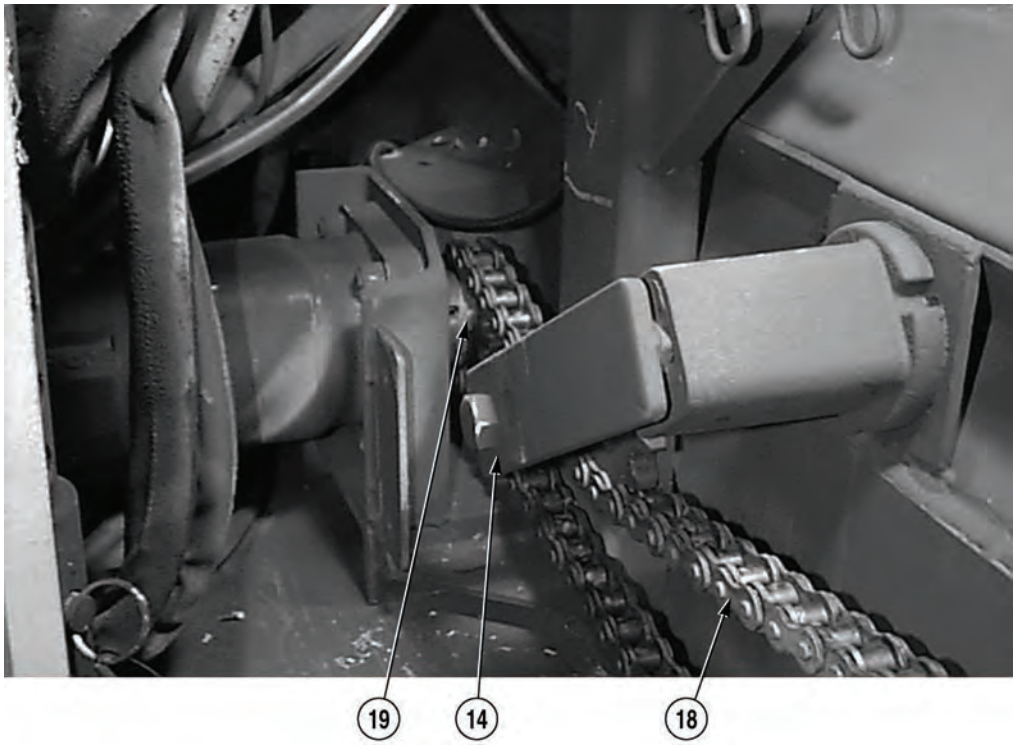

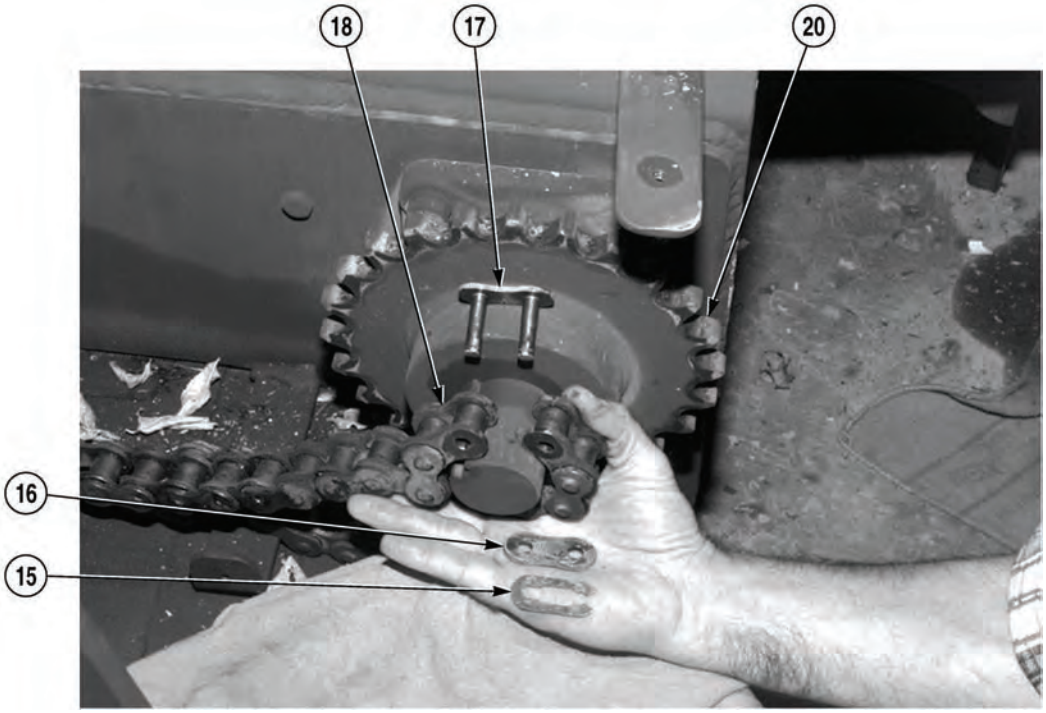

(8) With the aid of and assistant, pry tension arm (14) up and install chain (18), master link (17), plate (16), and clip (15) on sprocket (19) and sprocket (20).

3-65. CONVEYOR BELT HYDRAULIC MOTOR REPLACEMENT (CONT).

(9) Install guard (13) on Concrete Mobile Mixer (5) with four screws (10), lockwashers (11), and washers (12).

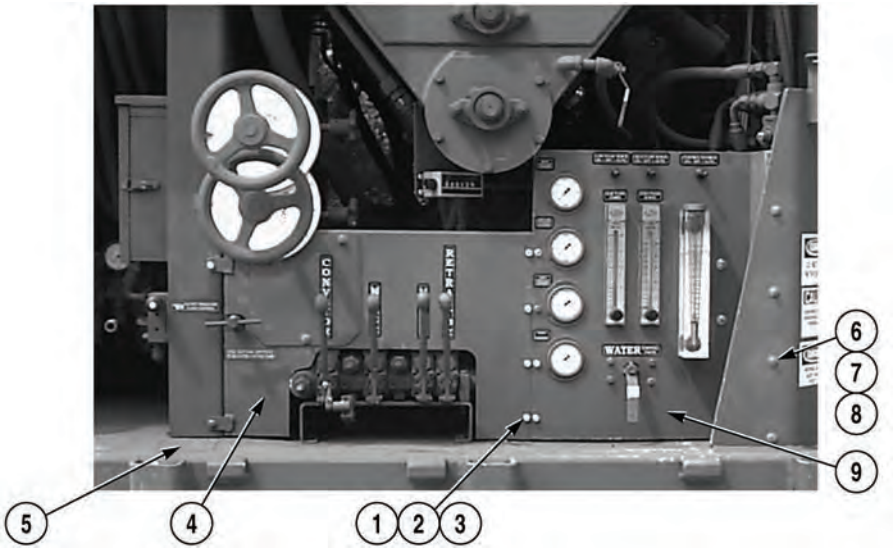

(10) Install panel (9) on Concrete Mobile Mixer (5) with five screws (6), lockwashers (7), and washers (8).

(11) Install panel (4) on Concrete Mobile Mixer (5) with six screws (1), lockwashers (2), and washers (3).

c. Follow-On Maintenance:

- Start engine, (Para 2-19).
- Check for leaks.
- Shut off engine, (Para 2-19).
- Check hydraulic reservoir level, (Para 2-10).

END OF TASK

3-66. WATER PRESSURE FLOW CONTROL VALVE REPLACEMENT.

This task covers:

a. Removal b. Installation c. Follow-On Maintenance

INITIAL SETUP

Tools and Special Tools
Tool Kit, General Mechanic's: Automotive (Item 19, Appendix I)
Cap and Plug Set (Item 3, Appendix I)
Pan, Drain (Item 12, Appendix I)

Materials/Parts
Hydraulic Oil (Item 5, Appendix H)
Tags, Identification (Item 13, Appendix H)
Preformed Packing Kit (Item 18, Appendix H)
Lockwasher (2) (MS35338-44)

Equipment Condition
Engine OFF, (Para 2-19)
Concrete Mobile Mixer unloaded, (Para 2-5)

a. Removal.

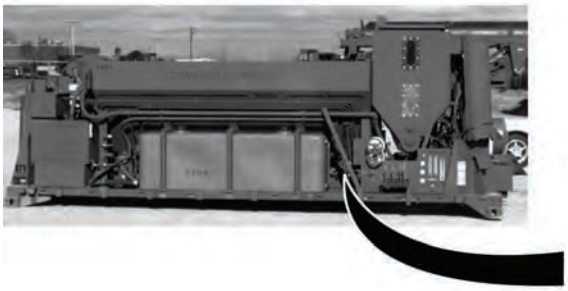

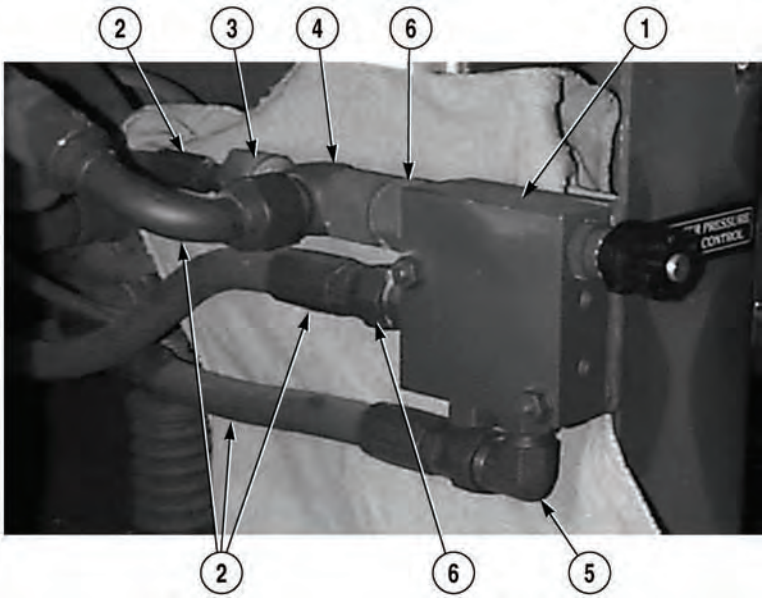

NOTE

- Tag and mark hoses prior to removal.
- Cap and plug hoses upon removal.

(1) Position drain pan under water pressure control valve (1).

(2) Remove four hoses (2) from reducer (3), tee (4), elbow (5), and fitting (6).

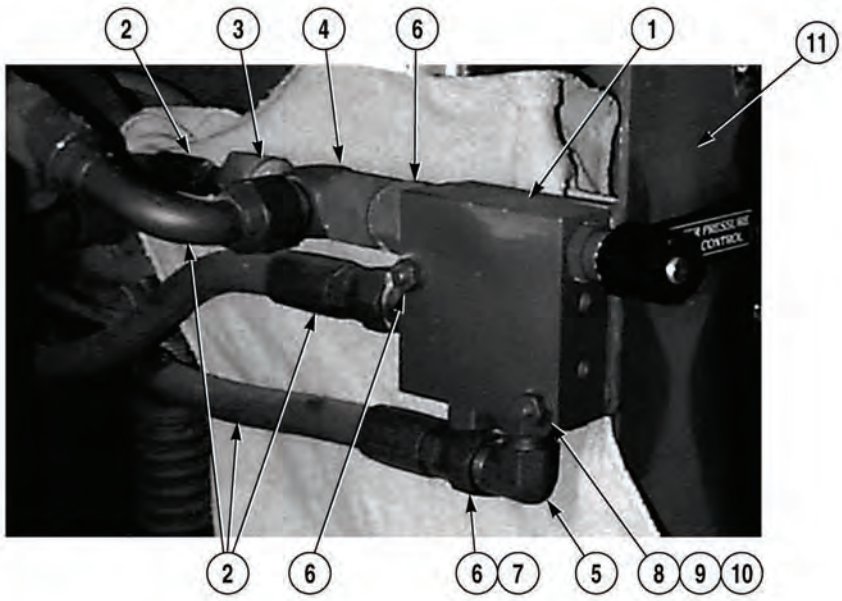

NOTE

Note location and position of fittings, reducer, tee, and elbow prior to removal.

(3) Remove two fittings (6), reducer (3), tee (4), elbow (5), and three preformed packings (7) from water pressure control valve (1). Discard preformed packings.

NOTE

Some models do not have washers.

(4) Remove two nuts (8), lockwashers (9), water pressure control valve (1), and two washers (10) from Concrete Mobile Mixer (11). Discard lockwashers.

b. Installation.

(1) Install two washers (10) and water pressure control valve (1) on Concrete Mobile Mixer (11) with two lockwashers (9) and nuts (8).

(2) Apply lubricating oil to three preformed packings (7).

NOTE

Install fittings, reducer, tee, and elbow as noted prior to removal.

(3) Install three preformed packings (7), two fittings (6), reducer (3), tee (4), and elbow (5) on water pressure control valve (1).

NOTE

Install hoses as noted during removal.

(4) Install four hoses (2) on reducer (3), tee (4), elbow (5), and fitting (6).

c. Follow-On Maintenance:

- Start engine, (Para 2-19).
- Check for leaks.
- Shut off engine, (Para 2-19).
- Check hydraulic reservoir level, (Para 2-6).

END OF TASK

3-67. WATER PUMP/LIFT CYLINDER CONTROL VALVE REPLACEMENT.

This task covers:

a. Removal b. Installation c. Follow-On Maintenance

INITIAL SETUP

Tools and Special Tools
Tool Kit, General Mechanic's: Automotive (Item 19, Appendix I)
Cap and Plug Set (Item 3, Appendix I)

Materials/Parts
Rags, Wiping (Item 9, Appendix H)
Sealing Compound (Item 11, Appendix H)
Tags, Identification (Item 13, Appendix H)
Lockwasher (8) (MS35338-44)

Equipment Condition
Engine OFF, (Para 2-19)
Concrete Mobile Mixer unloaded, (Para 2-5)

a. Removal

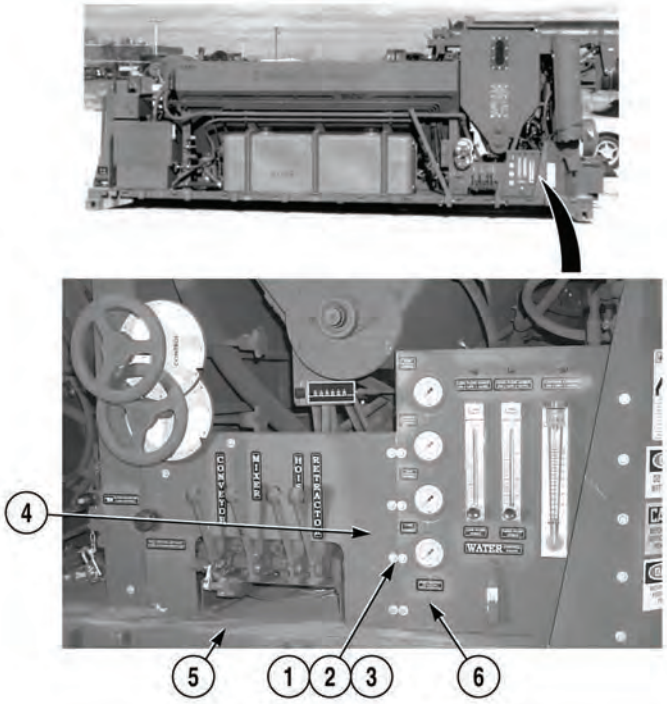

NOTE

Some models have five screws, lockwashers, and washers.

(1) Remove six screws (1), lockwashers (2), washers (3), and panel (4) from Concrete Mobile Mixer (5) and panel (6). Discard lockwashers.

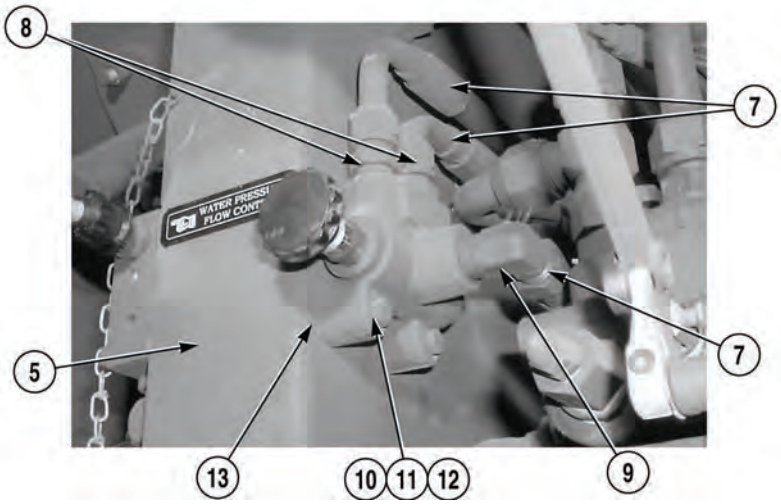

NOTE

- Tag and mark hoses prior to removal.
- Cap and plug all hoses upon removal.
- Position rags under water pump/lift cylinder control valve to catch oil that may drip from hoses and valve.

(2) Remove three hoses (7) from two fittings (8) and elbow (9).

(3) Remove two screws (10), nuts (11), lockwashers (12), and water pump/lift cylinder control valve (13) from Concrete Mobile Mixer (5). Discard lockwashers.

(4) Remove two fittings (8) and elbow (9) from water pump/lift cylinder control valve (13).

3-67. WATER PUMP/LIFT CYLINDER CONTROL VALVE REPLACEMENT (CONT).

b. Installation.

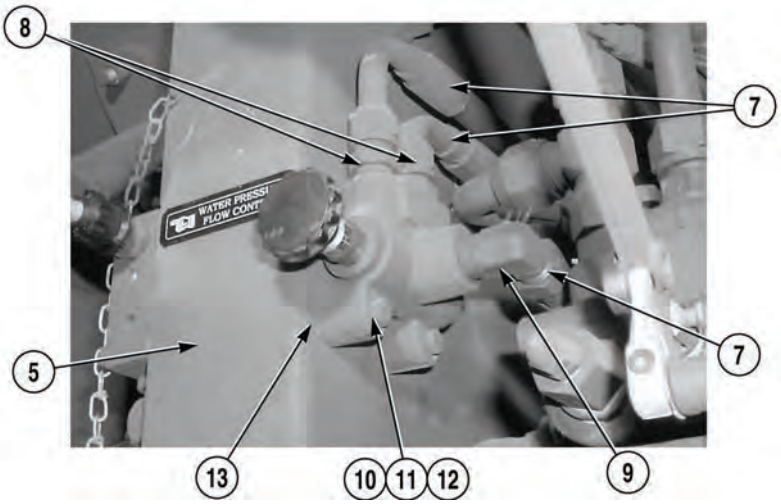

WARNING

Adhesives, solvents, and sealing compounds can burn easily, give off harmful vapors, and are harmful to skin and clothing. To avoid injury or death, keep away from open fire and use in well-ventilated area. If adhesives, solvent, or sealing compound gets on skin or clothing, wash immediately with soap and water.

(1) Apply sealing compound to threads of two fittings (8) and elbow (9).

(2) Install two fittings (8) and elbow (9) on water pump/lift cylinder control valve (13).

(3) Install water pump/lift cylinder control valve (13) on Concrete Mobile Mixer (5) with two screws (10), lockwashers (12) and nuts (11).

NOTE

Install hoses as noted prior to removal.

(4) Install three hoses (7) on two fittings (8) and elbow (9).

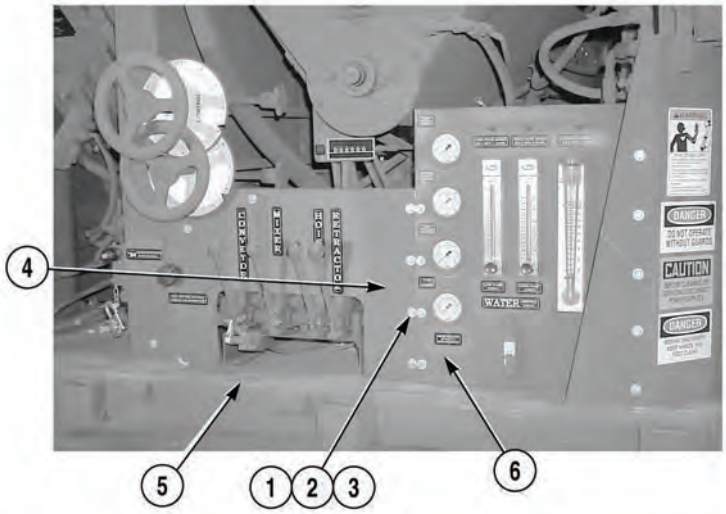

(5) Install panel (4) on Concrete Mobile Mixer (5) and panel (6) with six screws (1) lockwashers (2), and washers (3).

c. Follow-On Maintenance:

- Start engine, (Para 2-19).
- Check for leaks.
- Shut off engine, (Para 2-19).
- Check hydraulic reservoir level, (Para 2-6).

END OF TASK

3-68. UPPER CEMENT BIN AUGER AND BEARING REPLACEMENT.

This task covers:

a. Removal b. Installation c. Follow-On Maintenance

INITIAL SETUP

Tools and Special Tools
Tool Kit, General Mechanic's: Automotive (Item 19, Appendix I)

Materials/Parts
Lockwasher (4) (MS35338-44)
Lockwasher (5) (MS35338-45)
Lockwasher (4) (MS35338-47)
Adhesive (Item 14, Appendix H)
Rope ½ in. x 25 ft (Item 10, Appendix H)

Personnel Required
Two

Equipment Condition
Engine OFF, (Para 2-19)
Concrete Mobile Mixer unloaded, (Para 2-5)

a. Removal.

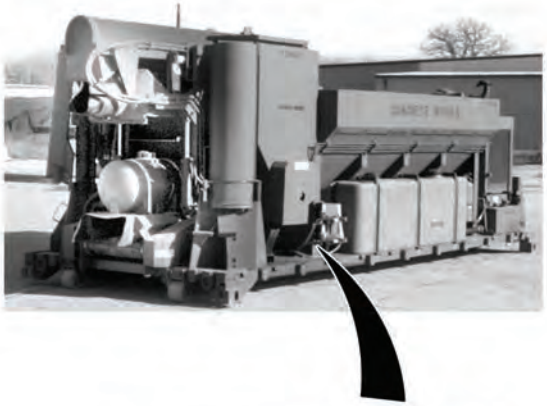

NOTE

Perform Steps (1) through (9) on right side of Concrete Mobile Mixer.

(1) Remove four screws (1), lockwashers (2), washers (3), and cover (4) from cement bin (5). Discard lockwashers.

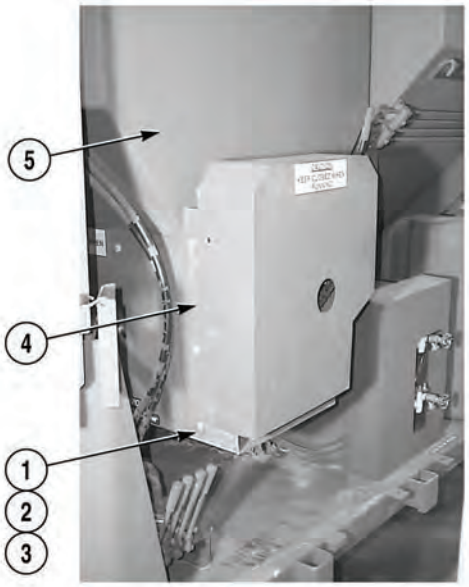

NOTE

Some models have washer, lockwasher, and nut.

(2) Loosen locknut (6) and screw (7) on idler sprocket (8).

(3) Loosen chain (9) and idler sprocket (8).

(4) Remove clip (10), plate (11), master link (12), and chain (9) from sprocket (13), sprocket (14), and idler sprocket (8).

(5) Loosen two setscrews (15) on sprocket (13) and key (16).

(6) Remove sprocket (13) and key (16) from upper auger shaft (17).

(7) Loosen two setscrews (18) on bearing (19).

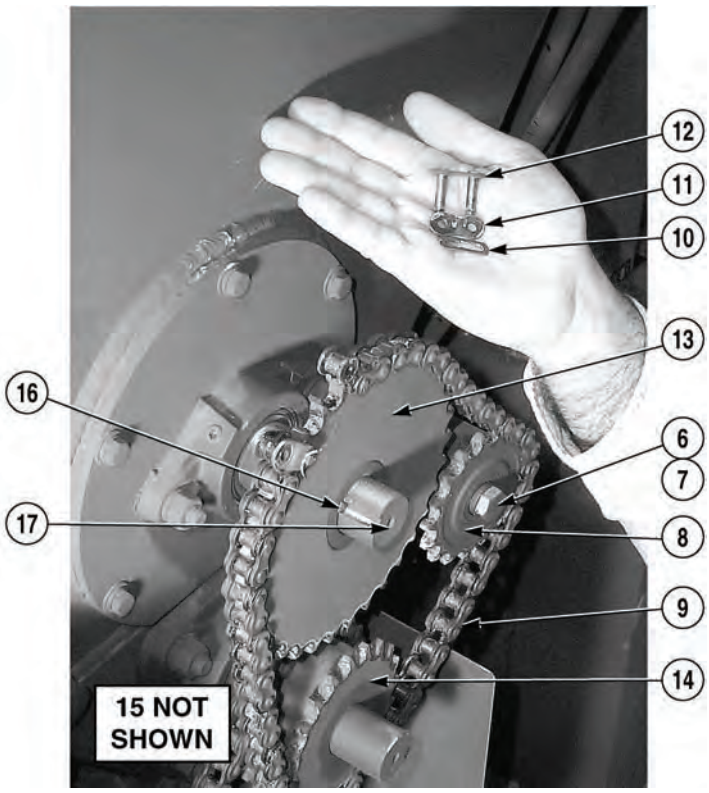

NOTE

To aid upper auger and bearing removal, support upper auger with rope through top access hatch.

(8) Remove two nuts (20), lockwashers (21), and bearing (19) from upper auger shaft (17) and cover plate (22). Discard lockwashers.

(9) Remove adhesive from bearing (19) and cover plate (22).

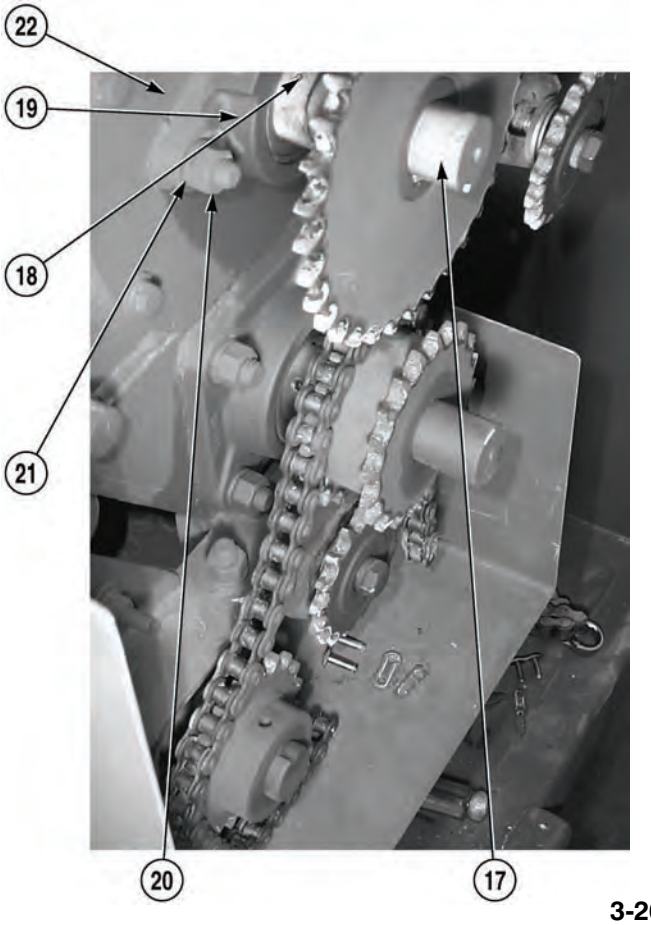

3-68. UPPER CEMENT BIN AUGER AND BEARING REPLACEMENT (CONT).

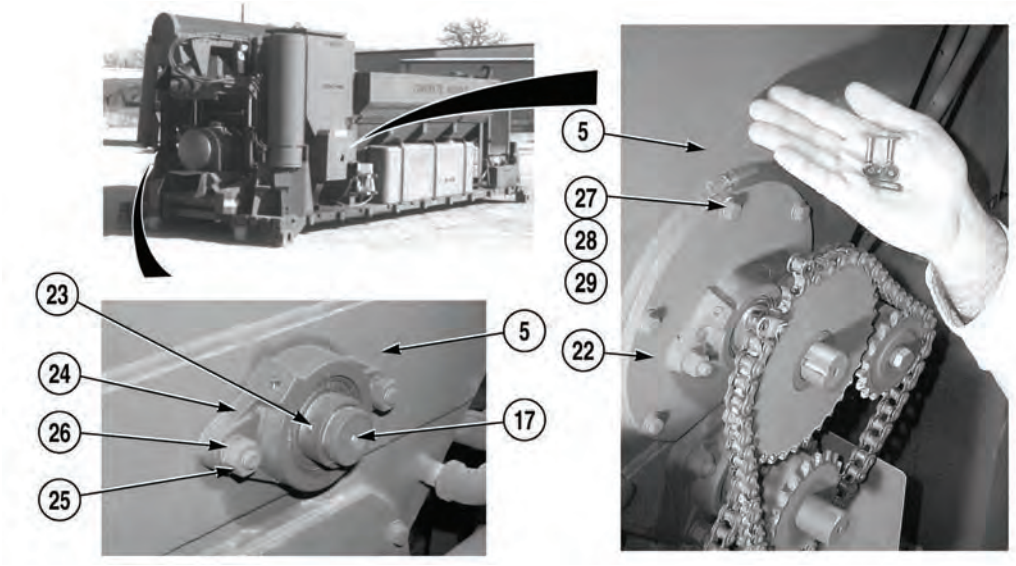

NOTE

Perform Steps (10) through (12) on left side of Concrete Mobile Mixer.

(10) Loosen two setscrews (23) on bearing (24).

(11) Remove two nuts (25), lockwashers (26), and bearing (24) from upper auger shaft (17) and cement bin (5). Discard lockwashers.

(12) Remove adhesive from bearing (24) and cement bin (5).

WARNING

Upper auger weighs 75 lbs (34 kg). Do not attempt to lift or move auger without aid of an assistant. Failure to comply could result in serious injury to personnel.

NOTE

Perform Steps (13) through (15) if auger removal is required.

(13) Remove five screws (27), lockwashers (28), washers (29), and cover plate (22) from cement bin (5). Discard lockwashers.

(14) With aid of an assistant, remove upper auger shaft (17) from cement bin (5).

(15) Remove adhesive from cover plate (22) and cement bin (5).

b. Installation.

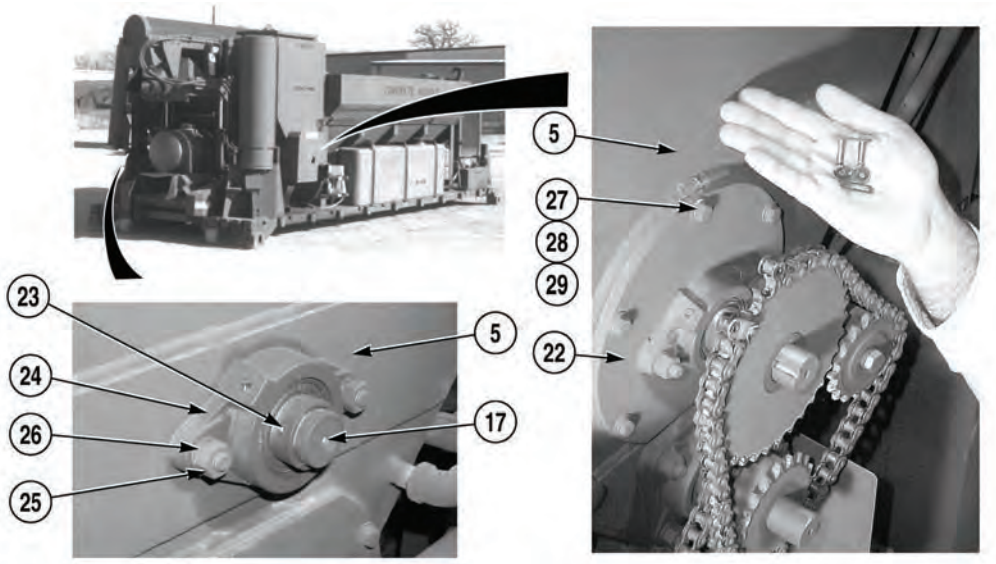

WARNING

Upper auger weighs 75 lbs (34 kg). Do not attempt to lift or move auger without aid of an assistant. Failure to comply could result in serious injury to personnel.

NOTE

- Perform Steps (1) through (3) only if auger has been removed.
- To aid installation of upper auger and bearings, support upper auger with rope through to access hatch.

(1) With the aid of an assistant, position upper auger shaft (17) from right side of cement bin (5) through hole on left side.

WARNING

Adhesives, solvents, and sealing compounds can burn easily, can give off harmful vapors, and are harmful to skin and clothing. To avoid injury or death, keep away from open fire and use in well-ventilated area. If adhesives, solvent, or sealing compound gets on skin or clothing, wash immediately with soap and water.

(2) Apply adhesive to cover plate (22).

(3) Install cover plate (22) on cement bin (5) with five washers (29), lockwashers (28), and screws (27).

3-68. UPPER CEMENT BIN AUGER AND BEARING REPLACEMENT (CONT).

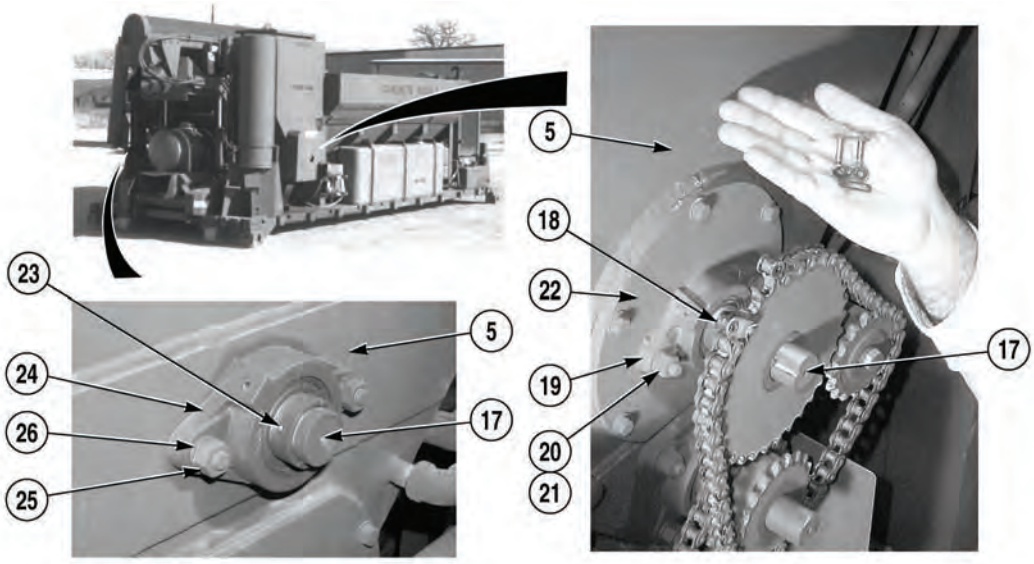

WARNING

Adhesives, solvents, and sealing compounds can burn easily, can give off harmful vapors, and are harmful to skin and clothing. To avoid injury or death, keep away from open fire and use in well-ventilated area. If adhesives, solvent, or sealing compound gets on skin or clothing, wash immediately with soap and water.

NOTE

Do not tighten setscrews until both bearings (left and right) have been installed.

(4) Apply adhesive to mounting surface of two bearings (24) and (19).

(5) Install bearing (24) on upper auger shaft (17) and cement bin (5) with two lockwashers (26) and nuts (25).

(6) Install bearing (19) on upper auger shaft (17) and cover plate (22) with two lockwashers (21) and nuts (20).

NOTE

Ensure auger shaft is seated into bearing on left side.

(7) Tighten four setscrews (23) and (18) in two bearings (24) and (19).

NOTE

- Do not tighten setscrews on sprocket.
- Install sprocket in position as noted prior to removal.

(8) Install sprocket (13) and key (16) on upper auger shaft (17).

(9) Install chain (9) master link (12), plate (11), and clip (10) on idler sprocket (8), sprocket (13) and sprocket (14).

(10) Check alignment of sprocket (13) on upper auger shaft (17) and chain (9). Adjust accordingly.

(11) Tighten setscrew (15) on sprocket (13).

(12) Adjust idler sprocket (8) until slack in chain is removed. Tighten locknut (6) on screw (7).

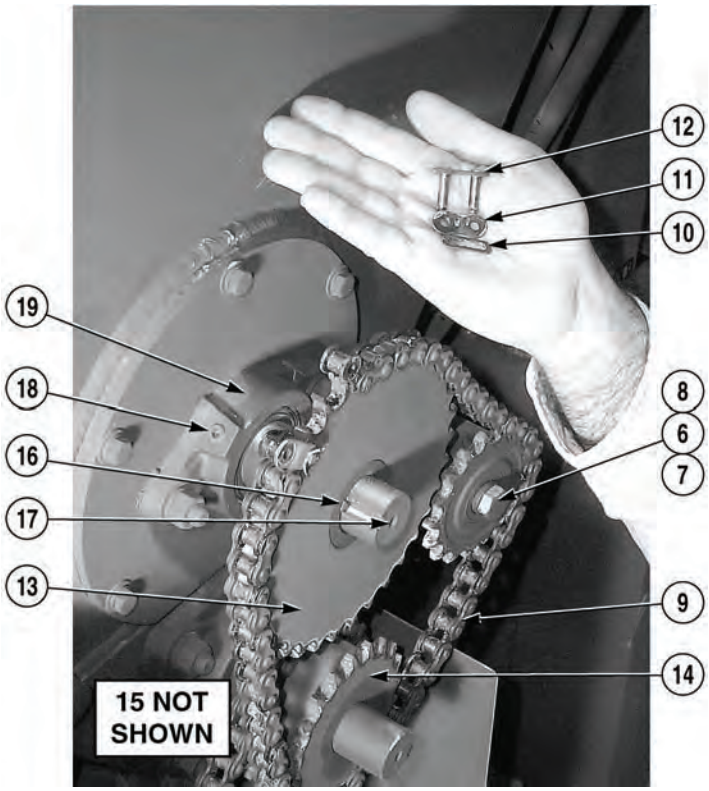

(13) Install cover (4) on cement bin (5) with four washers (3), lockwashers (2), and screws (1).

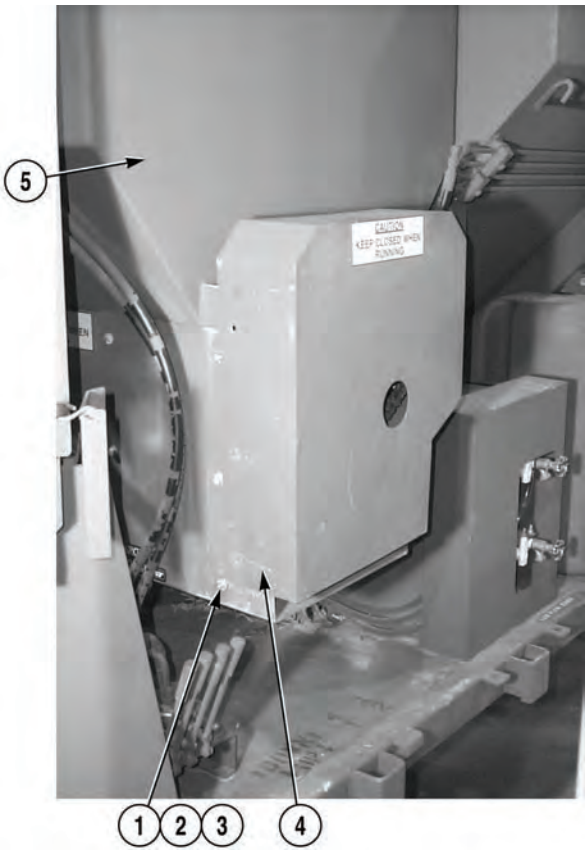

c. Follow-On Maintenance:

- Start engine, (Para 2-19).
- Check upper auger operation, (Para 2-22).
- Shut off engine, (Para 2-19).

END OF TASK

3-69. LOWER CEMENT BIN AUGER AND BEARING REPLACEMENT.

This task covers:

a. Removal b. Installation c. Follow-On Maintenance

INITIAL SETUP

Tools and Special Tools
Tool Kit, General Mechanic's: Automotive (Item 19, Appendix I)

Materials/Parts
Tags, Identification (Item 13, Appendix H)
Lockwasher (4) (MS35338-44)
Lockwasher (5) (MS35338-45)
Lockwasher (2) (MS35338-47)
Lockwasher (4) (MS35338-48)
Rope ½ in. x 25 ft. (Item 10, Appendix H)
Adhesive (Item 14, Appendix H)

Personnel Required
Two

Equipment Condition
Engine OFF, (Para 2-19)
Concrete Mobile Mixer unloaded, (Para 2-5)

a. Removal.

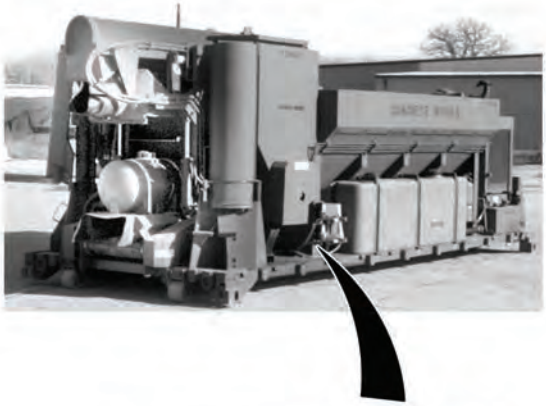

NOTE

Perform Steps (1) through (9) on right side of Concrete Mobile Mixer.

(1) Remove four screws (1), lockwashers (2), washers (3), and cover (4) from cement bin (5). Discard lockwashers.

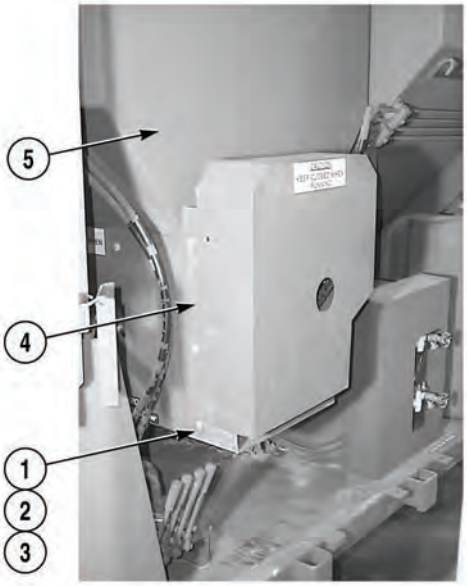

NOTE

- Perform Step (2) on upper auger.
- Note position and alignment of sprocket prior to removal.
- Some models have washers, lockwashers, and nut.

(2) Loosen locknut (6), and screw (7), on sprocket (8).

(3) Remove clip (9), plate (10), master link (11), and chain (12) from three sprockets (8), (13), and (14).

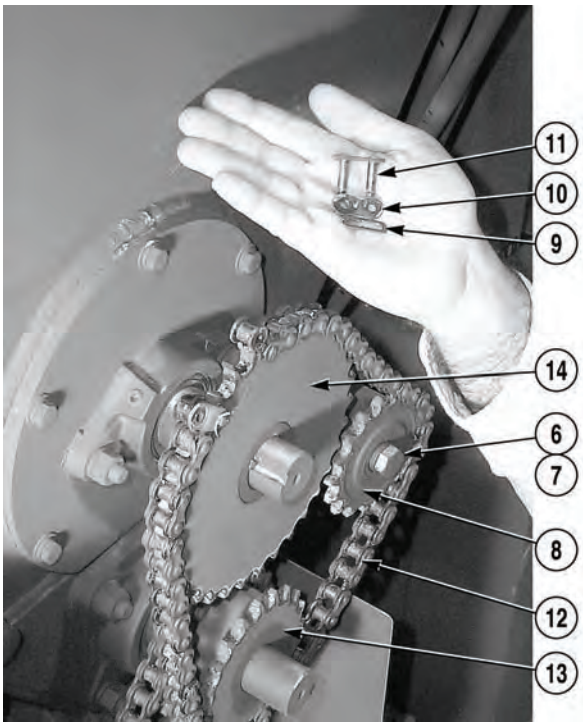

NOTE

- Perform Step (4) on lower auger.
- Note position and alignment of sprocket prior to removal.
- Some models have washer, lockwashers, and nut.

(4) Loosen locknut (15) and screw (16) on sprocket (17).

(5) Remove clip (18), plate (19), master link (20), and chain (21) from three sprockets (13), (17), and (22).

(6) Loosen two setscrews (23) and remove sprocket (13) and key (25) from lower auger shaft (24).

(7) Loosen two setscrews (26) on bearing (27).

NOTE

To aid lower auger and bearing removal, support lower auger with rope through top access hatch.

(8) Remove four nuts (28), lockwashers (29), and bearing (27) from lower auger shaft (24) and cement bin (5). Discard lockwashers.

(9) Remove adhesive from bearing (27) and cement bin (5).

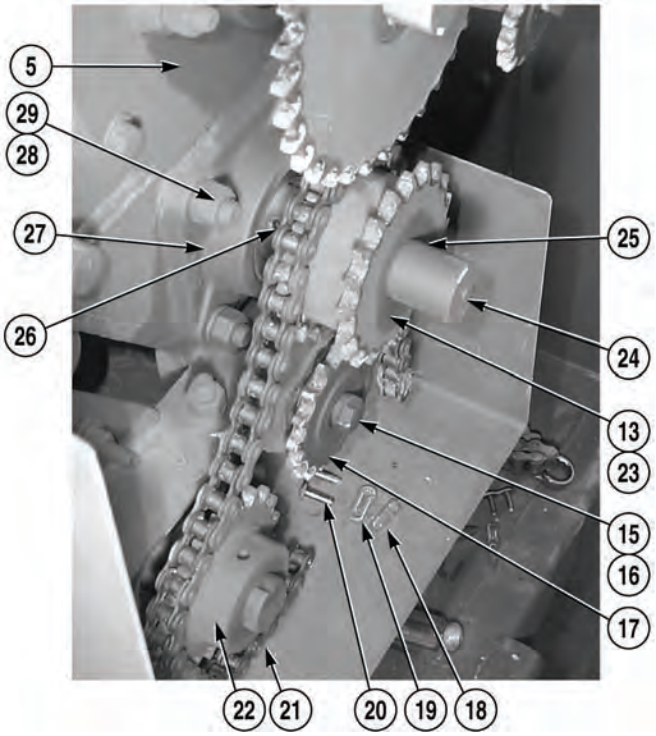

3-69. LOWER CEMENT BIN AUGER AND BEARING REPLACEMENT (CONT).

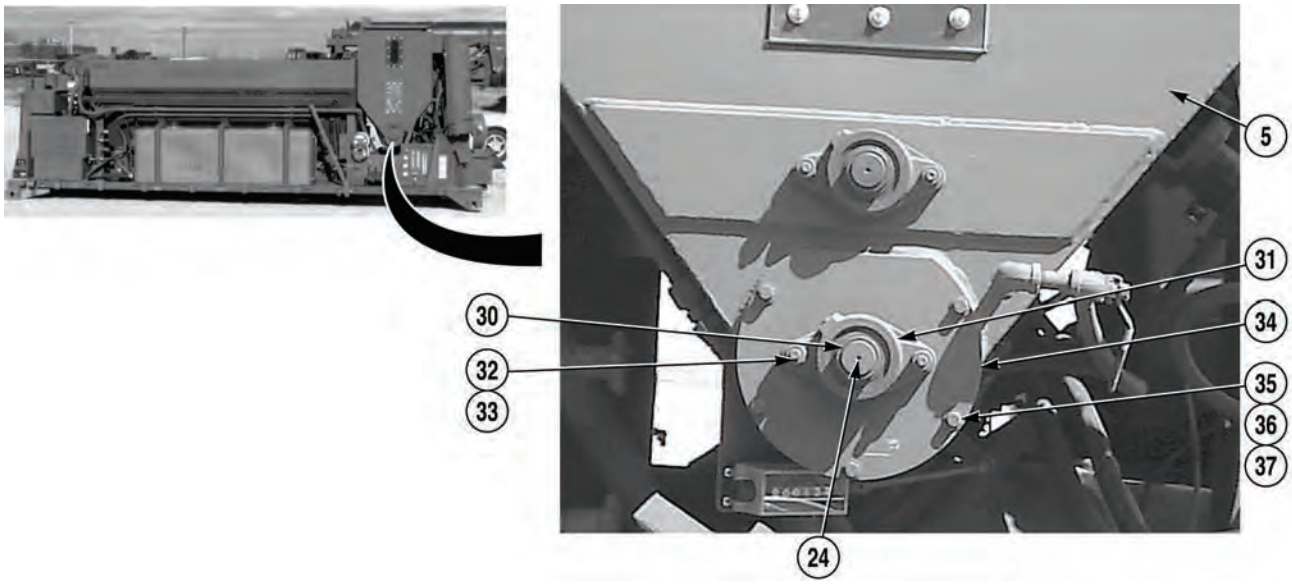

NOTE

Perform Steps (10) through (15) on left side of Concrete Mobile Mixer.

(10) Loosen two setscrews (30) on bearing (31).

(11) Remove two nuts (32), lockwashers (33), and bearing (31) from cover plate (34) and lower auger shaft (24). Discard lockwashers.

(12) Remove adhesive from bearing (31) and cover plate (34).

NOTE

Perform Steps (13) through (15) only if auger removal is required.

(13) Remove five screws (35), lockwashers (36), washers (37), and cover plate (34) from cement bin (5). Discard lockwashers.

WARNING

Lower auger weighs 75 lb (34 kg). Do not attempt to lift or move auger without aid of an assistant. Failure to comply could result in serious injury to personnel.

(14) With the aid of an assistant, remove lower auger shaft (24) from cement bin (5)

(15) Remove adhesive from cover plate (34) and cement bin (5).

b. Installation.

WARNING

Lower auger weighs 75 lb (34 kg). Do not attempt to lift or move auger without aid of an assistant. Failure to comply could result in serious injury to personnel.

NOTE

- Perform Steps (1) through (4) from left side of Concrete Mobile Mixer.
- Perform Steps (1) through (3) only if lower auger has been removed.
- To aid installation of lower auger and bearings, support lower auger through top access hatch.

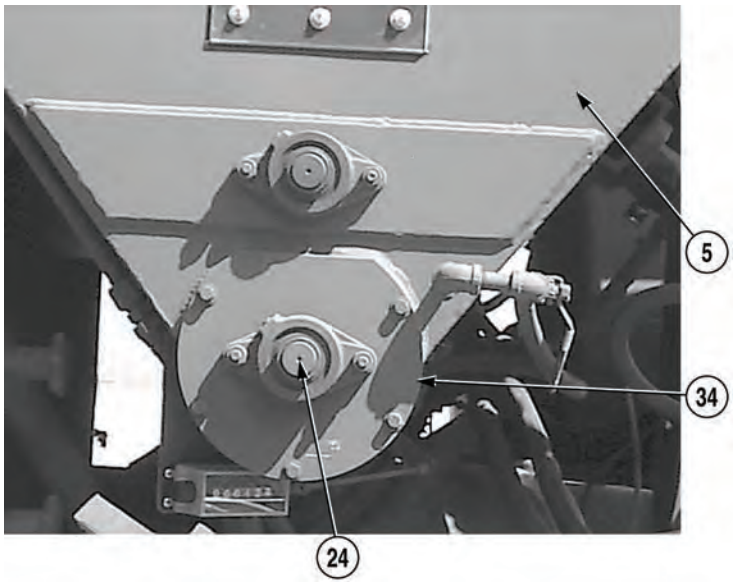

(1) With the aid of an assistant, position lower auger shaft (24) through hole in left side of cement bin (5) and through hole on right side.

WARNING

Adhesives, solvents, and sealing compounds can burn easily, can give off harmful vapors, and are harmful to skin and clothing. To avoid injury or death, keep away from open fire and use in well-ventilated area. If adhesives, solvent, or sealing compound gets on skin or clothing, wash immediately with soap and water.

(2) Apply adhesive to cover plate (34).

3-69. LOWER CEMENT BIN AUGER AND BEARING REPLACEMENT (CONT).

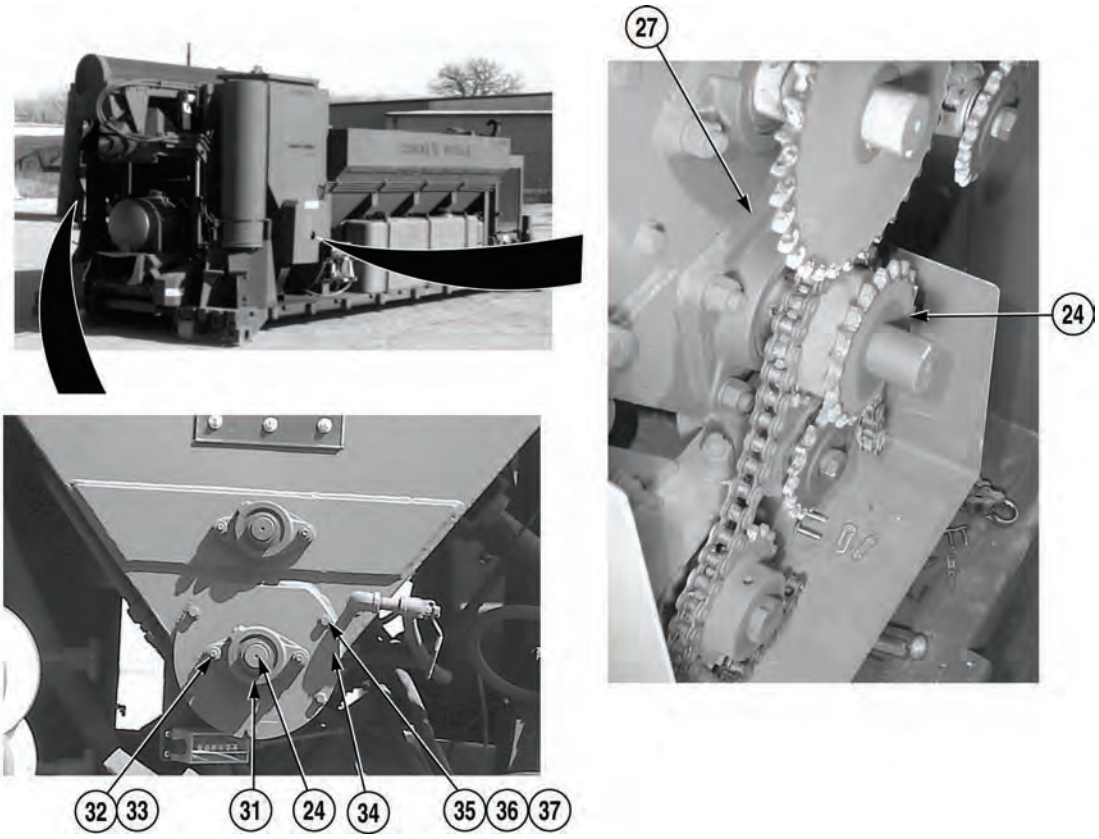

(3) Install cover plate (34) on cement bin (5) with five washers (37), lockwashers (36), and screws (35).

WARNING

Adhesives, solvents, and sealing compounds can burn easily, can give off harmful vapors, and are harmful to skin and clothing. To avoid injury or death, keep away from open fire and use in well-ventilated area. If adhesives, solvent, or sealing compound gets on skin or clothing, wash immediately with soap and water.

NOTE

Do not tighten setscrews until both bearings (left) and (right) have been installed.

(4) Apply adhesive to mounting surface of two bearings (27) and (31).

(5) Install bearing (31) on lower auger shaft (24).

(6) Install two lockwashers (33), nuts (32), and bearing (31) on cover plate (34).

NOTE

Perform Steps (7) through (15) on right side of cement mixer.

(7) Install bearing (27) on lower auger shaft (24) and cement bin (5) with four lockwashers (29) and nuts (28).

(8) Tighten four setscrews (26) and (30) on two bearings (27) and (31).

(9) Install sprocket (13) on lower auger shaft (24) and key (25).

(10) Install chain (21) on three sprockets (13), (17), and (22) with master link (20), plate (19) and clip (18).

(11) Install chain (12) on three sprockets (8), (13) and (14) with master link (11), plate (10), and clip (9).

NOTE

Install sprocket in position as noted prior to removal.

(12) Check alignment of sprocket (13) on upper and lower auger and chain. Adjust accordingly.

(13) Tighten setscrew (23) on sprocket (13).

(14) Adjust chain tension until slack in two chains (21) and (12) are removed. Tighten two locknuts (15) and (6) on screws (16) and (7).

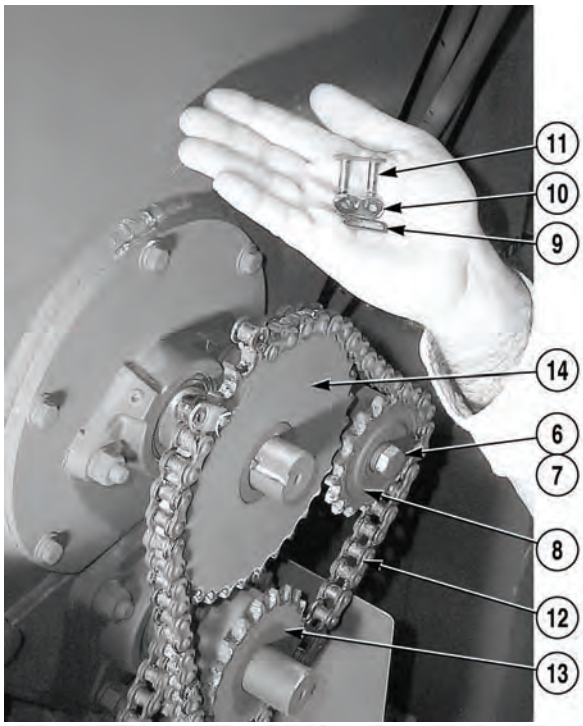

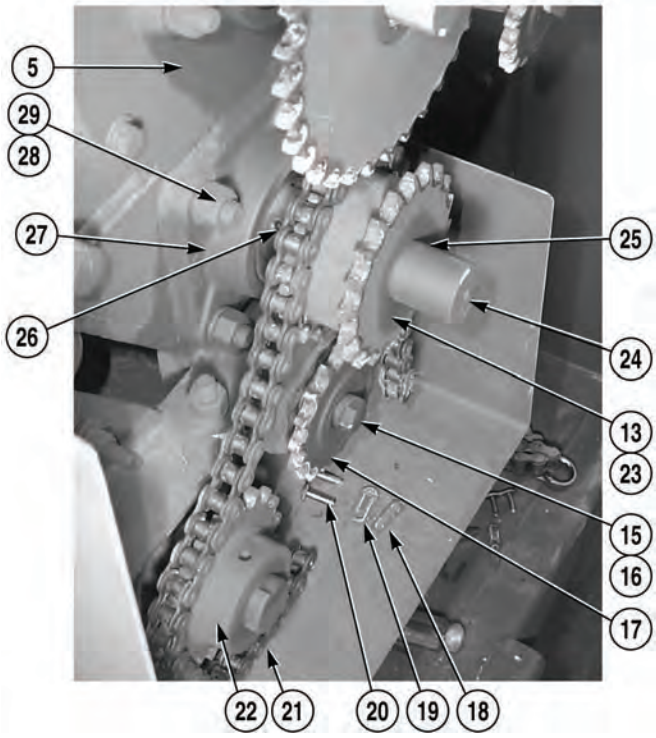

3-69. LOWER CEMENT BIN AUGER AND BEARING REPLACEMENT (CONT).

(15) Install cover (4) on cement bin (5) with four washers (3), lockwashers (2), and screws (1).

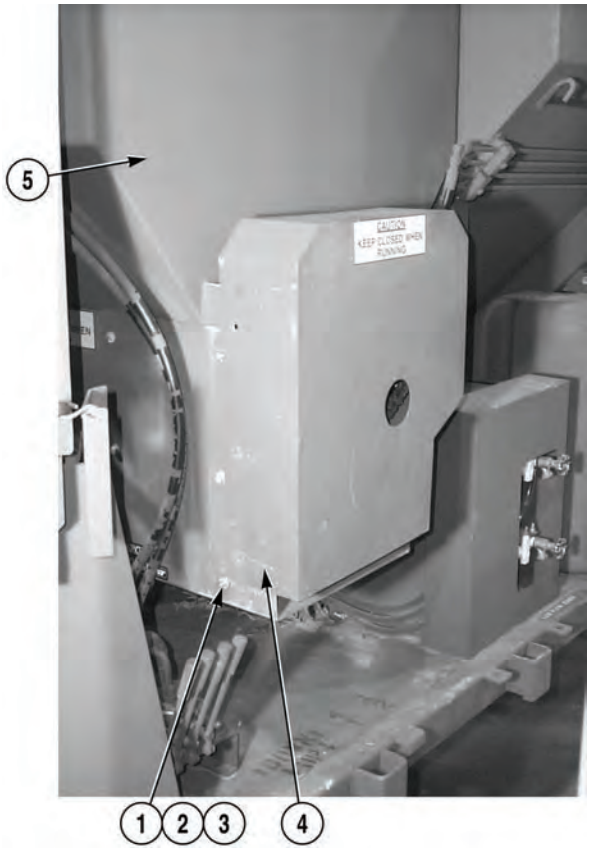

c. Follow-On Maintenance:

- Start engine, (Para 2-19).
- Check lower auger operation, (Para 2-22).
- Shut off engine, (Para 2-19).

END OF TASK

3-70. HYDRAULIC CONTROL VALVE (LIFT CYLINDERS) REPLACEMENT.

This task covers:

a. Removal b. Installation c. Follow-On Maintenance

INITIAL SETUP

Tools and Special Tools
Tool Kit, General Mechanic's: Automotive (Item 19, Appendix I)

Materials/Parts
Cable Ties (Item 2, Appendix H)
Hydraulic Oil (Item 5, Appendix H)
Tags, Identification (Item 13, Appendix H)
Lockwasher (4) (MS35338-46)
Preformed Packing Kit (Item 18, Appendix H)

Equipment Condition
Engine OFF, (Para 2-19)
Concrete Mobile Mixer unloaded, (Para 2-5)

a. Removal.

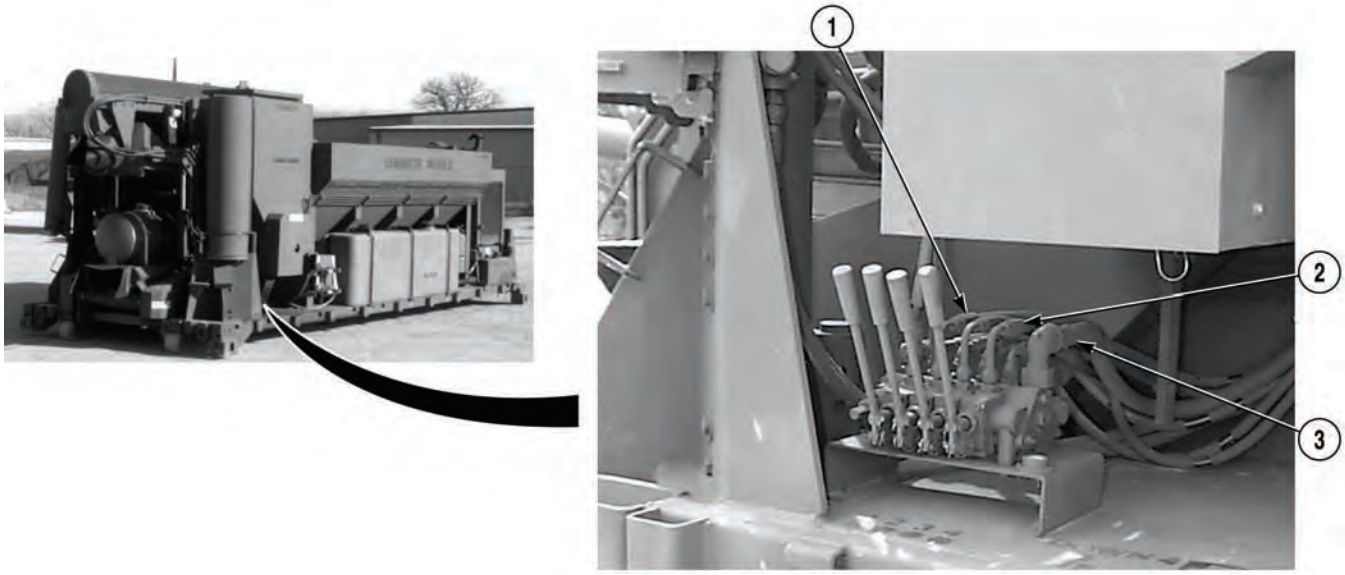

NOTE

- Remove cable ties as required.
- Tag and mark hoses prior to removal.
- Note location and position of elbows and adapters prior to removal.
- Cap and plug hoses upon removal.

(1) Position drain pan under hydraulic hoses (1), (2), and (3).

3-70. HYDRAULIC CONTROL VALVE (LIFT CYLINDERS) REPLACEMENT (CONT).

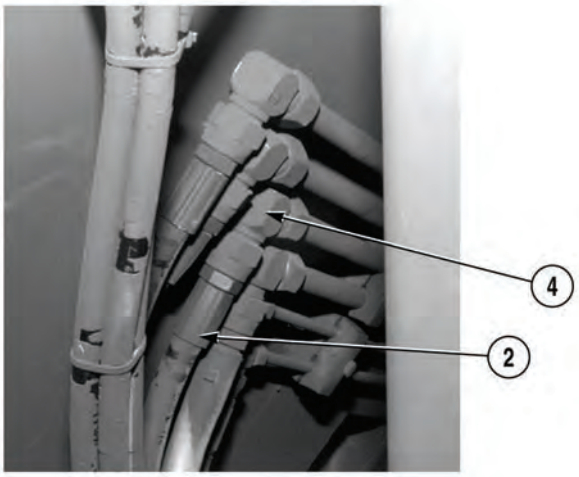

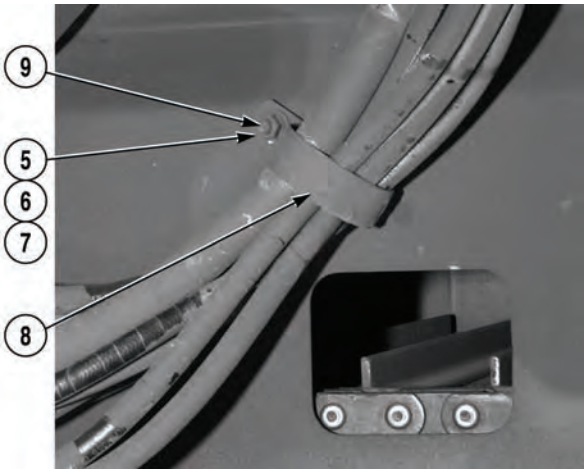

(2) Remove hose (2) from elbow (4).

(3) Remove nut (5), lockwasher (6), washer (7), and clamp (8) from stud (9). Discard lockwasher.

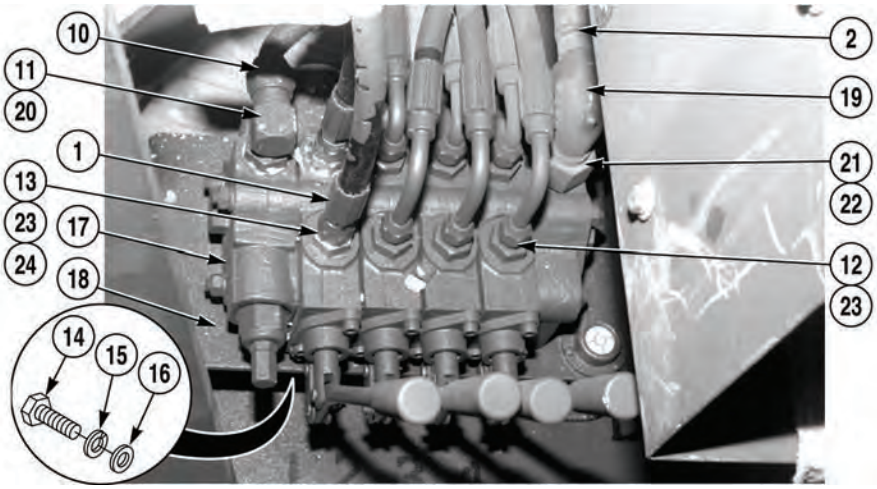

(4) Remove hose (10) from elbow (11).

NOTE

Note location of adapter (13) prior to removal.

(5) Remove eight hoses (1) from seven adapters (12) and adapter (13).

(6) Remove three screws (14), lockwashers (15), washers (16), and hydraulic control valve (17) from bracket (18). Discard lockwashers.

(7) Remove hose (2) from elbow (19).

(8) Remove elbow (11) preformed packing (20), elbow (19), adapter (21), and preformed packing (22) from hydraulic control valve (17). Discard preformed packings.

(9) Remove seven adapters (12), adapter (13), and eight preformed packings (23) from hydraulic control valve (17). Discard preformed packings.

(10) Remove restrictor (24) from adapter (13).

b. Installation.

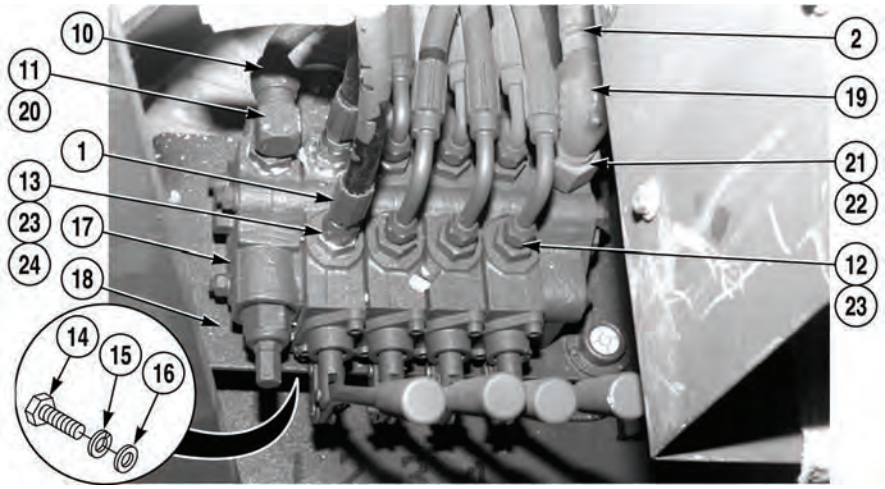

NOTE

- Install hoses as noted prior to removal.
- Install elbows and adapters in location and position as noted prior to removal.

(1) Install restrictor (24) on adapter (13).

(2) Apply lubricating oil to preformed packings (22) and (20) and eight preformed packings (23).

(3) Install eight preformed packings (23) and seven adapters (12) and adapter (13) on hydraulic control valve (17).

(4) Install elbow (11), preformed packing (20), elbow (19), adapter (21), and preformed packing (22) on hydraulic control valve (17).

(5) Install hose (2) on elbow (19).

(6) Install hydraulic control valve (17) on bracket (18) with three washers (16), lockwashers (15), and screws (14).

(7) Install eight hoses (1) on seven adapters (12) and adapter (13).

(8) Install hose (10) on elbow (11).

3-70. HYDRAULIC CONTROL VALVE (LIFT CYLINDERS) REPLACEMENT (CONT).

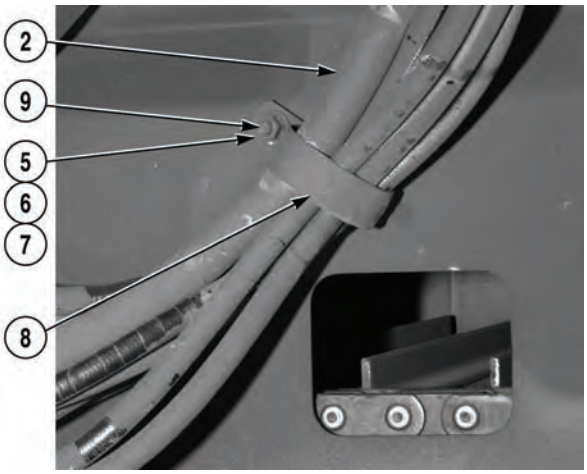

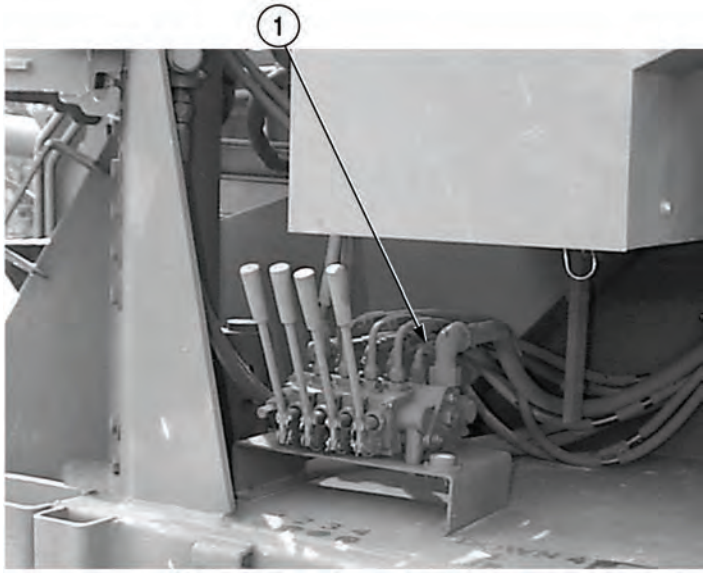

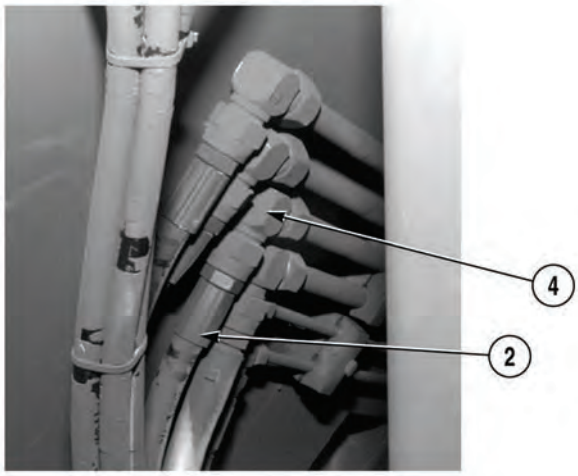

(9) Install clamp (8) with hoses (10), (2), and (1) on stud (9) with washer (7), lockwasher (6), and nut (5).

(10) Install hose (2) on elbow (4).

c. Follow-On Maintenance:

- Start engine, (Para 2-19).
- Check for leaks.
- Shut off engine, (Para 2-19).
- Check hydraulic reservoir oil level, (Para 2-6).

END OF TASK

3-71. HYDRAULIC CYLINDER REPLACEMENT (HOIST).

This task covers:

a. Removal b. Installation c. Follow-On Maintenance

INITIAL SETUP

Tools and Special Tools
Tool Kit, General Mechanic's: Automotive (Item 19, Appendix I)
Jackstand (Item NO TAG, Appendix I)
Pan, Drain (Item 12, Appendix I)
Lifting Device, Minimum Capacity 200 lb (91 kg)

Materials/Parts
Sealing Compound (Item 11, Appendix H)
Tags, Identification (Item 13, Appendix H)
Locknut (2) (MS51922-72)

Personnel Required
Two

Equipment Condition
Engine OFF, (Para 2-19)
Mixing auger deployed, (Para 2-23)
Concrete Mobile Mixer unloaded, (Para 2-5)

a. Removal.

WARNING

- Hydraulic cylinder weighs 150 1b (68 kg). Do not attempt to lift or move hydraulic cylinder without the aid of an assistant and a lifting device. Failure to comply could result in serious injury to personnel.
- Prior to removing hydraulic hoses from hydraulic cylinder, position suitable supports under hydraulic cylinder. Hydraulic cylinder will fall freely as soon as hoses are removed. Failure to comply could result in serious injury to personnel, and damage to equipment.

NOTE

- Tag and mark hoses prior to removal.
- Cap and plug hoses upon removal.

3-71. HYDRAULIC CYLINDER REPLACEMENT (HOIST) (CONT).

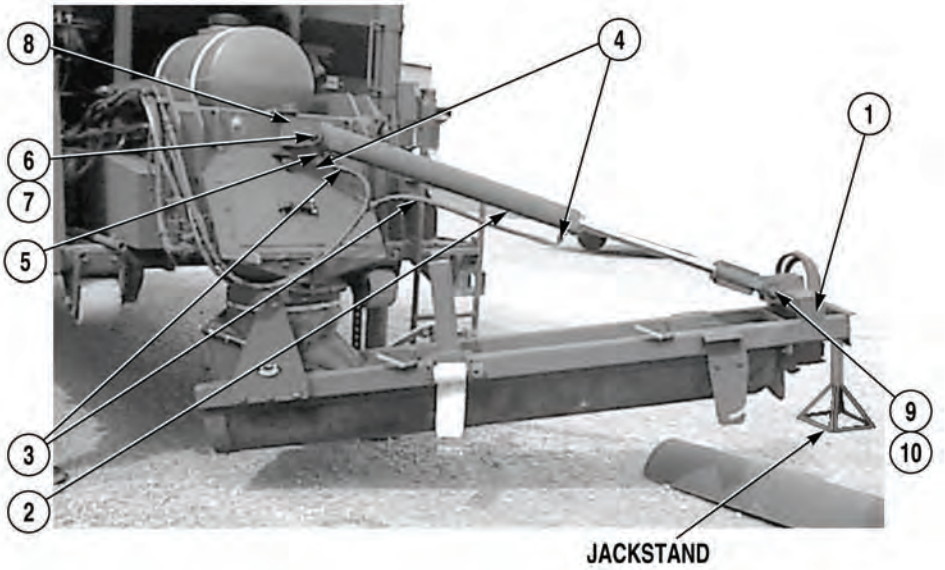

(1) Position drain pan under hydraulic hoses.

(2) Position mixing auger (1) on jack stand.

(3) Attach lifting device to hydraulic cylinder (2).

NOTE

Some models only have elbow at extend side of hydraulic cylinder.

(4) With the aid of an assistant and a suitable lifting device, support hydraulic cylinder (2) and remove two hoses (3) from fittings (4).

NOTE

Note position of fittings and elbow prior to removal.

(5) Remove two fittings (4) and elbow (5) from hydraulic cylinder (2).

(6) Remove screw (6) and locknut (7) from hydraulic cylinder (2) and bracket (8). Discard locknut.

(7) Remove screw (9), locknut (10), and hydraulic cylinder (2) from mixing auger (1). Discard locknut.

(8) Remove lifting device from hydraulic cylinder (2).

b. Installation.

WARNING

Hydraulic cylinder weighs 150 lb (68 kg). Do not attempt to lift or move hydraulic cylinder without the aid of an assistant and a lifting device. Failure to comply could result in serious injury to personnel.

NOTE

Install elbow and fittings in position as noted prior to removal.

(1) Attach lifting device to hydraulic cylinder (2).

(2) Position hydraulic cylinder (2) on mixing auger (1) and install screw (9) and locknut (10).

(3) Install screw (6) and locknut (7) on hydraulic cylinder (2) and bracket (8).

WARNING

Adhesives, solvents, and sealing compounds can burn easily, can give off harmful vapors, and are harmful to skin and clothing. To avoid injury or death, keep away from open fire and use in well-ventilated area. If adhesives, solvent, or sealing compound gets on skin or clothing, wash immediately with soap and water.

(4) Apply sealing compound to threads of two fittings (4) and elbow (5).

(5) Install elbow (5) and two fittings (4) on hydraulic cylinder (2).

NOTE

Install hoses as noted prior to removal.

(6) Install two hoses (3) on fittings (4).

(7) Remove lifting device from hydraulic cylinder (2).

(8) Remove jack stand from mixing auger (1).

c. Follow-On Maintenance:

- Start engine, (Para 2-19).
- Check for leaks.
- Stow mixing auger, (Para 2-23).
- Shut off engine, (Para 2-19).
- Check hydraulic reservoir oil level, (Para 2-6).

END OF TASK

3-72. MIXING AUGER HYDRAULIC MOTOR REPLACEMENT.

This task covers:

a. Removal b. Installation c. Follow-On Maintenance

INITIAL SETUP

Tools and Special Tools
Tool Kit, General Mechanic's: Automotive (Item 19, Appendix I)
Pan, Drain (Item 12, Appendix I)

Materials/Parts
Hydraulic Oil (Item 5, Appendix H)
Tags, Identification (Item 13, Appendix H)
Preformed Packings Kit (Item 18, Appendix H)
Locknut (2) (MS51922-33)
Lockwasher (4) (MS35338-48)
Anti-seize compound (Item 15, Appendix H)

Equipment Condition
Engine OFF, (Para 2-19)
Mixing auger deployed, (Para 2-23)
Concrete Mobile Mixer unloaded, (Para 2-5)

a. Removal.

NOTE

- Tag and mark hoses prior to removal.
- Cap and plug hoses upon removal.

(1) Position drain pan under hydraulic motor (1).

(2) Remove two hoses (2) from fittings (3).

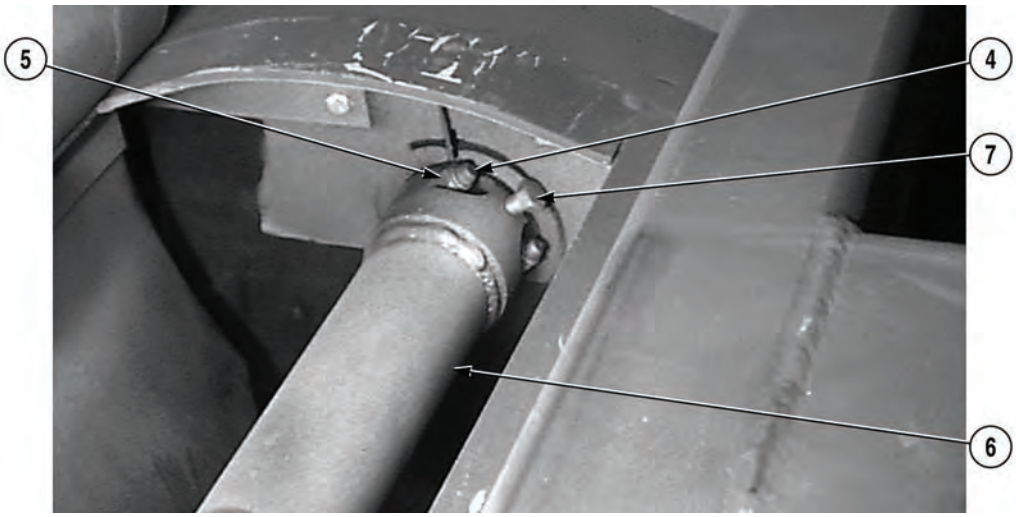

(3) Remove two screws (4) and locknuts (5) from mixing auger shaft (6). Discard locknuts.

(4) Loosen setscrew (7) on mixing auger shaft (6).

(5) Remove four screws (8), lockwashers (9), nuts (10), and hydraulic motor (1) from mixing auger shaft (6) and mixing auger (11). Discard lockwashers.

(6) Remove two fittings (3) and preformed packings (12) from hydraulic motor (1). Discard preformed packing.

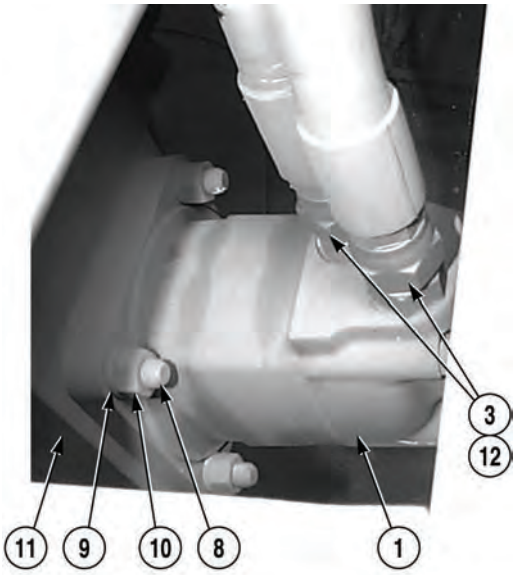

3-72. MIXING AUGER HYDRAULIC MOTOR REPLACEMENT (CONT).

b. Installation.

(1) Apply lubrication oil to two preformed packings (12).

(2) Install two fittings (3) and preformed packings (12) on hydraulic motor (1).

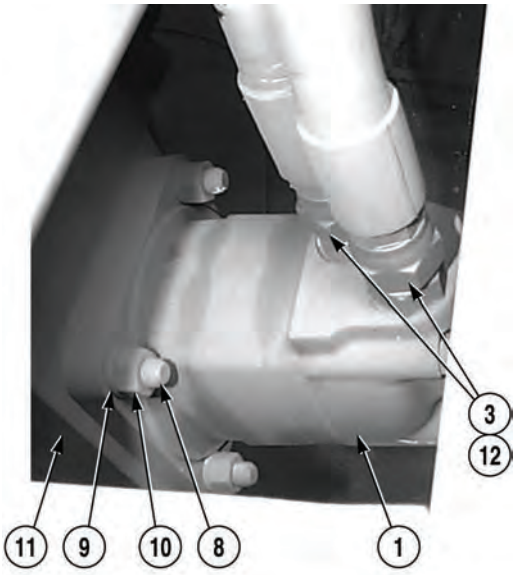

WARNING

Adhesives, solvents, and sealing compounds can burn easily, can give off harmful vapors, and are harmful to skin and clothing. To avoid injury or death, keep away from open fire and use in well-ventilated area. If adhesives, solvent, or sealing compound gets on skin or clothing, wash immediately with soap and water.

(3) Apply anti-seize compound to hydraulic motor (1) shaft.

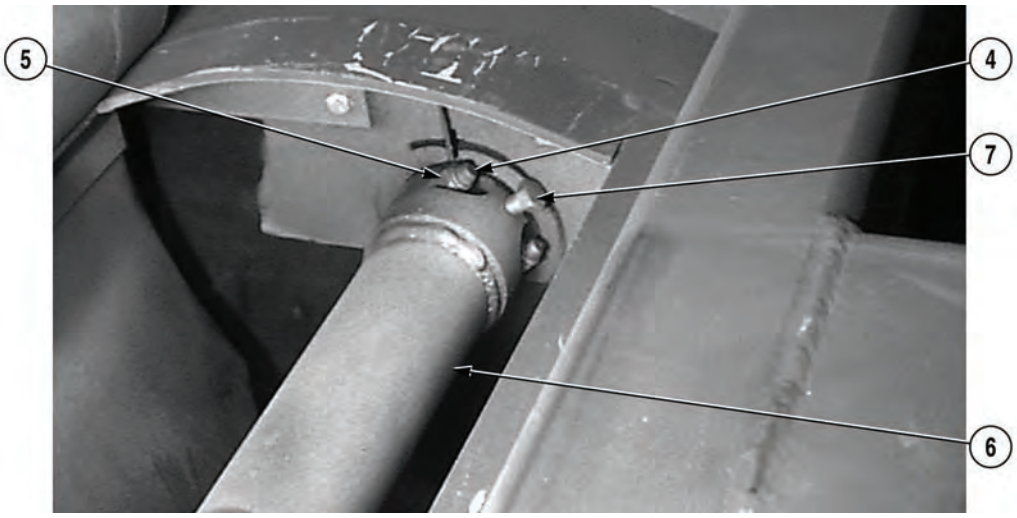

(4) Install hydraulic motor (1) on mixing auger (11) and mixing auger shaft (6) with four nuts (10), lockwashers (9), and screws (8).

(5) Install two locknuts (5) and screws (4) on mixing auger shaft (6).

(6) Tighten setscrew (7) on mixing auger shaft (6).

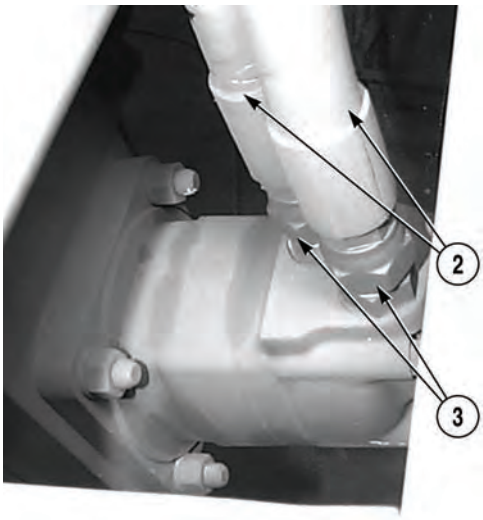

NOTE

Install hoses as noted prior to removal.

(7) Install two hoses (2) on fittings (3).

c. Follow-On Maintenance:

- Start engine, (Para 2-19).
- Check for leaks.
- Stow mixing auger, (Para 2-23).
- Shut off engine, (Para 2-19).
- Check hydraulic reservoir oil level, (Para 2-6).

END OF TASK

3-73. WEAR BLADE(S) REPLACEMENT.

This task covers:

a. Removal b. Installation c. Follow-On Maintenance

INITIAL SETUP

Tools and Special Tools
Tool Kit, General Mechanic's: Automotive (Item 19, Appendix I)

Materials/Parts
Locknut (MS51922-18)
Anti-seize compound (Item 15, Appendix H)

Equipment Condition
Engine OFF, (Para 2-19)
Mixing auger deployed, (Para 2-23)
Concrete Mobile Mixer unloaded, (Para 2-5)

a. Removal.

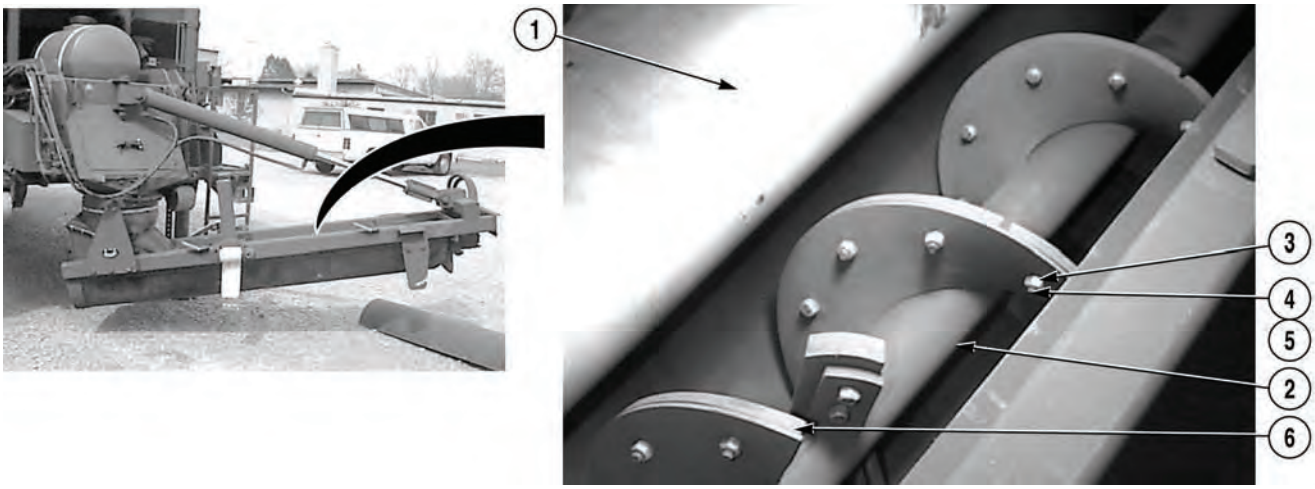

NOTE

- There are three different types of wear blades. All wear blades are replaced the same way.
- There are 13 paddles with two screws, 23 wear blades with two screws, and three wear blades with three screws.
- Note number of washers between wear blades and auger. Washers are used as spacers, and each wear blade has a different number of washers.
- Clean any concrete build up from wear blades and auger prior to removal.

(1) Open mixing guard (1) on mixing auger (2).

(2) Remove locknuts (3), screws (4), washers (5), and wear blade (6) from mixing auger (2). Discard locknuts.

b. Installation.

WARNING

Adhesives, solvents, and sealing compounds can burn easily, can give off harmful vapors, and are harmful to skin and clothing. To avoid injury or death, keep away from open fire and use in well-ventilated area. If adhesives, solvent, or sealing compound gets on skin or clothing, wash immediately with soap and water.

NOTE

Ensure same number of washers as noted during removal.

(1) Apply anti-seize compound to threads and tapered socket head of screws (4).

(2) Install wear blade (6) on mixing auger (2) with washers (5), screws (4), and locknuts (3).

(3) Close mixing guard (1) on mixing auger (2).

c. Follow-On Maintenance:

- Stow mixing auger, (Para 2-23).

END OF TASK

3-74. WATER VALVE REPLACEMENT.

This task covers:

a. Removal b. Installation

INITIAL SETUP

Tools and Special Tools
Tool Kit, General Mechanic's: Automotive (Item 19, Appendix I)

Materials/Parts
Sealing Compound (Item 11, Appendix H)
Tags, Identification (Item 13, Appendix H)

Equipment Condition
Engine OFF, (Para 2-19)
Mixing auger deployed, (Para 2-23)
Concrete Mobile Mixer unloaded, (Para 2-5)

a. Removal.

(1) Open three drain cocks (1).

NOTE

- Tag and mark hoses prior to removal.
- Water valve (S/N 8RDCD301620HC and Subsequent) removed similarly.

(2) Loosen two clamps (2) and remove hoses (3) from fittings (4).

(3) Loosen clamp (5) and remove hose (6) from fitting (7).

(4) Push in on collar (8) and remove vent hose (9) from elbow (10) on water valve (11).

(5) Push in on two collars (12) and remove two air lines (13) from elbows (14) on water valve (11).

(6) Remove water valve (11) from Concrete Mobile Mixer (15).

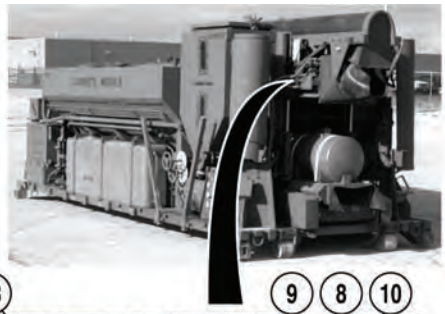

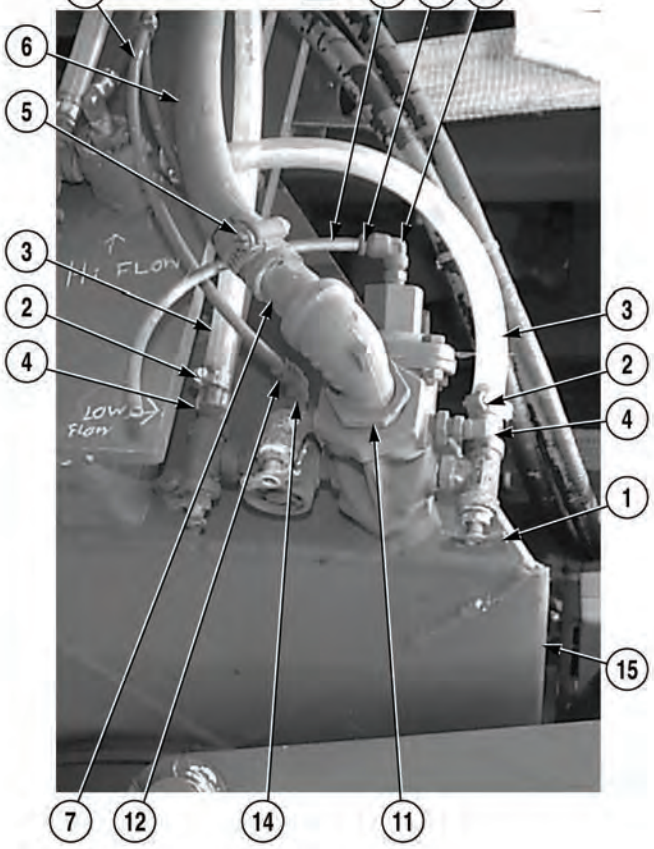

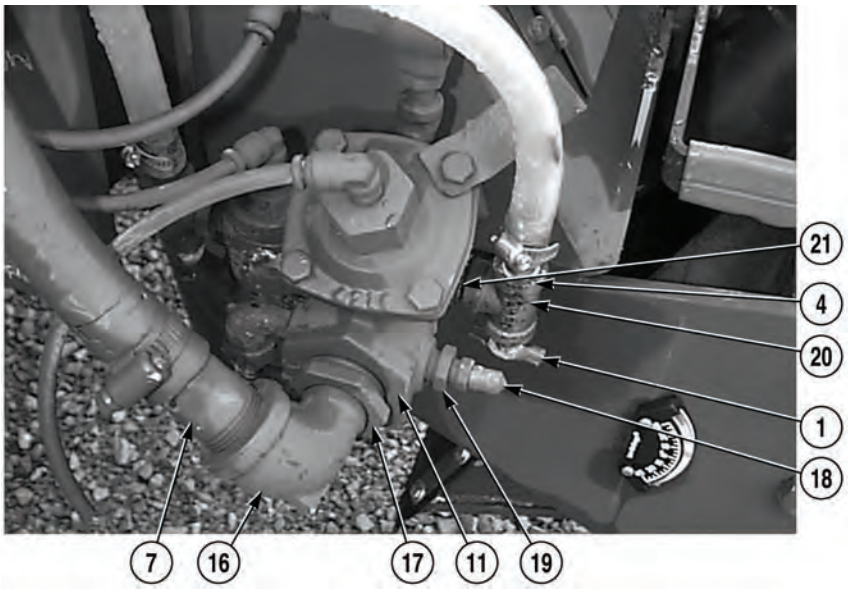

NOTE

Note location and position of elbow, fittings, bushings, reducers, and tees prior to removal.

(7) Remove fitting (7), elbow (16), and bushing (17) from water valve (11).

(8) Remove air valve (18) and bushing (19) from water valve (11).

(9) Remove tee (20), fitting (4), nipple (21), and drain cock (1) from water valve (11).

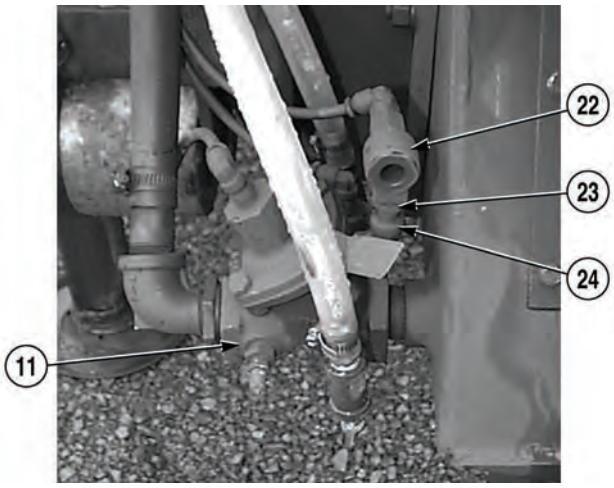

(10) Remove air valve (22) from nipple (23).

(11) Remove nipple (23) and elbow (24) from water valve (11).

3-74. WATER VALVE REPLACEMENT (CONT).

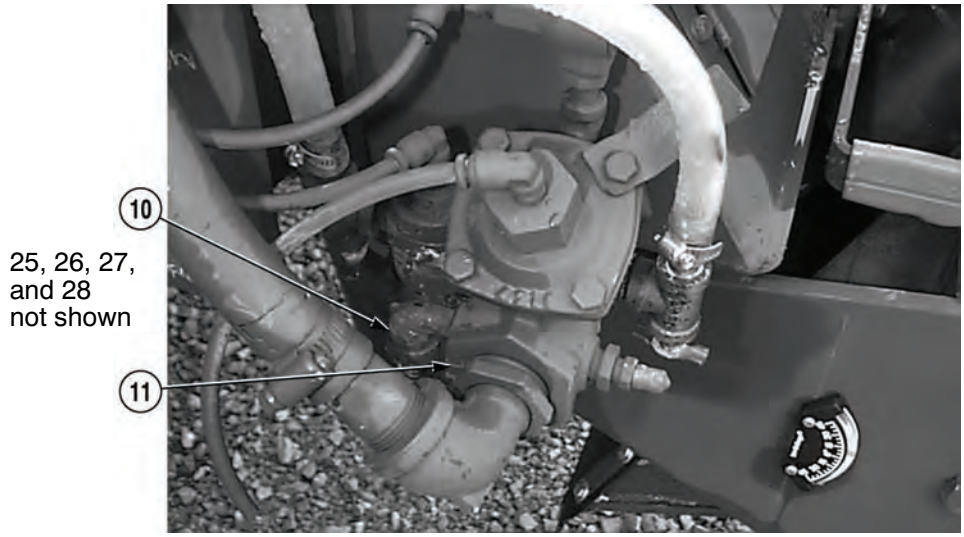

(12) Remove elbow (10), air valve (25), reducer (26), nipple (27), and elbow (28) from water valve (11).

b. Installation.

WARNING

Adhesives, solvents, and sealing compounds can burn easily, can give off harmful vapors, and are harmful to skin and clothing. To avoid injury or death, keep away from open fire and use in well-ventilated area. If adhesives, solvent, or sealing compound gets on skin or clothing, wash immediately with soap and water.

NOTE

Install elbows, fittings, bushings, reducers, and tees in location and position noted prior to removal.

(1) Apply sealing compound to threads of elbow (10), reducer (26), nipple (27), and elbow (28).

(2) Install elbow (10), nipple (27), air valve (25), reducer (26), and elbow (28) on water valve (11).

(3) Apply sealing compound to threads of elbow (24) and nipple (23).

(4) Install elbow (24) and nipple (23) on water valve (11).

(5) Install air valve (22) on nipple (23).

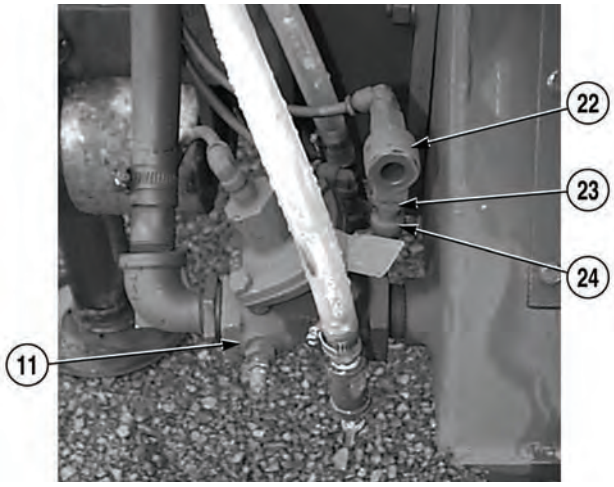

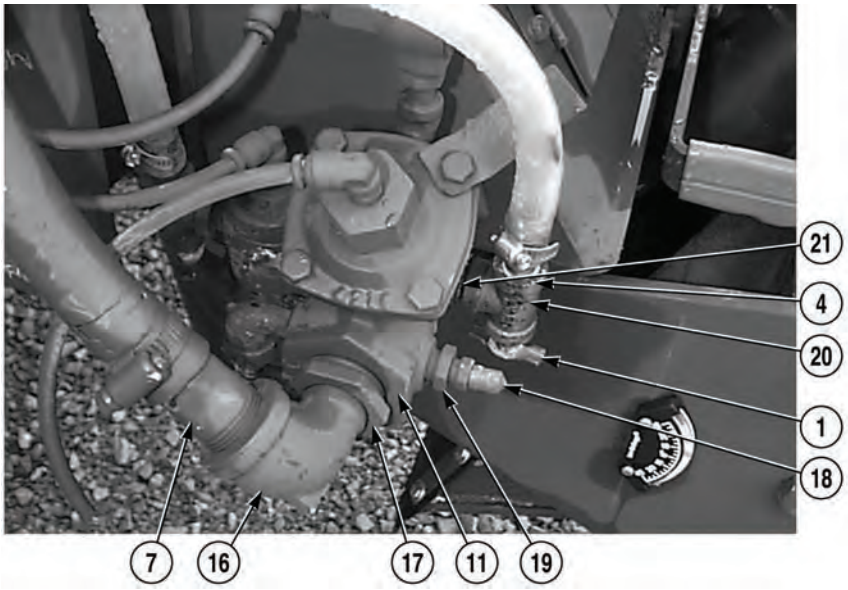

NOTE

Install elbow, fittings, bushings, reducers, and tees as noted prior to removal.

(6) Apply sealing compound to threads of tee (20), fitting (4), nipple (21), and drain cock (1).

(7) Install tee (20), fitting (4), nipple (21), and drain cock (1) on water valve (11).

(8) Apply sealing compound to threads of bushing (19) and air valve (18).

(9) Install bushing (19) and air valve (18) on water valve (11).

(10) Apply sealing compound to threads of fitting (7), elbow (16), and bushing (17).

(11) Install fitting (7), elbow (16), and bushing (17) on water valve (11).

3-74. WATER VALVE REPLACEMENT (CONT).

(12) Apply sealing compound to threads of water valve (11).

(13) Install water valve (11) on Concrete Mobile Mixer (15).

NOTE

Install hoses as noted prior to removal.

(14) Install two air lines (13) on elbows (14).

(15) Install vent hose (9) on elbow (10).

(16) Position hose (6) on fitting (7) and tighten clamp (5).

(17) Position two hoses (3) on fittings (4) and tighten clamps (2).

(18) Close three drain cocks (1).

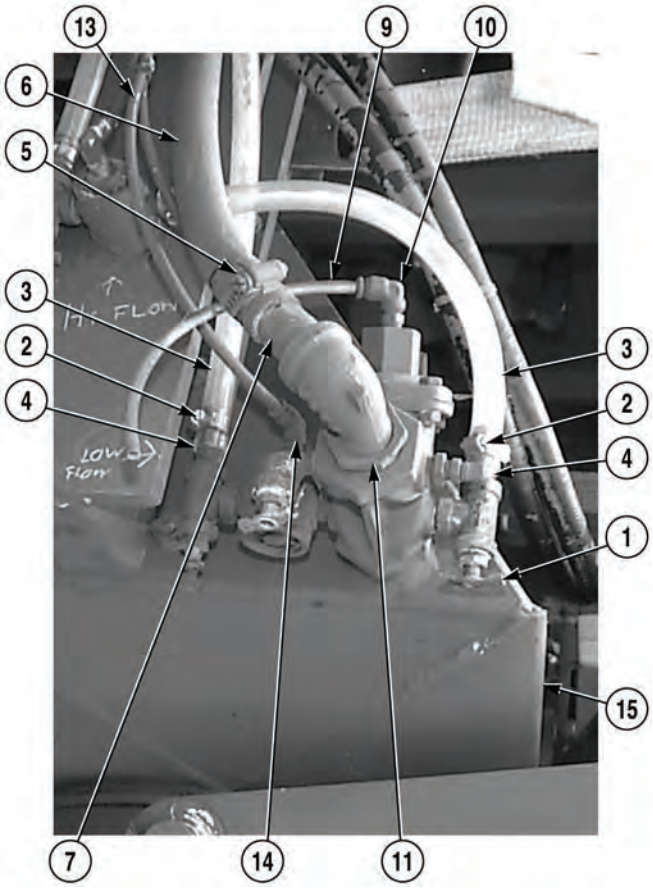

c. *Follow-On Maintenance:*

- Start engine, (Para 2-19).
- Check for leaks.
- Stow mixing auger, (Para 2-23).
- Shut off engine, (Para 2-19).

END OF TASK

3-75. CONVEYOR BELT REPLACEMENT.

This task covers:

a. Removal b. Installation c. Follow-On Maintenance

INITIAL SETUP

Tools and Special Tools
Tool Kit, General Mechanic's: Automotive (Item 19, Appendix I)
Winch, Cable, Hand Operating (Item 20, Appendix I)
Chain (5 ft) (Item 4 Appendix I)

Materials/Parts
Cotter Pin (6) (MS24665-385)
Lubrication Oil, Tire (Item 7, Appendix H)
Lockwasher (4) (MS 35338-44)

Personnel Required
Four

Equipment Condition
Engine OFF, (Para 2-19)
Concrete Mobile Mixer unloaded, (Para 2-5)
Mixing auger stowed, (Para 2-23)
Lift cylinders deployed, (Para 2-28)
Aggregate bin center wiper removed, (Para 3-76)

a. Removal.

WARNING

Removal of conveyor belt should be done with no materials in aggregate bins. Always disengage cement bin clutch prior to removal. Failure to comply could result in injury to personnel and damage to equipment.

NOTE

Perform this task with the aid of several assistants.

(1) Disengage cement bin clutch, (Para 2-22).

NOTE

- Angle iron cross-bar belts are rolled out over cable pulleys from conveyor system. These pulleys may be bolted to frame at the lower rear holes.
- Running Concrete Mobile Mixer at low idle speed and engaging conveyor belt will move conveyor belt to desired position.

(2) Start engine, (Para 2-19).

3-75. CONVEYOR BELT REPLACEMENT (CONT).

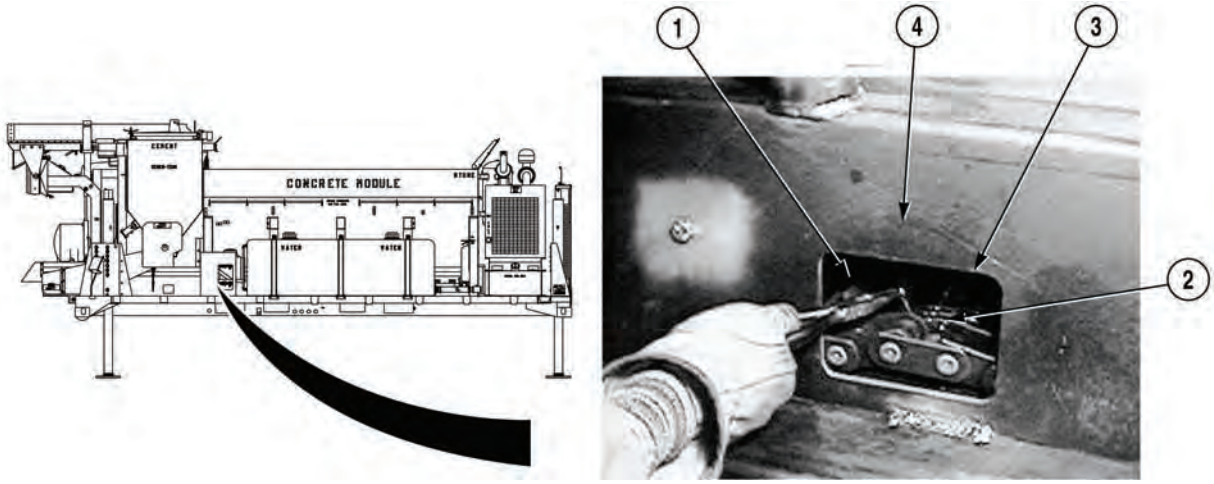

(3) Rotate conveyor belt (1) around until lacer pin (2) is visible through inspection window (3) of conveyor frame (4).

(4) Stop conveyor belt (1) at inspection window (3).

(5) Shut off engine, (Para 2-19).

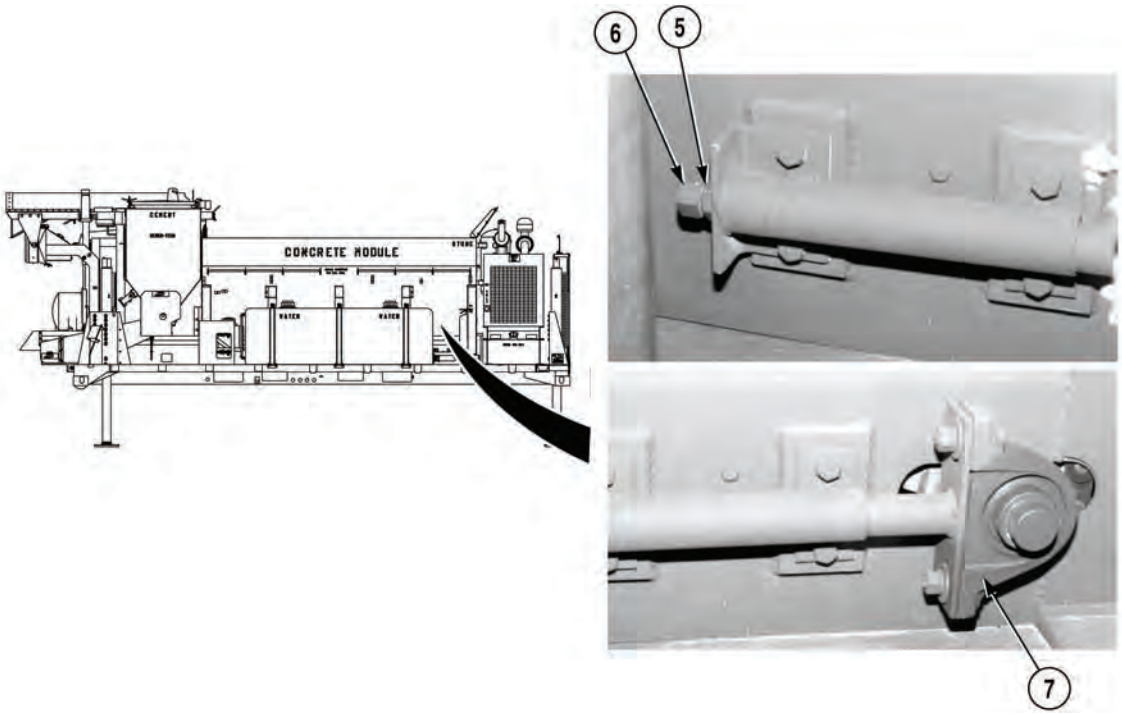

NOTE

- There are two take-up bearings, one on each side, at front of Concrete Mobile Mixer.
- Take-up bearings are loosened by turning counterclockwise.

(6) Loosen two jamnuts (5) and turn adjusting nuts (6) until take-up bearings (7) are loose.

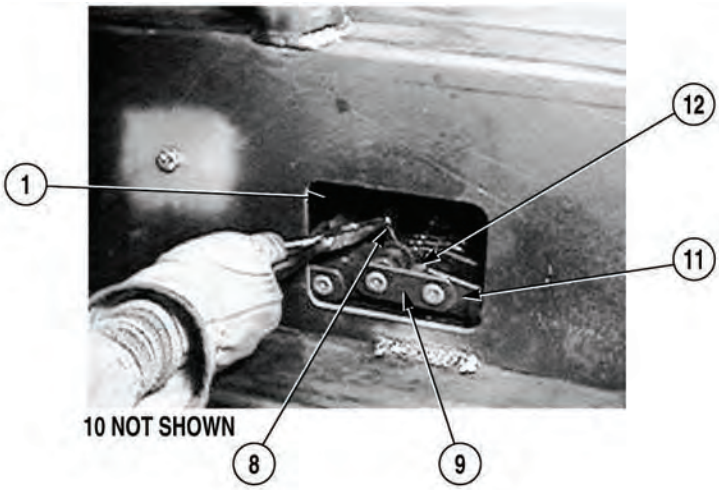

NOTE

Remove chain link that covers lacer pin.

(7) Remove four cotter pins (8), two chain links (9), and plates (10) from conveyor belt chains (11). Discard cotter pins.

NOTE

- To remove lacer pin, grasp lacer pin with a vise-grip and work it loose.
- If it is not possible to remove lacer pin by this method, cut conveyor belt with a sharp knife, at the rear end of conveyor where belt turns under. Then remove cotter pins and connecting links from chain or cut a link on each side of belt with a cutting torch.

(8) Remove lacer pin (12) from conveyor belt (1).

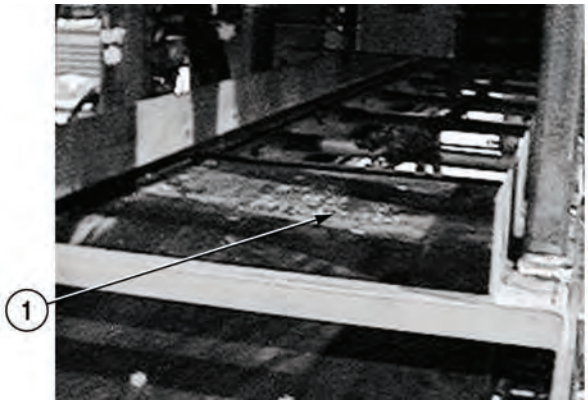

WARNING

Conveyor belt weighs 900 lb (408 kg). If conveyor belt is being reused, conveyor belt must be “run” out on a pallet. Do not lift or move conveyor belt without the aid of an assistant and a suitable lifting device. Failure to comply may result in serious injury to personnel.

(9) Start engine, (Para 2-19).

(10) Run engine at low idle speed and “run” conveyor belt (1) out.

3-75. CONVEYOR BELT REPLACEMENT (CONT).

b. Installation.

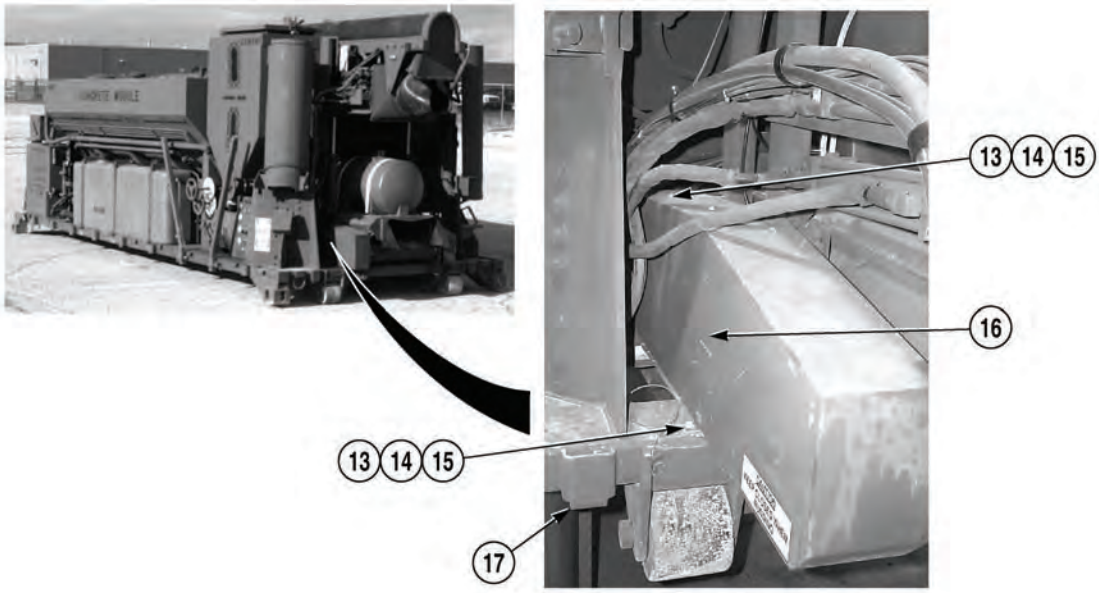

NOTE

Conveyor belt drive chain must be removed in order to install conveyor belt.

(1) Remove four screws (13), lockwashers (14), washers (15), and guard (16) from Concrete Mobile Mixer (17). Discard lockwashers.

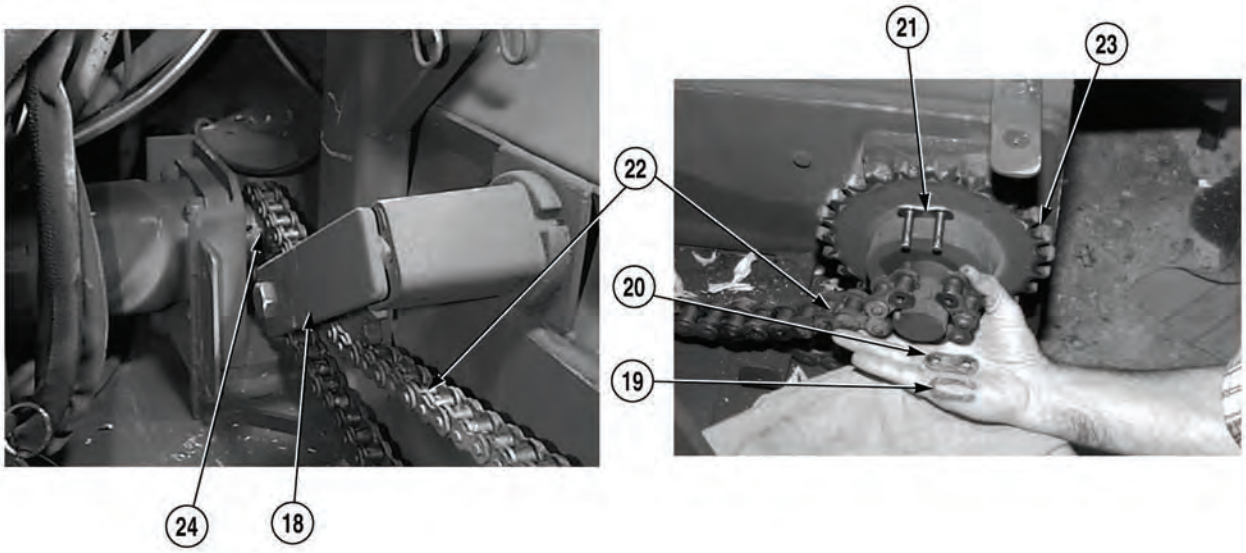

NOTE

- Pry up on tension arm to release tension on chain.
- Note position of chain prior to removal.

(2) With the aid of an assistant, pry tension arm (18) up and remove clip (19), plate (20), master link (21), and chain (22) from sprocket (23), and sprocket (24).

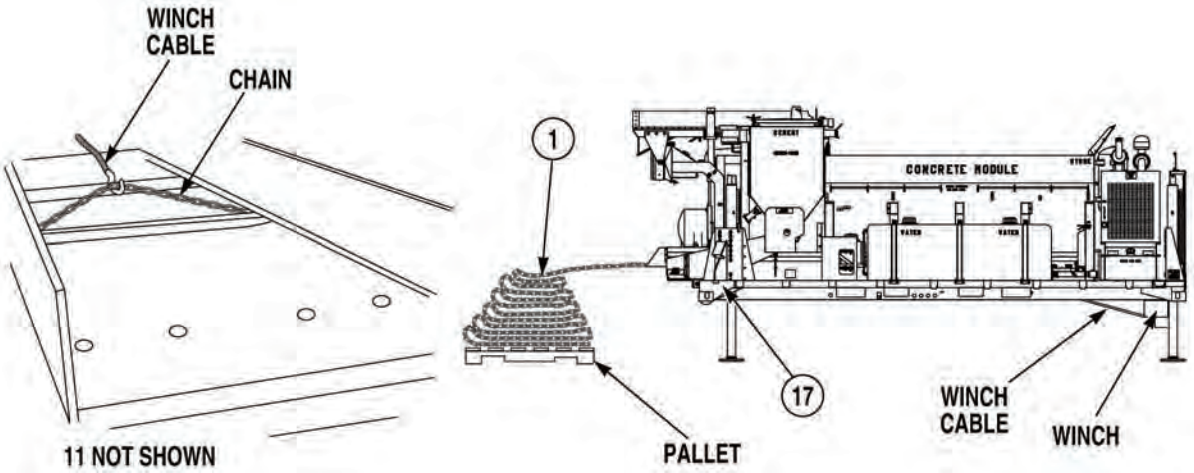

NOTE

Attaching small chain to two end chain links allows winch cable hook to pull conveyor belt.

(3) Attach winch to lower front portion of Concrete Mobile Mixer (17).

(4) Attach winch cable to chain attached to ends of conveyor belt chains (11).

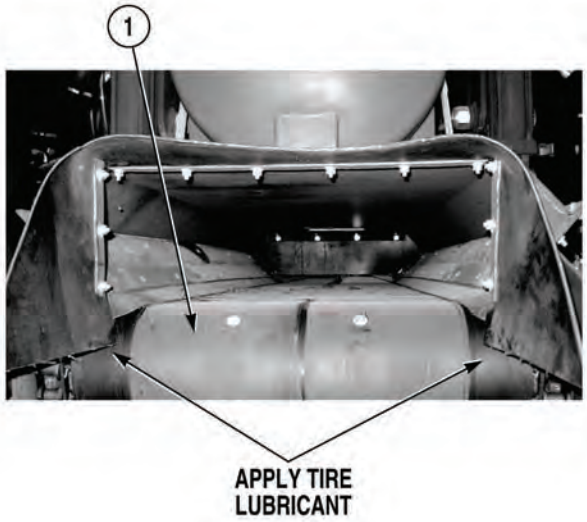

NOTE

Applying tire lubricant on conveyor belt mating surface of side wipers allows for easier installation of conveyer belt.

(5) Apply tire lubricant on conveyor belt (1).

NOTE

Raising pallet with fork lift and feeding conveyor belt from the top down will allow easier installation of conveyor belt.

(6) With the aid of an assistant, feed conveyor belt (1) into Concrete Mobile Mixer (17) while conveyor belt (1) is pulled towards front of Concrete Mobile Mixer (17) with winch.

(7) Remove winch cable from chain.

(8) Remove winch from lower front portion of Concrete Mobile Mixer (17).

3-75. CONVEYOR BELT REPLACEMENT (CONT).

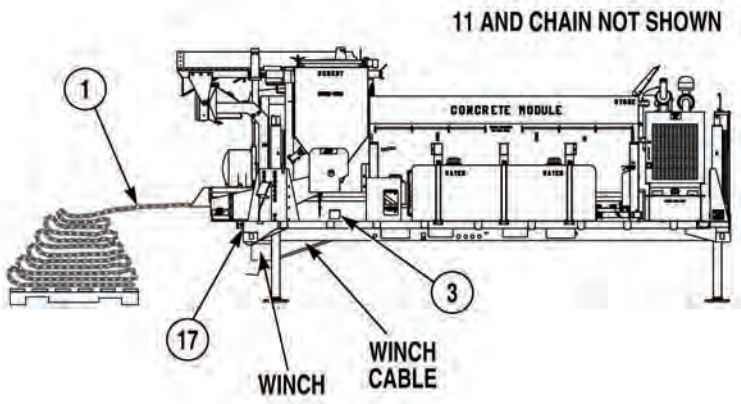

(9) Attach winch to lower rear portion of Concrete Mobile Mixer (17).

(10) Attach winch cable to chain.

(11) Continue pulling conveyor belt (1) to rear of Concrete Mobile Mixer (17), stopping at inspection window (3).

(12) Remove winch cable from chain and chain from conveyor belt chains (11).

(13) Remove winch from lower rear portion of Concrete Mobile Mixer (17).

(14) Install remaining portion of conveyor belt (1) stopping at inspection window (3).

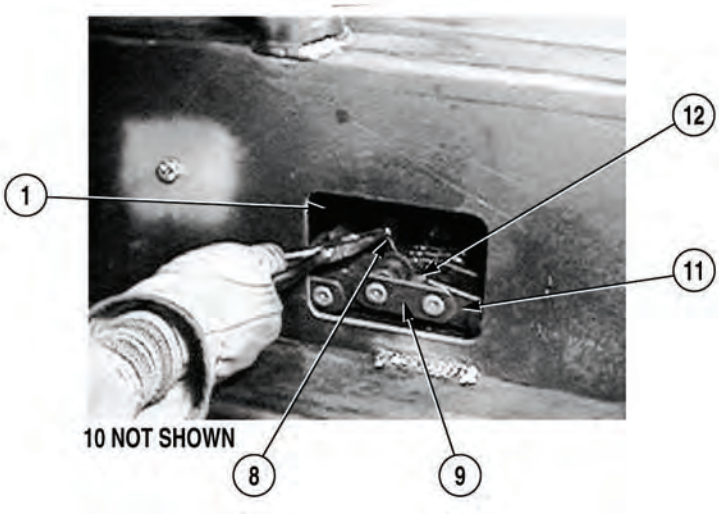

NOTE

Sharpening lacer pin to a point allows easier installation of lacer pin.

(15) Position both ends of conveyor belt (1) together.

(16) Install lacer pin (12) in conveyor belt (1).

(17) Install two chain links (9) and plates (10) on conveyor belt chains (11) with four cotter pins (8).

NOTE

- Bearings must be tightened equally. Failure to comply could result in damage to equipment.
- Ensure dimension “A” is equal on both take up bearings. Failure to comply could result in damage to equipment.

(18) Tighten two adjusting nuts (6) on two take-up bearings (7) to take all slack out of conveyor belt assembly and maintain equal “A” dimensions.

(19) Tighten two jamnuts (5) on take-up bearings (7).

3-75. CONVEYOR BELT REPLACEMENT (CONT).

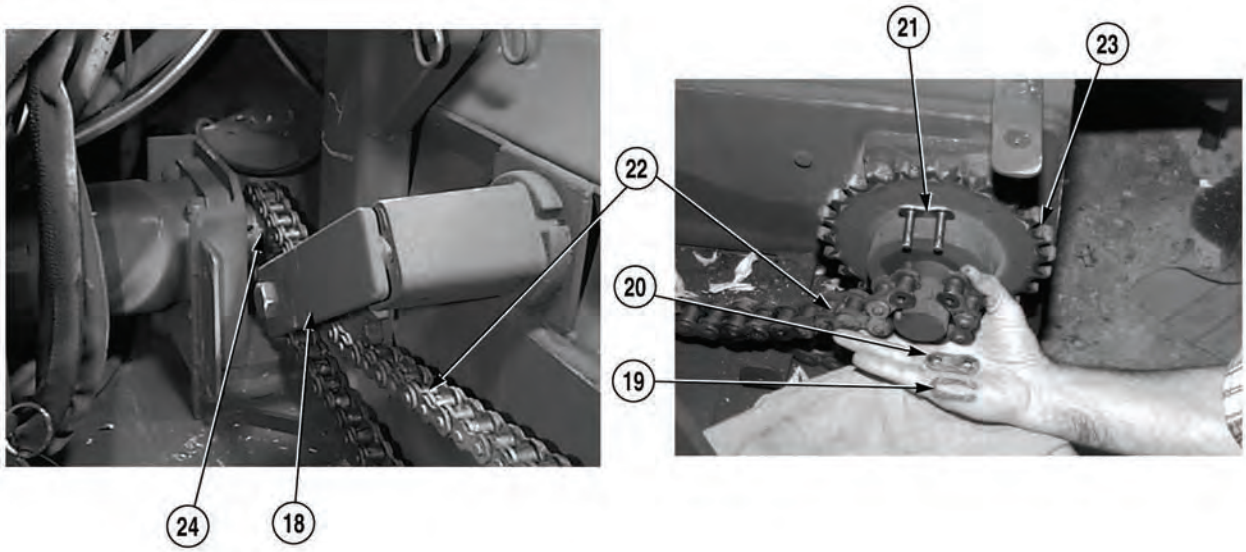

(20) With the aid of an assistant, pry tension arm (18) up and install chain (22) on two sprockets (23) and (24) with master link (21), plate (20), and clip (19).

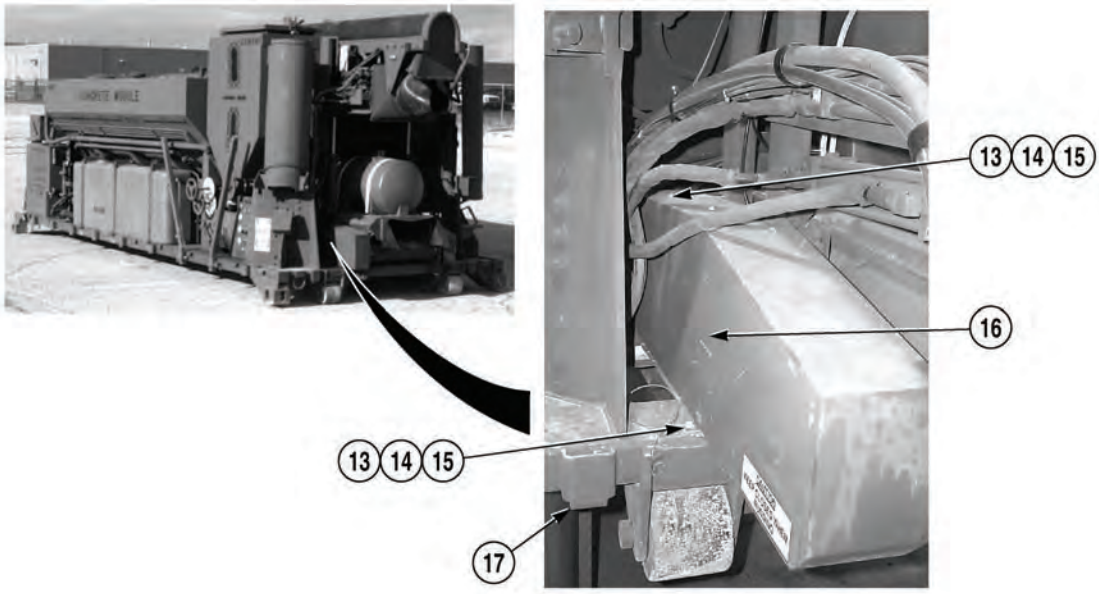

(21) Install guard (16) on Concrete Mobile Mixer (17) with four washers (15), lockwashers (14), and screws (13).

c. Follow-On Maintenance:

- Install aggregate bin center wiper, (Para 3-76).
- Start engine, (Para 2-19).
- Check conveyor belt operation.
- Stow lift cylinders, (Para 2-28).
- Shut off engine, (Para 2-19).

END OF TASK

3-76. CONVEYOR BELT WIPER REPLACEMENT.

This task covers:

a. Aggregate Bin Center Wiper Removal
b. Aggregate Bin Side Wiper Removal
c. Aggregate Bin Front Wiper Removal
d. Aggregate Bin Front Wiper Installation
e. Aggregate Bin Side Wiper Installation
f. Aggregate Bin Center Wiper Installation
g. Follow-On Maintenance

INITIAL SETUP

Tools and Special Tools
Tool Kit, General Mechanic's: Automotive (Item 19, Appendix I)
Lifting Device, Minimum Capacity 200 lb (91 kg)

Materials/Parts
Lockwasher (54) (MS35338-45)
Lockwasher (2) (MS35338-48)
Locknut (42) (MS51922-9)

Personnel Required
Two

Equipment Condition
Engine OFF, (Para 2-19)
Admix tank removed (hi-flow) (aggregate bin side wiper only), (Para 3-39)
Aggregate bins empty (aggregate bin center, side, and front wiper only), (Para 2-13)
Water tank removed (aggregate bin side wiper only), (Para 3-42)

a. Aggregate Bin Center Wiper Removal.

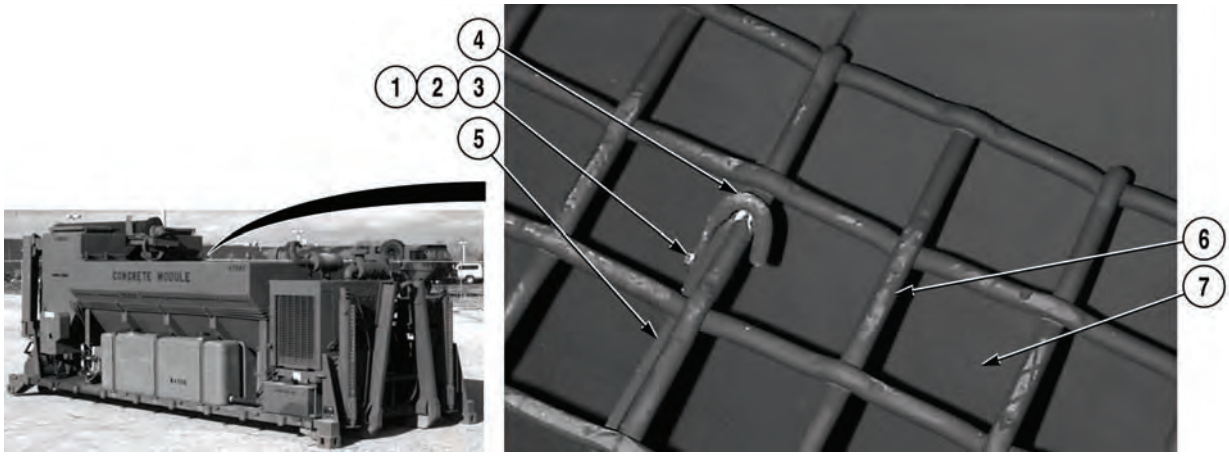

NOTE

Some models have ten washers.

(1) Remove five locknuts (1), screws (2), washers (3), and hooks (4) from three brackets (5). Discard locknuts.

(2) Attach lifting device to aggregate bin grating (6).

(3) With the aid of an assistant and using lifting device, remove aggregate bin grating (6) from aggregate bin (7).

(4) Repeat Steps (1) through (3) for second aggregate bin grating.

3-76. CONVEYOR BELT WIPER REPLACEMENT (CONT).

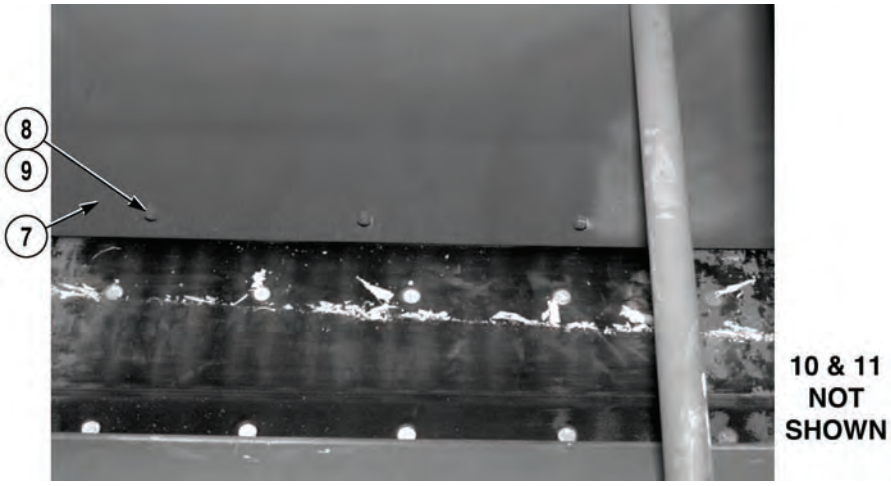

(5) Remove 14 nuts (8), lockwashers (9), and retainer (10) from wiper (11). Discard lockwashers.

(6) Remove wiper (11) from aggregate bin (7).

b. Aggregate Bin Side Wiper Removal.

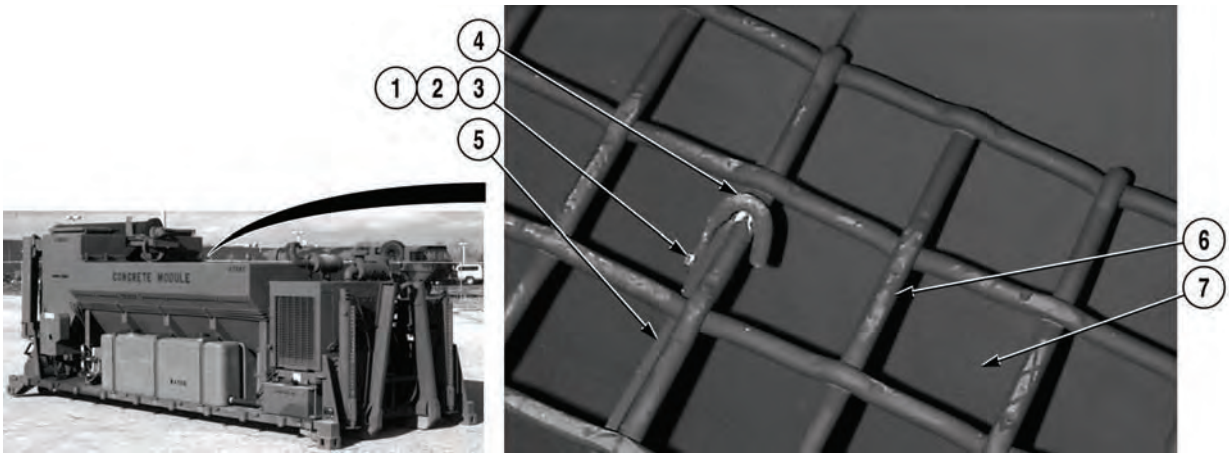

(1) Remove five locknuts (1), screws (2), washers (3), and hooks (4) from three brackets (5). Discard locknuts.

(2) Attach lifting device to aggregate bin grating (6).

(3) With the aid of an assistant and using a lifting device, remove aggregate bin grating (6) from aggregate bin (7).

(4) Repeat Steps (1) through (3) for second aggregate bin grating.

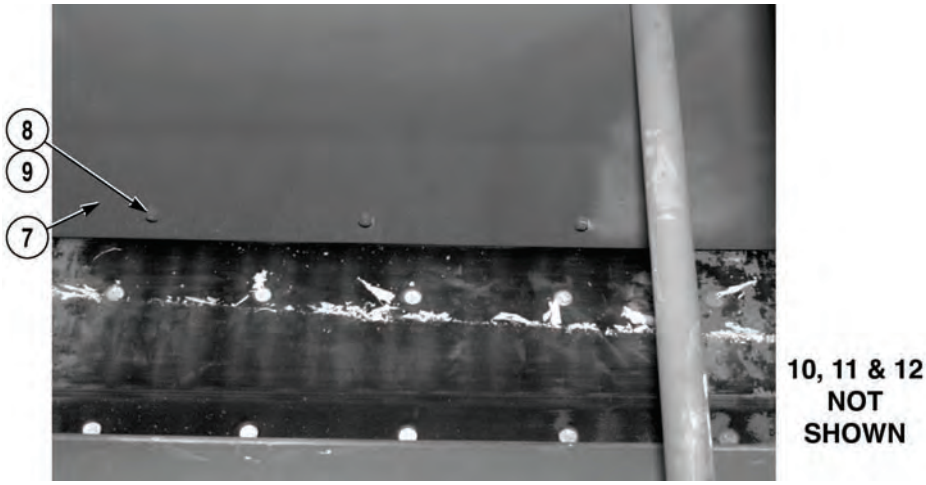

(5) With the aid of an assistant, remove 13 nuts (8), lockwashers (9), washers (10), screws (11), and retainer (12) from aggregate bin (7). Discard lockwashers.

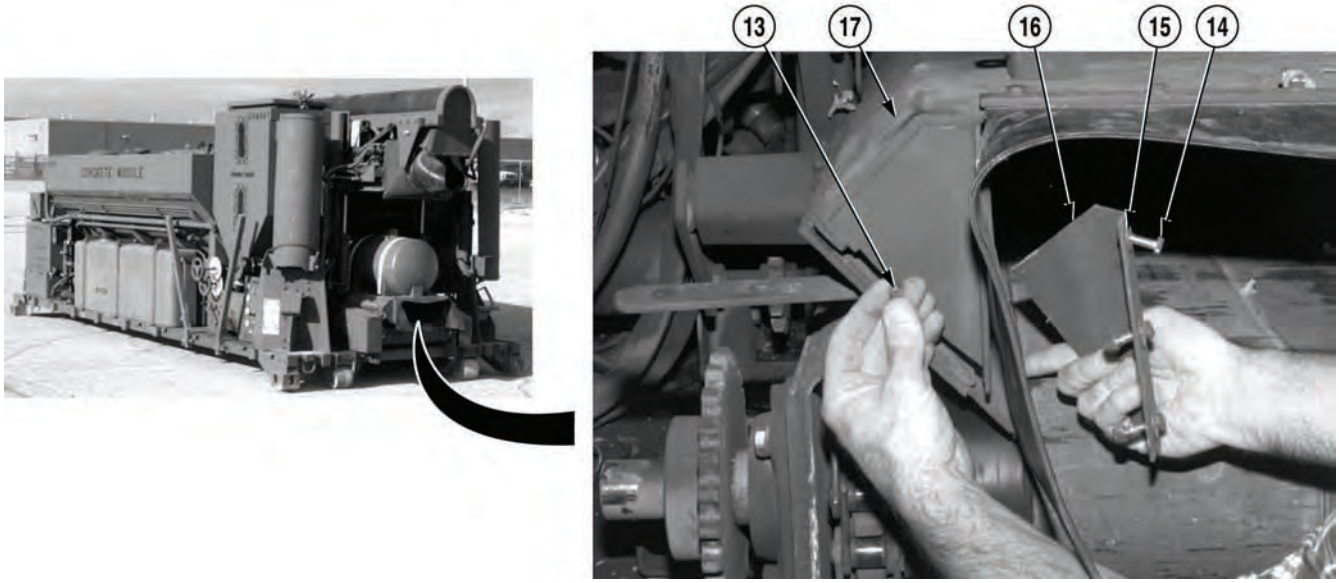

NOTE

Some models have 12 washers and six lockwashers.

(6) Remove six locknuts (13), screws (14), washers (15), and two plates (16) from cover (17). Discard locknuts.

3-76. CONVEYOR BELT WIPER REPLACEMENT (CONT).

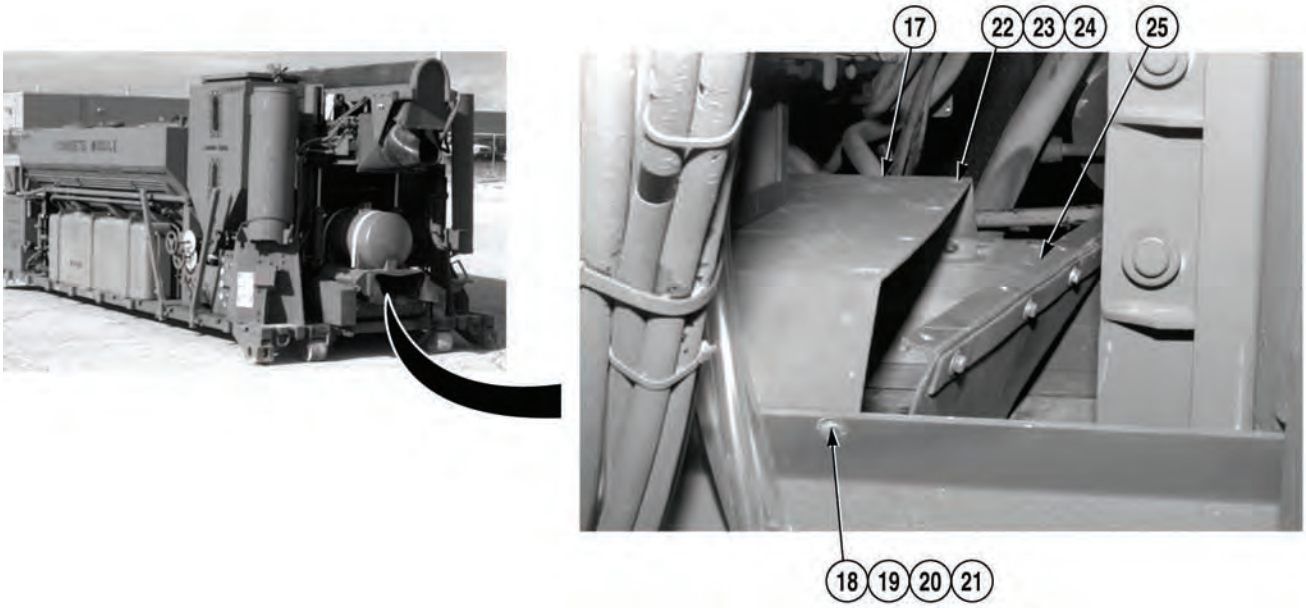

NOTE

Some models do not have washers.

(7) Remove four nuts (18), lockwashers (19), screws (20), and eight washers (21) from cover (17). Discard lockwashers.

NOTE

Some models have washers.

(8) Remove four nuts (22), lockwashers (23), screws (24), and angle bracket (25) from cover (17). Discard lockwashers.

(9) Remove cover (17) from Concrete Mobile Mixer (26).

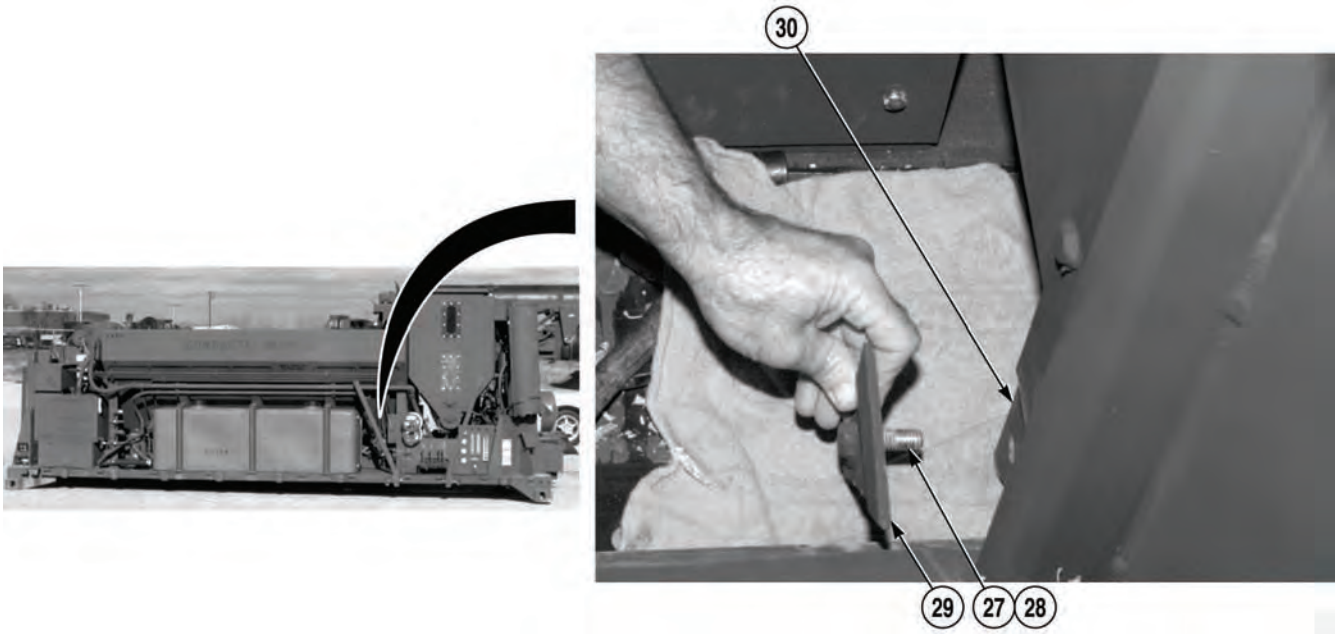

(10) Remove nut (27), lockwasher (28), and plate (29) from aggregate bin (30). Discard lockwasher.

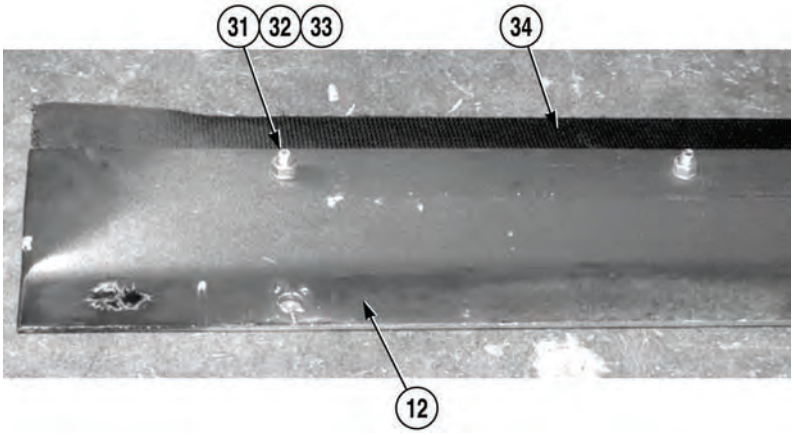

(11) Remove 24 nuts (31), lockwashers (32), screws (33), and wiper (34) from retainer (12). Discard lockwashers.

3-76. CONVEYOR BELT WIPER REPLACEMENT (CONT).

c. Aggregate Bin Front Wiper Removal.

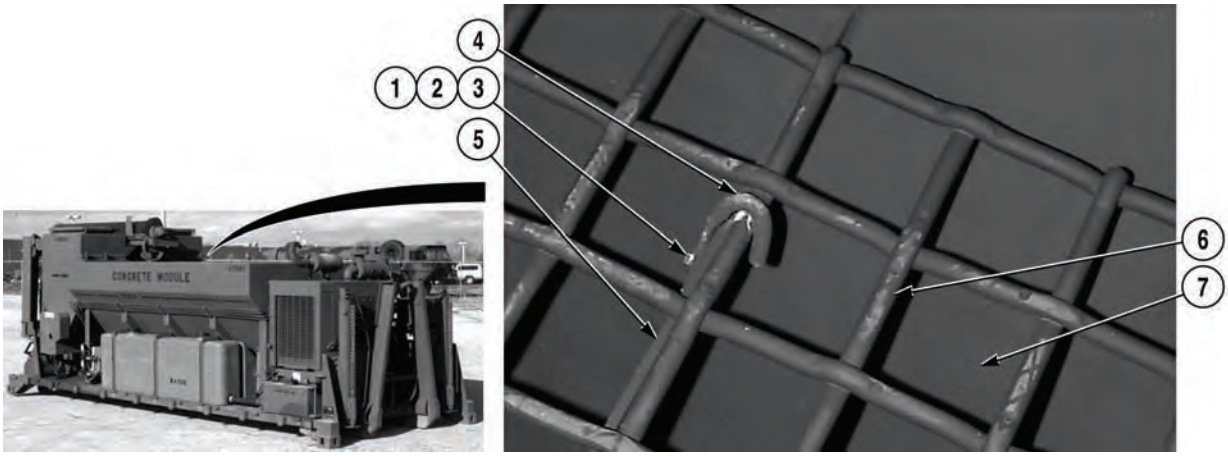

(1) Remove five locknuts (1), screws (2), washers (3), and hooks (4) from three brackets (5). Discard locknuts.

(2) Attach lifting device to aggregate bin grating (6).

(3) With the aid of an assistant and using a lifting device, remove aggregate bin grating (6) from aggregate bin (7).

(4) Repeat Steps (1) through (3) for second aggregate bin grating.

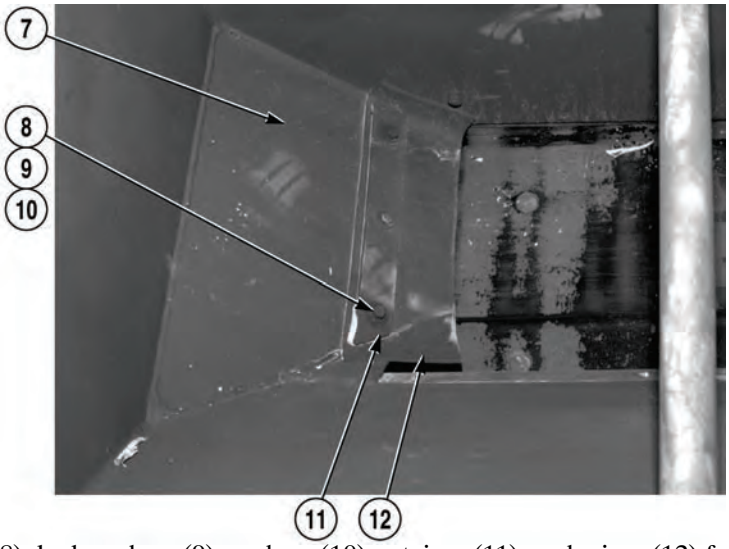

(5) Remove three screws (8), lockwashers (9) washers (10), retainer (11), and wiper (12) from aggregate bin (7). Discard lockwashers.

d. Aggregate Bin Front Wiper Installation.

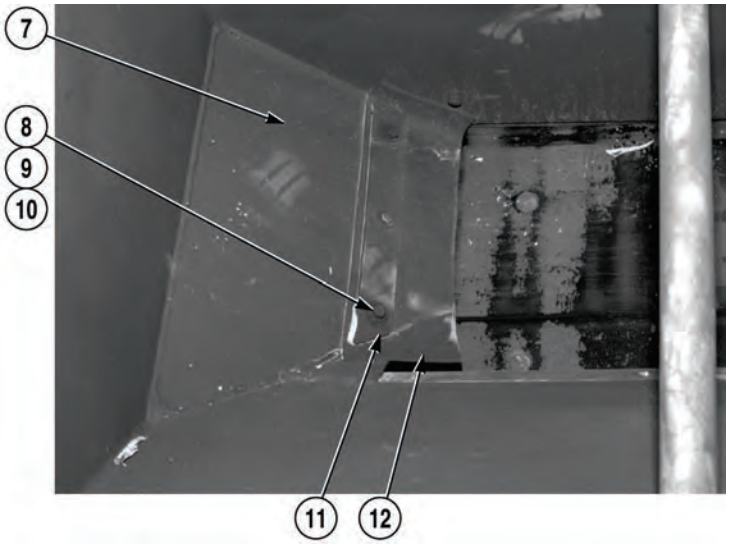

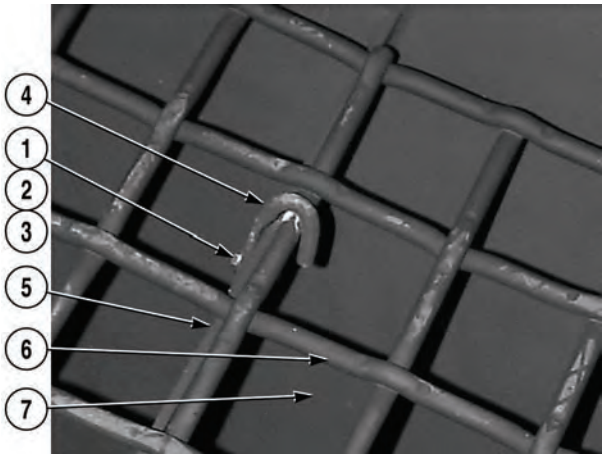

(1) Install wiper (12) and retainer (11) on aggregate bin (7) with three washers (10), lockwashers (9) and screws (8).

(2) With the aid an assistant and using lifting device, position aggregate bin grating (6) on aggregate bin (7).

(3) Install five hooks (4) on three brackets (5) with washers (3), screws (2), and locknuts (1).

(4) Remove lifting device from aggregate bin grating (6).

(5) Repeat Steps (2) through (4) for second aggregate bin grating.

e. Aggregate Bin Side Wiper Installation.

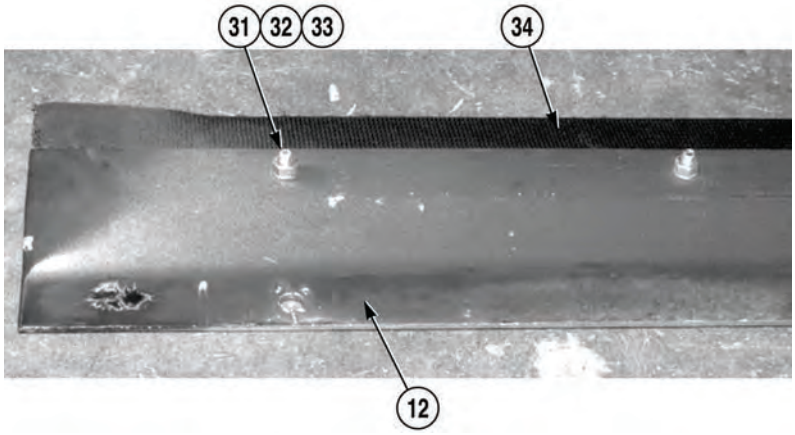

(1) Install wiper (34) in retainer (12) with 24 screws (33), lockwashers (32), and nuts (31).

3-76. CONVEYOR BELT WIPER REPLACEMENT (CONT).

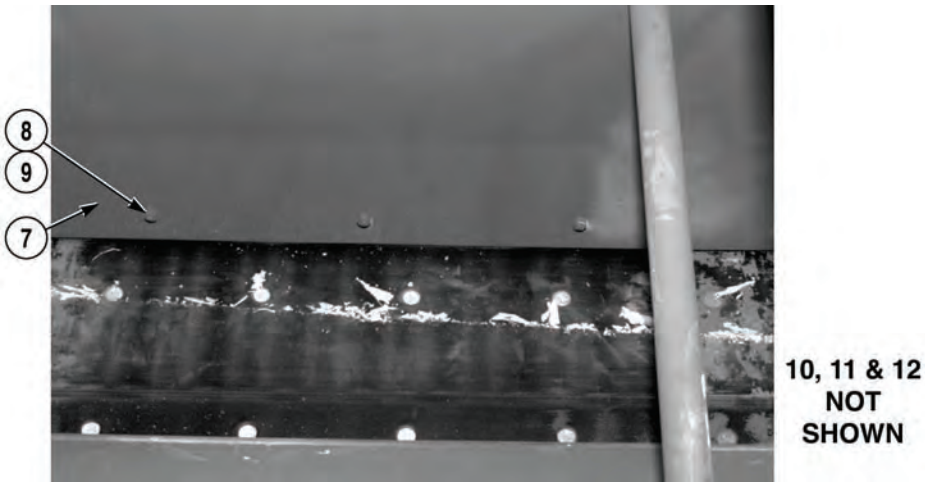

(2) With the aid of an assistant, position retainer (12) on aggregate bin (7) with 13 screws (11), washers (10), lockwashers (9), and nuts (8).

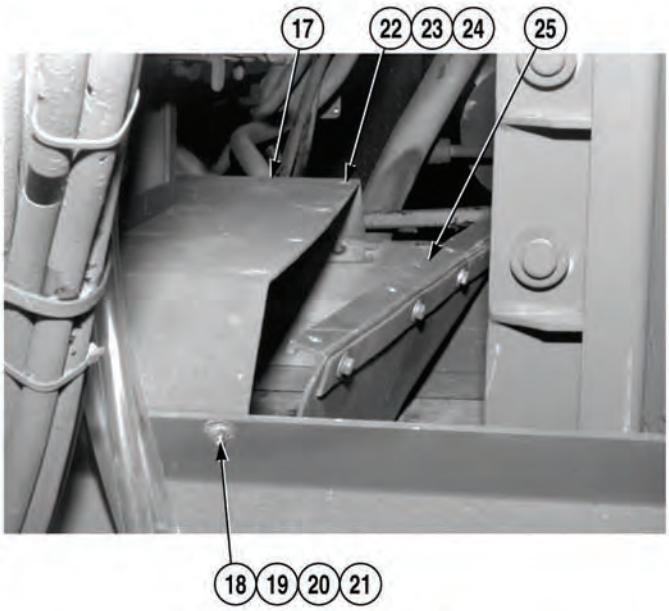

(3) Install plate (29) on aggregate bin (30) with lockwasher (28) and nut (27).

(4) Position cover (17) on Concrete Mobile Mixer (26).

(5) Install angle bracket (25) on cover (17) with four screws (24), lockwashers (23), and nuts (22).

(6) Install cover (17) with four screws (24), eight washers (21), four lockwashers (19), and nuts (18).

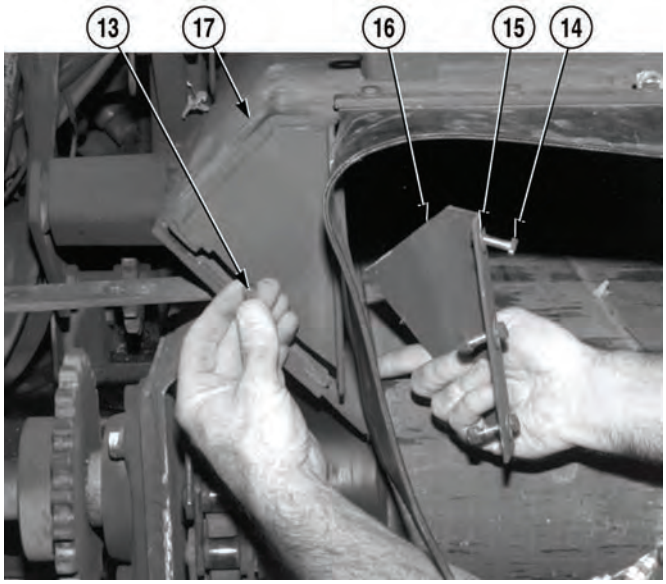

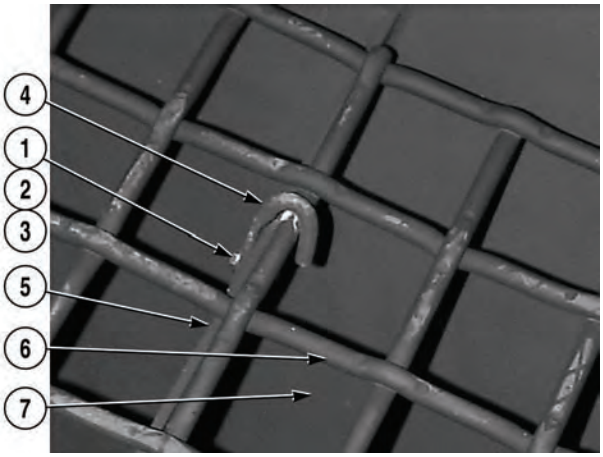

(7) Install two plates (16) on cover (17) with six screws (14), washers (15), and locknuts (13).

(8) With the aid of an assistant and using a lifting device, position aggregate bin grating (6) on aggregate bin (7).

(9) Install five hooks (4) on three brackets (5) with washers (3) screws (2) and locknuts (1).

(10) Remove lifting device from aggregate bin grating (6).

(11) Repeat Steps (3) through (5) for second aggregate bin grating.

f. Aggregate Bin Center Wiper Installation.

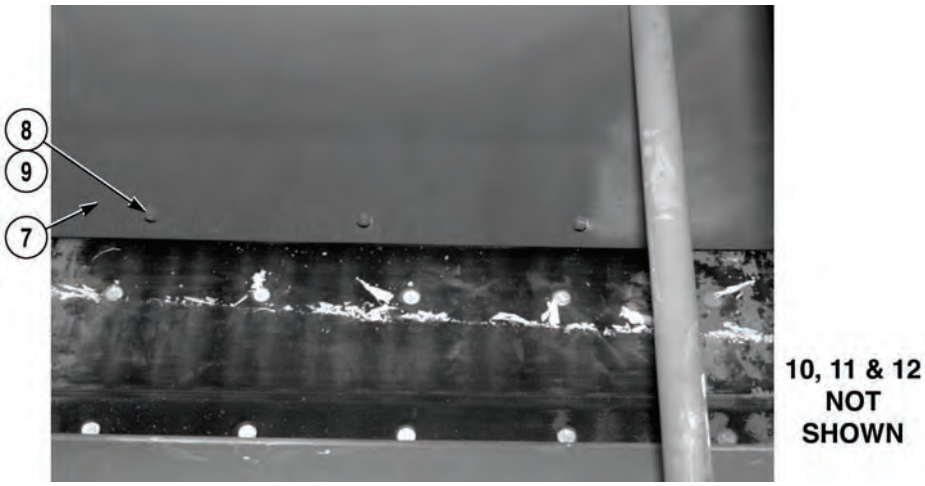

(1) Position wiper (11) on aggregate bin (7).

(2) Install retainer (10) on wiper (11) with 14 lockwashers (9) and nuts (8).

3-76. CONVEYOR BELT WIPER REPLACEMENT (CONT).

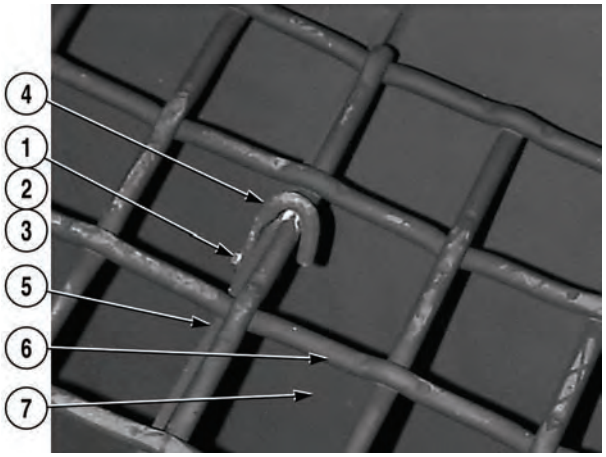

(3) With the aid of an assistant and using lifting device, position aggregate bin grating (6) on aggregate bin (7).

(4) Install five hooks (4) on three brackets (5) with five washers (3), screws (2), and locknuts (1).

(5) Remove lifting device from aggregate bin grating (6).

(6) Repeat Steps (3) through (5) for second aggregate bin grating.

g. Follow-On Maintenance:

- Install water tank (aggregate bin side only), (Para 3-42).
- Install admix tank (hi-flow) (aggregate bin side wiper only), (Para 3-39).

END OF TASK

3-77. CONVEYOR BELT SPEED ADJUSTMENT.

This task covers:

a. Adjustment

INITIAL SETUP

Tools and Special Tools
Tool Kit, General Mechanic's: Automotive (Item 19, Appendix I)

Personnel Required
Two

Materials/Parts
Chalk, Marking (Item 3, Appendix H)

Equipment Condition
Engine OFF, (Para 2-19)

a. Adjustment.

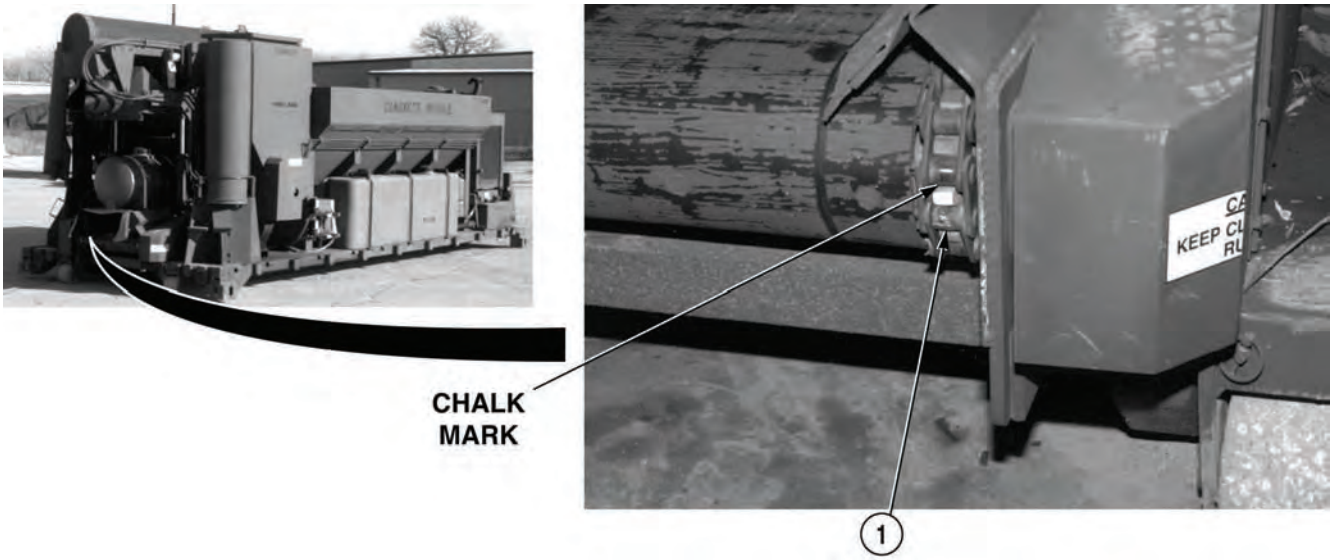

NOTE

Chalk line will be used as a visual marker to count rotations of conveyor belt drive gear.

(1) Apply chalk to tooth on conveyor belt drive gear (1).

3-77. CONVEYOR BELT SPEED ADJUSTMENT (CONT).

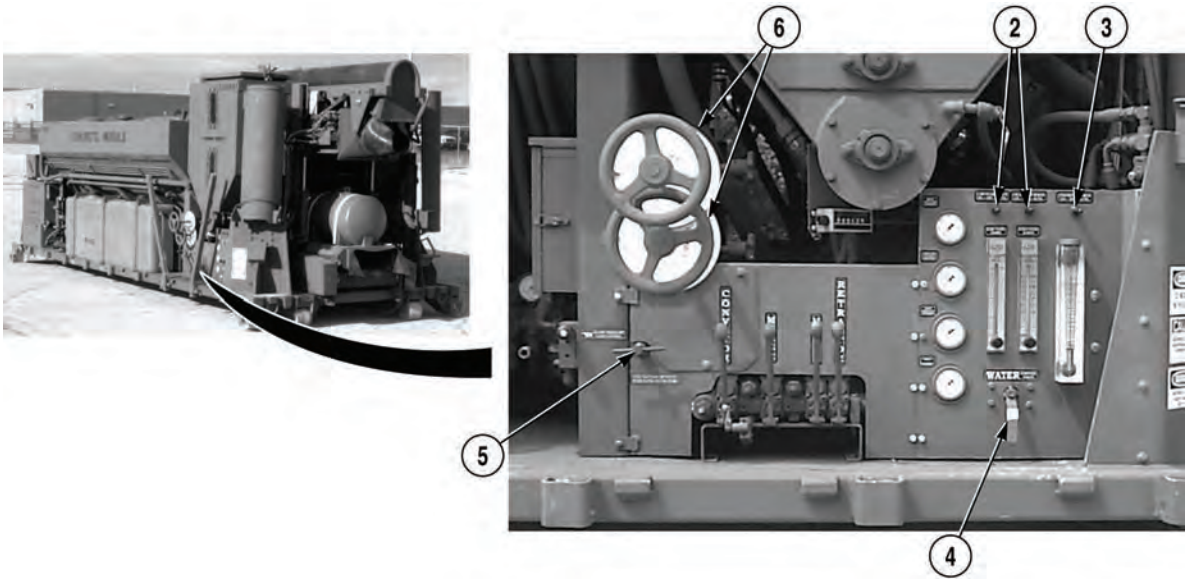

(2) Turn high flow/low flow admix switches (2) to “OFF.”

(3) Turn CONTROL OVERIDE switch (3) to “OFF” position.

(4) Turn water control valve (4) to “OFF” position.

(5) Pull selector valve (5) for lift cylinder OUT.

(6) Disengage cement bin clutch, (Para 2-22).

NOTE

Perform Step (7) only if aggregate bins are not empty.

(7) Adjust sand and stone gates (6) just until gates do not contact conveyor belt.

(8) Start engine, (Para 2-19).

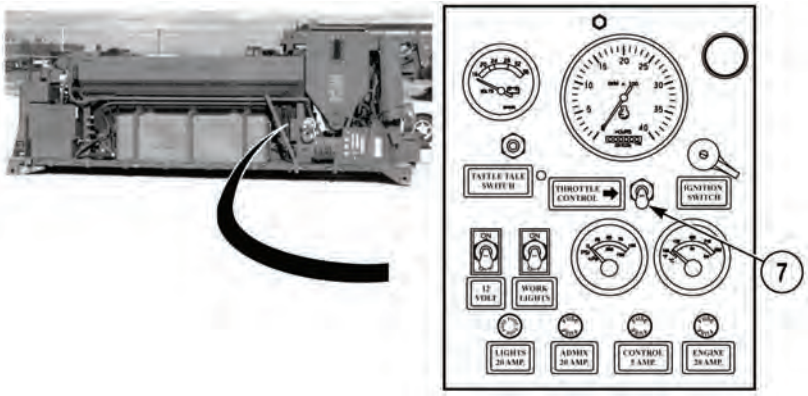

(9) Turn high idle switch (7) to “HIGH” position.

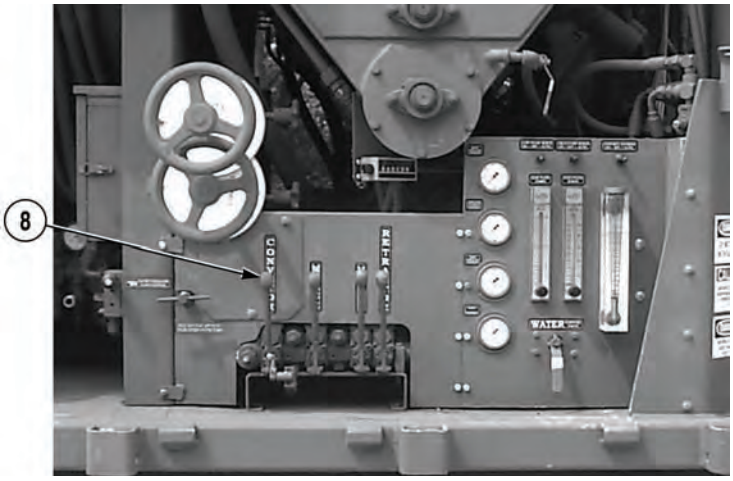

(10) Pull conveyor control lever (8) OUT.

3-77. CONVEYOR BELT SPEED ADJUSTMENT (CONT).

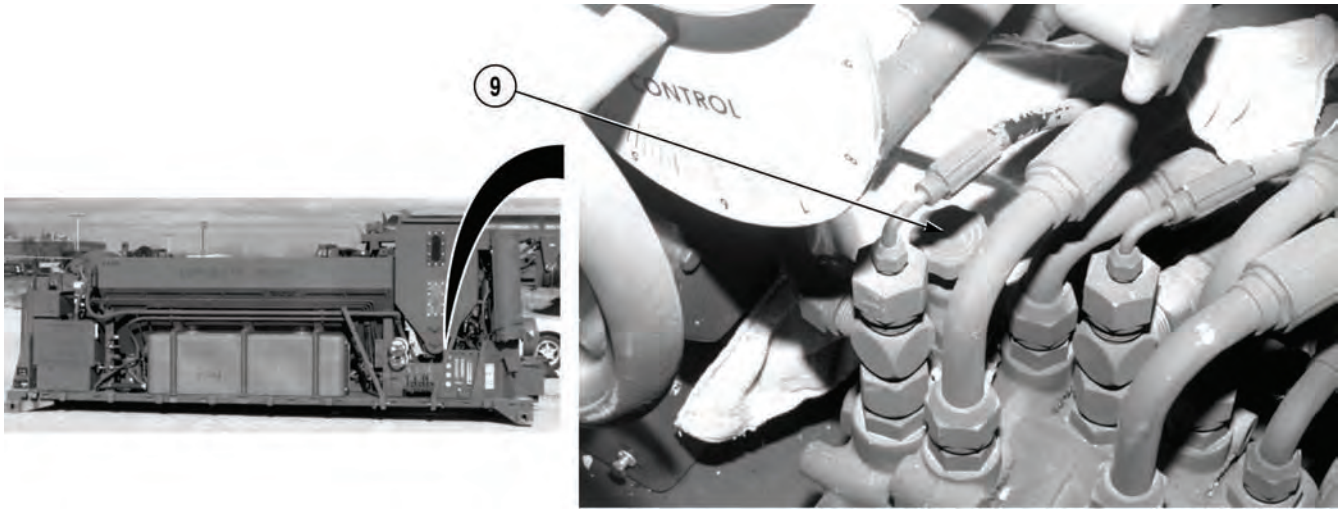

NOTE

- Set conveyor speed by turning conveyor belt control knob to 34 rpm for normal operations.
- With cement bin empty and cement bin augers engaged, cement auger counter will rotate at 340 RPMs or 10 times actual conveyer belt speed.

(11) While assistant counts number of revolutions of conveyor belt per minute, operator turns conveyor belt control knob (9) clockwise to decrease belt speed and counterclockwise to increase conveyor belt speed until desired speed is obtained.

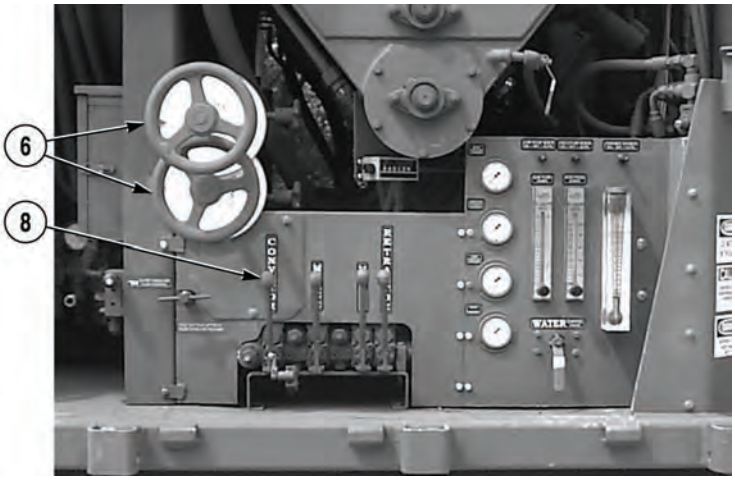

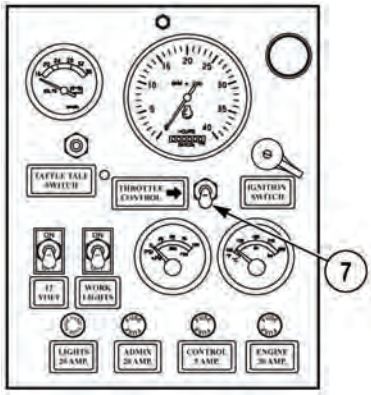

(12) Push conveyor control lever (8) IN.

(13) Turn high idle switch (7) to “LOW” position.

(14) Shut off engine, (Para 2-19).

(15) Close sand and stone gates (6).

END OF TASK

3-78. FRONT ENGINE ACCESS PANEL REPLACEMENT.

This task covers:

a. Removal b. Installation

INITIAL SETUP

Tools and Special Tools
Gloves, Heavy Duty (Item 7, Appendix I)

Equipment Condition
Engine OFF, (Para 2-19)

a. Removal.

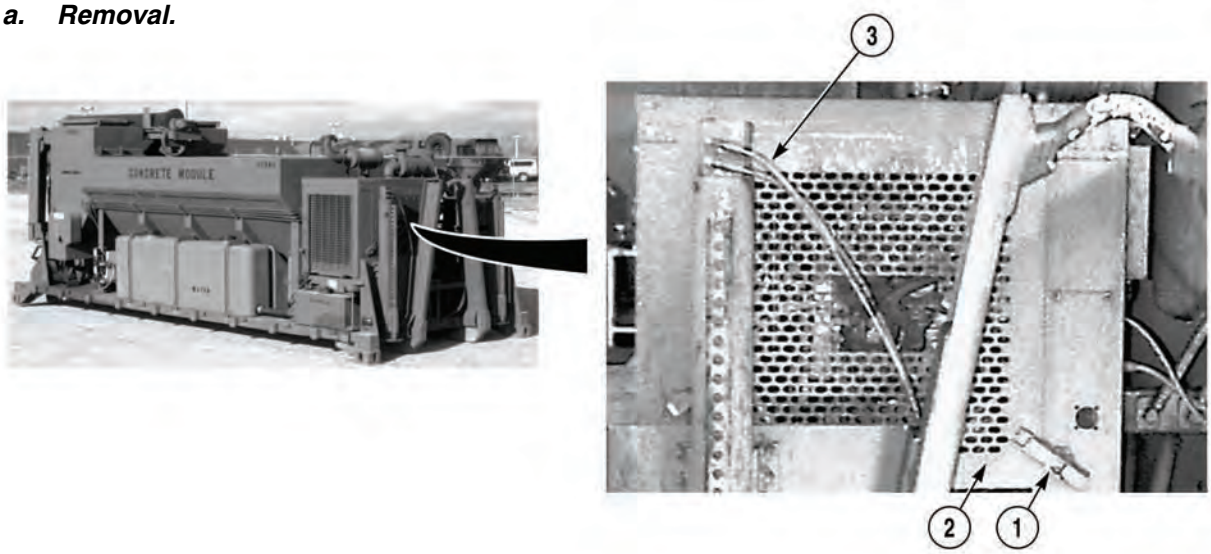

WARNING

Ensure personnel wear protective gloves when handling front engine access panel. Front engine access panel has sharp edges. Failure to comply may result in injury to personnel.

(1) Open two latches (1) on front engine access panel (2).

(2) Remove front engine access panel (2) from two pins (3).

3-78. FRONT ENGINE ACCESS PANEL REPLACEMENT (CONT).

b. Installation.

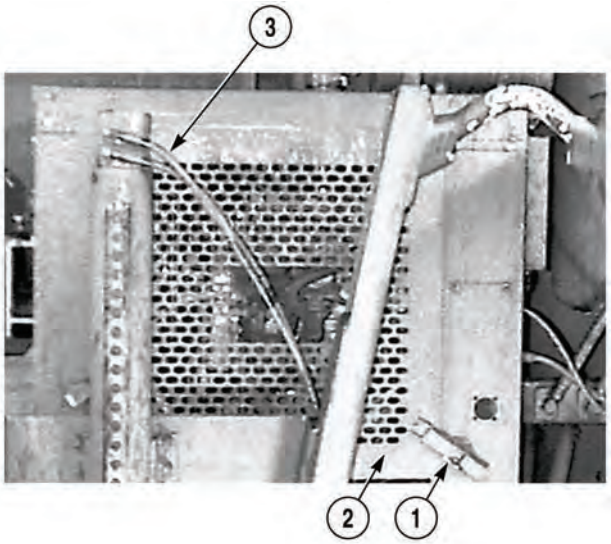

WARNING

Ensure personnel wear protective gloves when handling front engine access panel. Front engine access panel has sharp edges. Failure to comply may result in injury to personnel.

CAUTION

Keep all hoses clear upon installation of front engine access panel. Failure to comply could result in damage to equipment.

(1) Position front engine access panel (2) on two pins (3).

(2) Secure front engine access panel (2) with two latches (1).

END OF TASK

3-79. SIDE ENGINE ACCESS PANEL REPLACEMENT (S/N 8RDCD301513HC THRU S/N 8RDCD301619HC).

This task covers:

a. Removal b. Installation c. Follow-On Maintenance

INITIAL SETUP

Tools and Special Tools
Tool Kit, General Mechanic's: Automotive (Item 19, Appendix I)
Cap and Plug Set (Item 3, Appendix I)

Materials/Parts
Tags, Identification (Item 13, Appendix H)
Locknut (2) (MS51922-9)
Screw, Self-Tapping (6) (MS51851-106)

Equipment Condition
Engine OFF, (Para 2-19)
Front engine access panel removed, (Para 3-78)

a. Removal.

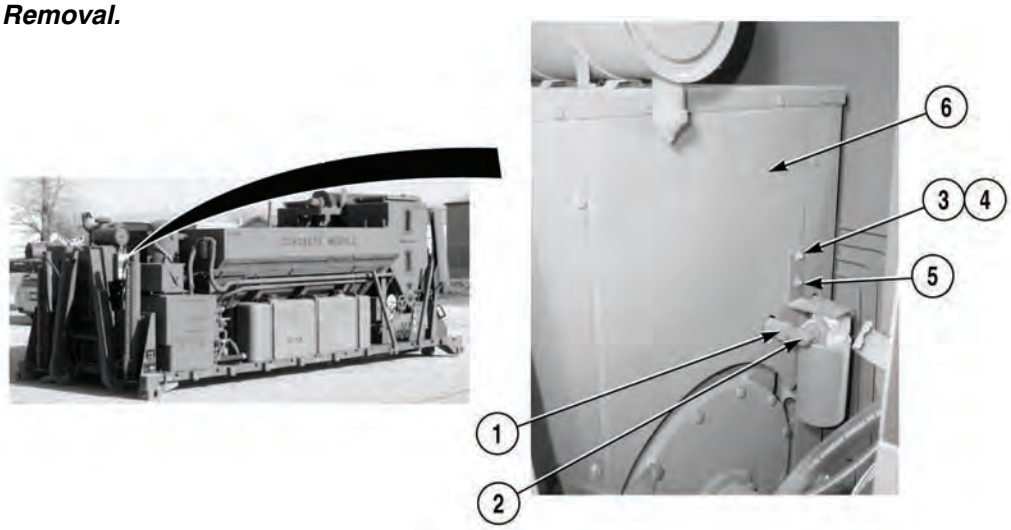

NOTE

- Tag and mark hoses and wires prior to removal.
- Cap and plug hoses upon removal.

(1) Disconnect two hoses (1) from elbows (2).

(2) Remove two locknuts (3), screws (4), and oil filter bracket (5) from side engine access panel (6). Discard locknuts.

3-79. SIDE ENGINE ACCESS PANEL REPLACEMENT (S/N 8RDCD301513HC THRU S/N 8RDCD301619HC) (CONT).

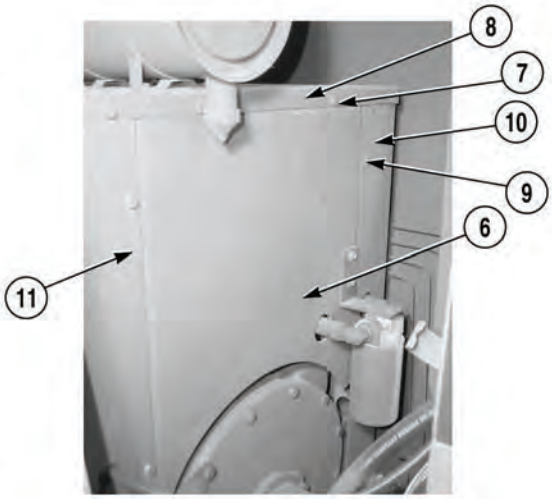

(3) Remove two self-tapping screws (7) in top engine cover (8) and side engine access panel (6). Discard self-tapping screws.

(4) Remove four self-tapping screws (9) and side engine access panel (6) from two panels (10) and (11). Discard self-tapping screws.

b. Installation.

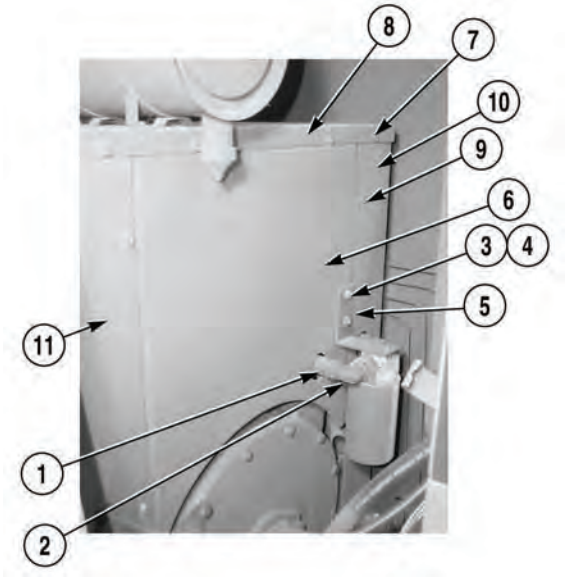

(1) Install side engine access panel (6) on two panels (10) and (11) with four self-tapping screws (9).

(2) Install two self-tapping screws (7) in top engine cover (8) and side engine access panel (6).

(3) Install oil filter bracket (5) on side engine access panel (6) with two screws (4), and locknuts (3).

NOTE

Ensure hoses are installed in same position as noted prior to removal.

(4) Connect two hoses (1) on elbows (2).

c. Follow-On Maintenance:

- Install front engine access panel, (Para 3-78).
- Install battery box cover, (Para 3-12).

END OF TASK

3-80. SIDE ENGINE ACCESS PANEL REPLACEMENT (S/N 8RDCD301620HC AND SUBSEQUENT).

This task covers:

a. Removal b. Installation c. Follow-On Maintenance

INITIAL SETUP

Tools and Special Tools
Tool Kit, General Mechanic's: Automotive (Item 19, Appendix I)
Cap and Plug Set (Item 3, Appendix I)

Materials/Parts
Tags, Identification (Item 13, Appendix H)
Locknut (2) (115303A)
Screw, Self-Tapping (4) (1367HX1)

Equipment Condition
Top engine cover removed, (Para 3-93)

a. Removal.

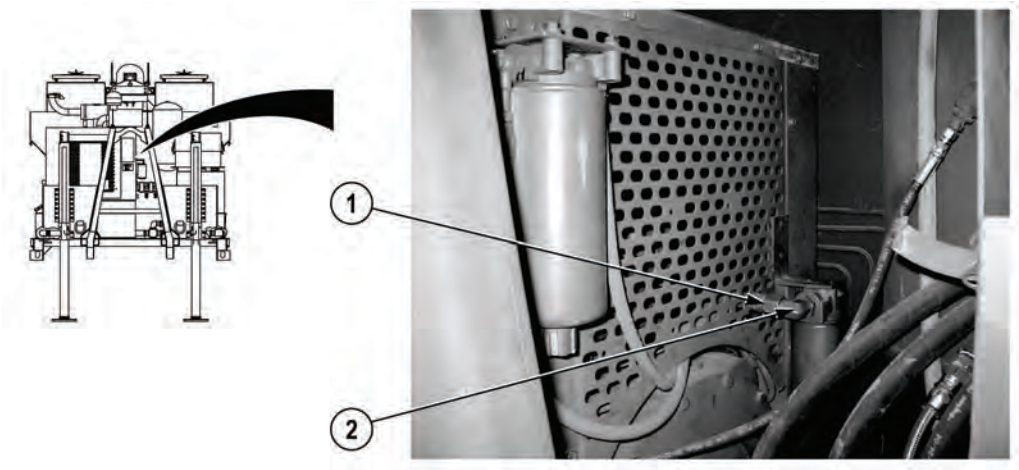

NOTE

- Tag and mark hoses prior to removal.
- Cap and plug hoses upon removal.

(1) Remove two hoses (1) from elbows (2).

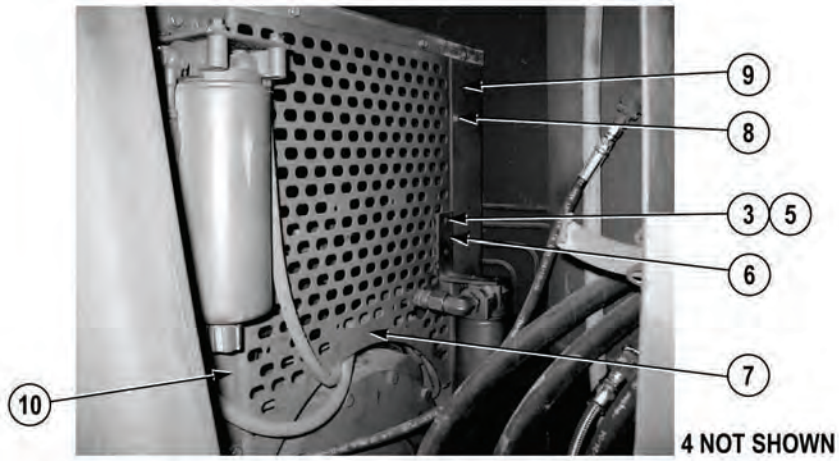

(2) Remove two locknuts (3), plate (4), screws (5), and oil filter bracket (6) from side engine access panel (7). Discard locknuts.

(3) Remove four self-tapping screws (8) and side engine access panel (7) from two corner supports (9) and (10). Discard self-tapping screws.

b. Installation.

(1) Install side engine access panel (7) on two corner supports (9) and (10) with four self-tapping screws (8).

(2) Install oil filter bracket (6) on side engine access panel (7) with two screws (5), plate (4), and locknuts (3).

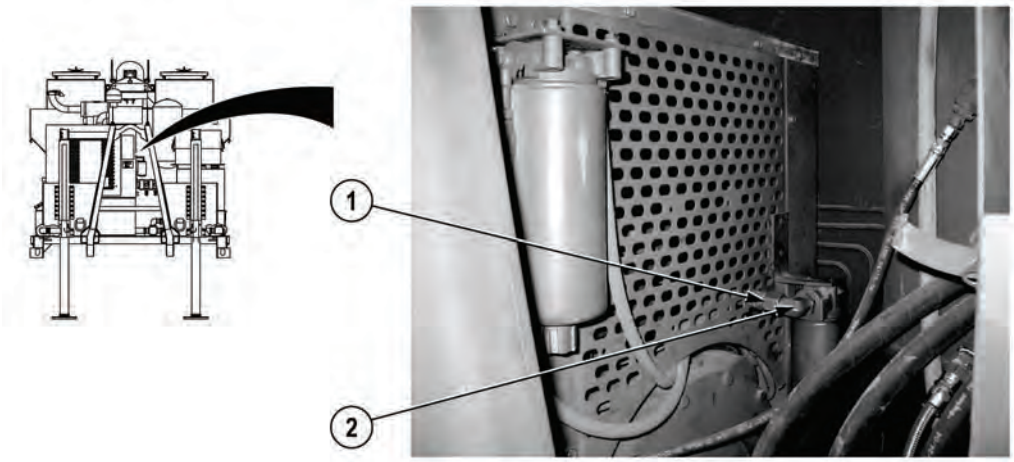

(3) Install two hoses (1) on elbows (2).

c. Follow-On Maintenance:

- Install top engine cover, (Para 3-93).

END OF TASK

3-81. REAR ENGINE ACCESS PANEL REPLACEMENT.

This task covers:

a. Removal b. Installation

INITIAL SETUP

Tools and Special Tools
Tool Kit, General Mechanic's: Automotive (Item 19, Appendix I)

Equipment Condition
Engine OFF, (Para 2-19)

a. Removal.

WARNING

Ensure engine is cool before performing this operation, injury to personnel may result.

(1) Open two latches (1) on rear engine access panel (2).

(2) Remove rear engine access panel (2) from two pins (3).

b. Installation.

CAUTION

Ensure to keep all hoses clear from rear engine access panel upon installation. Failure to comply could result on damage to equipment.

(1) Position rear engine access panel (2) on two pins (3).

(2) Secure rear engine access panel (2) with two latches (1).

END OF TASK

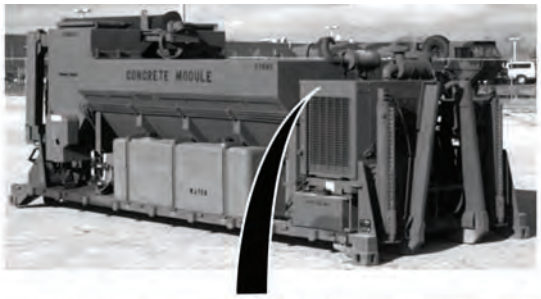

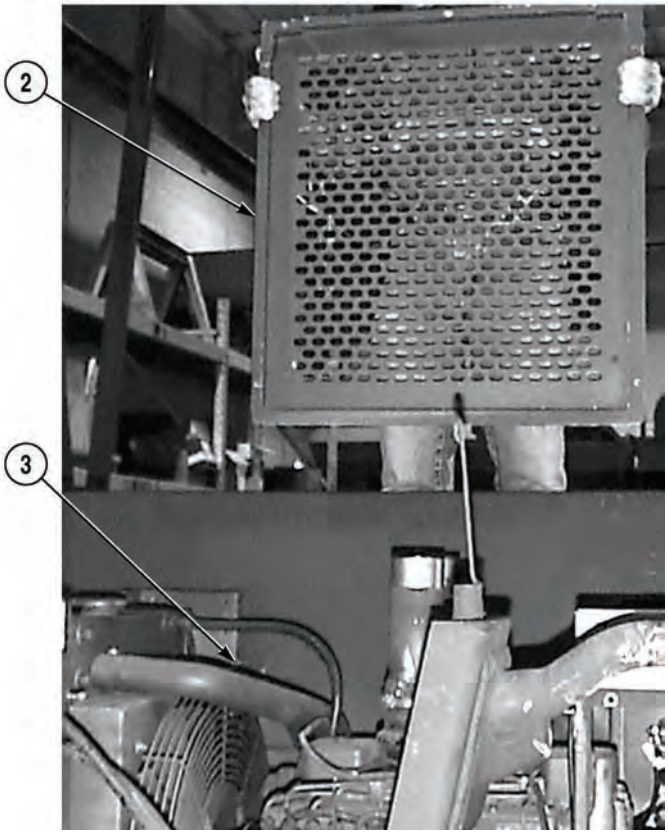

ONLY RIGHT SIDE OF ACCESS COVER SHOWN

3-82. ENGINE OIL DRAIN/FILL.

This task covers:

a. Drain b. Fill c. Follow-On Maintenance

INITIAL SETUP

Tools and Special Tools
Tool Kit, General Mechanic's: Automotive (Item 19, Appendix I)
Pan, Drain (Item 12, Appendix I)

Materials/Parts
Lubricating Oil, 15W40 (Item 6, Appendix H)
Lockwasher (2) (MS35338-44)

Equipment Condition
Engine OFF, (Para 2-19)
Front engine access panel removed, (Para 3-78)

a. Drain.

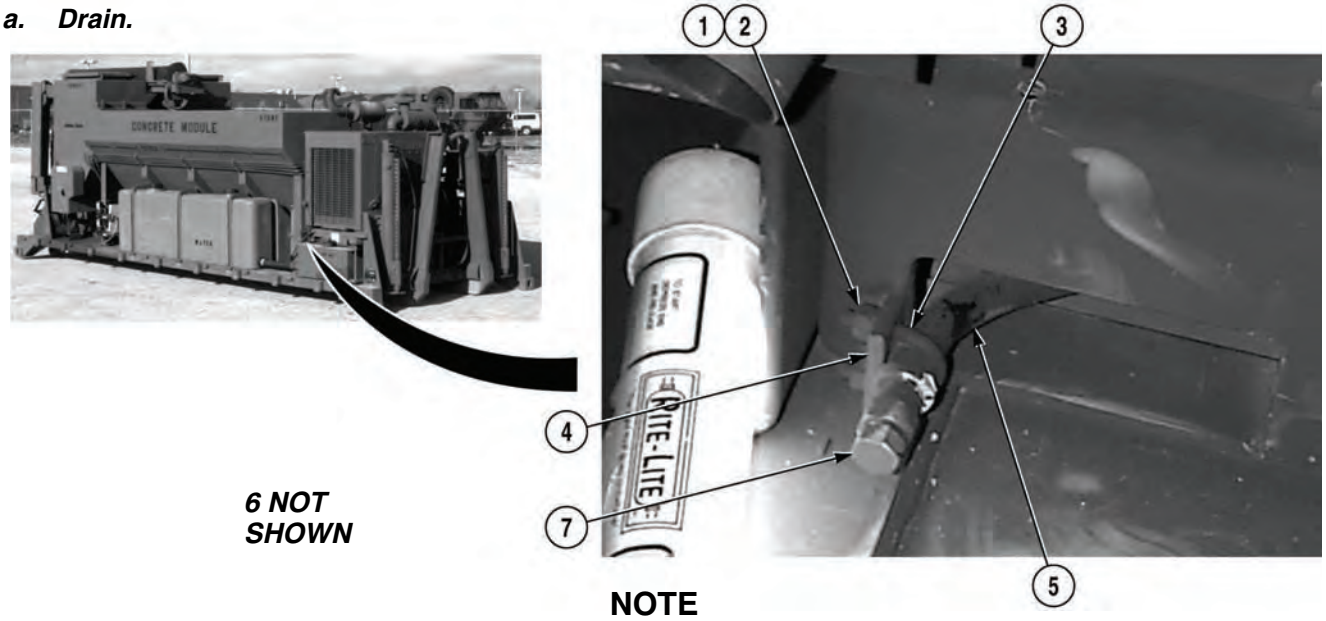

NOTE

To aid in draining, engine oil should be hot when drained.

(1) Remove two nuts (1), lockwashers (2), and U-bolt (3) from bracket (4). Discard lockwashers

NOTE

Position drain pan under drain hose to catch engine oil.

(2) Gently pull drain hose (5) away from engine (6).

(3) Remove drain plug (7) from drain hose (5) and completely drain oil.

(4) Install drain plug (7) in drain hose (5).

(5) Position drain hose (5) back towards engine (6).

(6) Secure drain hose (5) to bracket (4) with U-bolt (3), two lockwashers (2), and nuts (1).

3-82. ENGINE OIL DRAIN/FILL (CONT).

b. Fill.

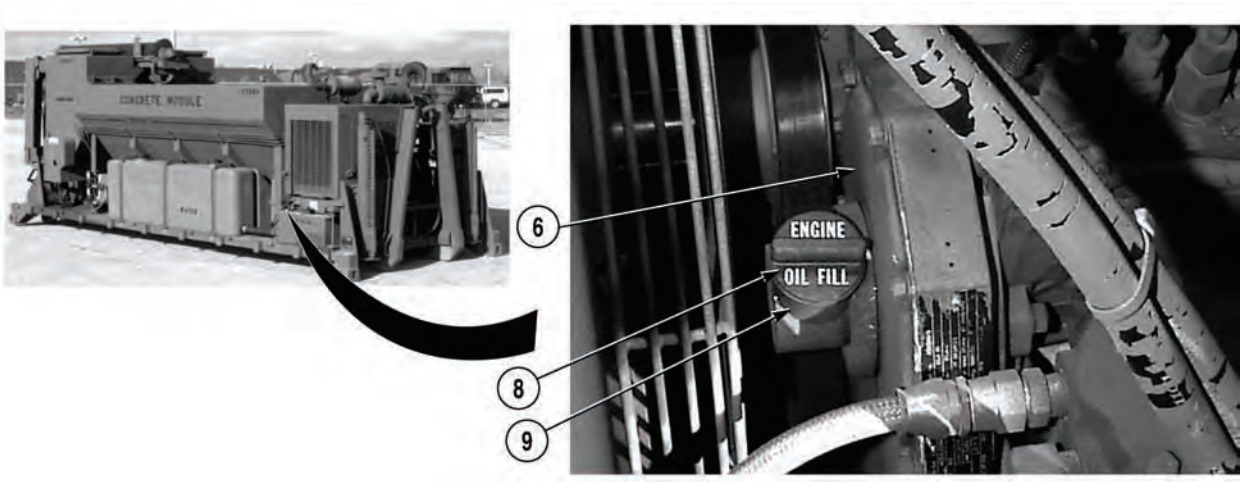

(1) Remove engine oil fill cap (8) from engine (6).

NOTE

- Engine oil level should be carefully checked by removing dipstick from engine and checking oil level on dipstick.
- Engine oil capacity is approximately 9.5 qt (9.0 L).

(2) Fill engine (6) with engine oil through fill cap hole (9) until dipstick shows “FULL.”

(3) Install engine oil fill cap (8) on engine (6).

c. Follow-On Maintenance:

- Start engine, (Para 2-19).
- Check for leaks.
- Shut off engine and allow oil to drain for 20 minutes.
- Check engine oil level and add engine oil as needed, (Para 2-10).
- Install front engine access panel, (Para 3-78).

END OF TASK

3-83. RADIATOR DRAIN/FILL.

This task covers:

a. Drain b. Fill c. Follow-On Maintenance

INITIAL SETUP

Tools and Special Tools
Tool Kit, General Mechanic's: Automotive (Item 19, Appendix I)
Pan, Drain (Item 12, Appendix I)

Materials/Parts
Antifreeze (Item 1, Appendix H)
Rags, Wiping (Item 9, Appendix H)
Hose, Drain (Item 19, Appendix H)

Equipment Condition
Engine OFF, (Para 2-19)
Front engine access panel removed, (Para 3-78)

a. Drain.

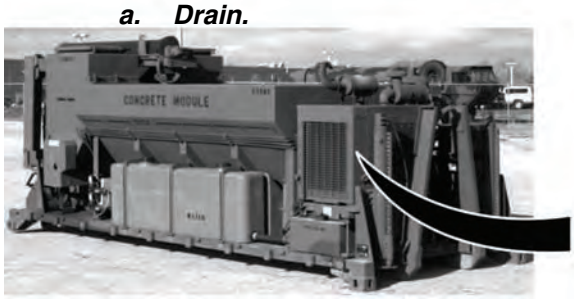

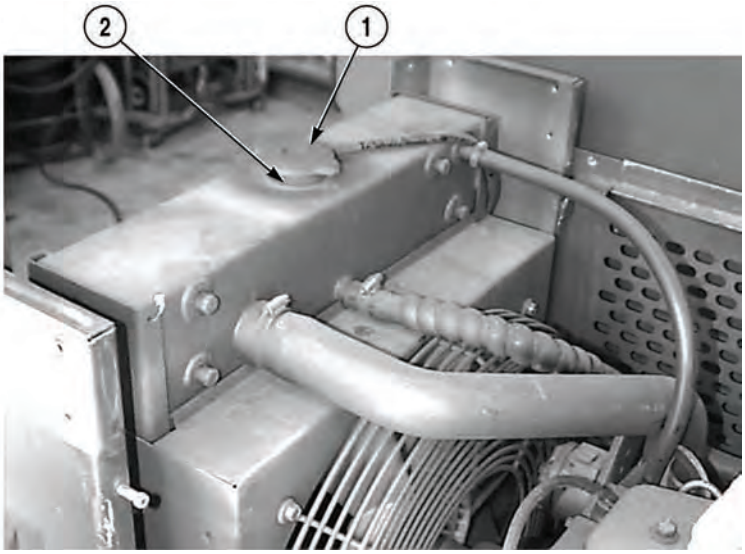

WARNING

- Radiator, radiator cap, coolant, and hoses are very hot and pressurized during Concrete Mobile Mixer operation. Let radiator cool before checking hoses. Failure to do so may result in serious burns to personnel.
- Use extreme caution when removing radiator cap. Sudden release of pressure can cause steam flash which could seriously injure personnel. Slowly loosen cap to first stop to relieve pressure before removing cap completely. After use, securely tighten cap.
- Use clean wiping rags or like material to remove radiator cap. Avoid using gloves. If hot water soaks through gloves, personnel could be burned.

(1) Remove radiator cap (1) from fill neck (2).

3-83. RADIATOR DRAIN/FILL (CONT).

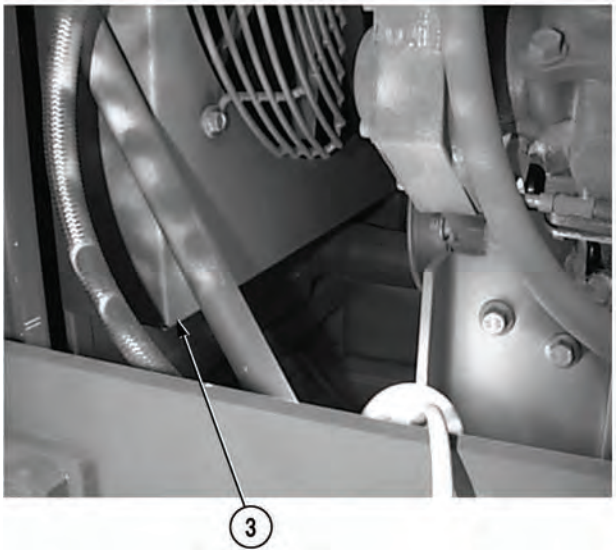

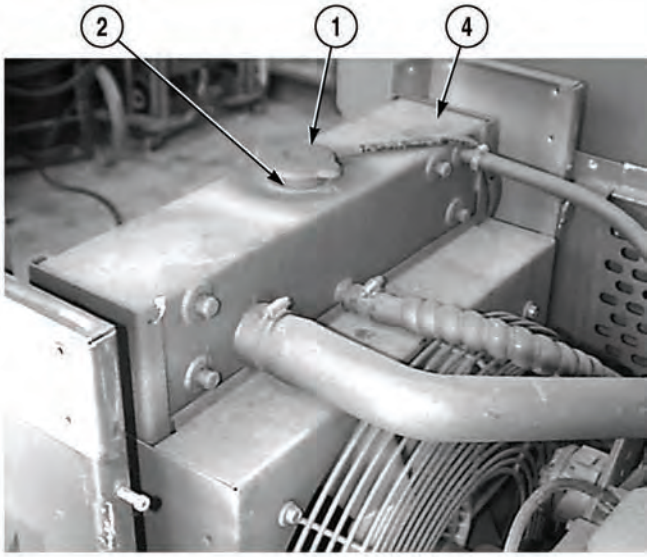

(2) Install drain hose on drain valve (3).

(3) Open drain valve (3) on radiator (4) and completely drain coolant.

(4) Close drain valve (3) on radiator (4).

(5) Remove drain hose from drain valve (3).

b. Fill.

NOTE

Radiator capacity is approximately 7.4 quarts (7.0 L).

(1) Fill radiator (4) with coolant through fill neck (2).

(2) Install radiator cap (1) on fill neck (2).

(3) Start engine and let run for 5 minutes and check for leaks, (Para 2-19).

(4) Check coolant level in radiator (4) and fill as required until full.

c. Follow-On Maintenance:

- Install front engine access panel, (Para 3-78).

END OF TASK

3-84. HYDRAULIC RESERVOIR DRAIN/FILL.

This task covers:

a. Drain b. Fill c. Follow-On Maintenance

INITIAL SETUP

Tools and Special Tools
Tool Kit, General Mechanic's: Automotive (Item 19, Appendix I)
Drum, Storage (Item 6, Appendix I)
Pan, Drain (Item 12, Appendix I)
Wrench, Combination 1-3/8 in. (Item 21, Appendix I)

Materials/Parts
Hydraulic Oil (Item 5, Appendix H)
Sealing Compound (Item 17, Appendix H)

Equipment Condition
Engine OFF, (Para 2-19)

a. Drain.

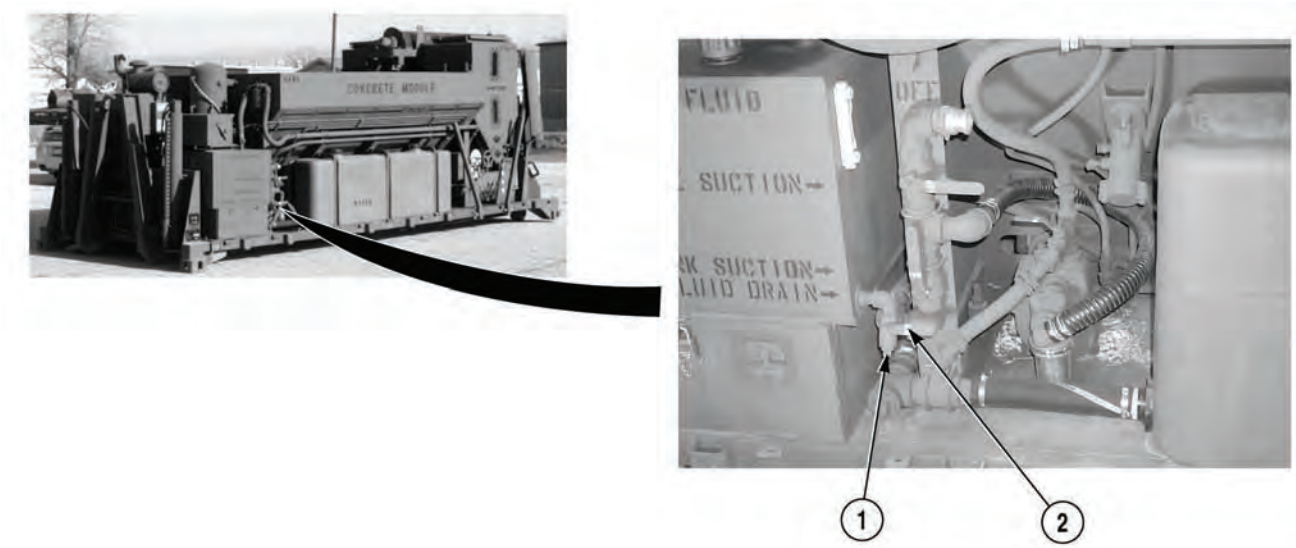

NOTE

- Hydraulic reservoir capacity is approximately 50 gal. (189 l).
- Position drain pan under drain valve to catch excess hydraulic fluid.

(1) Remove plug (1) from drain valve (2).

(2) Turn drain valve (2) to "ON" position and completely drain hydraulic fluid.

(3) Turn drain valve (2) to "OFF" position.

3-84. HYDRAULIC RESERVOIR DRAIN/FILL (CONT).

WARNING

Adhesives, solvents, and sealing compounds can burn easily, can give off harmful vapors, and are harmful to skin and clothing. To avoid injury or death, keep away from open fire and use in well-ventilated area. If adhesives, solvent, or sealing compound gets on skin or clothing, wash immediately with soap and water.

(4) Apply sealing compound to threads of plug (1).

(5) Install plug (1) in drain valve (2).

b. Fill.

CAUTION

Clean area before removing breather cap to keep foreign matter out of hydraulic reservoir and to prevent damage.

(1) Remove breather cap (3) from hydraulic reservoir (4).

(2) Fill hydraulic reservoir (4) with hydraulic oil until oil level is above red line and below black line in sight gage (5)

(3) Install breather cap (3) on hydraulic reservoir (4).

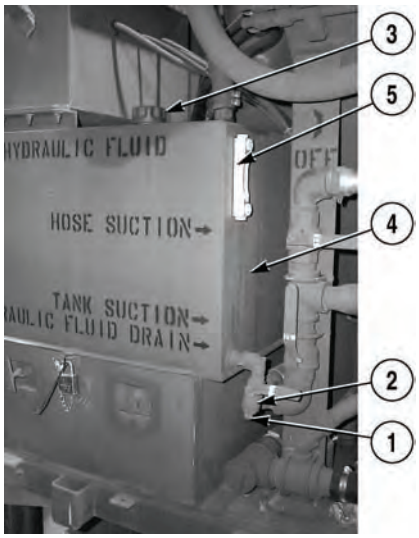

c. Follow-On Maintenance:

- Start engine, (Para 2-19).
- Check for leaks.
- Raise and lower lift cylinders, (Para 2-28).
- Shut off engine, (Para 2-19)
- Add hydraulic oil if necessary, (Para 2-10).

END OF TASK

3-85. HYDRAULIC RESERVOIR FILLER CAP REPLACEMENT.

This task covers:

a. Removal b. Installation

INITIAL SETUP

Tools and Special Tools
Tool Kit, General Mechanic's: Automotive
(Item 19, Appendix I)

Equipment Condition
Engine OFF, (Para 2-19)

Materials/Parts
Gasket (2) (FB-7)
Preformed Packing (2) (Item 18, Appendix H)
Screw (6) (MS35191-272)

a. Removal.

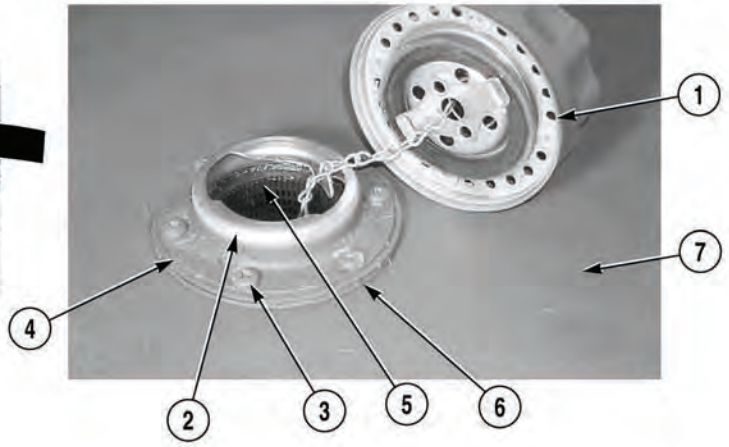

CAUTION

- Clean area before removing cap to keep foreign matter out of hydraulic reservoir. Failure to comply could result in damage to equipment.
- After hydraulic filler cap component is removed, cover opening to keep foreign matter out of hydraulic reservoir and to prevent possible damage.

(1) Remove cap (1) from mount (2).

(2) Remove six screws (3), mount (2), gasket (4), strainer (5), and gasket (6) from hydraulic reservoir (7). Discard gaskets and screws.

3-85. HYDRAULIC RESERVOIR FILLER CAP REPLACEMENT (CONT).

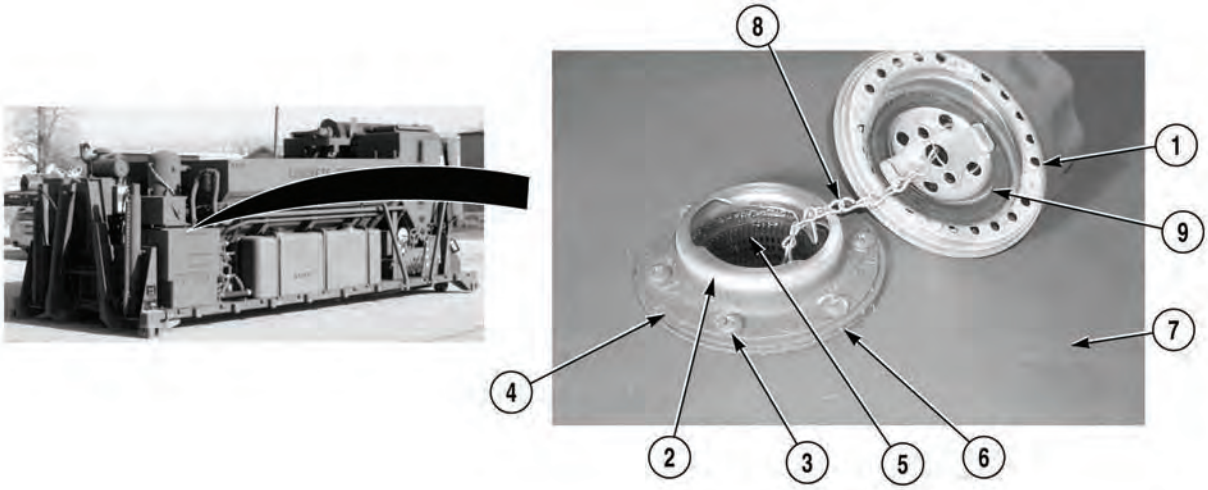

(3) Remove chain (8) from mount (2) and cap (1).

(4) Remove preformed packing (9) from cap (1). Discard preformed packing.

b. Installation.

CAUTION

After hydraulic filler cap component is removed, cover opening to keep foreign matter out of hydraulic reservoir and to prevent possible damage.

(1) Install preformed packing (9) on cap (1).

(2) Install chain (8) on mount (2) and cap (1).

(3) Install gasket (6), strainer (5), gasket (4), and mount (2) on hydraulic reservoir (7) with six screws (3).

(4) Install cap (1) on mount (2).

END OF TASK

3-86. HYDRAULIC RESERVOIR STRAINER SERVICE.

This task covers:

a. Service

b. Follow-On Maintenance

INITIAL SETUP

Tools and Special Tools
Tool Kit, General Mechanic's: Automotive (Item 19, Appendix I)
Cap and Plug Set (Item 3, Appendix I)
Wrench, Pipe (Item 24, Appendix I)

Materials/Parts
Cable Ties (Item 2, Appendix H)
Sealing Compound (Item 11, Appendix H)
Solvent, Dry-Cleaning (Item 12, Appendix H)
Tags, Identification (Item 13, Appendix H)

Equipment Condition
Hydraulic reservoir drained, (Para 3-84)

a. Service.

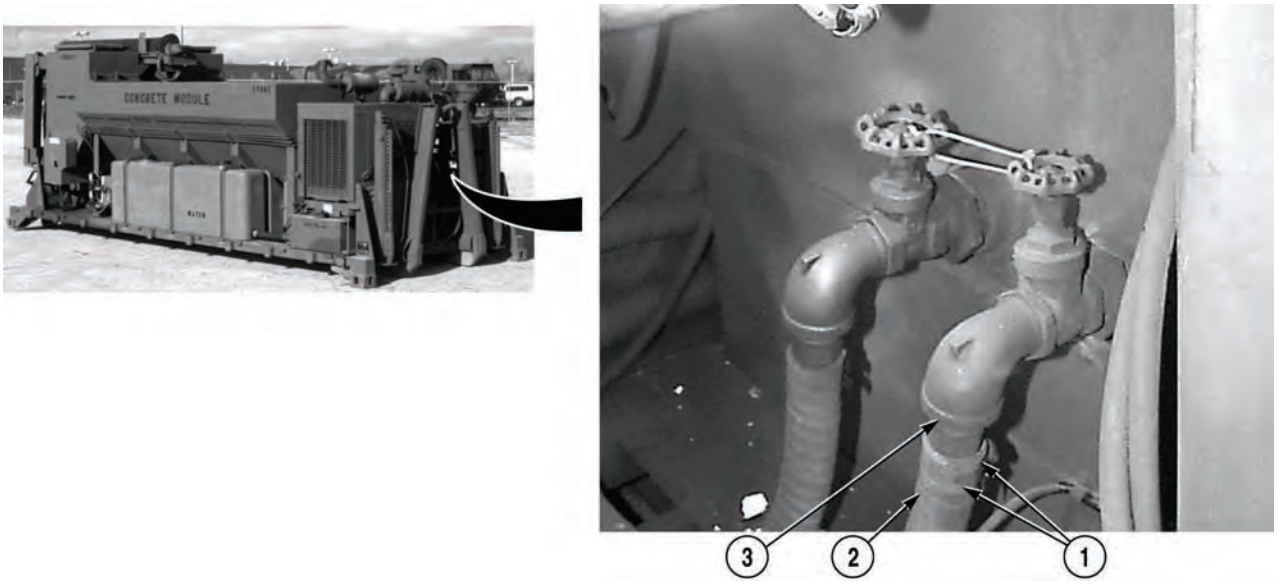

NOTE

- Tag and mark hoses prior to removal.
- Cap and plug hoses upon removal.
- There are two valves with strainers on the hydraulic reservoir. Both are removed the same way.

(1) Loosen two clamps (1) and remove hose (2) from fitting (3).

3-86. HYDRAULIC RESERVOIR STRAINER SERVICE (CONT).

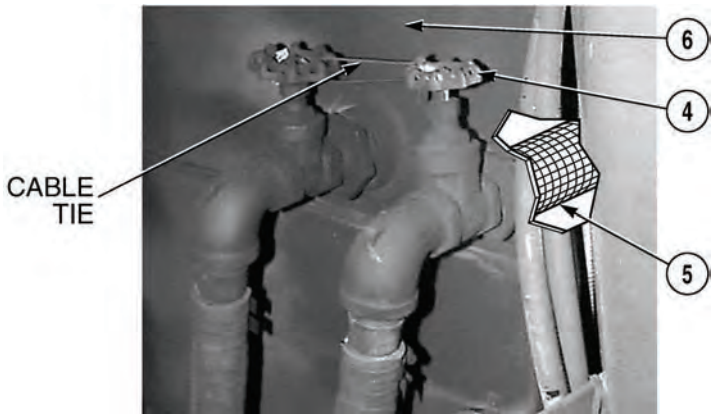

(2) Cut cable tie on valve assembly (4).

(3) Remove valve assembly (4) from strainer (5).

(4) Remove strainer (5) from hydraulic reservoir (6).

WARNING

Dry-cleaning solvent (P-D-680) is TOXIC and flammable. Wear protective goggles, face shield, and gloves; use only in a well-ventilated area; avoid contact with skin, eyes, and clothes, and do not breathe vapors. Keep away from heat or flame. Never smoke when using solvent. The flashpoint for Type II dry-cleaning solvent is 140°F (60°C) and Type III dry-cleaning solvent is 200°F (93°C). Failure to do so may result in serious injury or death to personnel.

(5) Clean all debris from strainer (5) with dry-cleaning solvent.

(6) Allow strainer (5) to air dry.

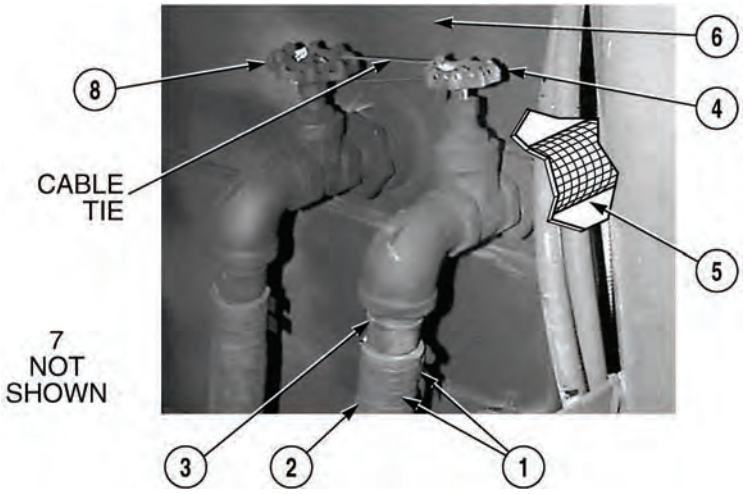

WARNING

Adhesives, solvents, and sealing compounds can burn easily, can give off harmful vapors, and are harmful to skin and clothing. To avoid injury or death, keep away from open fire and use in well-ventilated area. If adhesives, solvent, or sealing compound gets on skin or clothing, wash immediately with soap and water.

(7) Apply sealing compound to threads of strainer (5) and valve assembly (4).

(8) Install strainer (5) in hydraulic reservoir (6).

(9) Install valve assembly (4) in strainer (5).

(10) Position hose (2) on fitting (3) and tighten two clamps (1).

(11) Repeat Steps (1) through (10) for second strainer (7).

(12) Install cable tie on two valve assemblies (4) and (8).

b. Follow-On Maintenance:

- Fill hydraulic reservoir, (Para 3-84).
- Start engine, (Para 2-19).
- Check for leaks.
- Shut off engine, (Para 2-19).
- Check hydraulic reservoir oil level, (Para 2-6).

END OF TASK

3-87. RETRACTOR HYDRAULIC CYLINDER REPLACEMENT.

This task covers:

a. Removal b. Installation c. Follow-On Maintenance

INITIAL SETUP

Tools and Special Tools
Tool Kit, General Mechanic's: Automotive (Item 19, Appendix I)
Cap and Plug Set (Item 3, Appendix I)
Pan, Drain (Item 12, Appendix I)
Wrench, Combination 1-1/2 in. (Item 22, Appendix I)

Equipment Condition
Engine OFF, (Para 2-19)

Materials/Parts
Hydraulic Oil (Item 5, Appendix H)
Tags, Identification (Item 13, Appendix H)
Preformed Packing Kit (Item 18, Appendix H)
Locknut (MS51922-72)

Personnel Required
Two

a. Removal.

WARNING

If mixing auger is in stowed position, gravity could cause mixing auger to lower. Prior to performing this procedure, ensure mixing auger is secured with storage pin. Failure to comply could result in serious injury.

NOTE

- There are two retractor cylinders on the Concrete Mobile Mixer. Both are removed the same way.
- Tag and mark hoses prior to removal.
- Cap and plug hoses upon removal.
- Some models have locknuts and screws.

(1) Position drain pan under retractor hydraulic cylinder (1).

(2) Remove hose (2) from elbow (3).

(3) Remove hose (4) from adapter (5).

(4) Remove two pins (6) and pins (7) from retractor hydraulic cylinder (1).

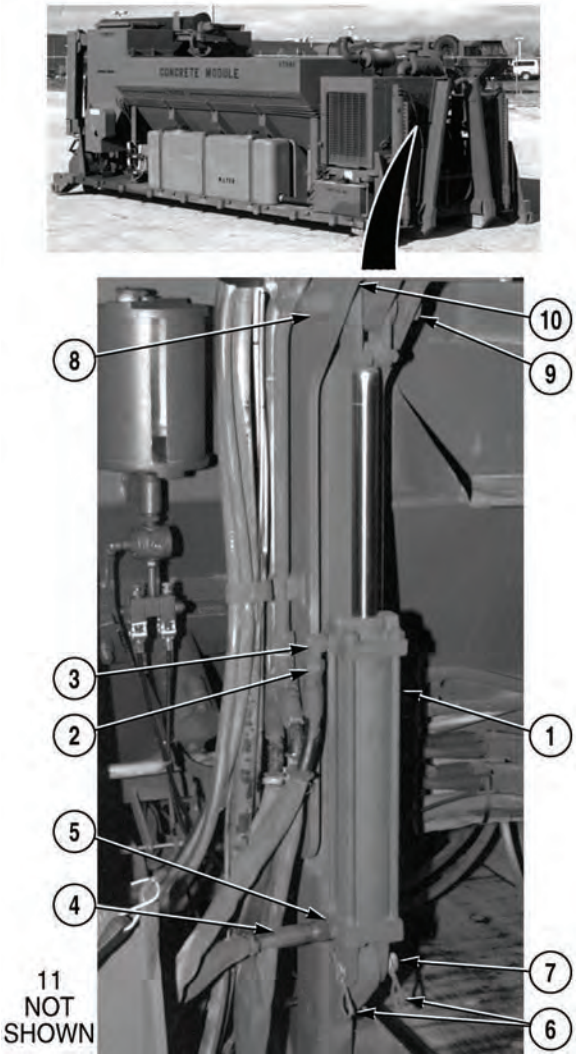

(5) With the aid of an assistant, remove locknut (8), screw (9), and retractor hydraulic cylinder (1) from bracket (10). Discard locknut.

NOTE

Note position of elbow prior to removal.

(6) Remove elbow (3), adapter (5), and two preformed packings (11) from retractor hydraulic cylinder (1). Discard two preformed packings.

b. Installation.

NOTE

Ensure elbow is installed in the same position as noted during removal.

(1) Apply lubricating oil to two preformed packings (11).

(2) Install two preformed packings (11).

(3) Install adapter (5) and elbow (3) in retractor hydraulic cylinder (1).

(4) With the aid of an assistant, position retractor hydraulic cylinder (1) on bracket (10) with screw (9) and locknut (8).

(5) Position two pins (7) in retractor hydraulic cylinder (1) and install with two pins (6).

(6) Tighten locknut (8) on screw (9).

(7) Install hose (4) on adapter (5).

(8) Install hose (2) on elbow (3)

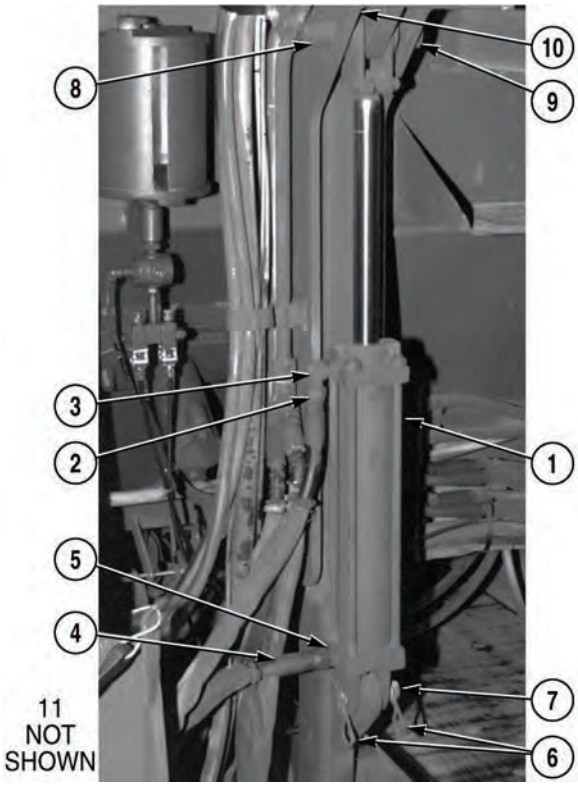

c. Follow-On Maintenance:

- Start engine, (Para 2-19).
- Check for leaks.
- Shut off engine, (Para 2-19).
- Check hydraulic reservoir oil level, (Para 2-10).

END OF TASK

3-88. ADMIX AND CHAIN DRIVE COVER(S) REPLACEMENT.

This task covers:

a. Admix Cover
b. Chain Drive Cover Removal
c. Chain Drive Cover Installation

INITIAL SETUP

Tools and Special Tools
Tool Kit, General Mechanic's: Automotive
(Item 19, Appendix I)

Materials/Parts
Lockwasher (3) (MS35338-44)
Lockwasher (5) (353AX)

Equipment Condition
Engine OFF, (Para 2-19)
Concrete Mobile Mixer unloaded, (Para 2-5)

a. Admix Cover.

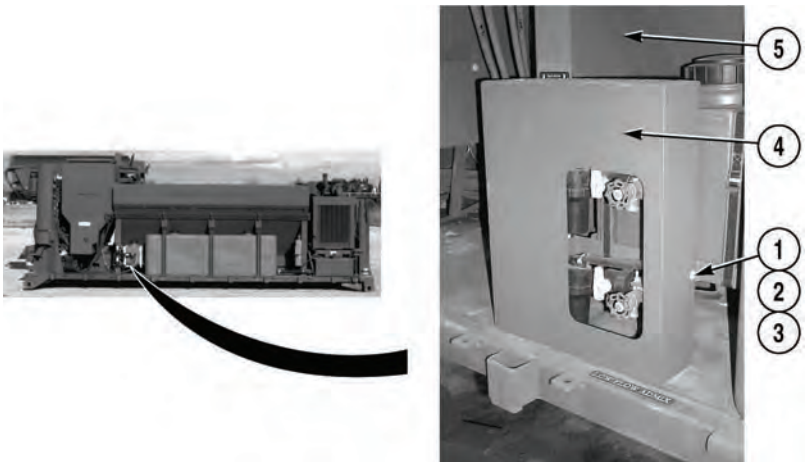

(1) **Removal.** Remove three screws (1), lockwashers (2), washers (3), and admix cover (4) from Concrete Mobile Mixer (5). Discard lockwashers.

(2) **Installation.** Install admix cover (4) on Concrete Mobile Mixer (5) with three screws (1), lockwashers (2), and washers (3).

b. Chain Drive Cover Removal.

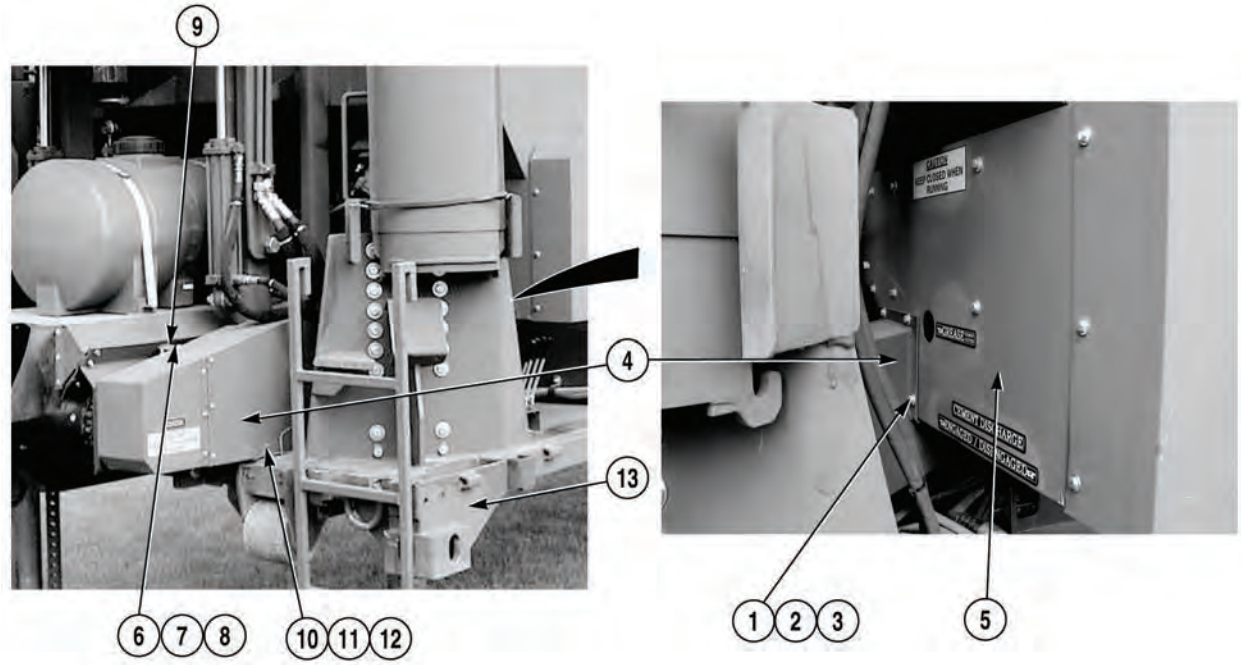

(1) Remove three screws (1), lockwashers (2), and washers (3) from chain drive cover (4) and cover (5). Discard lockwashers.

(2) Remove screw (6), lockwasher (7), and washer (8) from chain drive cover (4) and bracket (9). Discard lockwasher.

(3) Remove screw (10), lockwasher (11), washer (12), and chain drive cover (4) from Concrete Mobile Mixer (13). Discard lockwasher.

c. Chain Drive Cover Installation.

(1) Install chain drive cover (4) on Concrete Mobile Mixer (13) with washer (12), lockwasher (11), and screw (10).

(2) Install washer (8), lockwasher (7), and screw (6) on chain drive cover (4) and bracket (9).

(3) Install chain drive cover (4) on cover (5) with three washers (3), lockwashers (2), and screws (1).

END OF TASK

3-89. GRAB HANDLE REPLACEMENT.

This task covers:

a. Removal b. Installation

INITIAL SETUP

Tools and Special Tools
Tool Kit, General Mechanic's: Automotive
(Item 19, Appendix I)

Materials/Parts
Locknut (4) (MS 51922-17)

Equipment Condition
Engine OFF, (Para 2-19)
Concrete Mobile Mixer unloaded, (Para 2-5)

a. Removal.

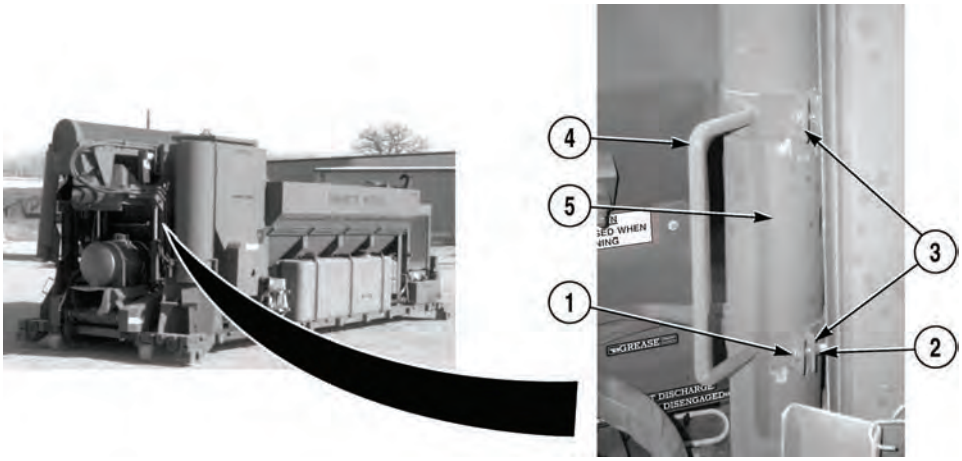

NOTE

Note position of grab handle prior to removal.

(1) Remove four screws (1), locknuts (2), two brackets (3), and grab handle (4) from lift cylinder (5). Discard locknuts.

b. Installation.

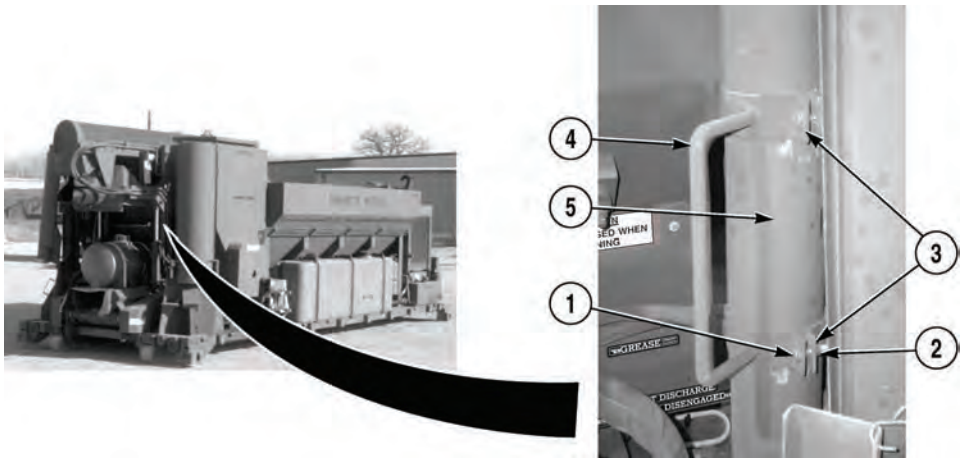

NOTE

Install grab handle as noted prior to removal.

(1) Install grab handle (4) and two brackets (3) on lift cylinder (5) with four screws (1) and locknuts (2).

END OF TASK

3-90. CONTROL BOX REPLACEMENT.

This task covers:

a. Removal b. Installation c. Follow-On Maintenance

INITIAL SETUP

Tools and Special Tools
Tool Kit, General Mechanic's: Automotive (Item 19, Appendix I)

Materials/Parts
Locknut (4) (MS 51943-31)
Tags, Identification (Item 13, Appendix H)

Equipment Condition
Engine Off, (Para 2-19)
Batteries disconnected, (Para 3-10)

a. Removal.

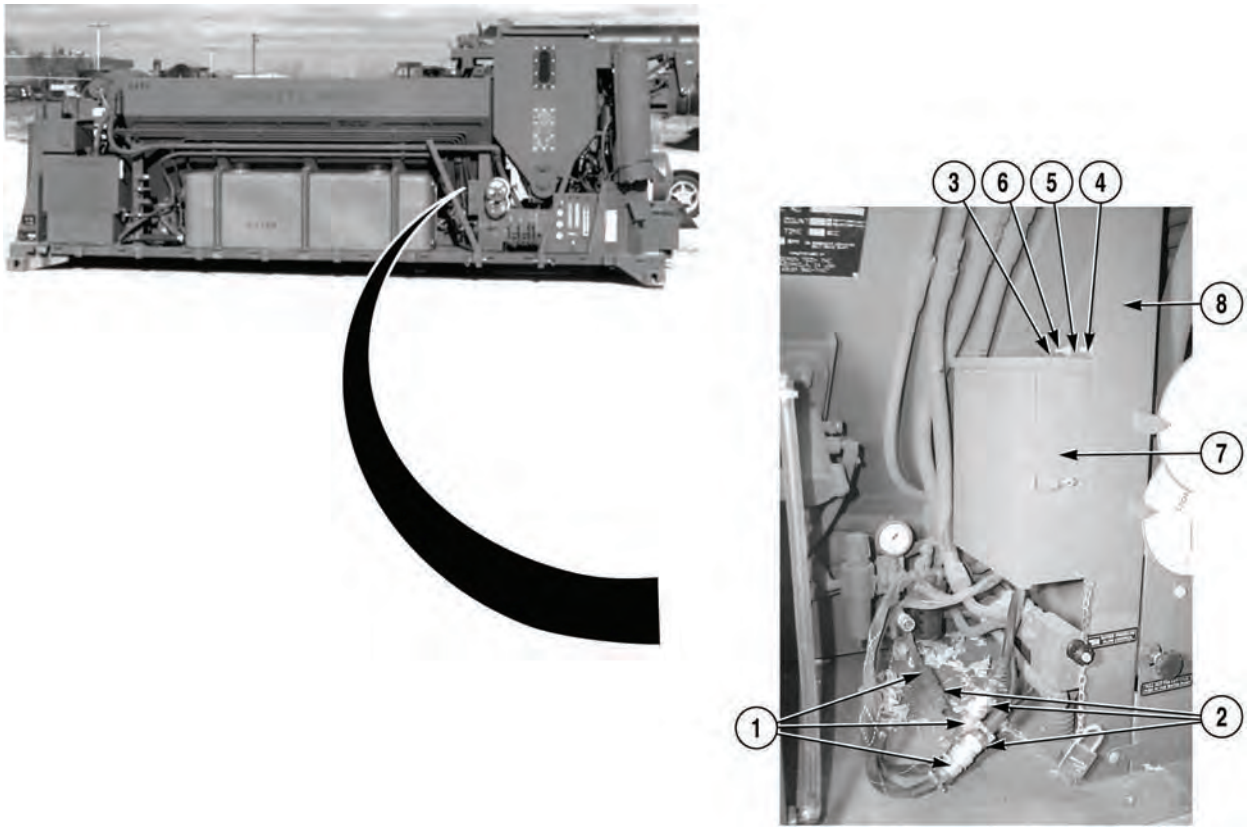

NOTE

Tag and mark connectors prior to removal.

(1) Disconnect three connectors (1) from connectors (2).

(2) Remove four screws (3), spacers (4), eight washers (5), four locknuts (6), and control box (7) from Concrete Mobile Mixer (8). Discard locknuts.

b. Installation.

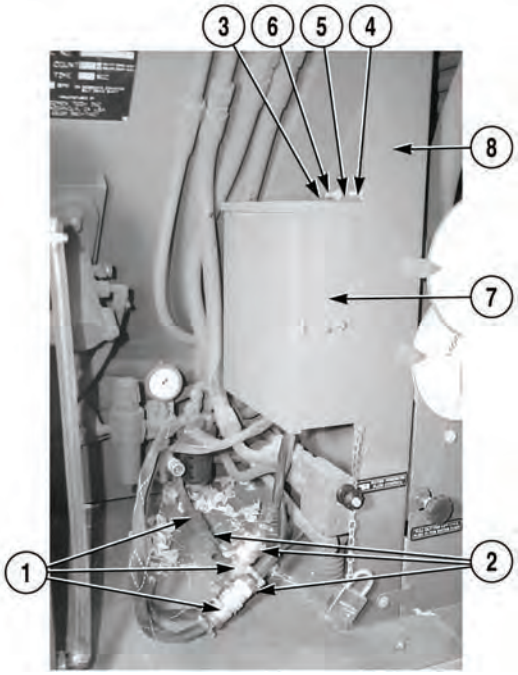

NOTE

Install connectors as noted prior to removal.

(1) Install control box (7) on Concrete Mobile Mixer (8) with four locknuts (6), eight washers (5), four spacers (4), and screws (3).

(2) Connect three connectors (2) to connectors (1).

c. Follow-On Maintenance:

- Connect batteries, (Para 3-10).
- Start engine (Para 2-19).
- Check operation of control box.
- Shut off engine, (Para 2-19).

END OF TASK

3-91. AUGER SHAFT AND LOWER BEARING REPLACEMENT.

This task covers:

a. Removal b. Installation c. Follow-On Maintenance

INITIAL SETUP

Tools and Special Tools
Tool Kit, General Mechanic's: Automotive (Item 19, Appendix I)

Personnel Required
Two

Materials/Parts
Lockwasher (8) (355AX)
Locknut (2) (108708A)
Locknut (2) (110310A)
Locknut (4) (114927A)

Equipment Condition
Concrete Mobile Mixer unloaded, (Para 2-5)
Mixing auger deployed, (Para 2-23)
Engine Off, (Para 2-19)

a. Removal.

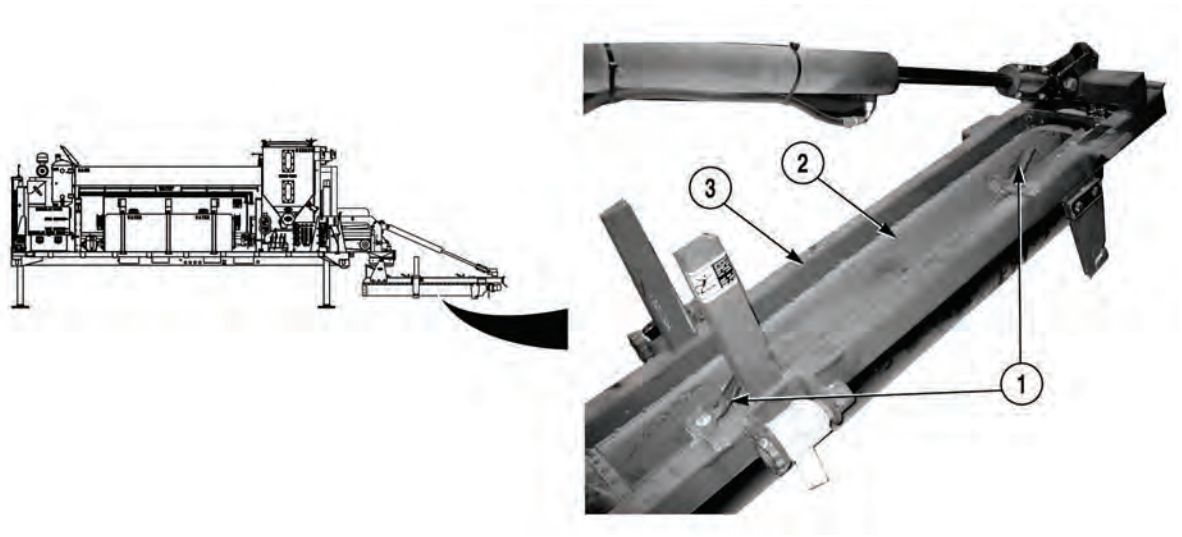

NOTE

Lower bearing and auger shaft are an assembly. Lower bearing is not serviceable separately.

(1) Rotate two clamps (1) and stow cover (2) in frame assembly (3).

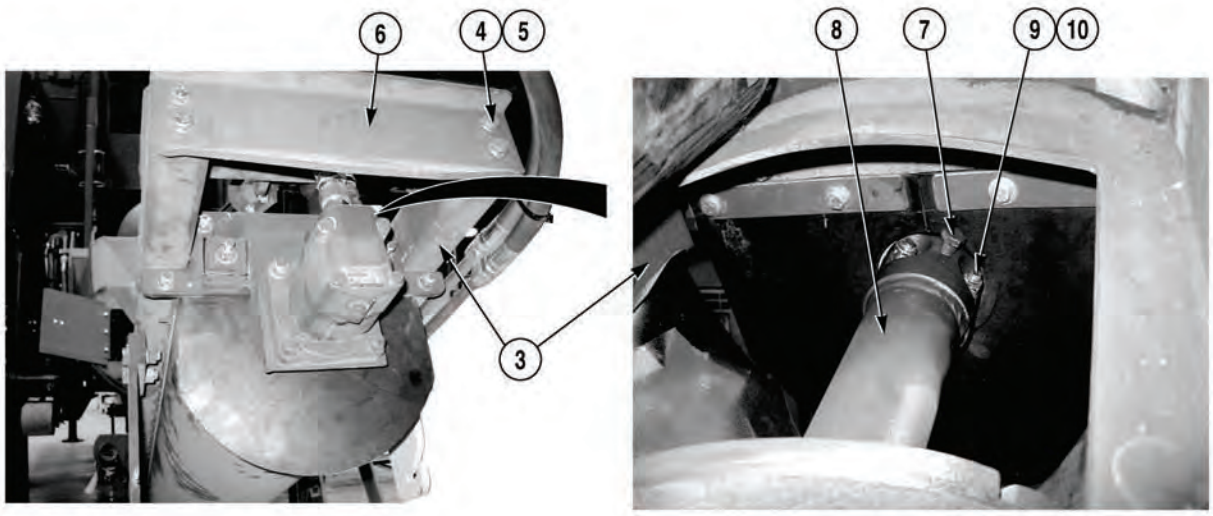

(2) Remove four screws (4), lockwashers (5), and bracket (6) from frame assembly (3). Discard lockwashers.

NOTE

Auger motor and bracket are removed as an assembly.

(3) Remove screw (7) from auger (8).

(4) Remove two locknuts (9) and screws (10) from auger (8). Discard locknuts.

CAUTION

Hydraulic motor remains attached to hoses and support bracket. Care must be taken when removing auger motor to support hoses, auger motor, and support bracket. Failure to comply may cause damage to equipment.

(5) With the aid of an assistant, remove two locknuts (11), backing plates (12), four isolators (13), two screws (14), and auger motor mounting bracket (15) from bracket (16). Position on frame assembly (3). Discard locknuts.

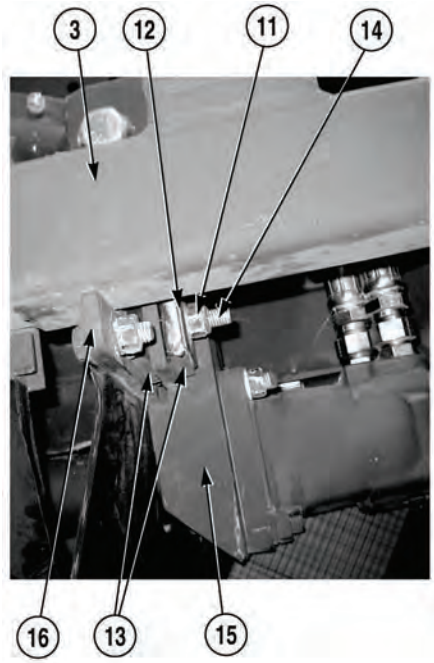

3-91. AUGER SHAFT AND LOWER BEARING REPLACEMENT (CONT).

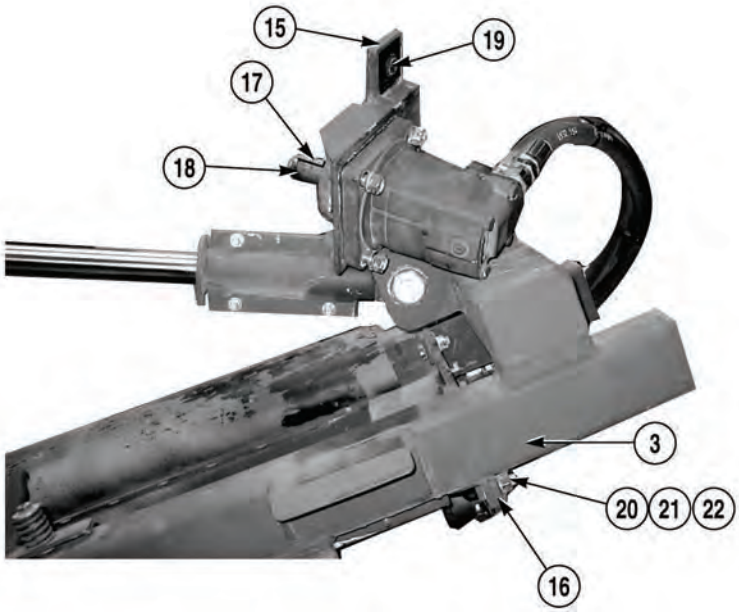

(6) Remove key (17) from shaft (18), and two rubber bushings (19) from auger motor mounting bracket (15).

(7) Remove four nuts (20), lockwashers (21), screws (22), and bracket (16) from frame assembly (3). Discard lockwashers.

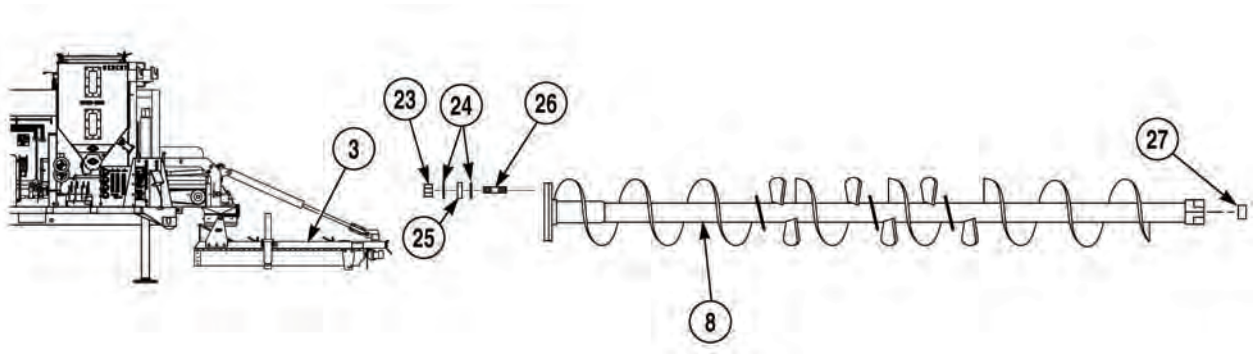

(8) Remove four locknuts (23), eight washers (24), and four isolators (25) from studs (26). Discard locknuts.

WARNING

Auger is heavy. Do not lift auger without the aid of an assistant. Failure to comply may cause serious injury to personnel.

NOTE

Bearing end of auger has a plug that aligns with hole in rear housing. Note position of plug and hole prior to removal.

(9) With the aid of an assistant, remove auger (8) from frame assembly (3).

(10) Remove four studs (26) from auger (8).

NOTE

Auger shaft is filled with Gear GO 80W-90 lubricating oil.

(11) Remove plug (27) from auger (8), (Para 3-92).

3-91. AUGER SHAFT AND LOWER BEARING REPLACEMENT (CONT).

b. Installation.

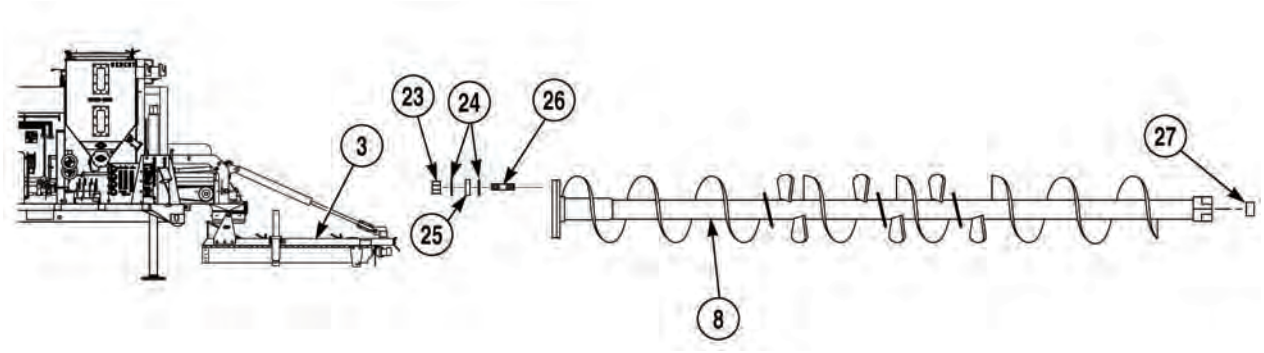

(1) Lubricate auger (8) and install plug (27), (Para 3-92).

(2) Install four studs (26) on auger (8).

WARNING

Auger is heavy. Do not lift auger without the aid of an assistant. Failure to comply may cause serious injury to personnel.

NOTE

Install bearing end of auger so that auger plug aligns with hole on frame assembly.

(3) With the aid of an assistant, position auger (8) in frame assembly (3).

(4) Install eight washers (24), four isolators (25), and locknuts (23) on studs (26).

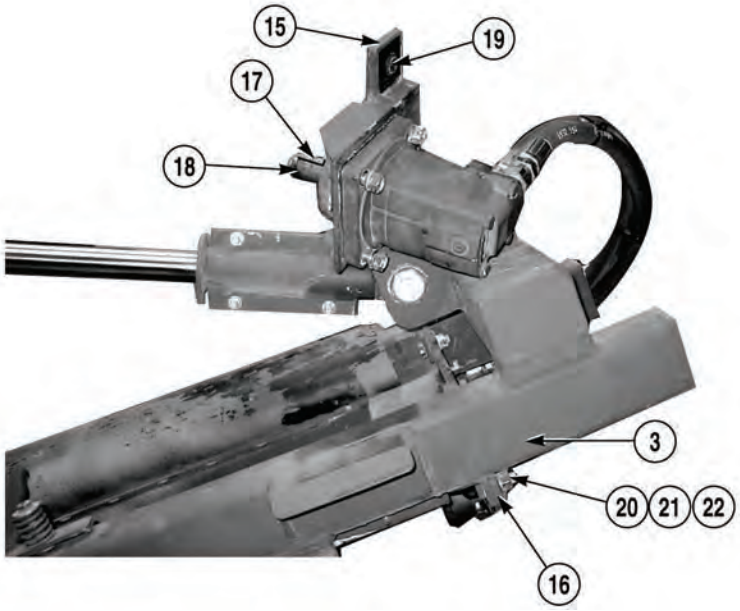

(5) Install bracket (16) on frame assembly (3) with four screws (22), lockwashers (21), and nuts (20).

(6) Install two rubber bushings (19) on auger motor mounting bracket (15).

(7) Install key (17) on shaft (18).

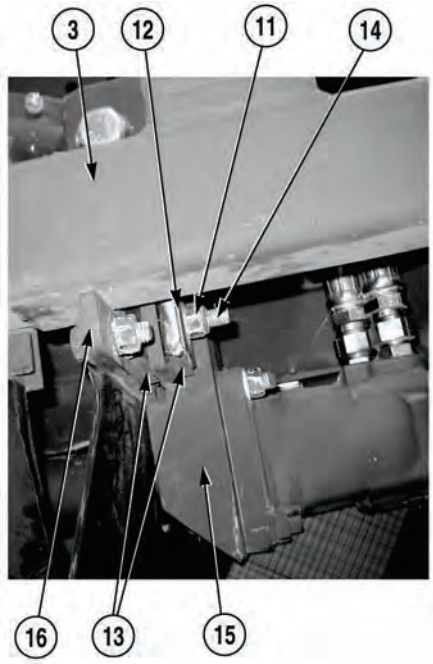

(8) With the aid of an assistant, remove auger motor mounting bracket (15) from frame assembly (3), and install auger motor mounting bracket (15) on bracket (16) with two screws (14), four isolators (13), two backing plates (12), and locknuts (11).

3-91. AUGER SHAFT AND LOWER BEARING REPLACEMENT (CONT).

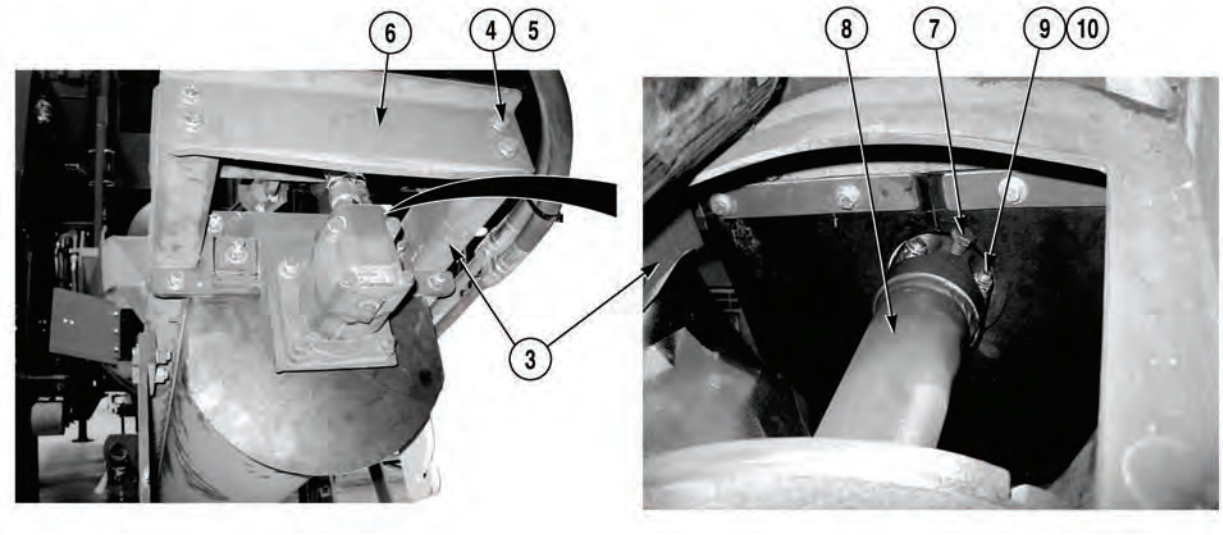

(9) Install two screws (10) and locknuts (9) on auger (8).

(10) Install screw (7) on auger (8).

(11) Install bracket (6) on frame assembly (3) with four lockwashers (5) and screws (4).

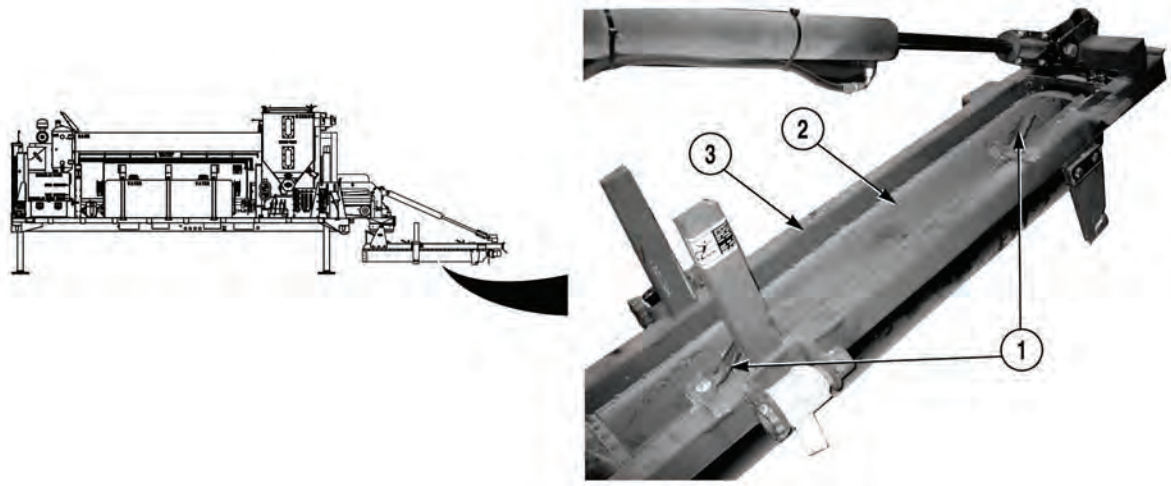

(12) Unstow cover (2) on frame assembly (3) and rotate two clamps (1).

c. Follow-On Maintenance:

- Stow mixing auger, (Para 2-23).

END OF TASK

3-92. AUGER LOWER BEARING SERVICE.

This task covers:

a. Removal b. Installation

INITIAL SETUP

Tools and Special Tools
Tool Kit, General Mechanic's: Automotive
(Item 19, Appendix I)

Materials/Parts
Locknut (2) (MS 51922-33)
Lockwashers (8) (MS35338-48)
Sealing Compound (Item 11, Appendix H)
Lubricating Oil, Gear GO 80W-90
(Item 16, Appendix H)

Equipment Condition
Engine Off, (Para 2-19)
Mixing auger deployed, (Para 2-23)
Concrete Mobile Mixer unloaded, (Para 2-5)

a. Removal.

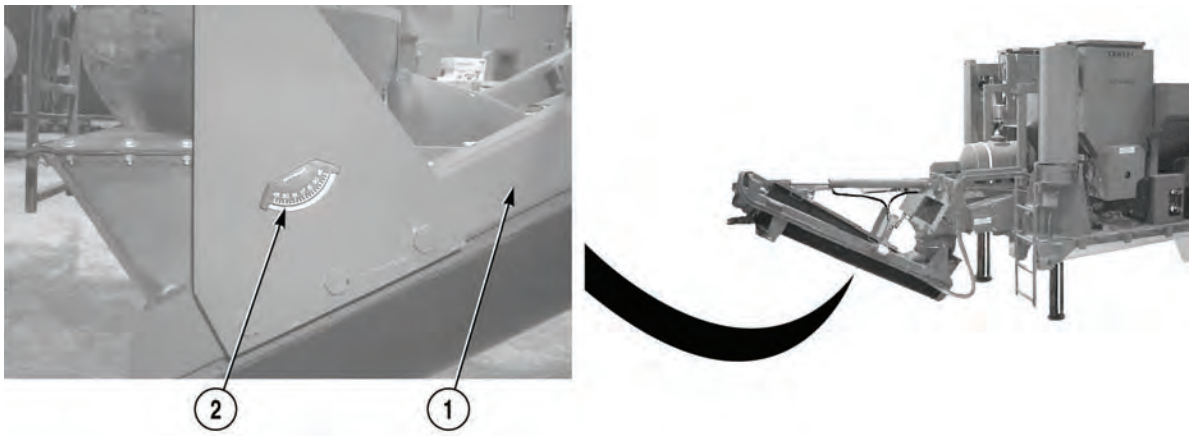

NOTE

Mixing auger should be positioned at 25° to 30°.

(1) Position mixing auger (1) as indicated by angle meter (2).

3-92. AUGER LOWER BEARING SERVICE (CONT).

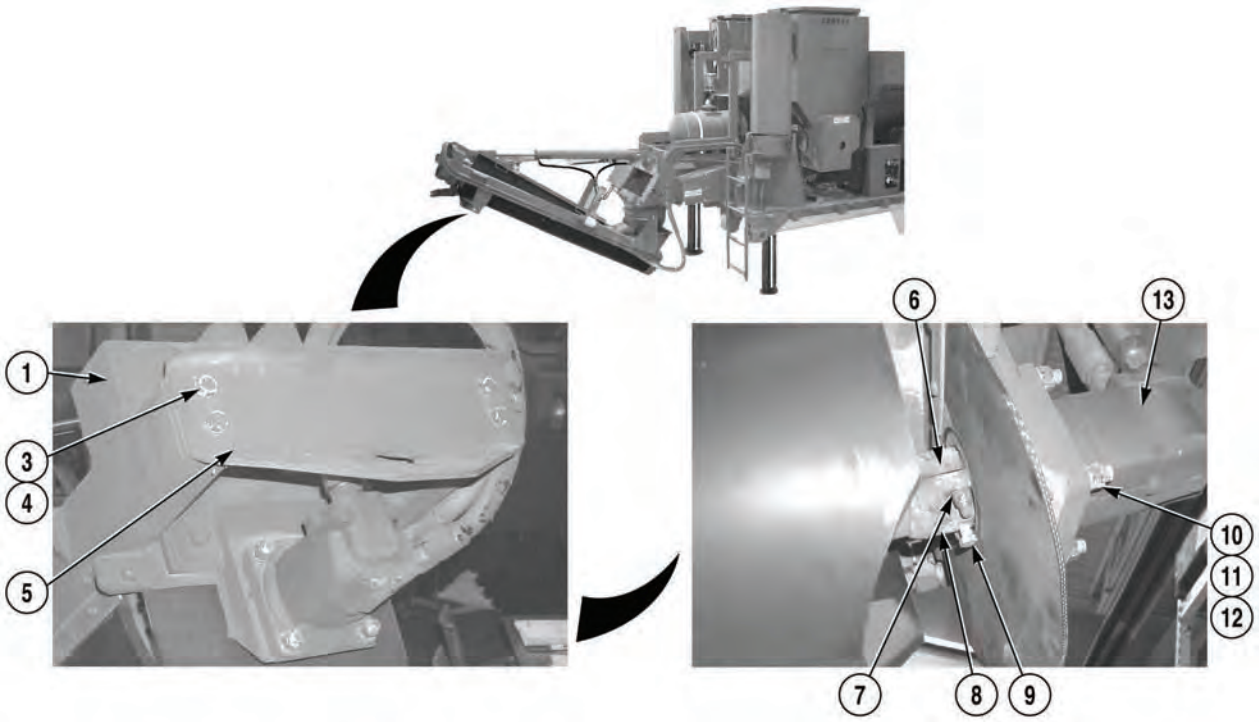

(2) Remove four screws (3), lockwashers (4), and bracket (5) from mixing auger (1). Discard lockwashers.

(3) Remove two screws (6) and locknuts (7) from mixing auger shaft (8). Discard locknuts.

(4) Loosen screw (9) on mixing auger shaft (8).

NOTE

Some models have retainer washers, isolators, and bushings.

(5) Remove four screws (10), lockwashers (11), nuts (12), and hydraulic motor (13) from mixing auger shaft (8) and mixing auger (1). Discard lockwashers.

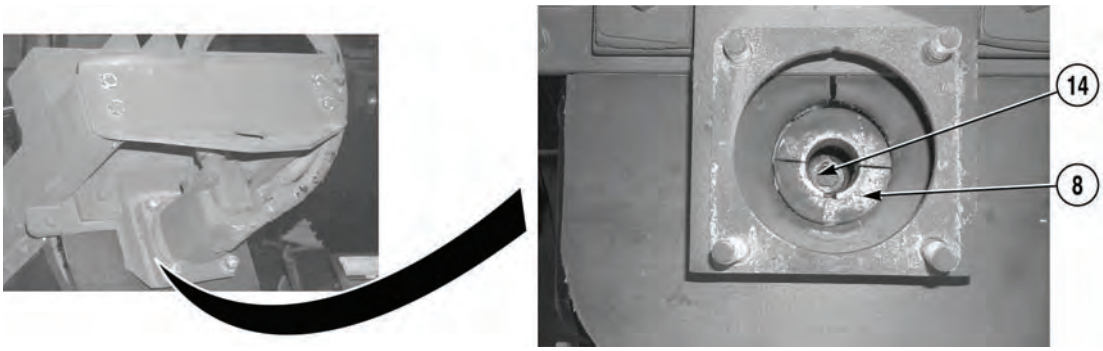

(6) Remove plug (14) from mixing auger shaft (8).

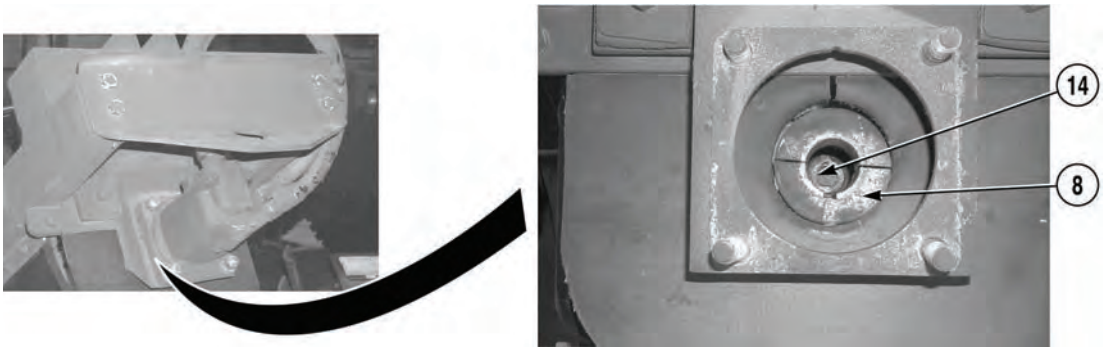

NOTE

- Oil level should be within 8-10” (20-25 cm.) from top of mixing auger shaft.
- Mixing auger capacity is approximately 3.5 qts. (3.3L).

(7) Check oil level in mixing auger shaft (8). If oil level is low add Gear GO 80W-90 lubricating oil.

b. Installation.

WARNING

Adhesives, solvents, and sealing compounds can burn easily, can give off harmful vapors, and are harmful to skin and clothing. To avoid injury or death, keep away from open fire and use in well-ventilated area. If adhesives, solvent, or sealing compound gets on skin or clothing, wash immediately with soap and water.

(1) Apply sealing compound to threads of plug (14).

(2) Install plug (14) on mixing auger shaft (8).

3-92. AUGER LOWER BEARING SERVICE (CONT).

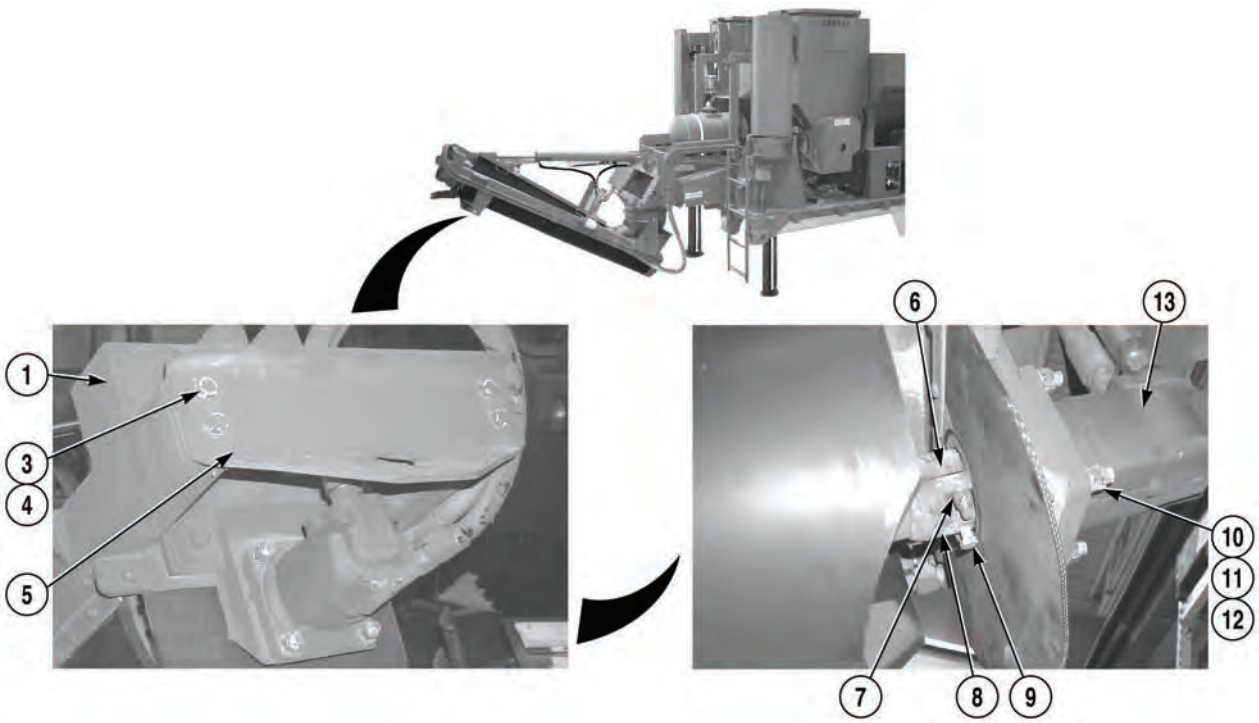

(3) Apply anti-seize compound to shaft of hydraulic motor (13).

(4) Install hydraulic motor (13) on mixing auger (1) and mixing auger shaft (8) with four nuts (12), lockwashers (11), and screws (10).

(5) Install two locknuts (7) and screws (6) on mixing auger shaft (8).

(6) Tighten screw (9) on mixing auger shaft (8).

(7) Install bracket (5) on mixing auger (1) with four screws (3) and lockwashers (4).

c. Follow-On Maintenance:

- Stow mixing auger, (Para 2-23).

END OF TASK

3-93. TOP ENGINE COVER REPLACEMENT.

This task covers:

a. Removal b. Installation c. Follow-On Maintenance

INITIAL SETUP

Tools and Special Tools
Tool Kit, General Mechanic's: Automotive
(Item 19, Appendix I)

Materials/Parts
Screw, Self-Tapping (24) (MS 51851-106)

Personnel Required
Two

Equipment Condition
Engine OFF, (Para 2-19)
Engine air intake assembly removed, (Para 3-3)
Exhaust assembly removed, (Para 3-5)

a. Removal.

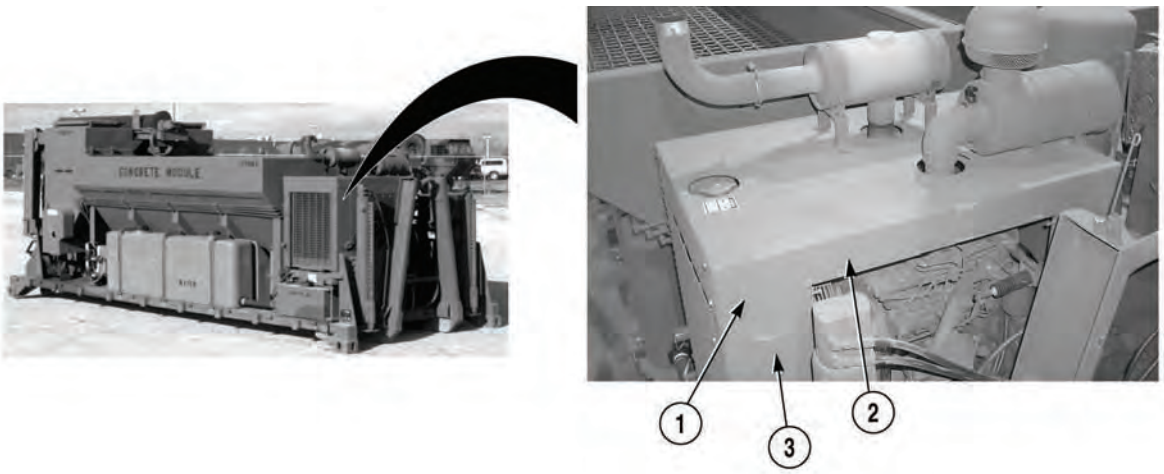

WARNING

Top engine cover weighs 65 lb (29.5 kg). Do not attempt to move or lift cover without the aid of an assistant. Failure to comply could result in serious injury to personnel.

With aid of assistant, remove 24 self-tapping screws (1) and engine cover (2) from engine shroud (3). Discard self-tapping screws.

b. Installation.

With aid of an assistant, install engine cover (2) on engine shroud (3) with 24 self-tapping screws (1).

c. Follow-On Maintenance:

- Install exhaust assembly, (Para 3-5).
- Install air intake assembly, (Para 3-3).

END OF TASK

3-94. AUGER STOWAGE PAD REPLACEMENT.

This task covers:

a. Removal b. Installation c. Follow-On Maintenance

INITIAL SETUP

Tools and Special Tools
Tool Kit, General Mechanic's: Automotive
(Item 19, Appendix I)

Materials/Parts
Locknuts (2) (MS 51943-31)

Equipment Condition
Engine OFF, (Para 2-19)
Concrete Mobile Mixer unloaded, (Para 2-5)
Mixing Auger Deployed, (Para 2-23)

a. Removal.

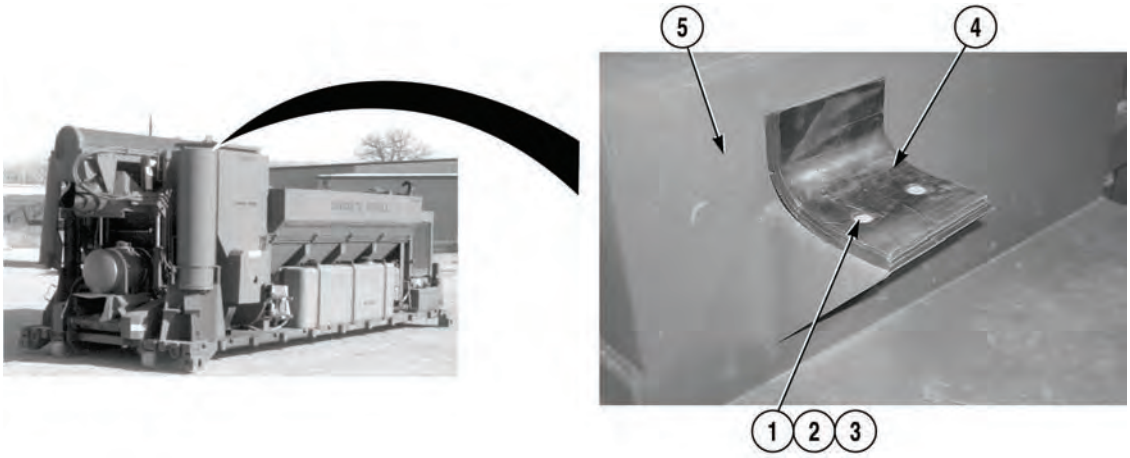

NOTE

- There are two auger stowage pads on the Concrete Mobile Mixer. Both are replaced the same way.
- Some models have washers and nuts.

Remove two screws (1), washers (2), locknuts (3), and auger stowage pad (4) from cement bin (5). Discard locknuts.

b. Installation.

Install auger stowage pad (4) on cement bin (5) with two locknuts (3), washers (2), and screws (1).

c. Follow-On Maintenance:

- Stow mixing auger, (Para 2-23).

END OF TASK

3-95. PIN REPLACEMENT.

This task covers:

a. Removal b. Installation

INITIAL SETUP

Tools and Special Tools
Tool Kit, General Mechanic's: Automotive (Item 19, Appendix I)

Equipment Condition
Engine OFF, (Para 2-19)

Materials/Parts
Cotter Pin (MS 24665-353)
Kit, Lanyard (97840A66)

a. Removal.

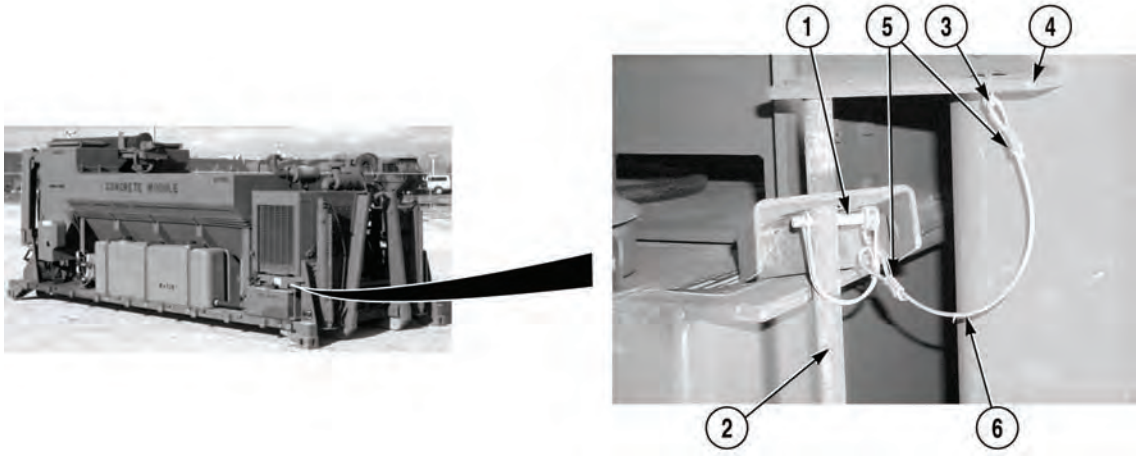

NOTE

All pins on the Concrete Mobile Mixer are removed the same way. Ladder storage pin shown.

(1) Remove locking pin (1) from pin (2).

(2) Remove cotter pin (3) from bracket (4).

(3) Remove two swaging sleeves (5) and wire rope (6) from locking pin (1) and cotter pin (3). Discard swaging sleeves, wire rope and cotter pin.

b. Installation.

(1) Install wire rope (6) on cotter pin (3) and locking pin (1) with two swaging sleeves (5).

(2) Install cotter pin (3) on bracket (4).

(3) Install locking pin (1) on pin (2).

END OF TASK

3-96. PADLOCK REPLACEMENT.

This task covers:

a. Removal b. Installation

INITIAL SETUP

Tools and Special Tools
Tool Kit, General Mechanic's: Automotive
(Item 19, Appendix I)

Equipment Condition
Engine OFF, (Para 2-19)

Materials/Parts
Locknut (112556A)

a. Removal.

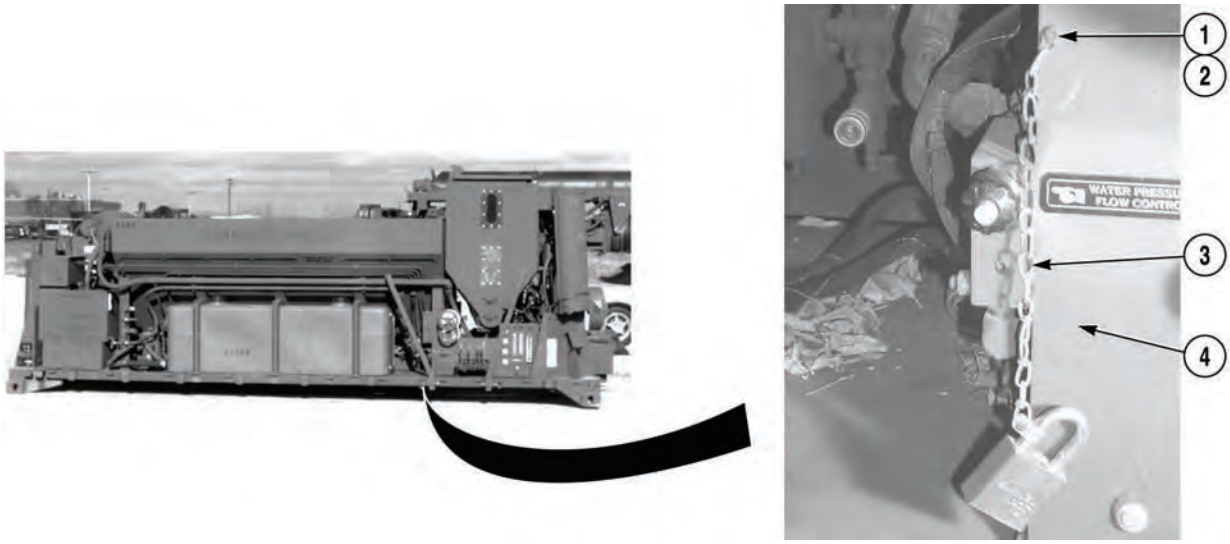

NOTE

There are two retaining chains for padlocks on the Concrete Mobile Mixer, both are removed the same way. Control box location shown.

Remove screw (1), locknut (2), and chain (3) from Concrete Mobile Mixer (4). Discard locknut.

b. Installation.

Install chain (3) on Concrete Mobile Mixer (4) with screw (1) and locknut (2).

END OF TASK

3-97. FUEL TRANSFER PUMP REPLACEMENT (S/N 8RDCD301513HC THRU S/N 8RDCD301619HC).

This task covers:

a. Removal b. Installation c. Follow-On Maintenance

INITIAL SETUP

Tools and Special Tools
Tool Kit, General Mechanic's: Automotive (Item 19, Appendix I)
Cap and Plug set (Item 3, Appendix I)
Wrench, Torque (Item 25, Appendix I)

Materials/Parts
Gasket, cover plate (2) (3931348)
Sealing Compound (Item 10 Appendix H).

Equipment Condition
Engine OFF, (Para 2-19)
Concrete Mobile Mixer unloaded, (Para 2-5)
Front engine access panel removed, (Para 3-78)

3-97. FUEL TRANSFER PUMP REPLACEMENT (S/N 8RDCD301513HC THRU S/N 8RDCD301619HC) (CONT).

a. Removal.

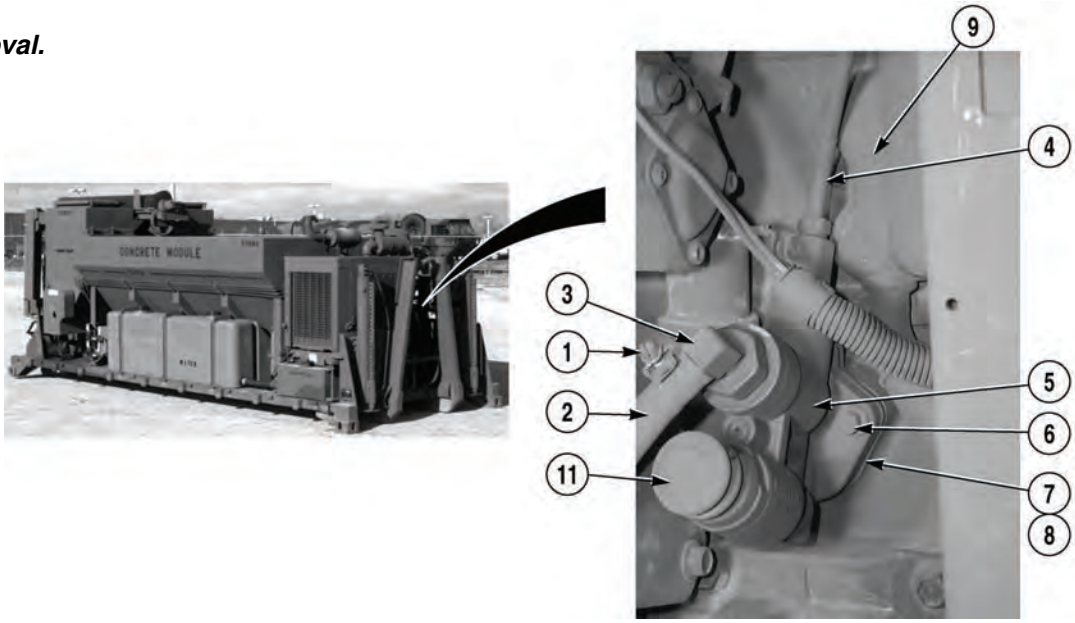

WARNING

Fuel is very flammable and can explode easily. To avoid serious injury or death, keep fuel away from open fire and keep fire extinguisher within easy reach when working with fuel . Do not work on fuel system when engine is hot. Fuel can be ignited by hot engine.

NOTE

Cap and plug fuel lines upon removal.

(1) Loosen clamp (1) and remove fuel line (2) from elbow (3).

(2) Remove tube (4) from fuel transfer pump (5).

NOTE

Note position of gaskets and spacer prior to removal.

(3) Remove two screws (6), fuel transfer pump (5), two gaskets (7), and spacer (8) from engine (9). Discard gaskets.

NOTE

Note position of elbow prior to removal.

(4) Remove elbow (3) from fuel transfer pump (5).

b. Installation.

WARNING

Adhesives, solvents, and sealing compounds can burn easily, can give off harmful vapors, and are harmful to skin and clothing. To avoid injury or death, keep away from open fire and use in well-ventilated area. If adhesives, solvent, or sealing compound gets on skin or clothing, wash immediately with soap and water.

CAUTION

Alternately tighten the mounting capscrews. As the capscrews are tightened the fuel transfer pump plunger is pushed into the pump. Failure to tighten the capscrews in an even manner can result in the plunger being bent or broken.

NOTE

- Clean the mounting surfaces on the cylinder block.
- Install elbow as noted prior to removal.

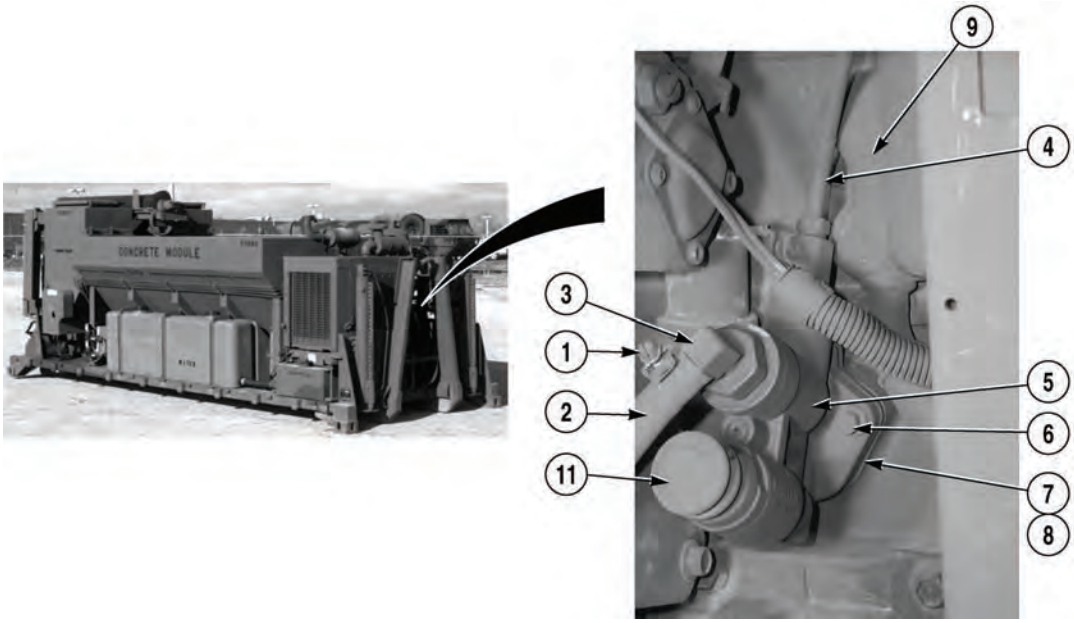

(1) Apply sealing compound to threads of elbow (3).

(2) Install elbow (3) on fuel transfer pump (5).

3-97. FUEL TRANSFER PUMP REPLACEMENT (S/N 8RDCD301513HC THRU S/N 8RDCD301619HC) (CONT).

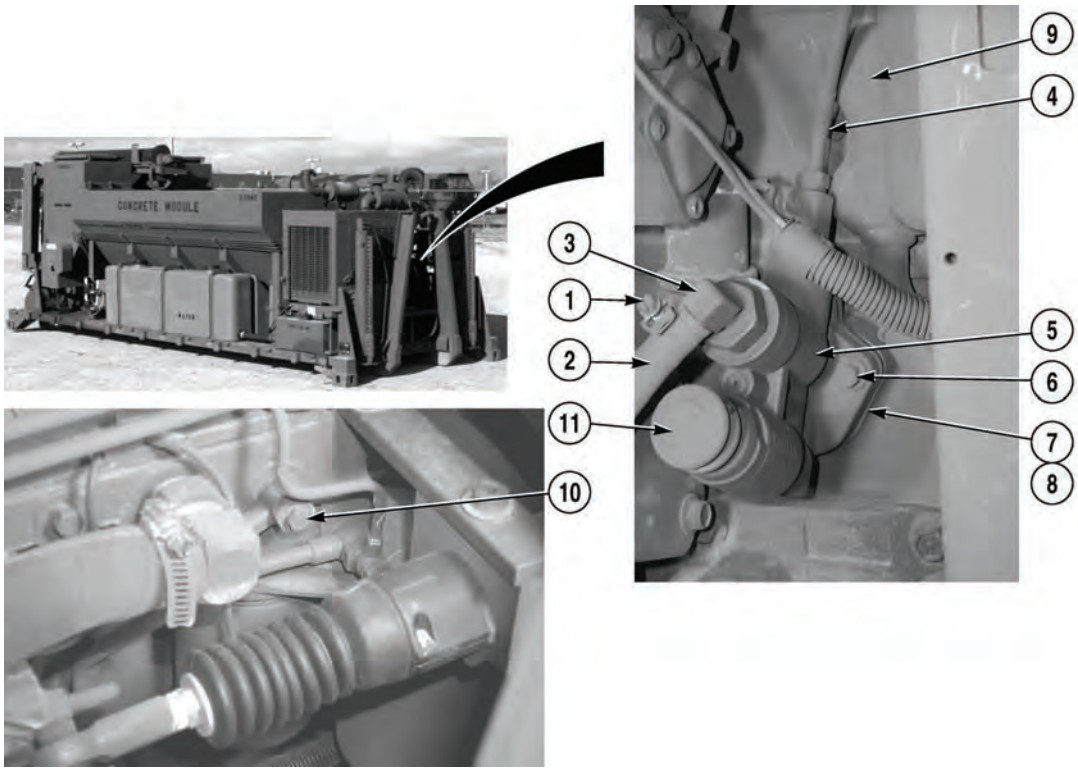

NOTE

Install gaskets and seal as noted prior to removal.

(3) Install two gaskets (7), spacer (8), and fuel transfer pump (5) on engine (9) with two screws (6). Tighten screws to 18 lb-ft (24 N·m).

(4) Install tube (4) on fuel transfer pump (5). Tighten fitting to 18 lb-ft (24 N·m).

(5) Position fuel line (2) on elbow (3) and tighten clamp (1).

(6) Open bleed screw (10) and operate hand primer (11) until fuel flowing from bleed screw (10) is free of air.

(7) Tighten bleed screw (10) to 7 lb-ft (9 N·m).

c. Follow-On Maintenance:

- Start engine, (Para 2-19).
- Check for leaks.
- Shut off engine, (Para 2-19).
- Install front engine access panel, (Para 3-78).

END OF TASK

3-98. FUEL TRANSFER PUMP REPLACEMENT (S/N 8RDCD301620HC AND SUBSEQUENT).

This task covers:

a. Removal b. Installation c. Follow-On Maintenance

INITIAL SETUP

Tools and Special Tools
Tool Kit, General Mechanic's: Automotive (Item 19, Appendix I)
Cap and Plug Set (Item 3, Appendix I)
Wrench, Torque (Item 25, Appendix I)

Materials/Parts
Gasket (3939258)
Sealing Compound (Item 11 Appendix H)

Equipment Condition
Engine OFF, (Para 2-19)
Concrete Mobile Mixer unloaded, (Para 2-5)
Front engine access panel removed, (Para 3-78)

a. Removal.

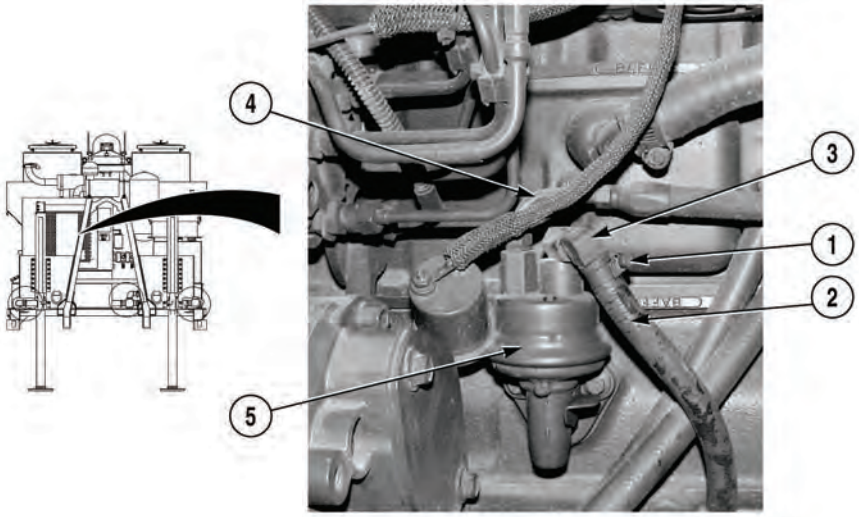

WARNING

Fuel is very flammable and can explode easily. To avoid serious injury or death, keep fuel away from open fire and keep fire extinguisher within easy reach when working with fuel. Do not work on fuel system when engine is hot. Fuel can be ignited by hot engine.

NOTE

Cap and plug fuel lines upon removal.

(1) Loosen clamp (1) and remove fuel line (2) from elbow (3).

(2) Remove hose (4) from fuel transfer pump (5).

3-98. FUEL TRANSFER PUMP REPLACEMENT (S/N 8RDCD301620HC AND SUBSEQUENT) (CONT).

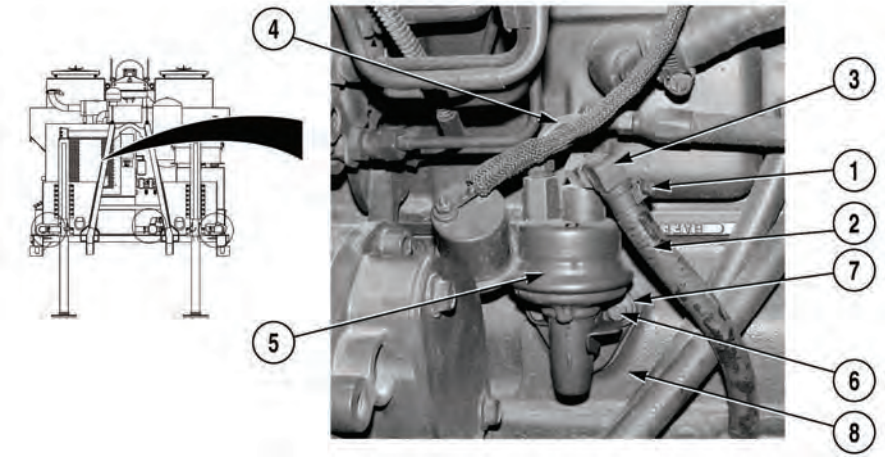

(3) Remove two screws (6), fuel transfer pump (5), and gasket (7) from engine (8). Discard gasket.

NOTE

Note position of elbow prior to removal.

(4) Remove elbow (3) from fuel transfer pump (5).

b. Installation.

WARNING

Adhesives, solvents, and sealing compounds can burn easily, can give off harmful vapors, and are harmful to skin and clothing. To avoid injury or death, keep away from open fire and use in well-ventilated area. If adhesives, solvent, or sealing compound gets on skin or clothing, wash immediately with soap and water.

NOTE

- Clean the mounting surfaces on the cylinder block.
- Install elbow as noted prior to removal.

(1) Apply sealing compound to threads of elbow (3).

(2) Install elbow (3) on fuel transfer pump (5).

CAUTION

Alternately tighten mounting screws. As screws are tightened, fuel transfer pump plunger is pushed into pump. Failure to tighten screws in an even manner can result in plunger being bent or broken.

(3) Install gasket (7) and fuel transfer pump (5) on engine (8) with two screws (6). Tighten screws to 17 lb-ft (23 N·m).

(4) Install hose (4) on fuel transfer pump (5).

(5) Position fuel line (2) on elbow (3) and tighten clamp (1).

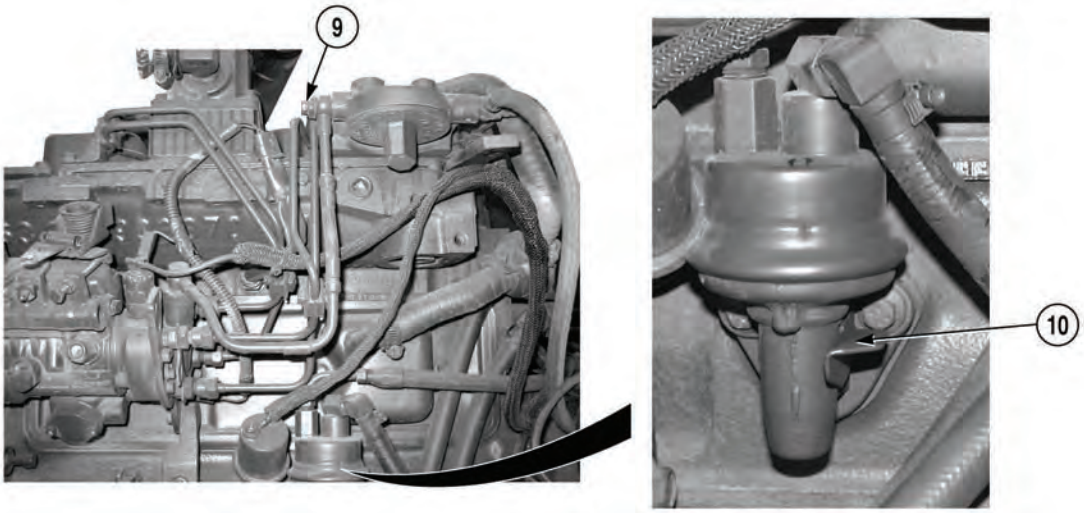

(6) Open bleed screw (9) and operate hand primer (10) until fuel flowing from bleed screw (9) is free of air.

(7) Tighten bleed screw (9).

c. Follow-On Maintenance:

- Start engine, (Para 2-19).
- Check for leaks.
- Shut off engine, (Para 2-19).
- Install front engine access panel, (Para 3-78).

END OF TASK

3-99. THERMOSTAT REPLACEMENT (S/N 8RDCD301513HC THRU S/N 8RDCD301619HC)

This task covers:

a. Removal b. Installation c. Follow-On Maintenance

INITIAL SETUP

Tools and Special Tools
Tool Kit, General Mechanic's: Automotive (Item 19, Appendix I)
Wrench, Torque (Item 25, Appendix I)

Materials/Parts
Kit, Thermostat (3802968)
Tags, Identification (Item 13, Appendix I)

Equipment Condition
Engine OFF, (Para 2-19)
Concrete Mobile Mixer unloaded, (Para 2-5)
Alternator removed (S/N 8RDCD301513HC thru S/N 8RDCD301619HC), (Para 3-25)
Radiator drained, (Para 3-83)

a. Removal.

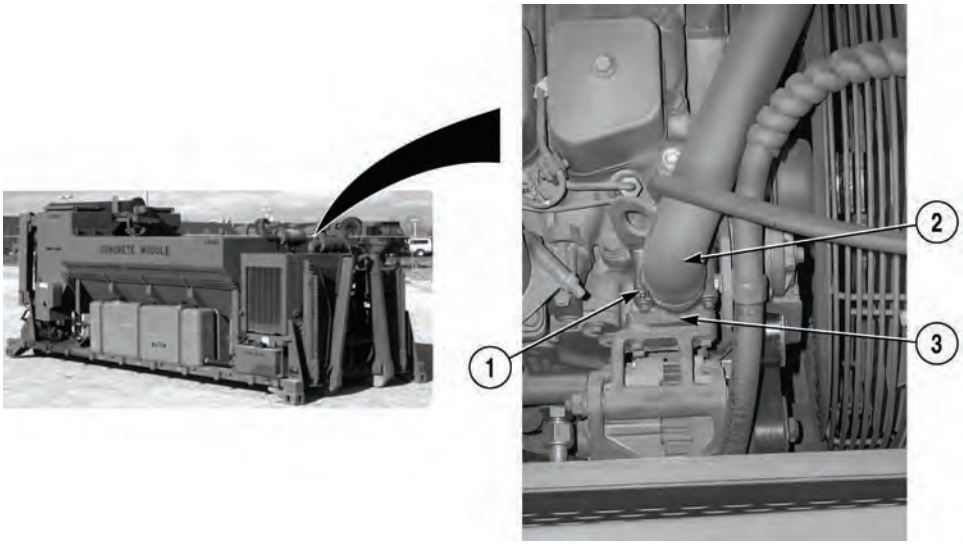

WARNING

- Radiator, radiator cap, coolant, and hoses are very hot and pressurized during engine operation. Let radiator cool before checking hoses. Failure to do so may result in serious burns to personnel.
- Ensure engine is cool before performing this task or injury to personnel may result.

(1) Loosen clamp (1) and remove upper radiator hose (2) from thermostat housing (3).

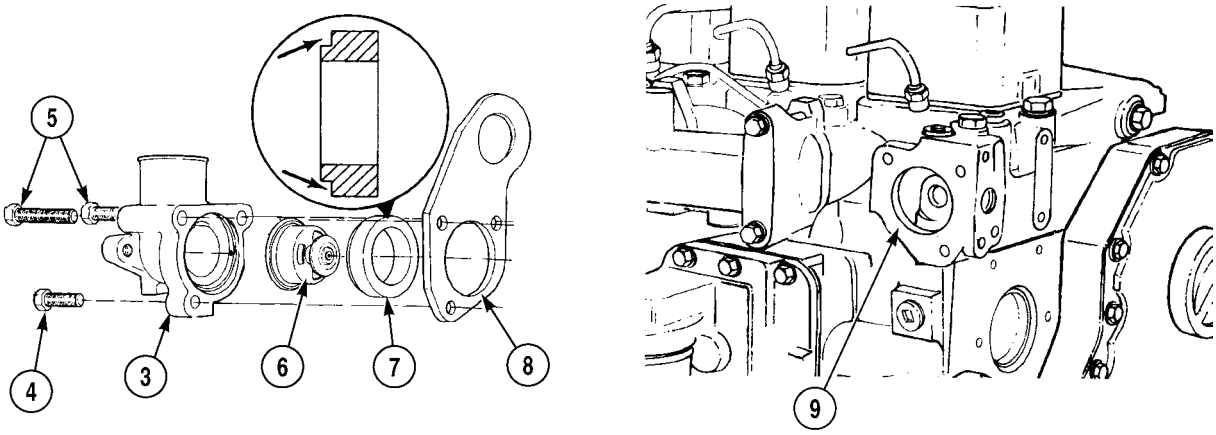

(2) Remove screw (4), two screws (5), thermostat housing (3), thermostat (6), rubber seal (7), and lifting bracket (8) from engine (9). Discard rubber seal.

CAUTION

Do not let any debris fall into the thermostat cavity when cleaning gasket surface. Failure to comply could result in damage to equipment.

(3) Clean mounting surface of thermostat housing (3) and engine (9).

b. Installation.

CAUTION

Always use the correct thermostat and never operate the engine without a thermostat. Failure to comply could result in damage to engine.

(1) Install lifting bracket (8), rubber seal (7), thermostat (6), thermostat housing (3), two screws (5), and screw (4) on engine (9). Tighten screws to 18 lb-ft (24 N·m).

3-99. THERMOSTAT REPLACEMENT (S/N 8RDCD301513HC THRU S/N 8RDCD301619HC) (CONT).

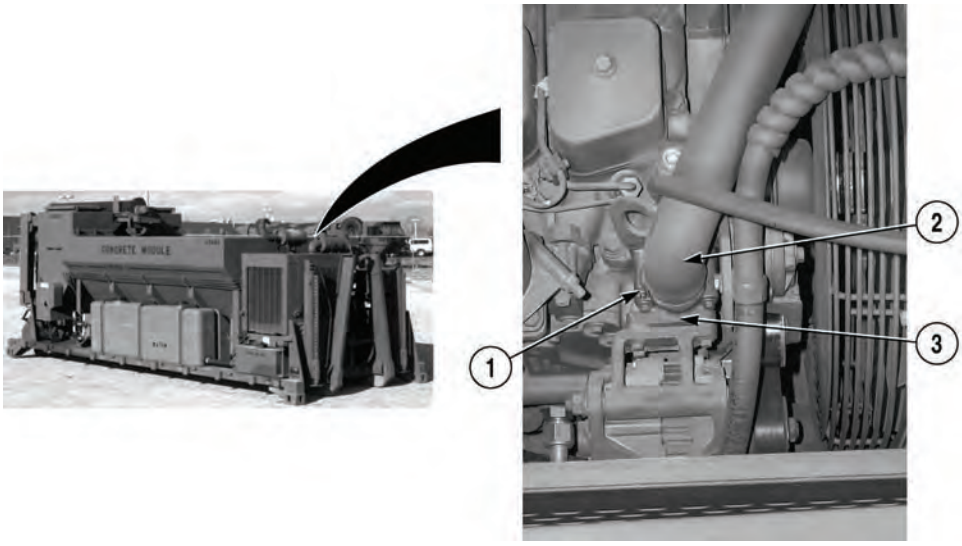

(2) Position upper radiator hose (2) on thermostat housing (3) and tighten clamp (1).

c. Follow-On Maintenance:

- Install alternator (S/N 8RDCD301513HC thru S/N 8RDCD301619HC), (Para 3-25).
- Fill radiator, (Para 3-83).
- Start engine, (Para 2-19).
- Check for leaks.
- Shut off engine, (Para 2-19).

END OF TASK

3-100. THERMOSTAT REPLACEMENT (S/N 8RDCD301620HC AND SUBSEQUENT).

This task covers:

a. Removal b. Installation c. Follow-On Maintenance

INITIAL SETUP

Tools and Special Tools
Tool Kit, General Mechanic's: Automotive (Item 19, Appendix I)
Wrench, Torque (Item 25, Appendix I)

Materials/Parts
Gasket (3923331)
Tags, Identification (Item 13, Appendix H)

Equipment Condition
Alternator removed (S/N 8RDCD301620HC and Subsequent), (Para 3-26)
Radiator drained, (Para 3-83)

a. Removal.

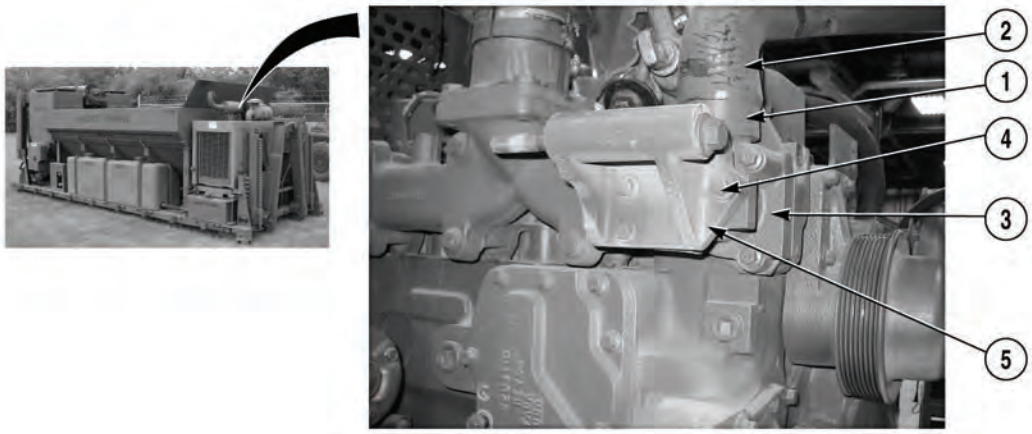

WARNING

Ensure engine is cool before performing this task or injury to personnel may result.

(1) Loosen clamp (1) and remove upper radiator hose (2) from thermostat housing (3).

(2) Remove three screws (4) and bracket (5) from thermostat housing (3).

3-100. THERMOSTAT REPLACEMENT (S/N 8RDCD301620HC AND SUBSEQUENT) (CONT).

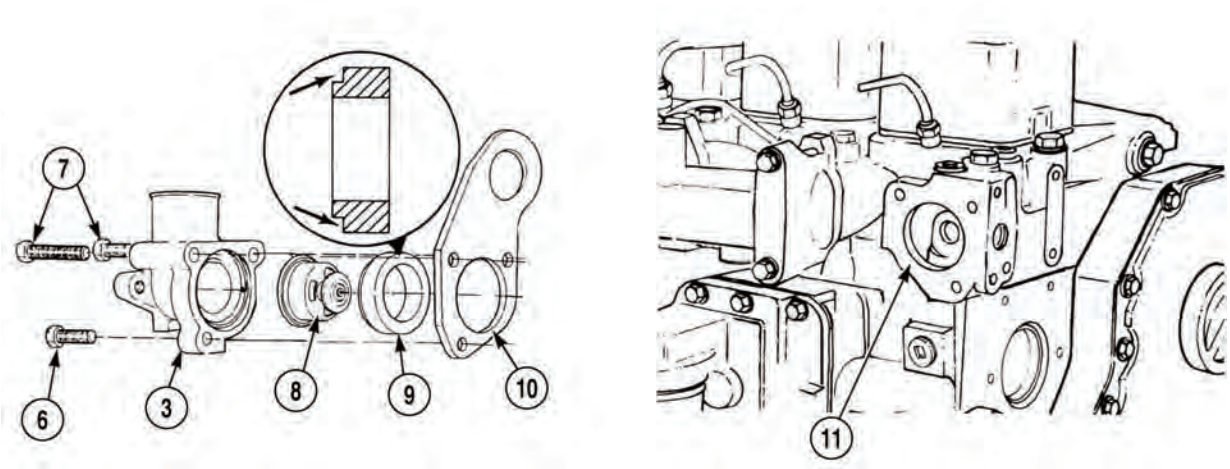

(3) Remove screw (6), two screws (7), thermostat housing (3), thermostat (8), gasket (9), and lifting bracket (10) from engine (11). Discard gasket.

CAUTION

Do not let any debris fall into the thermostat cavity when cleaning gasket surface. Failure to comply could result in damage to equipment.

(4) Clean mounting surface of thermostat housing (3) and engine (11).

b. Installation.

CAUTION

Always use the correct thermostat, and never operate the engine without a thermostat. Failure to comply could result in damage to engine.

(1) Install lifting bracket (10), gasket (9), thermostat (8), thermostat housing (3) on engine (11) with two screws (7) and screw (6). Tighten screws to 18 lb-ft (24 N·m).

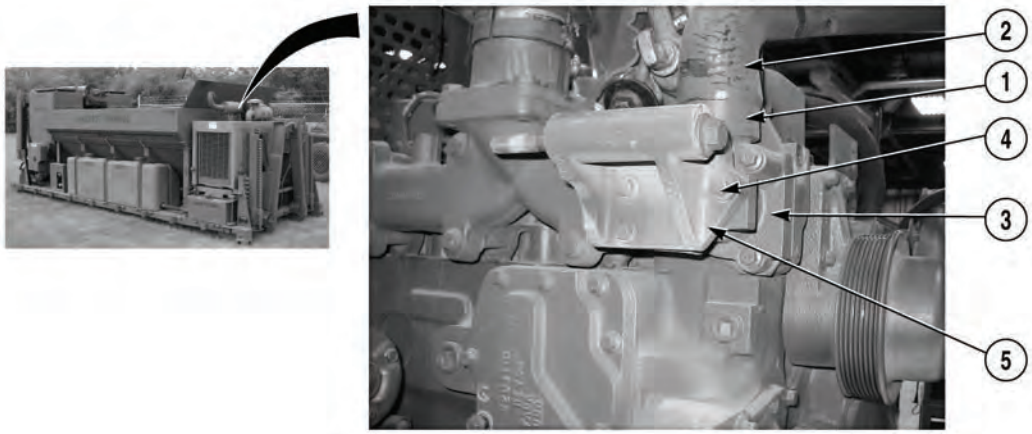

(2) Install bracket (5) on thermostat housing (3) with three screws (4). Tighten screws to 18 lb-ft (24 N·m).

(3) Install upper radiator hose (2) on thermostat housing (3) and tighten clamp (1).

c. Follow-On Maintenance:

- Install Alternator (S/N 8RDCD301620HC and Subsequent), (Para 3-26).
- Fill Radiator, (Para 3-83).
- Start engine, (Para 2-19).
- Check for leaks.
- Shut off engine, (Para 2-19).

END OF TASK

3-101. FAN BLADE REPLACEMENT (S/N 8RDCD301513HC THRU S/N 8RDCD301619HC).

This task covers:

a. Removal b. Installation c. Follow-On Maintenance

INITIAL SETUP

Tools and Special Tools
Tool Kit, General Mechanic's: Automotive (Item 19, Appendix I)
Wrench, Torque (Item 25, Appendix I)

Equipment Condition
Engine OFF, (Para 2-19)
Concrete Mobile Mixer unloaded, (Para 2-5)
Radiator removed (S/N 8RDCD301513HC thru S/N 8RDCD301619HC), (Para 3-20)

a. Removal.

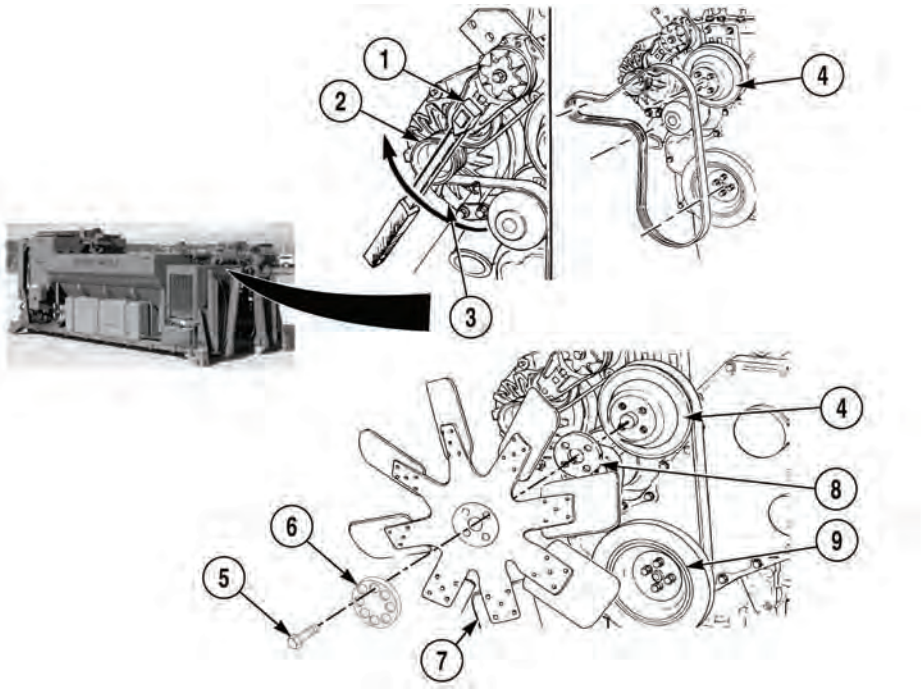

CAUTION

Applying excessive force in opposite direction of wind-up to positive stop can cause tension arm to break.

NOTE

- Belt tensioner winds in direction that spring tang is bent over tensioner body. To loosen tension on belt, rotate tension to wind spring tighter.
- Note routing of fan drive belt before removal.

(1) Lift tensioner arm (1) and pulley (2), and remove fan drive belt (3) from fan pulley (4).

(2) Remove four screws (5), plate (6), fan blade (7), spacer (8), and fan pulley (4) from engine (9).

b. Installation.

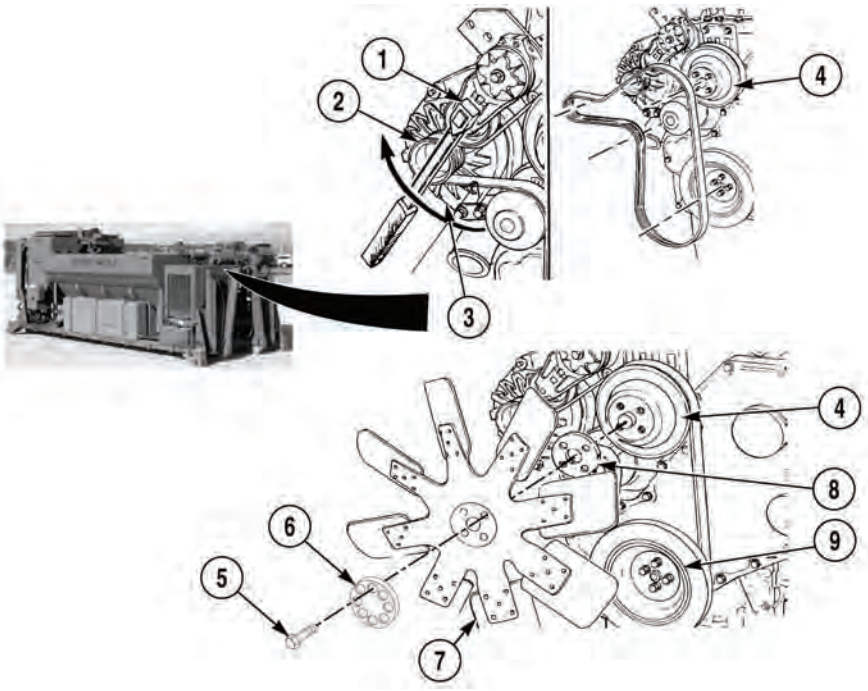

NOTE

Ensure fan drive belt is installed in the same position as noted prior to removal.

(1) Install fan pulley (4), spacer (8), fan blade (7) and plate (6) on engine (9) with four screws (5). Tighten screws to 18 lb-ft (24 N·m)

(2) Lift tensioner arm (1), and pulley (2) and install fan drive belt (3) on fan pulley (4).

c. Follow-on Maintenance.

- Install radiator, (S/N 8RDCD301513HC thru S/N 8RDCD301619HC), (Para 3-20).

END OF TASK

3-102. FAN BLADE REPLACEMENT (S/N 8RDCD301620HC AND SUBSEQUENT).

This task covers:

a. Removal b. Installation c. Follow-On Maintenance

INITIAL SETUP

Tools and Special Tools
Tool Kit, General Mechanic's: Automotive (Item 19, Appendix I)
Wrench, Torque (Item 25, Appendix I)

Equipment Condition
Radiator removed (S/N 8RDCD301620HC and Subsequent), (Para 3-21)
Fan drive belt removed (S/N 8RDCD301620HC and Subsequent), (Para 3-107)

a. Removal.

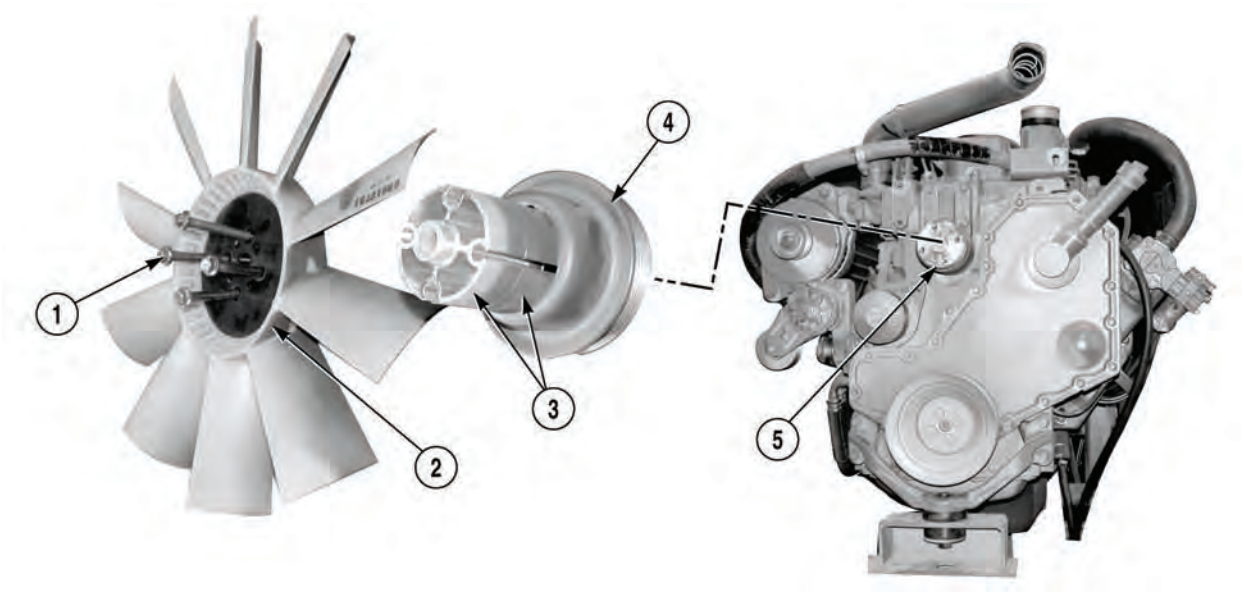

Remove four screws (1), fan (2), two spacers (3), and fan pulley (4) from hub (5).

b. Installation.

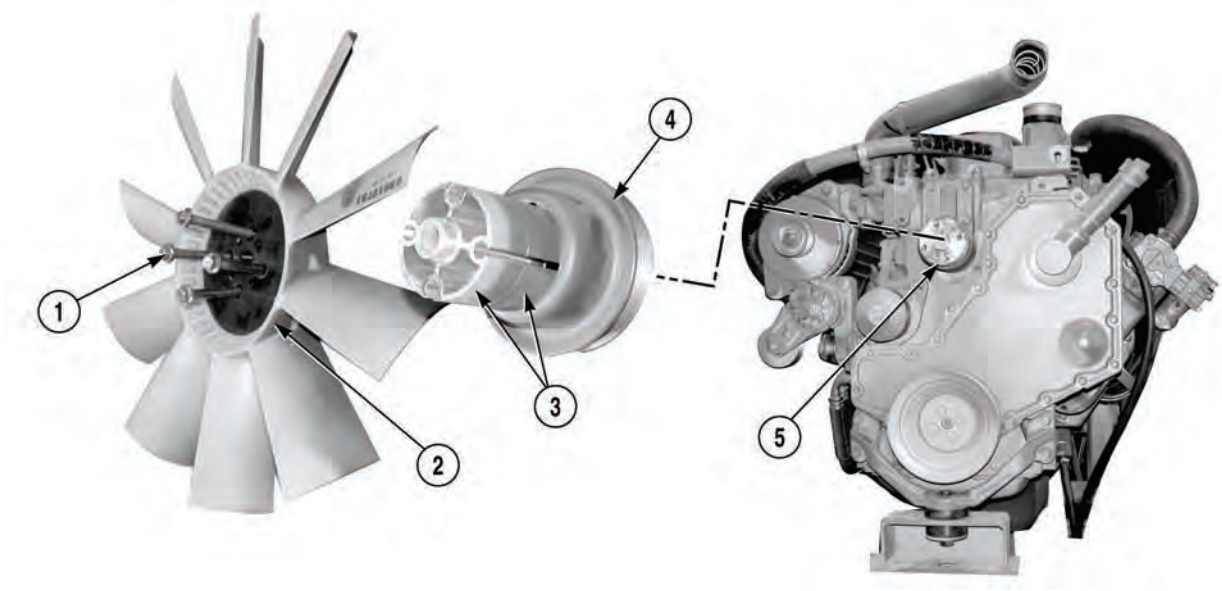

Install fan pulley (4), two spacers (3), and fan (2) on hub (5) with four screws (1). Tighten screws to 32 lb-ft (43 N·m).

c. Follow-on Maintenance:

- Install fan drive belt (S/N 8RDCD301620HC and Subsequent), (Para 3-107).
- Install radiator (S/N 8RDCD301620HC and Subsequent), (Para 3-21).

END OF TASK

3-103. OIL PAN REPLACEMENT.

This task covers:

a. Removal b. Installation c. Follow-On Maintenance

INITIAL SETUP

Tools and Special Tools
- Tool Kit, General Mechanic's: Automotive (Item 19, Appendix I)
- Wrench, Torque (Item 25, Appendix I)
- Lifting Device, Minimum Capacity 800 lb (363 kg)
- Stand, Engine (Item 17, Appendix I)
- Adapter Plate, Engine (Item 13, Appendix I)

Materials/Parts
- Gasket (3931602)
- Sealing Compound (Item 17, Appendix H)

Personnel Required
- Two

Equipment Condition
- Engine OFF, (Para 2-19)
- Concrete Mobile Mixer unloaded, (Para 2-5)
- Engine oil drained, (Para 3-82)
- Engine removed from Concrete Mobile Mixer, (Para 3-30)

a. Removal.

WARNING

Engine weighs 800 lb (363 kg). Do not attempt to move or lift engine without aid of an assistant and a lifting device. Failure to comply could result in serious injury or death to personnel.

(1) Attach lifting device to engine (1).

WARNING

Engine weighs 800 lb (363 kg). Position engine on engine stand with adapter plate to support. Keep lifting device connected for added stability. Failure to comply could result in serious injury or death to personnel.

(2) With the aid of an assistant and using a lifting device, install engine (1) on engine stand with adapter plate.

(3) With the aid of an assistant, remove 24 screws (2), oil pan (3), and gasket (4) from engine (1). Discard gasket.

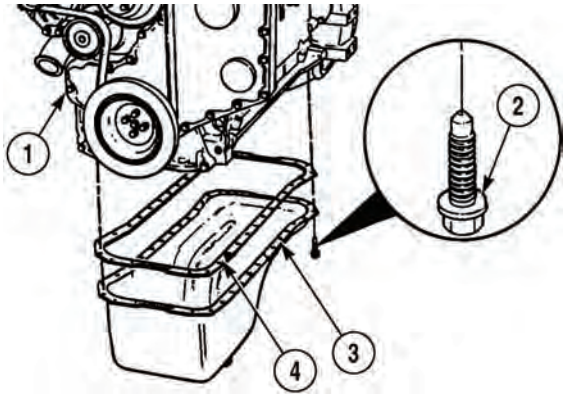

b. Installation:

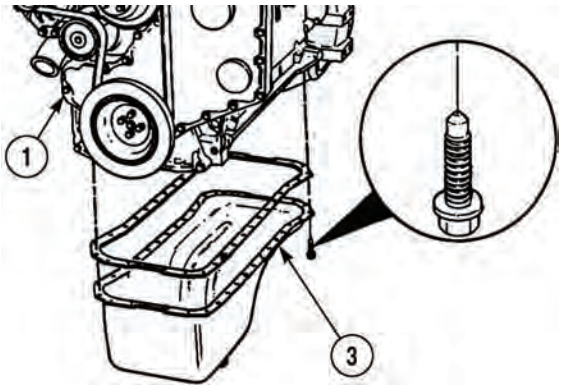

WARNING

Engine weighs 800 lb (363 kg). Do not attempt to move or lift engine without aid of an assistant and a lifting device. Failure to comply could result in serious injury or death to personnel.

(1) Clean gasket sealing surface of engine (1).

(2) Clean mounting surface on oil pan (3).

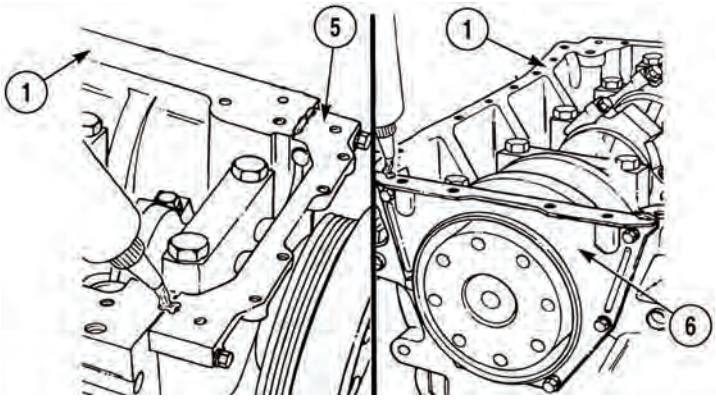

WARNING

Adhesives, solvents, and sealing compounds can burn easily, can give off harmful vapors, and are harmful to skin and clothing. To avoid injury or death, keep away from open fire and use in well-ventilated area. If adhesives, solvent, or sealing compound gets on skin or clothing, wash immediately with soap and water.

(3) Apply sealant to engine (1), gear housing (5), and rear seal housing (6).

3-103. OIL PAN REPLACEMENT (CONT).

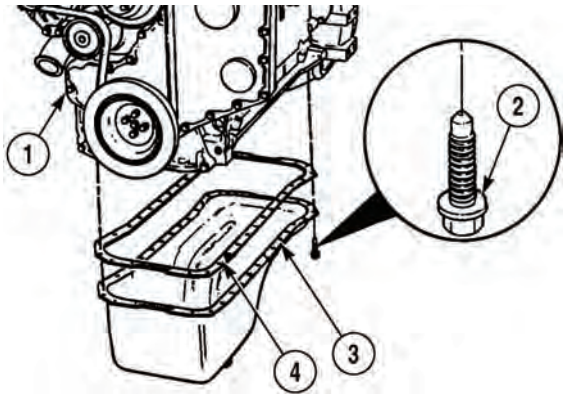

(4) Install gasket (4) and oil pan (3) on engine (1) with 24 screws (2). Tighten screws to 18 lb-ft (24 N·m).

WARNING

Engine weighs 800 lb (363 kg). Do not attempt to move or lift engine without aid of an assistant and a lifting device. Failure to comply could result in serious injury or death to personnel.

(5) Attach lifting device to engine (1).

(6) With the aid of an assistant and using a lifting device, remove engine (1) from engine stand and adapter plate.

c. Follow-On Maintenance:

- Install engine on Concrete Mobile Mixer, (Para 3-30).
- Fill engine with oil, (Para 3-82).

END OF TASK

3-104. WATER PUMP REPLACEMENT (S/N 8RDCD301513HC THRU S/N 8RDCD301619HC).

This task covers:

a. Removal b. Installation c. Follow-On Maintenance

INITIAL SETUP

Tools and Special Tools
Tool Kit, General Mechanic's: Automotive (Item 19, Appendix I)
Wrench, Torque (Item 25, Appendix I)

Materials/Parts
Seal (3906698)

Equipment Condition
Engine OFF, (Para 2-19)
Concrete Mobile Mixer unloaded, (Para 2-5)
Cooling system drained, (Para 3-83)
Front engine access panel removed, (Para 3-78)
Fan drive belt removed, (Para 3-106)

a. Removal.

WARNING

- Radiator, radiator cap, coolant, and hoses are very hot and pressurized during truck operation. Let radiator cool before checking hoses. Failure to do so may result in serious burns to personnel.
- Ensure engine is cool before performing this task or injury to personnel may result.

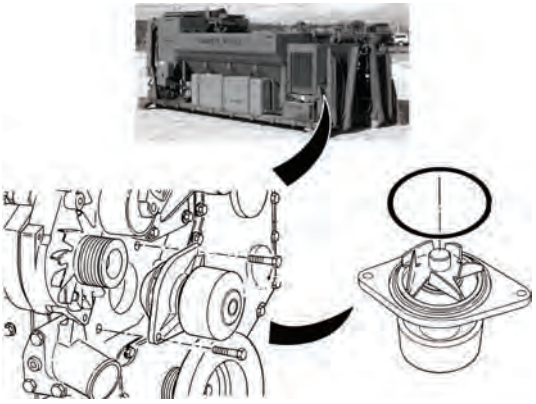

(1) Remove two screws (1) and water pump (2) from engine (3).

(2) Remove and discard seal (4) from water pump (2).

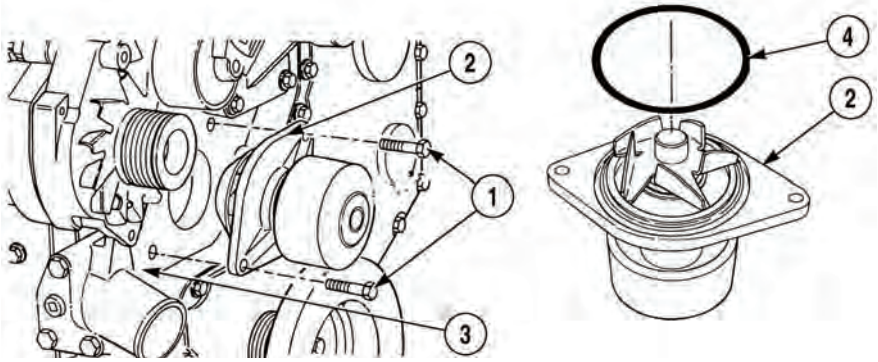

3-104. WATER PUMP REPLACEMENT (S/N 8RDCD301513HC THRU S/N 8RDCD301619HC) (CONT).

b. Installation.

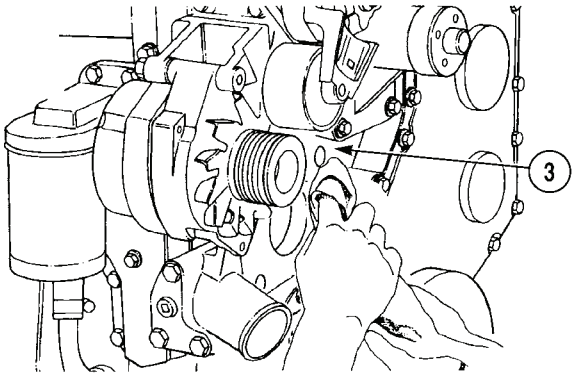

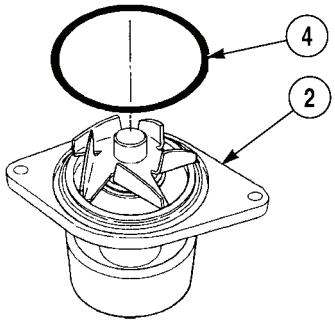

(1) Clean sealing surface on engine (3).

(2) Clean mounting surface on water pump (2).

(3) Install seal (4) on water pump (2).

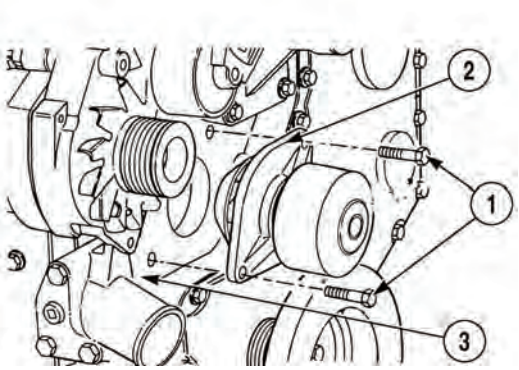

(4) Install water pump (2) on engine (3) with two screws (1). Tighten screws to 18 lb-ft (24N·m).

c. Follow-On Maintenance:

- Install fan drive belt, (Para 3-106).
- Fill cooling system, (Para 3-83).
- Start engine, (Para 2-19).
- Check for leaks.
- Shut off engine, (Para 2-19).
- Install front engine access panel, (Para 3-78).

END OF TASK

3-105. WATER PUMP REPLACEMENT (S/N 8RDCD301620HC AND SUBSEQUENT).

This task covers:

a. Removal b. Installation c. Follow-On Maintenance

INITIAL SETUP

Tools and Special Tools
Tool Kit, General Mechanic's: Automotive (Item 19, Appendix I)
Wrench, Torque (Item 25, Appendix I)

Materials/Parts
Seal (3906698)

Equipment Condition
Cooling system drained, (Para 3-83)
Front engine access panel removed, (Para 3-78)
Fan drive belt removed (S/N 8RDCD301620HC and Subsequent), (Para 3-107)

a. Removal.

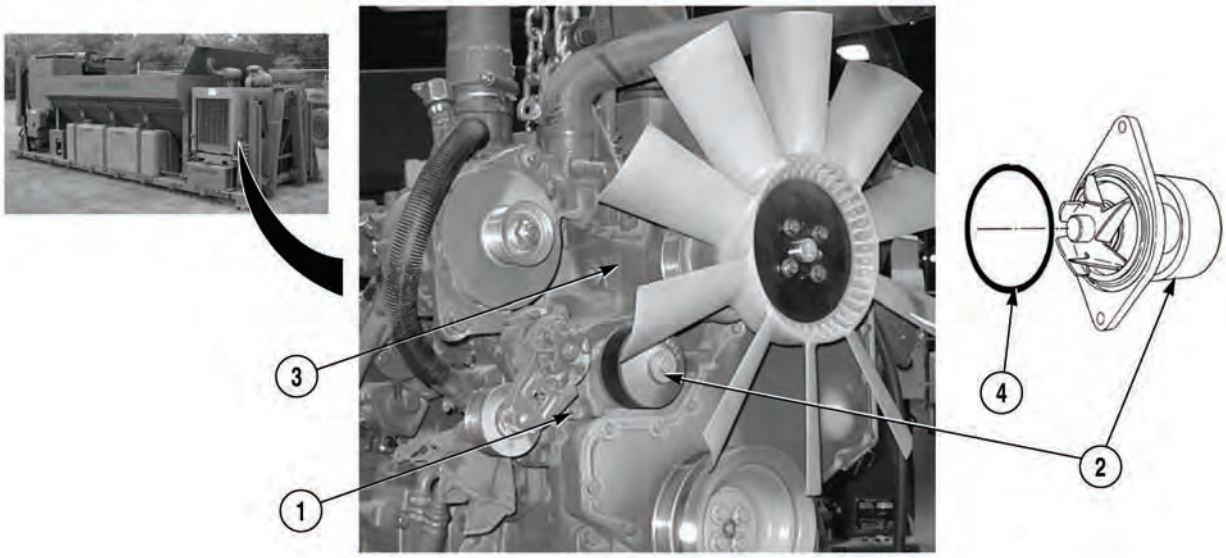

WARNING

Ensure engine is cool before performing this task or injury to personnel may result.

(1) Remove two screws (1) and water pump (2) from engine (3).

(2) Remove and discard seal (4) from water pump (2).

3-105. WATER PUMP REPLACEMENT (S/N 8RDCD301620HC AND SUBSEQUENT) (CONT).

b. Installation.

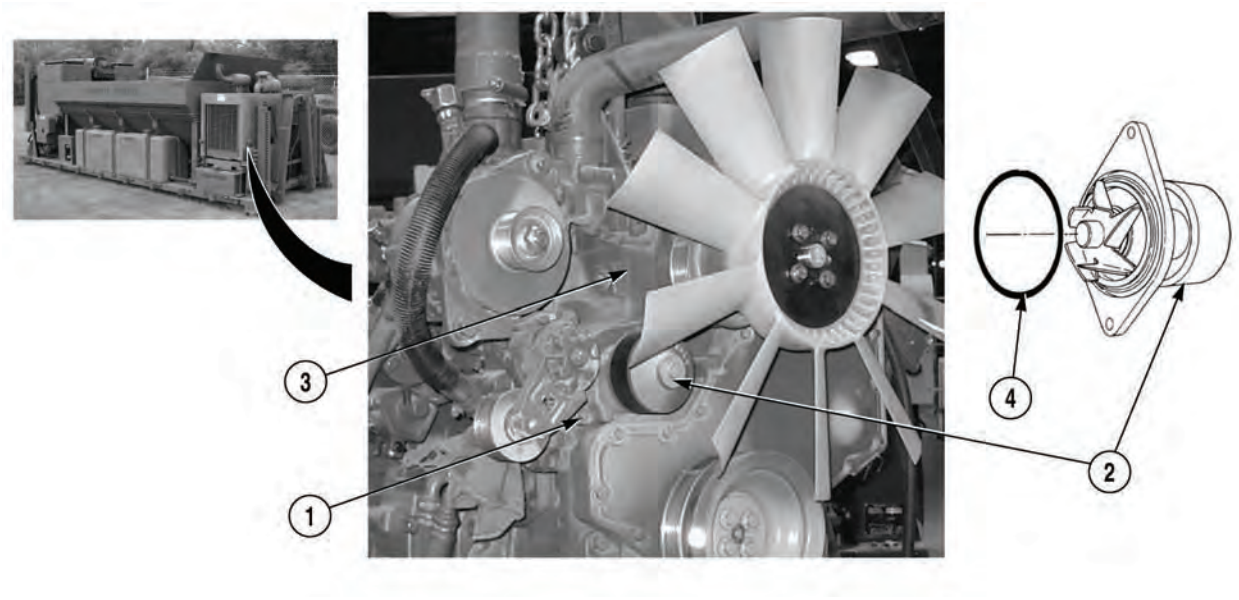

(1) Install seal (4) on water pump (2).

(2) Install water pump (2) on engine (3) with two screws (1). Tighten screws to 18 lb-ft (24 N·m).

c. Follow-On Maintenance:

- Install fan drive belt (S/N 8RDCD301620HC and Subsequent), (Para 3-107).
- Fill cooling system, (Para 3-83).
- Start engine, (Para 2-19).
- Check for leaks.
- Shut off engine, (Para 2-19).
- Install front engine access panel, (Para 3-78).

END OF TASK

3-106. FAN DRIVE BELT REPLACEMENT (S/N 8RDCD301513HC THRU S/N 8RDCD301619HC).

This task covers:

a. Removal b. Installation c. Follow-On Maintenance

INITIAL SETUP

Tools and Special Tools
Tool Kit, General Mechanic's: Automotive (Item 19, Appendix I)

Materials/Parts
Screw, Self-Tapping (4) (MS518151-106)

Equipment Condition
Engine OFF, (Para 2-19)
Concrete Mobile Mixer unloaded, (Para 2-5)
Top engine cover removed, (Para 3-93)

a. Removal.

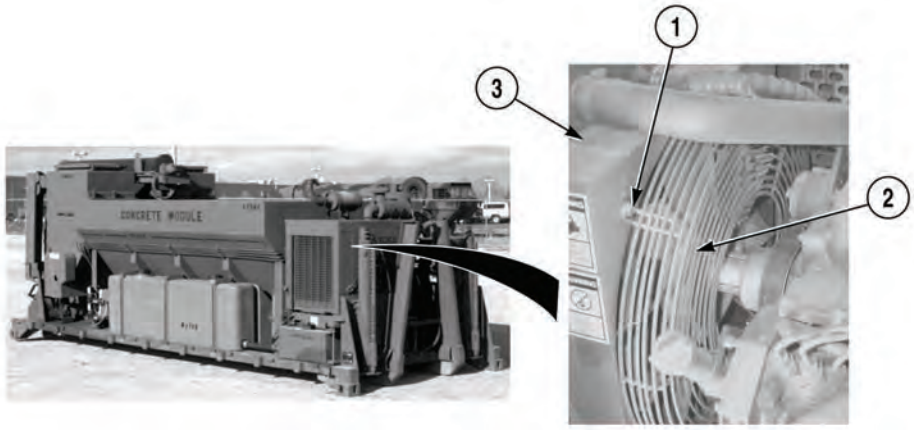

(1) Remove four self-tapping screws (1) and fan guard (2) from fan shroud (3). Discard self-tapping screws.

3-106. FAN DRIVE BELT REPLACEMENT (S/N 8RDCD301513HC THRU S/N 8RDCD301619HC) (CONT).

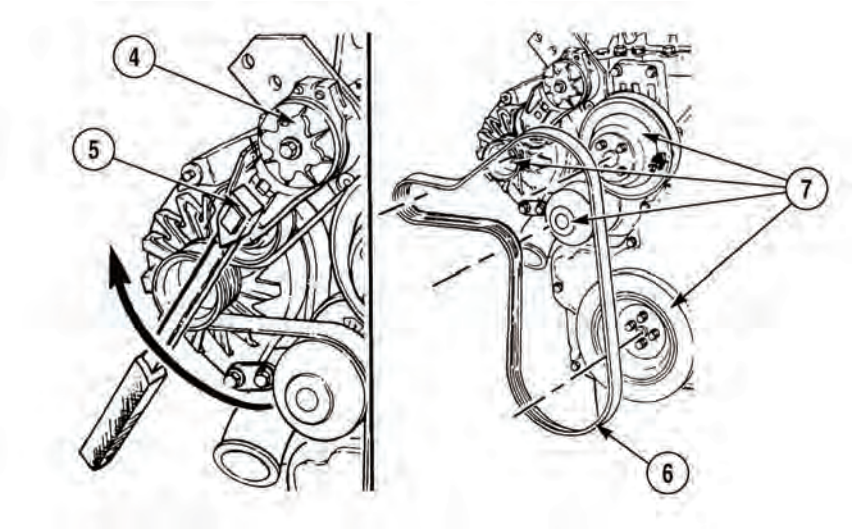

CAUTION

Applying excessive force in opposite direction of wind-up to positive stop can cause tension arm to break.

NOTE

- Belt tensioner winds in direction that spring tang is bent over tensioner body. To loosen tension on belt, rotate tensioner to wind spring tighter.
- Note routing of fan drive belt prior to removal.

(2) Lift tensioner arm (4) and pulley (5), and remove fan drive belt (6) from four pulleys (7).

b. Installation.

CAUTION

Applying excessive force in opposite direction of wind-up to positive stop can cause tension arm to break.

NOTE

- Belt tensioner winds in direction that spring tang is bent over tensioner body. To loosen tension on belt, rotate tensioner to wind spring tighter.
- Ensure fan belt is installed in the same position as noted prior to removal.

(1) Install fan drive belt (6) on four pulleys (7) lift tensioner arm (4) and install on pulley (5).

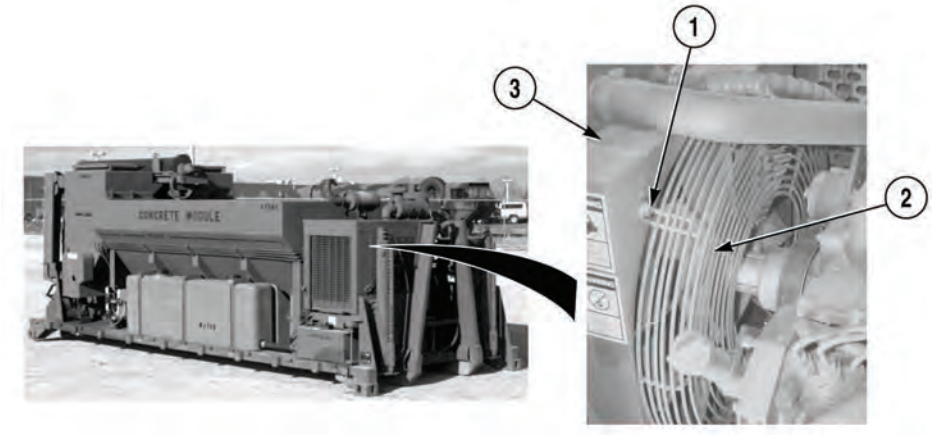

(2) Install fan guard (2) on fan shroud (3) with four self-tapping screws (1).

c. Follow-On Maintenance:

- Install top engine cover, (Para 3-93).
- Start engine, (Para 2-19).
- Check operation of fan belt.
- Shut off engine, (Para 2-19).

END OF TASK

3-107. FAN DRIVE BELT REPLACEMENT (S/N 8RDCD301620HC AND SUBSEQUENT).

This task covers:

a. Removal b. Installation c. Follow-On Maintenance

INITIAL SETUP

Tools and Special Tools
Tool Kit, General Mechanic's: Automotive (Item 19, Appendix I)

Materials/Parts
Screw, Self-Tapping (4) (MS518151-106)

Equipment Condition
Top engine cover removed, (Para 3-93)
Radiator drained (just below hose level), (Para 3-83)

a. Removal.

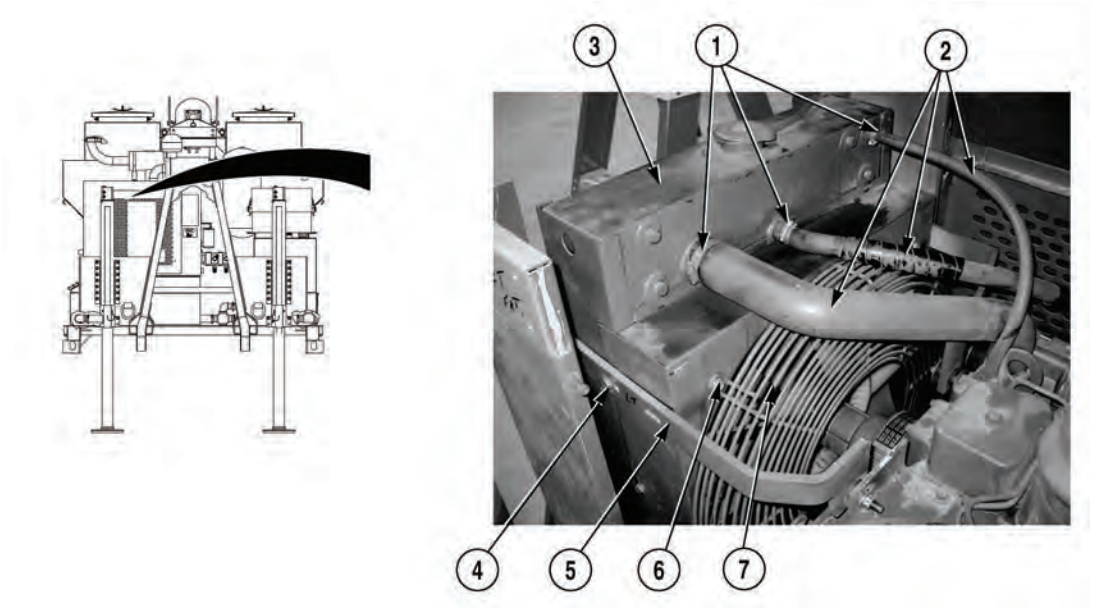

(1) Loosen three clamps (1) and remove hoses (2) from radiator (3).

NOTE

Radiator support bracket must be removed from radiator to provide clearance when removing fan guard.

(2) Remove two screws (4) from bracket (5) and radiator (3).

(3) Remove four self-tapping screws (6) and fan guard (7) from radiator (3). Discard self-tapping screws.

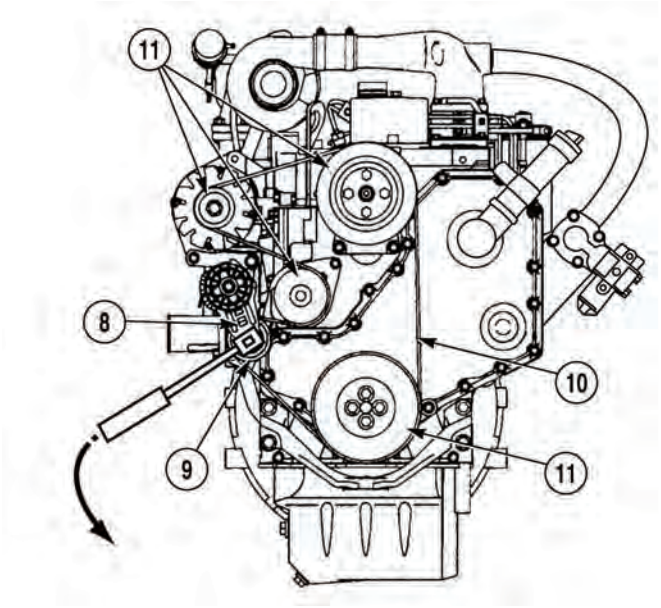

CAUTION

Applying excessive force in opposite direction of wind-up to positive stop can cause tension arm to break.

NOTE

- Belt tensioner winds in direction that spring tang is bent over tensioner body. To loosen tension on belt, rotate tensioner to wind spring tighter.
- Note routing of fan drive belt prior to removal.

(4) Pull tensioner arm (8) and pulley (9), and remove fan drive belt (10) from four pulleys (11) and pulley (9).

b. Installation.

CAUTION

Applying excessive force in opposite direction of wind-up to positive stop can cause tension arm to break.

NOTE

- Belt tensioner winds in direction that spring tang is bent over tensioner body. To loosen tension on belt, rotate tensioner to wind spring tighter.
- Ensure fan belt is installed in the same position as noted prior to removal.

(1) Pull tensioner arm (8) and pulley (9), and install fan drive belt (10) on four pulleys (11) and pulley (9).

3-107. FAN DRIVE BELT REPLACEMENT (S/N 8RDCD301620HC AND SUBSEQUENT) (CONT).

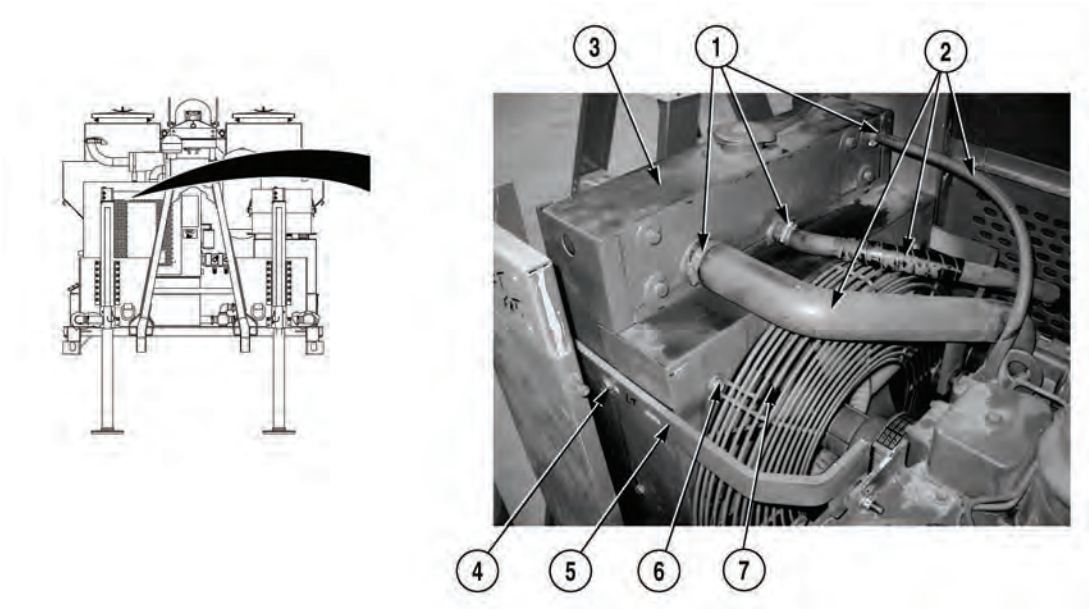

(2) Install fan guard (7) on radiator (3) with four self-tapping screws (6).

(3) Install bracket (5) on radiator (3) with two screws (4).

(4) Position three hoses (2) on radiator (3) and tighten three clamps (1).

c. Follow-On Maintenance:

- Fill radiator, (Para 3-83).
- Install top engine cover, (Para 3-93).
- Start engine, (Para 2-19).
- Check operation of fan belt.
- Shut off engine, (Para 2-19).

END OF TASK

3-108. FAN DRIVE BELT TENSIONER REPLACEMENT (S/N 8RDCD301620HC AND SUBSEQUENT).

This task covers:

a. Removal b. Installation c. Follow-On Maintenance

INITIAL SETUP

Tools and Special Tools
Tool Kit, General Mechanic's: Automotive (Item 19, Appendix I)
Wrench, Torque (Item 25, Appendix I)

Equipment Condition
Front engine access panel removed, (Para 3-78)
Fan drive belt removed, (S/N 8RDCD0301620HC and Subsequent), (Para 3-107)

a. Removal.

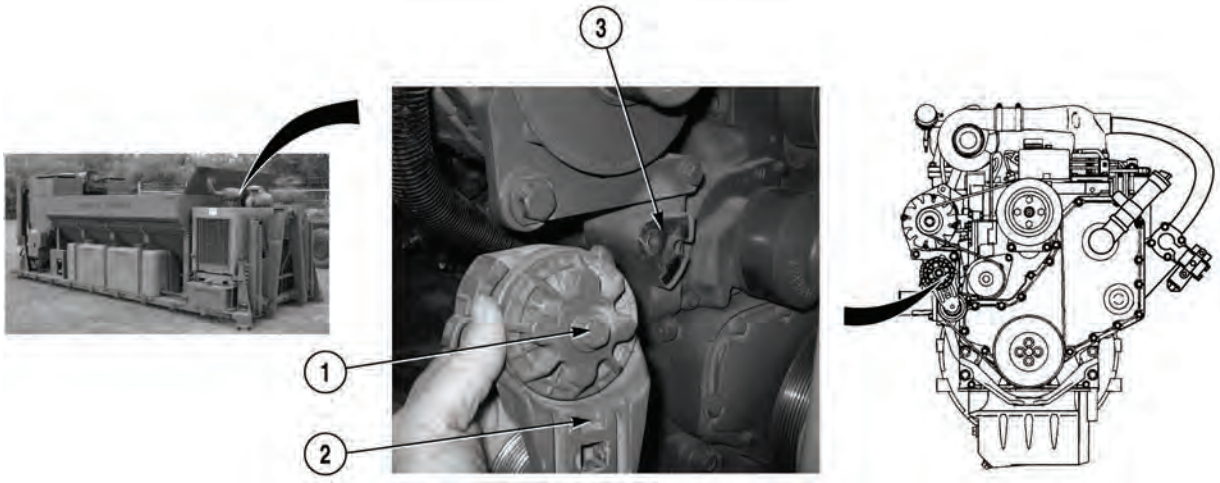

NOTE

Note position of belt tensioner prior to removal.

Remove screw (1) and belt tensioner (2) from engine (3).

b. Installation.

NOTE

Install belt tensioner as noted prior to removal.

Install belt tensioner (2) on engine (3) with screw (1). Tighten screw to 32 lb-ft (43 N·m).

c. Follow-On Maintenance:

- Install fan drive belt (S/N 8RDCD0301620HC and Subsequent), (Para 3-107).
- Install front engine access panel, (Para 3-78).

END OF TASK

3-109. AIR COMPRESSOR REPLACEMENT (S/N 8RDCD301513HC THRU S/N 8RDCD301619HC).

This task covers:

a. Removal b. Installation c. Follow-On Maintenance

INITIAL SETUP

Tools and Special Tools
Tool Kit, General Mechanic's: Automotive (Item 19, Appendix I)
Pan, Drain (Item 12, Appendix I)
Cap and Plug Set (Item 3, Appendix I)
Wrench, Torque 3/8 in. (Item 26, Appendix I)

Materials
Gasket (3929751)
Tags, Identification (Item 13, Appendix H)
Preformed Packing (2) (Item 18, Appendix H)
Sealing Compound (Item 11, Appendix H)
Lubricating Oil (Item 6, Appendix H)

Equipment Condition
Engine OFF, (Para 2-19)
Radiator drained, (Para 3-83)
Top engine cover removed, (Para 3-93)
Front engine access cover removed, (Para 3-78)

a. Removal.

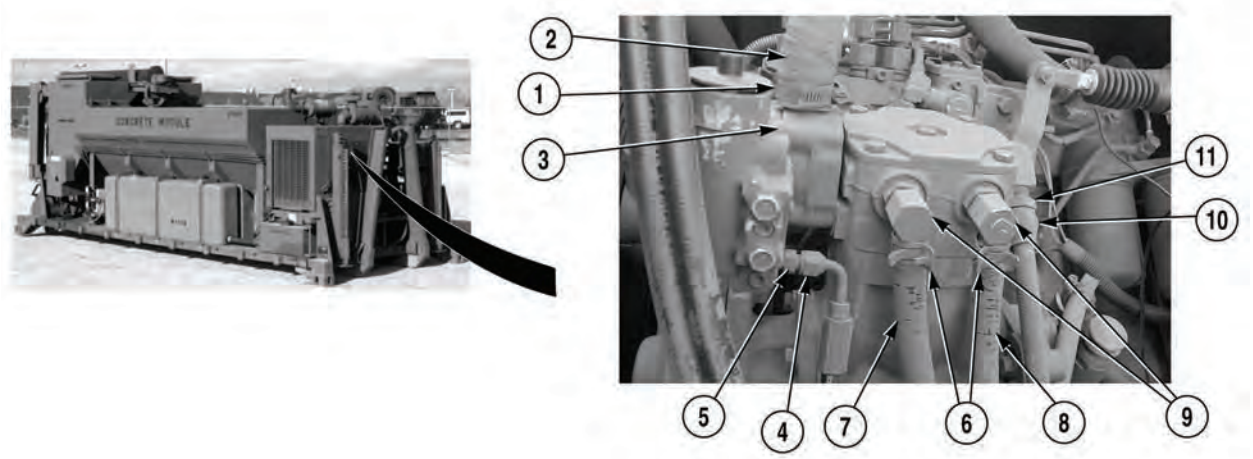

NOTE

- Tag and mark hoses prior to removal.
- Cap and plug hoses upon removal.
- Position drain pan under hoses and fittings to catch excess oil and coolant.

(1) Remove clamp (1) and hose (2) from air compressor (3).

(2) Remove hose (4) from fitting (5).

(3) Remove two clamps (6) and hoses (7) and (8) from elbows (9).

(4) Remove hose (10) from fitting (11).

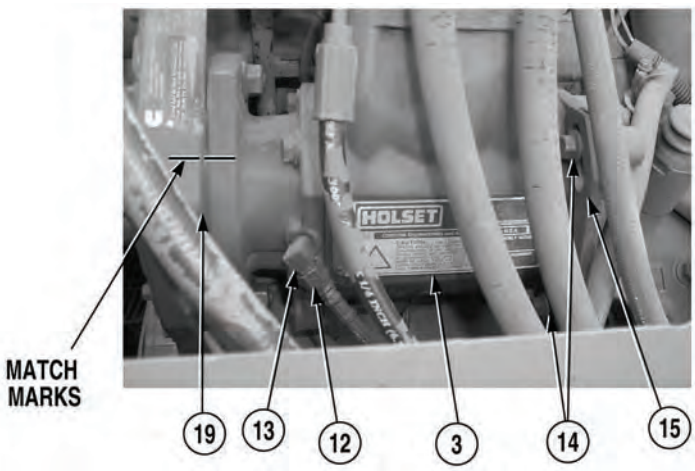

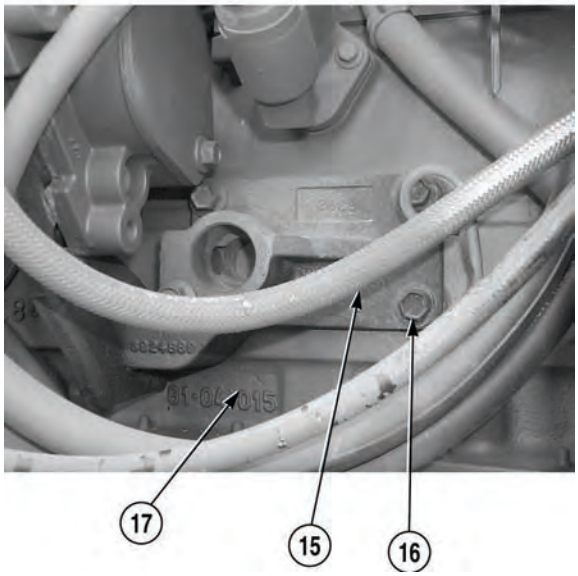

(5) Remove hose (12) from elbow (13).

NOTE

Some models have washers.

(6) Remove two screws (14) from air compressor (3) and bracket (15).

(7) Remove four screws (16) and bracket (15) from engine (17).

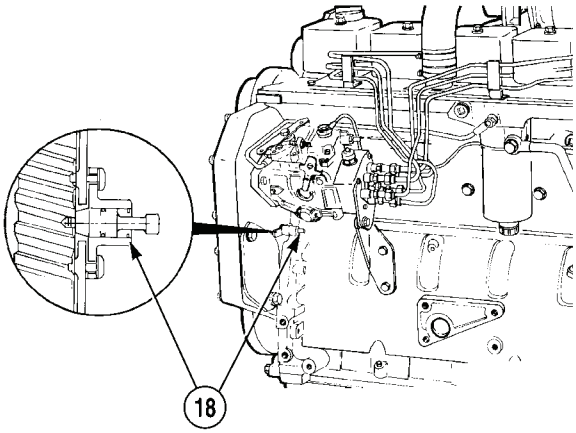

NOTE

- To locate Top Dead Center (TDC) on cylinder No.1 slowly rotate engine while holding timing pin until pin is seated and engine stops turning.
- Ensure timing pin is disengaged after locating TDC.
- Position of air compressor should be matchmarked on gear housing prior to removing nuts to aid installation.

(8) Locate TDC on cylinder No. 1 and engage timing pin (18).

(9) Disengage timing pin (18).

(10) Matchmark air compressor (3) to housing (19).

3-109. AIR COMPRESSOR REPLACEMENT (S/N 8RDCD301513HC THRU S/N 8RDCD301619HC) (CONT).

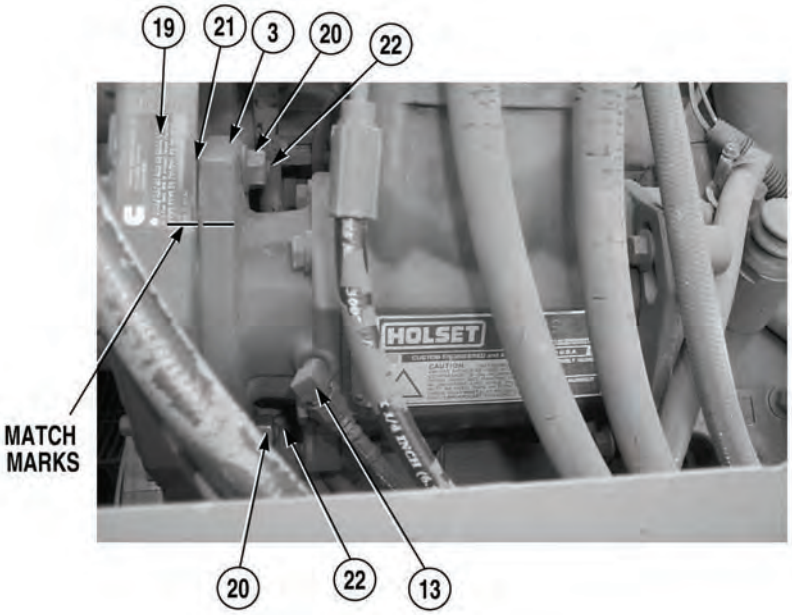

WARNING

Air Compressor weighs 60 lb (27.2 kg). Do not attempt to move or lift air compressor without the aid of an assistant. Failure to comply could result in serious injury to personnel.

(11) With the aid of an assistant, remove two nuts (20), gasket (21), and air compressor (3) from two studs (22) and housing (19). Discard gasket.

NOTE

Note position of elbows prior to removal.

(12) Remove elbow (13) from air compressor (3).

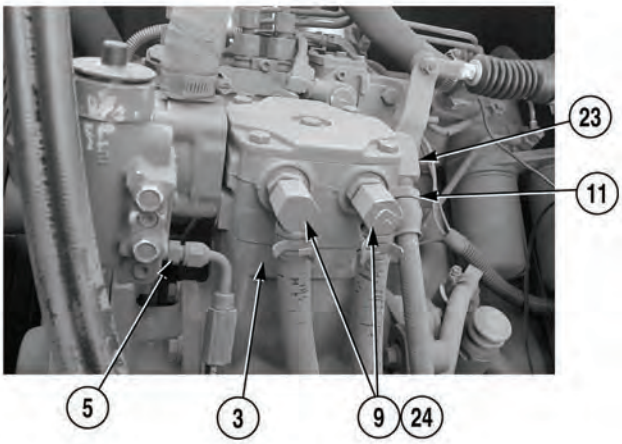

(13) Remove fitting (5) from air compressor (3).

(14) Remove fitting (11) from elbow (23).

(15) Remove elbow (23) from air compressor (3).

(16) Remove two elbows (9) and preformed packings (24) from air compressor (3). Discard preformed packings.

b. Installation.

NOTE

Install elbows as noted prior to removal.

(1) Apply lubricating oil to two preformed packings (24).

(2) Install two preformed packings (24) and elbows on air compressor (3).

WARNING

Adhesives, solvents, and sealing compounds can burn easily, can give off harmful vapors, and are harmful to skin and clothing. To avoid injury or death, keep away from open fire and use in well-ventilated area. If adhesives, solvent, or sealing compound gets on skin or clothing, wash immediately with soap and water.

(3) Apply sealing compound to threads of two elbows (23) and (13) and fittings (11) and (5).

(4) Install elbow (23) on air compressor (3).

(5) Install fitting (11) on elbow (23).

(6) Install fitting (5) on air compressor (3).

3-109. AIR COMPRESSOR REPLACEMENT (S/N 8RDCD301513HC THRU S/N 8RDCD301619HC) (CONT).

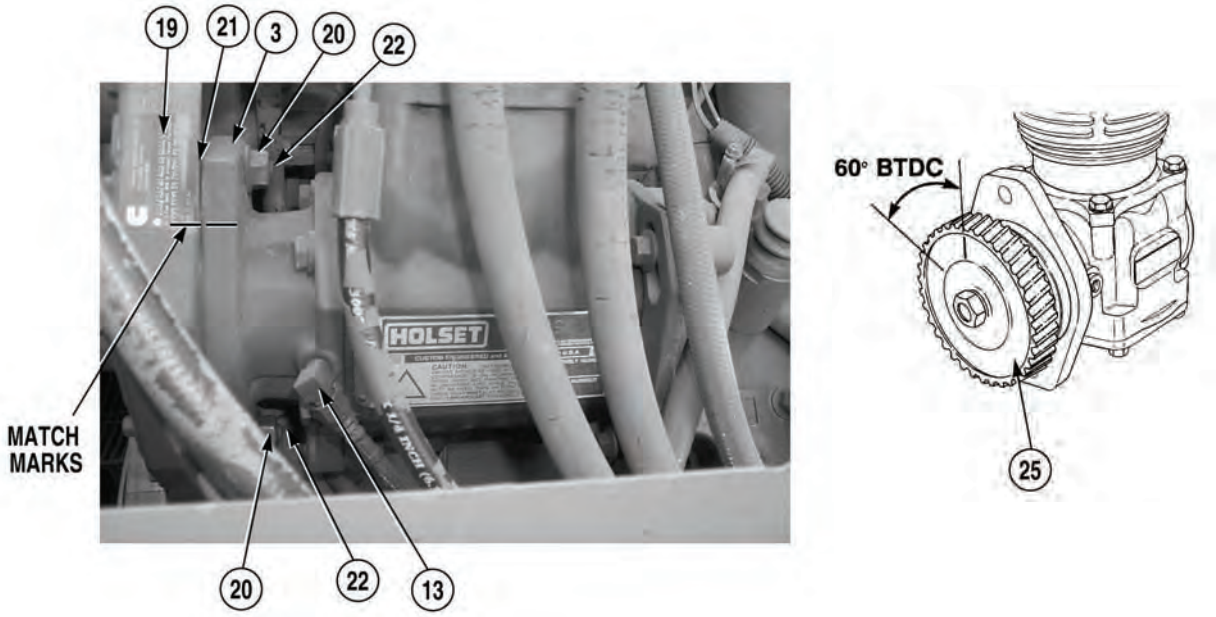

(7) Install elbow (13) on compressor (3).

(8) Clean gasket sealing surface of gear housing (19).

NOTE

Timing mark on gear should be located 60 degrees, or 6 teeth on a 36 tooth gear before TDC. This is approximately 10:00 o'clock when veiwed from front of air compressor.

(9) Position timing mark on gear (25) to 60 degrees before TDC.

WARNING

Air Compressor weighs 60 lb (27.2 kg). Do not attempt to move or lift air compressor without the aid of an assistant. Failure to comply could result in serious injury to personnel.

(10) With the aid of an assistant, install gasket (21) and air compressor (3) on housing (19) and two studs (22) with nuts (20). Do not tighten nuts.

(11) Align matchmarked position of housing (19) to air compressor (3).

(12) Tighten two nuts (20) to 57 lb-ft. (77 N·m).

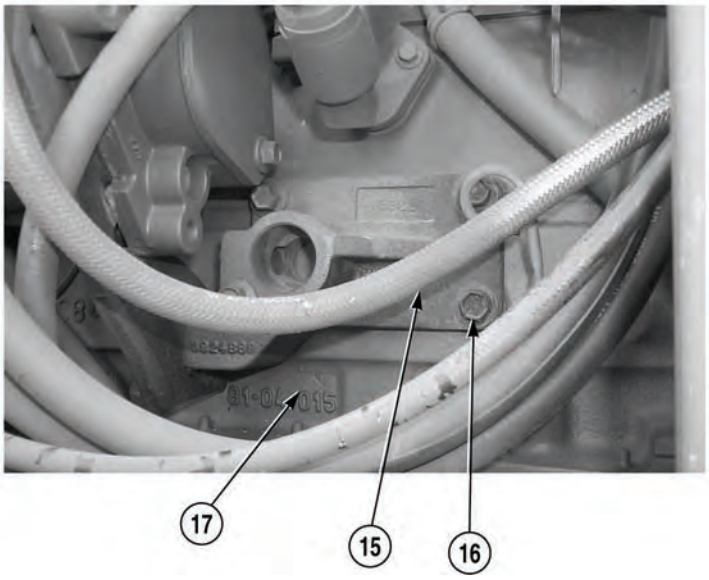

(13) Install bracket (15) on engine (17) with four screws (16). Tighten screws to 18 lb-ft. (24 N·m).

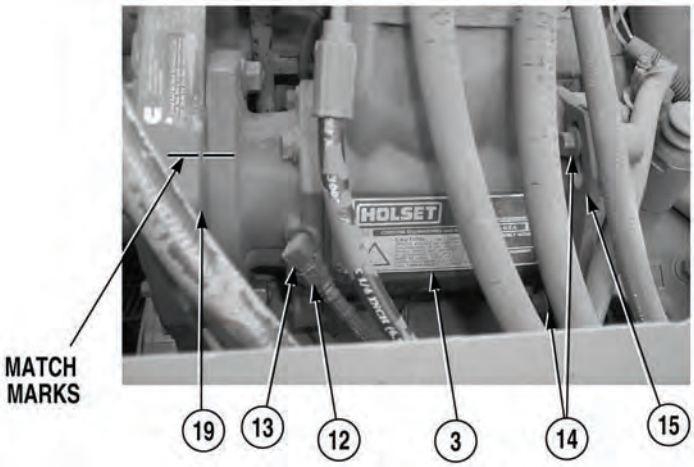

(14) Install air compressor (3) on bracket (15) with two screws (14). Tighten screws to 18 lb-ft. (24 N·m).

(15) Install hose (12) on elbow (13).

3-109. AIR COMPRESSOR REPLACEMENT (S/N 8RDCD301513HC THRU S/N 8RDCD301619HC) (CONT).

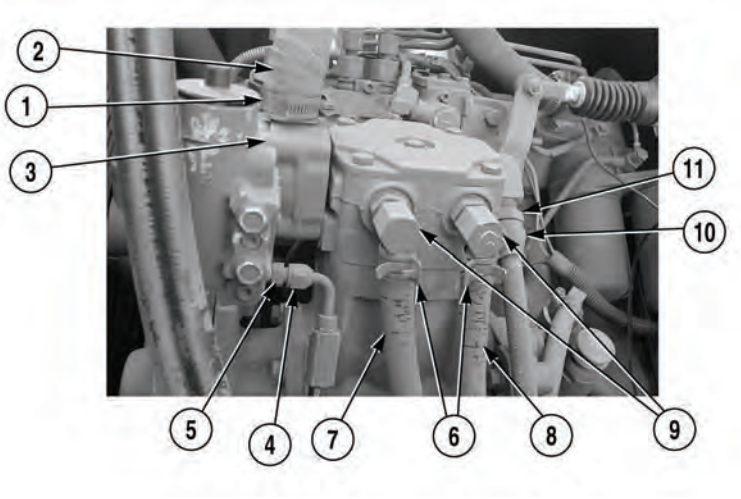

(16) Install hose (10) on fitting (11).

(17) Install two hoses (8) and (7) on elbows (9) with clamps (6).

(18) Install hose (4) on fitting (5).

(19) Install hose (2) on air compressor (3) with clamp (1).

c. Follow-On Maintenance:

- Install top engine cover, (Para 3-93).
- Fill radiator, (Para 3-83).
- Check engine oil level, fill as required, (Para 3-82).
- Start engine, (Para 2-19).
- Check for leaks.
- Shut off engine, (Para 2-19).
- Install front engine access cover, (Para 3-78).

END OF TASK

3-110. AIR COMPRESSOR REPLACEMENT (S/N 8RDCD301620HC AND SUBSEQUENT).

This task covers:

a. Removal b. Installation c. Follow-On Maintenance

INITIAL SETUP

Tools and Special Tools
- Tool Kit, General Mechanic's: Automotive (Item 19, Appendix I)
- Pan, Drain (Item 12, Appendix I)
- Cap and Plug Set (Item 3, Appendix I)
- Wrench, Torque (Item 25, Appendix I)
- Tool, Engine Turnover (Barring Tool), (Item 18, Appendix I)

Materials
- Tags, Identification (Item 13, Appendix H)
- Cable Ties, (Item 2, Appendix H)
- Gasket (3929751)

Materials (Continued)
- Timing Pin (3903924)
- Preformed Packing (3936876)
- Retaining Ring (3904849)
- Sealing Compound (Item 11, Appendix H)
- Lubricating Oil (Item 6, Appendix H)
- Preformed Packing (3910260)
- Preformed Packing (2) (Item 18, Appendix H)

Equipment Condition
- Top engine cover removed, (Para 3-93)
- Radiator drained, (Para 3-83)
- Front engine access cover removed, (Para 3-78)

a. Removal.

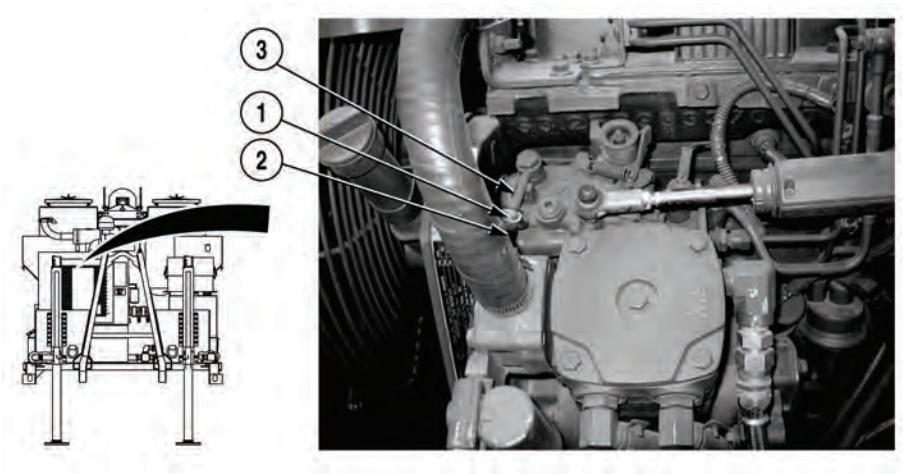

WARNING

Diesel fuel is flammable. Do not perform this procedure near fire, flame, or sparks. Failure to comply could result in injury or death to personnel.

NOTE

- Fuel line is removed to provide clearance for air compressor removal.
- Tag and mark hoses prior to removal.
- Cap and plug hoses upon removal.
- Position drain pan under hoses and fittings to catch excess fuel, oil, and coolant.

(1) Loosen clamp (1) and remove fuel hose (2) from fuel line (3).

3-110. AIR COMPRESSOR REPLACEMENT (S/N 8RDCD301620HC AND SUBSEQUENT) (CONT).

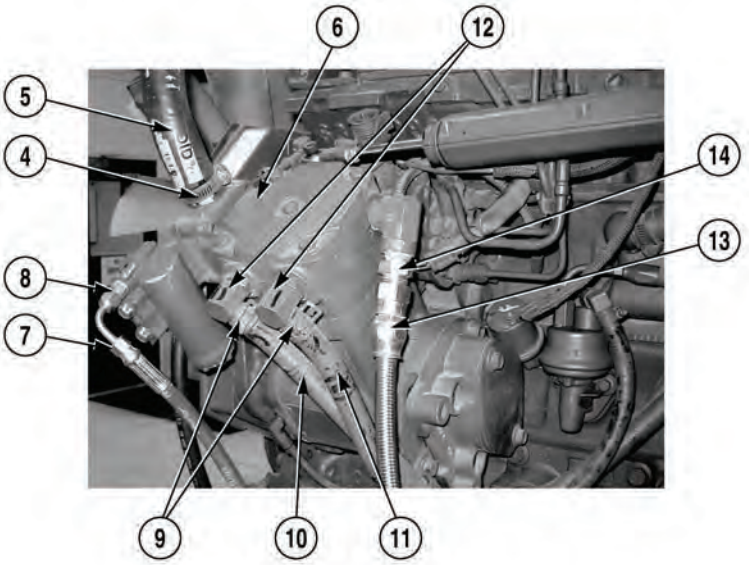

(2) Loosen clamp (4) and remove hose (5) from air compressor (6).

(3) Remove hose (7) from fitting (8).

(4) Remove two clamps (9) and hoses (10) and (11) from elbows (12).

(5) Remove hose (13) from fitting (14).

(6) Remove hose (15) from elbow (16).

(7) Remove screw (17), lockwasher (18), washer (19), and cushion clip (20) from bracket (21).

(8) Remove two screws (22) and washers (23) from bracket (21) and air compressor (6).

(9) Remove two screws (24), washers (25), and bracket (21) from bracket (26).

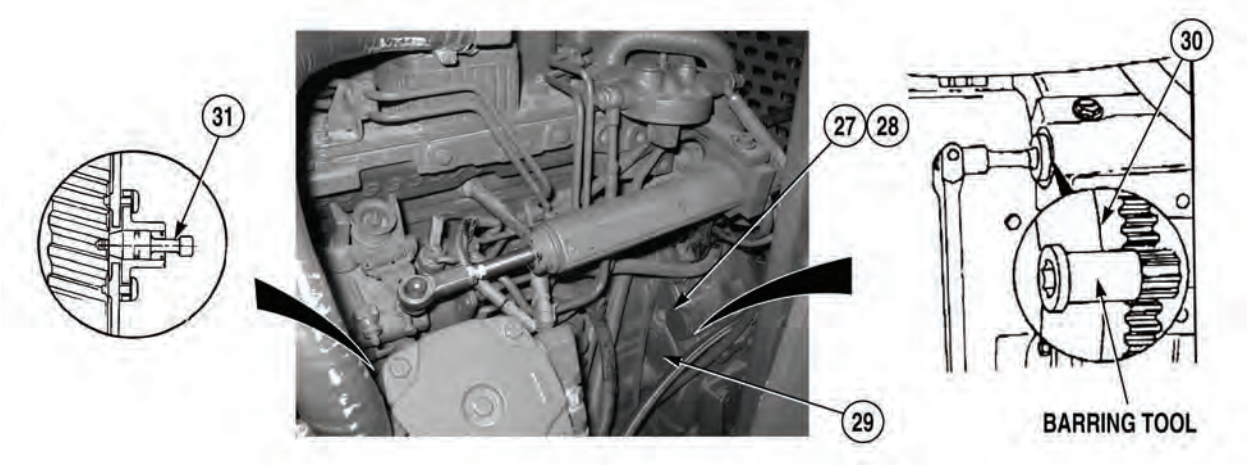

NOTE

Air compressor is installed on engine so that piston assembly inside air compressor is timed with engine to reduce vibration. Cylinder No. 1 must be brought to Top Dead Center (TDC).

(10) Remove cover (27) and preformed packing (28) from engine (29).

CAUTION

Timing pin is made of plastic and can break easily. Only one person should turn ring gear while holding timing pin to lessen the chance of breaking timing pin. Failure to comply may result in damage to equipment.

NOTE

- Timing pin is located between air compressor and fuel injection pump.
- If timing pin does not engage because timing pin is broken, replace timing pin, (Para 3-128).

(11) Install barring tool on ring gear (30) and slowly rotate ring gear (30) while holding timing pin (31) until timing pin (31) is seated and ring gear (30) stops turning.

NOTE

Ensure timing pin is disengaged after locating (TDC).

(12) Disengage timing pin (31).

3-110. AIR COMPRESSOR REPLACEMENT (S/N 8RDCD301620HC AND SUBSEQUENT) (CONT).

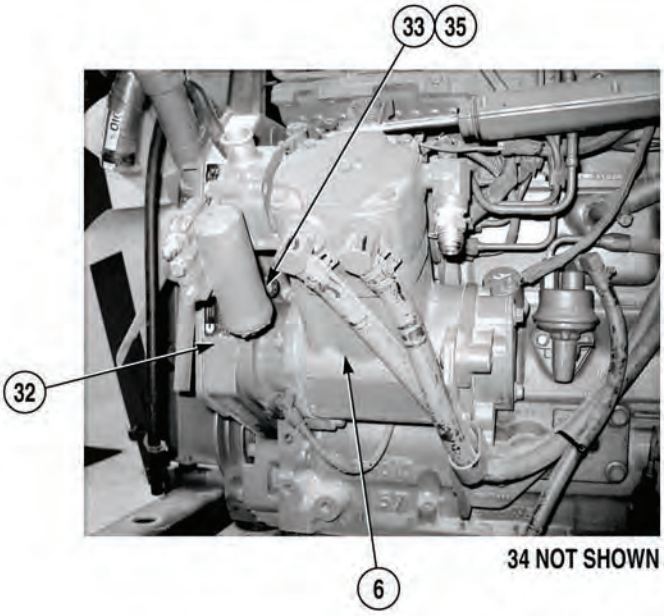

WARNING

Air compressor weighs 50 lb (22.7 kg). Do not attempt to move or lift air compressor without the aid of an assistant. Failure to comply could result in serious injury to personnel.

NOTE

If studs start turning when removing nuts, studs must be held in place with Allen wrench.

(13) With the aid of an assistant, remove two nuts (33), gasket (34), and air compressor (6) from two studs (35) and housing (32).

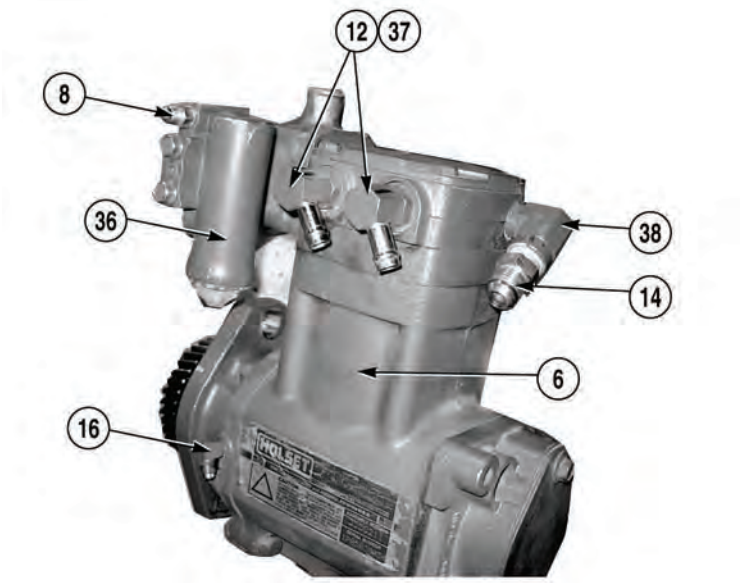

NOTE

Note position of elbows and fittings prior to removal.

(14) Remove elbow (16) from air compressor (6).

(15) Remove fitting (8) from governor (36).

(16) Remove two elbows (12) and preformed packings (37) from air compressor (6). Discard preformed packings.

(17) Remove fitting (14) and elbow (38) from air compressor (6).

b. Installation.

WARNING

Adhesives, solvents, and sealing compounds can burn easily, can give off harmful vapors, and are harmful to skin and clothing. To avoid injury or death, keep away from open fire and use in well-ventilated area. If adhesives, solvent, or sealing compound gets on skin or clothing, wash immediately with soap and water.

(1) Apply sealing compound to threads of two elbows (16) and (38) and fittings (8) and (14).

NOTE

Install elbows and fitting as noted prior to removal.

(2) Install elbow (38) and fitting (14) on air compressor (6).

(3) Apply lubricating oil to two preformed packings (37).

(4) Install two preformed packings (37) and elbows (12) on air compressor (6).

(5) Install fitting (8) on governor (36).

(6) Install elbow (16) on air compressor (6).

3-110. AIR COMPRESSOR REPLACEMENT (S/N 8RDCD301620HC AND SUBSEQUENT) (CONT).

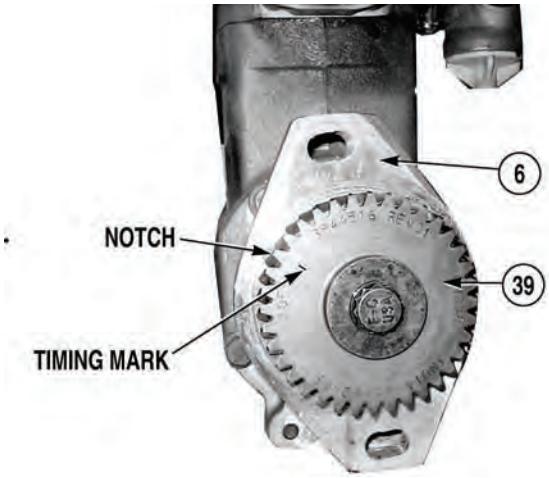

NOTE

Timing mark on gear should align with notch in housing.

(7) Position timing mark on gear (39) with NOTCH on air compressor (6).

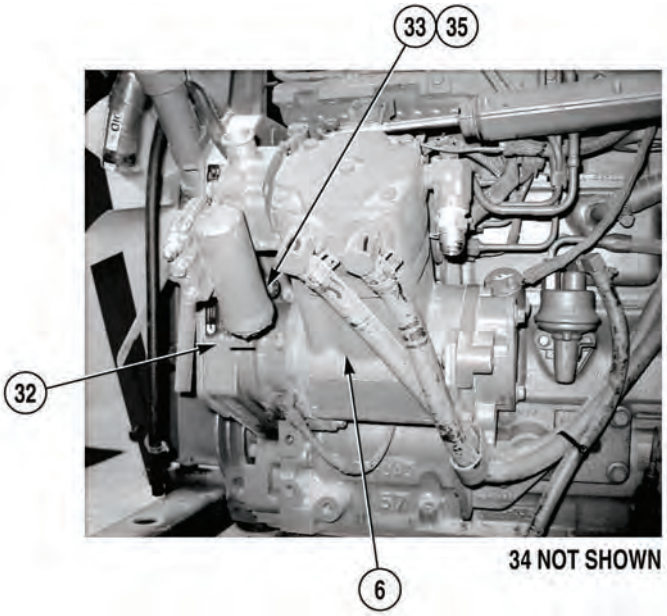

WARNING

Air compressor weighs 50 lb (22.7 kg). Do not attempt to move or lift air compressor without the aid of an assistant. Failure to comply could result in serious injury to personnel.

NOTE

If studs start turning when installing nuts, studs must be held in place with Allen wrench.

(8) With the aid of an assistant, install gasket (34) and air compressor (6) on two studs (35) and housing (32) with two nuts (33). Tighten nuts to 5716-ft. (77 N·m)

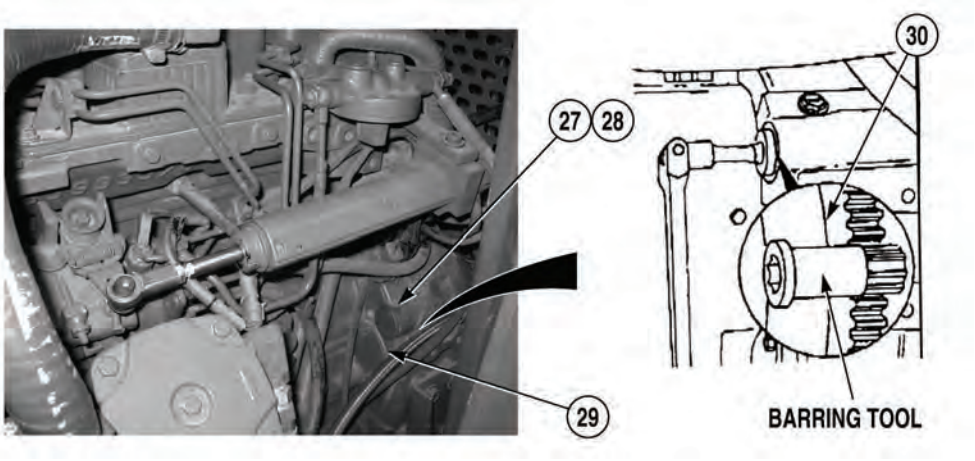

(9) Remove barring tool from ring gear (30) and engine (29).

(10) Apply lubricating oil to preformed packing (28).

(11) Install preformed packing (28) and cover (27) on engine (29).

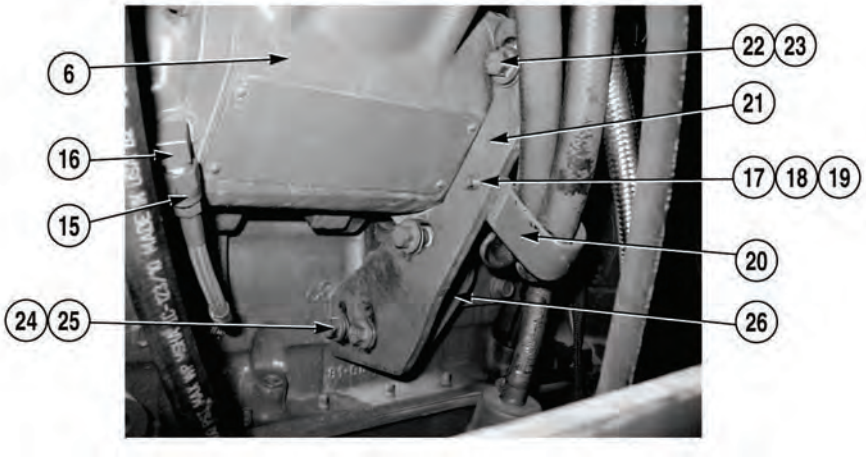

(12) Install bracket (21) on bracket (26) with two washers (25) and screws (24).

(13) Install bracket (21) on air compressor (6) with two washers (23) and screws (22).

(14) Install cushion clip (20) on bracket (21) with washer (19), lockwasher (18), and screw (17).

(15) Install hose (15) on elbow (16).

3-110. AIR COMPRESSOR REPLACEMENT (S/N 8RDCD301620HC AND SUBSEQUENT) (CONT).

(16) Install hose (13) on fitting (14).

(17) Install two hoses (10) and (11) on elbows (12) with clamps (9).

(18) Install hose (7) on fitting (8).

(19) Install hose (5) on air compressor (6) and tighten clamp (4).

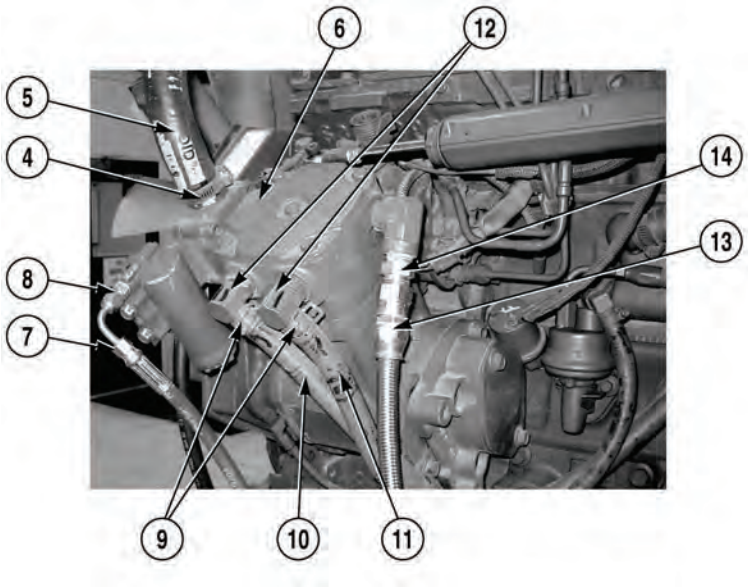

(20) Install fuel hose (2) on fuel line (3) and tighten clamp (1).

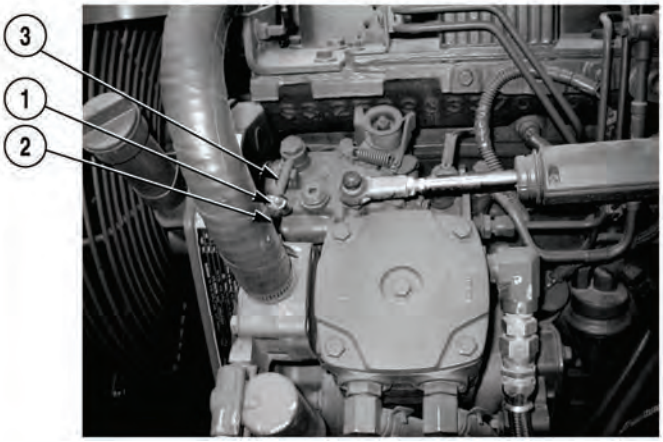

c. Follow-On Maintenance:

- Install top engine cover, (Para 3-93).
- Fill radiator, (Para 3-83).
- Check engine oil level, fill as required, (Para 3-82).
- Start engine, (Para 2-19).
- Check for leaks.
- Shut off engine, (Para 2-19).
- Install front engine access cover, (Para 3-78).

END OF TASK

3-111. FUEL PUMP SOLENOID REPLACEMENT (S/N 8RDCD301513HC THRU S/N 8RDCD301619HC).

This task covers:

a. Removal b. Installation C. Follow-On Maintenance

INITIAL SETUP

Tools and Special Tools
Tool Kit, General Mechanic's: Automotive (Item 19, Appendix I)

Materials/Parts
Locknut (64050A)

Equipment Condition
Engine OFF, (Para 2-19)
Batteries disconnected, (Para 3-10)

a. Removal.

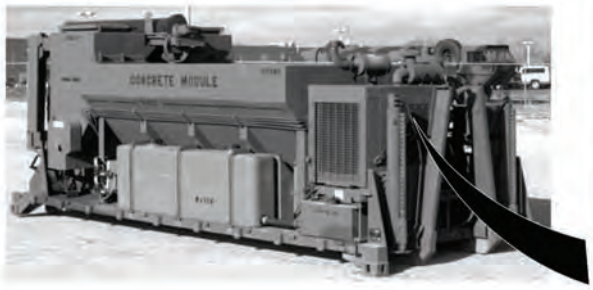

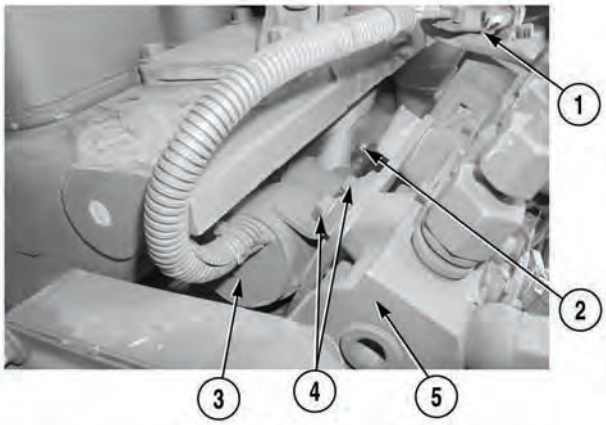

NOTE

Connector is removed by gently prying on tabs.

(1) Disconnect connector (1).

(2) Remove locknut (2) from fuel pump solenoid (3). Discard locknut.

(3) Remove two screws (4) and fuel pump solenoid (3) from fuel injector pump (5).

b. Installation.

(1) Install fuel pump solenoid (3) with two screws (4) on fuel injector pump (5).

(2) Install locknut (2) on fuel pump solenoid (3).

(3) Connect connector (1).

c. Follow-On Maintenance:

- Connect batteries, (Para 3-10).

END OF TASK

3-112. FUEL PUMP THERMO SWITCH REPLACEMENT (S/N 8RDCD301620HC AND SUBSEQUENT).

This task covers:

a. Removal b. Installation c. Follow-On Maintenance

INITIAL SETUP

Tools and Special Tools
Tool Kit, General Mechanic's: Automotive (Item 19, Appendix I)

Materials/Parts
Sealing Compound (Item 11, Appendix H)

Equipment Condition
Batteries disconnected, (Para 3-10)
Radiator drained, (Para 3-83)

a. Removal.

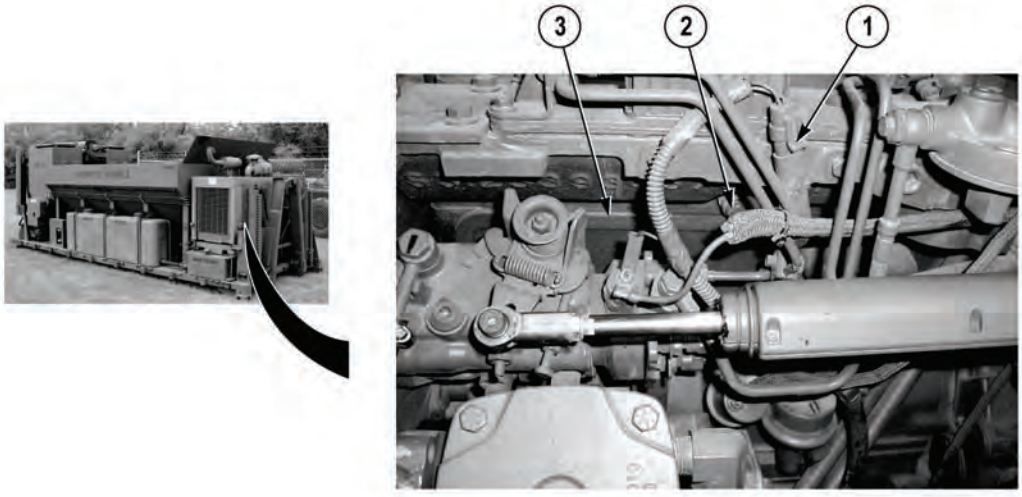

(1) Disconnect connector (1).

(2) Remove thermo switch (2) from engine (3).

b. Installation.

WARNING

Adhesives, solvents, and sealing compounds can burn easily, can give off harmful vapors, and are harmful to skin and clothing. To avoid injury or death, keep away from open fire and use in well-ventilated area. If adhesives, solvent, or sealing compound gets on skin or clothing, wash immediately with soap and water.

(1) Apply sealing compound to threads of thermo switch (2).

(2) Install thermo switch (2) on engine (3).

(3) Connect connector (1).

3-112. FUEL PUMP THERMO SWITCH REPLACEMENT (S/N 8RDCD301620HC AND SUBSEQUENT) (CONT).

c. Follow-On Maintenance:

- Fill radiator, (Para 3-83).
- Connect batteries, (Para 3-10).

END OF TASK

3-113. AGGREGATE DEFLECTOR ASSEMBLY REPLACEMENT.

This task covers:

a. Removal b. Installation

INITIAL SETUP

Tools and Special Tools
Tool Kit, General Mechanic's: Automotive (Item 19, Appendix I)

Personnel Required
Two

Materials/Parts
Lockwasher (5) (MS 35338-48)
Lockwasher (6) (MS 35338-26)

Equipment Condition
Engine OFF, (Para 2-19)
Concrete Mobile Mixer unloaded, (Para 2-5)

a. Removal.

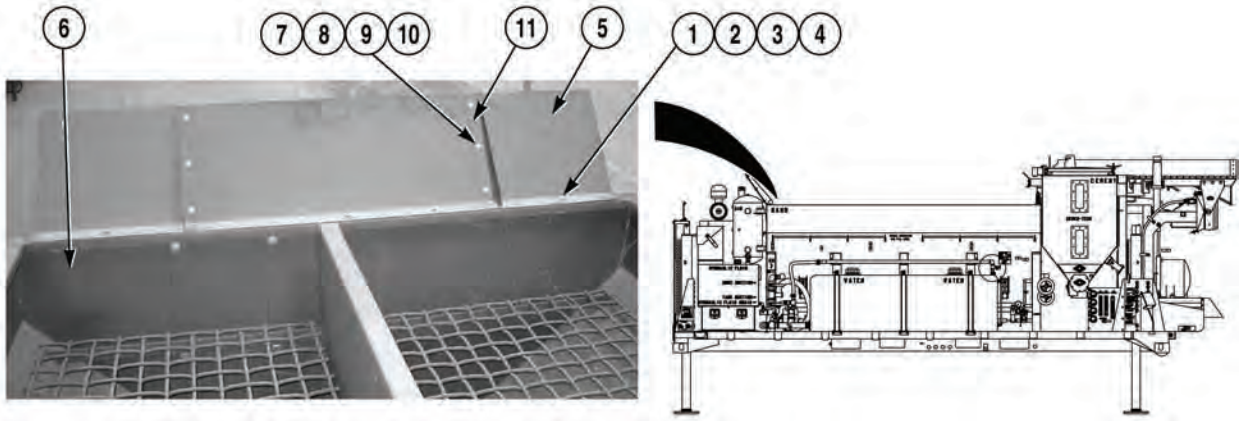

CAUTION

Aggregate deflector is awkward. Do not attempt to remove deflector without the aid of an assistant. Failure to comply may result in damage to equipment.

(1) With the aid of an assistant, remove five nuts (1), lockwashers (2), ten washers (3), five screws (4), and aggregate deflector (5) from Concrete Mobile Mixer (6). Discard lockwashers.

(2) Remove six nuts (7), lockwashers (8), washers (9), screws (10), and two brackets (11) from aggregate deflector (5). Discard lockwashers.

3-113. AGGREGATE DEFLECTOR ASSEMBLY REPLACEMENT (CONT).

b. Installation.

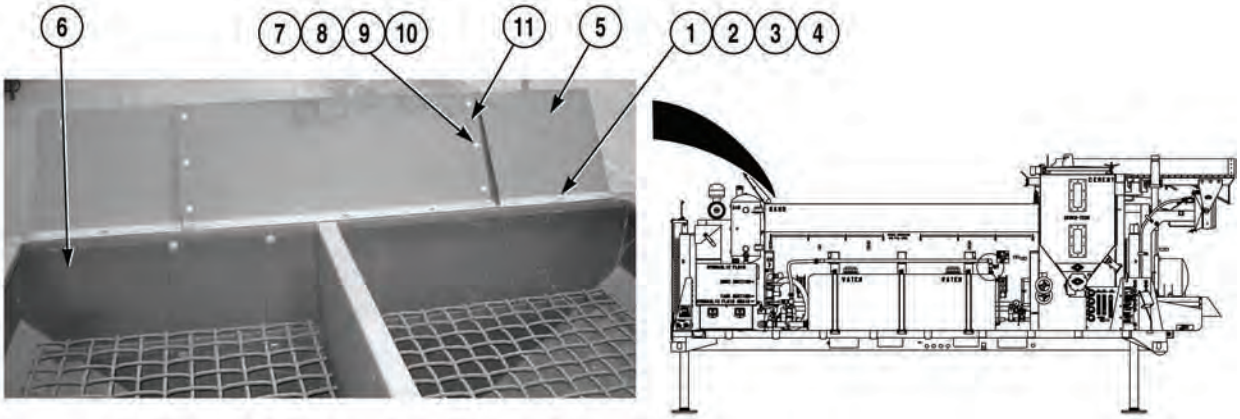

(1) Install two brackets (11) on aggregate deflector (5) with six screws (10), washers (9), lockwashers (8), and nuts (7).

CAUTION

Aggregate deflector is awkward. Do not attempt to install deflector without the aid of an assistant. Failure to comply may result in damage to equipment.

(2) With the aid of an assistant, install aggregate deflector (5) on Concrete Mobile Mixer (6) with five screws (4), ten washers (3), five lockwashers (2), and nuts (1).

END OF TASK

3-114. HIGH-FLOW/LOW-FLOW ADMIX VALVE(S) REPLACEMENT.

This task covers:

a. Removal b. Installation c. Follow-On Maintenance

INITIAL SETUP

Tools and Special Tools
Tool Kit, General Mechanic's: Automotive (Item 19, Appendix I)

Materials/Parts
Tags, Identification (Item 13, Appendix H)
Sealing Compound (Item 11, Appendix H)

Equipment Condition
Engine OFF, (Para 2-19)
Concrete Mobile Mixer unloaded, (Para 2-5)

a. Removal.

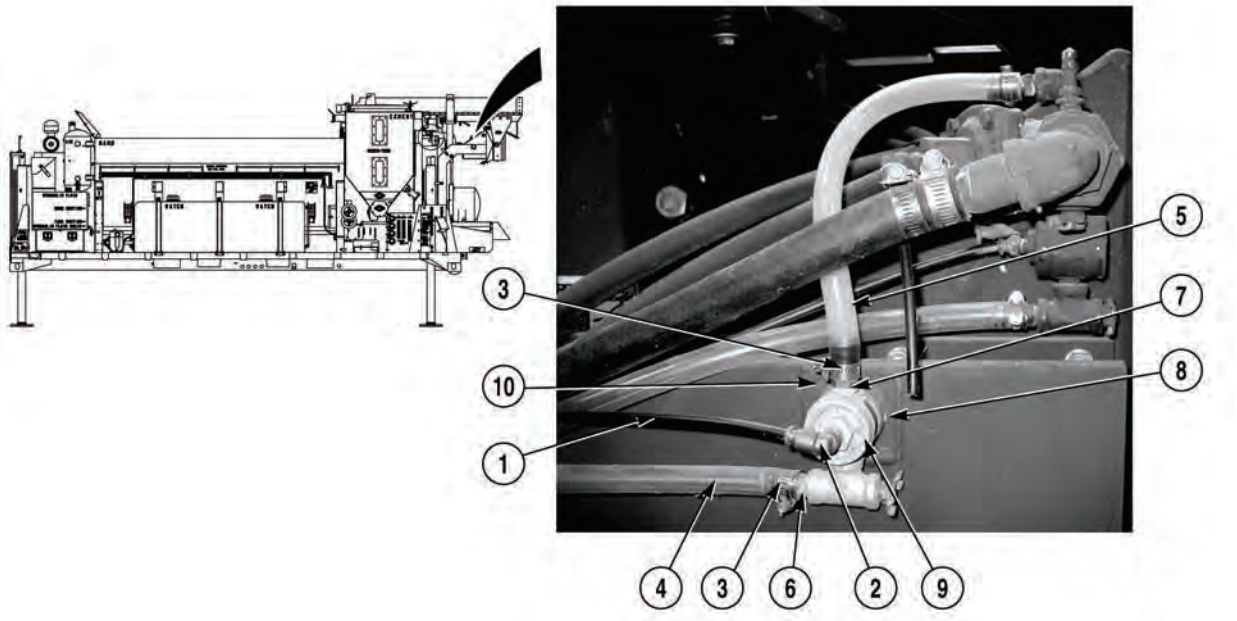

NOTE

- Tag and mark air lines and tubes prior to removal.
- Note position of elbows and fittings prior to removal.
- Perform Steps (1) through (5) to remove high-flow admix valve.

(1) Remove air line (1) from elbow (2).

(2) Loosen two clamps (3) and remove two tubes (4) and (5) from fittings (6) and (7).

(3) Remove four screws (8) and admix valve (9) from weldment (10).

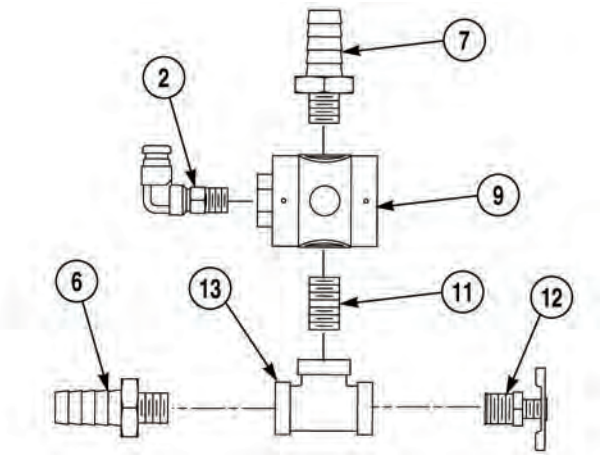

(4) Remove fitting (7), nipple (11), and elbow (2) from admix valve (9).

(5) Remove fitting (6), nipple (11), and drain cock (12) from tee (13).

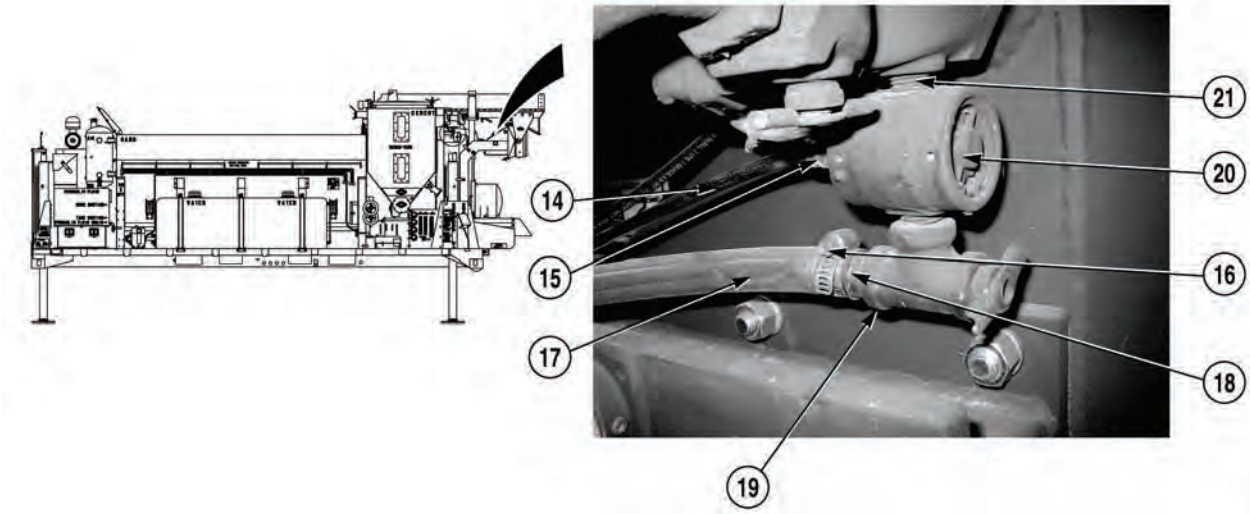

NOTE

Perform Steps (6) through (11) to remove low-flow admix valve.

(6) Remove air line (14) from fitting (15).

(7) Loosen clamp (16) and remove tube (17) from fitting (18).

(8) Remove fitting (18) from tee (19).

(9) Remove admix valve (20) from nipple (21).

3-114. HIGH-FLOW/LOW-FLOW ADMIX VALVE(S) REPLACEMENT (CONT).

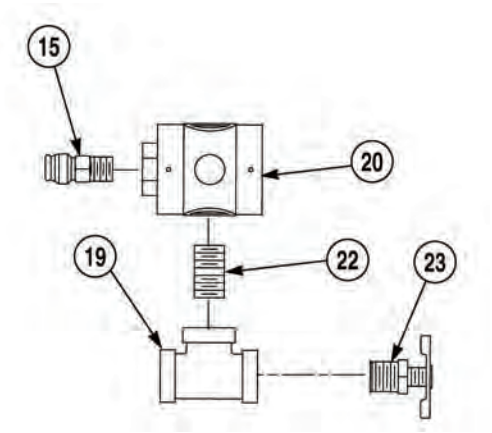

(10) Remove nipple (22) and fitting (15) from admix valve (20).

(11) Remove nipple (22) and drain cock (23) from tee (19).

b. Installation.

WARNING

Adhesives, solvents, and sealing compounds can burn easily, can give off harmful vapors and are harmful to skin and clothing. To avoid injury or death, keep away from open fire and use in well-ventilated area. If adhesives, solvents, or sealing compound gets on skin or clothing, wash immediately with soap and water.

NOTE

- Install elbows and fittings as noted prior to removal.
- Perform Steps (1) through (7) to install low-flow admix valve.

(1) Apply sealing compound to threads of drain cock (23), two nipples (21) and (22), and fittings (15) and (18).

(2) Install nipple (22) and drain cock (23) on tee (19).

(3) Install fitting (15) and nipple (22) on admix valve (20).

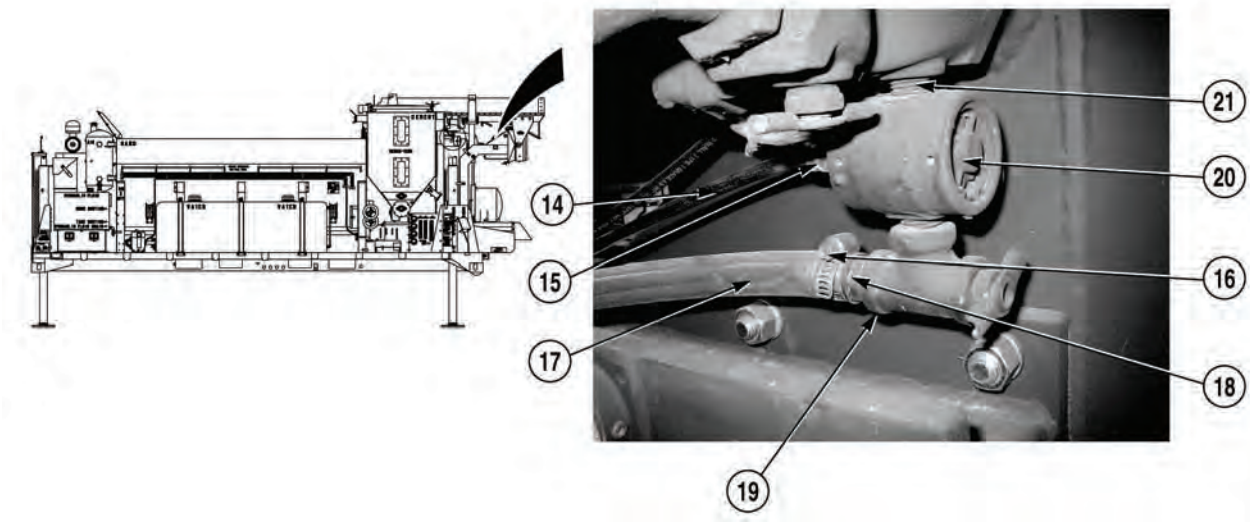

(4) Install admix valve (20) on nipple (21).

(5) Install fitting (18) on tee (19).

(6) Position tube (17) on fitting (18) and tighten clamp (16).

(7) Install air line (14) on fitting (15).

WARNING

Adhesives, solvents, and sealing compounds can burn easily, can give off harmful vapors and are harmful to skin and clothing. To avoid injury or death, keep away from open fire and use in well-ventilated area. If adhesives, solvents, or sealing compound gets on skin or clothing, wash immediately with soap and water.

NOTE

- Install elbows and fittings as noted prior to removal.
- Perform Steps (8) through (13) to install high-flow admix valve.

(8) Apply sealing compound to threads of elbow (2), two fittings (6) and (7), and nipple (11).

(9) Install fitting (6), nipple (11), and drain cock (12) on tee (13).

(10) Install elbow (2), fitting (7), and nipple (11) on admix valve (9).

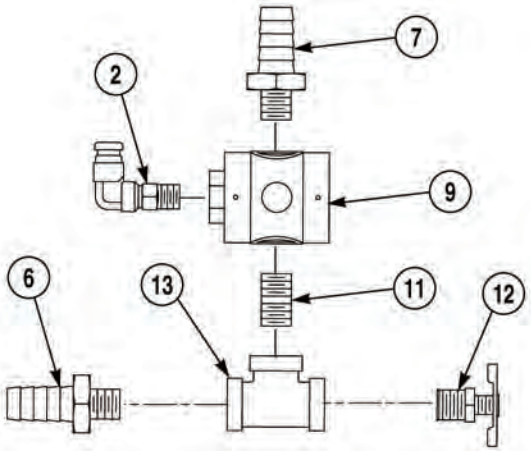

3-114. HIGH-FLOW/LOW-FLOW ADMIX VALVE(S) REPLACEMENT (CONT).

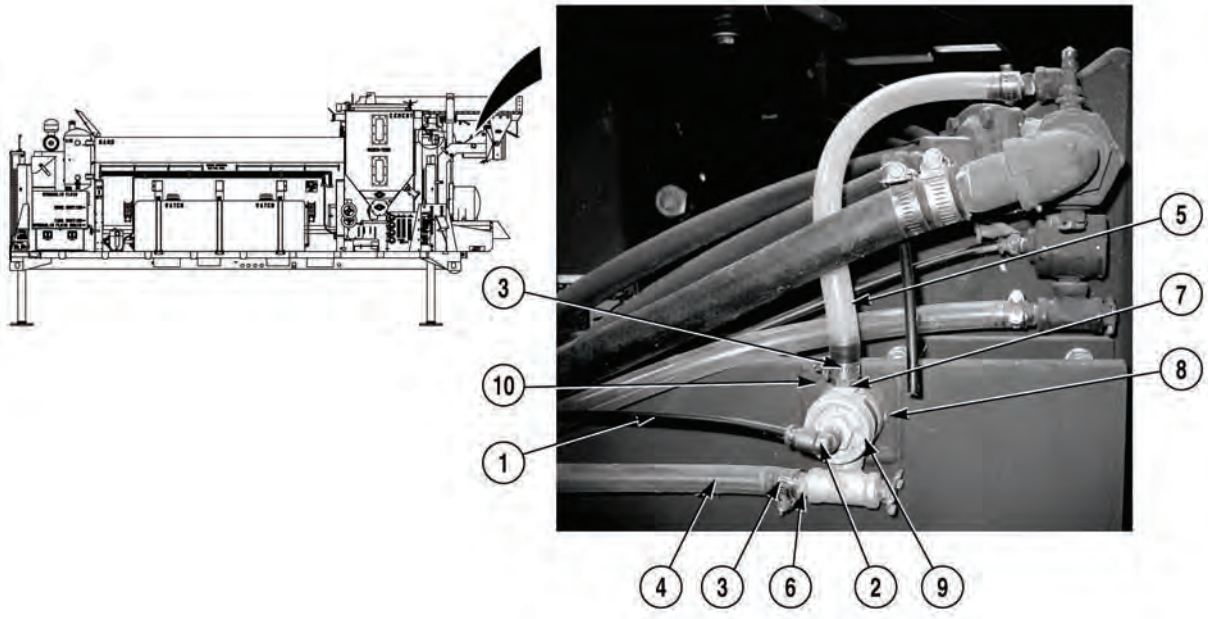

(11) Install admix valve (9) on weldment (10) with four screws (8).

(12) Position two tubes (4) and (5) on fittings (6) and (7), and tighten two clamps (3).

(13) Install air line (1) on elbow (2).

c. Follow-On Maintenance:

- Start engine, (Para 2-19).
- Check for leaks.
- Shut off engine, (Para 2-19).

END OF TASK

3-115. FUEL INJECTOR REPLACEMENT.

This task covers:

a. Removal b. Installation c. Follow-On Maintenance

INITIAL SETUP

Tools and Special Tools
- Tool Kit, General Mechanic's: Automotive (Item 19, Appendix I)
- Cap and Plug set (Item 3, Appendix I)
- Pan, Drain (Item 12, Appendix I)
- Wrench, Torque (Item 25, Appendix I)
- Puller, Mechanical (Item 15, Appendix I)
- Brush, Injector Cleaning (Item 2, Appendix I)

Materials/Parts
- Seal, Banjo Connector (3903380)
- 15W40 Engine Oil (Item 6, Appendix H)
- Anti-seize Compound (Item 15, Appendix H)
- Seal, Ring (3909356)
- Seal, Injector (3929492)
- Lockwasher (MS 35338-43)

Personnel Required
- Two

Equipment Condition
- Engine OFF, (Para 2-19)
- Concrete Mobile Mixer unloaded, (Para 2-5)
- Front engine access panel removed, (Para 3-78)
- Batteries disconnected, (Para 3-10)
- Top engine cover removed, (Para 3-93)

a. Removal.

WARNING

Fuel is very flammable and can explode easily. To avoid serious injury or death, keep fuel away from open fire and keep fire extinguisher within easy reach when working with fuel. Do no work on fuel system when engine is hot. Fuel can be ignited by engine.

CAUTION

Use caution during removal not to kink high pressure line. Failure to comply could cause inside of fuel line to flake and cause injector failure.

NOTE

- Cap and plug fuel lines upon removal.
- There are four injectors. All injectors are removed the same way. Number two injector shown.
- Position drain pan under injector to catch excess fuel.

3-115. FUEL INJECTOR REPLACEMENT (CONT).

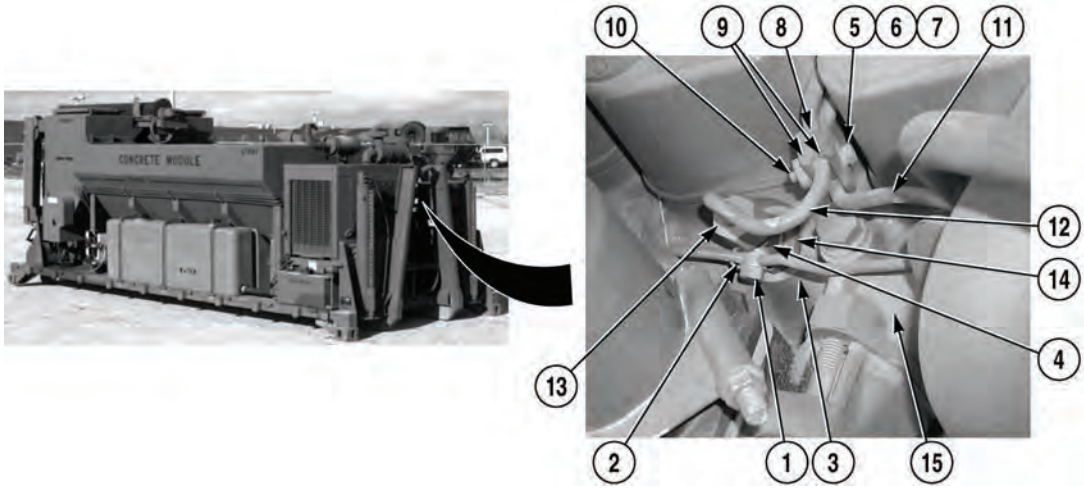

(1) Remove screw (1), banjo connector seal (2), and fuel manifold (3) from fuel injector (4). Discard banjo connector seal.

NOTE

Some models do not have lockwasher and washer.

(2) Remove screw (5), lockwasher (6), washer (7), brace (8), two isolators (9), and brace (10) from two fuel lines (11) and (12). Discard lockwasher.

(3) Remove fitting (13) and fuel line (12) from fuel injector (4).

CAUTION

- Using wrench, hold injector body while hold down nut is loosened. Failure to comply could result in damage to equipment.
- Fuel injector and hold down nut may be rusted together. To aid in removal, penetrating oil, or soft drift pin may be used to loosen fuel injector.

NOTE

Thoroughly clean around the injectors prior to removal.

(4) Loosen hold down nut (14) from engine (15).

(5) Using mechanical puller, remove fuel injector (4) from engine (15).

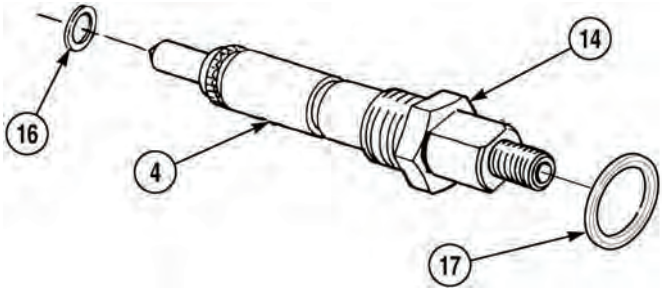

(6) Remove fuel injector seal (16), ring seal (17), and hold down nut (14) from fuel injector (4). Discard seals.

(7) Using injector cleaning brush, clean injector nozzle bore.

b. Installation.

WARNING

- Fuel is very flammable and can explode easily. To avoid serious injury or death, keep fuel away from open fire and keep fire extinguisher within easy reach when working with fuel. Do no work on fuel system when engine is hot. Fuel can be ignited by engine.
- Adhesives, solvents, and sealing compounds can burn easily, can give off harmful vapors, and are harmful to skin and clothing. To avoid injury or death, keep away from open fire and use in a well-ventilated area. If adhesives, solvent, or sealing compound gets on skin or clothing, wash immediately with soap and water.

NOTE

Lubricating oil may be applied to injector seal to aid installation.

3-115. FUEL INJECTOR REPLACEMENT (CONT).

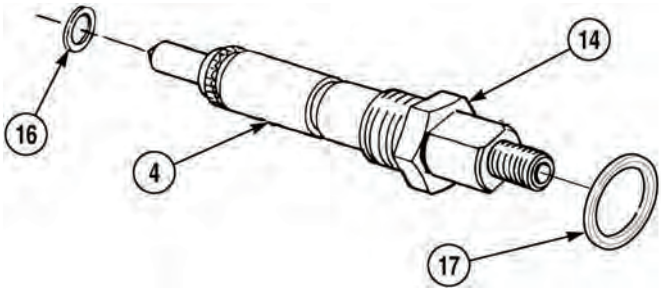

(1) Apply anti-seize compound to the threads of the injector hold down nut (14).

(2) Apply lubricating oil to fuel injector seal (16).

(3) Install hold down nut (14), ring seal (17), and fuel injector seal (16) on fuel injector (4).

(4) Install fuel injector (4) on engine (15).

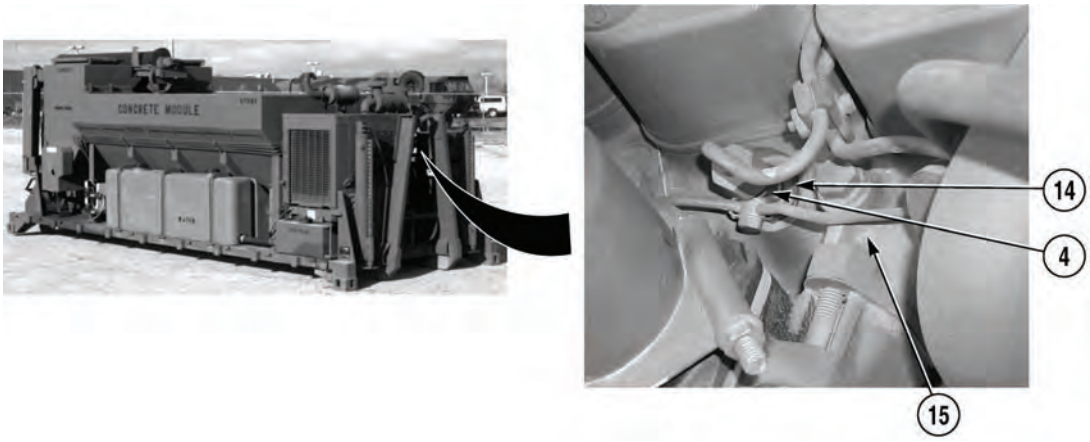

CAUTION

Using wrench, hold injector body while hold down nut is tightened. Failure to comply could result in damage to equipment.

NOTE

Align protrusion of injector with notch in injector bore.

(5) Install hold down nut (14) on engine (15). Tighten hold down nut to 44 lb-ft (60 N·m).

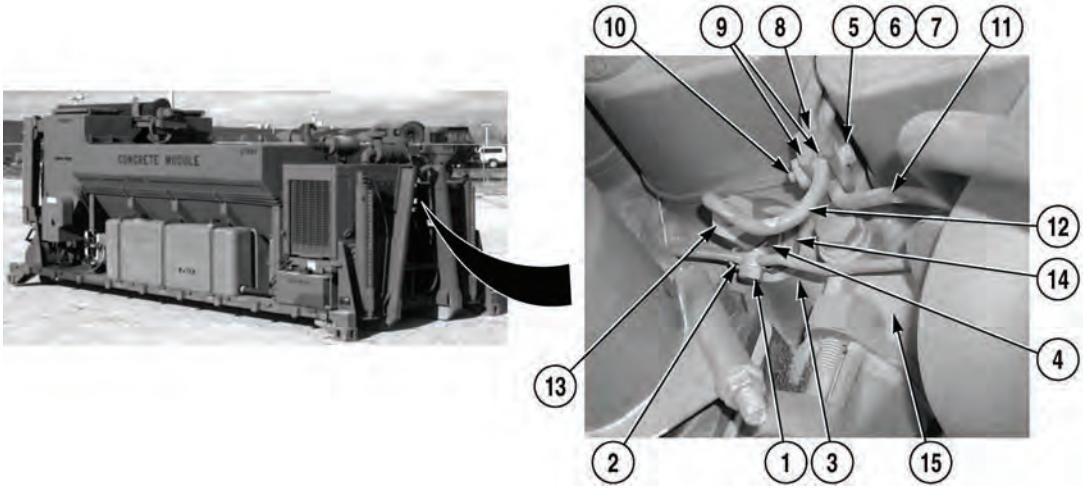

NOTE

Do not tighten fitting on fuel injector in Step (6).

(6) Position fuel line (12) and fitting (13) on fuel injector (4).

(7) Install brace (10), two isolators (9), brace (8), washer (7), and lockwasher (6) on two fuel lines (11) and (12) with screw (5).

(8) Install banjo connector seal (2) and fuel manifold (3) with screw (1) on fuel injector (4).

WARNING

- Fuel line pressure can penetrate skin and cause serious bodily harm. Do not allow any part of body to get in line of fuel spray. Failure to comply could result in serious injury or death to personnel.
- While cranking engine, ensure personnel stay clear of moving parts. Failure to comply could result in serious injury or death to presonnel.

(9) With the aid of an assistant, crank engine to allow entrapped air to bleed from fuel line (12). Tighten fitting (13) on fuel injector (4).

c. Follow-On Maintenance:

- Install top engine cover, (Para 3-93).
- Connect batteries, (Para 3-10).
- Start engine, (Para 2-19).
- Check for leaks.
- Shut off engine, (Para 2-19).
- Install front engine access panel, (Para 3-78).

END OF TASK

3-116. FUEL INJECTOR PUMP REPLACEMENT (S/N 8RDCD301513HC THRU S/N 8RDCD301619HC.

This task covers:

a. Removal b. Installation c. Follow-On Maintenance

INITIAL SETUP

Tools and Special Tools
- Tool Kit, General Mechanic's: Automotive (Item 19, Appendix I)
- Cap and Plug Set (Item 3, Appendix I)
- Pan, Drain (Item 12, Appendix I)
- Wrench, Torque (Item 25, Appendix I)
- Puller Kit, Universal (Item 14, Appendix I)

Materials/Parts
- Oil, Lubricating, Engine (Item 6, Appendix H)
- Tags, Identification (Item 13, Appendix H)
- Screw, Self-Tapping (4) (MS 518151-106)
- Preformed Packing (2) (3902363)
- Preformed Packing (1) (3903475)
- Locknut (64050A)
- Lockwasher (2) (2150Hx1)
- Preformed Packing (2-411-015-104)
- Sealing Washer (6) (3918191)
- Lockwasher (2-916-690-010)
- Gasket (3931607)

Equipment Condition
- Engine OFF, (Para 2-19)
- Concrete Mobile Mixer unloaded, (Para 2-5)
- Front engine access panel removed, (Para 3-78)

a. Removal.

WARNING

Fuel is very flammable and can explode easily. To avoid serious injury or death, keep fuel away from open fire and keep fire extinguisher within easy reach when working with fuel. Do not work on fuel system when engine is hot. Fuel can be ignited by a hot engine.

NOTE

- Tag and mark hoses and lines prior to removal.
- Cap and plug hoses and lines upon removal.
- Remove clamps, and support brackets as required.
- Position drain pan under lines and fittings to catch excess fuel.

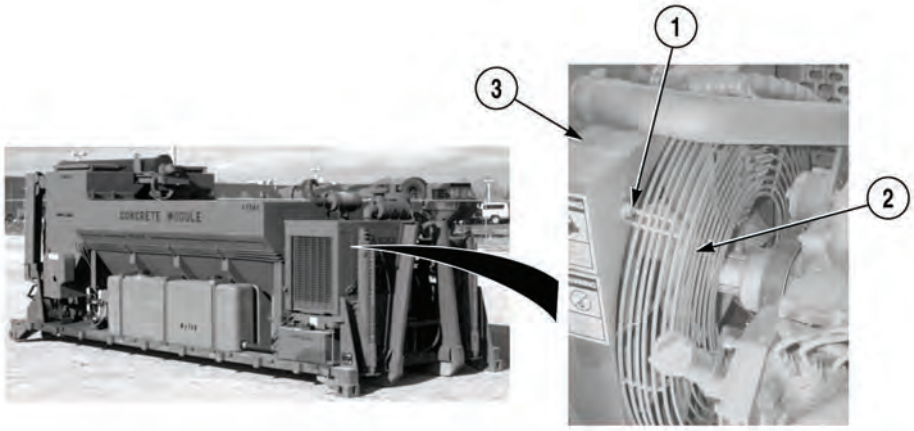

(1) Remove four self-tapping screws (1) and fan guard (2) from fan shroud (3). Discard self-tapping screws.

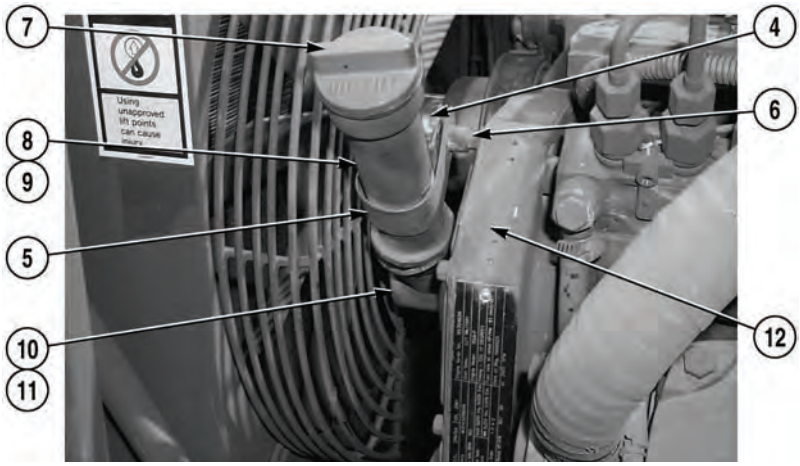

CAUTION

Oil filler tube and adapter are constructed of a breakable material. Use care during removal to unscrew adapter from gear cover or damage to equipment may result.

(2) Remove nut (4) from cushion clamp (5) and stud (6).

(3) Remove cap (7), tube (8), and two preformed packings (9) from adapter (10). Discard preformed packings.

NOTE

Note position of adapter and preformed packing prior to removal.

(4) Remove adapter (10) and preformed packing (11) from gear cover (12). Discard preformed packing.

3-116. FUEL INJECTOR PUMP REPLACEMENT (S/N 8RDCD301513HC THRU S/N 8RDCD301619HC (CONT).

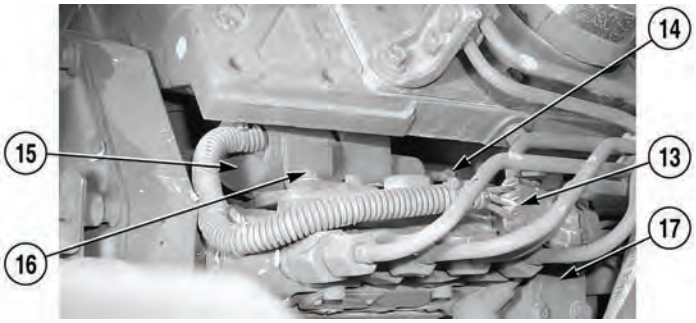

NOTE

Connector is removed by gently prying on tabs.

(5) Disconnect connector (13).

(6) Remove locknut (14) from fuel pump solenoid (15). Discard locknut.

(7) Remove two screws (16) and fuel pump solenoid (15) from fuel injector pump (17).

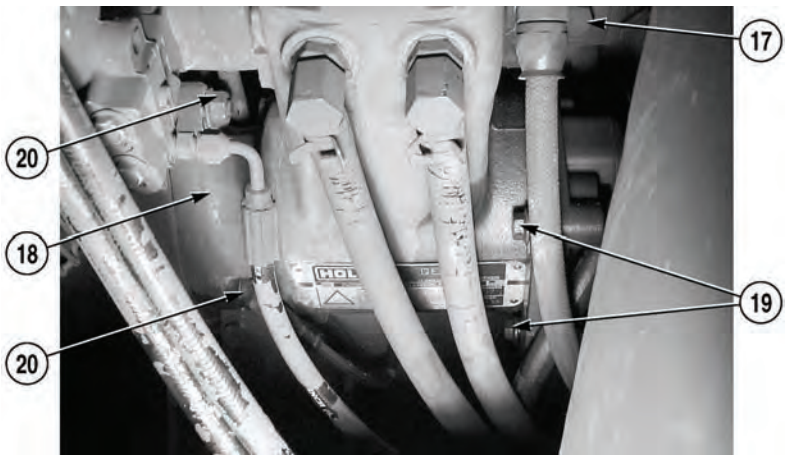

NOTE

Position of air compressor should be matchmarked on gear housing prior to loosening nuts to aid installation.

(8) Matchmark position of air compressor (18).

(9) Loosen two screws (19) and nuts (20) on air compressor (18).

CAUTION

A pry bar may be used to gently rotate air compressor to remove injector pump timing pin housing. Failure to comply could result in damage to equipment.

(10) Rotate air compressor (18) away from injector pump (17).

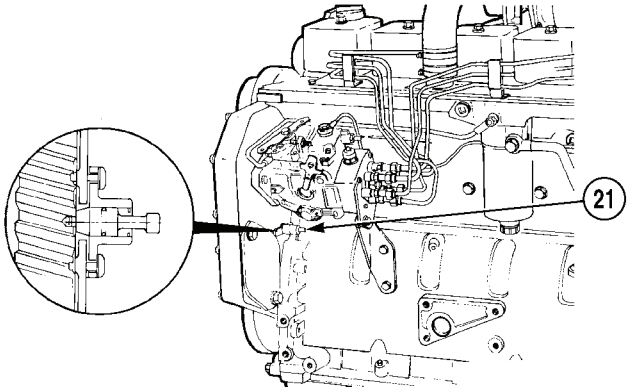

NOTE

To locate Top Dead Center (TDC) on cylinder No.1 slowly rotate engine while holding timing pin until pin is seated and engine stops turning.

(11) Locate TDC on cylinder No. 1 and engage timing pin (21).

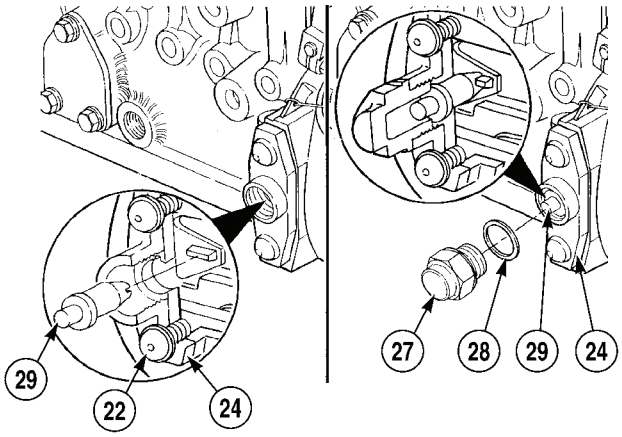

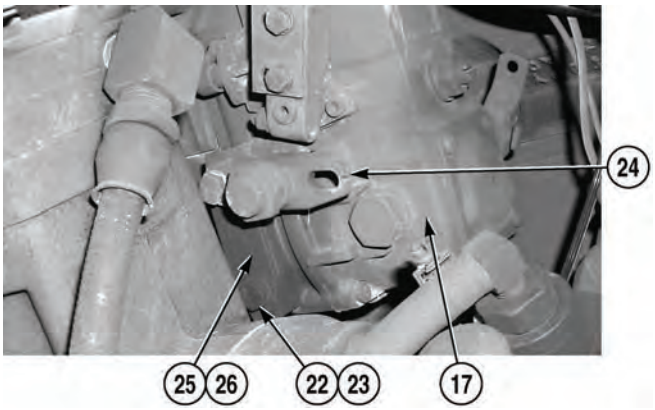

NOTE

Note position of screws prior to removal.

(12) Remove two screws (22), lockwashers (23), housing (24), cover (25), and preformed packing (26) from injector pump (17). Discard preformed packing and lockwashers.

(13) Remove cap (27), washer (28), and pin (29) from housing (24).

(14) Install housing (24) on injector pump (17) with two screws (22). Align matchmarks.

NOTE

Ensure pin is fully engaged on aligning tab.

(15) Install pin (29) on housing (24) to engage aligning tab inside injector pump.

3-116. FUEL INJECTOR PUMP REPLACEMENT (S/N 8RDCD301513HC THRU S/N 8RDCD301619HC (CONT).

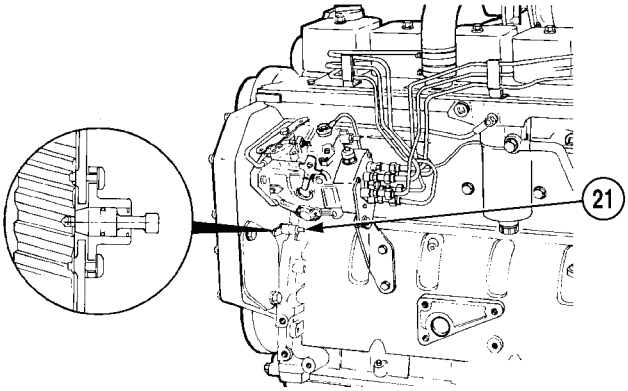

(16) Disengage timing pin (21).

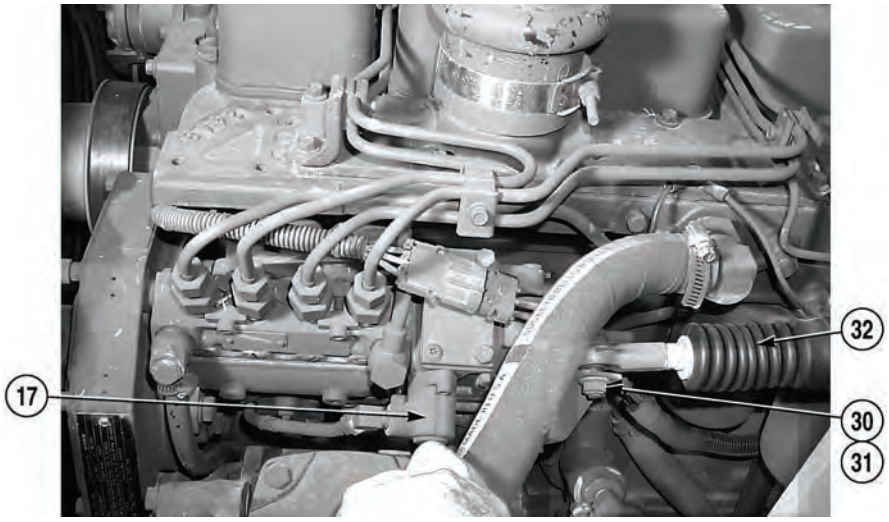

CAUTION

Do not remove the fuel pump control lever during throttle control removal. The control lever is indexed to the fuel pump shaft during assembly and removal could cause engine failure to start or damage to equipment.

(17) Remove nut (30), screw (31), and throttle actuator (32) from injector pump (17).

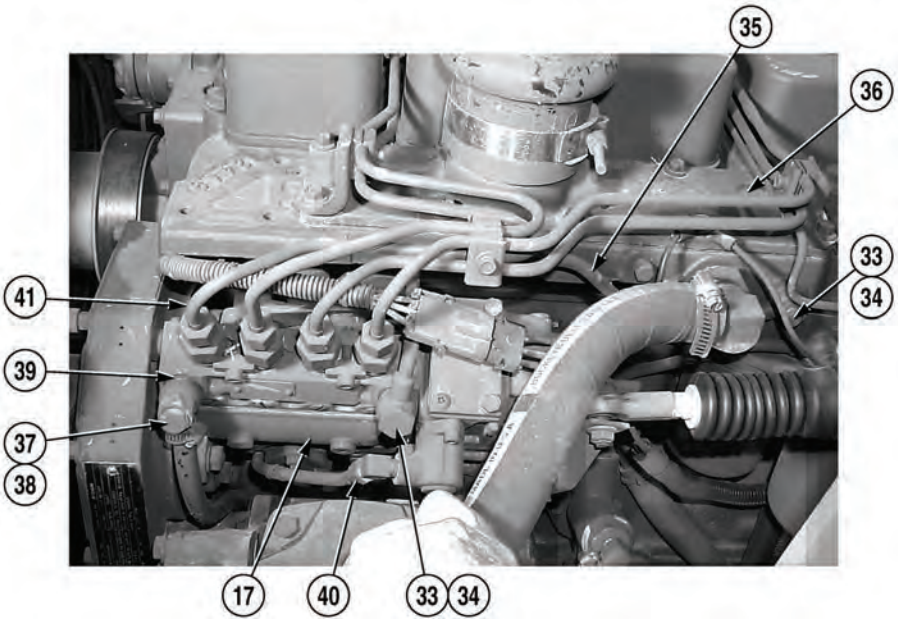

WARNING

Fuel is very flammable and can explode easily. To avoid serious injury or death, keep fuel away from open fire and keep fire extinguisher within easy reach when working with fuel. Do not work on fuel system when engine is hot. Fuel can be ignited by a hot engine.

(18) Remove two screws (33), four sealing washers (34), and tube (35) from engine (36) and injector pump (17). Discard sealing washers.

(19) Remove screw (37), two sealing washers (38), and fittings (39) from injector pump (17). Discard sealing washers.

(20) Remove hose (40) from injector pump (17).

CAUTION

Use caution during removal not to kink high pressure line. Failure to comply could cause inside of fuel line to flake and cause injector failure.

(21) Remove four lines (41) from injector pump (17).

3-116. FUEL INJECTOR PUMP REPLACEMENT (S/N 8RDCD301513HC THRU S/N 8RDCD301619HC (CONT).

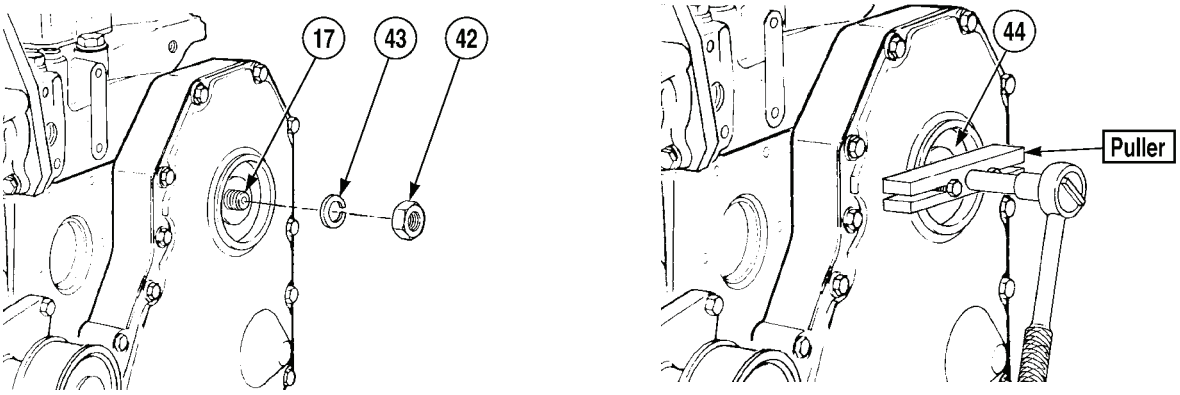

(22) Remove nut (42) and lockwasher (43) from injector pump (17) shaft. Discard lockwasher.

(23) Using puller loosen gear (44) from injector pump (17) shaft.

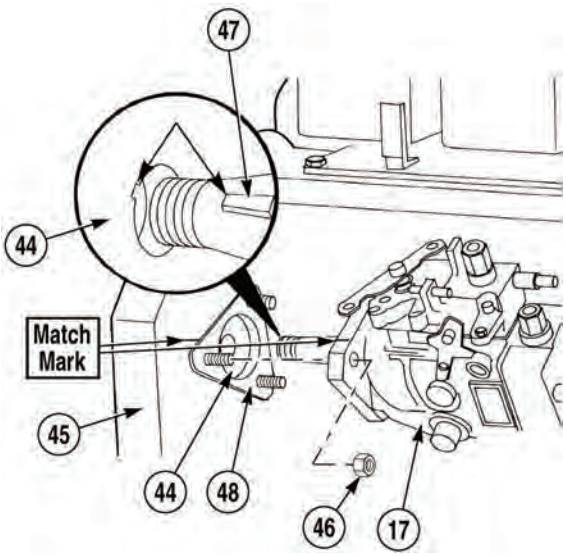

NOTE

If installing new fuel injector pump, ensure to transfer a matchmark in the same position.

(24) Matchmark position of injector pump (17) to gear housing (45).

(25) Remove three nuts (46), injector pump (17), key (47), and gasket (48) from gear housing (45) and gear (44). Discard gasket.

b. Installation.

WARNING

Fuel is very flammable and can explode easily. To avoid serious injury or death, keep fuel away from open fire and keep fire extinguisher within easy reach when working with fuel. Do not work on fuel system when engine is hot. Fuel can be ignited by a hot engine.

NOTE

- Install cable ties as required.
- As items are installed, remove caps and plugs from all hoses, tubes, and connectors.
- Install clamps, and support brackets as required.
- Inspect all hoses, lines, and fittings for cracks, bends, nicks, dents, stripping threads and cuts. Replace all damaged parts.
- Install cushion clips as required.

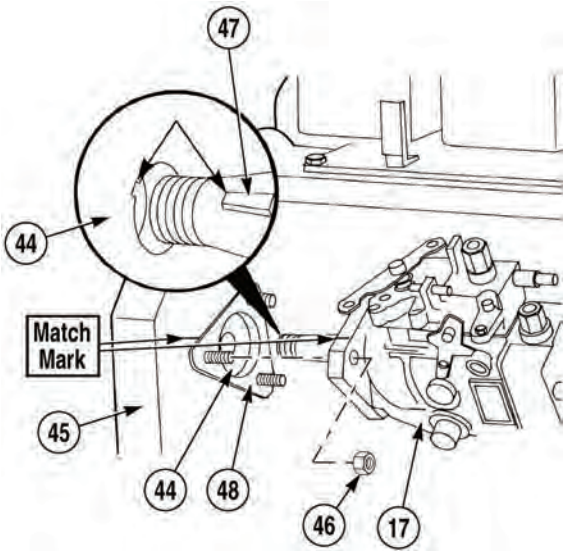

(1) Clean gasket sealing surface of gear housing (45).

(2) Align matchmarked position of gear housing (45) to injector pump (17).

(3) Install injector pump (17), key (47), and gasket (48) on gear housing (45) and gear (44) with three nuts (46). Tighten nuts to 18 lb-ft (24 N·m).

3-116. FUEL INJECTOR PUMP REPLACEMENT (S/N 8RDCD301513HC THRU S/N 8RDCD301619HC (CONT).

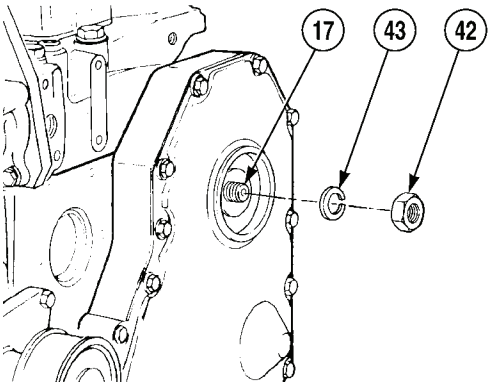

(4) Install nut (42) and lockwasher (43) on injector pump (17) shaft. Tighten nut to 48 lb-ft (65N·m).

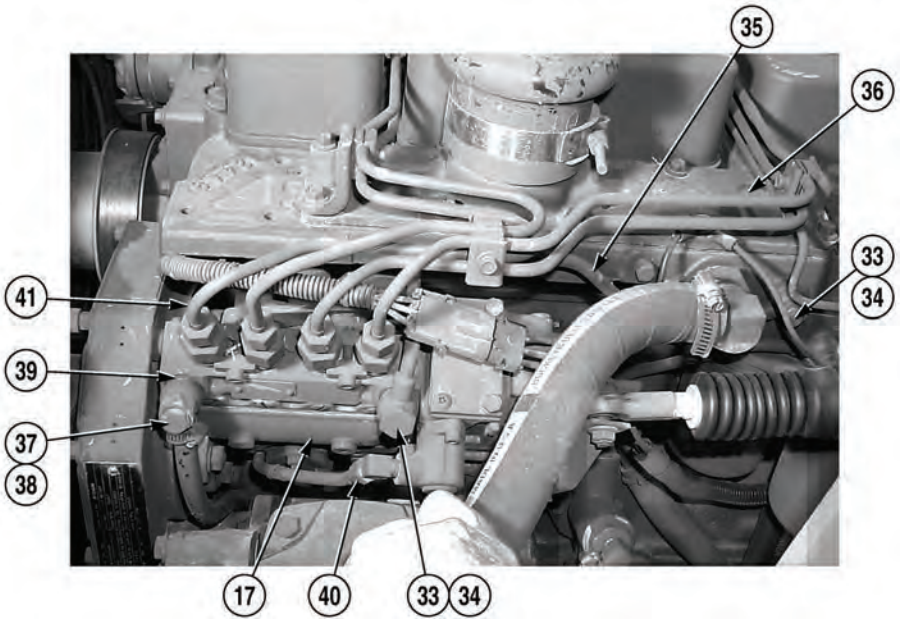

CAUTION

Use caution during installation not to kink high pressure line. Failure to comply could cause inside of fuel line to flake and cause injection failure.

(5) Install four lines (41) on injection pump (17).

(6) Install hose (40) on injection pump (17).

(7) Install two sealing washers (38) and fittings (39) on fuel injection pump (17) with screw (37).

(8) Install four sealing washers (34) and tube (35) on engine (36) and injection pump (17) with two screws (33).

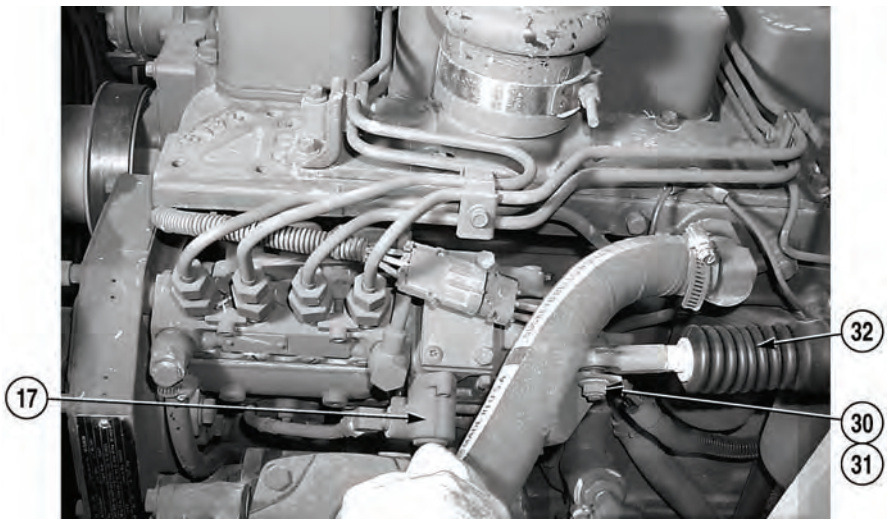

CAUTION

Do not remove the fuel pump control lever during throttle control removal. The control lever is indexed to the fuel pump shaft during assembly and removal could cause engine failure to start or damage to equipment.

(9) Install nut (30) and throttle actuator (32) on injection pump (17) with screw (31).

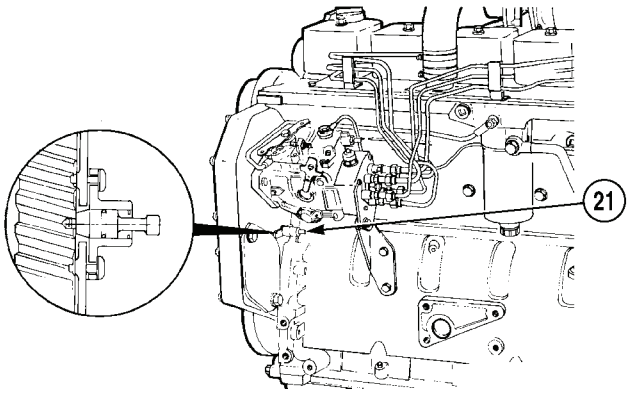

(10) Disengage timing pin (21) from housing (24).

3-116. FUEL INJECTOR PUMP REPLACEMENT (S/N 8RDCD301513HC THRU S/N 8RDCD301619HC (CONT).

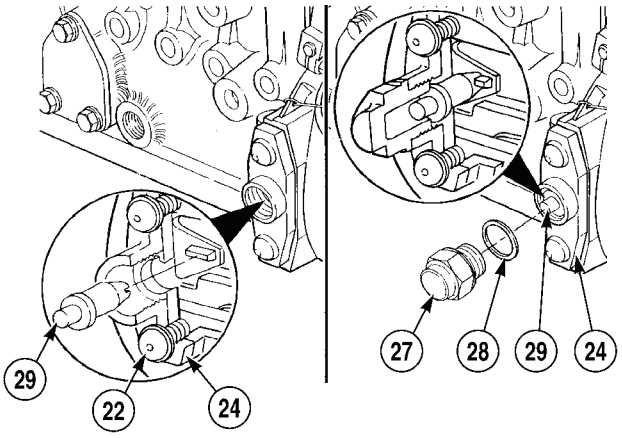

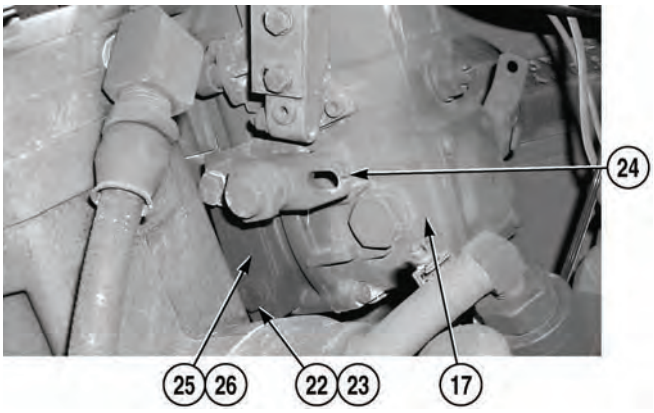

(11) Remove two screws (22) and housing (24) from injector pump (17).

(12) Install washer (28) and pin (29) on housing (24) with cap (27).

(13) Apply lubricating oil to preformed packing (26).

(14) Install lockwashers (23), housing (24), cover (25), and preformed packing (26) on injector pump (17) with two screws (22).

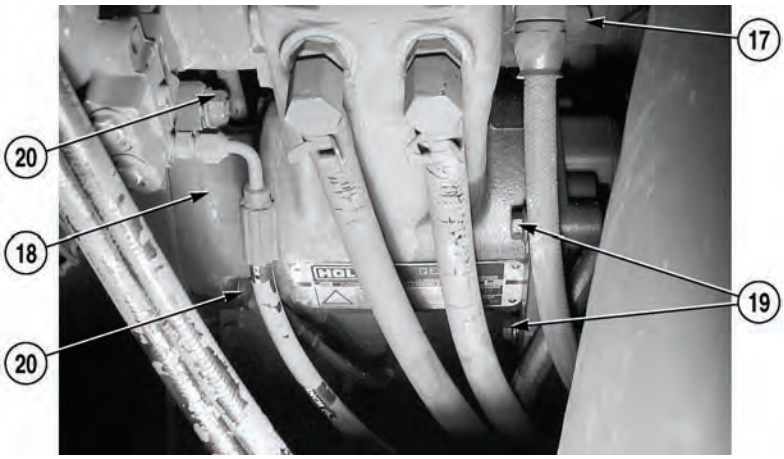

(15) Rotate air compressor (18) toward injector pump (17)

NOTE

Align matchmark position on air compressor and gear housing.

(16) Tighten two nuts (20) and screws (19) on air compressor (18).

(17) Install fuel pump solenoid (15) with two screws (16) on fuel injector pump (17).

(18) Install locknut (14) on fuel pump solenoid (15).

(19) Connect connector (13).

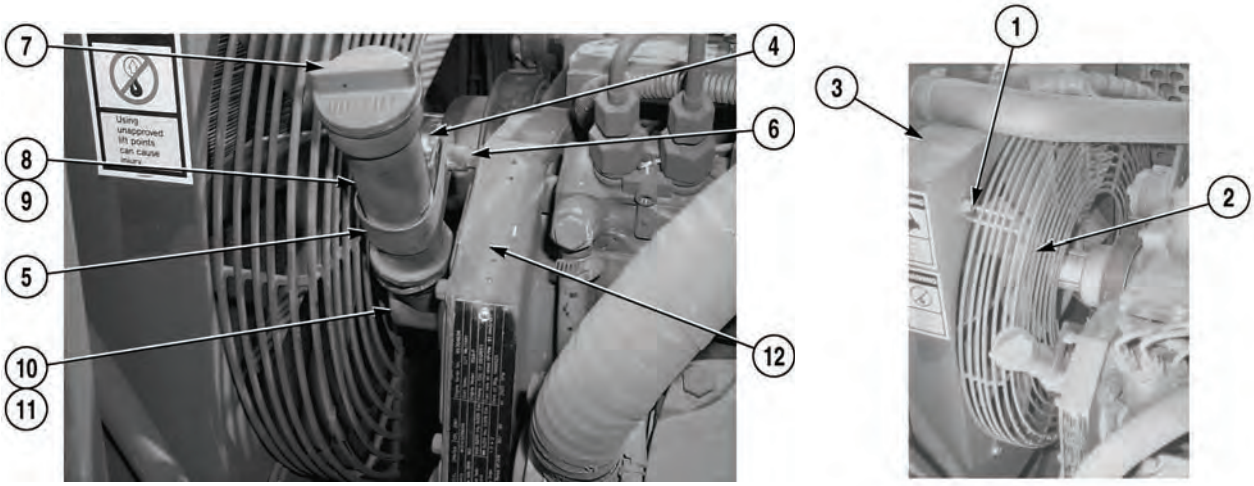

NOTE

Ensure preformed packing is positioned as noted prior to removal.

(20) Apply lubricating oil to preformed packing (11) and two preformed packings (9).

(21) Install preformed packing (11) and adapter (10) on gear cover (12).

(22) Install two preformed packings (9), cap (7), and tube (8) on adapter (10).

(23) Install cushion clamp (5) on stud (6) with nut (4).

(24) Install fan guard (2) on fan shroud (3) with four self-tapping screws (1).

3-116. FUEL INJECTOR PUMP REPLACEMENT (S/N 8RDCD301513HC THRU S/N 8RDCD301619HC (CONT).

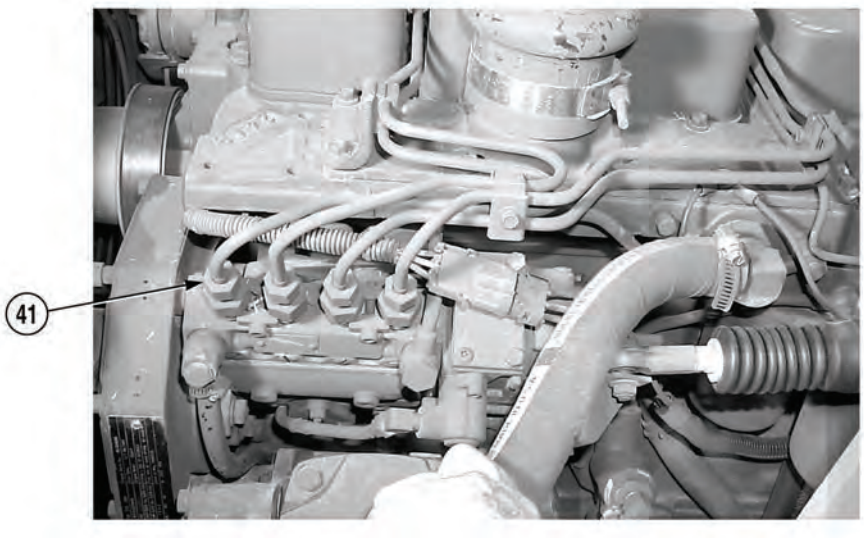

WARNING

- Fuel is very flammable and can explode easily. To avoid serious injury or death, keep fuel away from open fire and keep fire extinguisher within easy reach when working with fuel. Do not work on fuel system when engine is hot. Fuel can be ignited by a hot engine.
- Fuel line pressure can penetrate skin and cause serious bodily harm. Do not allow any part of body to get in line of fuel spray. Failure to comply could result in serious injury or death to personnel.

NOTE

- Controlled bleeding is provided at injection pump through fuel drain manifold. Small amounts of air in fuel system will be bleed automatically. If manual bleeding is required, bleed each line the same way.
- Position drain pan under lines and fittings to catch excess fuel.

(25) Bleed injector lines (41) by loosening nut while turning engine until fuel spurts out. Tighten nut.

c. Follow-On Maintenance:

- Start engine, (Para 2-19).
- Check for leaks.
- Shut off engine, (Para 2-19).
- Install front engine access panel (Para 3-78).

END OF TASK

3-117. FUEL INJECTOR PUMP REPLACEMENT (S/N 8RDCD301620HC AND SUBSEQUENT).

This task covers:

a. Removal b. Installation c. Follow-On Maintenance

INITIAL SETUP

Tools and Special Tools
- Tool Kit, General Mechanic's: Automotive (Item 19, Appendix I)
- Cap and Plug Set (Item 3, Appendix I)
- Pan, Drain (Item 12, Appendix I)
- Wrench, Torque (Item 25, Appendix I)
- Puller Kit, Universal (Item 14, Appendix I)
- Tool, Engine Turnover (Item 18, Appendix I)

Materials/Parts
- Tags, Identification (Item 13, Appendix H)
- Lubricating Oil, Engine (Item 6, Appendix H)
- Self-tapping Screw (4) (1367HX1)
- Timing Pin (3903924)

Materials/Parts Continued
- Preformed Packing (2) (3936876)
- Retaining Ring (3903924)
- Preformed Packing (3903475)
- Locknut (MS 51922-9)
- Sealing Washer (4) (3963983)
- Lockwasher (2-916-690-010)

Equipment Condition
- Batteries disconnected, (Para 3-10)
- Air Compressor removed (S/N 8RDCD301620HC and Subsequent), (Para 3-110)

a. Removal.

WARNING

Fuel is very flammable and can explode easily. To avoid serious injury or death, keep fuel away from open fire and keep fire extinguisher within easy reach when working with fuel. Do not work on fuel system when engine is hot. Fuel can be ignited by a hot engine.

NOTE

- Tag and mark hoses, lines, and wires prior to removal.
- Cap and plug hoses and lines upon removal.
- Position drain pan under lines and fittings to catch excess fuel.

3-117. FUEL INJECTOR PUMP REPLACEMENT (S/N 8RDCD301620HC AND SUBSEQUENT (CONT).

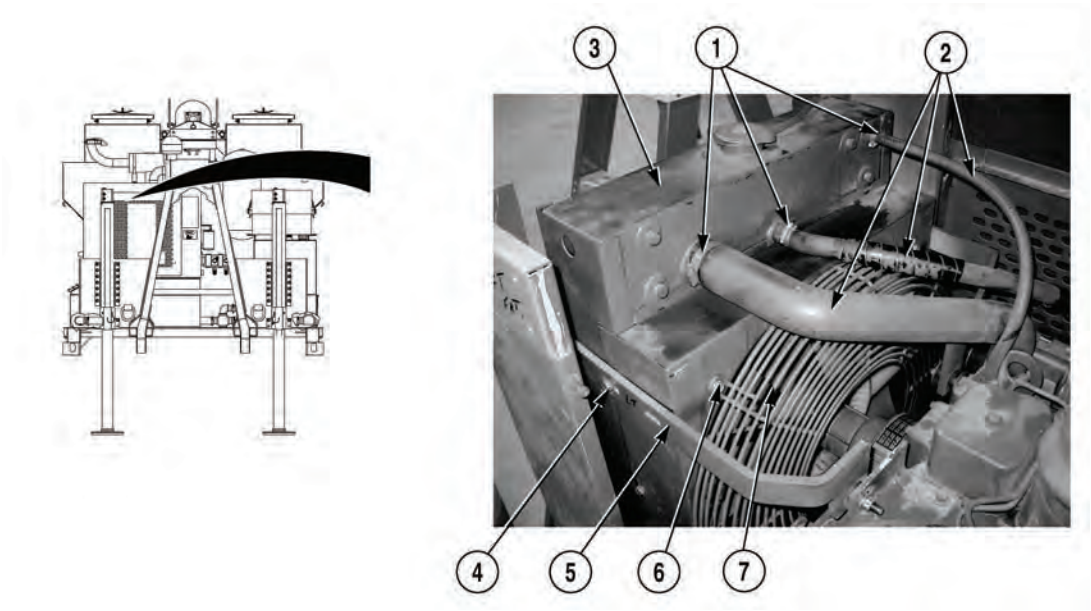

(1) Loosen three clamps (1) and remove hoses (2) from radiator (3).

NOTE

Radiator support bracket must be removed from radiator to provide clearance when removing fan guard.

(2) Remove two screws (4) from bracket (5) and radiator (3).

(3) Remove four self-tapping screws (6) and fan guard (7) from radiator (3). Discard self-tapping screws.

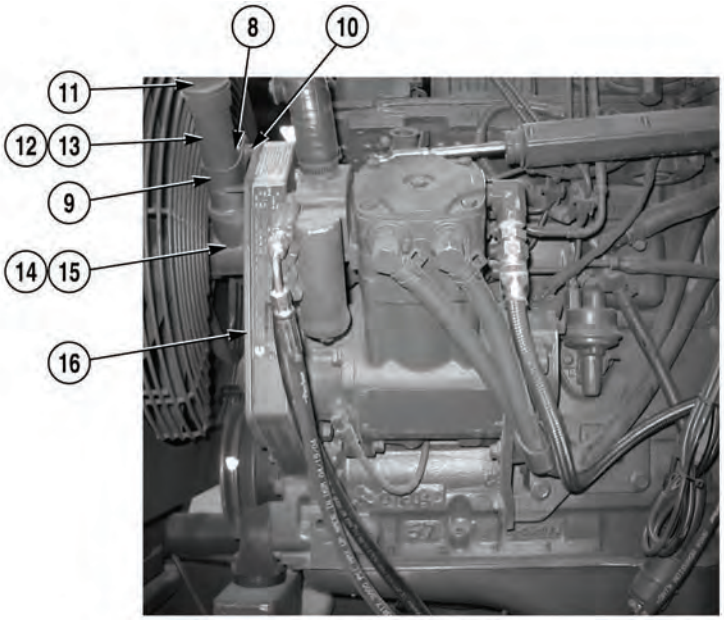

CAUTION

Oil filler tube and adapter are constructed of a breakable material. Use care during removal to unscrew adapter from gear cover or damage to equipment may result.

(4) Remove nut (8) from cushion clamp (9) and stud (10).

(5) Remove cap (11), tube (12), and two preformed packings (13) from adapter (14). Discard preformed packings.

NOTE

Note position of adapter and preformed packing prior to removal.

(6) Remove adapter (14) and preformed packing (15) from gear cover (16). Discard preformed packing.

3-117. FUEL INJECTOR PUMP REPLACEMENT (S/N 8RDCD301620HC AND SUBSEQUENT (CONT).

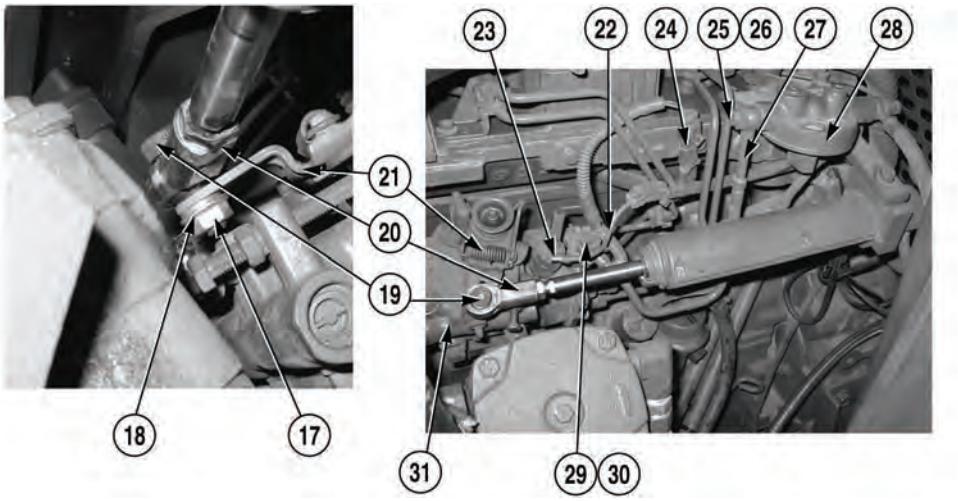

(7) Remove locknut (17), washer (18), screw (19), and rod end (20) from throttle lever (21). Discard locknut.

(8) Disconnect wire (22) from terminal (23).

(9) Disconnect connector (24).

(10) Remove screw (25), two sealing washers (26), and tube (27) from head (28). Discard sealing washers.

(11) Remove screw (29), two sealing washers (30), and tube (27) from injector pump (31). Discard sealing washers.

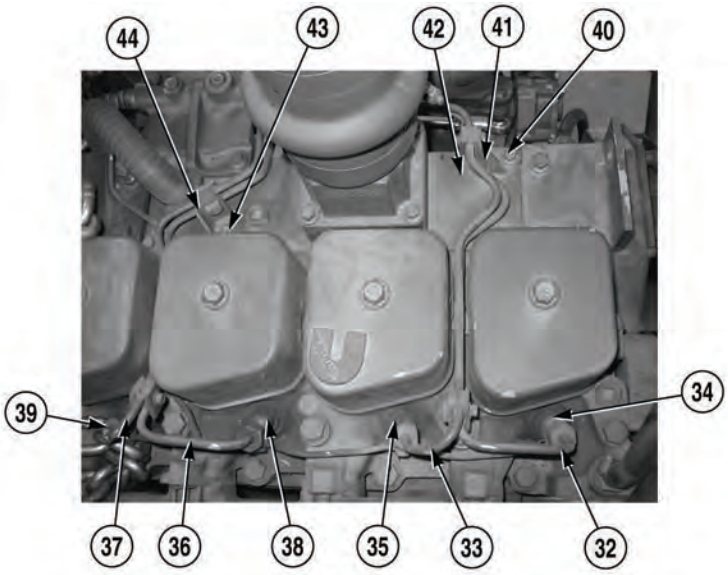

(12) Remove two tubes (32) and (33) from injectors (34) and (35).

(13) Remove two tubes (36) and (37) from injectors (38) and (39).

(14) Remove screw (40) and bracket (41) from engine (42).

(15) Remove screw (43) and bracket (44) from engine (42).

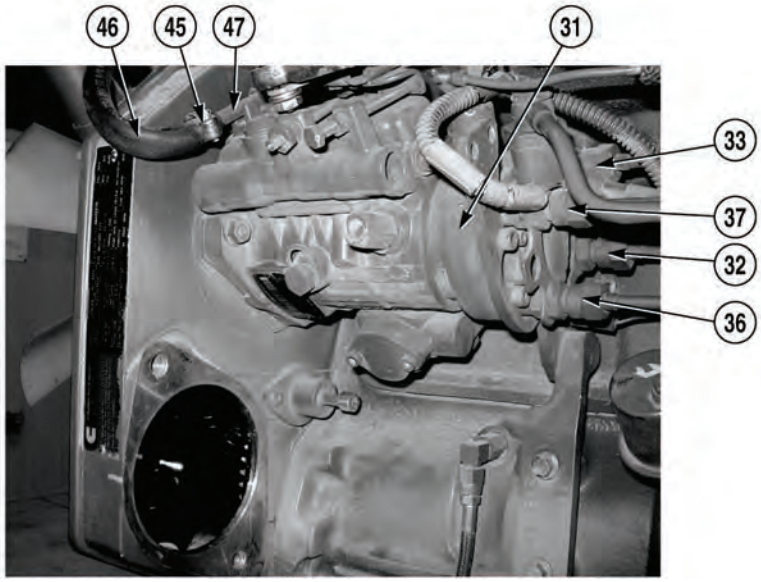

(16) Loosen clamp (45) and remove hose (46) from tube (47).

(17) Remove four tubes (32), (33), (36), and (37) from injector pump (31).

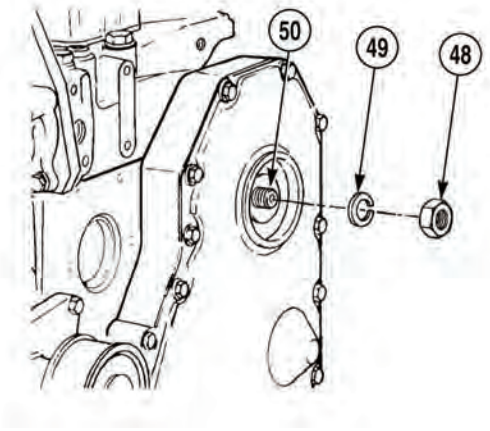

NOTE

Fuel injector pumps (S/N 8RDCD301620HC and Subsequent) do NOT have a key on driveshaft of fuel injector, even though a slot may be present on driveshaft and/or gear.

(18) Remove nut (48) and lockwasher (49) from driveshaft (50). Discard lockwasher.

3-117. FUEL INJECTOR PUMP REPLACEMENT (S/N 8RDCD301620HC AND SUBSEQUENT (CONT).

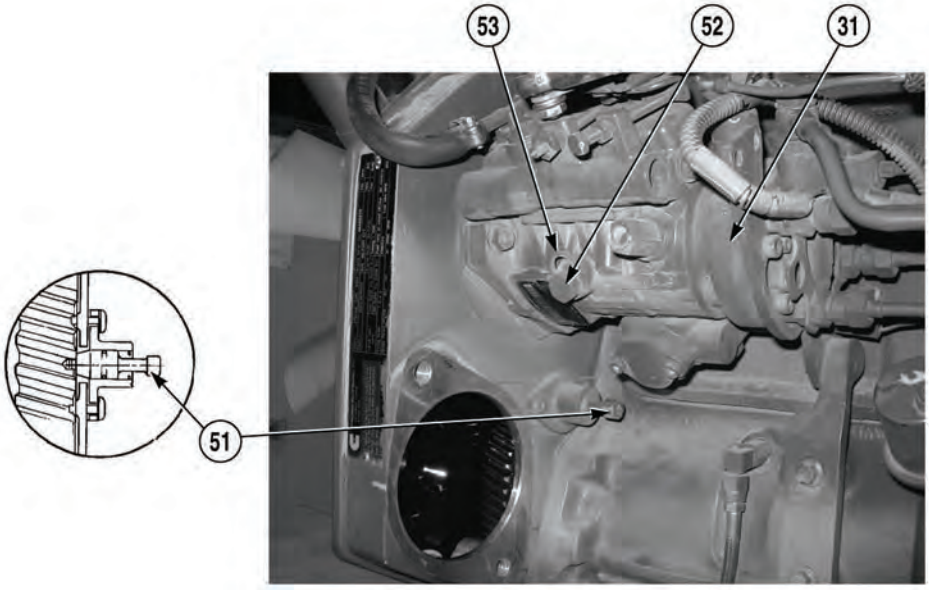

CAUTION

Timing pin is made of plastic and can break easily. Only one person should bar engine while holding timing pin in to lesson chance of breaking timing pin. Failure to comply may result in damage to equipment.

NOTE

- Cylinder No. 1 should already be at or close to Top Dead Center (TDC) after air compressor removal. Confirm that cylinder No. 1 is at Top Dead Center (TDC) by ensuring that timing pin is seated in gear.
- Engine barring tool should still be in place from Air Compressor Removal (S/N 8RDCD301620HC and Subsequent).
- If timing pin does not engage because timing pin is broken, replace timing pin, (Para 3-128).

(19) Locate TDC on cylinder No. 1 by barring engine slowly while pushing in on timing pin (51).

(20) Loosen fuel injector pump lockscrew (52) and position washer (53) downward.

(21) Tighten fuel injector pump lockscrew (52) on fuel injector pump (31). Tighten fuel injector pump lockscrew to 5 lb-ft (7 N·m).

(22) Disengage timing pin (51).

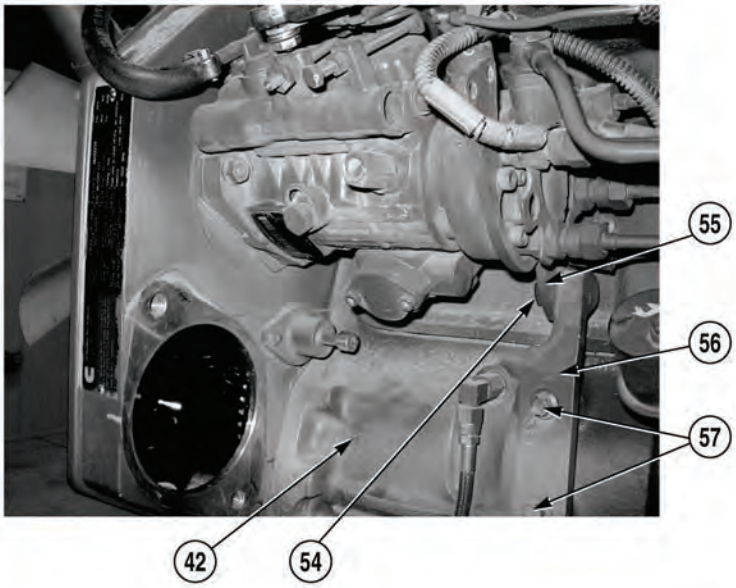

(23) Remove screw (54) from injector pump bracket (55) and support bracket (56).

(24) Remove two screws (57) and support bracket (56) from engine (42).

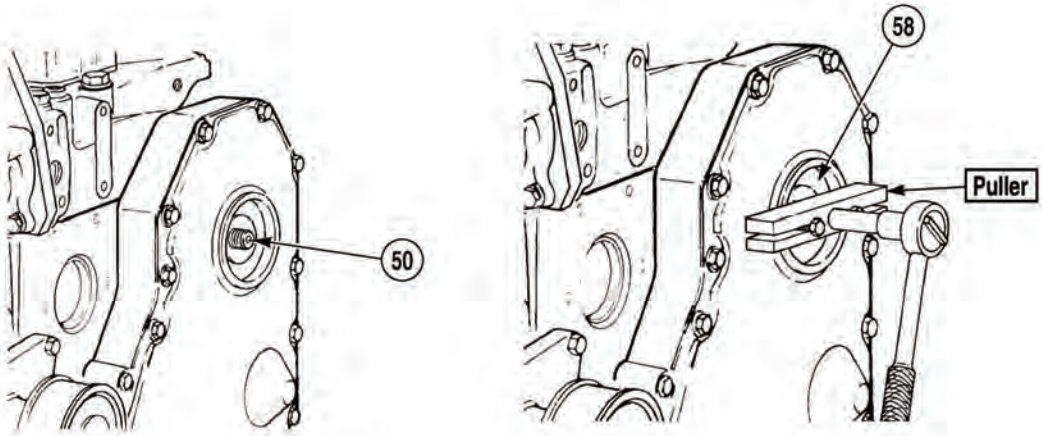

(25) Using puller, loosen drivegear (58) from driveshaft (50).

3-117. FUEL INJECTOR PUMP REPLACEMENT (S/N 8RDCD301620HC AND SUBSEQUENT (CONT).

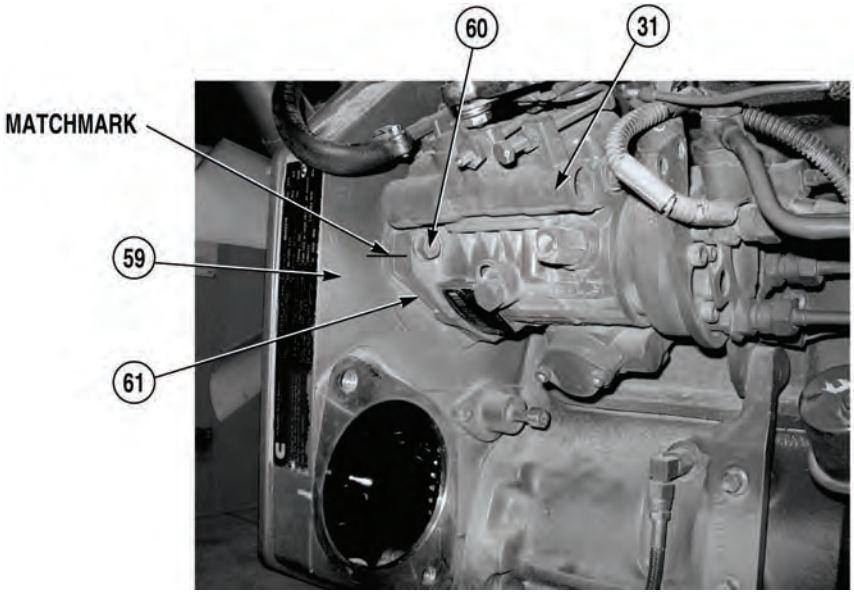

(26) Matchmark position of injector pump (31) and housing (59).

(27) Remove three nuts (60), injector pump (31), and gasket (61) from housing (59).

b. Installation.

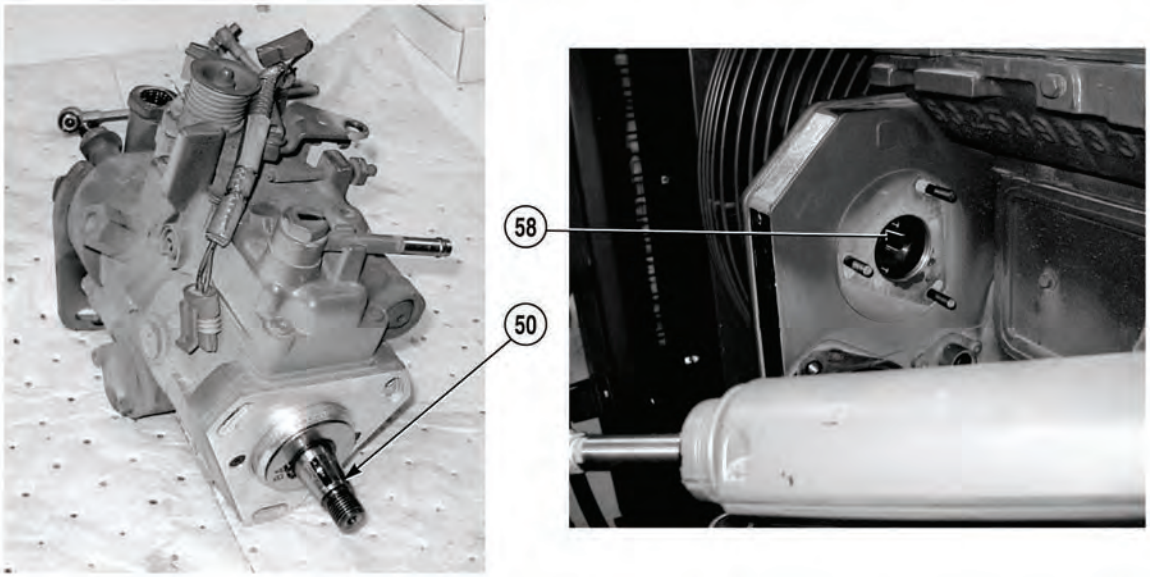

CAUTION

Fuel injector pump driveshaft and inside of gear must be clean and free of all oil before installation. Failure to make certain the driveshaft and inside and inside of gear is free of oil can result in the drive gear slipping on driveshaft.

(1) Clean inside of drivegear (58) and driveshaft (50).

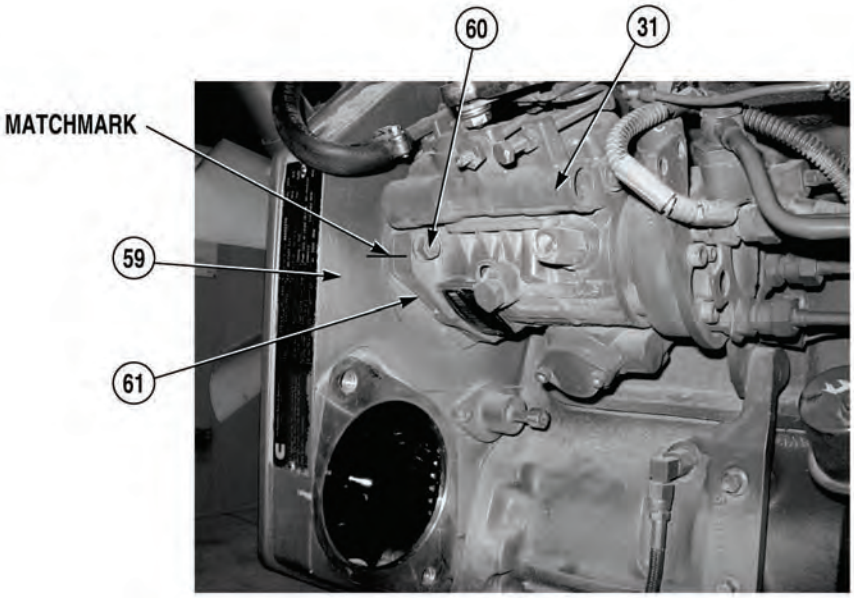

NOTE

Cylinder No. 1 must be at Top Dead Center (TDC).

(2) Clean gasket sealing surface of housing (59).

(3) Position gasket (61) and injector pump (31) on housing (59) and hand tighten three nuts (60).

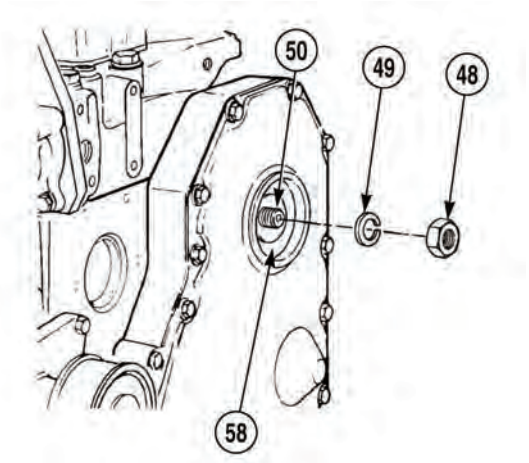

CAUTION

Timing pin must be disengaged before installing lockwasher and nut on shaft. Failure to comply may cause damage to timing pin.

NOTE

- Pump will rotate slightly because of gear helix and clearance. This is acceptable, provided the injector pump is free to move on injector pump mounting holes and the crankshaft does not move.
- This is not the final torque.

(4) Install lockwasher (49) and nut (48) on driveshaft (50) and drivegear (58). Tighten nut to 11 to 14.75 lb-ft. (15 to 20 N·m).

3-117. FUEL INJECTOR PUMP REPLACEMENT (S/N 8RDCD301620HC AND SUBSEQUENT (CONT).

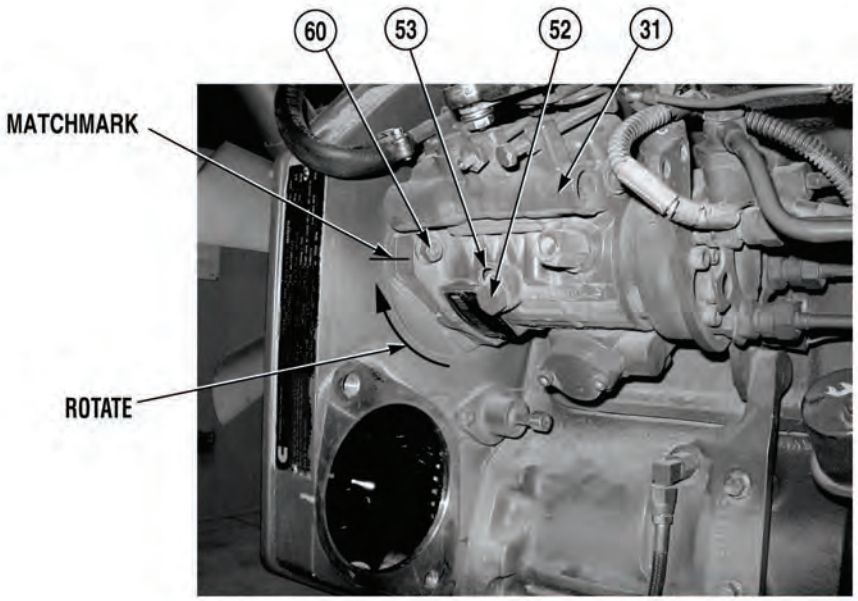

NOTE

Perform Step (5) if installing original injector pump.

(5) Align matchmark and tighten three nuts (60). Tighten nuts to 18 lb-ft. (24 N·m).

NOTE

- Perform Step (6) if installing a new or rebuilt pump.
- Gear lash is taken up by rotating injector pump.

(6) Rotate injector pump (31) and tighten three nuts (60). Tighten nuts to 18 lb-ft. (24 N·m).

(7) Loosen fuel injector pump lockscrew (52) and position washer (53) upward, and tighten fuel injector pump lockscrew (52) on fuel injector pump (31). Tighten lockscrew to 15 lb-ft (20 N·m).

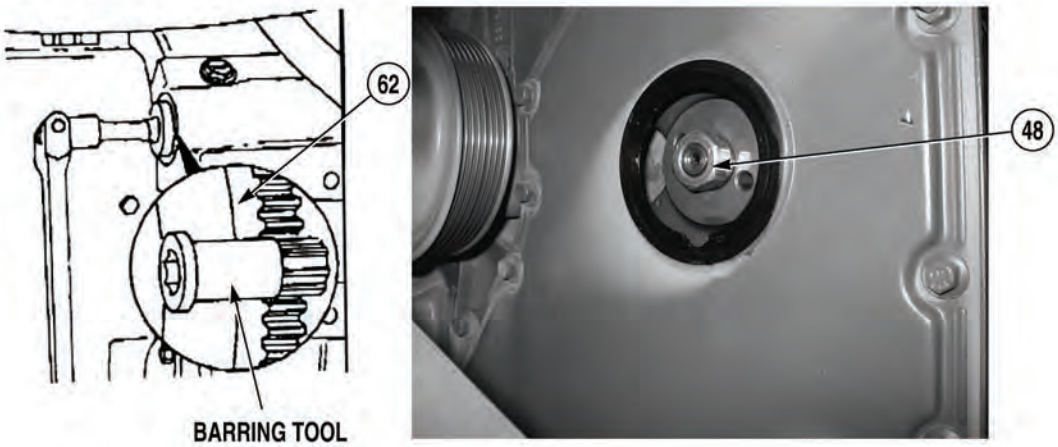

NOTE

Drivegear must not turn when applying final torque on driveshaft nut. Using barring tool and not allowing ring gear to turn will prevent drivegear from turning.

(8) While holding barring tool, secure and prevent ring gear (62) from turning and tighten nut (48). Tighten nut to 68 lb-ft. (92 N·m).

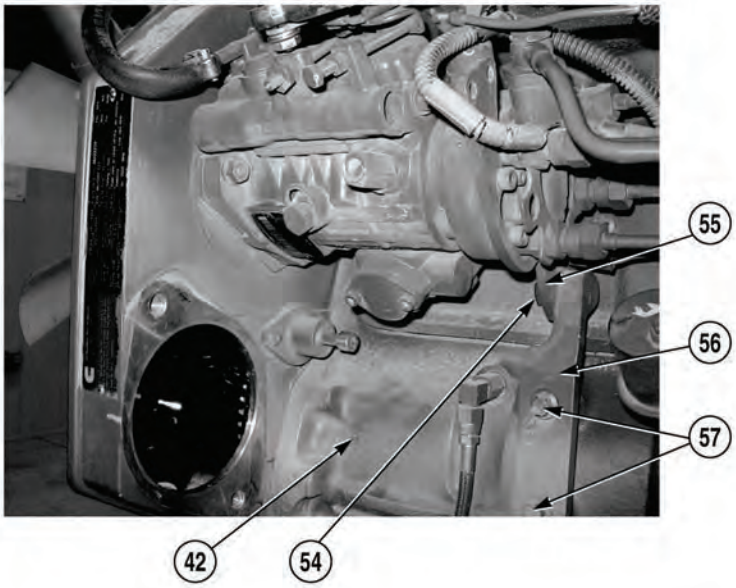

(9) Install support bracket (56) on engine (42) with two screws (57).

(10) Install injector pump bracket (55) on support bracket (56) with screw (54).

3-117. FUEL INJECTOR PUMP REPLACEMENT (S/N 8RDCD301620HC AND SUBSEQUENT (CONT).

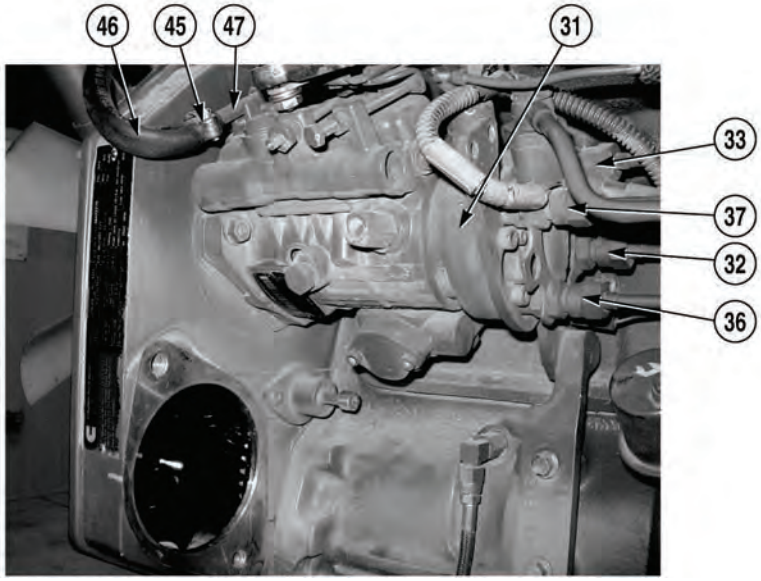

(11) Install four tubes (32), (33), (36), and (37) on injector pump (31).

(12) Install hose (46) on tube (47) and tighten clamp (45).

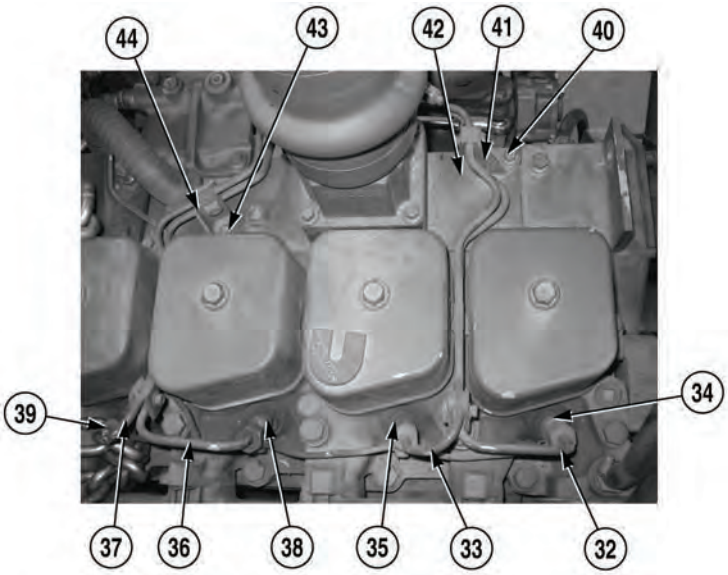

(13) Install bracket (44) on engine (42) with screw (43).

(14) Install bracket (41) on engine (42) with screw (40).

(15) Install two tubes (36) and (37) on injectors (38) and (39).

(16) Install two tubes (32) and (33) on injectors (34) and (35).

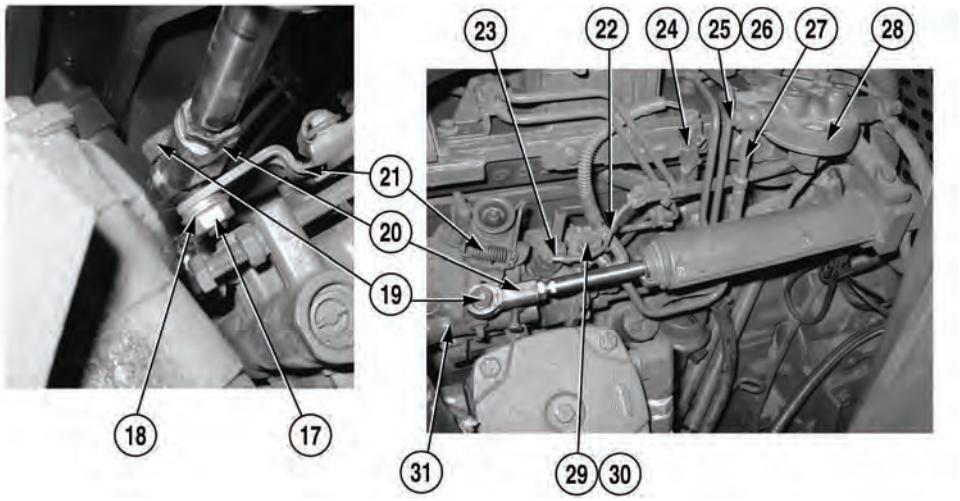

(17) Install tube (27) on injector pump (31) with two sealing washers (30) and screw (29).

(18) Install tube (27) on head (28) with two sealing washers (26) and screw (25).

(19) Connect connector (24).

(20) Connect wire (22) on terminal (23).

(21) Install rod end (20) on throttle lever (21) with screw (19), washer (18), and locknut (17).

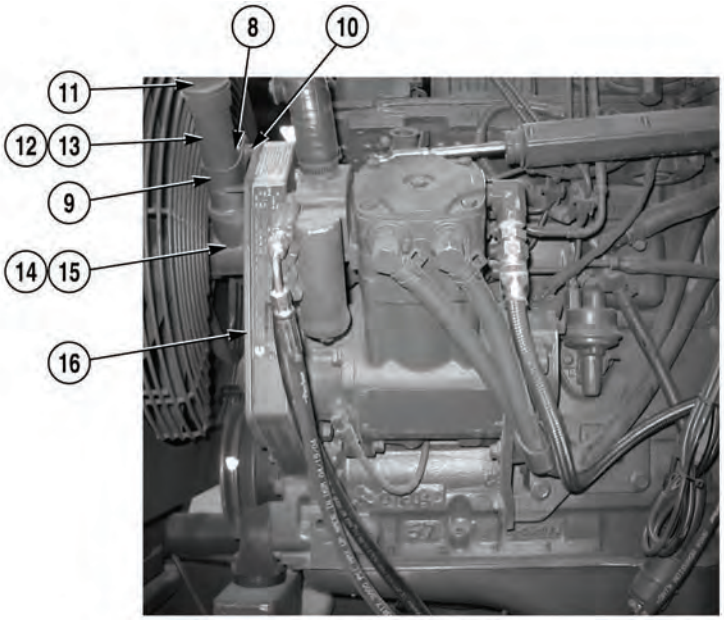

NOTE

Install preformed packing and adapter as noted prior to removal.

(22) Apply lubricating oil to two preformed packings (13) and preformed packing (15).

(23) Install preformed packing (15) and adapter (14) on gear cover (16).

(24) Install two preformed packings (13), cap (11), and tube (12) on adapter (14).

(25) Install cushion clamp (9) on stud (10) with nut (8).

3-117. FUEL INJECTOR PUMP REPLACEMENT (S/N 8RDCD301620HC AND SUBSEQUENT (CONT).

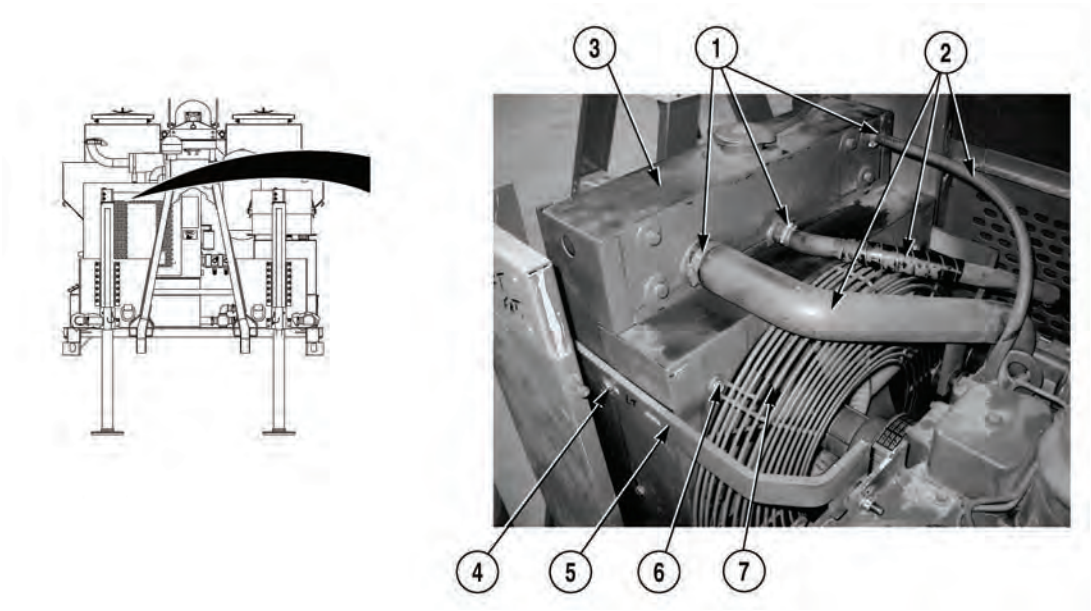

(26) Install fan guard (7) on radiator (3) with four self-tapping screws (6).

(27) Install bracket (5) on radiator (3) with two screws (4).

(28) Position three hoses (2) on radiator (3) and tighten three clamps (1).

c. Follow-On Maintenance:

- Install air compressor (S/N 8RDCD301620HC and Subsequent), (Para 3-110).
- Connect batteries, (Para 3-10).
- Start engine, (Para 2-19).
- Check for leaks.
- Shut off engine, (Para 2-19).

END OF TASK

3-118. FUEL TANK REPLACEMENT (S/N 8RDCD301620HC AND SUBSEQUENT).

This task covers:

a. Removal b. Installation c. Follow-On Maintenance

INITIAL SETUP

Tools and Special Tools
Tool Kit, General Mechanic's: Automotive (Item 19, Appendix I)

Materials/Parts
Sealing Compound (Item 11, Appendix H)
Lockwasher (6) (210104-8S)

Personnel Required
Two

Equipment Condition
Engine removed (S/N 8RDCD301620HC and Subsequent), (Para 3-31)
Fuel tank drained

a. Removal.

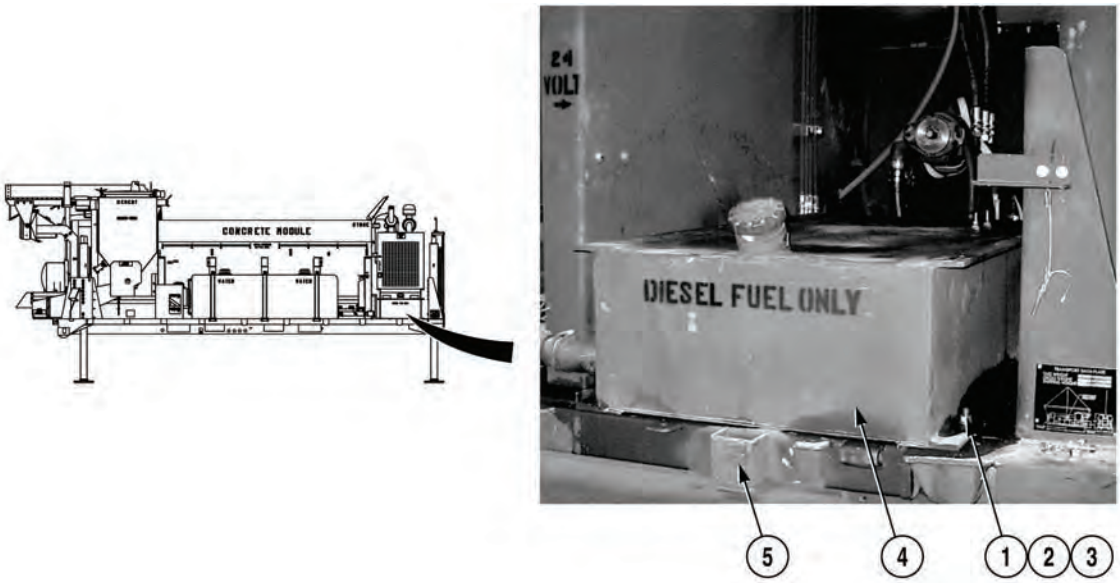

WARNING

Diesel fuel is flammable. Do not perform this procedure near fire, flame, or sparks. Failure to comply could result in injury or death to personnel.

(1) Remove three nuts (1), lockwashers (2), and screws (3) from fuel tank (4) and Concrete Mobile Mixer (5). Discard lockwashers.

3-118. FUEL TANK REPLACEMENT (S/N 8RDCD301620HC AND SUBSEQUENT) (CONT).

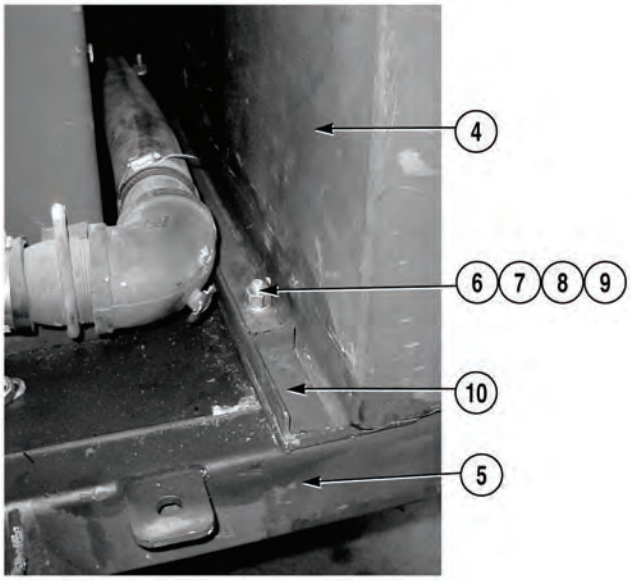

(2) Remove three nuts (6), lockwashers (7), washers (8), screws (9), and bracket (10) from fuel tank (4) and Concrete Mobile Mixer (5).

WARNING

Fuel tank is heavy. Do not lift or move fuel tank without the aid of an assistant and a suitable lifting device. Failure to comply may result in damage to equipment and serious personnel injury.

(3) With the aid of an assistant and a suitable lifting device, remove fuel tank (4) from Concrete Mobile Mixer (5).

(4) Remove two fittings (11) from fuel tank (4).

(5) Remove cap (12) from fuel tank (4).

b. Installation.

(1) Install cap (12) on fuel tank (4).

WARNING

Adhesives, solvents, and sealing compounds can burn easily, can give off harmful vapors, and are harmful to skin and clothing. To avoid injury or death, keep away from open fire and use in well-ventilated area. If adhesives, solvents, or sealing compound gets on skin or clothing, wash immediately with soap and water.

(2) Apply sealing compound on threads of two fittings (11).

(3) Install two fittings (11) on fuel tank (4).

WARNING

Fuel tank is heavy. Do not lift or move fuel tank without the aid of an assistant and a suitable lifting device. Failure to comply may result in damage to equipment and serious personal injury.

(4) With the aid of an assistant and a suitable lifting device, position fuel tank (4) on Concrete Mobile Mixer (5).

(5) Install fuel tank (4) and bracket (10) on Concrete Mobile Mixer (5) with three screws (9), washers (8), lockwashers (7), and nuts (6).

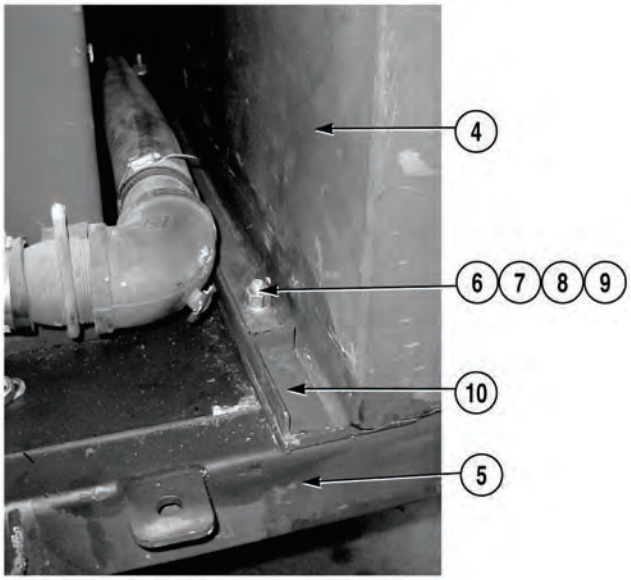

3-118. FUEL TANK REPLACEMENT (S/N 8RDCD301620HC AND SUBSEQUENT) (CONT).

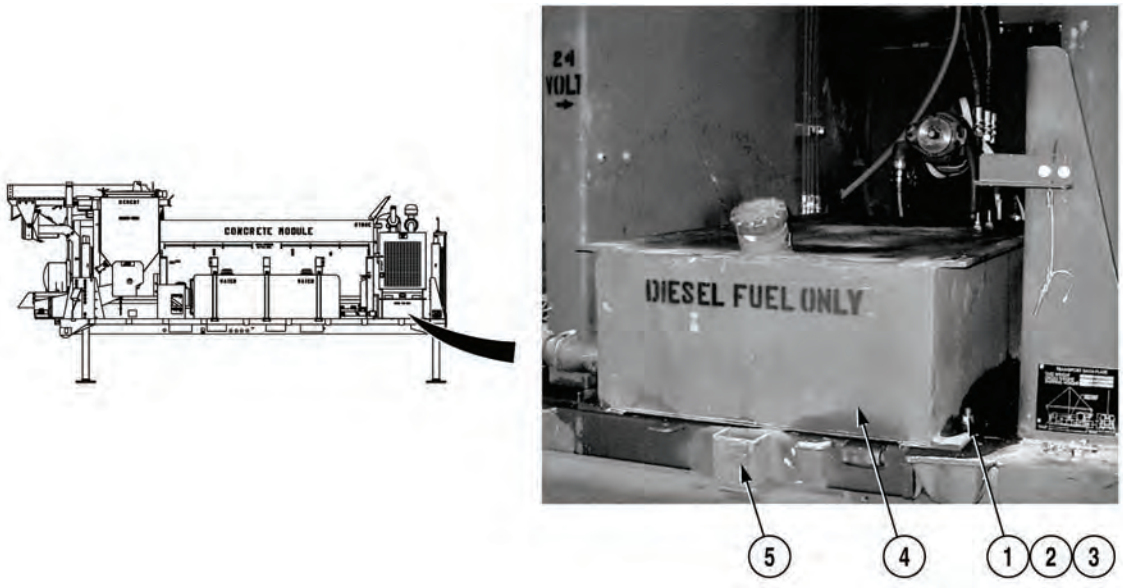

(6) Install three screws (3), lockwashers (2), and nuts (1) on fuel tank (4) and Concrete Mobile Mixer (5).

c. Follow-On Maintenance:

- Install engine (S/N 8RDCD301620HC and Subsequent), (Para 3-31).
- Fill fuel tank.
- Check for leaks.

END OF TASK

3-119. CEMENT BIN CLUTCH REPLACEMENT.

This task covers:

a. Removal b. Installation c. Follow-On Maintenance

INITIAL SETUP

Tools and Special Tools
Tool Kit, General Mechanic's: Automotive (Item 19, Appendix I)

Materials/Parts
Lockwasher (13) (MS 27183-9)
Lockwasher (2) (3351AX)
Lockwasher (MS 35338-47)
Locknut (MS 51922-33)
Lockwasher (4) (MS 35338-50)

Materials/Parts (Continued)
Lockwasher (4) (187130)
Lockwasher (355AX)

Equipment Condition
Admix and chain drive cover(s) removed (chain drive cover only), (Para 3-88)

a. Removal.

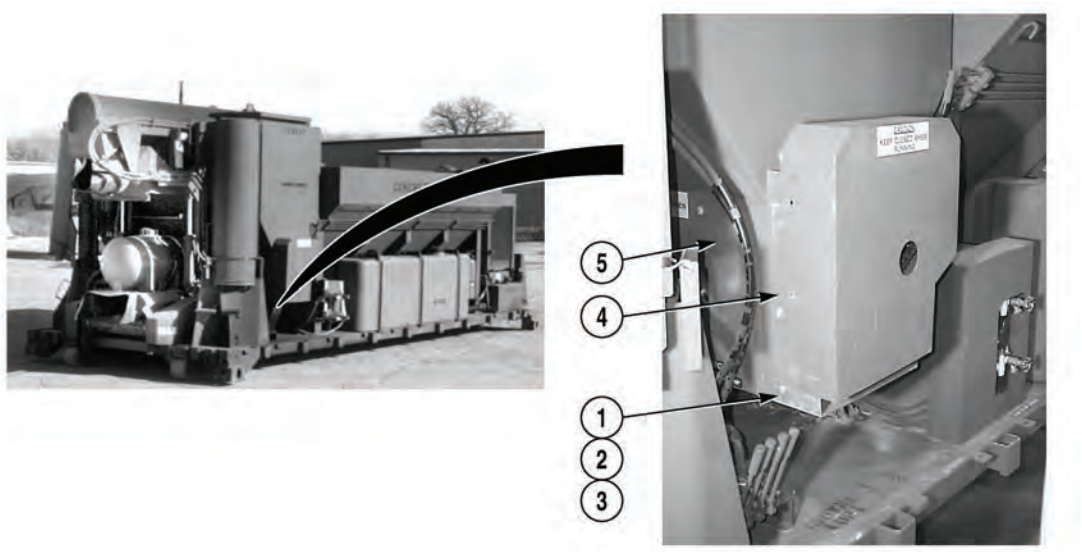

(1) Remove four screws (1), lockwashers (2), washers (3), and cover (4) from cover (5). Discard lockwashers.

3-119. CEMENT BIN CLUTCH REPLACEMENT (CONT).

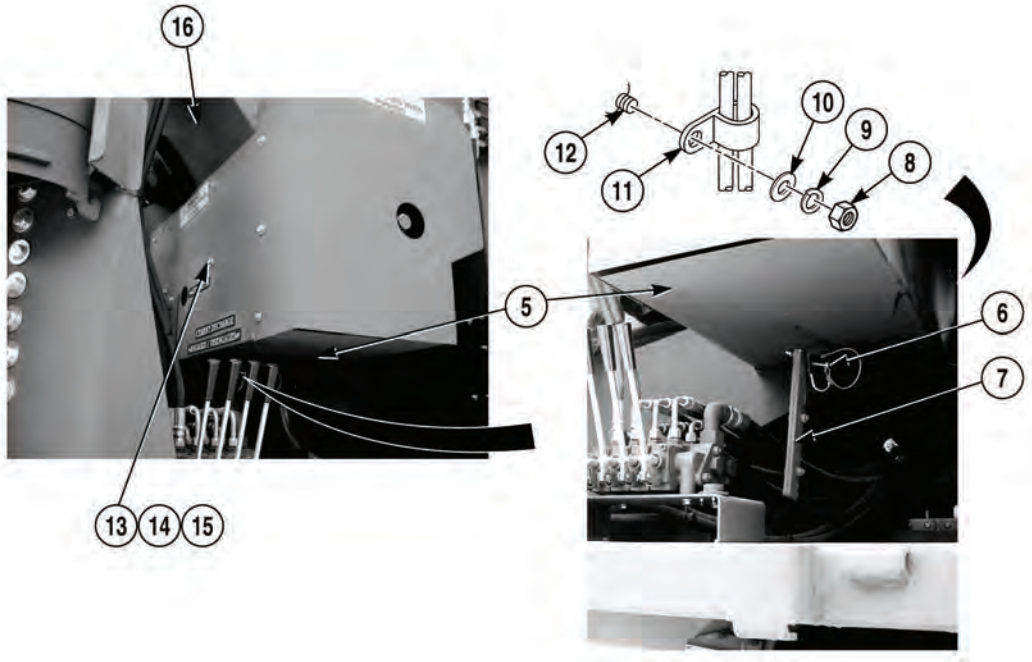

(2) Remove lock pin (6) from handle (7) and cover (5).

(3) Remove nut (8), lockwasher (9), washer (10), and cushion clip (11) from stud (12). Discard lockwasher.

(4) Remove nine screws (13), lockwashers (14), washers (15), and cover (5) from Concrete Mobile Mixer (16). Discard lockwashers.

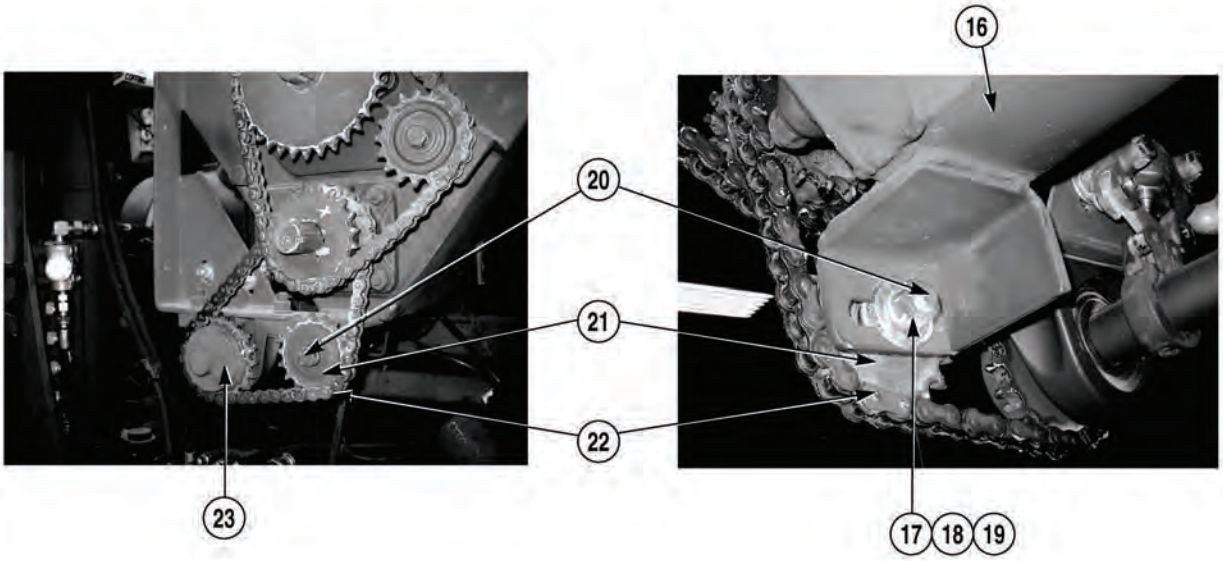

(5) Remove nut (17), lockwasher (18), washer (19), screw (20), and sprocket (21) from chain (22) and Concrete Mobile Mixer (16). Discard lockwasher.

(6) Remove chain (22) from sprocket (23).

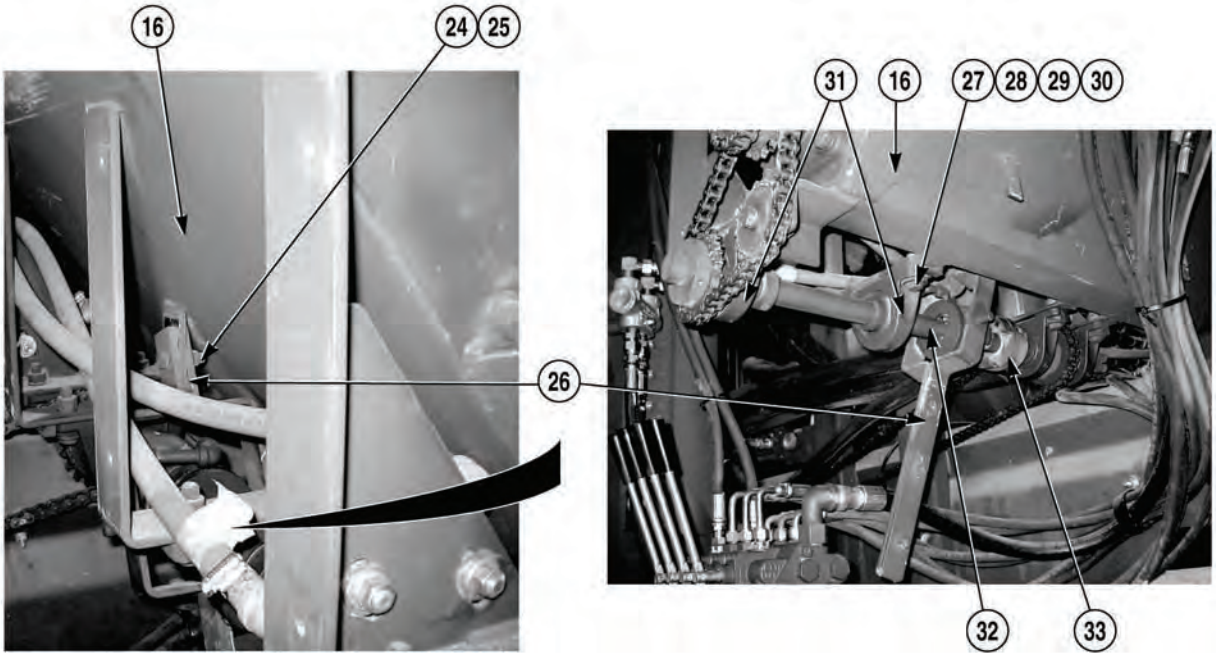

(7) Remove locknut (24), screw (25), and handle (26) from Concrete Mobile Mixer (16). Discard locknut.

(8) Remove four nuts (27), lockwashers (28), washers (29), screws (30), two bearings (31), and shaft (32) from clutch drive (33) and Concrete Mobile Mixer (16). Discard lockwashers.

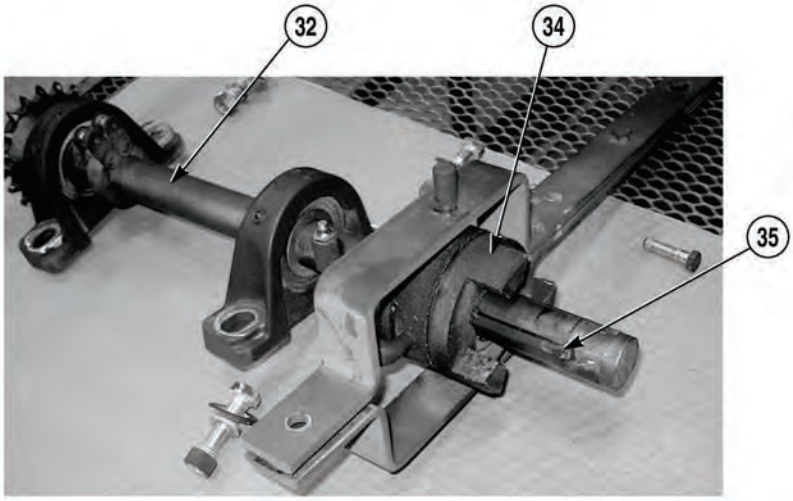

(9) Remove clutch drive jaw with collar (34) and key (35) from shaft (32).

3-119. CEMENT BIN CLUTCH REPLACEMENT (CONT).

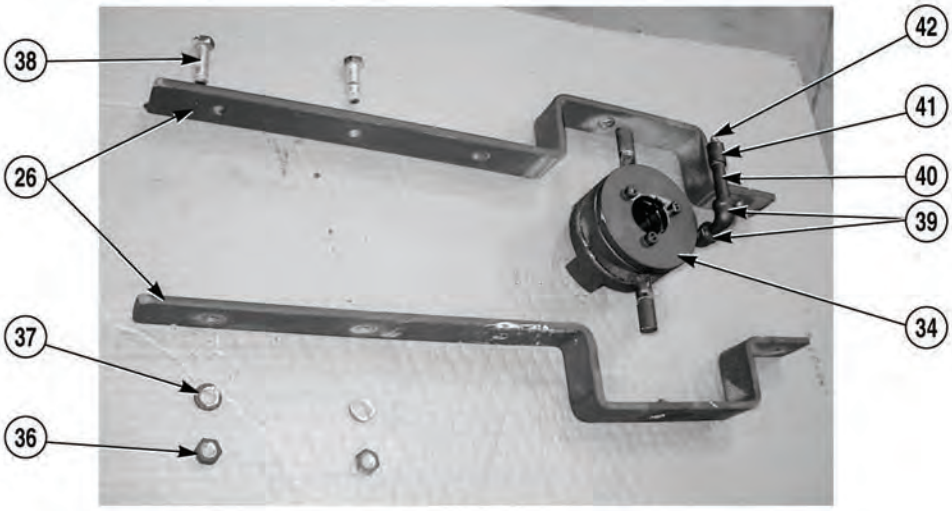

NOTE

Handle consists of two halves.

(10) Remove two nuts (36), lockwashers (37), screws (38), and handles (26) from clutch drive jaw with collar (34). Discard lockwashers.

(11) Remove two elbows (39), nipple (40), fitting (41), and grease fitting (42) from clutch drive jaw with collar (34).

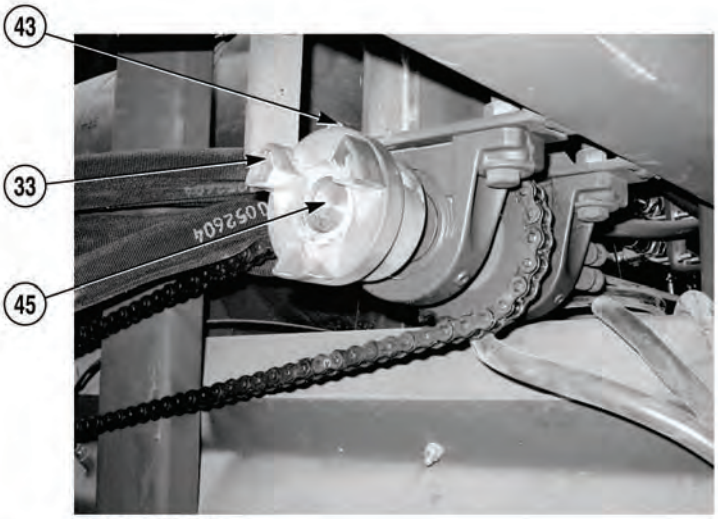

44 NOT SHOWN

(12) Remove setscrew (43), key (44), and clutch drive (33) from shaft (45).

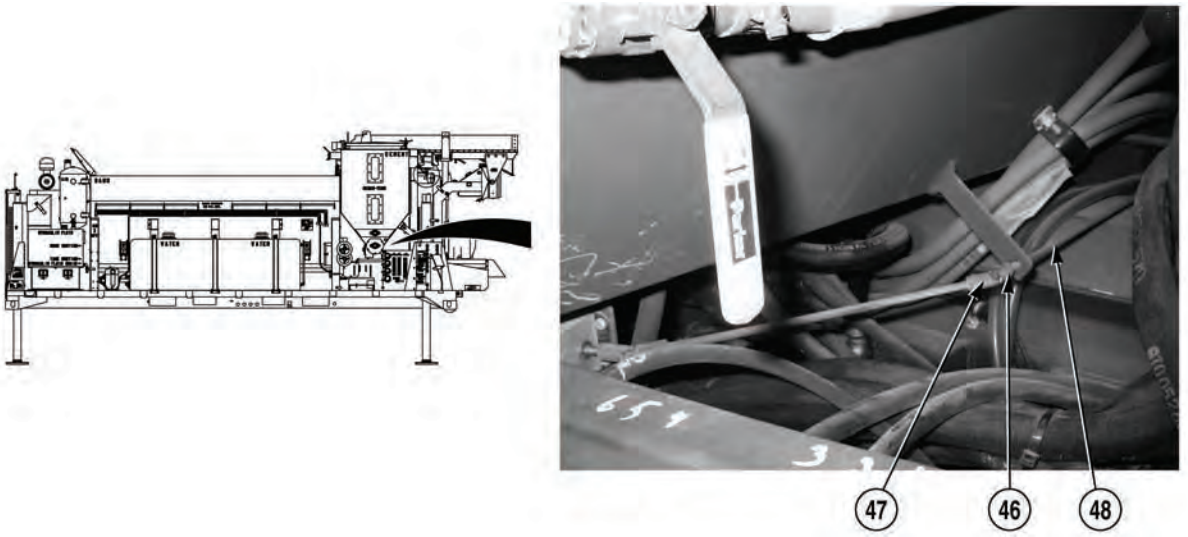

NOTE

- Perform Steps (13) through (18) to remove clutch drive assembly.
- Cement meter counter shaft is removed with clutch drive assembly.

(13) Remove setscrew (46) from flex coupling (47) and cement meter counter shaft (48).

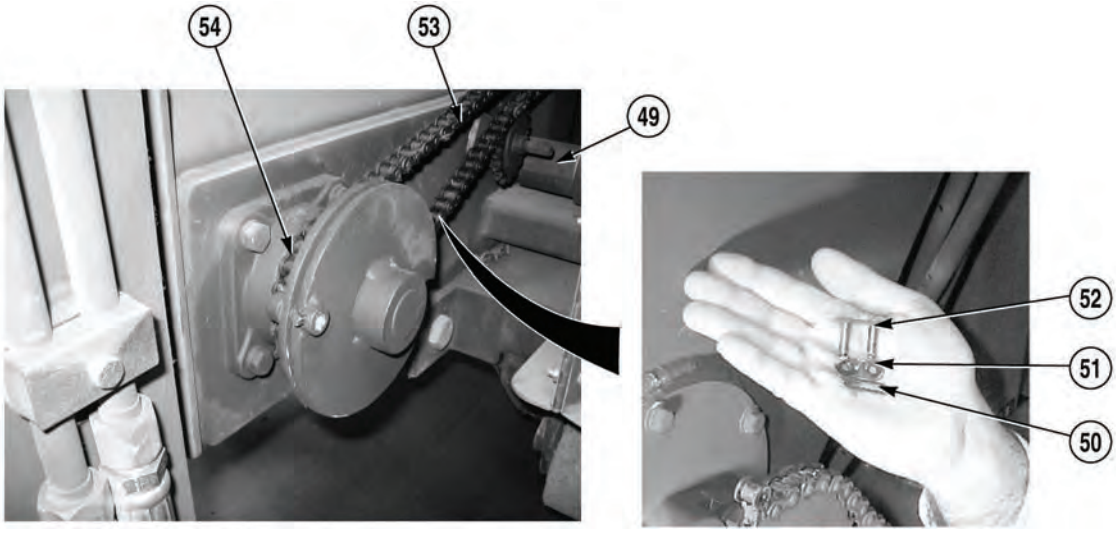

(14) Remove shear pin, (Para 3-9).

NOTE

- Pry down on tension arm to release tension on chain.
- Note position of chain prior to removal.
- It may be necessary to rotate chain to access master link.

(15) With the aid of an assistant, pry down tension arm (49) and remove clip (50), plate (51), master link (52), and chain (53) from sprocket (54).

3-119. CEMENT BIN CLUTCH REPLACEMENT (CONT).

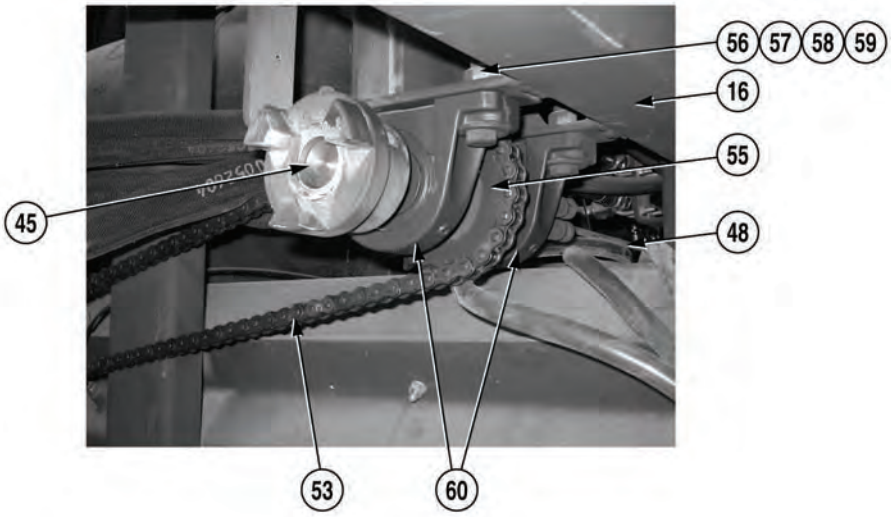

(16) Remove chain (53) from sprocket (55).

CAUTION

Cement meter counter shaft is attached to end of clutch drive assembly. Care must be taken when removing counter shaft and clutch drive assembly. Failure to comply may cause damage equipment.

(17) Remove four nuts (56), lockwashers (57), washers (58), screws (59), two bearings (60), shaft (45), and cement meter counter shaft (48) from Concrete Mobile Mixer (16). Discard lockwashers.

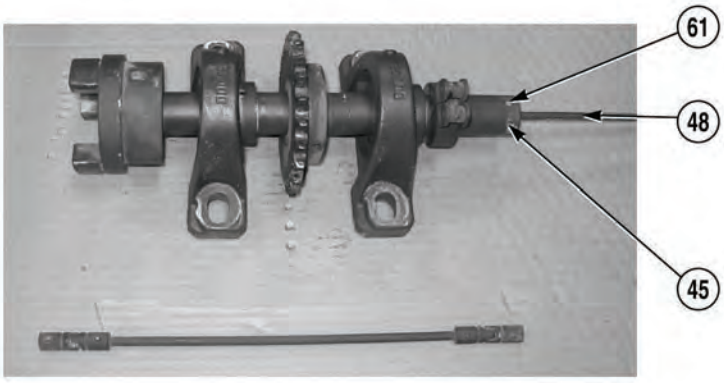

(18) Remove setscrew (61) and cement meter counter shaft (48) from shaft (45).

b. Installation.

(1) Install cement meter counter shaft (48) on shaft (45) with setscrew (61).

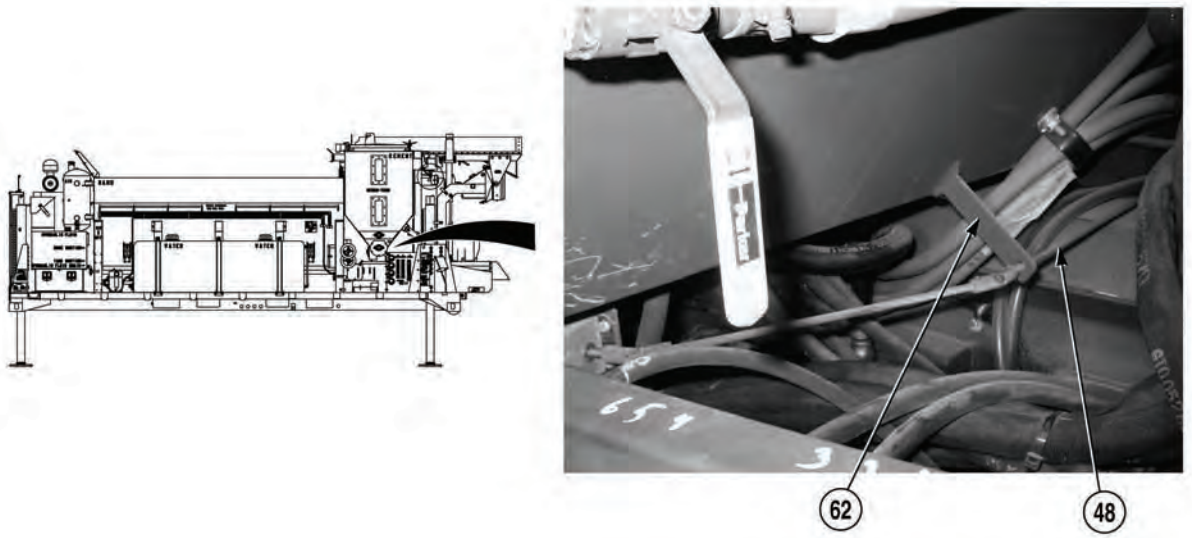

(2) Position cement meter counter shaft (48) through bracket (62).

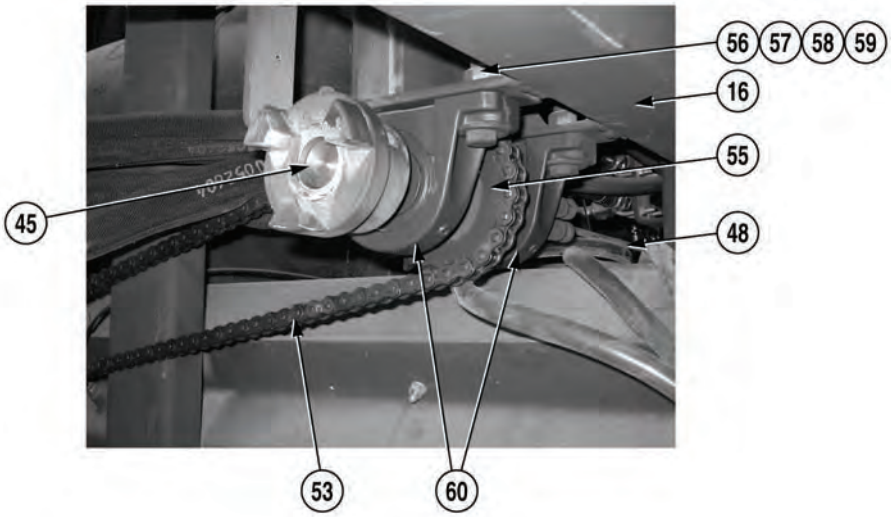

(3) Install two bearings (60), shaft (45), and cement meter counter shaft (48) on Concrete Mobile Mixer (16) with four screws (59), washers (58), lockwashers (57), and nuts (56).

(4) Position chain (53) on sprocket (55).

3-119. CEMENT BIN CLUTCH REPLACEMENT (CONT).

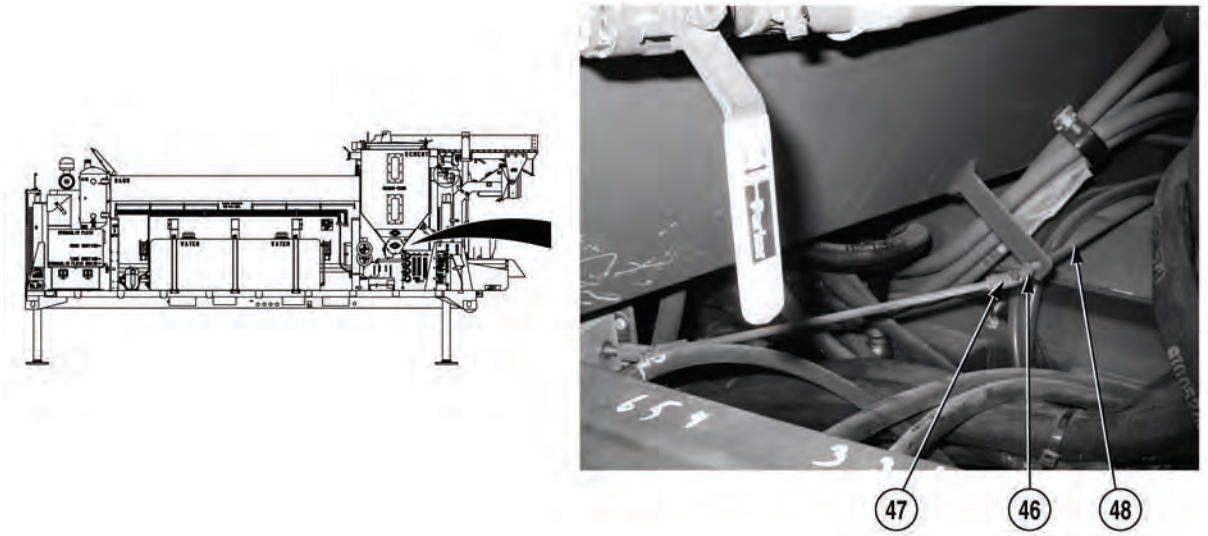

(5) Install cement meter counter shaft (48) on flex coupling (47) with setscrew (46).

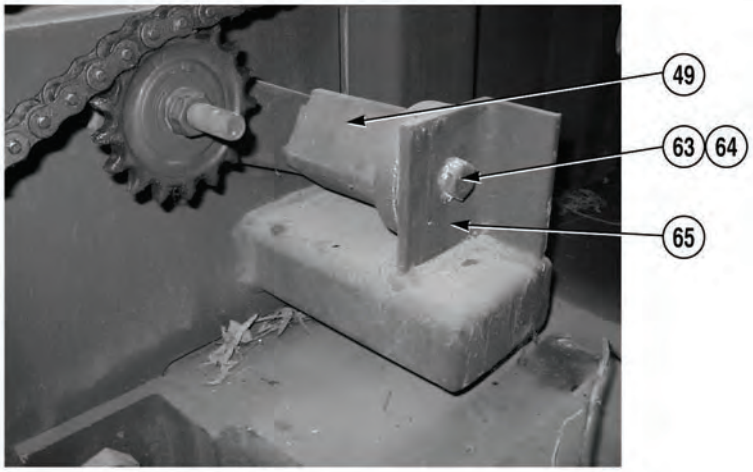

NOTE

- Perform Step (6) if prying down on tension arm does not provide enough slack in chain to install master link.
- Note position on tensioner prior to removal.

(6) Remove screw (63), lockwasher (64), and tension arm (49) from bracket (65). Discard lockwasher.

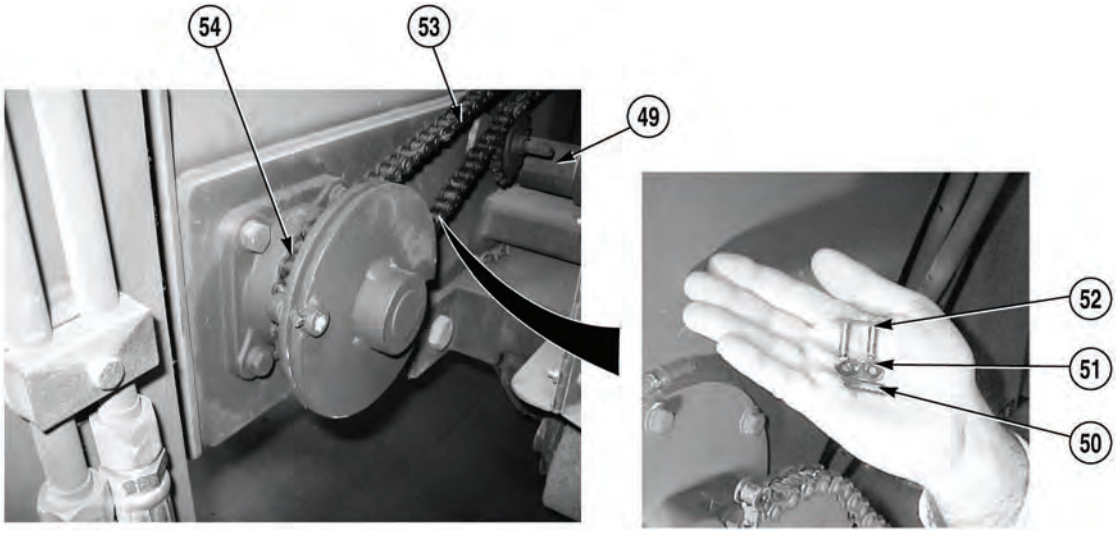

(7) Install chain (53) on sprocket (54) with master link (52), plate (51), and clip (50).

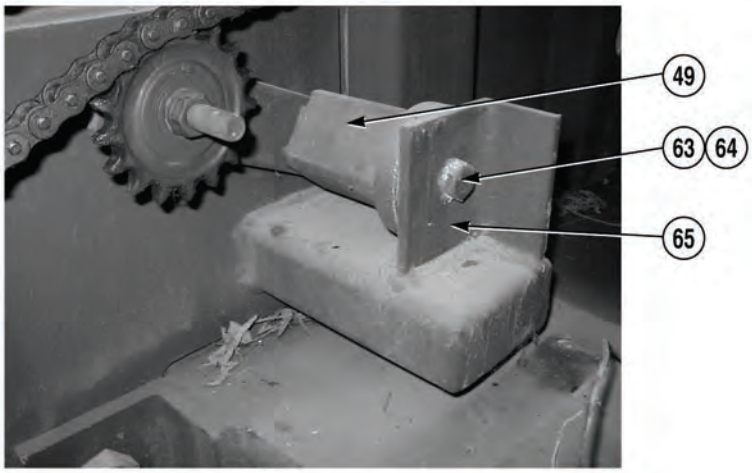

NOTE

Install tensioner as noted prior to removal.

(8) Install tension arm (49) on bracket (65) with lockwasher (64) and screw (63).

3-119. CEMENT BIN CLUTCH REPLACEMENT (CONT).

(9) Install clutch drive (33) on shaft (45) with key (44) and setscrew (43).

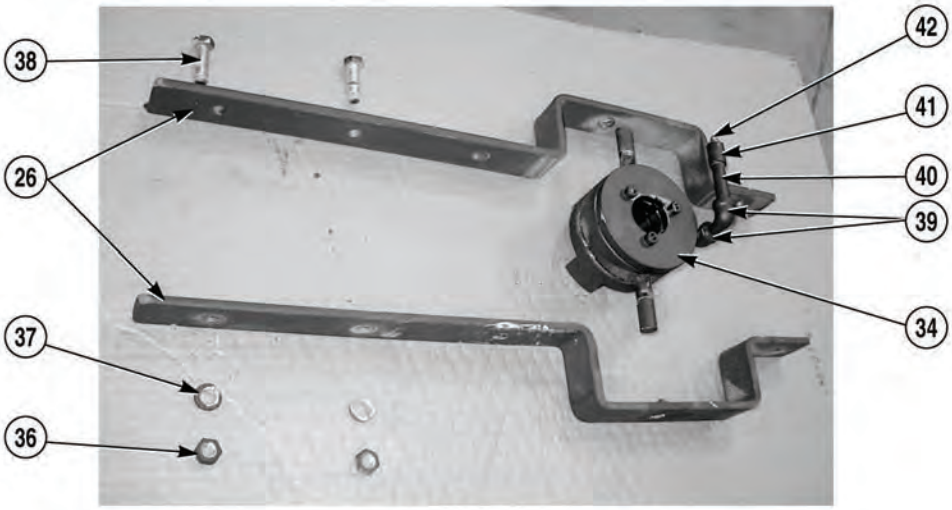

WARNING

Adhesives, solvents, and sealing compounds can burn easily, can give off harmful vapors, and are harmful to skin and clothing. To avoid injury or death, keep away from open fire and use in well-ventilated area. If adhesives, solvent, or sealing compound gets on skin or clothing, wash immediately with soap and water.

(10) Apply sealing compound to threads of two elbows (39), nipple (40), and grease fitting (42).

(11) Install two elbows (39), nipple (40), fitting (41), and grease fitting (42) on clutch drive jaw with collar (34).

(12) Install two handles (26) on clutch drive jaw with collar (34) with two screws (38), lockwashers (37), and nuts (36).

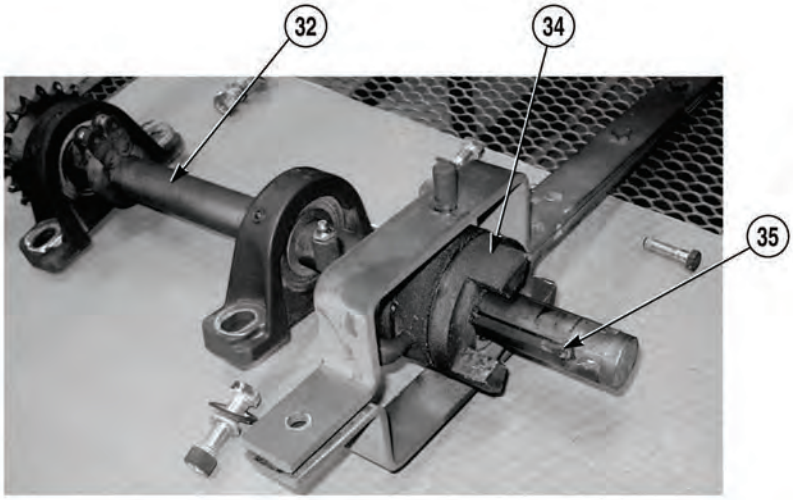

(13) Position clutch drive jaw with collar (34) and key (35) on shaft (32).

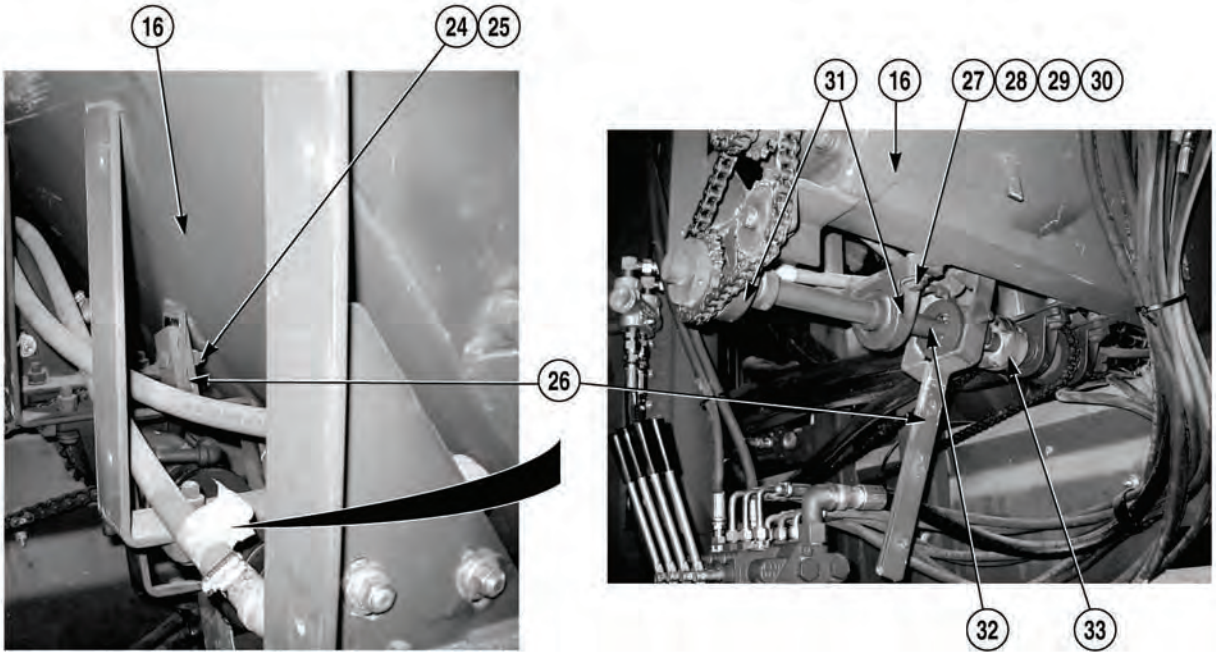

(14) Position shaft (32) in clutch drive (33).

(15) Install two bearings (31) and shaft (32) on Concrete Mobile Mixer (16) with four screws (30), washers (29), lockwashers (28), and nuts (27).

NOTE

Locknut must be tightened so that handle will still pivot.

(16) Install handle (26) on Concrete Mobile Mixer (16) with screw (25) and locknut (24).

3-119. CEMENT BIN CLUTCH REPLACEMENT (CONT).

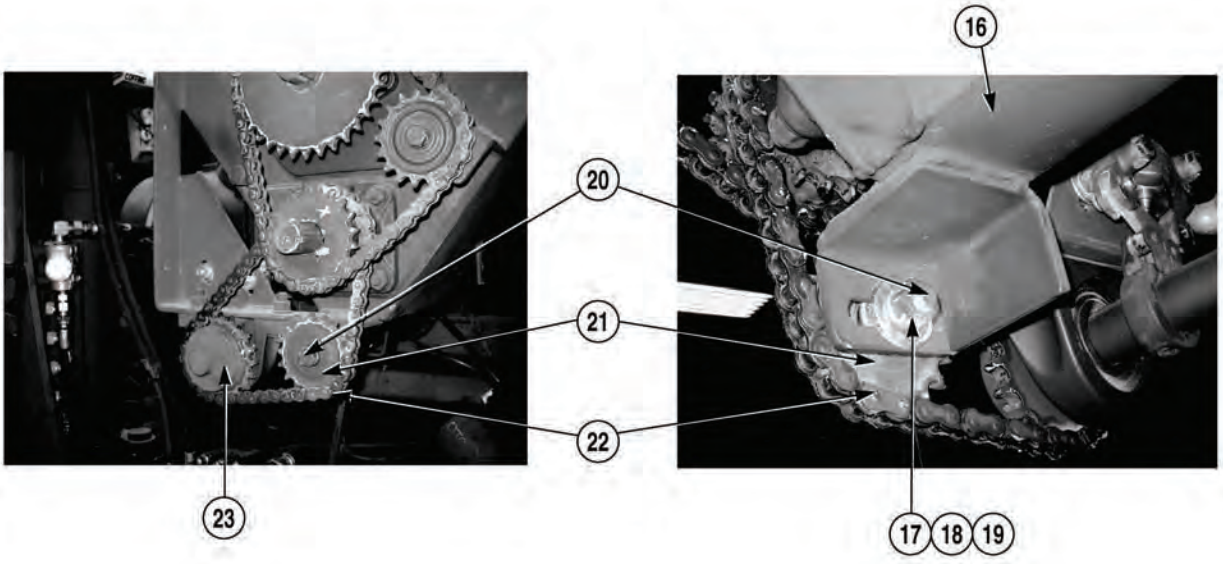

(17) Position chain (22) on sprocket (23).

(18) Install sprocket (21) on Concrete Mobile Mixer (16) with screw (20), washer (19), lockwasher (18), and nut (17).

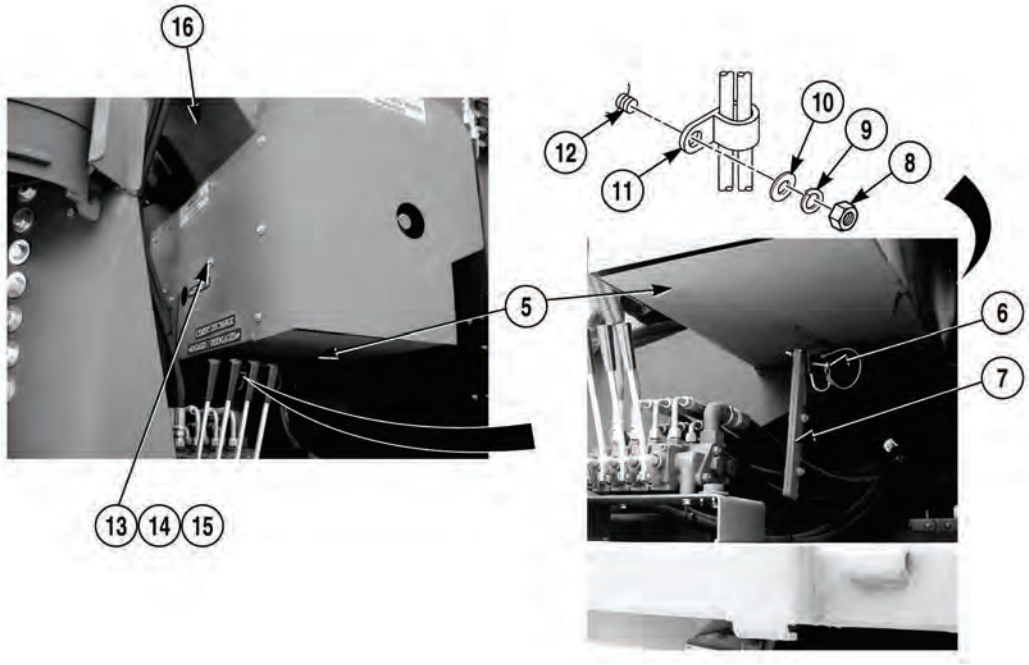

(19) Install cover (5) on Concrete Mobile Mixer (16) with nine washers (15), lockwashers (14), and screws (13).

(20) Install cushion clip (11) on stud (12) with washer (10), lockwasher (9), and nut (8).

(21) Install lock pin (6) on handle (7) and cover (5).

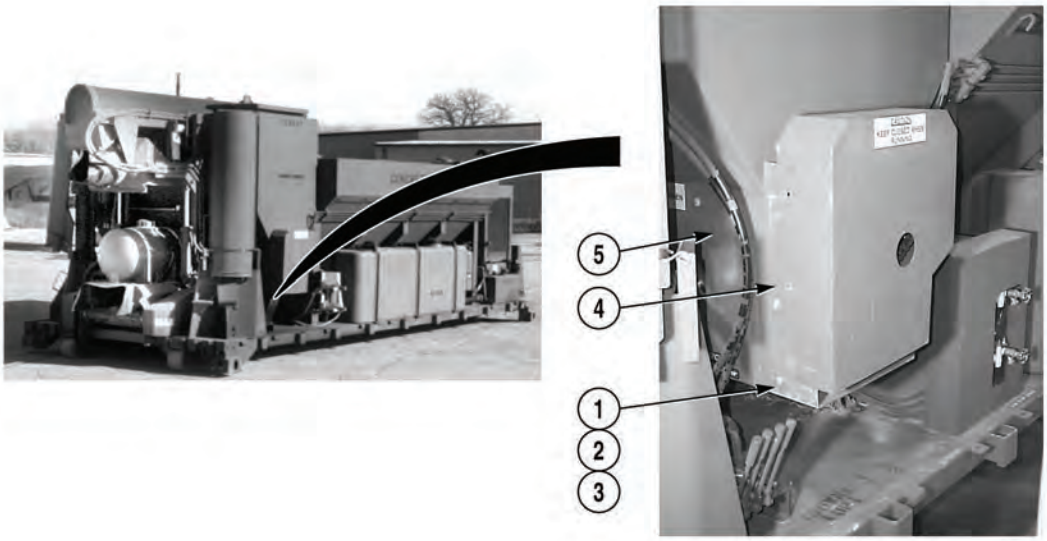

(22) Install cover (4) on cover (5) with four washers (3), lockwashers (2), and screws (1).

c. Follow-On Maintenance:

- Install Admix and chain drive cover(s) (chain drive cover only), (Para 3-88).

END OF TASK

3-120. AGGREGATE BIN(S) GATE REPLACEMENT.

This task covers:

a. Removal b. Installation c. Follow-On Maintenance

INITIAL SETUP

Tools and Special Tools
Tool Kit, General Mechanic's: Automotive (Item 19, Appendix I)

Materials/Parts
Tags, Identification (Item 13, Appendix H)
Cable Ties (Item 2, Appendix H)
Locknut (5) (SN-524NE-24)
Lockwasher (MS 35338-46)
Lockwasher (18) (MS 35338-44)
Lockwasher (6) (MS 35338-48)

Materials/Parts (Continued)
Lockwasher (2) (MS 35338-45)

Personnel Required
Two

Equipment Condition
Control box removed, (Para 3-90)
Aggregate bins empty, (Para 2-13)
Admix valves and chain drive covers removed (chain drive cover only), (Para 3-88)

a. Removal.

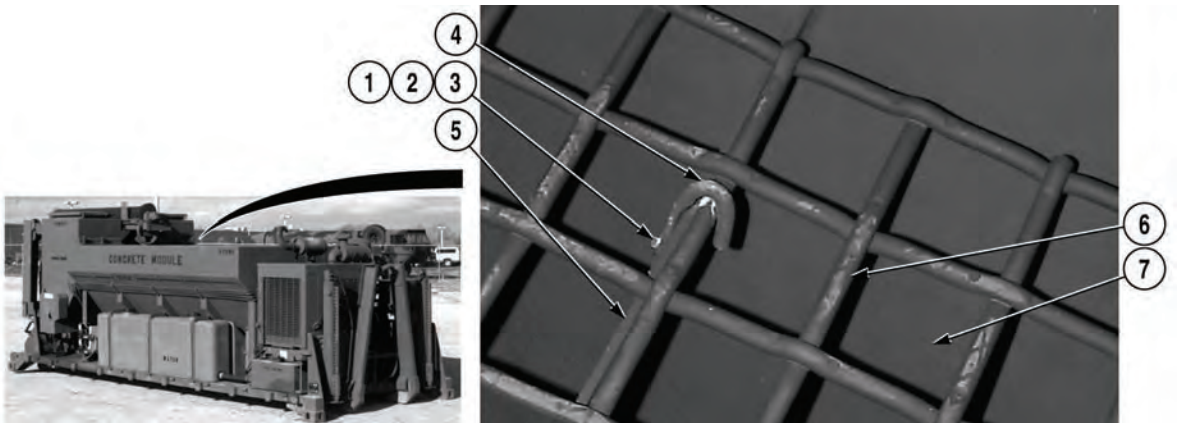

NOTE

Both aggregate bin gratings need to be removed to access lower fasteners securing gate housing brackets.

(1) Remove five locknuts (1), ten washers (2), five screws (3), and hooks (4) from three brackets (5). Discard locknuts.

WARNING

Aggregate bin grating is heavy, do not lift aggregate bin grating without the aid of an assistant and suitable lifting device. Failure to comply may result in serious injury to personnel.

(2) Attach lifting device to aggregate bin grating (6).

(3) With the aid of an assistant and a suitable lifting device, remove aggregate bin grating (6) from aggregate bin (7).

(4) Repeat Steps (1) through (3) for second aggregate bin grating.

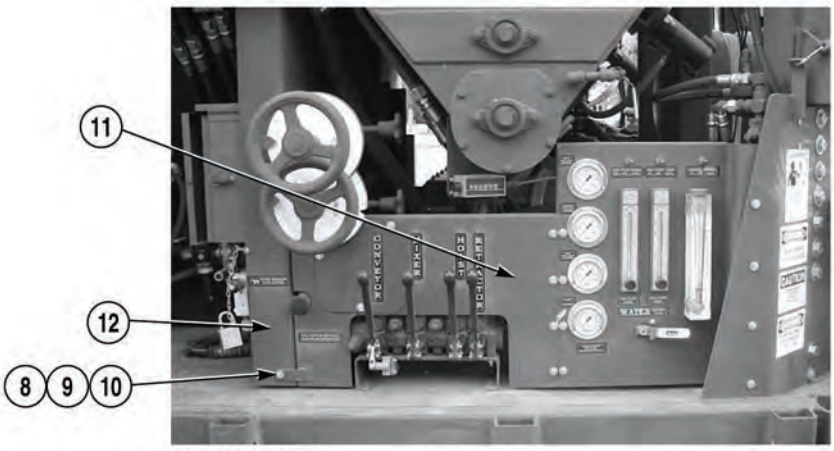

(5) Remove five screws (8), lockwashers (9), washers (10), and panel (11) from Concrete Mobile Mixer (12) and bracket (13). Discard lockwashers.

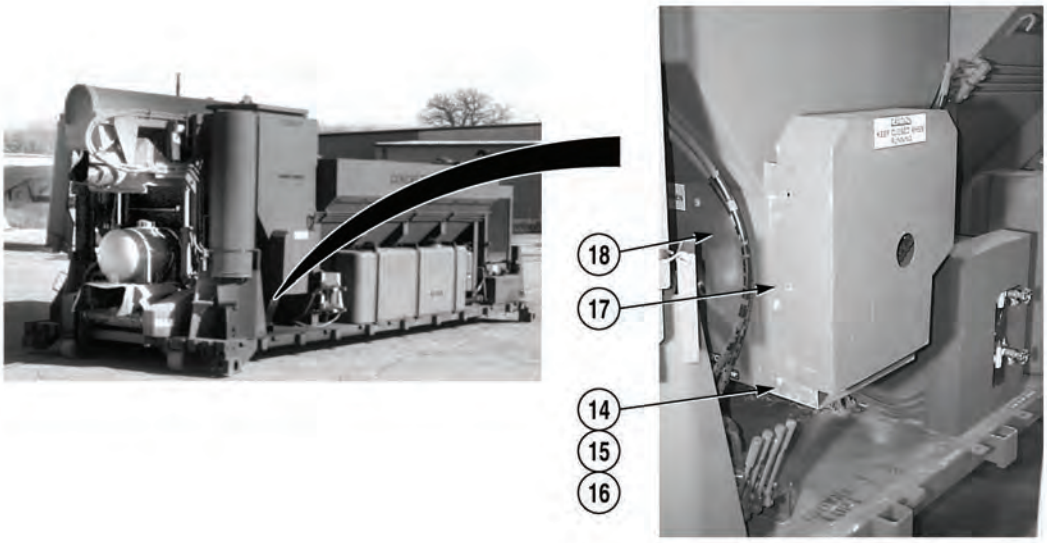

(6) Remove four screws (14), lockwashers (15), washers (16), and cover (17) from cover (18). Discard lockwashers.

3-120. AGGREGATE BIN(S) GATE REPLACEMENT (CONT).

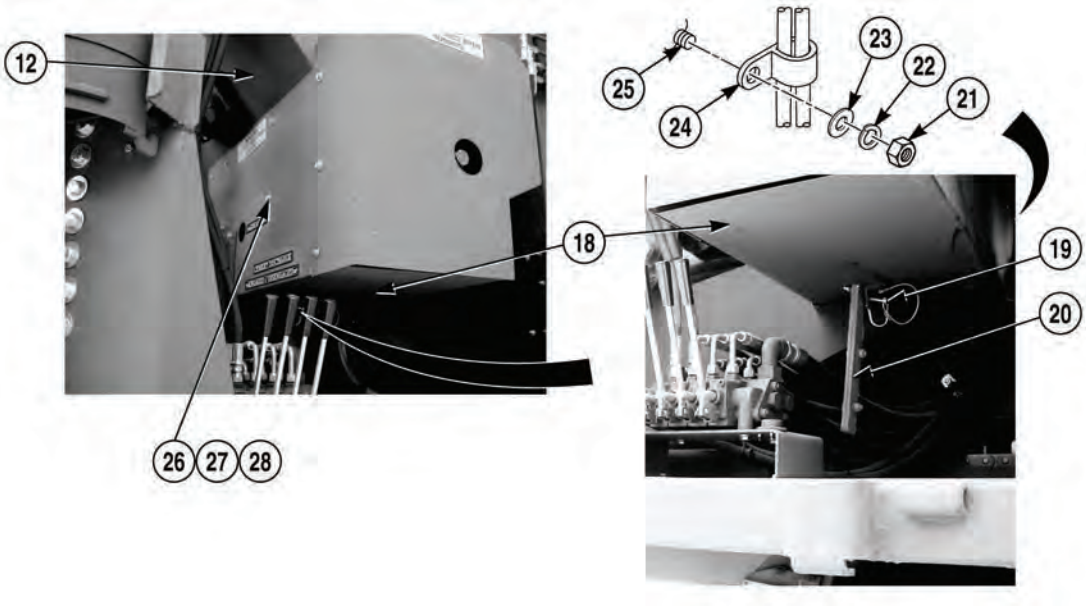

(7) Remove lock pin (19) from handle (20) and cover (18).

(8) Remove nut (21), lockwasher (22), washer (23), and cushion clip (24) from stud (25). Discard lockwasher.

(9) Remove nine screws (26), lockwashers (27), washers (28), and cover (18) from Concrete Mobile Mixer (12). Discard lockwashers.

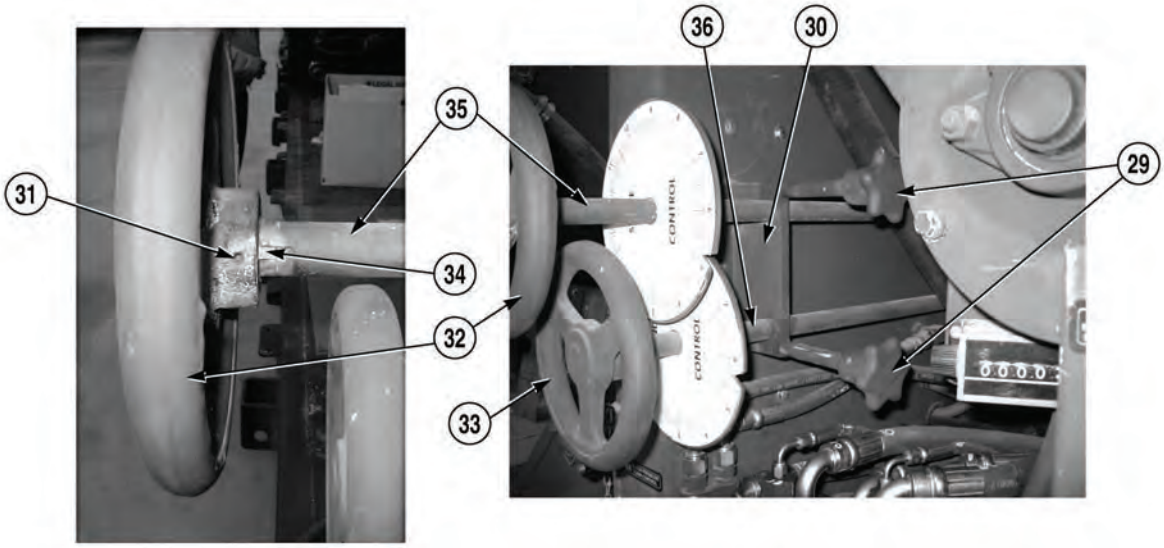

(10) Remove two handles (29) from gate lock (30).

NOTE

Performing Step (11) permits easier access to fasteners holding gate assembly to aggregate bin. One or both handles may need to be removed.

(11) Remove two setscrews (31), handles (32) and (33), and keys (34) from two shafts (35) and (36).

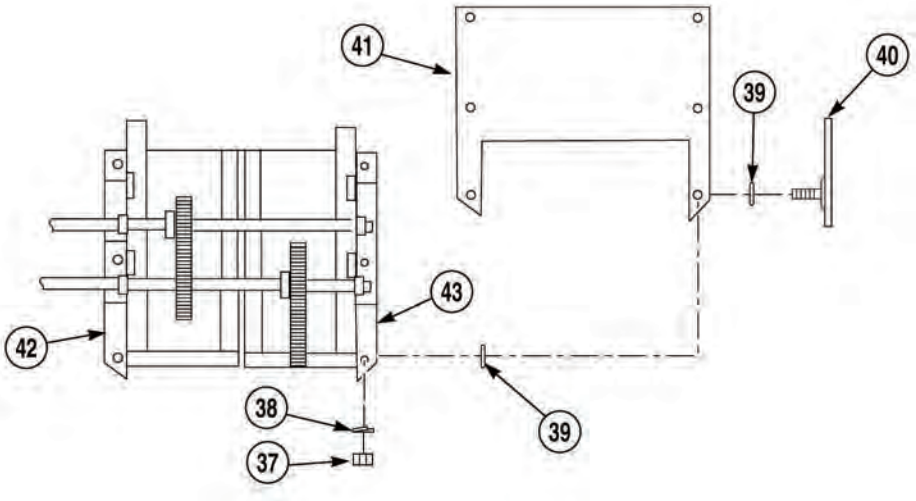

NOTE

- Bottom of back plate and two guide housing brackets are held in place with two triangular shaped brackets. These two brackets are removed from inside of stone and sand bins. Right side shown.
- Note position of washers prior to removal.

(12) With the aid of an assistant, remove two nuts (37), lockwashers (38), four washers (39), and two brackets (40) from back plate (41) and two guide brackets (42) and (43). Discard lockwashers.

NOTE

Two shafts, guide brackets and gears are removed as an assembly. Gates will fall on conveyor belt and are removed through sand and stone bins. Studs are welded on inside of cement and sand bin.

(13) With the aid of an assistant, remove four nuts (44), lockwashers (45), two shafts (35) and (36), guide brackets (42) and (43), and gears (46) and (47) from four studs (48) and Concrete Mobile Mixer (12). Discard lockwashers.

3-120. AGGREGATE BIN(S) GATE REPLACEMENT (CONT).

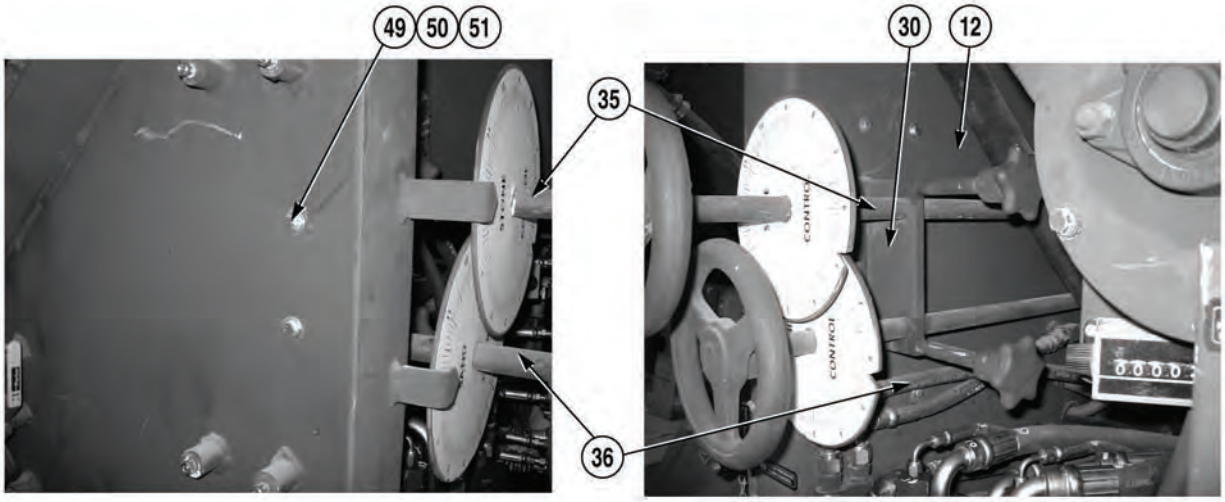

(14) With the aid of an assistant, remove two screws (49), lockwashers (50), washers (51), gate lock (30), two shafts (35) and (36), from Concrete Mobile Mixer (12). Discard lockwashers.

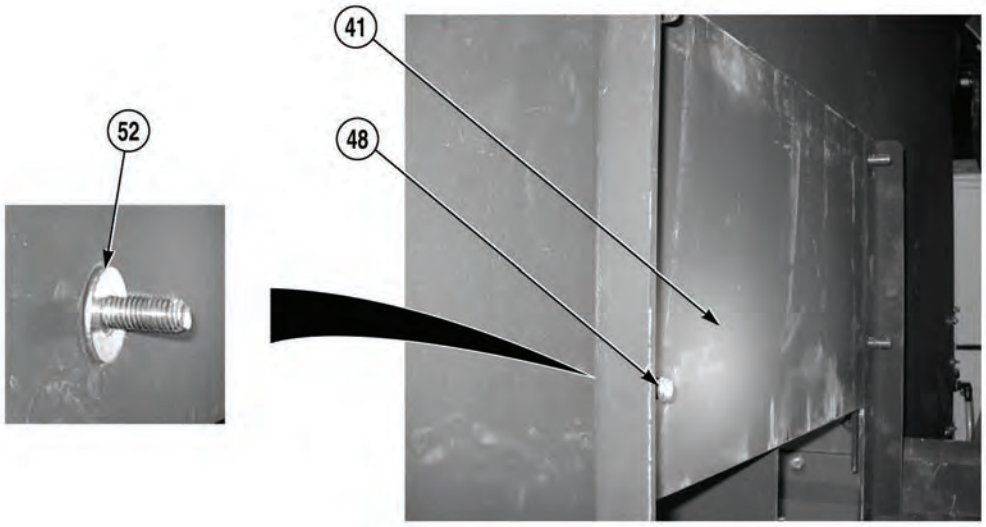

(15) Remove back plate (41) and four washers (52) from four studs (48).

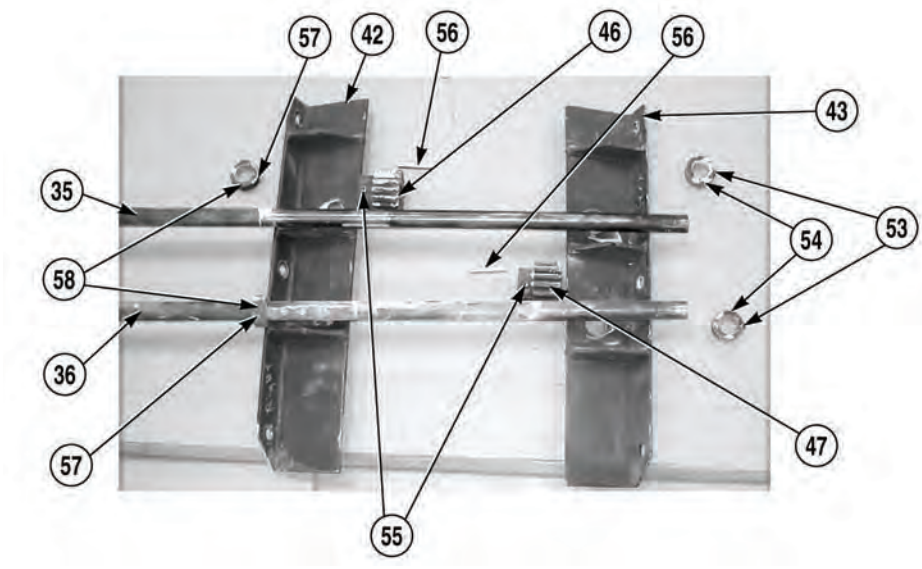

NOTE

Note position of collars and gears on shafts prior to removal.

(16) Loosen two setscrews (53) and remove collars (54) and guide bracket (43) from two shafts (35 and 36).

(17) Loosen two setscrews (55) and remove gears (46) and (47), keys (56), and guide bracket (42) from two shafts (35) and (36).

(18) Loosen two setscrews (57) and remove collars (58) from shafts (35) and (36).

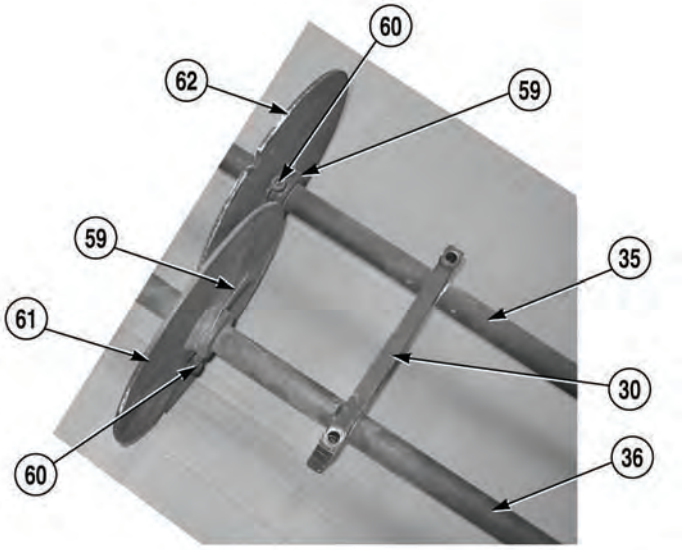

NOTE

- Perform Steps (19) and (20) if dials and gate lock need to be removed.
- Note position of dials and gate lock prior to removal.

(19) Remove two wires (59), setscrews (60), and dials (61) and (62) from shafts (35) and (36).

(20) Remove gate lock (30) from two shafts (35) and (36).

3-120. AGGREGATE BIN(S) GATE REPLACEMENT (CONT).

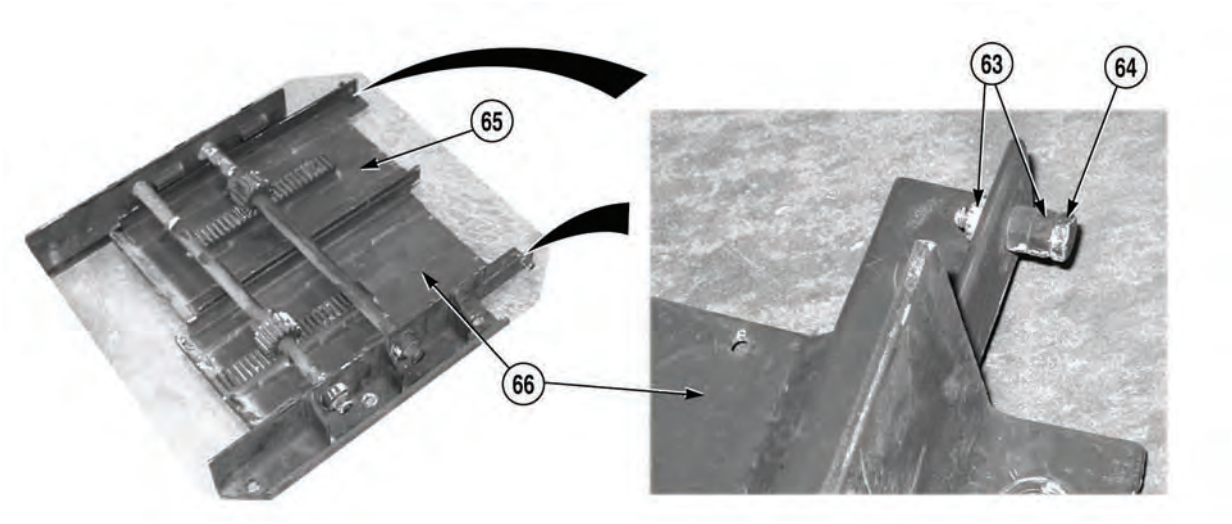

NOTE

- Gate stop is assembled from screw and three nuts.
- Perform Step (21) if gate stops needs to be removed.
- Both gate stops are removed the same way.

(21) Remove six nuts (63) and two screws (64) from gates (65) and (66).

b. Installation.

NOTE

Perform Step (1) if gate stops need to be installed.

(1) Install two screws (64) and six nuts (63) on two gates (65) and (66).

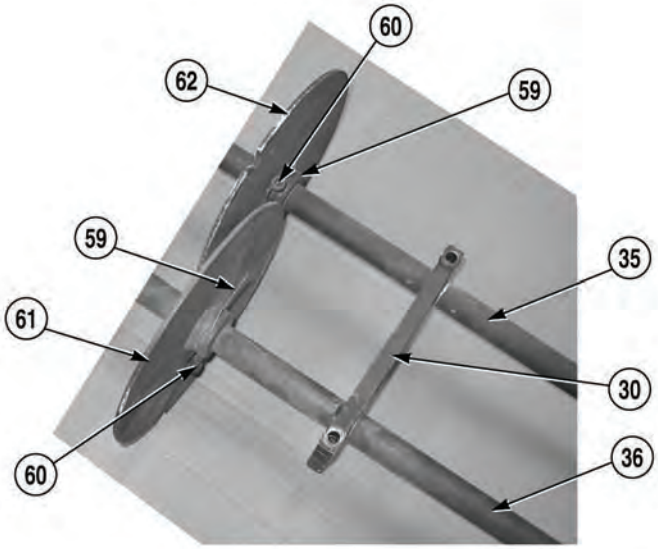

NOTE

- Perform Steps (2) and (3) if dials and gate lock need to be installed.
- Install dials and gate locks as noted prior to removal.

(2) Position gate lock (30) on two shafts (35) and (36).

(3) Position two dials (61) and (62) and setscrews (60) on two shafts (35) and (36). Do not tighten setscrews (60) or install wires (59).

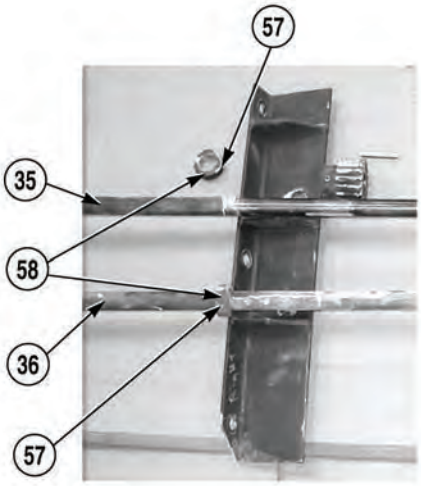

NOTE

Install two collars on shafts as noted prior to removal.

(4) Install two collars (58) on shafts (35) and (36) with setscrews (57).

3-120. AGGREGATE BIN(S) GATE REPLACEMENT (CONT).

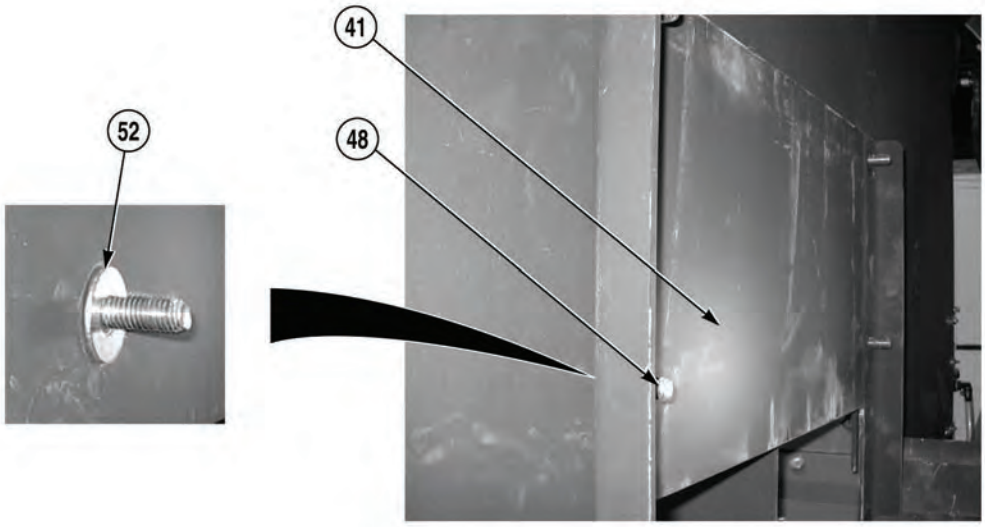

(5) Position four washers (52) and back plate (41) on four studs (48).

(6) Install two guide brackets (42) and (43) on four studs (48) with lockwashers (45) and nuts (44).

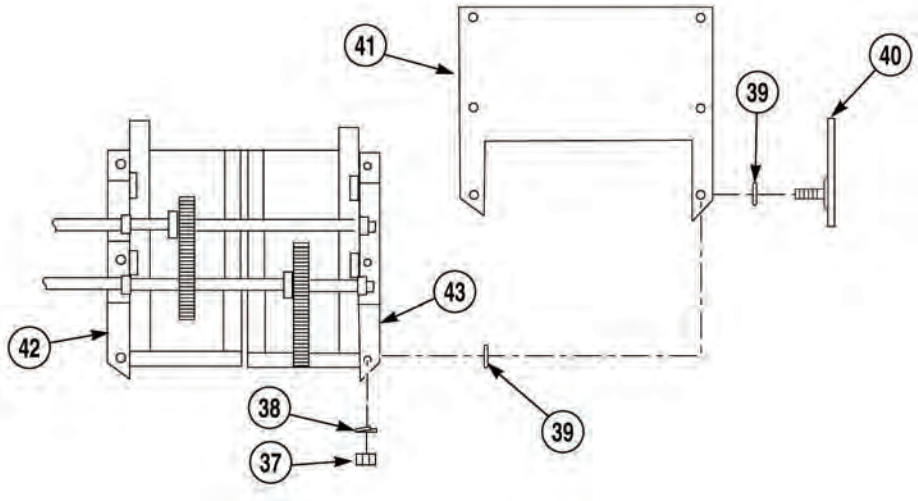

NOTE

- Install washers as noted prior to removal.
- Both brackets are installed the same way. Right side shown.

(7) With the aid of an assistant, install two brackets (40) on guide brackets (42) and (43) and back plate (41) with four washers (39), two lockwashers (38), and nuts (37).

65 NOT SHOWN

NOTE

Before installing two shafts, gates are positioned between guide brackets and suspended by gate stops. Both gates are positioned between guide brackets simultaneously.

(8) With the aid of an assistant, position two gates (65) and (66) between guide brackets (42) and (43).

3-120. AGGREGATE BIN(S) GATE REPLACEMENT (CONT).

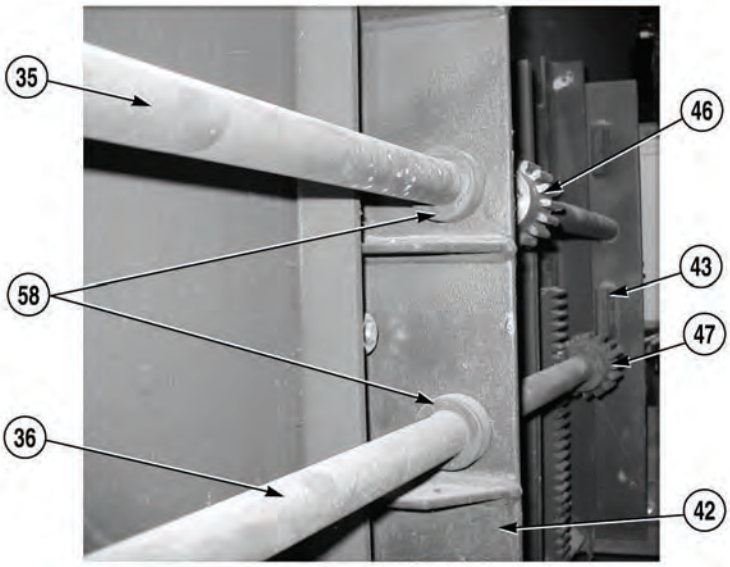

(9) Position two shafts (35) and (36) on guide bracket (42).

(10) Slide two gears (46) and (47) on shafts (35) and (36).

(11) Slide two shafts (35) and (36) through guide bracket (43) until two collars (58) contact guide bracket (42).

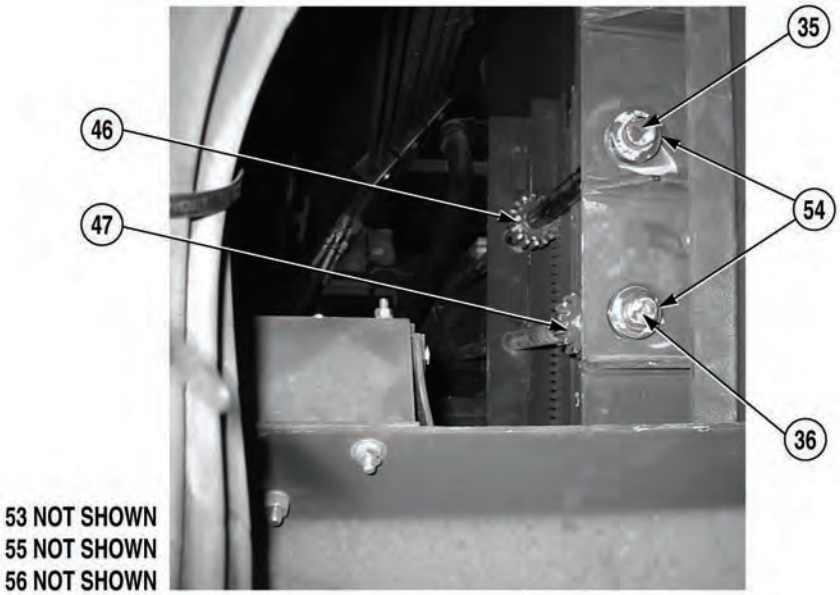

(12) Install two collars (54) on shafts (35) and (36) with two setscrews (53).

NOTE

Gears are in place when gears are fully engaged with racks on gate.

(13) Position and tighten two gears (46) and (47) on shafts (35) and (36) with two keys (56) and setscrews (55).

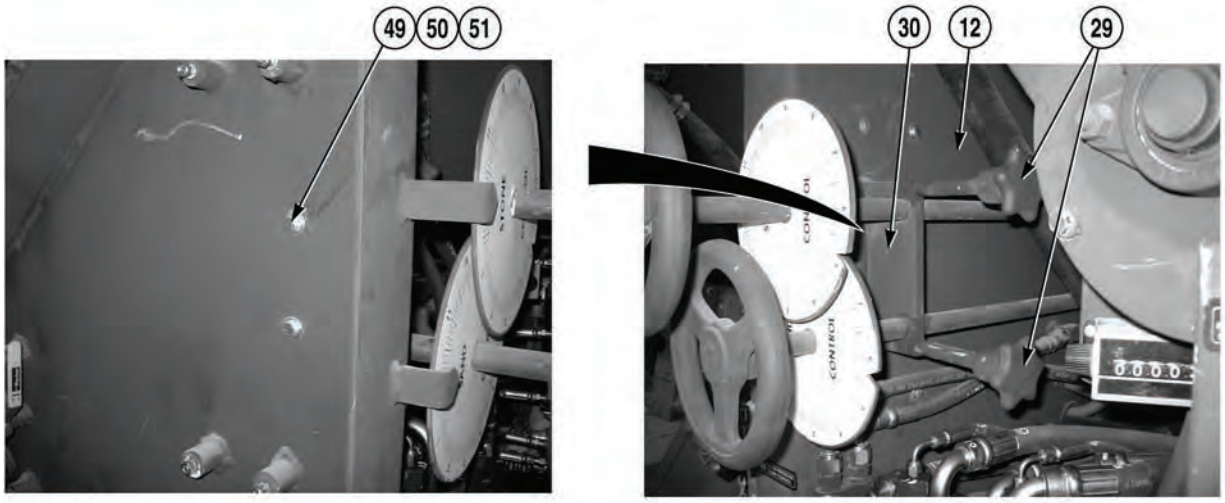

(14) Install gate lock (30) on Concrete Mobile Mixer (12) with two washers (51), lockwashers (50), and screws (49).

(15) Install two handles (29) on gate lock (30). Do not tighten handles.

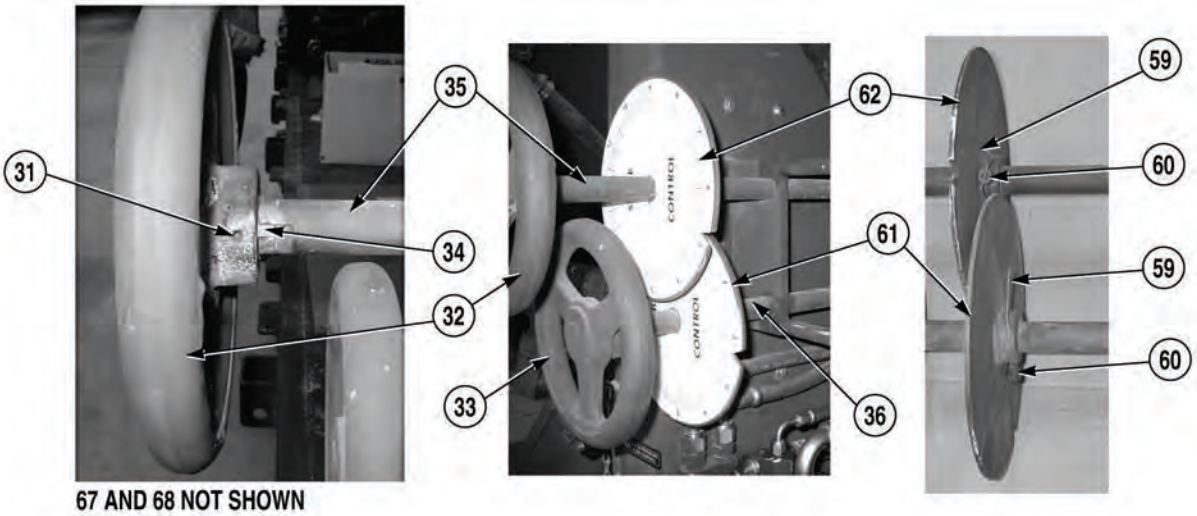

NOTE

Perform Step (16) if two handles need to be installed.

(16) Install two handles (32) and (33) on shafts (35) and (36) with two keys (34) and setscrews (31).

NOTE

Perform Step (17) to set dials to correct position.

(17) Rotate two dials (61) and (62) so that number 12 on dials (61) and (62) align with pointers (67) and (68).

(18) Tighten two setscrews (60) on dials (61) and (62).

3-120. AGGREGATE BIN(S) GATE REPLACEMENT (CONT).

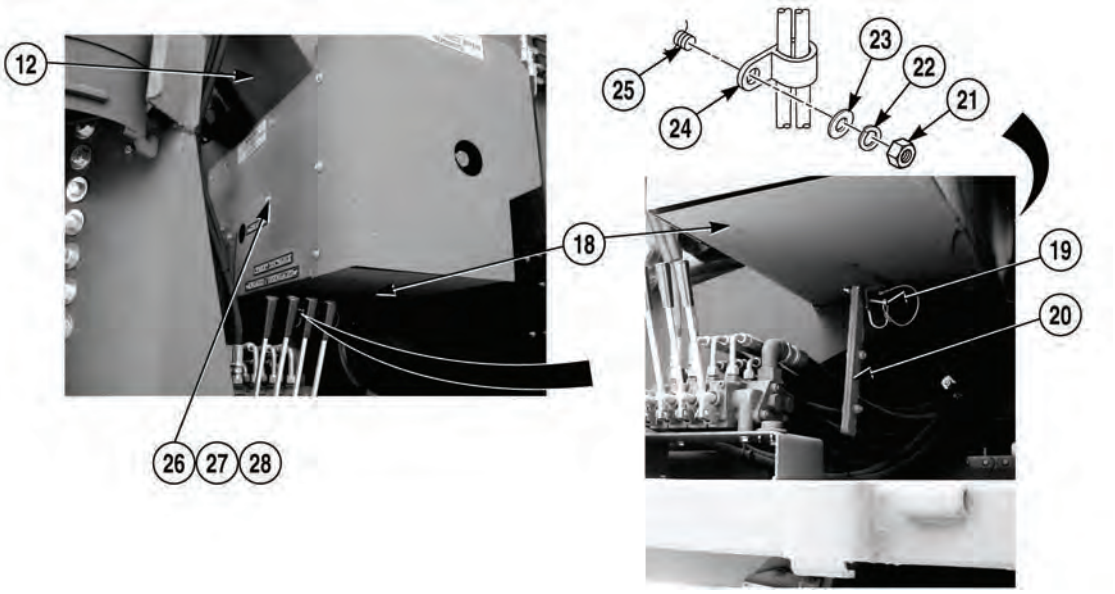

(19) Install cover (18) on Concrete Mobile Mixer (12) with nine washers (28), lockwashers (27), and screws (26).

(20) Install cushion clip (24) on stud (25) with washer (23), lockwasher (22), and nut (21).

(21) Install lock pin (19), cover (18), and handle (20).

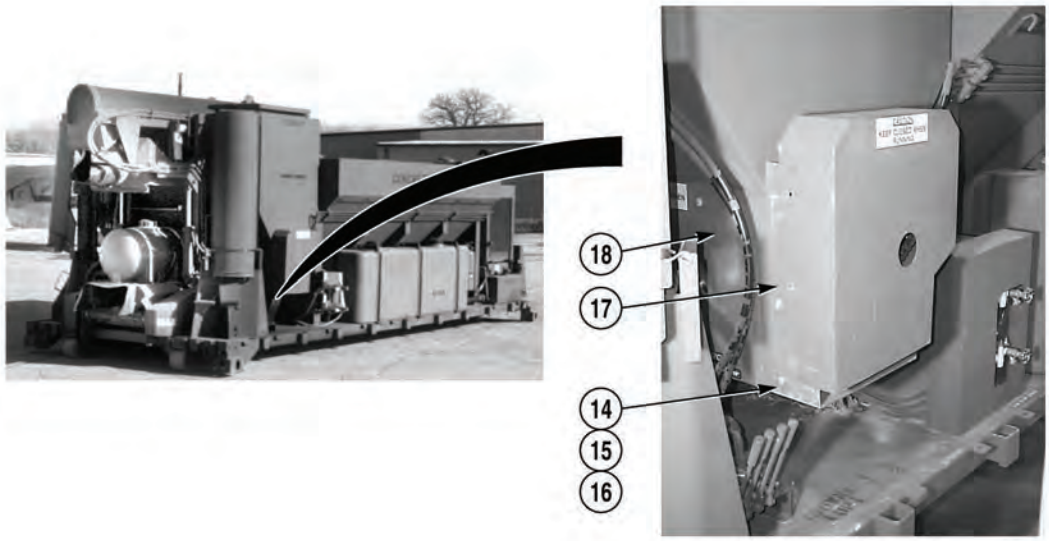

(22) Install cover (17) on cover (18) with four washers (16), lockwashers (15), and screws (14).

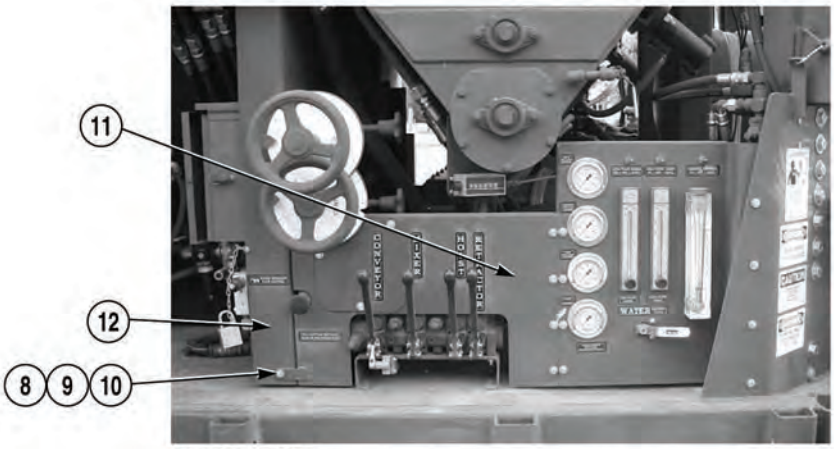

(23) Install panel (11) on Concrete Mobile Mixer (12) and bracket (13) with five washers (10), lockwashers (9), and screws (8).

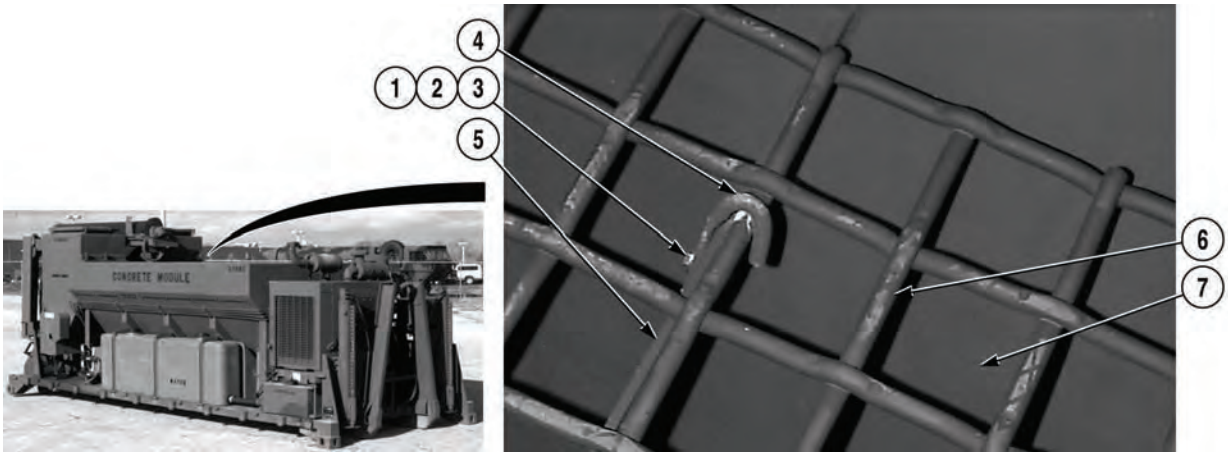

(24) With the aid of an assistant and a suitable lifting device, install aggregate bin grating (6) on aggregate bin (7) and three brackets (5) with five hooks (4), screws (3), ten washers (2), and five locknuts (1).

(25) Repeat Step (24) for second aggregate bin grating.

c. Follow-On Maintenance:

- Install control box, (Para 3-90).
- Install admix valves and chain drive covers (chain drive cover only), (Para 3-88).

END OF TASK

3-121. CEMENT FLUFFER CONTROL VALVE REPLACEMENT.

This task covers:

a. Removal b. Installation

INITIAL SETUP

Tools and Special Tools
Tool Kit, General Mechanic's: Automotive (Item 19, Appendix I)

Materials/Parts
Sealing Compound (Item 11, Appendix H)

Equipment Condition
Engine OFF, (Para 2-19)
Concrete Mobile Mixer unloaded, (Para 2-5)

a. Removal.

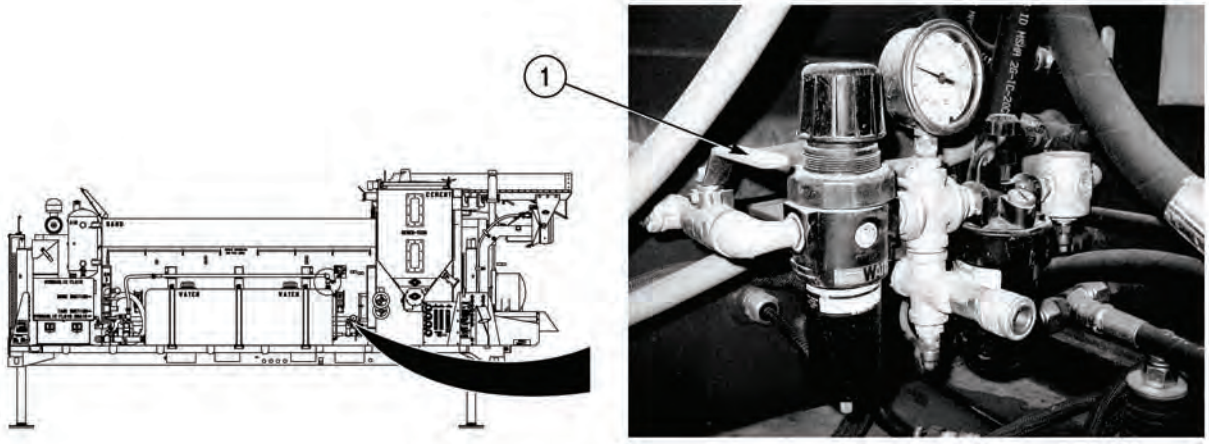

(1) Turn main air supply valve (1) OFF.

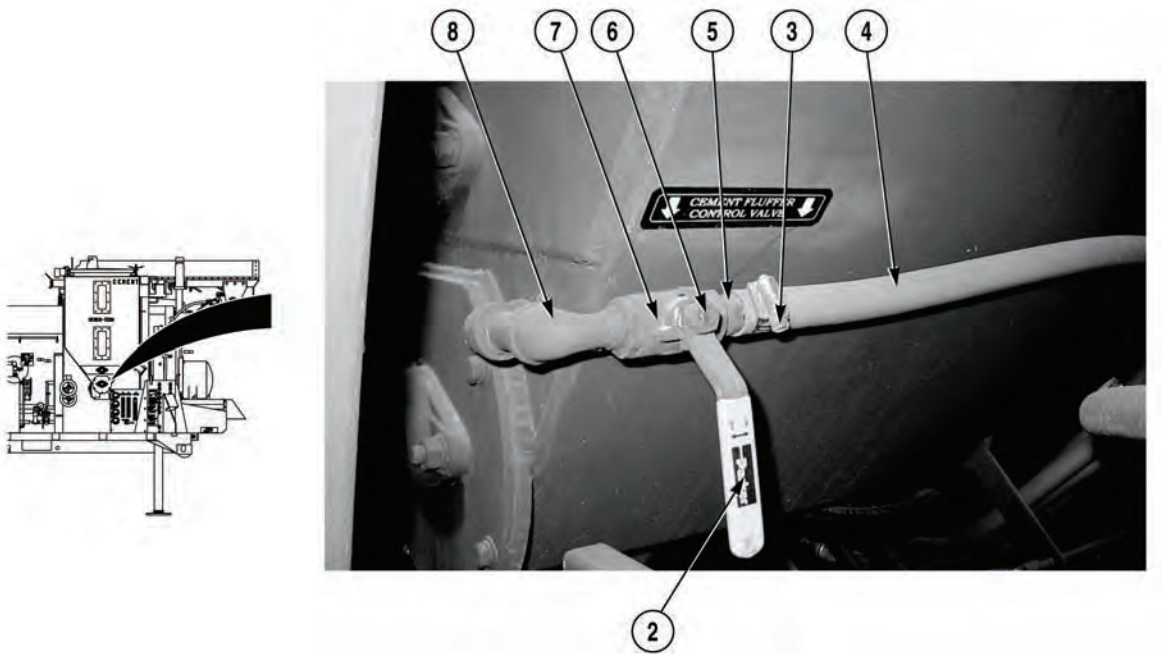

(2) Slowly open valve handle (2).

(3) Loosen clamp (3) and remove hose (4) from fitting (5).

(4) Remove nut (6) and valve handle (2) from valve (7).

(5) Remove valve (7) from elbow (8).

(6) Remove fitting (5) from valve (7).

b. Installation.

WARNING

Adhesives, solvents, and sealing compounds can burn easily, can give off harmful vapors, and are harmful to skin and clothing. To avoid injury or death, keep away from open fire and use in well-ventilated area. If adhesives, solvent, or sealing compound gets on skin or clothing, wash immediately with soap and water.

(1) Apply sealing compound to threads of fitting (5) and elbow (8).

(2) Install fitting (5) on valve (7).

(3) Install valve (7) on elbow (8).

(4) Install valve handle (2) on valve (7) with nut (6).

(5) Install hose (4) on fitting (5) and tighten clamp (3).

(6) Close valve handle (2).

3-121. CEMENT FLUFFER CONTROL VALVE REPLACEMENT (CONT).

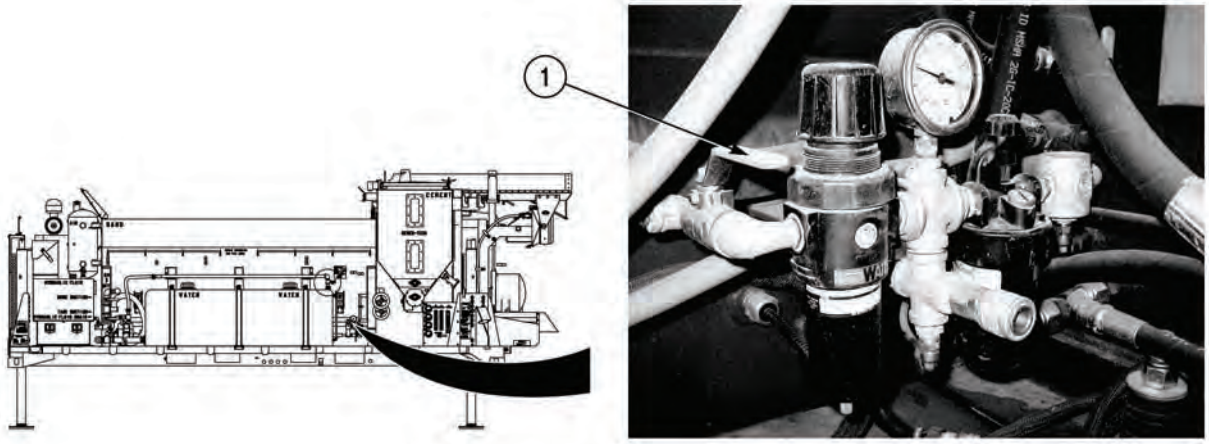

(7) Turn main air supply valve (1) ON, and check for leaks.

END OF TASK

3-122. RETRACTOR CYLINDERS DOUBLE CHECK VALVE REPLACEMENT.

This task covers:

a. Removal b. Installation c. Follow-On Maintenance

INITIAL SETUP

Tools and Special Tools
Tool Kit, General Mechanic's: Automotive (Item 19, Appendix I)
Cap and Plug Set (Item 3, Appendix I)

Materials/Parts
Tags, Identification, (Item 13, Appendix H)
Cable Ties (Item 2, Appendix H)
Locknut (2) (2560HX)

Equipment Condition
Right side delivery chutes removed, (Para 2-26)
Mixing auger either fully deployed or stowed, (Para 2-23)

a. Removal.

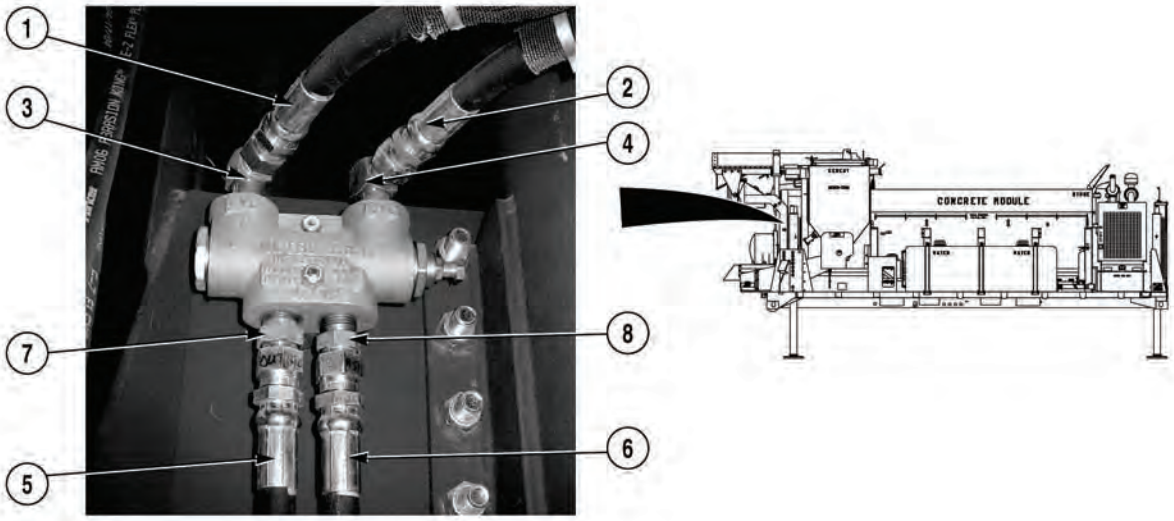

WARNING

If mixing auger is in stowed position, gravity could cause mixing auger to lower. Prior to performing this procedure, ensure mixing auger is secured with storage pin. Failure to comply could result in serious injury.

NOTE

- Tag and mark hoses prior to removal.
- Cap and plug hoses upon removal.

(1) Remove two hoses (1) and (2) from elbows (3) and (4).

(2) Remove two hoses (5) and (6) from fittings (7) and (8).

3-122. RETRACTOR CYLINDERS DOUBLE CHECK VALVE REPLACEMENT (CONT).

NOTE

Note length and position of screws prior to removal.

(3) Remove two locknuts (9), screws (10), spacers (11), and double check valve (12) from bracket (13). Discard locknuts.

NOTE

Note position of elbows and fittings prior to removal.

(4) Remove two elbows (3) and (4) and fittings (7) and (8) from double check valve (12).

b. Installation.

NOTE

Install elbows and fittings as noted prior to removal.

(1) Install two elbows (3) and (4) and fittings (7) and (8) on double check valve (12).

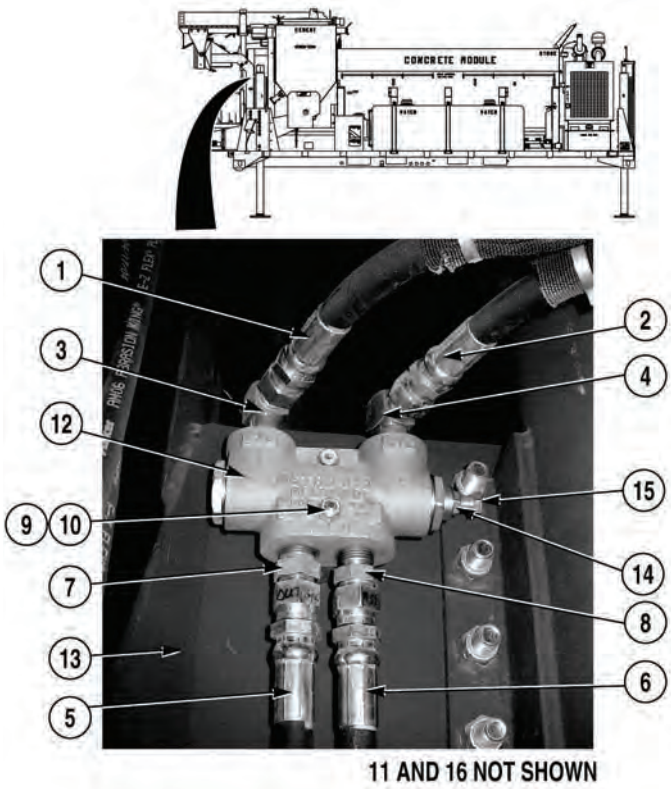

NOTE

Install screws as noted prior to removal.

(2) Install double check valve (12) on bracket (13) with two spacers (11), screws (10), and locknuts (9).

(3) Install two hoses (5) and (6) on fittings (7) and (8).

(4) Install two hoses (1) and (2) on elbows (3) and (4).

(5) If required, adjust double check valve (12) by loosening jamnut (14) and turning adjusting screw (15) in or out until retractor cylinders (16) operate smoothly.

c. Follow-On Maintenance:

- Right side delivery chutes stowed, (Para 2-26).
- Start engine, (Para 2-19).
- Check for leaks.
- Shut off engine, (Para 2-19).
- Check hydraulic reservoir oil level, (Para 2-6).

END OF TASK

3-123. HOIST CYLINDER RELIEF AND DOUBLE CHECK VALVE REPLACEMENT.

This task covers:

a. Removal b. Installation c. Follow-On Maintenance

INITIAL SETUP

Tools and Special Tools
Tool Kit, General Mechanic's: Automotive (Item 19, Appendix I)
Cap and Plug Set (Item 3, Appendix I)

Materials/Parts
Tags, Identification (Item 13, Appendix H)
Cable Ties (Item 2, Appendix H)
Locknut (2) (2560HX)

Equipment Condition
Engine OFF, (Para 2-19)
Concrete Mobile Mixer unloaded, (Para 2-5)

a. Removal.

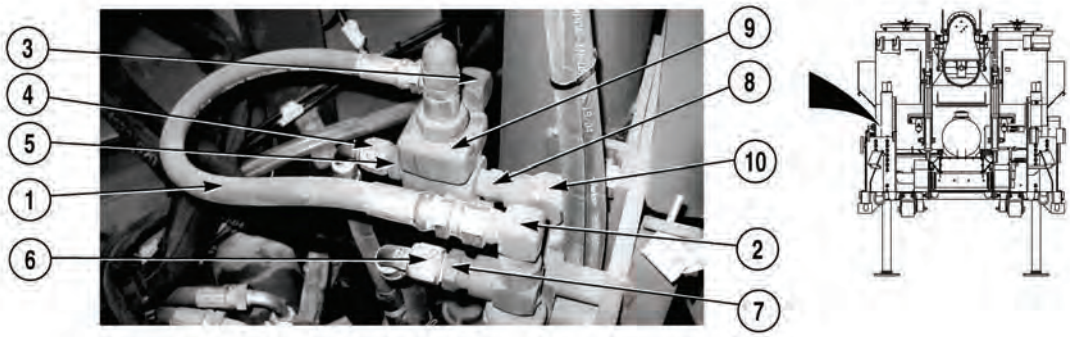

NOTE

- Tag and mark hoses prior to removal.
- Cap and plug hoses upon removal.
- Note position of elbows and fittings prior to removal.
- Perform Steps (1) through (5) to remove relief valve.

(1) Remove hose (1) from two elbows (2) and (3).

(2) Remove hose (4) from fitting (5).

(3) Remove hose (6) from fitting (7).

(4) Remove fitting (8) and relief valve (9) from elbow (10).

(5) Remove elbow (3) and two fittings (5) and (8) from relief valve (9).

3-123. HOIST CYLINDER RELIEF AND DOUBLE CHECK VALVE REPLACEMENT (CONT).

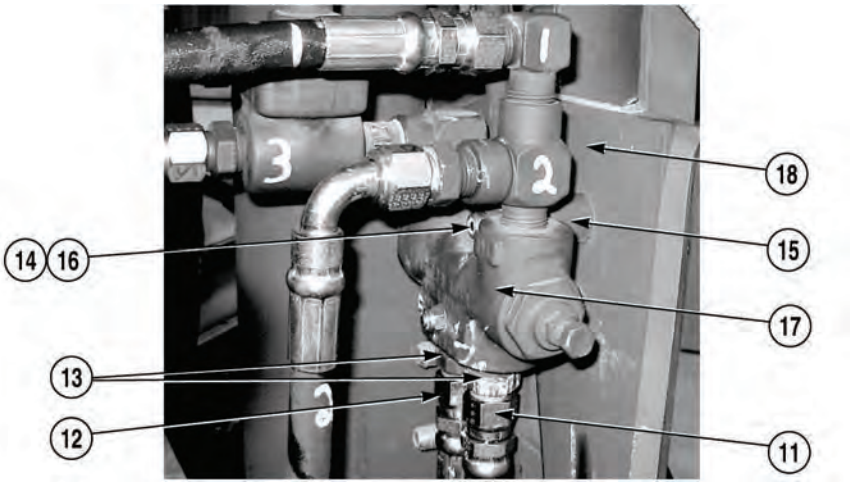

NOTE

Perform Steps (6) through (9) to remove double check valve.

(6) Remove two hoses (11) and (12) from fittings (13).

(7) Remove two locknuts (14), spacers (15), screws (16), and double check valve (17) from bracket (18). Discard locknuts.

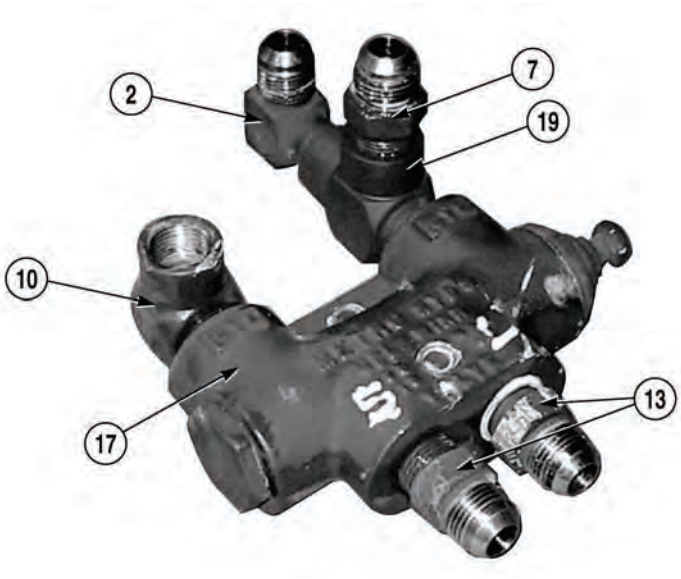

(8) Remove two fittings (13) and elbow (10) from double check valve (17).

(9) Remove tee (19), elbow (2), and fitting (7) from double check valve (17).

b. Installation.

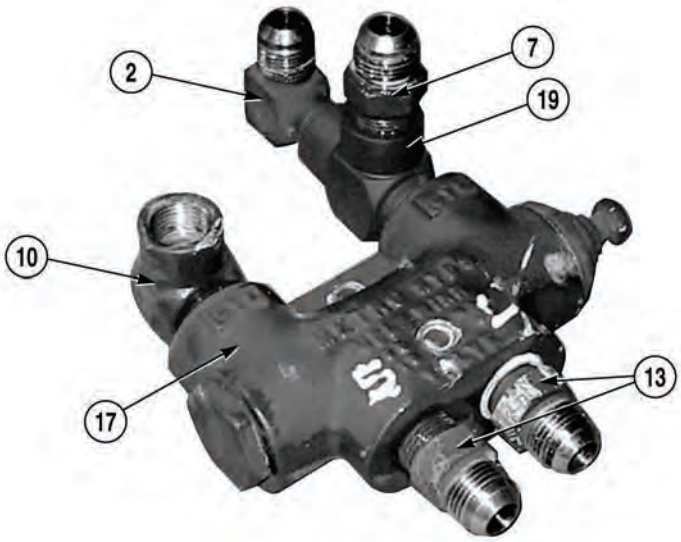

NOTE

- Install elbows and fittings as noted prior to removal.
- Perform Steps (1) through (4) to install double check valve.

(1) Install fitting (7), elbow (2), and tee (19) on double check valve (17).

(2) Install elbow (10) and two fittings (13) on double check valve (17).

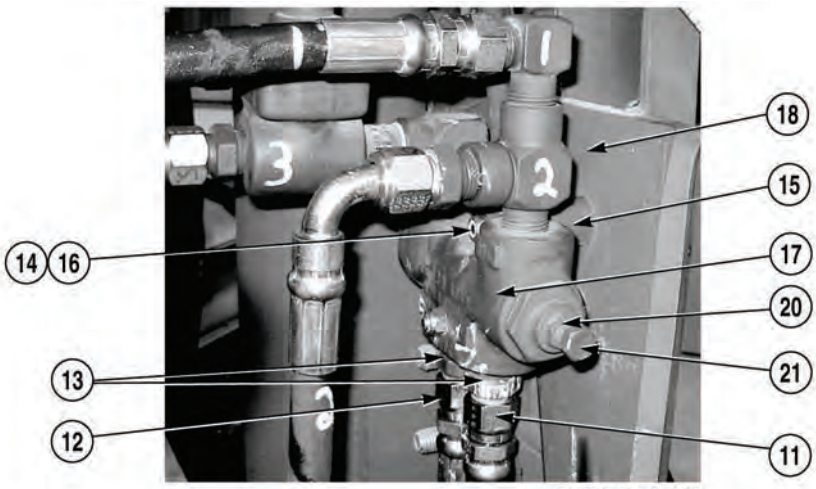

22 NOT SHOWN

(3) Install double check valve (17) on bracket (18) with two screws (16), spacers (15), and locknuts (14).

(4) Install two hoses (11) and (12) on fittings (13).

(5) If required, adjust double check valve (17) by loosening jamnut (20) and turning adjusting screw (21) in or out until hoist cylinder (22) operates smoothly.

3-123. HOIST CYLINDER RELIEF AND DOUBLE CHECK VALVE REPLACEMENT (CONT).

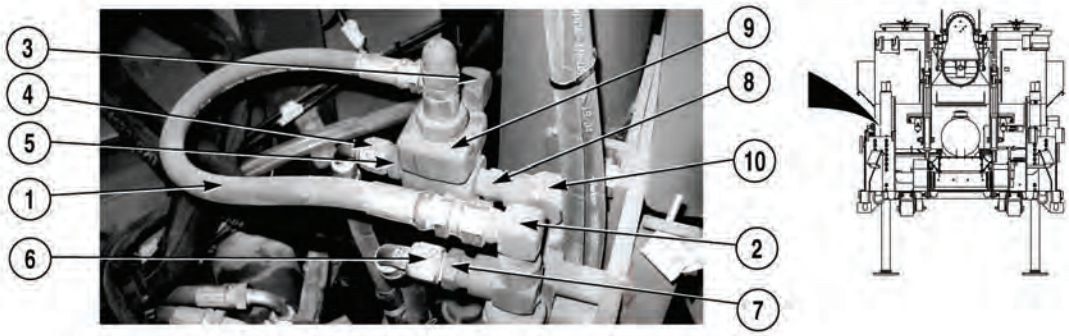

NOTE

Perform Steps (5) through (9) to install relief valve.

(6) Install elbow (3) and two fittings (5) and (8) on relief valve (9).

(7) Install fitting (8) and relief valve (9) on elbow (10).

(8) Install hose (6) on fitting (7).

(9) Install hose (4) on fitting (5).

(10) Install hose (1) on two elbows (2) and (3).

c. Follow-On Maintenance:

- Start engine, (Para 2-19).
- Check for leaks.
- Shut off engine, (Para 2-19).
- Check hydraulic reservoir oil level, (Para 2-6).

END OF TASK

3-124. PRESSURE SWITCH REPLACEMENT (S/N 8RDCD301620HC AND SUBSEQUENT).

This task covers:

a. Removal b. Installation c. Follow-On Maintenance

INITIAL SETUP

Tools and Special Tools
Tool Kit, General Mechanic's: Automotive (Item 19, Appendix I)

Materials/Parts
Sealing Compound (Item 11, Appendix H)
Lockwasher (2239HX)

Equipment Condition
Batteries disconnected, (Para 3-10)
Front engine access panel removed, (Para 3-78)

a. Removal.

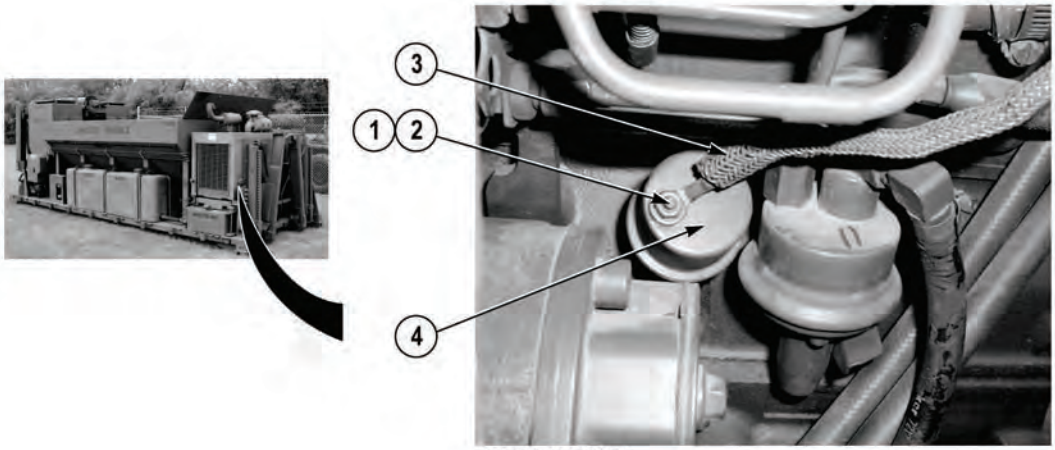

(1) Remove nut (1), lockwasher (2), and wire (3) from sensor (4). Discard lockwasher.

(2) Remove sensor (4) from elbow (5).

3-124. PRESSURE SWITCH REPLACEMENT (S/N 8RDCD301620HC AND SUBSEQUENT) (CONT).

b. Installation.

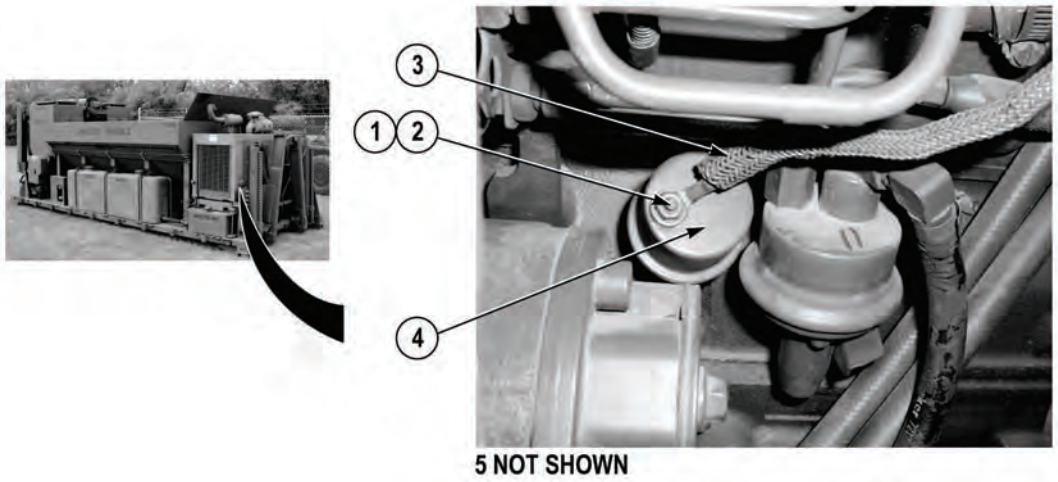

WARNING

Adhesives, solvents, and sealing compounds can burn easily, can give off harmful vapors, and are harmful to skin and clothing. To avoid injury or death, keep away from open fire and use in well-ventilated area. If adhesives, solvents, or sealing compound gets on skin or clothing, wash immediately with soap and water.

(1) Apply sealing compound to threads of sensor (4).

(2) Install sensor (4) on elbow (5).

(3) Install wire (3) on sensor (4) with lockwasher (2) and nut (1).

c. Follow-On Maintenance:

- Install front engine access panel, (Para 3-78).
- Connect batteries, (Para 3-10).

END OF TASK

3-125. TEMPERATURE SENSOR REPLACEMENT (S/N 8RDCD301620HC AND SUBSEQUENT).

This task covers:

a. Removal b. Installation c. Follow-On Maintenance

INITIAL SETUP

Tools and Special Tools
Tool Kit, General Mechanic's: Automotive (Item 19, Appendix I)

Materials/Parts
Sealing Compound, (Item 11, Appendix H)
Lockwasher (MS 35338-43)

Equipment Condition
Batteries disconnected, (Para 3-10)
Front engine access panel removed, (Para 3-78)
Radiator drained, (Para 3-83)

a. Removal.

TOP VIEW

NOTE

Note position of washers prior to removal.

(1) Remove nut (1), lockwasher (2), wire (3), washer (4), and fiber washer (5) from sensor (6). Discard lockwasher.

(2) Remove sensor (6) from engine (7).

3-125. TEMPERATURE SENSOR REPLACEMENT (S/N 8RDCD301620HC AND SUBSEQUENT) (CONT).

b. Installation.

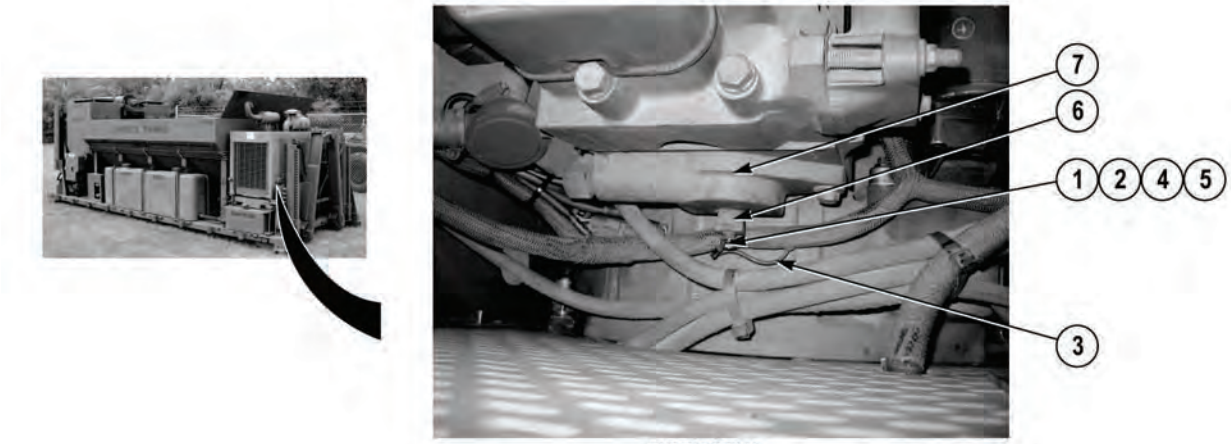

TOP VIEW

WARNING

Adhesives, solvents, and sealing compounds can burn easily, can give off harmful vapors, and are harmful to skin and clothing. To avoid injury or death, keep away from open fire and use in well-ventilated area. If adhesives, solvents, or sealing compound gets on skin or clothing, wash immediately with soap and water.

(1) Apply sealing compound to threads of sensor (6).

(2) Install sensor (6) on engine (7).

NOTE

Install washer as noted prior to removal.

(3) Install fiber washer (5), washer (4), wire (3), lockwasher (2), and nut (1) on sensor (6).

c. Follow-On Maintenance:

- Fill radiator, (Para 3-83).
- Install front engine access panel, (Para 3-78).
- Connect batteries, (Para 3-10).

END OF TASK

3-126. BALL VALVE(S) (WATER) REPLACEMENT.

This task covers:

a. Removal b. Installation

INITIAL SETUP

Tools and Special Tools
Tool Kit, General Mechanic's: Automotive (Item 19, Appendix I)

Materials/Parts
Lockwasher (4) (351AX)
Sealing Compound (Item 11, Appendix H)

Equipment Condition
Engine OFF, (Para 2-19)
Concrete Mobile Mixer unloaded, (Para 2-5)
Water tanks drained, (Para 2-12)

a. Removal.

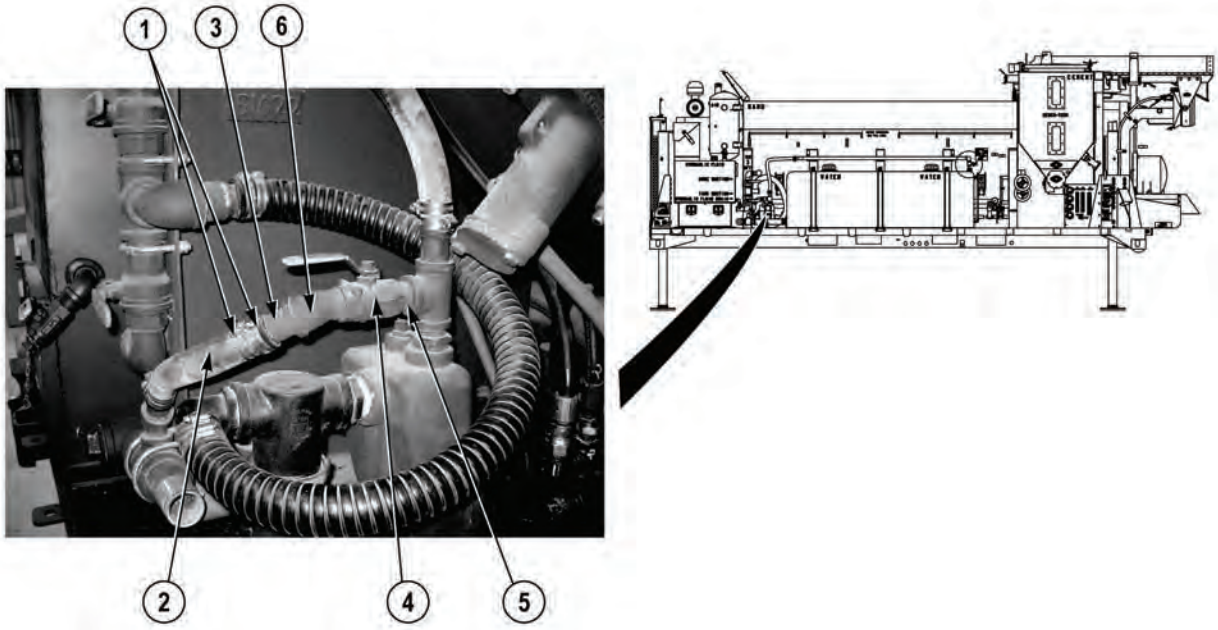

NOTE

- Perform Steps (1) through (3) to remove water pump valve.
- Ball valve on gage panel removed similarly.
- Valve must be in open position.

(1) Loosen two clamps (1) and remove hose (2) from fitting (3).

(2) Remove water pump valve (4) from nipple (5).

(3) Remove fitting (3) and elbow (6) from water pump valve (4).

3-126. BALL VALVE(S) (WATER) REPLACEMENT (CONT).

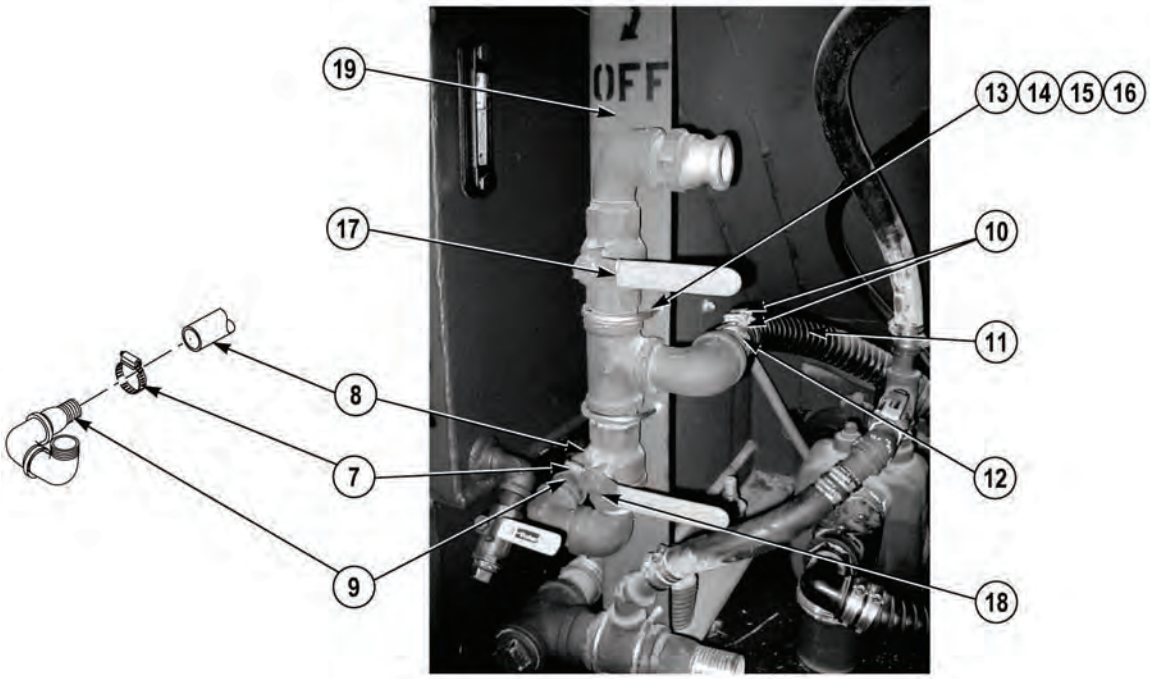

NOTE

Perform Steps (4) through (8) to remove hose and tank suction valves.

(4) Loosen clamp (7) and remove hose (8) from fitting (9).

(5) Loosen two clamps (10) and remove hose (11) from fitting (12).

NOTE

Note position of washers prior to removal.

(6) Remove four nuts (13), lockwashers (14), two washers (15), U-bolts (16), and hose and tank suction valves (17) and (18) from corner column support (19). Discard lockwashers.

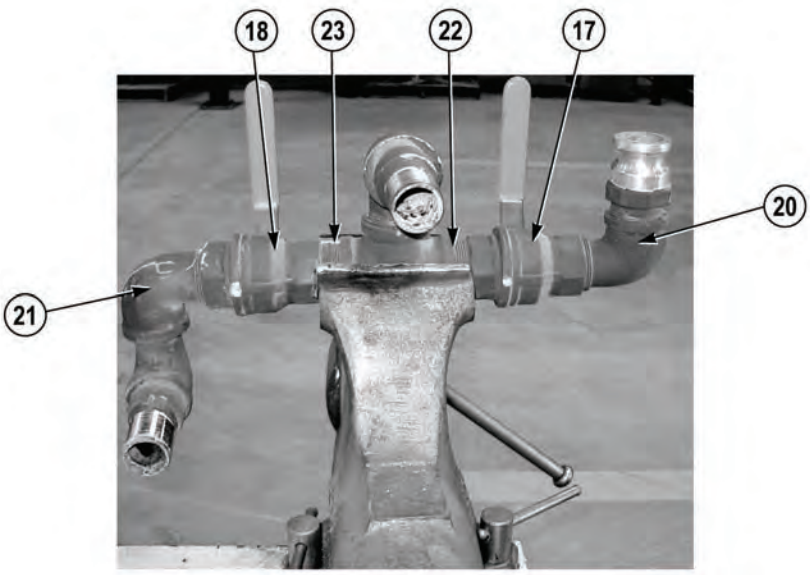

(7) Remove two elbows (20) and (21) from hose and tank suction valves (17) and (18).

(8) Remove hose and tank suction valves (17) and (18) from nipples (22) and (23).

b. Installation.

WARNING

Adhesives, solvents, and sealing compounds can burn easily, can give off harmful vapors, and are harmful to skin and clothing. To avoid injury or death, keep away from open fire and use in well-ventilated area. If adhesives, solvent, or sealing compound gets on skin or clothing, wash immediately with soap and water.

NOTE

Perform Steps (1) through (6) to install hose and tank suction valves.

(1) Apply sealing compound to threads of two nipples (22) and (23), and elbows (20) and (21).

(2) Install hose and tank suction valves (17) and (18) on nipples (22) and (23).

(3) Install two elbows (20) and (21) on hose and tank suction valves (17) and (18).

3-126. BALL VALVE(S) (WATER) REPLACEMENT (CONT).

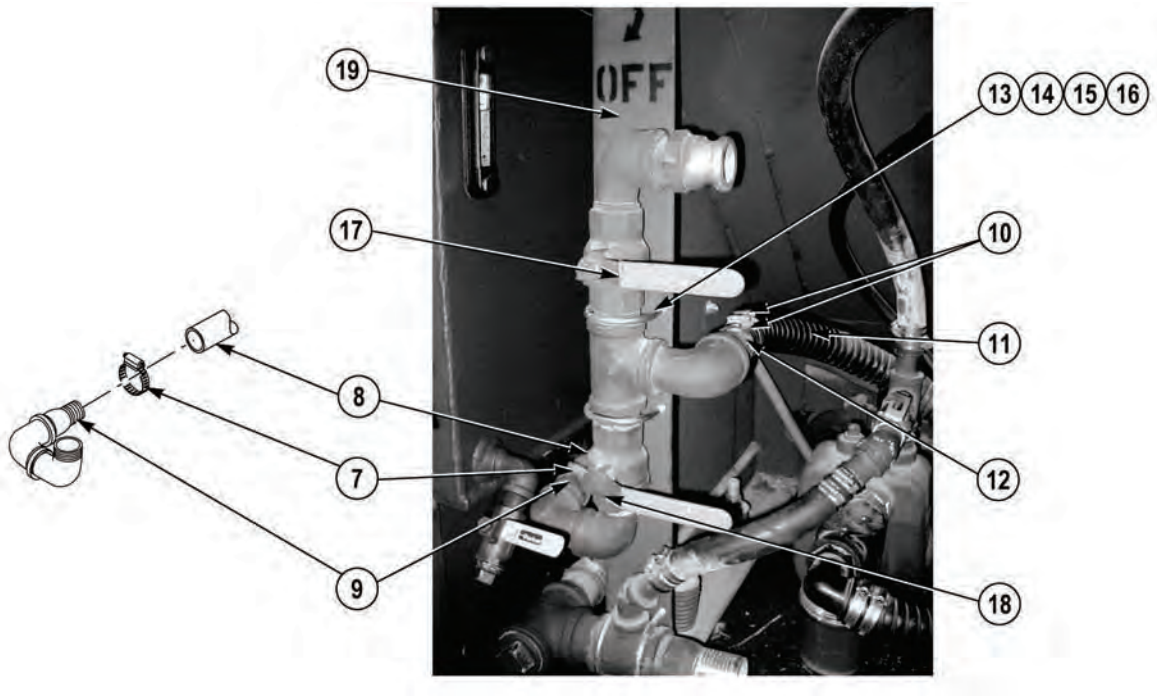

NOTE

Install washers as noted prior to removal.

(4) Install hose and tank suction valves (17) and (18) on corner column support (19) with two U-bolts (16), washers (15), four lockwashers (14), and nuts (13).

(5) Install hose (11) on fitting (12) with two clamps (10).

(6) Install hose (8) on fitting (9) with clamp (7).

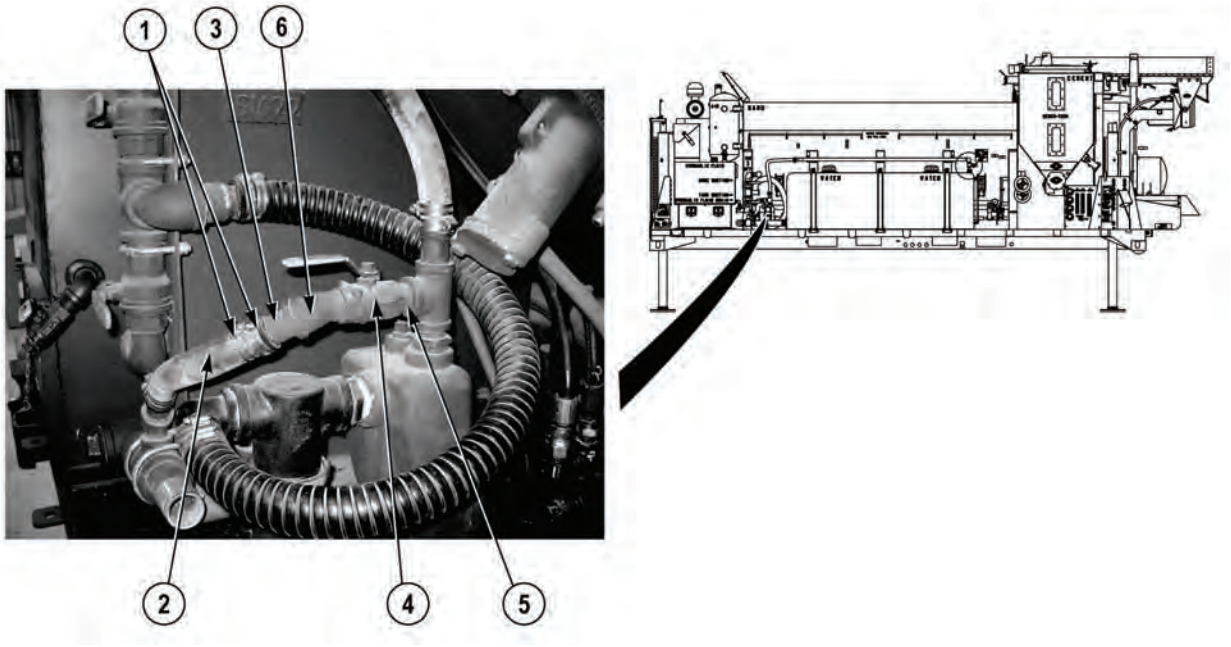

WARNING

Adhesives, solvents, and sealing compounds can burn easily, can give off harmful vapors, and are harmful to skin and clothing. To avoid injury or death, keep away from open fire and use in well-ventilated area. If adhesives, solvent, or sealing compound gets on skin or clothing, wash immediately with soap and water.

NOTE

Perform Steps (7) through (10) to install water pump valve.

(7) Apply sealing compound on threads of nipple (5) and elbow (6).

(8) Install elbow (6) and fitting (3) on water pump valve (4).

(9) Install water pump valve (4) on nipple (5).

(10) Install hose (2) on fitting (3) with two clamps (1).

END OF TASK

3-127. HIGH IDLE CONTROL MODULE REPLACEMENT.

This task covers:

a. Removal
b. Installation
c. Adjustment
d. Follow-On Maintenance

INITIAL SETUP

Tools and Special Tools
Tool Kit, General Mechanic's: Automotive (Item 19, Appendix I)

Materials/Parts
Tags, Identification (Item 13, Appendix H)
Cable Ties (Item 2, Appendix H)
Locknut (7) (MS 51943-31)

Equipment Condition
Batteries disconnected, (Para 3-10)
Front engine access panel removed, (Para 3-78)

a. Removal.

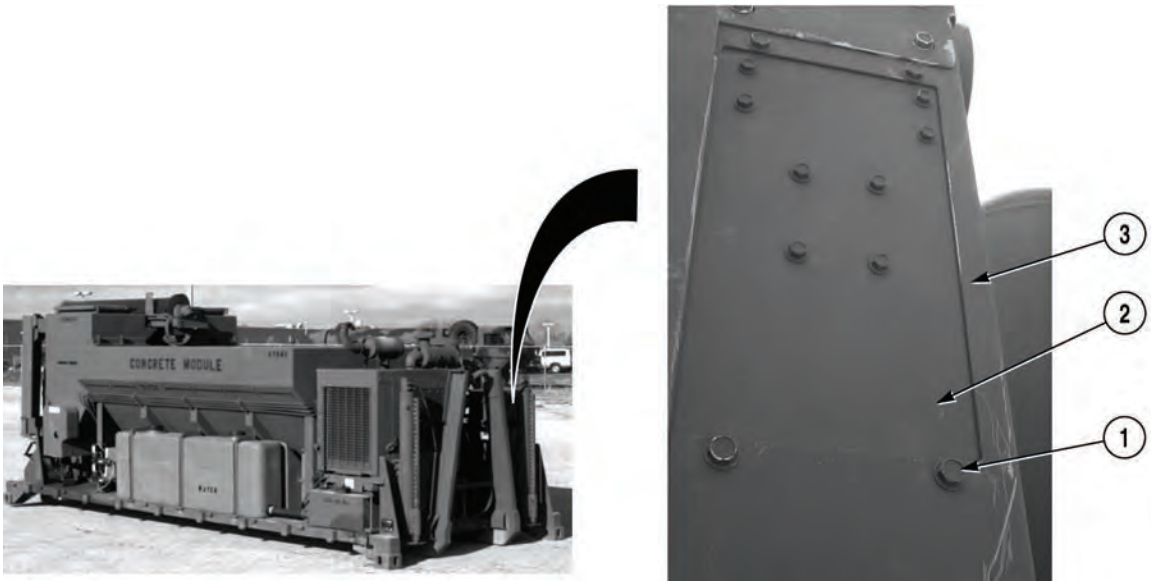

(1) Remove four screws (1) and cover (2) from engine enclosure (3).

NOTE

- Remove cable ties as required.
- Tag and mark wires and connectors prior to removal.

(2) Disconnect connector (4).

(3) Remove locknut (5) and wire (6) from screw (7). Discard locknut.

(4) Disconnect connector (8).

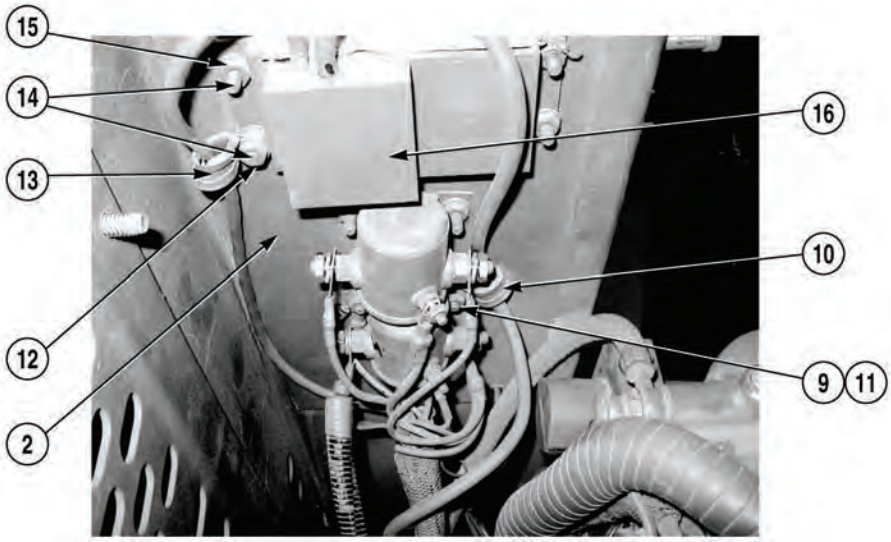

(5) Remove locknut (9) and cushion clip (10) from screw (11). Discard locknut.

(6) Remove locknut (12) and cushion clip (13) from screw (14). Discard locknut.

(7) Remove four locknuts (15), screws (14), and high idle control module (16) from cover (2). Discard locknuts.

3-127. HIGH IDLE CONTROL MODULE REPLACEMENT (CONT).

b. Installation.

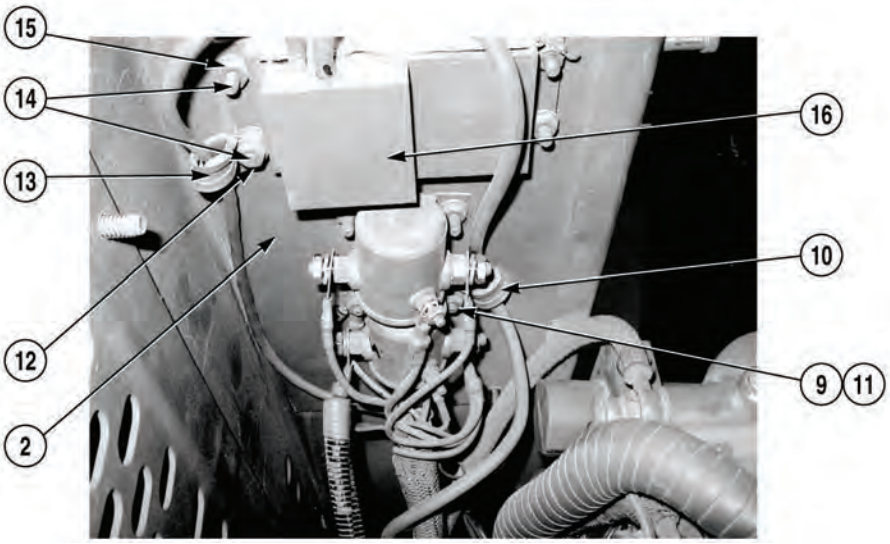

NOTE

Install cable ties as required.

(1) Install high idle control module (16) on cover (2) with four screws (14), and locknuts (15).

(2) Install cushion clip (13) on screw (14) with locknut (12).

(3) Install cushion clip (10) on screw (11) with locknut (9).

(4) Connect connector (8).

(5) Install wire (6) on screw (7) with locknut (5).

(6) Connect connector (4).

c. Adjustment.

WARNING

Batteries are connected during adjustment process. Magnetic switch connections are exposed 12 and 24 volts. Take care not to make contact with magnetic switch connections and engine enclosure. Failure to comply may result in serious injury to personnel and/or damage to equipment.

(1) Connect batteries, (Para 3-10).

(2) Start engine, (Para 2-19).

NOTE

Engine high idle must run at 2250 RPM. Perform Steps (3) and (4) to determine correct RPM.

(3) Operate engine at high idle, (Para 2-19).

(4) Determine engine RPM, (Para 2-1).

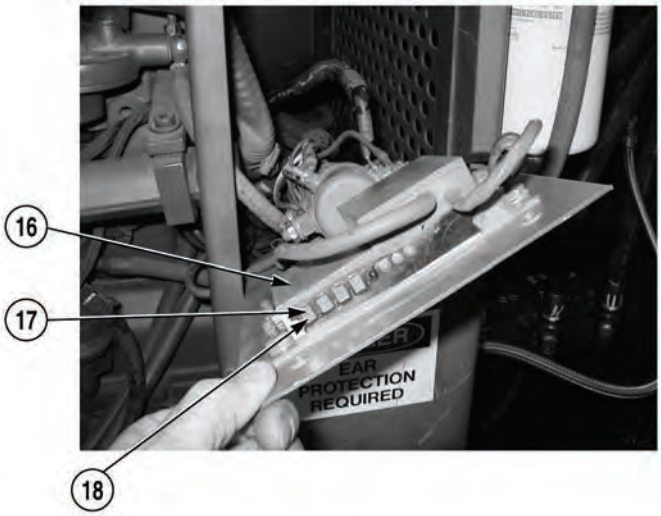

NOTE

If engine RPM does not run at 2250 RPM perform Step (5) to adjust high idle control module.

(5) Adjust screw (17) on trimmer pot (18) of high idle control module (16).

(6) Shut off engine, (Para 2-19).

(7) Install cover (2) on engine enclosure (3) with four screws (1).

d. Follow-On Maintenance:

- Install front engine access panel, (Para 3-78).

END OF TASK

3-128. TIMING PIN REPLACEMENT (S/N 8RDCD301620HC AND SUBSEQUENT)

This task covers:

a. Removal b. Installation c. Follow-On Maintenance

INITIAL SETUP

Tools and Special Tools
Tool Kit, General Mechanic's: Automotive (Item 19, Appendix I)

Materials/Parts
Lubricating Oil, 15W40 (Item 6, Appendix H)
Timing Pin (3903924)
Preformed Packing (3913994)
Retaining Ring (3904849)

Equipment Condition
Air compressor removed (S/N 8RDCD301620HC and Subsequent), (Para 3-110)

a. Removal.

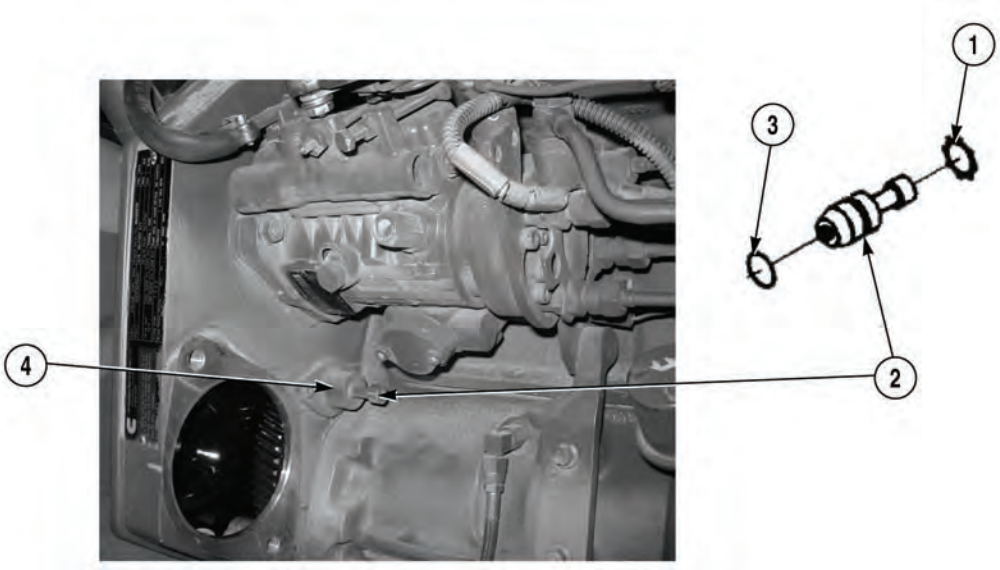

CAUTION

Timing pin housing must not be removed when removing timing pin. Failure to comply may cause damage to equipment.

Remove retaining ring (1), timing pin (2), and preformed packing (3) from timing pin housing (4). Discard preformed packing (3) and retaining ring (1).

b. Installation.

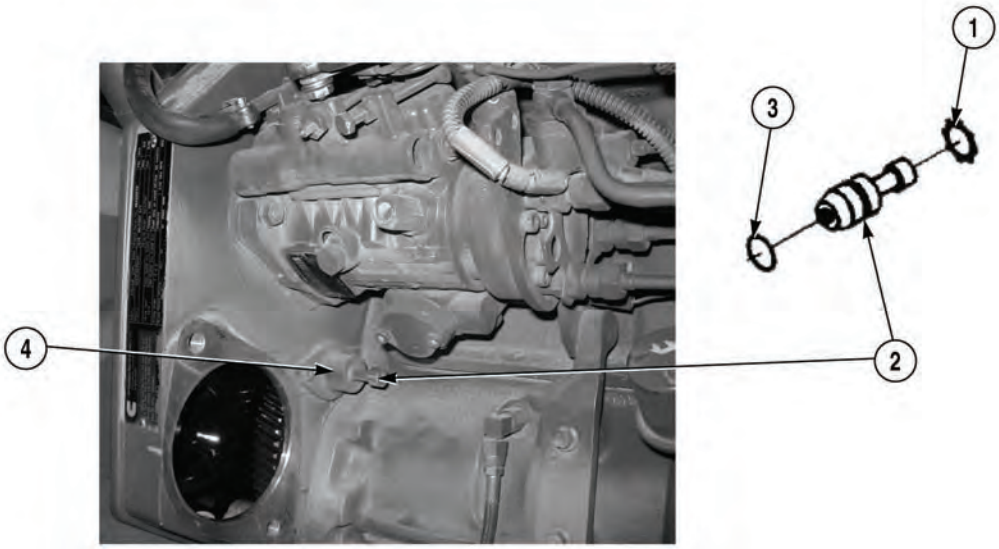

(1) Apply lubricating oil on preformed packing (3).

(2) Install preformed packing (3) and timing pin (2) in timing pin housing (4) with retaining ring (1).

c. Follow-On:

- Install air compressor replacement (S/N 8RDCD301620HC and Subsequent), (Para 3-110).

END OF TASK

3-129. HYDRAULIC HOSE AND TUBE REPLACEMENT.

This task covers:

a. Hydraulic hose locations

INITIAL SETUP

Tools and Special Tools
Tool Kit, General Mechanic's: Automotive (Item 19, Appendix I)
Pan, Drain (Item 12, Appendix I)
Cap and Plug Set (Item 3, Appendix I)

Materials/Parts
Cable Ties, (Item 2, Appendix H)
Tags, Identification (Item 13, Appendix H)
Hydraulic Oil, (Item 5, Appendix H)

Equipment Condition
Engine OFF, (Para 2-19)
Wheels chocked, (TM 9-2320-364-10)

a. Hydraulic Hose Locations.

WARNING

Never disconnect any hydraulic line or fitting without first dropping pressure to zero. Failure to comply may result in serious injury or death to personnel.

NOTE

- This procedure shows the location of hydraulic hoses on the Concrete Mobile Mixer. It will never be necessary to remove all hydraulic hoses at one time.
- Tag and mark hoses and tubes prior to removal.
- Cap and plug all hoses and fittings upon removal.
- Position drain pan under hoses.
- The hydraulic hose tables are used in conjunction with the hydraulic schematics, (Para 3-144). The paragraph above each table identifies which hydraulic schematic is used as a reference.

The following hoses and tubes are identified in Hydraulic Schematics, Hydraulic Supply Lines, (Para 3-144).

Hose/Tube Item No.	(Ref No.)	From	To
Hose 1932-534	48	Hydraulic Pump	Tube (Ref No. 49)
Tube 1932-519	49	Hose (Ref No. 48)	Hose (Ref No. 64)
Hose 1932-537	64	Tube (Ref No. 49)	Hose (Ref No. 54)
Hose 1932-546	54	Hose (Ref No. 64)	Hydraulic Control Valve (Concrete Mobile Mixer Operations) and Hose (Ref No. 47)
Hose 1932-543	47	Hydraulic Control Valve (Concrete Mobile Mixer Operations) and Hose (Ref No. 54)	Mixer Hydraulic pressure gage.
Hose 1932-535	50	Hydraulic Pump	Tube (Ref No. 51)
Tube 1932-518	51	Hose (Ref No. 50)	Hose (Ref No. 65)
Hose 1932-538	65	Tube (Ref No. 51)	Hose (Ref No. 55)
Hose 1932-544	55	Hose (Ref No. 65)	Hydraulic Control Valve (Concrete Mobile Mixer Operations) and Hose (Ref No. 46)
Hose 1932-545	46	Hydraulic Control Valve (Concrete Mobile Mixer Operations) and Hose (Ref No. 55)	Conveyor Hydraulic Pressure Gage
Hose 1932-536	52	Hydraulic Pump	Tube (Ref No. 53)
Tube 1932-517	53	Hose (Ref No. 52)	Hose (Ref No. 66)
Hose 1932-539	66	Tube (Ref No. 53)	Water Pressure Flow Control Valve
Hose 1932-540	63	Water Pressure Flow Control Valve	Hoist Hydraulic Pressure Gage
Hose 1932-542	42	Water Pressure Flow Control Valve	Hose (Ref No. 43)
Hose 1932-552	43	Hose (Ref No. 42)	Hydraulic Control Valve (Concrete Mobile Mixer Operations)
Hose 1932-541	67	Water Pressure Flow Control Valve	Hose (Ref No. 68)
Hose 1932-553	68	Hose (Ref No. 67)	Water Pump/Lift Cylinder Selector Valve
Hose 1932-559	59	Water Pump/Lift Cylinder Selector Valve	Hose (Ref No. 60)
Hose 1932-564	60	Hose (Ref No. 59)	Tube (Ref No. 61)
Tube 1932-516	61	Hose (Ref No. 60)	Hose (Ref No. 62)
Hose 1932-568	62	Tube (Ref No. 61)	Relief Valve on Water Pump
Tube 1932-558	58	Water Pump/Lift Cylinder Selector Valve	Tube (Ref No. 57)
Tube 1932-523	57	Hose (Ref No. 58)	Hose (Ref No. 56)
Hose 1932-563	56	Tube (Ref No. 57)	Hydraulic Control Valve (Lift Cylinders)

3-129. HYDRAULIC HOSE AND TUBE REPLACEMENT (CONT).

Hose/Tube Item No.	(Ref No.)	From	To
Hose 1932-572	1	Hydraulic Control Valve (Lift Cylinders)	Right, Rear Lift Cylinder
Hose 1932-571	2	Hydraulic Control Valve (Lift Cylinders)	Right, Rear Lift Cylinder
Hose 1932-577	3	Hydraulic Control Valve (Lift Cylinders)	Tube (Ref No. 20)
Tube 1932-520	20	Hose (Ref No. 3)	Hose (Ref No. 11)
Hose 1932-581	11	Tube (Ref No. 20)	Left, Rear Lift Cylinder
Hose 1932-578	4	Hydraulic Control Valve (Lift Cylinders)	Tube (Ref No. 21)
Tube 1932-521	21	Hose (Ref No. 4)	Hose (Ref No. 11)
Hose 1932-581	11	Tube (Ref No. 21)	Left, Rear Lift Cylinder
Hose 1932-575	5	Hydraulic Control Valve (Lift Cylinders)	Tube (Ref No. 14)
Tube 1932-528	14	Hose (Ref No. 5)	Tube (Ref No. 18)
Tube 1932-532	18	Tube (Ref No. 14)	Hose (Ref No. 10)
Hose 1932-580	10	Tube (Ref No. 18)	Left, Front Lift Cylinder
Hose 1932-576	6	Hydraulic Control Valve (Lift Cylinder)	Tube (Ref No. 15)
Tube 1932-529	15	Hose (Ref No. 6)	Tube (Ref No. 19)
Tube 1932-533	19	Tube (Ref No. 15)	Hose (Ref No. 10)
Hose 1932-580	10	Tube (Ref No. 18)	Left, Front Lift Cylinder
Hose 1932-573	7	Hydraulic Control Valve (Lift Cylinders)	Tube (Ref No. 12)
Tube 1932-526	12	Hose (Ref No. 7)	Tube (Ref No. 16)
Tube 1932-530	16	Tube (Ref No. 12)	Hose (Ref No. 9)
Hose 1932-579	9	Tube (Ref No. 16)	Right, Front Lift Cylinder
Hose 1932-574	8	Hydraulic Control Valve (Lift Cylinders)	Tube (Ref No. 13)
Tube 1932-527	13	Hose (Ref No. 8)	Tube (Ref No. 17)
Tube 1932-531	17	Tube (Ref No. 13)	Hose (Ref No. 9)
Hose 1932-579	9	Tube (Ref No. 17)	Right, Front Lift Cylinder
Hose 1932-548	44	Hydraulic Control Valve (Concrete Mobile Mixer Operations)	Conveyor Belt Hydraulic Motor
Hose 1932-549	45	Hydraulic Control Valve (Concrete Mobile Mixer Operations)	Conveyor Belt Hydraulic Motor
Hose 1932-547	38	Hydraulic Control Valve (Concrete Mobile Mixer Operations)	Tube (Ref No. 39)
Tube 1932-511	39	Hose (Ref No. 38)	Hose (Ref No. 41)

Hose/Tube Item No.	(Ref No.)	From	To
Hose 1932-550	41	Tube (Ref No. 39)	Tube 1932-515
Tube 1932-515	None	Hose (Ref No. 41)	Hose 1932-551
Hose 1932-551	None	Tube 1932-515	Mixing Auger Hydraulic Motor
Hose 1932-547	38	Hydraulic Control Valve (Concrete Mobile Mixer Operations)	Tube (Ref No. 40)
Tube 1932-512	40	Hose (Ref No. 38)	Hose (Ref No. 41)
Hose 1932-550	41	Tube (Ref No. 40)	Tube 1932-515
Tube 1932-515	None	Hose (Ref No. 41)	Hose 1932-551
Hose 1932-551	None	Tube 1932-515	Mixing Auger Hydraulic Motor
Hose 1932-555	30	Hydraulic Control Valve (Concrete Mobile Mixer Operations)	Double Check Valve (Hoist)
Hose 1932-560	32	Double Check Valve (Hoist)	Tube (Ref No. 36)
Tube 1932-513	36	Hose (Ref No. 32)	Hose (Ref No. 35)
Hose 1932-566	35	Tube (Ref No. 36)	Hydraulic Cylinder (Hoist)
Hose 1932-554	33	Double Check Valve (Hoist)	Relief Valve
Hose 1932-556	31	Hydraulic Control Valve (Concrete Mobile Mixer Operations)	Double Check Valve (Hoist)
Hose 1932-560	32	Relief Valve	Tube (Ref No. 37)
Tube 1932-514	37	Hose (Ref No. 32)	Hose (Ref No. 34)
Hose 1932-565	34	Tube (Ref No. 37)	Hydraulic Cylinder (Hoist)
Hose 1932-557	23	Hydraulic Control Valve (Concrete Mobile Mixer Operations)	Tube (Ref No. 24)
Tube 1932-525	24	Hose (Ref No. 23)	Hose (Ref No. 26)
Hose 1932-561	26	Tube (Ref No. 24)	Double Check Valve (Retractor Hydraulic Cylinders)
Hose 1932-567	27	Double Check Valve (Retractor Hydraulic Cylinders)	Two Hoses (Ref No. 28)
Hose 1932-569	28	Double Check Valve (Retractor Hydraulic Cylinders)	Retractor Hydraulic Cylinder (Right)
Hose 1932-569	28	Double Check Valve (Retractor Hydraulic Cylinders)	Retractor Hydraulic Cylinder (Left)
Hose 1932-557	23	Hydraulic Control Valve (Concrete Mobile Mixer Operations)	Hose (Ref No. 25)
Hose 1932-524	25	Hose (Ref No. 23)	Hose (Ref No. 26)
Hose 1932-561	26	Hose (Ref No. 25)	Double Check Valve (Retractor Hydraulic Cylinders)
Hose 1932-567	27	Double Check Valve (Retractor Hydraulic Cylinders)	Two Hoses (Ref No. 29)
Hose 1932-570	29	Double Check Valve (Retractor Hydraulic Cylinders)	Retractor Hydraulic Cylinder (Right)
Hose 1932-570	29	Double Check Valve (Retractor Hydraulic Cylinders)	Retractor Hydraulic Cylinder (Left)

3-129. HYDRAULIC HOSE AND TUBE REPLACEMENT (CONT).

The following hoses are identified in Hydraulic Schematics, Hydraulic Return Lines, (Para 3-144).

Hose/Tube Item No.	(Ref No.)	From	To
Hose 5220-516-015000	15	Hydraulic Control Valve (Concrete Mobile Mixer Operations)	Hydraulic Return Manifold
Hose 5220-516-01800	21	Hydraulic Control Valve (Concrete Mobile Mixer Operations)	Hydraulic Return Manifold
Hose 1932-592	20	Hydraulic Control Valve (Lift Cylinders)	Tube (Ref No. 19)
Tube 1932-522	19	Hose (Ref No. 20)	Hose (Ref No. 17)
Hose 1932-591	17	Tube (Ref No. 19)	Hydraulic Return Manifold
Hose 5220-424-03250	14	Hydraulic Return Manifold	Pipe (Ref No. 22)
Pipe 5019-170-11500	22	Hose (Ref No. 14)	Relief Valve on Water Pump
Hose 1932-590	9	Hose (Ref No. 22) and Hose (Ref No. 4)	Relief Valve on Water Pump
Hose 1932-589	6	Relief Valve on Water Pump	Water Pump
Hose 5220-424-03450	4	Hose (Ref No. 22) and Hose (Ref No. 9)	Hydraulic Filter

The following hoses are identified in Hydraulic Schematics, Hydraulic Reservoir Lines, (Para 3-144).

Hose/Tube Item No.	(Ref No.)	From	To
Hose 1932-A09	1	Hydraulic Filter	Hydraulic Reservoir
Hose 1932-A98	8	Hydraulic Reservoir	Hydraulic Pump
Hose 1932-A99	9	Hydraulic Reservoir	Hydraulic Pump

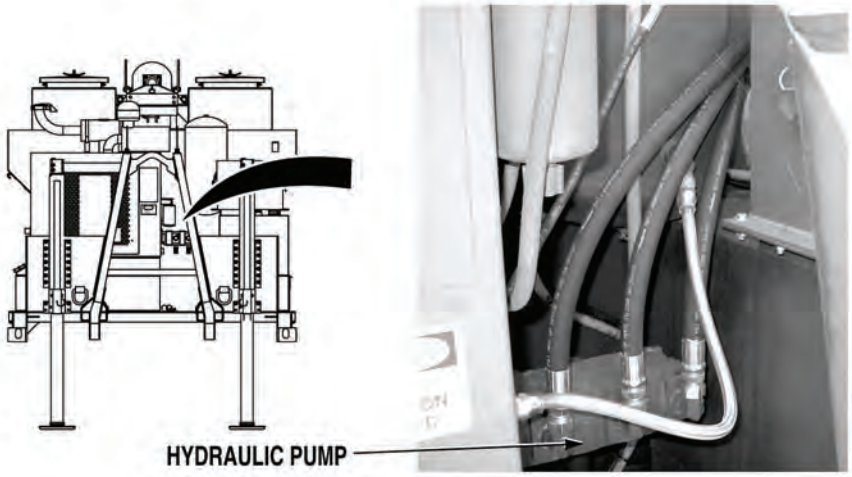
HYDRAULIC PUMP

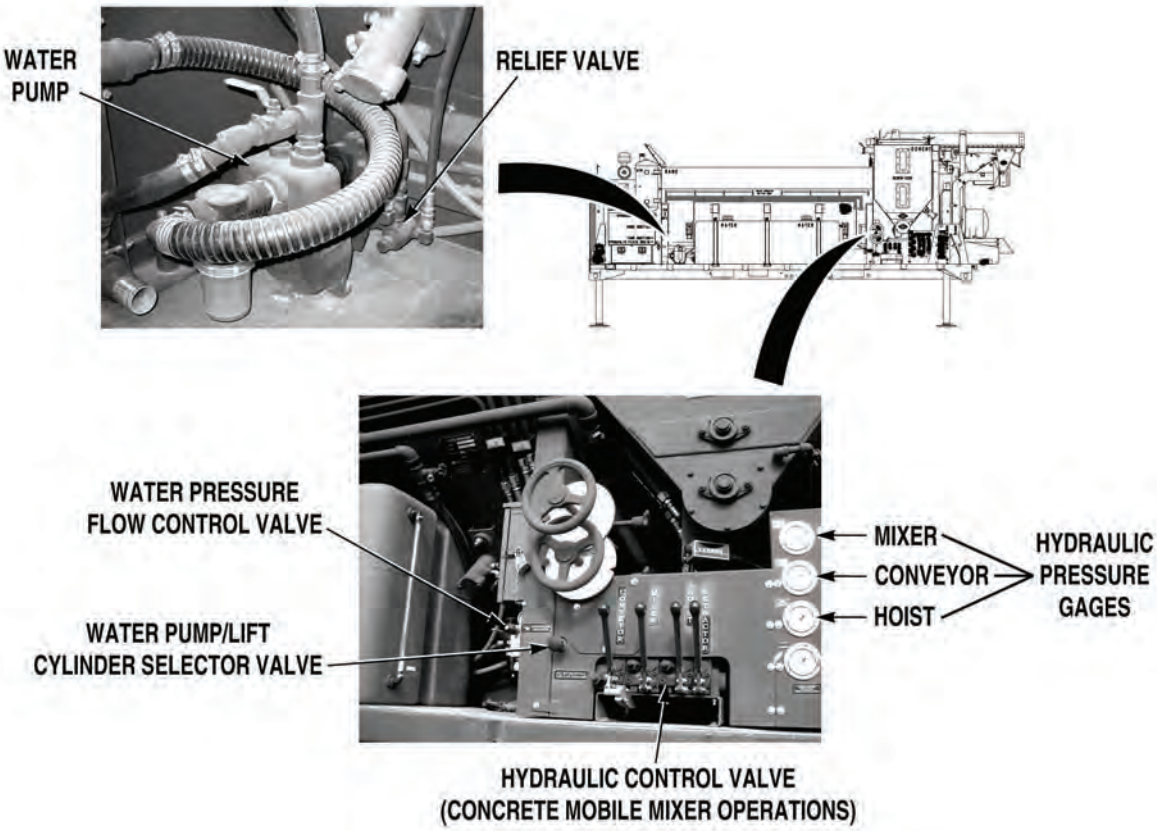
WATER PUMP
RELIEF VALVE
WATER PRESSURE FLOW CONTROL VALVE
WATER PUMP/LIFT CYLINDER SELECTOR VALVE
MIXER
CONVEYOR
HOIST
HYDRAULIC PRESSURE GAGES
HYDRAULIC CONTROL VALVE (CONCRETE MOBILE MIXER OPERATIONS)

3-129. HYDRAULIC HOSE AND TUBE REPLACEMENT (CONT).

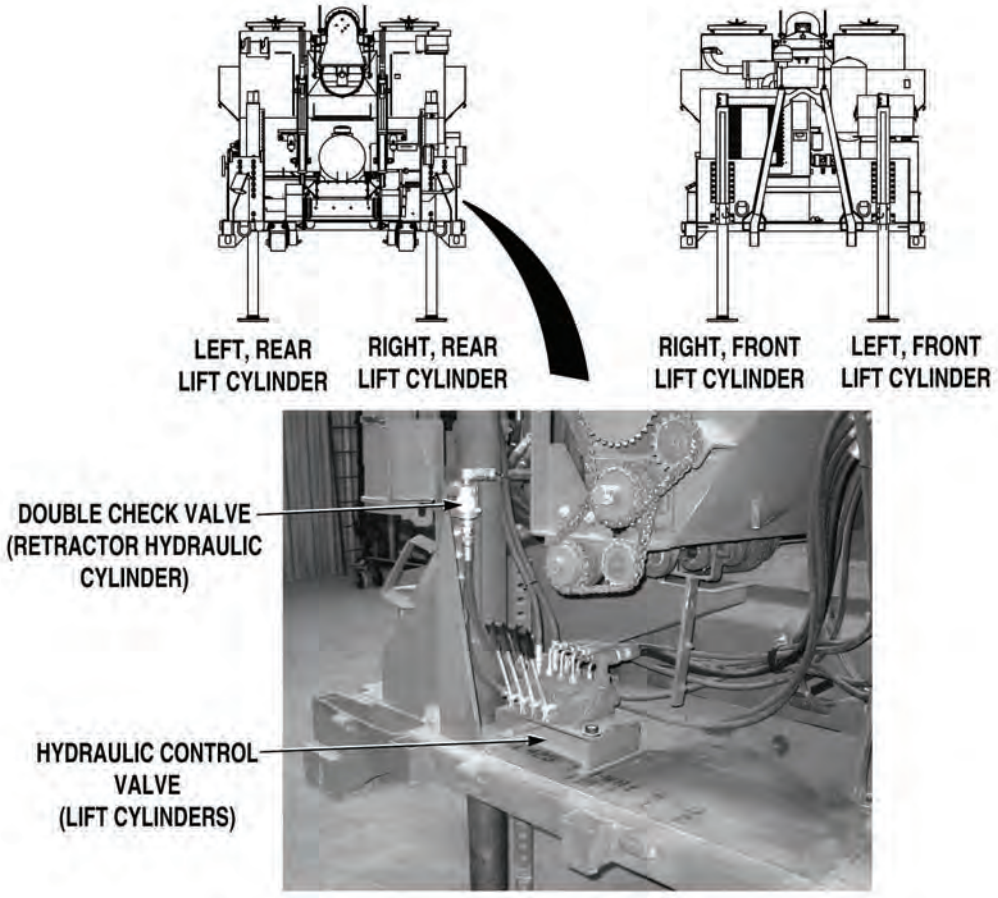

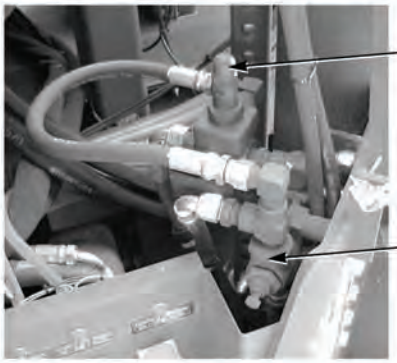
RELIEF VALVE
DOUBLE LOCK VALVE (HOIST)

DOUBLE LOCK VALVE (RETRACTION HYDRAULIC CYLINDER)

CONVEYOR BELT HYDRAULIC MOTOR

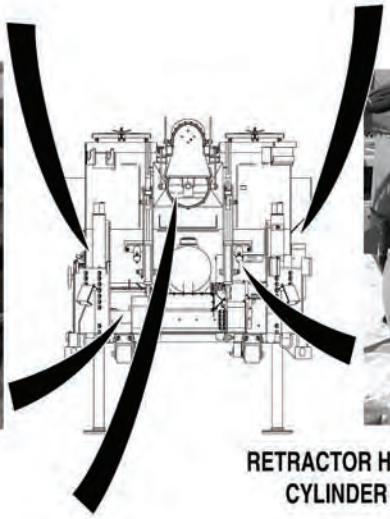

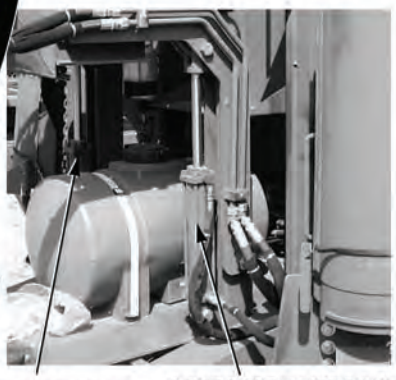
RETRACTOR HYDRAULIC CYLINDER (LEFT)
RETRACTOR HYDRAULIC CYLINDER (RIGHT)

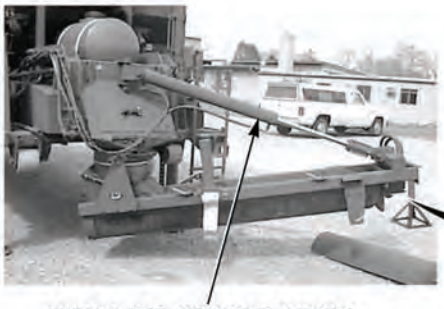
HYDRAULIC CYLINDER (HOIST)

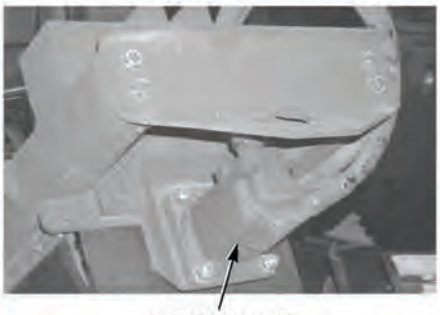
MIXING AUGER HYDRAULIC MOTOR

3-129. HYDRAULIC HOSE AND TUBE REPLACEMENT (CONT).

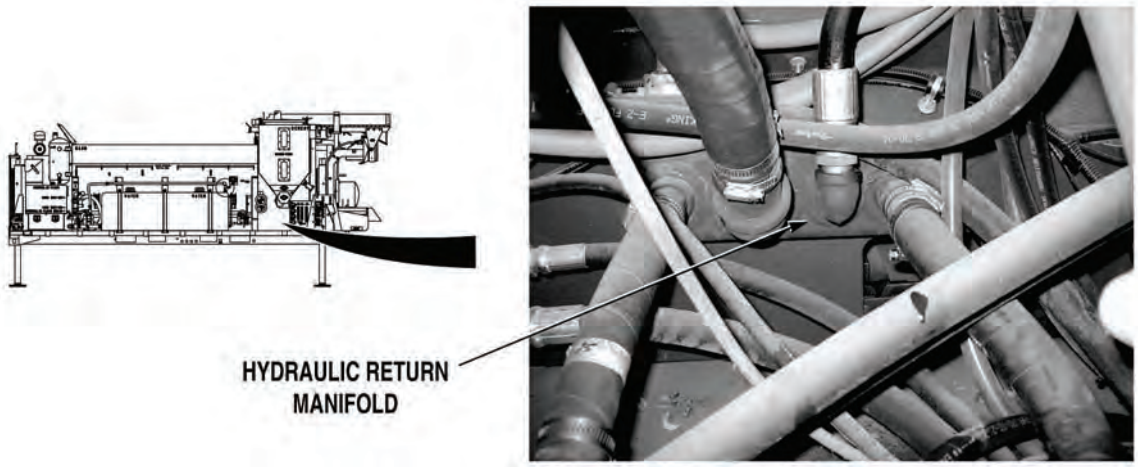

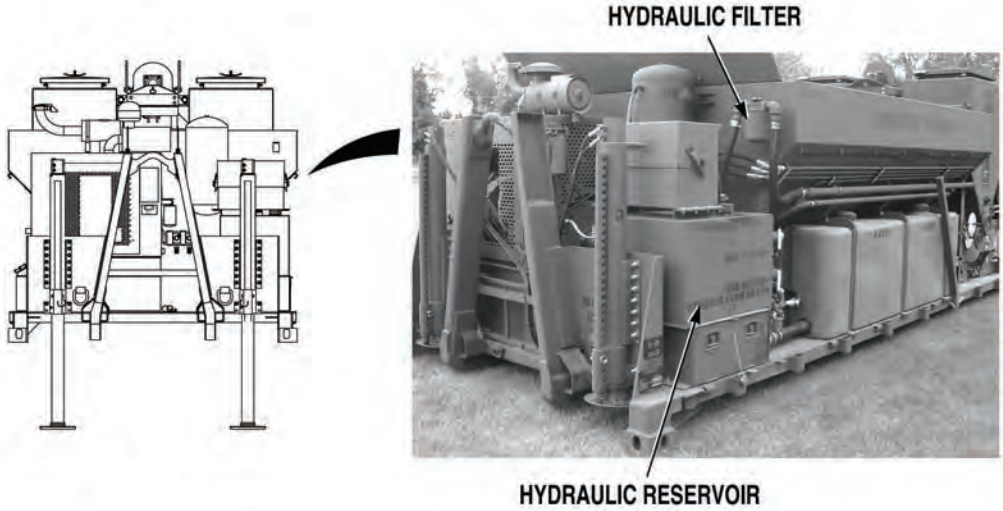

END OF TASK

3-130. ADMIX TUBE REPLACEMENT.

This task covers:

a. Admix Tube Replacement

INITIAL SETUP

Tools and Special Tools
Tool Kit, General Mechanic's: Automotive (Item 19, Appendix I)
Cap and Plug Set (Item 3, Appendix I)

Materials/Parts
Tags, Identification (Item 13, Appendix H)
Cable Ties (Item 2, Appendix H)

Equipment Condition
Engine OFF, (Para 2-19)
Concrete Mobile Mixer unloaded, (Para 2-5)

a. Admix Tube Replacement.

NOTE

- This procedure shows the location of Admix high-flow and low-flow tube replacement. It will never be necessary to remove all tubes at the same time.
- Tag and mark all tubes prior to removal.
- Cap and plug all tubes prior to removal.

3-130. ADMIX TUBE REPLACEMENT (CONT).

Tube Part No. (Ref No.)	From	To
5075-808-09800 (1)	High-Flow Admix Tank	Valve
5075-808-11700 (2)	High-Flow Admix Pump	High-Flow Admix Gage
5075-808-08850 (3)	High-Flow Admix Gage	Air Valve
5075-808-01025 (4)	Air Valve	Air/Water Valve
5075-808-01100 (5)	Low-Flow Admix Tank	Valve
5075-808-11400 (6)	Low-Flow Admix Pump	Low-Flow Admix Gage
5075-808-09450 (7)	Low-Flow Admix Gage	Air Valve

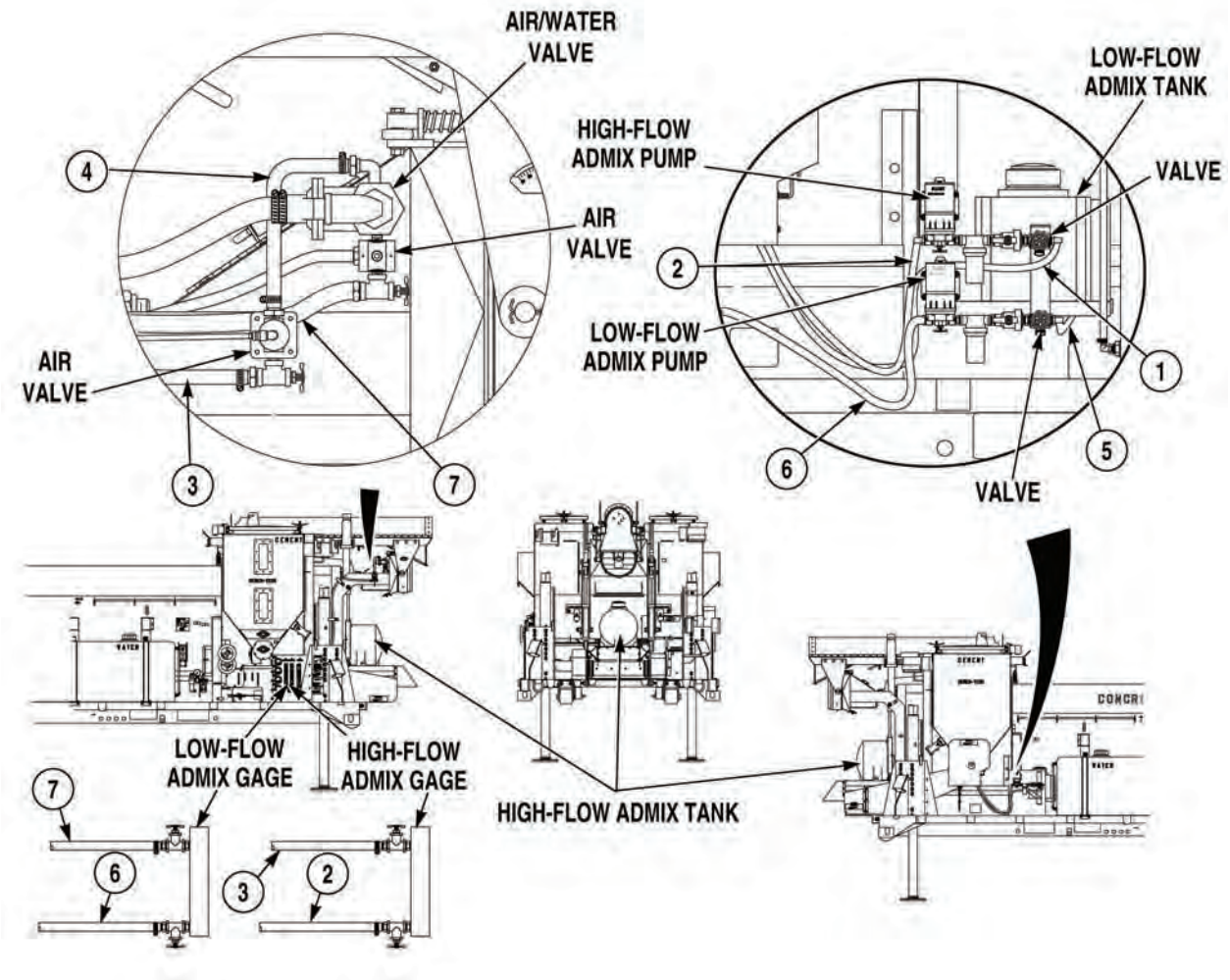

END OF TASK

3-131. WATER HOSE AND PIPE REPLACEMENT.

This task covers:

a. Water Hose and Pipe Location

INITIAL SETUP

Tools and Special Tools
Tool Kit, General Mechanic's: Automotive (Item 19, Appendix I)
Cap and Plug Set (Item 3, Appendix I)

Materials/Parts
Tags, Identification, (Item 13, Appendix H)

Equipment Condition
Engine OFF, (Para 2-19)
Concrete Mobile Mixer unloaded, (Para 2-5)

a. Water Hose and Pipe Locations.

NOTE

- This procedure shows the location of water hoses and pipe. It will never be necessary to remove all hoses and pipes at the same time.
- Tag and mark all hoses and pipes prior to removal.
- Cap and plug all hoses and pipes prior to removal.

Hose or Pipe Part No.	Ref No.	From	To
5400-321-01650	1	Right Side Water Tank	Hose No. 2
5400-321-04475	2	Hose No. 1	Hoses No. 3 and No. 6
5400-321-02100	3	Hoses No. 2 and No. 6	Hoses No. 4 and No. 5
5400-321-01300	4	Left Side Water Tank	Hoses No. 3 and No. 5
5400-161-01050	5	Hoses No. 3 and No. 4	Ball Valve at Water Pump
5400-241-02200	6	Hoses No. 2 and No. 3	Tank Suction Ball Valve
5400-2420-30000	7	Water Strainer	Hose Adapter (When Attached)
5400-2420-03800	8	Tee Between Hose Suction Ball Valve and Tank Suction Ball Valve	Strainer
5400-161-02800	9	Top of Water Pump	Water Pipe No. 10
1932-A92	10	Hose No. 9	Hose No. 11
5400-161-04200	11	Water Pipe No. 10	Hose No. 12
5400-121-03550	12	Hose No. 11	Ball Valve (Water Control)
1932-582	13	Ball Valve (Water Control)	Water Pressure Gage
5400-121-02900	14	Ball Valve (Water Control)	Water Flow Gage
5400-121-08850	15	Water Flow Gage	Air/Water Valve

3-131. WATER HOSE AND PIPE REPLACEMENT (CONT).

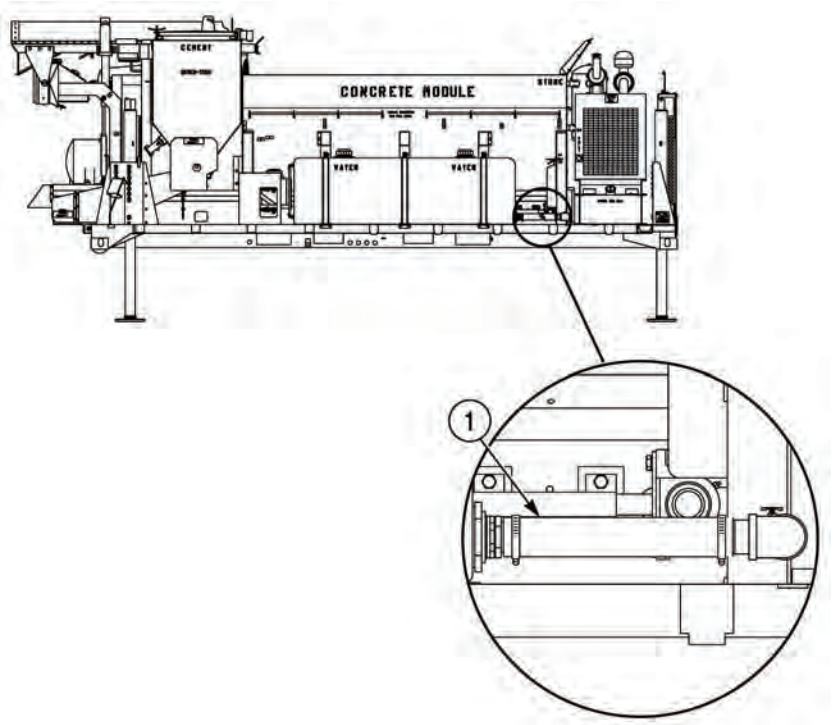

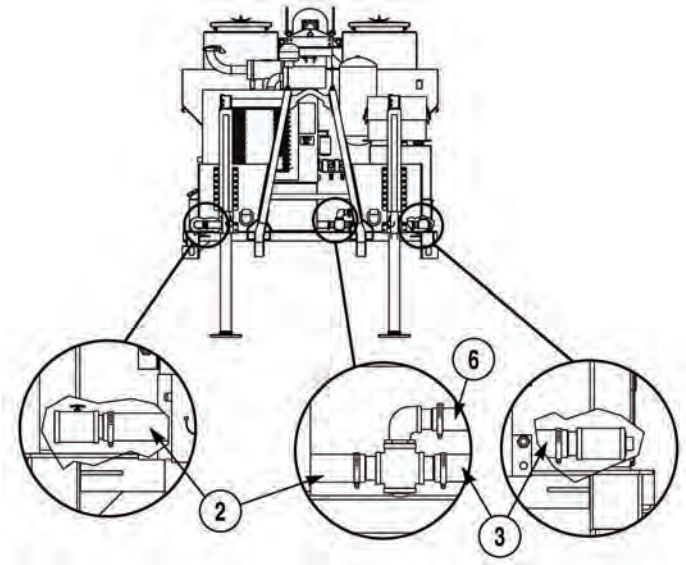

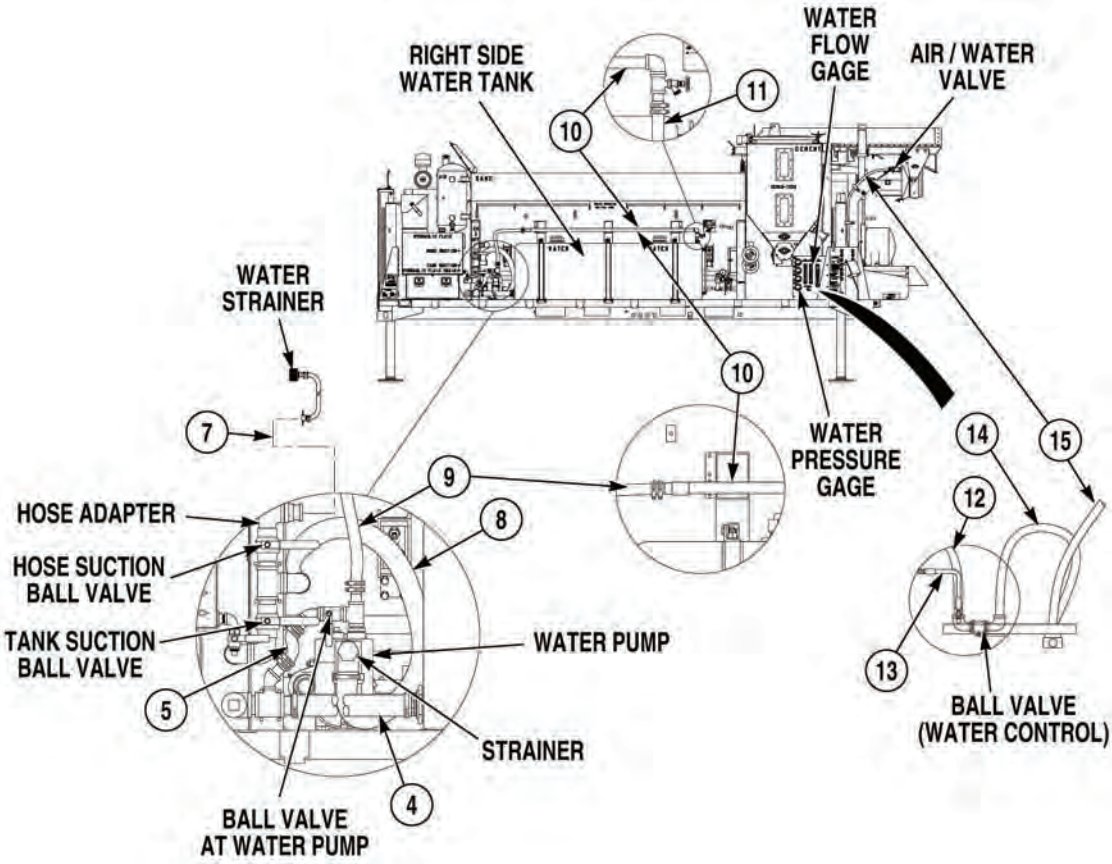
RIGHT SIDE
WATER TANK
WATER
FLOW
GAGE
AIR / WATER
VALVE
11
10
WATER
STRAINER
7
10
WATER
PRESSURE
GAGE
14
15
9
12
HOSE ADAPTER
8
HOSE SUCTION
BALL VALVE
TANK SUCTION
BALL VALVE
WATER PUMP
13
5
BALL VALVE
(WATER CONTROL)
STRAINER
4
BALL VALVE
AT WATER PUMP

END OF TASK

3-132. AIR LINE REPLACEMENT.

This task covers:

a. Air Line Locations

INITIAL SETUP

Tools and Special Tools
Tool Kit, General Mechanic's: Automotive (Item 19, Appendix I)
Cap and Plug Set (Item 3, Appendix I)

Materials/Parts
Tags, Identification (Item 13, Appendix H)
Cable Ties (Item 2, Appendix H)

Equipment Condition
Air reservoir drained, (Para 3-33)

a. Air Line Locations.

NOTE

- This procedure shows the location of air hoses and tubes on the Concrete Mobile Mixer. It will never be necessary to remove all air hoses and tubes at one time.
- As items are removed, cap and plug all air hoses, tubes, and fittings.
- Tag and mark all air hoses and tubes prior to removal.
- Remove cable ties as required.
- Remove clamps and support brackets as required.
- Inspect all air hoses, tubes, and fittings for cracks, bends, nicks, dents, stripping threads, and cuts. Replace all damaged parts.
- The air line table below is used in conjunction with the pneumatic schematic, (Para 3-145).

Air Hose/Tube Item No.	Ref No.	From	To
Hose (Braided Steel) 5400-084	10	Air Compressor	Air Line Support Bracket
Hose (Braided Steel) 5400-084	10	Air Line Support Bracket	Air Reservoir
Hose 1932-586	9	Air Compressor (Governor)	Air Reservoir
Hose 5400-081-08600	4	Air Reservoir	Hose (Ref No. 47)
Hose 5400-081-02450	47	Hose (Ref No. 4)	Hose (Ref No. 47)

Air Hose/Tube Item No.	Ref No.	From	To
Hose 5400-081-02450	47	Hose (Ref No. 47)	Hose (Ref No. 48)
Hose 5400-081-01450	48	Hose (Ref No. 47)	Ball Valve at Air Filter Regulator/ Lubricator Assembly
Hose 5400-081-07000	74	Air Gage (Below) at Filter Regulator/Lubricator Assembly	Cement Fluffer Control Valve
Tubing 5075-204-04700	52	Air Valve at Air Filter Regulator/ Lubricator Assembly	Tubing (Ref No. 53) and Tubing (Ref No. 57)
Tubing 5075-204-00350	53	Tubing (Ref No. 52) and Tubing (Ref No. 57)	Air Solenoid
Tubing 5075-204-10000	54	Air Solenoid	Low-Flow Admix Air Valve
Tubing 5075-204-09500	55	Air Solenoid	High-Flow Admix Air Valve
Tubing 5075-204-02150	57	Tubing (Ref No. 53) and Tubing (Ref No. 52)	Tubing (Ref No. 58) and Tubing (Ref No. 59)
Tubing 5075-204-06700	58	Tubing (Ref No. 57) and Tubing (Ref No. 59)	Water Valve
Tubing 5075-204-00500	21	Water Valve	Vents to Air
Tubing 5075-204-02600	59	Tubing (Ref No. 57) and Tubing (Ref No. 58)	Air Valve on Chain Oiler
Tubing 5075-204-05300	60	Chain Oiler	Chain
Tubing 5075-204-02300	61	Chain Oiler	Chain
Tubing 5075-204-00500	42	Air Solenoid	Vents to Air
Tubing 5075-204-04400	56	Air Solenoid	Air Gage (Below) at Air Filter Regulator/Lubricator Assembly
Hose 5400-081-01350	62	Air Valve at Air Filter Regulator/ Lubricator Assembly	Hose (Ref No. 63) and Hose (Ref No. 67)
Hose 5400-081-07400	63	Hose (Ref No. 67) and Hose (Ref No. 62)	Air Cam Valve
Hose 5400-081-04300	64	Air Cam Valve	Hose (Ref No. 65) and Hose (Ref No. 66)
Hose 5400-081-02650	65	Hose (Ref No. 64) and Hose (Ref No. 66)	Air Vibrator
Hose 5400-081-02100	66	Hose (Ref No. 64) and Hose (Ref No. 65)	Air Vibrator

3-132. AIR LINE REPLACEMENT (CONT).

Air Hose/Tube Item No.	Ref No.	From	To
Hose 5400-081-04650	67	Hose (Ref No. 62) and Hose (Ref No. 63)	Air Cam Valve
Hose 5400-081-05450	68	Air Cam Valve	Ball Valve
Hose 5400-081-02700	69	Ball Valve	Hose (Ref No. 70)
Hose 5400-081-02350	70	Hose (Ref No. 69)	Hose (Ref No. 71) and Hose (Ref No. 73)
Hose 5400-081-02350	71	Hose (Ref No. 70) and Hose (Ref No. 73)	Hose (Ref No. 72)
Hose 5400-081-02400	72	Hose (Ref No. 71)	Air Vibrator
Hose 5400-081-02450	73	Hose (Ref No. 70) and Hose (Ref No. 71)	Hose (Ref No. 81)
Hose 5400-081-02600	81	Hose (Ref No. 73)	Air Vibrator
Hose 1932-A60	34	Basic Issue Items (BII)	Connect to Quick Disconnect or Air Filter Regulator/Lubricator Assembly

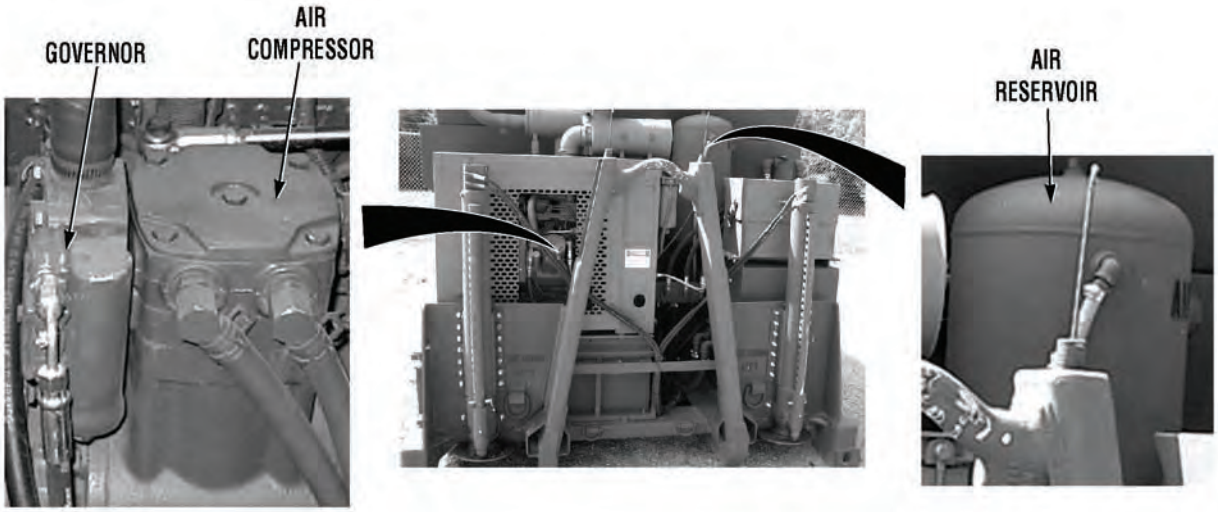
GOVERNOR
AIR COMPRESSOR
AIR RESERVOIR

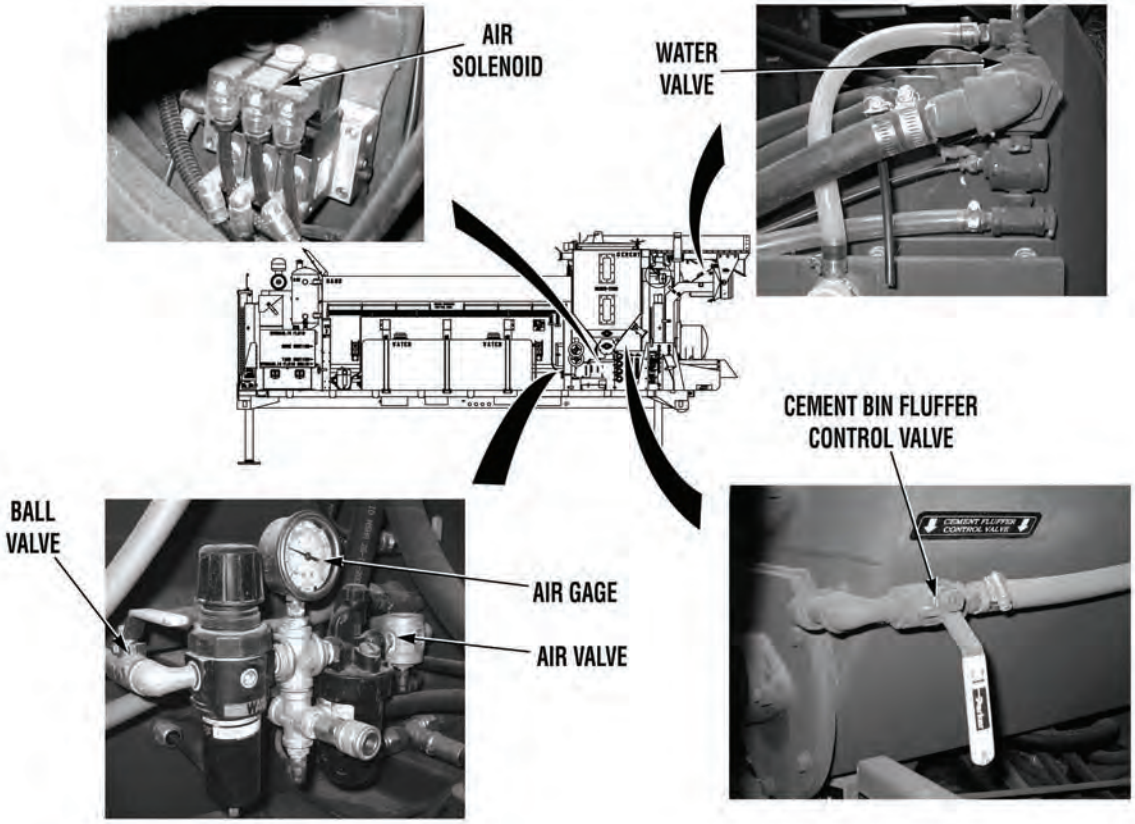
AIR SOLENOID
WATER VALVE
CEMENT BIN FLUFFER CONTROL VALVE
BALL VALVE
AIR GAGE
AIR VALVE

3-132. AIR LINE REPLACEMENT (CONT).

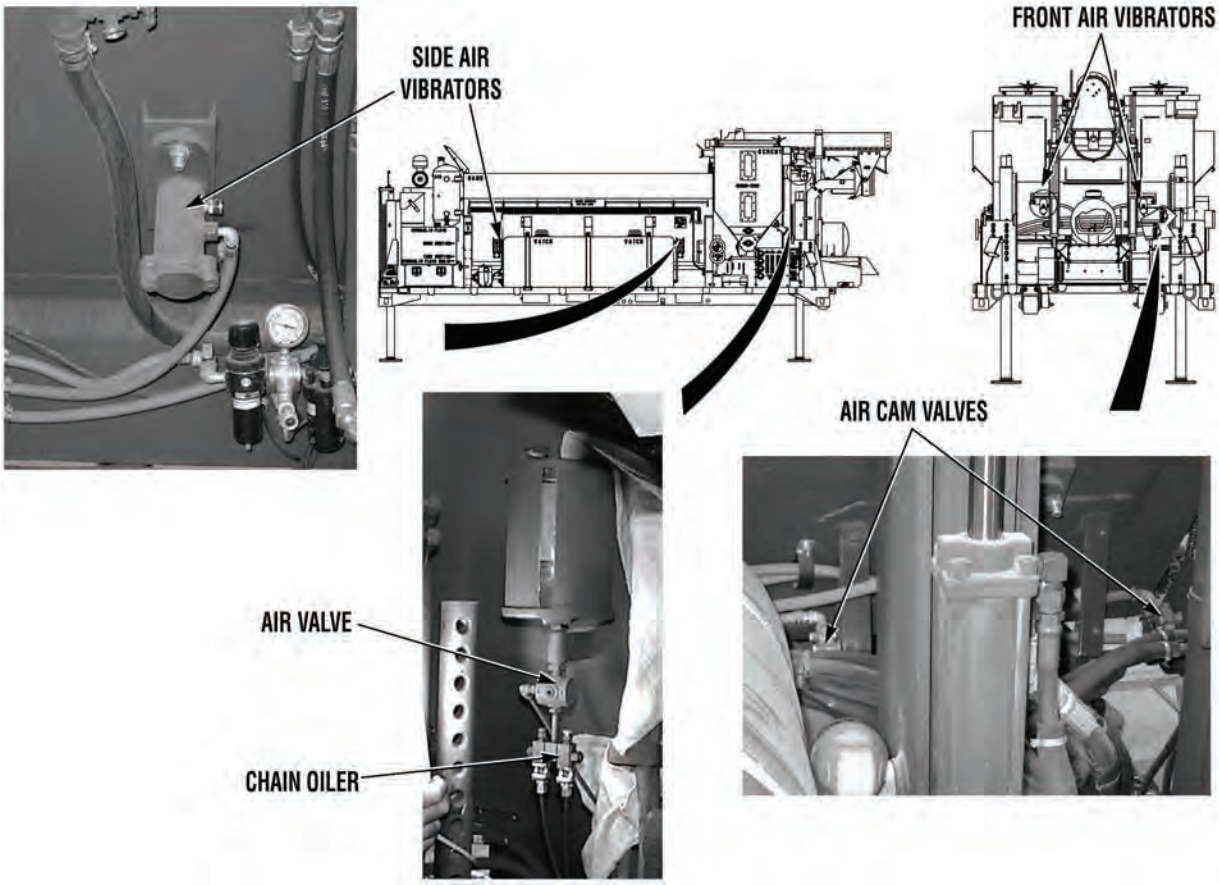

END OF TASK

3-133. FUEL LINES REPLACEMENT (S/N 8RDCD301620HC AND SUBSEQUENT).

This task covers:

a. Fuel Line Locations

b. Follow-On Maintenance

INITIAL SETUP

Tools and Special Tools
Tool Kit, General Mechanic's: Automotive (Item 19, Appendix I)
Pan, Drain (Item 12, Appendix I)
Cap and Plug Set (Item 3, Appendix I)

Materials/Parts
Tags, Identification (Item 13, Appendix H)
Cable Ties (Item 2, Appendix H)
Oil, Fuel, Diesel (Item 8, Appendix H)

Equipment Condition
Front engine access panel removed, (Para 3-78)

a. Fuel Line Locations.

WARNING

Diesel fuel is flammable. Do not perform this procedure near fire, flames, or sparks. Failure to comply could result in injury or death to personnel.

NOTE

- This procedure shows the location of fuel lines on the Concrete Mixer Module. It will never be necessary to remove all fuel lines at one time.
- Position drain pan under fuel lines being removed to catch excess fuel.
- Tag and mark all hoses prior to removal.
- Cap and plug all hoses upon removal.
- Remove and install cable ties as required.

Hose Item No.	From	To
1	Fuel Tank	Inline Fuel Filter
2	Inline Fuel Filter	Fuel Transfer Pump
3	Fuel Transfer Pump	Fuel Filter
4	Fuel Filter	Fuel Filter Head
5	Fuel Filter Head	Fuel Injector Pump
6	Fuel Injector Pump	Fuel Tank (Return)

3-133. FUEL LINES REPLACEMENT (S/N 8RDCD301620HC AND SUBSEQUENT) (CONT).

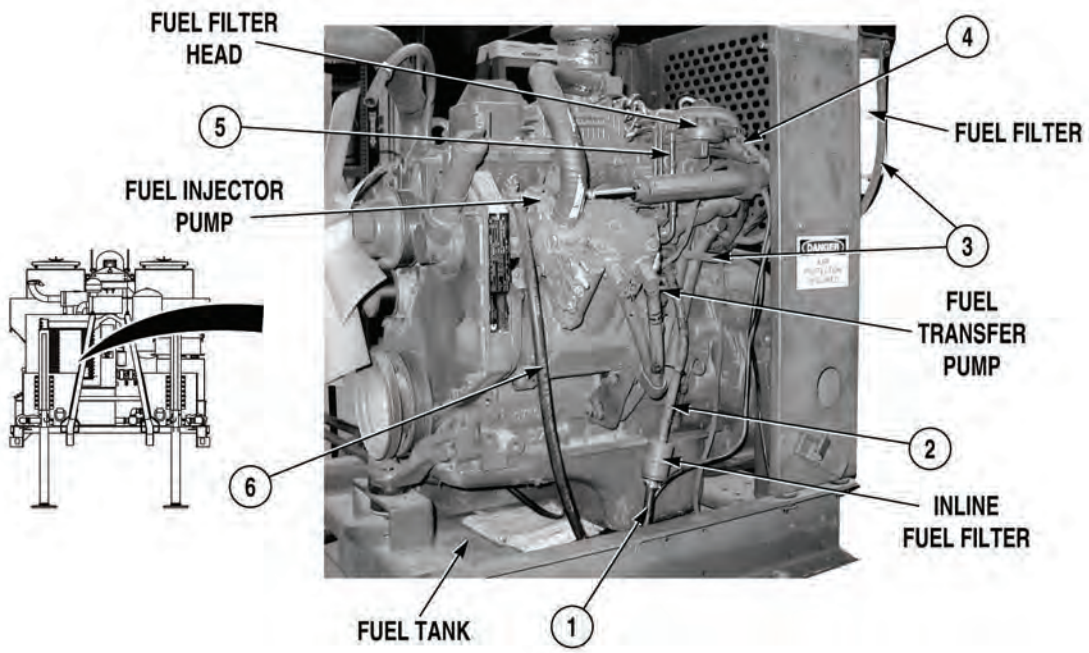

b. Follow-On Maintenance:

- Install front engine access panel, (Para 3-78).
- Prime fuel system, if required, (Para 3-97 or 3-98).

END OF TASK

3-134. MAIN WIRE HARNESS REPLACEMENT.

This task covers:

a. Removal b. Installation c. Follow-On Maintenance

INITIAL SETUP

Tools and Special Tools
Tool Kit, General Mechanic's: Automotive (Item 19, Appendix I)

Materials/Parts
Tags, Identification (Item 13, Appendix H)
Locknut (5) (SN-524NE-24)
Lockwasher (3) (MS 35335-62)

Personnel Required
Two

Equipment Condition
Concrete Mobile Mixer unloaded, (Para 2-5)
Batteries disconnected, (Para 3-10)
Water tank removed (left side), (Para 3-42)
Aggregate bins empty (sand side only), (Para 2-13)

a. Removal.

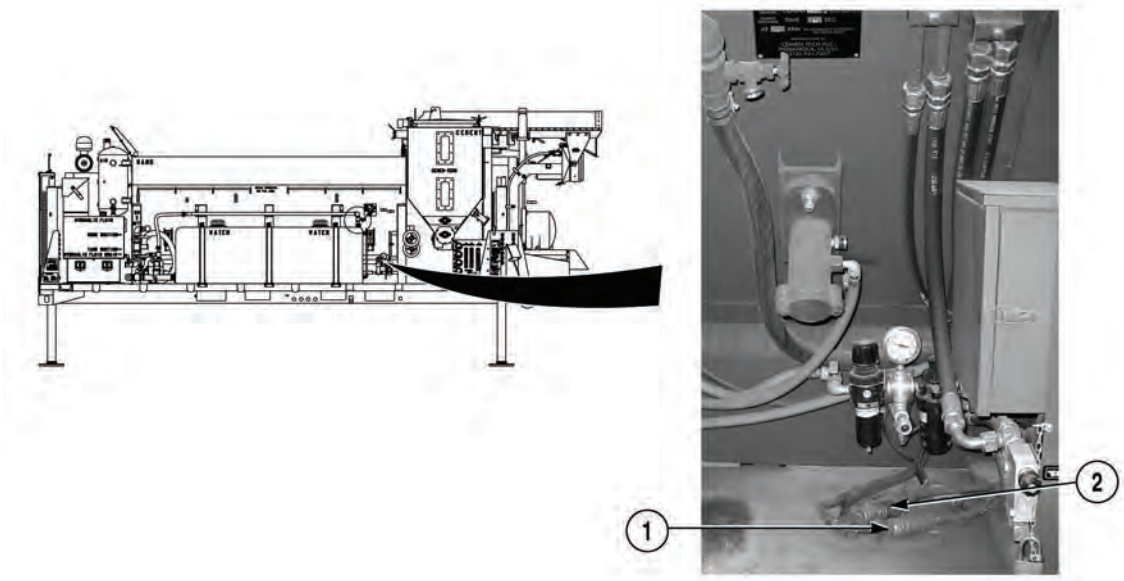

NOTE

Tag and mark connectors prior to removal.

(1) Disconnect two connectors (1) and (2).

3-134. MAIN WIRE HARNESS REPLACEMENT (CONT).

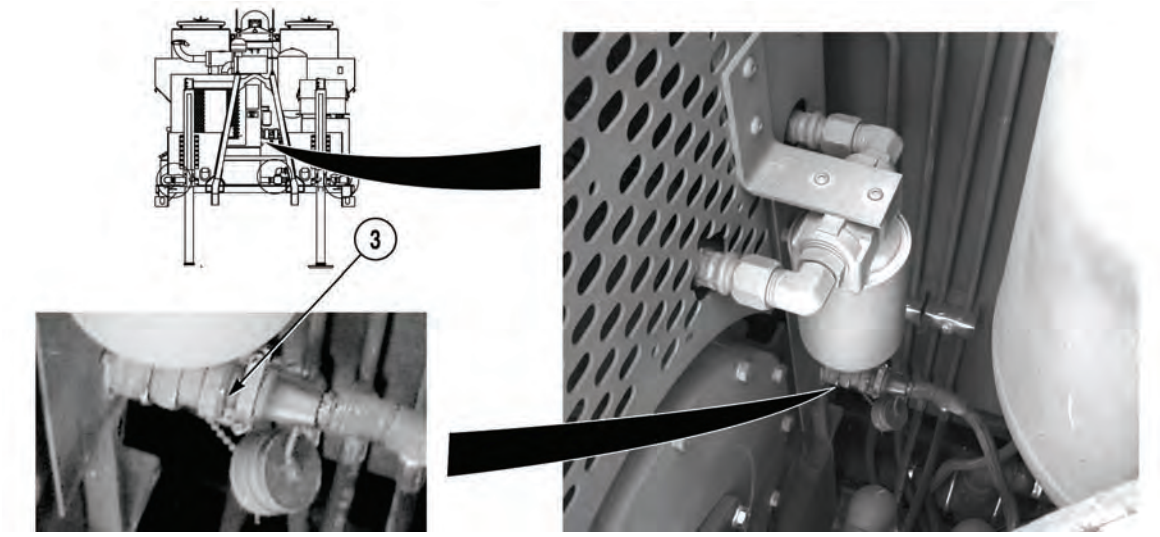

(2) Disconnect connector (3).

NOTE

- Removal of wire harness requires removal of three nuts, lockwashers, and screws to allow clearance for connector (2) to be removed.
- Sand aggregate bin grating needs to be removed to access three nuts, lockwashers, and screws.

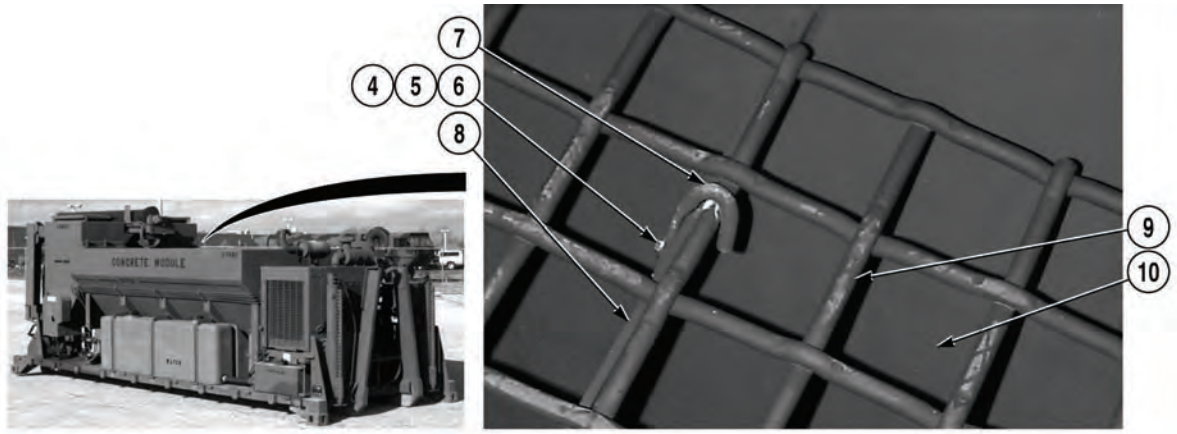

(3) Remove five locknuts (4), 10 washers (5), five screws (6), and hooks (7) from three brackets (8). Discard locknuts.

WARNING

Aggregate bin grating is heavy, do not lift aggregate bin grating without the aid of an assistant and suitable lifting device. Failure to comply may result in serious injury to personnel.

(4) Attach lifting device to aggregate bin grating (9).

(5) With the aid of an assistant and a suitable lifting device, remove aggregate bin grating (9) from Concrete Mobile Mixer (10).

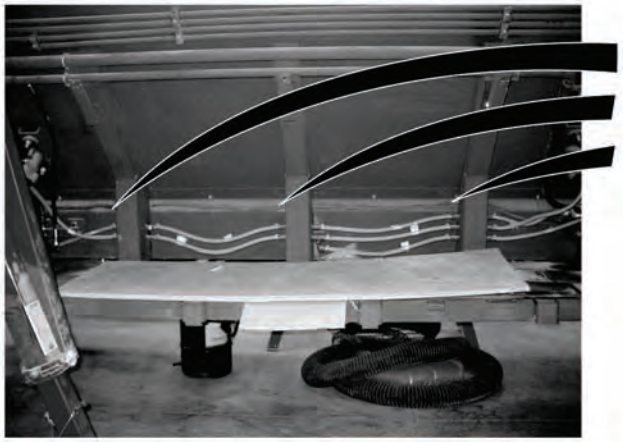

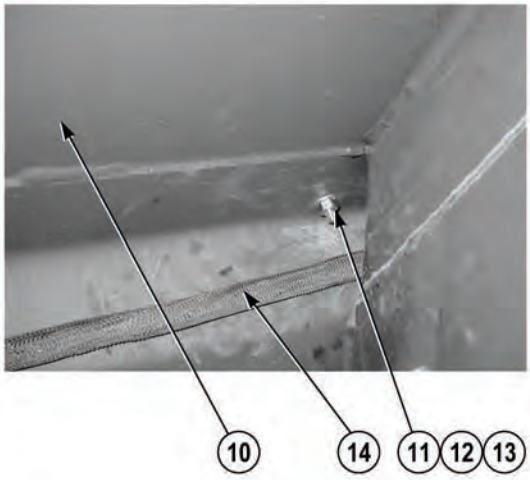

(6) Remove three nuts (11), lockwashers (12), and screws (13) from Concrete Mobile Mixer (10). Discard lockwashers.

(7) Remove wire harness (14) from Concrete Mobile Mixer (10).

b. Installation.

(1) Position wire harness (14) on Concrete Mobile Mixer (10).

(2) Install three screws (13), lockwashers (12), and nuts (11) on Concrete Mobile Mixer (10).

3-134. MAIN WIRE HARNESS REPLACEMENT (CONT).

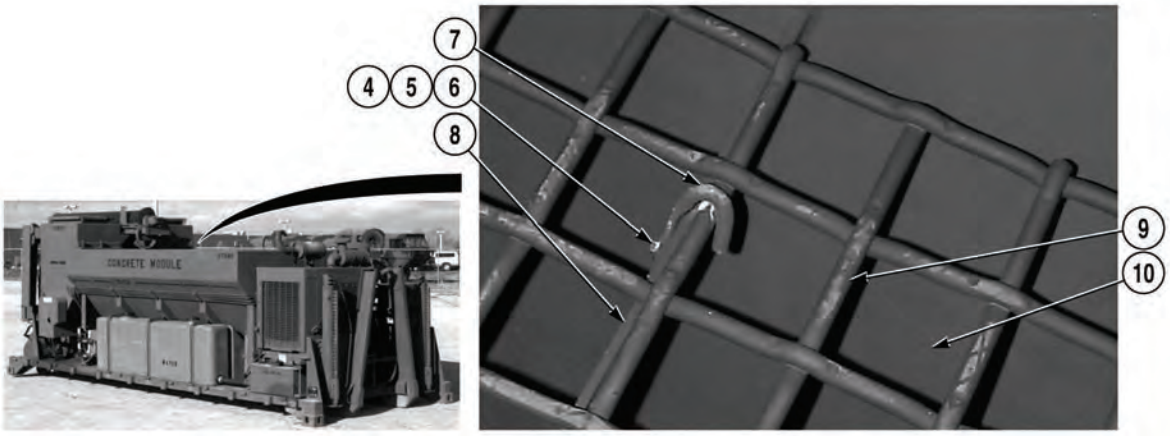

WARNING

Aggregate bin grating is heavy, do not lift aggregate bin grating without the aid of an assistant and suitable lifting device. Failure to comply may result in serious injury to personnel.

(3) With the aid of an assistant and a suitable lifting device, install aggregate bin grating (9) on Concrete Mobile Mixer (10) and three brackets (8) with five screws (6), ten washers (5), five hooks (7), and locknuts (4).

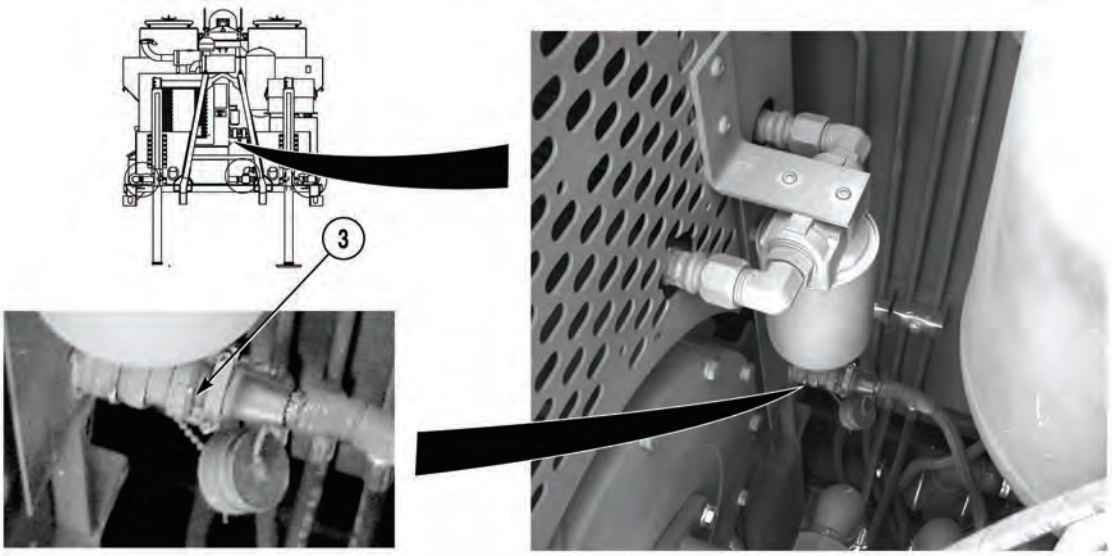

(4) Connect connector (3).

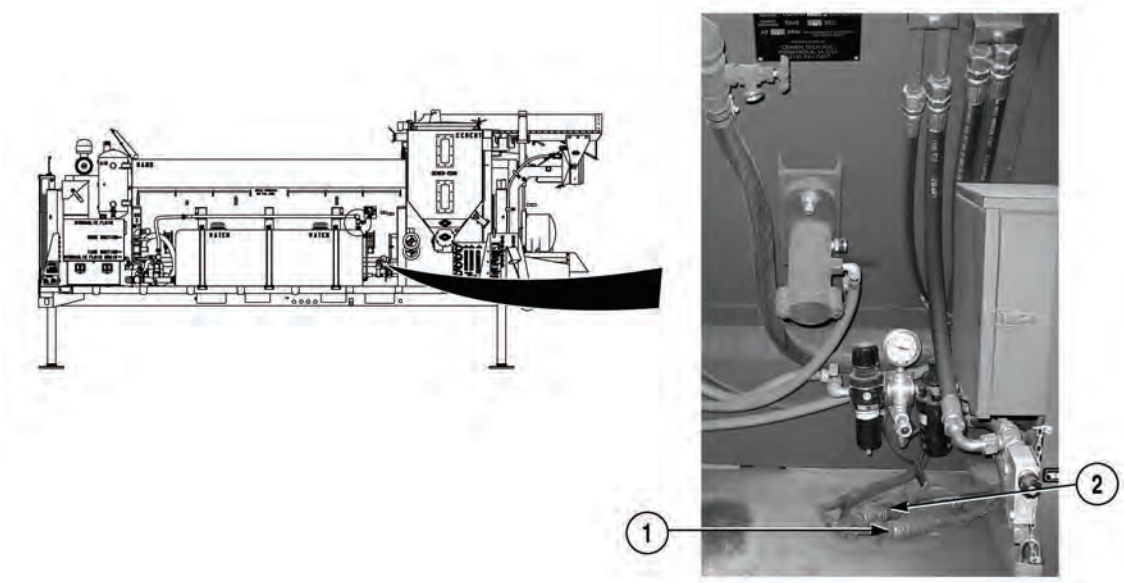

(5) Connect two connectors (1) and (2).

c. Follow-On Maintenance:

- Connect batteries, (Para 3-10).
- Install water tank (left side), (Para 3-42).

END OF TASK

3-135. ROLLER SWITCH AND CONTROL WIRE HARNESS REPLACEMENT.

This task covers:

a. Removal b. Installation c. Follow-On Maintenance

INITIAL SETUP

Tools and Special Tools
Tool Kit, General Mechanic's: Automotive (Item 19, Appendix I)
Crimping Tool (Item 5, Appendix I)

Materials/Parts
Cable Ties, (Item 2, Appendix H)
Tags, Identification (Item 13, Appendix H)
Tape, Liquid (Item 20, Appendix H)
Lockwasher (11) (MS 35338-44)

Equipment Condition
Concrete Mobile Mixer unloaded, (Para 2-5)
Batteries disconnected, (Para 3-10)
Admix tank removed (low-flow), (Para 3-39)

a. Removal.

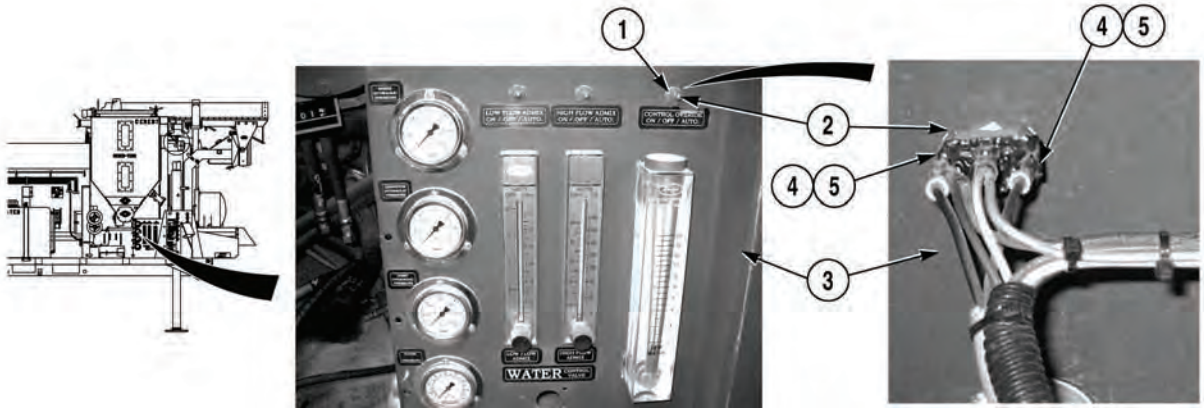

NOTE

- Remove cable ties as required.
- Tag and mark wires and connectors prior to removal.
- Perform Steps (1) through (3) to remove roller switch.
- Rubber boot is part of nut.

(1) Remove nut (1) and switch (2) from panel (3).

NOTE

Wires being removed from switch should be red and black with red terminal rings.

(2) Remove two screws (4) and three terminal rings (5) from switch (2).

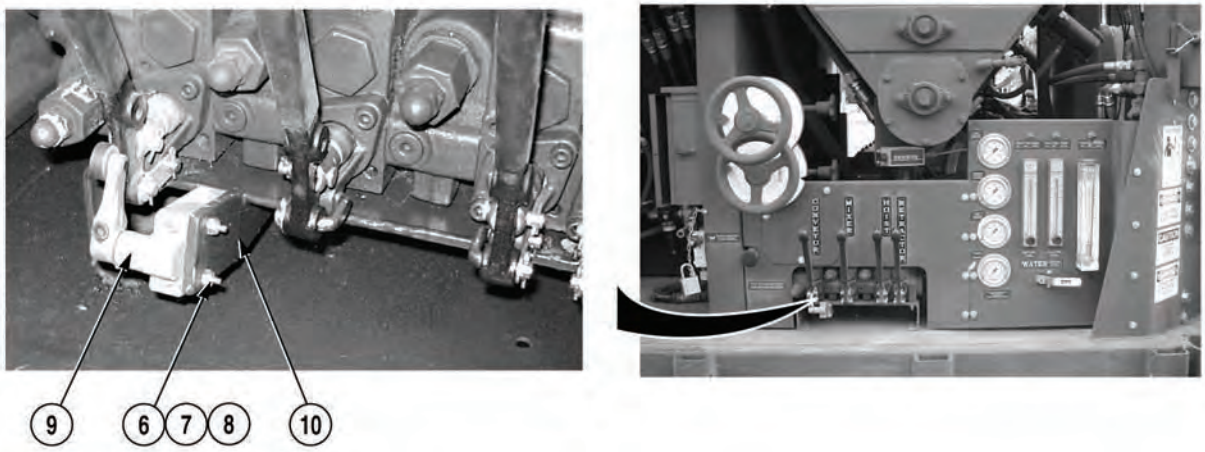

(3) Remove two locknuts (6), washers (7), screws (8), and roller switch (9) from bracket (10).

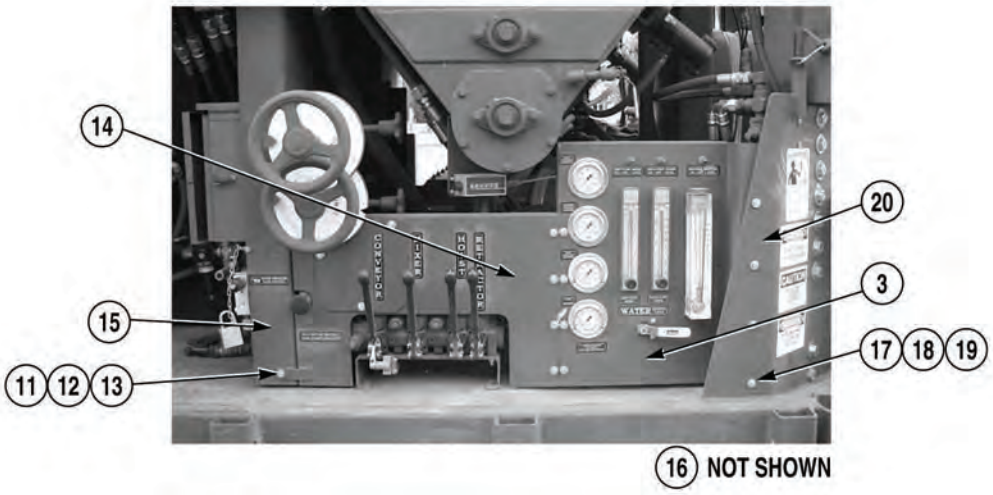

NOTE

Perform Steps (4) through (29) to remove wire harness from Concrete Mobile Mixer.

(4) Remove five screws (11), lockwashers (12), washers (13), and panel (14) from Concrete Mobile Mixer (15) and bracket (16). Discard lockwashers.

CAUTION

Use extreme care when removing panel from Concrete Mobile Mixer. Hoses will still be connected to gages and meters. Failure to comply may result in damage to equipment.

NOTE

Panel will only be moved enough to access wire harness components.

(5) Remove four screws (17), lockwashers (18), washers (19), and panel (3) from bracket (20). Discard lockwashers.

3-135. ROLLER SWITCH AND CONTROL WIRE HARNESS REPLACEMENT (CONT).

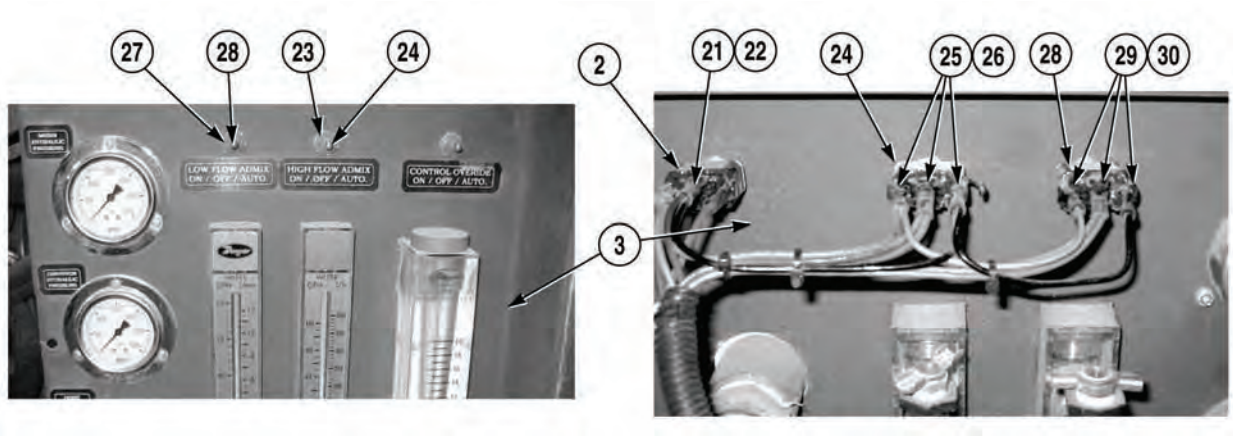

(6) Remove screw (21) and terminal ring (22) from switch (2).

(7) Remove nut (23) and switch (24) from panel (3).

(8) Remove three screws (25) and terminal rings (26) from switch (24).

(9) Remove nut (27) and switch (28) from panel (3).

(10) Remove three screws (29) and terminal rings (30) from switch (28).

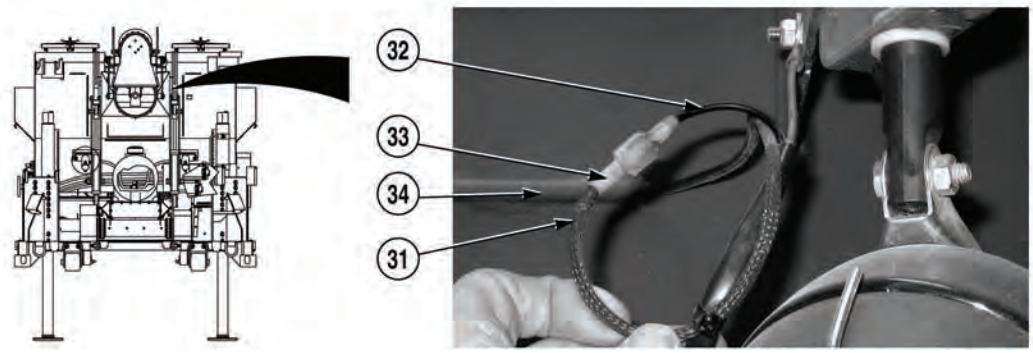

NOTE

- Spade terminals on both work light wires must be cut off in order to thread wires through tubing.
- Cut wire as close to spade terminal as possible.
- Both work light wires are removed the same way. Right side shown.

(11) Disconnect wire (31) from wire (32).

(12) Cut spade terminal (33) from wire (31).

(13) Thread wire (31) through tubing (34).

(14) Repeat Steps (11) through (13) to remove left side work light wire.

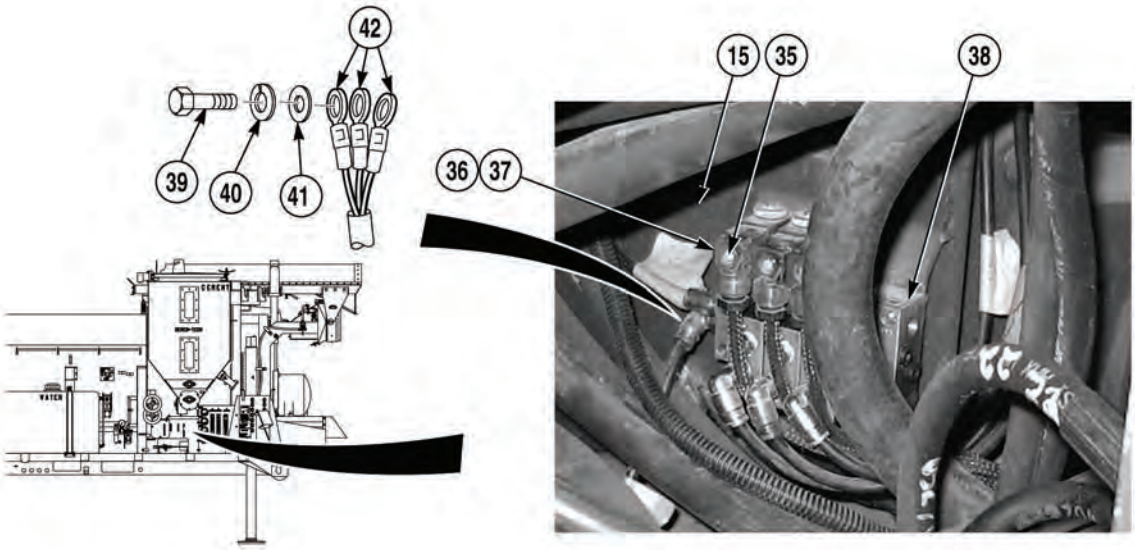

(15) Loosen three screws (35) and remove connectors (36), and gaskets (37) from solenoid valve (38).

(16) Remove screw (39), lockwasher (40), washer (41), and three ring terminals (42) from Concrete Mobile Mixer (15). Discard lockwasher.

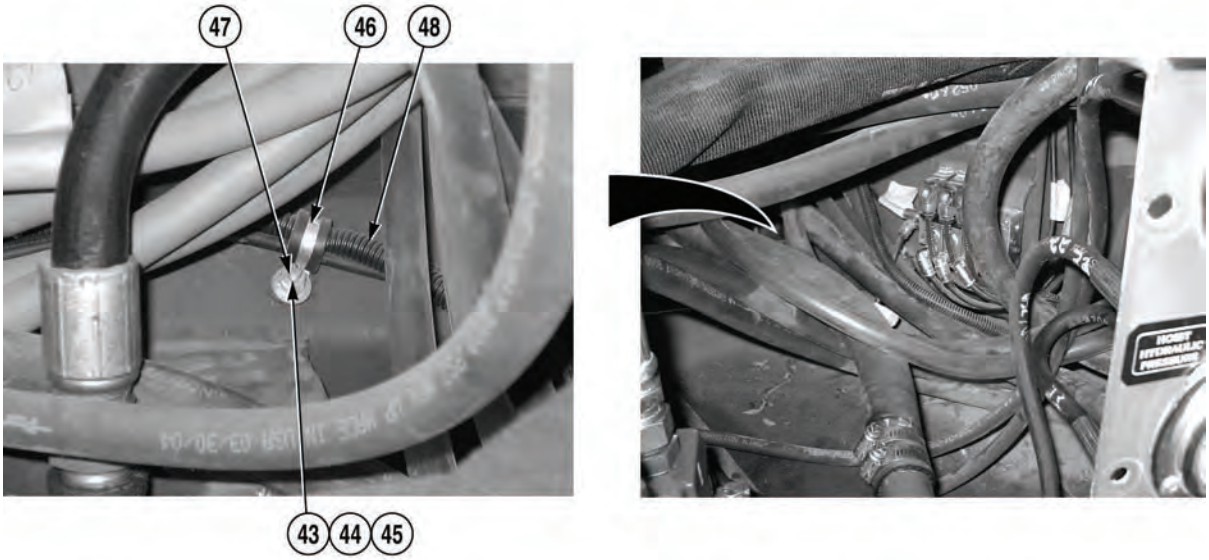

(17) Remove nut (43), lockwasher (44), washer (45), and cushion clip (46) from stud (47) and wire harness (48). Discard lockwasher.

3-135. ROLLER SWITCH AND CONTROL WIRE HARNESS REPLACEMENT (CONT).

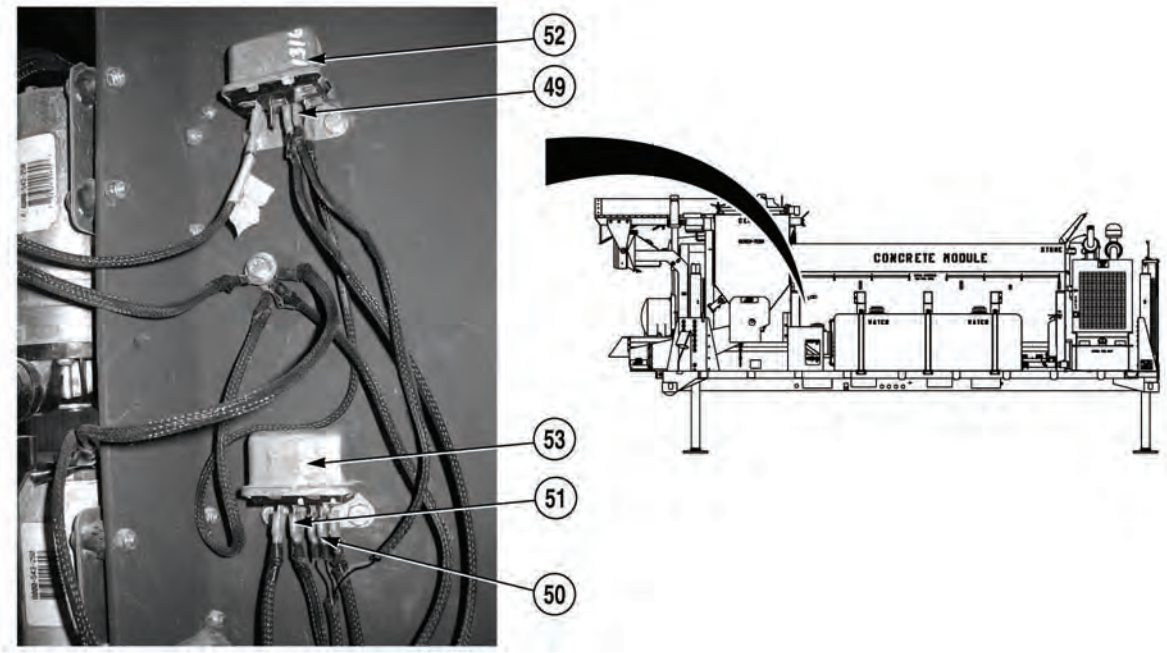

(18) Disconnect three wires (49), (50), and (51) from two relays, (52) and (53).

NOTE

Two ground wires and jumper wire are part of wire harness. Perform Steps (19) through (21) to remove ground wires and jumper wires.

(19) Remove locknut (54), two washers (55), screw (56), and four wires (57), (58), (59), and (60) from Concrete Mobile Mixer (15).

(20) Remove two wires (59) and (60) from relays (52) and (53).

(21) Remove wire (61) from two relays (52) and (53).

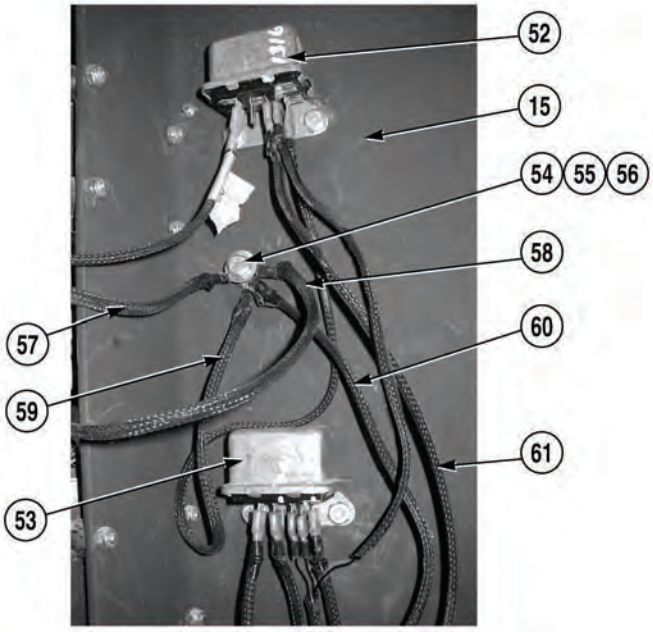

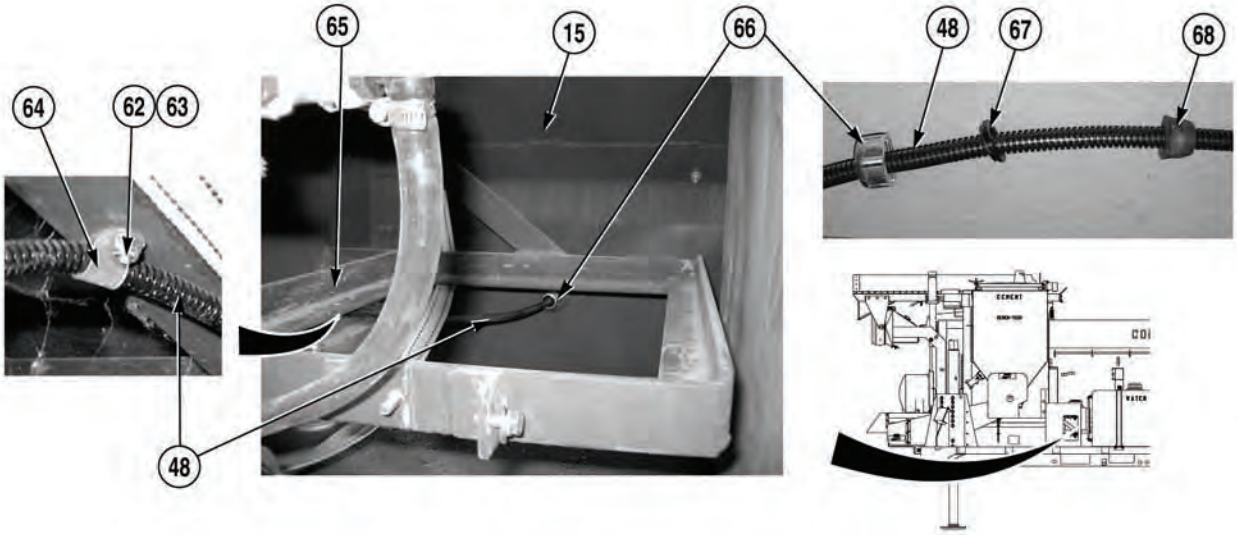

(22) Remove locknut (62), screw (63), and cushion clip (64) from wire harness (48) and bracket (65).

(23) Remove nut (66), retainer (67), and bushing (68) from Concrete Mobile Mixer (15) and wire harness (48).

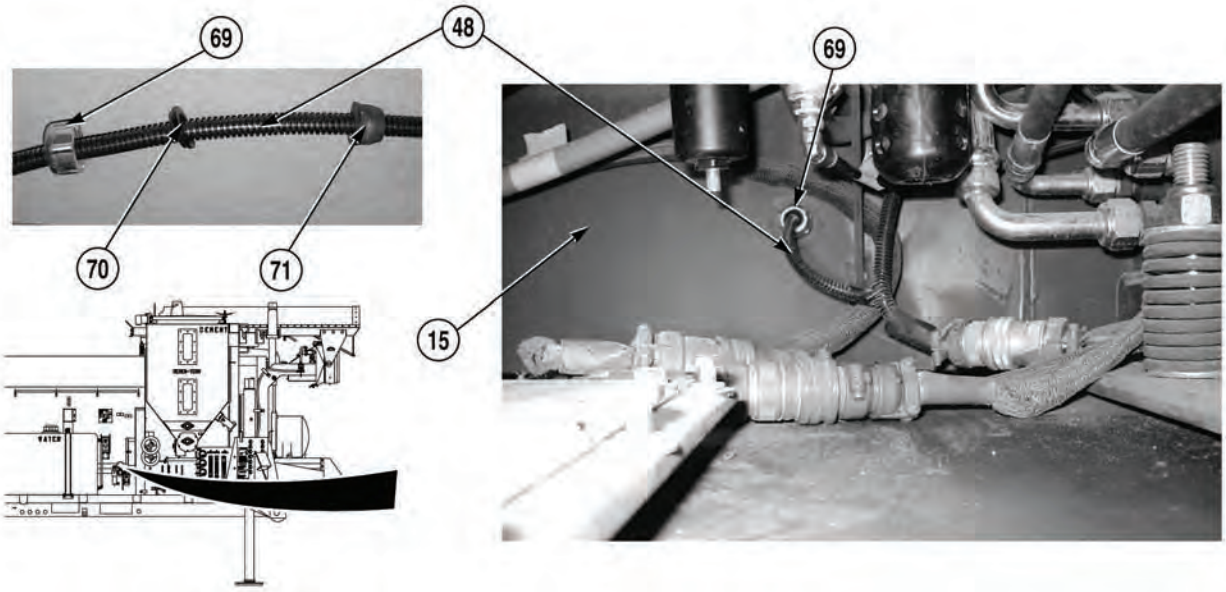

(24) Remove nut (69), retainer (70), and bushing (71) from Concrete Mobile Mixer (15) and wire harness (48).

NOTE

When pulling portion of wire harness from relays through conduit from right side of conveyor to left, attaching a pull wire at relay ends will aid in installing new wire harness.

(25) Pull portion of wire harness (48) from right side of Concrete Mobile Mixer to left side.

3-135. ROLLER SWITCH AND CONTROL WIRE HARNESS REPLACEMENT (CONT).

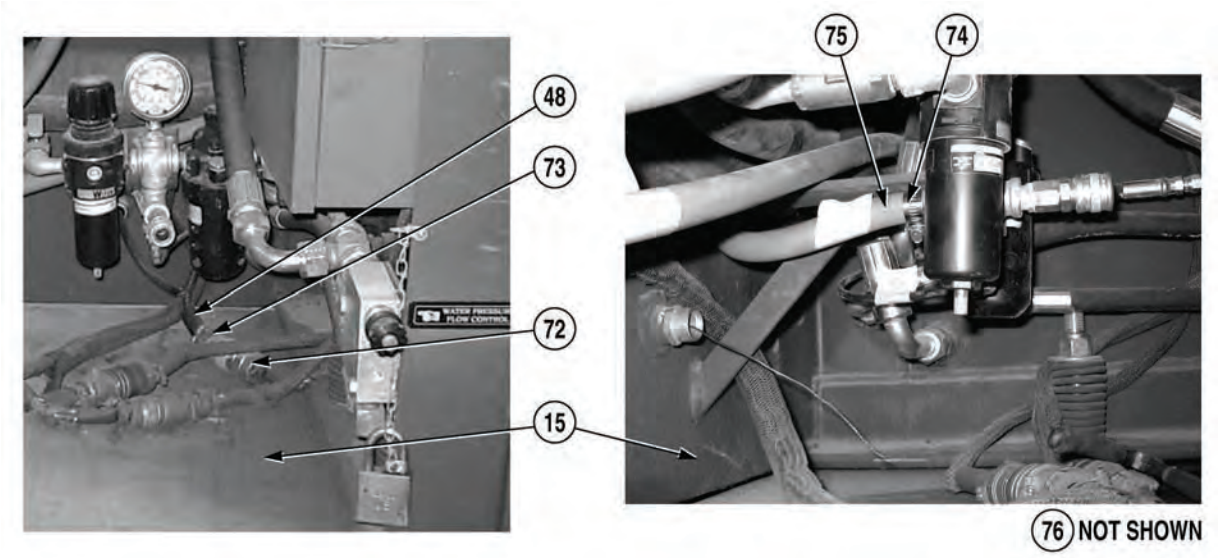

(26) Disconnect connector (72) from connector (73).

NOTE

To provide clearance when removing wire harness from Concrete Mobile Mixer, air line from fitting below air gage must be removed and pulled through passage where wire harness runs.

(27) Loosen and remove clamp (74) and air line (75) from fitting (76).

(28) Pull air line (75) towards back of Concrete Mobile Mixer (15).

NOTE

Wire harness is removed by routing harness from rear of Concrete Mobile Mixer to front.

(29) Remove wire harness (48) from Concrete Mobile Mixer (15).

b. Installation.

NOTE

- Perform Steps (1) through (27) to install wire harness on Concrete Mobile Mixer.
- Install cable ties as required.

(1) Position wire harness (48) on Concrete Mobile Mixer (15).

(2) Install air line (75) on fitting (76) with clamp (74).

(3) Connect connector (73) on connector (72).

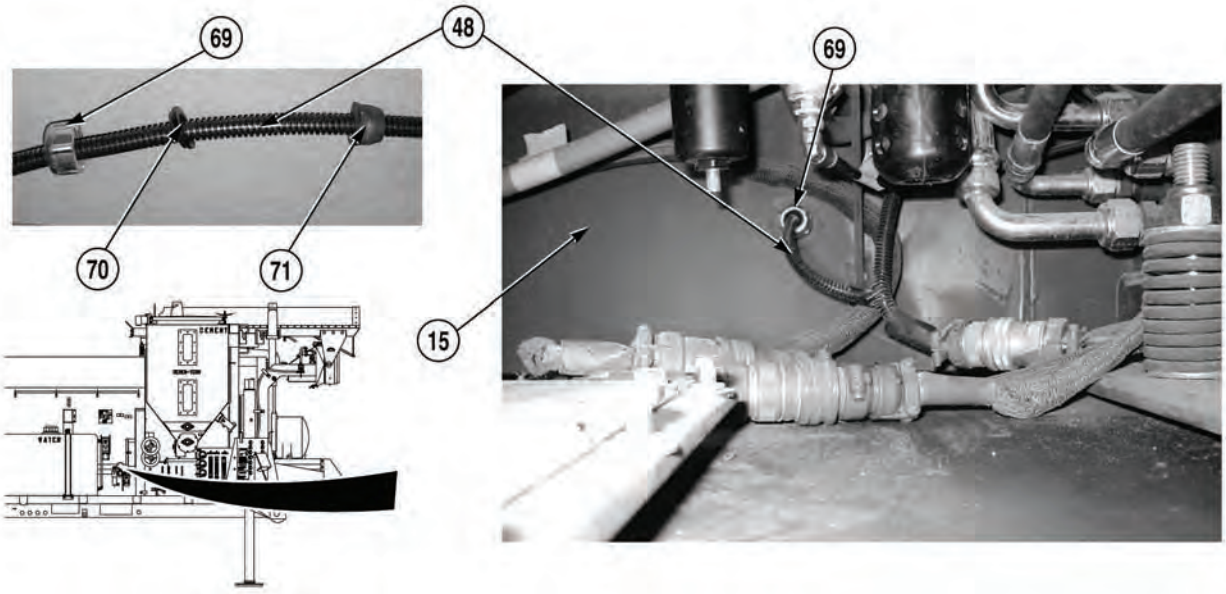

NOTE

Portion of wire harness going to relays must be pulled through conduit with pull wire.

(4) Pull portion of wire harness (48) from left side of Concrete Mobile Mixer to right side.

(5) Install wire harness (48) on Concrete Mobile Mixer (15) with bushing (71), retainer (70), and nut (69).

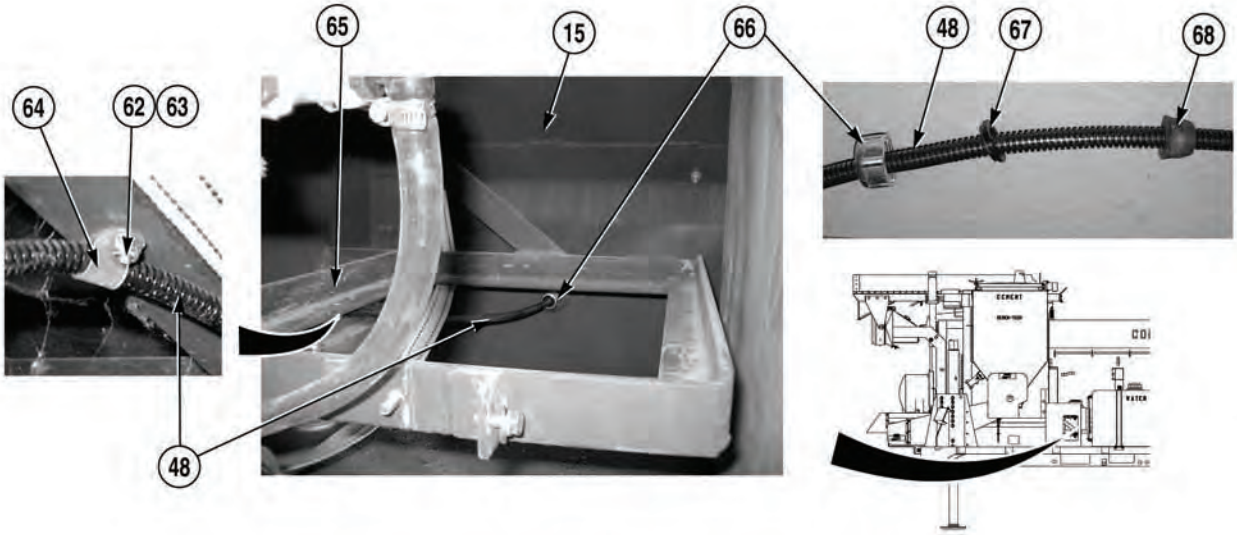

(6) Install wire harness (48) on Concrete Mobile Mixer (15) with bushing (68), retainer (67), and nut (66).

(7) Install wire harness (48) on bracket (65) with cushion clip (64), screw (63), and locknut (62).

3-135. ROLLER SWITCH AND CONTROL WIRE HARNESS REPLACEMENT (CONT).

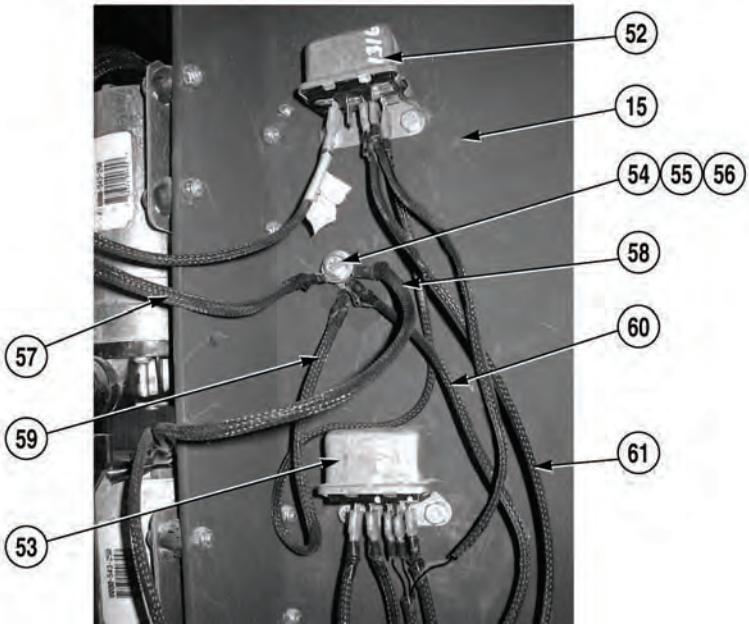

(8) Install wire (61) on two relays (52) and (53).

(9) Install two wires (59) and (60) on relays (52) and (53).

(10) Install four wires (57), (58), (59), and (60) on Concrete Mobile Mixer (15) with screw (56) two washers (55) and locknut (54).

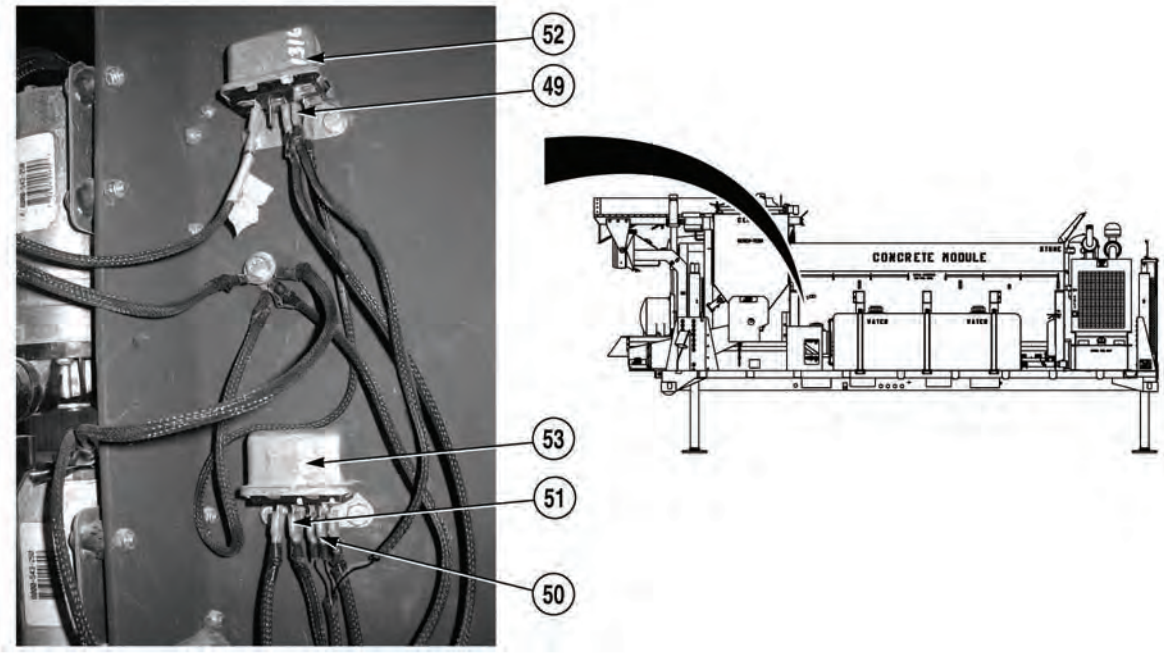

(11) Connect three wires (49), (50), and (51) on two relays (52) and (53).

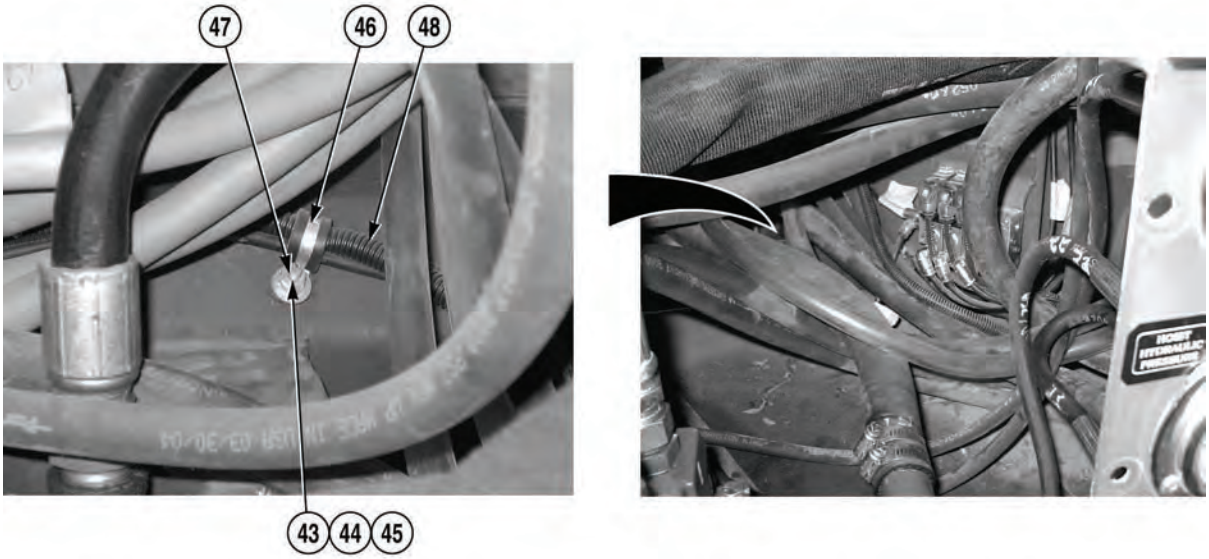

(12) Install wire harness (48) on stud (47) with cushion clip (46), washer (45), lockwasher (44), and nut (43).

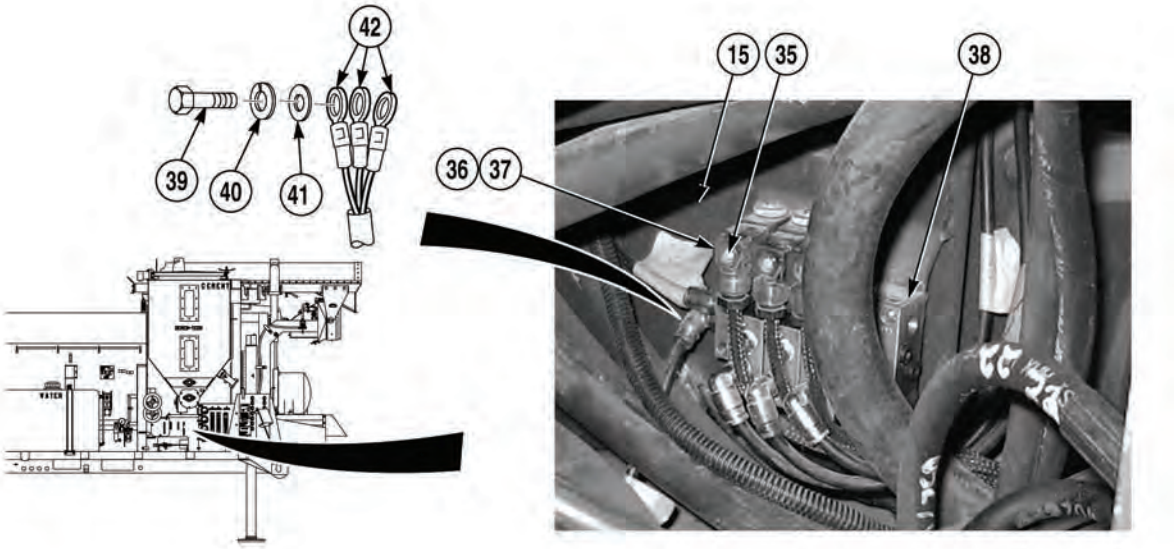

(13) Install three terminal rings (42) on Concrete Mobile Mixer (15) with washer (41), lockwasher (40), and screw (39).

(14) Install three gaskets (37) and connectors (36) on solenoid valve (38) with three screws (35).

3-135. ROLLER SWITCH AND CONTROL WIRE HARNESS REPLACEMENT (CONT).

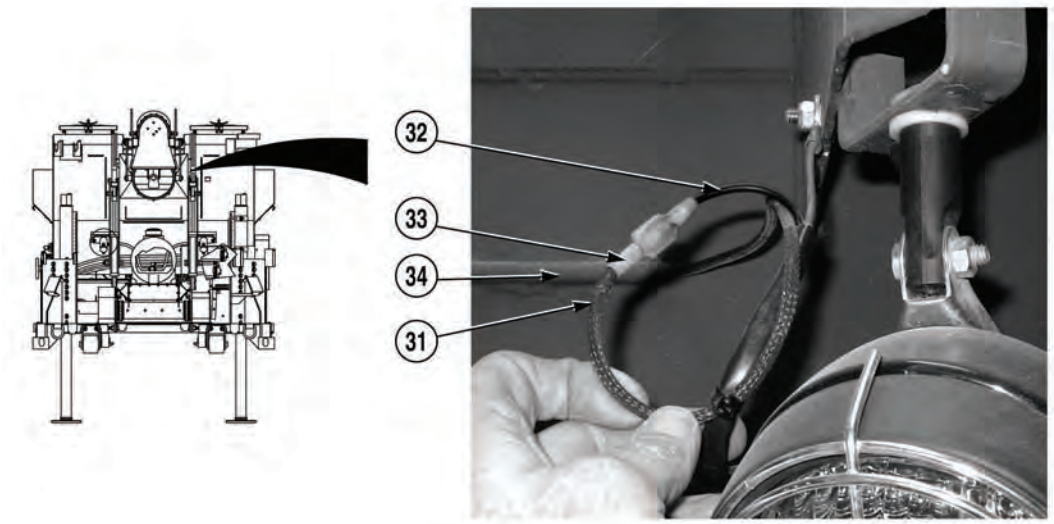

NOTE

Both work light wires are installed the same way. Right side shown.

(15) Thread wire (31) through tubing (34).

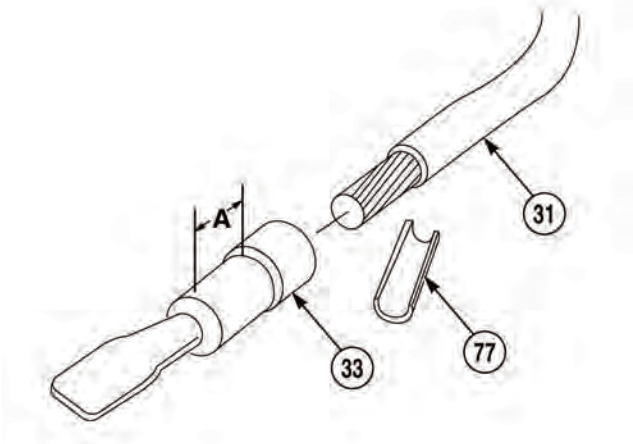

(16) Remove insulation (77) from end of wire (31) equal to dimension A.

NOTE

Ensure all strands of wire are inside terminal when installing.

(17) Install new spade terminal (33) on wire (31) and crimp securely.

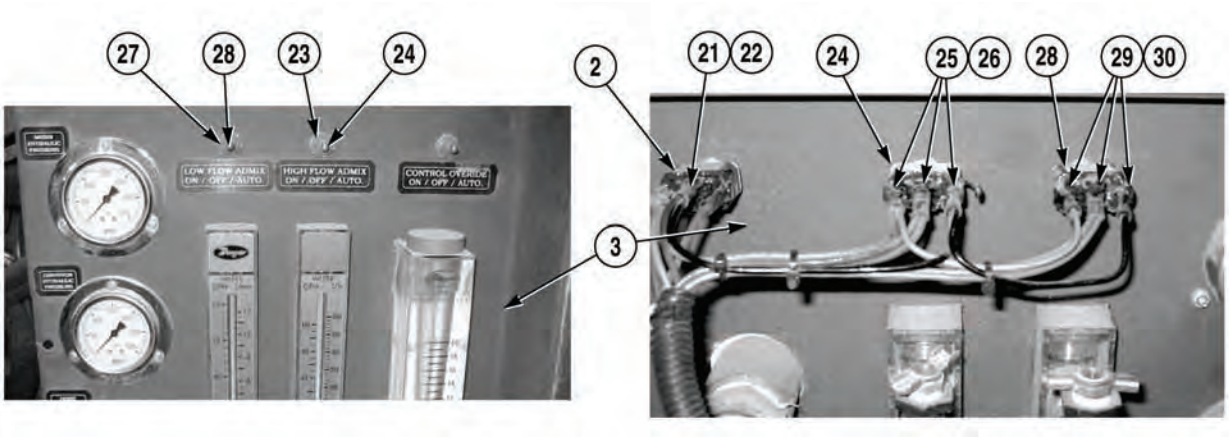

(18) Install three terminal rings (30) on switch (28) with three screws (29).

WARNING

Adhesives, solvents, and sealing compounds can burn easily, can give off harmful vapors, and are harmful to skin and clothing. To avoid injury or death, keep away from open fire and use in well-ventilated area. If adhesives, solvent, or sealing compound gets on skin or clothing, wash immediately with soap and water.

(19) Apply Liquid Tape on three terminal rings (30) and screws (29).

(20) Install switch (28) on panel (3) with nut (27).

(21) Install three terminal rings (26) on switch (24) with three screws (25).

(22) Apply Liquid Tape on three terminal rings (26) and screws (25).

(23) Install switch (24) on panel (3) with nut (23).

(24) Install terminal ring (22) on switch (2) with screw (21).

(25) Apply Liquid Tape on terminal ring (22) and screw (21).

3-135. ROLLER SWITCH AND CONTROL WIRE HARNESS REPLACEMENT (CONT).

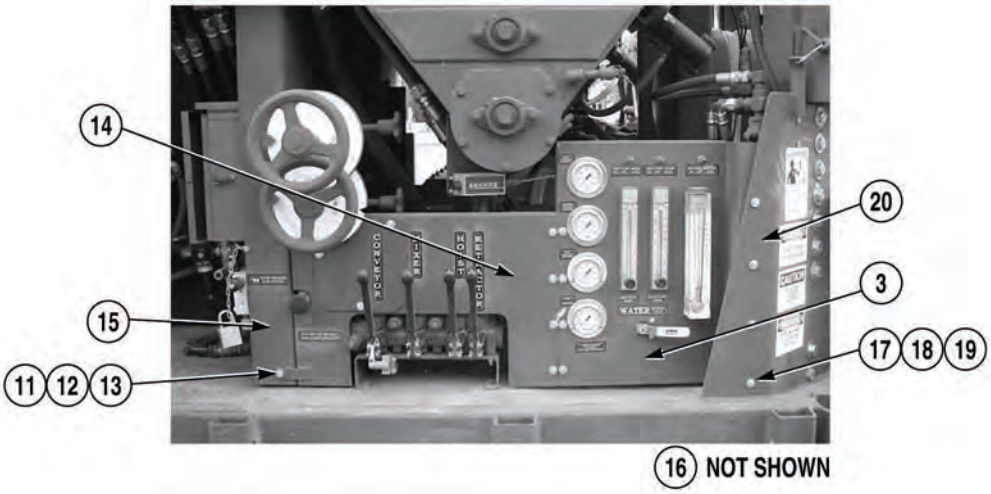

(26) Install panel (3) on bracket (20) with four washers (19), lockwashers (18), and screws (17).

(27) Install panel (14) on Concrete Mobile Mixer (15) and bracket (16) with five washers (13), lockwashers (12), and screws (11).

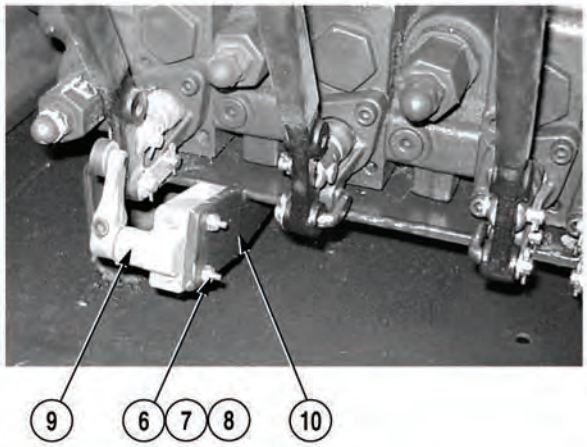

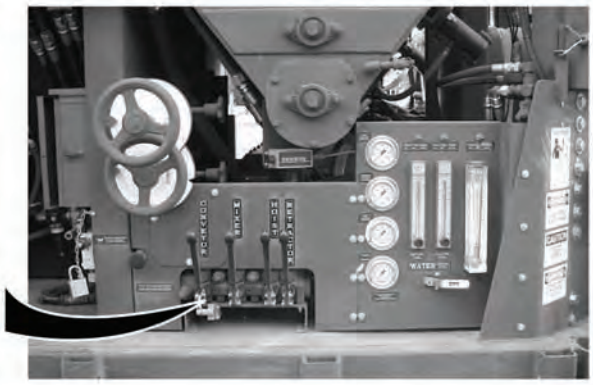

NOTE

Perform Steps (28) through (31) to install roller switch.

(28) Install roller switch (9) on bracket (10) with two screws (8), washers (7), and locknuts (6).

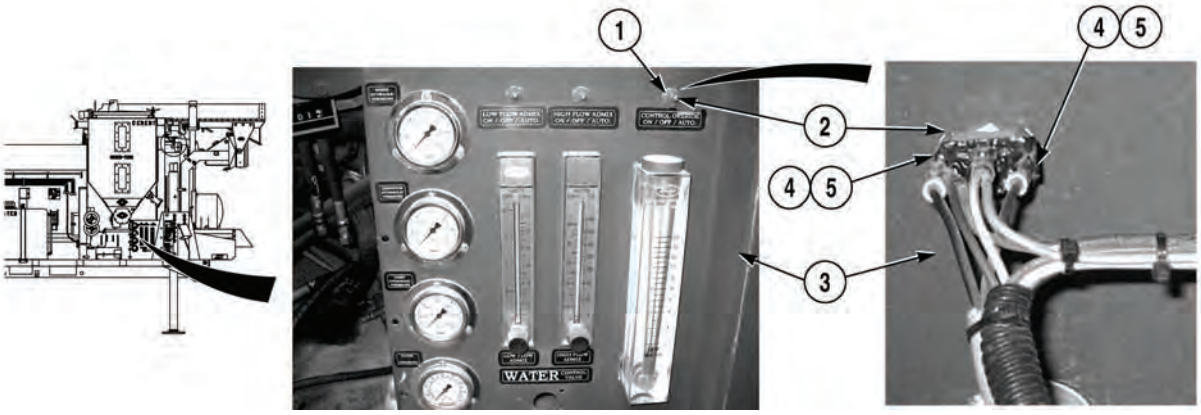

(29) Install three terminal rings (5) on switch (2) with two screws (4).

WARNING

Adhesives, solvents, and sealing compounds can burn easily, can give off harmful vapors, and are harmful to skin and clothing. To avoid injury or death, keep away from open fire and use in well ventilated area. If adhesives, solvent, or sealing compound gets on skin or clothing, wash immediately with soap and water.

(30) Apply Liquid Tape on three terminal rings (5) and two screws (4).

(31) Install switch (2) on panel (3) with nut (1).

c. Follow-On Maintenance:

- Connect batteries, (Para 3-10).
- Install admix tank (low-flow), (Para 3-39).

END OF TASK

3-136. ENGINE WIRE HARNESS REPLACEMENT (S/N 8RDCD301620HC AND SUBSEQUENT).

This task covers:

a. Removal b. Installation c. Follow-On Maintenance

INITIAL SETUP

Tools and Special Tools
Tool Kit, General Mechanic's: Automotive (Item 19, Appendix I)
Jackstand, Trestle, (Item NO TAG, Appendix I)

Personnel Required
Two

Materials/Parts
Tags, Identification, (Item 13, Appendix H)
Cable Ties, (Item 2, Appendix H)
Lockwasher (8) (TBD)
Lockwasher (2) (MS 51415-8)
Locknut (4) (1571870)
Lockwasher (3) (MS 35338-45)
Lockwasher (2) (MS 35338-43)
Locknut (MS 51943-31)
Locknut (4) (1605420)

Equipment Condition
Concrete Mobile Mixer unloaded, (Para 2-5)
Concrete Mobile Mixer lowered, (Para 2-28)
Work station platform unstowed, (Para 2-27)
Ladder unstowed, (Para 2-30)
Batteries disconnected, (Para 3-10)
Front engine access panel removed, (Para 3-78)
Top engine cover removed, (Para 3-93)

a. Removal.

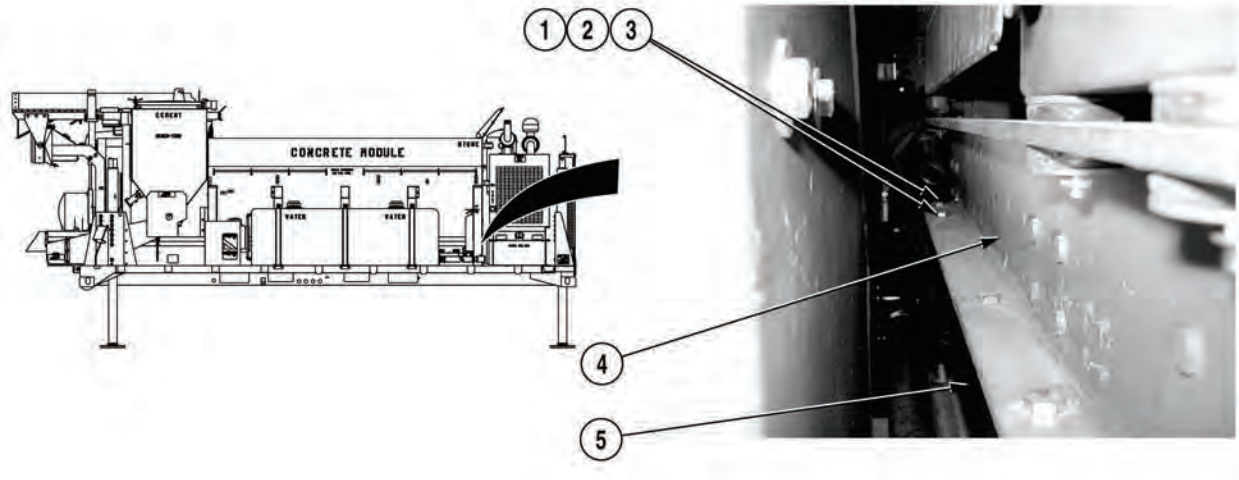

NOTE

- Engine and engine support assembly must be removed from fuel tank in order to remove main engine wire harness connector from corner post.
- Before lowering Concrete Mobile Mixer to floor level, two nuts, lockwashers, and screws located below corner post holding the main wire harness connector must be removed.

(1) Remove two nuts (1), lockwashers (2), and screws (3) from engine support assembly (4) and fuel tank (5). Discard lockwashers.

(2) Lower Concrete Mobile Mixer to floor level, (Para 2-28).

(3) Remove front engine access panel, (Para 3-78).

(4) Remove top engine cover, (Para 3-93).

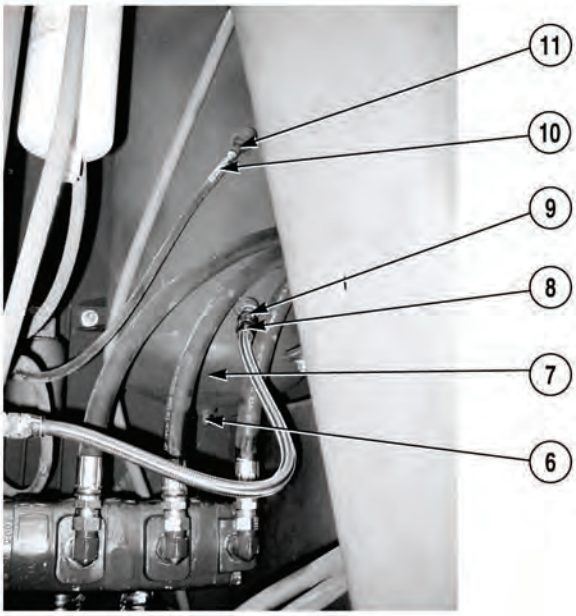

NOTE

- Remove cable ties and cushion clips as required.
- Tag and mark hoses, wires, and connectors prior to removal.
- Cap and plug hoses prior to removal.
- Position drain pan under hoses prior to removal.

(5) Open drain cock (6) on air reservoir (7) and drain air.

(6) Remove air line (8) from fitting (9).

(7) Remove air line (10) from fitting (11).

3-136. ENGINE WIRE HARNESS REPLACEMENT (S/N 8RDCD301620HC AND SUBSEQUENT) (CONT).

(8) Disconnect connector (12).

(9) Install cap (13) on frame mounted portion of connector (12).

WARNING

Hydraulic pump weighs 100 lb (45.4 kg). Do not attempt to lift or move hydraulic pump without the aid of an assistant and lifting device. Failure to comply could result in serious injury to personnel.

NOTE

Hydraulic pump may be removed and supported by straps during engine removal.

(10) With the aid of an assistant and suitable lifting device, remove two screws (14), lockwashers (15), and hydraulic pump (16) from engine (17) while supporting hydraulic pump (16). Discard lockwashers.

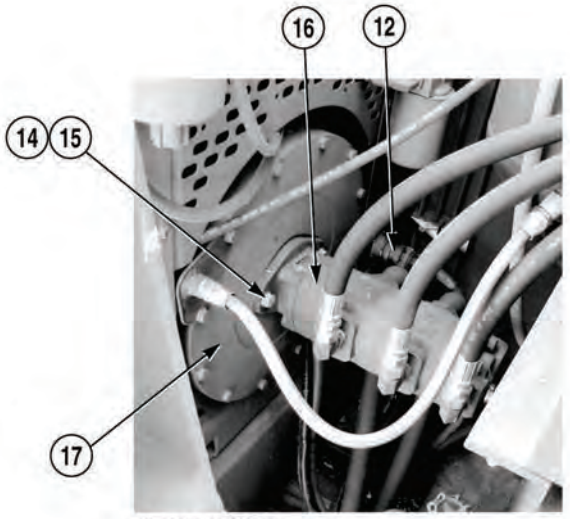

13 NOT SHOWN

WARNING

Diesel fuel is flammable. Do not perform this procedure near fire, flame, or sparks. Failure to comply could result in injury or death to personnel.

(11) Loosen two clamps (18) and remove fuel lines (19) and (20) from fittings (21) and (22).

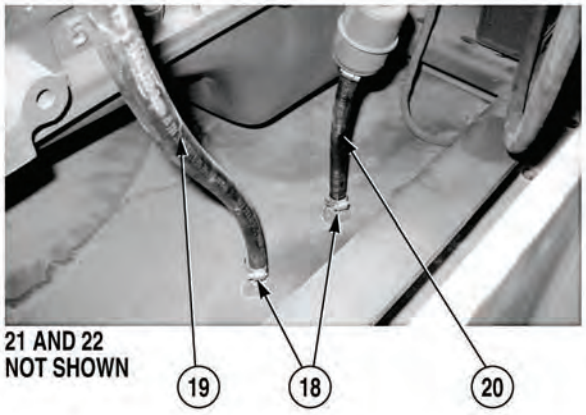

21 AND 22 NOT SHOWN

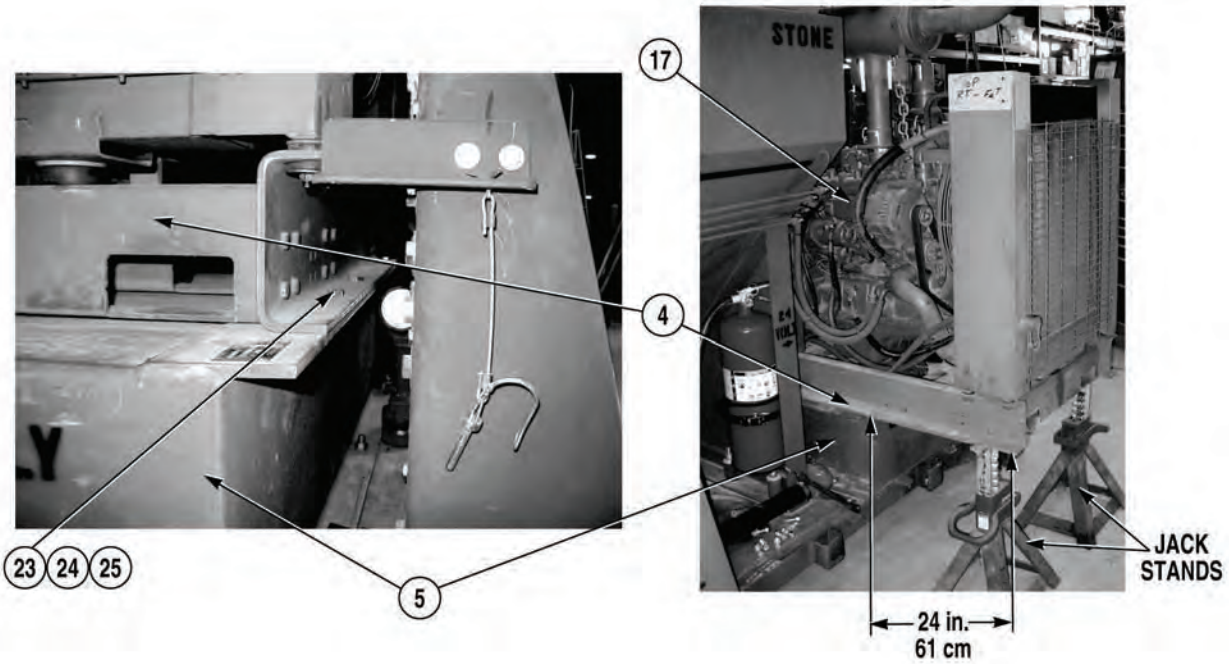

NOTE

Engine and engine support assembly are removed from fuel tank as an assembly.

(12) Remove six nuts (23), lockwashers (24), and screws (25) from engine support assembly (4) and fuel tank (5). Discard lockwashers.

WARNING

Engine and engine support assembly weigh 1200 lb (544.8 kg). Do not attempt to move or lift engine and engine support assembly without aid of an assistant and suitable lifting device. Failure to comply could result in serious injury or death to personnel.

CAUTION

Engine and engine support assembly must be lifted high enough to clear fuel tank fill cap. When engine is lowered on fuel tank and jack stands, end of engine support assembly must be positioned 24 in. (61 cm) from fuel tank. Failure to comply may cause damage to equipment.

(13) With the aid of an assistant and suitable lifting device, remove engine (17) and engine support assembly (4) from fuel tank (5), and support on two jack stands and fuel tank (5).

3-136. ENGINE WIRE HARNESS REPLACEMENT (S/N 8RDCD301620HC AND SUBSEQUENT) (CONT).

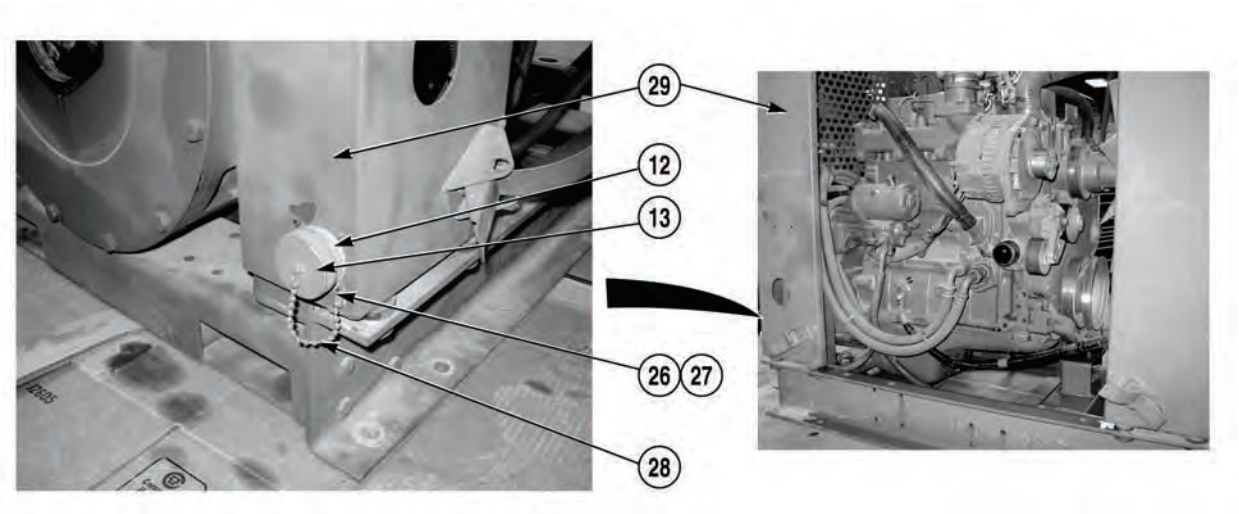

(14) Remove cap (13) from connector (12).

(15) Remove four locknuts (26), screws (27), chain (28), and connector (12) from corner post (29). Discard locknuts.

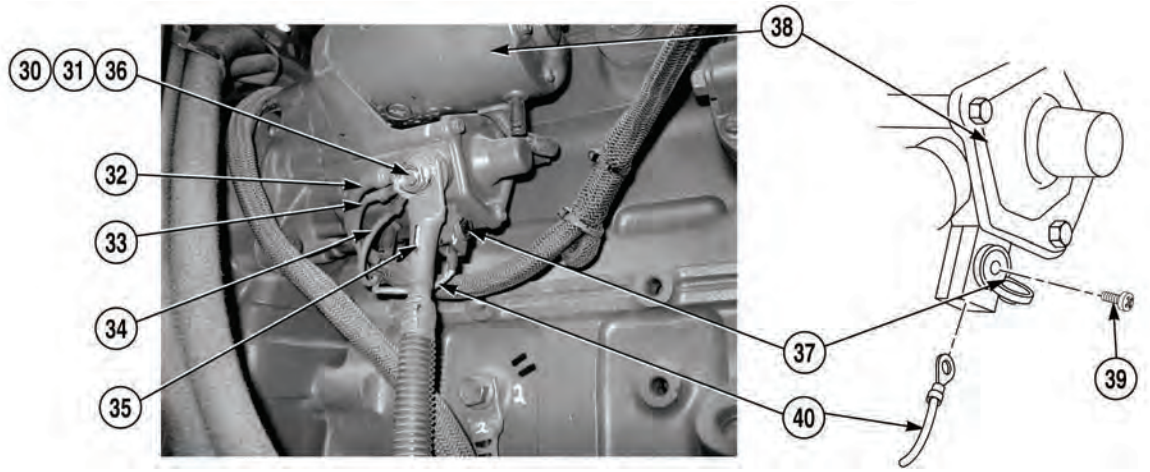

(16) Remove nut (30), lockwasher (31), and four wires (32), (33), (34), and (35) from stud (36).

(17) Remove cover (37) from starter (38).

NOTE

Screw has captive lockwasher.

(18) Remove screw (39) and wire (40) from starter (38).

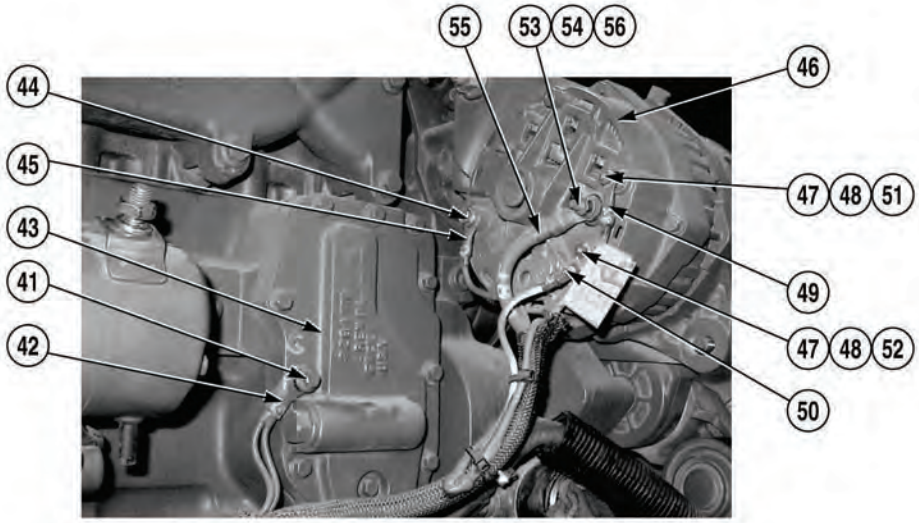

NOTE

Two wires are attached to ring terminal.

(19) Remove screw (41) and ring terminal (42) from cover (43).

NOTE

Screw has captive lockwasher.

(20) Remove screw (44) and wire (45) from alternator (46).

(21) Remove two nuts (47), lockwashers (48), and wires (49) and (50) from studs (51) and (52).

(22) Remove nut (53), lockwasher (54), and wire (55) from stud (56).

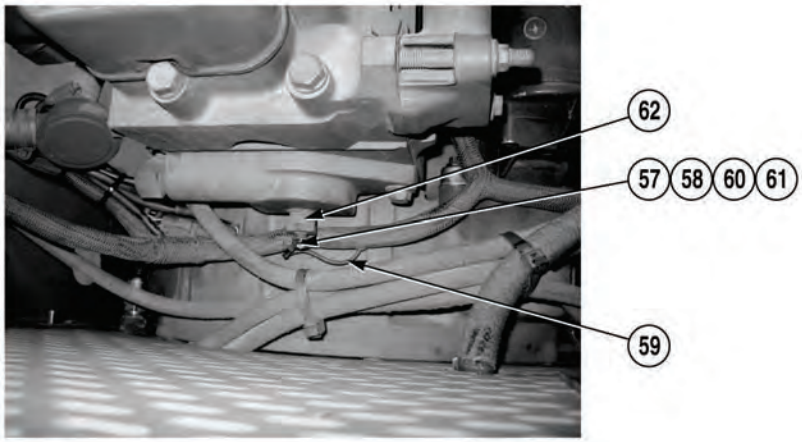

NOTE

Note position of washers prior to removal.

(23) Remove nut (57), lockwasher (58), wire (59), washer (60), and fiber washer (61) from temperature sensor (62).

3-136. ENGINE WIRE HARNESS REPLACEMENT (S/N 8RDCD301620HC AND SUBSEQUENT) (CONT).

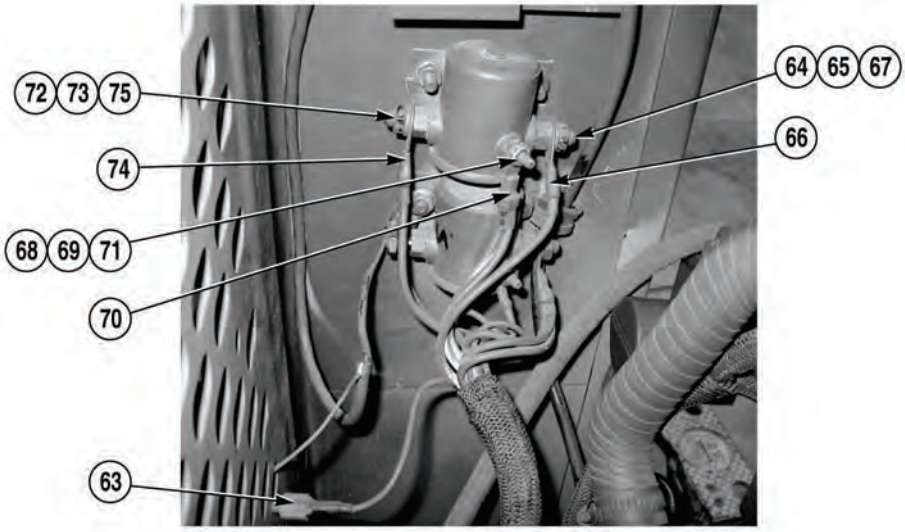

(24) Disconnect connector (63).

(25) Remove nut (64), lockwasher (65), and wire (66) from stud (67). Discard lockwasher.

NOTE

Two wires are attached to ring terminal.

(26) Remove nut (68), lockwasher (69), and ring terminal (70) from stud (71). Discard lockwasher.

(27) Remove nut (72), lockwasher (73), and wire (74) from stud (75). Discard lockwasher.

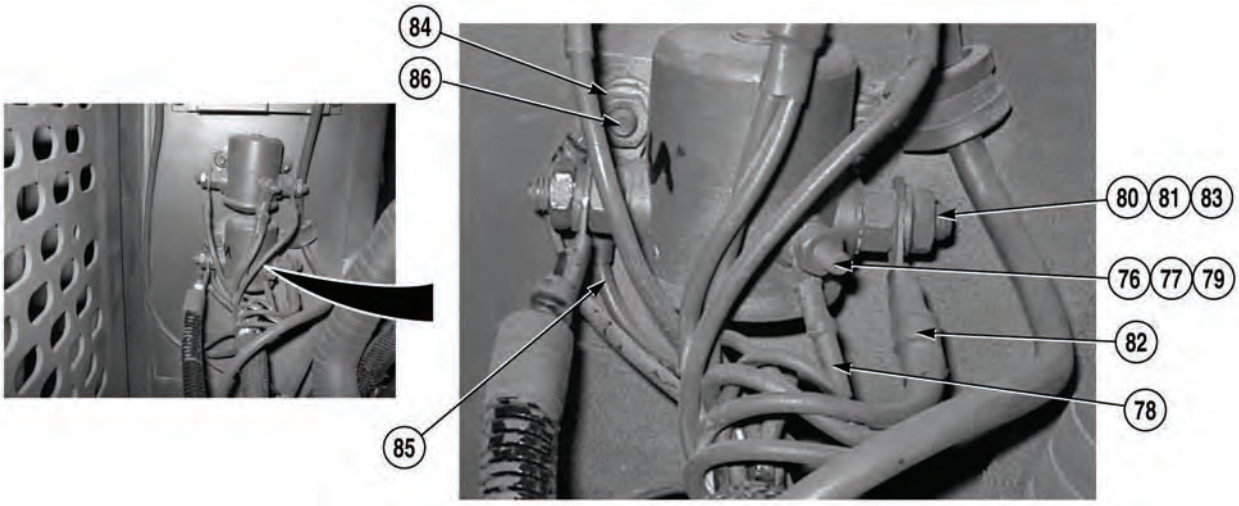

(28) Remove nut (76), lockwasher (77), and wire (78) from stud (79). Discard lockwasher.

NOTE

Four wires are attached to ring terminal.

(29) Remove nut (80), lockwasher (81), and ring terminal (82) from stud (83). Discard lockwasher.

(30) Remove locknut (84) and wire (85) from screw (86). Discard locknut.

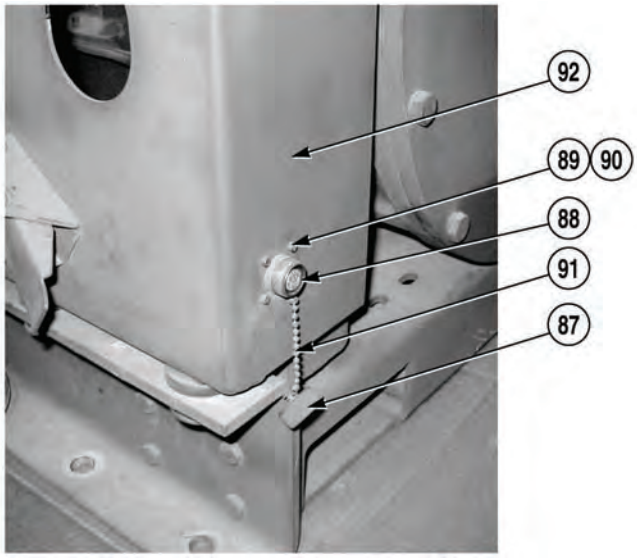

(31) Remove cap (87) from connector (88).

(32) Remove four locknuts (89), screws (90), chain (91), and connector (88) from corner post (92). Discard locknuts.

3-136. ENGINE WIRE HARNESS REPLACEMENT (S/N 8RDCD301620HC AND SUBSEQUENT) (CONT).

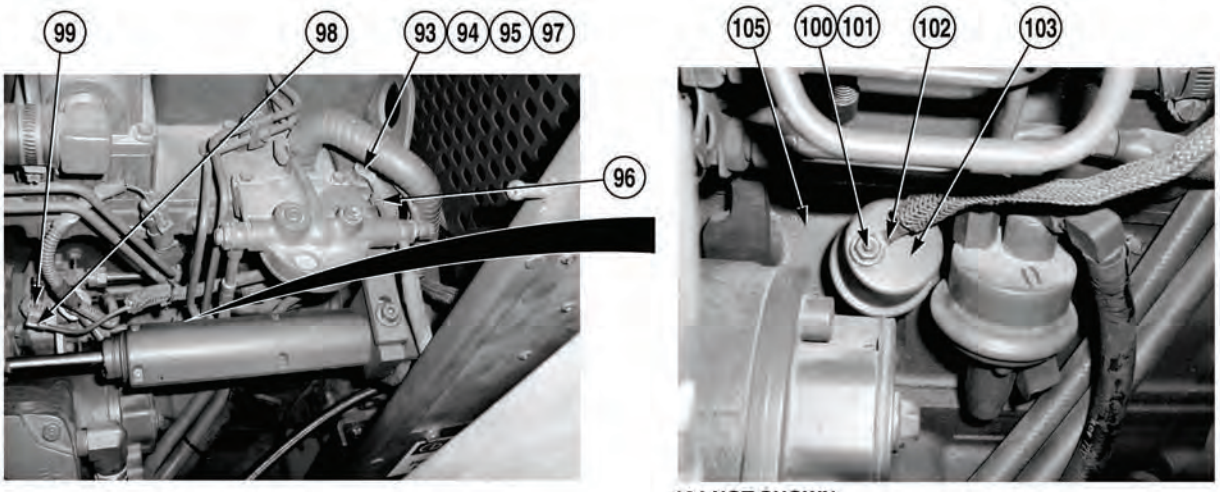

104 NOT SHOWN

(33) Remove nut (93), lockwasher (94), washer (95), and wire (96) from stud (97).

(34) Disconnect wire (98) from terminal (99).

(35) Remove nut (100), lockwasher (101), and wire (102) from sensor (103) and wire harness (104) from engine assembly (105).

b. Installation.

NOTE

Install cable ties as required.

(1) Position wire harness (104) on engine assembly (105).

(2) Install wire (102) on sensor (103) with lockwasher (101) and nut (100).

(3) Connect wire (98) on terminal (99).

(4) Install wire (96) on stud (97) with washer (95), lockwasher (94) and nut (93).

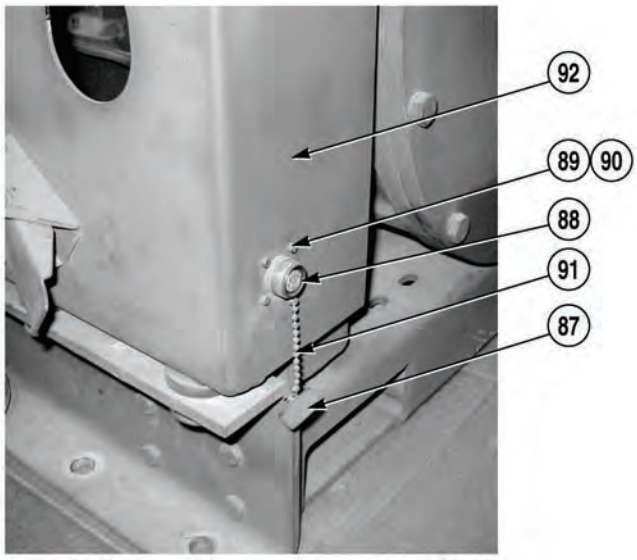

(5) Install connector (88) and chain (91) on corner post (92) with four screws (90) and locknuts (89).

(6) Install cap (87) on connector (88).

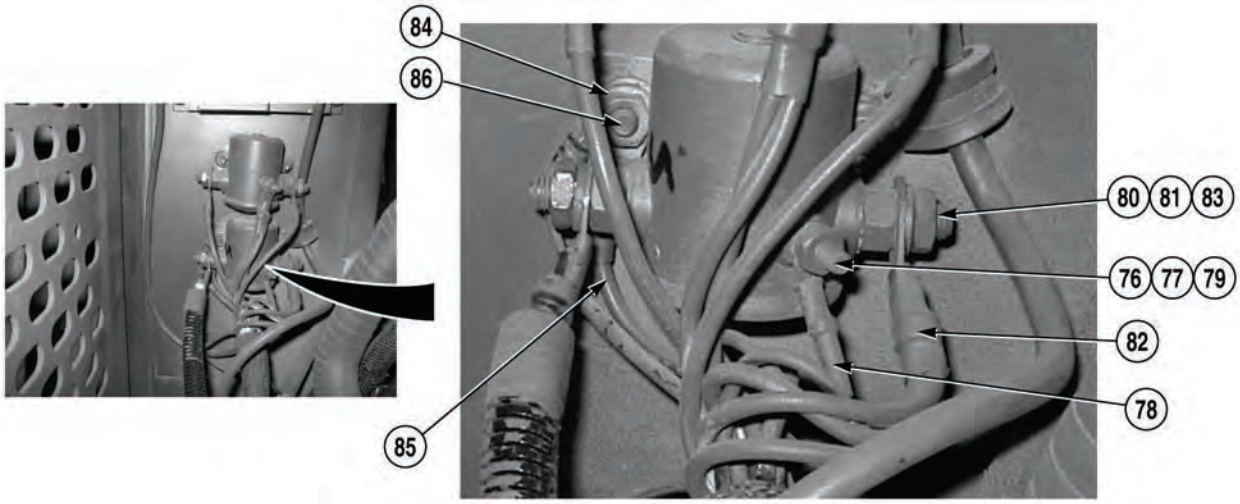

(7) Install wire (85) on screw (86) with locknut (84).

(8) Install ring terminal (82) on stud (83) with lockwasher (81) and nut (80).

(9) Install wire (78) on stud (79) with lockwasher (77) and nut (76).

3-136. ENGINE WIRE HARNESS REPLACEMENT (S/N 8RDCD301620HC AND SUBSEQUENT) (CONT).

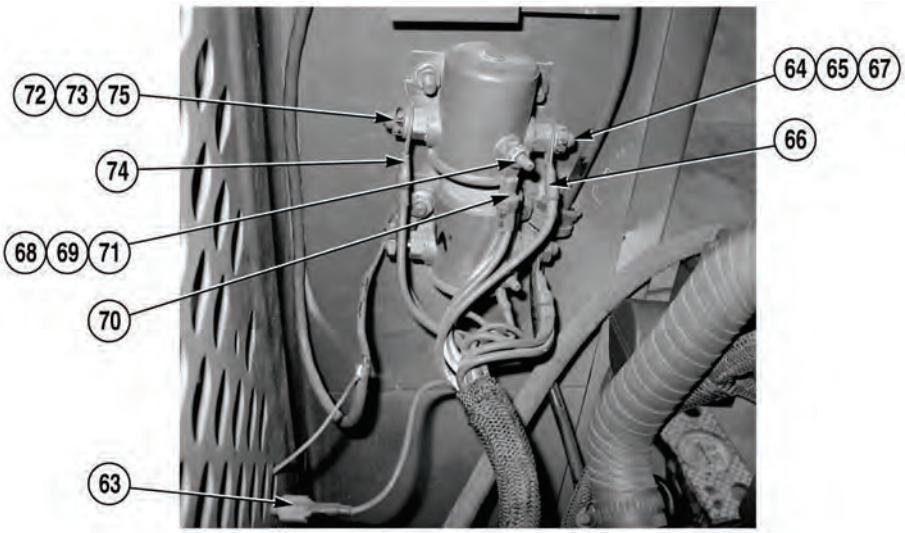

(10) Install wire (74) on stud (75) with lockwasher (73) and nut (72).

(11) Install ring terminal (70) on stud (71) with lockwasher (69) and nut (68).

(12) Install wire (66) on stud (67) with lockwasher (65) and nut (64).

(13) Connect connector (63).

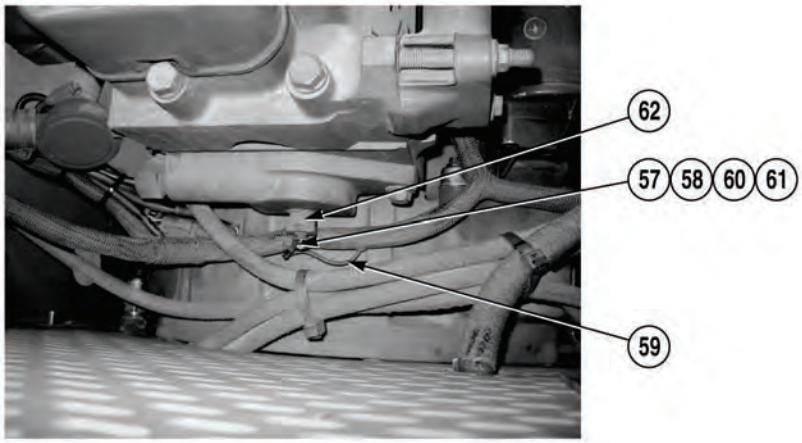

NOTE

Install washers as noted prior to removal.

(14) Install fiber washer (61), washer (60), and wire (59) on temperature sensor (62) with lockwasher (58) and nut (57).

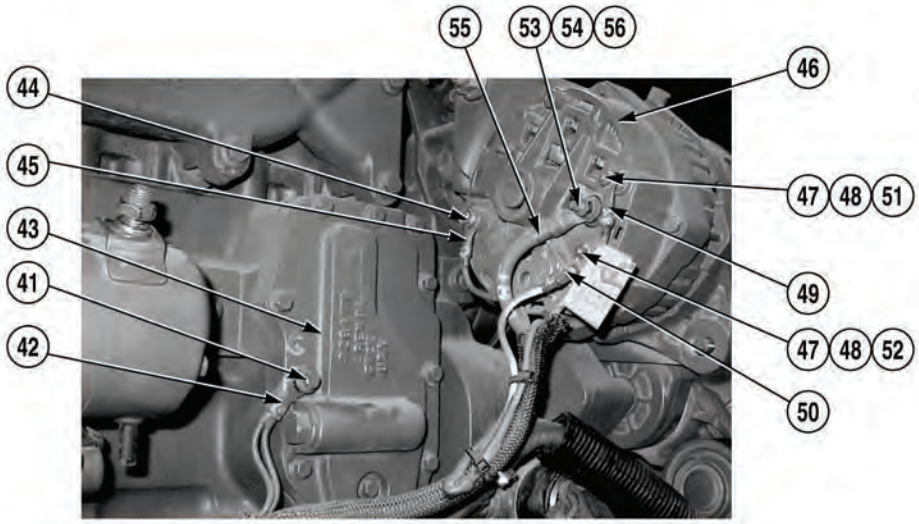

(15) Install wire (55) on stud (56) with lockwasher (54) and nut (53).

(16) Install two wires (49) and (50) on studs (51) and (52) with two lockwashers (48) and nuts (47).

(17) Install wire (45) on alternator (46) with screw (44).

(18) Install ring terminal (42) on cover (43) with screw (41).

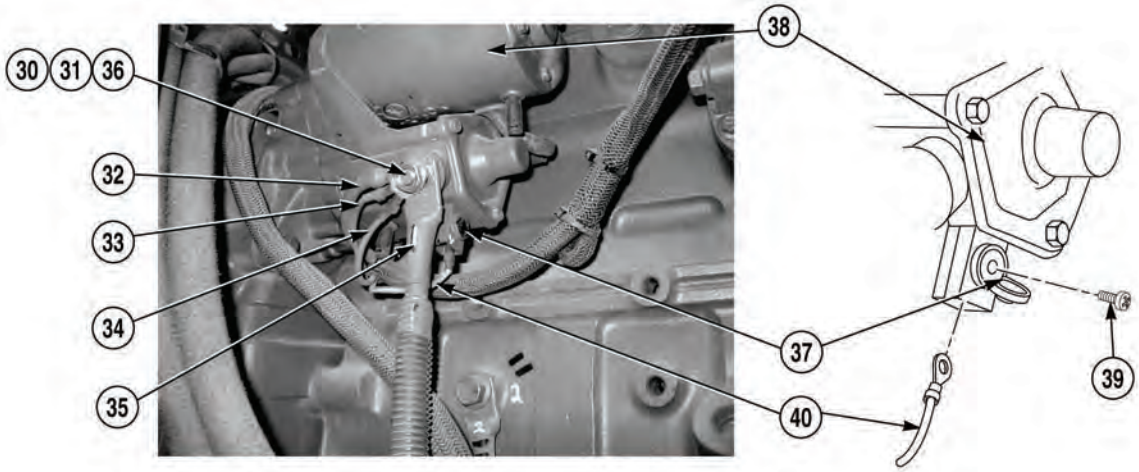

(19) Install wire (40) on starter (38) with screw (39).

(20) Close cover (37) on starter (38).

(21) Install four wires (32), (33), (34), and (35) on stud (36) with lockwasher (31) and nut (30).

3-136. ENGINE WIRE HARNESS REPLACEMENT (S/N 8RDCD301620HC AND SUBSEQUENT) (CONT).

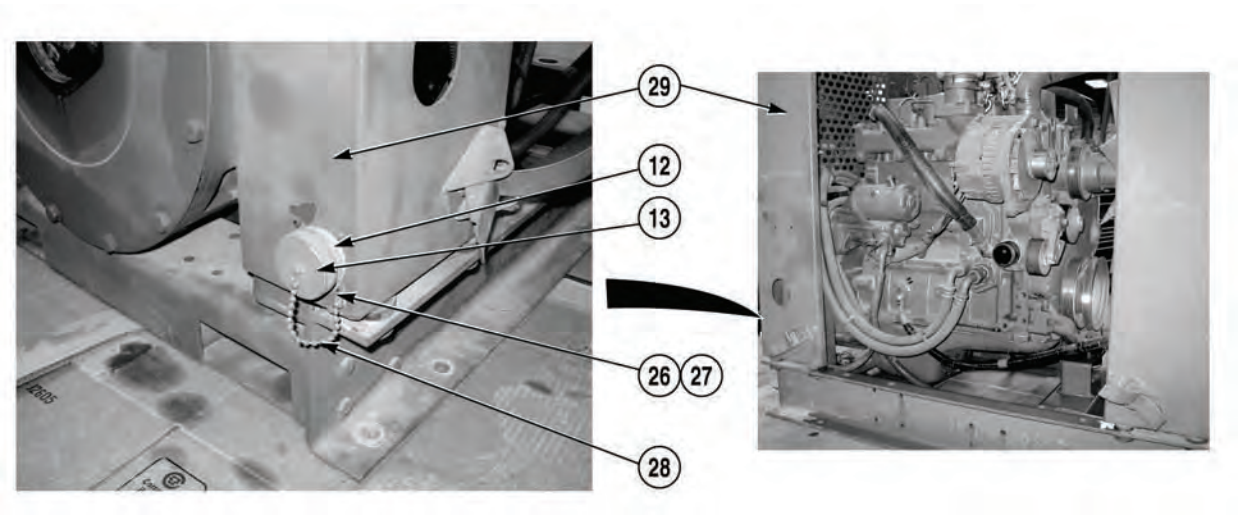

(22) Install connector (12) and chain (28) on corner post (29) with four locknuts (26) and screws (27).

(23) Install cap (13) on connector (12).

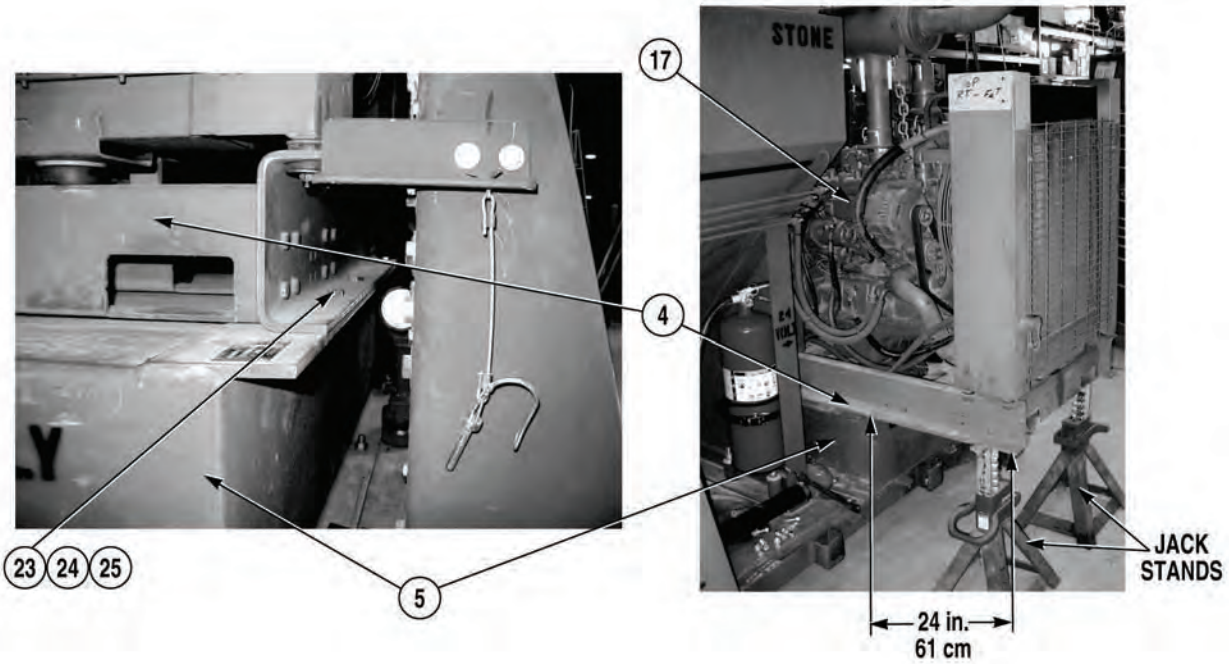

WARNING

Engine and engine support assembly weigh 1200 lb (544.8 kg). Do not attempt to move or lift engine and engine support assembly without aid of an assistant and suitable lifting device. Failure to comply could result in serious injury or death to personnel.

CAUTION

Engine and engine support assembly must be lifted high enough to clear fuel tank fill cap when engine is installed on fuel tank. Failure to comply may cause damage to equipment.

(24) With the aid of an assistant and suitable lifting device install engine (17) and engine support assembly (4) on fuel tank (5) with six screws (25), lockwashers (24), and nuts (23).

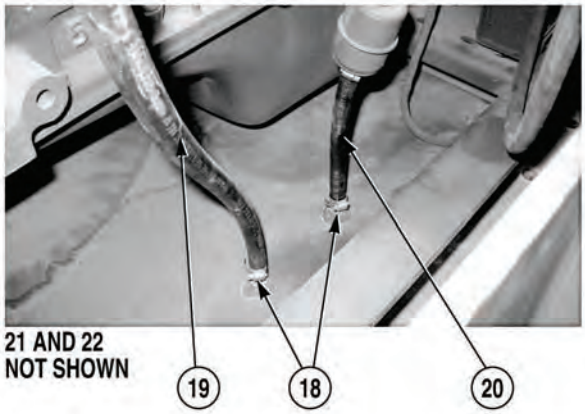

(25) Install two fuel lines (19) and (20) on fittings (21) and (22) with clamps (18).

3-136. ENGINE WIRE HARNESS REPLACEMENT (S/N 8RDCD301620HC AND SUBSEQUENT) (CONT).

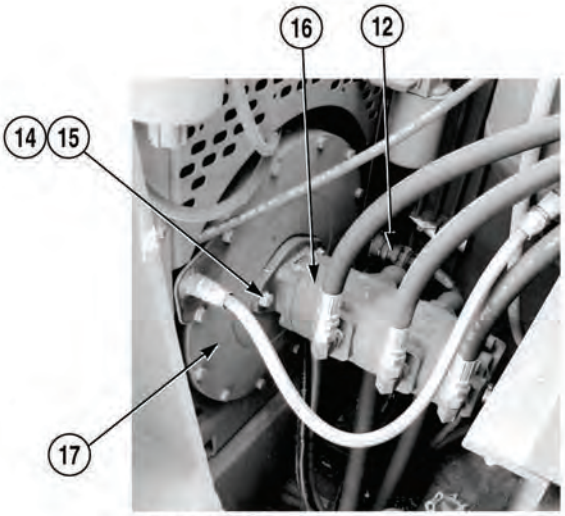

13 NOT SHOWN

(26) With the aid of an assistant and suitable lifting device install hydraulic pump (16) on engine (17) with two lockwashers (15) and screws (14).

(27) Remove cap (13) from connector (12).

(28) Connect connector (12).

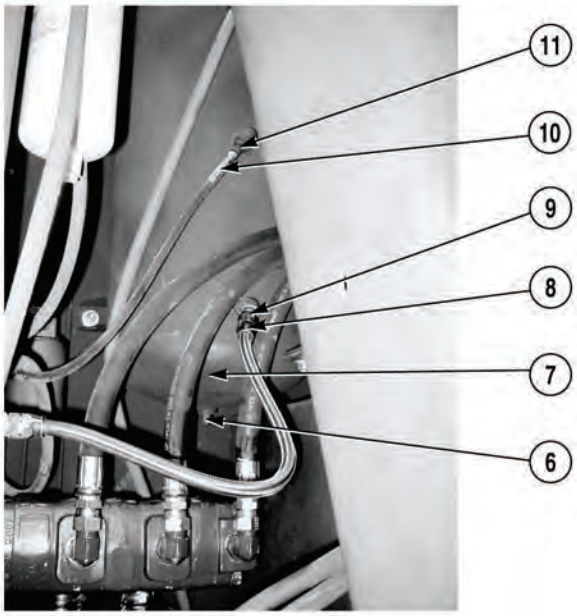

(29) Install air line (10) on fitting (11).

(30) Install air line (8) on fitting (9).

(31) Close drain cock (6) on air reservoir (7).

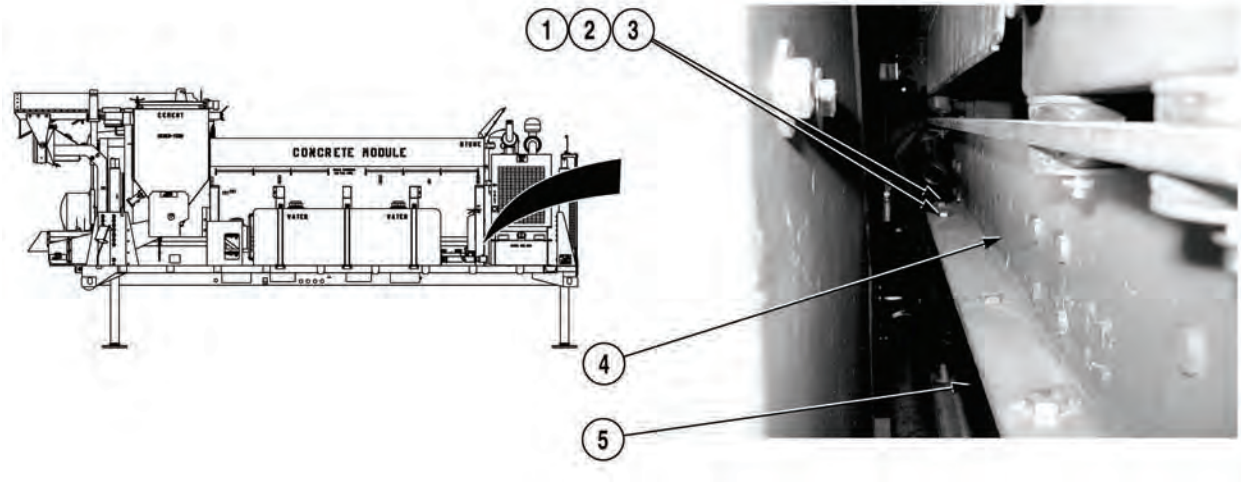

(32) Install top engine cover, (Para 3-93).

(33) Install front engine access panel, (Para 3-78).

(34) Raise Concrete Mobile Mixer, (Para 2-28).

(35) Install two screws (3), lockwashers (2), and nuts (1) on engine support assembly (4) and fuel tank (5).

c. Follow-On Maintenance:

- Install top engine cover, (Para 3-93).
- Install front engine access panel, (Para 3-78).
- Connect batteries, (Para 3-10).
- Stow ladder, (Para 2-30).
- Stow work station platform, (Para 2-27).

END OF TASK

3-137. CONTROL BOX WIRE HARNESS (8-PIN CONNECTOR) REPLACEMENT.

This task covers:

a. Removal b. Installation c. Follow-On Maintenance

INITIAL SETUP

Tools and Special Tools
Tool Kit, General Mechanic's: Automotive (Item 19, Appendix I)

Materials/Parts
Tags, Identification (Item 13, Appendix H)
Locknut (1600460)
Lockwasher (2) (1978HX)
Lockwasher (MS 35338-42)

Equipment Condition
Control box removed, (Para 3-90)

a. Removal.

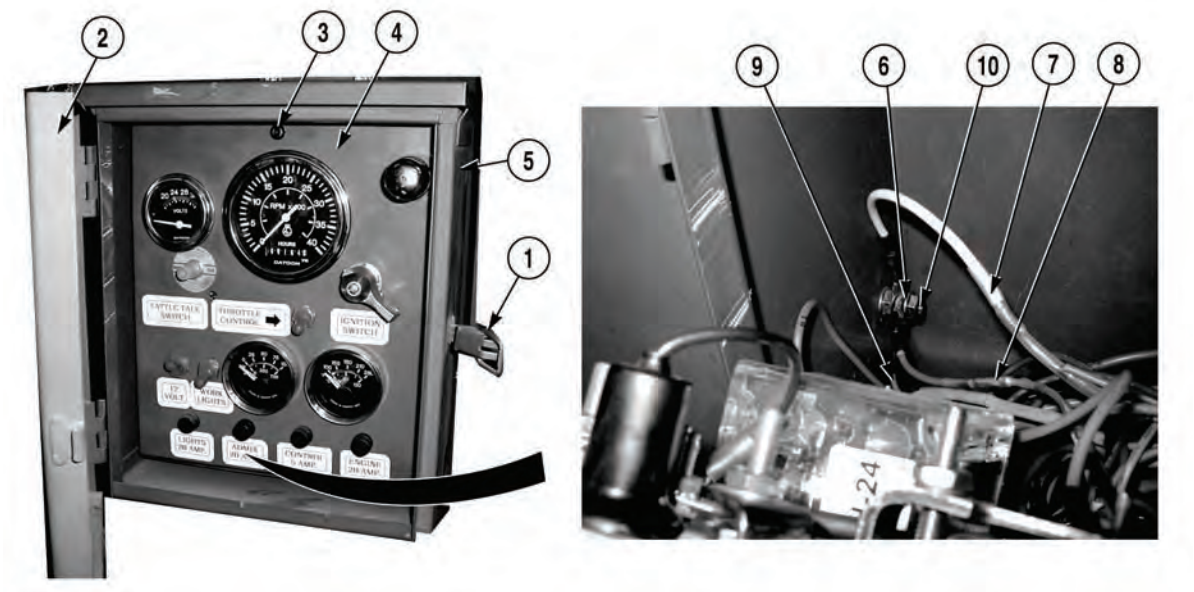

(1) Release latch (1) and open control box door (2).

NOTE

Gently tip control panel forward to access wires.

(2) Remove screw (3) and control panel (4) from control box (5).

NOTE

Tag and mark wires prior to removal.

(3) Remove locknut (6), white wire (7), orange wire with diode (8), and pink wire with diode (9) from stud (10). Discard locknut.

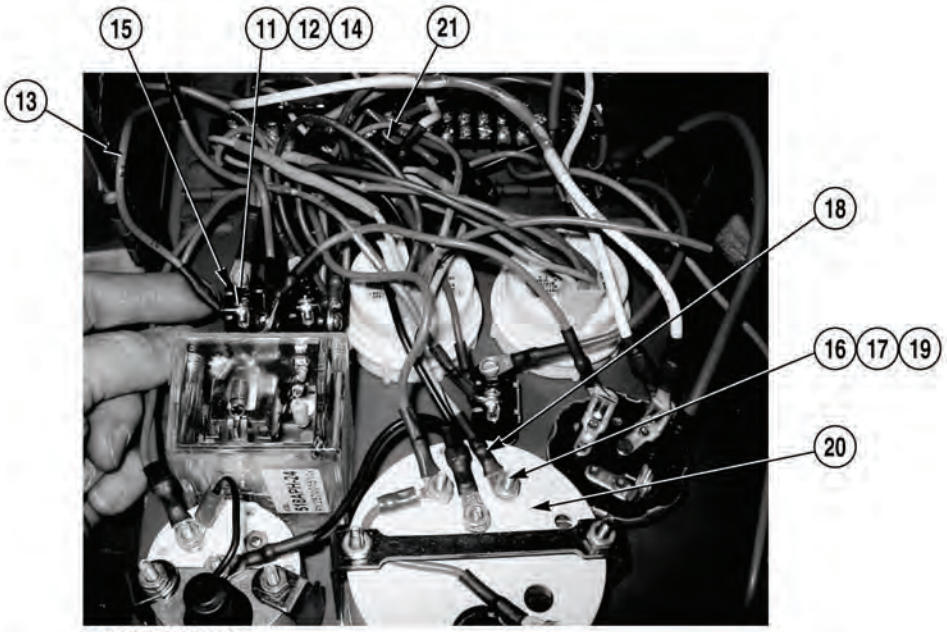

22 NOT SHOWN

NOTE

Brown wire is not connected.

(4) Remove screw (11), lockwasher (12), and orange wire (13) from terminal (14) on 12-volt switch (15). Discard lockwasher.

(5) Remove nut (16), lockwasher (17), and yellow/black wire (18) from terminal S (19) on tachometer gage (20). Discard lockwasher.

(6) Remove red/white wire (21) from 5-amp fuse (22).

3-137. CONTROL BOX WIRE HARNESS (8-PIN CONNECTOR) REPLACEMENT (CONT).

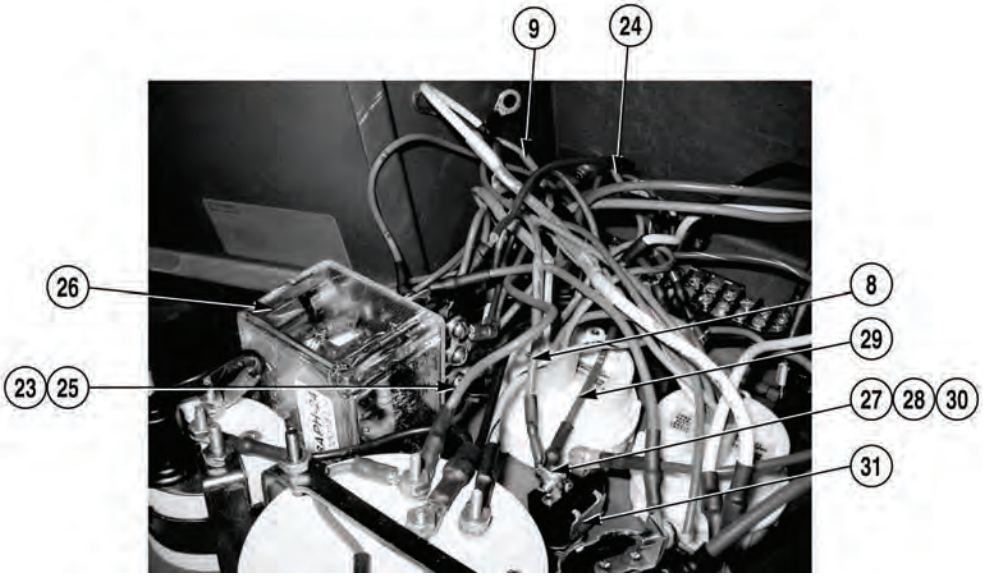

NOTE

Screw has captive lockwasher.

(7) Remove screw (23), pink wire (24), and pink wire with diode (9) from terminal NC (25) on tattle tale switch (26).

(8) Remove screw (27), lockwasher (28), red wire (29), and orange wire with diode (8) from terminal (30) on throttle control switch (31). Discard lockwasher.

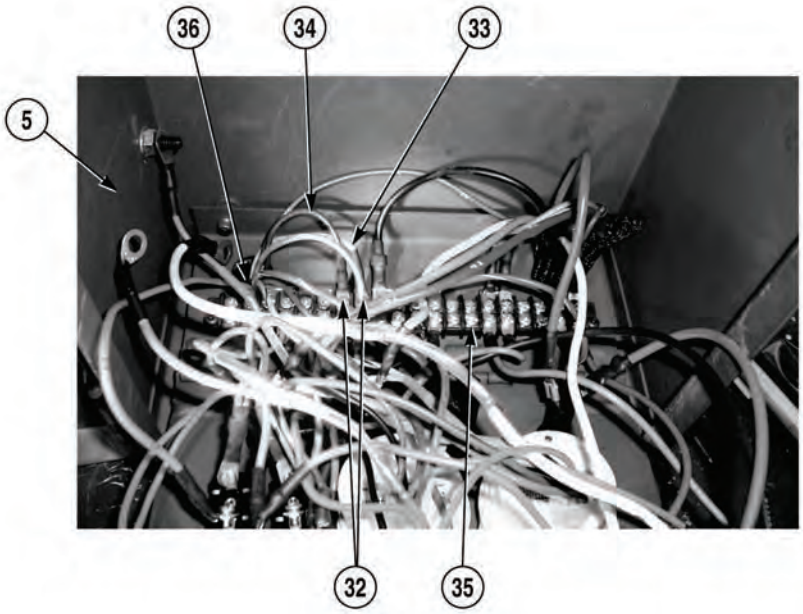

NOTE

Terminal strip connection points are numbered from left to right. Yellow wire removed from position eight and blue wire removed from position seven.

(9) Remove two screws (32) and remove yellow wire (33) and blue wire (34) from terminal strip (35).

(10) Remove wire harness (36) from control box (5).

b. Installation.

(1) Position wire harness (36) in control box (5).

(2) Install yellow wire (33) and blue wire (34) on terminal strip (35) with two screws (32).

3-137. CONTROL BOX WIRE HARNESS (8-PIN CONNECTOR) REPLACEMENT (CONT).

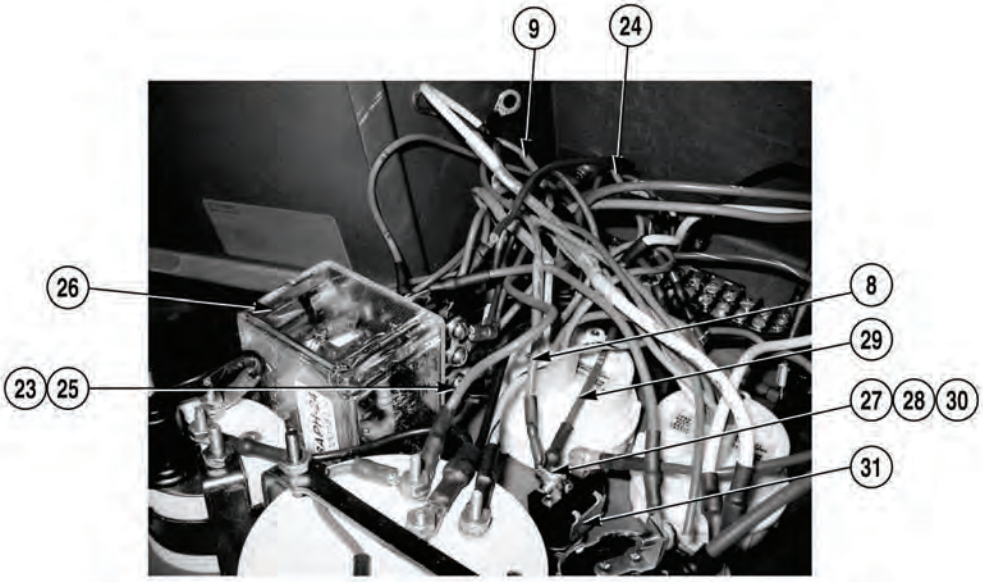

(3) Install red wire (29) and orange wire with diode (8) on terminal (30) of throttle control switch (31) with lockwasher (28) and screw (27).

(4) Install pink wire (24) and pink wire with diode (9) on terminal NC (25) of tattle tale switch (26) with screw (23).

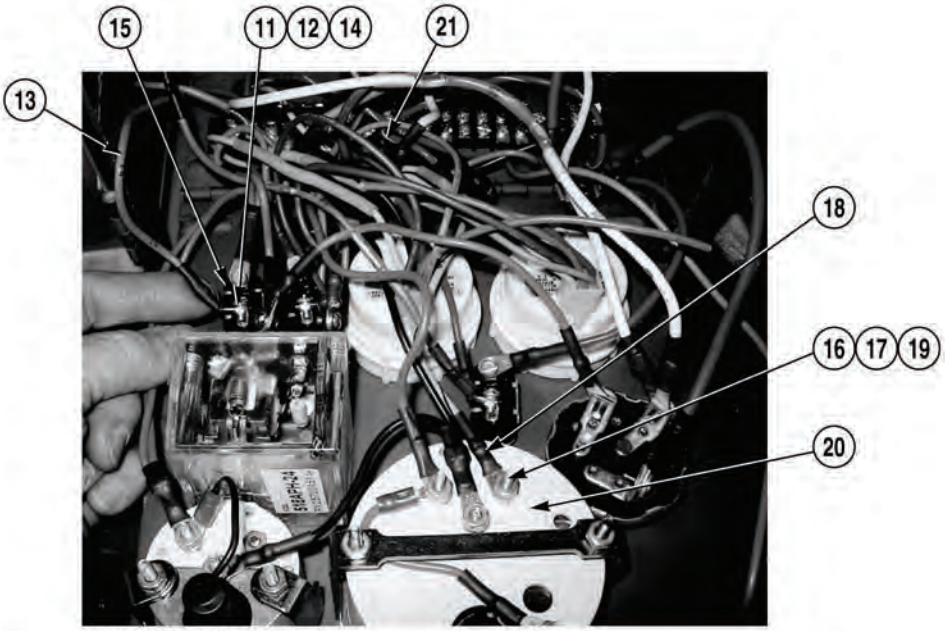

22 NOT SHOWN

(5) Install red/white wire (21) on 5-amp fuse (22).

(6) Install yellow/black wire (18) on terminal S (19) of tachometer gage (20) with lockwasher (17) and nut (16).

(7) Install orange wire (13) on terminal (14) of 12-volt switch (15) with lockwasher (12) and screw (11).

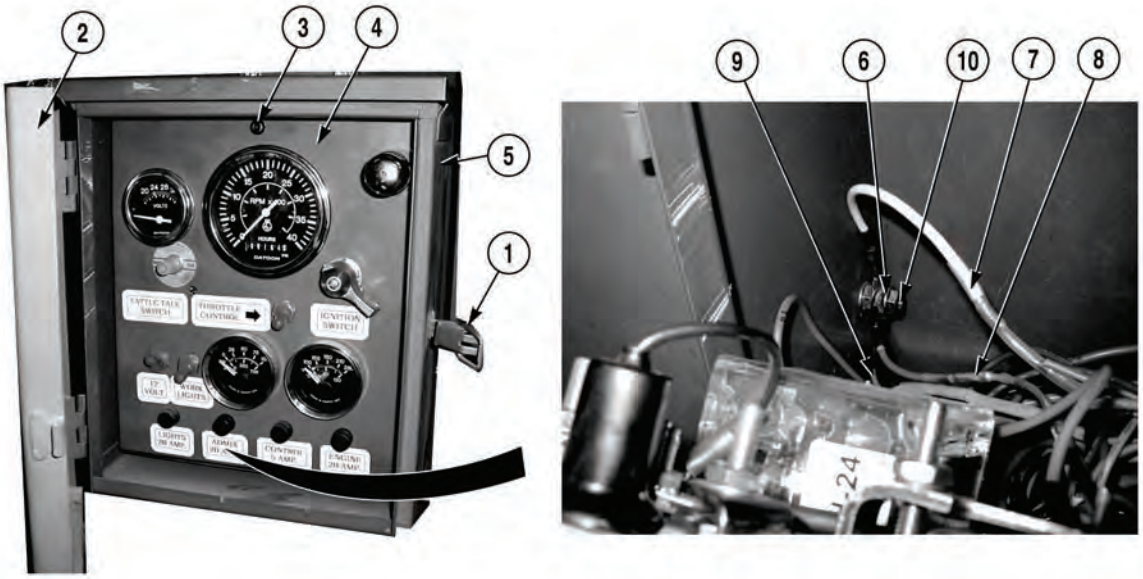

(8) Install white wire (7), orange wire with diode (8), and pink wire with diode (9) on stud (10) with locknut (6).

(9) Install control panel (4) on control box (5) with screw (3).

(10) Close control box door (2) and secure latch (1).

c. Follow-On Maintenance:

- Install control box, (Para 3-90).

END OF TASK

3-138. CONTROL BOX WIRE HARNESS (5-PIN CONNECTOR) REPLACEMENT.

This task covers:

a. Removal b. Installation c. Follow-On Maintenance

INITIAL SETUP

Tools and Special Tools
Tool Kit, General Mechanic's: Automotive (Item 19, Appendix I)

Materials/Parts
Tags, Identification (Item 13, Appendix H)
Locknut (1600460)
Lockwasher (MS 35338-43)

Equipment Condition
Control box removed, (Para 3-90)

a. Removal.

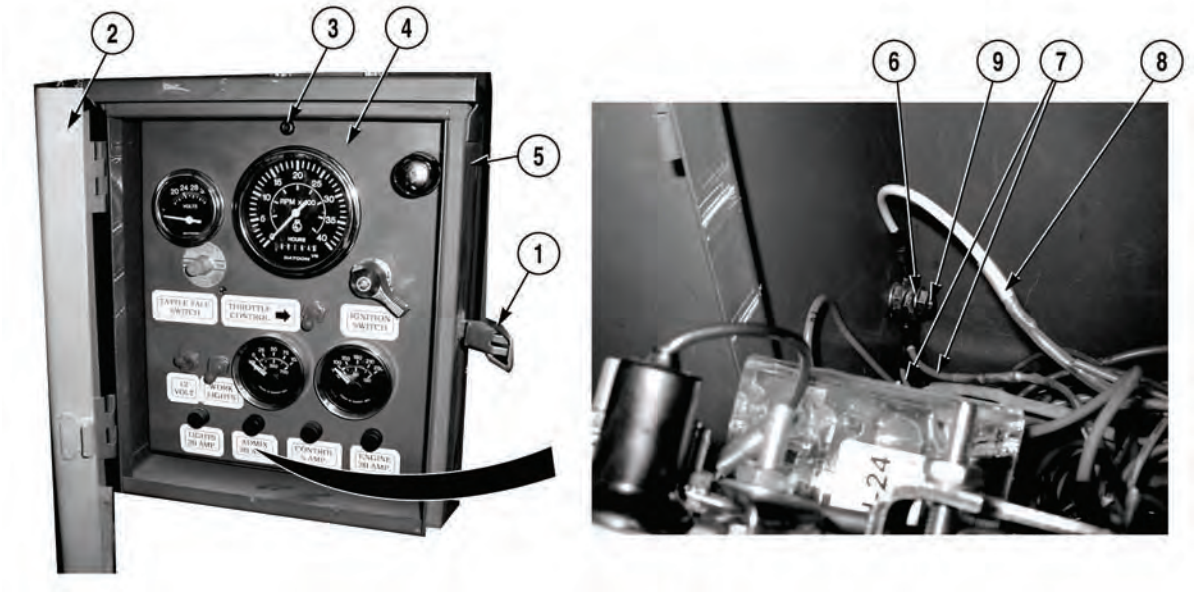

(1) Release latch (1) and open control box door (2).

NOTE

Gently tip control panel forward to access wires.

(2) Remove screw (3) and control panel (4) from control box (5).

NOTE

Tag and mark wires prior to removal.

(3) Remove locknut (6), two wires (7), and white wire with diode (8) from stud (9). Discard locknut.

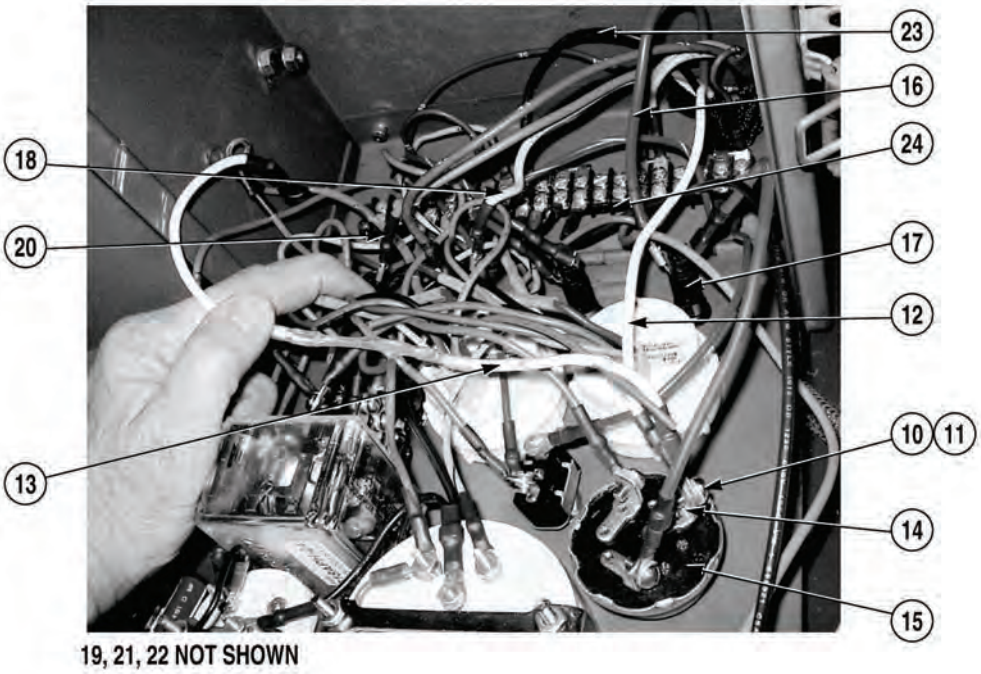

(4) Remove screw (10), lockwasher (11), white wire (12), and white wire with diode (13) from terminal S (14) on ignition switch (15). Discard lockwasher.

(5) Remove red wire (16) from 20-amp engine fuse (17).

(6) Remove yellow wire (18) from 20-amp admix fuse (19).

(7) Remove orange wire (20) from 20-amp light fuse (21).

NOTE

Terminal strip connection points are numbered from left to right. Black wire removed from position nine.

(8) Remove screw (22) and black wire (23) from terminal strip (24).

b. Installation.

(1) Install back wire (23) on terminal strip (24) with screw (22).

(2) Install orange wire (20) on 20-amp light fuse (21).

(3) Install yellow wire (18) on 20-amp admix fuse (19).

(4) Install red wire (16) on 20-amp engine fuse (17).

(5) Install white wire (12) and white wire with diode (13) on terminal S (14) of ignition switch (15) with lockwasher (11) and screw (10).

3-138. CONTROL BOX WIRE HARNESS (5-PIN CONNECTOR) REPLACEMENT (CONT).

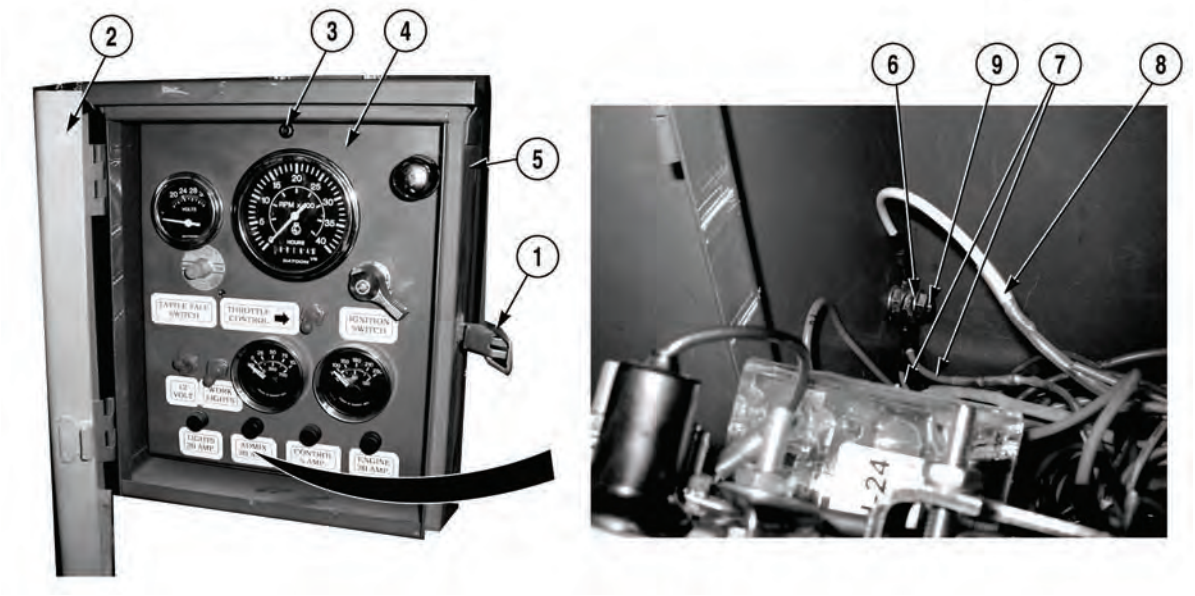

(6) Install two wires (7) and white wire with diode (8) on stud (9) with locknut (6).

(7) Install control panel (4) on control box (5) with screw (3).

(8) Close control box door (2) and secure latch (1).

c. Follow-On Maintenance:

- Install control box, (Para 3-90).

END OF TASK

3-139. CONTROL BOX WIRE HARNESS (4-PIN CONNECTOR) REPLACEMENT.

This task covers:

a. Removal b. Installation c. Follow-On Maintenance

INITIAL SETUP

Tools and Special Tools
Tool Kit, General Mechanic's: Automotive (Item 19, Appendix I)

Materials/Parts
Tags, Identification (Item 13, Appendix H)
Locknut (1600460)

Equipment Condition
Control box removed, (Para 3-90)

a. Removal.

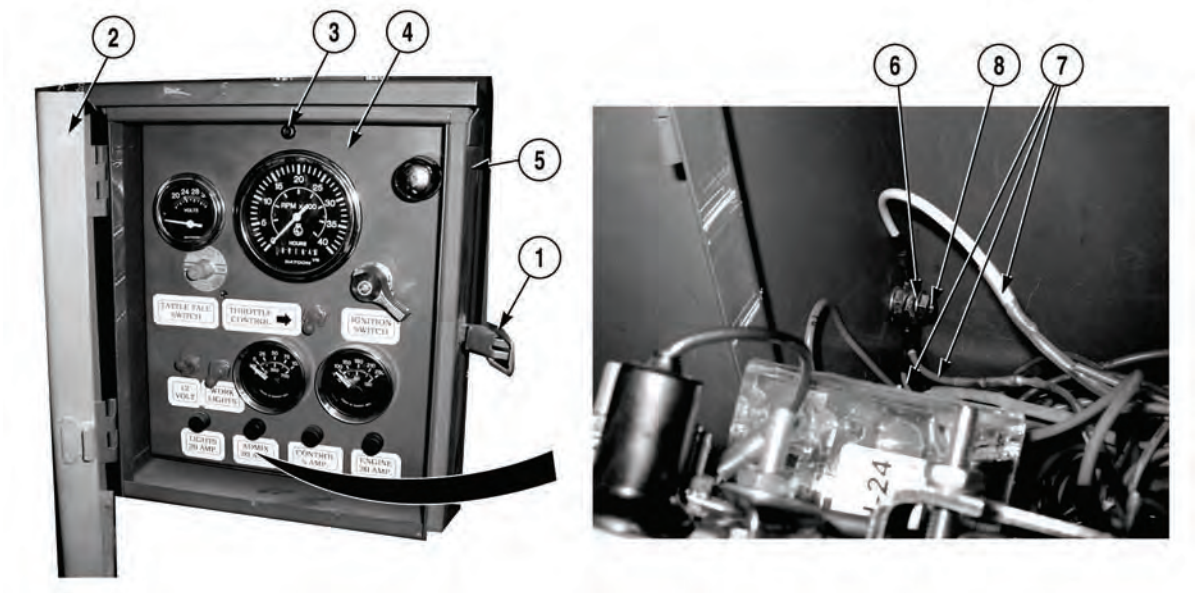

(1) Release latch (1) and open control box door (2).

NOTE

Gently tip control panel forward to access wires.

(2) Remove screw (3) and control panel (4) from control box (5).

NOTE

- Three wires must be removed from ground stud to provide sufficient clearance.
- Tag and mark wires prior to removal.

(3) Remove locknut (6) and three wires (7) from stud (8). Discard locknut.

3-139. CONTROL BOX WIRE HARNESS (4-PIN CONNECTOR) REPLACEMENT (CONT).

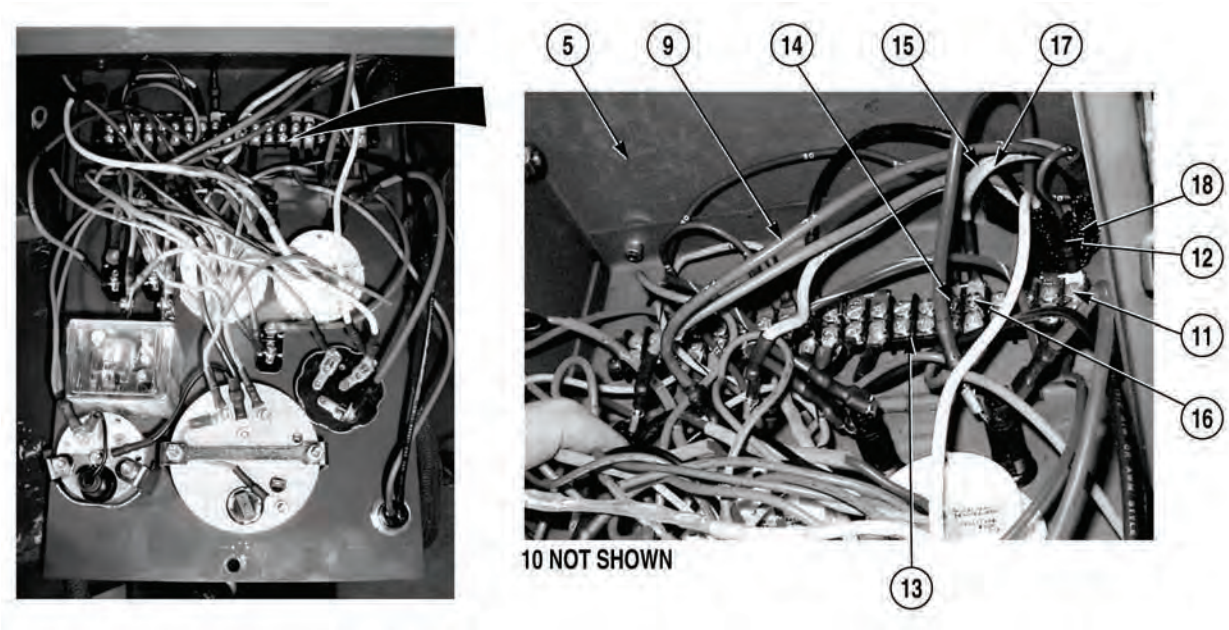

(4) Disconnect blue wire (9) from 20-amp admix fuse (10).

NOTE

Terminal strip connection points are numbered from left to right. Blue wire removed from position twenty.

(5) Remove screw (11) and blue wire (12) from terminal strip (13).

NOTE

Grey wire removed from position fifteen.

(6) Remove screw (14) and grey wire (15) from terminal strip (13).

NOTE

Yellow wire removed from position sixteen.

(7) Remove screw (16) and yellow wire (17) from terminal strip (13), and remove wire harness (18) from control box (5).

b. Installation.

(1) Position wire harness (18) in control box (5) and install yellow wire (17) on terminal strip (13) with screw (16).

(2) Install grey wire (15) on terminal strip (13) with screw (14).

(3) Install blue wire (12) on terminal strip (13) with screw (11).

(4) Connect blue wire (9) on 20-amp admix fuse (10).

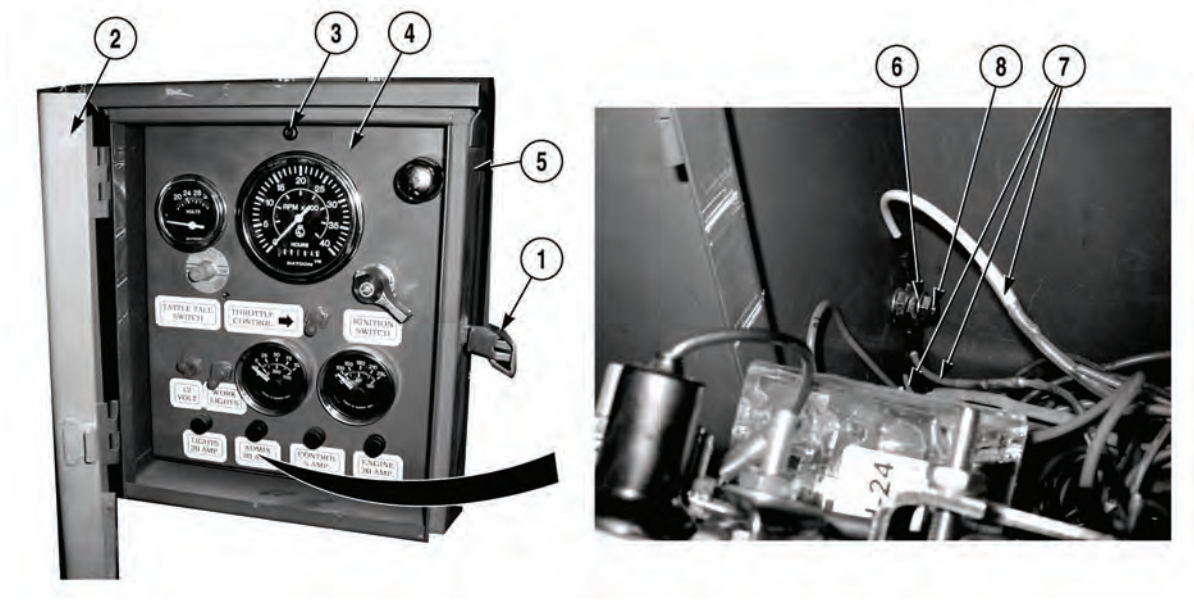

(5) Install three wires (7) on stud (8) with locknut (6).

(6) Install control panel (4) on control box (5) with screw (3).

(7) Close control box door (2) and secure latch (1).

c. Follow-On Maintenance:

- Install control box, (Para 3-90).

END OF TASK

3-140. BATTERY EQUALIZER AND SLAVE RECEPTACLE CABLE REPLACEMENT (S/N 8RDCD301620HC AND SUBSEQUENT).

This task covers:

a. Removal b. Installation C. Follow-On Maintenance

INITIAL SETUP

Tools and Special Tools
Tool Kit, General Mechanic's: Automotive (Item 19, Appendix I)

Materials/Parts
Tags, Identification (Item 13, Appendix H)
Cable Ties (Item 2, Appendix H)
Locknut (3) (TBD)
Locknut (4) (1600460)
Screw, Self-Tapping (4) (1367HX1)
Lockwasher (MS 35338-45)
Lockwasher (TBD)

Equipment Condition
Batteries disconnected, (Para 3-10)
Top engine cover removed, (Para 3-93)

a. Removal.

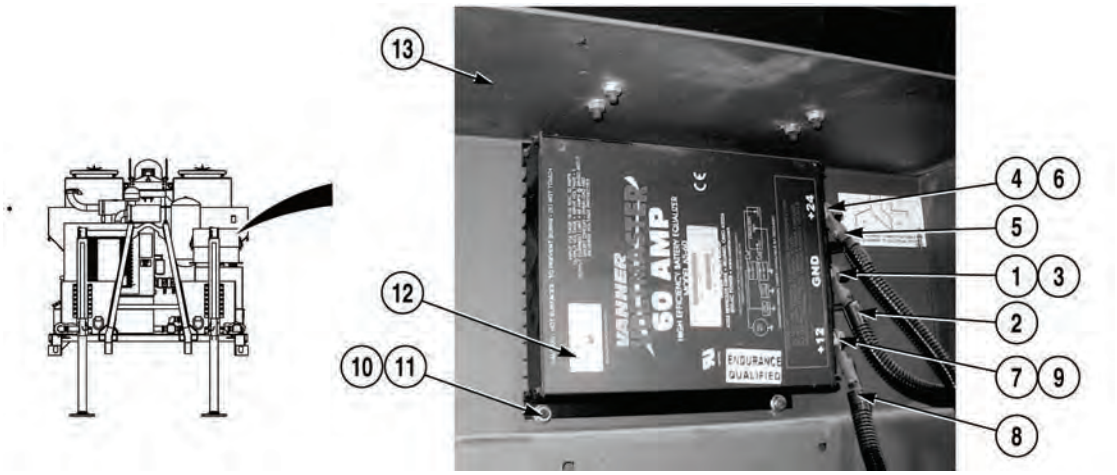

NOTE

- Tag and mark wires and cables prior to removal.
- Remove cushion clips and cable ties as required.
- Perform Steps (1) through (4) to remove battery equalizer.

(1) Remove locknut (1) and cable (2) from ground stud (3). Discard locknut.

(2) Remove locknut (4) and cable (5) from +24-volt stud (6). Discard locknut.

(3) Remove locknut (7) and cable (8) from +12-volt stud (9). Discard locknut.

(4) Remove four locknuts (10), screws (11), and battery equalizer (12) from cover (13). Discard locknuts.

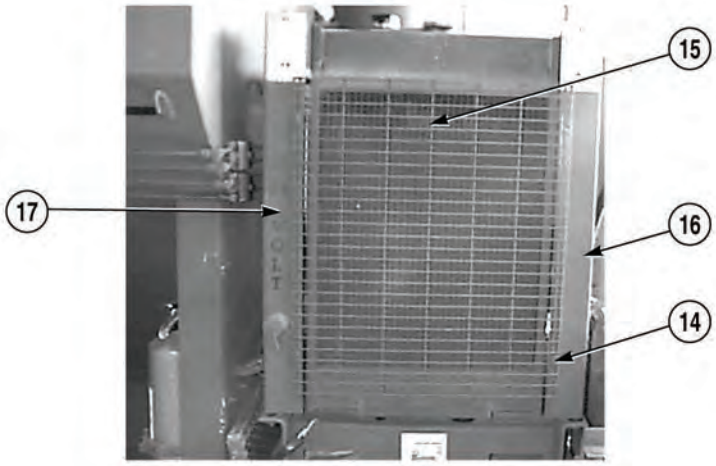

NOTE

Perform Steps (5) through (9) to remove slave receptacle cables.

(5) Remove four self-tapping screws (14) and grille (15) from two corner supports (16) and (17). Discard self-tapping screws.

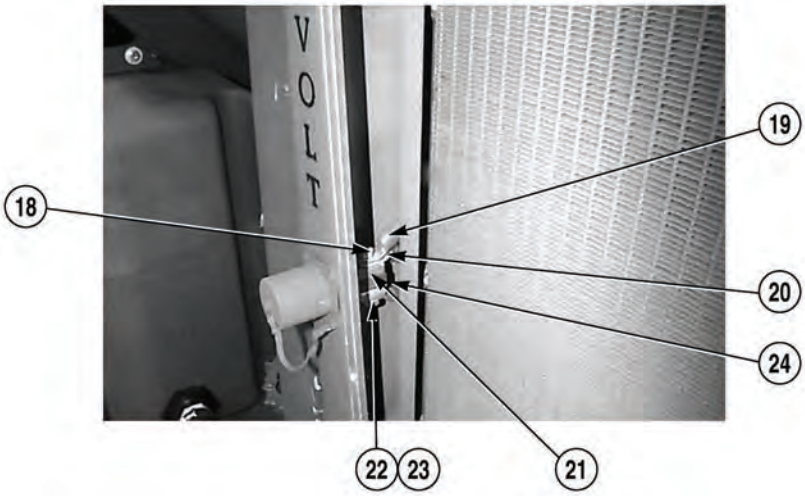

(6) Remove screw (18) and two cables (19) and (20) from connector (21).

(7) Remove screw (22), lockwasher (23), and cable (24) from connector (21). Discard lockwasher.

3-140. BATTERY EQUALIZER AND SLAVE RECEPTACLE CABLE REPLACEMENT (S/N 8RDCD301620HC AND SUBSEQUENT) (CONT).

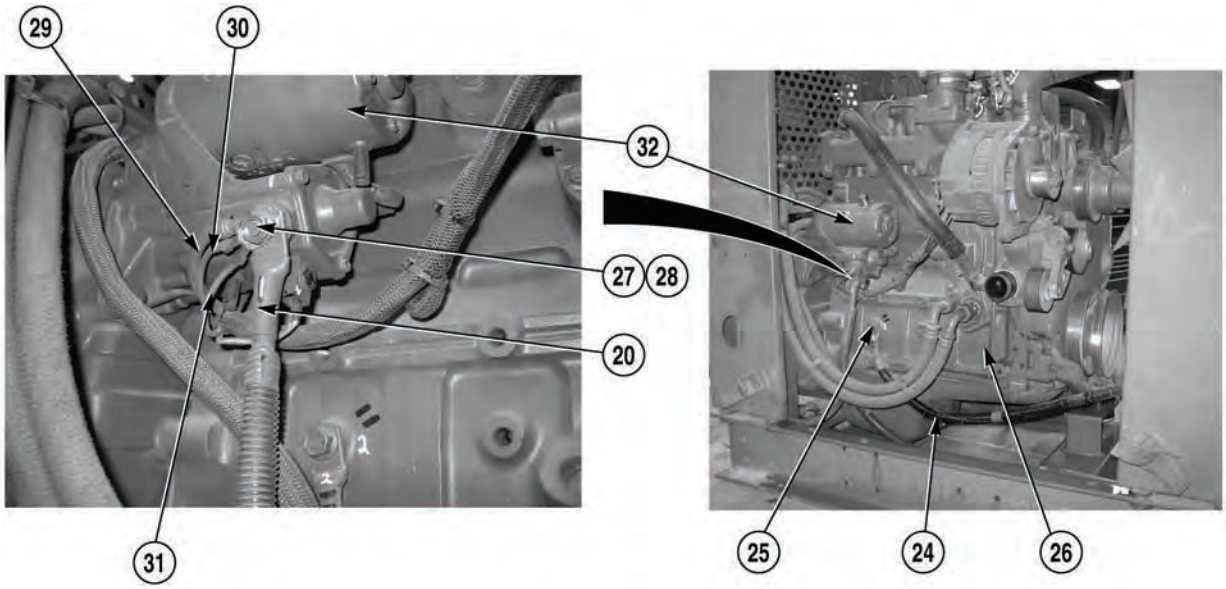

(8) Remove screw (25) and cable (24) from engine (26).

(9) Remove nut (27), lockwasher (28), and three wires (29), (30), (31), and cable (20) from starter (32). Discard lockwasher.

b. Installation.

NOTE

- Install cushion clips and cable ties as required.
- Perform Steps (1) through (5) to install slave receptacle cable.

(1) Install cable (20) and three wires (29), (30), and (31) on starter (32) with lockwasher (28) and nut (27).

(2) Install cable (24) on engine (26) with screw (25).

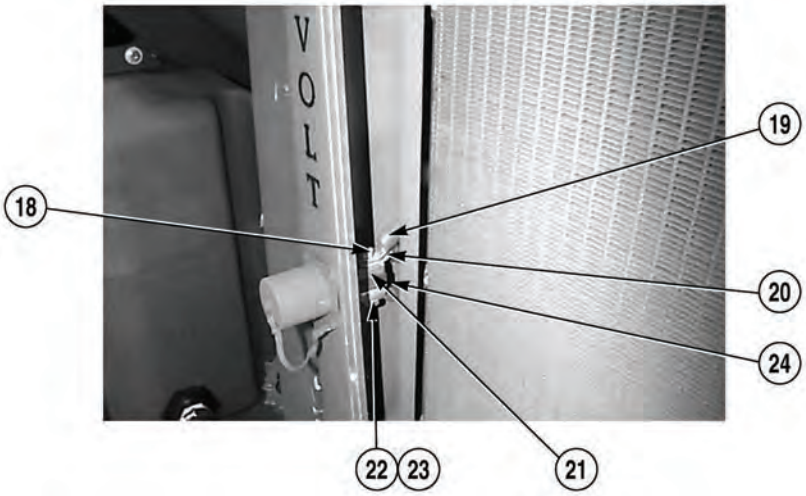

(3) Install cable (24) on connector (21) with lockwasher (23) and screw (22).

(4) Install two cables (19) and (20) on connector (21) with screw (18).

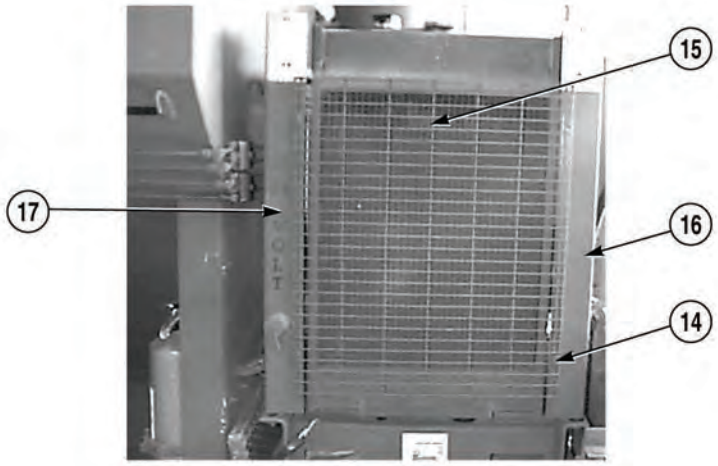

(5) Install grille (15) on two corner supports (16) and (17) with four self-tapping screws (14).

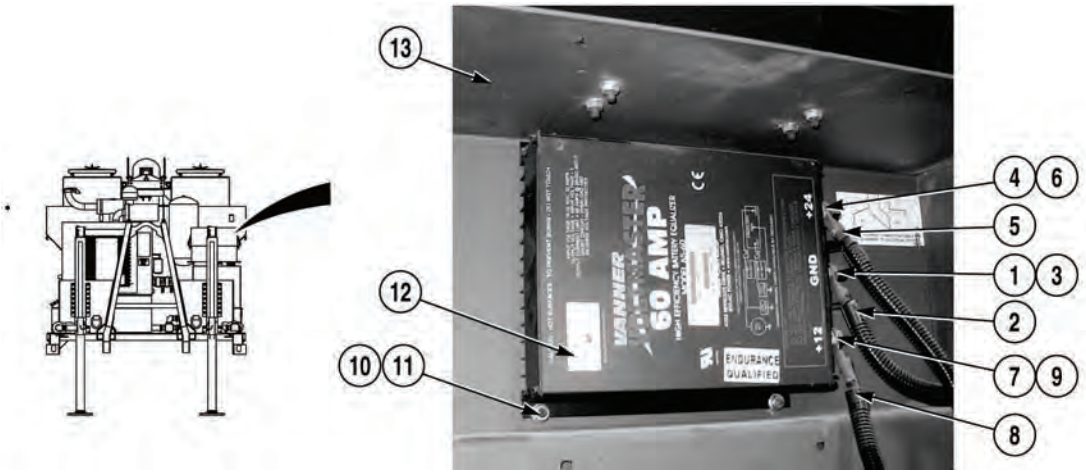

NOTE

Perform Steps (6) through (9) to install battery equalizer.

(6) Install battery equalizer (12) on cover (13) with four screws (11) and locknuts (10).

(7) Install cable (8) on +12-volt stud (9) with locknut (7).

(8) Install cable (5) on +24-volt stud (6) with locknut (4).

(9) Install cable (2) on ground stud (3) with locknut (1).

c. Follow-On Maintenance:

- Install top engine cover, (Para 3-93).
- Connect batteries, (Para 3-10).

END OF TASK

3-141. WIRE REPAIR.

This task covers:

a. Type 1 Wire Repair b. Type 2 Wire Repair c. Follow-On Maintenance

INITIAL SETUP

Tools and Special Tools
Tool Kit, General Mechanic's: Automotive (Item 19, Appendix I)
Crimping Tool (Item 5, Appendix I)

Equipment Condition
Batteries disconnected, (Para 3-10)

a. Type 1 Wire Repair.

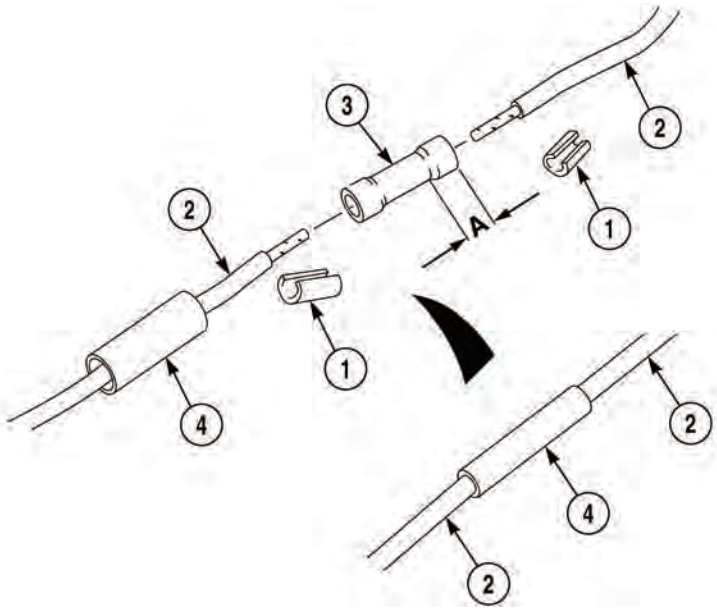

NOTE

If required, remove butt connector from wire.

(1) Remove insulation (1) from both ends of wires (2) equal to dimension A on butt connector (3).

(2) Slide 3 in. (76.20 mm) piece of heatshrink tubing (4) over end of one wire (2).

NOTE

Ensure all strands of wire are inside terminal of butt connector.

(3) Install bare ends of wire (2) in butt connector (3) and crimp securely.

(4) Inspect wire splice to ensure no bare wire is visible.

(5) Slide heatshrink tubing (4) over butt connector (3).

WARNING

- Never use open flame to apply heat to heatshrink tubing. Failure to comply may result in injury to personnel.
- Allow heatshrink tubing to cool before handling. Failure to comply may result in injury to personnel.

CAUTION

Do not overheat tubing. Failure to comply may cause damage to equipment.

NOTE

Ensure butt connector is centered in heatshrink tubing.

(6) Apply heat to heatshrink tubing (4). Allow heatshrink tubing to shrink until tight on butt connector (3) and wire (2).

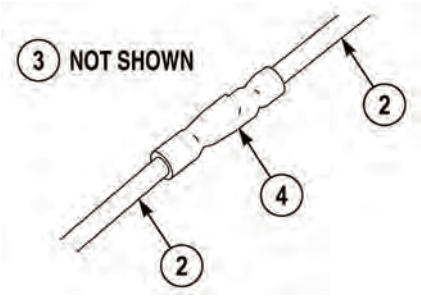

b. Type 2 Wire Repair.

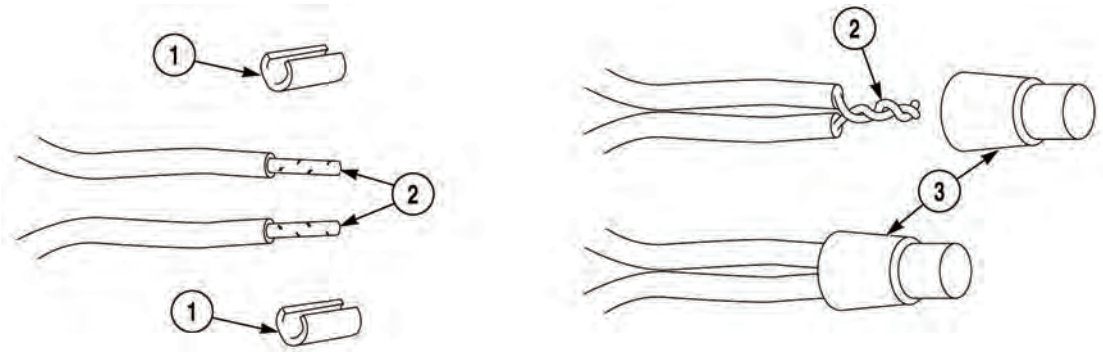

NOTE

Remove pigtail, spade or ring connector from remaining wire(s) if required. Pigtail connector shown.

(1) Remove insulation (1) from both ends of wires (2) equal to the length of connector (3).

(2) Twist two ends of wires (2) together.

(3) Install connector (3) on two wires (2) and crimp securely.

c. Follow-On Maintenance:

- Connect batteries, (Para 3-10).

END OF TASK

3-142. CYLINDER HEAD REPLACEMENT (S/N RDCD301513HC THRU S/N 8RDCD301619HC).

This task covers:

a. Removal b. Installation c. Follow-On Maintenance

INITIAL SETUP

Tools and Special Tools
- Tool Kit, General Mechanic's: Automotive (Item 19, Appendix I)
- Cap and Plug set (Item 3, Appendix I)
- Wrench, Torque (Item 25, Appendix I)
- Wrench, Torque (Item 26, Appendix I)
- Socket Set, 3/8 in. (Item NO TAG, Appendix I)
- Lifting Device, Minimum Capacity 80 lb (36 kg)
- Pan, Drain (Item 12, Appendix I)

Materials/Parts
- Tags, Identification (Item 13, Appendix H)
- Sealing Compound (Item 11, Appendix H)
- Anti-seize compound (Item 15, Appendix H)
- Gaskets (4) (3905443)
- Gaskets (4) (3930906)
- Seals (6) (3918191)
- Gasket (3931605)

Materials/Parts (Continued)
- Preformed Packing (3906694)
- Preformed Packing (3906695)
- Gasket (3283333)
- Lubricating Oil, Engine 15/40 (Item 6, Appendix H)

Personnel Required
- Two

Equipment Condition
- Engine OFF (Para 2-19)
- Concrete Mobile Mixer unloaded (Para 2-5)
- Thermostat removed (Para 3-99)
- Fan Blade removed (Para 3-101)
- Alternator removed (Para 3-25)
- Fuel Filter removed (Para 3-27)
- Top Engine Cover removed (Para 3-93)

a. Removal.

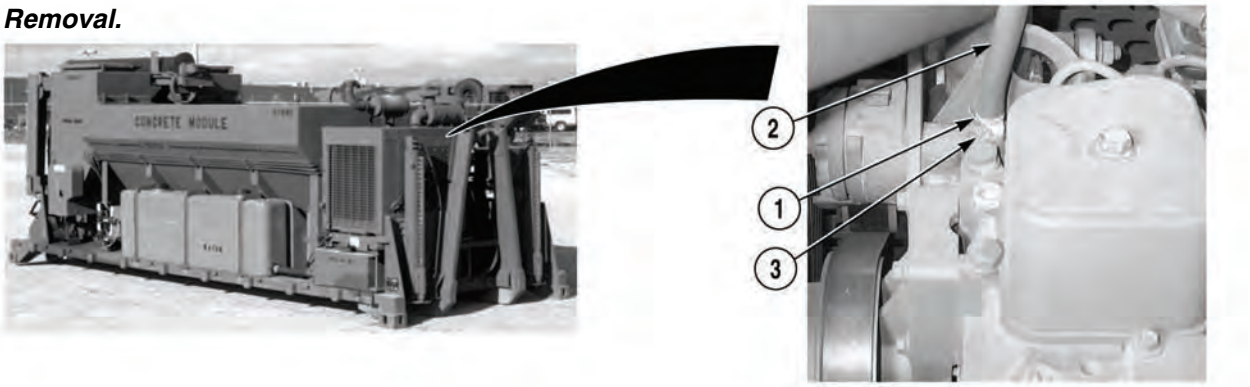

WARNING

Fuel is very flammable and can explode easily. To avoid serious injury or death, keep fuel away from open fire and keep fire extinguisher within easy reach when working with fuel. Do not work on fuel system when engine is hot. Fuel can be ignited by hot engine.

(1) Loosen clamp (1) and remove hose (2) from fitting (3).

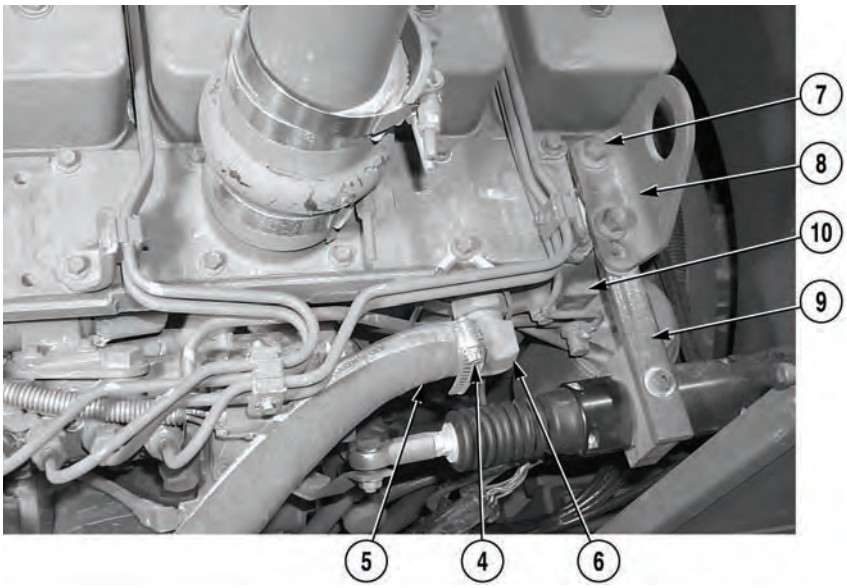

(2) Loosen clamp (4) and remove hose (5) from elbow (6).

(3) Remove two screws (7), lifting bracket (8), and bracket (9) from cylinder head (10).

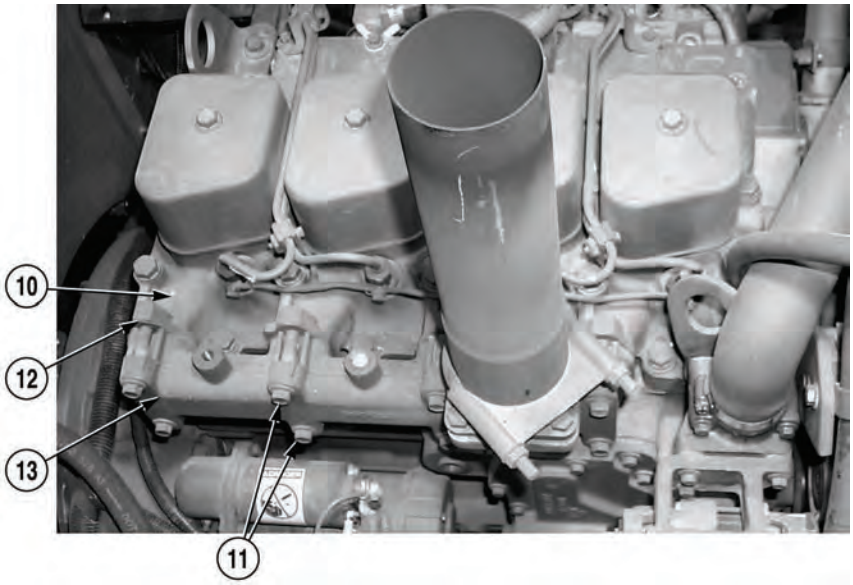

(4) Remove eight screws (11), four gaskets (12), and exhaust manifold (13) from cylinder head (10). Discard gaskets.

3-142. CYLINDER HEAD REPLACEMENT (S/N 8RDCD301513HC THRU S/N 8RDCD301619HC) (CONT).

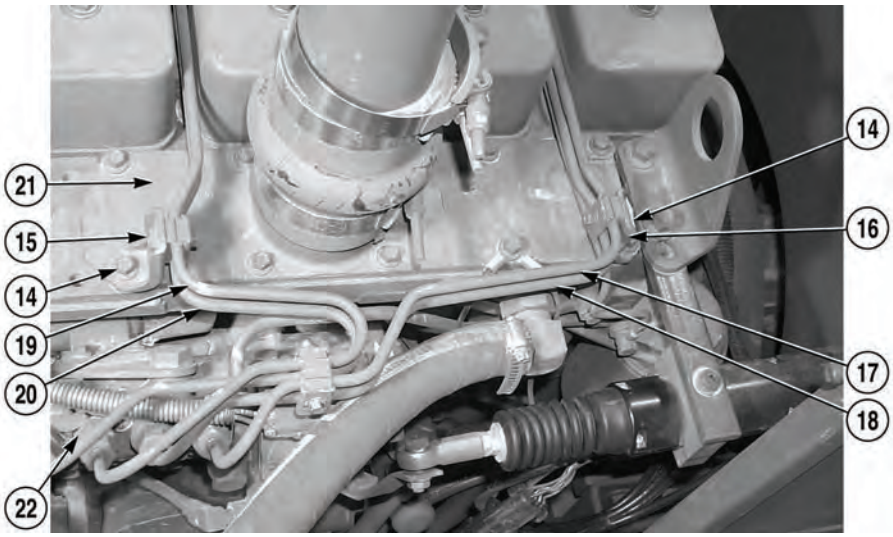

CAUTION

Use caution during removal to not bend high pressure lines. This could cause inside of fuel line to flake and cause injector failure.

(5) Remove two screws (14), braces (15) and (16), and fuel four lines (17), (18), (19), and (20) from manifold cover assembly (21).

NOTE

- Cap and plug fuel lines upon removal.
- Position drain pan under fuel lines and fittings to catch excess fuel.

(6) Remove four fuel lines (17), (18), (19), and (20) from four fittings (22).

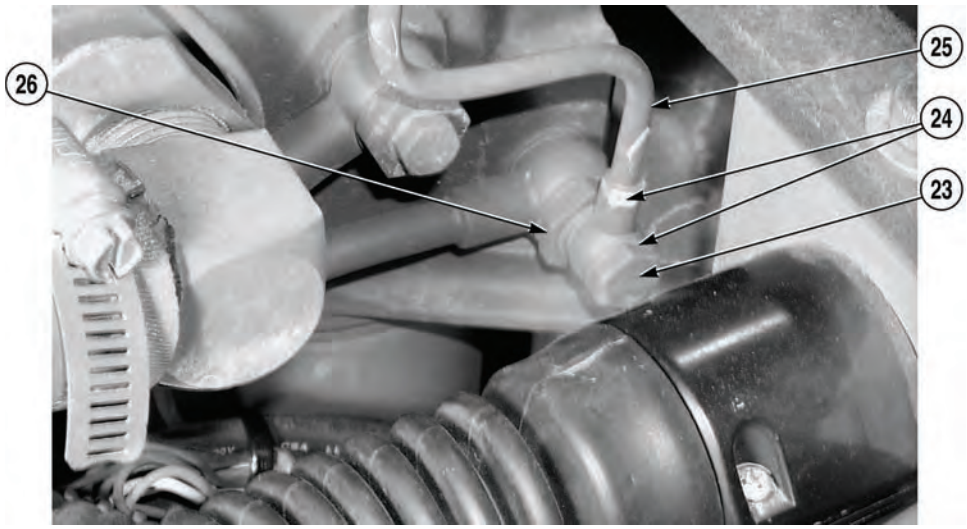

(7) Remove screw (23), two seals (24), and fuel line (25) from fitting (26). Discard seals.

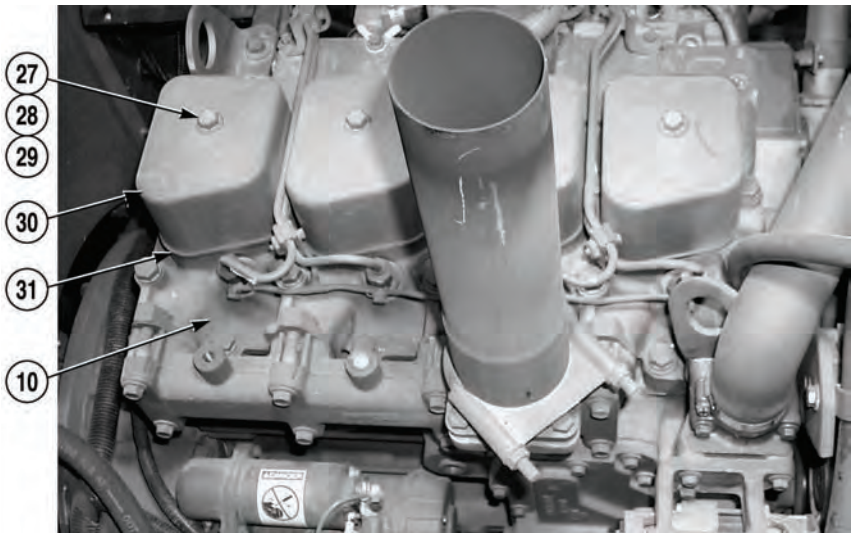

(8) Remove fuel injectors, (Para 3-99).

(9) Remove four screws (27), washers (28), isolators (29), covers (30) and gaskets (31) from cylinder head (10). Discard gaskets.

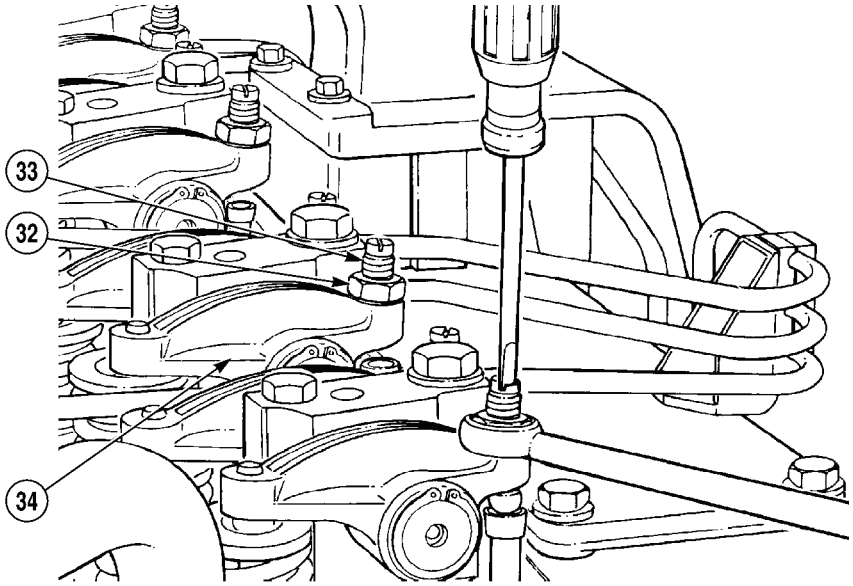

NOTE

Completely loosen rocker lever adjusting screws prior to removal.

(10) Loosen eight nuts (32) on screw (33).

(11) Loosen eight screws (33) on rocker lever assemblies (34).

3-142. CYLINDER HEAD REPLACEMENT (S/N 8RDCD301513HC THRU S/N 8RDCD301619HC) (CONT).

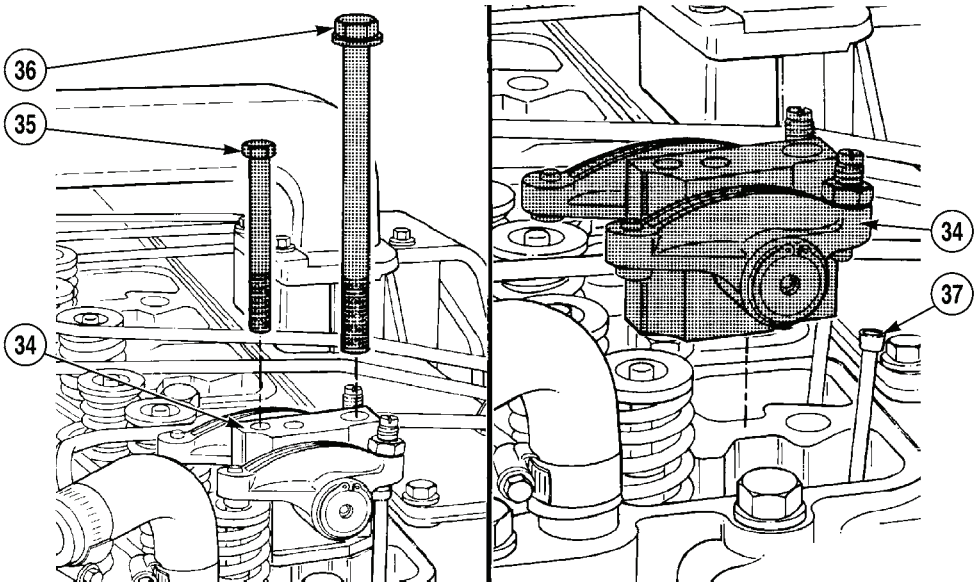

NOTE

Note location and position of screws prior to removal.

(12) Remove four screws (35), screws (36), and rocker lever assemblies (34) from cylinder head (10).

(13) Remove eight push rods (37) from cylinder head (10).

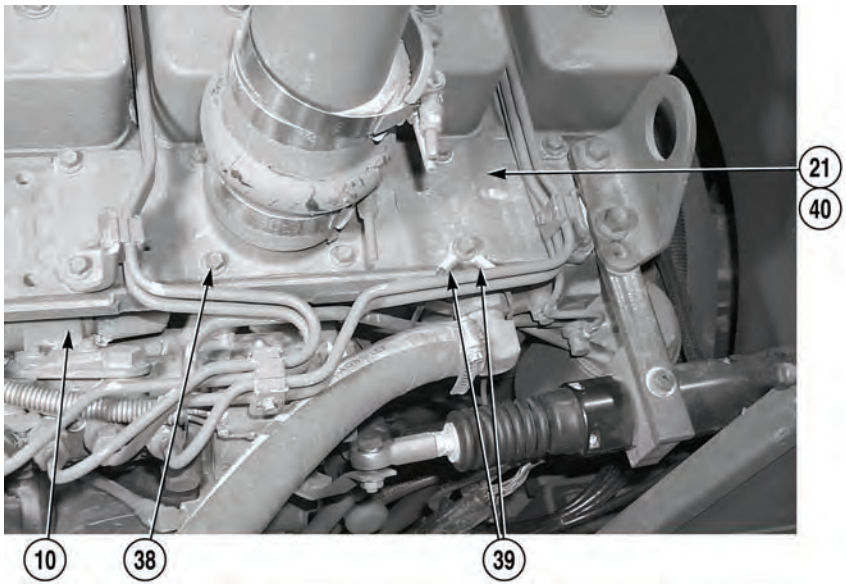

NOTE

Note position of wires prior to removal.

(14) Remove eight screws (38), two wires (39), manifold cover assembly (21), and gasket (40) from cylinder head (10). Discard gasket.

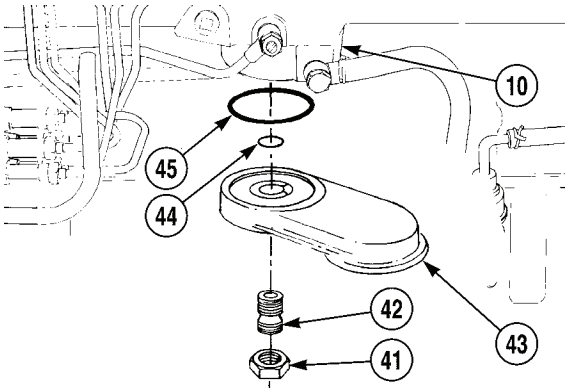

(15) Remove nut (41), fitting (42), cover (43), and two preformed packings (44) and (45) from cylinder head (10). Discard preformed packings.

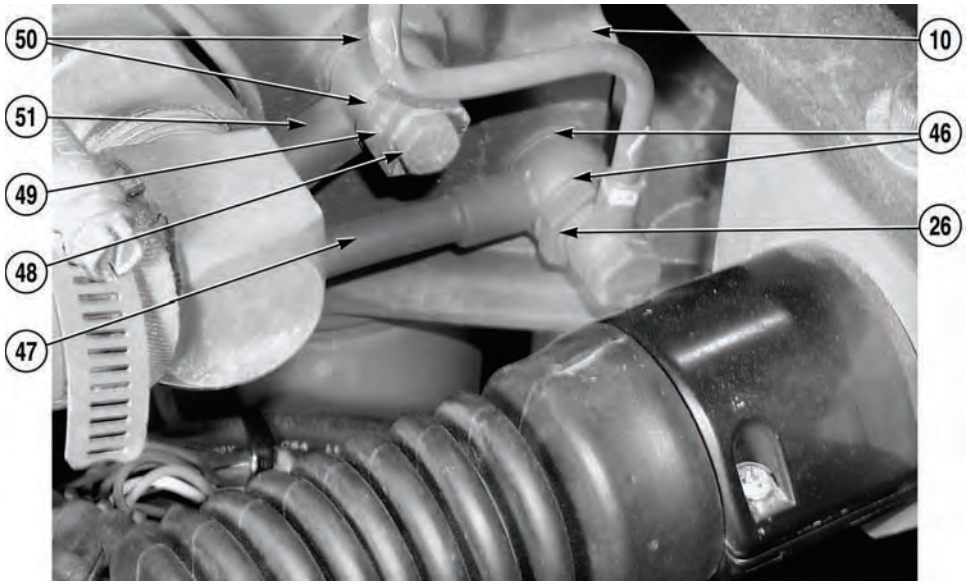

(16) Remove fitting (26), two seals (46), and fuel line (47) from cylinder head (10). Discard seals.

(17) Remove fitting (48), fitting (49), two seals (50), and fuel line (51) from cylinder head (10). Discard seals.

3-142. CYLINDER HEAD REPLACEMENT (S/N 8RDCD301513HC THRU S/N 8RDCD301619HC) (CONT).

(18) Remove hose (52) from elbow (53).

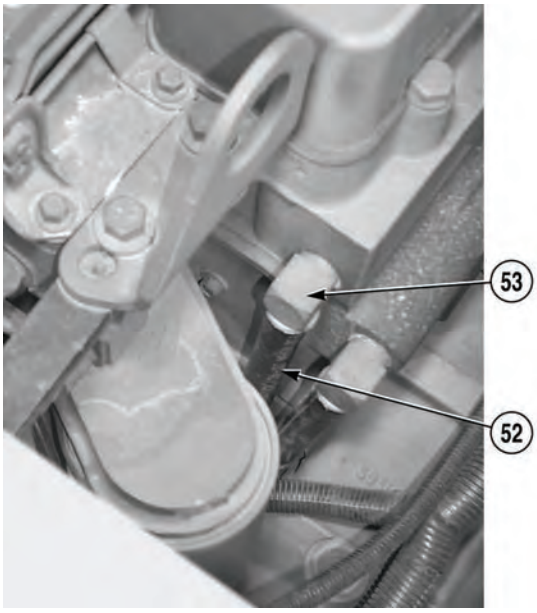

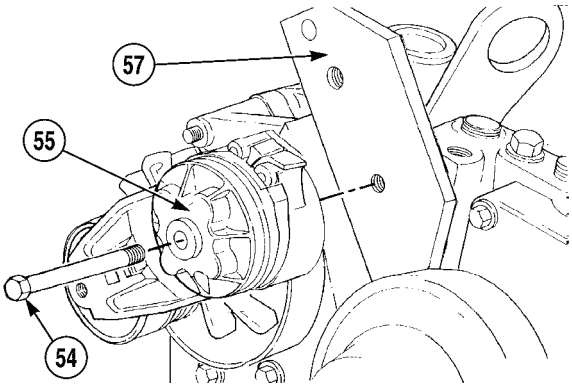

(19) Remove screw (54), belt tensioner (55), two screws (56), and bracket (57) from cylinder head (10).

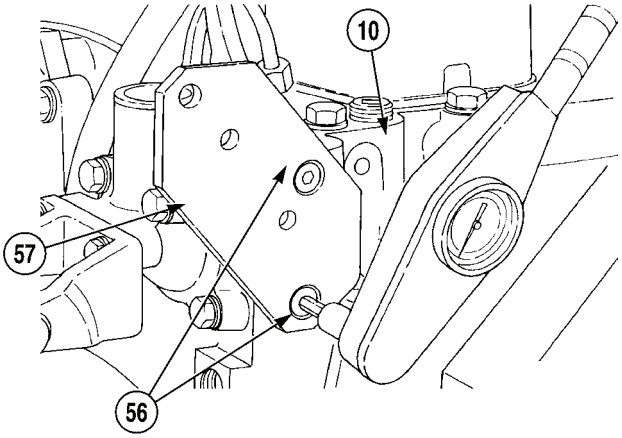

(20) Remove four screws (58) and fan hub assembly (59) from cylinder head (10).

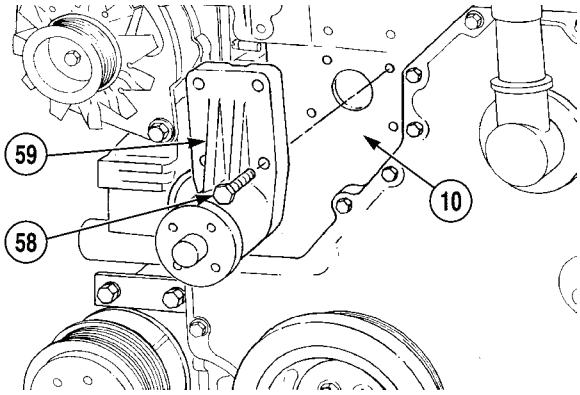

NOTE

Note position and length of screws prior to removal.

(21) Remove 10 screws (60) and four screws (61) in order shown from cylinder head (10).

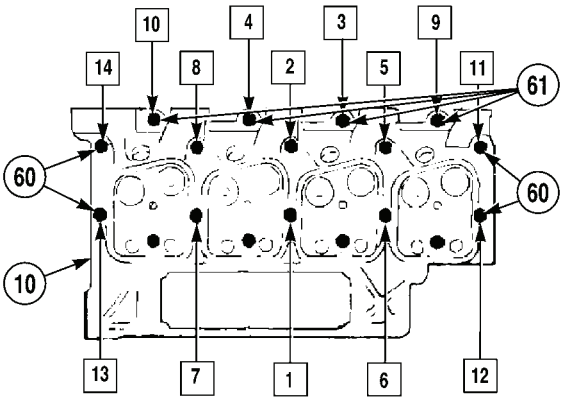

WARNING

Cylinder head weighs 80 lb (36 kg). Do not attempt to lift or move cylinder head without use of a suitable lifting device and aid of an assistant. Failure to comply could result in serious injury to personnel.

(22) With aid of an assistant and using lifting device, remove cylinder head (10) and gasket (62) from engine (63). Discard gasket.

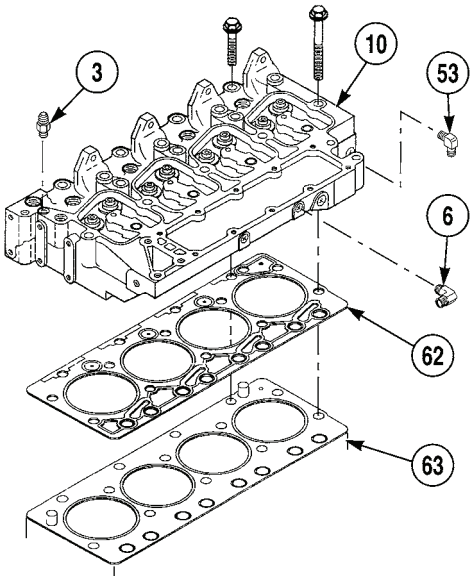

NOTE

Note position of elbows prior to removal.

(23) Remove elbow (6) and fitting (3) from cylinder head (10).

(24) Remove elbow (53) from cylinder head (10).

3-142. CYLINDER HEAD REPLACEMENT (S/N 8RDCD301513HC THRU S/N 8RDCD301619HC) (CONT).

b. Installation.

WARNING

- Fuel is very flammable and can explode easily. To avoid serious injury or death, keep fuel away from open fire and keep fire extinguisher within easy reach when working with fuel. Do not work on fuel system when engine is hot. Fuel can be ignited by hot engine.
- Fuel line pressure can penetrate skin and cause serious bodily harm. Do not allow any part of body to get in line of fuel spray. Failure to comply could result in serious injury or death to personnel.
- Adhesives, solvents, and sealing compounds can burn easily, can give off harmful vapors, and are harmful to skin and clothing. To avoid injury or death, keep away from open fire and use in well-ventilated area. If adhesives, solvent, or sealing compound gets on skin or clothing, wash immediately with soap and water.

NOTE

- Clean the cylinder head prior to installation.
- Install elbows in position as noted prior to removal.

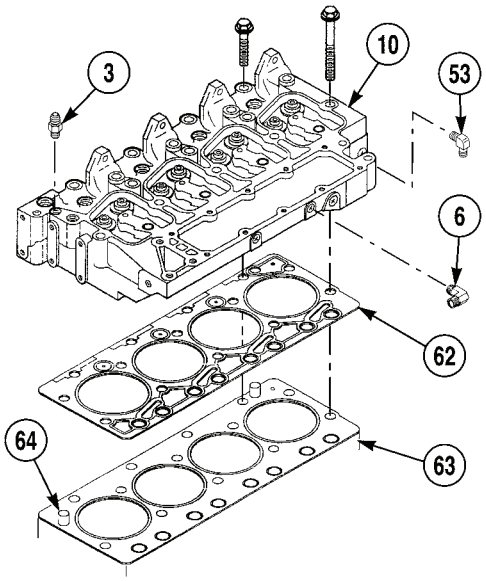

(1) Apply sealing compound to two elbows (53) and (6) and fitting (3).

(2) Install elbow (53) on cylinder head (10).

(3) Install fitting (3) and elbow (6) on cylinder head (10).

WARNING

Cylinder head weighs 80 lb (36 kg). Do not attempt to lift or move cylinder head without use of a suitable lifting device and aid of an assistant. Failure to comply could result in serious injury to personnel.

CAUTION

Ensure gasket is correctly aligned with holes in the cylinder block. Failure to comply could cause damage to engine.

(4) Install gasket (62) and cylinder head (10) on engine (63) by positioning on two dowels (64).

CAUTION

Ensure push rods are positioned into the valve tappets. Failure to comply could cause damage to push rods.

3-142. CYLINDER HEAD REPLACEMENT (S/N 8RDCD301513HC THRU S/N 8RDCD301619HC) (CONT).

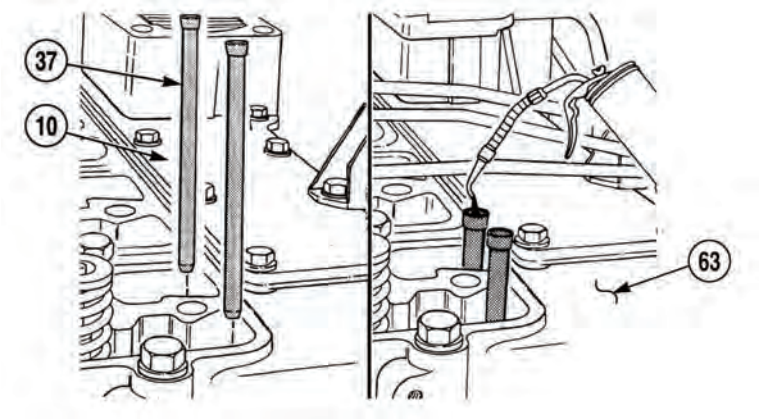

(5) Lightly lubricate the push rod sockets (37) with oil.

(6) Install eight push rods (37) on engine (63) and cylinder head (10).

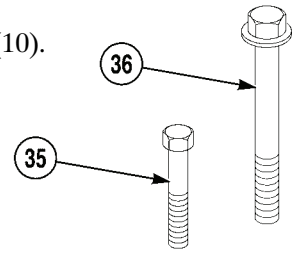

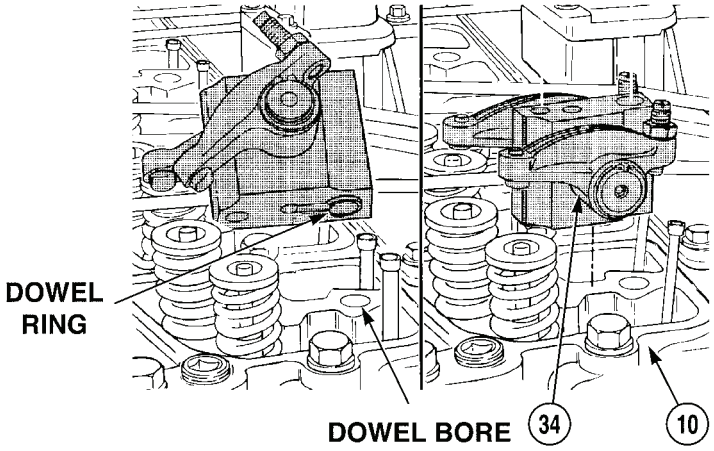

CAUTION

- Align dowel rings in the rocker lever assemblies on dowel bores. Failure to comply could cause damage to rocker lever assemblies.
- Ensure screws are installed in position and location as noted prior to removal. Failure to comply may result in damage to equipment.

(7) Lubricate threads and under heads of four rocker lever assembly screws (36) and (35).

(8) Position rocker lever assemblies (34) with four screws (35) and (36) on cylinder head (10). Finger tighten screws (35) and (36) on cylinder head (10).

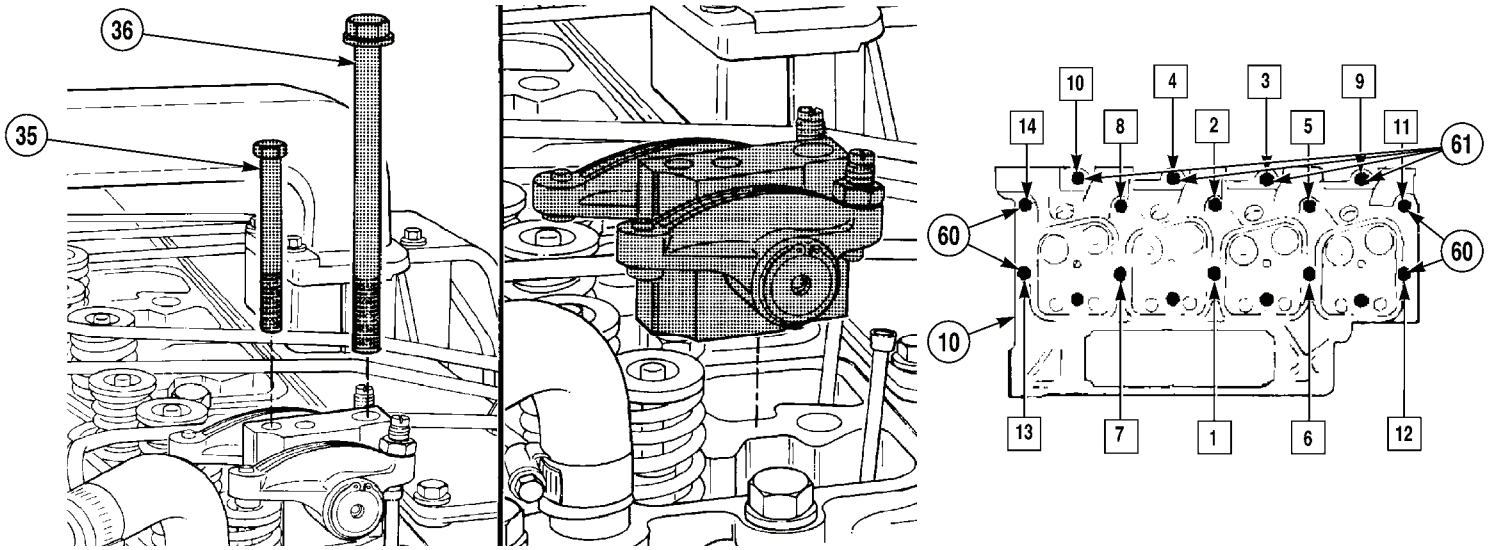

(9) Lubricate threads and under the heads of 10 cylinder head screws (60) and four cylinder head screws (61).

NOTE

Install screws in position and location as noted prior to removal.

(10) Position 10 screws (60) and four screws (61) on cylinder head (10). Finger tighten ten screws (60) and four screws (61) on cylinder head (10).

CAUTION

Tighten cylinder head screws in correct sequence.

(11) Tighten 10 screws (60), four screws (61), and screws (36) to 66 lb-ft (90 N·m).

(12) Tighten four screws (36) to 90 lb-ft (120 N·m).

(13) Tighten 10 screws (60), four screws (61), and screws (36) an additional 90 degrees (1/4 turn).

(14) Tighten four screws (35) to 18 lb-ft (24 N·m).

3-142. CYLINDER HEAD REPLACEMENT (S/N 8RDCD301513HC THRU S/N 8RDCD301619HC) (CONT).

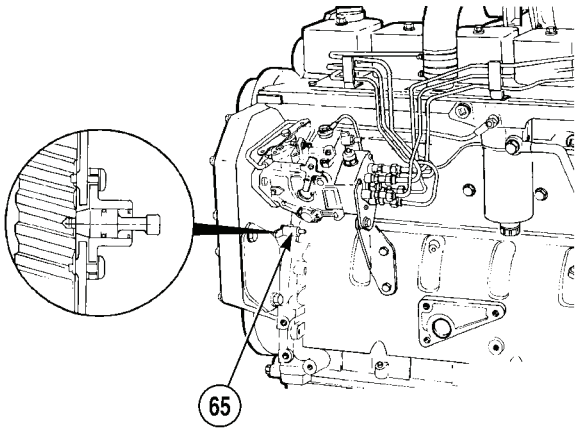

CAUTION

After locating (TDC) be sure to disengage timing pin to prevent damage to the engine.

NOTE

Cylinder No. 1 is at (TDC) on the compression stroke when the timing pin engages in the hole in the camshaft gear.

(15) Position engine No. 1 cylinder at Top Dead Center (TDC). Manually rotate engine while pushing on timing pin (65).

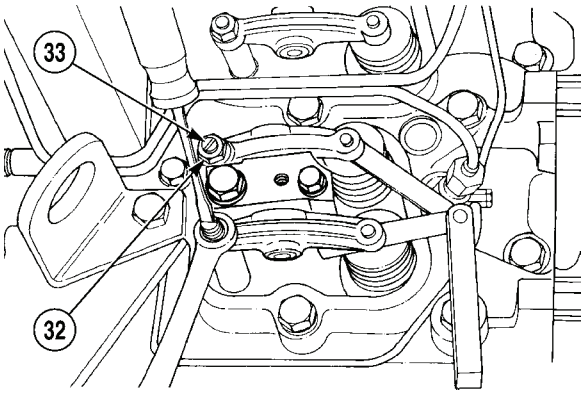

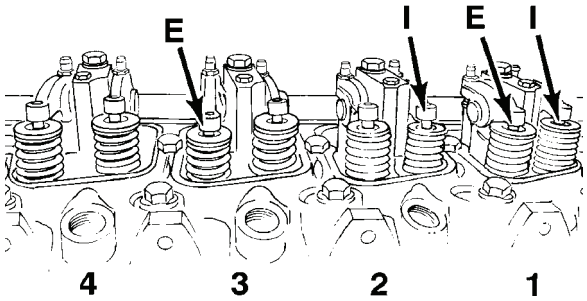

E=Exhaust Valve I=Intake Valve

NOTE

Valve adjustment is correct when some resistance is “felt” when feeler gage is slipped between the valve stem and the rocker lever.

(16) Adjust screw (33) on intake valve for cylinder 1 and 2 to .010 in (.254 mm) clearance, and tighten nut (32). Tighten nuts to 18 lb-ft. (24 N·m) and measure valve lash again.

(17) Adjust screw (33) on exhaust valve for cylinder 1 and 3 to .020 in (.508 mm) clearance, and tighten nut (32). Tighten nuts to 18 lb-ft. (24 N·m) and measure valve lash again.

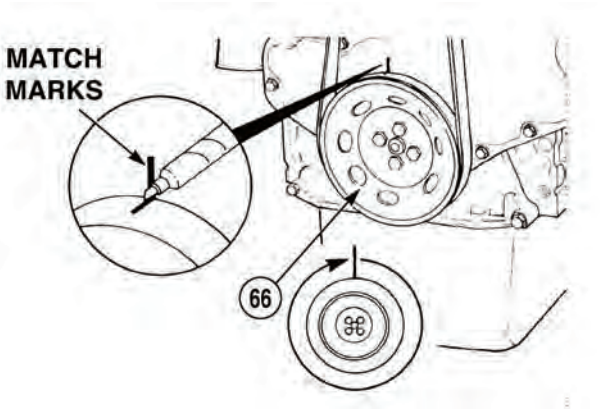

CAUTION

To prevent engine or pin damage, ensure timing pin is disengaged.

(18) Matchmark pulley (66) and rotate engine 360 degrees (One full turn).

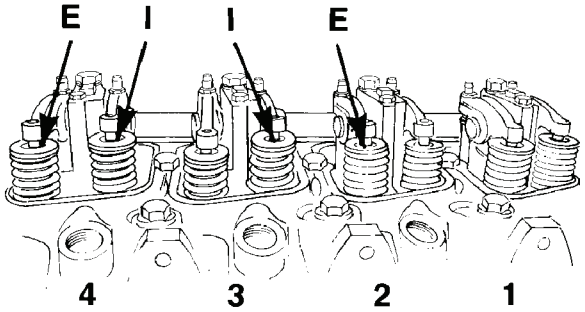

E=Exhaust Valve I=Intake Valve

(19) Adjust screw (33) on intake valve for cylinder 3 and 4 to .010 (.254mm) clearance, and tighten nut (32). Tighten nuts to 18 lb-ft. (24 N·m) and measure valve lash again.

(20) Adjust screw (33) on exhaust valve for cylinder 2 and 4 to .020 (.508mm) clearance, and tighten nut (32). Tighten nuts to 18 lb-ft. (24 N·m) and measure valve lash again.

3-142. CYLINDER HEAD REPLACEMENT (S/N 8RDCD301513HC THRU S/N 8RDCD301619HC) (CONT).

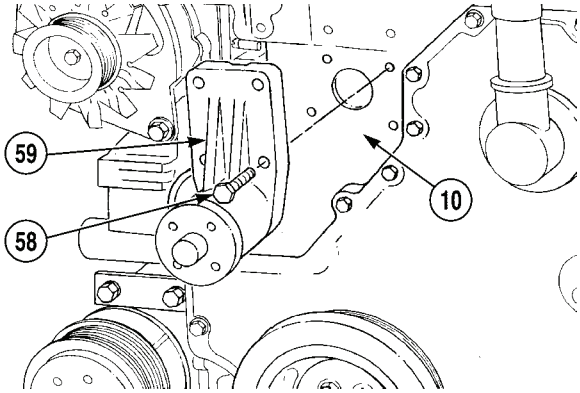

(21) Install fan hub assembly (59) on cylinder head (10) with four screws (58). Tighten screws to 18 lb-ft (24 N·m).

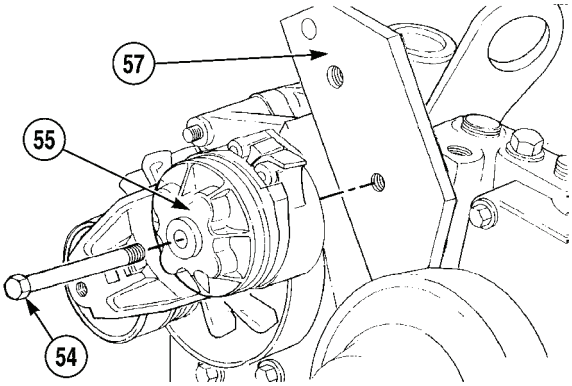

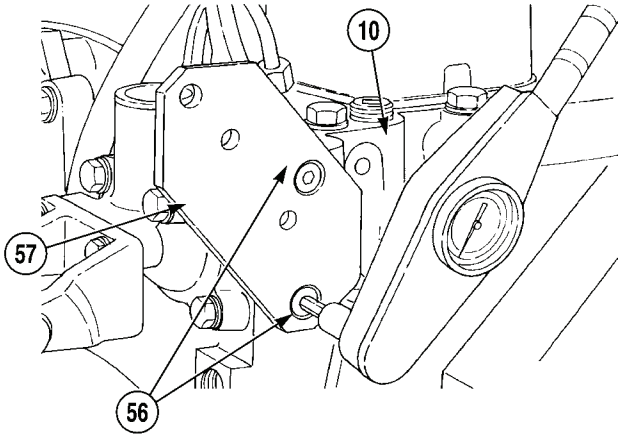

(22) Install bracket (57) on cylinder head (10) with two screws (56). Tighten screws to 18 lb-ft (24 N·m).

(23) Install belt tensioner (55) on bracket (57) with screw (54). Tighten screw to 32 lb-ft (43 N·m).

(24) Install hose (52) on elbow (53).

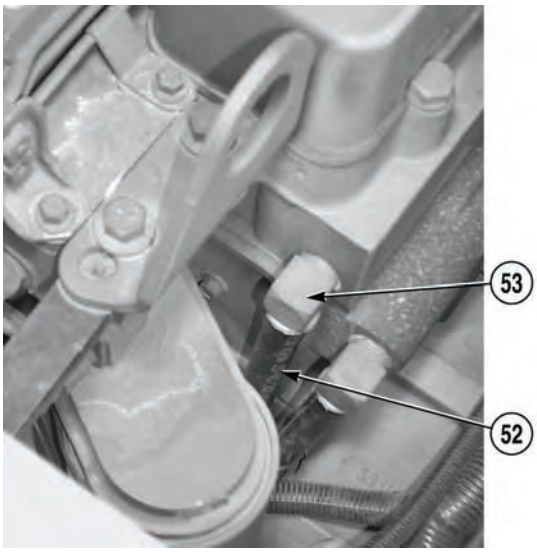

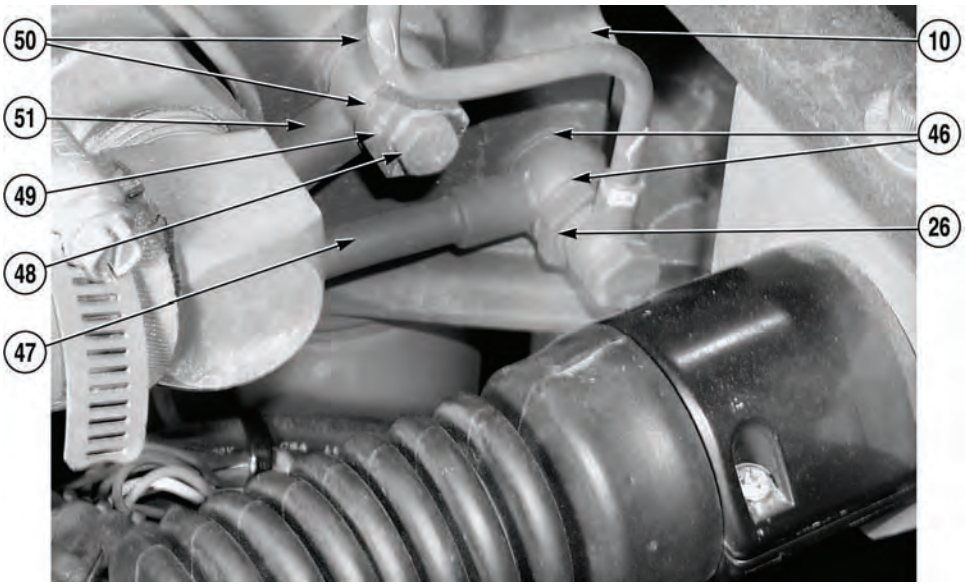

(25) Install two seals (50), fuel line (51), and fitting (49) on cylinder head (10) with fitting (48).

(26) Install two seals (46) and fuel line (47) on cylinder head (10) with fitting (26).

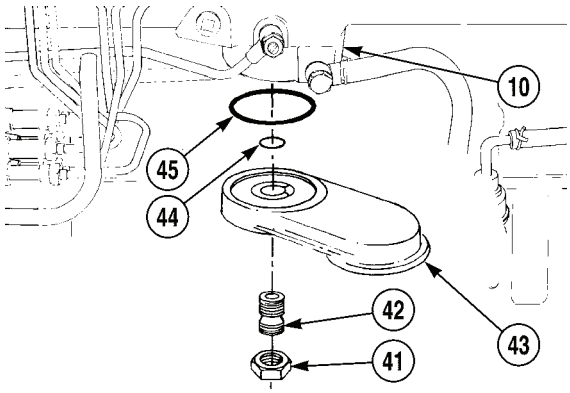

(27) Apply lubricating oil to preformed packings (44) and (45).

(28) Install preformed packings (44) and (45), cover (43), and fitting (42) on cylinder head (10) with nut (41).

3-142. CYLINDER HEAD REPLACEMENT (S/N 8RDCD301513HC THRU S/N 8RDCD301619HC) (CONT).

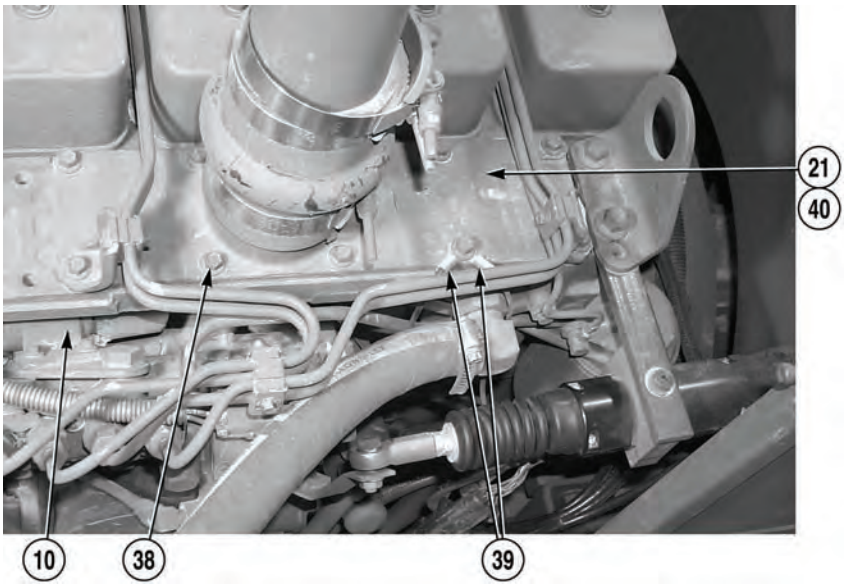

NOTE

Ensure wires are in position as noted prior to removal.

(29) Install gasket (40), manifold cover assembly (21), and two wires (39) on cylinder head (10) with eight screws (38). Tighten screws to 18 lb-ft (24 N·m).

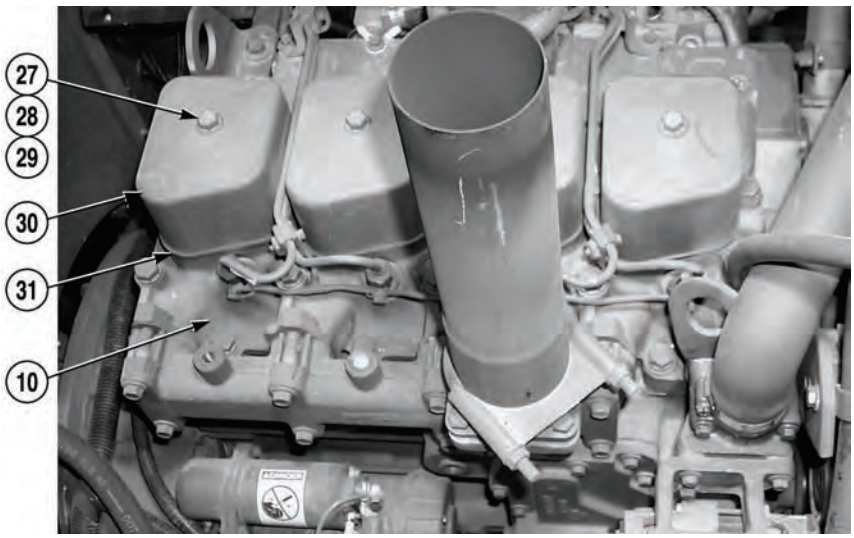

(30) Install four gaskets (31), covers (30), isolators (29), and washers (28) on cylinder head (10) with four screws (27). Tighten screws to 18 lb-ft (24 N·m).

(31) Install fuel injectors, (Para 3-115).

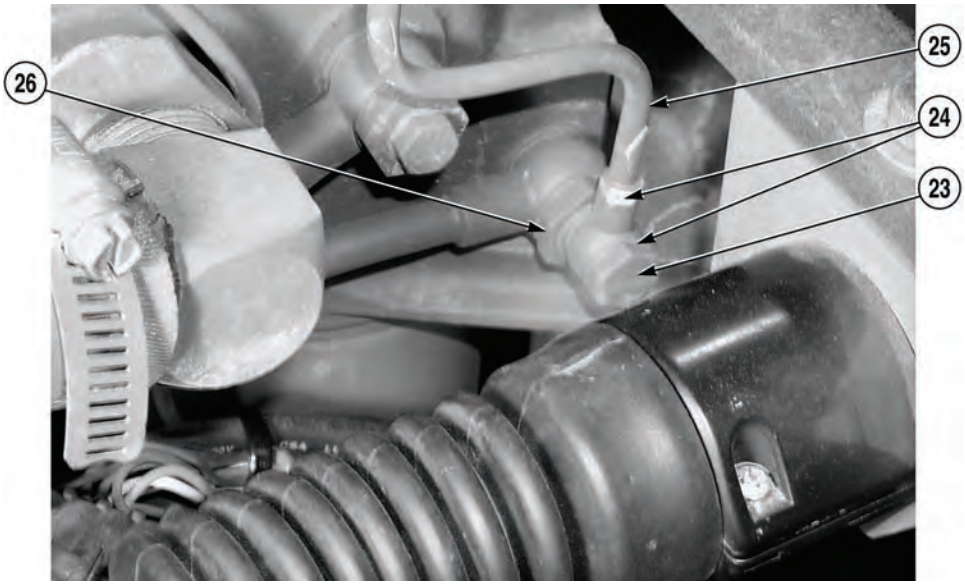

(32) Install two seals (24) and fuel line (25) on fitting (26) with screw (23).

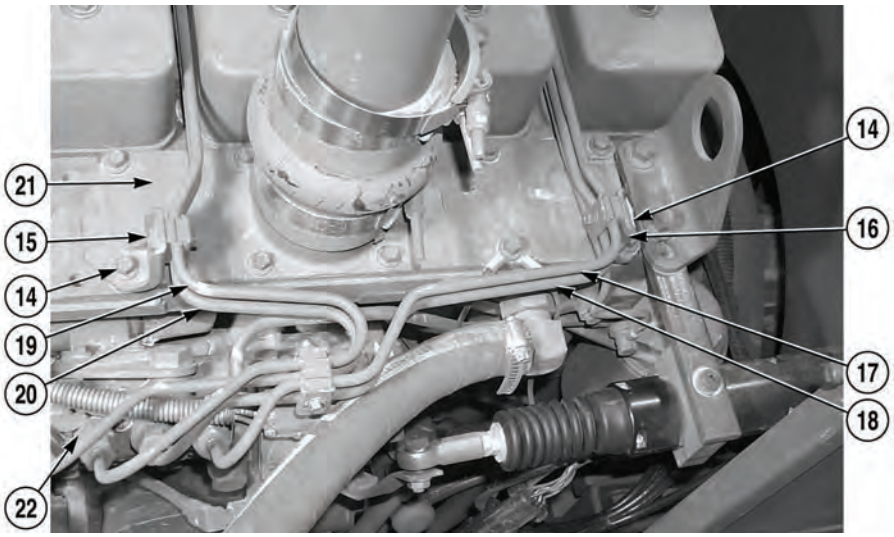

(33) Install fuel lines (17), (18), (19), and (20) on four fittings (22).

(34) Install fuel lines (17), (18), (19), and (20), two braces (15) and (16) on manifold cover assembly (21) with two screws (14). Tighten screws to 18 lb-ft (24 N·m).

3-142. CYLINDER HEAD REPLACEMENT (S/N 8RDCD301513HC THRU S/N 8RDCD301619HC) (CONT).

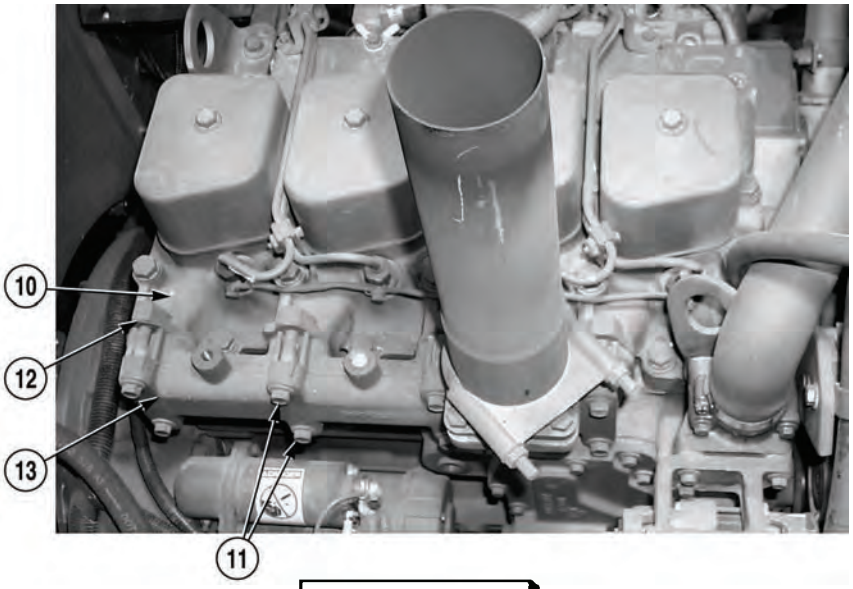

WARNING

Adhesives, solvents, and sealing compounds can burn easily, can give off harmful vapors, and are harmful to skin and clothing. To avoid injury or death, keep away from open fire and use in well-ventilated area. If adhesives, solvent, or sealing compound gets on skin or clothing, wash immediately with soap and water.

(35) Install anti-seize compound to threads of eight screws (11).

(36) Install exhaust manifold (13) and four gaskets (12) on cylinder head (10) with eight screws (11). Tighten screws to 32 lb-ft (43 N·m).

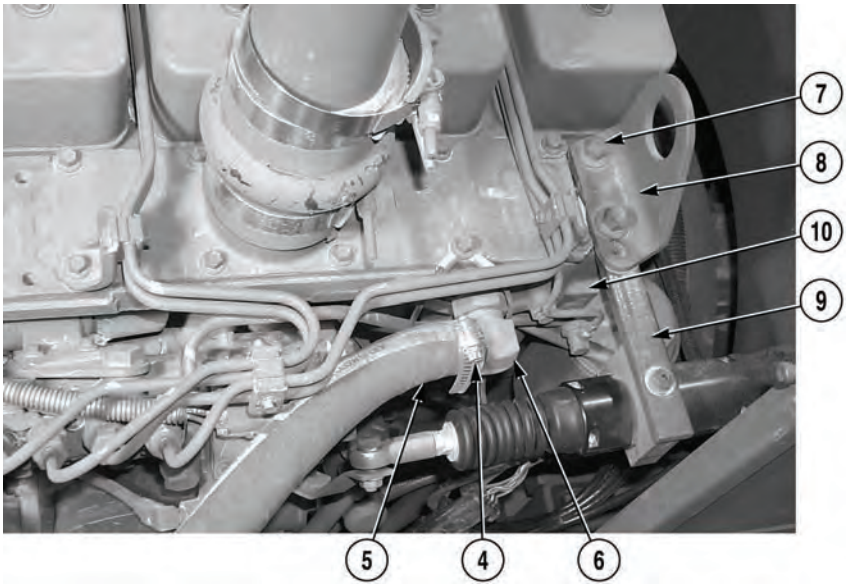

(37) Install bracket (9) and lifting bracket (8) on cylinder head (10) with two screws (7).

(38) Install hose (5) on elbow (6) with clamp (4).

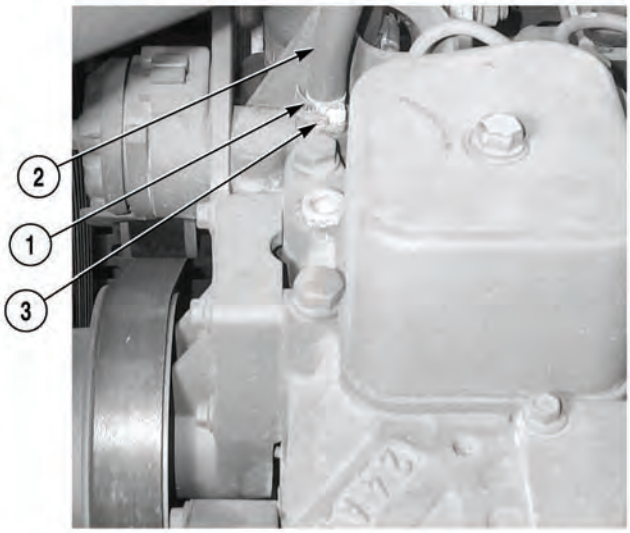

(39) Install hose (2) on fitting (3) with clamp (1).

c. Follow-On Maintenance:

- Install top engine cover, (Para 3-93).
- Install thermostat, (Para 3-99).
- Install fan blade, (Para 3-101).
- Install alternator, (Para 3-25).
- Install fuel filter, (Para 3-27).
- Start engine, (Para 2-19).
- Check for leaks.
- Shut off engine, (Para 2-19).

END OF TASK

3-143. PUSH ROD COVER REPLACEMENT (S/N 8RDCD301513HC THRU S/N 8RDCD301619HC).

This task covers:

a. Removal b. Installation c. Follow-On Maintenance

INITIAL SETUP

Tools and Special Tools
Tool Kit, General Mechanic's: Automotive (Item 19, Appendix I)

Materials/Parts
Clamp (3904230)
Gasket (3283767)
Seal, Grommet (4) (3928759)
Locknut (1767050)

Equipment Condition
Engine OFF, (Para 2-19)
Concrete Mobile Mixer unloaded, (Para 2-5)
Inner fuel filter removed, (Para 3-27)
Top engine cover removed, (Para 3-93)
Side engine access panel removed, (Para 3-79)
Front engine access panel removed, (Para 3-78)
Air compressor removed, (Para 3-109)
Fuel injector pump removed, (Para 3-116)

a. Removal.

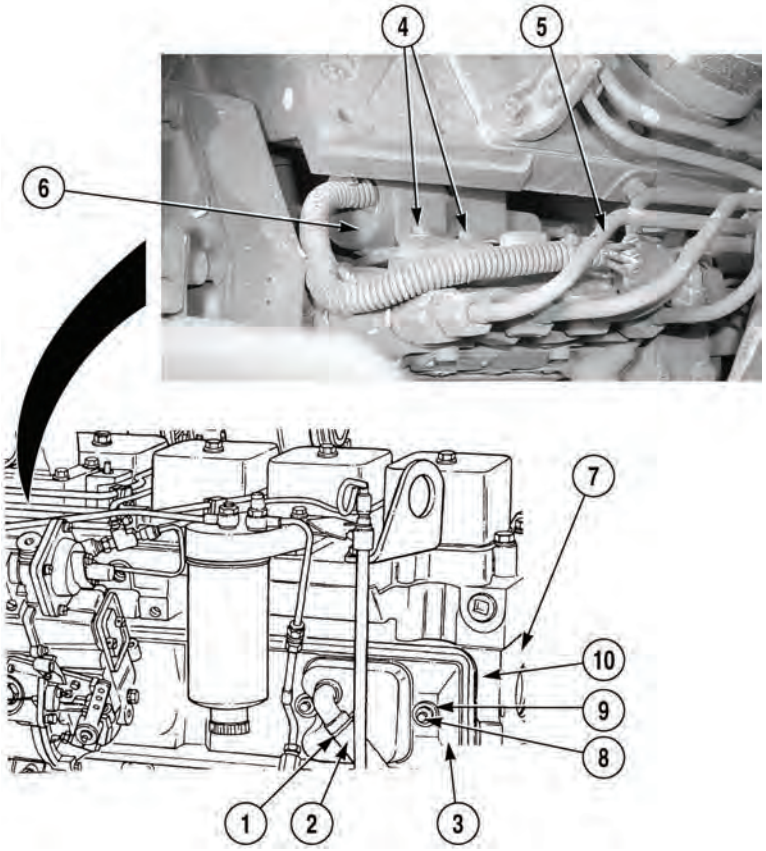

(1) Remove clamp (1) and hose (2) from push rod cover (3). Discard clamp.

(2) Remove two screws (4), locknut (5), and fuel shutoff solenoid (6) from engine (7). Discard locknut.

(3) Remove four screws (8) and grommet seals (9). Discard grommet seals.

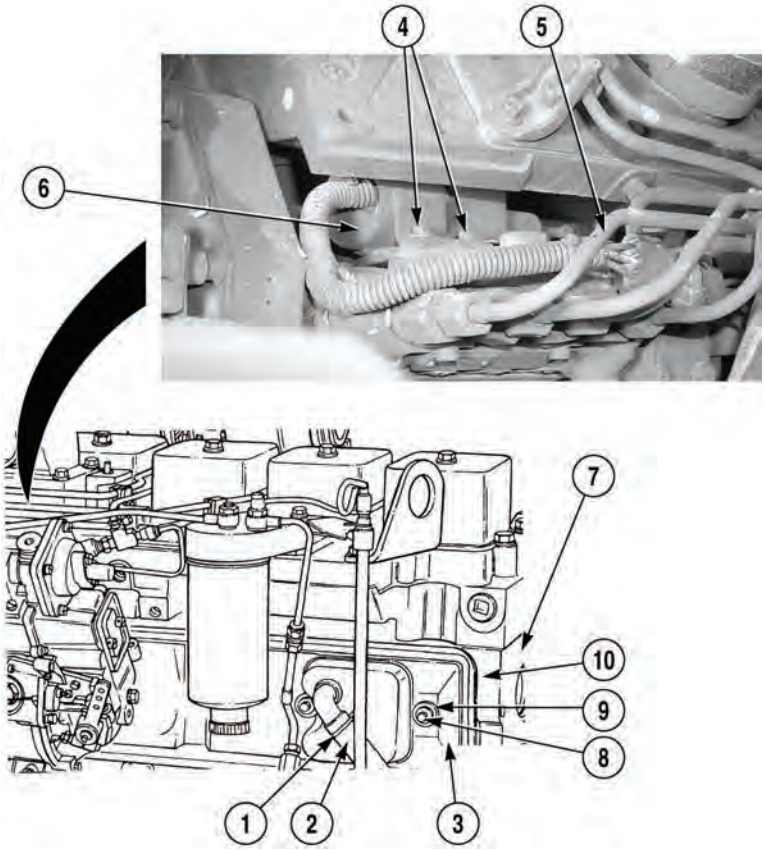

(4) Remove push rod cover (3) and gasket (10) from engine (7). Discard gasket.

b. Installation

(1) Install gasket (10) and push rod cover (3) on engine (7) with four screws (8) and grommet seals (9).

(2) Install fuel shutoff solenoid (6) on engine (7) with two screws (4) and locknut (5).

(3) Position clamp (1) on hose (2).

(4) Install hose (2) on push rod cover (3) with clamp (1).

3-143. PUSH ROD COVER REPLACEMENT (S/N 8RDCD301513HC THRU S/N 8RDCD301619HC) (CONT).

c. Follow-On Maintenance:

- Install fuel injector pump, (Para 3-116).
- Install air compressor, (Para 3-109).
- Install inner fuel filter, (Para 3-27).
- Install top engine cover, (Para 3-93).
- Start engine, (Para 2-19).
- Check for leaks.
- Shut off engine, (Para 2-19).
- Install front engine access panel, (Para 3-78).
- Install side engine access panel, (Para 3-79).

END OF TASK

3-144. HYDRAULIC SCHEMATICS.

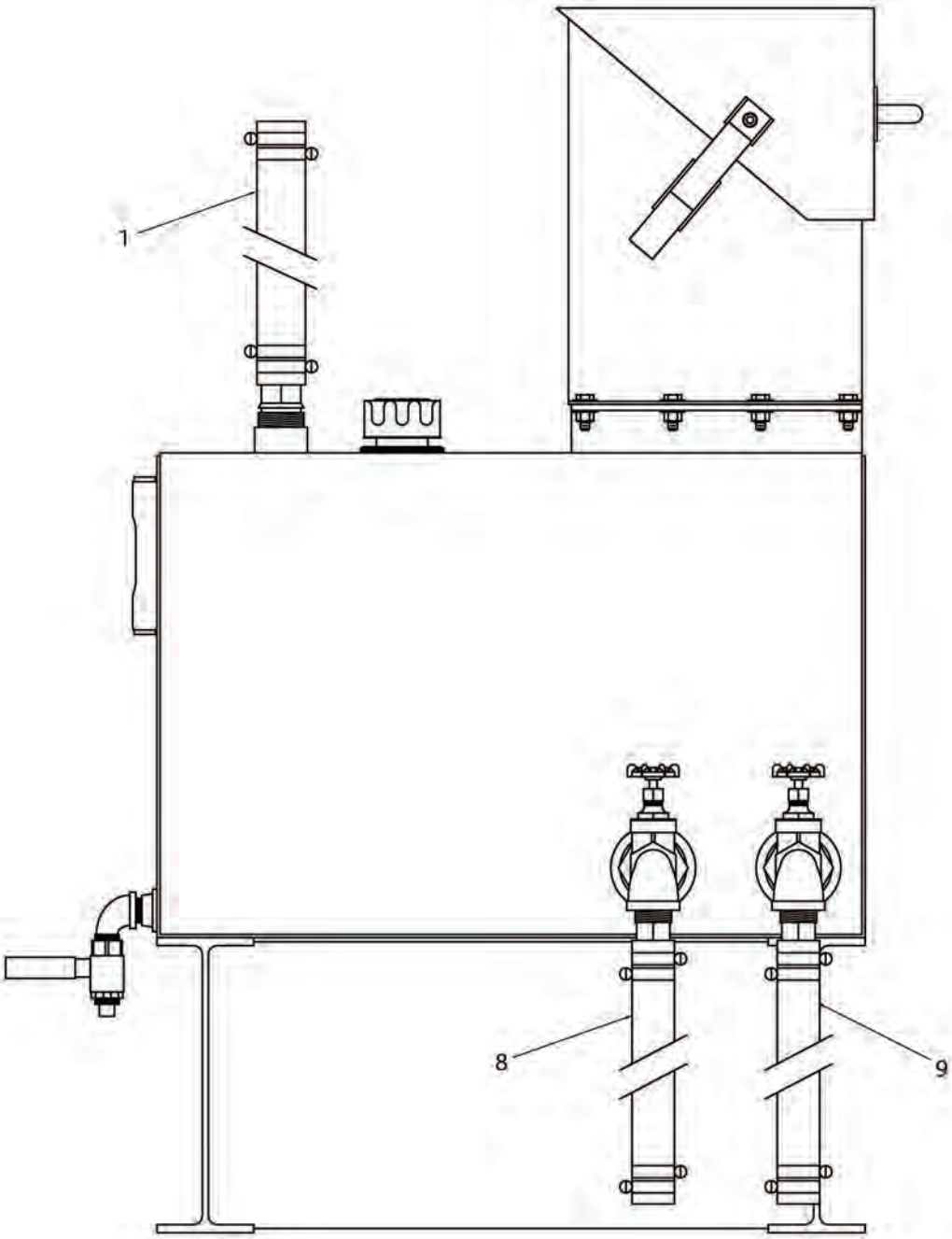

ITEM	QTY	USAGE	PART NUMBER	DESCRIPTION
9	1	1.00	1932-A98	HOSE - HYD SUCTION
8	1	1.00	1932-A99	HOSE - HYD SUCTION
1	1	1.00	1932-A09	HOSE - HYD RETURN

HYDRAULIC RESERVOIR LINES

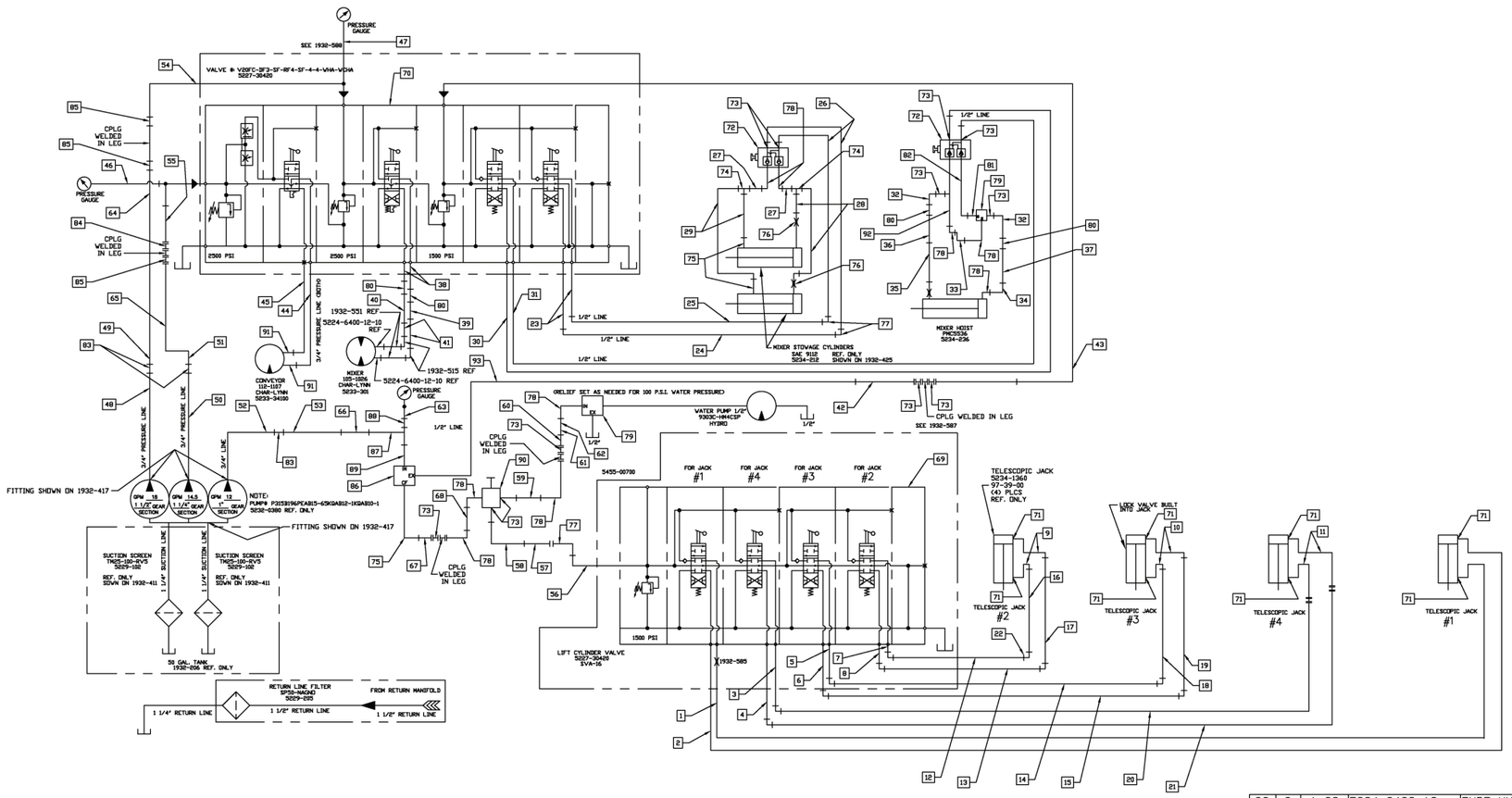

HYDRAULIC SUPPLY LINES

ITEM	QTY	USAGE	PART NUMBER	DESCRIPTION
93	1	1.00	5224-6400-10-08	CONNECTOR JIC -10 x -08 M-ORNG
92	1	1.00	5224-5602-08	TEE 1/2 NPT MFF 5602-08
91	2	1.00	5224-6400-12-16	CONNECTOR JIC -12 x -16 M-ORNG
90	1	1.00	5227-009	VLV SELECTOR S-50 1/2 RDCD
89	1	1.00	5224-6400-12-08	CONNECTOR JIC -12 x -08 M-ORNG
88	1	1.00	5224-2406-12-04	TUBE REDUCER JIC -12 x 1/4 OD
87	1	1.00	5224-6602-12	TEE 12MJ -12FJX -12MJ
86	1	1.00	5228-028	FLOCNTRL WTR/SWVL/WNCH YFCQHAN
85	3	1.00	5224-2404-12-12	CONNECTOR JIC -12 x 3/4 NPT
84	1	1.00	5224-2501-12-12	ELBOW M-JIC -12 x M-NPT 3/4IN

ITEM	QTY	USAGE	PART NUMBER	DESCRIPTION
83	3	1.00	5224-2403-12	TUBE UNION JIC-12-12
82	1	1.00	5224-5502-08-08	ELBOW 90ST 3/8 NPT
81	1	1.00	5224-5404-08	HEX NIPPLE 1/2 NPT
80	4	1.00	5224-2504-12	ELBOW 45 UNION M-JIC -12
79	2	1.00	5227-104	VLV RELIEF RL50-1500 1/2"WATER
78	8	1.00	5224-2501-10-08	ELBOW M-JIC -10 x M-NPT 1/2IN
77	3	1.00	5224-2500-12	ELBOW M-JIC -12 x M-JIC -12
76	2	1.00	1932-584	ADAPTER HYD ORIFICE 3/64" DIA
75	3	1.00	5224-6801-10-08	ELBOW JIC -10 x -08 M-ORNG
74	2	1.00	5224-2603-10	TEE M-JIC -10
73	10	1.00	5224-2404-10-08	CONNECTOR JIC -10 x 1/2 NPT
72	2	1.00	5227-117	VLV WNCH LOCK DBL 408-04 1/2"
71	8	1.00	5224-6801-06	ELBOW JIC -06 x -06 M-ORNG
70	1	1.00	1932-588	MAIN VALVE ASSY REF
69	1	1.00	1932-587	4 SPOON LEVEL GUAGE REF
68	1	1.00	1932-553	HOSE 10"
67	1	1.00	1932-541	HOSE FLOW CONTROL 11"
66	1	1.00	1932-539	HOSE 24" HOIST/WTR PMP/LIFT CY
65	1	1.00	1932-538	HOSE CONVEYOR 26"
64	1	1.00	1932-537	HOSE MIXER 30 "
63	1	1.00	1932-540	HOSE 62" HOIST GUAGE
62	1	1.00	1932-568	HOSE WATER PUMP MOTOR 33 1/2"
61	1	1.00	1932-516	TUBE HYD WATER PUMP
60	1	1.00	1932-564	HOSE RELIEF VALVE 23"
59	1	1.00	1932-559	HOSE HYD SELECTOR VLV 11 1/2"
58	1	1.00	1932-558	HOSE HYD SELECTOR VALVE 44"
57	1	1.00	1932-523	TUBE HYD LIFT CYL
56	1	1.00	1932-563	HOSE HYD VALVE/LIFT CYL 55"
55	1	1.00	1932-544	HOSE HYD CONTROL VALVE 11 1/2"
54	1	1.00	1932-546	HOSE HYD CONTROL VALVE 21"
53	1	1.00	1932-517	TUBE HYD HOIST/WTRPMP/LIFT CYL
52	1	1.00	1932-536	HOSE 40" HOIST/WTR PMP/LIFT CY
51	1	1.00	1932-518	TUBE HYD MIXER
50	1	1.00	1932-535	HOSE CONVEYOR 44"
49	1	1.00	1932-519	TUBE HYD CONVEYOR

ITEM	QTY	USAGE	PART NUMBER	DESCRIPTION
48	1	1.00	1932-534	HOSE MIXER 48"
47	1	1.00	1932-543	HOSE HYD CONTROL VALVE 45"
46	1	1.00	1932-545	HOSE HYD CONTROL VALVE 49"
45	1	1.00	1932-549	HOSE CONVEYOR MOTOR 29"
44	1	1.00	1932-548	HOSE CONVEYOR MOTOR 29"
43	1	1.00	1932-552	HOSE HYD VALVE 26 1/2"
42	1	1.00	1932-542	HOSE FLOW CONTROL 51"
41	2	1.00	1932-550	HOSE HYD MIXER 60"
40	1	1.00	1932-512	TUBE HYD MIXER
39	1	1.00	1932-511	TUBE HYD MIXER
38	2	1.00	1932-547	HOSE HYD MIXER 96"
37	1	1.00	1932-514	TUBE HYD HOIST
36	1	1.00	1932-513	TUBE HYD HOIST
35	1	1.00	1932-566	HOSE HYD HOIST 80"
34	1	1.00	1932-565	HOSE HYD HOIST 60"
33	1	1.00	1932-554	HOSE HYD HOIST 20"
32	2	1.00	1932-560	HOSE HYD HOIST 60"
31	1	1.00	1932-556	HOSE HYD HOIST 52"
30	1	1.00	1932-555	HOSE HYD HOIST 57"
29	2	1.00	1932-570	HOSE HYD MIXER RETRACTOR 66"
28	2	1.00	1932-569	HOSE HYD MIXER RETRACTOR 56"
27	2	1.00	1932-567	HOSE HYD LOCK VALVE 46"
26	2	1.00	1932-561	HOSE 77"
25	1	1.00	1932-524	TUBE HYD LIFT ARM 66 1/4"
24	1	1.00	1932-525	TUBE HYD LIFT ARM 71 1/4"
23	2	1.00	1932-557	HOSE HYD VALVE/LOCK VALVE 17
22	10	1.00	5224-2500-06	ELBOW M-JIC -06 x M-JIC -06
21	1	1.00	1932-521	TUBE HYD LIFT CYL 52"
20	1	1.00	1932-520	TUBE HYD LIFT CYL 48"
19	1	1.00	1932-533	TUBE HYD LIFT CYL 80 3/8"
18	1	1.00	1932-532	TUBE HYD LIFT CYL 76"
17	1	1.00	1932-531	TUBE HYD LIFT CYL 71 1/2"
16	1	1.00	1932-530	TUBE HYD LIFT CYL 67"
15	1	1.00	1932-529	TUBE HYD LIFT CYL 136 1/2"
14	1	1.00	1932-528	TUBE HYD LIFT CYL 135"
13	1	1.00	1932-527	TUBE HYD LIFT CYL 133 1/2"
12	1	1.00	1932-526	TUBE HYD LIFT CYL 132 1/2"
11	2	1.00	1932-581	HOSE HYD LIFT CYL 100"
10	2	1.00	1932-580	HOSE HYD LIFT CYL 98"
9	2	1.00	1932-579	HOSE HYD LIFT CYL 112"
8	1	1.00	1932-574	HOSE HYD LIFT CYL 75"
7	1	1.00	1932-573	HOSE HYD LIFT CYL 75"
6	1	1.00	1932-576	HOSE HYD LIFT CYL 72"
5	1	1.00	1932-575	HOSE HYD LIFT CYL 72"
4	1	1.00	1932-578	HOSE HYD LIFT CYL 49"
3	1	1.00	1932-577	HOSE HYD LIFT CYL 52"
2	1	1.00	1932-571	HOSE HYD LIFT CYL 46"
1	1	1.00	1932-572	HOSE HYD LIFT CYL 44"

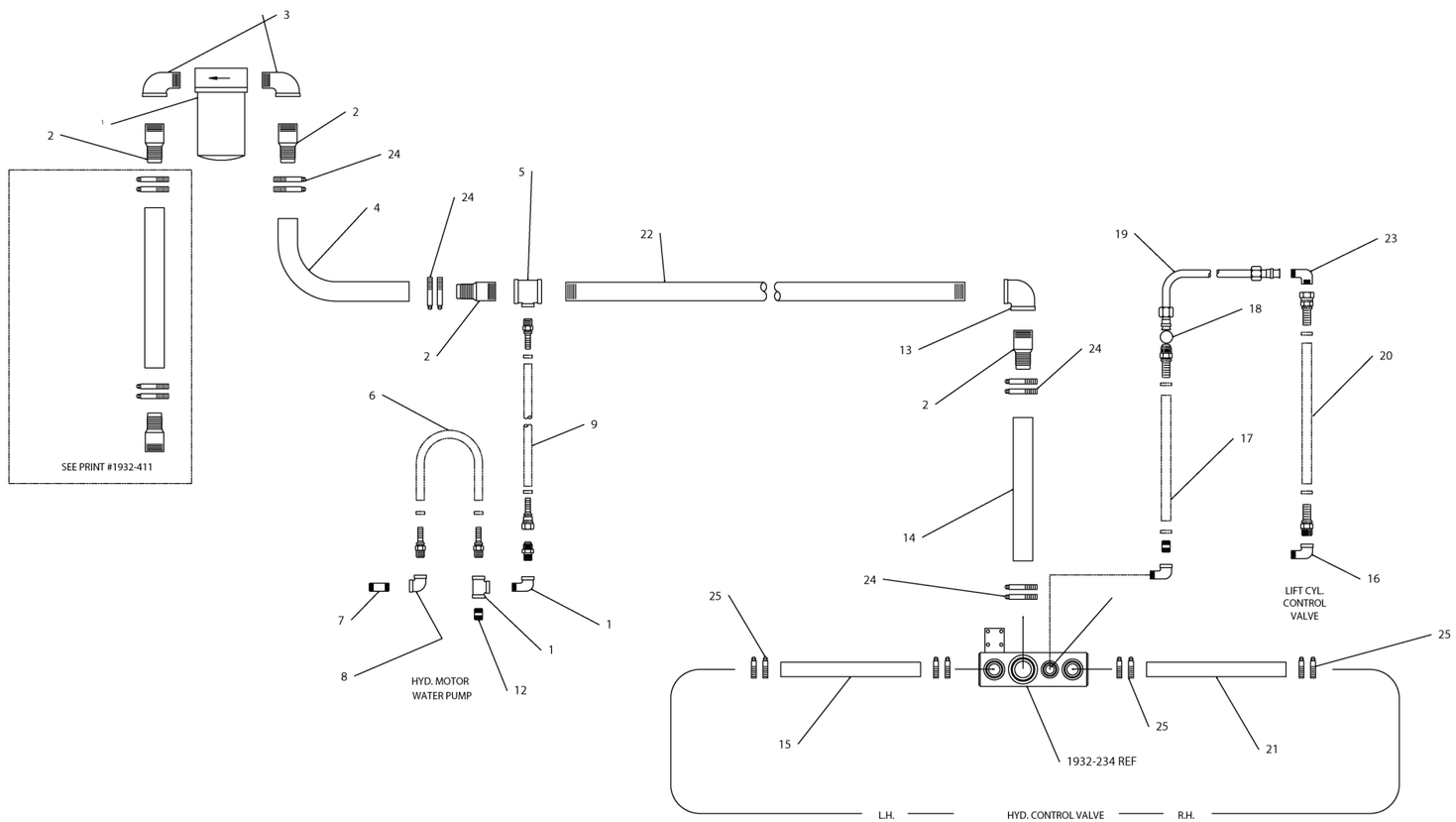

NOTE:
1. ITEM 28 THREADED ON BOTH ENDS

ITEM	QTY	USAGE	PART NUMBER	DESCRIPTION
25	8	1.00	5370-520	CLAMP HOSE #20 24115
24	8	1.00	5370-524	CLAMP HOSE #24 24116
23	1	1.00	5224-2500-12	ELBOW M-JIC -12 x M-JIC -12
22	1	9.59	5019-170-11500	PIPE 1 1/2 SCH40BLK CTL
21	1	1.00	5220-516-01800	HOSE HYD 1 SUCT 16C4 100R4 CTL
20	1	1.00	1932-592	RETURN HOSE - LIFT CYL VLV
19	1	1.00	1932-522	LIFT CYLINDER - RETURN TUBE
18	1	1.00	5224-2403-12	TUBE UNION JIC-12-12
17	1	1.00	1932-591	RETURN HOSE - LIFT CYL VLV
16	1	1.00	5003-140	ELL 90ST 3/4
15	1	1.25	5220-516-01500	HOSE HYD 1 SUCT 16C4 100R4
14	1	2.17	5220-424-03250	HOSE HYD 1 1/2 SUCT 24gmv CTL
13	1	1.00	5001-170	ELL 90 1 1/2
12	1	1.00	5053-000	NIPPLE 1/2 X CL
11	1	1.00	5000-130	TEE 1/2
10	1	1.00	5224-2501-10-08	ELBOW M-JIC -10 x M-NPT 1/2IN
9	1	1.00	1932-590	RETURN HOSE - WTR PUMP
8	1	1.00	5001-130	ELL 90 1/2
7	1	1.00	5053-040	NIPPLE 1/2 X 2
6	1	1.00	1932-589	RETURN HOSE - WTR PUMP
5	1	1.00	5012-173	TEE RED 1 1/2 x 1/2
4	1	1.00	5220-424-03450	HOSE HYD 1 1/2 SUCT 24gmv CTL
3	2	1.00	5013-171	RED EL 90 ST 1 1/2 X 1 1/4
2	4	1.00	5070-170	NIPPLE KC 1 1/2IN
1	1	1.00	5229-205	FILT ASY SINGLE MCD100 SSF-120

HYDRAULIC RETURN LINES

3-145. PNEUMATIC SCHEMATICS.

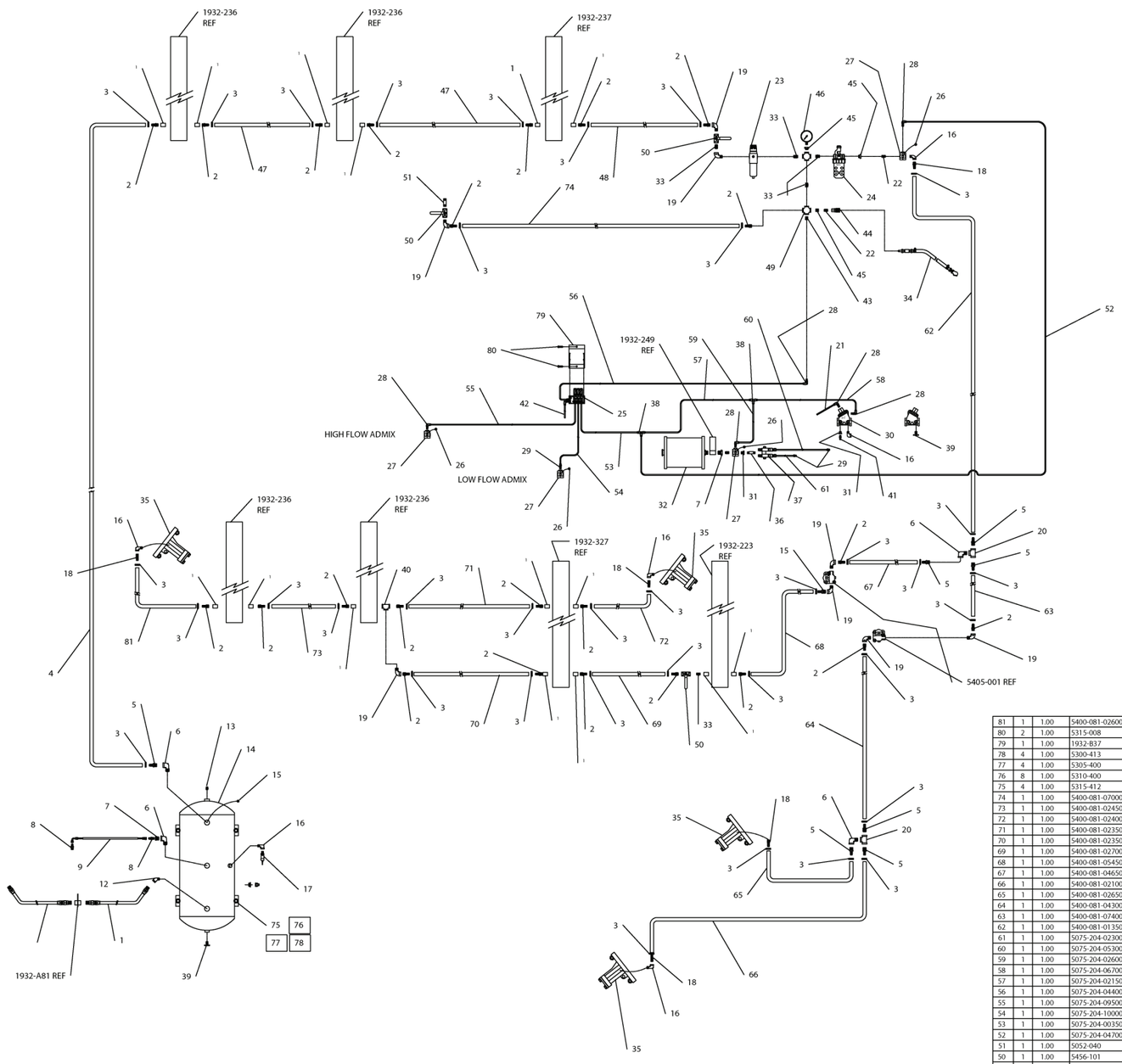

ITEM	QTY	USAGE	PART NUMBER	DESCRIPTION
81	1	1.00	5400-081-02600	HOSE AIR 1/2" 1BRD GRAY/RED
80	2	1.00	5315-008	HHCS ZP 1/4-20 X 1 GR 5
79	1	1.00	1932-B37	AIR SOLENOID MOUNT
78	4	1.00	5300-413	NUT 1/2-13
77	4	1.00	5305-400	LKWSHTR 1/2 S/T
76	8	1.00	5310-400	FLATWASHER ZP 1/2 USS
75	4	1.00	5315-412	HHCS ZP 1/2-13x1-1/2 GR 5
74	1	1.00	5400-081-07000	HOSE AIR 1/2" 1BRD GRAY/RED
73	1	1.00	5400-081-02450	HOSE AIR 1/2" 1BRD GRAY/RED
72	1	1.00	5400-081-02400	HOSE AIR 1/2" 1BRD GRAY/RED
71	1	1.00	5400-081-02350	HOSE AIR 1/2" 1BRD GRAY/RED
70	1	1.00	5400-081-02350	HOSE AIR 1/2" 1BRD GRAY/RED
69	1	1.00	5400-081-02700	HOSE AIR 1/2" 1BRD GRAY/RED
68	1	1.00	5400-081-05450	HOSE AIR 1/2" 1BRD GRAY/RED
67	1	1.00	5400-081-04650	HOSE AIR 1/2" 1BRD GRAY/RED
66	1	1.00	5400-081-02100	HOSE AIR 1/2" 1BRD GRAY/RED
65	1	1.00	5400-081-02650	HOSE AIR 1/2" 1BRD GRAY/RED
64	1	1.00	5400-081-04300	HOSE AIR 1/2" 1BRD GRAY/RED
63	1	1.00	5400-081-07400	HOSE AIR 1/2" 1BRD GRAY/RED
62	1	1.00	5400-081-01350	HOSE AIR 1/2" 1BRD GRAY/RED
61	1	1.00	5075-204-02300	TUBING AIRLINE 1/4"OD BLK POLY
60	1	1.00	5075-204-05300	TUBING AIRLINE 1/4"OD BLK POLY
59	1	1.00	5075-204-02600	TUBING AIRLINE 1/4"OD BLK POLY
58	1	1.00	5075-204-06700	TUBING AIRLINE 1/4"OD BLK POLY
57	1	1.00	5075-204-02150	TUBING AIRLINE 1/4"OD BLK POLY
56	1	1.00	5075-204-04400	TUBING AIRLINE 1/4"OD BLK POLY
55	1	1.00	5075-204-09500	TUBING AIRLINE 1/4"OD BLK POLY
54	1	1.00	5075-204-10000	TUBING AIRLINE 1/4"OD BLK POLY
53	1	1.00	5075-204-00350	TUBING AIRLINE 1/4"OD BLK POLY
52	1	1.00	5075-204-04700	TUBING AIRLINE 1/4"OD BLK POLY
51	1	1.00	5052-040	NIPPLE 3/8 X 2
50	1	1.00	5456-101	VALV BALL 3/8 V500P-6
49	1	1.00	5009-120	CROSS 3/8IN
48	1	1.00	5400-081-01450	HOSE AIR 1/2" 1BRD GRAY/RED
47	2	1.00	5400-081-02450	HOSE AIR 1/2" 1BRD GRAY/RED

ITEM	QTY	USAGE	PART NUMBER	DESCRIPTION
46	1	1.00	5404-104	GAGE AIR 160#PSI LIQ2 1/2"ABS
45	2	1.00	5010-122	HEX RED 3/8 X 1/4
44	1	1.00	5401-004	HOSE AIR QUIK CPLR 1/4F 3003
43	1	1.00	5010-123	HEX RED 3/8 x 1/8
42	1	1.00	5075-204-00500	TUBING AIRLINE 1/4"OD BLK POLY
41	1	1.00	5401-002	AIRCHUCK AUX HOSE 6146A23
40	1	1.00	5000-120	TEE 3/8
39	2	1.00	5076-793	DRAINCOCK BRASS 1/4NPT 321P
38	2	1.00	5077-820	TUBE TEE 3104 1/4OD
37	1	1.00	5200-109	CHAIN OIL DRIP CONTROL B-3150-
36	1	1.00	5050-040	NIPPLE 1/8 X 2
35	2	1.00	5407-021	VIBRATOR 2"CVC-1200VMR 2520200
34	1	1.00	1932-A60	HOSE AIR ASY 1/2"x 15'
33	5	1.00	5052-000	NIPPLE 3/8 X CL
32	1	1.00	5200-509	CHAIN OILER RESEVOIR B-966-16
31	2	1.00	5010-112	HEX RED 1/4 x 1/8
30	1	1.00	5456-001	VALV AIR/WTR 1"421 DV42C NOSAC
29	3	1.00	5077-422	TUBE CONNCTR 3115 1/4ODx1/8NPT
28	6	1.00	5077-522	TUBE M/ELBOW 3209 1/4ODx1/8NPT
27	4	1.00	5405-103	VALV AIR 250A 2WAY NC WO/BS AI
26	4	1.00	5005-112	PLUG 1/4 COUNTERSUNK HEX(421)
25	1	1.00	5405-21003	VALV ELEC/AIR 12V ASY-3 RDCD
24	1	1.00	5402-004.01	LUBRICATOR AIR 3/8"L606-03B WA
23	1	1.00	5402-102.01	FILTER/REGULTR COMBO B11-03DJC
22	3	1.00	5051-000	NIPPLE 1/4 X CL
21	1	1.00	5075-204-00500	TUBING AIRLINE 1/4"OD BLK POLY
20	2	1.00	5000-130	TEE 1/2
19	8	1.00	5003-120	ELL 90ST 3/8 BLACK
18	5	1.00	5401-044	HOSE BARB 1/2IDx1/4NPT 11308
17	1	1.00	5405-403	VALV RELIEF 165# SAFEPOP 5A714
16	6	1.00	5003-110	ELL 90ST 1/4
15	1	1.00	5005-110	PLUG 1/4
14	1	1.00	5457-22000	TANK AIR 20GAL 72-14-20-200 RD
13	1	1.00	5005-130	PLUG 1/2
12	1	1.00	5004-130	ELL 45ST 1/2
11	1	1.00	1932-A81	REF
10	1	1.00	5400-084	HOSE ASY STEEL BRD 1/2MNPTx24"
9	1	1.00	1932-586	HOSE FLOW CONTROL 63"
8	2	1.00	5224-2404-04-04	CONNECTOR JIC-04 x 1/4 NPT
7	2	1.00	5010-133	HEX RED 1/2 x 1/4
6	4	1.00	5003-130	ELL 90ST 1/2
5	7	1.00	5401-082	HOSE BARB 1/2IDx1/2NPT 11310
4	1	1.00	5400-081-08600	HOSE AIR 1/2" 1BRD GRAY/RED
3	36	1.00	5370-506	CLAMP HOSE #6 (M5S) 24110X
2	21	1.00	5401-081	HOSE BARB 1/2IDx3/8NPT 11309
1	15	1.00	5007-120	CPLG 3/8

3-146. ELECTRIC SCHEMATICS.

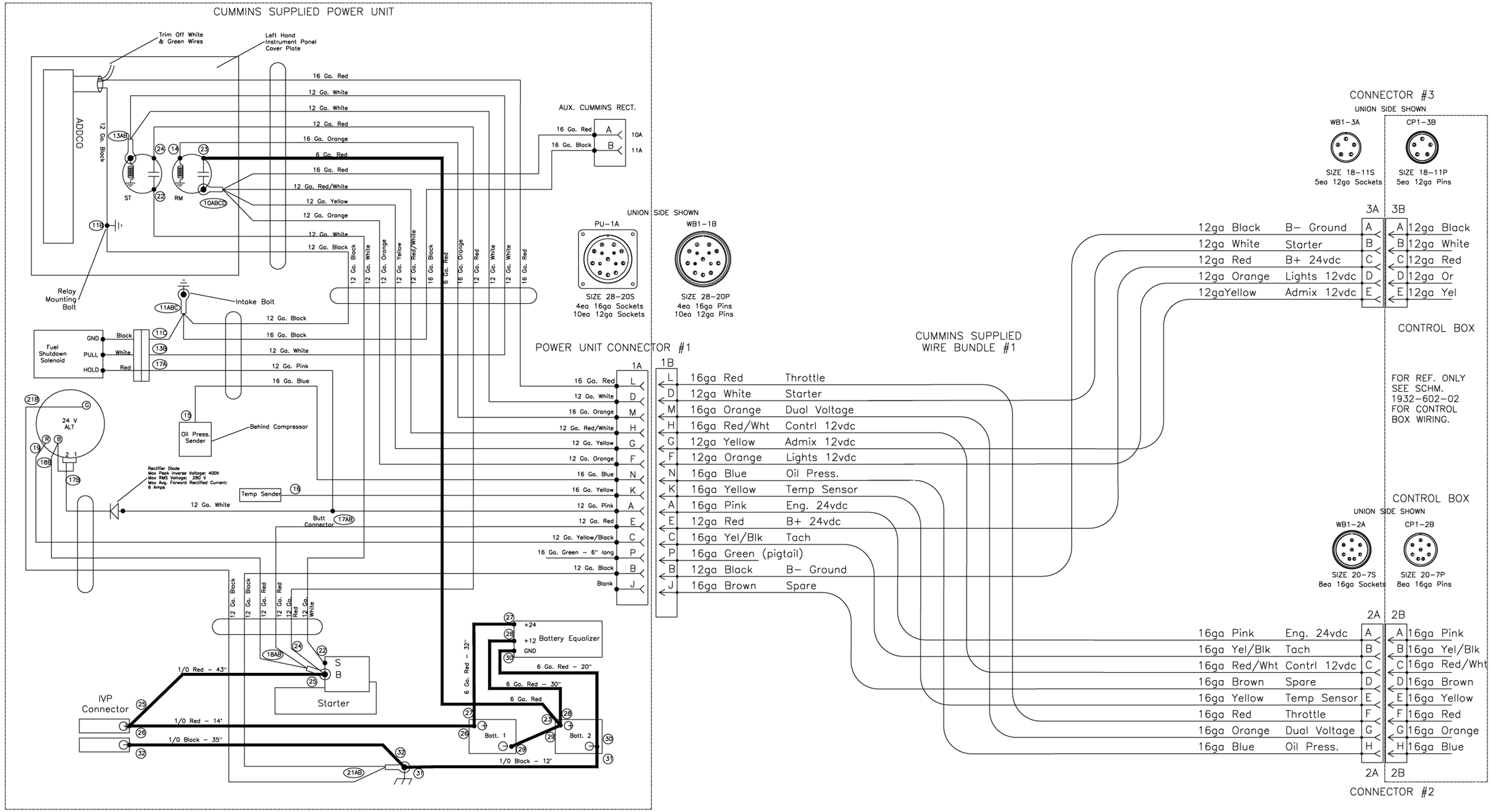

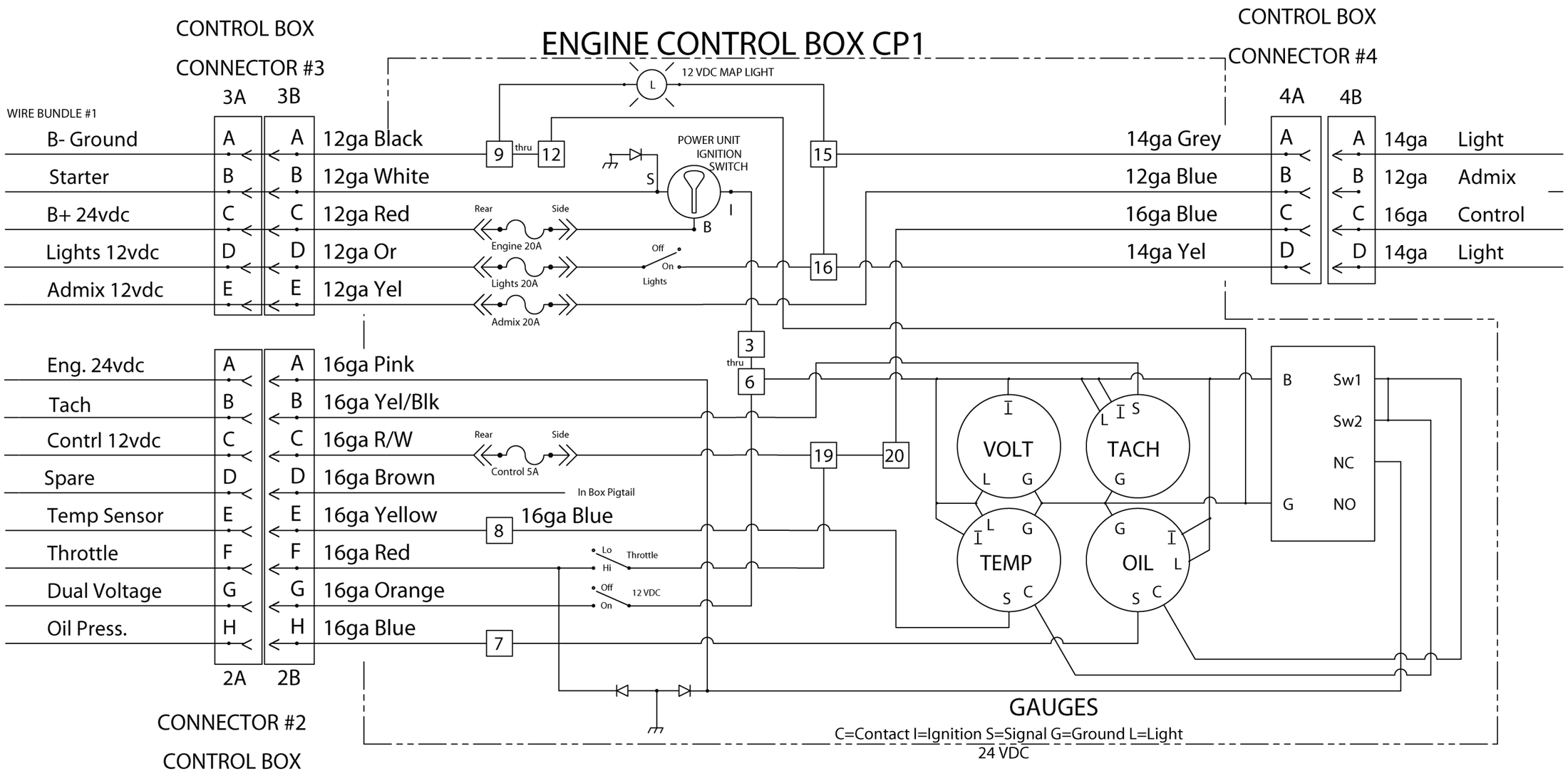

Note: Connectors 2 & 3 duplicated from print 1932-602-01 for clarity
Note: Connector 4 duplicated from print 1932-602-03 for clarity
Note: Terminals 9,10,11,&12 are grounded to battery neg. cable. Symbol connections refer to chassis ground
Note: Lights in all 4 gauges to come on with ignition switch.
Note: 12 vdc switch (dual voltage) to work with ignition switch.
Note: Terminals 13 & 14 reserved for future changes.
Note: Reverse EMF diodes were added as per your drawings, INSIDE CONTROL BOX.

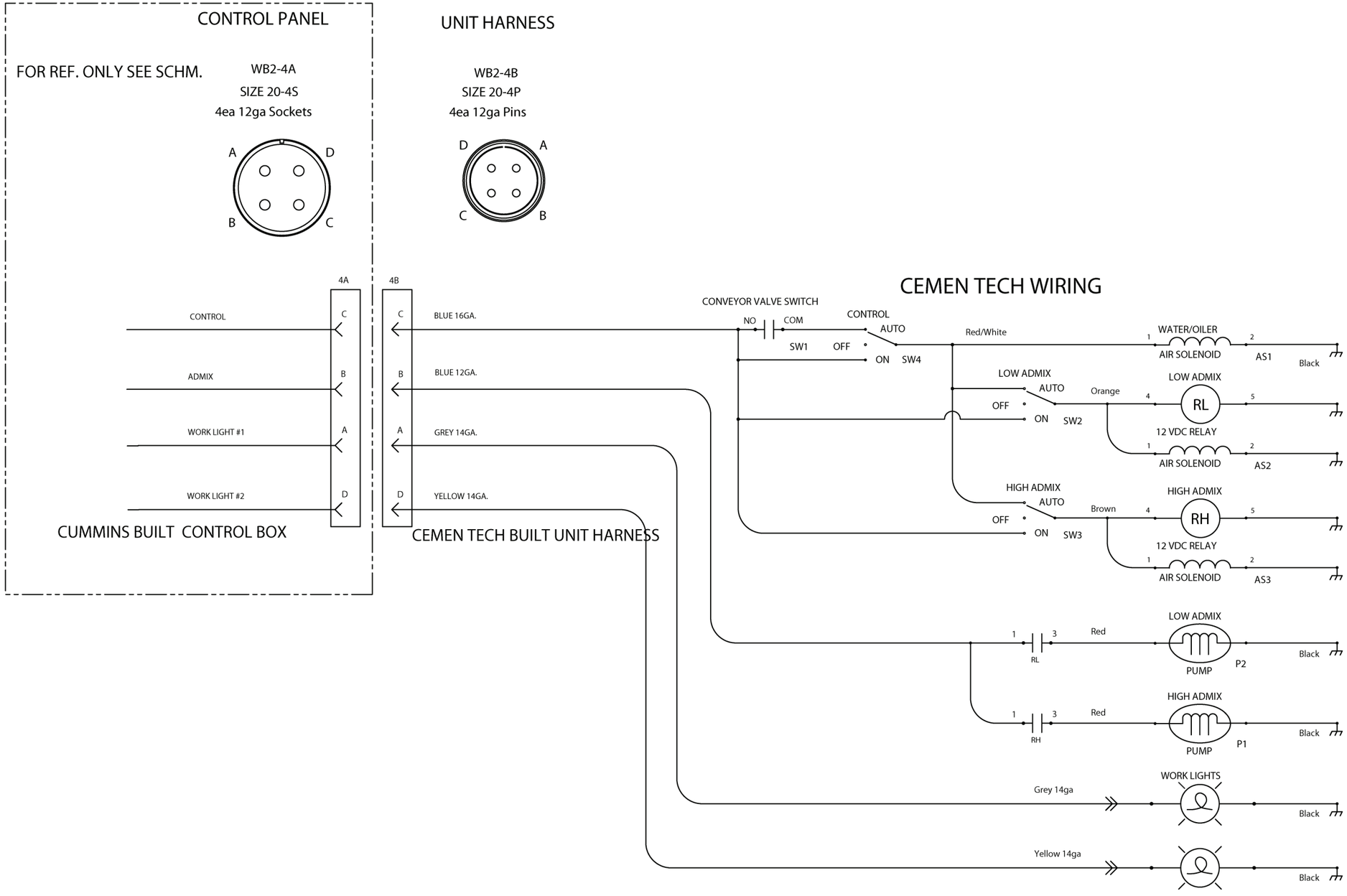
CONTROL PANEL
FOR REF. ONLY SEE SCHM.
WB2-4A
SIZE 20-4S
4ea 12ga Sockets
A
D
B
C
UNIT HARNESS
WB2-4B
SIZE 20-4P
4ea 12ga Pins
D
A
C
B
CEMEN TECH WIRING
4A
4B
CONTROL
ADMIX
WORK LIGHT #1
WORK LIGHT #2
CUMMINS BUILT CONTROL BOX
BLUE 16GA.
BLUE 12GA.
GREY 14GA.
YELLOW 14GA.
CEMEN TECH BUILT UNIT HARNESS
CONVEYOR VALVE SWITCH
NO
COM
SW1
CONTROL
AUTO
OFF
ON
SW4
Red/White
WATER/OILER
AIR SOLENOID
AS1
Black
LOW ADMIX
AUTO
OFF
ON
SW2
Orange
RL
12 VDC RELAY
AIR SOLENOID
AS2
HIGH ADMIX
AUTO
OFF
ON
SW3
Brown
RH
12 VDC RELAY
AIR SOLENOID
AS3
LOW ADMIX
Red
RL
PUMP
P2
HIGH ADMIX
Red
RH
PUMP
P1
WORK LIGHTS
Grey 14ga
Yellow 14ga

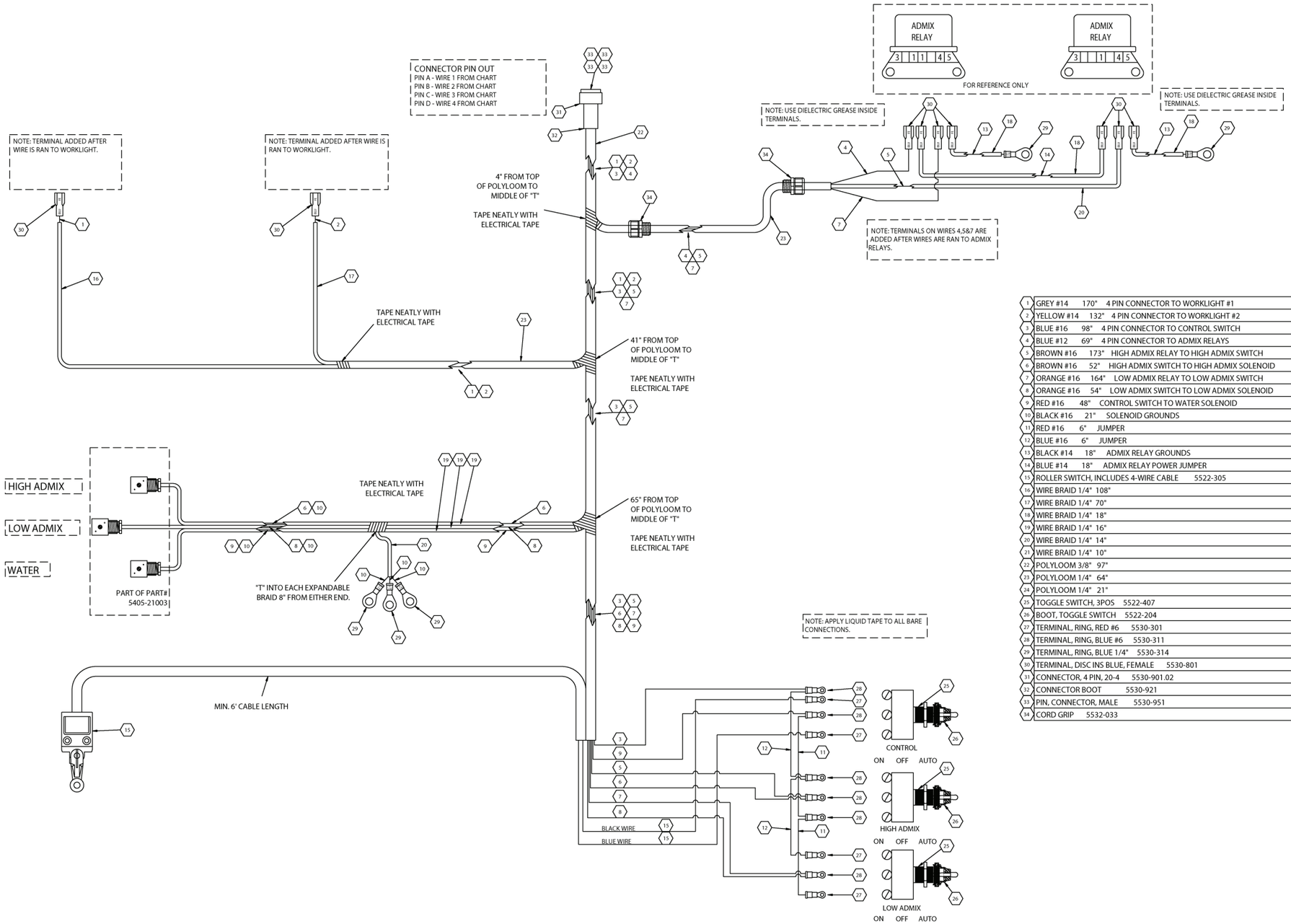

1	GREY #14 170" 4 PIN CONNECTOR TO WORKLIGHT #1
2	YELLOW #14 132" 4 PIN CONNECTOR TO WORKLIGHT #2
3	BLUE #16 98" 4 PIN CONNECTOR TO CONTROL SWITCH
4	BLUE #12 69" 4 PIN CONNECTOR TO ADMIX RELAYS
5	BROWN #16 173" HIGH ADMIX RELAY TO HIGH ADMIX SWITCH
6	BROWN #16 52" HIGH ADMIX SWITCH TO HIGH ADMIX SOLENOID
7	ORANGE #16 164" LOW ADMIX RELAY TO LOW ADMIX SWITCH
8	ORANGE #16 54" LOW ADMIX SWITCH TO LOW ADMIX SOLENOID
9	RED #16 48" CONTROL SWITCH TO WATER SOLENOID
10	BLACK #16 21" SOLENOID GROUNDS
11	RED #16 6" JUMPER
12	BLUE #16 6" JUMPER
13	BLACK #14 18" ADMIX RELAY GROUNDS
14	BLUE #14 18" ADMIX RELAY POWER JUMPER
15	ROLLER SWITCH, INCLUDES 4-WIRE CABLE 5522-305
16	WIRE BRAID 1/4" 108"
17	WIRE BRAID 1/4" 70"
18	WIRE BRAID 1/4" 18"
19	WIRE BRAID 1/4" 16"
20	WIRE BRAID 1/4" 14"
21	WIRE BRAID 1/4" 10"
22	POLYLOOM 3/8" 97"
23	POLYLOOM 1/4" 64"
24	POLYLOOM 1/4" 21"
25	TOGGLE SWITCH, 3POS 5522-407
26	BOOT, TOGGLE SWITCH 5522-204
27	TERMINAL, RING, RED #6 5530-301
28	TERMINAL, RING, BLUE #6 5530-311
29	TERMINAL, RING, BLUE 1/4" 5530-314
30	TERMINAL, DISC INS BLUE, FEMALE 5530-801
31	CONNECTOR, 4 PIN, 20-4 5530-901.02
32	CONNECTOR BOOT 5530-921
33	PIN, CONNECTOR, MALE 5530-951
34	CORD GRIP 5532-033

3-147. WATER SCHEMATICS.

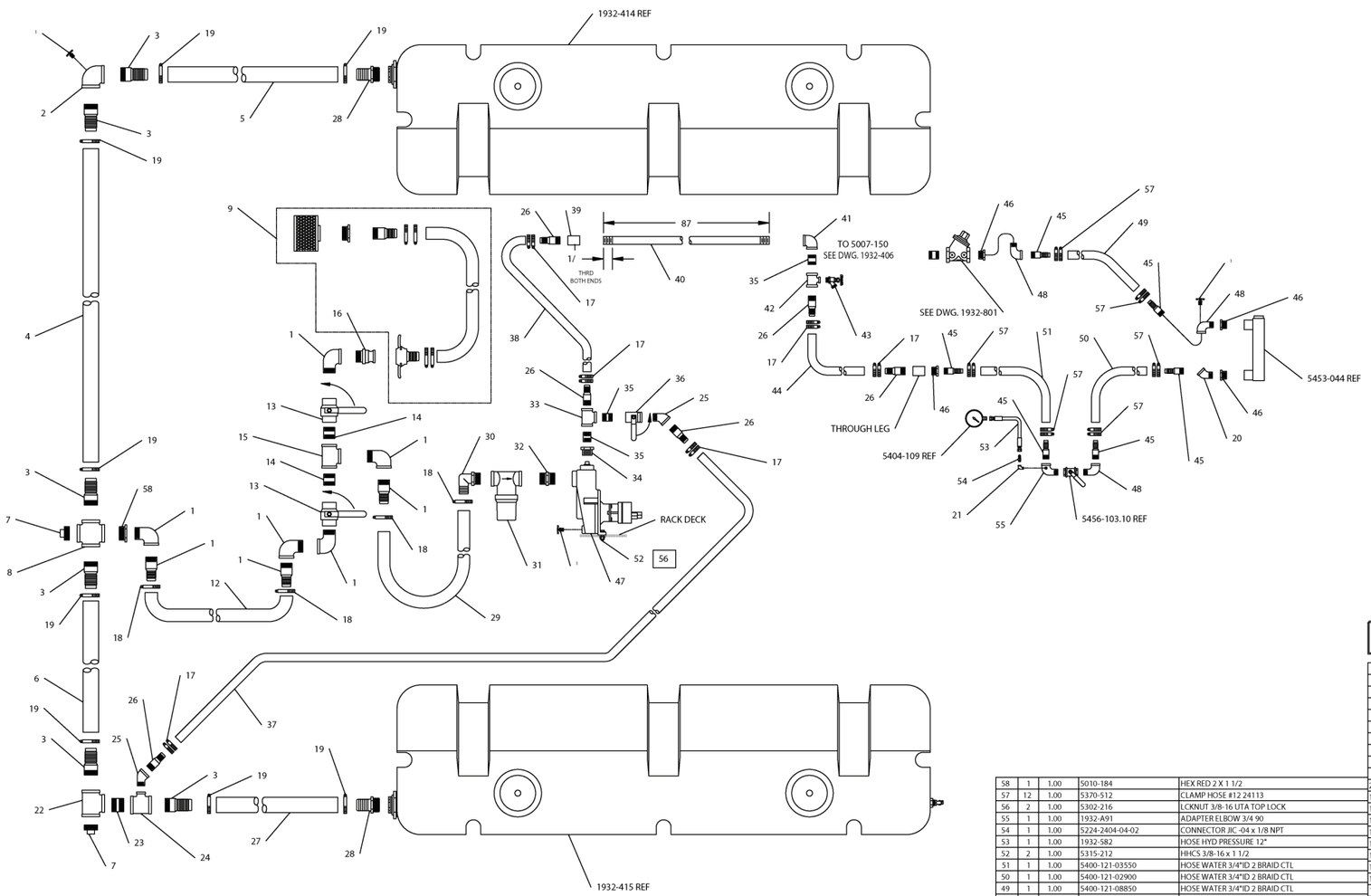

NOTE:
USE THREAD SEALANT ON ALL THREADED CONNECTIONS.

ITEM	QTY	USAGE	PART NUMBER	DESCRIPTION
58	1	1.00	5010-184	HEX RED 2 X 1 1/2
57	12	1.00	5370-512	CLAMP HOSE #12 24113
56	2	1.00	5302-216	LCKNUT 3/8-16 UTA TOP LOCK
55	1	1.00	1932-A91	ADAPTER ELBOW 3/4 90
54	1	1.00	5224-2404-04-02	CONNECTOR JIC -04 x 1/8 NPT
53	1	1.00	1932-582	HOSE HYD PRESSURE 12"
52	2	1.00	5315-212	HHCS 3/8-16 x 1 1/2
51	1	1.00	5400-121-03550	HOSE WATER 3/4"ID 2 BRAID CTL
50	1	1.00	5400-121-02900	HOSE WATER 3/4"ID 2 BRAID CTL
49	1	1.00	5400-121-08850	HOSE WATER 3/4"ID 2 BRAID CTL
48	2	1.00	5003-140.10	ELL 90ST 3/4 GAL
47	1	1.00	5455-00700	PUMP CENTRFGL WTR RDCD 93033-B
46	4	1.00	5010-154	HEX RED 1 X 3/4
45	6	1.00	5070-140	NIPPLE KC 3/4IN
44	1	1.00	5400-161-04200	HOSE WATER 1" 200 PSI HORIZON
43	1	1.00	5456-705	VALV BOILER DRAIN 1/2"NPT #19
42	1	1.00	5012-153	TEE RED 1 x 1 x 1/2
41	1	1.00	5001-150	ELL 90 1IN
40	1	1.00	1932-A92	PIPE WATER
39	1	1.00	5007-150	CPLG 1
38	1	1.00	5400-161-02800	HOSE WATER 1" 200 PSI HORIZON
37	1	1.00	5400-161-01050	HOSE WATER 1" 200 PSI HORIZON
36	1	1.00	5456-104	VALV BALL 1" V500P-16
35	4	1.00	5055-000	NIPPLE 1 X CL
34	1	1.00	5010-162	HEX RED 1 1/4 X 1
33	1	1.00	5000-150	TEE 1IN
32	1	1.00	5057-000.30	NIPPLE 1 1/2xCL POLY TN52424PP
31	1	1.00	5451-124	STRAINR WATER 1 1/2"CLEAR RDCD

ITEM	QTY	USAGE	PART NUMBER	DESCRIPTION
30	1	1.00	5401-724	HOSE BARB90EL 1 1/2MPTx 1 1/2
29	1	1.00	5400-24200-03800	HOSE WATER 1 1/2"SUCTION/DISCH
28	2	1.00	5401-432	HOSE BARBNPPL 2"MPTx2"HB PLSTC
27	1	1.00	5400-321-01300	HOSE WATER 2 SUCTION/DISCH
26	6	1.00	5070-150	NIPPLE KC 1IN
25	2	1.00	5004-150	ELL 45ST 1IN
24	1	1.00	5012-184	TEE RED 2 X 2 X 1
23	1	1.00	5058-000	NIPPLE 2 X CL
22	1	1.00	5000-180	TEE 2IN
21	1	1.00	5003-100.10	ELL 90ST 1/8 GALV
20	1	1.00	5004-140.10	ELL 45ST 3/4 GAL
19	8	1.00	5370-536	CLAMP HOSE #36 24119
18	4	1.00	5370-528	CLAMP HOSE #28 24117
17	12	1.00	5370-516	CLAMP HOSE #16
16	1	1.00	5401-015	ADAPTER HOSE 1 1/2"M-NPT 150-F
15	1	1.00	5000-170	TEE 1 1/2IN
14	2	1.00	5057-000	NIPPLE 1 1/2 x CL
13	2	1.00	5456-106	VALV BALL 1 1/2 V500P-24
12	1	1.00	5400-241-02200	HOSE WATER 1 1/2" 200PSI HORIZ
11	3	1.00	5070-170	NIPPLE KC 1 1/2IN
10	5	1.00	5003-170	ELL 90ST 1 1/2
9	1	1.00	1932-703	HOSE ASSY WATER SUCTION
8	1	1.00	5009-180	CROSS 2IN
7	2	1.00	5005-180	PLUG 2IN
6	1	1.00	5400-321-02100	HOSE WATER 2 SUCTION/DISCH CTL
5	1	1.00	5400-321-01650	HOSE WATER 2 SUCTION/DISCH CTL
4	1	1.00	5400-321-04475	HOSE WATER 2 SUCTION/DISCH CTL
3	6	1.00	5070-180	NIPPLE KC 2IN
2	1	1.00	5001-180	ELL 90 2IN
1	3	1.00	5076-793	DRAINCOCK BRASS 1/4NPT 321P

CHAPTER 4

UNIT MAINTENANCE TROUBLESHOOTING INSTRUCTIONS

Para Contents Page

4-1 Introduction 4-1
4-2 Introduction To Logic Tree Troubleshooting 4-1
4-3 Troubleshooting Symptom Index 4-3
4-4 Troubleshooting 4-5

4-1. INTRODUCTION.

a. This section contains information for locating and correcting most of the troubles which may develop on the Concrete Mobile Mixer. Each malfunction for an individual component, unit, or system is followed by a list of tests or inspections which will help to determine the corrective actions to take. Perform the tests/ inspections and corrective action in the order listed.

b. Tests/inspections and corrective action in the order listed.

c. This manual cannot list all malfunctions that may occur, nor all tests or inspections and corrective actions. If a malfunction is not listed or is not corrected by listed corrective actions, notify your supervisor.

d. For engine troubleshooting not listed below refer to Cummins engine manual.

4-2. INTRODUCTION TO LOGIC TREE TROUBLESHOOTING.

a. ***Page Layout.*** Troubleshooting procedures are divided into logic tree pages and test pages.

(1) A logic tree page is always a left-hand page, facing the test page on the right. The logic tree page provides the sequence of steps required to isolated a fault to a failed component. All critical information for decision making is on the left-hand page. Each logic tree page contains the following information:

(a) **INITIAL SETUP** - This box is located only on the first logic tree page of a fault. INITIAL SETUP lists tools, materials, references, personnel and equipment needed to troubleshoot the fault.

(b) **KNOWN INFO** - This box is located in the top left-hand column. KNOWN INFO lists conditions and information that will eliminate specific components as the cause of the fault.

(c) **POSSIBLE PROBLEMS** - This box is located directly below KNOWN INFO. All of the system components that could cause a fault are listed in the POSSIBLE PROBLEMS box. The first component listed in the POSSIBLE PROBLEMS box is the one that will be tested at that step in the logic sequence. When one of the components is tested and found to be operational, it is entered at the bottom of the KNOWN INFO box as OK.

(d) **QUESTION** - Each question, located in the middle column, refers to the first possible problem listed in POSSIBLE PROBLEMS. If the answer to the question is YES, proceed to the next step. If the answer is NO, follow the NO arrow to obtain directions for correcting the problem. If the step contains a WARNING or CAUTION message, a small shadow box is printed above the question. Text for WARNINGs or CAUTIONs is on the following right-hand page.

4-2. INTRODUCTION TO LOGIC TREE TROUBLESHOOTING (CONT).

(e) **TEST OPTIONS** - This box is located in the top right-hand column. TEST OPTIONS lists tests available for testing parts suspected of failing.

(f) **REASON FOR QUESTION** - This box is located directly below TEST OPTIONS. It explains the purpose for the question in the middle column.

(2) A test page is always a right-hand page, facing the logic tree page on the left. The test provides detailed instructions for testing the first component listed in the POSSIBLE PROBLEMS box. This test will also provide an answer for the question in the middle column. Note the arrow connecting the test on the right-hand page to the REASON FOR QUESTION. When possible, illustrations are included to provide visual details. Warnings, cautions and notes contain additional information for testing.

b. How to Begin Troubleshooting.

(1) Determine the symptom or condition that indicates a problem or failure. Troubleshooting is divided into symptoms peculiar to a module system or component, for example: air system or hydraulics.

(2) Go to the referenced page to begin troubleshooting. Open the manual flat so both the left-hand and right-hand pages are displayed before you. The information on both pages is important to resolve the problem or failure. However, the experienced technician can follow the left-hand page instructions and refer to the right-hand page when necessary.

(3) Follow the Diagnostic Procedure. Answer question No. 1 on the left-hand page and follow the YES or NO path to either the remedy or the next question. If necessary, look on the right-hand page for test instructions and illustrations.

(4) Observe warnings, cautions and notes. The formatting and symbols used in this manual for warnings, cautions and notes are as follows:

WARNING

This is the symbol for a warning statement. If you see the word WARNING above a question on the left-hand page, look on the right-hand page for the text of the message. WARNINGs describe a situation which could cause severe injury or death to personnel.

CAUTION

This is the symbol for a caution statement. If you see the word CAUTION above a question on the left-hand page, look on the right-hand page for the text of the message. CAUTIONs describe a situation which could cause damage to equipment.

NOTE

This is the symbol for a note. Notes are located directly above the test to which they refer. Notes provide additional information for performing a test.

4-3. TROUBLESHOOTING SYMPTOM INDEX.

The following pages contain the malfunctions listed in Field Troubleshooting Symptom Index (Table 4-1), test or inspection instructions required to determine cause of malfunction, and corrective actions for repairing the faulty equipment.

Table 4-1. Unit Maintenance Troubleshooting Symptom Index

Fault No.	Troubleshooting Procedure	Page
1	Admix System (High-Flow) Does Not Operate Correctly	4-5
2	Admix System (Low-Flow) Does Not Operate Correctly	4-79
3	Air Pressure Low or System Charge is Slow	4-146
4	All 12-Volt DC Circuits Do Not Operate	4-180
5	Battery Charging System or Battery Equalizer Does Not Operate Correctly	4-198
6	Cement Fluffer Control (Aerating) Valve Does Not Operate Correctly	4-244
7	Cement Metering Counter Does Not Operate Correctly	4-258
8	Cement is Not Delivered or Delivery is Uneven or Incorrect When Clutch is Engaged	4-278
9	Concrete Mix Too Dry (No or Low Water Flow to Mixer)	4-306
10	Concrete Mix Too Wet, Too Sandy, Too Stony, Is Not Mixed Thoroughly, or Delivery is Uneven	4-332
11	Concrete Mixing Auger Does Not Rotate, Rotates Slowly, Noisy, or Vibrates	4-356
12	Concrete Mixer Chute Swivel Binds	4-378
13	Concrete Mixer Hoist, Retractor Cylinders, Lift Cylinders, and Water Pump Do Not Operate	4-386
14	Concrete Mixer Hoist Does Not Operate Correctly	4-392
15	Concrete Mixer Retractor Cylinders Do Not Operate Correctly	4-428
16	Conveyor Belt Does Not Operate Correctly or is Damaged	4-470
17	Conveyor Belt Oiler Does Not Operate	4-504
18	Engine Cranks But Fails to Start (Exhaust Smoke Not Present)	4-528
19	Engine Cranks But Hard to Start or Will Not Start (Exhaust Smoke Present)	4-562
20	Engine Does Not Shut Down During Low Oil Pressure or Engine Overheat Conditions	4-584
21	Engine Excessive Noise or Vibration	4-602
22	Engine Fails to Crank or Cranks Slowly	4-636
23	Engine Gage Reading Incorrect	4-695
24	Engine High Idle Does Not Operate	4-766
25	Engine Overheats (Engine Shutdown Occurs When Water Temperature Gage Reads Above 215°F [102°C])	4-814
26	Engine Starts, But Runs Rough, Has Low Power, Excessive Exhaust Smoke, Excessive Fuel Consumption, or Stops	4-846

4-3. TROUBLESHOOTING SYMPTOM INDEX (CONT).

Fault No.	Troubleshooting Procedure	Page
27	Hydraulic Circuits Do Not Operate	4-882
28	Lift Cylinder(s) Do Not Operate Correctly	4-896
29	Concrete Mixer Auto and/or Manual Controls Do Not Operate (Aquatic [Water] Valve, High and Low Admix, Vibrators, and Chain Oiler)	4-913
30	No or Low Water Pressure (Unable to Adjust Water Pressure)	4-962
31	Not Able to Fill Water Tanks From Lakes or Ponds	4-998
32	Sand and Stone Gates Do Not Operate Correctly	4-1042
33	Vibrator(s) Do Not Operate Correctly	4-1052
34	Work Light(s) Do Not Operate	4-1102

4-4. TROUBLESHOOTING.

1. ADMIX SYSTEM (HIGH-FLOW) DOES NOT OPERATE CORRECTLY.

INITIAL SETUP

Tools and Special Tools

Tool Kit, General Mechanic's: Automotive (Item 19, Appendix I)

Equipment Condition

Concrete Mobile Mixer unloaded from PLS, (Para 2-5)

Concrete Mobile Mixer at operating level, (Para 2-28)

Mixing auger deployed, (Para 2-23)

Engine OFF, (Para 2-19)

1. ADMIX SYSTEM (HIGH-FLOW) DOES NOT OPERATE CORRECTLY (CONT).

KNOWN INFO
Nothing.

POSSIBLE PROBLEMS
Air lines between high-flow admix air solenoid and admix valve kinked or damaged.
Admix system drain cock valves open.
ADMIX fuse faulty.
Air pressure low.
Low-flow admix system not operating.
System control circuits not operating correctly.
Admix solution valve and strainer assembly faulty.
Admix strainer clogged or damaged.
Admix tube between admix tank and water valve kinked or damaged.
Admix tube between admix valve and water valve clogged.
Water valve fitting clogged or faulty.
Admix valve faulty.
Admix air solenoid faulty.
Air line between admix air solenoid and admix valve faulty.
Admix flowmeter faulty.
Admix tube between flowmeter and admix valve clogged.
Admix tube between pump and flowmeter clogged.
Admix pump faulty.
Admix tank clogged.
Admix tube between high-flow admix tank and drain valve clogged.
Blue wire between low admix relay and high-flow admix relay faulty.
High-flow admix relay faulty.
Admix pump ground connection faulty.
Admix relay ground wire faulty.
Control wire harness (brown) wire faulty.
Admix relay ground connections faulty.
Control wire harness (blue) wire faulty.
Main wire harness admix pump power (yellow) wire faulty.
Battery equalizer magnetic switch connections loose or corroded.
Engine harness admix pump power (yellow) wire faulty.
Control box 5-pin wire harness (yellow) wire faulty.
Control box 4-pin wire harness (blue) wire faulty.

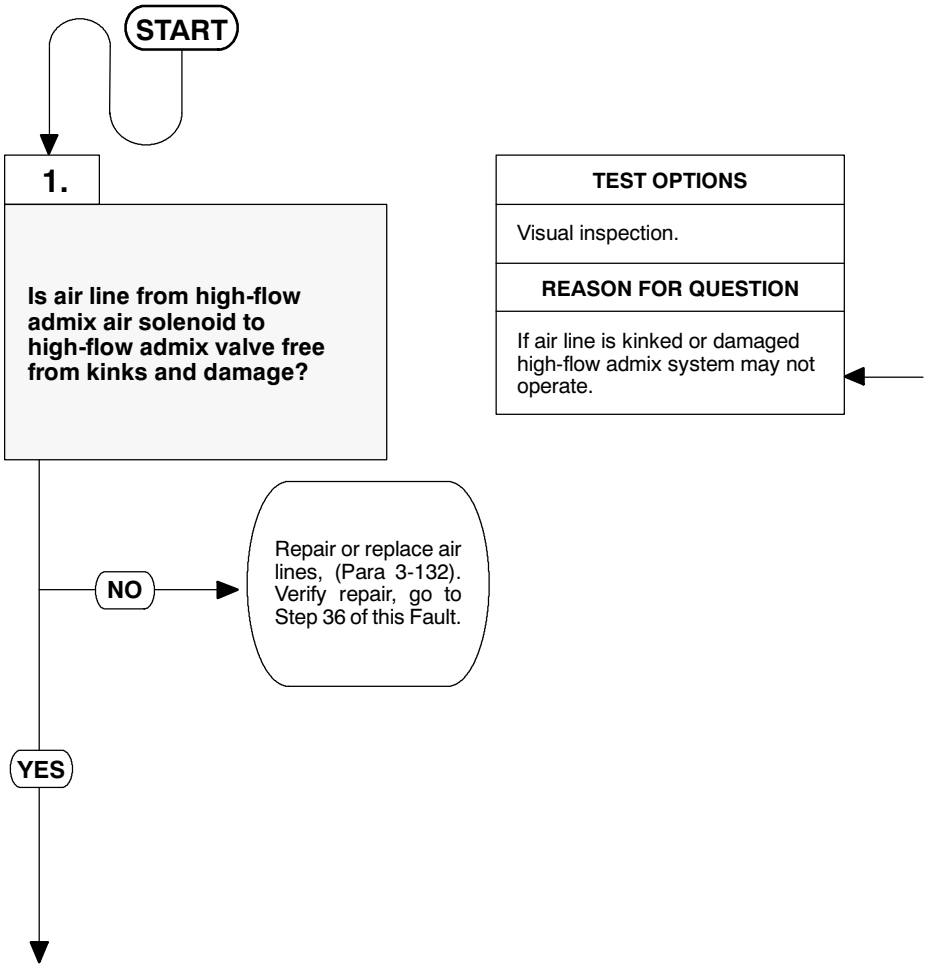

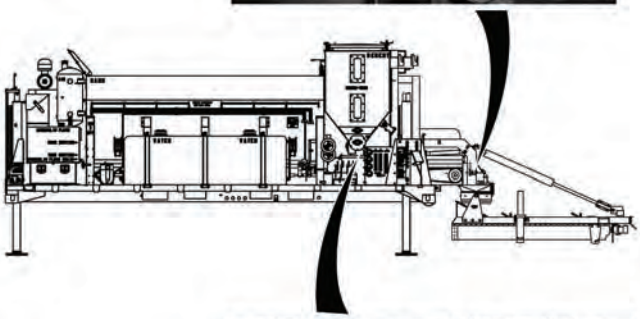

VISUAL INSPECTION
Check if air line between high-flow admix air solenoid and high-flow admix valve are free from kinks and damage. (a) If air line is not free from kinks and damage, repair or replace air line, (Para 3-132). Verify repair, go to Step 36 of this Fault. (b) If air line is free from kinks and damage, go to Step 2 of this Fault.

1. ADMIX SYSTEM (HIGH-FLOW) DOES NOT OPERATE CORRECTLY (CONT).

KNOWN INFO

Air lines between high-flow admix air solenoid and admix valve not kinked or damaged.

POSSIBLE PROBLEMS

- Admix system drain cock valves open.
- ADMIX fuse faulty.
- Air pressure low.
- Low-flow admix system not operating.
- System control circuits not operating correctly.
- Admix solution valve and strainer assembly faulty.
- Admix strainer clogged or damaged.
- Admix tube between admix tank and water valve kinked or damaged.
- Admix tube between admix valve and water valve clogged.
- Water valve fitting clogged or faulty.
- Admix valve faulty.
- Admix air solenoid faulty.
- Air line between admix air solenoid and admix valve faulty.
- Admix flowmeter faulty.
- Admix tube between flowmeter and admix valve clogged.
- Admix tube between pump and flowmeter clogged.
- Admix pump faulty.
- Admix tank clogged.
- Admix tube between high-flow admix tank and drain valve clogged.
- Blue wire between low admix relay and high-flow admix relay faulty.
- High-flow admix relay faulty.
- Admix pump ground wire faulty.
- Admix relay ground wire faulty.
- Control wire harness (brown) wire faulty.
- Admix relay ground connections faulty.
- Control wire harness (blue) wire faulty.
- Main wire harness admix pump power (yellow) wire faulty.
- Battery equalizer magnetic switch connections loose or corroded.
- Engine harness admix pump power (yellow) wire faulty.
- Control box 5-pin wire harness (yellow) wire faulty.
- Control box 4-pin wire harness (blue) wire faulty.

2.

Are all high-flow admix drain cock valves closed?

TEST OPTIONS

Visual inspection.

REASON FOR QUESTION

If high-flow admix drain cock valves are open, high-flow admix system will not operate.

NO → Close high-flow admix drain cock valves, (Para 2-15). Verify repair, go to Step 36 of this Fault.

YES ↓

VISUAL INSPECTION

Check if all high-flow admix drain cock valves are closed.

NOTE

Drain cock valves located on backside of flowmeter panel.

(a) If all high-flow admix drain cock valves are not closed, close admix drain cock valves, (Para 2-15). Verify repair, go to Step 36 of this Fault.

(b) If all high-flow admix drain cock valves are closed, go to Step 3 of this Fault.

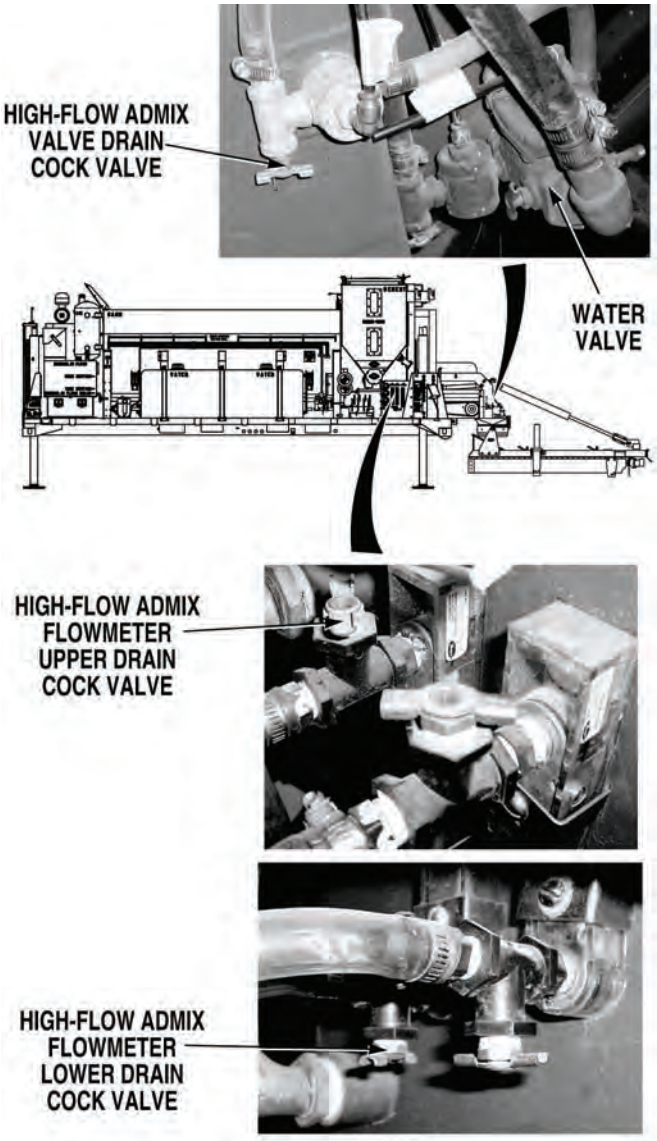

1. ADMIX SYSTEM (HIGH-FLOW) DOES NOT OPERATE CORRECTLY (CONT).

KNOWN INFO
Air lines between high-flow admix air solenoid and admix valve not kinked or damaged.
Admix system drain cock valves closed.

POSSIBLE PROBLEMS
ADMIX fuse faulty.
Air pressure low.
Low-flow admix system not operating.
System control circuits not operating correctly.
Admix solution valve and strainer assembly faulty.
Admix strainer clogged or damaged.
Admix tube between admix tank and water valve kinked or damaged.
Admix tube between admix valve and water valve clogged.
Water valve fitting clogged or faulty.
Admix valve faulty.
Admix air solenoid faulty.
Air line between admix air solenoid and admix valve faulty.
Admix flowmeter faulty.
Admix tube between flowmeter and admix valve clogged.
Admix tube between pump and flowmeter clogged.
Admix pump faulty.
Admix tank clogged.
Admix tube between high-flow admix tank and drain valve clogged.
Blue wire between low admix relay and high-flow admix relay faulty.
High-flow admix relay faulty.
Admix pump ground wire faulty.
Admix relay ground wire faulty.
Control wire harness (brown) wire faulty.
Admix relay ground connections faulty.
Control wire harness (blue) wire faulty.
Main wire harness admix pump power (yellow) wire faulty.
Battery equalizer magnetic switch connections loose or corroded.
Engine harness admix pump power (yellow) wire faulty.
Control box 5-pin wire harness (yellow) wire faulty.
Control box 4-pin wire harness (blue) wire faulty.

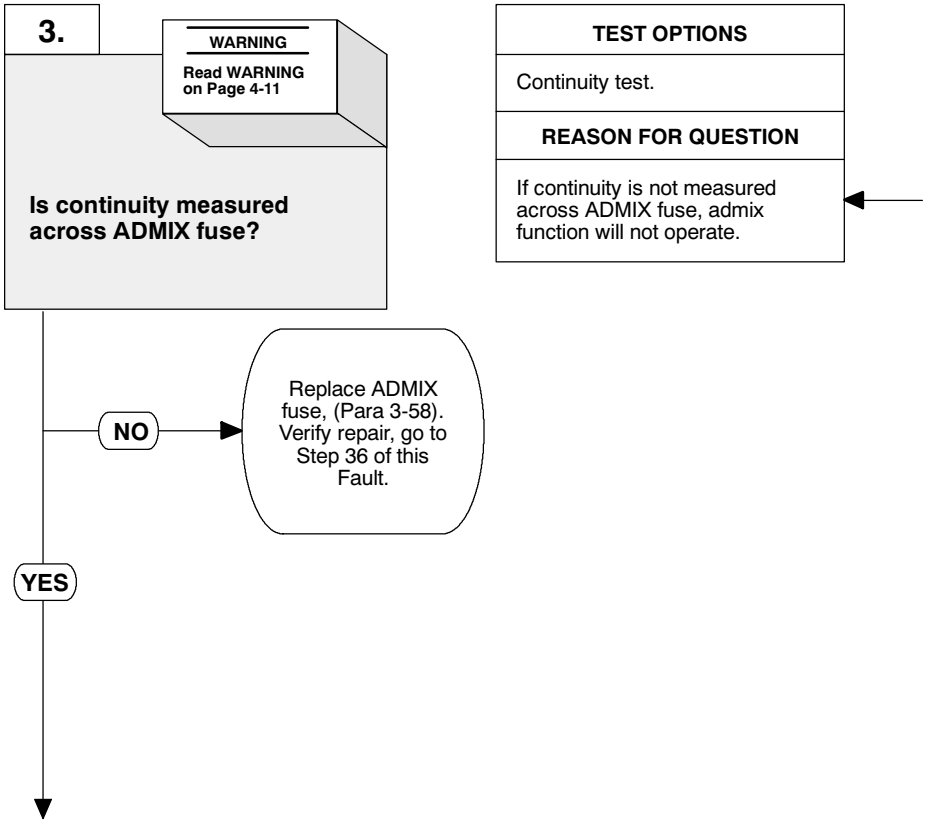

WARNING

Remove all jewelry such as rings, dog tags, bracelets, etc. If jewelry or tools contact positive electrical circuits, a direct short may result. Damage to equipment, injury or death to personnel may occur.

CONTINUITY TEST

(1) Release latch and open control box door.

(2) Remove fuse from ADMIX fuse holder, (Para 3-58).

(3) Set multimeter select switch to ohms.

(4) Connect positive (+) multimeter lead to one end of ADMIX fuse.

(5) Connect negative (-) multimeter lead to opposite end of ADMIX fuse.

(a) If continuity is not measured across ADMIX fuse, replace ADMIX fuse, (Para 3-58). Verify repair, go to Step 36 of this Fault.

(b) If continuity is measured across ADMIX fuse, reinstall fuse in ADMIX fuse holder and go to Step 4 of this Fault.

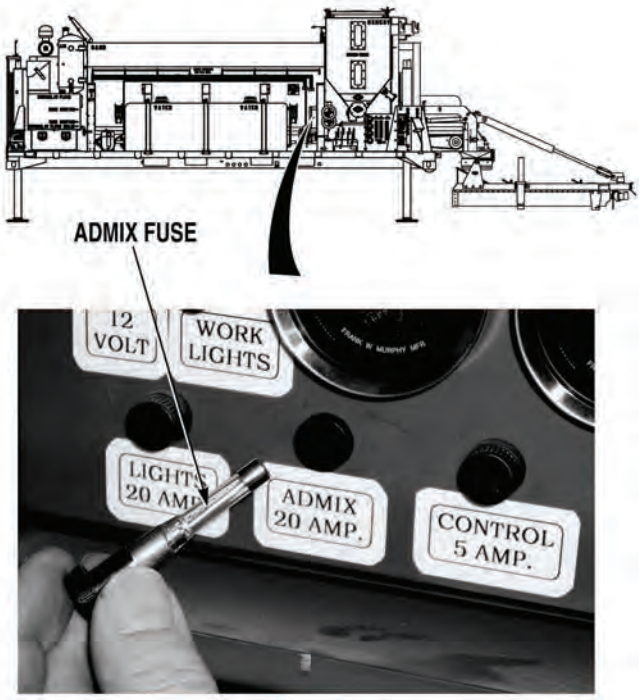

1. ADMIX SYSTEM (HIGH-FLOW) DOES NOT OPERATE CORRECTLY (CONT).

KNOWN INFO
Air lines between high-flow admix air solenoid and admix valve not kinked or damaged.
Admix system drain cock valves closed.
ADMIX fuse OK.

POSSIBLE PROBLEMS
Air pressure low.
Low-flow admix system not operating.
System control circuits not operating correctly.
Admix solution valve and strainer assembly faulty.
Admix strainer clogged or damaged.
Admix tube between admix tank and water valve kinked or damaged.
Admix tube between admix valve and water valve clogged.
Water valve fitting clogged or faulty.
Admix valve faulty.
Admix air solenoid faulty.
Air line between admix air solenoid and admix valve faulty.
Admix flowmeter faulty.
Admix tube between flowmeter and admix valve clogged.
Admix tube between pump and flowmeter clogged.
Admix pump faulty.
Admix tank clogged.
Admix tube between high-flow admix tank and drain valve clogged.
Blue wire between low admix relay and high-flow admix relay faulty.
High-flow admix relay faulty.
Admix pump ground wire faulty.
Admix relay ground wire faulty.
Control wire harness (brown) wire faulty.
Admix relay ground connections faulty.
Control wire harness (blue) wire faulty.
Main wire harness admix pump power (yellow) wire faulty.
Battery equalizer magnetic switch connections loose or corroded.
Engine harness admix pump power (yellow) wire faulty.
Control box 5-pin wire harness (yellow) wire faulty.
Control box 4-pin wire harness (blue) wire faulty.

4.

Does air system charge to 80 to 100 psi (552 to 690 kPa) with CONTROL OVERIDE, HIGH FLOW ADMIX, and LOW FLOW ADMIX switches OFF?

NO → Go to “Air Pressure Low or System Charge is Slow”, (Fault 3).

YES ↓

TEST OPTIONS
Operational test.
REASON FOR QUESTION
If air system does not charge, another troubleshooting procedure applies.

OPERATIONAL TEST

(1) If ON, turn CONTROL OVERIDE switch OFF, (Para 2-1).

(2) If ON, turn LOW FLOW ADMIX switch OFF, (Para 2-1).

(3) If ON, turn HIGH FLOW ADMIX switch OFF, (Para 2-1).

(4) Start engine, (Para 2-19).

(5) If closed, open air system supply control valve, (Para 2-18).

(6) If required, adjust air regulator, (Para 2-18). Check if air system charges to 80 to 100 psi (552 to 690 kPa).

(a) If air system does not charge to 80 to 100 psi (552 to 690 kPa), go to “Air Pressure Low or System Charge Is Slow, (Fault 3).

(b) If air system charges to 80 to 100 psi (552 to 690 kPa), go to Step 4 of this Fault.

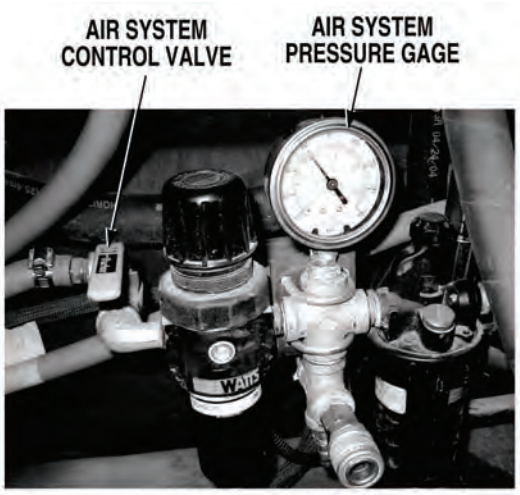

1. ADMIX SYSTEM (HIGH-FLOW) DOES NOT OPERATE CORRECTLY (CONT).

KNOWN INFO
Air lines between high-flow admix air solenoid and admix valve not kinked or damaged.
Admix system drain cock valves closed.
ADMIX fuse OK.
Air pressure OK.

POSSIBLE PROBLEMS
Low-flow admix system not operating.
System control circuits not operating correctly.
Admix solution valve and strainer assembly faulty.
Admix strainer clogged or damaged.
Admix tube between admix tank and water valve kinked or damaged.
Admix tube between admix valve and water valve clogged.
Water valve fitting clogged or faulty.
Admix valve faulty.
Admix air solenoid faulty.
Air line between admix air solenoid and admix valve faulty.
Admix flowmeter faulty.
Admix tube between flowmeter and admix valve clogged.
Admix tube between pump and flowmeter clogged.
Admix pump faulty.
Admix tank clogged.
Admix tube between high-flow admix tank and drain valve clogged.
Blue wire between low admix relay and high-flow admix relay faulty.
High-flow admix relay faulty.
Admix pump ground wire faulty.
Admix relay ground wire faulty.
Control wire harness (brown) wire faulty.
Admix relay ground connections faulty.
Control wire harness (blue) wire faulty.
Main wire harness admix pump power (yellow) wire faulty.
Battery equalizer magnetic switch connections loose or corroded.
Engine harness admix pump power (yellow) wire faulty.
Control box 5-pin wire harness (yellow) wire faulty.
Control box 4-pin wire harness (blue) wire faulty.

5.

Does high-flow admix system operate correctly when system is set up for flush operation with drain cock valves closed and solution valve open?

TEST OPTIONS
Operational test.
REASON FOR QUESTION
To further isolate fault.

NO → Go to Step 7 of this Fault.

YES ↓

OPERATIONAL TEST
(1) Set up high-flow admix system for flush operation, (Para 2-15). (2) Close high-flow admix system drain cock valves, (Para 2-15). (3) Turn HIGH FLOW ADMIX switch ON, (Para 2-1). (4) Check if high-flow admix system drains at water valve. (a) If high-flow admix flushing function does not operate correctly, go to Step 7 of this Fault. (b) If high-flow admix flushing function operates correctly, go to Step 6 of this Fault.

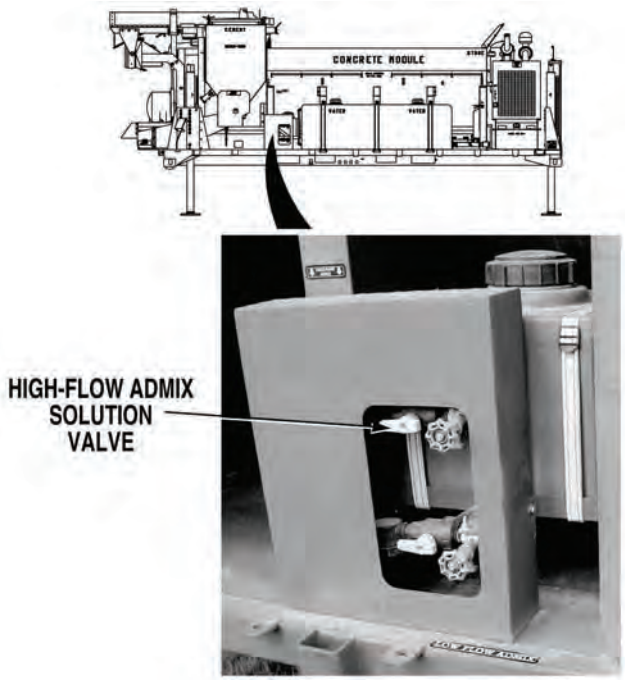

1. ADMIX SYSTEM (HIGH-FLOW) DOES NOT OPERATE CORRECTLY (CONT).

KNOWN INFO

- Air lines between high-flow admix air solenoid and admix valve not kinked or damaged.
- Admix system drain cock valves closed.
- ADMIX fuse OK.
- Air pressure OK.
- Admix solution valve and strainer assembly OK.
- Admix strainer OK.
- Admix tube between admix tank and water valve not kinked or damaged.
- Admix tube between admix valve and water valve not clogged.
- Water valve fitting not clogged.
- Admix valve OK.
- Admix air solenoid OK.
- Air line between admix air solenoid and admix valve OK.
- Admix flowmeter OK.
- Admix tube between flowmeter and admix valve not clogged.
- Admix tube between pump and flowmeter not clogged.
- Admix pump OK.
- Admix tank OK.
- Admix tube between high-flow admix tank and drain valve not clogged.
- Blue wire between low admix relay and high-flow admix relay OK.
- High-flow admix relay OK.
- Admix pump ground wire OK.
- Admix relay ground wire OK.
- Control wire harness (brown) wire OK.
- Admix relay ground connections OK.
- Control wire harness (blue) wire OK.
- Main wire harness admix pump power (yellow) wire OK.
- Battery equalizer magnetic switch connections OK.
- Engine harness admix pump power (yellow) wire OK.
- Control box 5-pin wire harness (yellow) wire OK.
- Control box 4-pin wire harness (blue) wire OK.

POSSIBLE PROBLEMS

- Low-flow admix system not operating.
- System control circuits not operating correctly.

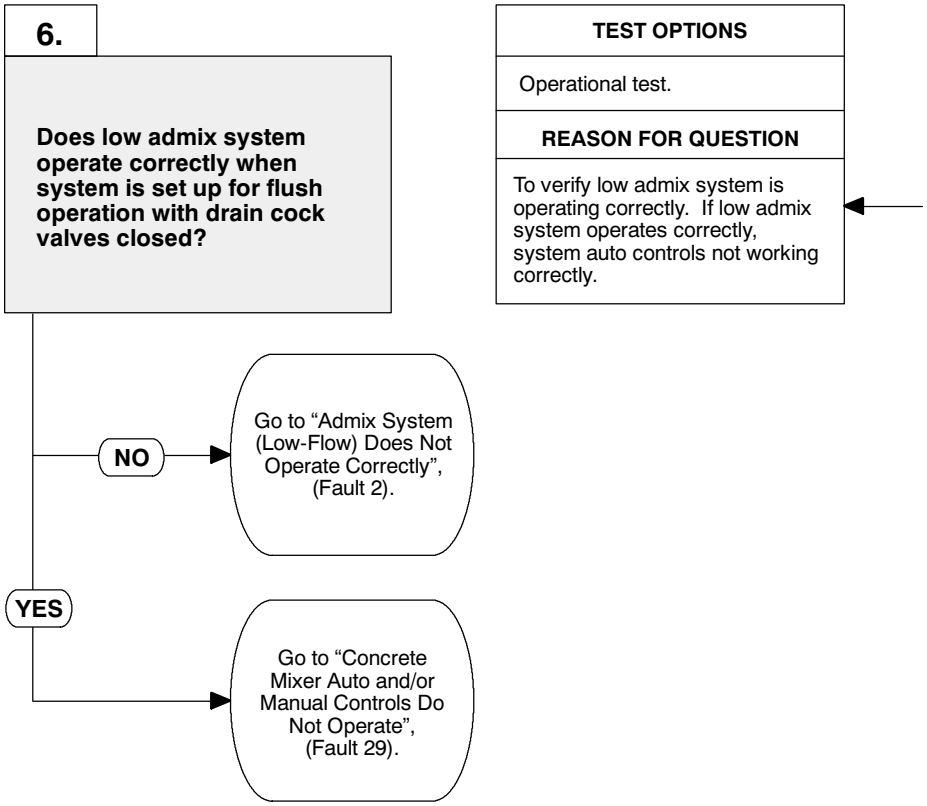

OPERATIONAL TEST

(1) Set up low admix system for flush operation, (Para 2-16).

NOTE

Drain cock valves located on backside of flowmeter panel.

(2) Close low admix system drain cock valves, (Para 2-16).

(3) Turn LOW FLOW ADMIX switch ON, (Para 2-1).

(4) Check if low admix system drains at water valve.

(a) If low admix system does not operate correctly, go to "Admix System (Low-Flow) Does Not Operate Correctly", (Fault 2).

(b) If low admix system operates correctly, go to "Concrete Mixer Auto and/or Manual Controls Do Not Operate", (Fault 29).

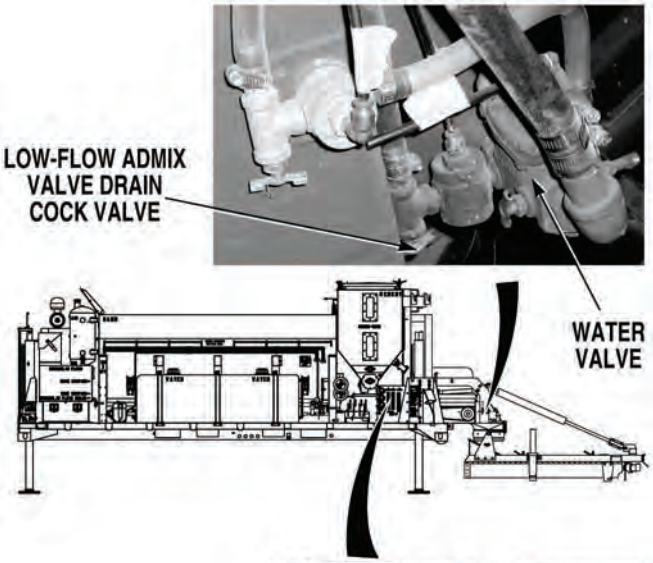

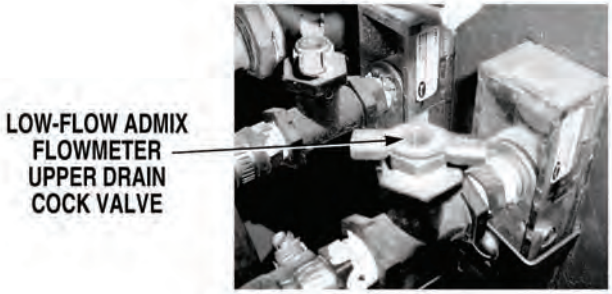

1. ADMIX SYSTEM (HIGH-FLOW) DOES NOT OPERATE CORRECTLY (CONT).

KNOWN INFO
Air lines between high-flow admix air solenoid and admix valve not kinked or damaged.
Admix system drain cock valves closed.
ADMIX fuse OK.
Air pressure OK.
Low-flow admix system OK.

POSSIBLE PROBLEMS
System control circuits not operating correctly.
Admix strainer clogged or damaged.
Admix tube between admix tank and water valve kinked or damaged.
Admix tube between admix valve and water valve clogged.
Water valve fitting clogged or faulty.
Admix valve faulty.
Admix air solenoid faulty.
Air line between admix air solenoid and admix valve faulty.
Admix flowmeter faulty.
Admix tube between flowmeter and admix valve clogged.
Admix tube between pump and flowmeter clogged.
Admix pump faulty.
Admix solution valve and strainer assembly faulty.
Admix tank clogged.
Admix tube between high-flow admix tank and drain valve clogged.
Blue wire between low admix relay and high-flow admix relay faulty.
High-flow admix relay faulty.
Admix pump ground wire faulty.
Admix relay ground wire faulty.
Control wire harness (brown) wire faulty.
Admix relay ground connections faulty.
Control wire harness (blue) wire faulty.
Main wire harness admix pump power (yellow) wire faulty.
Battery equalizer magnetic switch connections loose or corroded.
Engine harness admix pump power (yellow) wire faulty.
Control box 5-pin wire harness (yellow) wire faulty.
Control box 4-pin wire harness (blue) wire faulty.

7.

Is high-flow admix air solenoid energized when HIGH FLOW ADMIX switch is placed in ON position?

NO → Go to “Concrete Mixer Auto and/or Manual Controls Do Not Operate”, (Fault 29).

YES ↓

TEST OPTIONS
Visual/Audible test.
REASON FOR QUESTION
If high-flow admix air solenoid does not energize, another troubleshooting procedure applies.

VISUAL/AUDIBLE TEST

(1) Shut OFF engine, (Para 2-19).

(2) Turn IGNITION SWITCH ON, (Para 2-1).

(3) Turn 12 VOLT switch ON, (Para 2-1).

NOTE

Air solenoid is energized when a clicking sound is heard.

(4) Turn HIGH FLOW ADMIX switch ON, (Para 2-10). Check if high-flow admix air solenoid is energized.

(a) If high-flow admix air solenoid does not energize, go to "Concrete Mixer Auto and/or Manual Controls Do Not Operate", (Fault 29).

(b) If high-flow admix air solenoid energizes, go to Step 8 of this Fault.

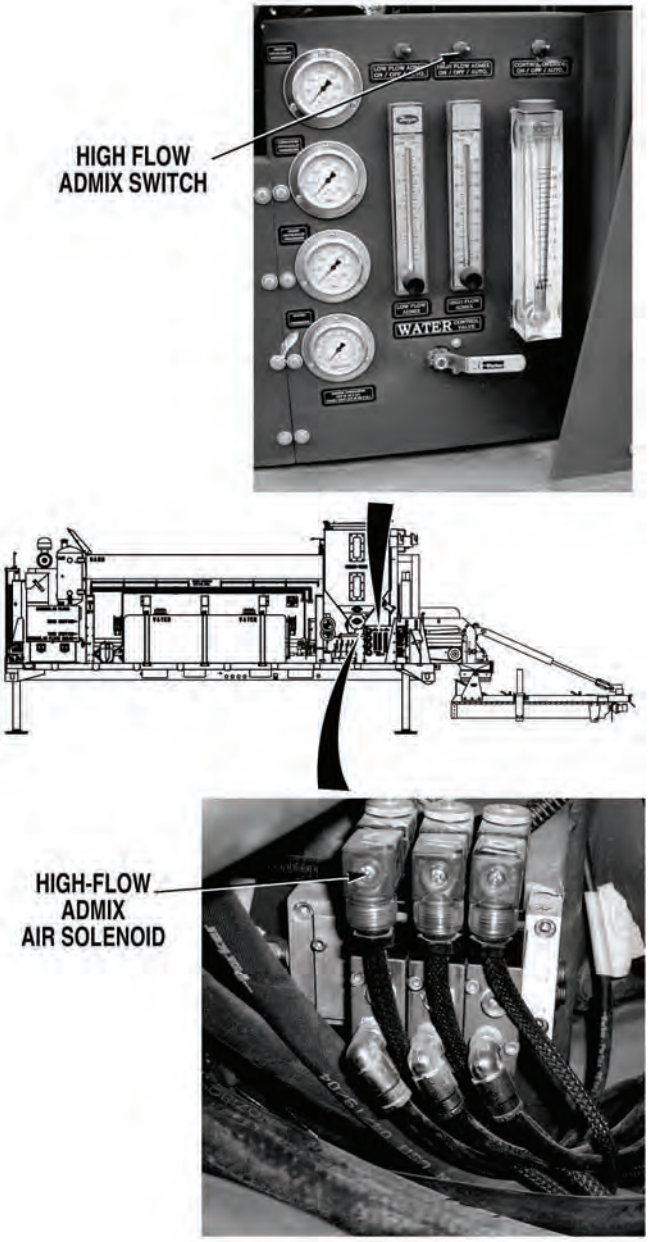

1. ADMIX SYSTEM (HIGH-FLOW) DOES NOT OPERATE CORRECTLY (CONT).

KNOWN INFO
Air lines between high-flow admix air solenoid and admix valve not kinked or damaged.
Admix system drain cock valves closed.
ADMIX fuse OK.
Air pressure OK.
Low-flow admix system OK.
System control circuits operating correctly.

POSSIBLE PROBLEMS
Admix strainer clogged or damaged.
Admix tube between admix tank and water valve kinked or damaged.
Admix tube between admix valve and water valve clogged.
Water valve fitting clogged.
Admix valve faulty.
Admix air solenoid faulty.
Air line between admix air solenoid and admix valve faulty.
Admix flowmeter faulty.
Admix tube between flowmeter and admix valve clogged.
Admix tube between pump and flowmeter not clogged.
Admix pump faulty.
Admix solution valve and strainer assembly faulty.
Admix tank clogged.
Admix tube between high-flow admix tank and drain valve clogged.
Blue wire between low admix relay and high-flow admix relay faulty.
High-flow admix relay faulty.
Admix pump ground wire faulty.
Admix relay ground wire faulty.
Control wire harness (brown) wire faulty.
Admix relay ground connections faulty.
Control wire harness (blue) wire faulty.
Main wire harness admix pump power (yellow) wire faulty.
Battery equalizer magnetic switch connections loose or corroded.
Engine harness admix pump power (yellow) wire faulty.
Control box 5-pin wire harness (yellow) wire faulty.
Control box 4-pin wire harness (blue) wire faulty.

8.

Does high-flow admix pump operate when HIGH FLOW ADMIX switch is turned ON?

TEST OPTIONS
Operational test.
REASON FOR QUESTION
To further isolate fault.

NO → Go to Step 23 of this Fault.

YES ↓

OPERATIONAL TEST

(1) Remove admix cover, (Para 3-88).

NOTE

High-flow admix pump operation will be checked by listening for pump noise when HIGH FLOW ADMIX switch is turned ON.

(2) If OFF, Turn HIGH FLOW ADMIX switch ON, (Para 2-1).

(3) Check if high-flow admix pump operates.

(a) If high-flow admix pump does not operate, go to Step 23 of this Fault.

(b) If high-flow admix pump operates, go to Step 9 of this Fault.

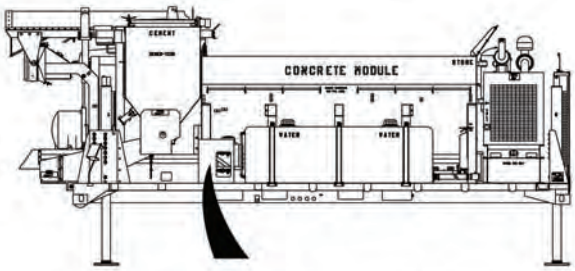

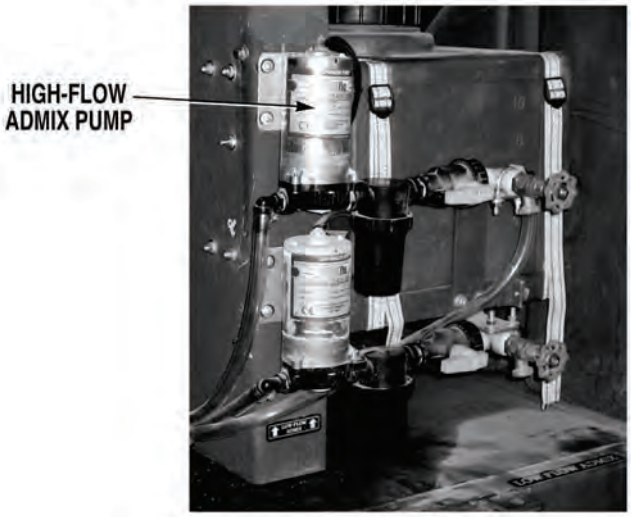

1. ADMIX SYSTEM (HIGH-FLOW) DOES NOT OPERATE CORRECTLY (CONT).

KNOWN INFO

- Air lines between high-flow admix air solenoid and admix valve not kinked or damaged.
- Admix system drain cock valves closed.
- ADMIX fuse OK.
- Air pressure OK.
- Low-flow admix system OK.
- System control circuits operating correctly.
- Blue wire between low admix relay and high-flow admix relay OK.
- High-flow admix relay OK.
- Admix pump ground wire OK.
- Admix relay ground wire OK.
- Control wire harness (brown) wire OK.
- Admix relay ground connections OK.
- Control wire harness (blue) wire OK.
- Main wire harness admix pump power (yellow) wire OK.
- Battery equalizer magnetic switch connections OK.
- Engine harness admix pump power (yellow) wire OK.
- Control box 5-pin wire harness (yellow) wire OK.
- Control box 4-pin wire harness (blue) wire OK.

POSSIBLE PROBLEMS

- Admix solution valve and strainer assembly faulty.
- Admix strainer clogged or damaged.
- Admix tube between admix tank and water valve kinked or damaged.
- Admix tube between admix valve and water valve clogged.
- Water valve fitting clogged.
- Admix valve faulty.
- Admix air solenoid faulty.
- Air line between admix air solenoid and admix valve faulty.
- Admix flowmeter faulty.
- Admix tube between flowmeter and admix valve clogged.
- Admix tube between pump and flowmeter clogged.
- Admix pump faulty.
- Admix tank clogged.
- Admix tube between high-flow admix tank and drain valve clogged.

9.

Are strainer housing and solution valve connections tight and free from damage?

NO → Tighten connections or replace damaged strainer assembly and/or solution valve, (Para 3-45). Verify repair, go to Step 36 of this Fault.

YES ↓

TEST OPTIONS

Visual inspection.

REASON FOR QUESTION

If strainer housing and solution valve connections are not tight and free from damage, high-flow admix function may not operate.

VISUAL INSPECTION
(1) Turn HIGH FLOW ADMIX switch OFF, (Para 2-1). (2) Check if strainer assembly and solution valve connections are tight and free from damage. (a) If strainer assembly and solution valve connections are not tight and free from damage, tighten connections or replace damaged strainer assembly and/or solution valve, (Para 3-45). Verify repair, go to Step 36 of this Fault. (b) If strainer assembly and solution valve are tight and free from damage, go to Step 10 of this Fault.

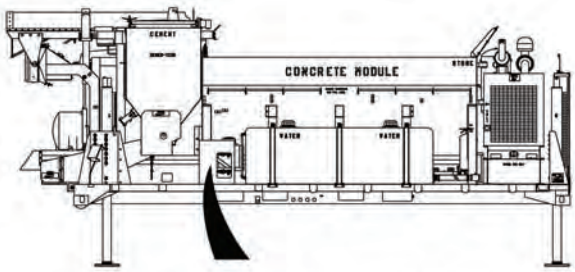

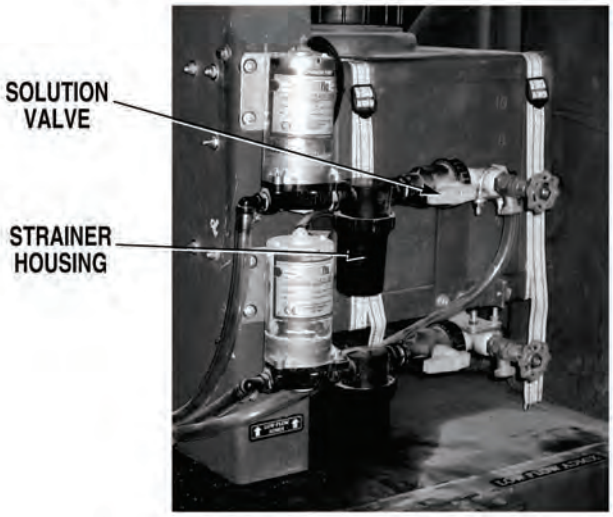

1. ADMIX SYSTEM (HIGH-FLOW) DOES NOT OPERATE CORRECTLY (CONT).

KNOWN INFO

- Air lines between high-flow admix air solenoid and admix valve not kinked or damaged.
- Admix system drain cock valves closed.
- ADMIX fuse OK.
- Air pressure OK.
- Low-flow admix system OK.
- System control circuits operating correctly.
- Blue wire between low admix relay and high-flow admix relay OK.
- High-flow admix relay OK.
- Admix pump ground wire OK.
- Admix relay ground wire OK.
- Control wire harness (brown) wire OK.
- Admix relay ground connections OK.
- Control wire harness (blue) wire OK.
- Main wire harness admix pump power (yellow) wire OK.
- Battery equalizer magnetic switch connections OK.
- Engine harness admix pump power (yellow) wire OK.
- Control box 5-pin wire harness (yellow) wire OK.
- Control box 4-pin wire harness (blue) wire OK.
- Admix solution valve and strainer assembly OK.

POSSIBLE PROBLEMS

- Admix strainer clogged or damaged.
- Admix tube between admix tank and water valve kinked or damaged.
- Admix tube between admix valve and water valve clogged.
- Water valve fitting clogged or faulty.
- Admix valve faulty.
- Admix air solenoid faulty.
- Air line between admix air solenoid and admix valve faulty.
- Admix flowmeter faulty.
- Admix tube between flowmeter and admix valve clogged.
- Admix tube between pump and flowmeter clogged.
- Admix pump faulty.
- Admix tank clogged.
- Admix tube between high-flow admix tank and drain valve clogged.

10.

Is admix strainer free from damage and obstructions?

TEST OPTIONS

Visual inspection.

REASON FOR QUESTION

If admix strainer is not free from damage and obstructions, high-flow admix function may not operate.

NO → Clean or replace admix strainer, (Para 3-44). Verify repair, go to Step 36 of this Fault.

YES ↓

VISUAL INSPECTION
(1) Remove high-flow admix strainer from strainer housing, (Para 3-44). (2) Check if admix strainer is free from damage and obstructions. (a) If high-flow admix strainer is not free from damage and obstructions, clean or replace admix strainer, (Para 3-44). Verify repair, go to Step 36 of this Fault. (b) If high-flow admix strainer is free from damage and obstructions, go to Step 11 of this Fault.

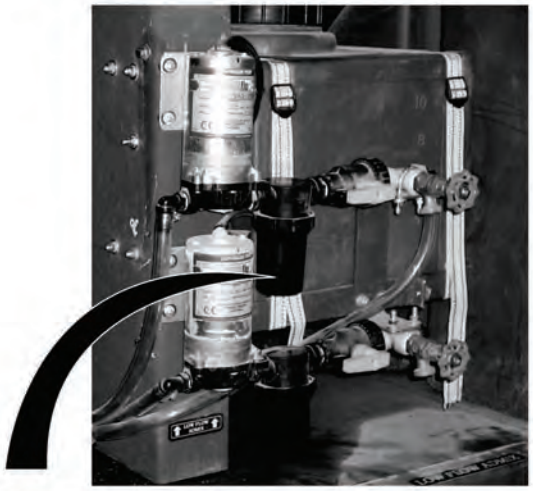

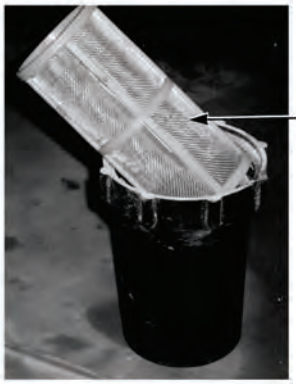

1. ADMIX SYSTEM (HIGH-FLOW) DOES NOT OPERATE CORRECTLY (CONT).

KNOWN INFO

- Air lines between high-flow admix air solenoid and admix valve not kinked or damaged.
- Admix system drain cock valves closed.
- ADMIX fuse OK.
- Air pressure OK.
- Low-flow admix system OK.
- System control circuits operating correctly.
- Blue wire between low admix relay and high-flow admix relay OK.
- High-flow admix relay OK.
- Admix pump ground wire OK.
- Admix relay ground wire OK.
- Control wire harness (brown) wire OK
- Admix relay ground connections OK.
- Control wire harness (blue) wire OK.
- Main wire harness admix pump power (yellow) wire OK.
- Battery equalizer magnetic switch connections OK.
- Engine harness admix pump power (yellow) wire OK.
- Control box 5-pin wire harness (yellow) wire OK.
- Control box 4-pin wire harness (blue) wire OK.
- Admix solution valve and strainer assembly OK.
- Admix strainer OK.

POSSIBLE PROBLEMS

- Admix tube between admix tank and water valve kinked or damaged.
- Admix tube between admix valve and water valve clogged.
- Water valve fitting clogged or faulty.
- Admix valve faulty.
- Admix air solenoid faulty.
- Air line between admix air solenoid and admix valve faulty.
- Admix flowmeter faulty.
- Admix tube between flowmeter and admix valve clogged.
- Admix tube between pump and flowmeter clogged.
- Admix pump faulty.
- Admix tank clogged.
- Admix tube between high-flow admix tank and drain valve clogged.

11.

Are admix tubes from high-flow admix tank to water valve free from kinks and damage?

NO → Repair or replace damaged admix tubes, (Para 3-130). Verify repair, go to Step 36 of this Fault.

YES ↓

TEST OPTIONS

Visual inspection.

REASON FOR QUESTION

If admix tubes from high-flow admix tank to water valve are kinked or damaged, high-flow admix function may not operate.

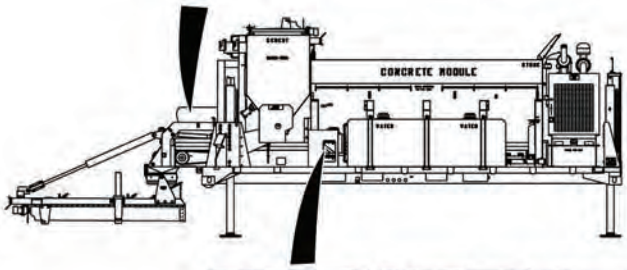

VISUAL INSPECTION
Check if admix tubes from high-flow admix tank to water valve are free from kinks and damage. (a) If admix tubes are not free from kinks and damage, repair or replace damaged admix tubes, (Para 3-130). Verify repair, go to Step 36 of this Fault. (b) If admix tubes are free from kinks and damage, go to Step 12 of this Fault.

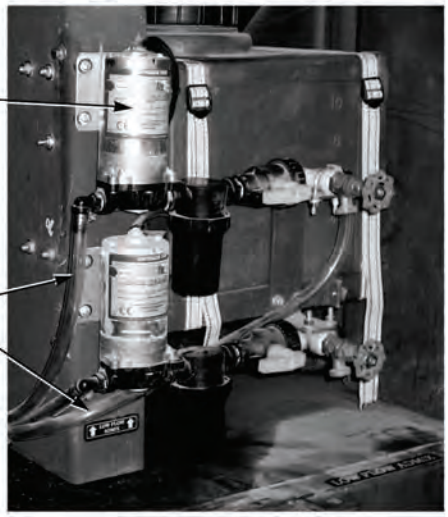

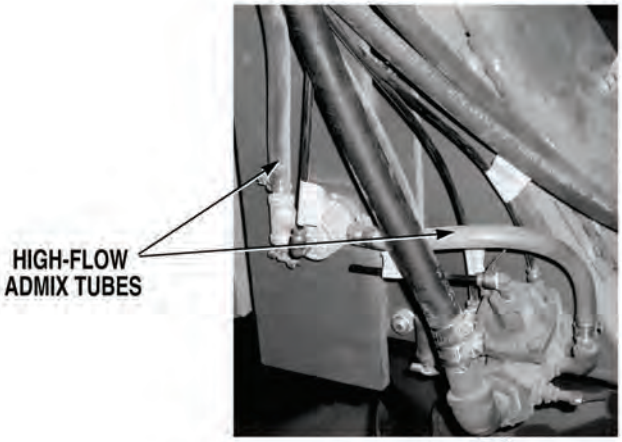

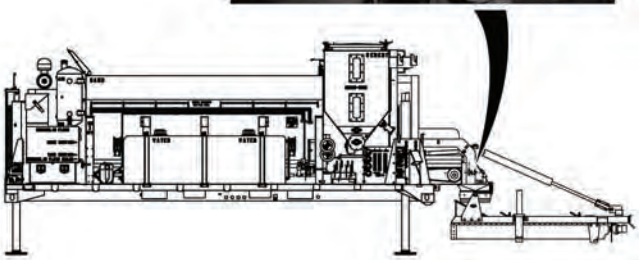

1. ADMIX SYSTEM (HIGH-FLOW) DOES NOT OPERATE CORRECTLY (CONT).

KNOWN INFO

- Air lines between high-flow admix air solenoid and admix valve not kinked or damaged.
- Admix system drain cock valves closed.
- ADMIX fuse OK.
- Air pressure OK.
- Low-flow admix system OK.
- System control circuits operating correctly.
- Blue wire between low admix relay and high-flow admix relay OK.
- High-flow admix relay OK.
- Admix pump ground wire OK.
- Admix relay ground wire OK.
- Control wire harness (brown) wire OK.
- Admix relay ground connections OK.
- Control wire harness (blue) wire OK.
- Main wire harness admix pump power (yellow) wire OK.
- Battery equalizer magnetic switch connections OK.
- Engine harness admix pump power (yellow) wire OK.
- Control box 5-pin wire harness (yellow) wire OK.
- Control box 4-pin wire harness (blue) wire OK.
- Admix solution valve and strainer assembly OK.
- Admix strainer OK.
- Admix tube between admix tank and water valve not kinked or damaged.

POSSIBLE PROBLEMS

- Admix tube between admix valve and water valve clogged.
- Water valve fitting clogged.
- Admix valve faulty.
- Admix air solenoid faulty.
- Air line between admix air solenoid and admix valve faulty.
- Admix flowmeter faulty.
- Admix tube between flowmeter and admix valve clogged.
- Admix tube between pump and flowmeter clogged.
- Admix pump faulty.
- Admix tank clogged.
- Admix tube between high-flow admix tank and drain valve clogged.

12.

Does admix/water flow freely when high-flow admix drain valve is opened?

NO → Go to Step 22 of this Fault.

YES ↓

TEST OPTIONS

Operational test.

REASON FOR QUESTION

To further isolate fault.

OPERATIONAL TEST

(1) Remove drain/fill hose from stowage box and attach to high-flow admix drain valve, (Para 2-15).

(2) Place drain/fill hose in suitable drain pan.

(3) Open high-flow admix drain valve, (Para 2-15). Check if admix/water flows freely from drain valve.

(a) If admix/water does not flow freely, close high-flow admix drain valve and go to Step 22 of this Fault.

(b) If admix/water flows freely, close high-flow admix drain valve and go to Step 13 of this Fault.

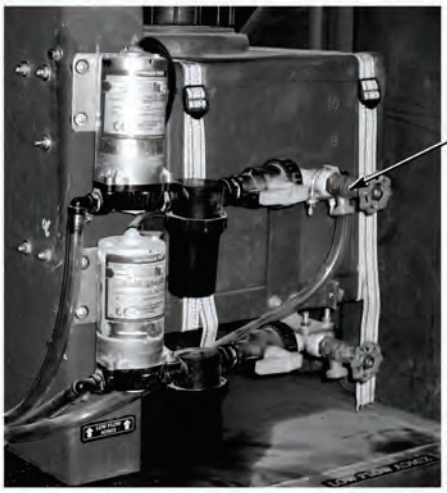

1. ADMIX SYSTEM (HIGH-FLOW) DOES NOT OPERATE CORRECTLY (CONT).

KNOWN INFO
Air lines between high-flow admix air solenoid and admix valve not kinked or damaged.
Admix system drain cock valves closed.
ADMIX fuse OK.
Air pressure OK.
Low-flow admix system OK.
System control circuits operating correctly.
Blue wire between low admix relay and high-flow admix relay OK.
High-flow admix relay OK.
Admix pump ground wire OK.
Admix relay ground wire OK.
Control wire harness (brown) wire OK.
Admix relay ground connections OK.
Control wire harness (blue) wire OK.
Main wire harness admix pump power (yellow) wire OK.
Battery equalizer magnetic switch connections OK.
Engine harness admix pump power (yellow) wire OK.
Control box 5-pin wire harness (yellow) wire OK.
Control box 4-pin wire harness (blue) wire OK.
Admix solution valve and strainer assembly OK.
Admix strainer OK.
Admix tube between admix tank and water valve not kinked or damaged.
Admix tank not clogged.
Admix tube between high-flow admix tank and drain valve not kinked or damaged.

POSSIBLE PROBLEMS
Admix tube between admix valve and water valve clogged.
Water valve fitting clogged.
Admix valve faulty.
Admix air solenoid faulty.
Air line between admix air solenoid and admix valve faulty.
Admix flowmeter faulty.
Admix tube between flowmeter and admix valve clogged.
Admix tube between pump and flowmeter clogged.
Admix pump faulty.

13.

Does admix/water flow freely when high-flow admix valve drain cock valve is open and HIGH FLOW ADMIX switch is placed in ON position?

TEST OPTIONS
Operational test.
REASON FOR QUESTION
To further isolate fault.

NO → Go to Step 18 of this Fault.

YES ↓

OPERATIONAL TEST

(1) Place suitable drain pan under high-flow admix valve drain cock valve.

(2) Open high-flow admix valve drain cock valve, (Para 2-15).

(3) Turn HIGH FLOW ADMIX switch ON, (Para 2-1).

(4) Check if admix/water flows freely from high-flow admix valve drain cock.

  (a) If admix/water does not flow freely, turn HIGH FLOW ADMIX switch OFF and go to Step 18 of this Fault.

  (b) If admix/water flows freely, turn HIGH FLOW ADMIX switch OFF and go to Step 14 of this Fault.

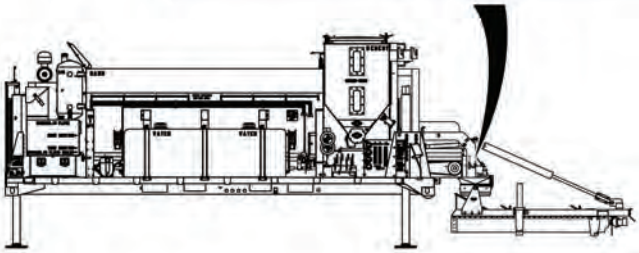

1. ADMIX SYSTEM (HIGH-FLOW) DOES NOT OPERATE CORRECTLY (CONT).

KNOWN INFO
Air lines between high-flow admix air solenoid and admix valve not kinked or damaged.
Admix system drain cock valves closed.
ADMIX fuse OK.
Air pressure OK.
Low-flow admix system OK.
System control circuits operating correctly.
Blue wire between low admix relay and high-flow admix relay OK.
High-flow admix relay OK.
Admix pump ground wire OK.
Admix relay ground wire OK.
Control wire harness (brown) wire OK.
Admix relay ground connections OK.
Control wire harness (blue) wire OK.
Main wire harness admix pump power (yellow) wire OK.
Battery equalizer magnetic switch connections OK.
Engine harness admix pump power (yellow) wire OK.
Control box 5-pin wire harness (yellow) wire OK.
Control box 4-pin wire harness (blue) wire OK.
Admix solution valve and strainer assembly OK.
Admix strainer OK.
Admix tube between admix tank and water valve not kinked or damaged.
Admix tank not clogged.
Admix tube between high-flow admix tank and drain valve not clogged.
Admix flowmeter OK.
Admix tube between flowmeter and admix valve not clogged.
Admix tube between pump and flowmeter not clogged.
Admix pump OK.

POSSIBLE PROBLEMS
Admix tube between admix valve and water valve clogged.
Water valve fitting clogged.
Admix valve faulty.
Admix air solenoid faulty.
Air line between admix air solenoid and admix valve faulty.

14.

Does admix/water flow freely when admix tube is disconnected from output of high-flow admix valve and HIGH FLOW ADMIX switch is placed in ON position?

NO → Go to Step 16 of this Fault.

YES ↓

TEST OPTIONS
Operational test.
REASON FOR QUESTION
To further isolate fault.

OPERATIONAL TEST

(1) Close high-flow admix valve drain cock valve, (Para 2-15).

(2) Disconnect admix tube from high admix valve output port, (Para 3-130).

(3) Turn HIGH FLOW ADMIX switch ON, (Para 2-1).

(4) Check if admix/water flows freely from admix tube.

  (a) If admix/water does not flow freely, turn HIGH FLOW ADMIX switch OFF and go to Step 16 of this Fault.

  (b) If admix/water flows freely, turn HIGH FLOW ADMIX switch OFF and go to Step 15 of this Fault.

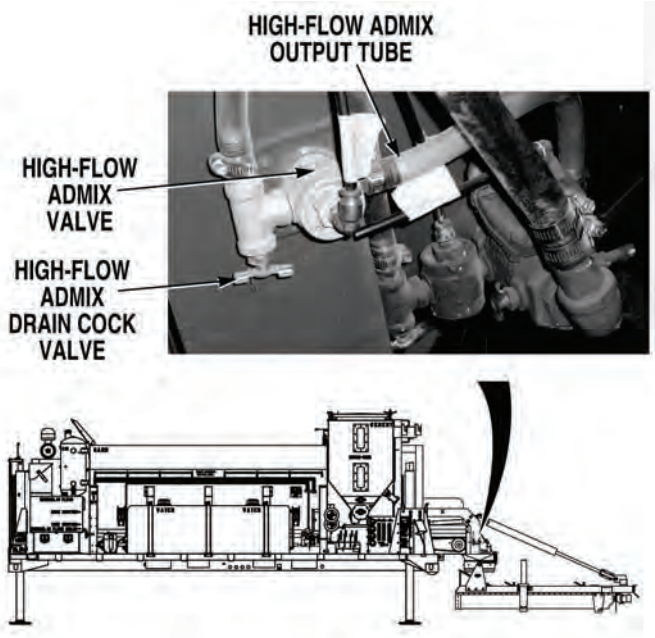

1. ADMIX SYSTEM (HIGH-FLOW) DOES NOT OPERATE CORRECTLY (CONT).

KNOWN INFO
Air lines between high-flow admix air solenoid and admix valve not kinked or damaged.
Admix system drain cock valves closed.
ADMIX fuse OK.
Air pressure OK.
Low-flow admix system OK.
System control circuits operating correctly.
Blue wire between low admix relay and high-flow admix relay OK.
High-flow admix relay OK.
Admix pump ground wire OK.
Admix relay ground wire OK.
Control wire harness (brown) wire OK.
Admix relay ground connections OK.
Control wire harness (blue) wire OK.
Main wire harness admix pump power (yellow) wire OK.
Battery equalizer magnetic switch connections OK.
Engine harness admix pump power (yellow) wire OK.
Control box 5-pin wire harness (yellow) wire OK.
Control box 4-pin wire harness (blue) wire OK.
Admix solution valve and strainer assembly OK.
Admix strainer OK.
Admix tube between admix tank and water valve not kinked or damaged.
Admix tank not clogged.
Admix tube between high-flow admix tank and drain valve not clogged.
Admix flowmeter OK.
Admix tube between flowmeter and admix valve not clogged.
Admix tube between pump and flowmeter not clogged.
Admix pump OK.
Admix valve OK.
Admix air solenoid OK.
Air line between admix air solenoid and admix valve OK.

POSSIBLE PROBLEMS
Admix tube between admix valve and water valve clogged.
Water valve fitting clogged.

15.

Does admix/water flow freely when admix tube is disconnected from water valve and HIGH FLOW ADMIX switch is placed in ON position?

NO → Flush or replace high-flow admix tube, (Para 3-130). Verify repair, go to Step 36 of this Fault.

YES → Flush or replace water valve, (Para 3-74). Verify repair, go to Step 36 of this Fault.

TEST OPTIONS
Operational test.
REASON FOR QUESTION
If admix/water flows freely, water valve is clogged or faulty. If not, tube between admix valve and water valve is clogged.

OPERATIONAL TEST

(1) Connect tube to high-flow admix valve,(Para 3-130).

(2) Place a suitable drain pan under water valve.

(3) Disconnect admix tube from water valve, (Para 3-130).

(4) Turn HIGH FLOW ADMIX switch ON, (Para 2-1).

(5) Check if admix/water flows freely from admix tube.

  (a) If admix/water does not flow freely, turn HIGH FLOW ADMIX switch OFF and flush or replace admix tube between admix valve and water valve, (Para 3-130).

  (b) If admix/water flows freely, turn HIGH FLOW ADMIX switch OFF and flush water valve admix fitting or replace water valve, (Para 3-74).

(6) Verify repair, go to Step 36 of this Fault.

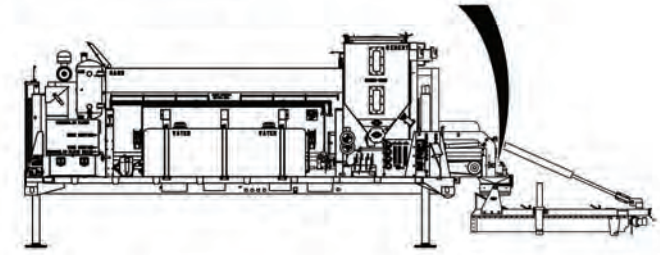

1. ADMIX SYSTEM (HIGH-FLOW) DOES NOT OPERATE CORRECTLY (CONT).

KNOWN INFO

- Air lines between high-flow admix air solenoid and admix valve not kinked or damaged.
- Admix system drain cock valves closed.
- ADMIX fuse OK.
- Air pressure OK.
- Low-flow admix system OK.
- System control circuits operating correctly.
- Blue wire between low admix relay and high-flow admix relay OK.
- High-flow admix relay OK.
- Admix pump ground wire OK.
- Admix relay ground wire OK.
- Control wire harness (brown) wire OK.
- Admix relay ground connections OK.
- Control wire harness (blue) wire OK.
- Main wire harness admix pump power (yellow) wire OK.
- Battery equalizer magnetic switch connections OK.
- Engine harness admix pump power (yellow) wire OK.
- Control box 5-pin wire harness (yellow) wire OK.
- Control box 4-pin wire harness (blue) wire OK.
- Admix solution valve and strainer assembly OK.
- Admix strainer OK.
- Admix tube between admix tank and water valve OK.
- Admix tank not clogged.
- Admix tube between high-flow admix tank and drain valve not clogged.
- Admix flowmeter OK.
- Admix tube between flowmeter and admix valve not clogged.
- Admix tube between pump and flowmeter not clogged.
- Admix pump OK.
- Admix tube between admix valve and water valve not clogged.
- Water valve fitting not clogged.

POSSIBLE PROBLEMS

- Admix valve faulty.
- Admix air solenoid faulty.
- Air line between admix air solenoid and admix valve faulty.

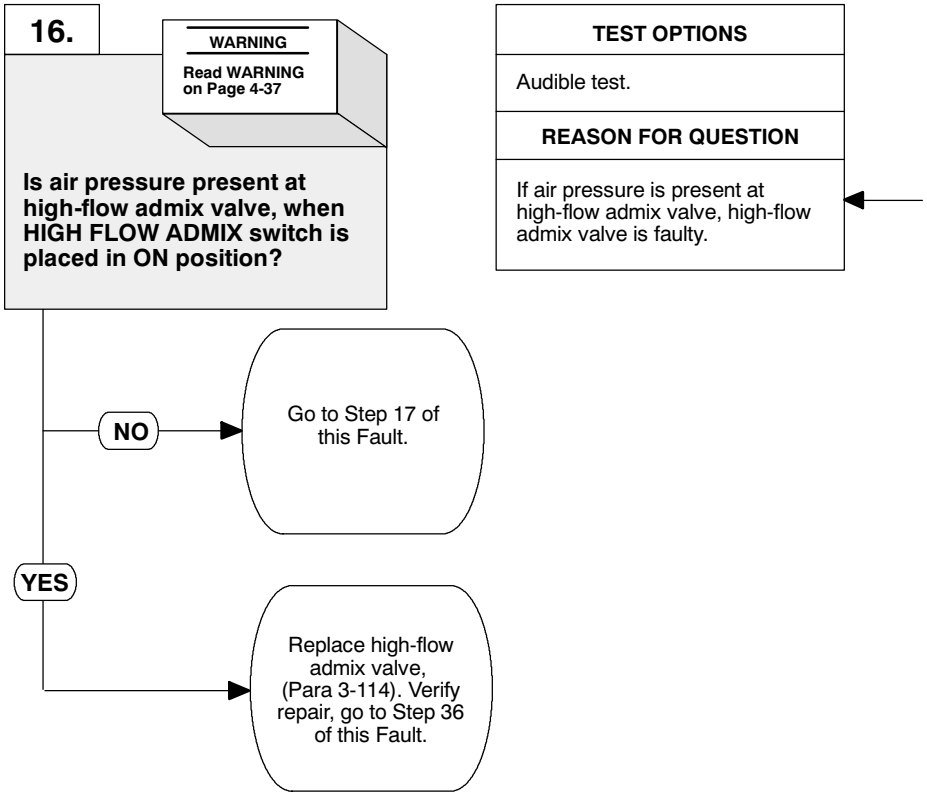

WARNING

Air lines may be under extreme pressure. Ensure all personnel wear protective goggles when working around compressed air. Failure to comply may result in serious injury or death to personnel.

AUDIBLE TEST

(1) Turn HIGH FLOW ADMIX switch OFF, (Para 2-1).

(2) Connect tube to high-flow admix valve, output port, (Para 3-130).

(3) Turn HIGH FLOW ADMIX switch ON, (Para 2-1).

(4) Slowly disconnect air line from high admix valve. Listen for air to escape from air line.

(a) If air is not present, go to Step 17 of this Fault.

(b) If air is present, replace high-flow admix valve, (Para 3-114). Verify repair, go to Step 36 of this Fault.

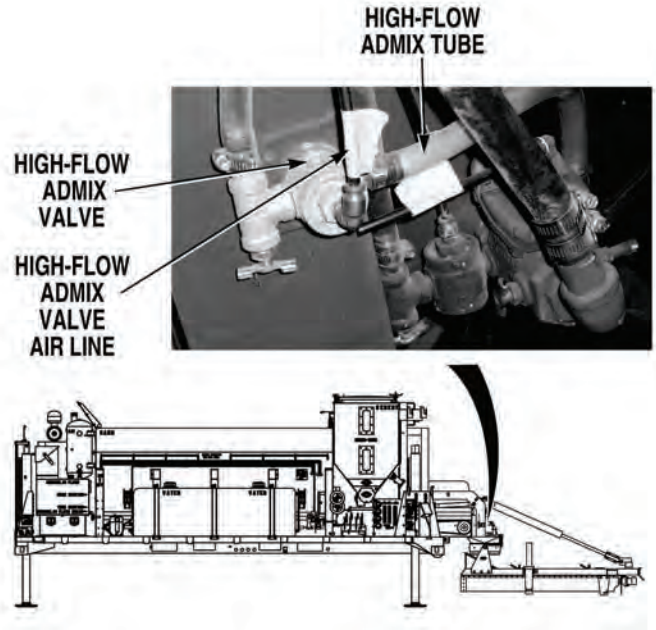

1. ADMIX SYSTEM (HIGH-FLOW) DOES NOT OPERATE CORRECTLY (CONT).

KNOWN INFO

- Air lines between high-flow admix air solenoid and admix valve not kinked or damaged.
- Admix system drain cock valves closed.
- ADMIX fuse OK.
- Air pressure OK.
- Low-flow admix system OK.
- System control circuits operating correctly.
- Blue wire between low admix relay and high-flow admix relay OK.
- High-flow admix relay OK.
- Admix pump ground wire OK.
- Admix relay ground wire OK.
- Control wire harness (brown) wire OK.
- Admix relay ground connections OK.
- Control wire harness (blue) wire OK.
- Main wire harness admix pump power (yellow) wire OK.
- Battery equalizer magnetic switch connections OK.
- Engine harness admix pump power (yellow) wire OK.
- Control box 5-pin wire harness (yellow) wire OK.
- Control box 4-pin wire harness (blue) wire OK.
- Admix solution valve and strainer assembly OK.
- Admix strainer OK.
- Admix tube between admix tank and water valve not kinked or damaged.
- Admix tank not clogged.
- Admix tube between high-flow admix tank and drain valve not clogged.
- Admix flowmeter OK.
- Admix tube between flowmeter and admix valve not clogged.
- Admix tube between pump and flowmeter not clogged.
- Admix pump OK.
- Admix tube between admix valve and water valve not clogged.
- Water valve fitting not clogged.
- Admix valve OK.

POSSIBLE PROBLEMS

- Admix air solenoid faulty.
- Air line between admix air solenoid and admix valve faulty.

17.

WARNING

Read WARNING on Page 4-39

Is air pressure present at high-flow admix air solenoid when HIGH FLOW ADMIX switch is placed in ON position?

NO → Replace high-flow admix air solenoid, (Para 3-64). Verify repair, go to Step 36 of this Fault.

YES → Repair or replace air line between air solenoid and admix valve, (Para 3-132). Verify repair, go to Step 36 of this Fault.

TEST OPTIONS

Audible test.

REASON FOR QUESTION

If air pressure is present at high-flow admix air solenoid, air line to high-flow admix valve is faulty. If not, high-flow admix air solenoid is faulty.

WARNING

Air lines may be under extreme pressure. Ensure all personnel wear protective goggles when working around compressed air. Failure to comply may result in serious injury or death to personnel.

AUDIBLE TEST

(1) Turn HIGH FLOW ADMIX switch OFF, (Para 2-1).

(2) Connect air line to high-flow admix valve, (Para 3-132).

(3) Remove panel from hydraulic control valve bank, (Para 3-51).

(4) Turn HIGH FLOW ADMIX switch ON, (Para 2-1).

(5) Slowly disconnect air line from high admix air solenoid. Listen for air escaping from air line.

  (a) If air is not present, replace high-flow admix air solenoid, (Para 3-64).

  (b) If air is present, replace air line between high-flow admix air solenoid and high-flow admix valve, (Para 3-132).

(6) Verify repair, go to Step 36 of this Fault.

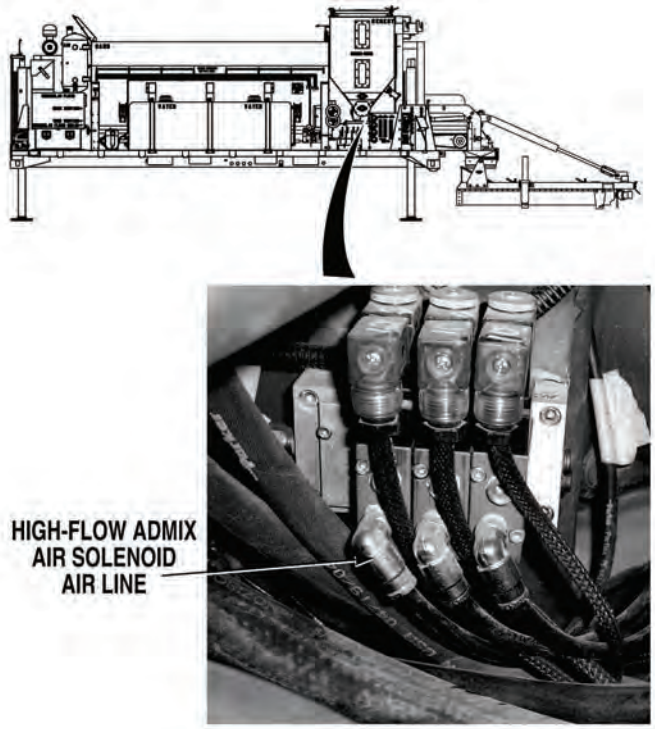

1. ADMIX SYSTEM (HIGH-FLOW) DOES NOT OPERATE CORRECTLY (CONT).

KNOWN INFO
Air lines between high-flow admix air solenoid and admix valve not kinked or damaged.
Admix system drain cock valves closed.
ADMIX fuse OK.
Air pressure OK.
Low-flow admix system OK.
System control circuits operating correctly.
Blue wire between low admix relay and high-flow admix relay OK.
High-flow admix relay OK.
Admix pump ground wire OK.
Admix relay ground wire OK.
Control wire harness (brown) wire OK.
Admix relay ground connections OK.
Control wire harness (blue) wire OK.
Main wire harness admix pump power (yellow) wire OK.
Battery equalizer magnetic switch connections OK.
Engine harness admix pump power (yellow) wire OK.
Control box 5-pin wire harness (yellow) wire OK.
Control box 4-pin wire harness (blue) wire OK.
Admix strainer OK.
Admix tube between admix tank and water valve not kinked or damaged.
Admix tank not clogged.
Admix tube between high-flow admix tank and drain valve not clogged.
Admix tube between admix valve and water valve not clogged.
Water valve fitting not clogged.
Admix valve OK.
Admix air solenoid OK.
Air line between admix air solenoid and admix valve OK.

POSSIBLE PROBLEMS
Admix flowmeter faulty.
Admix tube between flowmeter and admix valve clogged.
Admix tube between pump and flowmeter clogged.
Admix pump faulty.
Admix solution valve and strainer assembly faulty.

18.

Does admix/water flow freely when high-flow admix flowmeter lower drain cock valve is open and HIGH FLOW ADMIX switch is placed in ON position?

NO → Go to Step 20 of this Fault.

YES ↓

TEST OPTIONS
Operational test.
REASON FOR QUESTION
To further isolate fault.

OPERATIONAL TEST

(1) Close high-flow admix valve drain cock valve, (Para 2-15).

(2) Open high-flow admix flowmeter lower drain cock valve, (Para 2-15). Allow flowmeter to drain.

(3) Turn HIGH FLOW ADMIX switch ON, (Para 2-1).

(4) Check if admix/water flows freely from high-flow admix flowmeter lower drain cock.

(a) If admix/water does not flow freely, turn HIGH FLOW ADMIX switch OFF, (Para 2-1) and go to Step 20 of this Fault.

(b) If admix/water flows freely, turn HIGH FLOW ADMIX switch OFF, (Para 2-1) and go to Step 19 of this Fault.

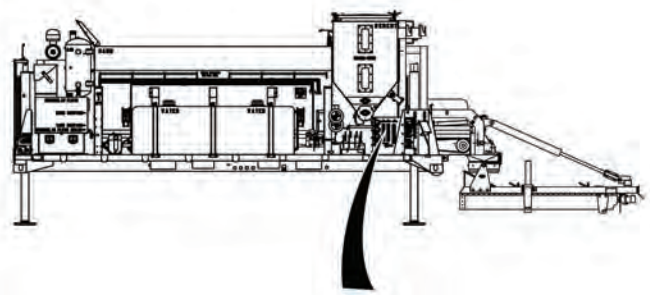

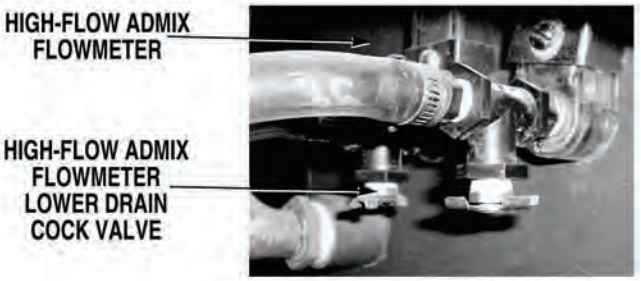

1. ADMIX SYSTEM (HIGH-FLOW) DOES NOT OPERATE CORRECTLY (CONT).

KNOWN INFO

- Air lines between high-flow admix air solenoid and admix valve not kinked or damaged.
- Admix system drain cock valves closed.
- ADMIX fuse OK.
- Air pressure OK.
- Low-flow admix system OK.
- System control circuits operating correctly.
- Blue wire between low admix relay and high-flow admix relay OK.
- High-flow admix relay OK.
- Admix pump ground wire OK.
- Admix relay ground wire OK.
- Control wire harness (brown) wire OK.
- Admix relay ground connections OK.
- Control wire harness (blue) wire OK.
- Main wire harness admix pump power (yellow) wire OK.
- Battery equalizer magnetic switch connections OK.
- Engine harness admix pump power (yellow) wire OK.
- Control box 5-pin wire harness (yellow) wire OK.
- Control box 4-pin wire harness (blue) wire OK.
- Admix strainer OK.
- Admix tube between admix tank and water valve not kinked or damaged.
- Admix tank not clogged.
- Admix tube between high-flow admix tank and drain valve not clogged.
- Admix tube between admix valve and water valve not clogged.
- Water valve fitting not clogged.
- Admix valve OK.
- Admix air solenoid OK.
- Air line between admix air solenoid and admix valve OK.
- Admix tube between pump and flowmeter OK.
- Admix pump OK.
- Admix solution valve and strainer assembly OK.

POSSIBLE PROBLEMS

- Admix flowmeter faulty.
- Admix tube between flowmeter and admix valve clogged.

19.

Does admix/water flow freely when high-flow admix flowmeter upper drain cock valve is open and HIGH FLOW ADMIX switch is placed in ON position?

TEST OPTIONS

Operational test.

REASON FOR QUESTION

If admix/water flows freely, admix tube between high-flow admix flowmeter and admix valve is faulty. If not, high-flow admix flowmeter is faulty.

NO → Replace high-flow admix flowmeter, (Para 3-62). Verify repair, go to Step 36 of this Fault.

YES → Flush or replace admix tube between high-flow admix flowmeter and admix valve, (Para 3-130). Verify repair, go to Step 36 of this Fault.

OPERATIONAL TEST

(1) Close high-flow admix flowmeter lower drain cock valve, (Para 2-15).

(2) Open high-flow admix flowmeter upper drain cock valve, (Para 2-15).

(3) Turn HIGH FLOW ADMIX switch ON, (Para 2-1).

(4) Check if admix/water flows freely from high-flow admix flowmeter upper drain cock valve.

  (a) If admix/water does not flow freely, turn HIGH FLOW ADMIX switch OFF and flush or replace high-flow admix flowmeter, (Para 3-62).

  (b) If admix/water flows freely, turn HIGH FLOW ADMIX switch OFF and flush or replace admix tube between high-flow admix flowmeter and admix valve, (Para 3-130).

(5) Verify repair, go to Step 36 of this Fault.

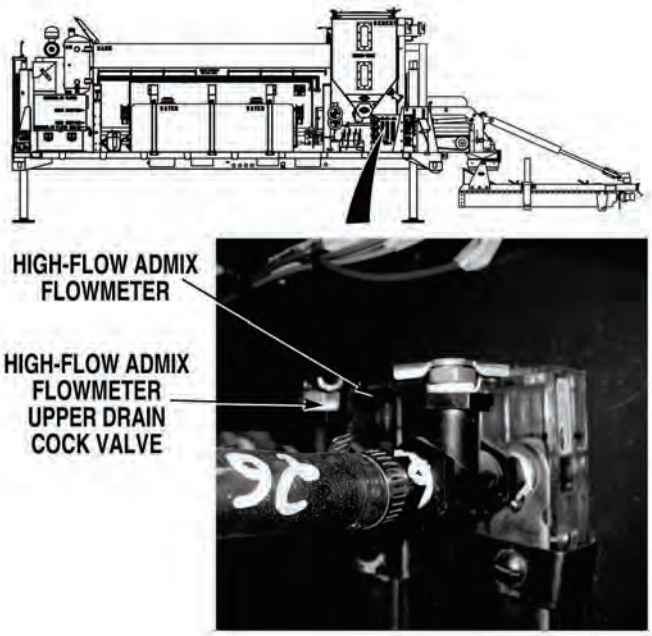

1. ADMIX SYSTEM (HIGH-FLOW) DOES NOT OPERATE CORRECTLY (CONT).

KNOWN INFO

- Air lines between high-flow admix air solenoid and admix valve not kinked or damaged.
- Admix system drain cock valves closed.
- ADMIX fuse OK.
- Air pressure OK.
- Low-flow admix system OK.
- System control circuits operating correctly.
- Blue wire between low admix relay and high-flow admix relay OK.
- High-flow admix relay OK.
- Admix pump ground wire OK.
- Admix relay ground wire OK.
- Control wire harness (brown) wire OK.
- Admix relay ground connections OK.
- Control wire harness (blue) wire OK.
- Main wire harness admix pump power (yellow) wire OK.
- Battery equalizer magnetic switch connections OK.
- Engine harness admix pump power (yellow) wire OK.
- Control box 5-pin wire harness (yellow) wire OK.
- Control box 4-pin wire harness (blue) wire OK.
- Admix strainer OK.
- Admix tube between admix tank and water valve not kinked or damaged.
- Admix tank not clogged.
- Admix tube between high-flow admix tank and drain valve not clogged.
- Admix tube between admix valve and water valve not clogged.
- Water valve fitting not clogged.
- Admix valve OK.
- Admix air solenoid OK.
- Air line between admix air solenoid and admix valve OK.
- Admix flowmeter OK.
- Admix tube between flowmeter and admix valve OK.

POSSIBLE PROBLEMS

- Admix tube between pump and flowmeter clogged.
- Admix pump faulty.
- Admix solution valve and strainer assembly faulty.

20.

Does admix/water flow freely when admix tube is disconnected from output of high-flow admix pump and HIGH FLOW ADMIX switch is placed in ON position?

TEST OPTIONS

Operational test.

REASON FOR QUESTION

If admix/water flows freely, admix tube between high-flow admix pump and high-flow admix flowmeter is faulty.

NO → Go to Step 21 of this Fault.

YES → Repair or replace admix tube between high-flow admix pump and high-flow admix flowmeter, (Para 3-130). Verify repair, go to Step 36 of this Fault.

OPERATIONAL TEST

(1) Close high-flow admix flowmeter lower drain cock valve, (Para 2-15).

(2) Remove admix cover, (Para 3-88).

(3) Disconnect admix tube from output of high-flow admix pump, (Para 3-130).

(4) Turn HIGH FLOW ADMIX switch ON, (Para 2-1).

(5) Check if admix/water flows freely from output of high-flow admix pump.

(a) If admix/water does not flow freely, turn HIGH FLOW ADMIX switch OFF and go to Step 21 of this Fault.

(b) If admix/water flows freely, turn HIGH FLOW ADMIX switch OFF and flush or replace admix tube between high-flow admix pump and high-flow admix flowmeter, (Para 3-130). Verify repair, go to Step 36 of this Fault.

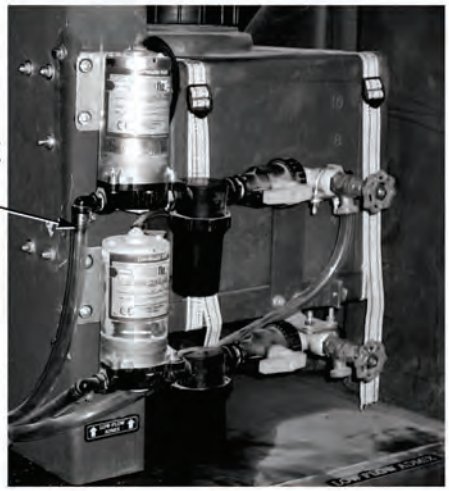

1. ADMIX SYSTEM (HIGH-FLOW) DOES NOT OPERATE CORRECTLY (CONT).

KNOWN INFO
Air lines between high-flow admix air solenoid and admix valve not kinked or damaged.
Admix system drain cock valves closed.
ADMIX fuse OK.
Air pressure OK.
Low-flow admix system OK.
System control circuits operating correctly.
Blue wire between low admix relay and high-flow admix relay OK.
High-flow admix relay OK.
Admix pump ground wire OK.
Admix relay ground wire OK.
Control wire harness (brown) wire OK.
Admix relay ground connections OK.
Control wire harness (blue) wire OK.
Main wire harness admix pump power (yellow) wire OK.
Battery equalizer magnetic switch connections OK.
Engine harness admix pump power (yellow) wire OK.
Control box 5-pin wire harness (yellow) wire OK.
Control box 4-pin wire harness (blue) wire OK.
Admix strainer OK.
Admix tube between admix tank and water valve not kinked or damaged.
Admix tank not clogged.
Admix tube between high-flow admix tank and drain valve not clogged.
Admix tube between admix valve and water valve not clogged.
Water valve fitting not clogged.
Admix valve OK.
Admix air solenoid OK.
Air line between admix air solenoid and admix valve OK.
Admix flowmeter OK.
Admix tube between flowmeter and admix valve OK.
Admix tube between pump and flowmeter OK.

POSSIBLE PROBLEMS
Admix pump faulty.
Admix solution valve and strainer assembly faulty.

21.

Does high-flow admix system operate correctly after replacing high-flow admix pump?

NO → Replace high-flow admix solution valve and strainer assembly, (Para 3-45). Verify repair, go to Step 36 of this Fault.

YES → Verify repair, go to Step 36 of this Fault.

TEST OPTIONS
Operational test.
REASON FOR QUESTION
If high-flow admix system operates after replacing high-flow admix pump, pump was faulty. If not, high-flow admix solution valve and/or strainer assembly are faulty.

OPERATIONAL TEST

(1) Turn 12 VOLT switch OFF, (Para 2-1).

(2) Turn IGNITION SWITCH OFF, (Para 2-1).

(3) Replace high-flow admix pump, (Para 3-45).

(4) Close high-flow admix system drain cock valves, (Para 2-15).

(5) Set up high-flow admix system for flush operation, (Para 2-15).

(6) Check if high-flow admix system operates correctly by observing flow at water valve.

(a) If high-flow admix system does not operate correctly, replace solution valve and high-flow admix strainer assembly, (Para 3-45). Verify repair, go to Step 36 of this Fault.

(b) If high-flow admix system does operate correctly, go to Step 36 of this Fault.

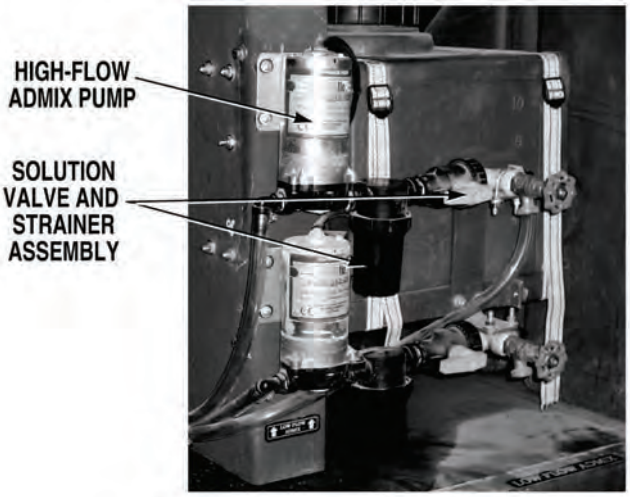

1. ADMIX SYSTEM (HIGH-FLOW) DOES NOT OPERATE CORRECTLY (CONT).

KNOWN INFO
Air lines between high-flow admix air solenoid and admix valve not kinked or damaged.
Admix system drain cock valves closed.
ADMIX fuse OK.
Air pressure OK.
Low-flow admix system OK.
System control circuits operating correctly.
Blue wire between low admix relay and high-flow admix relay OK.
High-flow admix relay OK.
Admix pump ground wire OK.
Admix relay ground wire OK.
Control wire harness (brown) wire OK.
Admix relay ground connections OK.
Control wire harness (blue) wire OK.
Main wire harness admix pump power (yellow) wire OK.
Battery equalizer magnetic switch connections OK.
Engine harness admix pump power (yellow) wire OK.
Control box 5-pin wire harness (yellow) wire OK.
Control box 4-pin wire harness (blue) wire OK.
Admix solution valve and strainer assembly OK.
Admix strainer OK.
Admix tube between admix tank and water valve not kinked or damaged.
Admix tube between admix valve and water valve not clogged.
Water valve fitting not clogged.
Admix valve OK.
Admix air solenoid OK.
Air line between admix air solenoid and admix valve OK.
Admix flowmeter OK.
Admix tube between flowmeter and admix valve not clogged.
Admix tube between pump and flowmeter not clogged.
Admix pump OK.

POSSIBLE PROBLEMS
Admix tank clogged.
Admix tube between high-flow admix tank and drain valve clogged.

22.

Does admix/water flow freely from high-flow admix tank when admix tube is disconnected?

TEST OPTIONS
Operational test.
REASON FOR QUESTION
If admix/water flows freely from high-flow admix tank, admix tube between admix tank and drain valve is clogged. If not, high-flow admix tank is clogged.

NO → Flush or replace high-flow admix tank, (Para 3-39). Verify repair, go to Step 36 of this Fault.

YES → Flush or replace admix tube between admix tank and drain valve, (Para 3-130). Verify repair, go to Step 36 of this Fault.

OPERATIONAL TEST

(1) Close admix drain valve, (Para 2-18).

(2) Disconnect admix tube from high-flow admix tank.

(3) Check if admix/water flows freely from high-flow admix tank.

(a) If high-flow admix/water does not flow freely from high-flow admix tank, flush, (Para 2-15) or replace high-flow admix tank, (Para 3-39).

(b) If high-flow admix/water flows freely from high-flow admix tank, repair or replace admix tube between high-flow admix tank and drain valve, (Para 3-130).

(4) Verify repair, go to Step 36 of this Fault.

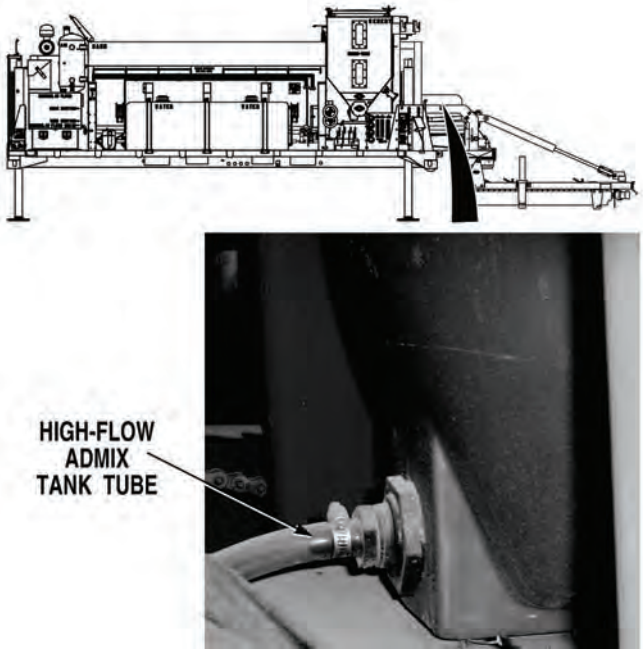

1. ADMIX SYSTEM (HIGH-FLOW) DOES NOT OPERATE CORRECTLY (CONT).

KNOWN INFO
Air lines between high-flow admix air solenoid and admix valve not kinked or damaged.
Admix system drain cock valves closed.
ADMIX fuse OK.
Air pressure OK.
Low-flow admix system OK.
System control circuits operating correctly.
Admix strainer OK.
Admix tube between admix tank and water valve not kinked or damaged.
Admix tube between admix valve and water valve not clogged.
Water valve fitting not clogged.
Admix valve OK.
Admix air solenoid OK.
Air line between admix air solenoid and admix valve OK.
Admix flowmeter OK.
Admix tube between flowmeter and admix valve not clogged.
Admix tube between pump and flowmeter not clogged.
Admix solution valve and strainer assembly OK.
Admix tank not clogged.
Admix tube between high-flow admix tank and drain valve not clogged.

POSSIBLE PROBLEMS
Admix pump faulty.
Blue wire between low admix relay and high-flow admix relay faulty.
High-flow admix relay faulty.
Admix pump ground wire faulty.
Control wire harness (brown) wire faulty.
Admix relay ground wire faulty.
Admix relay ground connections faulty.
Control wire harness (blue) wire faulty.
Main wire harness admix pump power (yellow) wire faulty.
Battery equalizer magnetic switch connections faulty.
Engine harness admix pump power (yellow) wire OK.
Control box 5-pin wire harness (yellow) wire faulty.
Control box 4-pin wire harness (blue) wire faulty.

23.

Does low admix pump operate when LOW FLOW ADMIX switch is placed in ON position?

NO → Go to Step 30 of this Fault.

YES ↓

TEST OPTIONS
Operational test.
REASON FOR QUESTION
To further isolate fault.

OPERATIONAL TEST

(1) Turn HIGH FLOW ADMIX switch OFF, (Para 2-1).

NOTE

Low admix pump operation will be checked by listening for pump noise when LOW FLOW ADMIX switch is turned ON.

(2) Turn LOW FLOW ADMIX switch ON, (Para 2-1).

(a) If low admix pump does not operate, go to Step 30 of this Fault.

(b) If low admix pump operates, go to Step 24 of this Fault.

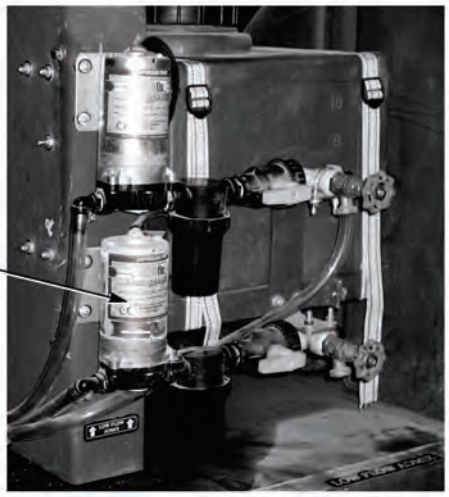

1. ADMIX SYSTEM (HIGH-FLOW) DOES NOT OPERATE CORRECTLY (CONT).

KNOWN INFO
Air lines between high-flow admix air solenoid and admix valve not kinked or damaged.
Admix system drain cock valves closed.
ADMIX fuse OK.
Air pressure OK.
Low-flow admix system OK.
System control circuits operating correctly.
Admix strainer OK.
Admix tube between admix tank and water valve not kinked or damaged.
Admix tube between admix valve and water valve not clogged.
Water valve fitting not clogged.
Admix valve OK.
Admix air solenoid OK.
Air line between admix air solenoid and admix valve OK.
Admix flowmeter OK.
Admix tube between flowmeter and admix valve not clogged.
Admix tube between pump and flowmeter not clogged.
Admix solution valve and strainer assembly OK.
Admix tank not clogged.
Admix tube between high-flow admix tank and drain valve not clogged.
Admix relay ground connections OK.
Control wire harness (blue) wire OK.
Main wire harness admix pump power (yellow) wire OK.
Battery equalizer magnetic switch connections OK.
Engine harness admix pump power (yellow) wire OK.
Control box 5-pin wire harness (yellow) wire OK.
Control box 4-pin wire harness (blue) wire OK.

POSSIBLE PROBLEMS
Admix pump faulty.
Blue wire between low admix relay and high-flow admix relay faulty.
High-flow admix relay faulty.
Admix pump ground wire faulty.
Control wire harness (brown) wire faulty.
Admix relay ground wire faulty.

24.

Is high-flow admix relay energized when HIGH FLOW ADMIX switch is placed in ON position?

NO → Go to Step 28 of this Fault.

YES ↓

TEST OPTIONS
Operational test.
REASON FOR QUESTION
To further isolate fault.

OPERATIONAL TEST

(1) Turn LOW FLOW ADMIX switch OFF, (Para 2-1).

(2) While an assistant turns HIGH FLOW ADMIX switch ON, (Para 2-1). Listen for high-flow admix relay to energize. Relay will make a clicking sound when energizing.

(a) If high-flow admix relay does not energize, go to Step 28 of this Fault.

(b) If high-flow admix relay energizes, go to Step 25 of this Fault.

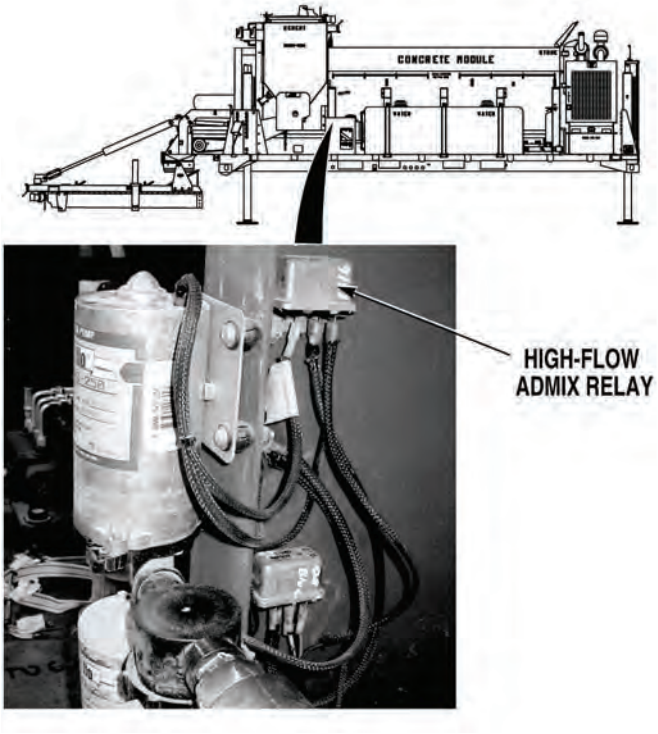

1. ADMIX SYSTEM (HIGH-FLOW) DOES NOT OPERATE CORRECTLY (CONT).

KNOWN INFO

- Air lines between high-flow admix air solenoid and admix valve not kinked or damaged.
- Admix system drain cock valves closed.
- ADMIX fuse OK.
- Air pressure OK.
- Low-flow admix system OK.
- System control circuits operating correctly.
- Admix strainer OK.
- Admix tube between admix tank and water valve not kinked or damaged.
- Admix tube between admix valve and water valve not clogged.
- Water valve fitting not clogged.
- Admix valve OK.
- Admix air solenoid OK.
- Air line between admix air solenoid and admix valve OK
- Admix flowmeter OK.
- Admix tube between flowmeter and admix valve not clogged.
- Admix tube between pump and flowmeter not clogged.
- Admix solution valve and strainer assembly OK.
- Admix tank not clogged.
- Admix tube between high-flow admix tank and drain valve not clogged.
- Admix relay ground connections OK.
- Control wire harness (blue) wire OK.
- Main wire harness admix pump power (yellow) wire OK.
- Battery equalizer magnetic switch connections OK.
- Engine harness admix pump power (yellow) wire OK.
- Control box 5-pin wire harness (yellow) wire OK.
- Control box 4-pin wire harness (blue) wire OK.
- Admix relay ground wire OK.
- Control wire harness (brown) wire OK.

POSSIBLE PROBLEMS

- Admix pump faulty.
- Blue wire between low admix relay and high-flow admix relay faulty.
- High-flow admix relay faulty.
- Admix pump ground wire faulty.

25.

WARNING

Read WARNING on Page 4-55

Are 10 to 14 VDC measured between high-flow admix relay terminal 1 and a known good ground when 12 VOLT switch is ON?

NO → Repair or replace wire (blue) between low admix relay and high-flow admix relay, (Para 3-141) or replace control wire harness (Para 3-135). Verify repair, go to Step 36 of this Fault.

YES ↓

TEST OPTIONS

Voltage test.

REASON FOR QUESTION

If 10 to 14 VDC are not present, blue wire between low admix relay and high-flow admix relay is faulty.

WARNING

Remove all jewelry such as rings, dog tags, bracelets, etc. If jewelry or tools contact positive electrical circuits, a direct short may result. Damage to equipment, injury or death to personnel may occur.

VOLTAGE TEST

(1) Turn HIGH FLOW ADMIX switch OFF, (Para 2-1).

(2) Connect positive (+) multimeter lead to high-flow admix relay, terminal 1.

(3) Connect negative (-) multimeter lead to a known good ground.

(a) If 10 to 14 VDC are not present, repair or replace wire (blue) between low admix relay and high-flow admix relay, (Para 3-141) or replace control wire harness, (Para 3-135). Verify repair, go to Step 36 of this Fault.

(b) If 10 to 14 VDC are present, go to Step 26 of this Fault.

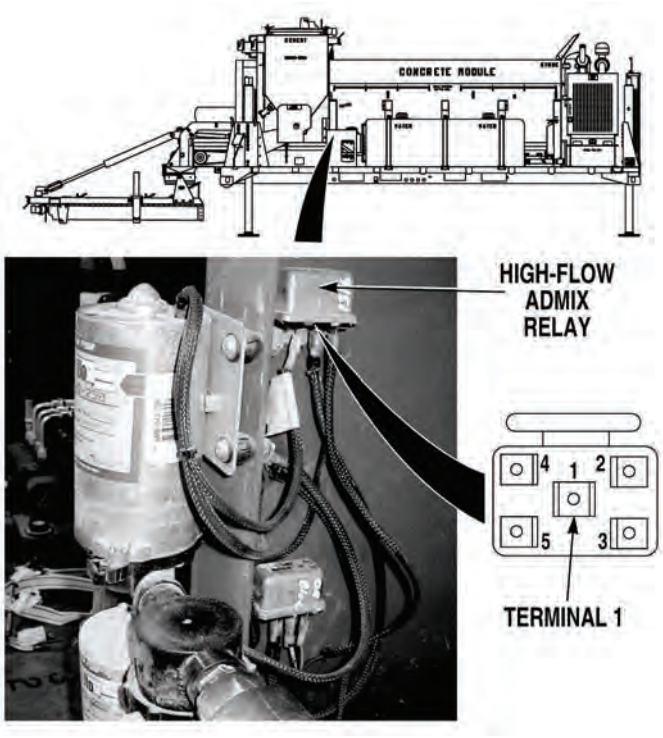

1. ADMIX SYSTEM (HIGH-FLOW) DOES NOT OPERATE CORRECTLY (CONT).

KNOWN INFO
Air lines between high-flow admix air solenoid and admix valve not kinked or damaged.
Admix system drain cock valves closed.
ADMIX fuse OK.
Air pressure OK.
Low-flow admix system OK.
System control circuits operating correctly.
Admix strainer OK.
Admix tube between admix tank and water valve not kinked or damaged.
Admix tube between admix valve and water valve not clogged.
Water valve fitting not clogged.
Admix valve OK.
Admix air solenoid OK.
Air line between admix air solenoid and admix valve OK.
Admix flowmeter OK.
Admix tube between flowmeter and admix valve not clogged.
Admix tube between pump and flowmeter not clogged.
Admix solution valve and strainer assembly OK.
Admix tank not clogged.
Admix tube between high-flow admix tank and drain valve not clogged.
Admix relay ground connections OK.
Control wire harness (blue) wire OK.
Main wire harness admix pump power (yellow) wire OK.
Battery equalizer magnetic switch connections OK.
Engine harness admix pump power (yellow) wire OK.
Control box 5-pin wire harness (yellow) wire OK.
Control box 4-pin wire harness (blue) wire OK.
Admix relay ground wire OK.
Control wire harness (brown) wire OK.
Admix pump ground wire OK.
Blue wire between low admix relay and high-flow admix relay OK.

POSSIBLE PROBLEMS
Admix pump faulty.
High-flow admix relay faulty.

26.

WARNING

Read WARNING on Page 4-57

Are 10 to 14 VDC measured between high-flow admix relay terminal 3 and a known good ground when HIGH FLOW ADMIX switch is ON?

NO → Replace high-flow admix relay, (Para 3-46). Verify repair, go to Step 36 of this Fault.

YES ↓

TEST OPTIONS
Voltage test.
REASON FOR QUESTION
If 10 to 14 VDC are not present, high-flow admix relay is faulty.

WARNING

Remove all jewelry such as rings, dog tags, bracelets, etc. If jewelry or tools contact positive electrical circuits, a direct short may result. Damage to equipment, injury or death to personnel may occur.

VOLTAGE TEST

(1) Turn HIGH FLOW ADMIX switch ON, (Para 2-1).

(2) Connect positive (+) multimeter lead to high-flow admix relay, terminal 3.

(3) Connect negative (-) multimeter lead to a known good ground.

(a) If 10 to 14 VDC are not present, replace high-flow admix relay, (Para 3-46). Verify repair, go to Step 36 of this Fault.

(b) If 10 to 14 VDC are present, go to Step 27 of this Fault.

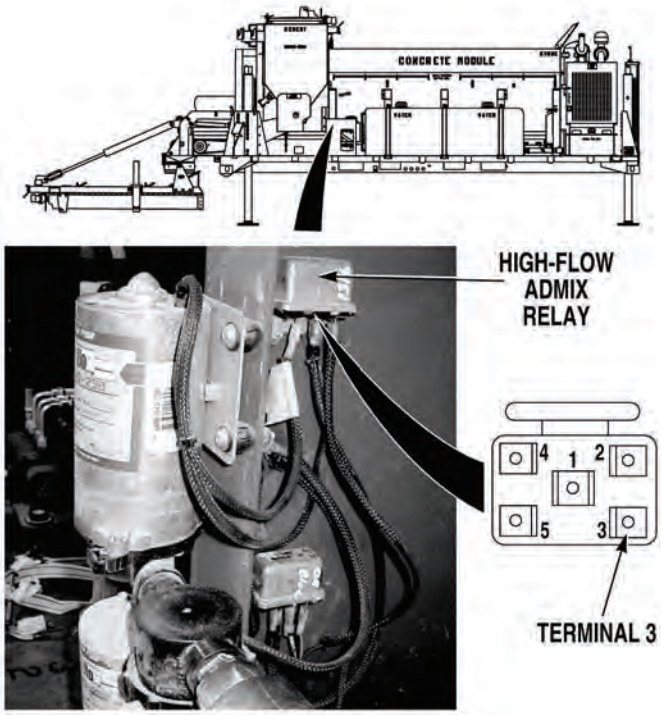

1. ADMIX SYSTEM (HIGH-FLOW) DOES NOT OPERATE CORRECTLY (CONT).

KNOWN INFO
Air lines between high-flow admix air solenoid and admix valve not kinked or damaged.
Admix system drain cock valves closed.
ADMIX fuse OK.
Air pressure OK.
Low-flow admix system OK.
System control circuits operating correctly.
Admix strainer OK.
Admix tube between admix tank and water valve not kinked or damaged.
Admix tube between admix valve and water valve not clogged.
Water valve fitting not clogged.
Admix valve OK.
Admix air solenoid OK.
Air line between admix air solenoid and admix valve OK.
Admix flowmeter OK.
Admix tube between flowmeter and admix valve not clogged.
Admix tube between pump and flowmeter not clogged.
Admix solution valve and strainer assembly OK.
Admix tank not clogged.
Admix tube between high-flow admix tank and drain valve not clogged.
Admix relay ground connections OK.
Control wire harness (blue) wire OK.
Main wire harness admix pump power (yellow) wire OK.
Battery equalizer magnetic switch connections OK.
Engine harness admix pump power (yellow) wire OK.
Control box 5-pin wire harness (yellow) wire OK.
Control box 4-pin wire harness (blue) wire OK.
Admix relay ground wire OK.
Control wire harness (brown) wire OK.
Blue wire between low admix relay and high-flow admix relay OK.
High-flow admix relay OK.

POSSIBLE PROBLEMS
Admix pump faulty.
Admix pump ground conection faulty.

27.

WARNING

Read WARNING on Page 4-59

Is high-flow admix pump ground connection secure and free from damage?

NO → Repair ground wire connection, (Para 3-141) or replace high-flow admix pump, (Para 3-45). Verify repair, go to Step 36 of this Fault.

YES → Replace high-flow admix pump, (Para 3-45). Verify repair, go to Step 36 of this Fault.

TEST OPTIONS
Visual inspection.
REASON FOR QUESTION
High-flow admix pump would not operate if ground connection or pump is faulty.

WARNING

Remove all jewelry such as rings, dog tags, bracelets, etc. If jewelry or tools contact positive electrical circuits, a direct short may result. Damage to equipment, injury or death to personnel may occur.

VISUAL INSPECTION

(1) Turn HIGH FLOW ADMIX switch OFF, (Para 2-1).

(2) Check if high-flow admix pump ground connection is secure and free from damage.

(a) If ground connection is not secure and free from damage, repair ground connection, (Para 3-141) or replace high-flow admix pump, (Para 3-45).

(b) If ground connection is secure and free from damage, replace high-flow admix pump, (Para 3-45).

(3) Verify repair, go to Step 36 of this Fault.

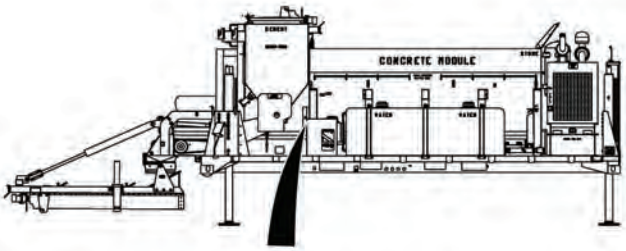

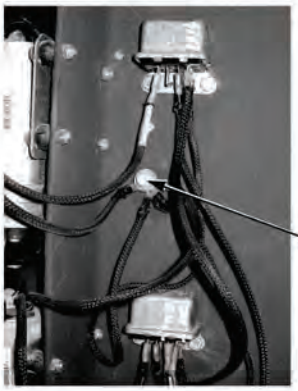

1. ADMIX SYSTEM (HIGH-FLOW) DOES NOT OPERATE CORRECTLY (CONT).

KNOWN INFO
Air lines between high-flow admix air solenoid and admix valve not kinked or damaged.
Admix system drain cock valves closed.
ADMIX fuse OK.
Air pressure OK.
Low-flow admix system OK.
System control circuits operating correctly.
Admix strainer OK.
Admix tube between admix tank and water valve not kinked or damaged.
Admix tube between admix valve and water valve not clogged.
Water valve fitting not clogged.
Admix valve OK.
Admix air solenoid OK.
Air line between admix air solenoid and admix valve OK.
Admix flowmeter OK.
Admix tube between flowmeter and admix valve not clogged.
Admix tube between pump and flowmeter not clogged.
Admix solution valve and strainer assembly OK.
Admix tank not clogged.
Admix tube between high-flow admix tank and drain valve not clogged.
Admix relay ground connections OK.
Control wire harness (blue) wire OK.
Main wire harness admix pump power (yellow) wire OK.
Battery equalizer magnetic switch connections OK.
Engine harness admix pump power (yellow) wire OK.
Control box 5-pin wire harness (yellow) wire OK.
Control box 4-pin wire harness (blue) wire OK.
Blue wire between low admix relay and high-flow admix relay OK.
Admix pump OK.
Admix pump ground connection OK.

POSSIBLE PROBLEMS
High-flow admix relay faulty.
Control wire harness (brown) wire faulty.
Admix relay ground wire faulty.

28.

WARNING

Read WARNING on Page 4-61

Is continuity measured across control harness high-flow admix pump relay control (brown) wire from high-flow admix switch to relay, terminal 4?

NO → Repair control (brown) wire, (Para 3-141) or replace control wire harness, (Para 3-135). Verify repair, go to Step 36 of this Fault.

YES ↓

TEST OPTIONS
Continuity test.
REASON FOR QUESTION
If continuity is not measured, high-flow admix relay control (brown) wire is faulty.

WARNING

Remove all jewelry such as rings, dog tags, bracelets, etc. If jewelry or tools contact positive electrical circuits, a direct short may result. Damage to equipment, injury or death to personnel may occur.

CONTINUITY TEST

(1) Turn HIGH FLOW ADMIX switch OFF, (Para 2-1).

(2) Turn 12 VOLT switch OFF, (Para 2-1).

(3) Turn IGNITION SWITCH OFF, (Para 2-1).

(4) Disconnect batteries, (Para 3-10).

(5) Set multimeter select switch to ohms.

(6) Connect jumper wire between high admix relay, terminal 4 and a known good ground.

(7) Connect positive (+) multimeter lead to control (brown) wire at HIGH FLOW ADMIX switch.

(8) Connect negative (-) multimeter lead to a known good ground.

(a) If continuity is not measured, repair control (brown) wire, (Para 3-141) or replace control wire harness, (Para 3-135). Verify repair, go to Step 36 of this Fault.

(b) If continuity is measured, go to Step 29 of this Fault.

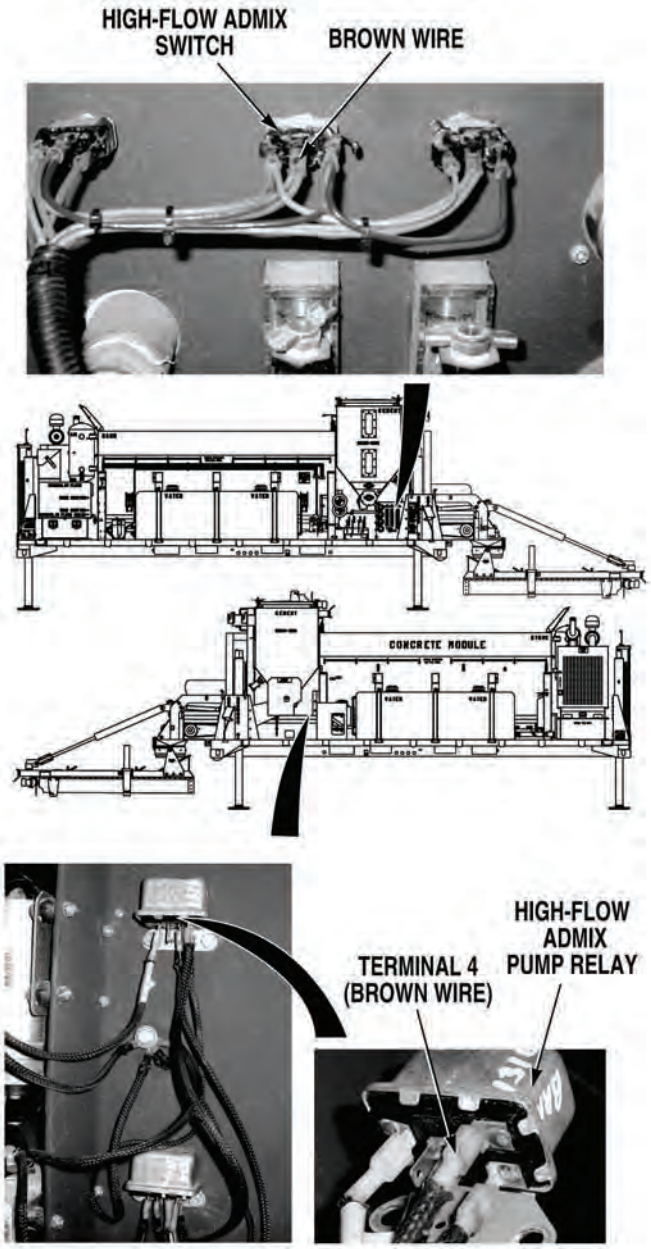

1. ADMIX SYSTEM (HIGH-FLOW) DOES NOT OPERATE CORRECTLY (CONT).

KNOWN INFO
Air lines between high-flow admix air solenoid and admix valve not kinked or damaged.
Admix system drain cock valves closed.
ADMIX fuse OK.
Air pressure OK.
Low-flow admix system OK.
System control circuits operating correctly.
Admix strainer OK.
Admix tube between admix tank and water valve not kinked or damaged.
Admix tube between admix valve and water valve not clogged.
Water valve fitting not clogged.
Admix valve OK.
Admix air solenoid OK.
Air line between admix air solenoid and admix valve OK.
Admix flowmeter OK.
Admix tube between flowmeter and admix valve not clogged.
Admix tube between pump and flowmeter not clogged.
Admix solution valve and strainer assembly OK.
Admix tank not clogged.
Admix tube between high-flow admix tank and drain valve not clogged.
Admix relay ground connections OK.
Control wire harness (blue) wire OK.
Main wire harness admix pump power (yellow) wire OK.
Battery equalizer magnetic switch connections OK.
Engine harness admix pump power (yellow) wire OK.
Control box 5-pin wire harness (yellow) wire OK.
Control box 4-pin wire harness (blue) wire OK.
Blue wire between low admix relay and high-flow admix relay OK.
Admix pump OK.
Admix pump ground wire OK.
Control wire harness (brown) wire OK.

POSSIBLE PROBLEMS
High-flow admix relay faulty.
Admix relay ground wire faulty.

29.

WARNING

Read WARNING on Page 4-63

Is continuity measured across high-flow admix pump control relay ground wire from relay terminal 5 to a known good ground?

NO → Repair or replace ground (black) wire, (Para 3-141) or replace control wire harness, (Para 3-135). Verify repair, go to Step 36 of this Fault.

YES → Replace high-flow admix relay, (Para 3-46). Verify repair, go to Step 36 of this Fault.

TEST OPTIONS
Continuity test.
REASON FOR QUESTION
If continuity is measured, high-flow admix relay is faulty. If not, high-flow admix relay ground (black) wire is faulty.

WARNING

Remove all jewelry such as rings, dog tags, bracelets, etc. If jewelry or tools contact positive electrical circuits, a direct short may result. Damage to equipment, injury or death may occur.

CONTINUITY TEST

(1) Set multimeter select switch to ohms.

(2) Connect positive (+) multimeter lead to ground wire at high-flow admix relay, terminal 5.

(3) Connect negative (-) multimeter lead to a known good ground.

(a) If continuity is not measured, repair or replace ground wire, (Para 3-141) or replace control wire harness (Para, 3-135).

(b) If continuity is measured, replace high-flow admix pump relay, (Para 3-46).

(4) Verify repair, go to Step 36 of this Fault.

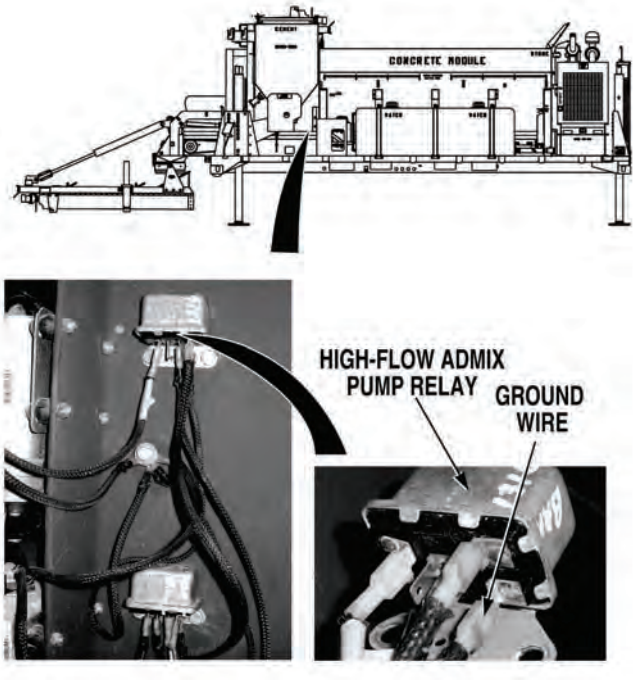

1. ADMIX SYSTEM (HIGH-FLOW) DOES NOT OPERATE CORRECTLY (CONT).

KNOWN INFO
Air lines between high-flow admix air solenoid and admix valve not kinked or damaged.
Admix system drain cock valves closed.
ADMIX fuse OK.
Air pressure OK.
Low-flow admix system OK.
System control circuits operating correctly.
Admix strainer OK.
Admix tube between admix tank and water valve not kinked or damaged.
Admix tube between admix valve and water valve not clogged.
Water valve fitting not clogged.
Admix valve OK.
Admix air solenoid OK.
Air line between admix air solenoid and admix valve OK.
Admix flowmeter OK.
Admix tube between flowmeter and admix valve not clogged.
Admix tube between pump and flowmeter not clogged.
Admix solution valve and strainer assembly OK.
Admix tank not clogged.
Admix tube between high-flow admix tank and drain valve not clogged.
Admix pump OK.
Blue wire between low admix relay and high-flow admix relay OK.
High-flow admix relay OK.
Admix pump ground wire OK.
Control wire harness (brown) wire OK.
Admix relay ground wire OK.

POSSIBLE PROBLEMS
Admix relay ground connections faulty.
Control wire harness (blue) wire faulty.
Main wire harness admix pump power (yellow) wire faulty.
Control box 5-pin wire harness (yellow) wire faulty.
Control box 4-pin wire harness (blue) wire faulty.
Battery equalizer magnetic switch connections loose or corroded.
Engine harness admix pump power (yellow) wire faulty.

30.

WARNING

Read WARNING on Page 4-65

Are 10 to 14 VDC measured between control box harness, 4-pin connector terminal B and a known good ground when 12 VOLT switch is in ON position?

NO → Go to Step 32 of this Fault.

YES ↓

TEST OPTIONS
Voltage test.
REASON FOR QUESTION
To further isolate fault.

WARNING

Remove all jewelry such as rings, dog tags, bracelets, etc. If jewelry or tools contact positive electrical circuits, a direct short may result. Damage to equipment, injury or death to personnel may occur.

VOLTAGE TEST

(1) Disconnect batteries, (Para 3-10).
(2) Disconnect control box 4-pin wire harness connector, (Para 3-90).
(3) Connect batteries, (Para 3-10).
(4) Turn IGNITION SWITCH ON, (Para 2-1).
(5) Turn 12 VOLT switch ON, (Para 2-1).
(6) Connect positive (+) multimeter lead to control box 4-pin wire harness connector, terminal B.
(7) Connect negative (-) multimeter lead to a known good ground.
    (a) If 10 to 14 VDC are not present, go to Step 32 of this Fault.
    (b) If 10 to 14 VDC are present, go to Step 31 of this Fault.

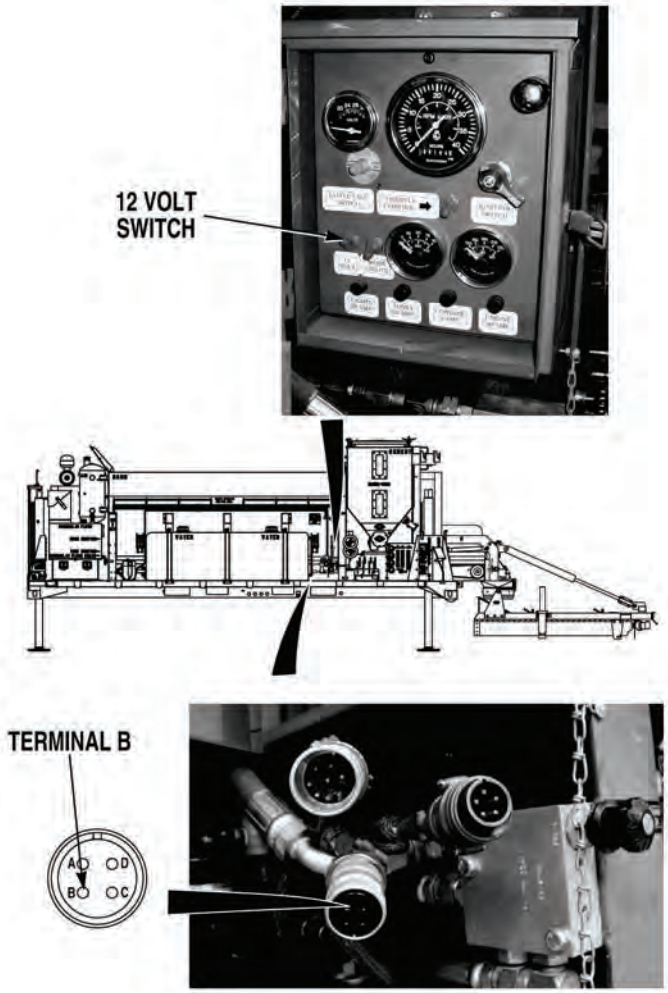

1. ADMIX SYSTEM (HIGH-FLOW) DOES NOT OPERATE CORRECTLY (CONT).

KNOWN INFO

- Air lines between high-flow admix air solenoid and admix valve not kinked or damaged.
- Admix system drain cock valves closed.
- ADMIX fuse OK.
- Air pressure OK.
- Low-flow admix system OK.
- System control circuits operating correctly.
- Admix strainer OK.
- Admix tube between tank and water valve OK.
- Admix tube between admix valve and water valve OK.
- Water valve OK.
- Admix valve OK.
- Admix air solenoid OK.
- Air line between admix air solenoid and admix valve OK.
- Admix flowmeter OK.
- Admix tube between flowmeter and admix valve OK.
- Admix tube between pump and flowmeter OK.
- Admix solution valve and strainer assembly OK.
- Admix tank OK.
- Admix tube between high-flow admix tank and drain valve OK.
- Admix pump OK.
- Blue wire between low admix relay and high-flow admix relay OK.
- High-flow admix relay OK.
- Admix pump ground wire OK.
- Control wire harness (brown) wire OK.
- Admix relay ground wire OK.
- Main wire harness admix pump power (yellow) wire OK.
- Control box 5-pin wire harness (yellow) wire OK.
- Control box 4-pin wire harness (blue) wire OK.
- Battery equalizer magnetic switch connections OK.
- Engine harness admix pump power (yellow) wire OK.

POSSIBLE PROBLEMS

- Admix relay ground connections faulty.
- Control wire harness (blue) wire faulty.

31.

WARNING

Read WARNING on Page 4-67

Are admix relay ground wire connections secure and free from damage?

NO → Repair control harness ground connection, (Para 3-46). Verify repair, go to Step 36 of this Fault.

YES → Repair power (blue) wire, (Para 3-141) or replace control wire harness, (Para 3-135). Verify repair, go to Step 36 of this Fault.

TEST OPTIONS

Visual inspection.

REASON FOR QUESTION

If relay ground wire connections are secure and free from damage, control wire harness relay power (blue) wire is faulty. If not, relay ground connection is faulty.

WARNING

Remove all jewelry such as rings, dog tags, bracelets, etc. If jewelry or tools contact positive electrical circuits, a direct short may result. Damage to equipment, injury or death to personnel may occur.

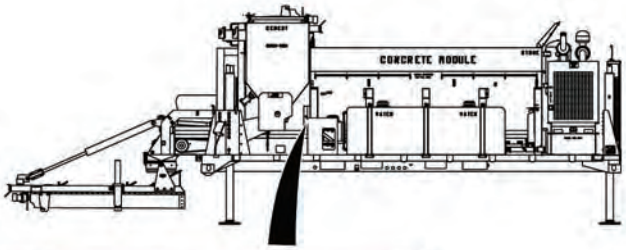

VISUAL INSPECTION

(1) Turn 12 VOLT switch OFF, (Para 2-1).

(2) Turn IGNITION SWITCH OFF, (Para 2-1).

(3) Check if high-flow admix relay ground connections are secure and free from damage.

(a) If ground connections are not secure and free from damage, repair high-flow admix relay ground connection, (Para 3-46).

(b) If ground connections are secure, repair power (blue) wire, (Para 3-141) or replace control wire harness, (Para 3-135).

(4) Verify repair, go to Step 36 of this Fault.

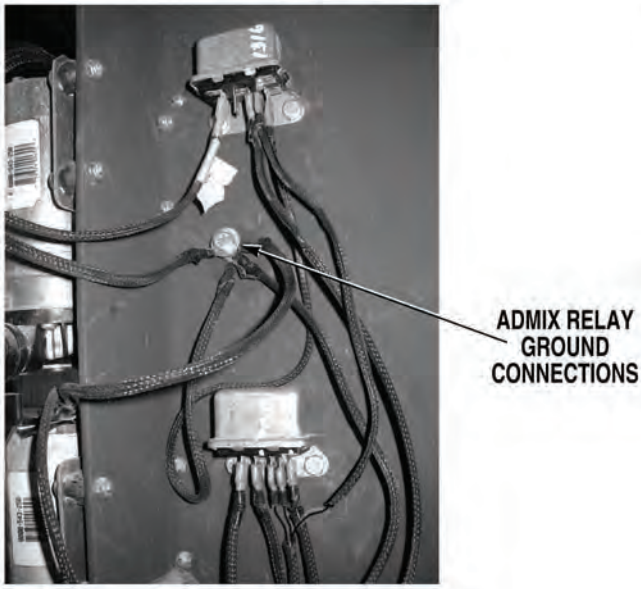

1. ADMIX SYSTEM (HIGH-FLOW) DOES NOT OPERATE CORRECTLY (CONT).

KNOWN INFO

- Air lines between high-flow admix air solenoid and admix valve not kinked or damaged.
- Admix system drain cock valves closed.
- ADMIX fuse OK.
- Air pressure OK.
- Low-flow admix system OK.
- System control switches operating correctly.
- Admix strainer OK.
- Admix tube between admix tank and water valve not kinked or damaged.
- Admix tube between admix valve and water valve not clogged.
- Water valve fitting not clogged.
- Admix valve OK.
- Admix air solenoid OK.
- Air line between admix air solenoid and admix valve OK.
- Admix flowmeter OK.
- Admix tube between flowmeter and admix valve not clogged.
- Admix tube between pump and flowmeter not clogged.
- Admix solution valve and strainer assembly OK.
- Admix tank not clogged.
- Admix tube between high-flow admix tank and drain valve not clogged.
- Admix pump OK.
- Blue wire between low admix relay and high-flow admix relay OK.
- High-flow admix relay OK.
- Admix pump ground wire OK.
- Admix relay ground wire OK.
- Control wire harness (brown) wire OK.
- Admix relay ground connections OK.
- Control wire harness (blue) wire OK.

POSSIBLE PROBLEMS

- Main wire harness admix pump power (yellow) wire faulty.
- Control box 5-pin wire harness (yellow) wire faulty.
- Control box 4-pin wire harness (blue) wire faulty.
- Battery equalizer magnetic switch connections faulty.
- Engine harness admix pump power (yellow) wire faulty.

32.

WARNING

Read WARNING on Page 4-69

Is continuity measured across main wire harness admix pump power (yellow) wire from engine connector, terminal G to control box 5-pin wire harness, terminal E?

NO → Repair admix pump power (yellow) wire, (Para 3-141) or replace main wire harness, (Para 3-134). Verify repair, go to Step 36 of this Fault.

YES ↓

TEST OPTIONS

Continuity test.

REASON FOR QUESTION

If continuity is not measured, main wire harness admix pump power (yellow) wire is faulty.

WARNING

Remove all jewelry such as rings, dog tags, bracelets, etc. If jewelry or tools contact positive electrical circuits, a direct short may result. Damage to equipment, injury or death to personnel may occur.

CONTINUITY TEST

(1) Disconnect batteries, (Para 3-10).

(2) Set multimeter select switch to ohms.

(3) Disconnect main wire harness, at control box 5-pin wire harness connector, (Para 3-90).

(4) Disconnect main wire harness, at engine harness connector, (Para 3-90).

(5) Connect jumperwire between main wire harness power (yellow) wire engine harness connector, terminal G and a known good ground.

(6) Connect positive (+) multimeter lead to main wire harness at control box 5-pin wire harness connector, terminal E.

(7) Connect negative (-) multimeter lead to a known good ground.

(a) If continuity is not measured repair admix pump power (yellow) wire, (Para 3-141) or replace main wire harness, (Para 3-134). Verify repair, go to Step 36 of this Fault.

(b) If continuity is measured, go to Step 33 of this Fault.

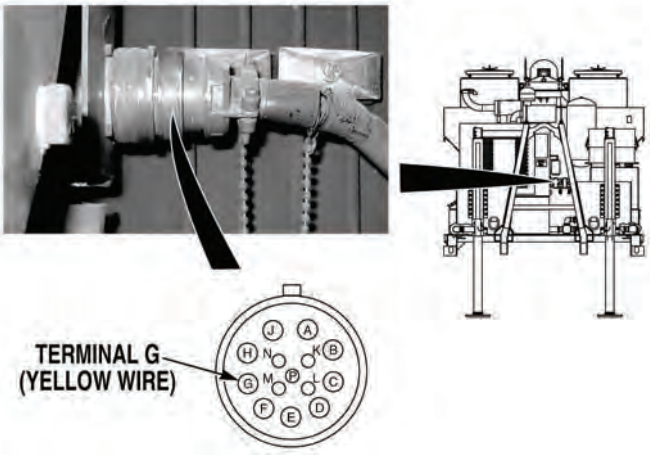

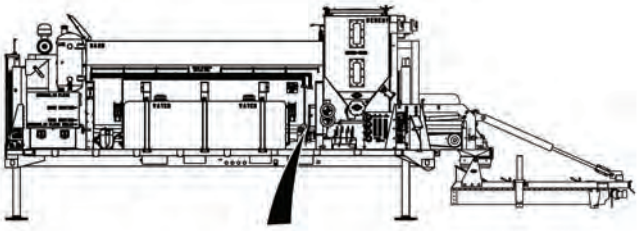

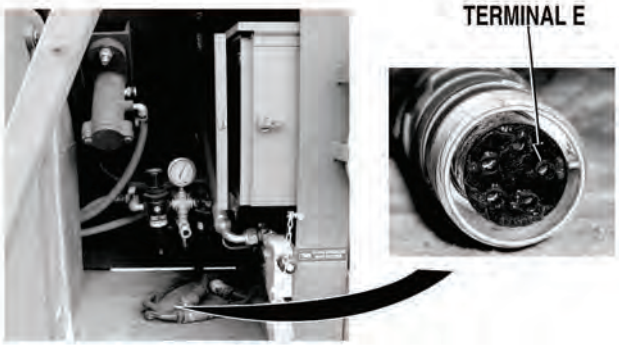

1. ADMIX SYSTEM (HIGH-FLOW) DOES NOT OPERATE CORRECTLY (CONT).

KNOWN INFO
Air lines between high-flow admix air solenoid and admix valve not kinked or damaged.
Admix system drain cock valves closed.
ADMIX fuse OK.
Air pressure OK.
Low-flow admix system OK.
System control switches operating correctly.
Admix strainer OK.
Admix tube between admix tank and water valve not kinked or damaged.
Admix tube between admix valve and water valve not clogged.
Water valve fitting OK.
Admix valve OK.
Admix air solenoid OK.
Air line between admix air solenoid and admix valve OK.
Admix flowmeter OK.
Admix tube between flowmeter and admix valve not clogged.
Admix tube between pump and flowmeter not clogged.
Admix solution valve and strainer assembly OK.
Admix tank not clogged.
Admix tube between high-flow admix tank and drain valve not clogged.
Admix pump OK.
Blue wire between low admix relay and high-flow admix relay OK.
High-flow admix relay OK.
Admix pump ground wire OK.
Control wire harness (brown) wire OK.
Admix relay ground wire OK.
Admix relay ground connections OK.
Control wire harness (blue) wire OK.
Main wire harness admix pump power (yellow) wire OK.

POSSIBLE PROBLEMS
Control box 5-pin wire harness (yellow) wire faulty.
Control box 4-pin wire harness (blue) wire faulty.
Battery equalizer magnetic switch connections faulty.
Engine harness admix pump power (yellow) wire faulty.

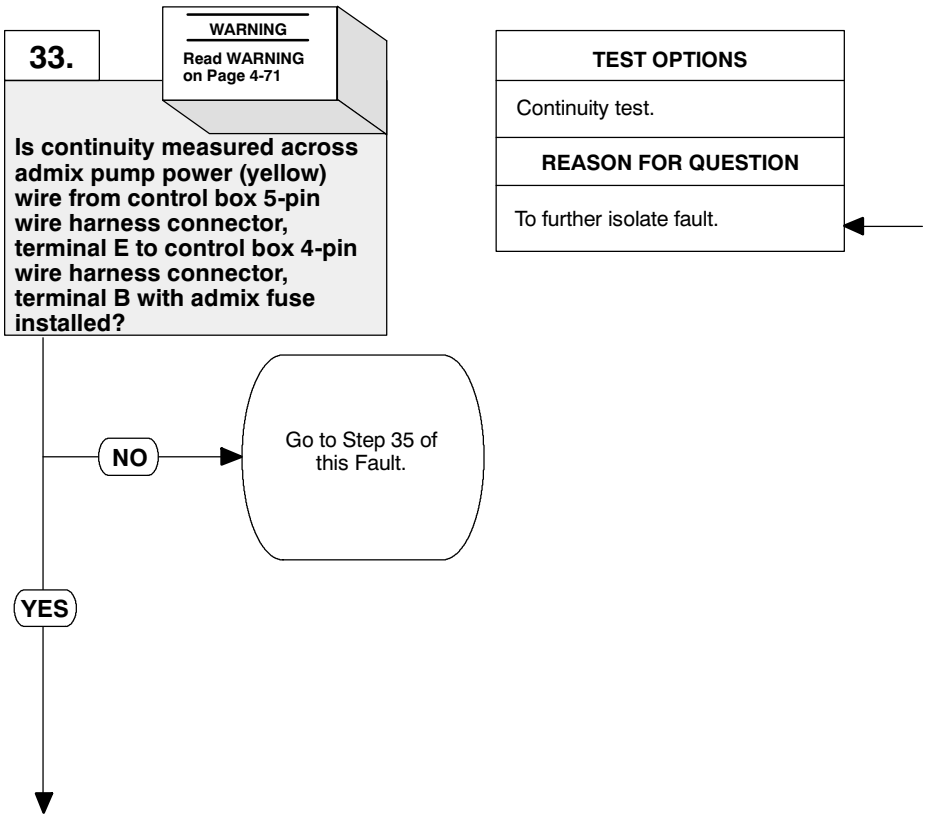

WARNING

Remove all jewelry such as rings, dog tags, bracelets, etc. If jewelry or tools contact positive electrical circuits, a direct short may result. Damage to equipment, injury or death to personnel may occur.

CONTINUITY TEST

(1) Set multimeter select switch to ohms.

(2) If removed, install ADMIX fuse in ADMIX fuse holder, (Para 3-58).

(3) Disconnect control box 5-pin wire harness at main wire harness, (Para 3-90).

(4) Disconnect control box 4-pin wire harness at control wire harness, (Para 3-90).

(5) Connect positive (+) multimeter lead to power (yellow) wire at control box 5-pin wire harness, terminal E.

(6) Connect negative (-) multimeter lead to power (yellow) wire at control box 4-pin wire harness, terminal B.

(a) If continuity is not measured, go to Step 35 of this Fault.

(b) If continuity is measured, go to Step 34 of this Fault.

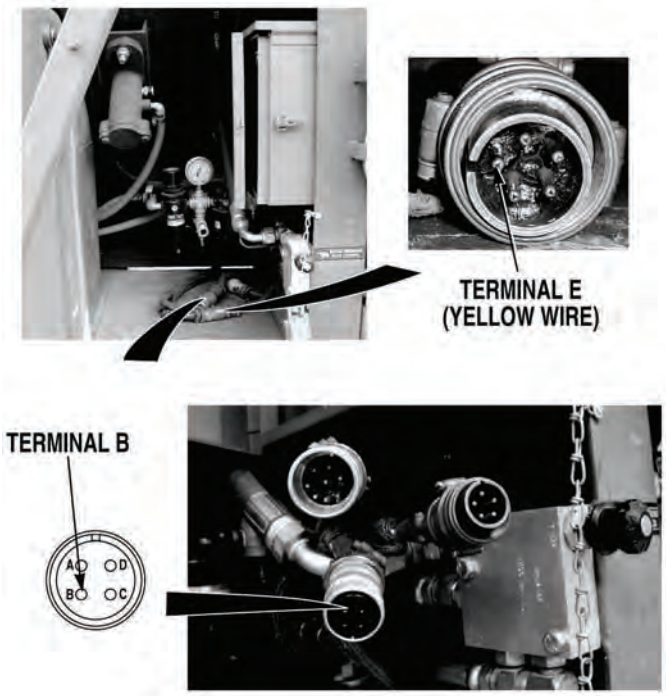

1. ADMIX SYSTEM (HIGH-FLOW) DOES NOT OPERATE CORRECTLY (CONT).

KNOWN INFO

- Air lines between high-flow admix air solenoid and admix valve not kinked or damaged.
- Admix system drain cock valves closed.
- ADMIX fuse OK.
- Air pressure OK.
- Low-flow admix system OK.
- System control circuits operating correctly.
- Admix strainer OK.
- Admix tube between admix tank and water valve not kinked or damaged.
- Admix tube between admix valve and water valve not clogged.
- Water valve fitting not clogged.
- Admix valve OK.
- Admix air solenoid OK.
- Air line between admix air solenoid and admix valve OK.
- Admix flowmeter OK.
- Admix tube between flowmeter and admix valve not clogged.
- Admix tube between pump and flowmeter not clogged.
- Admix solution valve and strainer assembly OK.
- Admix tank not clogged.
- Admix tube between high-flow admix tank and drain valve not clogged.
- Admix pump OK.
- Blue wire between low admix relay and high-flow admix relay OK.
- High-flow admix relay OK.
- Admix pump ground wire OK.
- Control wire harness (brown) wire OK.
- Admix relay ground wire OK.
- Admix relay ground connections OK.
- Control wire harness (blue) wire OK.
- Main wire harness admix pump power (yellow) wire OK.
- Control box 5-pin wire harness (yellow) wire OK.
- Control box 4-pin wire harness (blue) wire OK.

POSSIBLE PROBLEMS

- Battery equalizer magnetic switch connections faulty.
- Engine harness admix pump power (yellow) wire faulty.

34.

WARNING

Read WARNING on Page 4-73

Are battery equalizer magnetic switch terminals tight and free from corrosion?

NO → Clean and tighten battery equalizer magnetic switch terminals, (Para 3-17). Verify repair, go to Step 36 of this Fault.

YES → Repair power (yellow) wire, (Para 3-141) or replace engine wire harness, (Para 3-136). Verify repair, go to Step 36 of this Fault.

TEST OPTIONS

Visual inspection.

REASON FOR QUESTION

If battery equalizer magnetic switch terminals are tight and free from corrosion, engine wire harness admix pump power (yellow) wire is faulty .

WARNING

Remove all jewelry such as rings, dog tags, bracelets, etc. If jewelry or tools contact positive electrical circuits, a direct short may result. Damage to equipment, injury or death to personnel may occur.

CONTINUITY TEST

(1) Remove battery equalizer magnetic switch cover panel from engine compartment, (Para 3-17).

(2) Check if battery equalizer magnetic switch terminals are tight and free from corrosion.

(a) If battery equalizer magnetic switch terminals are not tight and free from corrosion, clean and tighten battery equalizer magnetic switch terminals, (Para 3-17).

(b) If battery equalizer magnetic switch terminals are tight and free from corrosion, repair power (yellow) wire, (Para 3-141) or replace engine wire harness, (Para 3-136).

(3) Verify repair, go to Step 36 of this Fault.

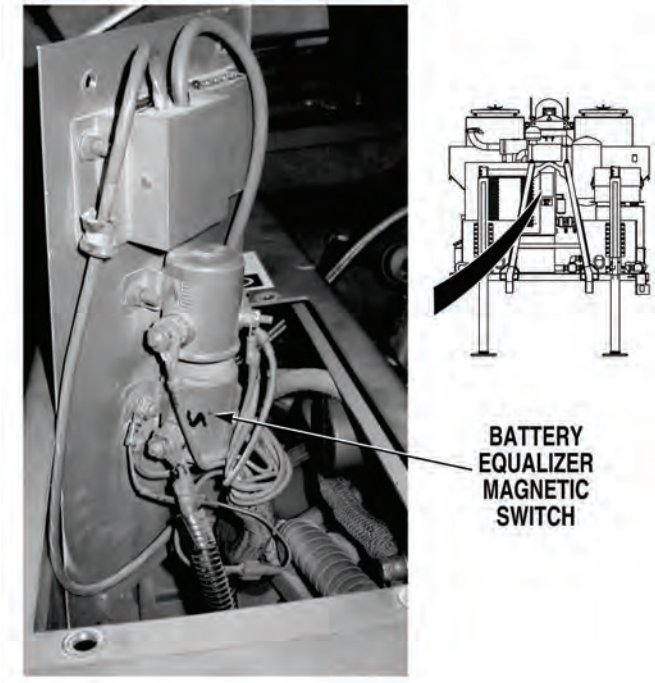

1. ADMIX SYSTEM (HIGH-FLOW) DOES NOT OPERATE CORRECTLY (CONT).

KNOWN INFO

- Air lines between high-flow admix air solenoid and admix valve not kinked or damaged.
- Admix system drain cock valves closed.
- ADMIX fuse OK.
- Air pressure OK.
- Low-flow admix system OK.
- System control circuits operating correctly.
- Admix strainer OK.
- Admix tube between admix tank and water valve not kinked or damaged.
- Admix tube between admix valve and water valve not clogged.
- Water valve fitting not clogged.
- Admix valve OK.
- Admix air solenoid OK.
- Air line between admix air solenoid and admix valve OK.
- Admix flowmeter OK.
- Admix tube between flowmeter and admix valve not clogged.
- Admix tube between pump and flowmeter not clogged.
- Admix solution valve and strainer assembly OK.
- Admix tank not clogged.
- Admix tube between high-flow admix tank and drain valve not clogged.
- Admix pump OK.
- Blue wire between low admix relay and high-flow admix relay OK.
- High-flow admix relay OK.
- Admix pump ground wire OK.
- Control wire harness (brown) wire OK.
- Admix relay ground wire OK.
- Admix relay ground connections OK.
- Control wire harness (blue) wire OK.
- Main wire harness admix pump power (yellow) wire OK.
- Battery equalizer magnetic switch connections OK.
- Engine harness admix pump power (yellow) wire OK.

POSSIBLE PROBLEMS

- Control box 5-pin wire harness (yellow) wire fautly.
- Control box 4-pin wire harness (blue) wire faulty.

35.

WARNING

Read WARNING on Page 4-75

Is continuity measured across control box 5-pin wire harness admix pump power (yellow) wire, terminal E to ADMIX fuse holder?

NO → Repair admix pump power (yellow) wire, (Para 3-141) or replace control box 5-pin wire harness, (Para 3-138). Verify repair, go to Step 36 of this Fault.

YES → Repair admix pump power (blue) wire, (Para 3-141) or replace control box 4-pin wire harness, (Para 3-139). Verify reapir, go to Step 36 of this Fault.

TEST OPTIONS

Continuity test.

REASON FOR QUESTION

If continuity is measured, control box 4-pin wire harness admix pump power (blue) wire is faulty. If not, control box 5-pin wire harness admix pump power (yellow) wire is faulty.

WARNING

Remove all jewelry such as rings, dog tags, bracelets, etc. If jewelry or tools contact positive electrical circuits, a direct short may result. Damage to equipment, injury or death to personnel may occur.

CONTINUITY TEST

(1) Remove control box from Concrete Mobile Mixer, (Para 3-90).

(2) Open control box door and remove screw from top of control panel. Gently open control panel to expose wires.

(3) Set multimeter select switch to ohms.

(4) Connect positive (+) multimeter lead to control box 5-pin wire harness, admix pump power (yellow) wire, terminal E.

(5) Connect negative (-) multimeter lead to yellow wire at ADMIX fuse holder.

  (a) If continuity is not measured, repair admix pump power (yellow) wire, (Para 3-141) or replace control box 5-pin wire harness, (Para 3-138).

  (b) If continuity is measured, repair admix pump power (blue) wire, (para 3-141) or replace control box 4-pin wire harness, (Para 3-139).

(6) Verify repair, go to Step 36 of this Fault.

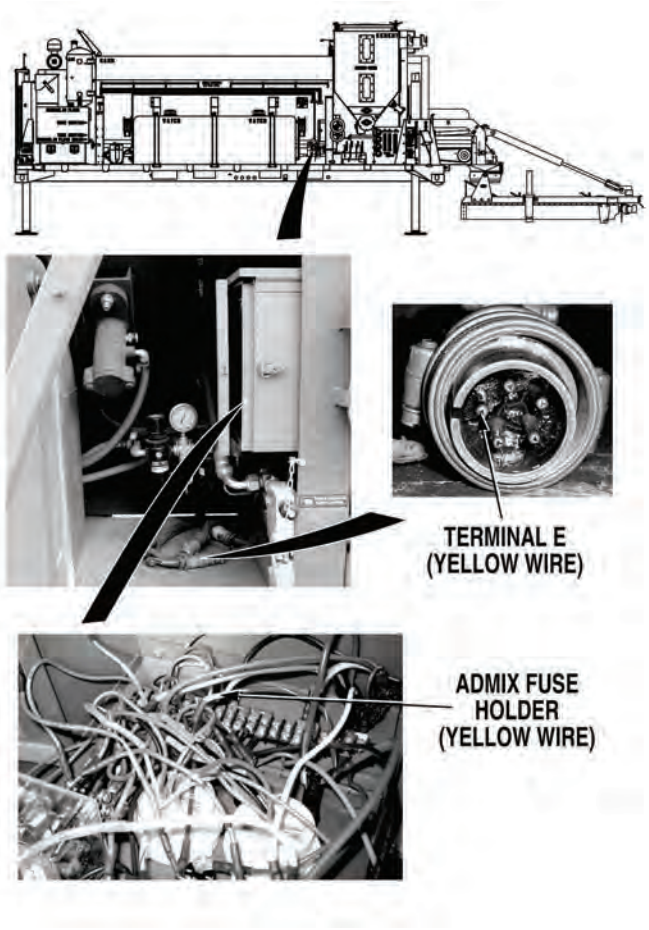

1. ADMIX SYSTEM (HIGH-FLOW) DOES NOT OPERATE CORRECTLY (CONT).

KNOWN INFO
Air lines between high-flow admix air solenoid and admix valve not kinked or damaged.
Admix system drain cock valves closed.
ADMIX fuse OK.
Air pressure OK.
Low-flow admix system OK.
System control circuits operating correctly.
Admix strainer OK.
Admix tube between admix tank and water valve not kinked or damaged.
Admix tube between admix valve and water valve OK.
Water valve OK.
Admix valve OK.
Admix air solenoid OK.
Air line between admix air solenoid and admix valve OK.
Admix flowmeter OK.
Admix tube between flowmeter and admix valve not clogged.
Admix tube between pump and flowmeter not clogged.
Admix solution valve and strainer assembly OK.
Admix tank not clogged.
Admix tube between high-admix tank and drain valve not clogged.
Admix pump OK.
Blue wire between low admix relay and high-flow admix relay OK.
High-flow admix relay OK.
Admix pump ground wire OK.
Admix relay ground wire OK.
Control wire harness (brown) wire OK.
Admix relay ground connections OK.
Control wire harness (blue) wire OK.
Main wire harness admix pump power (yellow) wire OK.
Control box 5-pin wire harness (yellow) wire OK.
Control box 4-pin wire harness (blue) wire OK.
Engine harness admix pump power (yellow) wire OK.
Battery equalizer magnetic switch connections OK.

POSSIBLE PROBLEMS
None.

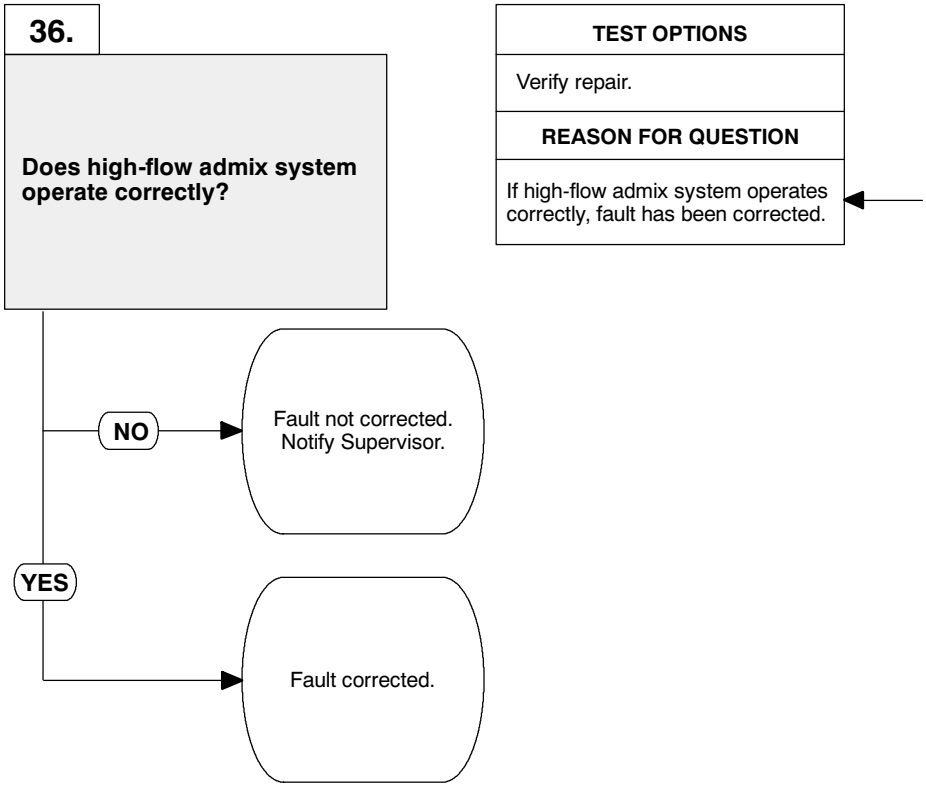

VERIFY REPAIR

(1) If removed, install control box cover, (Para 3-90).

(2) If disconnected, connect wire harness connectors.

(3) If removed, install hydraulic control valve cover, (Para 3-51).

(4) If removed, install admix cover, (Para 3-88).

(5) If disconnected, connect batteries, (Para 3-10).

(6) If OFF, turn IGNITION SWITCH ON, (Para 2-1).

(7) If OFF, turn 12 VOLT switch ON, (Para 2-1).

(8) Operate high-admix function, (Para 2-34, 2-36, or 2-37). Check if high-admix function operates.

  (a) If high-admix system does not operate, fault not corrected. Notify Supervisor.

  (b) If high-admix system operates, fault has been corrected.

(9) Shut OFF engine, (Para 2-19).

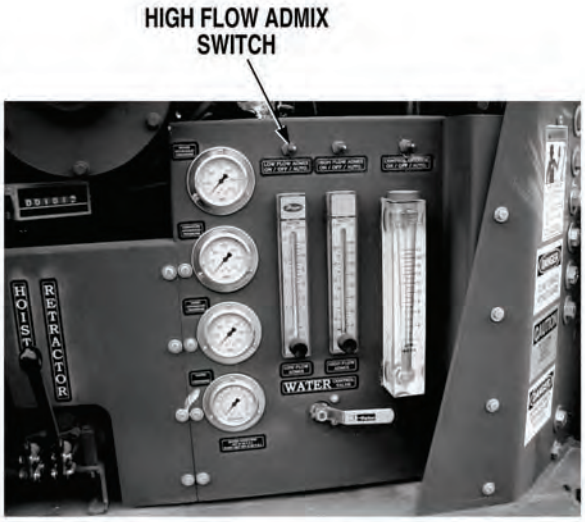

2. ADMIX SYSTEM (LOW-FLOW) DOES NOT OPERATE CORRECTLY.

INITIAL SETUP

Tools and Special Tools
Tool Kit, General Mechanic's: Automotive (Item 19, Appendix I)

Equipment Condition
Concrete Mobile Mixer unloaded from PLS, (Para 2-5)
Concrete Mobile Mixer at operating level, (Para 2-28)
Mixing auger deployed, (Para 2-23)
Engine OFF, (Para 2-19)

2. ADMIX SYSTEM (LOW-FLOW) DOES NOT OPERATE CORRECTLY (CONT).

KNOWN INFO
Nothing.

POSSIBLE PROBLEMS
Air lines between low-flow admix air solenoid and admix valve kinked or damaged.
Admix system drain cock valves open.
ADMIX fuse faulty.
Air pressure faulty.
High-flow admix system not operating.
System control switches not operating correctly.
Admix solution valve and strainer assembly faulty.
Admix strainer clogged or damaged.
Admix tube between tank and water valve kinked or damaged.
Admix tube between admix valve and water valve clogged.
Water valve fitting clogged or faulty.
Admix valve faulty.
Admix air solenoid faulty.
Air line between admix air solenoid and admix valve faulty.
Admix flowmeter faulty.
Admix tube between flowmeter and admix valve clogged.
Admix tube between pump and flowmeter faulty.
Admix pump faulty.
Admix tank clogged.
Admix tube between low-flow admix tank and drain valve clogged.
Low-flow admix relay faulty.
Admix pump ground connection faulty.
Control wire harness (orange) wire faulty.
Admix relay ground wire faulty.
Admix relay ground connections faulty.
Control wire harness (blue) wire faulty.
Main wire harness admix pump power (yellow) wire faulty.
Battery equalizer magnetic switch connections loose or corroded.
Engine harness admix pump power (yellow) wire faulty.
Control box 5-pin wire harness (yellow) wire faulty.
Control box 4-pin wire harness (blue) wire faulty.

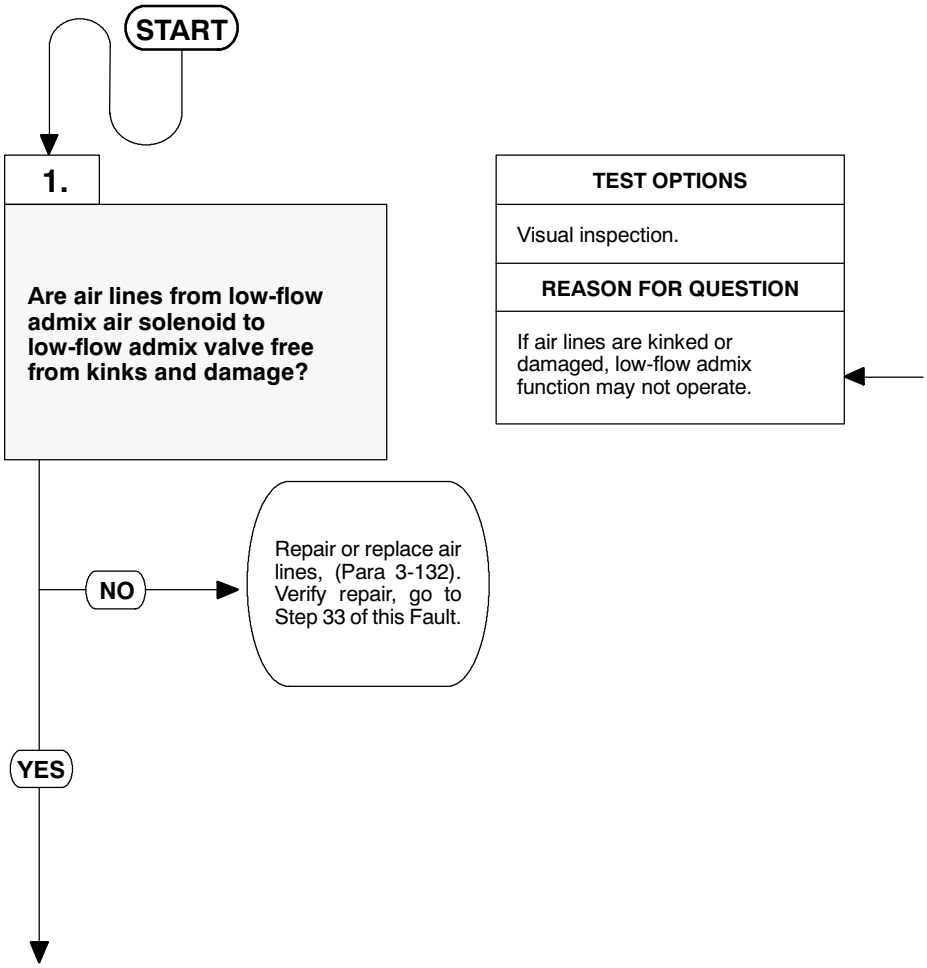

VISUAL INSPECTION
Check if air lines between low-flow admix air solenoid and low-flow admix valve are free from kinks and damage. (a) If air lines are not free from kinks and damage, repair or replace air lines, (Para 3-132). Verify repair, go to Step 33 of this Fault. (b) If air lines are free from kinks and damage, go to Step 2 of this Fault.

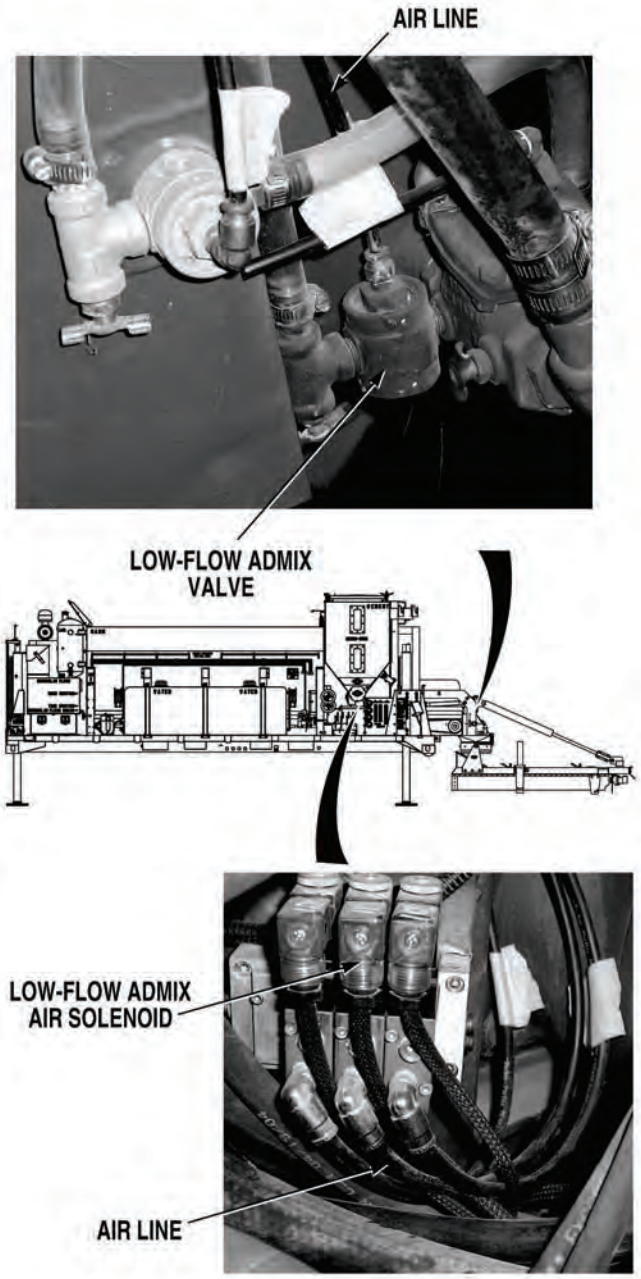

2. ADMIX SYSTEM (LOW-FLOW) DOES NOT OPERATE CORRECTLY (CONT).

KNOWN INFO

Air lines between low-flow admix air solenoid and admix valve not kinked or damaged.

POSSIBLE PROBLEMS

- Admix system drain cock valves open.
- ADMIX fuse faulty.
- Air pressure faulty.
- High-flow admix system not operating.
- System control switches not operating correctly.
- Admix solution valve and strainer assembly faulty.
- Admix strainer clogged or damaged.
- Admix tube between tank and water valve kinked or damaged.
- Admix tube between admix valve and water valve clogged.
- Water valve fitting clogged or faulty.
- Admix valve faulty.
- Admix air solenoid faulty.
- Air line between admix air solenoid and admix valve faulty.
- Admix flowmeter faulty.
- Admix tube between flowmeter and admix valve clogged.
- Admix tube between pump and flowmeter faulty.
- Admix pump faulty.
- Admix tank clogged.
- Admix tube between low-flow admix tank and drain valve clogged.
- High admix relay faulty.
- Admix pump ground connection faulty.
- Control wire harness (orange) wire faulty.
- Admix relay ground wire faulty.
- Admix relay ground connections faulty.
- Control wire harness (blue) wire faulty.
- Main wire harness admix pump power (yellow) wire faulty.
- Battery equalizer magnetic switch connections loose or corroded.
- Engine harness admix pump power (yellow) wire faulty.
- Control box 5-pin wire harness (yellow) wire faulty.
- Control box 4-pin wire harness (blue) wire faulty.

2.

Are all low-flow admix drain cock valves closed?

TEST OPTIONS

Visual inspection.

REASON FOR QUESTION

If low-flow admix drain cock valves are open, low-flow admix system will not operate.

NO → Close low-flow admix drain cock valves, (Para 2-16). Verify repair. go to Step 33 of this Fault.

YES ↓

VISUAL INSPECTION

Check if all low-flow admix drain cock valves are closed.

NOTE

Drain cock valves located on backside of flowmeter panel.

(a) If all low-flow admix drain cock valves are not closed, close all low-flow admix drain cock valves, (Para 2-16). Verify repair, go to Step 33 of this Fault.

(b) If all low-flow admix drain cock valves are closed, go to Step 3 of this Fault.

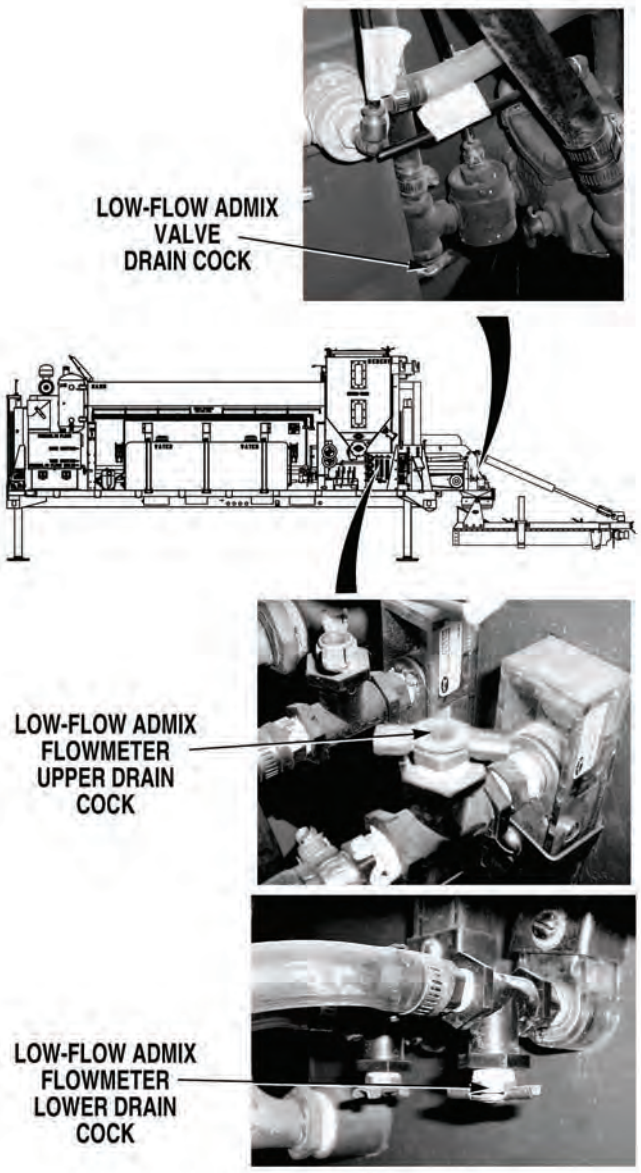

2. ADMIX SYSTEM (LOW-FLOW) DOES NOT OPERATE CORRECTLY (CONT).

KNOWN INFO
Air lines between low-flow admix air solenoid and admix valve not kinked or damaged.
Admix system drain cock valves closed.

POSSIBLE PROBLEMS
ADMIX fuse faulty.
Air pressure faulty.
High-flow admix system not operating.
System control switches not operating correctly.
Admix solution valve and strainer assembly faulty.
Admix strainer clogged or damaged.
Admix tube between tank and water valve kinked or damaged.
Admix tube between admix valve and water valve clogged.
Water valve fitting clogged or faulty.
Admix valve faulty.
Admix air solenoid faulty.
Air line between admix air solenoid and admix valve faulty.
Admix flowmeter faulty.
Admix tube between flowmeter and admix valve clogged.
Admix tube between pump and flowmeter faulty.
Admix pump faulty.
Admix tank clogged.
Admix tube between low-flow admix tank and drain valve clogged.
High admix relay faulty.
Admix pump ground connection faulty.
Control wire harness (orange) wire faulty.
Admix relay ground wire faulty.
Admix relay ground connections faulty.
Control wire harness (blue) wire faulty.
Main wire harness admix pump power (yellow) wire faulty.
Battery equalizer magnetic switch connections loose or corroded.
Engine harness admix pump power (yellow) wire faulty.
Control box 5-pin wire harness (yellow) wire faulty.
Control box 4-pin wire harness (blue) wire faulty.

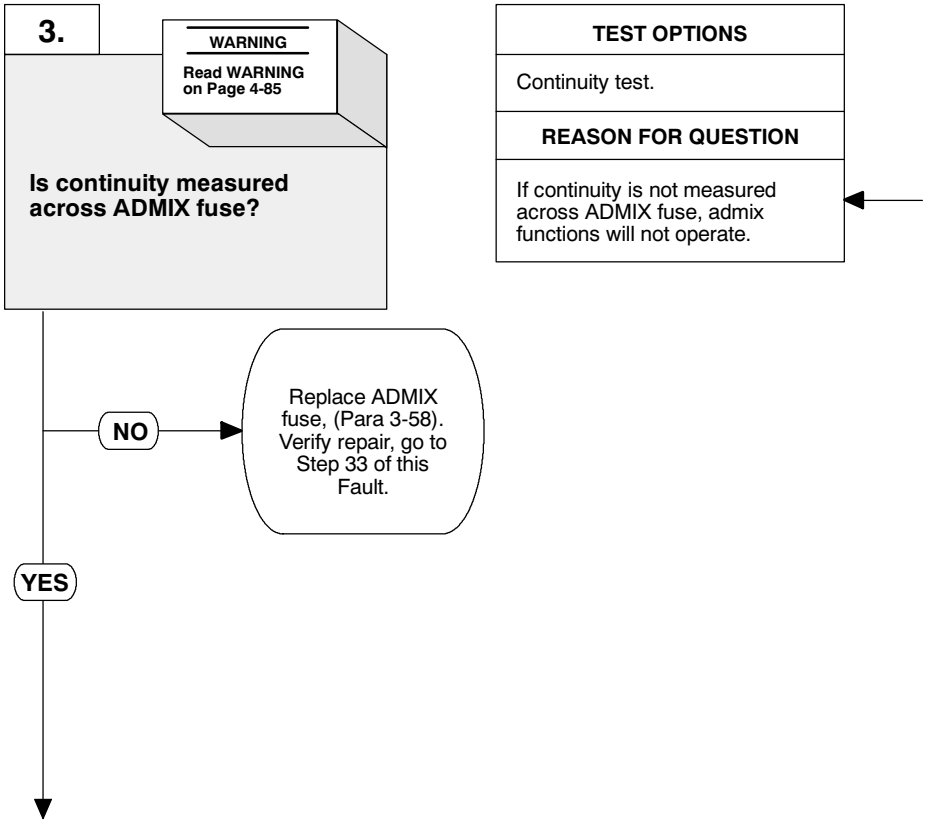

WARNING

Remove all jewelry such as rings, dog tags, bracelets, etc. If jewelry or tools contact positive electrical circuits, a direct short may result. Damage to equipment, injury or death to personnel may occur.

CONTINUITY TEST

(1) Release latch and open control box door.

(2) Remove fuse from ADMIX fuse holder, (Para 3-58).

(3) Set multimeter select switch to ohms.

(4) Connect positive (+) multimeter lead to one end of ADMIX fuse.

(5) Connect negative (–) multimeter lead to opposite end of ADMIX fuse.

(a) If continuity is not measured across ADMIX fuse, replace ADMIX fuse, (Para 3-58). Verify repair, go to Step 33 of this Fault.

(b) If continuity is measured across ADMIX fuse, reinstall fuse in ADMIX fuse holder and go to Step 4 of this Fault.

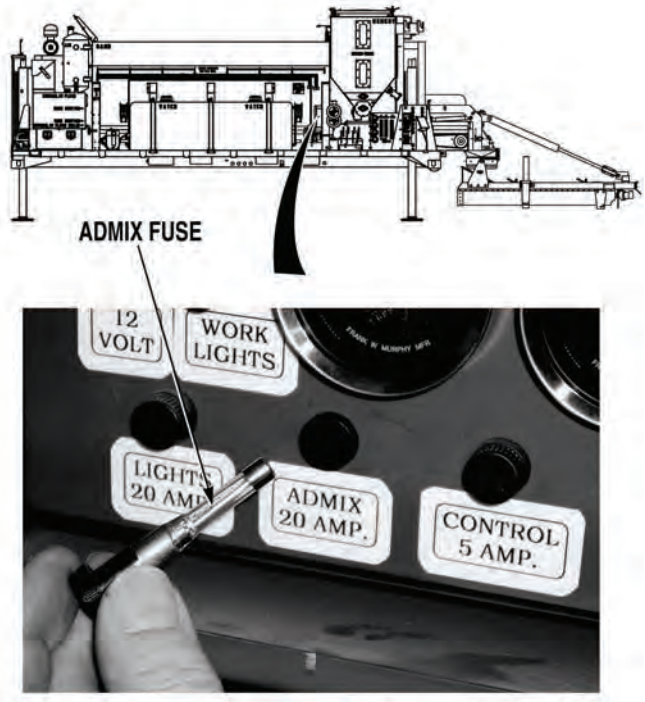

2. ADMIX SYSTEM (LOW-FLOW) DOES NOT OPERATE CORRECTLY (CONT).

KNOWN INFO

Air lines between low-flow admix air solenoid and admix valve not kinked or damaged.

Admix system drain cock valves closed.

ADMIX fuse OK.

POSSIBLE PROBLEMS

Air pressure faulty.

High-flow admix system not operating.

System control switches not operating correctly.

Admix solution valve and strainer assembly faulty.

Admix strainer clogged or damaged.

Admix tube between tank and water valve kinked or damaged.

Admix tube between admix valve and water valve clogged.

Water valve fitting clogged or faulty.

Admix valve faulty.

Admix air solenoid faulty.

Air line between admix air solenoid and admix valve faulty.

Admix flowmeter faulty.

Admix tube between flowmeter and admix valve clogged.

Admix tube between pump and flowmeter faulty.

Admix pump faulty.

Admix tank clogged.

Admix tube between low-flow admix tank and drain valve clogged.

High admix relay faulty.

Admix pump ground connection faulty.

Control wire harness (orange) wire faulty.

Admix relay ground wire faulty.

Admix relay ground connections faulty.

Control wire harness (blue) wire faulty.

Main wire harness admix pump power (yellow) wire faulty.

Battery equalizer magnetic switch connections loose or corroded.

Engine harness admix pump power (yellow) wire faulty.

Control box 5-pin wire harness (yellow) wire faulty.

Control box 4-pin wire harness (blue) wire faulty.

4.

Does air system charge to 80 to 100 psi (552 to 690 kPa) with CONTROL OVERRIDE, HIGH FLOW ADMIX, and LOW FLOW ADMIX switches OFF?

NO → Go to “Air Pressure Low or System Charge is Slow”, (Fault 3).

YES ↓

TEST OPTIONS

Operational test.

REASON FOR QUESTION

If air system does not charge, another troubleshooting procedure applies.

OPERATIONAL TEST

(1) If ON, turn CONTROL OVERIDE switch OFF, (Para 2-1).

(2) If ON, turn LOW FLOW ADMIX switch OFF, (Para 2-1).

(3) If ON, turn HIGH FLOW ADMIX switch OFF, (Para 2-1).

(4) Start engine, (Para 2-19)

(5) If closed, open air system supply control valve, (Para 2-18).

(6) Check if air system charges to 80 to 100 psi (552 to 690 kPa).

(a) If air system does not charge to 80 to 100 psi (552 to 690 kPa), go to “Air Pressure Low or System Charge Is Slow”, (Fault 3).

(b) If air system charges to 80 to 100 psi (552 to 690 kPa), go to Step 4 of this Fault.

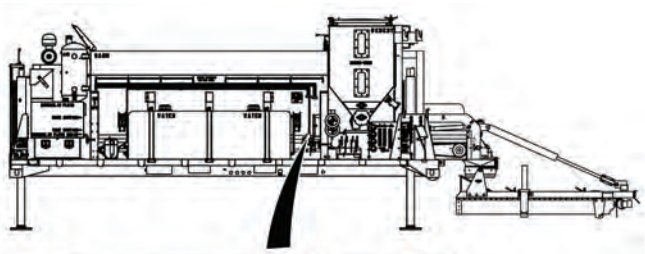

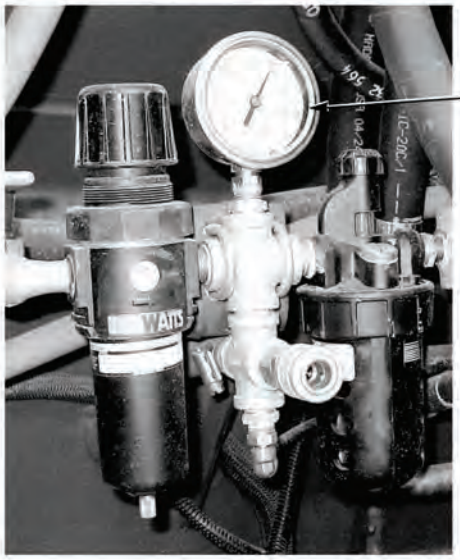

2. ADMIX SYSTEM (LOW-FLOW) DOES NOT OPERATE CORRECTLY (CONT).

KNOWN INFO
Air lines between low-flow admix air solenoid and admix valve not kinked or damaged.
Admix system drain cock valves closed.
ADMIX fuse OK.
Air pressure OK.

POSSIBLE PROBLEMS
High-flow admix system not operating.
System control switches not operating correctly.
Admix solution valve and strainer assembly faulty.
Admix strainer clogged or damaged.
Admix tube between tank and water valve kinked or damaged.
Admix tube between admix valve and water valve clogged.
Water valve fitting clogged or faulty.
Admix valve faulty.
Admix air solenoid faulty.
Air line between admix air solenoid and admix valve faulty.
Admix flowmeter faulty.
Admix tube between flowmeter and admix valve clogged.
Admix tube between pump and flowmeter faulty.
Admix pump faulty.
Admix tank clogged.
Admix tube between low-flow admix tank and drain valve clogged.
High admix relay faulty.
Admix pump ground connection faulty.
Control wire harness (orange) wire faulty.
Admix relay ground wire faulty.
Admix relay ground connections faulty.
Control wire harness (blue) wire faulty.
Main wire harness admix pump power (yellow) wire faulty.
Battery equalizer magnetic switch connections loose or corroded.
Engine harness admix pump power (yellow) wire faulty.
Control box 5-pin wire harness (yellow) wire faulty.
Control box 4-pin wire harness (blue) wire faulty.

5.

Does low-flow admix system operate correctly when system is set up for flush operation with drain cock valves closed and solution valve open?

TEST OPTIONS
Operational test.
REASON FOR QUESTION
To further isolate fault.

NO → Go to Step 7 of this Fault.

YES ↓

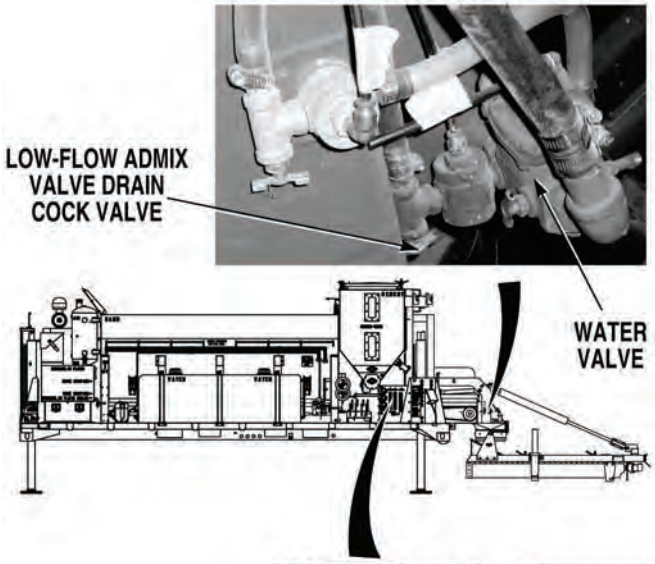

OPERATIONAL TEST

(1) Set up low-flow admix system for flushing operation, (Para 2-16).

(2) Close low-flow admix system drain cock valves, (Para 2-16).

(3) Turn LOW FLOW ADMIX switch ON, (Para 2-1).

(4) Check if low-flow admix system drains at water valve.

  (a) If low-flow admix flushing function does not operate correctly, go to Step 7 of this Fault.

  (b) If low-flow admix flushing function operates correctly, go to Step 6 of this Fault.

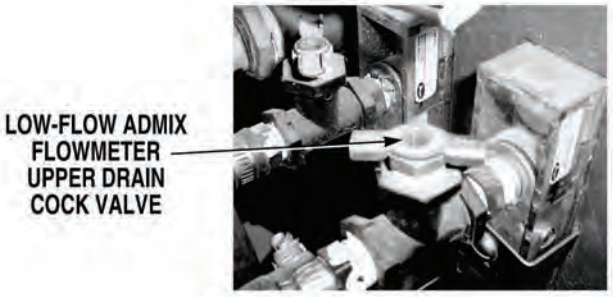

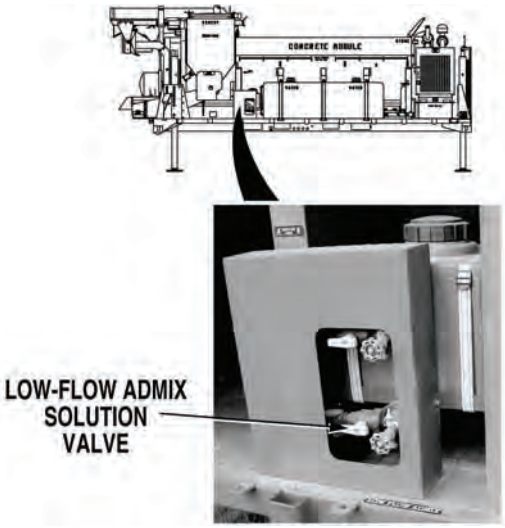

2. ADMIX SYSTEM (LOW-FLOW) DOES NOT OPERATE CORRECTLY (CONT).

KNOWN INFO
Air lines between low-flow admix air solenoid and admix valve not kinked or damaged.
Admix system drain cock valves closed.
ADMIX fuse OK.
Air pressure OK.
Admix solution valve and strainer assembly OK.
Admix strainer OK.
Admix tube between tank and water valve not clogged.
Admix tube between admix valve and water valve not clogged.
Water valve fitting OK.
Admix valve OK.
Admix air solenoid OK.
Air line between admix air solenoid and admix valve OK.
Admix flowmeter OK.
Admix tube between flowmeter and admix valve not clogged.
Admix tube between pump and flowmeter not clogged.
Admix pump OK.
Admix tank OK.
Admix tube between low-flow admix tank and drain valve not clogged.
High admix relay OK.
Admix pump ground connection OK.
Control wire harness (orange) wire OK.
Admix relay ground wire OK.
Admix relay ground connections OK.
Control wire harness (blue) wire OK.
Main wire harness admix pump power (yellow) wire OK.
Battery equalizer magnetic switch connections OK.
Engine harness admix pump power (yellow) wire OK.
Control box 5-pin wire harness (yellow) wire OK.
Control box 4-pin wire harness (blue) wire OK.

POSSIBLE PROBLEMS
High-flow admix system not operating.
System control switches not operating correctly.

6.

Does high admix system operate correctly when system is set up for flush operation with drain cock valves closed and solution valve open?

NO → Go to “Admix System (High-Flow) Does Not Operate Correctly”, (Fault 1).

YES → Go to “Concrete Mixer Auto and/or Manual Controls Do Not Operate”, (Fault 29).

TEST OPTIONS
Operational test.
REASON FOR QUESTION
To verify high admix system is operating correctly. If high admix system operates correctly, system auto controls are not working correctly.

OPERATIONAL TEST

(1) Set up high admix system for flushing operation, (Para 2-15).

(2) Close high admix system drain cock valves, (Para 2-15).

NOTE

Drain cock valves located on backside of flowmeter panel.

(3) Turn HIGH FLOW ADMIX switch ON, (Para 2-1).

(4) Check if high admix system drains at water valve.

(a) If high admix system does not operate correctly, go to "Admix System (High-Flow) Does Not Operate Correctly", (Fault 1).

(b) If high-flow admix system operates correctly, go to "Concrete Mixer Auto and/or Manual Controls Do Not Operate", (Fault 29).

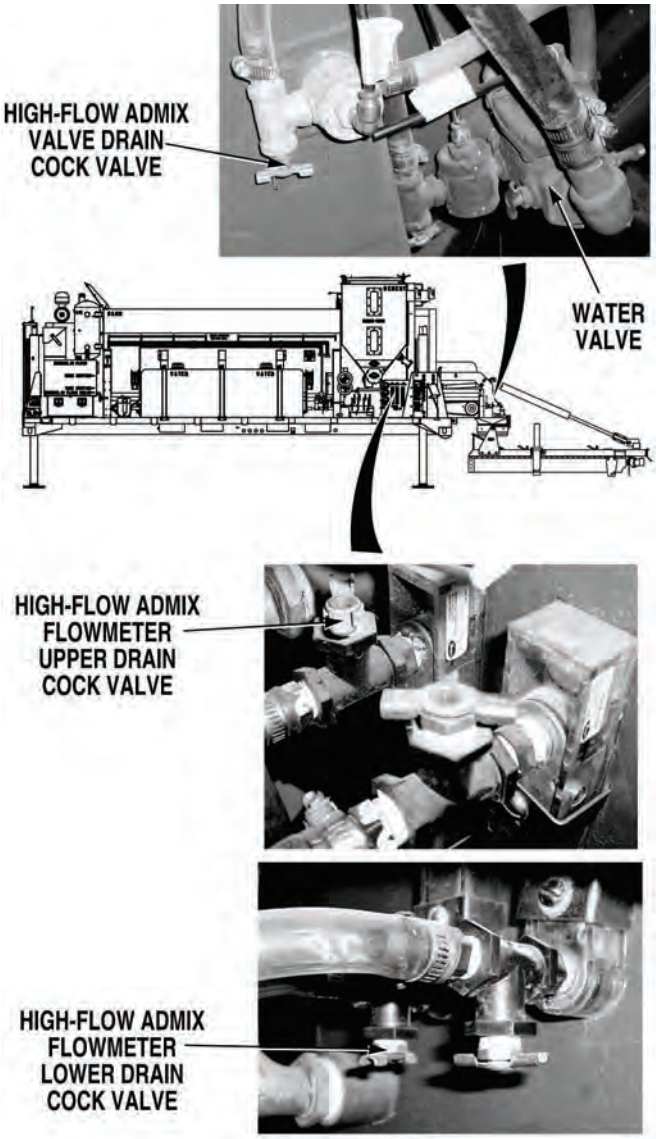

2. ADMIX SYSTEM (LOW-FLOW) DOES NOT OPERATE CORRECTLY (CONT).

KNOWN INFO

Air lines between low-flow admix air solenoid and admix valve not kinked or damaged.

Admix system drain cock valves closed.

ADMIX fuse OK.

Air pressure OK.

High-flow admix system OK.

POSSIBLE PROBLEMS

System control switches not operating correctly.

Admix strainer clogged or damaged.

Admix tube between tank and water valve kinked or damaged.

Admix tube between admix valve and water valve clogged.

Water valve fitting clogged or faulty.

Admix valve faulty.

Admix air solenoid faulty.

Air line between admix air solenoid and admix valve faulty.

Admix flowmeter faulty.

Admix tube between flowmeter and admix valve clogged.

Admix tube between pump and flowmeter faulty.

Admix pump faulty.

Admix tank clogged.

Admix tube between low-flow admix tank and drain valve clogged.

Admix solution valve and strainer assembly faulty.

High admix relay faulty.

Admix pump ground connection faulty.

Control wire harness (orange) wire faulty.

Admix relay ground wire faulty.

Admix relay ground connections faulty.

Control wire harness (blue) wire faulty.

Main wire harness admix pump power (yellow) wire faulty.

Battery equalizer magnetic switch connections loose or corroded.

Engine harness admix pump power (yellow) wire faulty.

Control box 5-pin wire harness (yellow) wire faulty.

Control box 4-pin wire harness (blue) wire faulty.

7.

Is low-flow admix air solenoid energized when LOW FLOW ADMIX switch is placed in ON position?

NO → Go to “Concrete Mixer Auto and/or Manual Controls Do Not Operate”, (Fault 29).

YES ↓

TEST OPTIONS

Visual/Audible test.

REASON FOR QUESTION

If low-flow admix air solenoid does not energize, another troubleshootiing procedure applies.

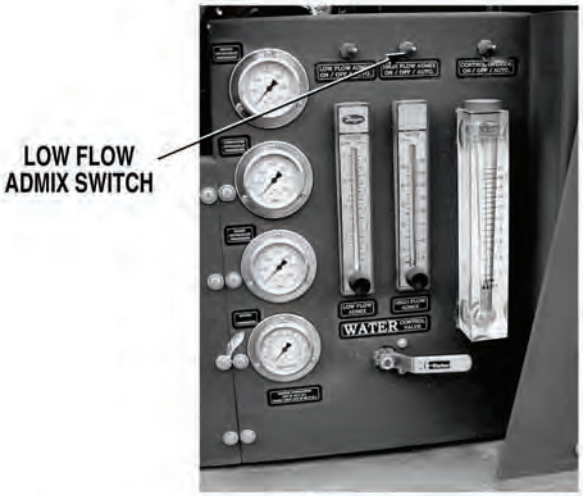

VISUAL/AUDIBLE TEST

(1) Shut OFF engine, (Para 2-19).

(2) Turn IGNITION SWITCH ON, (Para 2-1).

(3) Turn 12 VOLT switch ON, (Para 2-1).

NOTE

Air solenoid is energized when a clicking sound is heard.

(4) Turn LOW-FLOW ADMIX switch ON, (Para 2-1). Check if high admix air solenoid is energized.

(a) If low-flow admix air solenoid does not energize, go to "Concrete Mixer Auto and/or Manual Controls Do Not Operate", (Fault 29).

(b) If low-flow admix air solenoid energizes, go to Step 8 of this Fault.

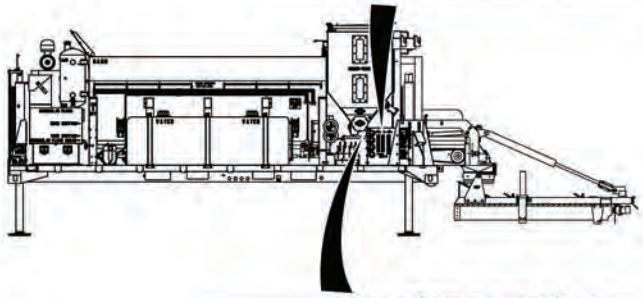

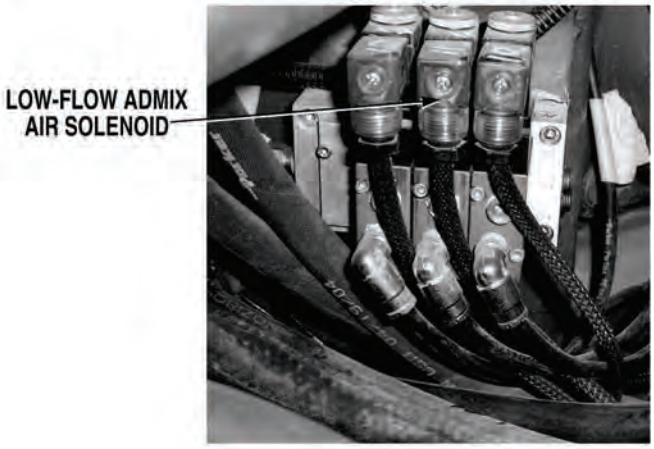

2. ADMIX SYSTEM (LOW-FLOW) DOES NOT OPERATE CORRECTLY (CONT).

KNOWN INFO
Air lines between low-flow admix air solenoid and admix valve not kinked or damaged.
Admix system drain cock valves closed.
ADMIX fuse OK.
Air pressure OK.
High-flow admix system OK.
System control switches operating correctly.

POSSIBLE PROBLEMS
Admix strainer clogged or damaged.
Admix tube between tank and water valve kinked or damaged.
Admix tube between admix valve and water valve clogged.
Water valve fitting clogged or faulty.
Admix valve faulty.
Admix air solenoid faulty.
Air line between admix air solenoid and admix valve faulty.
Admix flowmeter faulty.
Admix tube between flowmeter and admix valve clogged.
Admix tube between pump and flowmeter faulty.
Admix pump faulty.
Admix tank clogged.
Admix tube between low-flow admix tank and drain valve clogged.
Admix solution valve and strainer assembly faulty.
High admix relay faulty.
Admix pump ground connection faulty.
Control wire harness (orange) wire faulty.
Admix relay ground wire faulty.
Admix relay ground connections faulty.
Control wire harness (blue) wire faulty.
Main wire harness admix pump power (yellow) wire faulty.
Battery equalizer magnetic switch connections loose or corroded.
Engine harness admix pump power (yellow) wire faulty.
Control box 5-pin wire harness (yellow) wire faulty.
Control box 4-pin wire harness (blue) wire faulty.

8.

Does low-flow admix pump operate when LOW FLOW ADMIX switch is placed in ON position?

TEST OPTIONS
Operational test.
REASON FOR QUESTION
To further isolate fault.

NO → Go to Step 21 of this Fault.

YES ↓

OPERATIONAL TEST

(1) Remove admix cover, (Para 3-88).

NOTE

Low-flow admix pump operation will be checked by listening for pump noise when LOW FLOW ADMIX switch is turned ON, (Para 2-1).

(2) Turn LOW FLOW ADMIX switch ON, (Para 2-1).

(3) Check if low-flow admix pump operates.

(a) If low-flow admix pump does not operate, go to Step 21 of this Fault.

(b) If low-flow admix pump operates, go to Step 9 of this Fault.

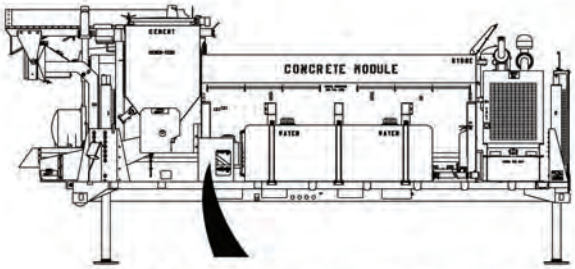

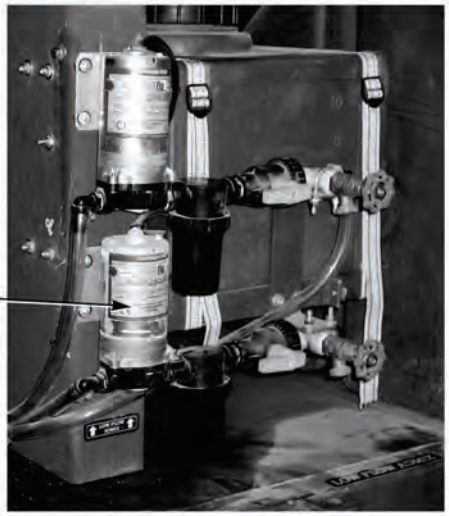

2. ADMIX SYSTEM (LOW-FLOW) DOES NOT OPERATE CORRECTLY (CONT).

KNOWN INFO

- Air lines between low-flow admix air solenoid and admix valve OK.
- Admix system drain cock valves closed.
- ADMIX fuse OK.
- Air pressure OK.
- High-flow admix system OK.
- System control switches operating correctly.
- High admix relay OK.
- Admix pump ground connection OK.
- Control wire harness (orange) wire OK.
- Admix relay ground wire OK.
- Admix relay ground connections OK.
- Control wire harness (blue) wire OK.
- Main wire harness admix pump power (yellow) wire OK.
- Battery equalizer magnetic switch connections OK.
- Engine harness admix pump power (yellow) wire OK.
- Control box 5-pin wire harness (yellow) wire OK.
- Control box 4-pin wire harness (blue) wire OK.

POSSIBLE PROBLEMS

- Admix solution valve and strainer assembly faulty.
- Admix strainer clogged or damaged.
- Admix tube between tank and water valve kinked or damaged.
- Admix tube between admix valve and water valve clogged.
- Water valve fitting clogged or faulty.
- Admix valve faulty.
- Admix air solenoid faulty.
- Admix flowmeter faulty.
- Admix tube between flowmeter and admix valve clogged.
- Admix tube between pump and flowmeter clogged.
- Admix pump faulty.
- Admix tank clogged.
- Admix tube between high admix tank and drain valve clogged.

9.

Are strainer housing and solution valve tight and free from damage?

NO → Tighten connections or replace strainer assembly and/or solution valve, (Para 3-45). Verify repair, go to Step 33 of this Fault.

YES ↓

TEST OPTIONS

Visual inspection.

REASON FOR QUESTION

If strainer housing and solution valve are not tight and free from damage, low-flow admix function may not operate.

VISUAL INSPECTION

(1) Turn LOW-FLOW ADMIX switch OFF, (Para 2-1).

(2) Check if strainer assembly and solution valve are securely connected and free from damage.

(a) If strainer assembly and solution valve are not securely connected and free from damage, replace strainer assembly and/or solution valve, (Para 3-45). Verify repair, go to Step 33 of this Fault.

(b) If strainer assembly and solution valve are securely connected and free from damage, go to Step 10 of this Fault.

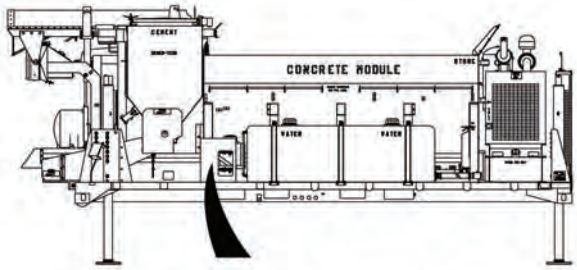

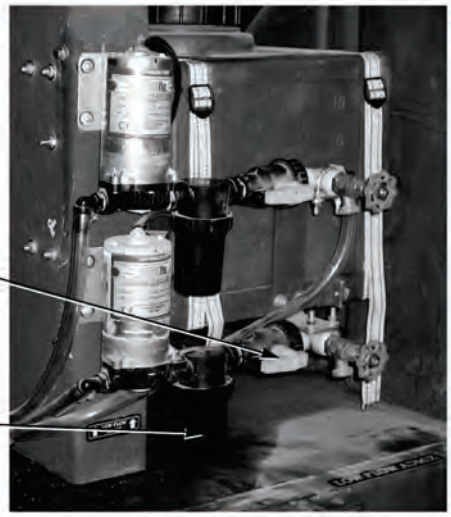

2. ADMIX SYSTEM (LOW-FLOW) DOES NOT OPERATE CORRECTLY (CONT).

KNOWN INFO

- Air lines between low-flow admix air solenoid and admix valve OK.
- Admix system drain cock valves closed.
- ADMIX fuse OK.
- Air pressure OK.
- High-flow admix system OK.
- System control switches operating correctly.
- High admix relay OK.
- Admix pump ground connection OK.
- Control wire harness (orange) wire OK.
- Admix relay ground wire OK.
- Admix relay ground connections OK.
- Control wire harness (blue) wire OK.
- Main wire harness admix pump power (yellow) wire OK.
- Battery equalizer magnetic switch connections OK.
- Engine harness admix pump power (yellow) wire OK.
- Control box 5-pin wire harness (yellow) wire OK.
- Control box 4-pin wire harness (blue) wire OK.
- Admix solution valve and strainer assembly OK.

POSSIBLE PROBLEMS

- Admix strainer clogged or damaged.
- Admix tube between tank and water valve kinked or damaged.
- Admix tube between admix valve and water valve clogged.
- Water valve fitting clogged or faulty.
- Admix valve faulty.
- Admix air solenoid faulty.
- Admix flowmeter faulty.
- Admix tube between flowmeter and admix valve clogged.
- Admix tube between pump and flowmeter clogged.
- Admix pump faulty.
- Admix tank clogged.
- Admix tube between high admix tank and drain valve clogged.

10.

Is admix strainer free from damage and obstructions?

TEST OPTIONS

Visual inspection.

REASON FOR QUESTION

If admix strainer is not free from damage and obstructions, low-flow admix function may not operate.

NO → Clean or replace admix strainer, (Para 3-44). Verify repair, go to Step 33 of this Fault.

YES ↓

VISUAL INSPECTION
(1) Remove admix strainer from strainer housing, (Para 3-44). (2) Check if admix strainer is free from damage and obstructions. (a) If admix strainer is not free from damage and obstructions, clean or replace admix strainer, (Para 3-44). Verify repair, go to Step 33 of this Fault. (b) If admix strainer is free from damage and obstructions, go to Step 11 of this Fault.

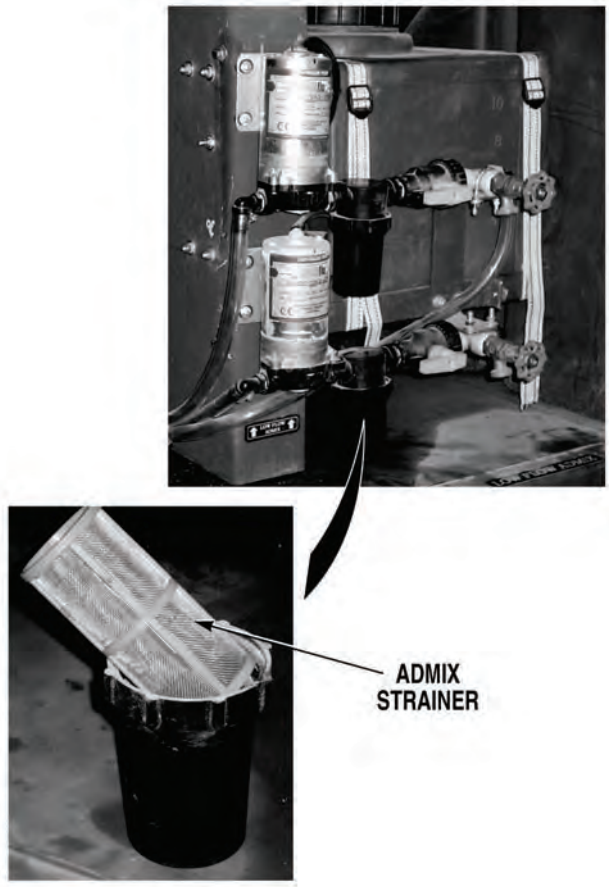

2. ADMIX SYSTEM (LOW-FLOW) DOES NOT OPERATE CORRECTLY (CONT).

KNOWN INFO

- Air lines between low-flow admix air solenoid and admix valve OK.
- Admix system drain cock valves closed.
- ADMIX fuse OK.
- Air pressure OK.
- High-flow admix system OK.
- System control switches operating correctly.
- High admix relay OK.
- Admix pump ground connection OK.
- Control wire harness (orange) wire OK.
- Admix relay ground wire OK.
- Control wire harness (blue) wire OK.
- Admix relay ground connections OK.
- Main wire harness admix pump power (yellow) wire OK.
- Engine harness admix pump power (yellow) wire OK.
- Battery equalizer magnetic switch connections OK.
- Control box 5-pin wire harness (yellow) wire OK.
- Control box 4-pin wire harness (blue) wire OK.
- Admix solution valve and strainer assembly OK.
- Admix strainer OK.

POSSIBLE PROBLEMS

- Admix tube between tank and water valve kinked or damaged.
- Admix tube between admix valve and water valve clogged.
- Water valve fitting clogged or faulty.
- Admix valve faulty.
- Admix air solenoid faulty.
- Admix flowmeter faulty.
- Admix tube between flowmeter and admix valve clogged.
- Admix tube between pump and flowmeter clogged.
- Admix pump faulty.
- Admix tank clogged.
- Admix tube between low-flow admix tank and drain valve clogged.

11.

Are admix tubes from low-flow admix tank to water valve free from kinks and damage?

TEST OPTIONS

Visual inspection.

REASON FOR QUESTION

If admix tubes from low-flow admix tank to water valve are kinked or damaged, low-flow admix function may not operate.

NO → Repair or replace admix tubes, (Para 3-130). Verify repair, go to Step 33 of this Fault.

YES ↓

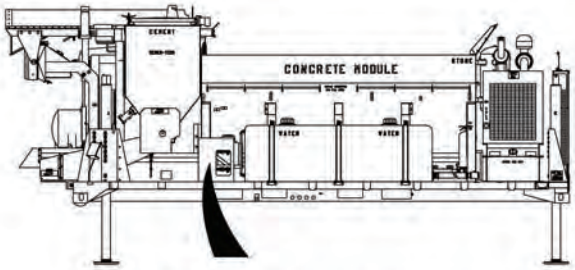

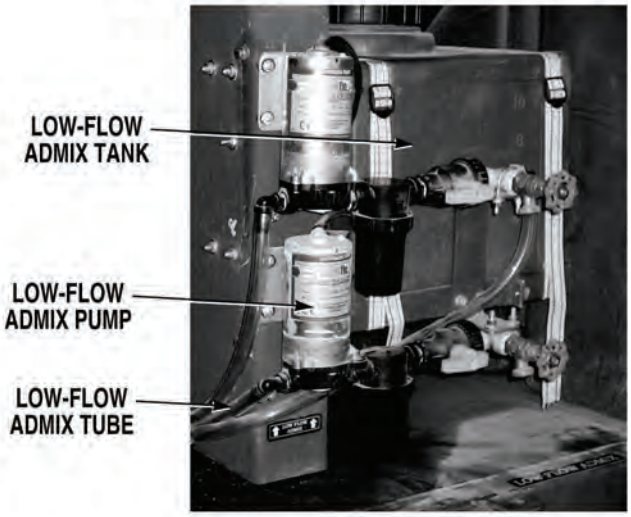

VISUAL INSPECTION
Check if admix tube from low-flow admix tank to water valve are free from kinks and damage. (a) If admix tubes are not free from kinks and damage replace admix tubes, (Para 3-130). Verify repair, go to Step 33 of this Fault. (b) If admix tubes are free from kinks and damage, go to Step 12 of this Fault.

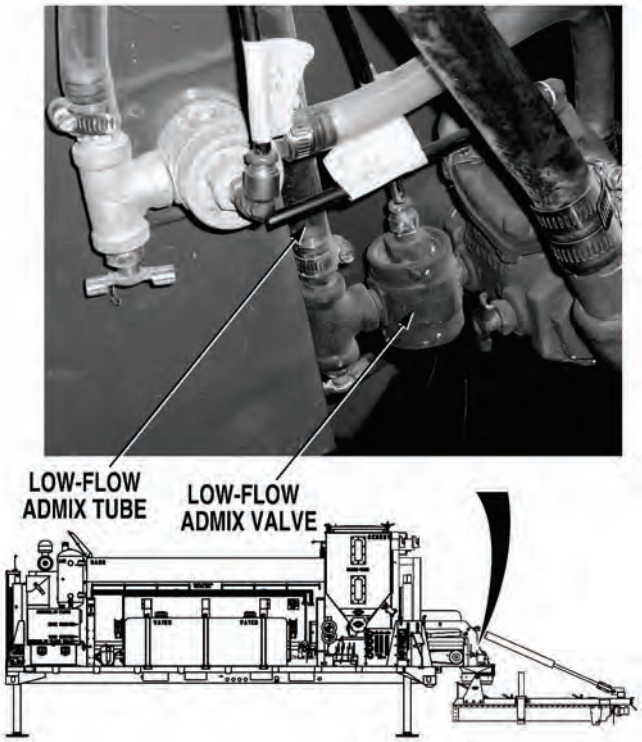

2. ADMIX SYSTEM (LOW-FLOW) DOES NOT OPERATE CORRECTLY (CONT).

KNOWN INFO

- Air lines between low-flow admix air solenoid and admix valve OK.
- Admix system drain cock valves closed.
- ADMIX fuse OK.
- Air pressure OK.
- High-flow admix system OK.
- System control switches operating correctly.
- High admix relay OK.
- Admix pump ground connection OK.
- Control wire harness (orange) wire OK.
- Admix relay ground wire OK.
- Admix relay ground connections OK.
- Control wire harness (blue) wire OK.
- Main wire harness admix pump power (yellow) wire OK.
- Battery equalizer magnetic switch connections OK.
- Engine harness admix pump power (yellow) wire OK.
- Control box 5-pin wire harness (yellow) wire OK.
- Control box 4-pin wire harness (blue) wire OK.
- Admix solution valve and strainer assembly OK.
- Admix strainer OK.
- Admix tube between tank and water valve not clogged.

POSSIBLE PROBLEMS

- Admix tube between admix valve and water valve clogged.
- Water valve fitting clogged or faulty.
- Admix valve faulty.
- Admix air solenoid faulty.
- Admix flowmeter faulty.
- Admix tube between flowmeter and admix valve clogged.
- Admix tube between pump and flowmeter clogged.
- Admix pump faulty.
- Admix tank clogged.
- Admix tube between low-flow admix tank and drain valve clogged.

12.

Does admix/water flow freely when low-flow admix drain valve is opened?

NO → Flush or replace low-flow admix tank, (Para 3-39) and/or flush or replace admix tube between tank and drain valve, (Para 3-130). Verify repair, go to Step 33 of this Fault.

YES ↓

TEST OPTIONS

Operational test.

REASON FOR QUESTION

If admix water does not flow freely, low-flow admix tank or tube between admix tank and drain valve is clogged.

OPERATIONAL TEST

(1) Remove drain/fill hose from stowage box and attach to low-flow admix drain valve, (Para 2-16).

(2) Place drain/fill hose in suitable drain pan.

(3) Open low-flow admix drain valve, (Para 2-16). Check if admix/water flows freely from drain valve.

(a) If admix/water does not flow freely, flush or replace low-flow admix tank, (Para 3-39) and/or flush or replace admix tube between tank and drain valve, (Para 3-130). Verify repair, go to Step 33 of this Fault.

(b) If admix/water flows freely, go to Step 13 of this Fault.

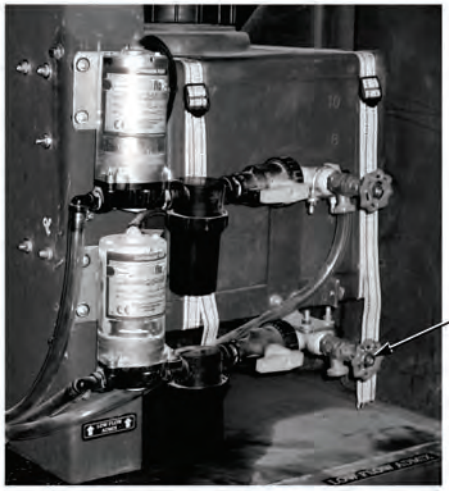

2. ADMIX SYSTEM (LOW-FLOW) DOES NOT OPERATE CORRECTLY (CONT).

KNOWN INFO
Air lines between low-flow admix air solenoid and admix valve OK.
Admix system drain cock valves closed.
ADMIX fuse OK.
Air pressure OK.
High-flow admix system OK.
System control switches operating correctly.
High admix relay OK.
Admix pump ground connection OK.
Control wire harness (orange) wire OK.
Admix relay ground wire OK.
Admix relay ground connections OK.
Control wire harness (blue) wire OK.
Main wire harness admix pump power (yellow) wire OK.
Battery equalizer magnetic switch connections OK.
Engine harness admix pump power (yellow) wire OK.
Control box 5-pin wire harness (yellow) wire OK.
Control box 4-pin wire harness (blue) wire OK.
Admix solution valve and strainer assembly OK.
Admix strainer OK.
Admix tube between tank and water valve not clogged.
Admix tank OK.
Admix tube between high admix tank and drain valve not clogged.

POSSIBLE PROBLEMS
Admix tube between admix valve and water valve clogged.
Water valve fitting clogged or faulty.
Admix valve faulty.
Admix air solenoid faulty.
Admix flowmeter faulty.
Admix tube between flowmeter and admix valve clogged.
Admix tube between pump and flowmeter clogged.
Admix pump faulty.

13.

Does admix/water flow freely when low-flow admix valve drain cock valve is open and LOW FLOW ADMIX switch is placed in ON position?

NO → Go to Step 17 of this Fault.

YES ↓

TEST OPTIONS
Operational test.
REASON FOR QUESTION
To further isolate fault.

OPERATIONAL TEST

(1) Place suitable drain pan under low-flow admix valve drain cock.

(2) Open low-flow admix valve drain cock valve, (Para 2-16).

(3) Turn LOW-FLOW ADMIX switch ON, (Para 2-1).

(4) Check if admix/water flows freely from low-flow admix valve drain cock.

   (a) If admix/water does not flow freely, turn LOW-FLOW ADMIX switch OFF and go to Step 17 of this Fault.

   (b) If admix/water flows freely, turn LOW FLOW ADMIX switch OFF and go to Step 14 of this Fault.

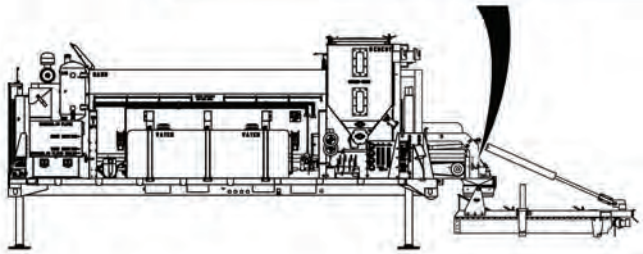

2. ADMIX SYSTEM (LOW-FLOW) DOES NOT OPERATE CORRECTLY (CONT).

KNOWN INFO

- Air lines between low-flow admix air solenoid and admix valve OK.
- Admix system drain cock valves closed.
- ADMIX fuse OK.
- Air pressure OK.
- High-flow admix system OK.
- System control switches operating correctly.
- High admix relay OK.
- Admix pump ground connection OK.
- Control wire harness (orange) wire OK.
- Admix relay ground wire OK.
- Admix relay ground connections OK.
- Control wire harness (blue) wire OK.
- Main wire harness admix pump power (yellow) wire OK.
- Battery equalizer magnetic switch connections OK.
- Engine harness admix pump power (yellow) wire OK.
- Control box 5-pin wire harness (yellow) wire OK.
- Control box 4-pin wire harness (blue) wire OK.
- Admix solution valve and strainer assembly OK.
- Admix strainer OK.
- Admix tube between tank and water valve not clogged.
- Admix tank OK.
- Admix tube between high admix tank and drain valve not clogged.
- Admix tube between admix valve and water valve not clogged.
- Admix air solenoid OK.
- Admix flowmeter OK.
- Admix tube between flowmeter and admix valve not clogged.
- Admix tube between pump and flowmeter not clogged.
- Admix pump OK.

POSSIBLE PROBLEMS

- Water valve fitting clogged.
- Admix valve faulty.

14.

WARNING

Read WARNING on Page 4-107

Is air pressure present at low-flow admix valve, when LOW FLOW ADMIX switch is placed in ON position?

NO → Go to Step 16 of this Fault.

YES ↓

TEST OPTIONS

Audible test.

REASON FOR QUESTION

If air pressure is not present at low-flow admix valve, low-flow admix function will not operate.

WARNING

Air lines may be under extreme pressure. Ensure all personnel wear protective goggles when working around compressed air. Failure to comply may result in serious injury or death to personnel.

AUDIBLE TEST

(1) Close low-flow admix valve drain cock valve, (Para 2-16).

(2) Slowly disconnect air line from low admix valve. Listen for air to escape from air line.

(a) If air is not present, go to Step 16 of this Fault.

(b) If air is present, replace low-flow admix valve, (Para 3-114). Verify repair, go to Step 33 of this Fault.

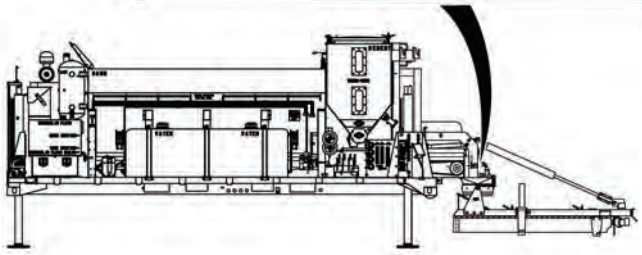

2. ADMIX SYSTEM (LOW-FLOW) DOES NOT OPERATE CORRECTLY (CONT).

KNOWN INFO

- Air lines between low-flow admix air solenoid and admix valve not kinked or damaged.
- Admix system drain cock valves closed.
- ADMIX fuse OK.
- Air pressure OK.
- High-flow admix system OK.
- System control switches operating correctly.
- High admix relay OK.
- Admix pump ground connection OK.
- Control wire harness (orange) wire OK.
- Admix relay ground wire OK.
- Admix relay ground connections OK.
- Control wire harness (blue) wire OK.
- Main wire harness admix pump power (yellow) wire OK.
- Battery equalizer magnetic switch connections OK.
- Engine harness admix pump power (yellow) wire OK.
- Control box 5-pin wire harness (yellow) wire OK.
- Control box 4-pin wire harness (blue) wire OK.
- Admix solution valve and strainer assembly OK.
- Admix strainer OK.
- Admix tube between tank and water valve not clogged.
- Admix tank OK.
- Admix tube between high admix tank and drain valve not clogged.
- Admix tube between admix valve and water valve not clogged.
- Admix flowmeter OK.
- Admix tube between flowmeter and admix valve not clogged.
- Admix tube between pump and flowmeter not clogged.
- Admix pump OK.
- Admix air solenoid OK.

POSSIBLE PROBLEMS

- Admix valve faulty.
- Water valve fitting clogged.

15.

Is water valve low-flow admix fitting clogged?

TEST OPTIONS

Visual inspection.

REASON FOR QUESTION

If water valve low-flow admix fitting is clogged, low-flow admix function will not operate.

NO → Replace low-flow admix valve, (Para 3-114). Verify repair, go to Step 33 of this Fault.

YES → Flush water valve low-flow admix fitting or replace water valve, (Para 3-74). Verify repair, go to Step 33 of this Fault.

VISUAL INSPECTION

(1) Remove low-flow admix valve, (Para 3-114).

(2) Check if admix/water flows freely from low-flow admix valve.

  (a) If admix/water does not flow freely, replace low-flow admix valve, (Para 3-114).

  (b) If admix/water flows freely, flush fitting or replace water valve, (Para 3-74).

(3) Verify repair, go to Step 33 of this Fault.

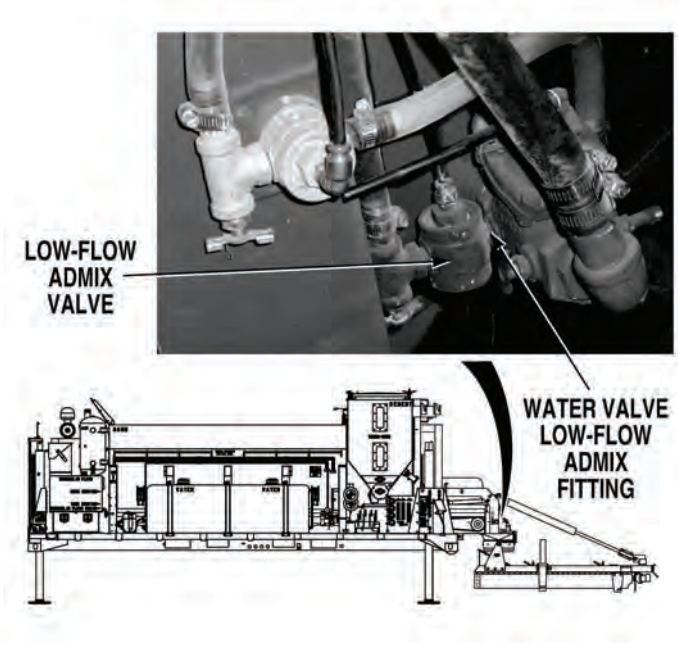

2. ADMIX SYSTEM (LOW-FLOW) DOES NOT OPERATE CORRECTLY (CONT).

KNOWN INFO

- Air lines between low-flow admix air solenoid and admix valve not kinked or damaged.
- Admix system drain cock valves closed.
- ADMIX fuse OK.
- Air pressure OK.
- High-flow admix system OK.
- System control switches operating correctly.
- High admix relay OK.
- Admix pump ground connection OK.
- Control wire harness (orange) wire OK.
- Admix relay ground wire OK.
- Admix relay ground connections OK.
- Control wire harness (blue) wire OK.
- Main wire harness admix pump power (yellow) wire OK.
- Battery equalizer magnetic switch connections OK.
- Engine harness admix pump power (yellow) wire OK.
- Control box 5-pin wire harness (yellow) wire OK.
- Control box 4-pin wire harness (blue) wire OK.
- Admix solution valve and strainer assembly OK.
- Admix strainer OK.
- Admix tube between tank and water valve not clogged.
- Admix tank OK.
- Admix tube between high admix tank and drain valve not clogged.
- Admix tube between admix valve and water valve not clogged.
- Admix flowmeter OK.
- Admix tube between flowmeter and admix valve not clogged.
- Admix tube between pump and flowmeter not clogged.
- Admix pump OK.
- Water valve fitting OK.
- Admix valve OK.

POSSIBLE PROBLEMS

- Admix air solenoid faulty.
- Air line between admix air solenoid and admix valve faulty.

16.

WARNING

Read WARNING on Page 4-111

Is air pressure present at low-flow admix air solenoid when LOW FLOW ADMIX switch is placed in ON position?

NO → Replace low-flow admix air solenoid, (Para 3-64). Verify repair, go to Step 33 of this Fault.

YES → Repair or replace air line between air solenoid and low-flow admix valve, (Para 3-132). Verify repair, go to Step 33 of this Fault.

TEST OPTIONS

Audible test.

REASON FOR QUESTION

If air pressure is not present at low-flow admix air solenoid, low-flow admix function will not operate.

WARNING

Air lines may be under extreme pressure. Ensure all personnel wear protective goggles when working around compressed air. Failure to comply may result in serious injury or death to personnel.

AUDIBLE TEST

(1) Turn LOW FLOW ADMIX switch OFF, (Para 2-1).

(2) Connect air line to low-flow admix valve, (Para 3-132).

(3) Remove panel from hydraulic control valve bank, (Para 3-51).

(4) Turn LOW FLOW ADMIX switch ON, (Para 2-1).

(5) Slowly disconnect air line from low admix air solenoid. Listen for air to escape from air line.

  (a) If air is not present, replace low-flow admix air solenoid, (Para 3-64).

  (b) If air is present, repair or replace air line between low-flow admix air solenoid and low-flow admix valve, (Para 3-132).

(6) Verify repair, go to Step 33 of this Fault.

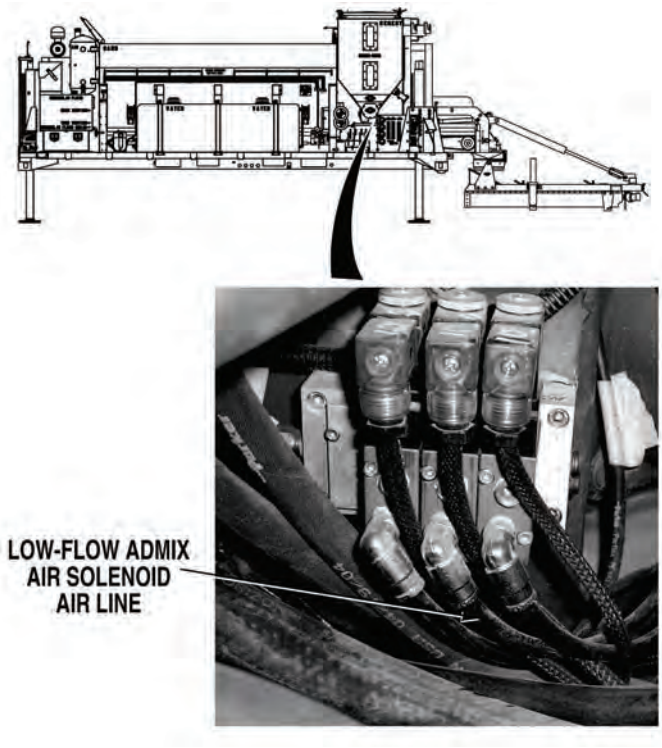

2. ADMIX SYSTEM (LOW-FLOW) DOES NOT OPERATE CORRECTLY (CONT).

KNOWN INFO
Air lines between low-flow admix air solenoid and admix valve not kinked or damaged.
Admix system drain cock valves closed.
ADMIX fuse OK.
Air pressure OK.
High-flow admix system OK.
System control switches operating correctly.
High admix relay OK.
Admix pump ground connection OK.
Control wire harness (orange) wire OK.
Admix relay ground wire OK.
Admix relay ground connections OK.
Control wire harness (blue) wire OK.
Main wire harness admix pump power (yellow) wire OK.
Battery equalizer magnetic switch connections OK.
Engine harness admix pump power (yellow) wire OK.
Control box 5-pin wire harness (yellow) wire OK.
Control box 4-pin wire harness (blue) wire OK.
Admix strainer OK.
Admix tube between tank and water valve not clogged.
Admix tank OK.
Admix tube between high admix tank and drain valve not clogged.
Admix tube between admix valve and water valve not clogged.
Water valve fitting OK.
Admix valve OK.
Admix air solenoid OK.
Air line between admix air solenoid and admix valve OK.

POSSIBLE PROBLEMS
Admix flowmeter faulty.
Admix tube between flowmeter and admix valve clogged.
Admix tube between pump and flowmeter clogged.
Admix pump faulty.
Admix solution valve and strainer assembly faulty.

17.

Does admix/water flow freely when low-flow admix flowmeter lower drain cock valve is open and LOW FLOW ADMIX switch is placed in ON position?

NO → Go to Step 19 of this Fault.

YES ↓

TEST OPTIONS
Operational test.
REASON FOR QUESTION
To further isolate fault.

OPERATIONAL TEST

(1) Close low-flow admix valve drain cock valve, (Para 2-16).

(2) If OFF, turn LOW FLOW ADMIX switch ON, (Para 2-1).

(3) Open low-flow admix flowmeter lower drain cock valve, (Para 2-16).

(4) Check if admix/water flows freely from low-flow admix flowmeter lower drain cock valve.

(a) If admix/water does not flow freely, turn LOW FLOW ADMIX switch OFF, (Para 2-1) and go to Step 19 of this Fault.

(b) If admix/water flows freely, turn LOW FLOW ADMIX switch OFF, (Para 2-1) and go to Step 18 of this Fault.

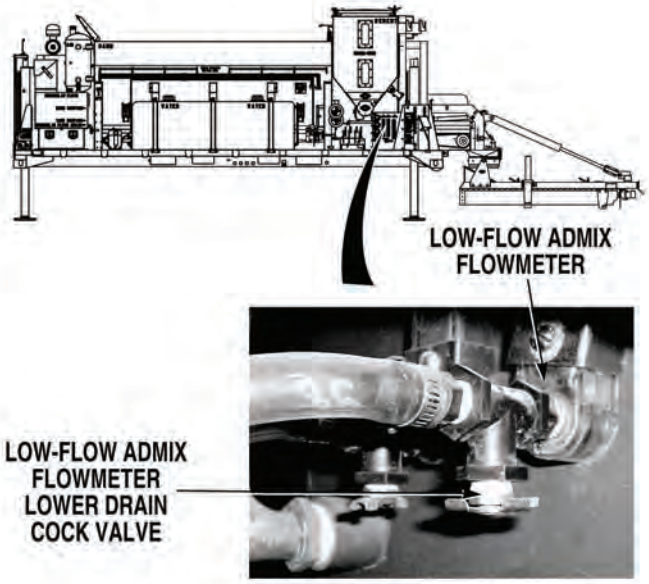

2. ADMIX SYSTEM (LOW-FLOW) DOES NOT OPERATE CORRECTLY (CONT).

KNOWN INFO
Air lines between low-flow admix air solenoid and admix valve not kinked or damaged.
Admix system drain cock valves closed.
ADMIX fuse OK.
Air pressure OK.
High-flow admix system OK.
System control switches operating correctly.
High admix relay OK.
Admix pump ground connection OK.
Control wire harness (orange) wire OK.
Admix relay ground wire OK.
Admix relay ground connections OK.
Control wire harness (blue) wire OK.
Main wire harness admix pump power (yellow) wire OK.
Battery equalizer magnetic switch connections OK.
Engine harness admix pump power (yellow) wire OK.
Control box 5-pin wire harness (yellow) wire OK.
Control box 4-pin wire harness (blue) wire OK.
Admix strainer OK.
Admix tube between tank and water valve not clogged.
Admix tank OK.
Admix tube between high admix tank and drain valve not clogged.
Admix tube between admix valve and water valve not clogged.
Water valve fitting not clogged.
Admix valve OK.
Admix air solenoid OK.
Air line between admix air solenoid and admix valve OK.
Admix tube between pump and flowmeter not clogged.
Admix pump OK.
Admix solution valve and strainer assembly OK.

POSSIBLE PROBLEMS
Admix flowmeter faulty.
Admix tube between flowmeter and admix valve clogged.

18.

Does admix/water flow freely when low-flow admix flowmeter upper drain cock valve is open and LOW FLOW ADMIX switch is placed in ON position?

NO → Replace low-flow admix flowmeter, (Para 3-62). Verify repair, go to Step 33 of this Fault.

YES → Repair or replace admix tube between low-flow admix flowmeter and admix valve, (Para 3-130). Verify repair, go to Step 33 of this Fault.

TEST OPTIONS
Operational test.
REASON FOR QUESTION
If admix/water flows freely, admix tube between low-flow admix flowmeter and admix valve is faulty. If not, low-flow admix flowmeter is faulty.

OPERATIONAL TEST

(1) Close low-flow admix flowmeter lower drain cock valve, (Para 2-16).

(2) Open low-flow admix flowmeter upper drain cock valve, (Para 2-16).

(3) Check if admix/water flows freely from low-flow admix flowmeter upper drain cock valve.

(a) If admix/water does not flow freely, turn LOW FLOW ADMIX switch OFF and flush or replace low-flow admix flowmeter, (Para 3-62).

(b) If admix/water flows freely, turn LOW FLOW ADMIX switch OFF and flush or replace admix tube between low-flow admix flowmeter and low-flow admix valve, (Para 3-130).

(4) Verify repair, go to Step 33 of this Fault.

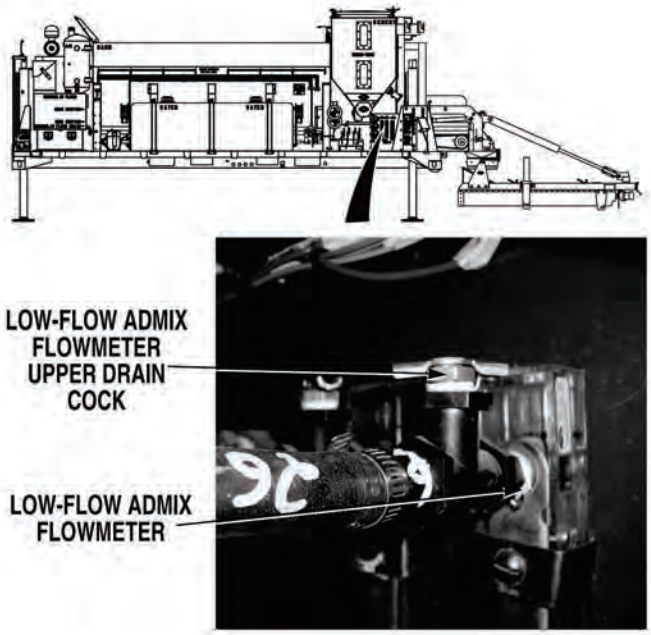

2. ADMIX SYSTEM (LOW-FLOW) DOES NOT OPERATE CORRECTLY (CONT).

KNOWN INFO
Air lines between low-flow admix air solenoid and admix valve not kinked or damaged.
Admix system drain cock valves closed.
ADMIX fuse OK.
Air pressure OK.
High-flow admix system OK.
System control switches operating correctly.
High admix relay OK.
Admix pump ground connection OK.
Control wire harness (orange) wire OK.
Admix relay ground wire OK.
Admix relay ground connections OK.
Control wire harness (blue) wire OK.
Main wire harness admix pump power (yellow) wire OK.
Battery equalizer magnetic switch connections OK.
Engine harness admix pump power (yellow) wire OK.
Control box 5-pin wire harness (yellow) wire OK.
Control box 4-pin wire harness (blue) wire OK.
Admix strainer OK.
Admix tube between tank and water valve not clogged.
Admix tank not clogged.
Admix tube between high admix tank and drain valve not clogged.
Admix tube between admix valve and water valve not clogged.
Water valve fitting not clogged.
Admix valve OK.
Admix air solenoid OK.
Air line between admix air solenoid and admix valve OK.
Admix flowmeter OK.
Admix tube between flowmeter and admix valve OK.

POSSIBLE PROBLEMS
Admix tube between pump and flowmeter clogged.
Admix pump faulty.
Admix solution valve and strainer assembly faulty.

19.

Does admix/water flow freely when admix tube is disconnected from output of low-flow admix pump and LOW FLOW ADMIX switch is placed in ON position?

NO → Go to Step 20 of this Fault.

YES → Repair or replace admix tube between low-flow admix pump and low-flow admix flowmeter, (Para 3-130). Verify repair, go to Step 33 of this Fault.

TEST OPTIONS
Operational test.
REASON FOR QUESTION
If admix/water flows freely, admix tube between low-flow admix pump and low-flow admix flowmeter is faulty.

OPERATIONAL TEST

(1) Close low-flow admix flowmeter lower drain cock valve, (Para 2-16).

(2) Remove admix cover, (Para 3-88).

(3) Disconnect admix tube from output of low-flow admix pump, (Para 3-130).

(4) Turn LOW FLOW ADMIX switch ON, (Para 2-1).

(5) Check if admix/water flows freely from output of low-flow admix pump.

(a) If admix/water does not flow freely, turn LOW FLOW ADMIX switch OFF and go to Step 20 of this Fault.

(b) If admix/water flows freely, turn LOW FLOW ADMIX switch OFF and flush or replace admix tube between low-flow admix pump and low-flow admix flowmeter, (Para 3-130). Verify repair, go to Step 33 of this Fault.

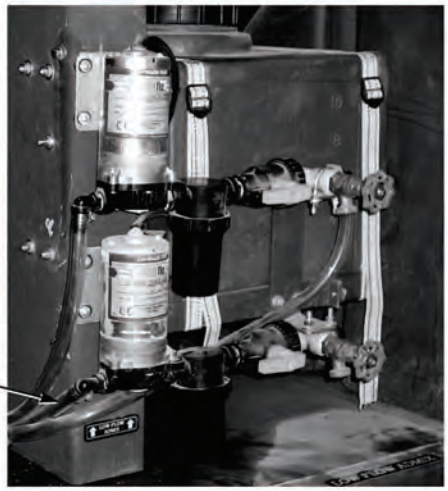

2. ADMIX SYSTEM (LOW-FLOW) DOES NOT OPERATE CORRECTLY (CONT).

KNOWN INFO
Air lines between low-flow admix air solenoid and admix valve not kinked or damaged.
Admix system drain cock valves closed.
ADMIX fuse OK.
Air pressure OK.
High-flow admix system OK.
System control switches operating correctly.
High admix relay OK.
Admix pump ground connection OK.
Control wire harness (orange) wire OK.
Admix relay ground wire OK.
Admix relay ground connections OK.
Control wire harness (blue) wire OK.
Main wire harness admix pump power (yellow) wire OK.
Battery equalizer magnetic switch connections OK.
Engine harness admix pump power (yellow) wire OK.
Control box 5-pin wire harness (yellow) wire OK.
Control box 4-pin wire harness (blue) wire OK.
Admix strainer OK.
Admix tube between tank and water valve not clogged.
Admix tank OK.
Admix tube between low-flow admix tank and drain valve not clogged.
Admix tube between admix valve and water valve not clogged.
Water valve fitting OK.
Admix valve OK.
Admix air solenoid OK.
Air line between admix air solenoid and admix valve OK.
Admix flowmeter OK.
Admix tube between flowmeter and admix valve OK.
Admix tube between pump and flowmeter not clogged.

POSSIBLE PROBLEMS
Admix pump faulty.
Admix solution valve and strainer assembly faulty.

20.

Does low-flow admix system operate correctly after replacing low-flow admix pump?

NO → Replace low-flow admix solution valve and strainer assembly, (Para 3-45). Verify repair, go to Step 33 of this Fault.

YES → Fault corrected. Verify repair, go to Step 33 of this Fault.

TEST OPTIONS
Operational test.

REASON FOR QUESTION
If low-flow admix system operates after replacing low-flow admix pump, pump was faulty. If not, low-flow admix solution valve and/or strainer assembly are faulty.

OPERATIONAL TEST

(1) Turn 12 VOLT switch OFF, (Para 2-1).

(2) Turn IGNITION SWITCH OFF, (Para 2-1).

(3) Replace low-flow admix pump, (Para 3-45).

(4) Set up low-flow admix system for flush operation, (Para 2-16).

(5) Check if low-flow admix system operates correctly by observing flow at water valve.

(a) If low-flow admix system does not operate correctly, replace solution valve and low-flow admix strainer assembly, (Para 3-45). Verify repair, go to Step 33 of this Fault.

(b) If low-flow admix system does operate correctly, fault corrected. Verify repair, go to Step 33 of this Fault.

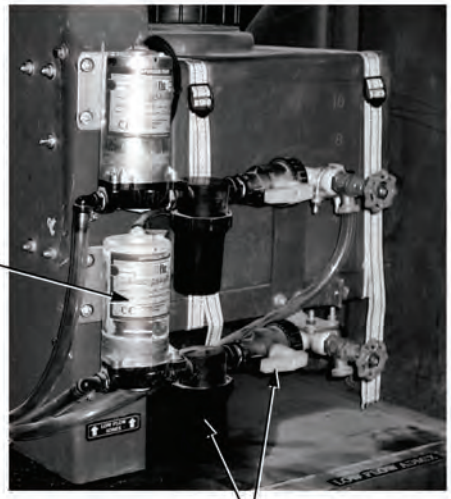

2. ADMIX SYSTEM (LOW-FLOW) DOES NOT OPERATE CORRECTLY (CONT).

KNOWN INFO
Air lines between low-flow admix air solenoid and admix valve not kinked or damaged.
Admix system drain cock valves closed.
ADMIX fuse OK.
Air pressure OK.
High-flow admix system OK.
System control switches operating correctly.
Admix strainer OK.
Admix tube between tank and water valve OK.
Admix tube between admix valve and water valve not clogged.
Water valve fitting not clogged.
Admix valve OK.
Admix air solenoid OK.
Air line between admix air solenoid and admix valve OK.
Admix flowmeter OK.
Admix tube between flowmeter and admix valve OK.
Admix tube between pump and flowmeter not clogged.
Admix solution valve and strainer assembly OK.
Admix tank OK.
Admix tube between high admix tank and drain valve not clogged.
Admix relay ground connections OK.
Control wire harness (blue) wire OK.
Main wire harness admix pump power (yellow) wire OK.
Battery equalizer magnetic switch connections OK.
Engine harness admix pump power (yellow) wire OK.
Control box 5-pin wire harness (yellow) wire OK.
Control box 4-pin wire harness (blue) wire OK.

POSSIBLE PROBLEMS
Admix pump faulty.
Low-flow admix relay faulty.
Admix pump ground connection faulty.
Control wire harness (orange) wire faulty.
Admix relay ground wire faulty.

21.

Does high-flow admix pump operate when HIGH FLOW ADMIX switch is placed in ON position?

NO → Go to Step 27 of this Fault.

YES ↓

TEST OPTIONS
Operational test.
REASON FOR QUESTION
To further isolate fault.

OPERATIONAL TEST
(1) Turn LOW FLOW ADMIX switch OFF, (Para 2-1). (2) Turn HIGH FLOW ADMIX switch ON, (Para 2-1). (a) If high-flow admix pump does not operate, go to Step 27 of this Fault. (b) If high-flow admix pump operates, go to Step 22 of this Fault.

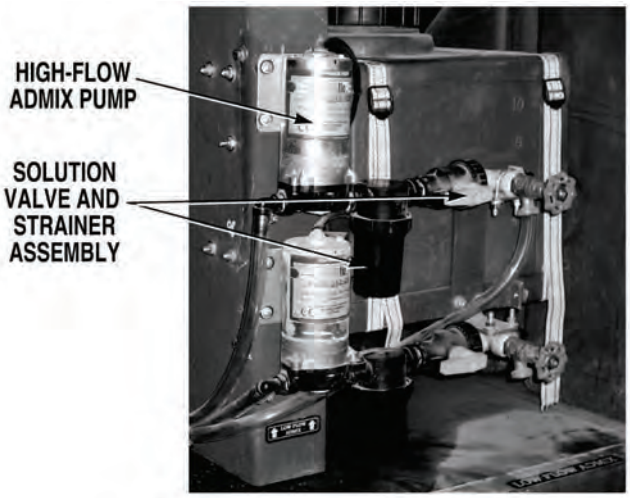

2. ADMIX SYSTEM (LOW-FLOW) DOES NOT OPERATE CORRECTLY (CONT).

KNOWN INFO
Air lines between low-flow admix air solenoid and admix valve not kinked or damaged.
Admix system drain cock valves closed.
ADMIX fuse OK.
Air pressure OK.
High-flow admix system OK.
System control switches operating correctly.
Admix strainer OK.
Admix tube between tank and water valve not kinked or damaged.
Admix tube between admix valve and water valve not clogged.
Water valve fitting not clogged.
Admix valve OK.
Admix air solenoid OK.
Air line between admix air solenoid and admix valve OK.
Admix flowmeter OK.
Admix tube between flowmeter and admix valve not clogged.
Admix tube between pump and flowmeter not clogged.
Admix solution valve and strainer assembly OK.
Admix tank not clogged.
Admix tube between high admix tank and drain valve not clogged.
Admix relay ground connections OK.
Control wire harness (blue) wire OK.
Main wire harness admix pump power (yellow) wire OK.
Battery equalizer magnetic switch connections OK.
Engine harness admix pump power (yellow) wire OK.
Control box 5-pin wire harness (yellow) wire OK.
Control box 4-pin wire harness (blue) wire OK.

POSSIBLE PROBLEMS
Admix pump faulty.
Low-flow admix relay faulty.
Admix pump ground connection faulty.
Control wire harness (orange) wire faulty.
Admix relay ground wire faulty.

22.

Is low-flow admix relay energized when LOW FLOW ADMIX switch is placed in ON position?

NO → Go to Step 25 of this Fault.

YES ↓

TEST OPTIONS
Operational test.
REASON FOR QUESTION
To further isolate fault.

OPERATIONAL TEST

(1) Turn HIGH FLOW ADMIX switch OFF, (Para 2-1).

(2) While an assistant turns LOW FLOW ADMIX switch ON, (Para 2-1), listen for low-flow admix relay to energize. Relay will make a clicking sound when energizing.

(a) If low-flow admix relay does not energize, go to Step 25 of this Fault.

(b) If low-flow admix relay energizes, go to Step 23 of this Fault.

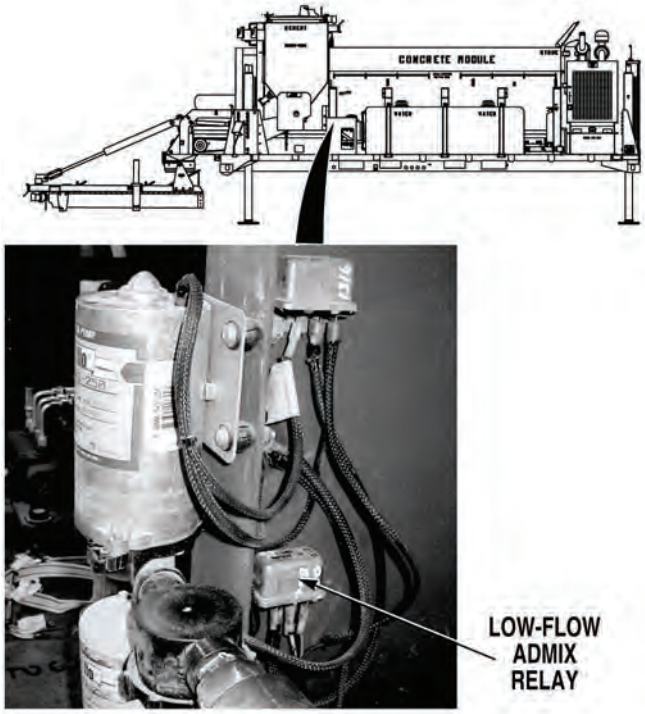

2. ADMIX SYSTEM (LOW-FLOW) DOES NOT OPERATE CORRECTLY (CONT).

KNOWN INFO
Air lines between low-flow admix air solenoid and admix valve not kinked or damaged.
Admix system drain cock valves closed.
ADMIX fuse OK.
Air pressure OK.
High-flow admix system OK.
System control switches operating correctly.
Admix strainer OK.
Admix tube between tank and water valve not clogged.
Admix tube between admix valve and water valve not clogged.
Water valve fitting OK.
Admix valve OK.
Admix air solenoid OK.
Air line between admix air solenoid and admix valve OK.
Admix flowmeter OK.
Admix tube between flowmeter and admix valve OK.
Admix tube between pump and flowmeter not clogged.
Admix solution valve and strainer assembly OK.
Admix tank OK.
Admix tube between high admix tank and drain valve not clogged.
Admix relay ground connections OK.
Control wire harness (blue) wire OK.
Main wire harness admix pump power (yellow) wire OK.
Battery equalizer magnetic switch connections OK.
Engine harness admix pump power (yellow) wire OK.
Control box 5-pin wire harness (yellow) wire OK.
Control box 4-pin wire harness (blue) wire OK.
Admix pump ground connection OK.
Control wire harness (orange) wire OK.
Admix relay ground wire OK.

POSSIBLE PROBLEMS
Admix pump faulty.
Low-flow admix relay faulty.

23.

WARNING

Read WARNING on Page 4-125

Are 10 to 14 VDC measured between low-flow admix relay terminal 3 and a known good ground when LOW FLOW ADMIX switch is ON?

NO → Replace low-flow admix relay, (Para 3-46). Verify repair, go to Step 33 of this Fault.

YES ↓

TEST OPTIONS
Voltage test.
REASON FOR QUESTION
If 10 to 14 VDC are not present, low-flow admix relay is faulty.

WARNING

Remove all jewelry such as rings, dog tags, bracelets, etc. If jewelry or tools contact positive electrical circuits, a direct short may result. Damage to equipment, injury or death to personnel may occur.

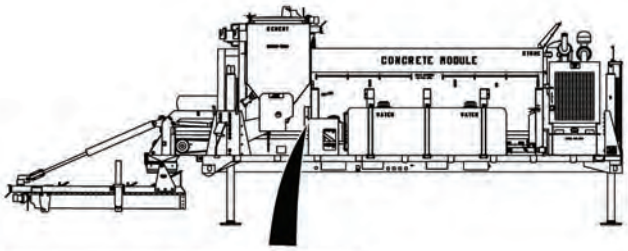

VOLTAGE TEST

(1) Turn LOW FLOW ADMIX switch ON, (Para 2-1).

(2) Connect positive (+) multimeter lead to low-flow admix relay, terminal 3.

(3) Connect negative (-) multimeter lead to a known good ground.

(a) If 10 to 14 VDC are not present, replace low-flow admix relay, (Para 3-46). Verify repair, go to Step 33 of this Fault.

(b) If 10 to 14 VDC are present, go to Step 24 of this Fault.

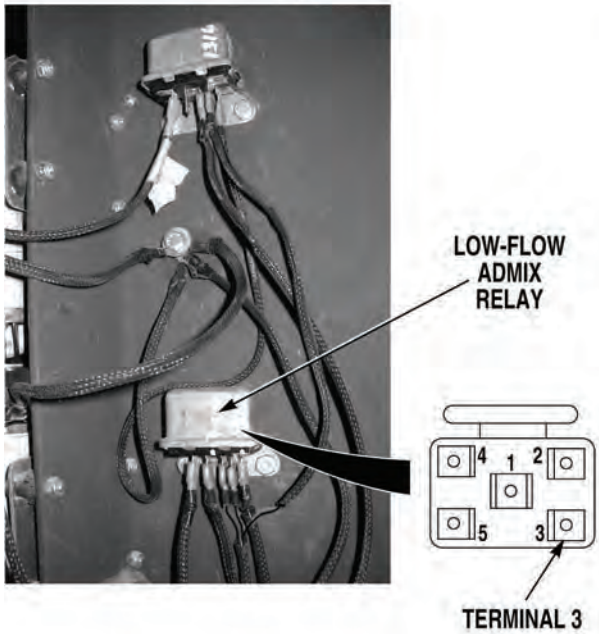

2. ADMIX SYSTEM (LOW-FLOW) DOES NOT OPERATE CORRECTLY (CONT).

KNOWN INFO

- Air lines between low-flow admix air solenoid and admix valve not kinked or damaged.
- Admix system drain cock valves closed.
- ADMIX fuse OK.
- Air pressure OK.
- High-flow admix system OK.
- System control switches operating correctly.
- Admix strainer OK.
- Admix tube between tank and water valve not clogged.
- Admix tube between admix valve and water valve not clogged.
- Water valve fitting OK.
- Admix valve OK.
- Admix air solenoid OK.
- Air line between admix air solenoid and admix valve OK.
- Admix flowmeter OK.
- Admix tube between flowmeter and admix valve OK.
- Admix tube between pump and flowmeter not clogged.
- Admix solution valve and strainer assembly OK.
- Admix tank OK.
- Admix tube between high admix tank and drain valve not clogged.
- Admix relay ground connections OK.
- Control wire harness (blue) wire OK.
- Main wire harness admix pump power (yellow) wire OK.
- Battery equalizer magnetic switch connections OK.
- Engine harness admix pump power (yellow) wire OK.
- Control box 5-pin wire harness (yellow) wire OK.
- Control box 4-pin wire harness (blue) wire OK.
- High admix relay OK.
- Admix relay ground wire OK.
- Control wire harness (orange) wire OK.

POSSIBLE PROBLEMS

- Admix pump faulty.
- Admix pump ground connection faulty.

24.

WARNING

Read WARNING on Page 4-127

Is low-flow admix pump ground connection secure and free from damage?

NO → Repair ground wire connection, (Para 3-141) or replace low-flow admix pump, (Para 3-45). Verify repair, go to Step 33 of this Fault.

YES → Replace low-flow admix pump, (Para 3-45). Verify repair, go to Step 33 of this Fault.

TEST OPTIONS

Visual inspection.

REASON FOR QUESTION

Low-flow admix pump would not operate if ground connection or pump is faulty.

WARNING

Remove all jewelry such as rings, dog tags, bracelets, etc. If jewelry or tools contact positive electrical circuits, a direct short may result. Damage to equipment, injury or death to personnel may occur.

VISUAL INSPECTION

(1) Turn LOW FLOW ADMIX switch OFF, (Para 2-1).

(2) Check if low-flow admix pump ground connection is secure and free from damage.

(a) If ground connection is not secure and free from damage, repair ground connection, (Para 3-141) or replace high admix pump, (Para 3-45).

(b) If ground connection is secure and free from damage, replace low-flow admix pump, (Para 3-45).

(3) Verify repair, go to Step 33 of this Fault.

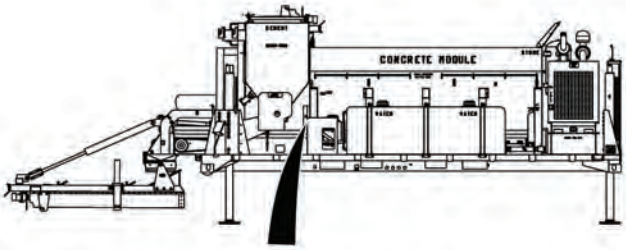

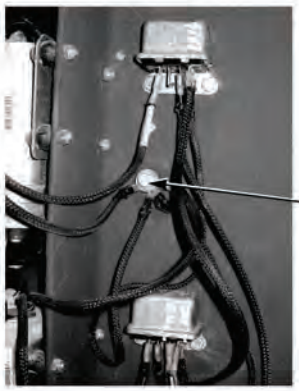

2. ADMIX SYSTEM (LOW-FLOW) DOES NOT OPERATE CORRECTLY (CONT).

KNOWN INFO

- Air lines between low-flow admix air solenoid and admix valve not kinked or damaged.
- Admix system drain cock valves closed.
- ADMIX fuse OK.
- Air pressure OK.
- High-flow admix system OK.
- System control switches operating correctly.
- Admix strainer OK.
- Admix tube between tank and water valve not clogged.
- Admix tube between admix valve and water valve not clogged.
- Water valve fitting OK.
- Admix valve OK.
- Admix air solenoid OK.
- Air line between admix air solenoid and admix valve OK.
- Admix flowmeter OK.
- Admix tube between flowmeter and admix valve OK.
- Admix tube between pump and flowmeter not clogged.
- Admix solution valve and strainer assembly OK.
- Admix relay ground connections OK.
- Control wire harness (blue) wire OK.
- Main wire harness admix pump power (yellow) wire OK.
- Battery equalizer magnetic switch connections OK.
- Engine harness admix pump power (yellow) wire OK.
- Control box 5-pin wire harness (yellow) wire OK.
- Control box 4-pin wire harness (blue) wire OK.
- Admix pump OK.
- Admix tank OK.
- Admix tube between high admix tank and drain valve not clogged.
- Admix pump ground connection OK.

POSSIBLE PROBLEMS

- Low-flow admix relay faulty.
- Control wire harness (orange) wire faulty.
- Admix relay ground wire faulty.

25.

WARNING

Read WARNING on Page 4-129

Is continuity measured across control harness low-flow admix pump relay control (orange) wire from low-flow admix switch to relay, terminal 4?

NO → Repair control (orange) wire, (Para 3-141) or replace control wire harness, (Para 3-135). Verify repair, go to Step 33 of this Fault.

YES ↓

TEST OPTIONS

Continuity test.

REASON FOR QUESTION

If continuity is not measured, low-flow admix relay control (yellow) wire is faulty.

WARNING

Remove all jewelry such as rings, dog tags, bracelets, etc. If jewelry or tools contact positive electrical circuits, a direct short may result. Damage to equipment, injury or death to personnel may occur.

CONTINUITY TEST

(1) Turn LOW FLOW ADMIX switch OFF, (Para 2-1).

(2) Turn 12 VOLT switch OFF, (Para 2-1).

(3) Turn IGNITION SWITCH OFF, (Para 2-1).

(4) Disconnect batteries, (Para 3-10).

(5) Set multimeter select switch to ohms.

(6) Connect jumper wire between high admix relay, terminal 4 and a known good ground.

(7) Connect positive (+) multimeter lead to control (orange) wire at LOW FLOW ADMIX switch.

(8) Connect negative (-) multimeter lead to a known good ground.

(a) If continuity is not measured, repair control (orange) wire, (Para 3-141) or replace control wire harness, (Para 3-135). Verify repair, go to Step 33 of this Fault.

(b) If continuity is measured, go to Step 26 of this Fault.

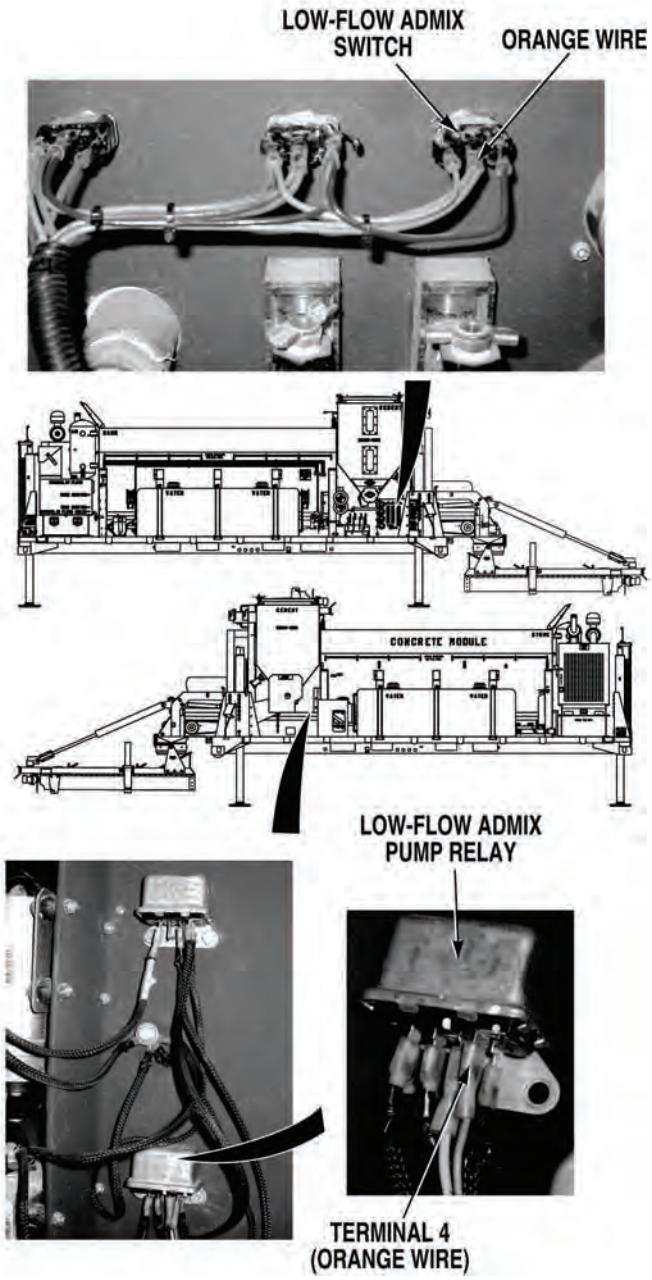

2. ADMIX SYSTEM (LOW-FLOW) DOES NOT OPERATE CORRECTLY (CONT).

KNOWN INFO
Air lines between low-flow admix air solenoid and admix valve not kinked or damaged.
Admix system drain cock valves closed.
ADMIX fuse OK.
Air pressure OK.
High-flow admix system OK.
System control switches operating correctly.
Admix strainer OK.
Admix tube between tank and water valve not clogged.
Admix tube between admix valve and water valve not clogged.
Water valve fitting OK.
Admix valve OK.
Admix air solenoid OK.
Air line between admix air solenoid and admix valve OK.
Admix flowmeter OK.
Admix tube between flowmeter and admix valve OK.
Admix tube between pump and flowmeter not clogged.
Admix solution valve and strainer assembly OK.
Admix relay ground connections OK.
Control wire harness (blue) wire OK.
Main wire harness admix pump power (yellow) wire OK.
Battery equalizer magnetic switch connections OK.
Engine harness admix pump power (yellow) wire OK.
Control box 5-pin wire harness (yellow) wire OK.
Control box 4-pin wire harness (blue) wire OK.
Admix pump OK.
Admix tank OK.
Admix tube between high admix tank and drain valve not clogged.
Admix pump ground connection OK.
Control wire harness (orange) wire OK.

POSSIBLE PROBLEMS
Low-flow admix relay faulty.
Admix relay ground wire faulty.

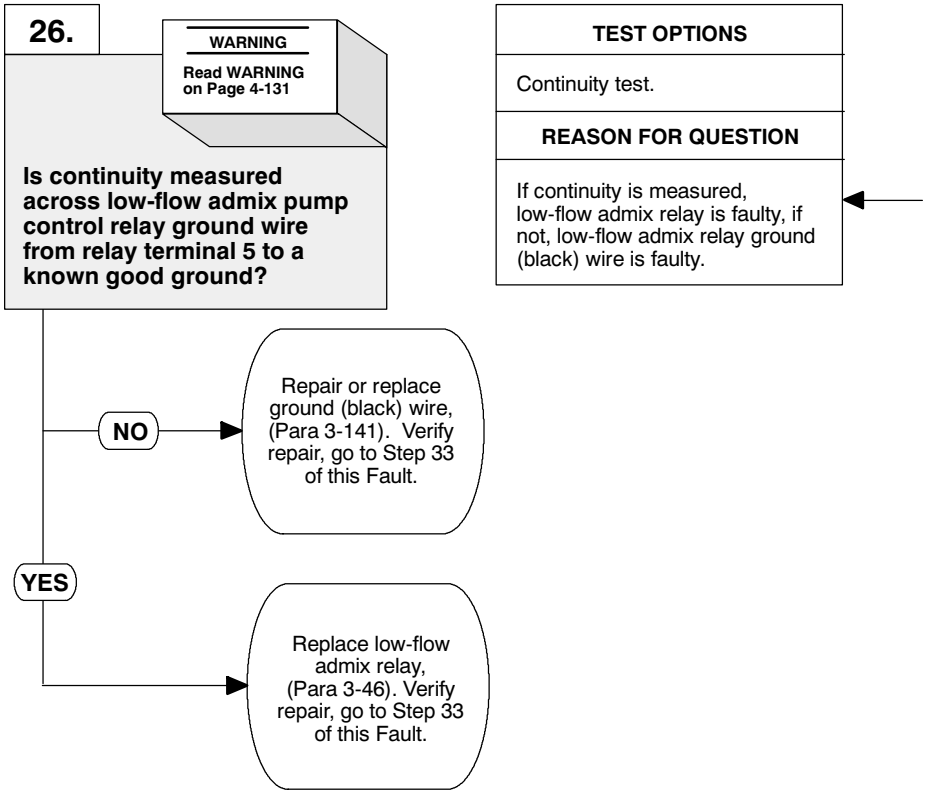

WARNING

Remove all jewelry such as rings, dog tags, bracelets, etc. If jewelry or tools contact positive electrical circuits, a direct short may result. Damage to equipment, injury or death to personnel may occur.

CONTINUITY TEST

(1) Set multimeter select switch to ohms.

(2) Connect positive (+) multimeter lead to ground wire at low-flow admix relay, terminal 5.

(3) Connect negative (-) multimeter lead to a known good ground.

(a) If continuity is not measured, repair or replace ground wire, (Para 3-141) or replace control wire harness, (Para 3-135).

(b) If continuity is measured, replace low-flow admix pump relay, (Para 3-46).

(4) Verify repair, go to Step 33 of this Fault.

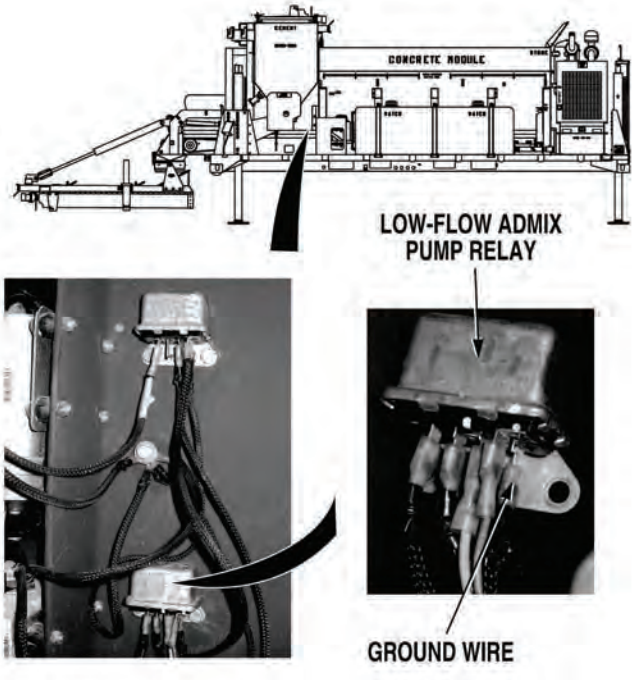

2. ADMIX SYSTEM (LOW-FLOW) DOES NOT OPERATE CORRECTLY (CONT).

KNOWN INFO

- Air lines between low-flow admix air solenoid and admix valve not kinked or damaged.
- Admix system drain cock valves closed.
- ADMIX fuse OK.
- Air pressure OK.
- High-flow admix system OK.
- System control switches operating correctly.
- Admix strainer OK.
- Admix tube between tank and water valve OK.
- Admix tube between admix valve and water valve not clogged.
- Water valve fitting OK.
- Admix valve OK.
- Admix air solenoid OK.
- Air line between admix air solenoid and admix valve OK.
- Admix flowmeter OK.
- Admix tube between flowmeter and admix valve OK.
- Admix tube between pump and flowmeter not clogged.
- Admix solution valve and strainer assembly OK.
- Admix relay ground connections OK.
- Admix pump OK.
- Admix tank OK.
- Admix tube between high admix tank and drain valve not clogged.
- High admix relay OK.
- Admix pump ground connection OK.
- Control wire harness (orange) wire OK.

POSSIBLE PROBLEMS

- Control wire harness (blue) wire faulty.
- Control box 5-pin wire harness (yellow) wire faulty.
- Main wire harness admix pump power (yellow) wire faulty.
- Admix relay ground wire faulty.
- Control box 4-pin wire harness (blue) wire faulty.
- Battery equalizer magnetic switch connections loose or corroded.
- Engine harness admix pump power (yellow) wire faulty.

27.

WARNING

Read WARNING on Page 4-133

Are 10 to 14 VDC measured between control box harness, 4-pin connector, terminal B, and a known good ground when 12 VOLT switch is in ON position?

NO → Go to Step 29 of this Fault.

YES ↓

TEST OPTIONS

Voltage test.

REASON FOR QUESTION

To further isolate fault.

WARNING

Remove all jewelry such as rings, dog tags, bracelets, etc. If jewelry or tools contact positive electrical circuits, a direct short may result. Damage to equipment, injury or death to personnel may occur.

VOLTAGE TEST

(1) Disconnect batteries, (Para 3-10).

(2) Disconnect control box 4-pin wire harness connector, (Para 3-139).

(3) Connect batteries, (Para 3-10).

(4) Turn IGNITION SWITCH ON, (Para 2-1).

(5) Turn 12 VOLT switch ON, (Para 2-1).

(6) Connect positive (+) multimeter lead to control box 4-pin wire harness connector, terminal B.

(7) Connect negative (-) multimeter lead to a known good ground.

(a) If 10 to 14 VDC are not present, go to Step 29 of this Fault.

(b) If 10 to 14 VDC are present, go to Step 28 of this Fault.

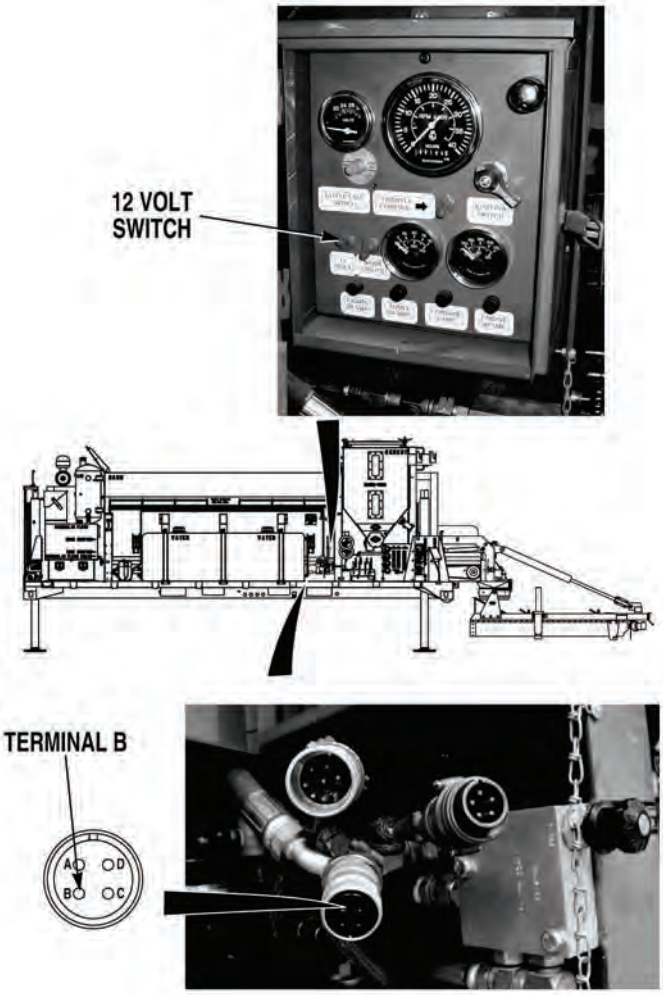

2. ADMIX SYSTEM (LOW-FLOW) DOES NOT OPERATE CORRECTLY (CONT).

KNOWN INFO

- Air lines between low-flow admix air solenoid and admix valve not kinked or damaged.
- Admix system drain cock valves closed.
- ADMIX fuse OK.
- Air pressure OK.
- High-flow admix system OK.
- System control switches operating correctly.
- Admix strainer OK.
- Admix tube between tank and water valve not clogged.
- Admix tube between admix valve and water valve not clogged.
- Water valve fitting OK.
- Admix valve OK.
- Admix air solenoid OK.
- Air line between admix air solenoid and admix valve OK.
- Admix flowmeter OK.
- Admix tube between flowmeter and admix valve OK.
- Admix tube between pump and flowmeter not clogged.
- Admix solution valve and strainer assembly OK.
- Admix pump OK.
- High admix relay OK.
- Admix pump ground connection OK.
- Control wire harness (orange) wire OK.
- Admix relay ground wire OK.
- Main wire harness admix pump power (yellow) wire OK.
- Control box 5-pin wire harness (yellow) wire OK.
- Control box 4-pin wire harness (blue) wire OK.
- Battery equalizer magnetic switch connections OK.
- Engine harness admix pump power (yellow) wire OK.
- Admix tank OK.
- Admix tube between high admix tank and drain valve not clogged.

POSSIBLE PROBLEMS

- Admix relay ground connections faulty.
- Control wire harness (blue) wire faulty.

28.

WARNING

Read WARNING on Page 4-135

Are admix relay ground wire connections secure and free from damage?

NO → Repair control harness ground connection, (Para 3-141). Verify repair, go to Step 33 of this Fault.

YES → Repair ground wire, (Para 3-141) or replace control wire harness, (Para 3-135). Verify repair, go to Step 33 of this Fault.

TEST OPTIONS

Visual inspection.

REASON FOR QUESTION

If relay ground wire connections are not secure and free from damage, low-flow admix system will not operate.

WARNING

Remove jewelry such as rings, dog tags, bracelets, etc. If jewelry or tools contact positive electrical circuits, a direct short may result. Damage to equipment, injury or death to personnel may occur.

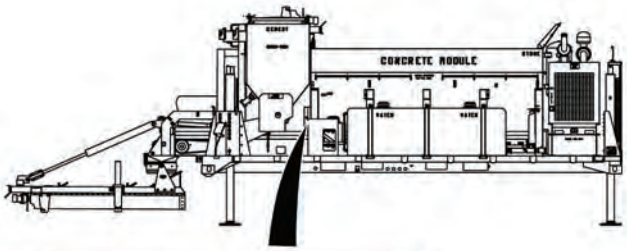

VISUAL INSPECTION

(1) Turn 12 VOLT switch OFF, (Para 2-1).

(2) Turn IGNITION SWITCH OFF, (Para 2-1).

(3) Check if low-flow admix relay ground connections are secure and free from damage.

(a) If ground connections are not secure and free from damage, repair low-flow admix relay ground connection, (Para 3-46).

(b) If ground connections are secure, repair ground wire, (Para 3-141) or replace control wire harness, (Para 3-135).

(4) Verify repair, go to Step 33 of this Fault.

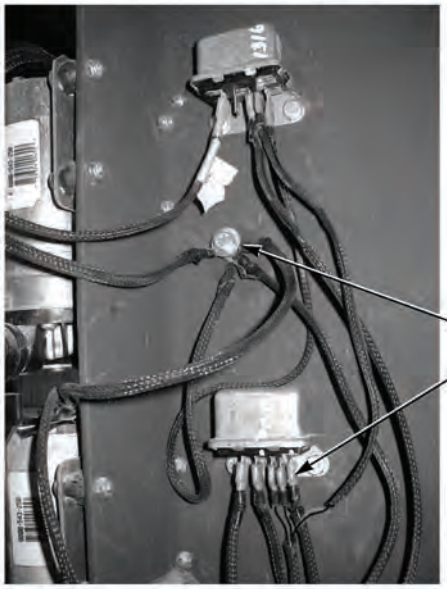

2. ADMIX SYSTEM (LOW-FLOW) DOES NOT OPERATE CORRECTLY (CONT).

KNOWN INFO

- Air lines between low-flow admix air solenoid and admix valve not kinked or damaged.
- Admix system drain cock valves closed.
- ADMIX fuse OK.
- Air pressure OK.
- High-flow admix system OK.
- System control switches operating correctly.
- Admix strainer OK.
- Admix tube between tank and water valve OK.
- Admix tube between admix valve and water valve not clogged.
- Water valve fitting OK.
- Admix valve OK.
- Admix air solenoid OK.
- Air line between admix air solenoid and admix valve OK.
- Admix flowmeter OK.
- Admix tube between flowmeter and admix valve OK.
- Admix tube between pump and flowmeter not clogged.
- Admix solution valve and strainer assembly OK.
- Admix pump OK.
- Admix tank OK.
- Admix tube between high admix tank and drain valve not clogged.
- High admix relay OK.
- Admix pump ground connection OK.
- Control wire harness (orange) wire OK.
- Admix relay ground wire OK.
- Admix relay ground connections OK.
- Control wire harness (blue) wire OK.

POSSIBLE PROBLEMS

- Main wire harness admix pump power (yellow) wire faulty.
- Battery equalizer magnetic switch connections faulty.
- Engine harness admix pump power (yellow) wire faulty.
- Control box 5-pin wire harness (yellow) wire faulty.
- Control box 4-pin wire harness (blue) wire faulty.

29.

WARNING

Read WARNING on Page 4-137

Is continuity measured across main wire harness admix pump power (yellow) wire from engine connector, terminal G to control box 5-pin wire harness connector, terminal E?

NO → Repair power (yellow) wire, (Para 3-141) or replace main wire harness, (Para 3-134). Verify repair, go to Step 33 of this Fault.

YES ↓

TEST OPTIONS

Continuity test.

REASON FOR QUESTION

If continuity is not measured, main wire harness admix pump power (yellow) wire is faulty.

WARNING

Remove all jewelry such as rings, dog tags, bracelets, etc. If jewelry or tools contact positive electrical circuits, a direct short may result. Damage to equipment, injury or death to personnel may occur.

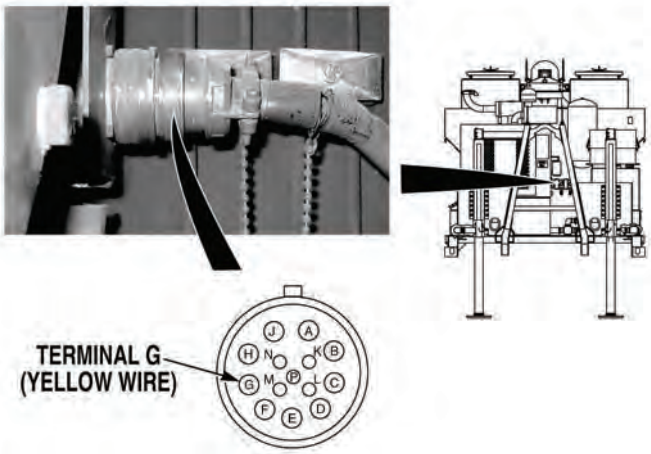

CONTINUITY TEST

(1) Disconnect batteries, (Para 3-10).

(2) Disconnect main wire harness, at control box 5-pin wire harness connector, (Para 3-134).

(3) Disconnect main wire harness, at engine harness connector, (Para 3-134).

(4) Set multimeter select switch to ohms.

(5) Connect jumperwire between main wire harness power (yellow) wire, engine harness connector, terminal G, and a known good ground.

(6) Connect positive (+) multimeter lead to main wire harness, control box 5-pin wire harness connector, (Para 3-134), terminal E.

(7) Connect negative (-) multimeter lead to a known good ground.

(a) If continuity is not measured, repair admix pump power (yellow) wire, (Para 3-141) or replace main wire harness, (Para 3-134). Verify repair, go to Step 33 of this Fault.

(b) If continuity is measured, go to Step 30 of this Fault.

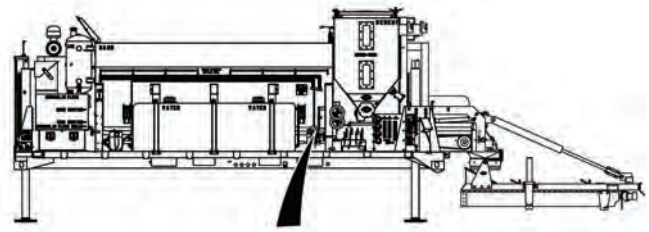

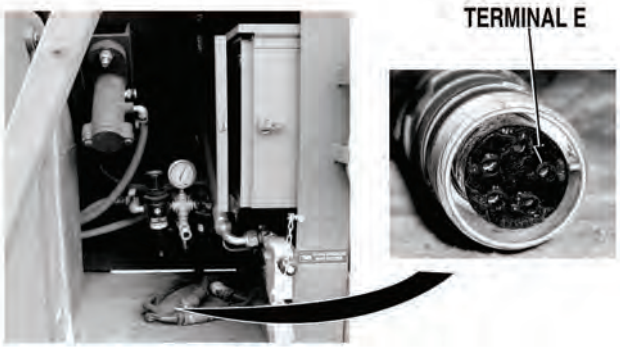

2. ADMIX SYSTEM (LOW-FLOW) DOES NOT OPERATE CORRECTLY (CONT).

KNOWN INFO
Air lines between low-flow admix air solenoid and admix valve not kinked or damaged.
Admix system drain cock valves closed.
ADMIX fuse OK.
Air pressure OK.
High-flow admix system OK.
System control switches operating correctly.
Admix strainer OK.
Admix tube between tank and water valve OK.
Admix tube between admix valve and water valve not clogged.
Water valve fitting OK.
Admix valve OK.
Admix air solenoid OK.
Air line between admix air solenoid and admix valve OK.
Admix flowmeter OK.
Admix tube between flowmeter and admix valve OK.
Admix tube between pump and flowmeter not clogged.
Admix solution valve and strainer assembly OK.
Admix pump OK.
Admix tank OK.
Admix tube between high admix tank and drain valve not clogged.
High admix relay OK.
Admix pump ground connection OK.
Control wire harness (orange) wire OK.
Admix relay ground wire OK.
Admix relay ground connections OK.
Control wire harness (blue) wire OK.
Main wire harness admix pump power (yellow) wire OK.

POSSIBLE PROBLEMS
Battery equalizer magnetic switch connections faulty.
Engine harness admix pump power (yellow) wire faulty.
Control box 5-pin wire harness (yellow) wire faulty.
Control box 4-pin wire harness (blue) wire faulty.

WARNING

Read WARNING on Page 4-139

30.

Is continuity measured across admix pump power (yellow) wire from control box 5-pin wire harness connector, terminal E to control box 4-pin wire harness connector, terminal B with admix fuse installed?

NO → Go to Step 32 of this Fault.

YES ↓

TEST OPTIONS
Continuity test.
REASON FOR QUESTION
To futher isolate fault.

WARNING

Remove all jewelry such as rings, dog tags, bracelets, etc. If jewelry or tools contact positive electrical circuits, a direct short may result. Damage to equipment, injury or death to personnel may occur.

CONTINUITY TEST

(1) Set multimeter select switch to ohms.

(2) If removed, install ADMIX fuse in ADMIX fuse holder, (Para 3-58).

(3) Disconnect control box 5-pin wire harness at main wire harness, (Para 3-90).

(4) Disconnect control box 4-pin wire harness at control wire harness, (Para 3-90).

(5) Connect positive (+) multimeter lead to power (yellow) wire at control box 5-pin wire harness connector, terminal E.

(6) Connect negative (-) multimeter lead to power (yellow) wire at control box 4-pin wire harness, terminal B.

(a) If continuity is not measured, go to Step 32 of this Fault.

(b) If continuity is measured, go to Step 31 of this Fault.

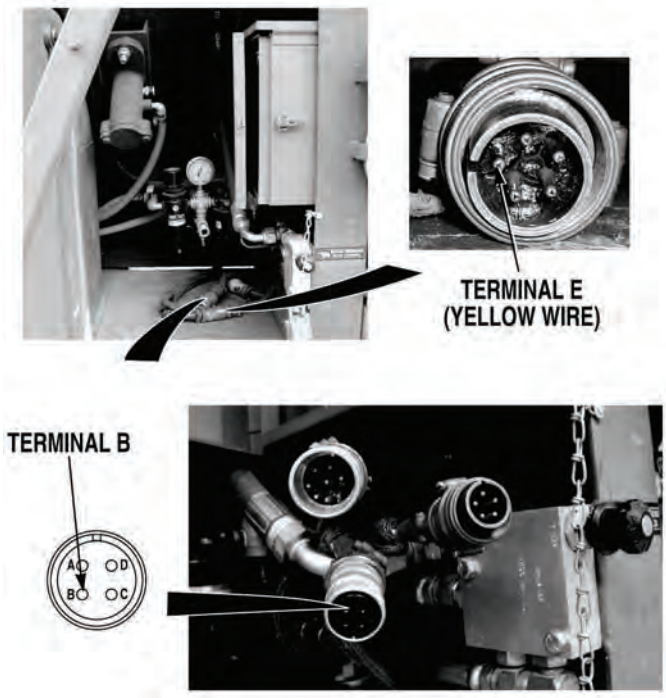

2. ADMIX SYSTEM (LOW-FLOW) DOES NOT OPERATE CORRECTLY (CONT).

KNOWN INFO

- Air lines between low-flow admix air solenoid and admix valve not kinked or damaged.
- Admix system drain cock valves closed.
- ADMIX fuse OK.
- Air pressure OK.
- High-flow admix system OK.
- System control switches operating correctly.
- Admix strainer OK.
- Admix tube between tank and water valve not clogged.
- Admix tube between admix valve and water valve not clogged.
- Water valve fitting OK.
- Admix valve OK.
- Admix air solenoid OK.
- Air line between admix air solenoid and admix valve OK.
- Admix flowmeter OK.
- Admix tube between flowmeter and admix valve not clogged.
- Admix tube between pump and flowmeter not clogged.
- Admix solution valve and strainer assembly OK.
- Admix relay ground connections OK.
- Control wire harness (blue) wire OK.
- Admix pump OK.
- Admix tank OK.
- Admix tube between high admix tank and drain valve not clogged.
- High admix relay OK.
- Admix pump ground connection OK.
- Control wire harness (orange) wire OK.
- Admix relay ground wire OK.
- Main wire harness admix pump power (yellow) wire OK.
- Control box 5-pin wire harness (yellow) wire OK.
- Control box 4-pin wire harness (blue) wire OK.

POSSIBLE PROBLEMS

- Battery equalizer magnetic switch connections faulty.
- Engine harness admix pump power (yellow) wire faulty.

31.

WARNING

Read WARNING on Page 4-141

Are battery equalizer magnetic switch terminals tight and free from corrosion?

NO → Clean and tighten battery equalizer magnetic switch terminals, (Para 3-17). Verify repair, go to Step 33 of this Fault.

YES → Repair power (yellow) wire, (Para 3-141) or replace engine wire harness, (Para 3-136). Verify repair, go to Step 33 of this Fault.

TEST OPTIONS

Visual inspection.

REASON FOR QUESTION

If battery equalizer magnetic switch terminals are tight and free from corrosion, engine wire harness admix pump power (yellow) wire is faulty.

WARNING

Remove all jewelry such as rings, dog tags, bracelets, etc. If jewelry or tools contact positive electrical circuits, a direct short may result. Damage to equipment, injury or death to personnel may occur.

VISUAL INSPECTION

(1) Remove battery equalizer magnetic switch cover panel from engine compartment, (Para 3-17).

(2) Check if battery equalizer magnetic switch terminals are tight and free from corrosion.

(a) If battery equalizer magnetic switch terminals are not tight and free from corrosion, clean and tighten battery equalizer magnetic switch terminals, (Para 3-17).

(b) If battery equalizer magnetic switch terminals are tight and free from corrosion, repair power (yellow) wire, (Para 3-141) or replace engine wire harness, (Para 3-136).

(3) Verify repair, go to Step 36 of this Fault.

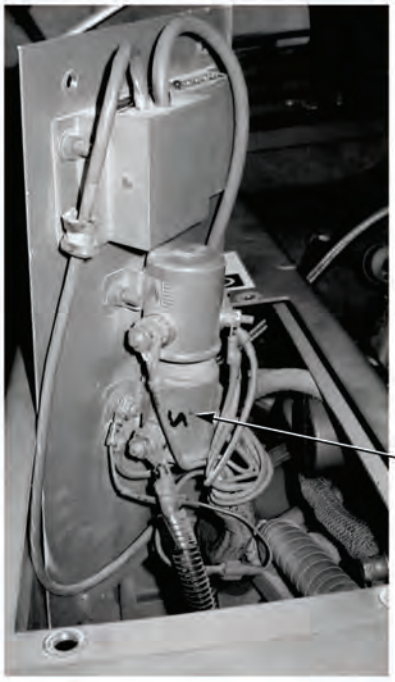

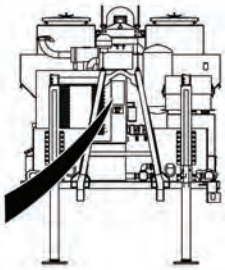

BATTERY EQUALIZER MAGNETIC SWITCH

2. ADMIX SYSTEM (LOW-FLOW) DOES NOT OPERATE CORRECTLY (CONT).

KNOWN INFO

- Air lines between low-flow admix air solenoid and admix valve not kinked or damaged.
- Admix system drain cock valves closed.
- ADMIX fuse OK.
- Air pressure OK.
- High-flow admix system OK.
- System control switches operating correctly.
- Admix strainer OK.
- Admix tube between tank and water valve OK.
- Admix tube between admix valve and water valve not clogged.
- Water valve fitting OK.
- Admix valve OK.
- Admix air solenoid OK.
- Air line between admix air solenoid and admix valve OK.
- Admix flowmeter OK.
- Admix tube between flowmeter and admix valve OK.
- Admix tube between pump and flowmeter not clogged.
- Admix solution valve and strainer assembly OK.
- Admix relay ground connections OK.
- Control wire harness (blue) wire OK.
- Admix pump OK.
- Admix tank OK.
- Admix tube between high admix tank and drain valve not clogged.
- High admix relay OK.
- Admix pump ground connection OK.
- Admix relay ground wire OK.
- Control wire harness (orange) wire OK.
- Main wire harness admix pump power (yellow) wire OK.
- Engine harness admix pump power (yellow) wire OK.
- Battery equalizer magnetic switch connections OK.

POSSIBLE PROBLEMS

- Control box 5-pin wire harness (yellow) wire faulty.
- Control box 4-pin wire harness (blue) wire faulty.

32.

WARNING

Read WARNING on Page 4-143

Is continuity measured across control box 5-pin wire harness admix pump power (yellow) wire, terminal E to ADMIX fuse holder?

NO → Repair admix pump power (yellow) wire, (Para 3-141) or replace control box 5-pin wire harness, (Para 3-138). Verify repair, go to Step 33 of this Fault.

YES → Repair admix pump power (blue) wire, (Para 3-141), or replace control box 4-pin wire harness, (Para 3-139). Verify repair, go to Step 33 of this Fault.

TEST OPTIONS

Continuity test.

REASON FOR QUESTION

If continuity is measured, control box 4-pin wire harness admix pump power (blue) wire is faulty. If not, control box 5-pin wire harness admix pump power (yellow) wire is faullty.

WARNING

Remove all jewelry such as rings, dog tags, bracelets, etc. If jewelry or tools contact positive electrical circuits, a direct short may result. Damage to equipment, injury or death to personnel may occur.

CONTINUITY TEST

(1) Remove control box from Concrete Mobile Mixer, (Para 3-90).

(2) Open control box door and remove screw from top of control panel. Gently open control panel to expose wires.

(3) Set multimeter select switch to ohms.

(4) Connect positive (+) multimeter lead to control box 5-pin wire harness, admix pump power (yellow) wire, terminal E.

(5) Connect negative (-) multimeter lead to yellow wire at ADMIX fuse holder.

  (a) If continuity is not measured, repair admix pump power (yellow) wire, (Para 3-141) or replace control box 5-pin wire harness, (Para 3-138).

  (b) If continuity is measured, repair admix pump power (blue) wire, (Para 3-141) or replace control box 4-pin wire harness, (Para 3-139).

(6) Verify repair, go to Step 33 of this Fault.

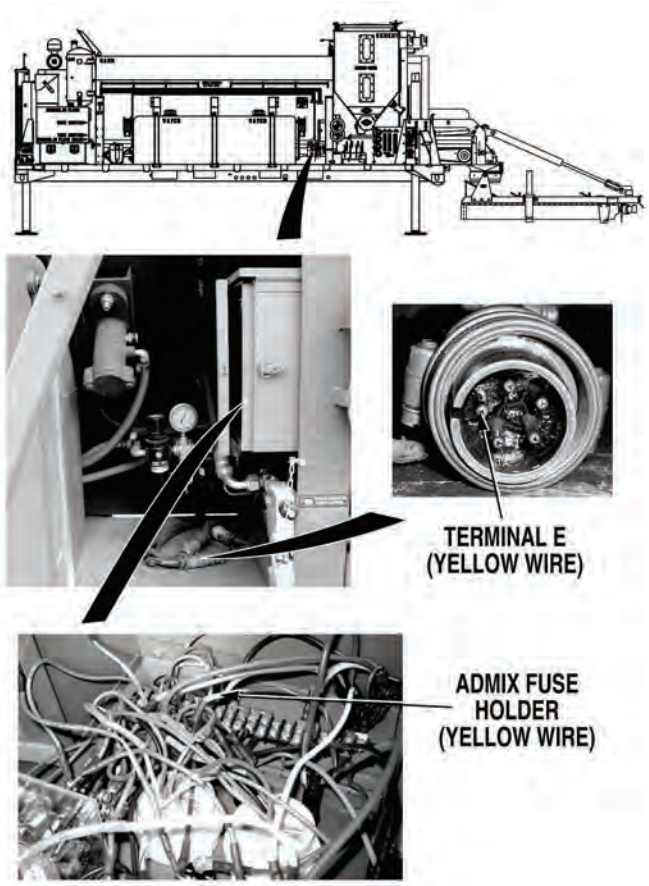

2. ADMIX SYSTEM (LOW-FLOW) DOES NOT OPERATE CORRECTLY (CONT).

KNOWN INFO
Air lines between low-flow admix air solenoid and admix valve not kinked or damaged. Admix system drain cock valves closed. ADMIX fuse OK. Air pressure OK. High-flow admix system OK. System control switches operating correctly. Admix strainer OK. Admix tube between tank and water valve OK. Admix tube between admix valve and water valve not clogged. Water valve fitting OK. Admix valve OK. Admix air solenoid OK. Air line between admix air solenoid and admix valve OK. Admix flowmeter OK. Admix tube between flowmeter and admix valve OK. Admix tube between pump and flowmeter not clogged. Admix solution valve and strainer assembly OK. Admix relay ground connections OK. Control wire harness (blue) wire OK. Admix pump OK. Admix tank OK. Admix tube between high admix tank and drain valve not clogged. High admix relay OK. Admix pump ground connection OK. Admix relay ground wire OK. Control wire harness (orange) wire OK. Main wire harness admix pump power (yellow) wire OK. Battery equalizer magnetic switch connections OK. Engine harness admix pump power (yellow) wire OK. Control box 5-pin wire harness (yellow) wire OK. Control box 4-pin wire harness (blue) wire OK.
POSSIBLE PROBLEMS
None.

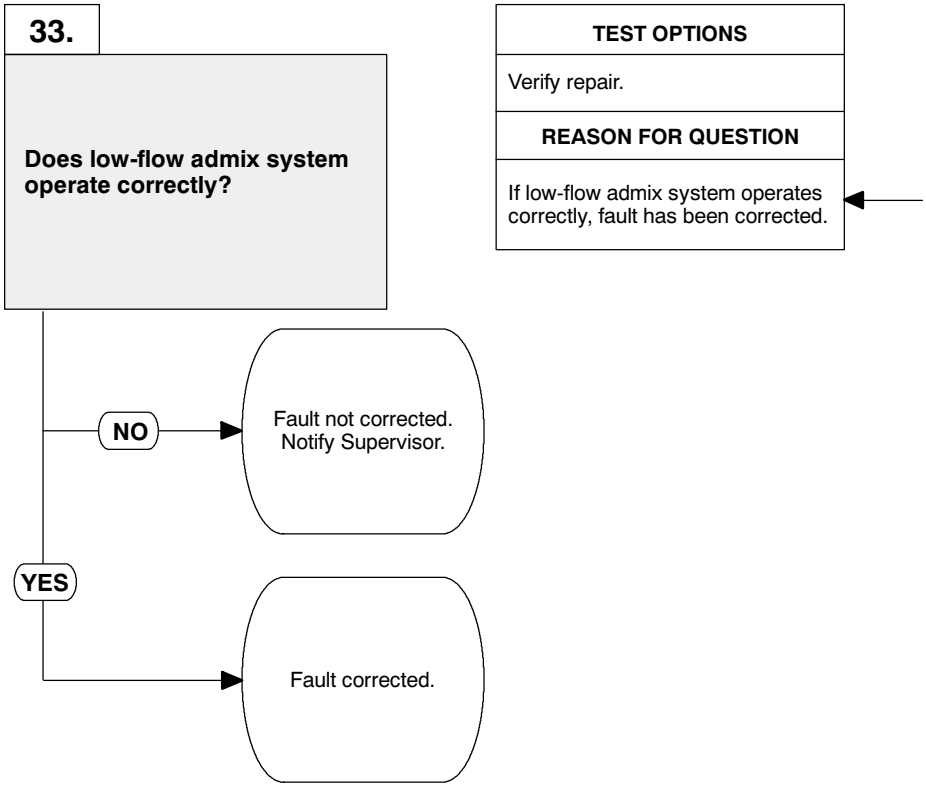

VERIFY REPAIR

(1) If removed, install control box cover, (Para 3-90).

(2) If disconnected, connect wire harness connectors.

(3) If removed, install hydraulic control valve cover, (Para 3-51).

(4) If removed, install admix cover, (Para 3-88).

(5) If disconnected, connect batteries, (Para 3-10).

(6) If OFF, turn IGNITION SWITCH ON, (Para 2-1).

(7) If OFF, turn 12 VOLT switch ON, (Para 2-1).

(8) Operate low-admix system, (Para 2-34, 2-36 or 2-37). Check if low-admix system operates.

  (a) If low-admix system does not operate, fault not corrected. Notify Supervisor.

  (b) If low-admix system operates, fault has been corrected.

(9) Shut OFF engine, (Para 2-19).

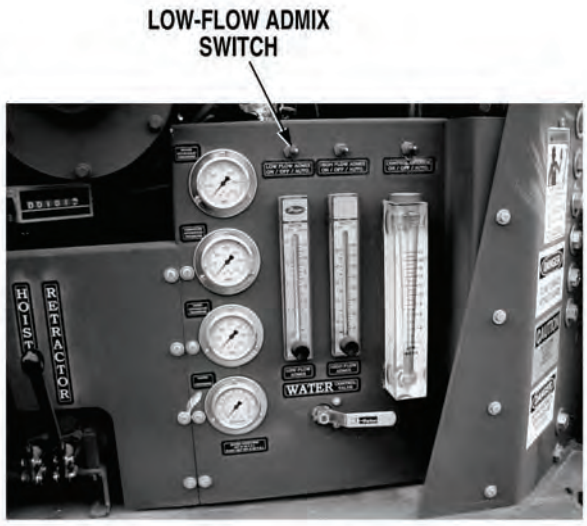

3. AIR PRESSURE LOW OR SYSTEM CHARGE IS SLOW.

INITIAL SETUP

Tools and Special Tools
Tool Kit, General Mechanic's: Automotive (Item 19, Appendix I)

Equipment Condition
Concrete Mobile Mixer unloaded from PLS, (Para 2-5)
Engine OFF, (Para 2-19)

KNOWN INFO

Nothing.

POSSIBLE PROBLEMS

- Air compressor damaged.
- Air reservoir drain cock valve open.
- Air filter regulator/lubricator assembly damaged.
- Air filter regulator/lubricator drain valve open.
- CEMENT FLUFFER CONTROL VALVE open or damaged.
- Compressor discharge air line kinked, damaged, or has excessive carbon buildup.
- Air compressor faulty.
- Air reservoir leaks or damaged.
- Air lines between compressor and air control valve leak, kinked, or damaged.
- Air filter regulator/lubricator assembly connections leak.
- Air lines between air filter regulator/lubricator assembly, air solenoid, and CEMENT FLUFFER CONTROL VALVE leak or damaged.
- Air filter regulator/lubricator assembly faulty.

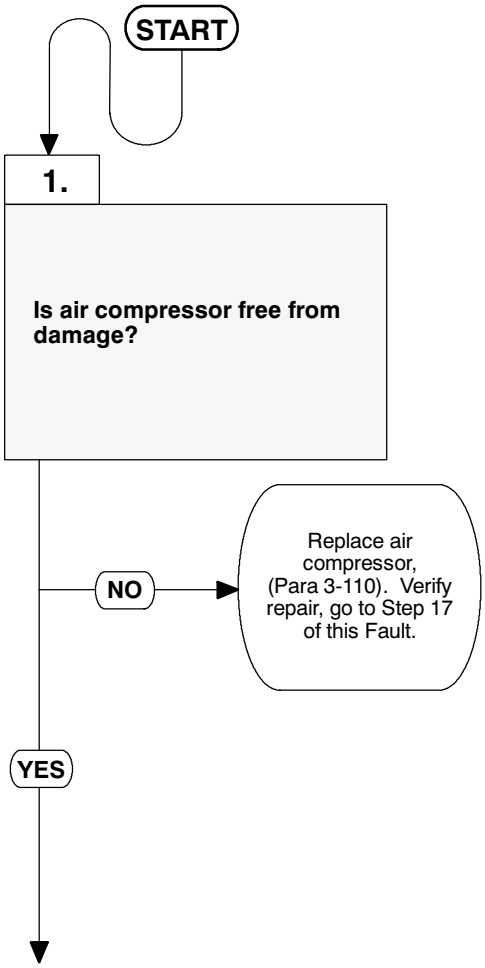

TEST OPTIONS

Visual inspection.

REASON FOR QUESTION

If air compressor is damaged, air system may not operate correctly.

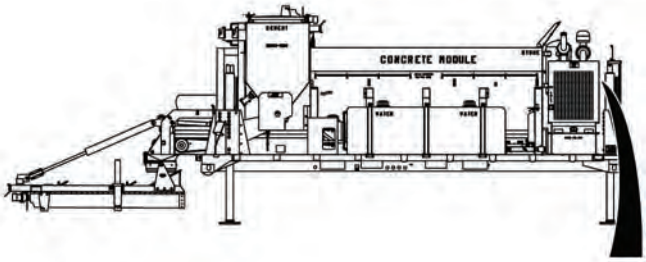

VISUAL INSPECTION
Check if air compressor is free from damage. (a) If air compressor is damaged, replace air compressor, (Para 3-110), Verify repair, go to Step 17 of this Fault. (b) If air compressor is free from damage, go to Step 2 of this Fault.

3. AIR PRESSURE LOW OR SYSTEM CHARGE IS SLOW (CONT).

KNOWN INFO
Air compressor not damaged.
POSSIBLE PROBLEMS
Air reservoir drain cock valve open. Air filter regulator/lubricator assembly damaged. Air filter regulator/lubricator drain valve open. CEMENT FLUFFER CONTROL VALVE open or damaged. Compressor discharge air line kinked, damaged, or has excessive carbon buildup. Air compressor faulty. Air reservoir leaks or damaged. Air lines between compressor and air control valve leak, kinked, or damaged. Air filter regulator/lubricator assembly connections leak. Air lines between air filter regulator/lubricator assembly, air solenoid, and CEMENT FLUFFER CONTROL VALVE leak or damaged. Air filter regulator/lubricator assembly faulty.

2.

Is air reservoir drain cock valve closed?

NO → Close air reservoir drain cock valve, (Para 2-9). Verify repair, go to Step 17 of this Fault.

YES ↓

TEST OPTIONS
Visual inspection.
REASON FOR QUESTION
If air reservoir drain cock valve is open, air system may not operate correctly.

VISUAL INSPECTION
Check if air reservoir drain cock valve is closed. (a) If air reservoir drain cock valve is not closed, close air reservoir drain cock valve, (Para 2-9). (b) If air reservoir drain cock valve is closed, go to Step 3 of this Fault.

3. AIR PRESSURE LOW OR SYSTEM CHARGE IS SLOW (CONT).

KNOWN INFO
Air compressor not damaged. Air reservoir drain cock valve closed.
POSSIBLE PROBLEMS
Air filter regulator/lubricator assembly damaged. Air filter regulator/lubricator drain valve open. CEMENT FLUFFER CONTROL VALVE open or damaged. Compressor discharge air line kinked, damaged, or has excessive carbon buildup. Air compressor faulty. Air reservoir leaks or damaged. Air lines between compressor and air control valve leak, kinked, or damaged. Air filter regulator/lubricator assembly connections leak. Air lines between air filter regulator/lubricator assembly, air solenoid, and CEMENT FLUFFER CONTROL VALVE leak or damaged. Air filter regulator/lubricator assembly faulty.

3.

Is air filter regulator/lubricator assembly free from damage?

NO → Replace damaged air filter regulator/lubricator assembly, (Para 3-47). Verify repair, go to Step 17 of this Fault.

YES ↓

TEST OPTIONS
Visual inspection.
REASON FOR QUESTION
If air filter regulator/lubricator assembly is not free from damage, air system may not operate correctly.

VISUAL INSPECTION

Check if air filter regulator/lubricator assembly is free from damage.

(a) If air filter regulator/lubricator assembly is damaged, replace damaged air filter regulator/lubricator assembly, (Para 3-47). Verify repair, go to Step 17 of this Fault.

(b) If air filter regulator/lubricator assembly is free from damage, go to Step 4 of this Fault.

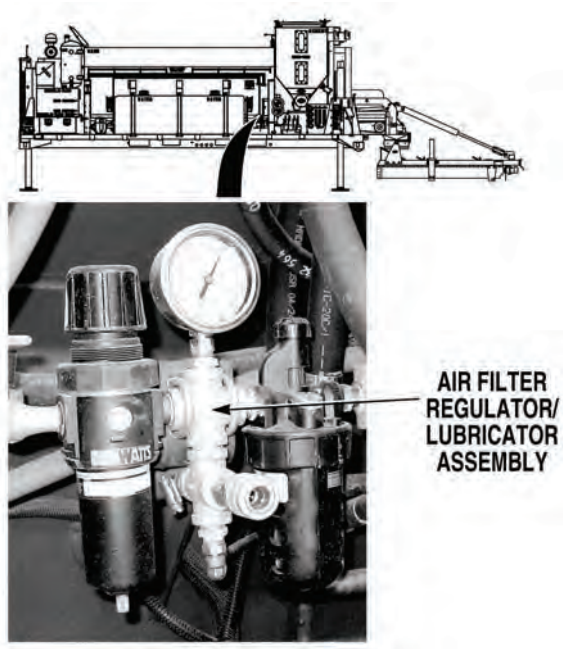

3. AIR PRESSURE LOW OR SYSTEM CHARGE IS SLOW (CONT).

KNOWN INFO
Air compressor not damaged. Air reservoir drain cock valve closed. Air filter regulator/lubricator assembly not damaged.
POSSIBLE PROBLEMS
Air filter regulator/lubricator drain valve open. CEMENT FLUFFER CONTROL VALVE open or damaged. Compressor discharge air line kinked, damaged, or has excessive carbon buildup. Air compressor faulty. Air reservoir leaks or damaged. Air lines between compressor and air control valve leak, kinked, or damaged. Air filter regulator/lubricator assembly connections leak. Air lines between air filter regulator/lubricator assembly, air solenoid, and CEMENT FLUFFER CONTROL VALVE leak or damaged. Air filter regulator/lubricator assembly faulty.

4.

Is air filter regulator/lubricator drain valve closed?

NO → Close air filter regulator/lubricator drain valve, (Para 2-9). Verify repair, go to Step 17 of this Fault.

YES ↓

TEST OPTIONS
Visual inspection.
REASON FOR QUESTION
If air filter regulator/lubricator drain valve is not closed, air system pressure may be low or system charge may be slow.

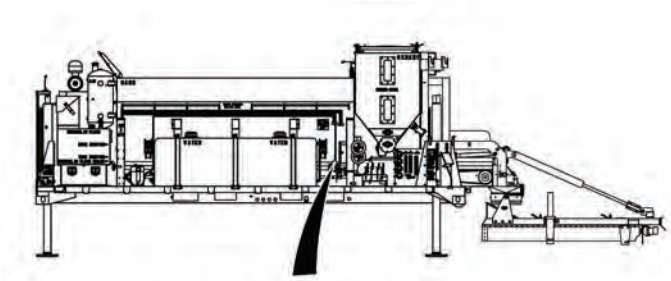

VISUAL INSPECTION
Check if air filter regulator/lubricator drain valve is closed. (a) If air filter regulator/lubricator drain valve is not closed, close drain valve, (Para 2-9). Verify repair, go to Step 17 of this Fault. (b) If air filter regulator/lubricator drain valve is closed, go to Step 5 of this Fault.

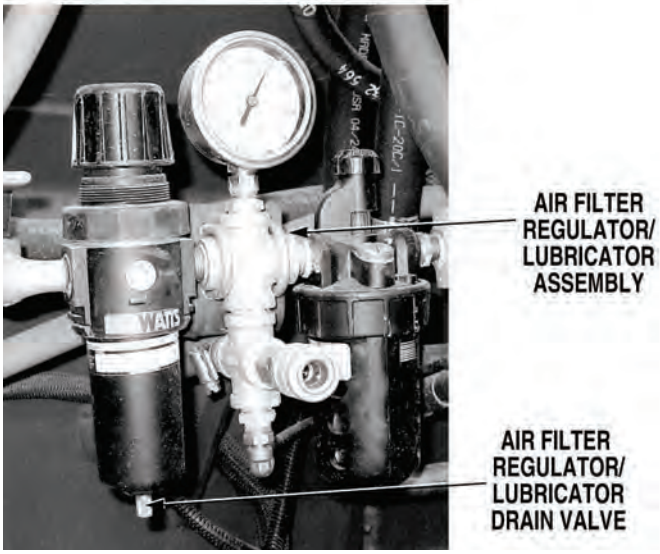

3. AIR PRESSURE LOW OR SYSTEM CHARGE IS SLOW (CONT).

KNOWN INFO
Air compressor not damaged. Air reservoir drain cock valve closed. Air filter regulator/lubricator assembly not damaged. Air filter regulator/lubricator drain valve closed.
POSSIBLE PROBLEMS
CEMENT FLUFFER CONTROL VALVE open or damaged. Compressor discharge air line kinked, damaged, or has excessive carbon buildup. Air compressor faulty. Air reservoir leaks or damaged. Air lines between compressor and air control valve leak, kinked, or damaged. Air filter regulator/lubricator assembly connections leak. Air lines between air filter regulator/lubricator assembly, air solenoid, and CEMENT FLUFFER CONTROL VALVE leak or damaged. Air filter regulator/lubricator assembly faulty.

5.

Is CEMENT FLUFFER CONTROL VALVE closed and free from damage?

NO → Close/open, or replace damaged CEMENT FLUFFER CONTROL VALVE, (Para 3-121). Verify repair, go to Step 17 of this Fault.

YES ↓

TEST OPTIONS
Visual inspection.
REASON FOR QUESTION
If CEMENT FLUFFER CONTROL VALVE is not closed and free from damage, air pressure may be low or system charge may be slow.

VISUAL INSPECTION
Check if CEMENT FLUFFER CONTROL VALVE is closed and free from damage. (a) If CEMENT FLUFFER CONTROL VALVE is not closed and free from damage, close or replace CEMENT FLUFFER CONTROL VALVE, (Para 3-121). Verify repair, go to Step 17 of this Fault. (b) If CEMENT FLUFFER CONTROL VALVE is closed and free from damage, go to Step 6 of this Fault.

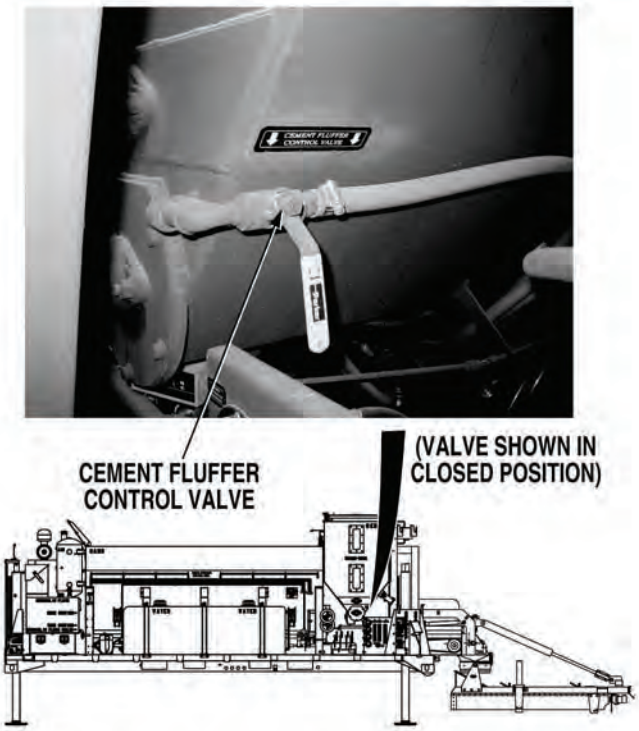

3. AIR PRESSURE LOW OR SYSTEM CHARGE IS SLOW (CONT).

KNOWN INFO

Air compressor not damaged.
Air reservoir drain cock valve closed.
Air filter regulator/lubricator assembly not damaged.
Air filter regulator/lubricator drain valve closed.
CEMENT FLUFFER CONTROL VALVE OK.

POSSIBLE PROBLEMS

Compressor discharge air line kinked, damaged, or has excessive carbon buildup.
Air compressor faulty.
Air reservoir leaks or damaged.
Air lines between compressor and air control valve leak, kinked, or damaged.
Air filter regulator/lubricator assembly connections leak.
Air lines between air filter regulator/lubricator assembly, air solenoid, and CEMENT FLUFFER CONTROL VALVE leak or damaged.
Air filter regulator/lubricator assembly faulty.

6.

Is compressor discharge air line free from kinks, damage, and excessive carbon buildup?

NO → Replace air line, (Para 3-132). Verify repair, go to Step 17 of this Fault.

YES ↓

TEST OPTIONS

Visual inspection.

REASON FOR QUESTION

If compressor discharge air line is not free from kinks, damage, and excessive carbon buildup, air pressure may be low or system charge may be slow.

VISUAL INSPECTION

(1) Open air reservoir drain cock, (Para 2-1).

(2) Disconnect air discharge line from air compressor, (Para 3-132).

(3) Check if air line is free from kinks, damage, and excessive carbon buildup.

NOTE

If measurement (x) is greater than 1/32 in. (1 mm), air line has excessive carbon buildup.

(a) If air discharge line is not free from kinks, damage, and excessive carbon, replace air discharge line, (Para 3-132). Verify repair, go to Step 17 of this Fault.

(b) If air discharge line is free from kinks, damage, and excessive carbon buildup, go to Step 7 of this Fault.

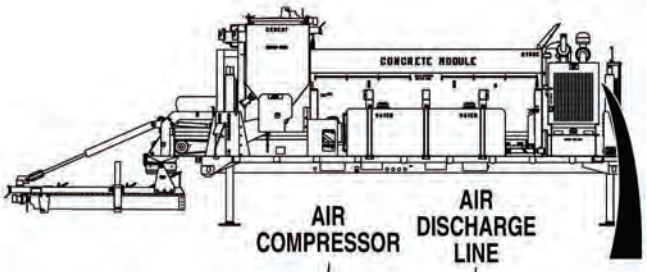

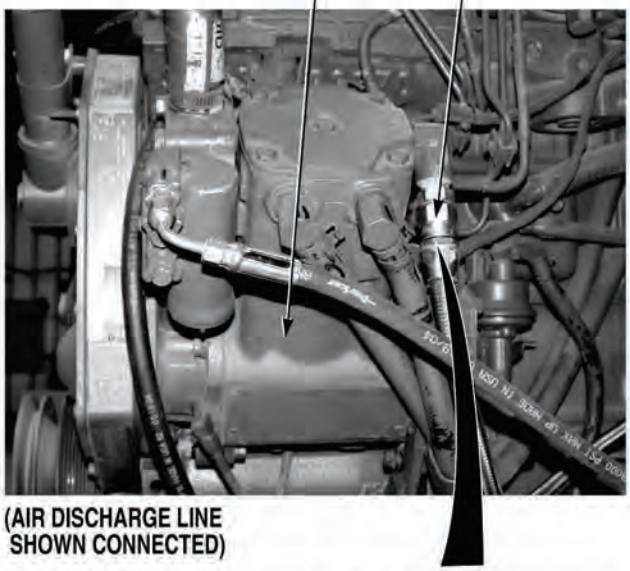

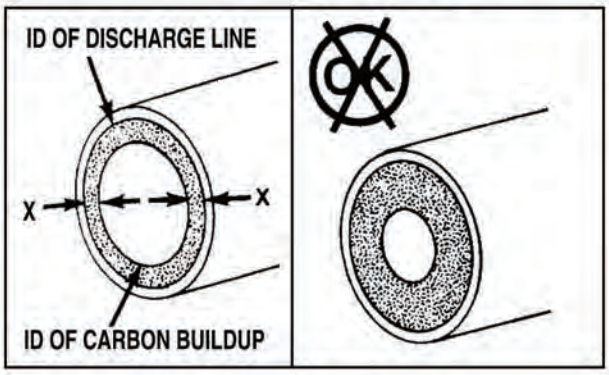

3. AIR PRESSURE LOW OR SYSTEM CHARGE IS SLOW (CONT).

KNOWN INFO

Air compressor not damaged.
Air reservoir drain cock valve closed.
Air filter regulator/lubricator assembly not damaged.
Air filter regulator/lubricator drain valve closed.
CEMENT FLUFFER CONTROL VALVE OK.
Compressor discharge air line OK.

POSSIBLE PROBLEMS

Air compressor faulty.
Air reservoir leaks or damaged.
Air lines between compressor and air control valve leak, kinked, or damaged.
Air filter regulator/lubricator assembly connections leak.
Air lines between air filter regulator/lubricator assembly, air solenoid, and CEMENT FLUFFER CONTROL VALVE leak or damaged.
Air filter regulator/lubricator assembly faulty.

7.

WARNING
Read WARNING on Page 4-159

Is compressed air present at air compressor discharge air line when engine is started?

NO → Replace air compressor, (Para 3-110). Verify repair, go to Step 17 of this Fault.

YES ↓

TEST OPTIONS

Operational test.

REASON FOR QUESTION

If air is not present at air compressor discharge line, air compressor is faulty.

WARNING

Air lines are under extreme pressure. Ensure all personnel wear protective goggles when working around compressed air. Failure to comply may result in serious injury or death to personnel.

OPERATIONAL TEST

(1) If open, close air reservoir drain cock valve, (Para 2-1).

(2) Connect air compressor discharge line.

(3) Disconnect air compressor discharge air line at engine compartment, (Para 3-132).

(4) Start engine, (Para 2-19).

(5) Check if air is present at air compressor, air discharge line.

(a) If air is not present at air discharge line, replace air compressor, (Para 3-110). Verify repair, go to Step 17 of this Fault.

(b) If air is present at air discharge line, go to Step 8 of this Fault.

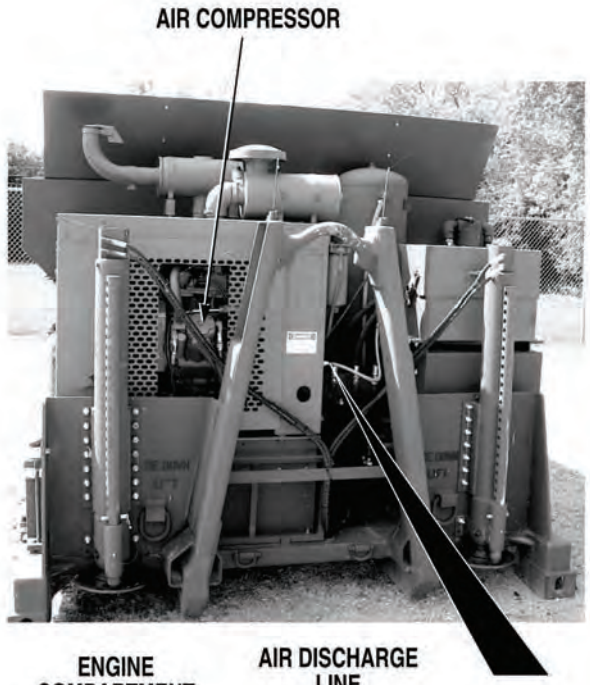

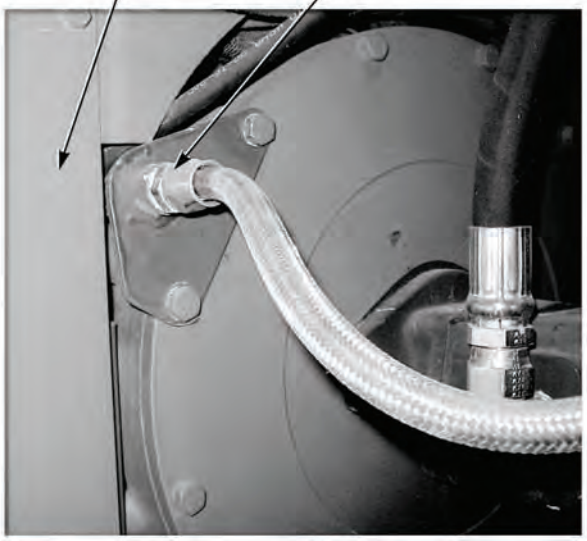

3. AIR PRESSURE LOW OR SYSTEM CHARGE IS SLOW (CONT).

KNOWN INFO

Air compressor not damaged.
Air reservoir drain cock valve closed.
Air filter regulator/lubricator assembly not damaged.
Air filter regulator/lubricator drain valve closed.
CEMENT FLUFFER CONTROL VALVE OK.
Compressor discharge air line OK.

POSSIBLE PROBLEMS

Air compressor faulty.
Air reservoir leaks or damaged.
Air lines between compressor and air control valve leak, kinked, or damaged.
Air filter regulator/lubricator assembly connections leak.
Air lines between air filter regulator/lubricator assembly, air solenoid, and CEMENT FLUFFER CONTROL VALVE leak or damaged.
Air filter regulator/lubricator assembly faulty.

8.

Is air reservoir free from leaks and damage?

NO → Replace air reservoir, (Para 3-33). Verify repair, go to Step 17 of this Fault.

YES ↓

TEST OPTIONS

Visual inspection.

REASON FOR QUESTION

If air reservoir is damaged, air pressure may be low or system charge may be slow.

VISUAL INSPECTION

(1) Shut OFF engine, (Para 2-19).

(2) Connect air discharge line at engine compartment, (Para 3-131).

(3) Close air control valve, (Para 2-1).

(4) Start engine, (Para 2-19).

(5) Allow air system to charge to 80 to 100 psi (552 to 690 kPa).

(6) Shut OFF engine, (Para 2-19).

(7) Check if air reservoir is free from leaks and damage.

(a) If air reservoir is not free from leaks and damage, replace air reservoir, (Para 3-33). Verify repair, go to Step 17 of this Fault.

(b) If air reservoir is free from leaks and damage, go to Step 9 of this Fault.

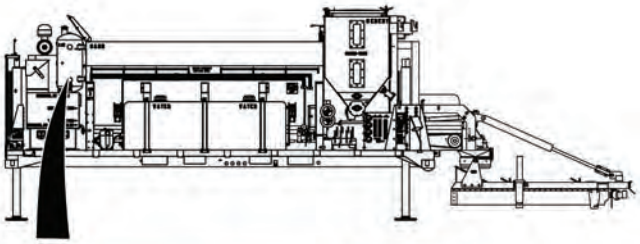

3. AIR PRESSURE LOW OR SYSTEM CHARGE IS SLOW (CONT).

KNOWN INFO

- Air compressor not damaged.
- Air reservoir drain cock valve closed.
- Air filter regulator/lubricator assembly not damaged.
- Air filter regulator/lubricator drain valve closed.
- CEMENT FLUFFER CONTROL VALVE OK.
- Compressor discharge air line OK.
- Air reservoir OK.

POSSIBLE PROBLEMS

- Air compressor faulty.
- Air filter regulator/lubricator assembly connections leak.
- Air lines between compressor and air control valve leak, kinked, or damaged.
- Air filter regulator/lubricator assembly faulty.
- Air lines between air filter regulator/lubricator assembly, air solenoid, and CEMENT FLUFFER CONTROL VALVE leak or damaged.

9.

Are all air lines between compressor and air control valve free from leaks, kinks, and damage (air supply valve closed)?

NO → Repair leaks or replace damaged air lines, (Para 3-132). Verify repair, go to Step 17 of this Fault.

YES ↓

TEST OPTIONS

Visual inspection.

REASON FOR QUESTION

If air lines are not free from leaks, kinks, and damage, air pressure may be low or system charge may be slow.

VISUAL INSPECTION
Check if air lines between air compressor and air control valve are free from leaks, kinks, and damage. (a) If air lines are not free from leaks, kinks, and damage, repair leaks or replace damaged air lines, (Para 3-132). Verify repair, go to Step 17 of this Fault. (b) If air lines are free from leaks, kinks, and damage, go to Step 10 of this Fault.

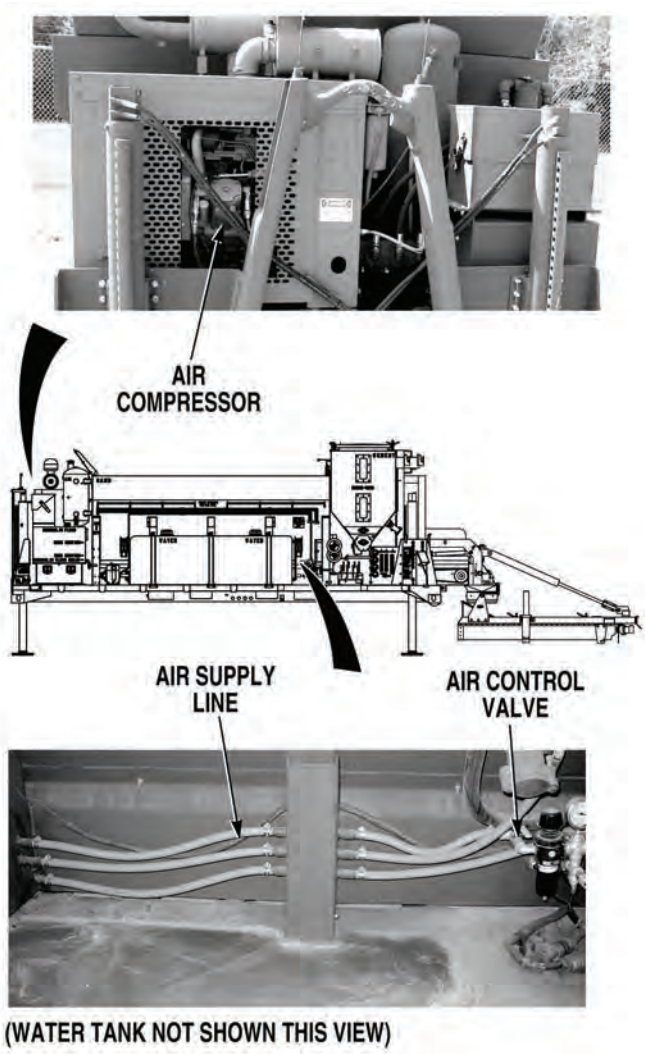

3. AIR PRESSURE LOW OR SYSTEM CHARGE IS SLOW (CONT).

KNOWN INFO

Air compressor not damaged.
Air reservoir drain cock valve closed.
Air filter regulator/lubricator assembly not damaged.
Air filter regulator/lubricator drain valve closed.
CEMENT FLUFFER CONTROL VALVE OK.
Compressor discharge air line OK.
Air reservoir OK.
Air lines between compressor and air control valve OK.

POSSIBLE PROBLEMS

Air compressor faulty.
Air filter regulator/lubricator assembly connections leak.
Air lines between air filter regulator/lubricator assembly, air solenoid, and CEMENT FLUFFER CONTROL VALVE leak or damaged.
Air filter regulator/lubricator assembly faulty.

10.

WARNING
Read WARNING on Page 4-165

Does air governor discharge air from air compressor air intake port when air control valve is closed?

NO → Replace air compressor, (Para 3-110). Verify repair, go to Step 17 of this Step.

YES ↓

TEST OPTIONS

Operational test.

REASON FOR QUESTION

If air governer does not discharge with engine running and control valve closed, air compressor is faulty.

WARNING

When working in engine compartment area with engine running, be extremely careful to avoid contact with or catching clothing in moving parts. Failure to comply could result in serious injury or death to personnel.

OPERATIONAL TEST

(1) Shut OFF engine, (Para 2-19).

(2) Disconnect air intake hose from air compressor, (Para 3-110).

(3) Start engine, (Para 2-19).

(4) Allow air system to charge to 120 psi (827 kPa).

(5) Check if air is discharging from air compressor air intake port.

(a) If air governor does not discharge air, replace air compressor, (Para 3-110). Verify repair, go to Step 17 of this Fault.

(b) If air governor discharges air, go to Step 11 of this Fault.

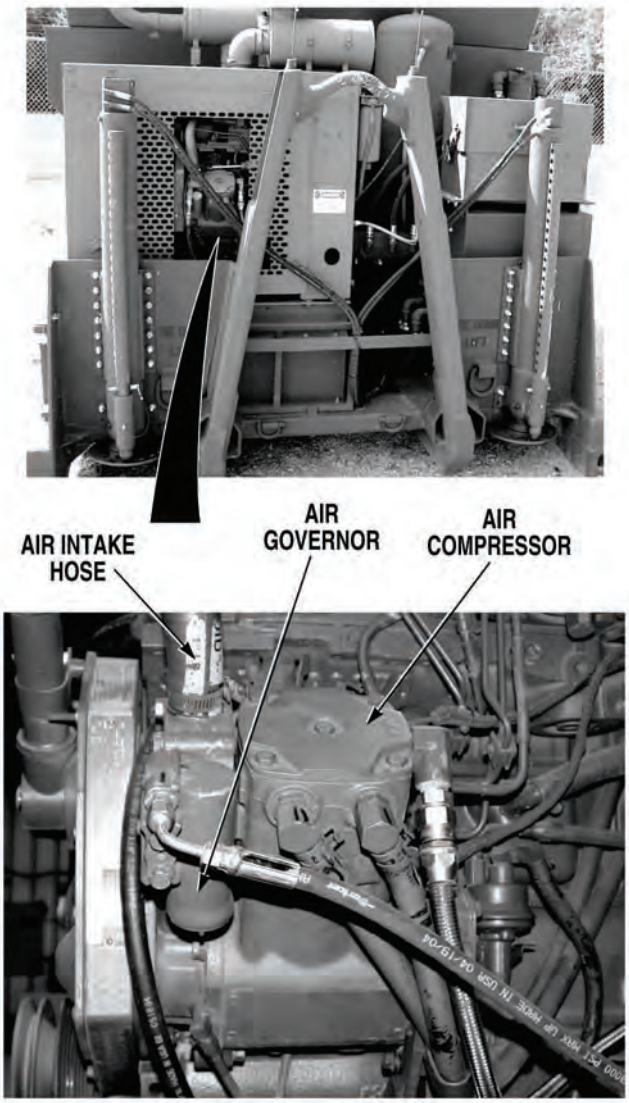

3. AIR PRESSURE LOW OR SYSTEM CHARGE IS SLOW (CONT).

KNOWN INFO
Air compressor not damaged. Air reservoir drain cock valve closed. Air filter regulator/lubricator assembly not damaged. Air filter regulator/lubricator drain valve closed. CEMENT FLUFFER CONTROL VALVE OK. Compressor discharge air line OK. Air reservoir OK. Air lines between compressor and air control valve OK. Air compressor OK.
POSSIBLE PROBLEMS
Air filter regulator/lubricator assembly connections leak. Air lines between air filter regulator/lubricator assembly, air solenoid, and CEMENT FLUFFER CONTROL VALVE leak or damaged. Air filter regulator/lubricator assembly faulty.

11.

Can air filter regulator/lubricator assembly be adjusted to 80 to 100 psi (552 to 690 kPa) when air control valve is opened and control switches are OFF?

NO → Go to Step 14 of this Fault.

YES ↓

TEST OPTIONS
Operational test.
REASON FOR QUESTION
To isolate fault.

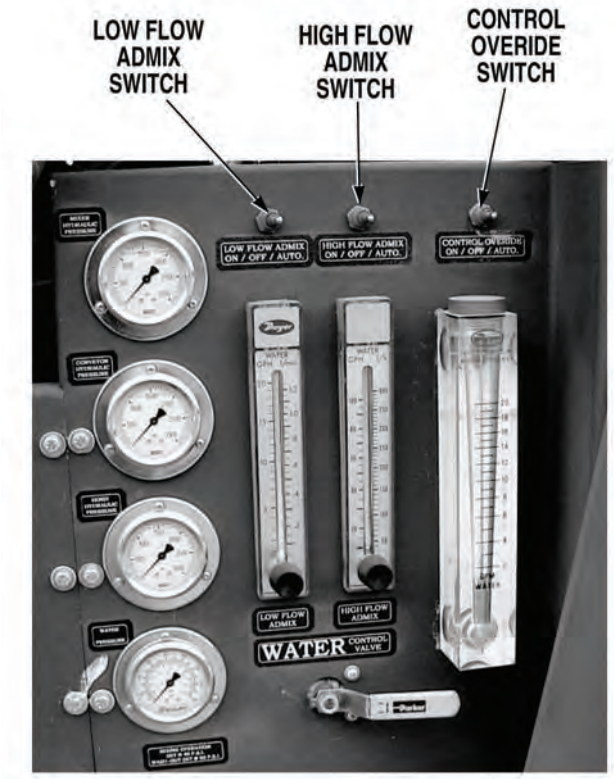

OPERATIONAL TEST

(1) Open air control valve, (Para 2-20).

(2) If ON, turn HIGH FLOW and LOW FLOW ADMIX switches OFF, (Para 2-1).

(3) If ON, turn CONTROL OVERIDE switch OFF, (Para 2-1).

(4) Check if air filter regulator/lubricator assembly can be adjusted to 80 to 100 psi (552 to 690 kPa).

(a) If air filter regulator/lubricator assembly cannot be adjusted to 80 to 100 psi (552 to 690 kPa), go to Step 14 of this Fault.

(b) If air filter regulator/lubricator assembly can be adjusted to 80 to 100 psi (552 to 690 kPa), go to Step 12 of this Fault.

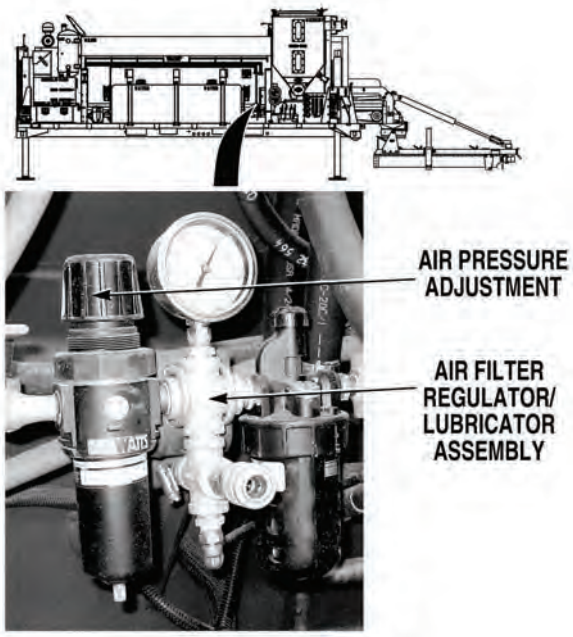

3. AIR PRESSURE LOW OR SYSTEM CHARGE IS SLOW (CONT).

KNOWN INFO

- Air compressor not damaged.
- Air reservoir drain cock valve closed.
- Air filter regulator/lubricator assembly not damaged.
- Air filter regulator/lubricator drain valve closed.
- CEMENT FLUFFER CONTROL VALVE OK.
- Compressor discharge air line OK.
- Air reservoir OK.
- Air lines between compressor and air control valve OK.
- Air compressor OK.
- Air filter regulator/lubricator assembly OK.

POSSIBLE PROBLEMS

- Air filter regulator/lubricator assembly connections leak.
- Air lines between air filter regulator/lubricator assembly, air solenoid, and CEMENT FLUFFER CONTROL VALVE leak or damaged.

12.

Does system hold air pressure when the engine is turned OFF?

NO → Go to Step 13 of this Fault.

YES → Fault corrected. Verify repair, go to Step 17 of this Fault.

TEST OPTIONS

Operational test.

REASON FOR QUESTION

If system holds air pressure after engine has been shut off, problem has been corrected.

OPERATIONAL TEST

(1) Shut OFF engine, (Para 2-19).

(2) Check if system holds air pressure.

(a) If system does not hold air pressure, go to Step 13 of this Fault.

(b) If system holds air pressure, fault corrected. Verify repair, go to Step 17 of this Fault.

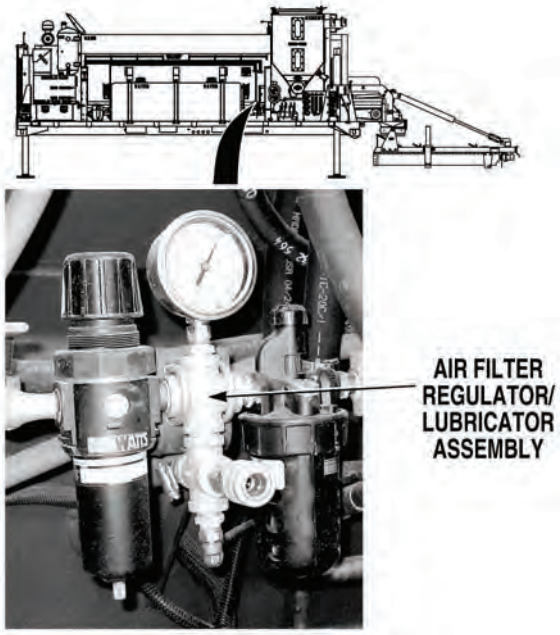

3. AIR PRESSURE LOW OR SYSTEM CHARGE IS SLOW (CONT).

KNOWN INFO

- Air compressor not damaged.
- Air reservoir drain cock valve closed.
- Air filter regulator/lubricator assembly not damaged.
- Air filter regulator/lubricator drain valve closed.
- CEMENT FLUFFER CONTROL VALVE OK.
- Compressor discharge air line OK.
- Air reservoir OK.
- Air lines between compressor and air control valve OK.
- Air compressor OK.
- Air filter regulator/lubricator assembly OK.

POSSIBLE PROBLEMS

- Air filter regulator/lubricator assembly connections leak.
- Air lines between air filter regulator/lubricator assembly air solenoid, and CEMENT FLUFFER CONTROL VALVE leak or damaged.

13.

Are air filter regulator/lubricator assembly connections free from leaks?

NO → Repair leaks or replace air filter regulator/lubricator assembly, (Para 3-47). Verify repair, go to Step 17 of this Fault.

YES → Repair leaks or replace damaged air lines, (Para 3-132) between air filter regulator/lubricator assembly air solenoid, and CEMENT FLUFFER CONTROL VALVE. Verify repair, go to Step 17 of this Fault.

TEST OPTIONS

Visual/audible inspection.

REASON FOR QUESTION

If air filter regulator/lubricator assembly connections are free from leaks, air lines between air filter regulator/lubricator assembly, air solenoid and CEMENT FLUFFER CONTROL VALVE leaks or is damaged. If not, air filter regulator/lubricator assembly is leaking.

VISUAL/AUDIBLE INSPECTION

(1) Check if air filter regulator/lubricator assembly connections are free from leaks.

NOTE

Air connections can be checked by soaking connections with a soap and water solution.

(a) If air filter regulator/lubricator assembly connections are not free from leaks, repair leaks or replace air filter regulator/lubricator assembly, (Para 3-47).

(b) If air filter regulator/lubricator assembly connections are free from leaks, repair leaks or repair air lines between air filter regulator/lubricator assembly, air solenoid and CEMENT FLUFFER CONTROL VALVE, (Para 3-132).

(2) Verify repair, go to Step 17 of this Fault.

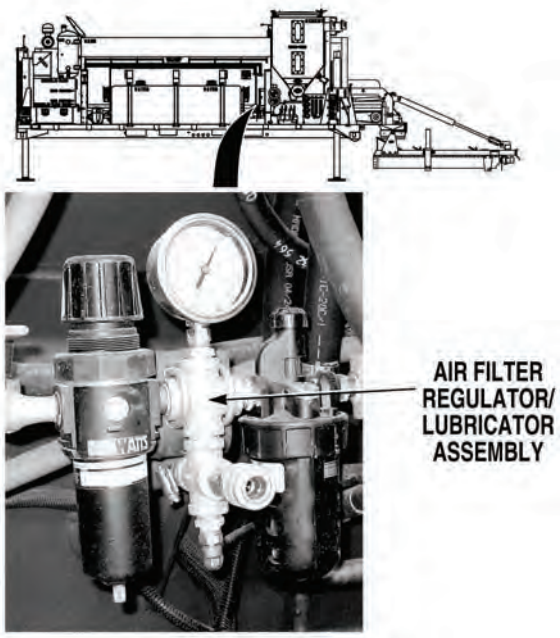

3. AIR PRESSURE LOW OR SYSTEM CHARGE IS SLOW (CONT).

KNOWN INFO

- Air compressor not damaged.
- Air reservoir drain cock valve closed.
- Air filter regulator/lubricator assembly not damaged.
- Air filter regulator/lubricator drain valve closed.
- CEMENT FLUFFER CONTROL VALVE OK.
- Compressor discharge air line OK.
- Air reservoir OK.
- Air lines between compressor and air control valve OK.

POSSIBLE PROBLEMS

- Air compressor faulty.
- Air filter regulator/lubricator assembly connections leak.
- Air lines between air filter regulator/lubricator assembly air solenoid, and CEMENT FLUFFER CONTROL VALVE leak or damaged.
- Air filter regulator/lubricator assembly faulty.

14.

WARNING

Read WARNING on Page 4-173

Does air governor discharge when air supply valve is opened and control switches are OFF with air filter regulator/lubricator assembly set at its maximum setting?

NO → Go to Step 15 of this Fault.

YES → Replace air compressor, (Para 3-110). Verify repair, go to Step 17 of this Fault.

TEST OPTIONS

Operational test.

REASON FOR QUESTION

If air governor discharges, air compressor is faulty.

WARNING

When working in engine compartment area with engine running, be extremely careful to avoid contact with or catching clothing in moving parts. Failure to comply could result in serious injury or death to personnel.

OPERATIONAL TEST

(1) Open air filter/regulator to its maximum setting, (Para 2-18).

(2) Remove air intake hose and check for air coming in air intake.

(3) Check if air governor discharges air.

(a) If air governor is not discharging air, go to Step 15 of this Fault.

(b) If air governor is discharging air, replace air compressor, (Para 3-110). Verify repair, go to Step 17 of this Fault.

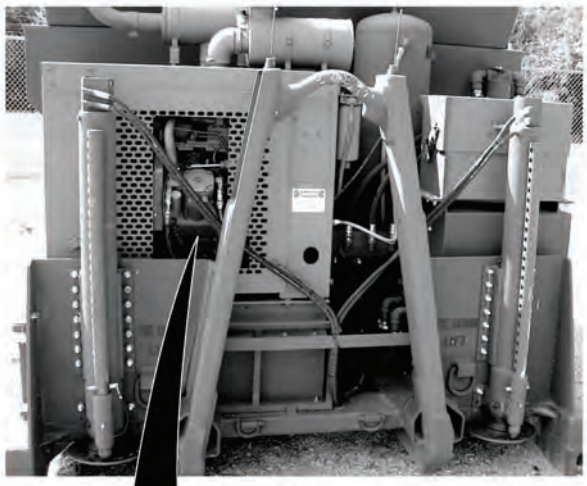

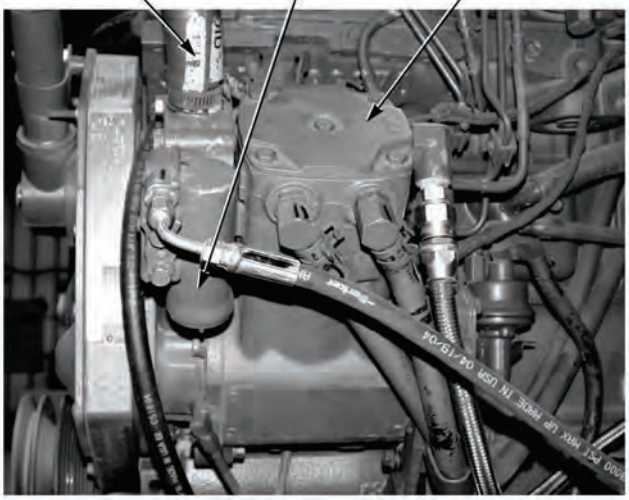

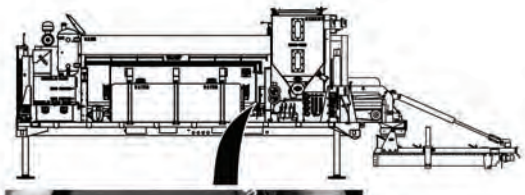

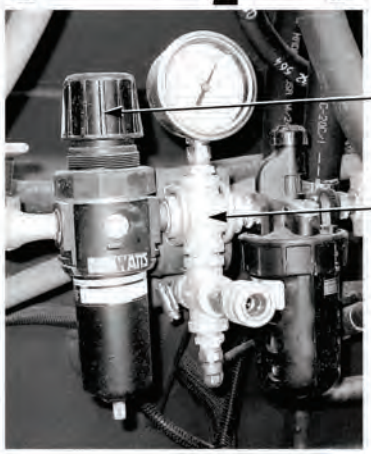

3. AIR PRESSURE LOW OR SYSTEM CHARGE IS SLOW (CONT).

KNOWN INFO

- Air compressor not damaged.
- Air reservoir drain cock valve closed.
- Air filter regulator/lubricator assembly not damaged.
- Air filter regulator/lubricator drain valve closed.
- CEMENT FLUFFER CONTROL VALVE OK.
- Compressor discharge air line OK.
- Air reservoir OK.
- Air lines between compressor and air control valve OK.
- Air compressor OK.

POSSIBLE PROBLEMS

- Air filter regulator/lubricator assembly connections leak.
- Air lines between air filter regulator/lubricator assembly air solenoid, and CEMENT FLUFFER CONTROL VALVE leak or damaged.
- Air filter regulator/lubricator assembly faulty.

15.

Are air filter regulator/lubricator assembly connections free from leaks?

NO → Repair leaks or replace air filter regulator/lubricator assembly, (Para 3-47). Verify repair, go to Step 17 of this Fault.

YES ↓

TEST OPTIONS

Visual/Audible inspection.

REASON FOR QUESTION

If air filter regulator/lubricator assembly is not free from leaks, air pressure may be low or system charge may be slow.

VISUAL/AUDIBLE INSPECTION

(1) Shut OFF engine, (Para 2-19).

(2) Check if air filter regulator/lubricator assembly is free from leaks.

NOTE

Air connections can be checked by soaking connections with a soap and water solution.

(a) If air filter regulator/lubricator assembly is not free from leaks, repair leaks or replace air filter regulator/lubricator assembly, (Para 3-47). Verify repair, go to Step 17 of this Fault.

(b) If air filter regulator/lubricator assembly is free from leaks, go to Step 16 of this Fault.

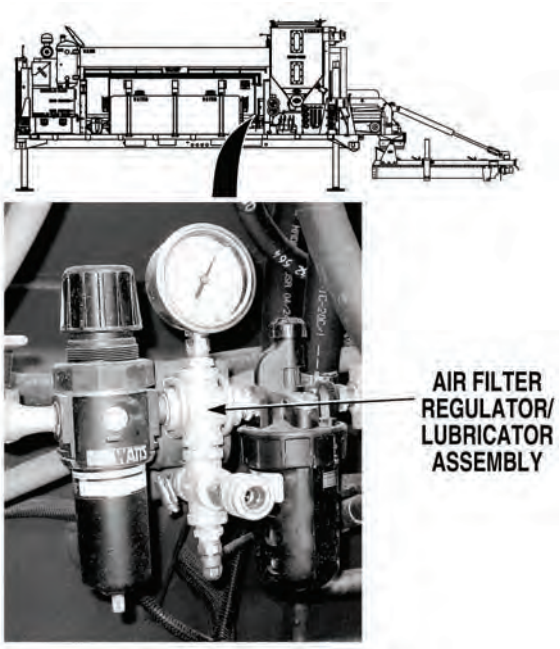

3. AIR PRESSURE LOW OR SYSTEM CHARGE IS SLOW (CONT).

KNOWN INFO

- Air compressor not damaged.
- Air reservoir drain cock valve closed.
- Air filter regulator/lubricator assembly not damaged.
- Air filter regulator/lubricator drain valve closed.
- CEMENT FLUFFER CONTROL VALVE OK.
- Compressor discharge air line OK.
- Air reservoir OK.
- Air lines between compressor and air control valve OK.
- Air compressor OK.
- Air filter regulator/lubricator assembly connections OK.

POSSIBLE PROBLEMS

- Air lines between air filter regulator/lubricator assembly air solenoid, and CEMENT FLUFFER CONTROL VALVE leak or damaged.
- Air filter regulator/lubricator assembly faulty.

16.

Are air lines between air filter regulator/lubricator, air solenoid, and CEMENT FLUFFER CONTROL VALVE free from leaks, kinks, and damage when air supply valve is opened and control switches are OFF?

NO → Repair leaks or replace damaged air lines, (Para 3-132). Verify repair, go to Step 17 of this Fault.

YES → Replace air filter regulator/lubricator, assembly (Para 3-47). Verify repair, go to Step 17 of this Fault.

TEST OPTIONS

Visual inspection.

REASON FOR QUESTION

If air lines between air filter regulator/lubricator assembly, air solenoid and CEMENT FLUFFER CONTROL VALVE are free from leaks, air filter regulator/lubricator assembly is faulty.

VISUAL/AUDIBLE INSPECTION
(1) Check if air lines between air filter regulator/lubricator assembly, air solenoid and CEMENT FLUFFER CONTROL VALVE are free from leaks. (a) If air lines are not free from leaks, kinks, and damage, repair leaks or replace damaged air lines, (Para 3-132). (b) If air lines are free from leaks, kinks, and damage, replace air filter regulator/lubricator assembly, (Para 3-47). (2) Verify repair, go to Step 17 of this Fault.

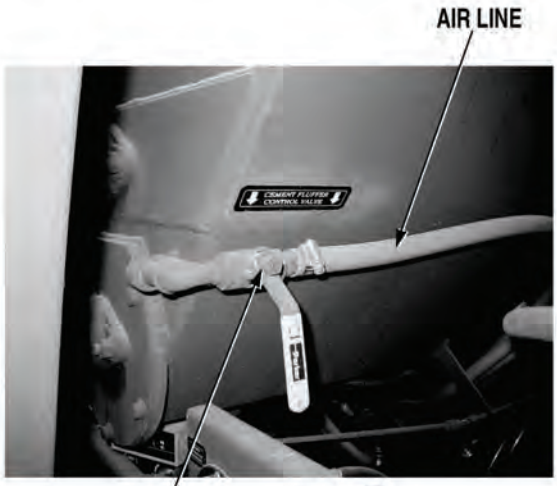

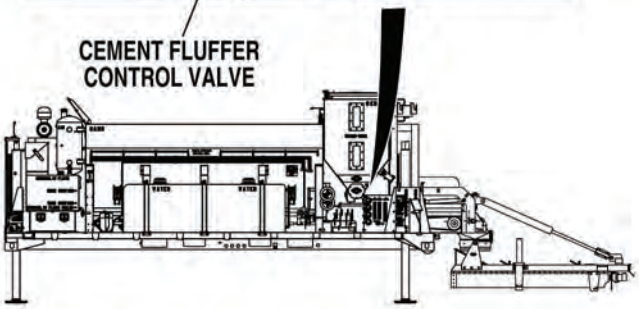

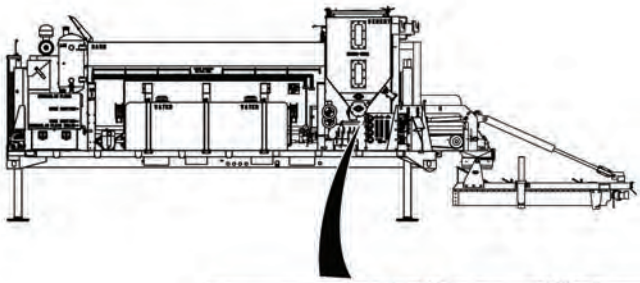

3. AIR PRESSURE LOW OR SYSTEM CHARGE IS SLOW (CONT).

KNOWN INFO
Air compressor not damaged. Air reservoir drain cock valve valve closed. Air filter regulator/lubricator assembly not damaged. Air filter regulator/lubricator drain valve closed. CEMENT FLUFFER CONTROL VALVE OK. Compressor discharge air line OK. Air compressor OK. Air reservoir OK. Air lines between compressor and air control valve OK. Air filter regulator/lubricator assembly connections OK. Air lines between air filter regulator/lubricator assembly air solenoid, and CEMENT FLUFFER CONTROL VALVE OK. Air filter regulator/lubricator assembly OK.
POSSIBLE PROBLEMS
None.

17.

Does air pressure system operate correctly?

NO → Fault not corrected. Notify Supervisor.

YES → Fault corrected.

TEST OPTIONS
Verify repair.
REASON FOR QUESTION
If air pressure system operates correctly, fault has been corrected.

VERIFY REPAIR

(1) If disconnected, connect air lines, (Para 3-132).

(2) If OFF, start engine, (Para 2-19).

(3) Check if air system charges, and hold air pressure at 80 to 100 psi (552 to 690 kPa).

  (a) If air system does not charge and hold at 80 to 100 psi (552 to 690 kPa), fault not corrected.

  (b) If air system charges and holds air pressure at 80 to 100 psi (552 to 690 kPa), fault has been corrected.

(4) Shut OFF engine, (Para 2-19).

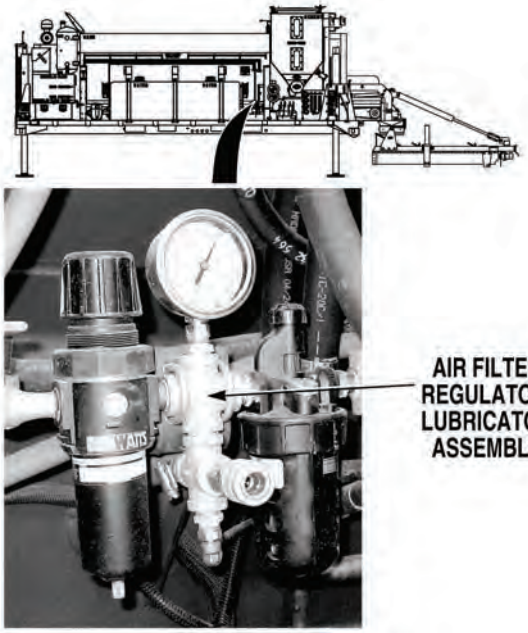

4. ALL 12-VOLT DC CIRCUITS DO NOT OPERATE.

INITIAL SETUP

Tools and Special Tools

Tool Kit, General Mechanic's: Automotive (Item 19, Appendix I)

Multimeter (Item 11, Appendix I)

Jumperwire

Equipment Condition

Concrete Mobile Mixer unloaded from PLS, (Para 2-5)

Engine OFF, (Para 2-19)

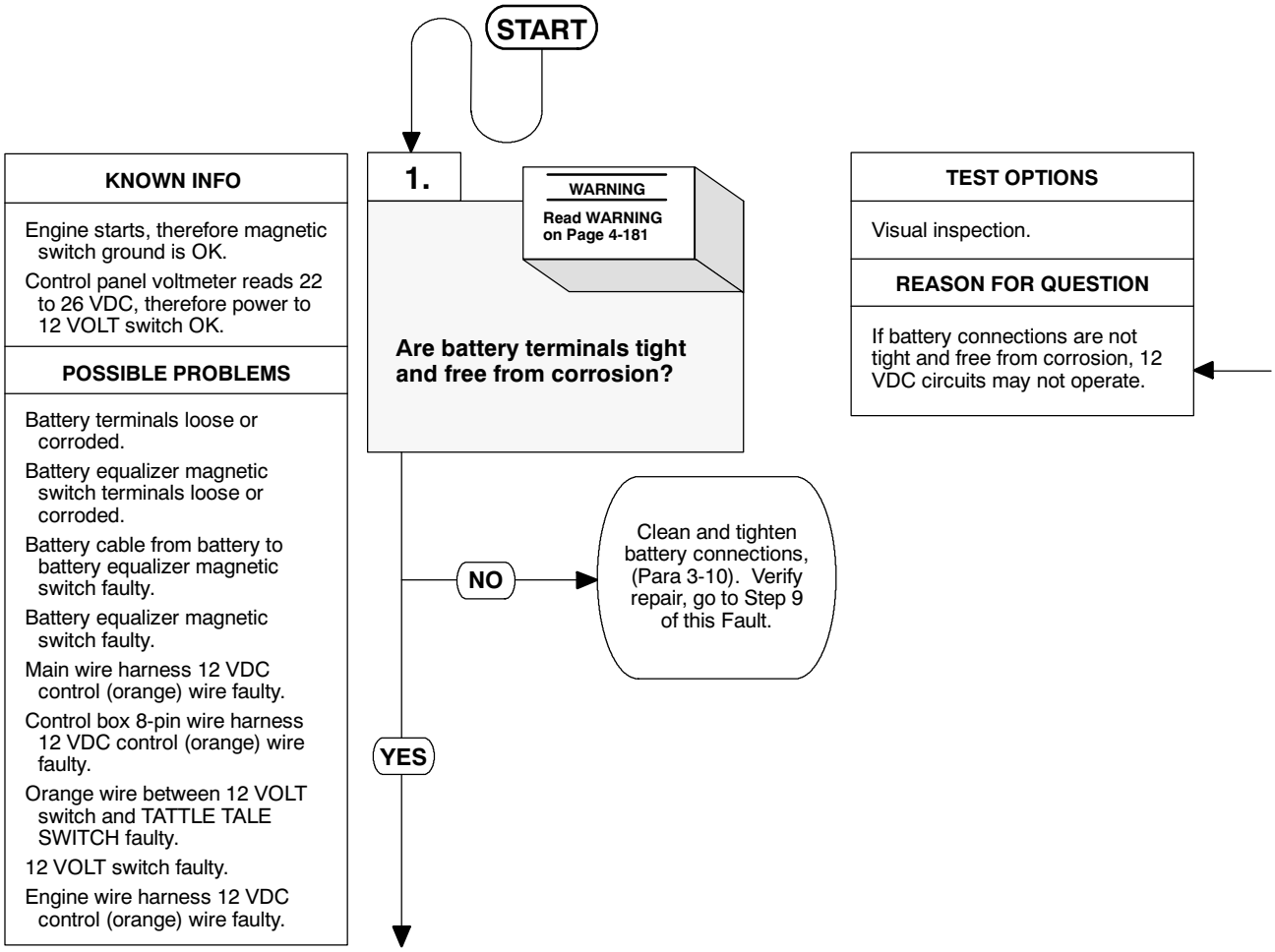

WARNING

- Remove all jewelry such as rings, dog tags, bracelets etc. If jewelry or tools contact positive electrical circuits, a direct short may result. Damage to equipment, injury or death to personnel may occur.
- Battery acid (electrolyte) is extremely harmful. Always wear safety goggles and rubber gloves, and do not smoke when performing maintenance on batteries. Injury will result if acid contacts skin or eyes. Wear rubber apron to prevent clothing from being damaged.

VISUAL INSPECTION
(1) Open battery box cover, (Para 3-10).
(2) Check if battery terminals are tight and free from corrosion.
(a) If battery terminals are not tight and free from corrosion, tighten, and clean battery terminals, (Para 3-10). Verify repair, go to Step 9 of this Fault.
(b) If battery terminals are tight and free from corrosion, go to Step 2 of this Fault.

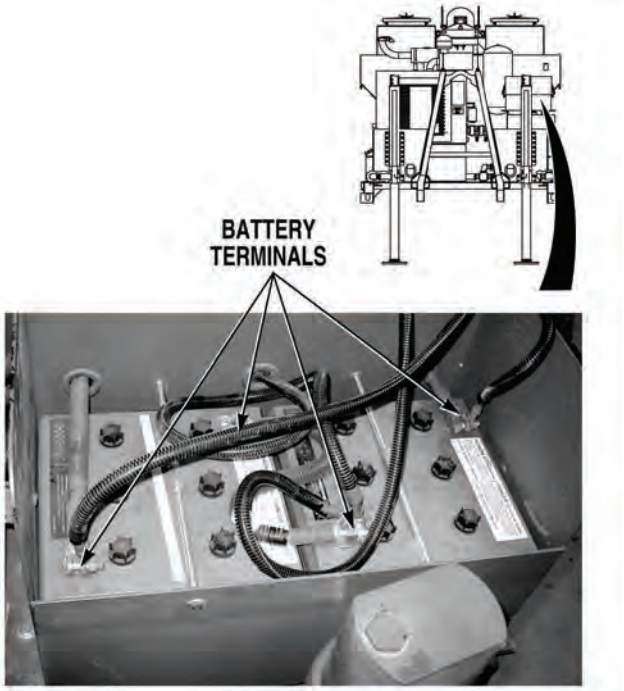

4. ALL 12 VOLT DC CIRCUITS DO NOT OPERATE (CONT).

KNOWN INFO

Engine starts, therefore magnetic switch ground is OK.

Control panel voltmeter reads 22 to 26 VDC, therefore power to 12 VOLT switch OK.

Battery terminals OK.

POSSIBLE PROBLEMS

Battery equalizer magnetic switch terminals loose or corroded.

Battery cable from battery to battery equalizer magnetic switch faulty.

Battery equalizer magnetic switch faulty.

Main wire harness 12 VDC control (orange) wire faulty.

Control box 8-pin wire harness 12 VDC control (orange) wire faulty.

12 VOLT switch faulty.

Engine wire harness 12 VDC control (orange) wire faulty.

2.

WARNING

Read WARNING on Page 4-183

Are battery equalizer magnetic switch terminals tight and free from corrosion?

NO → Clean and tighten battery equalizer magnetic switch connections, (Para 3-17). Verify repair, go to Step 11 of this Fault.

YES ↓

TEST OPTIONS

Visual inspection.

REASON FOR QUESTION

If battery equalizer magnetic switch terminals are not tight and free from corrosion, 12 VDC circuits may not operate.

WARNING

Remove all jewelry such as rings, dog tags, bracelets etc. If jewelry or tools contact positive electrical circuits, a direct short may result. Damage to equipment, injury or death to personnel may occur.

VISUAL INSPECTION

(1) Disconnect batteries, (Para 3-10).

(2) Remove magnetic switch cover plate from engine enclosure, (Para 3-17).

(3) Check if battery equalizer magnetic switch terminals are tight and free from corrosion.

(a) If battery equalizer magnetic switch terminals are not tight and free from corrosion, clean and tighten battery equalizer magnetic switch terminals, (Para 3-17). Verify repair, go to Step 9 of this Fault.

(b) If battery equalizer magnetic switch terminals are tight and free from corrosion, go to Step 3 of this Fault.

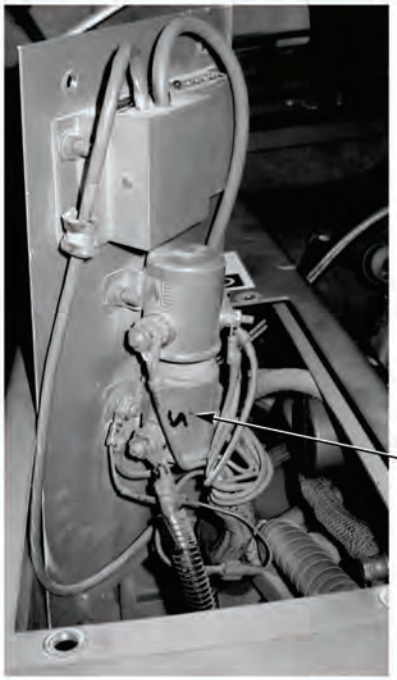

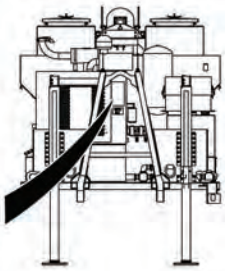

BATTERY EQUALIZER MAGNETIC SWITCH

4. ALL 12 VOLT DC CIRCUITS DO NOT OPERATE (CONT).

KNOWN INFO
Engine starts, therefore magnetic switch ground is OK. Control panel voltmeter reads 22 to 26 VDC, therefore power to 12 VOLT switch OK. Battery terminals OK. Battery equalizer magnetic switch terminals OK.
POSSIBLE PROBLEMS
Battery cable from battery to battery equalizer magnetic switch faulty. Battery equalizer magnetic switch faulty. Main wire harness 12 VDC control (orange) wire faulty. Control box 8-pin wire harness 12 VDC control (orange) wire faulty. 12 VOLT switch faulty. Engine wire harness 12 VDC control (orange) wire faulty.

3.

WARNING

Read WARNING on Page 4-185

Is battery equalizer magnetic switch energized, when 12 VOLT switch is turned ON?

NO → Go to Step 5 of this Fault.

YES ↓

TEST OPTIONS
Operational test.
REASON FOR QUESTION
To isolate fault.

WARNING

Remove all jewelry such as rings, dog tags, bracelets etc. If jewelry or tools contact positive electrical circuits, a direct short may result. Damage to equipment, injury or death to personnel may occur.

OPERATIONAL TEST

(1) Connect batteries, (Para 3-10).

(2) Turn IGNITION SWITCH ON, (Para 2-1).

(3) While an assistant turns 12 VOLT switch ON, (Para 2-1). Check if battery equalizer magnetic switch energizes.

NOTE

Magnetic switch will make an audible clicking sound when energizing.

(a) If battery equalizer magnetic switch does not energize, go to Step 5 of this Fault.

(b) If battery equalizer magnetic switch energizes, go to Step 4 of this Fault.

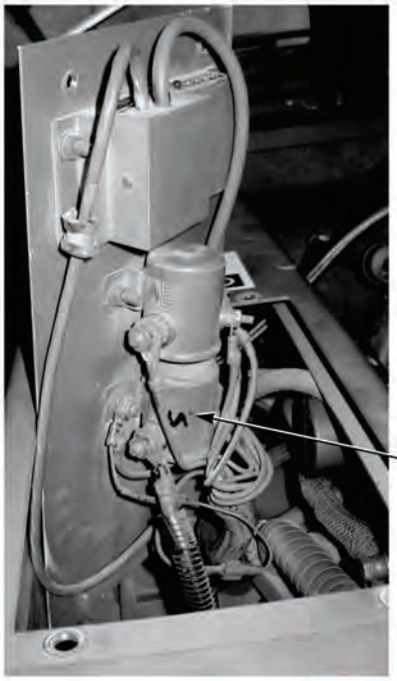

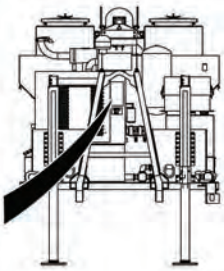

BATTERY EQUALIZER MAGNETIC SWITCH

IGNITION SWITCH

12 VOLT SWITCH

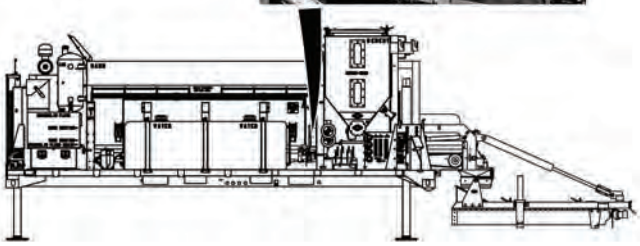

4. ALL 12 VOLT DC CIRCUITS DO NOT OPERATE (CONT).

KNOWN INFO

- Engine starts, therefore magnetic switch ground OK.
- Control panel voltmeter reads 22 to 26 VDC, therefore power to 12 VOLT switch OK.
- Battery terminals OK.
- Battery equalizer magnetic switch terminals OK.
- Main wire harness 12 VDC control (orange) wire OK.
- Control box 8-pin wire harness (orange) wire OK.
- 12 VOLT switch OK.
- Engine wire harness 12 VDC control (orange) wire OK.

POSSIBLE PROBLEMS

- Battery cable from battery to battery equalizer magnetic switch faulty.
- Battery equalizer magnetic switch faulty.

4.

WARNING

Read WARNING on Page 4-187

Are 10 to 14 VDC measured between battery equalizer magnetic switch battery cable terminal and a known good ground?

NO → Replace battery cable from battery to battery equalizer magnetic switch, (Para 3-140). Verify repair, go to Step 9 of this Fault.

YES → Replace battery equalizer magnetic switch, (Para 3-17). Verify repair, go to Step 9 of this Fault.

TEST OPTIONS

Voltage test.

REASON FOR QUESTION

If 10 to 14 VDC are present, battery equalizer magnetic switch is faulty. If not, battery cable from battery to battery equalizer magnetic switch is faulty.

WARNING

Remove all jewelry such as rings, dog tags, bracelets etc. If jewelry or tools contact positive electrical circuits, a direct short may result. Damage to equipment, injury or death to personnel may occur.

VOLTAGE TEST

(1) Remove magnetic switch cover plate from engine compartment, (Para 3-17).

(2) Connect positive (+) multimeter lead to battery equalizer magnetic switch battery cable terminal.

(3) Connect negative (-) multimeter lead to a known good ground.

(a) If 10 to 14 VDC are not present, replace cable from battery to battery equalizer magnetic switch, (Para 3-140).

(b) If 10 to 14 VDC are present, replace battery equalizer magnetic switch, (Para 3-17).

(4) Verify repair, go to Step 9 of this Fault.

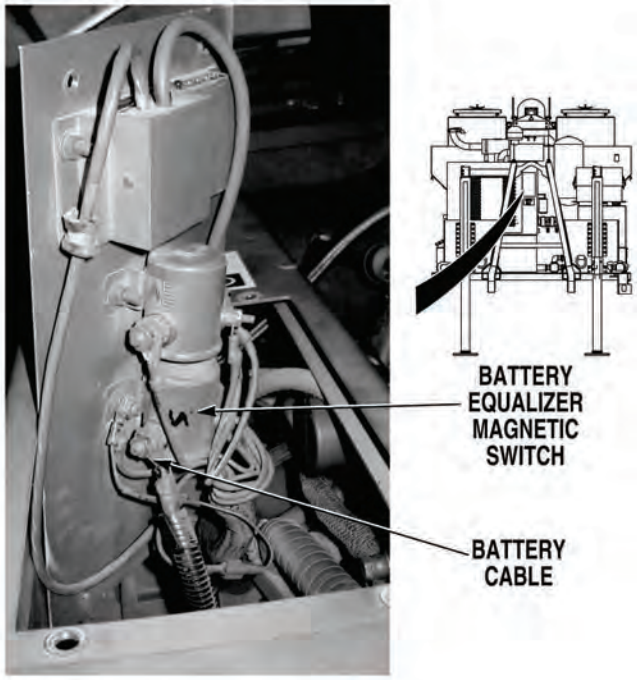

4. ALL 12 VOLT DC CIRCUITS DO NOT OPERATE (CONT).

KNOWN INFO

Engine starts, therefore magnetic switch ground OK.

Control panel voltmeter reads 22 to 26 VDC, therefore power to 12 VOLT switch OK.

Battery terminals OK.

Battery equalizer magnetic switch terminals OK.

Cable from battery to battery equalizer magnetic switch OK.

POSSIBLE PROBLEMS

Battery equalizer magnetic switch faulty.

Main wire harness 12 VDC control (orange) wire faulty.

Control box 8-pin wire harness 12 VDC control (orange) wire faulty.

12 VOLT switch faulty.

Engine wire harness 12 VDC control (orange) wire faulty.

5.

WARNING

Read WARNING on Page 4-189

Are 22 to 28 VDC measured between battery equalizer magnetic switch, control terminal and a known good ground at engine block when 12 VOLT switch is turned ON?

NO → Go to Step 6 of this Fault.

YES → Replace battery equalizer magnetic switch, (Para 3-17). Verify repair, go to Step 9 of this Fault.

TEST OPTIONS

Voltage test.

REASON FOR QUESTION

If 22 to 28 VDC is measured, battery equalizer magnetic switch is faulty.

WARNING

Remove all jewelry such as rings, dog tags, bracelets etc. If jewelry or tools contact positive electrical circuits, a direct short may result. Damage to equipment, injury or death to personnel may occur.

VOLTAGE TEST

(1) Connect positive (+) multimeter lead to battery equalizer magnetic switch control terminal.

(2) Connect negative (-) multimeter lead to a known good ground at engine block.

(a) If 22 to 28 VDC are not present, go to Step 6 of this Fault.

(b) If 22 to 28 VDC are present, replace battery equalizer magnetic switch (Para 3-17). Verify repair, go to Step 9 of this Fault.

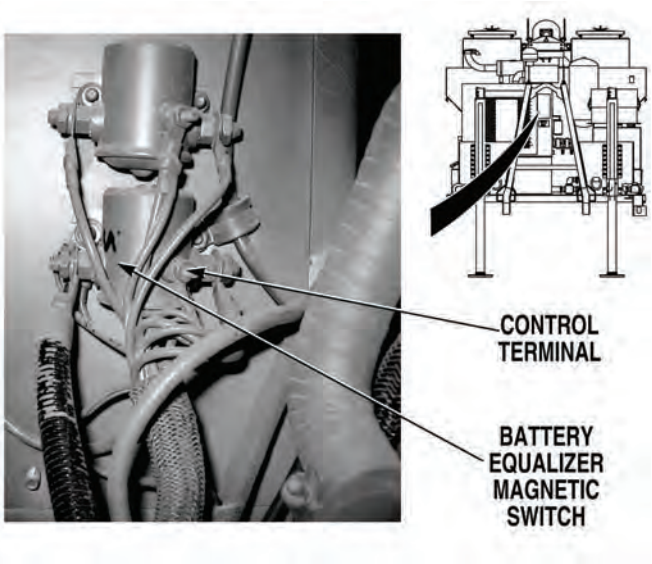

4. ALL 12 VOLT DC CIRCUITS DO NOT OPERATE (CONT).

KNOWN INFO

Engine starts, therefore magnetic switch ground OK.

Control panel voltmeter reads 22 to 26 VDC, therefore power to 12 VOLT switch OK.

Battery terminals OK.

Battery equalizer magnetic switch terminals OK.

Cable from battery to battery equalizer magnetic switch OK.

Battery equalizer magnetic switch OK.

POSSIBLE PROBLEMS

Main wire harness 12 VDC control (orange) wire faulty.

Control box 8-pin wire harness 12 VDC control (orange) wire faulty.

12 VOLT switch faulty.

Engine wire harness 12 VDC control (orange) wire faulty.

6.

WARNING

Read WARNING on Page 4-191

Is continuity measured across main wire harness 12 VDC control (orange) wire from engine connector, terminal M to 8-pin connector, terminal G?

NO → Repair 12 VDC control (orange) wire, (Para 3-141) or replace main wire harness, (Para 3-134). Verify repair, go to Step 9 of this Fault.

YES ↓

TEST OPTIONS

Continuity test.

REASON FOR QUESTION

If continuity is not measured, main wire harness 12 VDC control (orange) wire is faulty.

WARNING

Remove all jewelry such as rings, dog tags, bracelets etc. If jewelry or tools contact positive electrical circuits, a direct short may result. Damage to equipment, injury or death to personnel may occur.

CONTINUITY TEST

(1) Turn 12 VOLT switch OFF, (Para 2-1).

(2) Turn IGNITION CONTROL switch OFF, (Para 2-1).

(3) Disconnect batteries, (Para 2-19).

(4) Disconnect main wire harness engine wire harness connector, (Para 3-134).

(5) Disconnect main wire harness control box 8-pin connector, (Para 3-134).

(6) Set multimeter select switch to ohms.

(7) Connect jumperwire between main wire harness control box 8-pin connector, terminal G and a known good ground.

(8) Connect positive (+) multimeter lead to main wire harness engine wire harness connector, terminal M.

(9) Connect negative (-) multimeter lead to a known good ground.

(a) If continuity is not measured, repair 12 volt control (orange) wire, (Para 3-141) or replace main wire harness, (Para 3-134). Verify repair, go to Step 9 of this Fault.

(b) If continuity is measured, go to Step 7 of this Fault.

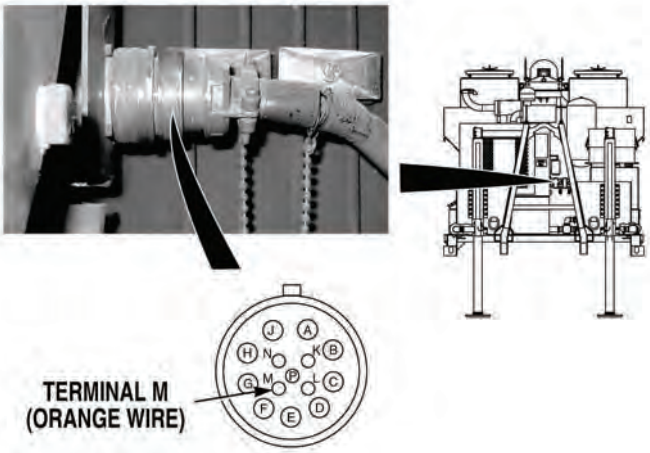

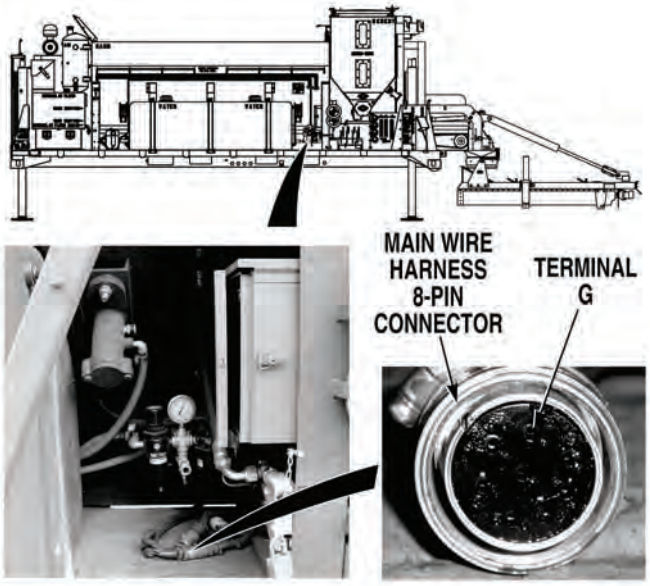

4. ALL 12 VOLT DC CIRCUITS DO NOT OPERATE (CONT).

KNOWN INFO

Engine starts, therefore magnetic switch ground OK.

Control panel voltmeter reads 22 to 26 VDC, therefore power to 12 VOLT switch OK.

Battery terminals OK.

Battery equalizer magnetic switch terminals OK.

Cable from battery to battery equalizer magnetic switch OK.

Battery equalizer magnetic switch OK.

Main wire harness 12 VDC control (orange) wire OK.

POSSIBLE PROBLEMS

Control box 8-pin wire harness 12 VDC control (orange) wire faulty.

12 VOLT switch faulty.

Engine wire harness 12 VDC control (orange) wire faulty.

7.

WARNING

Read WARNING on Page 4-193

Is continuity measured across control box 8-pin wire harness 12 VDC control (orange) wire from connector, terminal G to 12 VOLT switch?

NO → Repair 12 VDC control (orange) wire, (Para 3-141) or replace control box 8-pin wire harness, (Para 3-137). Verify repair, go to Step 9 of this Fault.

YES ↓

TEST OPTIONS

Continuity test.

REASON FOR QUESTION

If continuity is not measured, control box 8-pin wire harness 12 VDC control (orange) wire is faulty.

WARNING

Remove all jewelry such as rings, dog tags, bracelets etc. If jewelry or tools contact positive electrical circuits, a direct short may result. Damage to equipment, injury or death to personnel may occur.

CONTINUITY TEST

(1) Remove control box from concrete mobile mixer, (Para 3-90).

(2) Release latch and open control box door.

(3) Remove screw from top of control panel.

(4) Gently tip control panel forward for access to wires.

(5) Set multimeter select switch to ohms.

(6) Connect positive (+) multimeter lead to orange wire at control box wire harness 8-pin connector, terminal G.

(7) Connect negative (-) multimeter lead to orange wire at 12 VOLT switch single wire terminal.

(a) If continuity is not measured, repair orange wire, (Para 3-141) or replace control box 8-pin wire harness, (Para 3-137). Verify repair, go to Step 9 of this Fault.

(b) If continuity is measured, go to Step 8 of this Fault.

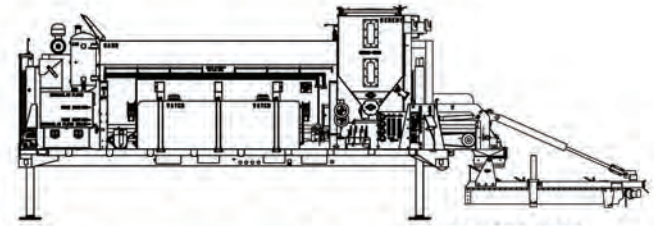

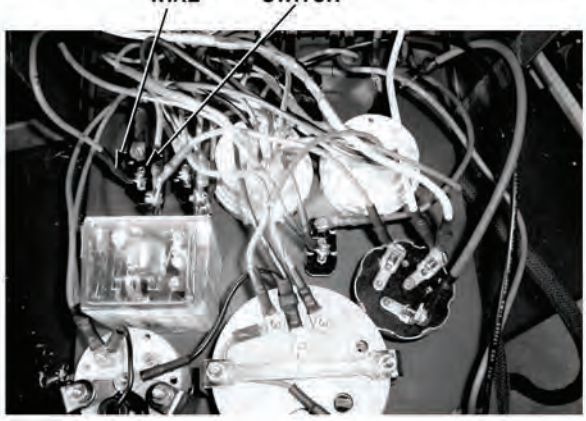

4. ALL 12 VOLT DC CIRCUITS DO NOT OPERATE (CONT).

KNOWN INFO

- Engine starts, therefore magnetic switch ground OK.
- Control panel voltmeter reads 22 to 26 VDC, therefore power to 12 VOLT switch OK.
- Battery terminals OK.
- Battery equalizer magnetic switch terminals OK.
- Cable from battery to battery equalizer magnetic switch OK.
- Battery equalizer magnetic switch OK.
- Main wire harness 12 VDC control (orange) wire OK.
- Control box 8-pin wire harness 12 VDC control (orange) wire OK.

POSSIBLE PROBLEMS

- 12 VOLT switch faulty.
- Engine wire harness 12 VDC control (orange) wire faulty.

8.

WARNING

Read WARNING on Page 4-195

Is continuity measured across 12 VOLT control switch when switch is in the ON position?

NO → Replace 12 VOLT switch, (Para 3-57). Verify repair, go to Step 9 of this Fault.

YES → Repair wire, (Para 3-141) or replace engine wire harness, (Para 3-136). Verify repair, go to Step 9 of this Fault.

TEST OPTIONS

Continuity test.

REASON FOR QUESTION

If continuity is measured, engine wire harness (orange) wire is faulty. If not, 12 VOLT switch is faulty.

WARNING

Remove all jewelry such as rings, dog tags, bracelets etc. If jewelry or tools contact positive electrical circuits, a direct short may result. Damage to equipment, injury or death to personnel may occur.

CONTINUITY TEST

(1) Set multimeter select switch to ohms.

(2) Turn 12 VOLT switch ON, (Para 2-1).

(3) Connect positive (+) multimeter lead to 12 VOLT switch, terminal A.

(4) Connect negative (-) multimeter lead to 12 VOLT switch, terminal B.

  (a) If continuity is not measured, replace 12 VOLT switch, (Para 3-57).

  (b) If continuity is measured, repair 12 VDC control (orange) wire, (Para 3-141) or replace engine wire harness, (Para 3-136).

(5) Verify repair, go to Step 9 of this Fault.

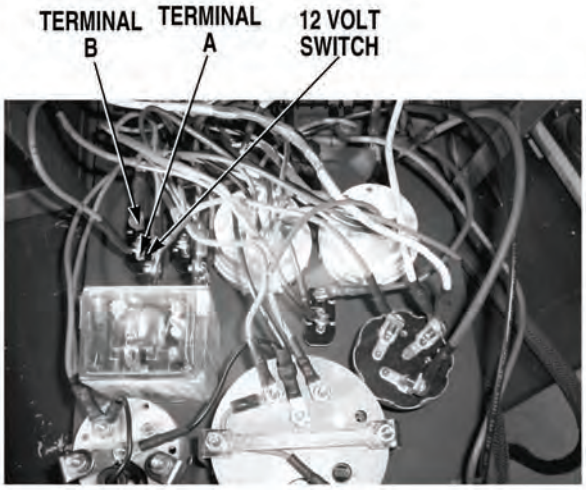

4. ALL 12 VOLT DC CIRCUITS DO NOT OPERATE (CONT).

KNOWN INFO
Engine starts, therefore magnetic switch ground OK. Control panel voltmeter reads 22 to 26 VDC therefore power to 12 VOLT switch OK. Battery terminals OK. Battery equalizer magnetic switch terminals OK. Cable from battery to battery equalizer magnetic switch OK. Battery equalizer magnetic switch OK. Main wire harness 12 VDC control (orange) wire OK. Control box 8-pin wire harness 12 VDC control (orange) wire OK. 12 VOLT switch OK. Engine wire harness 12 VDC control (orange) wire OK.
POSSIBLE PROBLEMS
None.

9.

Do all 12 Volt DC circuits operate?

NO → Fault not corrected. Notify Supervisor.

YES → Fault corrected.

TEST OPTIONS
Verify repair.
REASON FOR QUESTION
If all 12 Volt DC circuits operate, fault has been corrected.

VERIFY REPAIR

(1) If removed, install control box, (Para 3-90).

(2) If disconnected, connect control box 8-pin wire harness connections, (Para 3-134).

(3) If removed, install magnetic switch cover on engine enclosure, (Para 3-17).

(4) If disconnected, connect batteries, (Para 3-10).

(5) Turn IGNITION SWITCH ON, (Para 2-1).

(6) Turn 12 VOLT switch ON, (Para 2-1).

(7) Turn WORK LIGHTS switch ON, (Para 2-1).

  (a) If work lights do not operate, fault not corrected. Notify Supervisor.

  (b) If work lights operate, fault has been corrected.

(8) Turn WORK LIGHTS switch OFF, (Para 2-1).

(9) Turn 12 VOLT switch OFF, (Para 2-1).

(10) Turn IGNITION SWITCH OFF, (Para 2-1).

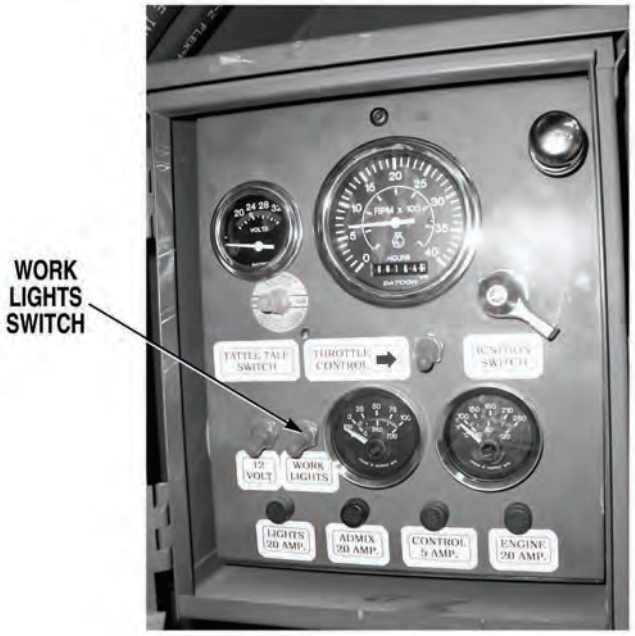

5. BATTERY CHARGING SYSTEM OR BATTERY EQUALIZER DOES NOT OPERATE CORRECTLY.

INITIAL SETUP

Tools and Special Tools

Tool Kit, General Mechanic's: Automotive (Item 19, Appendix I)

Multimeter (Item 11, Appendix I)

Equipment Condition

Concrete Mobile Mixer unloaded from PLS, (Para 2-5)

Engine OFF, (Para 2-19)

KNOWN INFO

Nothing.

POSSIBLE PROBLEMS

- Battery connections loose or corroded.
- Battery equalizer connections loose or corroded.
- Engine cooling fan drive belt loose or damaged.
- Battery pack A faulty.
- Battery pack B faulty.
- Voltmeter reading incorrect.
- Engine wire harness + 24 VDC (red) wire faulty.
- 12 VDC circuit overloaded.
- Battery equalizer faulty.
- Wire from battery + 24 VDC terminal to battery equalizer + 24 VDC terminal faulty.
- Wire from battery negative (-) terminal to battery equalizer ground terminal faulty.
- Wire from battery + 12 VDC terminal to battery equalizer + 12 VDC terminal faulty.
- Engine wire harness ground (black) wire faulty.
- Alternator faulty.
- Engine wire harness white wire between splice and voltage regulator enable terminal faulty.

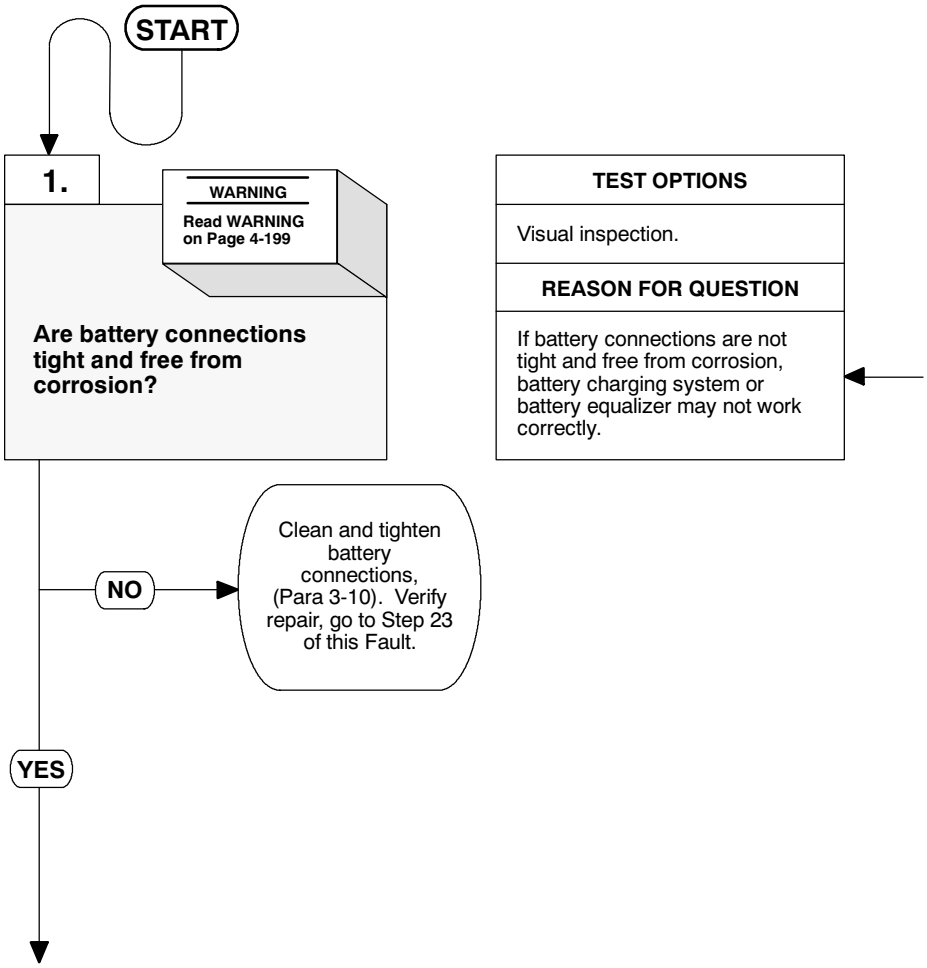

WARNING

Remove all jewelry such as rings, dog tags, bracelets etc. If jewelry or tools contact positive electrical circuits, a direct short may result. Damage to equipment, injury or death to personnel may occur.

VISUAL INSPECTION

Check if battery terminals are tight and free from corrosion.

(a) If battery terminals are loose or corroded, clean and tighten battery connections, (Para 3-10). Verify repair, go to Step 23 of this Fault.

(b) If battery terminals are tight and free from corrosion, go to Step 2 of this Fault.

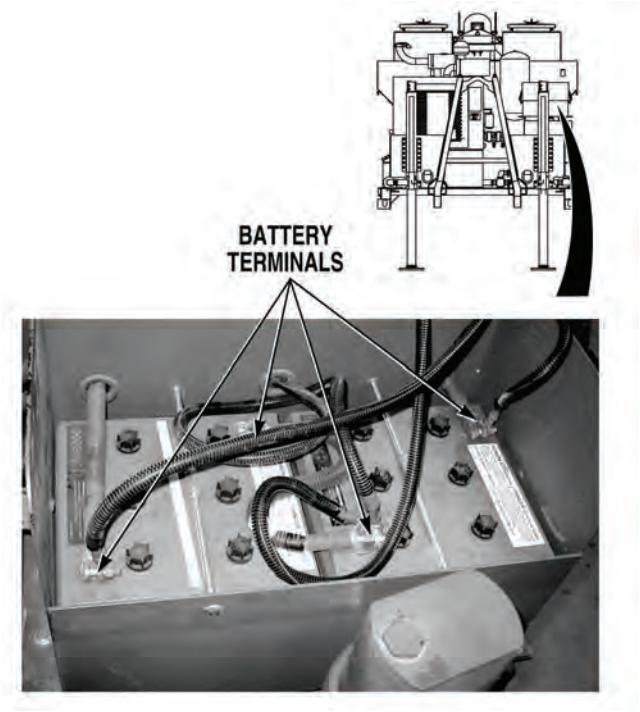

5. BATTERY CHARGING SYSTEM OR BATTERY EQUALIZER DOES NOT OPERATE CORRECTLY (CONT).

KNOWN INFO
Battery connections OK.
POSSIBLE PROBLEMS
Battery equalizer connections loose or corroded. Engine cooling fan drive belt loose or damaged. Battery pack A faulty. Battery pack B faulty. Voltmeter reading incorrect. Engine wire harness + 24 VDC (red) wire faulty. 12 VDC circuit overloaded. Battery equalizer faulty. Wire from battery + 24 VDC terminal to battery equalizer + 24 VDC terminal faulty. Wire from battery negative (-) terminal to battery equalizer ground terminal faulty. Wire from battery + 12 VDC terminal to battery equalizer + 12 VDC terminal faulty. Engine wire harness ground (black) wire faulty. Alternator faulty. Engine wire harness white wire between splice and voltage regulator enable terminal faulty.

2.

WARNING

Read WARNING on Page 4-201

Are battery equalizer connections tight and free from corrosion?

NO → Clean and tighten battery equalizer connections, (Para 3-13). Verify repair, go to Step 23 of this Fault.

YES ↓

TEST OPTIONS
Visual inspection.
REASON FOR QUESTION
If battery equalizer connections are not tight and free from corrosion, battery equalizer may not work correctly.

WARNING

Remove all jewelry such as rings, dog tags, bracelets etc. If jewelry or tools contact positive electrical circuits, a direct short may result. Damage to equipment, injury or death to personnel may occur.

VISUAL INSPECTION
Check if battery equalizer terminals are tight and free from corrosion. (a) If battery equalizer terminals are loose or corroded, clean and tighten battery equalizer connections, (Para 3-13). Verify repair, go to Step 23 of this Fault. (b) If battery equalizer terminals are tight and free from corrosion, go to Step 3 of this Fault.

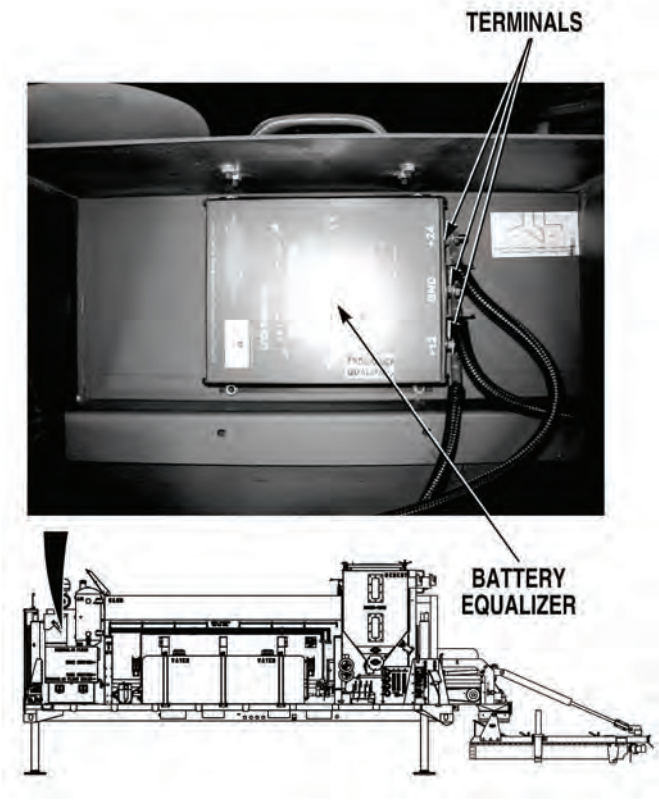

5. BATTERY CHARGING SYSTEM OR BATTERY EQUALIZER DOES NOT OPERATE CORRECTLY (CONT).

KNOWN INFO
Battery connections OK. Battery equalizer connections OK.
POSSIBLE PROBLEMS
Engine cooling fan drive belt loose or damaged. Battery pack A faulty. Battery pack B faulty. Voltmeter reading incorrect. Engine wire harness + 24 VDC (red) wire faulty. 12 VDC circuit overloaded. Battery equalizer faulty. Wire from battery + 24 VDC terminal to battery equalizer + 24 VDC terminal faulty. Wire from battery negative (-) terminal to battery equalizer ground terminal faulty. Wire from battery + 12 VDC terminal to battery equalizer + 12 VDC terminal faulty. Engine wire harness ground (black) wire faulty. Alternator faulty. Engine wire harness white wire between splice and voltage regulator enable terminal faulty.

3.

Is engine cooling fan drive belt tight and free from damage?

NO → Replace fan drive belt tensioner, (Para 3-108) and/or replace fan drive belt, (Para 3-107). Verify repair, go to Step 23 of this Fault.

YES ↓

TEST OPTIONS
Visual inspection.
REASON FOR QUESTION
If engine cooling fan drive belt is not tight and free from damage, battery charging system may not operate correctly.

VISUAL INSPECTION

(1) Remove front engine access panel, (Para 3-78).

(2) Check if engine cooling fan drive belt is tight and free from damage.

(a) If engine cooling fan drive belt is not tight and free from damage, replace fan drive belt tensioner, (Para 3-108) and/or replace fan drive belt, (Para 3-107). Verify repair, go to Step 23 of this Fault.

(b) If engine cooling fan drive belt is tight and free from damage, go to Step 4 of this Fault.

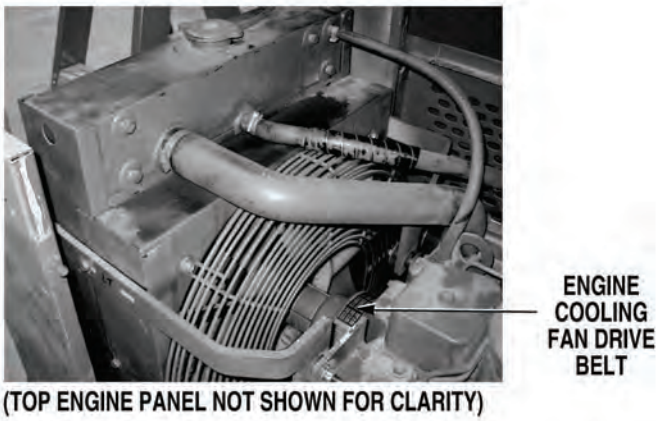

5. BATTERY CHARGING SYSTEM OR BATTERY EQUALIZER DOES NOT OPERATE CORRECTLY (CONT).

KNOWN INFO
Battery connections OK.
Battery equalizer connections OK.
Engine cooling fan drive belt OK.

POSSIBLE PROBLEMS
Battery pack A faulty.
Battery pack B faulty.
Voltmeter reading incorrect.
Engine wire harness + 24 VDC (red) wire faulty.
12 VDC circuit overloaded.
Battery equalizer faulty.
Wire from battery + 24 VDC terminal to battery equalizer + 24 VDC terminal faulty.
Wire from battery negative (-) terminal to battery equalizer ground terminal faulty.
Wire from battery + 12 VDC terminal to battery equalizer + 12 VDC terminal faulty.
Engine wire harness ground (black) wire faulty.
Alternator faulty.
Engine wire harness white wire between splice and voltage regulator enable terminal faulty.

4.

Does control panel voltmeter read 22 to 28 VDC when IGNITION SWITCH is turned ON?

NO → Go to Step 5 of this Fault.

YES → Go to Step 7 of this Fault.

TEST OPTIONS
Operational test.

REASON FOR QUESTION
To isolate fault.

OPERATIONAL TEST

(1) Turn IGNITION SWITCH ON, (Para 2-1).

(2) Check if control panel voltmeter reads 22 to 28 VDC.

(a) If control panel voltmeter does not read 22 to 28 VDC, go to Step 5 of this Fault.

(b) If control panel voltmeter does read 22 to 28 VDC, go to Step 7 of this Fault.

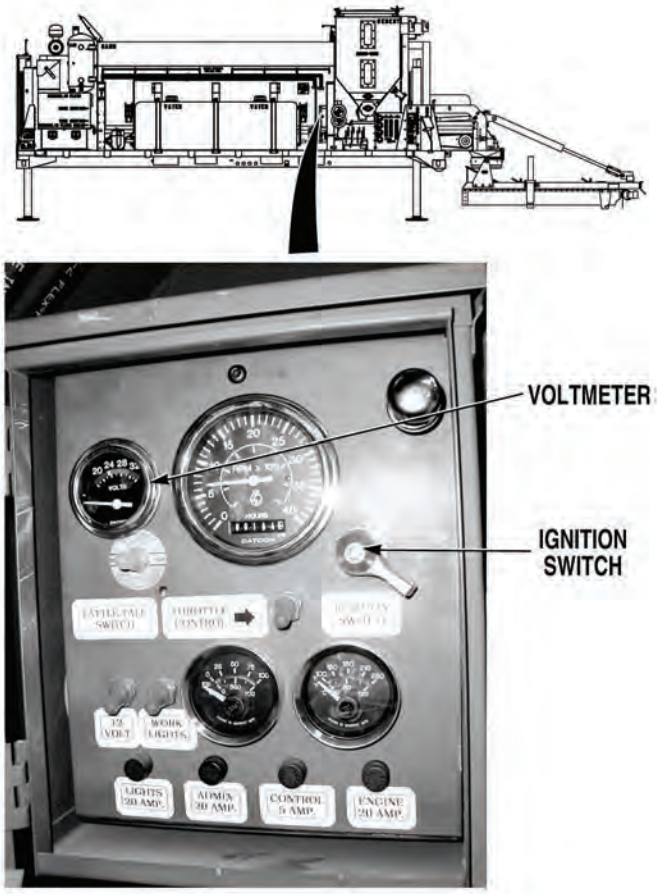

5. BATTERY CHARGING SYSTEM OR BATTERY EQUALIZER DOES NOT OPERATE CORRECTLY (CONT).

KNOWN INFO
Battery connections OK. Battery equalizer connections OK. Engine cooling fan drive belt OK.
POSSIBLE PROBLEMS
Battery pack A faulty. Battery pack B faulty. Voltmeter reading incorrect. Engine wire harness + 24 VDC (red) wire faulty. 12 VDC circuit overloaded. Battery equalizer faulty. Wire from battery + 24 VDC terminal to battery equalizer + 24 VDC terminal faulty. Wire from battery negative (-) terminal to battery equalizer ground terminal faulty. Wire from battery + 12 VDC terminal to battery equalizer + 12 VDC terminal faulty. Engine wire harness ground (black) wire faulty. Alternator faulty. Engine wire harness white wire between splice and voltage regulator enable terminal faulty.

5.

Is a voltage measurement greater than 0 VDC displayed on control panel voltmeter when IGNITION SWITCH is turned ON?

NO → Go to Step 6 of this Fault.

YES → Check specific gravity, (TM 9-6140-200-14) and service batteries. Then go to Step 7 of this Fault.

TEST OPTIONS
Operational test.
REASON FOR QUESTION
To further isolate fault.

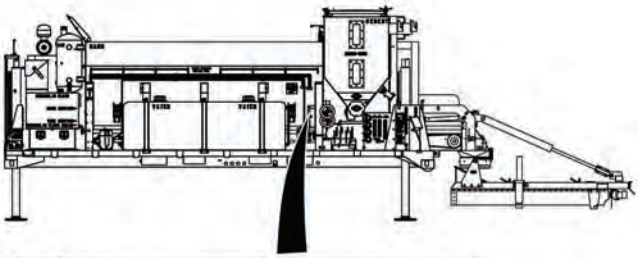

OPERATIONAL TEST
Check if greater than 0 VDC is displayed on control panel voltmeter. (a) If 0 VDC is displayed on control panel voltmeter, go to Step 6 of this Fault. (b) If greater than 0 VDC is displayed on control panel voltmeter, check specific gravity, (TM 9-6140-200-14) and service batteries. Then go to Step 7 of this Fault.

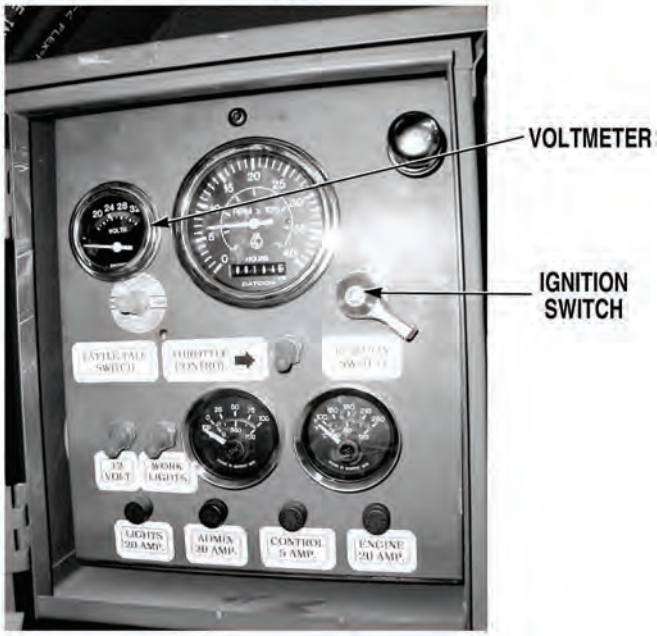

5. BATTERY CHARGING SYSTEM OR BATTERY EQUALIZER DOES NOT OPERATE CORRECTLY (CONT).

KNOWN INFO

- Battery connections OK.
- Battery equalizer connections OK.
- Engine cooling fan drive belt OK.
- Engine wire harness + 24 VDC (red) wire OK.
- 12 VDC circuit not overloaded.
- Battery equalizer OK.
- Wire from battery + 24 VDC terminal to battery equalizer + 24 VDC terminal OK.
- Wire from battery negative (-) terminal to battery equalizer ground terminal OK.
- Wire from battery + 12 VDC terminal to battery equalizer + 12 VDC terminal OK.
- Engine wire harness ground (black) wire OK.
- Alternator OK.
- Engine wire harness white wire between splice and voltage regulator enable terminal OK.

POSSIBLE PROBLEMS

- Battery pack A faulty.
- Battery pack B faulty.
- Voltmeter reading incorrect.

6.

WARNING

Read WARNING on Page 4-209

Is a voltage greater than 0 VDC measured from battery 24 VDC terminal to battery ground terminal?

NO → Check specific gravity, (TM 9-6140-200-14) and service batteries. Verify repair, go to Step 23 of this Fault.

YES → Go to “Engine Gage Reading Incorrect”, (Fault 23).

TEST OPTIONS

Voltage test.

REASON FOR QUESTION

If a voltage greater than 0 VDC is measured, voltmeter reading is incorrect. If not, battery is faulty.

WARNING

Remove all jewelry such as rings, dog tags, bracelets etc. If jewelry or tools contact positive electrical circuits, a direct short may result. Damage to equipment, injury or death to personnel may occur.

VOLTAGE TEST

(1) Connect positive + multimeter lead to battery 24 VDC terminal.

(2) Connect negative (-) multimeter lead to a known good ground.

(a) If a voltage greater than 0 VDC is not present, check specific gravity of battery, (TM 9-6140-200-14) and service batteries. Verify repair, go to Step 23 of this Fault.

(b) If a voltage greater than 0 VDC is present, go to "Engine Gage Reading Incorrect", (Fault 23).

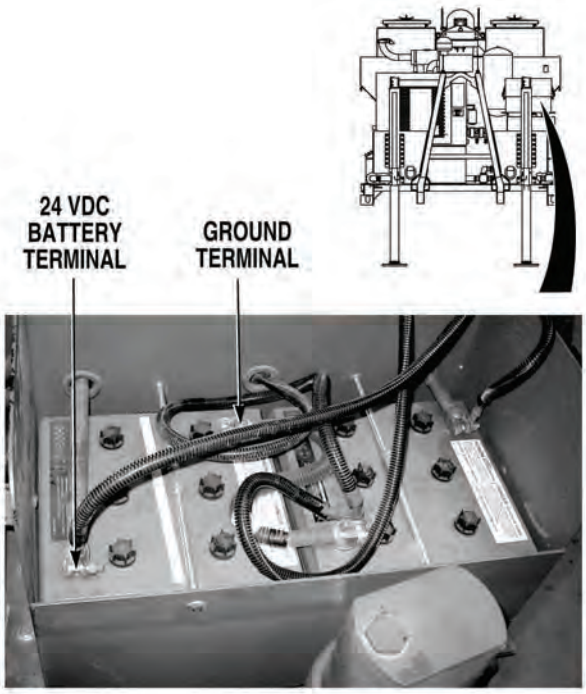

5. BATTERY CHARGING SYSTEM OR BATTERY EQUALIZER DOES NOT OPERATE CORRECTLY (CONT).

KNOWN INFO
Battery connections OK.
Battery equalizer connections OK.
Engine cooling fan drive belt OK.
Voltmeter reading OK.

POSSIBLE PROBLEMS
Battery pack A faulty.
Battery pack B faulty.
Engine wire harness + 24 VDC (red) wire faulty.
12 VDC circuit overloaded.
Battery equalizer faulty.
Wire from battery + 24 VDC terminal to battery equalizer + 24 VDC terminal faulty.
Wire from battery negative (-) terminal to battery equalizer ground terminal faulty.
Wire from battery + 12 VDC terminal to battery equalizer + 12 VDC terminal faulty.
Engine wire harness ground (black) wire faulty.
Alternator faulty.
Engine wire harness white wire between splice and voltage regulator enable terminal faulty.

7.

WARNING

Read WARNING on Page 4-211

Are 22 to 28 VDC measured between engine harness voltage regulator enable (white) wire and a known good ground when IGNITION SWITCH is ON and TATTLE TALE SWITCH is pressed?

NO → Go to Step 22 of this Fault.

YES ↓

TEST OPTIONS
Voltage test.

REASON FOR QUESTION
To further isolate fault.

WARNING

- Remove all jewelry such as rings, dog tags, bracelets etc. If jewelry or tools contact positive electrical circuits, a direct short may result. Damage to equipment, injury or death to personnel may occur.
- Care must be exercised while performing this test. Engine will start if assistant turns IGNITION SWITCH to start position.

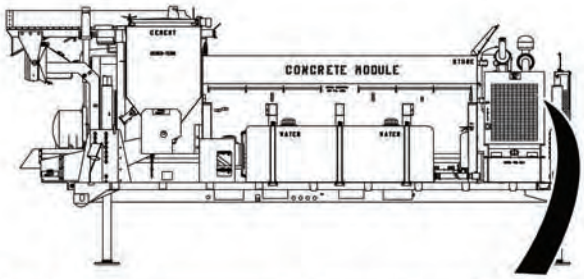

VOLTAGE TEST

(1) Remove top engine cover, (Para 3-93).

(2) Connect positive (+) multimeter lead to engine wire harness, voltage regulator enable white wire.

(3) Connect negative (-) multimeter lead to a known good ground.

(4) Turn IGNITION SWITCH ON, (Para 2-1).

(5) While an assistant presses TATTLE TALE SWITCH, check if 22 to 28 VDC are present at engine wire harness voltage regulator enable (white) wire.

(a) If 22 to 28 VDC are not present, go to Step 22 of this Fault.

(b) If 22 to 28 VDC are present, go to Step 8 of this Fault.

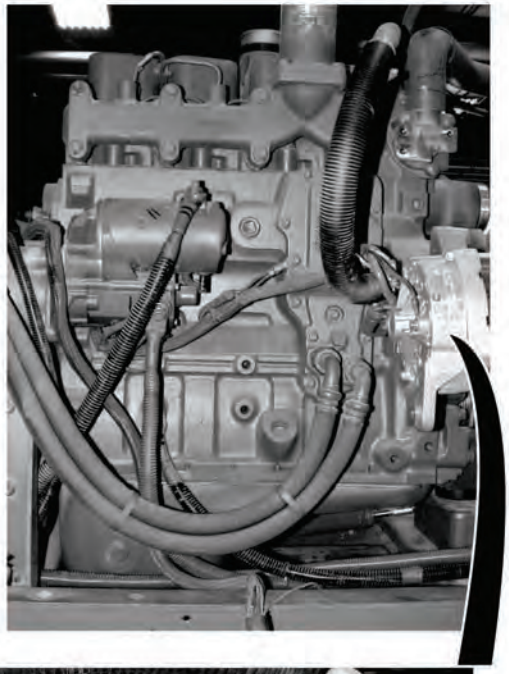

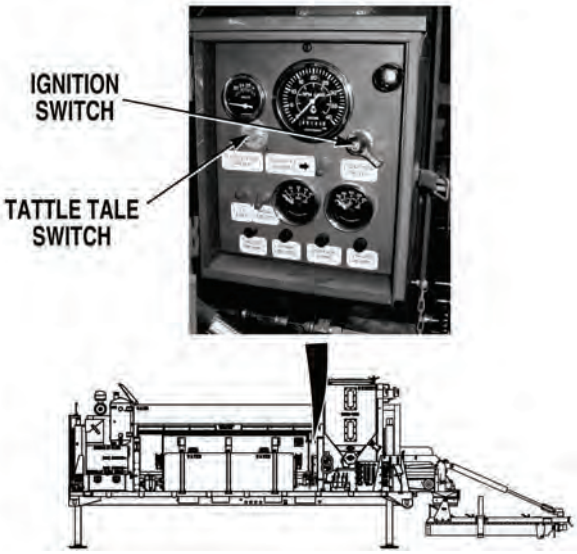

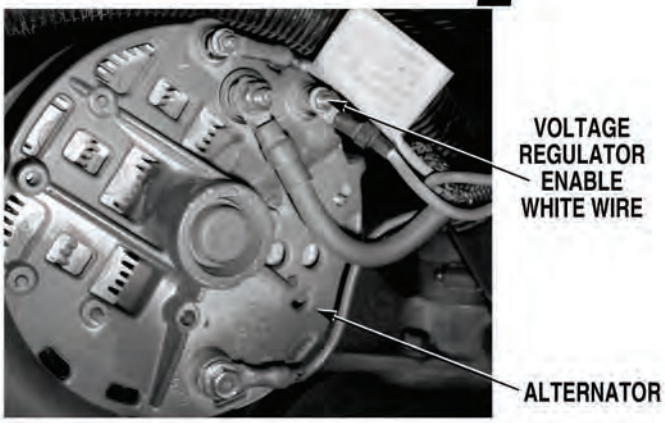

5. BATTERY CHARGING SYSTEM OR BATTERY EQUALIZER DOES NOT OPERATE CORRECTLY (CONT).

KNOWN INFO

- Battery connections OK.
- Battery equalizer connections OK.
- Engine cooling fan drive belt OK.
- Voltmeter reading OK.
- Engine wire harness white wire between splice and voltage regulator enable terminal OK.

POSSIBLE PROBLEMS

- Battery pack A faulty.
- Battery pack B faulty.
- Engine wire harness + 24 VDC (red) wire faulty.
- 12 VDC circuit overloaded.
- Battery equalizer faulty.
- Wire from battery + 24 VDC terminal to battery equalizer + 24 VDC terminal faulty.
- Wire from battery negative (-) terminal to battery equalizer ground terminal faulty.
- Wire from battery + 12 VDC terminal to battery equalizer + 12 VDC terminal faulty.
- Engine wire harness ground (black) wire faulty.
- Alternator faulty.

8.

WARNING

Read WARNING on Page 4-213

Are 22 to 28 VDC measured between red wire at alternator terminal and a known good ground?

NO → Repair + 24 VDC (red) wire, (Para 3-141) or replace engine wire harness, (Para 3-136). Verify repair, go to Step 23 of this Fault.

YES ↓

TEST OPTIONS

Voltage test.

REASON FOR QUESTION

If 22 to 28 VDC are not present, engine harness + 24 VDC (red) wire is faulty.

WARNING

Remove all jewelry such as rings, dog tags, bracelets etc. If jewelry or tools contact positive electrical circuits, a direct short may result. Damage to equipment, injury or death to personnel may occur.

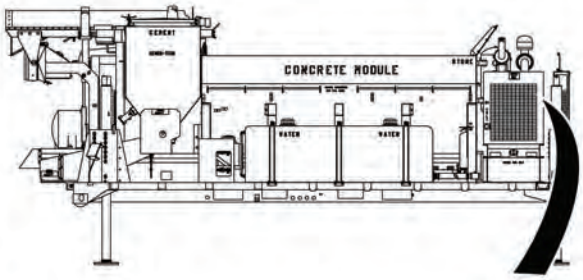

VOLTAGE TEST

(1) Turn IGNITION SWITCH OFF (Para, 2-1).

(2) Connect positive + multimeter lead to red wire at alternator terminal.

(3) Connect negative (-) multimeter lead to a known good ground.

(a) If 22 to 28 VDC are not present, repair (red) wire, (Para 3-141) or replace engine wire harness, (Para 3-136). Verify repair, go to Step 21 of this Fault.

(b) If 22 to 28 VDC is present, go to Step 9 of this Fault.

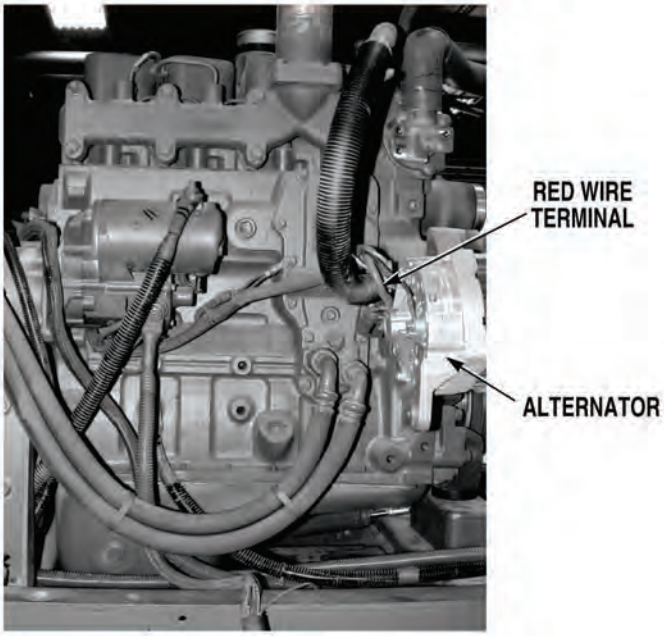

5. BATTERY CHARGING SYSTEM OR BATTERY EQUALIZER DOES NOT OPERATE CORRECTLY (CONT).

KNOWN INFO
Battery connections OK.
Battery equalizer connections OK.
Engine cooling fan drive belt OK.
Voltmeter reading OK.
Engine wire harness white wire between splice and voltage regulator enable terminal OK.
Engine wire harness + 24 VDC (red) wire OK.

POSSIBLE PROBLEMS
Battery pack A faulty.
Battery pack B faulty.
12 VDC circuit overloaded.
Battery equalizer faulty.
Wire from battery + 24 VDC terminal to battery equalizer + 24 VDC terminal faulty.
Wire from battery negative (-) terminal to battery equalizer ground terminal faulty.
Wire from battery + 12 VDC terminal to battery equalizer + 12 VDC terminal faulty.
Engine wire harness ground (black) wire faulty.
Alternator faulty.

9.

WARNING

Read WARNING on Page 4-215

Are 26 to 28 VDC measured between red wire at alternator terminal and a known good ground, when engine is running?

NO → Go to Step 21 of this Fault.

YES ↓

TEST OPTIONS
Voltage test.
REASON FOR QUESTION
To verify if alternator is operating.

WARNING

- Remove all jewelry such as rings, dog tags, bracelets etc. If jewelry or tools contact positive electrical circuits, a direct short may result. Damage to equipment, injury or death to personnel may occur.
- When working in engine compartment area with engine running, be extremely careful to avoid contact with or catching clothing in moving parts. Failure to comply may result in serious injury or death to personnel.

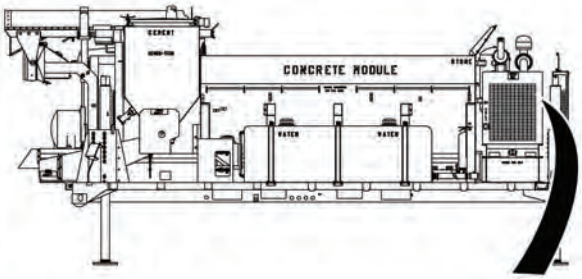

VOLTAGE TEST

NOTE

This Step is checking alternator charging voltage. It should be greater than battery voltage measured in Step 8.

(1) Start engine, (Para 2-19).

(2) Connect positive + multimeter lead to red wire at alternator terminal.

(3) Connect negative (-) multimeter lead to a known good ground.

(a) If 26 to 28 VDC are not present, go to Step 21 of this Fault.

(b) If 26 to 28 VDC is present, go to Step 9 of this Fault.

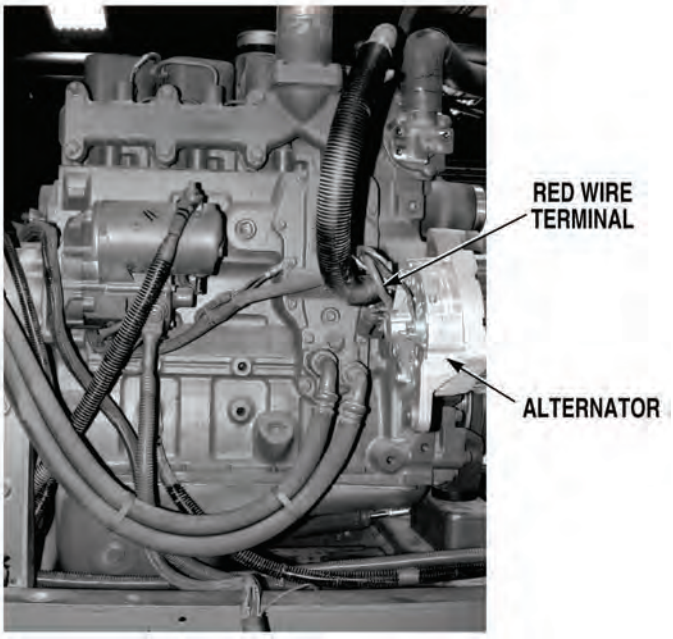

5. BATTERY CHARGING SYSTEM OR BATTERY EQUALIZER DOES NOT OPERATE CORRECTLY (CONT).

KNOWN INFO

- Battery connections OK.
- Battery equalizer connections OK.
- Engine cooling fan drive belt OK.
- Voltmeter reading OK.
- Engine wire harness white wire between splice and voltage regulator enable terminal OK.
- Engine wire harness + 24 VDC (red) wire OK.
- Engine wire harness ground (black) wire OK.
- Alternator OK.

POSSIBLE PROBLEMS

- Battery pack A faulty.
- Battery pack B faulty.
- 12 VDC circuit overloaded.
- Battery equalizer faulty.
- Wire from battery + 24 VDC terminal to battery equalizer + 24 VDC faulty.
- Wire from battery negative (-) terminal to battery equalizer ground terminal faulty.
- Wire from battery + 12 VDC terminal to battery equalizer + 12 VDC terminal faulty.

10.

Is battery equalizer indicator illuminated when IGNITION, 12 VDC, WORK LIGHT, CONTROL OVERIDE, HIGH FLOW ADMIX, and LOW FLOW ADMIX switches are ON (engine, WATER CONTROL VALVE, and solution valves OFF)?

NO → Go to Step 14 of this Fault.

YES ↓

TEST OPTIONS

Operational test.

REASON FOR QUESTION

To determine if battery equalizer is turned on with the maximum load on system.

OPERATIONAL TEST

(1) Shut OFF engine, (Para 2-19).

(2) Close WATER CONTROL VALVE and solution valves, (Para 2-20).

NOTE

The purpose of this Step is to check if battery equalizer is turned on when load is applied to 12 VDC system.

(3) Turn IGNITION SWITCH, 12 VDC, WORKLIGHTS, CONTROL OVERIDE, HIGH FLOW ADMIX, and LOW FLOW ADMIX switches ON, (Para 2-1).

(4) Check if battery equalizer indicator is illuminated.

(a) If battery equalizer indicator is not illuminated, go to Step 14 of this Fault.

(b) If battery equalizer indicator is illuminated, go to Step 11 of this Fault.

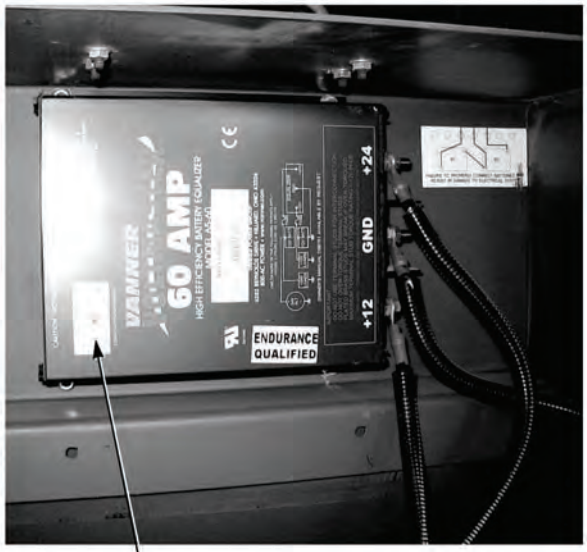

BATTERY EQUALIZER INDICATOR

5. BATTERY CHARGING SYSTEM OR BATTERY EQUALIZER DOES NOT OPERATE CORRECTLY (CONT).

KNOWN INFO

- Battery connections OK.
- Battery equalizer connections OK.
- Engine cooling fan drive belt OK.
- Voltmeter reading OK.
- Engine wire harness white wire between splice and voltage regulator enable terminal OK.
- Engine wire harness + 24 VDC (red) wire OK.
- Engine wire harness ground (black) wire OK.
- Alternator OK.
- Wire from battery + 24 VDC terminal to battery equalizer + 24 VDC terminal OK.
- Wire from battery negative (-) terminal to battery equalizer ground terminal OK.
- Wire from battery + 12 VDC terminal to battery equalizer + 12 VDC terminal OK.

POSSIBLE PROBLEMS

- Battery pack A faulty.
- Battery pack B faulty.
- 12 VDC circuit overloaded.
- Battery equalizer faulty.

11.

WARNING

Read WARNING on Page 4-219

Are 10 to 14 VDC measured between battery equalizer, + 12 VDC terminal and ground terminal? (Note reading within 0.05 VDC as battery pack A voltage reading)?

NO → Check specific gravity, (TM 9-6140-200-14) and service battery pack A. Verify repair, go to Step 23 of this Fault.

YES ↓

TEST OPTIONS

Voltage test.

REASON FOR QUESTION

If 10 to 14 VDC are not present, battery pack A is faulty.

WARNING

Remove all jewelry such as rings, dog tags, bracelets etc. If jewelry or tools contact positive electrical circuits, a direct short may result. Damage to equipment, injury or death to personnel may occur.

NOTE

- The battery equalizer monitors the voltage across battery pack A (batteries connected from + 12 terminal to ground terminal), and across battery pack B (batteries connected from + 24 terminal to + 12 terminal). If the voltage across pack A is 0.05 VDC lower than the voltage across pack B because of the load on the 12 VDC circuit, the battery equalizer provides additional current to the 12 VDC circuit to maintain the required power for the 12 VDC circuit load. If the voltage across battery pack A is greater than 0.10 VDC and lower than voltage across battery pack B when the battery equalizer indicator is illuminated, the 12 VDC system may be overloaded.
- Voltage reading must be taken between battery equalizer + 12 VDC and ground terminals. Do not take voltage reading between battery equalizer + 12 and ground. Failure to comply will result in incorrect test results.

VOLTAGE TEST

(1) Connect positive (+) multimeter lead to battery equalizer + 12 VDC terminal.

(2) Connect negative (-) multimeter lead to battery equalizer ground terminal.

(3) Note reading within 0.05 VDC as battery pack A voltage reading.

(a) If 10 to 14 VDC are not present, check specific gravity, (TM 9-6140-200-14) and service battery pack A. Verify repair, go to Step 23 of this Fault.

(b) If 10 to 14 VDC are present, go to Step 12 of this Fault.

5. BATTERY CHARGING SYSTEM OR BATTERY EQUALIZER DOES NOT OPERATE CORRECTLY (CONT).

KNOWN INFO

- Battery connections OK.
- Battery equalizer connections OK.
- Engine cooling fan drive belt OK.
- Voltmeter reading OK.
- Engine wire harness white wire between splice and voltage regulator enable terminal OK.
- Engine wire harness + 24 VDC (red) wire OK.
- Engine wire harness ground (black) wire OK.
- Alternator OK.
- Wire from battery + 24 VDC terminal to battery equalizer + 24 VDC terminal OK.
- Wire from battery negative (-) terminal to battery equalizer ground terminal OK.
- Wire from battery + 12 VDC terminal to battery equalizer + 12 VDC terminal OK.
- Battery pack A OK.

POSSIBLE PROBLEMS

- Battery pack B faulty.
- 12 VDC circuit overloaded.
- Battery equalizer faulty.

12.

WARNING

Read WARNING on Page 4-221

Are 10 to 14 VDC measured between battery equalizer, + 24 terminal and + 12 terminal? (Note reading within 0.05 VDC as battery pack B voltage reading.)

NO → Check specific gravity, (TM 9-6140-200-14) and service battery pack B. Verify repair, go to Step 23 of this Fault.

YES ↓

TEST OPTIONS

Voltage test.

REASON FOR QUESTION

If 10 to 14 VDC are not present, battery pack B is faulty.

WARNING

Remove all jewelry such as rings, dog tags, bracelets etc. If jewelry or tools contact positive electrical circuits, a direct short may result. Damage to equipment, injury or death to personnel may occur.

NOTE

- The battery equalizer monitors the voltage across battery pack A (batteries connected from + 12 terminal to ground terminal), and across battery pack B (batteries connected from + 24 terminal to + 12 terminal). If the voltage across pack A is 0.05 VDC lower than the voltage across pack B, because of the load on the 12 VDC circuit, the battery equalizer provides additional current to the 12 VDC circuit to maintain the required power for the 12 VDC circuit load. If the voltage across battery pack A is greater than 0.10 VDC and lower than voltage across battery pack B when the battery equalizer indicator is illuminated, the 12 VDC system may be overloaded.
- Voltage reading must be taken between battery equalizer + 24 VDC and + 12 VDC terminals. Failure to comply will result in incorrect test results.

VOLTAGE TEST

(1) Connect positive (+) multimeter lead to battery equalizer + 24 terminal.

(2) Connect negative (-) multimeter lead to battery equalizer + 12 terminal.

(3) Note reading within 0.05 VDC as battery pack B voltage reading.

(a) If 10 to 14 VDC are not present, Check specific gravity, (TM 9-6140-200-14) and service battery pack B. Verify repair, go to Step 23 of this Fault.

(b) If 10 to 14 VDC are present, go to Step 13 of this Fault.

5. BATTERY CHARGING SYSTEM OR BATTERY EQUALIZER DOES NOT OPERATE CORRECTLY (CONT).

KNOWN INFO

- Battery connections OK.
- Battery equalizer connections OK.
- Engine cooling fan drive belt OK.
- Voltmeter reading OK.
- Engine wire harness white wire between splice and voltage regulator enable terminal OK.
- Engine wire harness + 24 VDC (red) wire OK.
- Engine wire harness ground (black) wire OK.
- Alternator OK.
- Wire from battery + 24 VDC terminal to battery equalizer + 24 VDC terminal OK.
- Wire from battery negative (-) terminal to battery equalizer ground terminal OK.
- Wire from battery + 12 VDC terminal to battery equalizer + 12 VDC terminal OK.
- Battery pack A OK.
- Battery pack B OK.

POSSIBLE PROBLEMS

- 12 VDC circuit overloaded.
- Battery equalizer faulty.

13.

Was reading between + 12 terminal and ground within 0.10 VDC of reading between + 24 and + 12 terminals (Pack B-Pack A)?

NO → 12 VDC circuit is overloaded, notify Supervisor.

YES → Charging system and battery equalizer are working correctly. Notify Supervisor.

TEST OPTIONS

Voltage test.

REASON FOR QUESTION

If reading between equalizer + 12 terminal and ground are within 0.10 VDC of reading between equalizer + 24 and + 12 terminals, charging system and battery equalizer are working correctly. If not, 12 VDC circuit is overloaded.

NOTE

The battery equalizer monitors the voltage across battery pack A (batteries connected from + 12 terminal to ground terminal), and across battery pack B (batteries connected from + 24 terminal to + 12 terminal). If the voltage across pack A is 0.05 VDC lower than the voltage across pack B, because of the load on the 12 VDC circuit, the battery equalizer provides additional current to the 12 VDC circuit to maintain the required power for the 12 VDC circuit load. If the voltage across battery pack A is greater than 0.10 VDC and lower than voltage across battery pack B when the battery equalizer indicator is illuminated, the 12 VDC system may be overloaded.

VOLTAGE TEST

(1) Turn IGNITION SWITCH 12 VOLT, WORKLIGHTS, CONTROL OVERIDE, HIGH FLOW ADMIX, and LOW FLOW ADMIX switches OFF, (Para 2-1).

(2) Subtract battery pack A readings found in Step 11 from battery pack B readings found in Step 12.

(3) Check if difference between two numbers is within 0.10 VDC.

(a) If difference is not within 0.10 VDC, VDC circuit is overloaded, notify Supervisor.

(b) If difference is within 0.10 VDC, charging system and battery equalizer are working correctly, notify Supervisor.

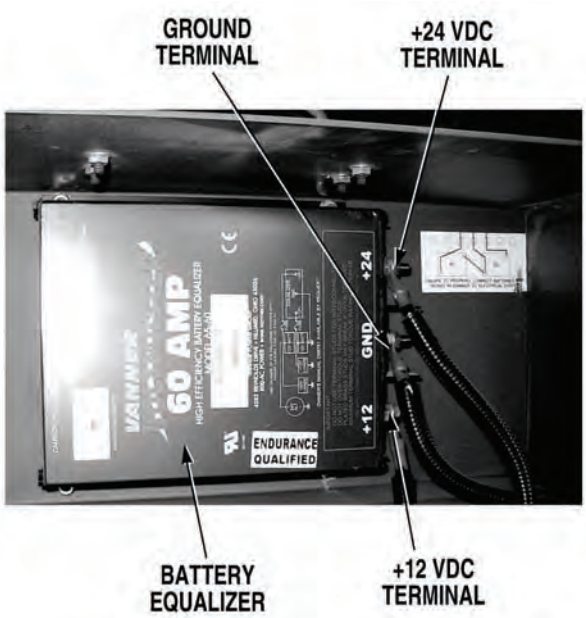

5. BATTERY CHARGING SYSTEM OR BATTERY EQUALIZER DOES NOT OPERATE CORRECTLY (CONT).

KNOWN INFO
Battery connections OK.
Battery equalizer connections OK.
Engine cooling fan drive belt OK.
Voltmeter reading OK.
Engine wire harness + 24 VDC (red) wire OK.
Engine wire harness ground (black) wire OK.
Alternator OK.
Engine wire harness white wire between splice and voltage regulator enable terminal OK.
12 VDC circuit not overloaded.

POSSIBLE PROBLEMS
Battery pack A faulty.
Battery pack B faulty.
Battery equalizer faulty.
Wire from battery + 24 VDC terminal to battery equalizer + 24 VDC terminal faulty.
Wire from battery negative (-) terminal to battery equalizer ground terminal faulty.
Wire from battery + 12 VDC terminal to battery equalizer + 12 VDC terminal faulty.

14.

WARNING

Read WARNING on Page 4-225

Are 10 to 14 VDC measured between battery equalizer, + 12 terminal and ground terminal (note reading within 0.05 VDC as battery pack A voltage reading)?

NO → Go to Step 19 of this Fault.

YES ↓

TEST OPTIONS
Voltage test.
REASON FOR QUESTION
To further isolate fault.

WARNING

Remove all jewelry such as rings, dog tags, bracelets etc. If jewelry or tools contact positive electrical circuits, a direct short may result. Damage to equipment, injury or death to personnel may occur.

NOTE

- The battery equalizer monitors the voltage across battery pack A (batteries connected from + 12 terminal to ground terminal), and across battery pack B (batteries connected from + 24 terminal to + 12 terminal). If the voltage across pack A is 0.05 VDC lower than the voltage across pack B, because of the load on the 12 VDC circuit, the battery equalizer provides additional current to the 12 VDC circuit to maintain the required power for the 12 VDC circuit load. If the voltage across battery pack A is greater than 0.10 VDC and lower than voltage across battery pack B when the battery equalizer indicator is illuminated, the 12 VDC system may be overloaded.
- Voltage reading must be taken between battery equalizer + 12 VDC and ground terminal. Do not take voltage reading between battery equalizer + 12 and ground. Failure to comply will result in incorrect test results.

VOLTAGE TEST

(1) Connect positive (+) multimeter lead to battery equalizer + 12 VDC terminal.

(2) Connect negative (-) multimeter lead to battery equalizer ground terminal.

(3) Note reading within 0.05 VDC as battery pack A voltage reading.

  (a) If 10 to 14 VDC are not present, go to Step 19 of this Fault.

  (b) If 10 to 14 VDC are present, go to Step 15 of this Fault.

5. BATTERY CHARGING SYSTEM OR BATTERY EQUALIZER DOES NOT OPERATE CORRECTLY (CONT).

KNOWN INFO
Battery connections OK. Battery equalizer connections OK. Engine cooling fan drive belt OK. Voltmeter reading OK. Engine wire harness + 24 VDC (red) wire OK. Engine wire harness ground (black) wire OK. Alternator OK. Engine wire harness white wire between splice and voltage regulator enable terminal OK. 12 VDC circuit not overloaded. Battery pack B OK. Wire from battery negative (-) terminal to battery equalizer ground terminal OK. Wire from battery + 12 VDC terminal to battery equalizer + 12 VDC terminal OK.
POSSIBLE PROBLEMS
Battery pack A faulty. Battery equalizer faulty. Wire from battery + 24 VDC terminal to battery equalizer + 24 VDC terminal faulty.

15.

WARNING

Read WARNING on Page 4-227

Are 10 to 14 VDC measured between battery equalizer, + 24 terminal and + 12 terminal (note reading within 0.05 VDC as battery pack B voltage reading)?

NO → Go to Step 18 of this Fault.

YES ↓

TEST OPTIONS
Voltage test.
REASON FOR QUESTION
To further isolate fault.

WARNING

Remove all jewelry such as rings, dog tags, bracelets etc. If jewelry or tools contact positive electrical circuits, a direct short may result. Damage to equipment, injury or death to personnel may occur.

NOTE

- The battery equalizer monitors the voltage across battery pack A (batteries connected from + 12 terminal to ground terminal), and across battery pack B (batteries connected from + 24 terminal to + 12 terminal). If the voltage across pack A is 0.05 VDC lower than the voltage across pack B, because of the load on the 12 VDC circuit, the battery equalizer provides additional current to the 12 VDC circuit to maintain the required power for the 12 VDC circuit load. If the voltage across battery pack A is greater than 0.10 VDC and lower than voltage across battery pack B when the battery equalizer indicator is illuminated, the 12 VDC system may be overloaded.
- Voltage reading must be taken between battery equalizer + 24 and + 12 VDC. Failure to comply will result in incorrect test results.

VOLTAGE TEST

(1) Connect positive (+) multimeter lead to battery equalizer + 24 terminal.

(2) Connect negative (-) multimeter lead to battery equalizer + 12 terminal.

(3) Note reading within 0.05 VDC as battery pack B voltage reading.

(a) If 10 to 14 VDC are not present, go to Step 18 of this Fault.

(b) If 10 to 14 VDC are present, go to Step 16 of this Fault.

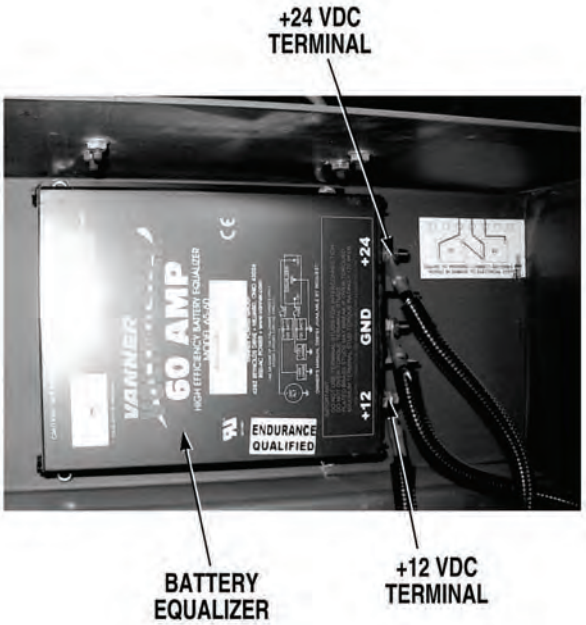

5. BATTERY CHARGING SYSTEM OR BATTERY EQUALIZER DOES NOT OPERATE CORRECTLY (CONT).

KNOWN INFO

- Battery connections OK.
- Battery equalizer connections OK.
- Engine cooling fan drive belt OK.
- Voltmeter reading OK.
- Engine wire harness + 24 VDC (red) wire OK.
- Engine wire harness ground (black) wire OK.
- Alternator OK.
- Engine wire harness white wire between splice and voltage regulator enable terminal OK.
- 12 VDC circuit not overloaded.
- Battery pack A OK.
- Wire from battery negative (-) terminal to battery equalizer ground terminal OK.
- Wire from battery + 12 VDC terminal to battery equalizer + 12 VDC terminal OK.
- Wire from battery + 24 VDC terminal to battery equalizer + 24 VDC terminal OK.

POSSIBLE PROBLEMS

- Battery pack B faulty.
- Battery equalizer faulty.

16.

Was reading between + 12 terminal and ground terminal greater than the reading between + 24 and + 12 terminals (Pack B-Pack A is a negative number)?

NO → Go to Step 17 of this Step.

YES → Replace battery pack B, (Para 3-11). Verify repair, go to Step 21 of this Fault.

TEST OPTIONS

Voltage test.

REASON FOR QUESTION

If the reading between + 12 terminal and ground are greater than reading between + 24 and + 12 terminals, battery pack B are faulty.

NOTE

The battery equalizer monitors the voltage across battery pack A (batteries connected from + 12 terminal to ground terminal), and across battery pack B (batteries connected from + 24 terminal to + 12 terminal). If the voltage across pack A is 0.05 VDC lower than the voltage across pack B, because of the load on tee 12 VDC circuit, the battery equalizer provides additional current to the 12 VDC circuit to maintain the required power for the 12 VDC circuit load. If the voltage across battery pack A is greater than 0.10 VDC lower than voltage across battery pack B when the battery equalizer indicator is illuminated, the 12 VDC system may be overloaded.

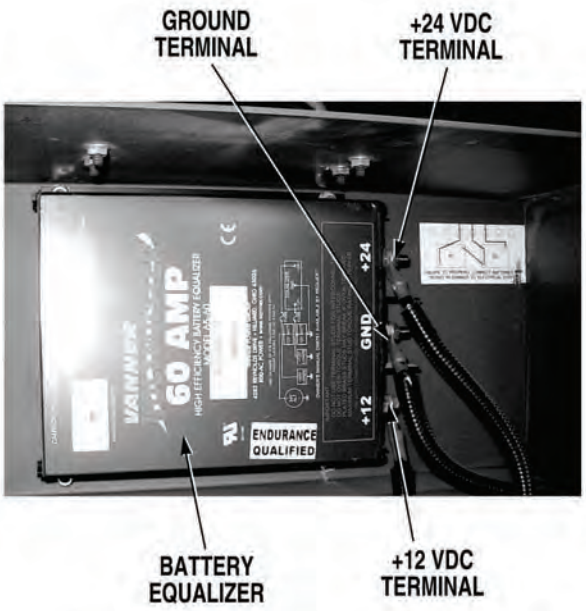

VOLTAGE TEST

(1) Turn IGNITION SWITCH, 12 VDC, WORKLIGHTS, CONTROL OVERIDE, HIGH FLOW ADMIX, and LOW FLOW ADMIX switches OFF, (Para 2-1).

(2) Compare VDC readings found in Steps 14 and 15.

(3) Check if reading between + 12 terminal and ground terminal is greater than reading between + 24 and + 12 terminals.

(a) If reading between + 12 terminal and ground terminal is less than the reading between + 24 and + 12 terminals (Pack B-Pack A is a positive number), go to Step 17 of this Fault.

(b) If reading between + 12 terminal and ground terminal is greater than the reading between + 24 and + 12 terminals (Pack B-Pack A is a negative number), replace battery Pack B, (Para 3-11). Verify repair, go to Step 21 of this Fault.

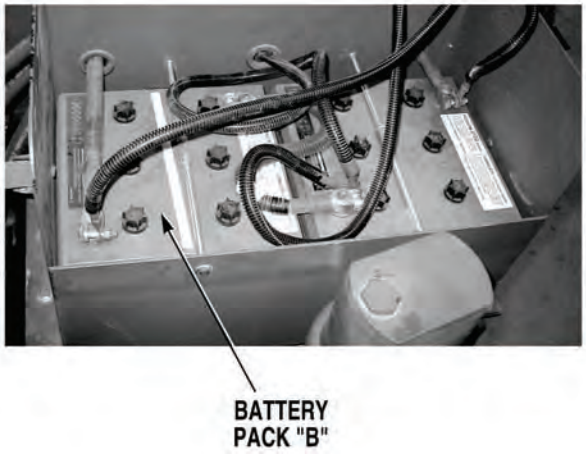

5. BATTERY CHARGING SYSTEM OR BATTERY EQUALIZER DOES NOT OPERATE CORRECTLY (CONT).

KNOWN INFO

- Battery connections OK.
- Battery equalizer connections OK.
- Engine cooling fan drive belt OK.
- Voltmeter reading OK.
- Engine wire harness + 24 VDC (red) wire OK.
- Engine wire harness ground (black) wire OK.
- Alternator OK.
- Engine wire harness white wire between splice and voltage regulator enable terminal OK.
- 12 VDC circuit not overloaded.
- Battery pack A OK.
- Wire from battery negative (-) terminal to battery equalizer ground terminal OK.
- Wire from battery + 12 VDC terminal to battery equalizer + 12 VDC terminal OK.
- Wire from battery + 24 VDC terminal to battery equalizer + 24 VDC OK.
- Battery pack B OK.

POSSIBLE PROBLEMS

Battery equalizer faulty.

17.

Was reading between + 12 terminal and ground terminal within 0.05 VDC of reading between + 24 and + 12 terminals (Pack B- Pack A is less than 0.05 VDC)?

NO → Replace battery equalizer, (Para 3-13). Verify repair, go to Step 23 of this Fault.

YES → Charging system and battery equalizer are working correctly. Notify Supervisor.

TEST OPTIONS

Voltage test.

REASON FOR QUESTION

If reading between equalizer + 12 terminal ground terminal was within 0.05 VDC of reading between equalizer + 24 and + 12 terminals, charging system and battery equalizer are working correctly. If not, battery equalizer is faulty.

NOTE

The battery equalizer monitors the voltage across battery pack A (batteries connected from + 12 terminal to ground terminal), and across battery pack B (batteries connected from + 24 terminal to + 12 terminal). If the voltage across pack A is 0.05 VDC lower than the voltage across pack B, because of the load on the 12 VDC circuit, the battery equalizer provides additional current to the 12 VDC circuit to maintain the required power for the 12 VDC circuit load. If the voltage across battery pack A is greater than 0.10 VDC and lower than voltage across battery pack B when the battery equalizer indicator is illuminated, the 12 VDC system may be overloaded.

VOLTAGE TEST

(1) Subtract battery pack A readings found in Step 14 from battery pack B readings found in Step 15.

(2) Check if difference between two numbers is within 0.05 VDC.

(a) If difference is not within 0.05 VDC, replace battery equalizer, (Para 3-13). Verify repair, go to Step 21 of this Fault.

(b) If difference is within 0.05 VDC, charging system and battery equalizer are working correctly, notify Supervisor.

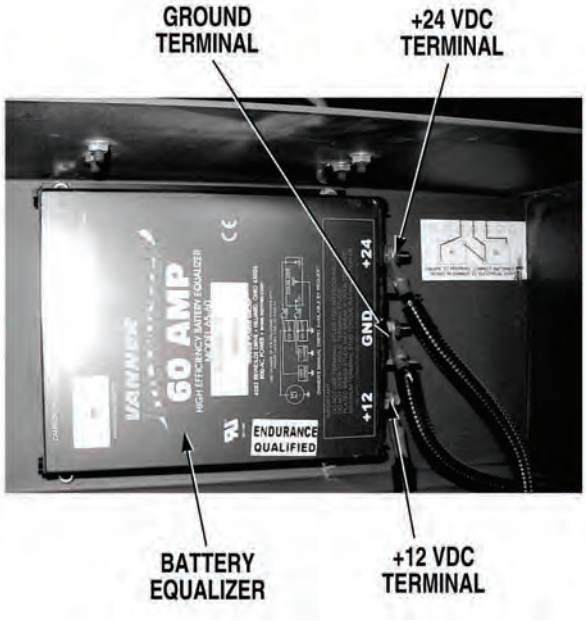

5. BATTERY CHARGING SYSTEM OR BATTERY EQUALIZER DOES NOT OPERATE CORRECTLY (CONT).

KNOWN INFO

- Battery connections OK.
- Battery equalizer connections OK.
- Engine cooling fan drive belt OK.
- Voltmeter reading OK.
- Engine wire harness + 24 VDC (red) wire OK.
- Engine wire harness ground (black) wire OK.
- Alternator OK.
- Engine wire harness white wire between splice and voltage regulator enable terminal OK.
- 12 VDC circuit not overloaded.
- Battery pack A OK.
- Battery equalizer OK.
- Wire from battery negative (-) terminal to battery equalizer ground terminal OK.
- Wire from battery + 12 VDC terminal to battery equalizer + 12 VDC terminal OK.

POSSIBLE PROBLEMS

- Battery pack B faulty.
- Wire from battery + 24 VDC terminal to battery equalizer + 24 VDC faulty.

18.

WARNING

Read WARNING on Page 4-233

Is continuity measured across wire from battery + 24 terminal to battery equalizer + 24 terminal?

NO → Repair or replace wire, (Para 3-141). Verify repair, go to Step 23 of this Fault.

YES → Check specific gravity, (TM-9-6140-200-14) and service battery pack B.

TEST OPTIONS

Continuity test.

REASON FOR QUESTION

If continuity is measured, battery pack B is faulty. If not, wire between battery + 24 terminal and battery equalizer + 24 terminal is faulty.

WARNING

Remove all jewelry such as rings, dog tags, bracelets etc. If jewelry or tools contact positive electrical circuits, a direct short may result. Damage to equipment, injury or death to personnel may occur.

CONTINUITY TEST

(1) Turn IGNITION, 12 VDC, WORKLIGHTS, CONTROL OVERIDE, HIGH FLOW ADMIX, and LOW FLOW ADMIX switches OFF, (Para 2-1).

(2) Disconnect + 24 VDC battery terminal, (Para 3-10).

(3) Set multimeter select switch to ohms.

(4) Connect positive + multimeter lead to wire at battery + 24 terminal.

(5) Connect negative (–) multimeter lead to battery equalizer + 24 terminal.

  (a) If continuity is not measured, repair or replace wire between battery + 24 terminal and battery equalizer + 24 terminal, (Para 3-141).

  (b) If continuity is measured, check specific gravity, (TM-9-6140-200-14) and service battery pack B.

(6) Verify repair, go to Step 23 of this Fault.

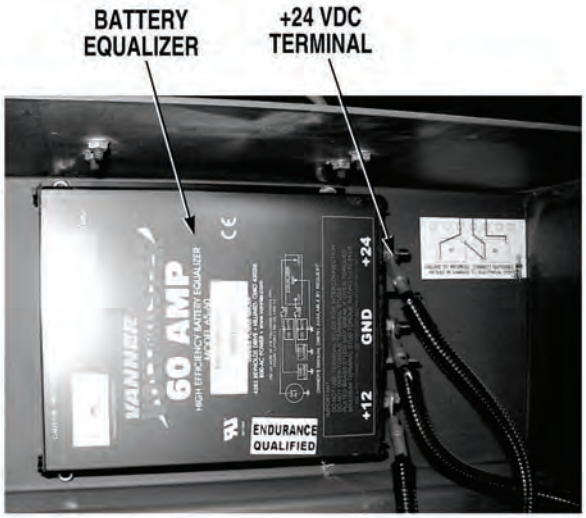

5. BATTERY CHARGING SYSTEM OR BATTERY EQUALIZER DOES NOT OPERATE CORRECTLY (CONT).

KNOWN INFO

- Battery connections OK.
- Battery equalizer connections OK.
- Engine cooling fan drive belt OK.
- Voltmeter reading OK.
- Engine wire harness + 24 VDC (red) wire OK.
- Engine wire harness ground (black) wire OK.
- Alternator OK.
- Engine wire harness white wire between splice and voltage regulator enable terminal OK.
- 12 VDC circuit not overloaded.
- Battery pack B OK.
- Battery equalizer OK.
- Wire from battery + 24 VDC terminal to battery equalizer + 24 VDC terminal OK.

POSSIBLE PROBLEMS

- Battery pack A faulty.
- Wire from battery negative (-) terminal to battery equalizer ground terminal faulty.
- Wire from battery + 12 VDC terminal to battery equalizer + 12 VDC terminal faulty.

19.

WARNING

Read WARNING on Page 4-235

Is continuity measured across wire from battery negative terminal to battery equalizer ground terminal?

NO → Repair or replace wire, (Para 3-141). Verify repair, go to Step 23 of this Fault.

YES ↓

TEST OPTIONS

Continuity test.

REASON FOR QUESTION

If continuity is not measured, wire between battery negative terminal and battery equalizer ground terminal faulty.

WARNING

Remove all jewelry such as rings, dog tags, bracelets etc. If jewelry or tools contact positive electrical circuits, a direct short may result. Damage to equipment, injury or death to personnel may occur.

CONTINUITY TEST

(1) Turn IGNITION, 12 VDC, WORKLIGHTS, CONTROL OVERIDE, HIGH FLOW ADMIX, and LOW FLOW ADMIX switches OFF, (Para 2-1).

(2) Disconnect batteries, (Para 3-10).

(3) Set multimeter select switch to ohms.

(4) Connect positive (+) multimeter lead to wire at battery negative terminal.

(5) Connect negative (-) multimeter lead to wire at battery equalizer ground terminal.

(a) If continuity is not measured, repair or replace wire between battery negative terminal and battery equalizer ground terminal, (Para 3-141). Verify repair, go to Step 23 of this Fault.

(b) If continuity is measured, go to Step 20 of this Fault.

5. BATTERY CHARGING SYSTEM OR BATTERY EQUALIZER DOES NOT OPERATE CORRECTLY (CONT).

KNOWN INFO

- Battery connections OK.
- Battery equalizer connections OK.
- Engine cooling fan drive belt OK.
- Voltmeter reading OK.
- Engine wire harness + 24 VDC (red) wire OK.
- Engine wire harness ground (black) wire OK.
- Alternator OK.
- Engine wire harness white wire between splice and voltage regulator enable terminal OK.
- 12 VDC circuit not overloaded.
- Battery pack B OK.
- Battery equalizer OK.
- Wire from battery + 24 VDC terminal to battery equalizer + 24 VDC terminal OK.
- Wire from battery negative (-) terminal to battery equalizer ground terminal OK.

POSSIBLE PROBLEMS

- Battery pack A faulty.
- Wire from battery + 12 VDC terminal to battery equalizer + 12 VDC terminal faulty.

20.

WARNING

Read WARNING on Page 4-237

Is continuity measured across wire from battery + 12 terminal to battery equalizer + 12 terminal?

NO → Repair or replace wire, (Para 3-141). Verify repair, go to Step 23 of this Fault.

YES → Check specific gravity, (TM 9-6140-200-14) and service battery pack A. Verify repair, go to Step 23 of this Fault.

TEST OPTIONS

Continuity test.

REASON FOR QUESTION

If continuity is measured, battery pack A is faulty. If not, wire between battery + 12 terminal and battery equalizer + 12 terminal is faulty.

WARNING

Remove all jewelry such as rings, dog tags, bracelets etc. If jewelry or tools contact positive electrical circuits, a direct short may result. Damage to equipment, injury or death to personnel may occur.

CONTINUITY TEST

(1) Disconnect + 12 VDC battery terminal, (Para 3-10).

(2) Set multimeter select switch to ohms.

(3) Connect positive (+) multimeter lead to wire at battery + 12 terminal.

(4) Connect negative (-) multimeter lead to wire at battery equalizer + 12 terminal.

(a) If continuity is not measured, repair or replace wire between battery + 12 terminal and battery equalizer + 12 terminal, (Para 3-141). Verify repair, go to Step 23 of this Fault.

(b) If continuity is measured, check specific gravity, (TM 9-6140-200-14) and service battery pack A.

(5) Verify repair, go to Step 23 of this Fault.

5. BATTERY CHARGING SYSTEM OR BATTERY EQUALIZER DOES NOT OPERATE CORRECTLY (CONT).

KNOWN INFO

- Battery connections OK.
- Battery equalizer connections OK.
- Engine cooling fan drive belt OK.
- Voltmeter reading OK.
- Engine wire harness white wire between splice and voltage regulator enable terminal OK.
- Engine wire harness + 24 VDC (red) wire OK.
- Battery pack A OK.
- Battery pack B OK.
- 12 VDC circuit not overloaded.
- Battery equalizer OK.
- Wire from battery + 24 VDC terminal to battery equalizer + 24 VDC terminal OK.
- Wire from battery negative (-) terminal to battery equalizer ground terminal OK.
- Wire from battery + 12 VDC terminal to battery equalizer + 12 VDC terminal OK.

POSSIBLE PROBLEMS

- Engine wire harness ground (black) wire faulty.
- Alternator faulty.

21.

WARNING

Read WARNING on Page 4-239

Is continuity measured across black wire from alternator terminal to a known good ground?

NO → Repair ground (black) wire, (Para 3-141) or replace engine wire harness, (Para 3-136). Verify repair, go to Step 23 of this Fault.

YES → Replace alternator, (Para 3-26). Verify repair, go to Step 23 of this Fault.

TEST OPTIONS

Continuity test.

REASON FOR QUESTION

If continuity is measured, alternator is faulty. If not, engine wire harness ground (black) wire is faulty.

WARNING

Remove all jewelry such as rings, dog tags, bracelets etc. If jewelry or tools contact positive electrical circuits, a direct short may result. Damage to equipment, injury or death to personnel may occur.

CONTINUITY TEST

(1) Shut OFF engine (Para 2-19).

(2) Set multimeter select switch to ohms.

(3) Connect positive (+) multimeter lead to ground (black) wire at alternator terminal.

(4) Connect negative (-) multimeter lead to a known good ground.

  (a) If continuity is not measured, repair black wire, (Para 3-141) or replace engine wire harness, (Para 3-136). Verify repair, go to Step 23 of this Fault.

  (b) If continuity is measured, replace alternator, (Para 3-26).

(5) Verify repair, go to Step 23 of this Fault.

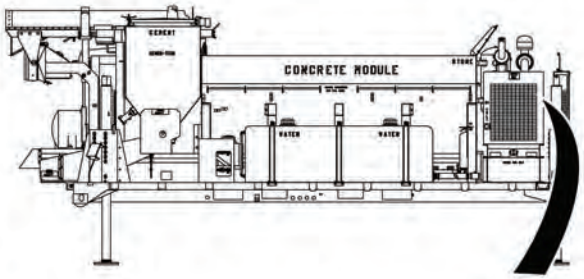

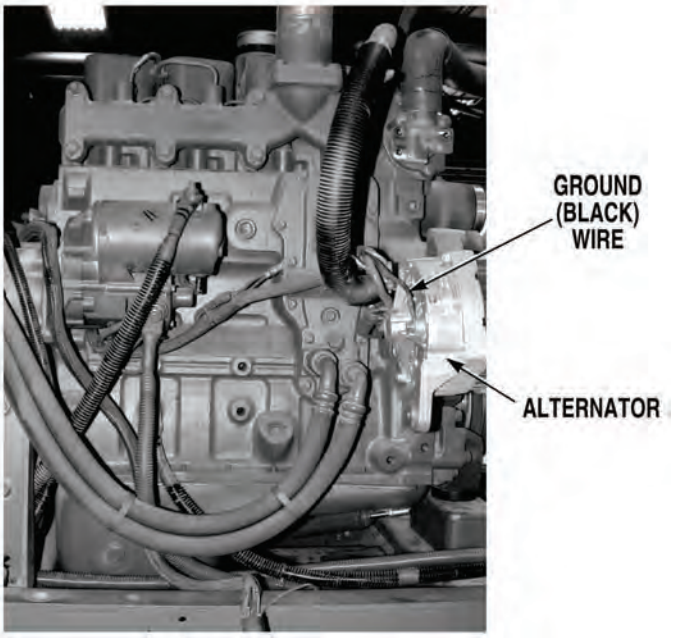

5. BATTERY CHARGING SYSTEM OR BATTERY EQUALIZER DOES NOT OPERATE CORRECTLY (CONT).

KNOWN INFO

- Battery connections OK.
- Battery equalizer connections OK.
- Engine cooling fan drive belt OK.
- Voltmeter reading OK.
- Battery pack A OK.
- Battery pack B OK.
- Engine wire harness + 24 VDC (red) wire OK.
- 12 VDC circuit not overloaded.
- Battery equalizer OK.
- Wire from battery + 24 VDC terminal to battery equalizer + 24 VDC terminal OK.
- Wire from battery negative (-) terminal to battery equalizer ground terminal OK.
- Wire from battery + 12 VDC terminal to battery equalizer + 12 VDC terminal OK.
- Engine wire harness ground (black) wire OK.
- Alternator OK.

POSSIBLE PROBLEMS

Engine wire harness (white) wire between splice and voltage regulator enable terminal faulty.

22.

Does engine start?

NO → Go to “Engine Cranks but Fails to Start (Exhaust Smoke Not Present)”, (Fault 18).

YES → Repair or replace engine wire harness white wire between splice and voltage regulator enable terminal, (Para 3-136). Verify repair, go to Step 23 of this Fault.

TEST OPTIONS

Operational test.

REASON FOR QUESTION

If engine starts, engine wire harness (white) wire between splice and voltage regulator enable terminal is faulty. If not, another troubleshooting procedure applies.

OPERATIONAL TEST
Attempt to start engine, (Para 2-19). Check if engine will start. (a) If engine does not start, go to "Engine Cranks But Fails to Start", (Fault 18). (b) If engine starts, repair white wire between splice and voltage regulator enable terminal, (Para 3-141) or replace engine wire harness, (Para 3-136). Verify repair, go to Step 23 of this Fault.

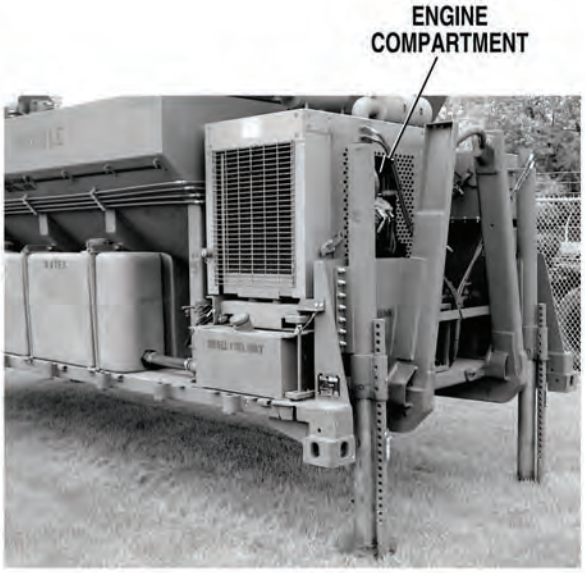

5. BATTERY CHARGING SYSTEM OR BATTERY EQUALIZER DOES NOT OPERATE CORRECTLY (CONT).

KNOWN INFO
Battery connections OK. Battery equalizer connections OK. Engine cooling fan drive belt OK. Voltmeter reading OK. Battery pack A OK. Battery pack B OK. Engine wire harness + 24 VDC (red) wire OK. 12 VDC circuit not overloaded. Battery equalizer OK. Wire from battery + 24 VDC terminal to battery equalizer + 24 VDC terminal OK. Wire from battery negative (-) terminal to battery equalizer ground terminal OK. Wire from battery + 12 VDC terminal to battery equalizer + 12 VDC terminal OK. Engine wire harness ground (black) wire OK. Alternator OK. Engine wire harness white wire between splice and voltage regulator enable terminal OK.
POSSIBLE PROBLEMS
None.

23.

Does battery charging system and battery equalizer operate correctly?

NO → Fault not corrected. Notify Supervisor.

YES → Fault corrected.

TEST OPTIONS
Verify repair.
REASON FOR QUESTION
If battery charging system and battery equalizer are operating correctly, fault has been corrected.

VERIFY REPAIR

(1) If removed, install top engine cover, (Para 3-93).

(2) If removed, install front engine access panel, (Para 3-78).

(3) Start engine, (Para 2-19).

(4) Turn THROTTLE CONTROL switch to high idle, (Para 2-1).

(5) Turn WORKLIGHTS ON, (Para 2-1).

(6) Observe voltage meter for 22 to 28 VDC.

  (a) If 22 to 28 VDC are not present, fault not corrected. Notify Supervisor.

  (b) If 22 to 28 VDC are present, fault has been corrected.

(7) Turn WORKLIGHTS OFF, (Para 2-1).

(8) Turn THROTTLE CONTROL switch to low idle, (Para 2-1).

(9) Shut OFF engine, (Para 2-1).

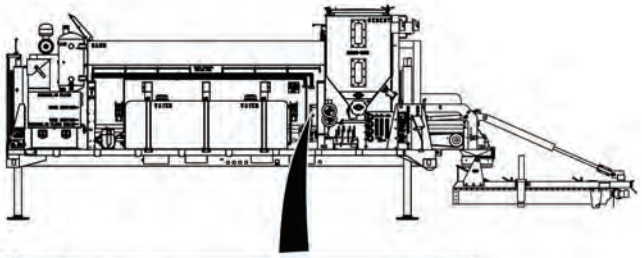

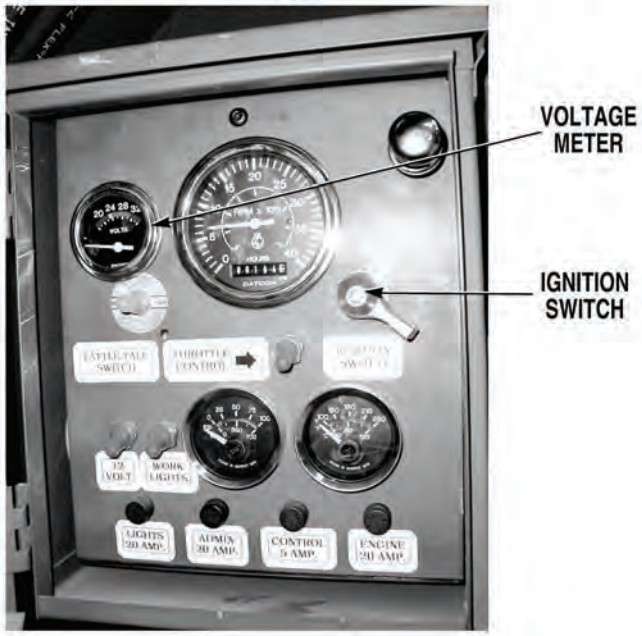

6. CEMENT FLUFFER CONTROL (AERATING) VALVE DOES NOT OPERATE CORRECTLY.

INITIAL SETUP

Tools and Special Tools
Tool Kit, General Mechanic's: Automotive (Item 19, Appendix I)

Equipment Condition
Concrete Mobile Mixer unloaded from PLS, (Para 2-5)
Engine OFF, (Para 2-19)

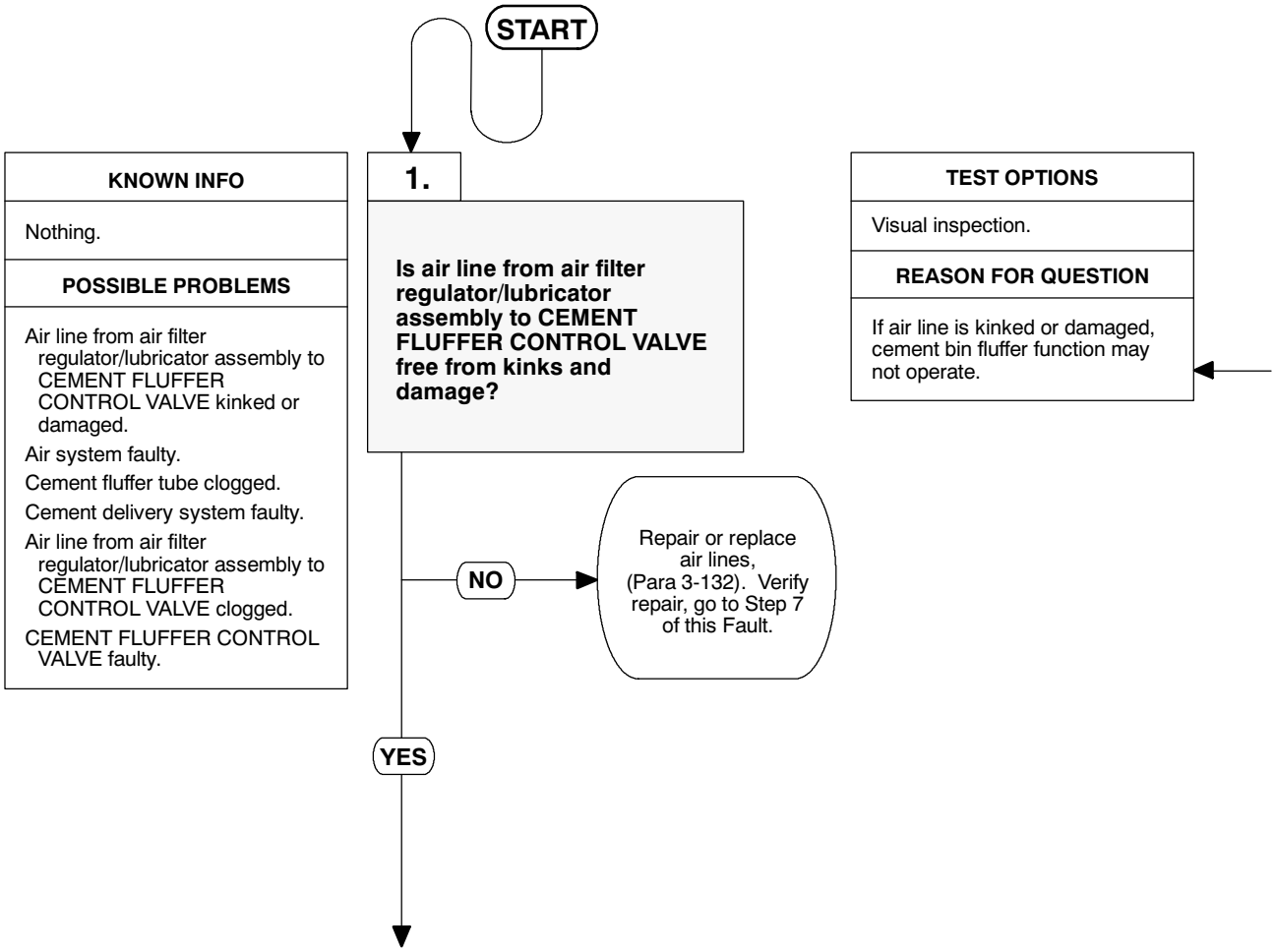

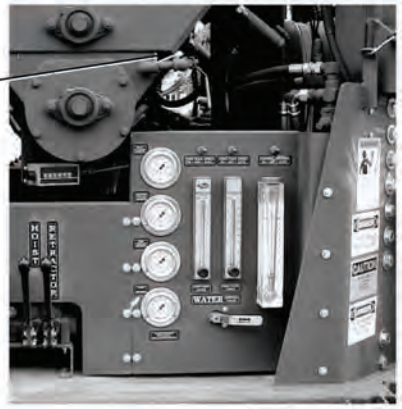

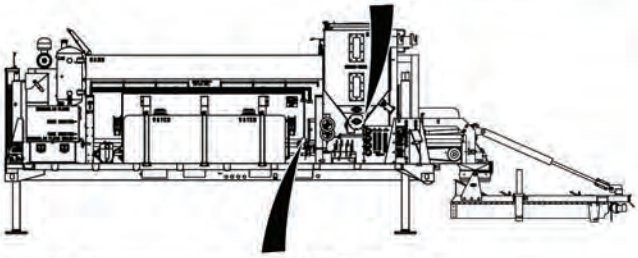

VISUAL INSPECTION
Check if air line between air filter regulator/lubricator assembly and CEMENT FLUFFER CONTROL VALVE is free from kinks and damage. (a) If air line is not free from kinks and damage, repair or replace air lines, (Para 3-132). Verify repair, go to Step 7 for this Fault. (b) If air line is free from kinks and damage, go to Step 2 of this Fault.

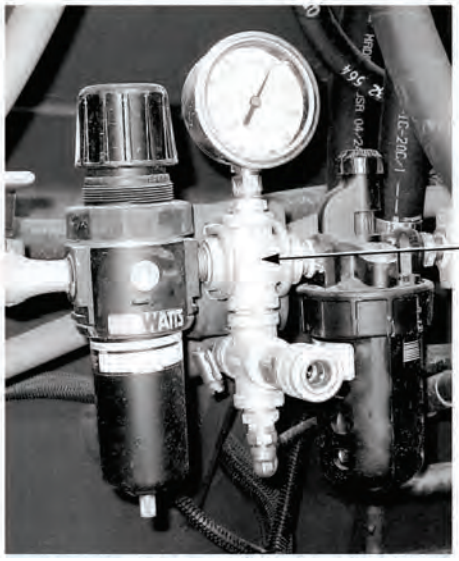

6. CEMENT FLUFFER CONTROL (AERATING) VALVE DOES NOT OPERATE CORRECTLY (CONT).

KNOWN INFO

Air line from air filter regulator/lubricator assembly to CEMENT FLUFFER CONTROL VALVE not kinked or damaged.

POSSIBLE PROBLEMS

Air system faulty.

Cement fluffer tube clogged.

Cement delivery system faulty.

Air line from air filter regulator/lubricator assembly to CEMENT FLUFFER CONTROL VALVE is clogged.

CEMENT FLUFFER CONTROL VALVE faulty.

2.

Does air system charge to 80 to 100 psi (552 to 690 kPa) with CONTROL OVERIDE, HIGH FLOW ADMIX, and LOW FLOW ADMIX switches OFF?

NO → Go to “Air Pressure Low or System Charge is Slow”, (Fault 3).

YES ↓

TEST OPTIONS

Operational test.

REASON FOR QUESTION

If air system does not charge to 80 to 100 psi (552 to 690 kPa), another troubleshooting procedure applies.

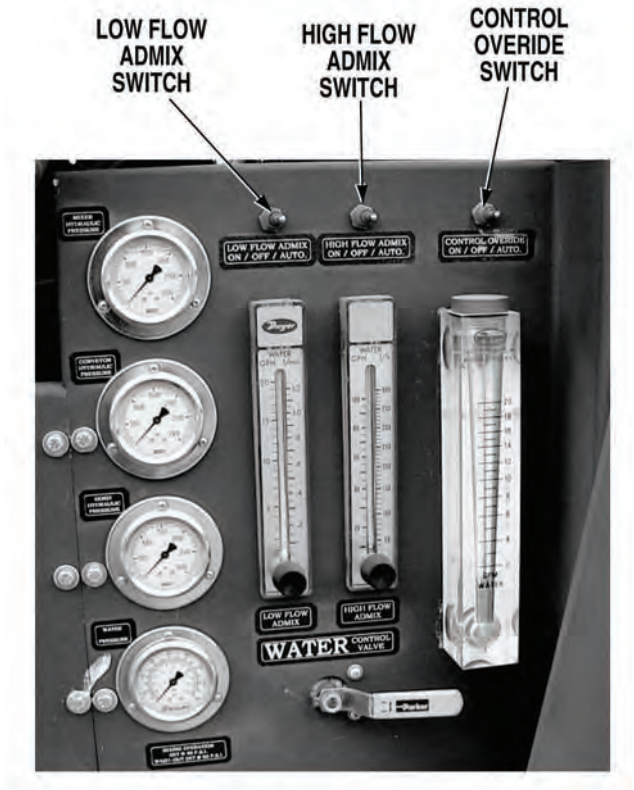

OPERATIONAL TEST

(1) Start engine, (Para 2-19).

(2) If ON, turn CONTROL OVERIDE switch OFF, (Para 2-1).

(3) If ON, turn HIGH FLOW ADMIX switch OFF, (Para 2-1).

(4) If ON, turn LOW FLOW ADMIX switch, OFF, (Para 2-1).

(5) Turn CEMENT FLUFFER CONTROL VALVE OFF, (Para 2-1).

(6) Allow system time to charge to 80 to 100 psi, adjust air filter regulator if required, (Para 2-20).

(7) Check if air system charges to 80 to 100 psi (552 to 690 kPa).

(a) If air system does not charge to 80 to 100 psi (552 to 690 kPa), go to “Air Pressure Low or System Charge is Slow”, (Fault 3).

(b) If air system charges to 80 to 100 psi (552 to 690 kPa), go to Step 3 of this Fault.

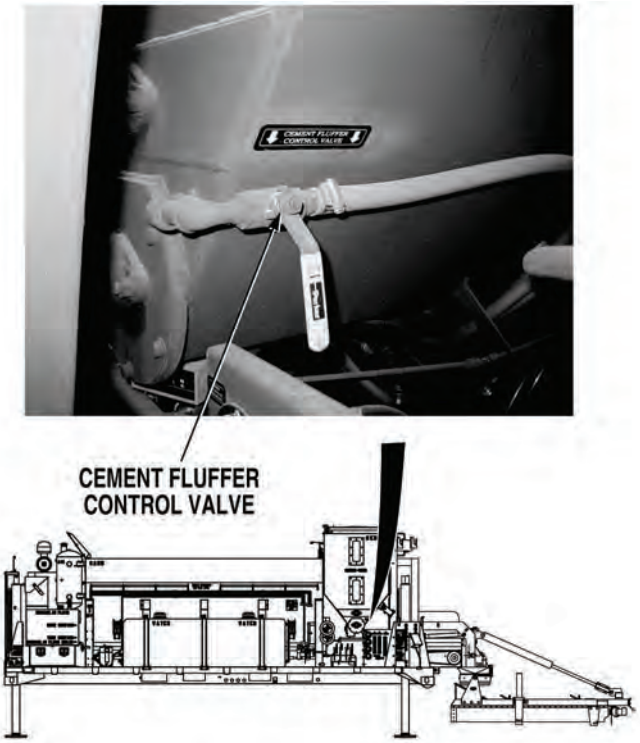

6. CEMENT FLUFFER CONTROL (AERATING) VALVE DOES NOT OPERATE CORRECTLY (CONT).

KNOWN INFO
Air line from air filter regulator/lubricator assembly to CEMENT FLUFFER CONTROL VALVE not kinked or damaged. Air system OK.
POSSIBLE PROBLEMS
Cement fluffer tube clogged. Cement delivery system faulty. Air line from air filter regulator/lubricator assembly to CEMENT FLUFFER CONTROL VALVE is clogged. CEMENT FLUFFER CONTROL VALVE faulty.

3.

Is air system pressure discharged when air system control valve is closed and CEMENT FLUFFER CONTROL VALVE is opened?

NO → Go to Step 5 of this Fault.

YES ↓

TEST OPTIONS
Operational test.
REASON FOR QUESTION
To isolate fault.

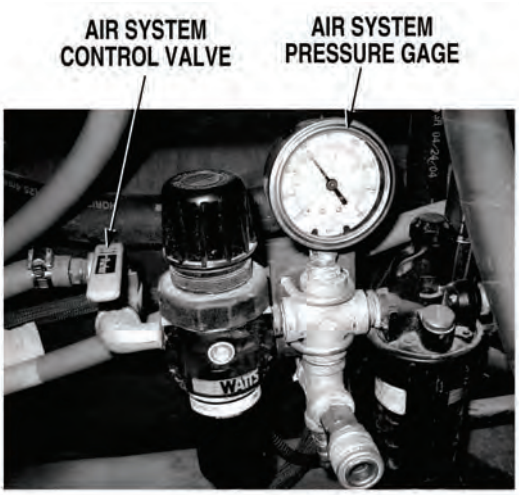

OPERATIONAL TEST

(1) Shut engine OFF, (Para 2-19).

(2) Close air system control valve, (Para 2-1).

(3) Open CEMENT FLUFFER CONTROL VALVE, (Para 2-1).

(4) Check if air pressure is discharged from system.

  (a) If air pressure is not discharged from system, go to go to Step 5 of this Fault.

  (b) If air pressure is discharged from system, go to Step 4 of this Fault.

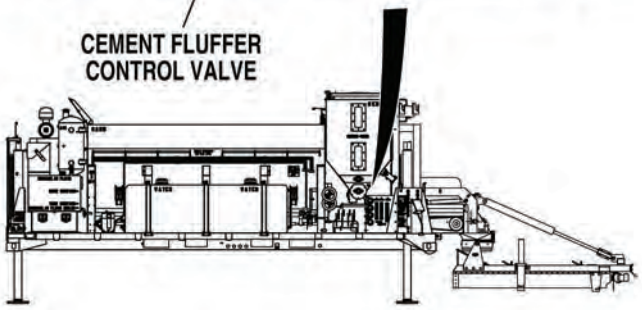

6. CEMENT FLUFFER CONTROL (AERATING) VALVE DOES NOT OPERATE CORRECTLY (CONT).

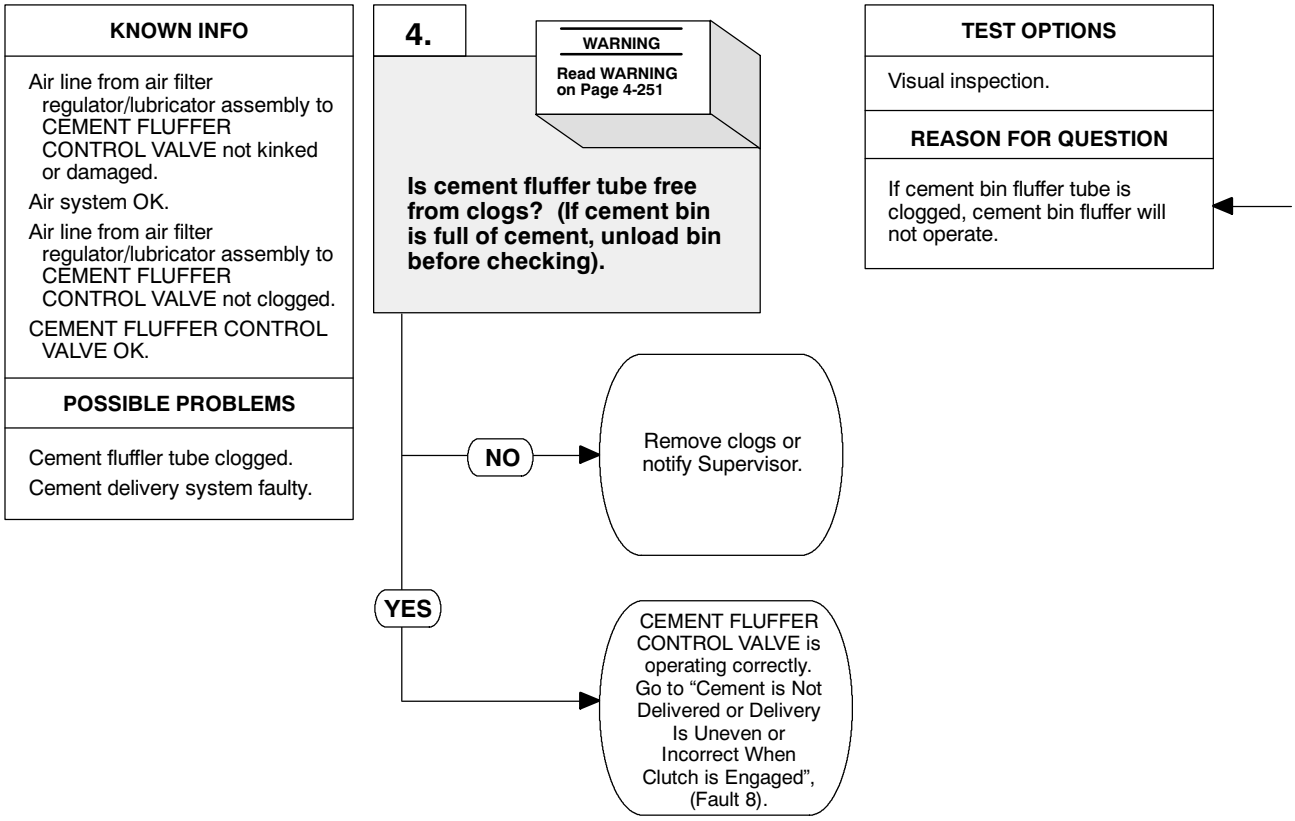

WARNING

During loading operations or at any time there is cement dust in the air, take precautions to avoid direct inhalation of dust. If you must be in direct vicinity of dust, wear a mask, or if none is available, cover your nose and mouth with a cloth. Cement dust can cause serious lung problems. Failure to comply could result in serious injury or death to personnel.

NOTE

The best way to observe if cement bin fluffer tube is free from clogs is to observe cement fluffer tube through side inspection window, while operating CEMENT FLUFFER CONTROL VALVE.

VISUAL INSPECTION

(1) Close FLUFFER CONTROL VALVE, (Para 2-1).

(2) Open air system control valve, (Para 2-1).

(3) Start engine, (Para 2-19).

(4) If full, empty cement bin, (Para 2-14).

(5) Allow system to charge to 80 to 100 psi (552 to 690 kPa).

(6) Open CEMENT FLUFFER CONTROL VALVE, (Para 2-1).

(7) Check if cement fluffer tube is free from clogs.

  (a) If cement fluffer tube is not free from clogs, remove clogs or notify Supervisor.

  (b) If cement fluffer tube is free from clogs, CEMENT FLUFFER CONTROL VALVE is working properly, go to “Cement is not Delivered, or Delivery is Uneven or Incorrect When Clutch is Engaged”, (Fault 8).

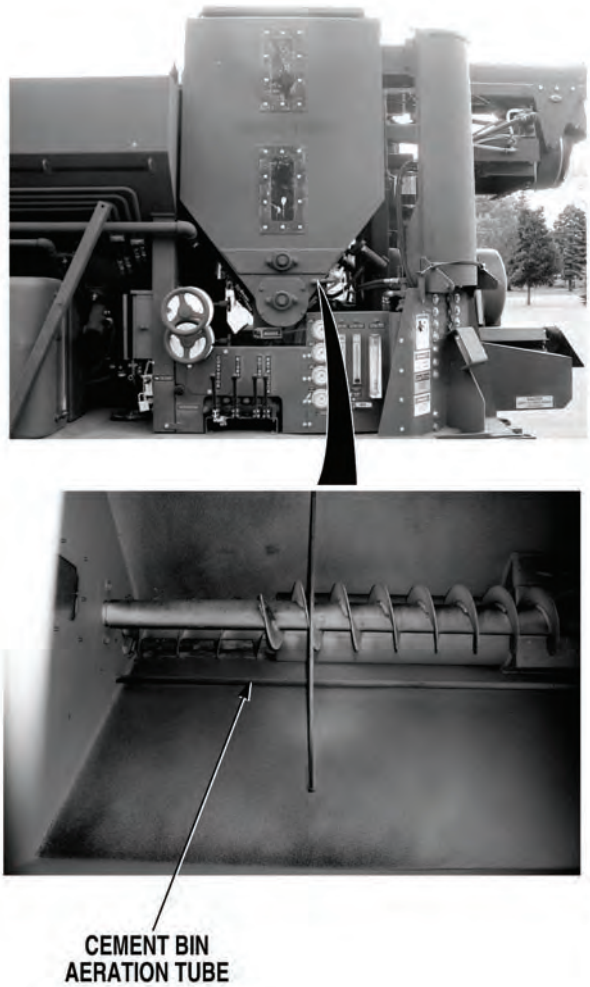

6. CEMENT FLUFFER CONTROL (AERATING) VALVE DOES NOT OPERATE CORRECTLY (CONT).

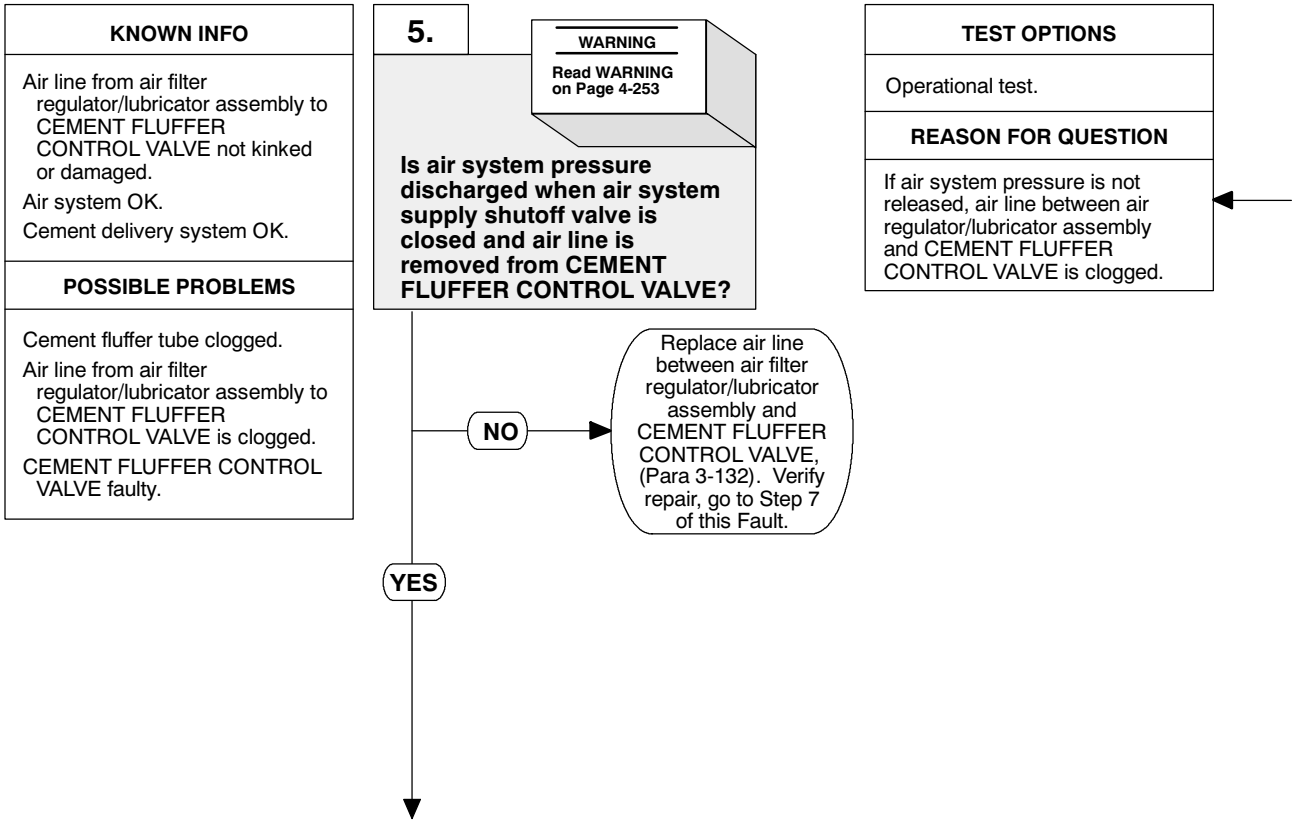

WARNING

Air lines are under extreme pressure. Ensure all personnel wear protective goggles when working around compressed air. Failure to comply may result in serious injury or death to personnel.

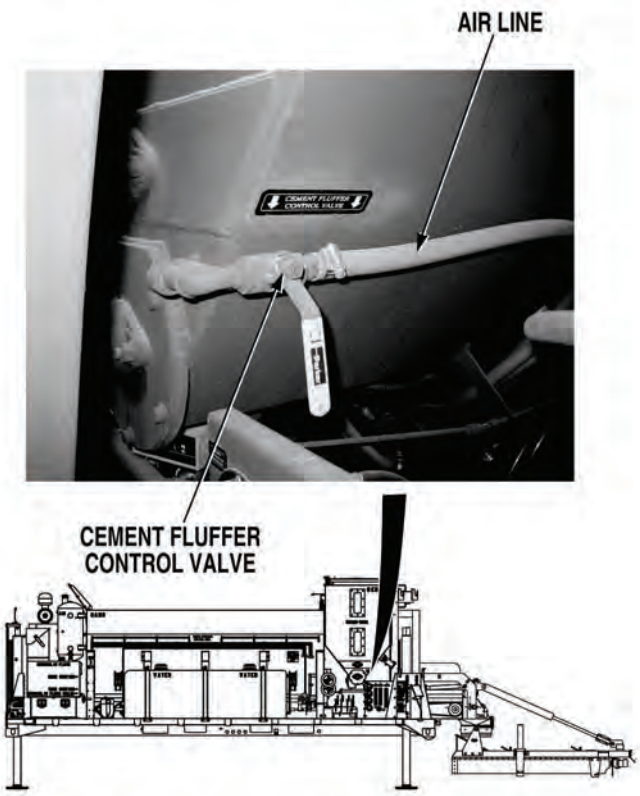

OPERATIONAL TEST

(1) Remove air line from CEMENT FLUFFER CONTROL VALVE, (Para 3-132).

(2) Check if air pressure is discharged from air system.

(a) If air pressure is not discharged from air system, replace air line between air regulator/lubricator assembly and CEMENT FLUFFER CONTROL VALVE, (Para 3-132). Verify repair, go to Step 7 of this Fault.

(b) If air pressure is discharged from air system, go to Step 6 of this Fault.

6. CEMENT FLUFFER CONTROL (AERATING) VALVE DOES NOT OPERATE CORRECTLY (CONT).

KNOWN INFO

Air line from air filter regulator/lubricator assembly to CEMENT FLUFFER CONTROL VALVE not kinked or damaged.

Air system OK.

Cement delivery system OK.

Air line from air filter regulator/lubricator assembly to CEMENT FLUFFER CONTROL VALVE OK.

POSSIBLE PROBLEMS

Cement fluffer tube clogged.

CEMENT FLUFFER CONTROL VALVE faulty.

6.

WARNING

Read WARNING on Page 4-255.

Is CEMENT FLUFFER CONTROL VALVE free from clogs?

NO → Remove clogs or replace CEMENT FLUFFER CONTROL VALVE, (Para 3-121). Verify repair, go to Step 7 of this Fault.

YES → Cement fluffer tube is clogged. Remove cap on end of fluffer tube and remove clogs or notify Supervisor.

TEST OPTIONS

Visual inspection.

REASON FOR QUESTION

If CEMENT FLUFFER CONTROL VALVE or cement fluffer tube is clogged, cement bin fluffer function will not operate.

WARNING

During loading operations or at any time there is cement dust in the air, take precautions to avoid direct inhalation of dust. If you must be in direct vicinity of dust, wear a dust mask, or if none is available, cover your nose and mouth with a cloth. Cement dust can cause serious lung problems. Failure to comply could result in serious injury or death to personnel.

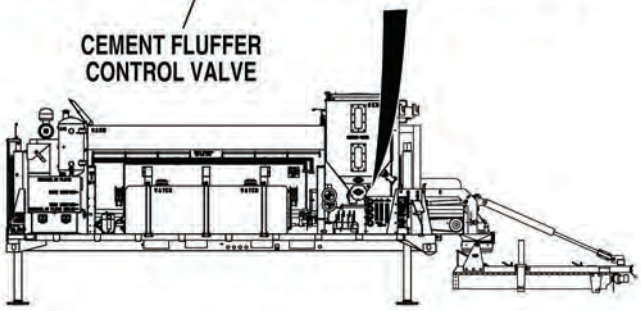

VISUAL INSPECTION

(1) Remove CEMENT FLUFFER CONTROL VALVE, (Para 3-121).

(2) Check if CEMENT FLUFFER CONTROL VALVE is free from clogs.

(a) If CEMENT FLUFFER CONTROL VALVE is not free from clogs, remove clogs or replace CEMENT FLUFFER CONTROL VALVE, (Para 3-121). Verify repair, go to Step 7 of this Fault.

(b) If CEMENT FLUFFER CONTROL VALVE is free from clogs, remove cap from end of fluffer tube and remove clogs or notify Supervisor.

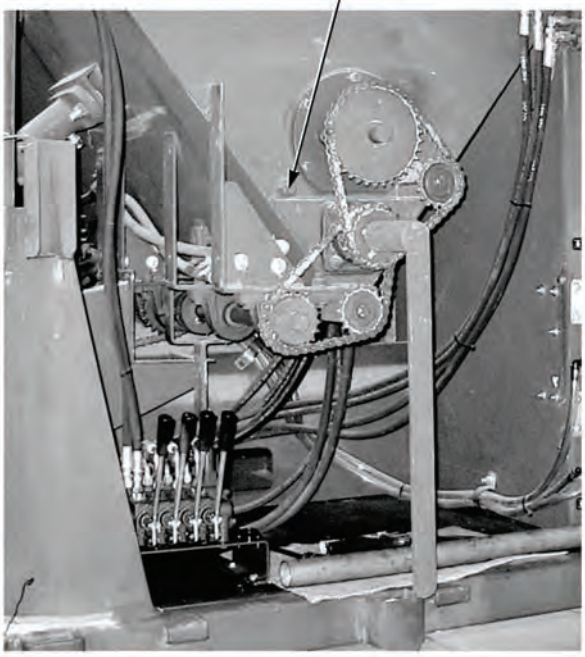

6. CEMENT FLUFFER CONTROL (AERATING) VALVE DOES NOT OPERATE CORRECTLY (CONT).

KNOWN INFO
Air line from air filter regulator/lubricator assembly to CEMENT FLUFFER CONTROL VALVE not kinked or damaged. Air system OK. Cement delivery system OK. Air line from air filter regulator/lubricator assembly to CEMENT FLUFFER CONTROL VALVE OK. Cement fluffer tube OK. CEMENT FLUFFER CONTROL VALVE OK.
POSSIBLE PROBLEMS
None.

7.

Does CEMENT FLUFFER CONTROL VALVE operate correctly?

NO → Fault not corrected. Notify Supervisor.

YES → Fault corrected.

TEST OPTIONS
Verify repair.
REASON FOR QUESTION
If CEMENT FLUFFER CONTROL VALVE does not operate correctly, fault has not been corrected.

VERIFY REPAIR

(1) If removed, install CEMENT FLUFFER CONTROL VALVE and attach air line, (Para 3-121).

(2) If OFF, start engine, (Para 2-19). Let air system charge to 80 to 100 psi (552 to 690 kPa).

(3) Operate CEMENT FLUFFER CONTROL VALVE, (Para 2-1).

(4) Check if CEMENT FLUFFER CONTROL VALVE operates correctly.

  (a) If CEMENT FLUFFER CONTROL VALVE does not operate correctly, fault not corrected. Notify Supervisor.

  (b) If CEMENT FLUFFER CONTROL VALVE operates correctly, fault has been corrected.

(5) Shut OFF engine, (Para 2-19).

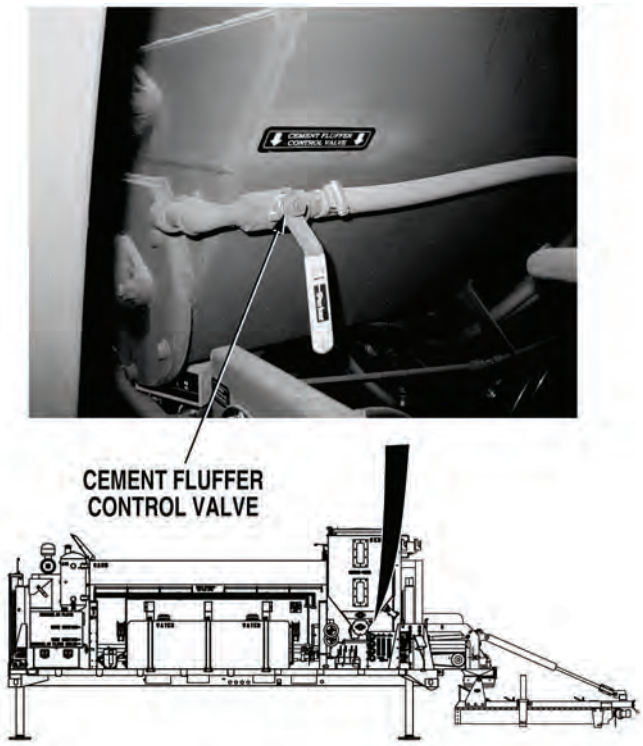

7. CEMENT METERING COUNTER DOES NOT OPERATE CORRECTLY.

INITIAL SETUP

Tools and Special Tools
Tool Kit, General Mechanic's: Automotive (Item 19, Appendix I)

Equipment Condition
Concrete Mobile Mixer unloaded from PLS, (Para 2-5)
Concrete Mobile Mixer at operating level, (Para 2-28)
Engine OFF, (Para 2-19)

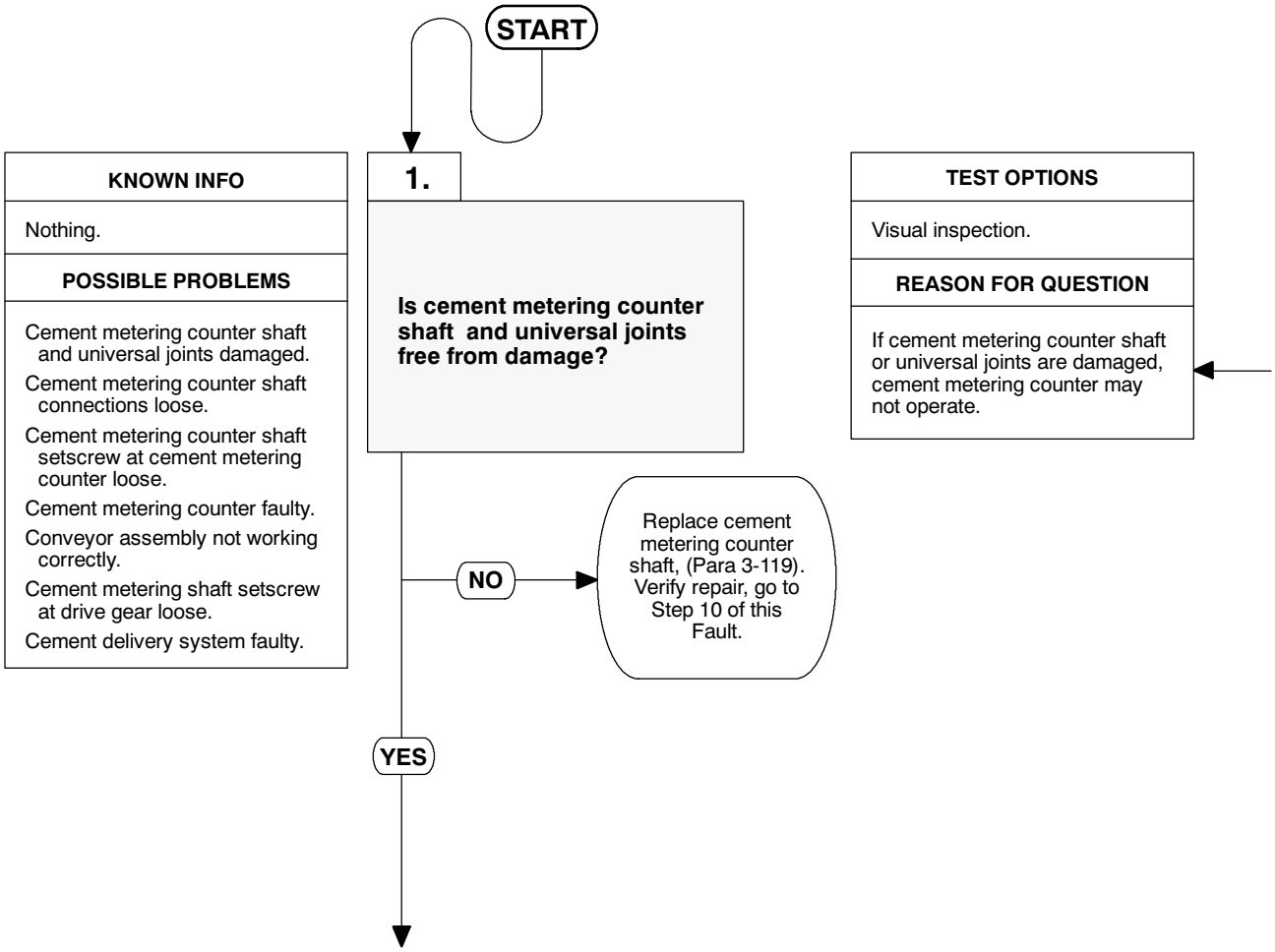

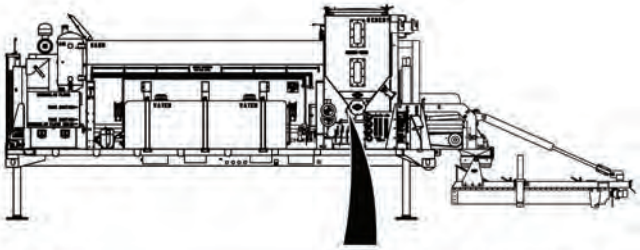

VISUAL INSPECTION

Check if cement metering counter shaft and universal joints are free from damage.

(a) If cement metering counter shaft and universal joints are not free from damage, replace cement metering counter shaft, (Para 3-119). Verify repair, go to Step 10 of this Fault.

(b) If cement metering counter shaft and universal joints are free from damage, go to Step 2 of this Fault.

7. CEMENT METERING COUNTER DOES NOT OPERATE CORRECTLY (CONT).

KNOWN INFO
Cement metering counter shaft and universal joints not damaged.
POSSIBLE PROBLEMS
Cement metering counter shaft connections loose. Cement metering counter shaft setscrew at cement metering counter loose. Cement metering counter faulty. Conveyor assembly not working correctly. Cement metering shaft setscrew at drive gear loose. Cement delivery system faulty.

2.

Is cement metering counter shaft free from excessive play?

NO → Tighten loose connections or replace damaged shaft sections, (Para 3-119). Verify repair, go to Step 10 of this Fault.

YES ↓

TEST OPTIONS
Visual inspection.
REASON FOR QUESTION
If cement metering counter shaft is not free from excessive play, cement metering counter may not operate correctly.

VISUAL INSPECTION
Check if cement metering counter shaft is free from excessive play. (a) If cement metering counter shaft is not free from excessive play, tighten loose connections or replace damaged sections, (Para 3-119). Verify repair, go to Step 10 of this Fault. (b) If cement metering counter shaft is free from excessive play, go to Step 3 of this Fault.

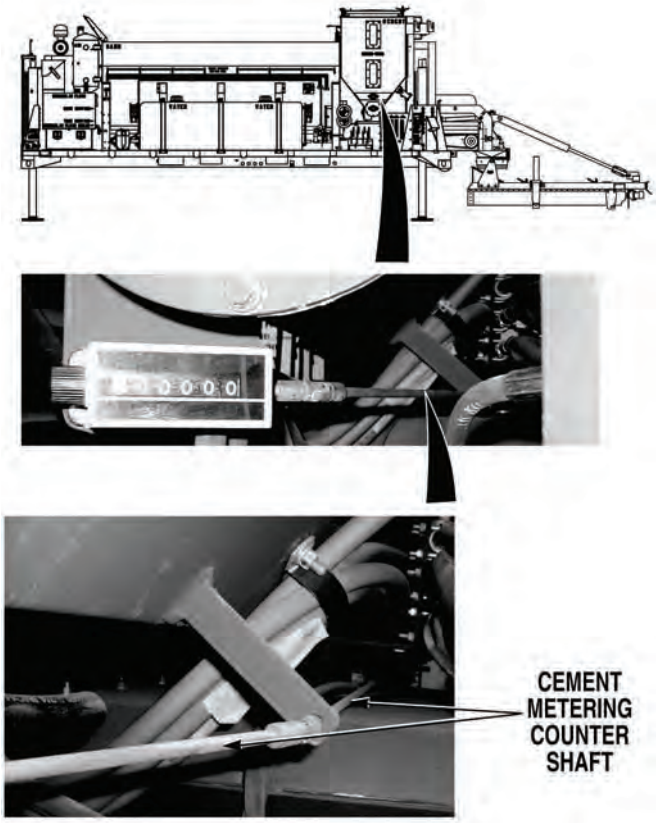

7. CEMENT METERING COUNTER DOES NOT OPERATE CORRECTLY (CONT).

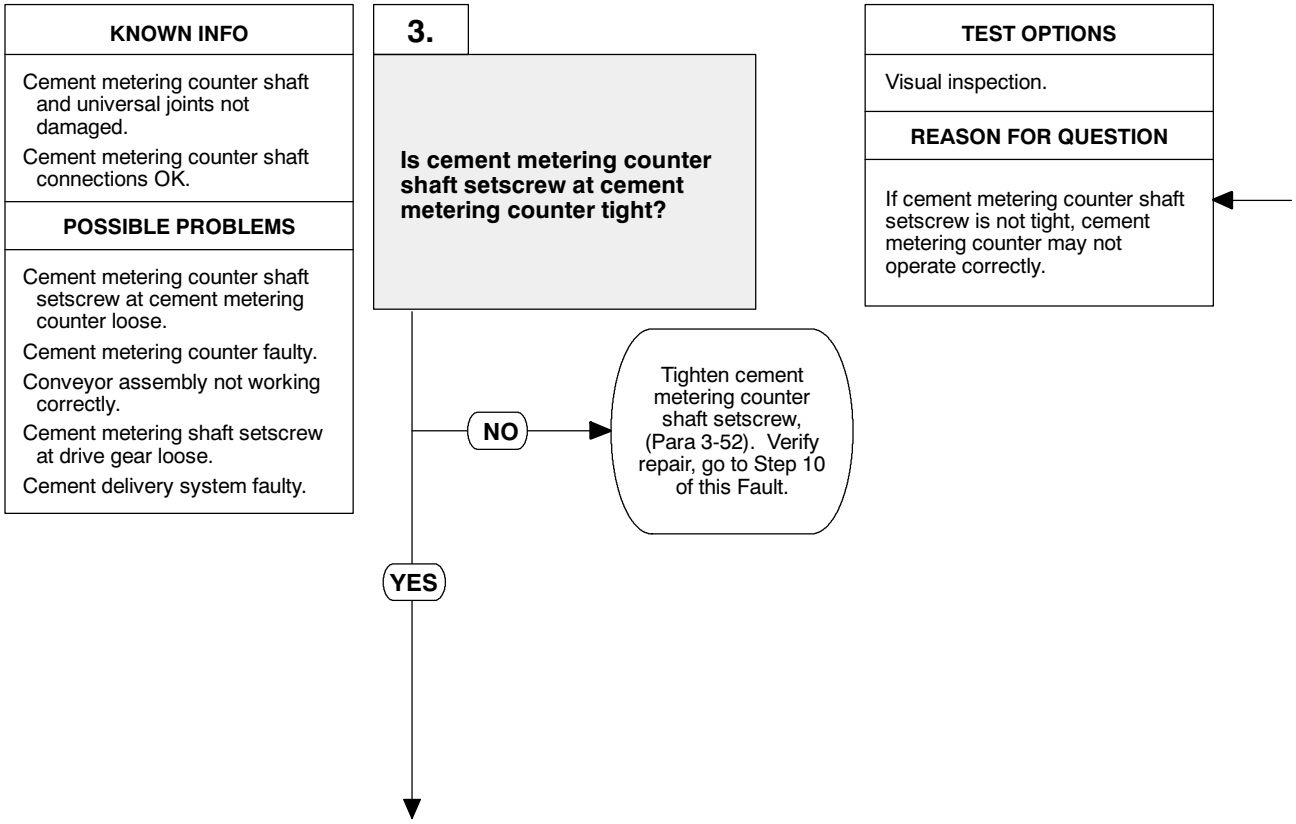

VISUAL INSPECTION
Check if cement metering counter shaft setscrew at cement metering counter is secure. (a) If cement metering counter shaft setscrew is not secure, tighten setscrew, (Para 3-52). Verify repair, go to Step 10 of this Fault. (b) If cement metering counter shaft setscrew is secure, go to Step 4 of this Fault.

7. CEMENT METERING COUNTER DOES NOT OPERATE CORRECTLY (CONT).

KNOWN INFO
Cement metering counter shaft and universal joints not damaged. Cement metering counter shaft connections OK. Cement metering counter shaft setscrew at cement metering counter OK.
POSSIBLE PROBLEMS
Cement metering counter faulty. Conveyor assembly not working correctly. Cement metering shaft setscrew at drive gear loose. Cement delivery system faulty.

4.

Does cement metering counter shaft rotate without binding when conveyor is operated?

NO → Go to Step 8 of this fault.

YES ↓

TEST OPTIONS
Operational test.
REASON FOR QUESTION
To further isolate fault.

OPERATIONAL TEST

(1) If engaged, disengage cement bin clutch, (Para 2-1).

(2) Turn HIGH FLOW/LOW FLOW ADMIX switches OFF, (Para 2-1).

(3) Turn CONTROL OVERIDE switch OFF, (Para 2-1).

(4) Turn WATER CONTROL VALVE OFF, (Para 2-18).

(5) Pull selector valve for lift cylinder OUT, (Para 2-18).

NOTE

Perform Step (6) only if aggregate bins are not empty.

(6) Adjust sand and stone gates just until gates do not contact conveyor belt, (Para 2-18).

(7) Start engine, (Para 2-19).

(8) Turn THROTTLE CONTROL switch to high idle, (Para 2-1).

(9) Turn CONTROL OVERIDE switch, ON, (Para 2-1).

(10) Pull CONVEYOR control out to ON position to operate conveyor, (Para 2-1).

(11) Check if cement metering counter shaft rotates without binding when conveyor is operated.

(a) If cement metering counter shaft does not rotate without binding, go to Step 8 of this Fault.

(b) If cement metering counter shaft rotates without binding, go to Step 5 of this Fault.

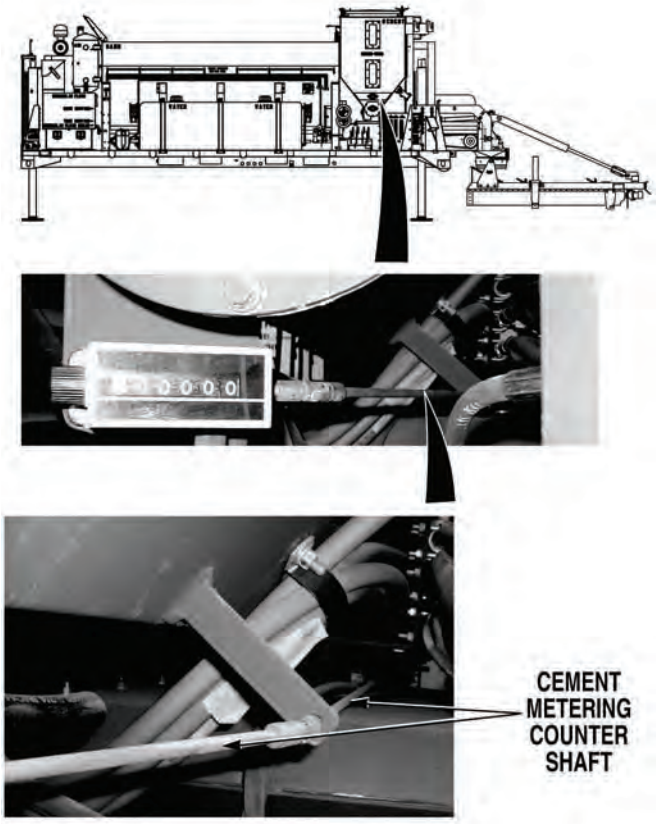

7. CEMENT METERING COUNTER DOES NOT OPERATE CORRECTLY (CONT).

KNOWN INFO
Cement metering counter shaft and universal joints not damaged. Cement metering counter shaft connections OK. Cement metering counter shaft setscrew at cement metering counter OK. Cement metering shaft setscrew at drive gear OK. Cement delivery system OK.
POSSIBLE PROBLEMS
Cement metering counter faulty. Conveyor assembly not working correctly.

5.

Does cement metering counter operate smoothly, when conveyor is operated?

NO → Replace cement metering counter, (Para 3-52). Verify repair, go to Step 10 of this Fault.

YES ↓

TEST OPTIONS
Operational test.
REASON FOR QUESTION
If cement metering counter does not operate smoothly, cement metering counter is faulty.

OPERATIONAL TEST
Check if cement metering counter operates smoothly when conveyor is operated. (a) If cement metering counter does not operate smoothly, replace cement metering counter, (Para 3-52). Verify repair, go to Step 10 of this Fault. (b) If cement metering counter operates smoothly, go to Step 6 of this Fault.

7. CEMENT METERING COUNTER DOES NOT OPERATE CORRECTLY (CONT).

KNOWN INFO
Cement metering counter shaft and universal joints not damaged. Cement metering counter shaft connections OK. Cement metering counter shaft setscrew at cement metering counter OK. Cement metering shaft setscrew at drive gear OK. Cement delivery system OK.
POSSIBLE PROBLEMS
Cement metering counter faulty. Conveyor assembly not working correctly.

6.

Does cement metering counter count up 330-350 counts in one minute, when conveyer is operated at high idle?

NO → Go to Step 7 of this fault.

YES → Cement metering counter is operating correctly. If problem continues, notify Supervisor.

TEST OPTIONS
Operational test.
REASON FOR QUESTION
To further isolate fault.

OPERATIONAL TEST
Check if cement metering counter, counts up 330-350 counts per minute. (a) If cement metering counter does not count up 330-350 counts per minute, go to Step 7 of this Fault. (b) If cement metering counter counts up 330-350 counts per minute, cement metering counter is operating correctly. If problem continues, notify Supervisor.

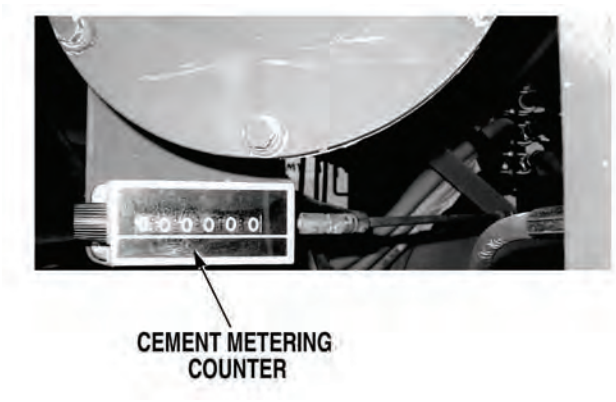

7. CEMENT METERING COUNTER DOES NOT OPERATE CORRECTLY (CONT).

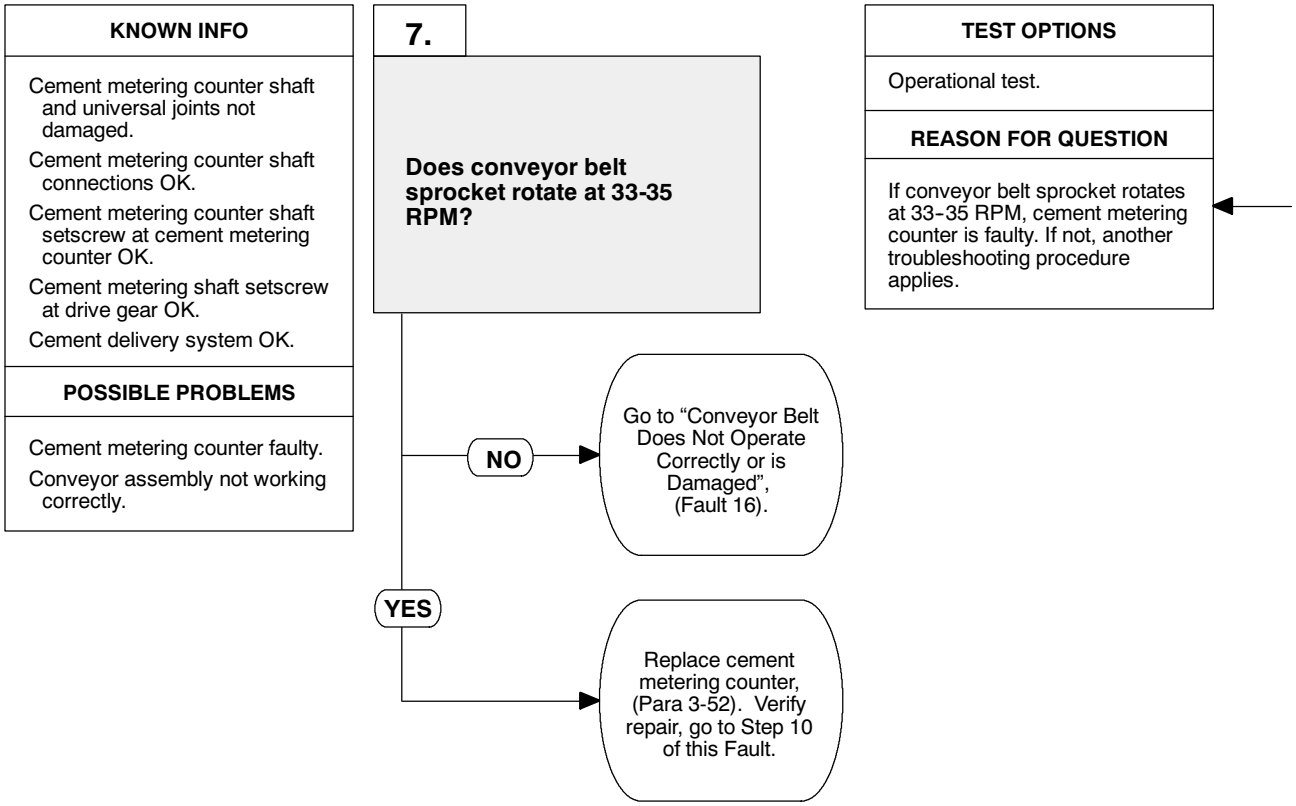

OPERATIONAL TEST

(1) Shut OFF engine, (Para 2-19).

NOTE

Chalk line will be used as a visual marker to count rotations of conveyor belt drive gear.

(2) Apply chalk line to tooth on conveyor gear.

(3) Start engine, (Para 2-19).

(4) Pull CONVEYOR control out to ON position, (Para 2-1).

(5) Check if conveyor sprocket rotates at 33-35 RPM.

(a) If conveyor sprocket does not rotate at 33-35 RPM, go to "Conveyor Belt Does Not Operate Correctly or is Damaged", (Fault 16).

(b) If conveyor sprocket rotates at 33-35 RPM, replace cement metering counter, (Para 3-52). Verify repair, go to Step 10 of this Fault.

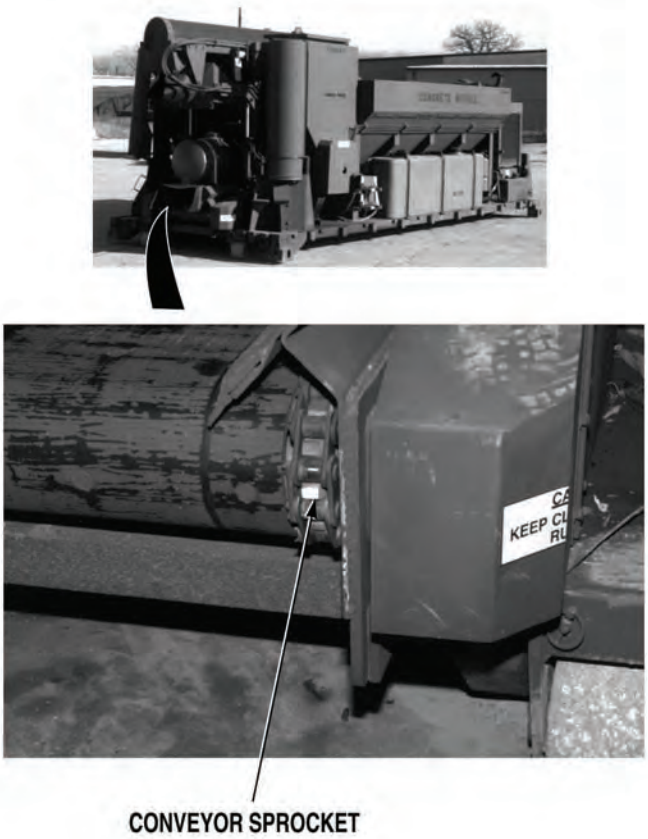

7. CEMENT METERING COUNTER DOES NOT OPERATE CORRECTLY. (CONT).

KNOWN INFO
Cement metering counter shaft and universal joints not damaged. Cement metering counter shaft connections OK. Cement metering counter shaft setscrew at cement metering counter OK. Cement metering counter OK. Conveyor assembly OK.
POSSIBLE PROBLEMS
Cement metering shaft setscrew at drive gear loose. Cement delivery system faulty.

8.

Does cement metering shaft rotate when conveyor is operated?

TEST OPTIONS
Operational test.
REASON FOR QUESTION
If cement metering shaft rotates when conveyor is operated, the shaft is binding or the setscrew at the drive gear is loose.

NO → Go to Step 9 of this fault.

YES → Repair binding or tighten cement metering system shaft setscrew at system drive gear, (Para 3-119). Verify repair, go to Step 10 of this Fault.

OPERATIONAL TEST
Check if cement metering shaft is rotating, when conveyor belt is operated. (a) If cement metering counter shaft does not rotate, go to Step 9 of this Fault. (b) If cement metering counter shaft rotates, repair binding or tighten cement metering counter setscrew at system drive gear, (para 3-119). Verify repair, go to Step 10 of this Fault.

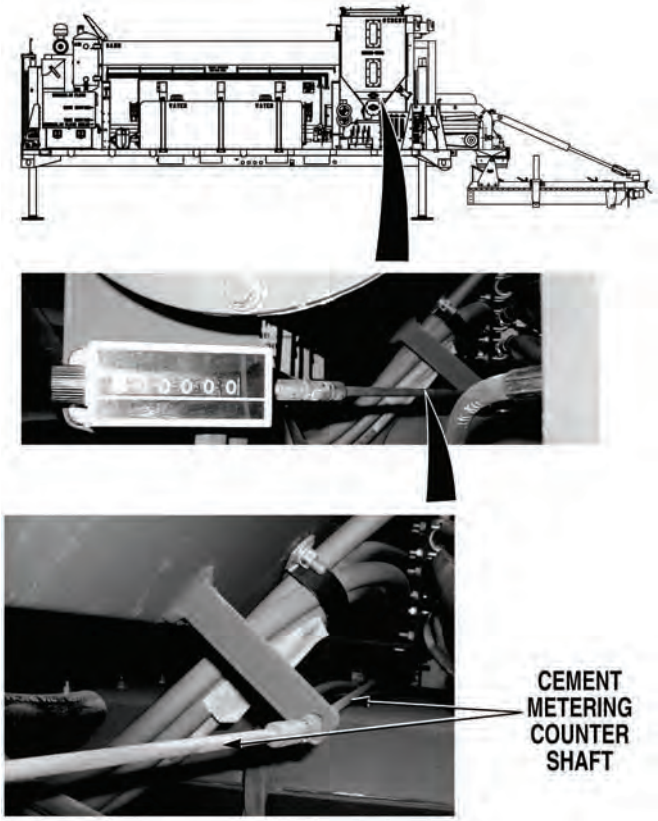

7. CEMENT METERING COUNTER DOES NOT OPERATE CORRECTLY (CONT).

KNOWN INFO

Cement metering counter shaft and universal joints not damaged.

Cement metering counter shaft connections OK.

Cement metering counter shaft setscrew at cement metering counter OK.

Cement metering counter OK.

Conveyor assembly OK.

POSSIBLE PROBLEMS

Cement metering shaft setscrew at drive gear loose .

Cement delivery system faulty.

9.

Is cement metering system drive chain and gear rotating when conveyor is operated?

NO → Go to “Cement is Not Delivered or Delivery is Uneven or Incorrecth When Clutch is Engaged”, (Fault 8).

YES → Tighten cement metering counter shaft setscrew at system drive gear, (Para 3-119). Verify repair, go to Step 10 of this Fault.

TEST OPTIONS

Operational test.

REASON FOR QUESTION

If cement metering system drive gear and chain are rotating when conveyor is operating, cement metering counter shaft setscrew at drive gear assembly is loose or missing. If not, another troubleshooting procedure applies.

OPERATIONAL TEST
Check if cement metering system drive chain and gear are rotating while conveyor belt is operating. (a) If cement metering system drive chain and gear are not rotating, replace or tighten setscrew attaching counter shaft to cement metering drive gear, (Para 3-119). Verify repair, go to Step 10 of this Fault. (b) If cement metering system drive chain and gear are rotating, go to “Cement is Not Delivered or Delivery is Uneven or Incorrect When Clutch is Engaged”, (Fault 8).

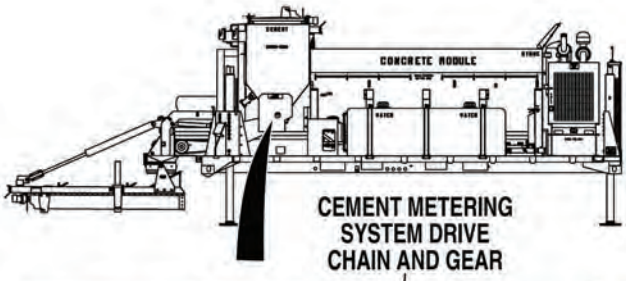

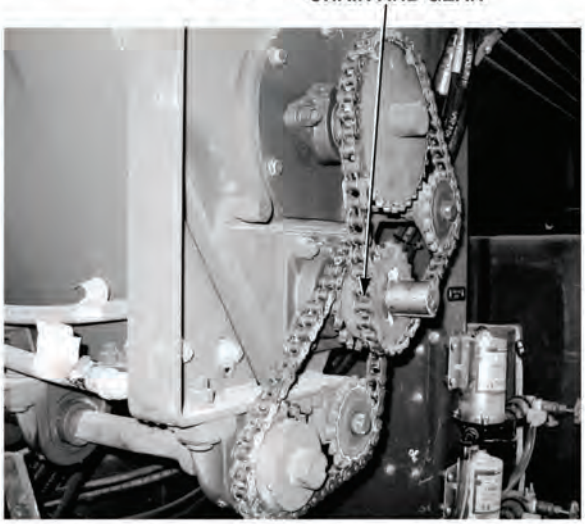

7. CEMENT METERING COUNTER DOES NOT OPERATE CORRECTLY (CONT).

KNOWN INFO
Cement metering counter shaft and universal joints not damaged. Cement metering counter shaft connections OK. Cement metering counter shaft setscrew at cement metering counter OK. Cement metering counter OK. Conveyor assembly OK. Cement metering shaft setscrew at drive gear OK. Cement delivery system OK.
POSSIBLE PROBLEMS
None.

10.

Does cement metering counter operate correctly?

NO → Fault not corrected. Notify Supervisor.

YES → Fault corrected.

TEST OPTIONS
Verify repair.
REASON FOR QUESTION
If cement metering counter operates correctly, fault has been corrected.

VERIFY REPAIR

(1) Turn HIGH FLOW/LOW FLOW ADMIX switches OFF, (Para 2-1).

(2) Turn CONTROL OVERIDE switch OFF, (Para 2-1).

(3) Turn WATER CONTROL VALVE OFF, (Para 2-18).

(4) Pull selector valve for lift cylinder OUT, (Para 2-18).

(5) Disengage cement clutch, (Para 2-18).

NOTE

Perform Step (8) only if aggregate bins are not empty.

(6) Adjust sand and stone gates just until gates do not contact conveyor belt, (Para 2-18).

(7) Start engine, (Para 2-19).

(8) Pull CONVEYOR control out to ON position, (Para 2-1).

(9) Check if cement metering counter operates correctly.

(a) If cement metering counter does not operate correctly, fault not corrected. Notify Supervisor.

(b) If cement metering counter operates correctly, fault has been corrected.

(10) Push CONVEYOR control in to OFF position, (Para 2-1).

(11) Turn THROTTLE CONTROL switch OFF, (Para 2-1).

(12) Shut OFF engine, (Para 2-19).

CEMENT METERING COUNTER

8. CEMENT IS NOT DELIVERED OR DELIVERY IS UNEVEN OR INCORRECT WHEN CLUTCH IS ENGAGED.

INITIAL SETUP

Tools and Special Tools
Tool Kit, General Mechanic's: Automotive (Item 19, Appendix I)

Equipment Condition
Concrete Mobile Mixer unloaded from PLS, (Para 2-5)
Concrete Mobile Mixer at operating level, (Para 2-28)
Engine OFF, (Para 2-19)

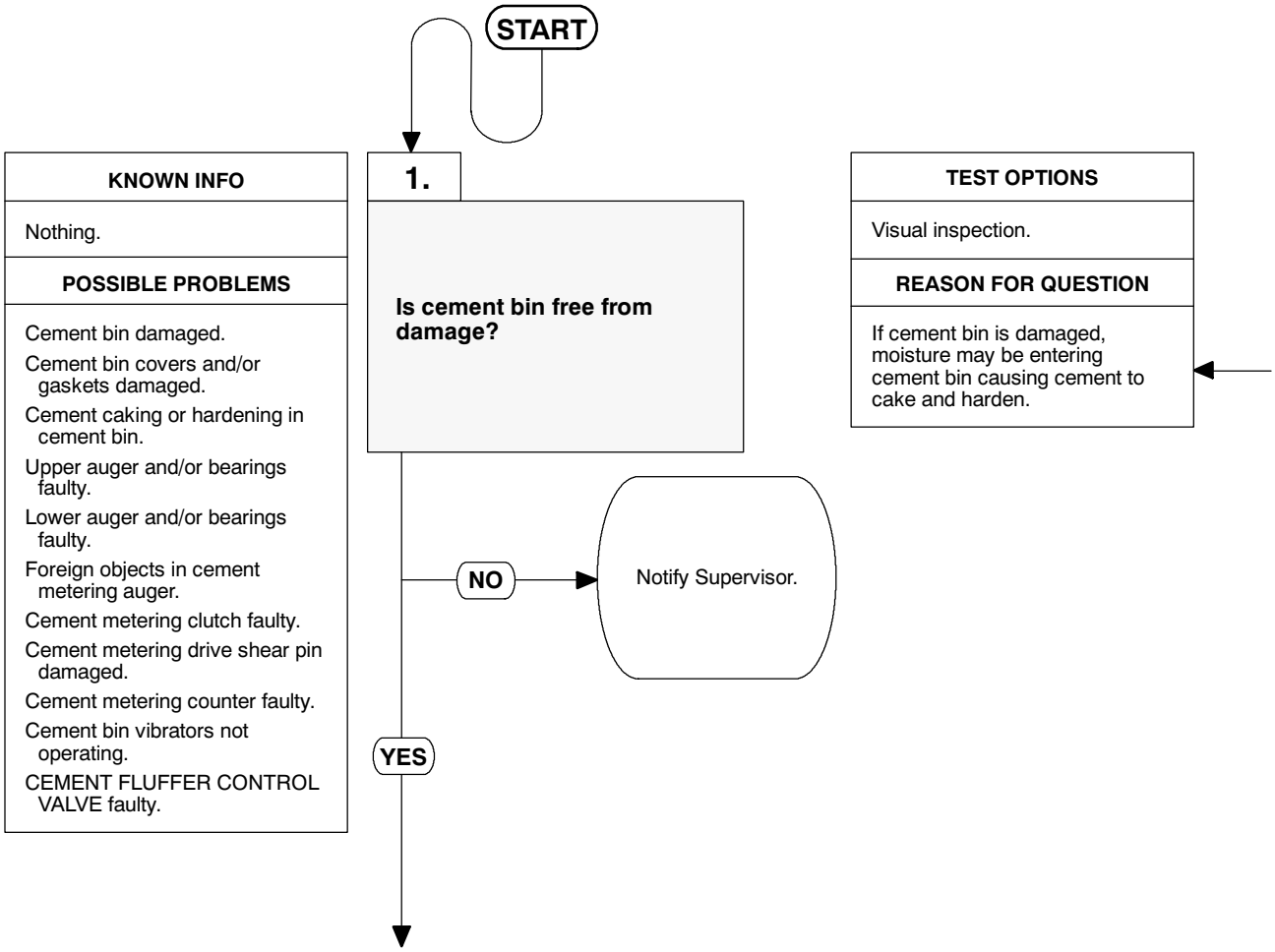

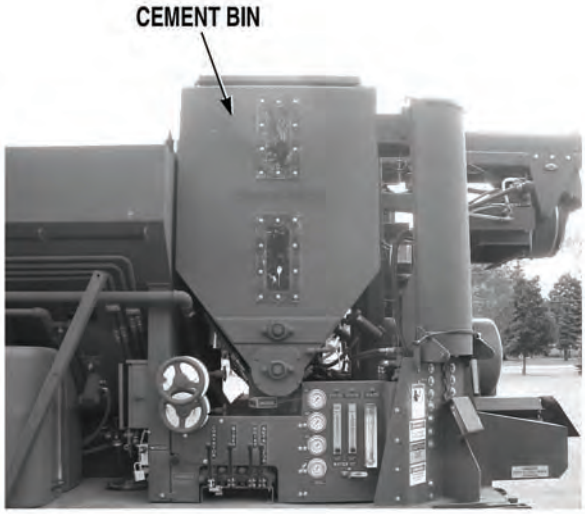

VISUAL INSPECTION
Check if cement bin is free from damage. (a) If cement bin is not free from damage, notify Supervisor. (b) If cement bin is free from damage, go to Step 2 of this Fault.

8. CEMENT IS NOT DELIVERED OR DELIVERY IS UNEVEN OR INCORRECT WHEN CLUTCH IS ENGAGED (CONT).

KNOWN INFO
Cement bin not damaged.
POSSIBLE PROBLEMS
Cement bin covers and/or gaskets damaged. Cement caking or hardening in cement bin. Upper auger and/or bearings faulty. Lower auger and/or bearings faulty. Foreign objects in cement metering auger. Cement metering clutch faulty. Cement metering drive shear pin damaged. Cement metering counter faulty. Cement bin vibrators not operating. CEMENT FLUFFER CONTROL VALVE faulty.

2.

WARNING

Read WARNING on Page 4-281

Are cement bin covers and cover gasket seals tight and free from damage and warpage?

NO → Go to Step 7 of this Fault.

YES ↓

TEST OPTIONS
Visual inspection.
REASON FOR QUESTION
If cement bin covers and gaskets are not tight or are damaged, moisture may be entering cement bin causing cement to cake and harden.

WARNING

During loading operations or any time there is cement dust in the air, take precautions to avoid direct inhalation of dust. If you must be in direct vicinity of dust, wear a dust mask, or if none is available, cover your nose and mouth with a cloth. Cement dust can cause serious lung problems. Failure to comply could result in serious injury or death to personnel.

VISUAL INSPECTION
Check if cement bin covers and gaskets are tight and free from damage and warpage. (a) If cement bin covers are not tight and free from damage and warpage, go to Step 7 of this Fault. (b) If cement bin covers are tight and free from damage and warpage, go to Step 3 of this Fault.

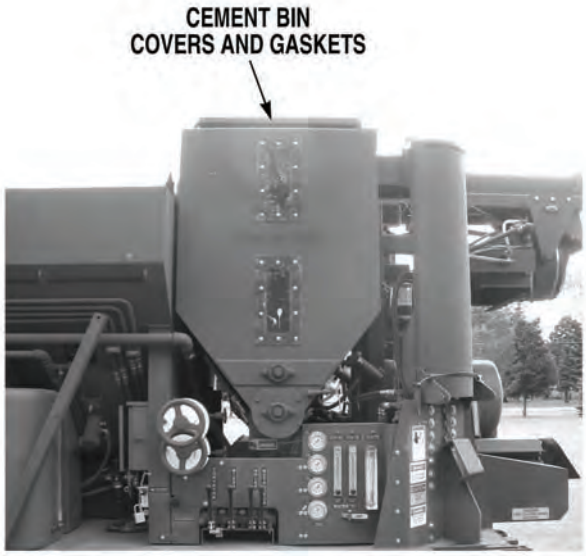

8. CEMENT IS NOT DELIVERED OR DELIVERY IS UNEVEN OR INCORRECT WHEN CLUTCH IS ENGAGED (CONT).

KNOWN INFO
Cement bin not damaged. Cement bin covers and/or gaskets OK.
POSSIBLE PROBLEMS
Cement caking or hardening in cement bin. Upper auger and/or bearings faulty. Lower auger and/or bearings faulty. Foreign objects in cement metering auger. Cement metering clutch faulty. Cement metering drive shear pin damaged. Cement metering counter faulty. Cement bin vibrators not operating. CEMENT FLUFFER CONTROL VALVE faulty.

3.

WARNING

Read WARNING on Page 4-283

If cement bin is filled, is cement free from caking and hard clumps?

NO → Moisture has entered cement bin. Locate and remove source of moisture. Then remove cement, clean cement bin and go to Step 8 of this Fault.

YES ↓

TEST OPTIONS
Visual inspection.
REASON FOR QUESTION
If cement bin is not free from caking and hard clumps, moisture is entering cement bin.

WARNING

During loading operations or any time there is cement dust in the air, take precautions to avoid direct inhalation of dust. If you must be in direct vicinity of dust, wear a dust mask, or if none is available, cover your nose and mouth with a cloth. Cement dust can cause serious lung problems. Failure to comply could result in serious injury or death to personnel.

CAUTION

Do not use water to clean inside of cement bin. Failure to comply could result in damage to equipment.

VISUAL INSPECTION
If cement bin is filled, check if cement in cement bin is free from caking and hard clumps. (a) If cement in cement bin is not free from caking and hard clumps, moisture has entered cement bin. Locate and remove source of moisture. Then remove cement, clean cement bin, and go to Step 8 of this Fault. (b) If cement in cement bin is free from caking and hard clumps, go to Step 4 of this Fault.

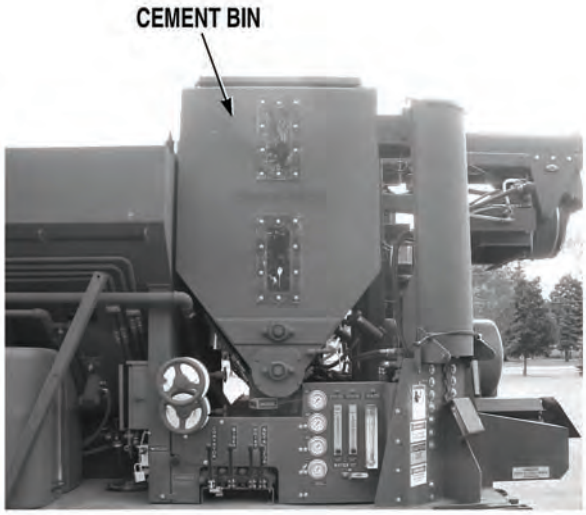

8. CEMENT IS NOT DELIVERED OR DELIVERY IS UNEVEN OR INCORRECT WHEN CLUTCH IS ENGAGED (CONT).

KNOWN INFO
Cement bin not damaged. Cement bin covers and/or gaskets OK. Cement not caking or hardening in cement bin.
POSSIBLE PROBLEMS
Upper auger and/or bearings faulty. Lower auger and/or bearings faulty. Foreign objects in cement metering auger. Cement metering clutch faulty. Cement metering drive shear pin damaged. Cement metering counter faulty. Cement bin vibrators not operating. CEMENT FLUFFER CONTROL VALVE faulty.

4.

WARNING

Read WARNING on Page 4-285

Do cement bin augers operate smoothly with hand crank?

NO → Go to Step 6 of this Fault.

YES ↓

TEST OPTIONS
Operational test.
REASON FOR QUESTION
To isolate fault.

WARNING

Ensure concrete mobile mixer engine is off and cement auger is not rotating prior to installing breaker bar and socket on cement auger shaft. Failure to comply could result in injury or death to personnel.

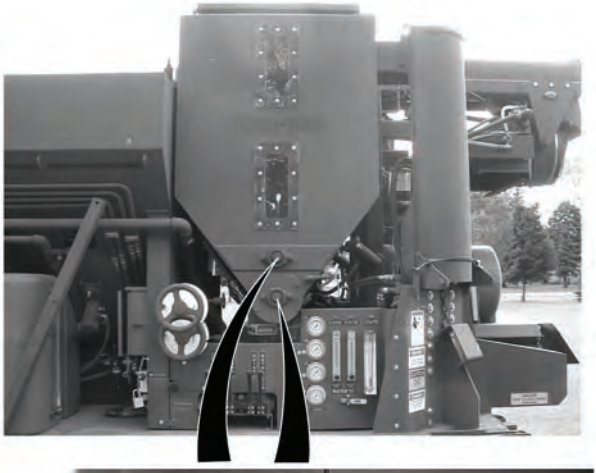

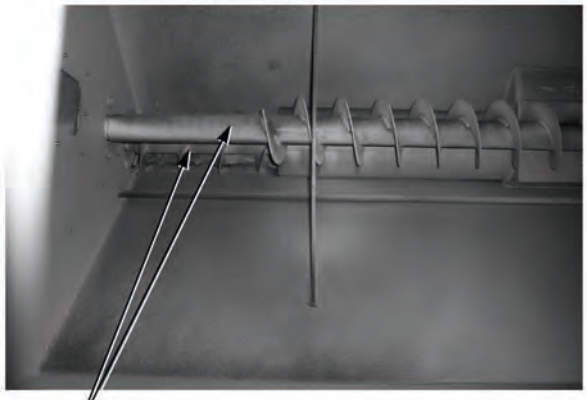

CEMENT BIN AUGERS

OPERATIONAL TEST

(1) Disengage, cement bin clutch, (Para 2-22).

(2) Position cement bin augers hand crank and socket on end of auger shaft, (Para 2-22).

(3) Using cement bin augers hand crank, rotate cement bin auger.

(4) Check if cement bin augers rotate smoothly.

(a) If cement bin augers do not operate smoothly, go to Step 6 of this Fault.

(b) If cement bin augers operate smoothly, go to Step 5 of this Fault.

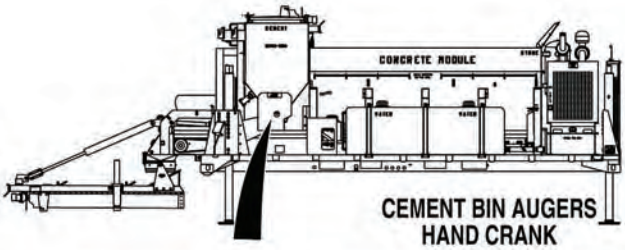

CEMENT BIN AUGERS HAND CRANK

8. CEMENT IS NOT DELIVERED OR DELIVERY IS UNEVEN OR INCORRECT WHEN CLUTCH IS ENGAGED (CONT).

KNOWN INFO

- Cement bin not damaged.
- Cement bin covers and/or gaskets OK.
- Cement not caking or hardening in cement bin.
- Upper auger and/or bearings OK.
- Lower auger and/or bearings OK.
- No foreign objects in cement metering auger.

POSSIBLE PROBLEMS

- Cement metering clutch faulty.
- Cement metering drive shear pin damaged.
- Cement metering counter faulty.
- Cement bin vibrators not operating.
- CEMENT FLUFFER CONTROL VALVE faulty.

5.

WARNING

Read WARNING on Page 4-287

Does cement metering system clutch operate smoothly without binding?

NO → Repair or replace cement metering system clutch assembly, (Para 3-119). Verify repair, go to Step 14 of this Fault.

YES → Go to Step 8 of this Fault.

TEST OPTIONS

Operational test.

REASON FOR QUESTION

If cement metering clutch is not operating smoothly without binding, cement metering system clutch assembly is faulty.

WARNING

Ensure breaker bar and socket are removed from auger shaft prior to engaging cement bin clutch, if Concrete Mobile Mixer engine is on. Failure to comply could result in injury or death to personnel.

OPERATIONAL TEST

(1) Remove cement bin clutch assembly cover, (Para 3-119).

(2) Engage and disengage cement metering system clutch, (Para 2-22).

(3) Check if cement metering system clutch operates smoothly without binding.

(a) If clutch does not operate smoothly without binding, repair or replace cement metering clutch assembly, (Para 3-119). Verify repair, go to Step 14 of this Fault.

(b) If clutch operates smoothly without binding, go to Step 8 of this Fault.

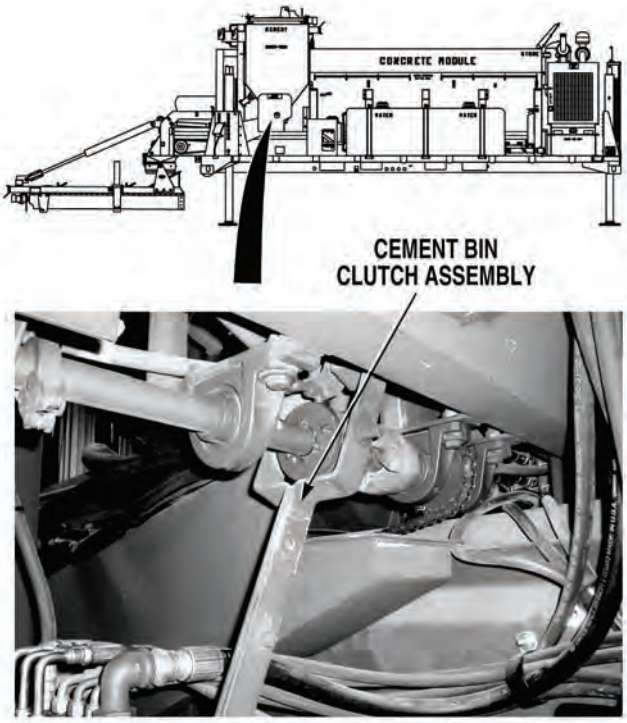

8. CEMENT IS NOT DELIVERED OR DELIVERY IS UNEVEN OR INCORRECT WHEN CLUTCH IS ENGAGED (CONT).

KNOWN INFO

- Cement bin not damaged.
- Cement bin covers and/or gaskets OK.
- Cement not caking or hardening in cement bin.
- Cement metering clutch OK.
- Cement metering drive shear pin OK.
- Cement metering counter OK.
- Cement bin vibrators operating.
- CEMENT FLUFFER CONTROL VALVE OK.

POSSIBLE PROBLEMS

- Upper auger and/or bearings faulty.
- Lower auger and/or bearings faulty.
- Foreign objects in cement metering auger.

6.

WARNING

Read WARNING on Page 4-289

Is binding caused by foreign objects in cement bin augers?

NO → Repair binding linkage or replace binding upper (Para 3-68) and/or lower augers and bearings, (Para 3-69). Then go to Step 8 of this Fault.

YES → Remove foreign objects from augers and go to Step 8 of this Fault.

TEST OPTIONS

Visual inspection.

REASON FOR QUESTION

If foreign objects are in cement bin, cement bin delivery system may not work correctly.

WARNING

During loading operations or any time there is cement dust in the air, take precautions to avoid direct inhalation of dust. If you must be in direct vicinity of dust, wear a dust mask, or if none is available, cover your nose and mouth with a cloth. Cement dust can cause serious lung problems. Failure to comply could result in serious injury or death to personnel.

CAUTION

Do not use water to clean inside of cement bin. Failure to comply could result in damage to equipment.

VISUAL INSPECTION

(1) If filled, remove cement from bin.

(2) Check for foreign objects in cement bin causing augers to bind.

(a) If foreign objects are not causing cement bin augers to bind, repair binding in linkage or replace upper and/or lower auger and bearings, (Para 3-68, 3-69). Then go to Step 8 of this Fault.

(b) If foreign objects are causing cement bin augers to bind, remove foreign objects from auger and go to Step 8 of this Fault.

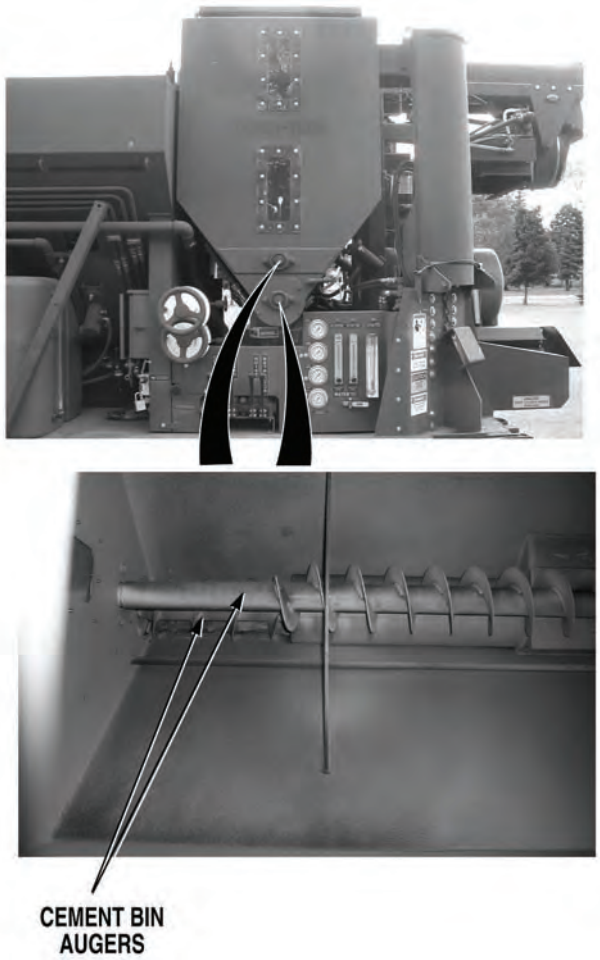

8. CEMENT IS NOT DELIVERED OR DELIVERY IS UNEVEN OR INCORRECT WHEN CLUTCH IS ENGAGED (CONT).

KNOWN INFO

- Cement bin not damaged.
- Cement metering clutch OK.
- Cement metering drive shear pin OK.
- Cement metering counter OK.
- Cement bin vibrators OK.
- CEMENT FLUFFER CONTROL VALVE OK.
- Upper auger and/or bearings OK.
- Lower auger and/or bearings OK.
- No foreign objects in cement metering auger.

POSSIBLE PROBLEMS

- Cement bin covers and/or gaskets faulty.
- Cement caking or hardening in cement bin.

7.

WARNING

Read WARNING on Page 4-291

If cement bin is filled, is cement free from caking and hard clumps?

NO → Remove cement and clean cement bin. Then repair or replace damaged cement bin cover and cover gaskets, (Para 3-59). Then go to Step 8 of this Fault.

YES → Repair or replace damaged cement bin cover and cover gaskets, (Para 3-59). Then go to Step 8 of this Fault.

TEST OPTIONS

Visual inspection.

REASON FOR QUESTION

If cement bin cement is caking or has hard clumps, cement delivery system may not operate correctly.

WARNING

During loading operations or any time there is cement dust in the air, take precautions to avoid direct inhalation of dust. If you must be in direct vicinity of dust, wear a dust mask, or if none is available, cover your nose and mouth with a cloth. Cement dust can cause serious lung problems. Failure to comply could result in serious injury or death to personnel.

CAUTION

Do not use water to clean inside of cement bin. Failure to comply could result in damage to equipment.

VISUAL INSPECTION
Check if cement bin cement is free from caking and hard clumps. (a) If cement bin cement is not free from caking and hard clumps, remove cement and clean cement bin, repair or replace damaged cement bin cover and gaskets, (Para 3-59). Then go to Step 8 of this Fault. (b) If cement bin cement is free from caking and hard clumps, repair or replace damaged cement bin cover and gaskets, (Para 3-59). Then go to Step 8 of this Fault.

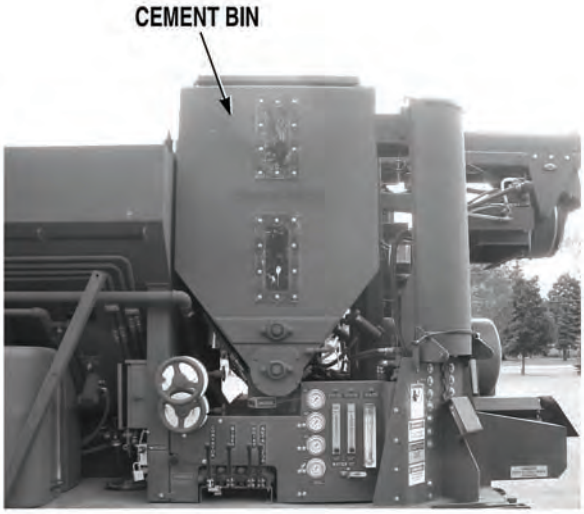

8. CEMENT IS NOT DELIVERED OR DELIVERY IS UNEVEN OR INCORRECT WHEN CLUTCH IS ENGAGED (CONT).

KNOWN INFO

- Cement bin not damaged.
- Upper auger and/or bearings OK.
- Lower auger and/or bearings OK.
- No foreign objects in cement metering auger.
- Cement bin covers and/or gaskets OK.
- Cement not caking or hardening in cement bin.

POSSIBLE PROBLEMS

- Cement metering drive shear pin damaged.
- Cement metering counter faulty.
- Cement metering clutch faulty.
- Cement bin vibrators faulty.
- CEMENT FLUFFER CONTROL VALVE faulty.

8.

WARNING

Read WARNING on Page 4-293

Is cement metering system drive chain and gear rotating when conveyor is operated?

NO → Cement metering system shear pin was broken because system was binding. Replace cement metering system drive gear shear pin, (Para 3-9). Verify repair, go to Step 14 of this Fault.

YES ↓

TEST OPTIONS

Operational test.

REASON FOR QUESTION

If cement metering drive chain and gear are not rotating, cement delivery system will not operate.

WARNING

To prevent becoming entangled in machinery, stand clear of rotating drives.

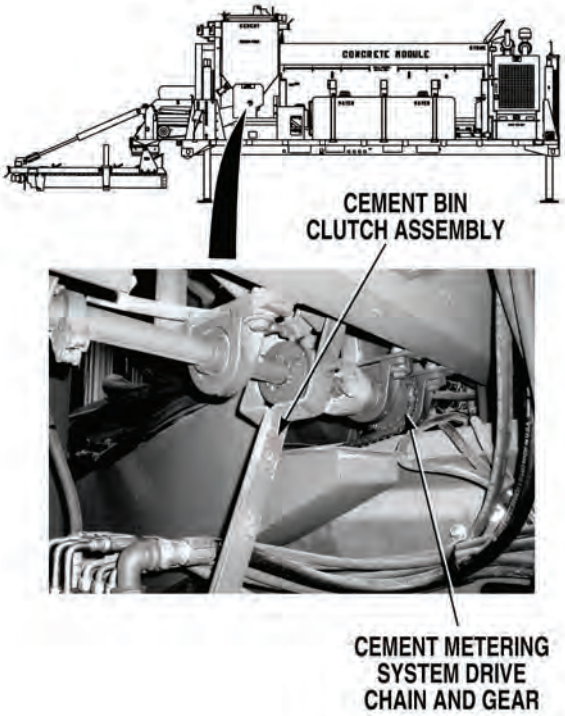

OPERATIONAL TEST

(1) If installed, remove cover, (Para 3-119).

(2) If engaged, disengage cement bin clutch, (Para 2-22).

(3) Close water control valve, (Para 2-18).

(4) Turn CONTROL OVERRIDE switch ON, (Para 2-1).

(5) Turn HIGH FLOW ADMIX switch OFF, (Para 2-1).

(6) Turn LOW FLOW ADMIX switch OFF, (Para 2-1).

(7) Close sand/stone aggregate gates, (Para 2-18).

(8) Start engine, (Para 2-19).

(9) Turn THROTTLE CONTROL valve to high idle, (Para 2-1).

(10) Pull CONVEYOR control out to ON position, (Para 2-1).

(11) Check if cement metering drive chain and gear are rotating, while conveyor is turning.

(a) If cement metering drive chain and gear are not turning, replace cement metering drive shear pin, (Para 3-9). Verify repair, go to Step 14 of this Fault.

(b) If cement metering drive chain and gear are turning, go to Step 9 of this Fault.

8. CEMENT IS NOT DELIVERED OR DELIVERY IS UNEVEN OR INCORRECT WHEN CLUTCH IS ENGAGED (CONT).

KNOWN INFO

- Cement bin not damaged.
- Upper auger and/or bearings OK.
- Lower auger and/or bearings OK.
- No foreign objects in cement metering auger.
- Cement bin covers and/or gaskets OK.
- Cement not caking or hardening in cement bin.
- Cement metering drive shear pin OK.

POSSIBLE PROBLEMS

- Cement metering counter faulty.
- Cement metering clutch faulty.
- Cement bin vibrators faulty.
- CEMENT FLUFFER CONTROL VALVE faulty.

9.

Does cement metering counter counts up 330-350 counts in one minute, when conveyor is operated at high idle?

NO → Go to “Cement Metering Counter Does Not Operate Correctly”, (Fault 7).

YES ↓

TEST OPTIONS

Operational test.

REASON FOR QUESTION

If cement metering counter does not count up 330-350 counts per minute, cement metering counter assembly is faulty.

OPERATIONAL TEST

Check if cement metering counter is counting up 330-350 counts per minute, while conveyor is turning.

(a) If cement metering counter does not count up 330-350 counts per minute, go to “Cement Metering Counter Does Not Operate Correctly, (Fault 7).

(b) If cement metering counter counts up 330-350 counts per minute, go to Step 10 of this Fault.

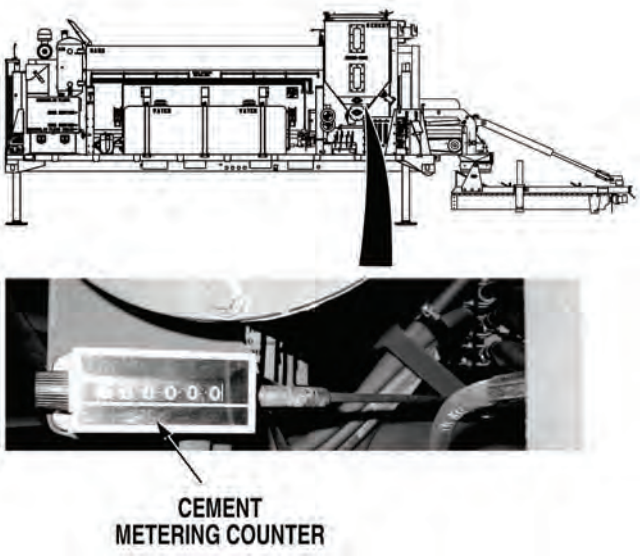

8. CEMENT IS NOT DELIVERED OR DELIVERY IS UNEVEN OR INCORRECT WHEN CLUTCH IS ENGAGED (CONT).

KNOWN INFO
Cement bin not damaged. Upper auger and/or bearings OK. Lower auger and/or bearings OK. No foreign objects in cement metering auger. Cement bin covers and/or gaskets OK. Cement not caking or hardening in cement bin. Cement metering drive shear pin OK. Cement metering counter OK.
POSSIBLE PROBLEMS
Cement metering clutch faulty. Cement bin vibrators faulty. CEMENT FLUFFER CONTROL VALVE faulty.

10.

WARNING

Read WARNING on Page 4-297

Do cement bin augers turn when cement metering system clutch is engaged?

NO → Repair or replace cement metering system clutch assembly, (Para 3-119). Verify repair, go to Step 14 of this Fault.

YES ↓

TEST OPTIONS
Operational test.
REASON FOR QUESTION
To further isolate fault.

WARNING

To prevent becoming entangled in machinery, stand clear of rotating drives.

OPERATIONAL TEST

(1) Push CONVEYOR control in to OFF position, (Para 2-20).

(2) Engage cement metering drive clutch, (Para 2-22).

(3) Pull CONVEYOR control out to ON position, (Para 2-20).

(4) Check if cement bin augers turn.

(a) If cement bin augers do not turn, repair or replace cement metering system clutch assembly, (Para 3-119). Verify repair, go to Step 14 of this Fault.

(b) If cement bin augers turn, go to Step 11 of this Fault.

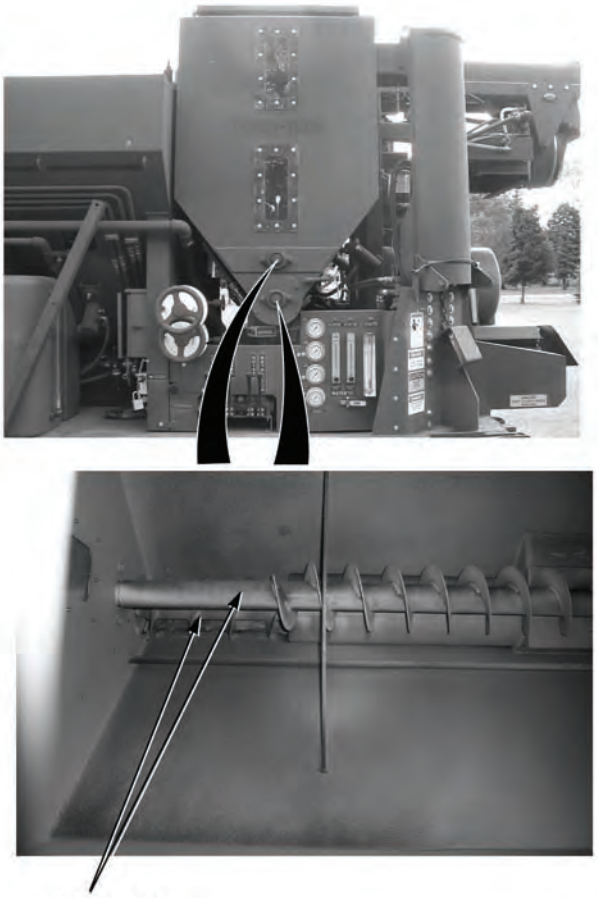

8. CEMENT IS NOT DELIVERED OR DELIVERY IS UNEVEN OR INCORRECT WHEN CLUTCH IS ENGAGED (CONT).

KNOWN INFO

- Cement bin not damaged.
- Upper auger and/or bearings OK.
- Lower auger and/or bearings OK.
- No foreign objects in cement metering auger.
- Cement bin covers and/or gaskets OK.
- Cement not caking or hardening in cement bin.
- Cement metering drive shear pin OK.
- Cement metering counter OK.
- Cement metering clutch OK.

POSSIBLE PROBLEMS

- Cement bin vibrators faulty.
- CEMENT FLUFFER CONTROL VALVE faulty.

11.

Are cement bin vibrators operating?

NO → Go to “Vibrator(s) Do Not Operate Correctly”, (Fault 33).

YES ↓

TEST OPTIONS

Operational test.

REASON FOR QUESTION

If cement bin vibrators are not working, cement delivery system may not operate correctly.

OPERATIONAL TEST

NOTE

There are two sets of two vibrators. Each set operates independently of the other. The sand bin vibrators will not operate if the sand bin vibrator shutoff valve is closed.

NOTE

The vibrators do not operate constantly. Each set of vibrators operate once per cement metering system counter shaft rotation.

Check if both cement bin vibrators are operating with conveyor belt turning and cement bin clutch engaged.

(a) If both cement bin vibrators are not operating, go to "Vibrator(s) Do Not Operate Correctly" (Fault 33).

(b) If both cement bin vibrators operate, go to Step 12 of this Fault.

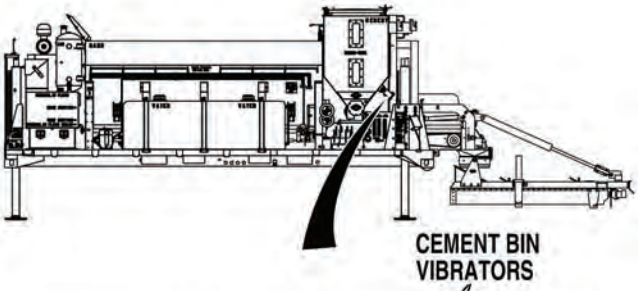

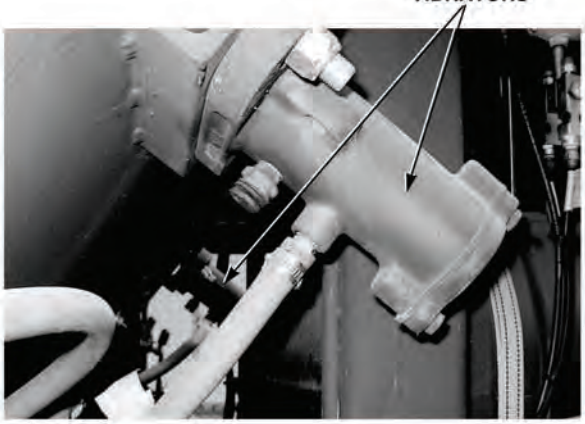

8. CEMENT IS NOT DELIVERED OR DELIVERY IS UNEVEN OR INCORRECT WHEN CLUTCH IS ENGAGED (CONT).

KNOWN INFO

- Cement bin not damaged.
- Upper auger and/or bearings OK.
- Lower auger and/or bearings OK.
- No foreign objects in cement metering auger.
- Cement bin covers and/or gaskets OK.
- Cement not caking or hardening in cement bin.
- Cement metering drive shear pin OK.
- Cement metering counter OK.
- Cement metering clutch OK.
- Cement bin vibrators OK.

POSSIBLE PROBLEMS

CEMENT FLUFFER CONTROL VALVE faulty.

12.

Does CEMENT FLUFFER CONTROL VALVE operate correctly?

NO → Go to “Cement Fluffer Control (Aerating) Valve Does Not Operate Correctly”, (Fault 6).

YES → If problem continues, notify Supervisor.

TEST OPTIONS

Operational test.

REASON FOR QUESTION

If CEMENT FLUFFER CONTROL VALVE is not operating, cement delivery system may not operate correctly.

OPERATIONAL TEST
(1) Operate CEMENT FLUFFER CONTROL VALVE, (Para 2-1). (2) Check if air is released through cement bin fluffer (aeration) tube. (a) If cement bin fluffer (aeration) system is not operating correctly, go to “Cement Fluffer Control (Aerating) Valve Does Not Operate Correctly”, (Fault 6). (b) If cement bin fluffer (aeration) system is operating correctly and problems continue, notify Supervisor.

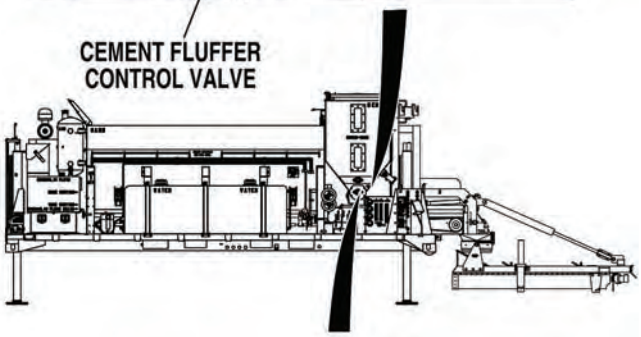

8. CEMENT IS NOT DELIVERED OR DELIVERY IS UNEVEN OR INCORRECT WHEN CLUTCH IS ENGAGED (CONT).

KNOWN INFO
Cement bin not damaged. Upper auger and/or bearings OK. Lower auger and/or bearings OK. No foreign objects in cement metering auger. Cement bin covers and/or gaskets OK. Cement not caking or hardening in cement bin. Cement metering drive shear pin OK. Cement metering counter OK. Cement bin vibrators OK. CEMENT FLUFFER CONTROL VALVE OK.
POSSIBLE PROBLEMS
Cement metering clutch faulty.

13.

Does cement bin clutch engage?

NO → Repair or replace cement bin clutch, (Para 3-119). Verify repair, go to Step 14 of this Fault.

YES → Repair cement metering clutch and auger drive assembly, (Para 3-68, 3-69, 3-119) or notify Supervisor.

TEST OPTIONS
Operational test.
REASON FOR QUESTION
If cement bin does not engage, cement delivery system will not operate.

OPERATIONAL TEST
Check if cement metering system clutch engages. (a) If cement metering system clutch does not engage, repair or replace cement bin clutch, (Para 3-119). Verify repair, go to Step 14 of this Fault. (b) If cement metering system clutch operates, repair cement metering system clutch and auger drive assembly, (Para 3-68, 3-69, 3-119) or notify Supervisor.

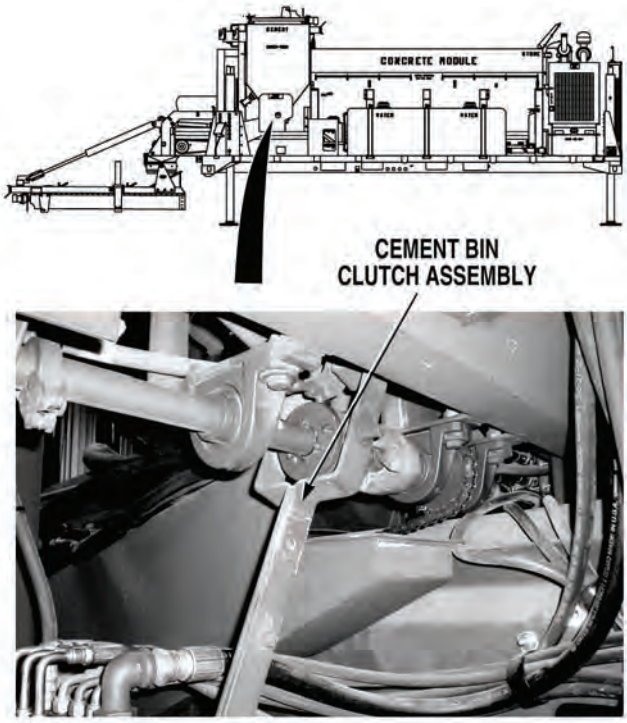

8. CEMENT IS NOT DELIVERED OR DELIVERY IS UNEVEN OR INCORRECT WHEN CLUTCH IS ENGAGED (CONT).

KNOWN INFO
Cement bin not damaged. Upper auger and/or bearings OK. Lower auger and/or bearings OK. No foreign objects in cement metering auger. Cement bin covers and/or gaskets OK. Cement not caking or hardening in cement bin. Cement metering drive shear pin OK. Cement metering counter OK. Cement metering clutch OK. Cement bin vibrators OK. CEMENT FLUFFER CONTROL VALVE OK.
POSSIBLE PROBLEMS
None.

14.

Is cement delivery system operating correctly when clutch is engaged?

NO → Fault not corrected. Notify Supervisor.

YES → Fault corrected.

TEST OPTIONS
Verify repair.
REASON FOR QUESTION
If cement delivery system is operating correctly, fault has been corrected.

VERIFY REPAIR

(1) If removed, install cement bin clutch cover, (Para 3-119).

(2) If open, close sand and stone aggregate gates, (Para 2-18).

(3) Start engine, (Para 2-19).

(4) Turn THROTTLE CONTROL to switch to high idle, (Para 2-1).

(5) If disengaged, engage cement bin metering clutch, (Para 2-22).

(6) Pull CONVEYOR control lever out to ON position, (Para 2-20).

(7) Check if cement delivery system is operating correctly.

  (a) If cement delivery system is not operating correctly, fault not corrected, notify Supervisor.

  (b) If cement delivery system is operating correctly, fault has been corrected.

(8) Disengage cement bin metering clutch, (Para 2-22).

(9) Push in CONVEYOR control lever to OFF position, (Para 2-20).

(10) Turn THROTTLE CONTROL switch to low idle, (Para 2-1).

(11) Shut OFF engine, (Para 2-19).

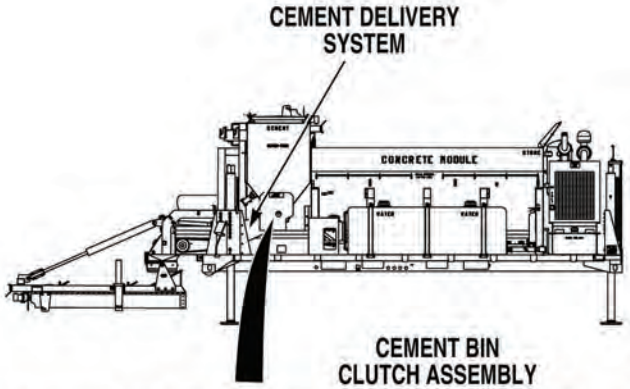

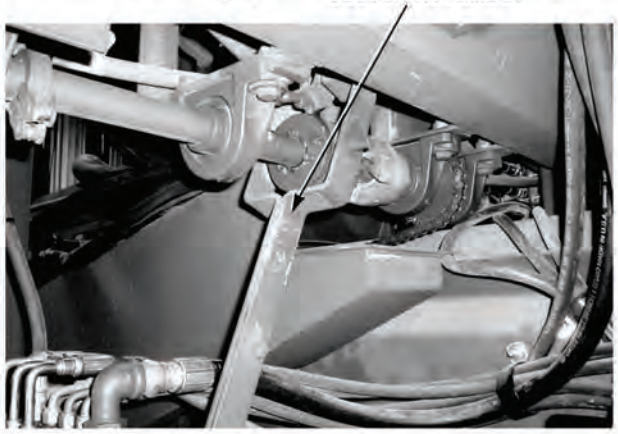

9. CONCRETE MIX TOO DRY (NO OR LOW WATER FLOW TO MIXER).

INITIAL SETUP

Tools and Special Tools

Tool Kit, General Mechanic's: Automotive (Item 19, Appendix I)

Equipment Condition

Concrete Mobile Mixer unloaded from PLS, (Para 2-5)

Concrete Mobile Mixer at operating level, (Para 2–28)

Engine OFF, (Para 2-19)

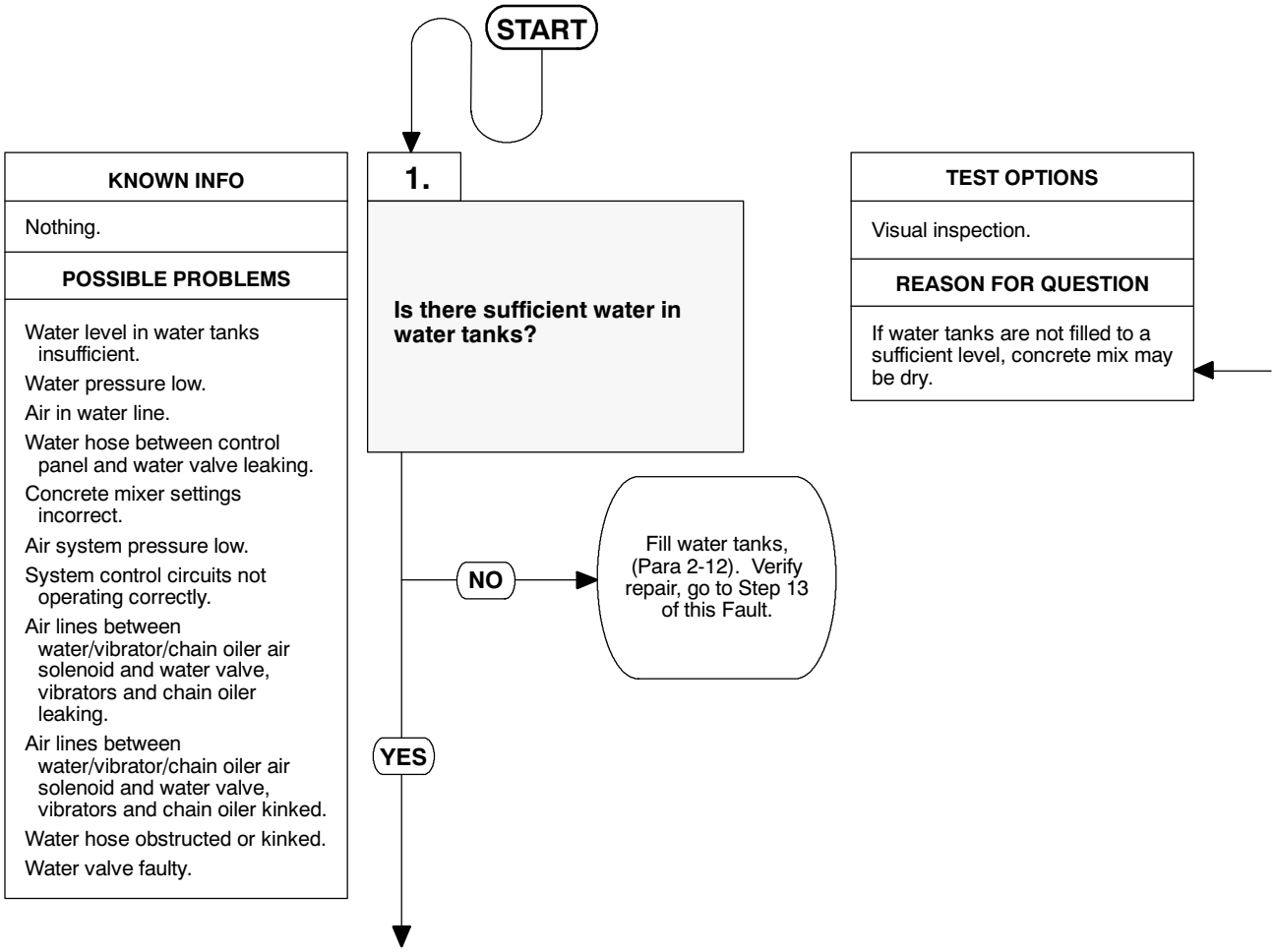

VISUAL INSPECTION
Check if water tanks are filled to a sufficient level. (a) If water tanks are not filled to a sufficient level, fill water tanks, (Para 2-12). Verify repair, go to Step 13 of this Fault. (b) If water tanks are filled to a sufficient level, go to Step 2 of this Fault.

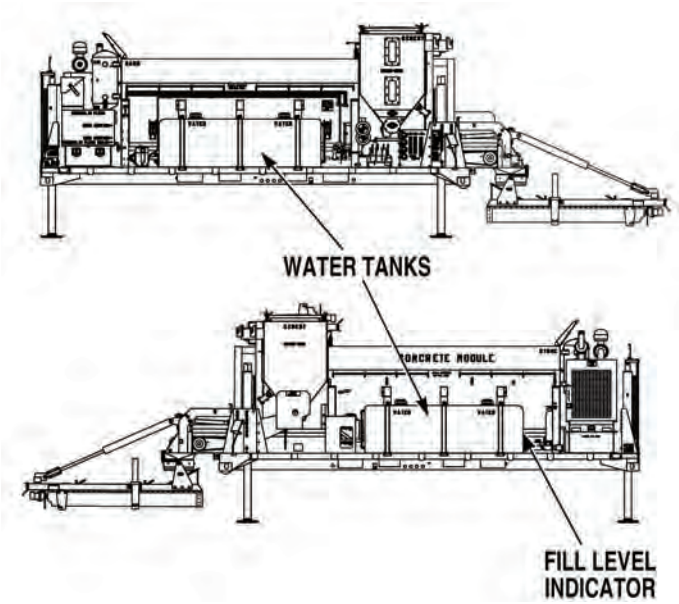

9. CONCRETE MIX TOO DRY (NO OR LOW WATER FLOW TO MIXER) (CONT).

KNOWN INFO
Water level in water tanks OK.
POSSIBLE PROBLEMS
Water pressure low. Air in water line. Water hose between control panel and water valve leaking. Concrete mixer settings incorrect. Air system pressure low. System control circuits not operating correctly. Air lines between water/vibrator/chain oiler air solenoid and water valve, vibrators and chain oiler leaking. Air lines between water/vibrator/chain oiler air solenoid and water valve, vibrators and chain oiler kinked. Water hose obstructed or kinked. Water valve faulty.

2.

Can water pressure be adjusted to 40 psi (276 kPa) with high idle ON?

NO → Go to “No or Low Water Pressure (Unable to Adjust Water Pressure)”, (Fault 30).

YES ↓

TEST OPTIONS
Operational test.
REASON FOR QUESTION
If water pressure cannot be adjusted to 40 psi (276 kPa), water system will not operate correctly.

OPERATIONAL TEST

(1) Start engine, (Para 2-19).

(2) Turn THROTTLE CONTROL switch to high idle, (Para 2-1).

(3) If out, push in WATER PUMP/LIFT CYLINDER control handle, (Para 2-1).

(4) Adjust WATER PRESSURE FLOW CONTROL valve to 40 psi (276 kPa), (Para 2-1).

(a) If water pressure cannot be adjusted to 40 psi (276 kPa), go to “No or Low Water Pressure (Unable to Adjust Water Pressure)”, (Fault 30).

(b) If water pressure can be adjusted to 40 psi (276 kPa), go to Step 3 of this Fault.

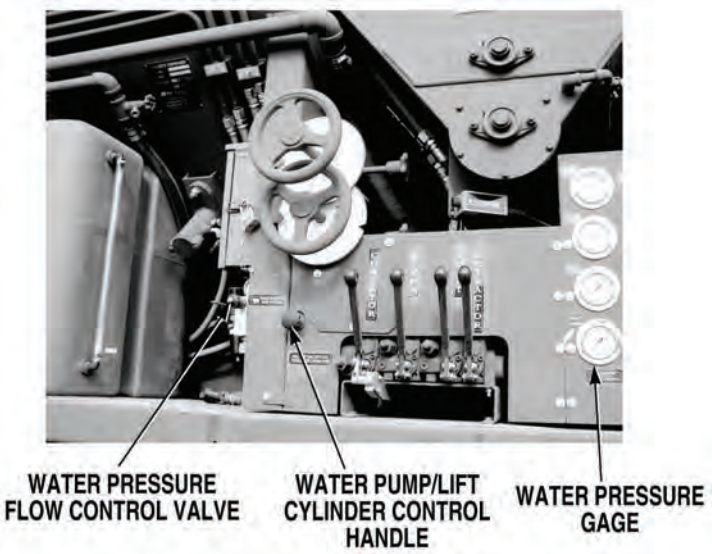

9. CONCRETE MIX TOO DRY (NO OR LOW WATER FLOW TO MIXER) (CONT).

KNOWN INFO
Water level in water tanks OK. Water pressure OK.
POSSIBLE PROBLEMS
Air in water line. Water hose between control panel and water valve leaking. Concrete mixer settings incorrect. Air system pressure low. System control circuits not operating correctly. Air lines between water/vibrator/chain oiler air solenoid and water valve, vibrators and chain oiler leaking. Air lines between water/vibrator/chain oiler air solenoid and water valve, vibrators and chain oiler kinked. Water hose obstructed or kinked. Water valve faulty.

3.

Does water flow from washout valve/hose without spitting (air in water flow)?

NO → Run water out washout valve until air is removed. Verify repair, go to Step 13 of this Fault.

YES ↓

TEST OPTIONS
Operational test.
REASON FOR QUESTION
If air is in water line, water supply system may not operate correctly.

OPERATIONAL TEST

(1) Remove drain/fill hose from stowage box and attach to washout valve.

(2) Open washout valve, (Para 2-12).

(3) Check if water flows freely from washout valve without spitting.

(a) If water does not flow freely from washout valve without spitting (air in line), run water out valve until air is removed. Verify repair, go to Step 13 of this Fault.

(b) If water flows freely from washout valve without spitting (air in line), go to Step 4 of this Fault.

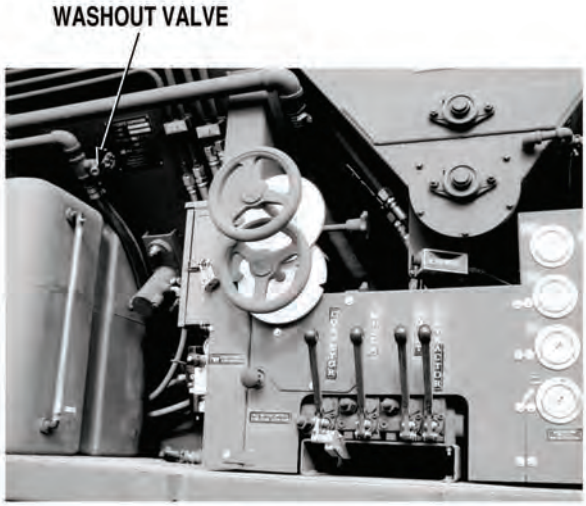

9. CONCRETE MIX TOO DRY (NO OR LOW WATER FLOW TO MIXER) (CONT).

KNOWN INFO
Water level in water tanks OK. Water pressure OK. No air in water line.
POSSIBLE PROBLEMS
Water hose between control panel and water valve leaking. Concrete mixer settings incorrect. Air system pressure low. System control circuits not operating correctly. Air lines between water/vibrator/chain oiler air solenoid and water valve, vibrators and chain oiler leaking. Air lines between water/vibrator/chain oiler air solenoid and water valve, vibrators and chain oiler kinked. Water hose obstructed or kinked. Water valve faulty.

4.

Can desired water flow be obtained when CONTROL OVERIDE switch is turned ON and WATER CONTROL VALVE is opened?

NO → Go to Step 6 of this Fault.

YES ↓

TEST OPTIONS
Operational test.
REASON FOR QUESTION
To isolate fault.

OPERATIONAL TEST

NOTE

Water will be present at mixer assembly. Place suitable drain pan under mixer assembly.

(1) Turn CONTROL OVERIDE switch ON, (Para 2-1).

(2) Open WATER CONTROL VALVE, (Para 2-1).

(3) Check if desired water flow is obtained at flowmeter. Check if water flow can be adjusted to desired setting.

(a) If water flow cannot be adjusted to desired setting, go to Step 6 of this Fault.

(b) If water flow can be adjusted to desired setting, go to Step 5 of this Fault.

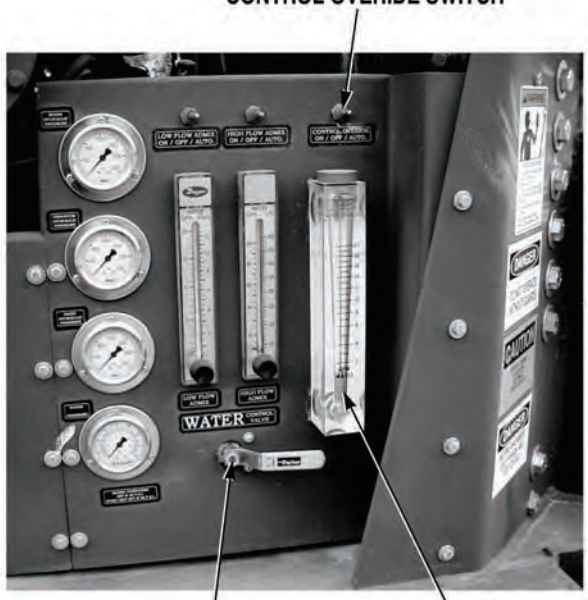

9. CONCRETE MIX TOO DRY (NO OR LOW WATER FLOW TO MIXER) (CONT).

KNOWN INFO
Water level in water tanks OK. Water pressure OK. No air in water line. Air system pressure OK. System control circuits operating correctly. Air lines between water/vibrator/chain oiler air solenoid and water valve, vibrators and chain oiler not leaking. Air lines between water/vibrator/chain oiler air solenoid and water valve, vibrators and chain oiler not kinked. Water hose not obstructed or kinked. Water valve OK.
POSSIBLE PROBLEMS
Water hose between control panel and water valve leaking. Concrete mixer settings incorrect.

5.

Are all water hoses and fittings from control panel to water valve free from leaks?

NO → Repair or replace leaking water hoses and fittings, (Para 3-131). Verify repair, go to Step 13 of this Fault.

YES → Notify Supervisor if problem continues. Concrete Mixer settings (sand and stone gates or conveyor speed) may be incorrect.

TEST OPTIONS
Visual inspection.
REASON FOR QUESTION
If water hoses and fittings have leaks, water system may not operate correctly.

VISUAL INSPECTION
(1) Turn CONTROL OVERIDE switch OFF, (Para 2-1). (2) Check if water hose and fittings between water control valve and water valve are free from leaks. (a) If water hose and fittings are not free from leaks, repair leaks or replace hoses and fittings, (Para 3-131). Verify repair, go to Step 13 of this Fault. (b) If water hose and fittings are free from leaks, and if problem continues, notify Supervisor. Concrete mixer settings, (sand and stone gates or conveyor speed) may be incorrect.

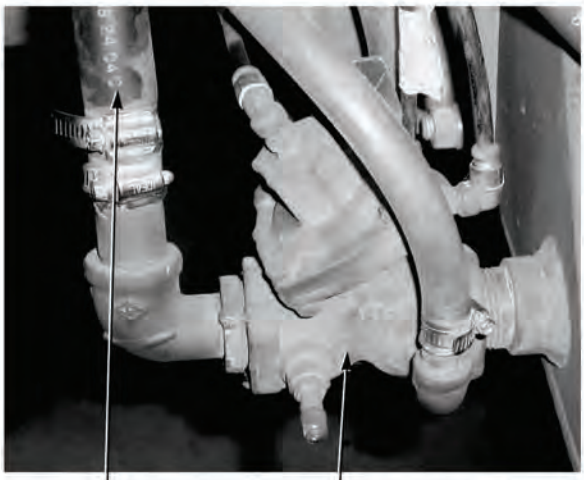

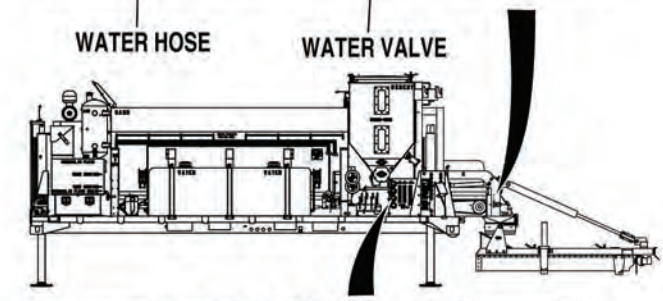

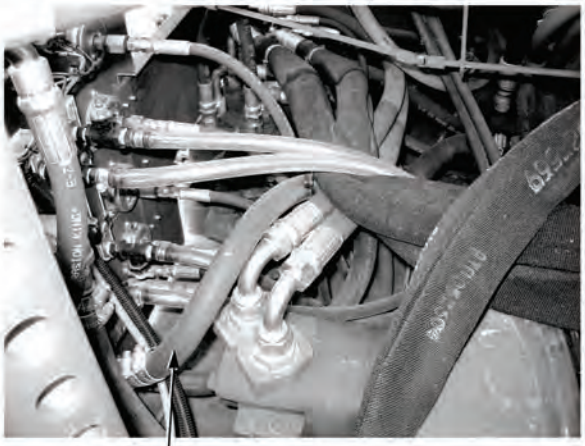

9. CONCRETE MIX TOO DRY (NO OR LOW WATER FLOW TO MIXER) (CONT).

KNOWN INFO

Water level in water tanks OK.
Water pressure OK.
No air in water line.
Water hose between control panel and water valve not leaking.
Concrete mixer settings OK.

POSSIBLE PROBLEMS

Air system pressure low.
System control circuits not operating correctly.
Air lines between water/vibrator/chain oiler air solenoid and water valve, vibrators and chain oiler leaking.
Air lines between water/vibrator/chain oiler air solenoid and water valve, vibrators and chain oiler kinked.
Water hose obstructed or kinked.
Water valve faulty.

6.

Does air system charge to 80 to 100 psi (552 to 690 kPa) with CONTROL OVERIDE, HIGH FLOW ADMIX, and LOW FLOW ADMIX switches OFF?

NO → Go to “Air Pressure Low or System Charge is Slow”, (Fault 3).

YES ↓

TEST OPTIONS

Operational test.

REASON FOR QUESTION

If air system does not charge to 80 to 100 psi (552 to 690 kPa), water delivery system may not operate.

OPERATIONAL TEST

(1) If ON, turn HIGH FLOW ADMIX switch OFF, (Para 2-1).

(2) If ON, turn LOW FLOW ADMIX switch OFF, (Para 2-1).

(3) Turn CONTROL OVERIDE switch OFF, (Para 2-1).

(4) Check if air system pressure charges to 80 to 100 psi (552 to 690 kPa).

(a) If air system pressure does not charge to 80 to 100 psi (552 to 690 kPa), go to “Air Pressure Low or System Charge is Slow”, (Fault 3).

(b) If air system pressure charges to 80 to 100 psi (552 to 690 kPa), go to Step 7 of this Fault.

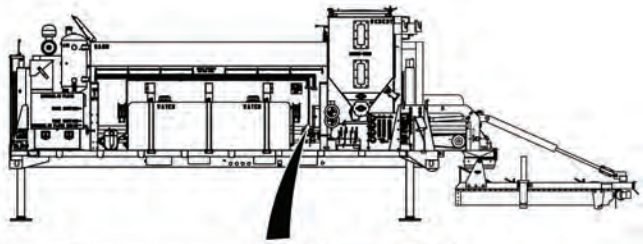

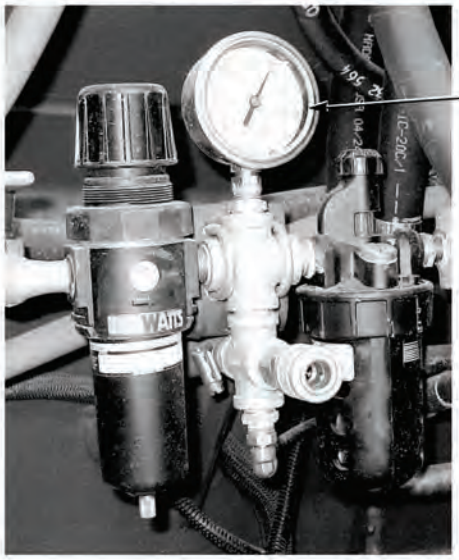

9. CONCRETE MIX TOO DRY (NO OR LOW WATER FLOW TO MIXER) (CONT).

KNOWN INFO

Water level in water tanks OK.
Water pressure OK.
No air in water line.
Water hose between control panel and water valve not leaking.
Concrete mixer settings OK.
Air system pressure OK.

POSSIBLE PROBLEMS

System control circuits not operating correctly.
Air lines between water/vibrator/chain oiler air solenoid and water valve, vibrators and chain oiler leaking.
Air lines between water/vibrator/chain oiler air solenoid and water valve, vibrators and chain oiler kinked.
Water hose obstructed or kinked.
Water valve faulty.

7.

Are vibrators activated when CONTROL OVERIDE switch is turned ON?

NO → Go to Step 8 of this Fault.

YES → If cement bin vibrators are enabled, operate conveyor with cement bin clutch engaged until vibrators are disabled, (Para 2-20). If not, close sand bin vibrator air valve, (Para 2-20). Then go to Step 9 of this Fault.

TEST OPTIONS

Audible test.

REASON FOR QUESTION

To verify operation of control override circuit in ON position. If vibrators operate, circuit is OK. If not, further testing is required.

AUDIBLE TEST
(1) Turn CONTROL OVERIDE switch ON, (Para 2-1). (2) Check if vibrators are operating. (a) If vibrators are not operating, go to Step 8 of this Fault. (b) If cement vibrators are operating, operate conveyor with cement bin clutch engaged until vibrators are disabled, (Para 2-20). If sand bin vibrators are operating, close sand bin vibrators air valve. Then go to Step 9 of this Fault.

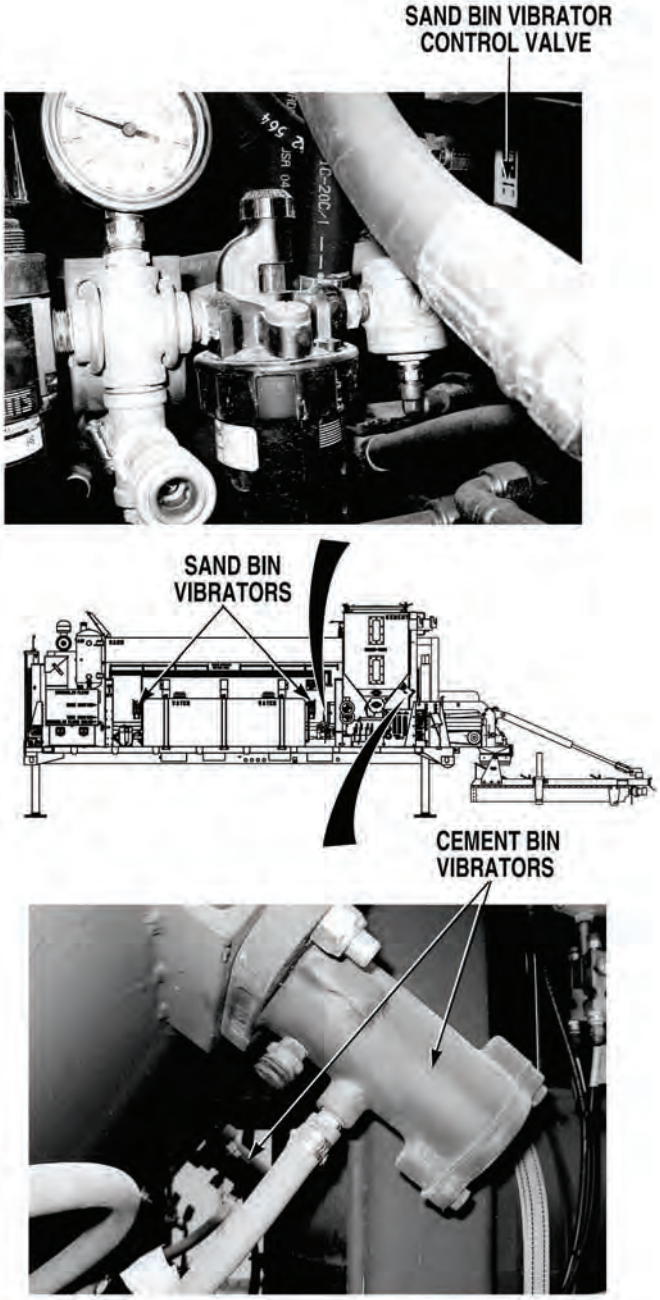

9. CONCRETE MIX TOO DRY (NO OR LOW WATER FLOW TO MIXER) (CONT).

KNOWN INFO
Water level in water tanks OK. Water pressure OK. No air in water line. Water hose between control panel and water valve not leaking. Concrete mixer settings OK. Air system pressure OK.
POSSIBLE PROBLEMS
System control circuits not operating correctly. Air lines between water/vibrator/chain oiler air solenoid and water valve, vibrators and chain oiler leaking. Air lines between water/vibrator/chain oiler air solenoid and water valve, vibrators and chain oiler kinked. Water hose obstructed or kinked. Water valve faulty.

8.

Is water/vibrator/chain oiler air solenoid energized when CONTROL OVERIDE switch is placed in the ON position (engine OFF and IGNITION SWITCH ON)?

NO → Go to “Concrete Mixer Auto and/or Manual Controls Do Not Operate”, (Fault 29).

YES ↓

TEST OPTIONS
Operational test.
REASON FOR QUESTION
If water/vibrator/chain oiler air solenoid is not energized, another troubleshooting procedure applies.

OPERATIONAL TEST

(1) Shut OFF engine, (Para 2-19).

(2) Turn IGNITION SWITCH ON, (Para 2-1).

(3) Turn 12 VOLT switch ON, (Para 2-1).

(4) Turn CONTROL OVERIDE switch ON, (Para 2-1).

(5) Check if water/vibrator/chain oiler air solenoid is energized. Air solenoid is energized when a clicking sound is heard.

(a) If water/vibrator/chain oiler air solenoid is not energized, go to “Concrete Mixer Auto and/or Manual Controls Do Not Operate”, (Fault 29).

(b) If water/vibrator/chain oiler air solenoid is energized, go to Step 9 of this Fault.

9. CONCRETE MIX TOO DRY (NO OR LOW WATER FLOW TO MIXER) (CONT).

KNOWN INFO

Water level in water tanks OK.
Water pressure OK.
No air in water line.
Water hose between control panel and water valve not leaking.
Concrete mixer settings OK.
Air system pressure OK.

POSSIBLE PROBLEMS

System control circuits not operating correctly.
Air lines between water/vibrator/chain oiler air solenoid and water valve, vibrators and chain oiler leaking.
Air lines between water/vibrator/chain oiler air solenoid and water valve, vibrators and chain oiler kinked.
Water hose obstructed or kinked.
Water valve faulty.

9.

Is water/vibrator/chain oiler air solenoid energized when CONTROL OVERIDE switch is placed in the AUTO position and CONVEYOR control is enabled (engine OFF and IGNITION SWITCH ON)?

NO → Go to “Concrete Mixer Auto and/or Manual Controls Do Not Operate”, (Fault 29).

YES ↓

TEST OPTIONS

Operational test.

REASON FOR QUESTION

If water/vibrator/chain oiler air solenoid is not energized, another troubleshooting procedure applies.

OPERATIONAL TEST

(1) If ON, shut OFF engine, (Para 2-19).

(2) If OFF, turn IGNITION SWITCH ON, (Para 2-1). Do not start engine.

(3) If OFF, turn 12 VOLT switch ON, (Para 2-1).

(4) Turn CONTROL OVERIDE switch to AUTO position, (Para 2-1).

(5) Pull CONVEYOR control out to ON position, (Para 2-1).

(6) Check if water/vibrator/chain oiler air solenoid is energized. Air solenoid is energized when a clicking sound is heard and an LED is illuminated.

(a) If water/vibrator/chain oiler air solenoid is not energized, go to “Concrete Mixer Auto and/or Manual Controls Do Not Operate”, (Fault 29).

(b) If water/vibrator/chain oiler air solenoid is energized, go to Step10 of this Fault.

9. CONCRETE MIX TOO DRY (NO OR LOW WATER FLOW TO MIXER) (CONT).

KNOWN INFO
Water level in water tanks OK. Water pressure OK. No air in water line. Water hose between control panel and water valve not leaking. Concrete mixer settings OK. Air system pressure OK. System control circuits OK.
POSSIBLE PROBLEMS
Air lines between water/vibrator/chain oiler air solenoid and water valve, vibrators and chain oiler leaking. Air lines between water/vibrator/chain oiler air solenoid and water valve, vibrators and chain oiler kinked. Water hose obstructed or kinked. Water valve faulty.

10.

Is air system charge between 80 and 100 psi (552 to 690 kPa) with CONTROL OVERIDE switch in the ON position?

NO → Repair or replace leaking air lines and fittings, (Para 3-132). Verify repair, go to Step 13 of this Fault.

YES ↓

TEST OPTIONS
Operational test.
REASON FOR QUESTION
If air system pressure in not 80 to 100 psi (552 to 690 kPa), water system may not operate correctly.

OPERATIONAL TEST

(1) Turn CONTROL OVERIDE switch to ON position, (Para 2-1).

(2) Check if air system charge is 80 to 100 psi (552 to 690 kPa).

(a) If air system charge is not 80 to 100 psi (552 to 690 kPa), repair or replace leaking air lines and fittings between water/vibrator/chain oiler air solenoid and water valve, chain oiler, air cams, and vibrators, (Para 3-132). Verify repair, go to Step 13 of this Fault.

(b) If air system charge is 80 to 100 psi (592 to 690 kPa), go to Step 11 of this Fault.

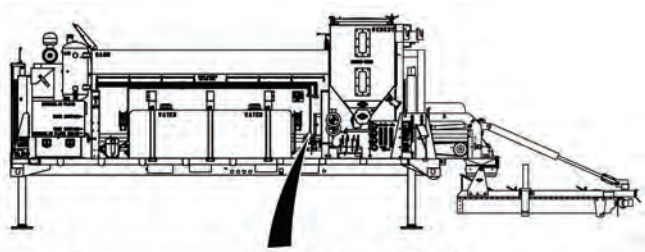

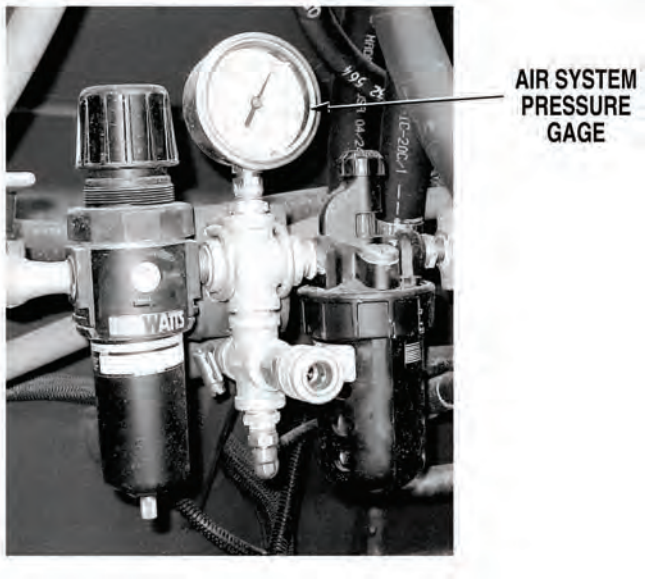

9. CONCRETE MIX TOO DRY (NO OR LOW WATER FLOW TO MIXER) (CONT).

KNOWN INFO

Water level in water tanks OK.
Water pressure OK.
No air in water line.
Water hose between control panel and water valve not leaking.
Concrete mixer settings OK.
Air system pressure OK.
System control circuits OK.
Air lines between water/vibrator/chain oiler air solenoid and water valve, vibrators and chain oiler not leaking.

POSSIBLE PROBLEMS

Air lines between water/vibrator/chain oiler air solenoid and water valve, vibrators and chain oiler kinked.
Water hose obstructed or kinked.
Water valve faulty.

11.

WARNING
Read WARNING on Page 4-327

Is air pressure present at water valve?

NO → Repair air lines between water/vibrator/chain oiler air solenoid valve and water valve, (Para 3-132). Verify repair, go to Step 13 of this Fault.

YES ↓

TEST OPTIONS

Audible test.

REASON FOR QUESTION

If air pressure is not present at air valve, air line between air/vibrator/chain oiler solenoid and water valve is blocked.

WARNING

Air lines are under extreme pressure. Ensure all personnel wear protective goggles when working around compressed air. Failure to comply may result in serious injury or death to personnel.

AUDIBLE TEST
Slowly disconnect air line at water valve, (Para 3-74). Listen for air to escape from air line. (a) If air is not present at water valve, repair or replace air line between water/vibrator/chain oiler air solenoid and water valve as required, (Para 3-132). Verify repair, go to Step 13 of this Fault. (b) If air is present at water valve, go to Step 12 of this Fault.

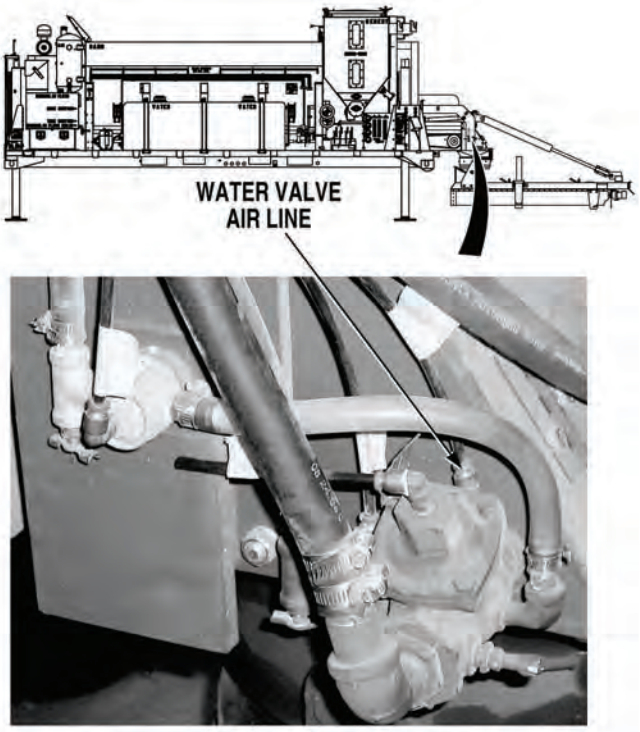

9. CONCRETE MIX TOO DRY (NO OR LOW WATER FLOW TO MIXER) (CONT).

KNOWN INFO

- Water level in water tanks OK.
- Water pressure OK.
- No air in water line.
- Water hose between control panel and water valve not leaking.
- Concrete mixer settings OK.
- Air system pressure OK.
- System control circuits OK.
- Air lines between water/vibrator/chain oiler air solenoid and water valve, vibrators and chain oiler not leaking.
- Air lines between water/vibrator/chain oiler air solenoid and water valve, vibrators and chain oiler not kinked.

POSSIBLE PROBLEMS

- Water hose obstructed or kinked.
- Water valve faulty.

12.

Can desired water flow be obtained when WATER CONTROL VALVE is opened and water hose is disconnected from water valve?

NO → Check all water hoses for obstructions or kinks. Repair or replace obstructed or kinked hoses, (Para 3-131). Flush system. Verify repair, go to Step 13 of this Fault.

YES → Replace water valve, (Para 3-74). Verify repair, go to Step 13 of this Fault.

TEST OPTIONS

Operational test.

REASON FOR QUESTION

If water flow is not present at water valve hose, water hose between WATER CONTROL VALVE and water valve is obstructed or kinked.

OPERATIONAL TEST

NOTE

Water flow will be present at mixer assembly. Place suitable drain pan under mixer assembly.

(1) Connect air line at water valve, (Para 3-74).

(2) Close water control valve, (Para 2-1).

(3) Disconnect water hose from water valve, (Para 3-74).

(4) Start engine, (Para 2-19).

(5) Turn THROTTLE CONTROL switch to high idle, (Para 2-1).

(6) If required, allow system to charge to 80 to 100 psi (552 to 690 kPa).

(7) Open water control valve, (Para 2-1).

(8) Check if water is flowing freely from water hose.

(a) If water is not flowing freely from water hose, repair or replace obstructed or kinked water hoses, (Para 3-131).

(b) If water flows freely from water hose, replace water valve, (Para 3-74).

(9) Verify repair, go to Step 13 of this Fault.

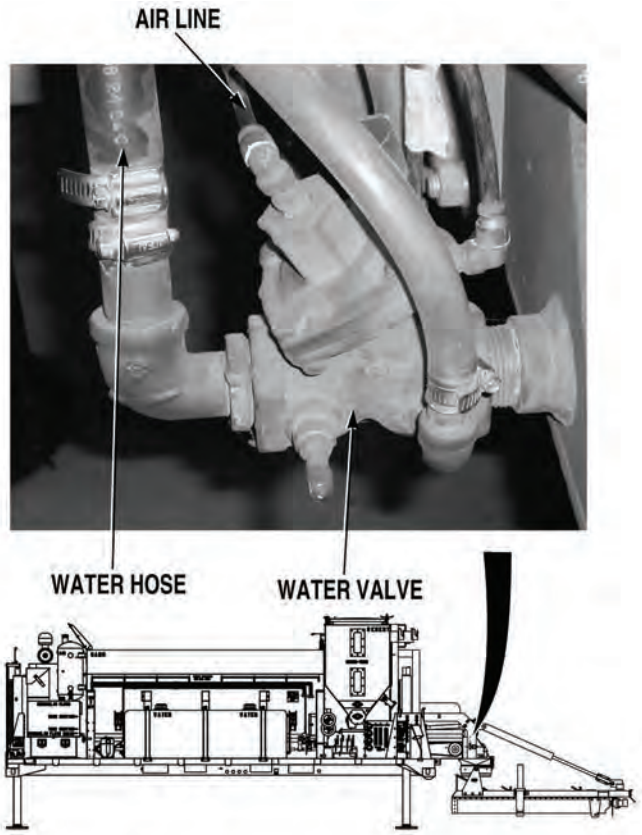

9. CONCRETE MIX TOO DRY (NO OR LOW WATER FLOW TO MIXER) (CONT).

KNOWN INFO
Water level in water tanks OK. Water pressure OK. No air in water line. Water hose between control panel and water valve not leaking. Concrete mixer settings OK. Air system pressure OK. System control circuits OK. Air lines between water/vibrator/chain oiler air solenoid and water valve, vibrators and chain oiler not leaking. Air lines between water/vibrator/chain oiler air solenoid and water valve, vibrators and chain oiler not kinked. Water hose not obstructed or kinked. Water valve OK.
POSSIBLE PROBLEMS
None.

13.

Is concrete mix too dry?

NO → Fault not corrected. Notify Supervisor.

YES → Fault corrected.

TEST OPTIONS
Verify repair.
REASON FOR QUESTION
If concrete mix is still too dry, fault not corrected.

VERIFY REPAIR

(1) If disconnected, connect air line at water valve, (Para 3-74).

(2) If disconnected, connect water hose at water valve, (Para 3-74).

(3) If OFF, start engine, (Para 2-19).

(4) Adjust water pressure setting to 40 psi (276 kPa), (Para 2-18).

(5) Adjust air pressure setting to 80 to 100 psi (552 to 690 kPa), (Para 2-18).

(6) If closed, open WATER CONTROL VALVE, (Para 2-1).

(7) Set CONTROL OVERIDE switch to ON position, (Para 2-1).

(8) Check if desired water flow is obtained.

  (a) If desired water flow is not obtained, fault not corrected. Notify Supervisor.

  (b) If desired water flow is obtained, fault has been corrected.

(9) Close WATER CONTROL VALVE, (Para 2-1).

(10) Turn CONTROL OVERIDE switch OFF, (Para 2-1).

(11) Shut OFF engine, (Para 2-19).

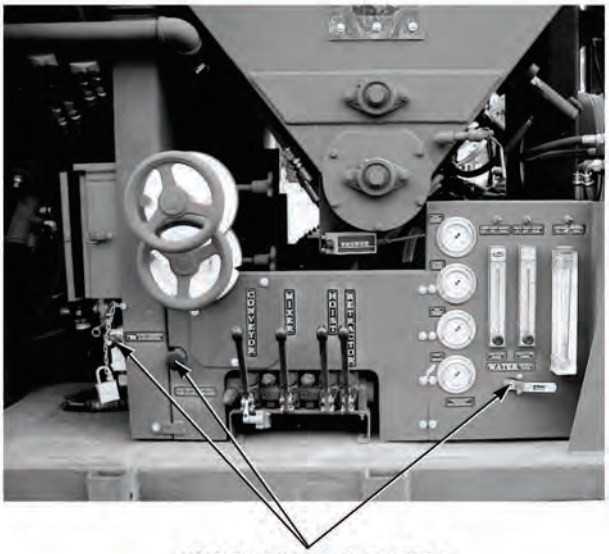

WATER CONTROL VALVES

10. CONCRETE MIX TOO WET, TOO SANDY, TOO STONY, IS NOT MIXED THOROUGHLY, OR DELIVERY IS UNEVEN.

INITIAL SETUP

Tools and Special Tools
Tool Kit, General Mechanic's: Automotive (Item 19, Appendix I)

Equipment Condition
Concrete Mobile Mixer unloaded from PLS, (Para 2-5)
Concrete Mobile Mixer at operating level, (Para 2–28)
Mixing auger deployed, (Para 2-23)
Engine OFF, (Para 2-19)

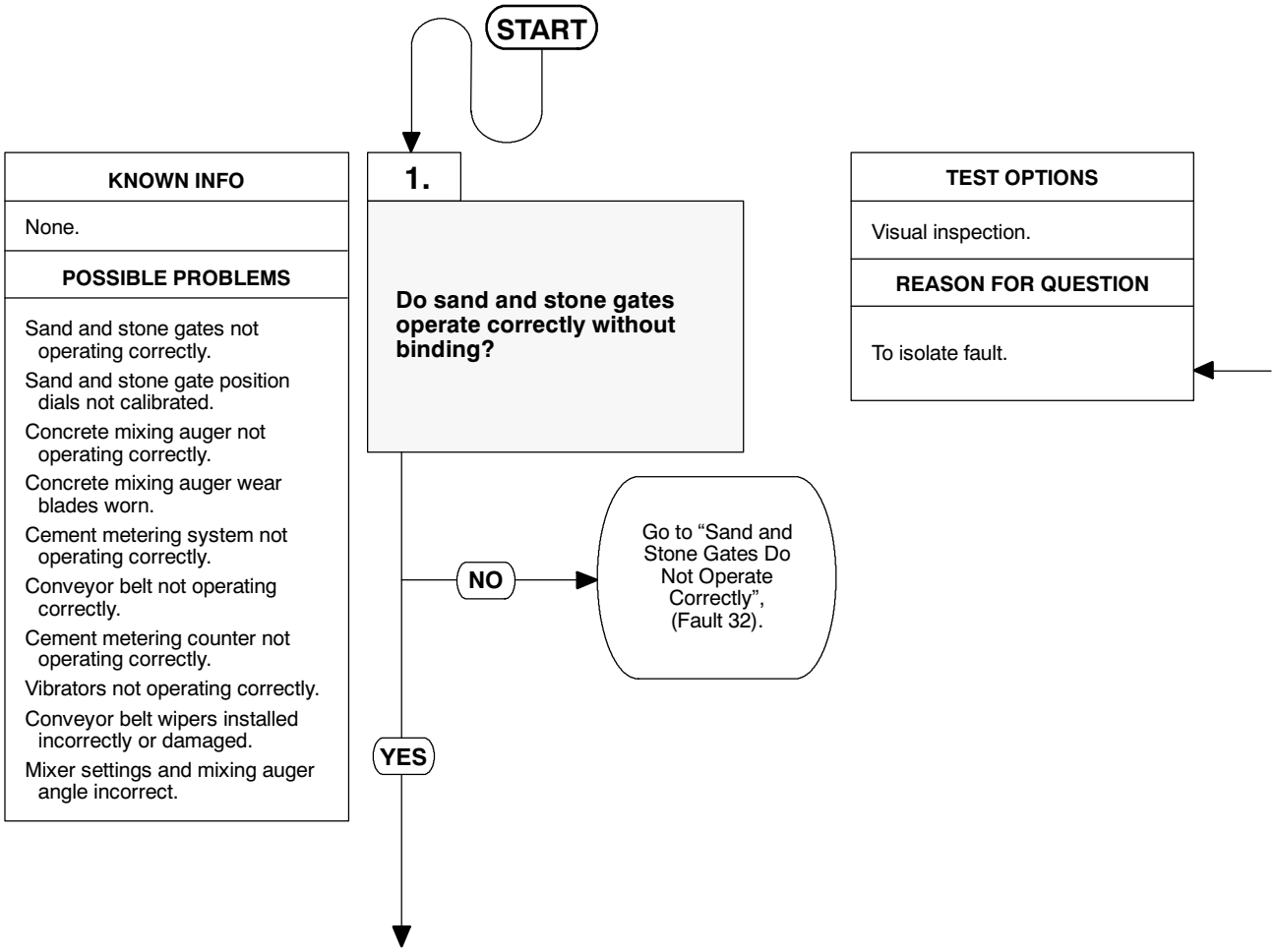

VISUAL INSPECTION
(1) Operate sand and stone aggregate gates, (Para 2-18). (2) Check if sand and stone aggregate gates operate correctly without binding. (a) If sand and stone aggregate gates do not operate correctly without binding, go to “Sand and Stone Gates Not Operating Correctly”, (Fault 32). (b) If sand and stone aggregate gates operate correctly without binding, go to Step 2 of this Fault.

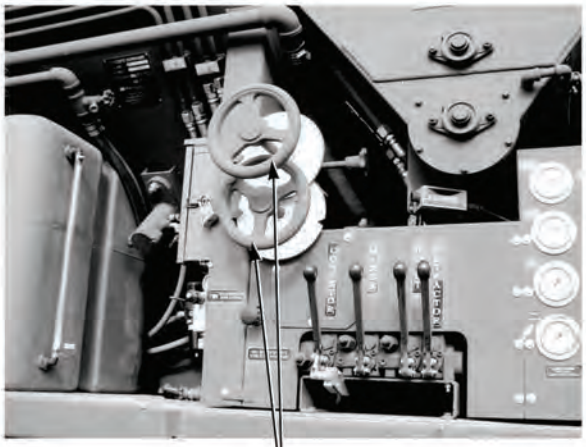

SAND/STONE AGGREGATE GATE CONTROL WHEELS

10. CONCRETE MIX TOO WET, TOO SANDY, TOO STONY, IS NOT MIXED THOROUGHLY, OR DELIVERY IS UNEVEN (CONT).

KNOWN INFO
Sand and stone gates operating correctly.

POSSIBLE PROBLEMS
Sand and stone gate position dials not calibrated.
Concrete mixing auger not operating correctly.
Concrete mixing auger wear blades worn.
Cement metering system not operating correctly.
Conveyor belt not operating correctly.
Cement metering counter not operating correctly.
Vibrators not operating correctly.
Conveyor belt wipers installed incorrectly or damaged.
Mixer settings and mixing auger angle incorrect.

2.

Are sand and stone aggregate gates calibrated correctly (position dials should read 12 when gates are fully closed)?

NO → Recalibrate sand and stone gates. Then go to Step 11 of this Fault.

YES ↓

TEST OPTIONS
Operational test.

REASON FOR QUESTION
If sand and stone aggregate gates are not calibrated correctly, concrete mixture may be incorrect.

OPERATIONAL TEST

(1) Fully close sand and stone aggregate gates, (Para 2-18).

(2) Check if position dials read 12 when sand and stone aggregate gates are fully closed.

(a) If position dials do not read 12 when aggregate gates are fully closed, recalibrate sand and stone position dials, (Para 3-120), go to Step 11 of this Fault.

(b) If position dials read 12 when sand and stone aggregate gates are fully closed, go to Step 3 of this Fault.

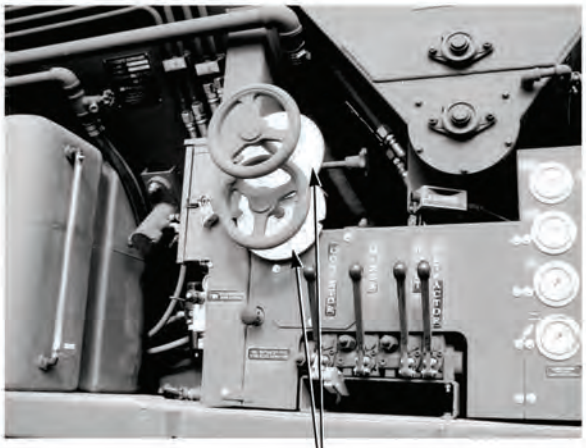

SAND/STONE AGGREGATE GATE POSITION DIALS

10. CONCRETE MIX TOO WET, TOO SANDY, TOO STONY, IS NOT MIXED THOROUGHLY, OR DELIVERY IS UNEVEN (CONT).

KNOWN INFO

Sand and stone gates operating correctly.

Sand and stone gate position dials calibrated.

POSSIBLE PROBLEMS

Concrete mixing auger not operating correctly.

Concrete mixing auger wear blades worn.

Cement metering system not operating correctly.

Conveyor belt not operating correctly.

Cement metering counter not operating correctly.

Vibrators not operating correctly.

Conveyor belt wipers installed incorrectly or damaged.

Mixer settings and mixing auger angle incorrect.

3.

WARNING

Read WARNING on Page 4-337

Does concrete mixing auger operate without excessive noise and vibration when performing Mixing Auger Test, (Para 2-24)?

NO → Go to “Concrete Mixing Auger Does Not Rotate, Rotates Slowly, Noisy, or, Vibrates”, (Fault 11).

YES ↓

TEST OPTIONS

Operational test.

REASON FOR QUESTION

If concrete mixing auger does not operate correctly, concrete mixture may not mix thoroughly.

WARNING

Auger will rotate with engine on and controls off. Extreme care should be taken when around auger area. Failure to comply may result in severe injury or death to personnel.

OPERATIONAL TEST

(1) Start engine, (Para 2-19). Do not turn high idle ON.

(2) If stowed, deploy concrete mixing auger, (Para 2-23).

(3) Pull MIXER control out to ON position, (Para 2-20).

(4) Perform Mixing Auger Test, (Para 2-24).

(5) Check if concrete mixing auger operates without excessive noise and vibration.

(a) If mixing auger does not operate without excessive noise and vibration, go to "Concrete Mixing Auger Does Not Rotate, Rotates Slowly, Noisy, or Vibrates", (Fault 11).

(b) If mixing auger operates without excessive noise and vibration, go to Step 4 of this Fault.

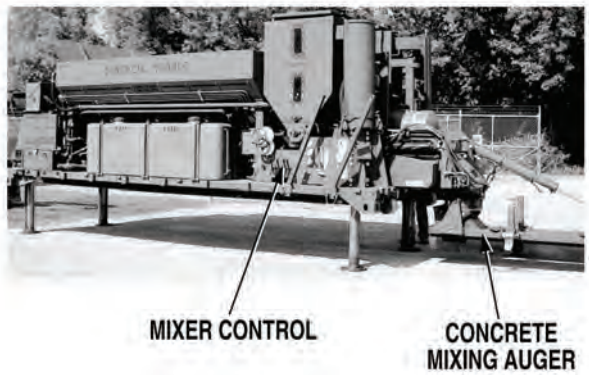

10. CONCRETE MIX TOO WET, TOO SANDY, TOO STONY, IS NOT MIXED THOROUGHLY, OR DELIVERY IS UNEVEN (CONT).

KNOWN INFO

- Sand and stone gates operating correctly.
- Sand and stone gate position dials calibrated.
- Concrete mixing auger operating correctly.

POSSIBLE PROBLEMS

- Concrete mixing auger wear blades worn.
- Cement metering system not operating correctly.
- Conveyor belt not operating correctly.
- Cement metering counter not operating correctly.
- Vibrators not operating correctly.
- Conveyor belt wipers installed incorrectly or damaged.
- Mixer settings and mixing auger angle incorrect.

4.

Are mixing auger wear blades free from excessive wear when performing Mixing Auger Wear Blade Check, (Para 2-25)?

NO → Replace worn mixing auger wear blades, (Para 3-73). Verify repair, go to Step 12 of this Fault.

YES ↓

TEST OPTIONS

Visual inspection.

REASON FOR QUESTION

If mixing auger wear blades have excessive wear, concrete mixture may not mix thoroughly.

VISUAL INSPECTION

(1) Shut OFF engine, (Para 2-19).

(2) Perform Mixing Auger Wear Blade check, (Para 2-25). Check if mixing auger blades are free from excessive wear.

(a) If mixing auger wear blades are not free from excessive wear, replace mixing auger wear blades, (Para 3-73). Verify repair, go to Step 12 of this Fault.

(b) If mixing auger wear blades are free from excessive wear, go to Step 5 of this Fault.

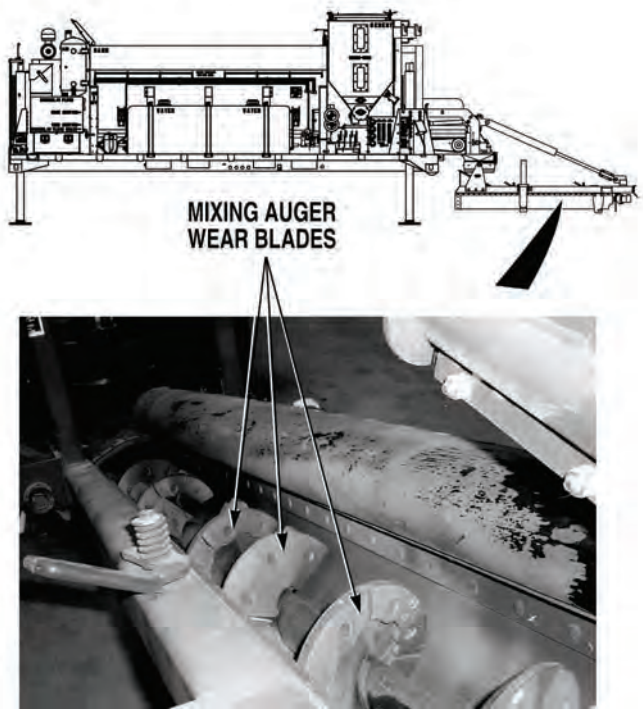

10. CONCRETE MIX TOO WET, TOO SANDY, TOO STONY, IS NOT MIXED THOROUGHLY, OR DELIVERY IS UNEVEN (CONT).

KNOWN INFO

- Sand and stone gates operating correctly.
- Sand and stone gate position dials calibrated.
- Concrete mixing auger operating correctly.
- Concrete mixing auger wear blades OK.

POSSIBLE PROBLEMS

- Cement metering system not operating correctly.
- Conveyor belt not operating correctly.
- Cement metering counter not operating correctly.
- Vibrators not operating correctly.
- Conveyor belt wipers installed incorrectly or damaged.
- Mixer settings and mixing auger angle incorrect.

5.

WARNING

Read WARNING on Page 4-341

Is cement in cement bin free from hardening or caking?

NO → Go to “Cement is Not Delivered or Delivery is Uneven or Incorrect When Clutch is Engaged”, (Fault 8).

YES ↓

TEST OPTIONS

Visual inspection.

REASON FOR QUESTION

If cement in cement bin is not free from hardening or caking, cement portion of concrete mix may be incorrect.

WARNING

During loading operations or any time there is cement dust in the air, take precautions to avoid direct inhalation of dust. If you must be in direct vicinity of dust, wear a dust mask, or if none is available, cover your nose and mouth with a cloth. Cement dust can cause serious lung problems. Failure to comply could result in serious injury or death to personnel.

VISUAL INSPECTION

Check if cement bin cement bin is free from hardening and caking.

(a) If cement in cement bin is not free from hardening and caking, go to “Cement is Not Delivered or Delivery is Uneven or Incorrect When Clutch is Engaged”, (Fault 8).

(b) If cement in cement bin is free from hardening and caking, go to Step 6 of this Fault.

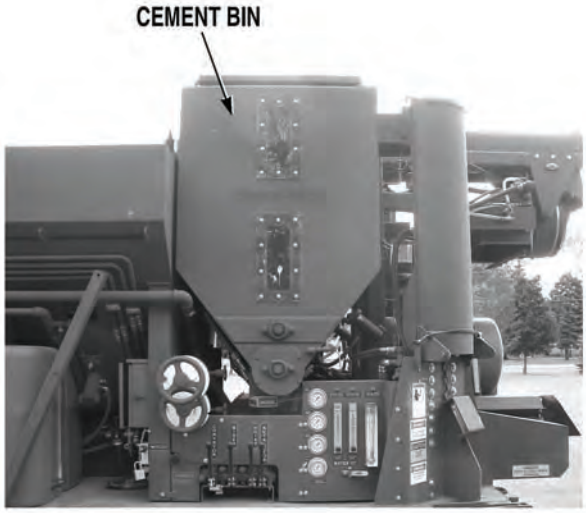

10. CONCRETE MIX TOO WET, TOO SANDY, TOO STONY, IS NOT MIXED THOROUGHLY, OR DELIVERY IS UNEVEN (CONT).

KNOWN INFO

- Sand and stone gates operating correctly.
- Sand and stone gate position dials calibrated.
- Concrete mixing auger operating correctly.
- Concrete mixing auger wear blades OK.

POSSIBLE PROBLEMS

- Cement metering system not operating correctly.
- Conveyor belt not operating correctly.
- Cement metering counter not operating correctly.
- Vibrators not operating correctly.
- Conveyor belt wipers installed incorrectly or damaged.
- Mixer settings and mixing auger angle incorrect.

6.

WARNING

Read WARNING on Page 4-343

Does conveyor operate without binding?

NO → Go to “Conveyor Belt Does Not Operate Correctly or is Damaged”, (Fault 16).

YES ↓

TEST OPTIONS

Operational test.

REASON FOR QUESTION

If conveyor is not operating correctly, sand and stone portions of concrete mix may be incorrect.

WARNING

To prevent becoming entangled in machinery, stand clear of rotating drives.

OPERATIONAL TEST

(1) If sand and stone aggregate bins are not empty, close sand and stone aggregate gates until they are just above conveyor belt, (Para 2-18).

(2) Start engine, (Para 2-19).

(3) Turn high idle ON, (Para 2-19).

(4) Pull CONVEYOR control out to ON position, (Para 2-20).

(5) Open conveyor inspection door and check if conveyor operates without binding.

(a) If conveyor does not operate without binding, go to "Conveyor Belt Does Not Operate Correctly or is Damaged" (Fault 16).

(b) If conveyor operates without binding, go to Step 7 of this Fault.

CONVEYOR INSPECTION DOOR

CONVEYOR

10. CONCRETE MIX TOO WET, TOO SANDY, TOO STONY, IS NOT MIXED THOROUGHLY, OR DELIVERY IS UNEVEN (CONT).

KNOWN INFO

- Sand and stone gates operating correctly.
- Sand and stone gate position dials calibrated.
- Concrete mixing auger operating correctly.
- Concrete mixing auger wear blades OK.

POSSIBLE PROBLEMS

- Cement metering system operating correctly.
- Conveyor belt not operating correctly.
- Cement metering counter not operating correctly.
- Vibrators not operating correctly.
- Conveyor belt wipers installed incorrectly or damaged.
- Mixer settings and mixing auger angle incorrect.

7.

WARNING

Read WARNING on Page 4-345

Is conveyor belt oiled correctly and free from damage and excessive wear?

NO → Go to “Conveyor Belt Does Not Operate Correctly or is Damaged”, (Fault 16).

YES ↓

TEST OPTIONS

Visual inspection.

REASON FOR QUESTION

If conveyor belt is not oiled correctly and free from damage and excessive wear, sand and stone portions of concrete mix may be incorrect.

WARNING

To prevent becoming entangled in machinery, stand clear of rotating drives.

VISUAL INSPECTION

(1) Stow mixing auger, (Para 2-23).

(2) Check if conveyor belt is oiled correctly and free from damage and excessive wear.

(a) If conveyor belt is not oiled correctly and free from damage and excessive wear, go to "Conveyor Belt Does Not Operate Correctly or is Damaged", (Fault 16).

(b) If conveyor belt is oiled correctly and free from damage and excessive wear, go to Step 8 of this Fault.

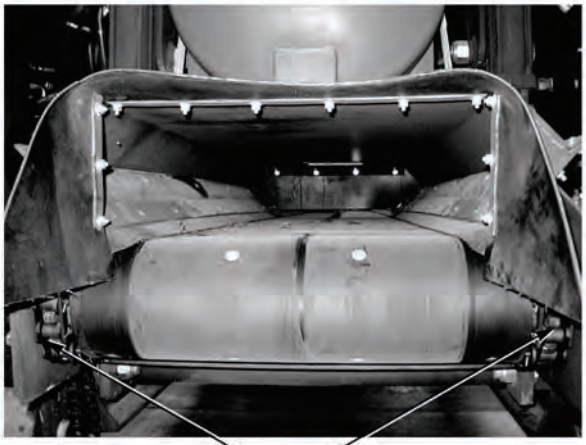

CONVEYOR BELT DRIVE GEARS

10. CONCRETE MIX TOO WET, TOO SANDY, TOO STONY, IS NOT MIXED THOROUGHLY, OR DELIVERY IS UNEVEN (CONT).

KNOWN INFO

- Sand and stone gates operating correctly.
- Sand and stone gate position dials calibrated.
- Concrete mixing auger operating correctly.
- Concrete mixing auger wear blades OK.
- Conveyor belt operating correctly.

POSSIBLE PROBLEMS

- Cement metering system not operating correctly.
- Cement metering counter not operating correctly.
- Vibrators not operating correctly.
- Conveyor belt wipers installed incorrectly or damaged.
- Mixer settings and mixing auger angle incorrect.

8.

Does cement metering counter operate correctly when conveyor is operated at high idle?

NO → Go to “Cement Metering Counter Does Not Operate Correctly”, (Fault 7).

YES ↓

TEST OPTIONS

Operational test.

REASON FOR QUESTION

If cement metering counter does not operate correctly, measured cement portion may be incorrect.

OPERATIONAL TEST

(1) Deploy mixing auger, (Para 2-23).

(2) Check if cement metering counter is operating correctly, when conveyor is operating at high idle.

NOTE

Cement metering counter should count up 330-350 counts in one minute, when conveyor is operated at high idle.

(a) If cement metering counter is not operating correctly, go to "Cement Metering Counter Does Not Operate Correctly", (Fault 7).

(b) If cement metering counter is operating correctly, go to Step 9 of this Fault.

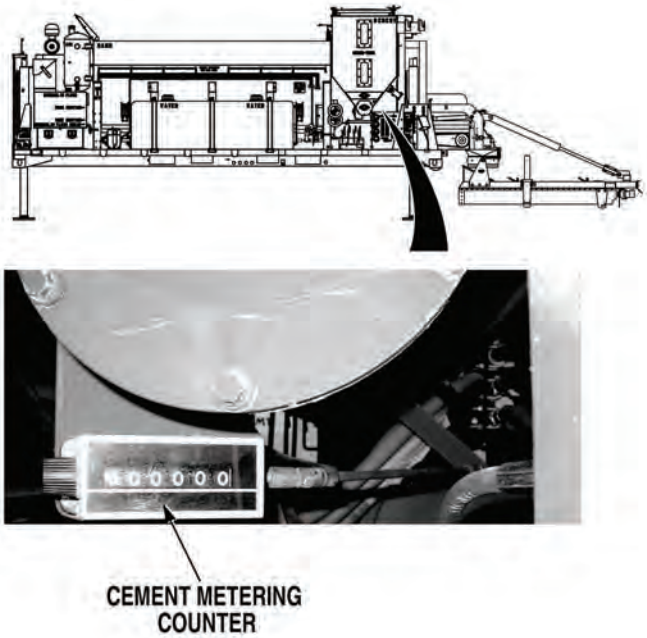

10. CONCRETE MIX TOO WET, TOO SANDY, TOO STONY, IS NOT MIXED THOROUGHLY, OR DELIVERY IS UNEVEN (CONT).

KNOWN INFO

- Sand and stone gates operating correctly.
- Sand and stone gate position dials calibrated.
- Concrete mixing auger operating correctly.
- Concrete mixing auger wear blades OK.
- Conveyor belt operating correctly.
- Cement metering counter operating correctly.

POSSIBLE PROBLEMS

- Cement metering system not operating correctly.
- Vibrators not operating correctly.
- Conveyor belt wipers installed incorrectly or damaged.
- Mixer settings and mixing auger angle incorrect.

9.

Does cement metering system clutch and augers operate without binding?

NO → Go to “Cement is Not Delivered or Delivery is Uneven or Incorrect When Clutch is Engaged”, (Fault 8).

YES ↓

TEST OPTIONS

Operational test.

REASON FOR QUESTION

If cement metering system is not operating correctly, cement portion of concrete mix may be incorrect.

OPERATIONAL TEST

(1) Push CONVEYOR control in to OFF position, (Para 2-20).

(2) Engage cement metering clutch, (Para 2-22).

(3) Pull CONVEYOR control out to ON position, (Para 2-20).

(4) Check if cement metering system clutch and augers are operating without binding.

(a) If cement metering system clutch and augers do not operate without binding, go to "Cement is Not Delivered or Delivery is Uneven or Incorrect When Clutch is Engaged", (Fault 8).

(b) If cement metering system clutch and augers operate without binding, go to Step 10 of this Fault.

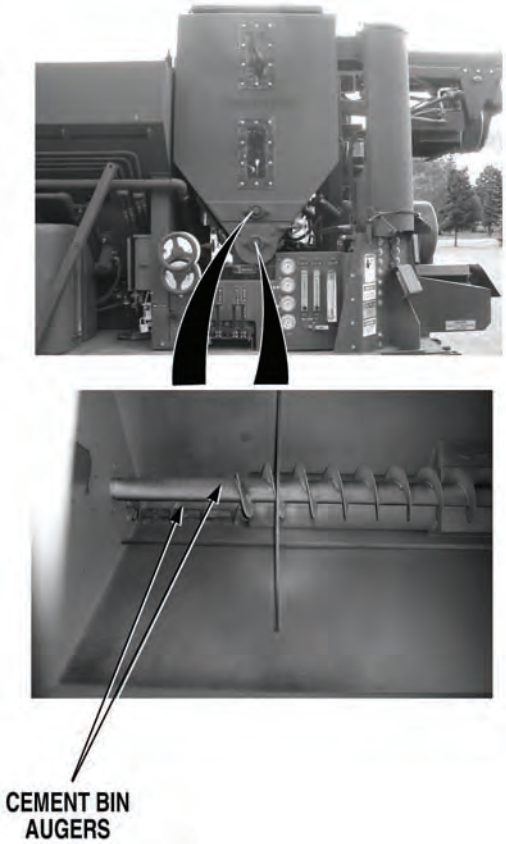

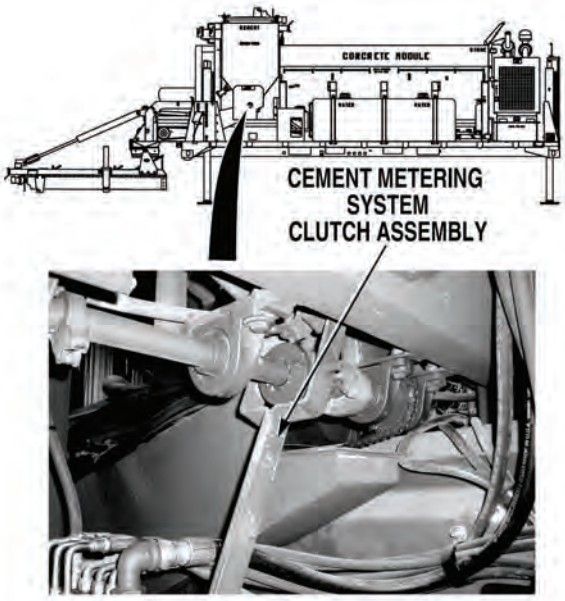

10. CONCRETE MIX TOO WET, TOO SANDY, TOO STONY, IS NOT MIXED THOROUGHLY, OR DELIVERY IS UNEVEN (CONT).

KNOWN INFO

- Sand and stone gates operating correctly.
- Sand and stone gate position dials calibrated.
- Concrete mixing auger operating correctly.
- Concrete mixing auger wear blades OK.
- Conveyor belt operating correctly.
- Cement metering counter operating correctly.
- Cement metering system operating correctly.

POSSIBLE PROBLEMS

- Vibrators not operating correctly.
- Conveyor belt wipers installed incorrectly or damaged.
- Mixer settings and mixing auger angle incorrect.

10.

Do all vibrators operate?

NO → Go to "Vibrator(s) Do Not Operate Correctly", (Fault 33).

YES ↓

TEST OPTIONS

Operational test.

REASON FOR QUESTION

If vibrators are not operating, concrete mixture may be incorrect.

OPERATIONAL TEST

NOTE

There are two sets of vibrators. Each set operates independently off the other.

NOTE

Vibrators operate once per cement metering system drive shaft rotation.

(1) If closed, open sand bin vibrator control valve.

(2) Check if all vibrators are operating.

(a) If all vibrators are not operating, go to “Vibrator(s) Do Not Operate Correctly”, (Fault 33).

(b) If all vibrators operate, go to Step 11 of this Fault.

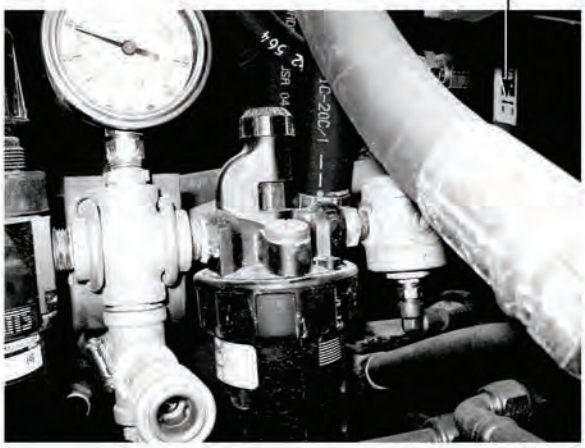

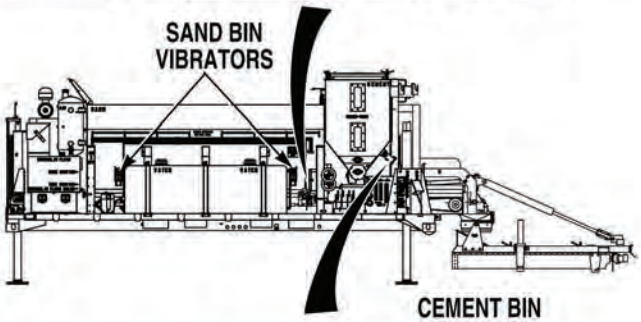

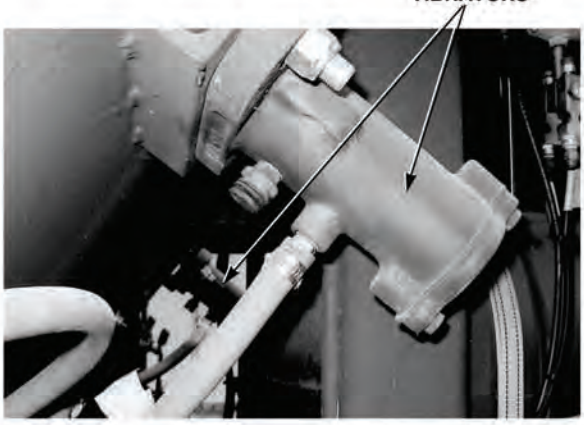

10. CONCRETE MIX TOO WET, TOO SANDY, TOO STONY, IS NOT MIXED THOROUGHLY, OR DELIVERY IS UNEVEN (CONT).

KNOWN INFO

- Sand and stone gates operating correctly.
- Sand and stone gate position dials calibrated.
- Concrete mixing auger operating correctly.
- Concrete mixing auger wear blades OK.
- Conveyor belt operating correctly.
- Cement metering counter operating correctly.
- Cement metering system operating correctly.
- Vibrators operating correctly.

POSSIBLE PROBLEMS

- Conveyor belt wipers installed incorrectly or damaged.
- Mixer settings and mixing auger angle incorrect.

11.

Are all conveyor belt wipers installed correctly (free from gaps) and free from damage?

NO → Reinstall loose or replace damaged and missing wipers, (Para 3-76). Verify repair, go to Step 12 of this Fault.

YES ↓

TEST OPTIONS

Visual inspection.

REASON FOR QUESTION

If conveyor belt wipers are not installed correctly and free from damage, sand and stone portions of concrete mix may be incorrect.

VISUAL INSPECTION

(1) If loaded, unload sand and stone aggregate bins, (Para 2-13).

(2) Shut OFF engine, (Para 2-19).

(3) Push CONVEYOR control in to OFF position, (Para 2-20).

(4) Check conveyor belt wipers for incorrect installation and damage.

(a) If conveyor belt wipers are installed incorrectly or damaged, reinstall loose or replace damaged or missing wipers, (Para 3-76).

(b) If conveyor belt wipers are installed correctly and free from damage, go to Step 12 of this Fault.

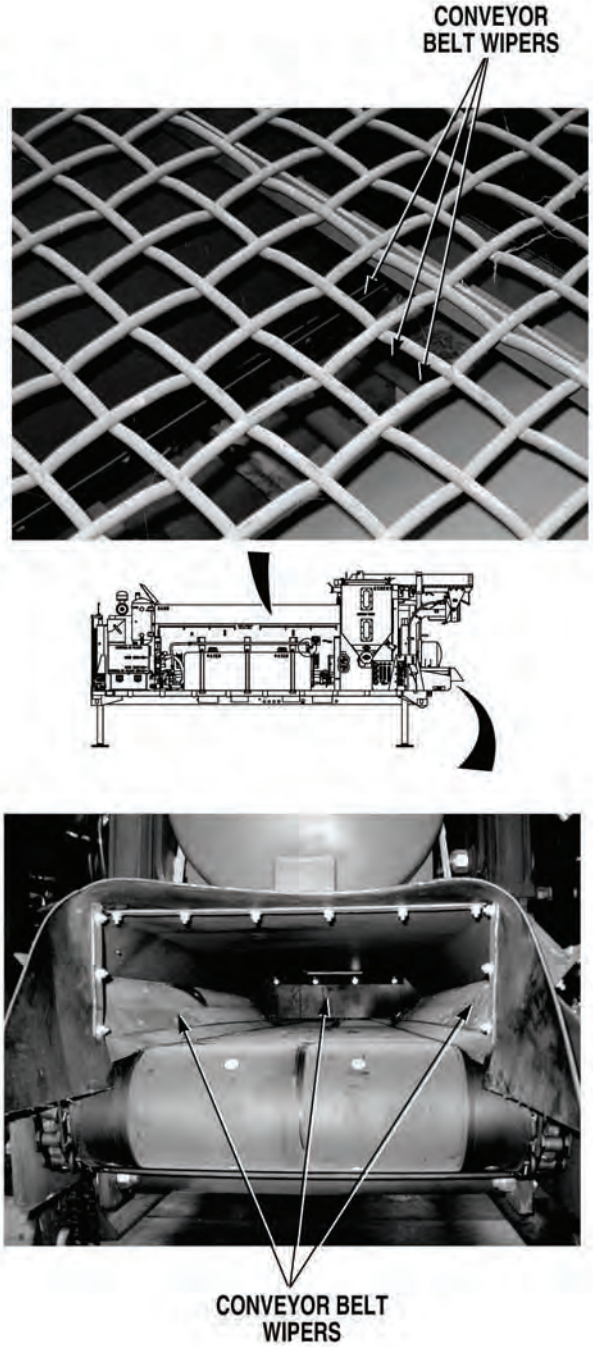

10. CONCRETE MIX TOO WET, TOO SANDY, TOO STONY, IS NOT MIXED THOROUGHLY, OR DELIVERY IS UNEVEN (CONT).

KNOWN INFO

- Sand and stone gates operating correctly.
- Sand and stone gate position dials calibrated.
- Concrete mixing auger operating correctly.
- Concrete mixing auger wear blades OK.
- Conveyor belt operating correctly.
- Cement metering counter operating correctly.
- Cement metering system operating correctly.
- Vibrators operating correctly.
- Conveyor belt wipers OK.

POSSIBLE PROBLEMS

Mixer settings and mixing auger angle incorrect.

12.

Is concrete mix delivery correct after recalculating and resetting all mixer adjustments and ensuring concrete mixing auger is at correct angle?

NO → Fault not corrected. Notify Supervisor.

YES → Fault corrected.

TEST OPTIONS

Verify repair.

REASON FOR QUESTION

If concrete mix delivery is correct after recalculating and resetting all mixing adjustments and ensuring mixing angle is correct, fault has been corrected.

VERIFY REPAIR

(1) Recalculate and reset all mixer settings, (Para 2-18).

(2) Start engine, (Para 2-19).

(3) Using hoist controls, adjust concrete mixer auger for minimum of 15 degree angle.

(4) Operate Concrete Mobile Mixer, (Para 2-20).

(5) Check if concrete mix is at correct consistency.

  (a) If concrete mix is not at correct consistency, fault not corrected. Notify Supervisor.

  (b) If concrete mix is at correct consistency, fault has been corrected.

(6) Shut down Concrete Mobile Mixer operations, (Para 2-20).

(7) Shut OFF engine, (Para 2-19).

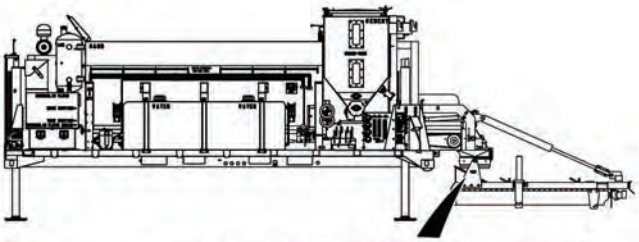

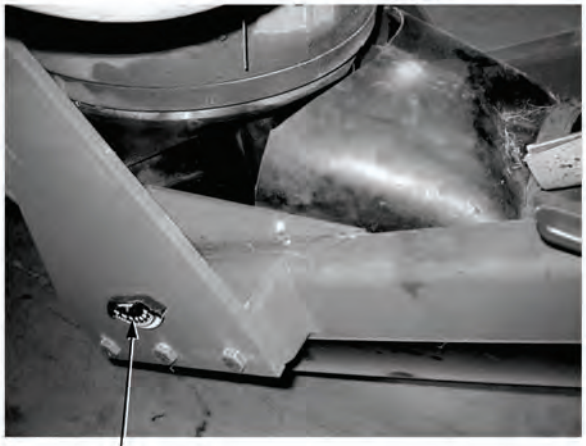

11. CONCRETE MIXING AUGER DOES NOT ROTATE, ROTATES SLOWLY, NOISY, OR VIBRATES.

INITIAL SETUP

Tools and Special Tools

Tool Kit, General Mechanic's: Automotive (Item 19, Appendix I)

Cap and Plug Set (Item 3, Appendix I)

Drain Pan, (Item 12, Appendix I)

Equipment Condition

Concrete Mobile Mixer unloaded from PLS, (Para 2-5)

Concrete Mobile Mixer raised to operating level, (Para 2–28)

Mixing auger deployed, (Para 2-23)

Engine OFF, (Para 2-19)

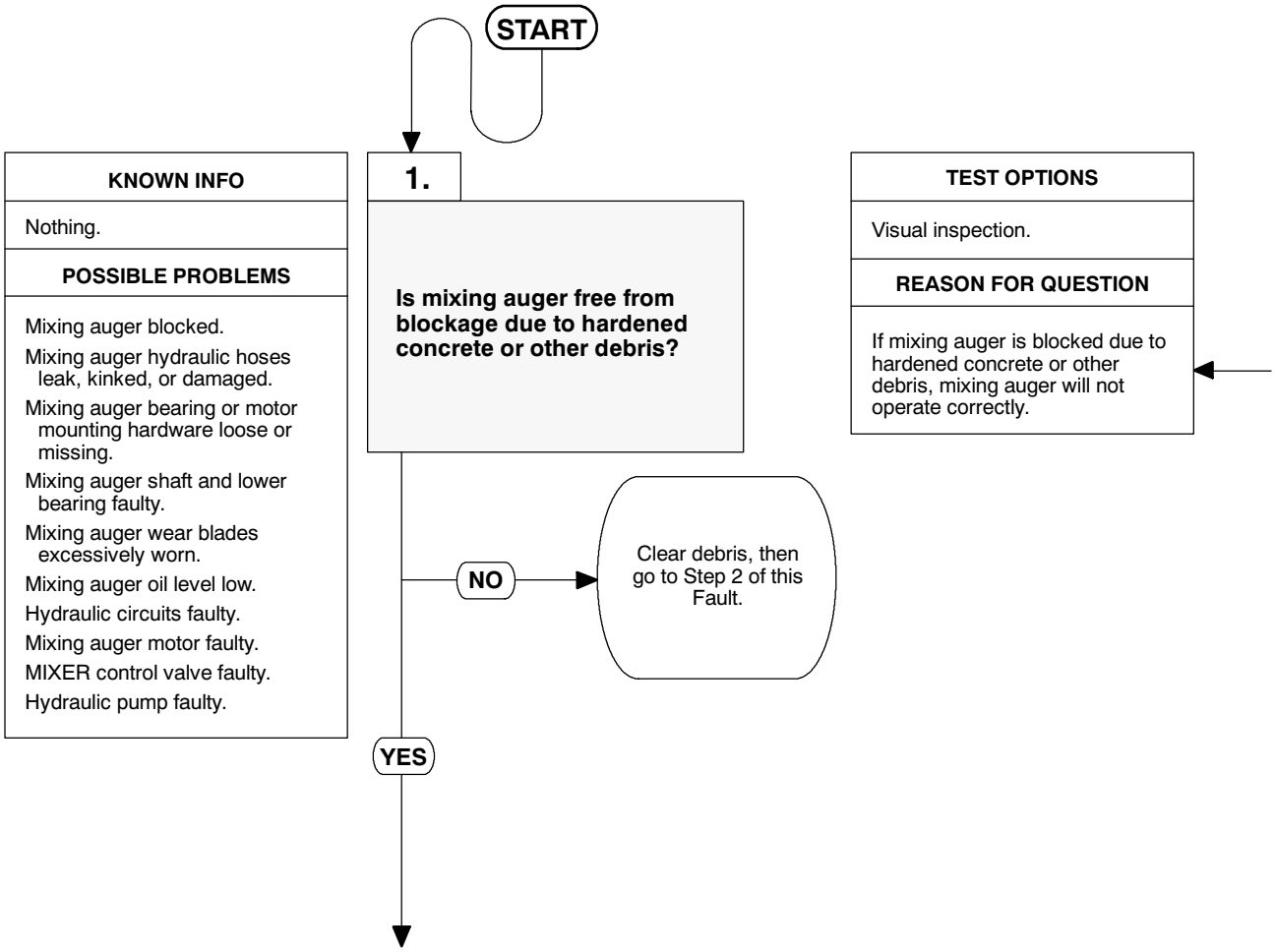

VISUAL INSPECTION
Check if mixing auger is blocked with hardened concrete or other debris. (a) If mixing auger is blocked with hardened concrete or other debris, clear debris, then go to Step 2 of this Fault. (b) If mixing auger is not blocked with hardened concrete or other debris, go to Step 2 of this Fault.

11. CONCRETE MIXING AUGER DOES NOT ROTATE, ROTATES SLOWLY, NOISY, OR VIBRATES (CONT).

KNOWN INFO
Mixing auger not blocked.
POSSIBLE PROBLEMS
Mixing auger hydraulic hoses leak, kinked, or damaged. Mixing auger bearing or motor mounting hardware loose or missing. Mixing auger shaft and lower bearing faulty. Mixing auger wear blades excessively worn. Mixer auger oil level low. Hydraulic circuits faulty. Mixing auger motor faulty. MIXER control valve faulty. Hydraulic pump faulty.

2.

Are hydraulic hoses from MIXER control valve to mixing auger motor free from leaks, kinks and damage?

NO → Repair leaks or replace damaged hoses, (Para 3-131). Verify repair, go to Step 11 of this Fault.

YES ↓

TEST OPTIONS
Visual inspection.
REASON FOR QUESTION
If mixing auger hydraulic hoses are not free from leaks, kinks, and damage, mixing auger may not operate.

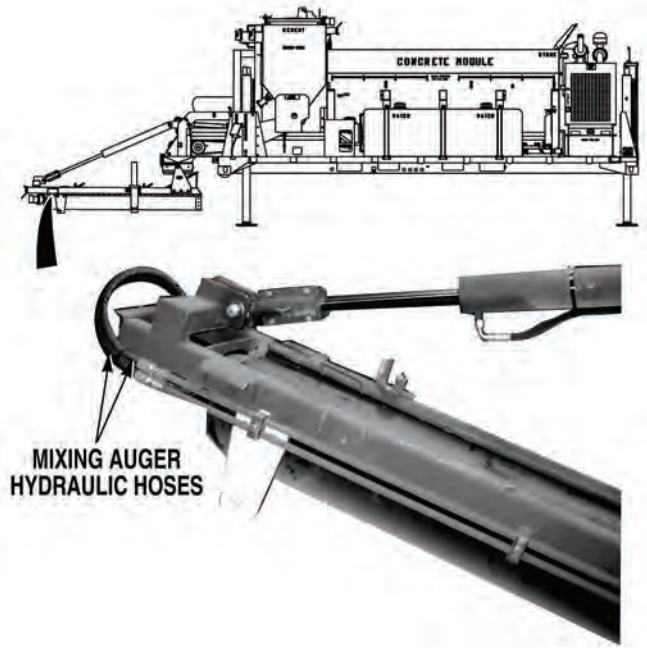

VISUAL INSPECTION
Check if hydraulic hoses from MIXER control valve to mixing auger motor are free from leaks, kinks, and damage. (a) If hydraulic hoses are not free from leaks, kinks, and damage, repair leaks or replace damaged hydraulic hoses, (Para 3-131). Verify repair, go to Step 11 of this Fault. (b) If hydraulic hoses are free from leaks, kinks, and damage, go to Step 3 of this Fault.

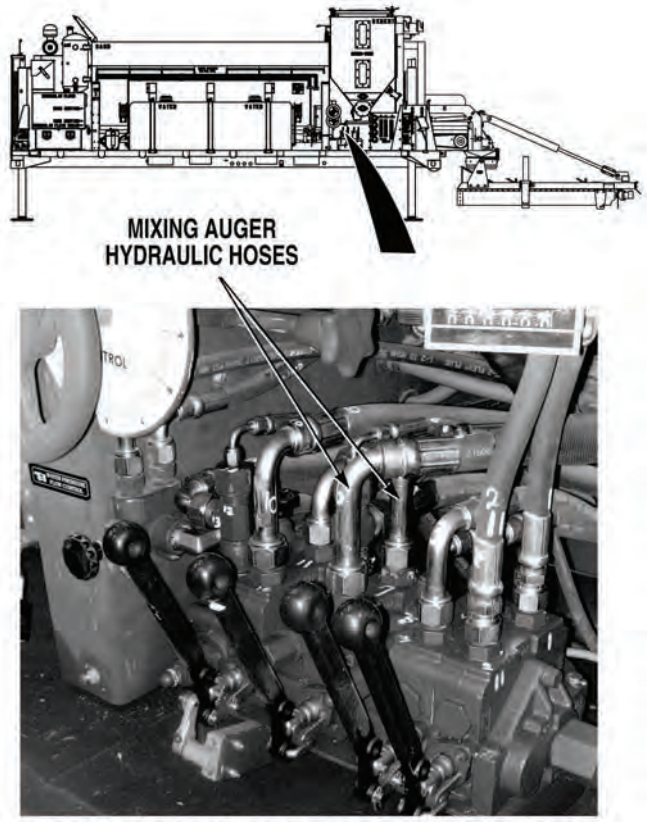

(HYDRAULIC CONTROLS PANEL REMOVED FOR CLARITY)

11. CONCRETE MIXING AUGER DOES NOT ROTATE, ROTATES SLOWLY, NOISY, OR VIBRATES (CONT).

KNOWN INFO
Mixing auger not blocked. Mixing auger hydraulic hoses not leaking, kinked, or damaged.
POSSIBLE PROBLEMS
Mixing auger bearing or mounting hardware loose or missing. Mixing auger shaft and lower bearing faulty. Mixing auger wear blades excessively worn. Mixing auger oil level low. Hydraulic circuits faulty. Mixing auger motor faulty. MIXER control valve faulty. Hydraulic pump faulty.

3.

Are all mixing auger bearing and motor mounting hardware present and secure?

NO → Tighten loose and replace missing hardware, (Para 3-91). Then go to Step 4 of this Fault.

YES ↓

TEST OPTIONS
Visual inspection.
REASON FOR QUESTION
If mixing auger bearing and mounting hardware are not present and secure, mixing auger may not operate correctly.

VISUAL INSPECTION

(1) Check if mixing auger bearing and motor mounting hardware is present and secure.

(a) If mixing auger bearing and motor mounting hardware are not present and secure, tighten loose or replace missing hardware, (Para 3-91). Then go to Step 4 of this Fault.

(b) If mixing auger bearing and motor mounting hardware is present and secure, go to Step 4 of this Fault.

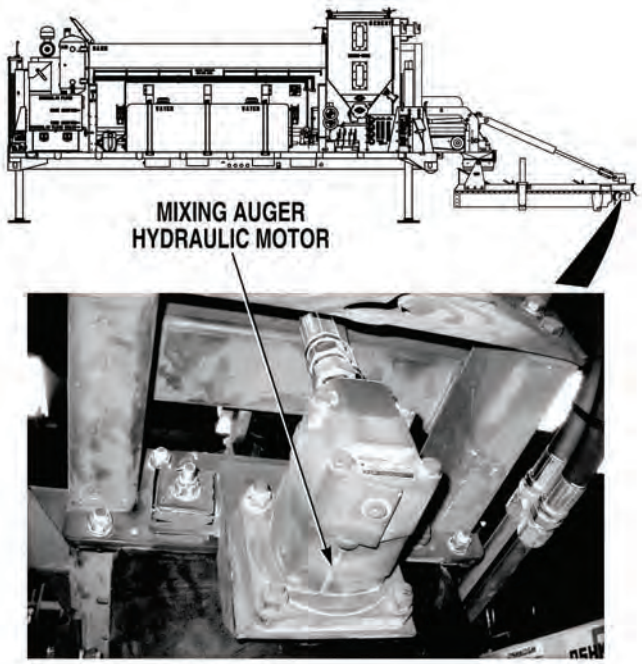

11. CONCRETE MIXING AUGER DOES NOT ROTATE, ROTATES SLOWLY, NOISY, OR VIBRATES (CONT).

KNOWN INFO
Mixing auger not blocked. Mixing auger hydraulic hoses not leaking, kinked, or damaged. Mixing auger bearing and motor mounting hardware OK.
POSSIBLE PROBLEMS
Mixing auger shaft and lower bearing faulty. Mixing auger wear blades excessively worn. Mixing auger oil level low. Hydraulic circuits faulty. Mixing auger motor faulty. MIXER control valve faulty. Hydraulic pump faulty.

4.

WARNING

Read WARNING on Page 4-363

Does mixing auger operate at correct speed when engaged (approximately 5 revolutions per second at high idle)?

NO → Go to Step 8 of this Fault.

YES ↓

TEST OPTIONS
Operational test.
REASON FOR QUESTION
To further isolate fault.

WARNING

To prevent becoming entangled in machinery, stand clear of rotating drives.

MIXING AUGER

OPERATIONAL TEST

(1) Start engine, (Para 2-19).

(2) Turn THROTTLE CONTROL to high idle, (Para 2-19).

(3) Pull MIXER control out to ON position, (Para 2-20).

NOTE

Mixing auger rotates approximately 5 revolutions per second at high idle.

(4) Check if mixing auger operates at correct operating speed.

(a) If mixing auger does not operate at correct speed, go to Step 8 of this Fault.

(b) If mixing auger operates at correct speed, go to Step 5 of this Fault.

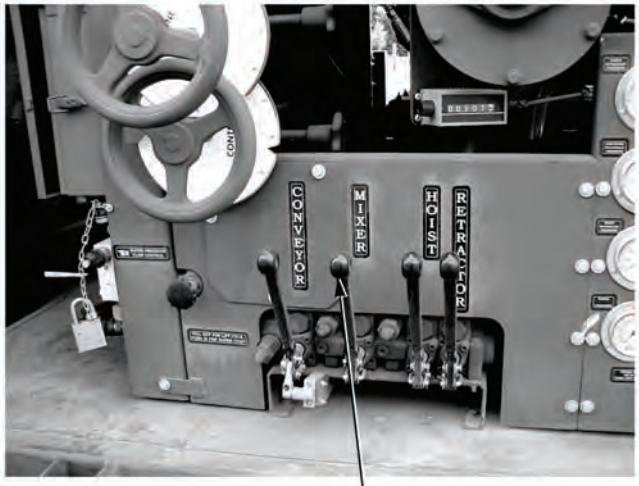

MIXER CONTROL

11. CONCRETE MIXING AUGER DOES NOT ROTATE, ROTATES SLOWLY, NOISY, OR VIBRATES (CONT).

KNOWN INFO
Mixing auger not blocked. Mixing auger hydraulic hoses not leaking, kinked, or damaged. Mixing auger bearing and motor mounting hardware OK. Hydraulic circuits OK. Mixing auger motor OK. MIXER control valve OK. Hydraulic pump OK.
POSSIBLE PROBLEMS
Mixing auger shaft and lower bearing faulty. Mixing auger wear blades excessively worn. Mixing auger oil level low.

5.

Does mixing auger pass auger shaft test, (Para 2-24)?

NO → Replace mixing auger shaft and lower bearing, (Para 3-91). Verify repair, go to Step 11 of this Fault.

YES ↓

TEST OPTIONS
Operational inspection.
REASON FOR QUESTION
If mixing auger does not pass auger shaft test, auger shaft and lower bearing are faulty.

OPERATIONAL TEST

NOTE

Do not stow mixing auger during mixing auger test.

Perform mixing auger test, (Para 2-24).

(a) If mixing auger does not pass test, replace mixing auger shaft and lower bearing, (Para 3-91). Verify repair, go to Step 11 of this Fault.

(b) If mixing auger passes test, go to Step 6 of this Fault.

11. CONCRETE MIXING AUGER DOES NOT ROTATE, ROTATES SLOWLY, NOISY, OR VIBRATES (CONT).

KNOWN INFO

- Mixing auger not blocked.
- Mixing auger hydraulic hoses not leaking, kinked, or damaged.
- Mixing auger bearing and motor mounting hardware OK.
- Hydraulic circuits OK.
- Mixing auger motor OK.
- MIXER control valve OK.
- Hydraulic pump OK.

POSSIBLE PROBLEMS

- Mixing auger shaft and lower bearing faulty.
- Mixing auger wear blades excessively worn.
- Mixing auger oil level low.

6.

Do mixing auger wear blades pass mixing auger wear blade check, (Para 2-25)?

NO → Replace faulty wear blades, (Para 3-73). Verify repair, go to Step 11 of this Fault.

YES ↓

TEST OPTIONS

Operational test.

REASON FOR QUESTION

If mixing auger wear blades do not pass mixing auger wear blade check, wear blades are excessively worn and need to be replaced.

OPERATIONAL TEST

NOTE

Do not stow mixing auger during mixing auger test.

(1) If running, shut OFF engine, (Para 2-19).

(2) Perform mixing auger wear blade check, (Para 2-25).

(a) If mixing auger wear blades do not pass mixing auger wear blade check, replace wear blades, (Para 3-73). Verify repair, go to Step 11 of this Fault.

(b) If mixing auger wear blades pass mixing auger wear blade check, go to Step 7 of this Fault.

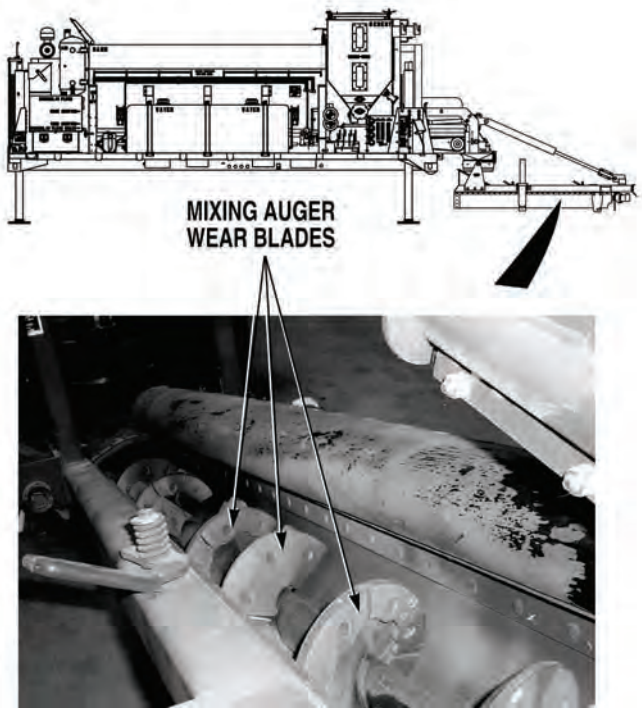

11. CONCRETE MIXING AUGER DOES NOT ROTATE, ROTATES SLOWLY, NOISY, OR VIBRATES (CONT).

KNOWN INFO

- Mixing auger not blocked.
- Mixing auger hydraulic hoses not leaking, kinked, or damaged.
- Mixing auger bearing and motor mounting hardware OK.
- Hydraulic circuits OK.
- Mixing auger motor OK.
- MIXER control valve OK.
- Hydraulic pump OK.
- Mixing auger wear blades OK.

POSSIBLE PROBLEMS

- Mixing auger shaft and lower bearing faulty.
- Mixing auger oil level low.

7.

Does mixing auger operate without excessive vibrations and noise after performing lower bearing service, (Para 3-92)?

NO → Replace mixing auger shaft and lower bearing, (Para 3-91). Verify repair, go to Step 11 of this Fault.

YES → Fault corrected. Verify repair, go to Step 11 of this Fault.

TEST OPTIONS

Operational test.

REASON FOR QUESTION

If mixing auger does not operate without excessive noise and vibration after performing lower bearing maintenance, auger shaft and lower bearing are faulty.

OPERATIONAL TEST

(1) Perform mixing auger lower bearing service, (Para 3-92).

(2) Start engine, (Para 2-19).

(3) Pull MIXER control out to ON position, (Para 2-20).

(4) Check if mixing auger operates without excessive vibration or noise.

  (a) If mixing auger does not operate without excessive noise and vibration, replace mixing auger shaft and lower bearing, (Para 3-91).

  (b) If mixing auger operates without excessive noise and vibration, problem corrected.

(5) Verify repair, go to Step 11 of this Fault.

11. CONCRETE MIXING AUGER DOES NOT ROTATE, ROTATES SLOWLY, NOISY, OR VIBRATES (CONT).

KNOWN INFO
Mixing auger not blocked. Mixing auger hydraulic hoses not leaking, kinked, or damaged. Mixing auger bearing and motor mounting hardware OK. Mixing auger shaft and lower bearing OK. Mixing auger wear blades not excessively worn. Mixing auger oil level OK.
POSSIBLE PROBLEMS
Hydraulic circuits faulty. Mixing auger motor faulty. MIXER control valve faulty. Hydraulic pump faulty.

8.

Does hoist, retractor, or conveyor function operate?

NO → Go to “Hydraulic Circuits Do Not Operate”, (Fault 27).

YES ↓

TEST OPTIONS
Operational test.
REASON FOR QUESTION
If hoist, retractor, or conveyor function does not operate, another troubleshooting procedure applies.

OPERATIONAL TEST

(1) Operate HOIST, RETRACTOR, or CONVEYOR controls, (Para 2-20).

(2) Check if hoist, retractor, or conveyor operates.

(a) If HOIST, RETRACTOR, or CONVEYOR controls do not operate, go to “Hydraulic Circuits Do Not Operate”, (Fault 27).

(b) If HOIST, RETRACTOR, and CONVEYOR controls operate, go to Step 9 of this Fault.

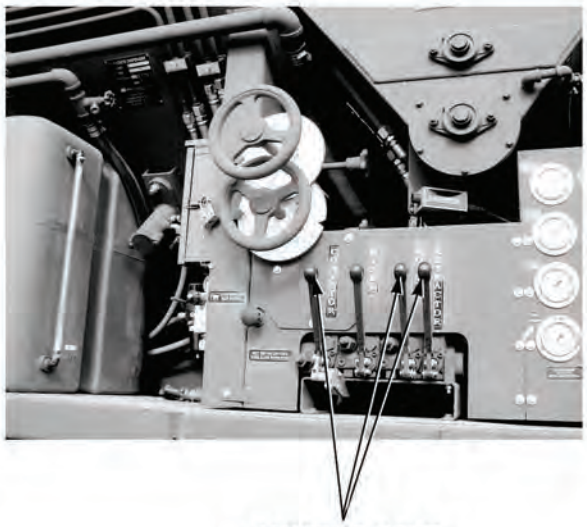

CONVEYOR, HOIST, RETRACTOR CONTROLS

11. CONCRETE MIXING AUGER DOES NOT ROTATE, ROTATES SLOWLY, NOISY, OR VIBRATES (CONT).

KNOWN INFO

- Mixing auger not blocked.
- Mixing auger hydraulic hoses not leaking, kinked, or damaged.
- Mixing auger bearing and motor mounting hardware OK.
- Mixing auger shaft and lower bearing OK.
- Mixing auger wear blades not excessively worn.
- Mixing auger oil level OK.
- Hydraulic circuits OK.

POSSIBLE PROBLEMS

- Mixing auger motor faulty.
- MIXER control valve faulty.
- Hydraulic pump faulty.

9.

WARNING

Read WARNING on Page 4-373

Is at least 2,500 psi (17,237 kPa) pressure present, when hydraulic hoses are disconnected and capped at mixing auger motor and MIXER control valve is activated?

NO → Go to Step 10 of this Fault.

YES → Replace mixing auger motor, (Para 3-72). Verify repair, go to Step 11 of this Fault.

TEST OPTIONS

Operational test.

REASON FOR QUESTION

If 2,500 psi (17,237 kPa) pressure is present, mixing auger motor is faulty.

WARNING

Never disconnect any hydraulic line or fitting without first dropping pressure to zero. Failure to comply may result in serious injury or death to personnel.

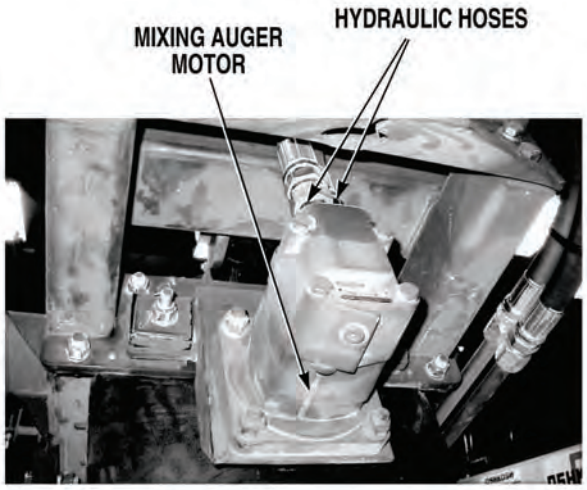

OPERATIONAL TEST

(1) Shut OFF engine, (Para 2-19).

(2) Place suitable drain pan under mixing auger motor.

(3) Disconnect hydraulic hoses at mixing auger motor, (Para 3-72). Plug hydraulic hose fittings.

(4) Start engine, (Para 2-19).

(5) Pull MIXER control out to ON position, (Para 2-20).

(6) Check if mixing auger system hydraulic pressure builds to 2,500 psi (17,237 kPa).

(a) If mixing auger hydraulic pressure does not build to 2,500 psi (17,237 kPa), go to Step 10 of this Fault.

(b) If mixing auger system hydraulic pressure builds to 2,500 psi (17,237 kPa), replace mixing auger motor, (Para 3-72). Verify repair, go to Step 11 of this Fault.

11. CONCRETE MIXING AUGER DOES NOT ROTATE, ROTATES SLOWLY, NOISY, OR VIBRATES (CONT).

KNOWN INFO

- Mixing auger not blocked.
- Mixing auger hydraulic hoses not leaking, kinked, or damaged.
- Mixing auger bearing and motor mounting hardware OK.
- Mixing auger shaft and lower bearing OK.
- Mixing auger wear blades not excessively worn.
- Mixing auger oil level OK.
- Hydraulic circuits OK.
- Mixing auger motor OK.

POSSIBLE PROBLEMS

- MIXER control valve faulty.
- Hydraulic pump faulty.

WARNING

Read WARNING on Page 4-375

10.

Is at least 2,500 psi (17,237 kPa) pressure present when hydraulic hoses are disconnected and capped at mixing auger motor and MIXER control valve is activated after swapping conveyor and mixer auger system supply hoses?

NO → Replace MIXER control valve, (Para 3-51) and adjust conveyor speed, (Para 3-77). Verify repair, go to Step 11 of this Fault.

YES → Replace hydraulic pump, (Para 3-34). Verify repair, go to Step 11 of this fault.

TEST OPTIONS

Operational test.

REASON FOR QUESTION

If at least 2,500 psi (17,237 kPa) is present, hydraulic pump is faulty. If not, MIXER control valve is faulty.

WARNING

Never disconnect any hydraulic line or fitting without first dropping pressure to zero. Failure to comply may result in serious injury or death to personnel.

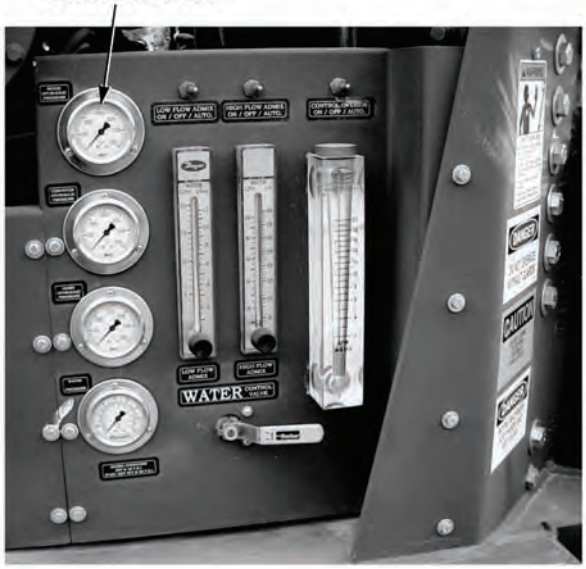

OPERATIONAL TEST

(1) Push MIXER control in to OFF position, (Para 2-20).

(2) Shut OFF engine, (Para 2-19).

(3) Place suitable drain pan under hydraulic hose connections above control box.

(4) Disconnect conveyor system supply hose at connector fitting above control box.

(5) Disconnect mixing auger system supply hose at connector fitting above control box.

(6) Connect mixing auger supply hose to conveyor system connector fitting, (Para 3-129).

(7) Connect conveyor system supply hose to mixing auger connector fitting, (Para 3-129).

(8) Start engine, (Para 2-19).

(9) Pull MIXER control out to ON position, (Para 2-20).

(10) Check if mixing auger system pressure builds to 2500 psi (17,237 kPa).

(a) If mixing auger system pressure does not build to 2,500 psi (17,237 kPa), replace mixer control valves, (Para 3-51) and adjust conveyor speed, (Para 3-77).

(b) If mixing auger system pressure builds to 2,500 psi (17,237 kPa), replace hydraulic pump, (Para 3-34).

(11) Verify repair, go to Step 17 of this Fault.

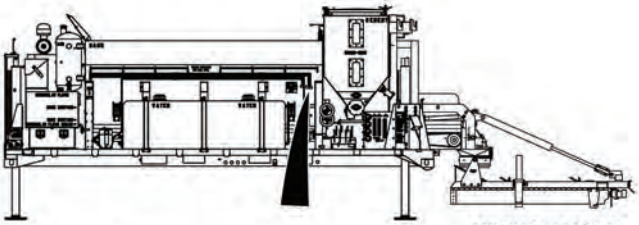

11. CONCRETE MIXING AUGER DOES NOT ROTATE, ROTATES SLOWLY, NOISY, OR VIBRATES (CONT).

KNOWN INFO

- Mixing auger not blocked.
- Mixing auger hydraulic hoses not leaking, kinked, or damaged.
- Mixing auger bearing and mounting hardware OK.
- Mixing auger shaft and lower bearing OK.
- Mixing auger wear blades not excessively worn.
- Mixing auger oil level OK.
- Hydraulic circuits OK.
- Mixing auger motor OK.
- MIXER control valve OK.
- Hydraulic pump OK.

POSSIBLE PROBLEMS

None.

11.

WARNING

Read WARNING on Page 4-377

Does concrete mixing auger operate correctly?

NO → Fault not corrected. Notify Supervisor.

YES → Fault corrected.

TEST OPTIONS

Verify repair.

REASON FOR QUESTION

If mixing auger operates correctly, fault has been corrected.

WARNING

Never disconnect any hydraulic line or fitting without first dropping pressure to zero. Failure to comply may result in serious injury or death to personnel.

VERIFY REPAIR

(1) If ON, shut OFF engine, (Para 2-19).

(2) If swapped, reconnect conveyor and mixing auger supply hoses to their original connections, (Para 3-129).

(3) If disconnected, connect hydraulic hoses at mixing auger hydraulic motor, (Para 3-129).

(4) Start engine, (Para 2-19).

(5) Pull MIXER control out to ON position, (Para 2-20).

(6) Check if mixing auger operates correctly.

  (a) If mixing auger is not operating correctly, fault not corrected. Notify Supervisor.

  (b) If mixing auger is operating correctly, fault has been corrected.

(7) Push MIXER control in to OFF position, (Para 2-20).

(8) Shut OFF engine, (Para 2-19).

RECOMMENDED CHANGES TO PUBLICATIONS AND BLANK FORMS For use of this form, see AR 25-30; the proponent agency is ODISC4.	Use Part II *(reverse)* for Repair Parts and Special Tool Lists (RPSTL) and Supply Catalogs/Supply Manuals (SC/SM).	DATE Date you filled out this form.
TO: *(Forward to proponent of publication or form) (Include ZIP Code)* AMSTA-LC-LMPP / TECH PUBS, TACOM-RI 1 Rock Island Arsenal Rock Island, IL 61299-7630	FROM: *(Activity and location) (Include ZIP Code)* Your mailing address	

PART I – ALL PUBLICATIONS (EXCEPT RPSTL AND SC/SM) AND BLANK FORMS

PUBLICATION/FORM NUMBER	DATE	TITLE
TM 9-3990-258-13&P-1	30 June 2008	Concrete Mobile Mixer, M5, Operator, Unit and DS Maintenance Manual & RPSTL

ITEM NO.	PAGE NO.	PARA-GRAPH	LINE NO. *	FIGURE NO.	TABLE NO.	RECOMMENDED CHANGES AND REASON (Provide exact wording of recommended changes, if possible).
	0004 00-2	4-7				Wrong POC is listed.

**Reference to line numbers within the paragraph or subparagraph.*

TYPED NAME, GRADE OR TITLE	TELEPHONE EXCHANGE/AUTOVON, PLUS EXTENSION	SIGNATURE
Your Name		Your Signature

SAMPLE

DA FORM 2028, FEB 74 REPLACES DA FORM 2028, 1 DEC 68, WHICH WILL BE USED. USAPPC V3.00

TO: (*Forward direct to addressee listed in publication*)	FROM: (*Activity and location) (Include ZIP Code)*	DATE
AMSTA-LC-LMPP / TECH PUBS, TACOM-RI 1 Rock Island Arsenal Rock Island, IL 61299-7630	Your address	Date you filled out this form

PART II – REPAIR PARTS AND SPECIAL TOOL LISTS AND SUPPLY CATALOGS/SUPPLY MANUALS

PUBLICATION NUMBER	DATE	TITLE
TM 9-3990-258-13&P-1	30 June 2008	Concrete Mobile Mixer, M5, Operator, Unit and DS Maintenance Manual & RPSTL

PAGE NO.	COLM NO.	LINE NO.	NATIONAL STOCK NUMBER	REFERENCE NO.	FIGURE NO.	ITEM NO.	TOTAL NO. OF MAJOR ITEMS SUPPORTED	RECOMMENDED ACTION

PART III – REMARKS (*Any general remarks or recommendations, or suggestions for improvement of publications and blank forms. Additional blank sheets may be used if more space is needed.)*

TYPED NAME, GRADE OR TITLE	TELEPHONE EXCHANGE/AUTOVON, PLUS EXTENSION	SIGNATURE
Your Name		Your Signature

USAPPC V3.00

RECOMMENDED CHANGES TO PUBLICATIONS AND BLANK FORMS For use of this form, see AR 25-30; the proponent agency is ODISC4.	Use Part II *(reverse)* for Repair Parts and Special Tool Lists (RPSTL) and Supply Catalogs/Supply Manuals (SC/SM).	DATE
TO: *(Forward to proponent of publication or form) (Include ZIP Code)* AMSTA-LC-LMPP / TECH PUBS, TACOM-RI 1 Rock Island Arsenal Rock Island, IL 61299-7630	FROM: *(Activity and location) (Include ZIP Code)*	

PART I – ALL PUBLICATIONS (EXCEPT RPSTL AND SC/SM) AND BLANK FORMS

PUBLICATION/FORM NUMBER	DATE	TITLE
TM 9-3990-258-13&P-1	30 June 2008	Concrete Mobile Mixer, M5, Operator, Unit and DS Maintenance Manual & RPSTL

ITEM NO.	PAGE NO.	PARA-GRAPH	LINE NO. *	FIGURE NO.	TABLE NO.	RECOMMENDED CHANGES AND REASON *(Provide exact wording of recommended changes, if possible).*

**Reference to line numbers within the paragraph or subparagraph.*

TYPED NAME, GRADE OR TITLE	TELEPHONE EXCHANGE/AUTOVON, PLUS EXTENSION	SIGNATURE

DA FORM 2028, FEB 74 REPLACES DA FORM 2028, 1 DEC 68, WHICH WILL BE USED. USAPPC V3.00

TO: (*Forward direct to addressee listed in publication*) AMSTA-LC-LMPP / TECH PUBS, TACOM-RI 1 Rock Island Arsenal Rock Island, IL 61299-7630	FROM: (*Activity and location) (Include ZIP Code)*	DATE

PART II – REPAIR PARTS AND SPECIAL TOOL LISTS AND SUPPLY CATALOGS/SUPPLY MANUALS

PUBLICATION NUMBER	DATE	TITLE
TM 9-3990-258-13&P-1	30 June 2008	Concrete Mobile Mixer, M5, Operator, Unit and DS Maintenance Manual & RPSTL

PAGE NO.	COLM NO.	LINE NO.	NATIONAL STOCK NUMBER	REFERENCE NO.	FIGURE NO.	ITEM NO.	TOTAL NO. OF MAJOR ITEMS SUPPORTED	RECOMMENDED ACTION

PART III – REMARKS (*Any general remarks or recommendations, or suggestions for improvement of publications and blank forms. Additional blank sheets may be used if more space is needed.)*

TYPED NAME, GRADE OR TITLE	TELEPHONE EXCHANGE/AUTOVON, PLUS EXTENSION	SIGNATURE

USAPPC V3.00

By Order of the Secretary of the Army:

Official:

GEORGE W. CASEY, JR.
General, United States Army
Chief of Staff

JOYCE E. MORROW
Administrative Assistant to the
Secretary of the Army

0812301

DISTRIBUTION: To be distributed in accordance with the Initial Distribution Number IDN: 381108, requirements for TM 9-3990-258-13&P-1.

THE METRIC SYSTEM AND EQUIVALENTS

LINEAR MEASURE
1 Centimeter=10 Millimeters=0.01 Meters=0.3937 Inches
1 Meter=100 Centimeters=1000 Millimeters=39.37 Inches
1 Kilometer=1000 Meters=0.621 Miles

WEIGHTS
1 Gram=0.001 Kilograms=1000 Milligrams=0.035 Ounces
1 Kilogram=1000 Grams=2.2 Lb
1 Metric Ton=1000 Kilograms=1 Megagram=1.1 Short Tons

LIQUID MEASURE
1 Milliliter=0.001 Liters=0.0338 Fluid Ounces
1 Liter=1000 Milliliters=33.82 Fluid Ounces

SQUARE MEASURE
1 Sq Centimeter=100 Sq Millimeters=0.155 Sq Inches
1 Sq Meter=10,000 Sq Centimeters=10.76 Sq Feet
1 Sq Kilometer=1,000,000 Sq Meters=0.386 Sq Miles

CUBIC MEASURE
1 Cu Centimeter=1000 Cu Millimeters=0.06 Cu Inches
1 Cu Meter=1,000,000 Cu Centimeters=35.31 Cu Feet

TEMPERATURE
5/9 (°F − 32) = °C
212° Fahrenheit is equivalent to 100° Celsius
90° Fahrenheit is equivalent to 32.2° Celsius
32° Fahrenheit is equivalent to 0° Celsius
9/5 C° + 32 = F°

APPROXIMATE CONVERSION FACTORS

TO CHANGE	TO	MULTIPLY BY
Inches	Centimeters	2.540
Feet	Meters	0.305
Yards	Meters	0.914
Miles	Kilometers	1.609
Square Inches	Square Centimeters	6.451
Square Feet	Square Meters	0.093
Square Yards	Square Meters	0.836
Square Miles	Square Kilometers	2.590
Acres	Square Hectometers	0.405
Cubic Feet	Cubic Meters	0.028
Cubic Yards	Cubic Meters	0.765
Fluid Ounces	Milliliters	29.573
Pints	Liters	0.473
Quarts	Liters	0.946
Gallons	Liters	3.785
Ounces	Grams	28.349
Pounds	Kilograms	0.454
Short Tons	Metric Tons	0.907
Pound-Feet	Newton-Meters	1.356
Pounds/Sq Inch	Kilopascals	6.895
Miles per Gallon	Kilometers per Liter	0.425
Miles per Hour	Kilometers per Hour	1.609

TO CHANGE	TO	MULTIPLY BY
Centimeters	Inches	0.394
Meters	Feet	3.280
Meters	Yards	1.094
Kilometers	Miles	0.621
Sq Centimeters	Square Inches	0.155
Square Meters	Square Feet	10.764
Square Meters	Square Yards	1.196
Square Kilometers	Square Miles	0.386
Sq Hectometers	Acres	2.471
Cubic Meters	Cubic Feet	35.315
Cubic Meters	Cubic Yards	1.308
Milliliters	Fluid Ounces	0.034
Liters	Pints	2.113
Liters	Quarts	1.057
Liters	Gallons	0.264
Grams	Ounces	0.035
Kilograms	Pounds	2.205
Metric Tons	Short Tons	1.102
Newton-Meters	Pound-Feet	0.738
Kilopascals	Pounds per Sq Inch	0.145
Km per Liter	Miles per Gallon	2.354
Km per Hour	Miles per Hour	0.621

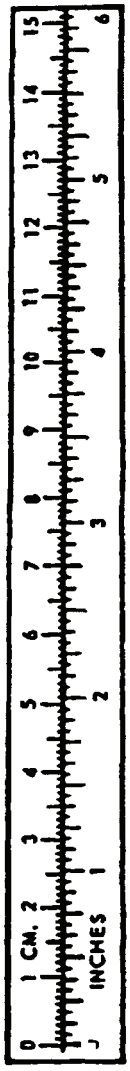

PIN: 084867-000