TECHNICAL MANUAL

UNIT, DIRECT SUPPORT, AND GENERAL SUPPORT REPAIR PARTS AND SPECIAL TOOLS LIST (INCLUDING DEPOT MAINTENANCE REPAIR PARTS) FOR TRACTOR, WHEELED, 4 X 4 DED SMALL EMPLACEMENT EXCAVATOR (SEE) NSN 2420-01-160-2754 (EIC: EDL)

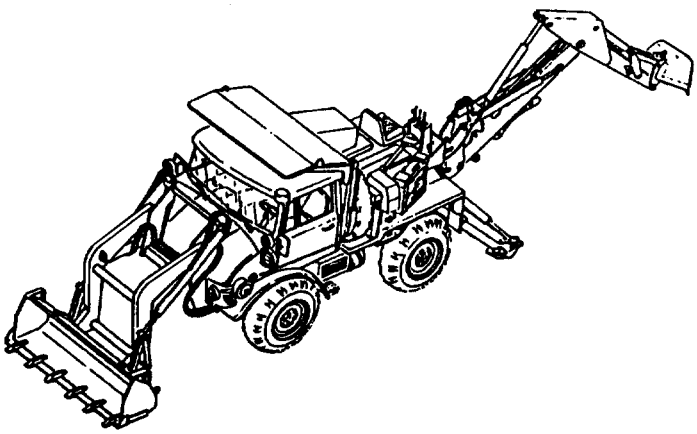

AND TRACTOR, WHEELED, 4 X 4 DED HIGH MOBILITY MATERIAL HANDLER (HMMH) NSN 2420-01-205-8636 (EIC: EED) Volume 1 of 2

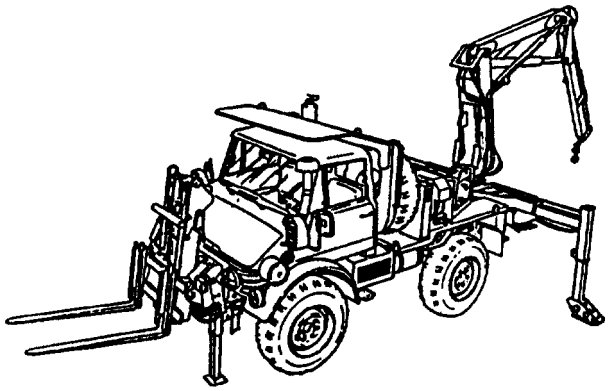

SUPERSEDURE NOTICE: This manual supersedes TM 5-2420-224-24P, dated 8 November 1993.

DISTRIBUTION STATEMENT A: Approved for public release; distribution is unlimited.

DESTRUCTION NOTICE: For unclassified, limited documents, destroy by any method that will prevent disclosure of contents or reconstruction of the document.

HEADQUARTERS, DEPARTMENT OF THE ARMY

30 NOVEMBER 2001

LIST OF EFFECTIVE PAGES/WORK PACKAGES

Date of issue for original manual is:

Original ..... 0 .....30 November 2001

TOTAL NUMBER OF PAGES FOR FRONT AND REAR MATTER IS 30 AND TOTAL NUMBER OF WORK PACKAGES IS 378, CONSISTING OF THE FOLLOWING:

Page/WP No.	*Change No.
VOLUME 1	
Title	0
A	0
B Blank	0
i - xiv	0
WP 0001 00 - 0196 00	0
VOLUME 2	
Title	0
A	0
B Blank	0
i - xiv	0
WP 0197 00 - 0378 00	0

*Zero in this column indicates an original page.

HEADQUARTERS,
DEPARTMENT OF THE ARMY,
Washington, D. C., 30 November 2001

TECHNICAL MANUAL

UNIT, DIRECT SUPPORT, AND GENERAL SUPPORT REPAIR PARTS AND SPECIAL TOOLS LIST (INCLUDING DEPOT MAINTENANCE REPAIR PARTS) FOR TRACTOR, WHEELED, 4 X 4 DED SMALL EMPLACEMENT EXCAVATOR (SEE) NSN 2420-01-160-2754 (EIC: EDL) AND TRACTOR, WHEELED, 4 X 4 DED HIGH MOBILITY MATERIAL HANDLER (HMMH) NSN 2420-01-205-8636 (EIC: EED)

Volume 1 of 2

REPORTING ERRORS AND RECOMMENDING IMPROVEMENTS

You can help improve this manual. If you find any mistakes or if you know of a way to improve the procedures, please let us know. Submit your DA Form 2028 (Recommended Changes to Publications and Blank Forms), through the internet, on the Army Electronic Product Support (AEPS) website. The internet address is http://aeps.ria.army.mil. If you need a password, scroll down and click on "ACCESS REQUEST FORM". The DA Form 2028 is located in the ONLINE FORMS PROCESSING section of the AEPS. Fill out the form and click on SUBMIT. Using this form on the AEPS will enable us to respond quicker to your comments and better manage the DA Form 2028 program. You may also mail, fax, or email your letter or DA Form 2028 direct to: AMSTA-LC-CI / TECH PUBS, TACOM-RI, 1 Rock Island Arsenal, Rock Island, IL 61299-7630. The email address is TACOM-TECH-PUBS@ria.army.mil. The fax number is DSN 793-0726 or Commercial (309) 782-0726.

DISTRIBUTION STATEMENT A: Approved for public release; distribution is unlimited.

DESTRUCTION NOTICE: For unclassified, limited documents, destroy by any method that will prevent disclosure of contents or reconstruction of the document.

---

*This manual supersedes TM 5-2420-224-24P dated 8 November 1993.

TABLE OF CONTENTS - VOLUME 1 OF 2

		WP Sequence No.
INTRODUCTION		0001 00
GROUP 01,0100	Engine, Engine Assembly – Diesel Engine 353-010-68-00, and Engine Accessory Bracket 406 240 01 01	0002 00
GROUP 0101	Crankcase, Block Cylinder Head – Diesel Engine Block 353 010 27 08	0003 00
	Block Crankcase and Diesel Cylinder Head 352 010 16 21	0004 00
GROUP 0102	Crankshaft – Engine Crankshaft 353 030 79 02, and Crankcase Assembly 352 030 65 02	0005 00

TABLE OF CONTENTS - VOLUME 1 OF 2 - Continued

		WP Sequence No.
GROUP 0103	Flywheel Assembly – Engine Flywheel 352 030 39 05	0006 00
GROUP 0104	Pistons, Connecting Rods – Internal Compression Piston 353 030 07 17, Internal Compression Piston 353 030 11 17, Internal Compression Piston 353 030 12 17, Internal Compression Piston 353 030 48 17, Internal Compression Piston 353 030 14 17, Internal Compression Piston 353 030 15 17, Piston Connecting Rod 366 030 21 20 30, Piston Connecting Rod 366 030 21 20 40, Piston Connecting Rod 366 030 21 20 50, Piston Connecting Rod 366 030 21 20 60, Piston Connecting Rod 366 030 21 20 70	0007 00
GROUP 0105	Valves, Camshafts, and Timing System –	
	Cylinder Head Cover	0008 00
	Mechanical Housing 366 010 01 33	0009 00
	Valves	0010 00
	Engine Rocker Arm352 050 06 34, and Rocker Arm Spindle 312 050 02 31	0011 00
	Vibration Dampener 362 070 00 45	0012 00
GROUP 0106	Engine Lubrication System –	
	Lubricating Cooler 362 180 09 65	0013 00
	Liquid Level Gauge Rod 352 010 24 72, and Oil Pan 352 010 68 13	0014 00
	Engine Oil Pump Assembly 364 180 01 01	0015 00
	Fluid Filter 67 607 63 146, Circuiting Valve Cover 67 607 31 991, Fluid Filter Element 352 180 03 09	0016 00
GROUP 0108	Manifolds – Exhaust Manifold 312 142 13 01	0017 00
GROUP 0121	Compressor Assembly (Including Compressor and Housing – Compressor Parts Kit 352 130 02 15, Compressor Cylinder Head 352 160 03 19, Piston Connecting Rod 352 130 02 16, Sleeve Cylinder 352 130 01 08, and Piston Assembly 352 130 01 17	0018 00
GROUP 02,0200	Clutch – Clutch Assembly	0019 00
GROUP 0202	Clutch Release Mechanism –	
	Clutch Levers and Shafts	0020 00
	Control Pedal 406 290 04 01	0021 00
GROUP 0207	Hydraulic Clutch System –	
	Hydraulic Cylinder Assembly 001 295 51 06	0022 00
	Brake Fluid Reservoir 0014319902	0023 00
	Clutch Slave Cylinder 263.207.00K014	0024 00
GROUP 03, 0301	Fuel System, Carburetor, Fuel Injector - Fuel Injector Nozzle 0432231887	0025 00
GROUP 0302	Fuel Pumps –	
	Metal Tube Assembly 352 070 37 33, Metal Tube Assembly 352 070 36 33, Metal Tube Assembly 352 070 35 33, Metal Tube Assembly 352 070 34 33, Metal Tube Assembly 352 070 33 33, Metal Tube Assembly 352 070 32 33	0026 00
	Cam Actuator Fuel Pump 440 003 996	0027 00

TABLE OF CONTENTS - VOLUME 1 OF 2 - Continued

		WP Sequence No.
GROUP 0302	Fuel Pumps – Continued	
	Metering Fuel Pump 0 400 876 188	0028 00
	Fuel Injection Pump Mounting Support and Camshaft	0029 00
	Access Cover 1 425 327 125, Remote Control Lever 1 422 013 039, and Remote Control Lever 1 422 003 106	0030 00
	Counterbalance Weight 1 428 194 021 and Related Parts	0031 00
	Valve Body 1 417 413 000, and Linear Rotor Roller 1 418 720 025	0032 00
GROUP 0304	Air Cleaner –	
	Intake Air Cleaner FSG09-0160	0033 00
	Air Cleaner Ducts	0034 00
GROUP 0306	Tank, Lines, Fittings, Headers – Engine Fuel Tank 919 470 00 01, Fuel Tank 419 470 72 01	0035 00
GROUP 0309	Fuel Filters –	
	Fluid Filter Assembly 001 092 09 01, Fluid Filter Assembly 149 200 00, and Fluid Filter Element 000 092 27 05	0036 00
	Fluid Filter 900 400 1-20	0037 00
GROUP 0311	Engine Starting Aids – Cold Start Aid	0038 00
GROUP 0312	Accelerator, Throttle or Choke Controls-	
	Accelerator Linkage and Remote Control Lever 312 300 2125	0039 00
	Front Throttle Control	0040 00
	Rear Throttle Control, Lines, and Fittings (SEE)	0041 00
	Rear Throttle Control, Lines, and Fittings (HMMH)	0042 00
GROUP 04, 0401	Exhaust System, Muffler, and Pipes - Exhaust Manifold Screen	0043 00
	Muffler and Pipes –	
	Muffler and Exhaust Pipe	0044 00
	Exhaust Spark Arrestor FCM07-0068	0045 00
GROUP 05,0501	Cooling System, Radiator, Evaporative Cooler, or Heat Exchanger –	
	Engine Coolant Radiator SD 02.147.000	0046 00
	Coolant Expansion Tank and Radiator Hoses	0047 00
GROUP 0503	Water Manifold, Headers, Thermostats and Housing Gaskets – Coolant Thermostat and Related Parts	0048 00
GROUP 0504	Water Pump – Cooling System Pump 353 200 37 01	0049 00
GROUP 0505	Fan Assembly – Fan Pulley and Belt	0050 00
GROUP 06,0601	Electrical System, Generator, Alternator – Alternator Mounting	0051 00
GROUP 0601	Generator, Alternator – Alternating Generator 0120439579	0052 00
GROUP 0602	Generator Regulator (Voltage) – Engine Generator Regulator 0 192 053 011	0053 00
GROUP 0603	Starting Motor –	
	Electrical Engine Starter and Attaching Hardware	0054 00
	Electrical Starter Motor	0055 00
GROUP 0606	Engine Safety Controls – Cutoff Switch (Electromagnetic Relay)	0056 00

TABLE OF CONTENTS - VOLUME 1 OF 2 - Continued

		WP Sequence No.
GROUP 0607	Instrument or Engine Control Panel –	
	Electronic Tachometer 333 430/009/001, Voltmeter 000 542 27 24, Light Assembly Indicators 4055-525	0057 00
	Liquid Quartz Indicator 003 540 95 47	0058 00
	Hydraulic Suspension Lockout Switches, Sending Units, and Indicator Lights	0059 00
GROUP 0608	Miscellaneous Items –	
	Auxiliary Switches	0060 00
	Fuse Box and Attaching Hardware	0061 00
	Engine Start Switch 0341001001	0062 00
	Control Tower	0063 00
GROUP 0609	Lights –	
	Headlight 899685, and Special Cable Assembly 419 540 80 38	0064 00
	Vehicular Lamp Unit 419 540 72 54, and Headlight Assembly 419 544 73 01	0065 00
	Parking Light E019521, Body Assembly 11639541, and Front Light Lens 11639546	0066 00
	Floodlight, Electric Rear 419 540 71 54, and Vehicle Utility Light D-01-6441-76	0067 00
	Electric Floodlight 419 540 71 54, and Vehicle Utility Light D-01-6441-76	0068 00
	Rear Light Box Assembly	0069 00
	Vehicular Rear Taillight 12376837, Body Assembly 12375838, and Light Lens 1237-5841	0070 00
	Dome Light	0071 00
GROUP 0610	Sending Units and Warning Switches –	
	Trailer Brake Pressure Switch, Brake Push Switch, Engine Start Switch and Hazard Relay	0072 00
	Engine Temperature Switch, Oil Pressure Sending Unit and Water Temperature Sending Unit	0073 00
	Backup Pressure Switch, Differential Lock Pressure Switch, PTO Switch and Interspeed Switch	0074 00
	Air Cleaner Push Switch, and Parking Brake Push Switch	0075 00
GROUP 0610	Sending Units and Warning Switches – Continued	
	Fuel Level Gauge	0076 00
	STE/ICE-R Pressure Switch, Resistor, Shunt, and Tachometer	0077 00
GROUP 0611	Horn, Siren –	
	Backup Alarm and Engine High Coolant Temperature/ Low Oil Pressure Alarm	0078 00
	Low Pressure Warning Buzzer	0079 00
	Horn and Switch	0080 00
GROUP 0612	Batteries, Storage (Wet or Dry) –	
	Batteries and Battery Box	0081 00
	Battery Cables	0082 00
GROUP 0613	Hull or Chassis Wiring Harness –	
	Electrical Installation (Front Chassis)	0083 00
	Electrical Installation (Instrument Panel)	0084 00
	Electrical Installation (Chassis)	0085 00

TABLE OF CONTENTS - VOLUME 1 OF 2 - Continued

		WP Sequence No.
GROUP 0613	Hull or Chassis Wiring Harness – Continued	
	Alternator Cable Assembly	0086 00
	Crane Mast Floodlight Warning Harness	0087 00
	Trailer Wiring Harness	0088 00
	Auxiliary Headlight, Front Composite Light, and Blackout Driving Light Wiring Harness	0089 00
	Dome Light Cable Assembly	0090 00
	Hazard Warning Light Wiring Harness, and Special Cable Assembly 389 540 2181	0091 00
	STE/ICE-R Wiring Harness	0092 00
	Forklift Wiring Harness (5-Pin)	0093 00
	Forklift Wiring Harness (3-Pin)	0094 00
	Forklift Power Cable	0095 00
	Electrical Lead	0096 00
	Cab Floor Separation Point to Hydraulic Suspension Lockout Wiring Harness	0097 00
	Forklift Connector to Fuse Holder Wiring Harness	0098 00
	Fuse Holder to Hydraulic Suspension Lockout/Rear Wall Wiring Harness	0099 00
	Cab Floor Separation Point to Rear Wall Wiring Harness	0100 00
	Frame Wiring Harness 419 540 00 37, Special Cable Assembly 380 540 21 81, and Electrical Plug Connector 380 540 22-81	0101 00
	Front Brake Disc Pad Wear Indicator Wiring Harness	0102 00
	Main Wiring Harness	0103 00
	Main Wiring Harness	0104 00
	Main Wiring Harness	0105 00
	Main Wiring Harness	0106 00
	Suppressor Filter Electrical Leads	0107 00
	Cap Plug Connector to Heater Panel Switch and Master Light Switch Wiring Harness	0108 00
	Chassis Wiring Harness	0109 00
GROUP 0615	Radio Interference Suppression – Suppressor Filter (Electrolytic Capacitor)	0110 00
GROUP 07, 0700	Transmission, Transmission Assembly (Main and/or Secondary) –	
	Mechanical Transmission 406 260 61 02	0111 00
	Transmission Housing 441 260 02 11, Transfer Transmission 406 260 25 12	0112 00
GROUP 0701	Transmission Shafts –	
	Power Take Off (PTO) Transmission 419 260 00 05, and Mechanical Housing 406 260 24 12	0113 00
	Front Axle PTO Gear	0114 00
	Shouldered Shaft 441 260 00 24	0115 00
	Counter Shaft	0116 00
	Input Shaft	0117 00
	Main Shaft and Bearing Unit Housing 406 260 09 17	0118 00
GROUP 0704	Transmission Top Cover Assembly –	
	Intermediate Speed Controls	0119 00
	Access Cover 406 260 53 14	0120 00

TABLE OF CONTENTS - VOLUME 1 OF 2 - Continued

		WP Sequence No.
GROUP 0705	Transmission Shifting Components –	
	Actuator Cylinder Assembly 1378-01-00	0121 00
	All Wheel Drive Selector	0122 00
	Transmission Shift Valves, Lines, and Fittings	0123 00
	Manual Control Lever 406 260 49 39, and Manual Control Lever 406 260 50 39	0124 00
	Differential Lock Lines and Fittings (Front)	0125 00
	Differential Lock Lines and Fittings (Rear)	0126 00
GROUP 09,0900	Propeller and Propeller Shafts –Propeller Shaft 416 337 21 10, and Thrust Ball Housing 416 330 14 14	0127 00
	Propeller Shafts – Propeller Shaft 416 337 22 10, and Thrust Ball Housing 416 330 13 14	0128 00
GROUP 10,1000	Front Axle, Front Axle Assembly – Front Axle Thrust Arms	0129 00
	Front Axle Assembly –	
	Front Axle Vent Lines and Fittings	0130 00
	Vehicle Axle Assembly 419 330 01 99	0131 00
	Right Vehicular Axle 416 330 73 29	0132 00
	Left Vehicular Axle 416 330 72 29	0133 00
GROUP 1002	Differential – Front Axle Differential and Mechanical Housing 416 335 04 01	0134 00
GROUP 1003	Planetary or Final Drive – Front Axle Final Drive	0135 00
GROUP 1004	Steering and Leaning Wheel Mechanism – Steering Knuckle	0136 00
GROUP 11,1100	Rear Axle, Rear Axle Assembly – Rear Axle Vent Lines and Fittings	0137 00
	Rear Axle Assembly –	
	Rear Axle Thrust Arms	0138 00
	Vehicular Axle 419 350 00 99	0139 00
	Rear Axle	0140 00
GROUP 1101	Housing, Beam, Housing Covers, Plugs, Seals, Etc. – Rear Axle and Differential Housings	0141 00
GROUP 1102	Differential – Rear Axle Differential and Mechanical Housing 416 335 04 01	0142 00
GROUP 1103	Planetary or Final Drive – Rear Axle Final Drive	0143 00
GROUP 12, 1201	Brakes, Hand Brakes – Parking Brake Handle, Pulley, and Cable	0144 00
	Hand Brakes –	
	Parking Brake Lever, Right Wire Rope Assembly 419 420 09 85, and Left Wire Rope Assembly 419 420 08 85	0145 00
GROUP 1202	Service Brakes (Front Brake) – Left Front Caliper Assembly 419 420 06 98, Right Front Caliper Assembly 419 420 07 98, Left Rear Caliper Assembly 419 420 01 98, Right Rear Caliper Assembly 419 420 09 98, and Hydraulic Bleeder Valve 3.3518-0013.2	0146 00
	Service Brakes (Rear Brake) – Left Hand Side Caliper Assembly 002 423 1198, Right Hand Side Caliper Assembly 13.2544-0011.2, and Hydraulic Bleeder Valve 3.3518-8000.2	0147 00

TABLE OF CONTENTS - VOLUME 1 OF 2 - Continued

		WP Sequence No.
GROUP 1204	Hydraulic Brake System –	
	Hydraulic Cylinder 004 430 47 01	0148 00
	Front Hydraulic Brake Lines and Fittings	0149 00
	Rear Hydraulic Brake Lines and Fittings	0150 00
	Proportional Brake Valve (ALB Valve) 001 431 78 12	0151 00
	Clutch Reservoir 000 431 83 02	0152 00
GROUP 1206	Mechanical Brake System – Brake Pedal 406 290 02 18	0153 00
GROUP 1208	Air Brake System –	
	Air Pressure Tanks	0154 00
	Air System Valves, Lines and Fittings	0155 00
	Brake Booster Assembly 000 431 74 14	0156 00
	Antifreeze Lines and Fittings	0157 00
	Fluid Regulating Valve (WABCO) 975 303 447 0	0158 00
	Fluid Regulating Valve (BOSCH) 0 481 039 202	0159 00
	Air Brake Evaporator (WABCO) 932 002 000 0	0160 00
	Air Brake Evaporator (KNORR) LS 4119-I/82388	0161 00
	Brake Air Lines and Fittings	0162 00
	Direct Linear Valve A571 002 0000	0163 00
	Brake Air Supply Lines and Fittings	0164 00
GROUP 1211	Trailer Brake Connections and Controls –	
	Trailer Air Supply Valve Lines and Fittings	0165 00
	Front Air Lines and Trailer Coupling	0166 00
	Rear Air Lines and Trailer Fittings	0167 00
	Direct Rotary Valve N-30103-BD, Lines and Fittings	0168 00
GROUP 03, 1311	Wheels and Tracks, Wheel Assembly – Wheel and Related Parts, Pneumatic Tire Valve MS51368-7	0169 00
	Wheel Assembly – Vehicular Wheel Hub 416 350 05 35 and Related Parts	0170 00
GROUP 1313	Tires – Vehicular Pneumatic Tire 12.5R20XLTPR12	0171 00
GROUP 14, 1401	Steering, Mechanical Steering Gear Assembly – Steering Tie Rod 416 330 00 03	0172 00
	Mechanical Steering Gear Assembly –	
	Steering Wheel and Shaft	0173 00
	Steering Drag Link 3.R1044	0174 00
GROUP 1407	Power Steering Gear Assembly -	
	Steering Gear 406 460 01 01, Access Cover 000 460 12 14, and Straight Shaft 000 462 46 12	0175 00
	Power Steering Gear Assembly	0176 00
GROUP 1410	Hydraulic Pump or Fluid Motor Assembly – Centrifugal Pump 001 466 11 01	0177 00
GROUP 1411	Hoses, Lines and Fittings – Power Steering Lines and Fittings	0178 00
GROUP 1413	Tanks, – Reservoirs Hydraulic Oil Tank 67 302 70 146	0179 00
GROUP 15, 1501	Frame Towing Attachments and Drawbars, Frame Assembly-Chassis Frame	0180 00
	Frame Assembly -	
	Vehicular Bracket C21452, and Structure Frame Section 419 610 75 03	0181 00
	Front Loader/Forklift Attachment Bracket	0182 00
	Left Platform	0183 00
	Left Platform Control Panel Guard	0184 00
	Right Platform	0185 00

TABLE OF CONTENTS - VOLUME 1 OF 2 - Continued

		WP Sequence No.
GROUP 1503	Pintles and Towing Attachments – Towing Pintle Assembly MS51118-1	0186 00
	Spare Wheel Carrier and Tire Lock – Spare Tire Mount	0187 00
GROUP 16, 1601	Springs and Shock Absorbers, Springs – Front Springs (Left Front Illustrated)	0188 00
	Springs –	
	Rear Springs (Left Rear Illustrated)	0189 00
GROUP 1604	Shock Absorbers Equipment –	
	Front Directional Shock Absorber 005-323-50-2600 (Left Front Illustrated)	0190 00
	Directional Shock Absorber 004 323 96 00 (Left Rear Illustrated)	0191 00
GROUP 1605	Torque, Radius, and Stabilizer Rods –	
	Control Arms (Front and Rear)	0192 00
	Front Axle Torsion Bar and Mounting	0193 00
	Rear Axle Torsion Bar and Mounting	0194 00
National Stock Number Index		0195 00
Part Number Index		0196 00

REAR MATTER

TABLE OF CONTENTS - VOLUME 2 OF 2

GROUP 18, 1801	Body, Cab and Hood Assemblies –	
	Front Plate	0197 00
	Roll Over Protection (ROPS) and Falling Object Protection (FOPS)	0198 00
	Vehicular Cab 419 600 01 05 and Engine Compartment Hood 406 880 54 56	0199 00
	Vehicular Door Pillar 421 620 03 13, and Left Pillar Assembly 406 620 02 13	0200 00
	Left Vehicular Door 419 720 00 01, Right Vehicular Door 419 720 01 01 (Left Illustrated)	0201 00
GROUP 18, 1801	Body, Cab and Hood Assemblies - Continued	
	Door Handle, Latch, and Window Regulator (Left Door Illustrated)	0202 00
	Hydraulic Suspension Lockout Mounting Bracket	0203 00
	Backhoe Control Tower	0204 00
GROUP 1802	Fenders, Running Boards with Mounting and Attaching Parts, Outriggers, Windshield, Glass, Etc. –	
	Front Fenders and Splash Guards	0205 00
	Rear Splash Guards	0206 00
	Vehicular Left Window 406 720 02 55, Vehicular Right Window 406 720 03 55 (Left Door Illustrated)	0207 00
	Front and Rear Windows	0208 00
GROUP 1804	Drain Valves, Drain Plugs, Etc – Cab Drain Plug	0209 00
GROUP 1805	Floors, Subfloors, and Related Components –	
	Front Cab Mounting	0210 00
	Rear Cab Mounting	0211 00
	Access Cover 419 683 01 15	0212 00

TABLE OF CONTENTS - VOLUME 2 OF 2

		WP Sequence No.
GROUP 1806	Upholstery Seats and Carpets –	
	Backhoe Adjustable Seat	0213 00
	Vehicular Seat 416 910 51 01, Vehicular Back Seat Cushion 416 910 00 33, Vehicular Seat Cushion 416 910 01 31, and Vehicular Seat 421 910 06 20	0214 00
	Vehicular Seat 419 910 51 03, Vehicular Seat Back Cushion 416 910 00 33, and Vehicular Seat Cushion 416 910 00 31	0215 00
	Seat Belts	0216 00
	Floor Linings	0217 00
	Sun Visor and Grip Handles	0218 00
GROUP 1808	Stowage Racks, Boxes, Straps, Carrying Cases, Cable Reels, Hose Reels, Etc. –	
	Accessories Stowage Box 962948B3, Access Box 419 580 71 05, Access Box Forward Door 419 580 71 20 and Access Door 419 580 70 20	0219 00
	Stowage Accessories Box 419 580 77 05, and Stowage Box Lid 419 580 73 20	0220 00
	Hose Reel Assembly 419 560 72 26, and Hose Reel N-617-19-20C.SR	0221 00
GROUP 22, 2202	Body, Chassis or Hull Accessory Item –	
	Rear Mirror Assembly 419 810 70 16 (Left Illustrated)	0222 00
	Accessory Items –	
	Windshield Wiper 000 820 5345, Motor, and Washer	0223 00
	Cab Heater Ducts and Lines	0224 00
	Vehicular Heater 416 830 03 00, Direct Current Motor 000 835 61 02, and Vehicular Radiator 001 835 05 01	0225 00
GROUP 2210	Data Plates and Instruction Holders –	
	Cab Interior Data Plates	0226 00
	Engine, Loader, and Impact Wrench Data Plates	0227 00
	Cab Exterior, Oil Cooler, and Backhoe Travel Lock Data Plate	0228 00
	Crane Data Plates	0229 00
	Forklift Data Plates	0230 00
	Backhoe Data Plates	0231 00
GROUP 24, 2401	Hydraulic Lift Components, Hydraulic Pump –	
	Front Hydraulic Pump	0232 00
	Hydraulic Pump –	
	Rear Hydraulic Pump	0233 00
	Hydraulic Suspension Lockout Motor and Pump	0234 00
	Crane Hydraulic Motor	0235 00
GROUP 2402	Hydraulic Control Valve –	
	Front Loader/Forklift Control Valve	0236 00
	Solenoid-Operated Boom Section Valve	0237 00
	Boom Control Section Valve	0238 00
	Low Body Section Valve	0239 00
	Solenoid Operated Hand Tool Section Valve	0240 00
	Front Loader/Forklift Relief Valve Lines and Fittings	0241 00
	Tilt and Latch Control Valve	0242 00
	Tilt and Latch Control Valve	0243 00
	Control Valve Mounting Plate	0244 00

TABLE OF CONTENTS - VOLUME 2 OF 2 - Continued

		WP Sequence No.
GROUP 2402	Hydraulic Control Valve – Continued	
	Backhoe Control Valve	0245 00
	Boom Section Valve	0246 00
	Dipper and Bucket Section Valve	0247 00
	Swing Section Valve	0248 00
	Backhoe Stabilizer Control Valve Assembly	0249 00
	Backhoe Swing Cylinder Relief Valve	0250 00
	Crane Valve Bank	0251 00
	Forklift Valve	0252 00
	Crane Lock Holding Valve	0253 00
	Crane 25 GPM Counterbalance Holding Valve	0254 00
	Crane 10 GPM Counterbalance Holding Valve	0255 00
	Crane Manual Relief Valve	0256 00
GROUP 2403	Hydraulic Control Levers and Linkage –	
	Front Loader/Forklift Hydraulic Valve Mounting	0257 00
	Backhoe Controls and Linkage	0258 00
	Front Loader/Forklift Control Valve Lever Controls (SEE)	0259 00
	Front Loader/Forklift Control Valve Lever Controls (HMMH)	0260 00
	Crane Controls and Linkages	0261 00
GROUP 2405	Hydraulic Mast Column –	
	Forklift Mounting Bracket	0262 00
	Forklift Outer Upright Mast Assembly	0263 00
	Forklift Inner Upright Mast Assembly	0264 00
	Forklift Rail Upright Mast Assembly	0265 00
	Forklift Carriage Assembly	0266 00
	Forklift Crosshead Assembly	0267 00
	Forklift Carriage Chains	0268 00
	Forklift Travel Lock	0269 00
	Forklift Front Outriggers	0270 00
GROUP 2406	Hydraulic Lines and Fittings –	
	Hydraulic Quick Disconnect Coupling (Female)	0271 00
	Hydraulic Quick Disconnect Coupling (Male)	0272 00
	Hose Reeving Group	0273 00
	Front Loader Hydraulic Lines and Fittings	0274 00
	Front Loader Hydraulic Lines and Fittings (Left Boom Cylinder)	0275 00
	Front Loader Hydraulic Lines and Fittings (Right Boom Cylinder)	0276 00
	Front Loader Hydraulic Lines and Fittings (Left Rollback Cylinder)	0277 00
	Forklift Hydraulic Lines and Fittings (Upright Mast Assembly)	0278 00
	Front Loader Hydraulic Lines and Fittings (Forklift Control Valve)	0279 00
	Forklift Hydraulic Lines and Fittings	0280 00
	Front Hydraulic Pump Lines and Fittings	0281 00
	Rear Hydraulic Pump Lines and Fittings	0282 00
	Front Hydraulic System Lines and Fittings	0283 00
	Rear Hydraulic System Lines and Fittings	0284 00

TABLE OF CONTENTS - VOLUME 2 OF 2 - Continued

		WP Sequence No.
GROUP 2406	Hydraulic Lines and Fittings – Continued	
	Backhoe/Crane Tilt and Latch Cylinders Hydraulic Lines and Fittings	0285 00
	Tube to Boss Elbow MS51527A8, Tube to Boss Elbow MS51527A-16, Tube Straight Adapter MS51525A8-10, Tube to Boss Elbow 218-5123, Tube to Boss Elbow MS51528A12, and Tube to Boss Elbow 218-5124	0286 00
	Backhoe Swing Cylinder Hydraulic Lines and Fittings	0287 00
	Backhoe Boom Cylinder Hydraulic Lines and Fittings	0288 00
	Backhoe Dipper Cylinder Hydraulic Lines and Fittings	0289 00
	Backhoe Bucket Cylinder Hydraulic Lines and Fittings	0290 00
	Crane Supply and Return Lines and Fittings	0291 00
	Crane Turntable Motor Lines and Fittings	0292 00
	Crane External End Extension Cylinder Hydraulic Lines and Fittings	0293 00
	Crane Inner Boom Lift Cylinder Hydraulic Lines and Fittings	0294 00
	Crane Mast Locking Cylinder Hydraulic Lines and Fittings	0295 00
	Crane Outer Boom Cylinder Hydraulic Lines and Fittings	0296 00
GROUP 2406	Hydraulic Lines and Fittings - Continued	
	Crane Horizontal Outrigger Cylinder Hydraulic Lines and Fittings	0297 00
	Crane Vertical Outrigger Cylinder Hydraulic Lines and Fittings	0298 00
	Hydraulic Suspension Lockout Lines and Fittings, and Fluid Filter 000 815 11 69	0299 00
	Hydraulic Suspension Lockout Lines and Fittings	0300 00
GROUP 2407	Hydraulic Cylinders –	
	Loader Bucket Rollback Cylinder Assembly 627-01042-30M	0301 00
	Loader Boom Cylinder Assembly 627-01041-30M	0302 00
	Backhoe Bucket Cylinder Assembly	0303 00
	Backhoe Boom Cylinder Assembly	0304 00
	Backhoe Swing Cylinder Assembly	0305 00
	Backhoe Dipper Cylinder Assembly	0306 00
	Backhoe Stabilizer Cylinder Assembly	0307 00
	Backhoe/Crane Latch Cylinders	0308 00
	Backhoe/Crane Tilt Cylinder (J.I. Case)	0309 00
	Backhoe/Crane Tilt Cylinder (Aeroquip)	0310 00
	Forklift Tilt Cylinder Assembly	0311 00
	Forklift Rotator Cylinder Assembly	0312 00
	Forklift Lift Cylinder Assembly	0313 00
	Crane External End Extension Cylinder Assembly	0314 00
	Crane Inner Boom Lift Cylinder Assembly	0315 00
	Crane Mast Locking Cylinder Assembly	0316 00
	Crane Outer Boom Cylinder Assembly	0317 00
	Crane Horizontal Outrigger Cylinder Assembly	0318 00
	Crane Vertical Outrigger Cylinder Assembly	0319 00

TABLE OF CONTENTS - VOLUME 2 OF 2 - Continued

		WP Sequence No.
GROUP 2408	Liquid Tanks or Reservoirs –	
	Hydraulic Tank Assembly (21.0 Gallon)	0320 00
	Hydraulic Tank Assembly (11.0 Gallon)	0321 00
	Hydraulic Oil Cooler	0322 00
GROUP 47, 4701	Gauges (Non-Electrical), Weighing and Measuring Devices – Instruments (Speed and Distance) – Speedometer and STE/ICE-R Tachometer Drive Shafts	0323 00
GROUP 4702	Gauges, Mountings, Lines and Fittings – Inclinometer	0324 00
GROUP 4703	Hourmeter – Hourmeter	0325 00
GROUP 70, 7005	Machine Tools and Related Equipment, Drills, Power Wrenches (Other Than Pneumatic) –	
	Hammer Drill	0326 00
	Hammer Drill	0327 00
	Drills, Power Wrenches (Other Than Pneumatic) – Pneumatic Impact Wrench IW12140V, Impact Mechanism 08021, Pile Drive Hammer Case 08071, Hydraulic Parts Kit 08068, Spur Gear 07989, and Hose/Coupler Assembly 10293	0328 00
GROUP 7006	Power Hammers (Other Than Pneumatic) – Paving Breaker VR67130M, Manual Control Handle 06185, Hydraulic Cylinder 04060, Pneumatic Tank Valve AN6287-1, and Breaker Foot Assembly 04598	0329 00
GROUP 7008	Power Saws (Other Than Pneumatic) –	
	Chain Saw CS06120M, and Handle Assembly 07693	0330 00
	Chain Saw and Mechanical Assembly Housing 07652	0331 00
GROUP 74, 7412	Crane, Shovels, and Earth Moving Equipment Components, – Backhoe Boom and Crane Boom D132948	0332 00
	Backhoe Attachments –	
	Rig Hoe Bucket Connecting Link D126492, Rig Connecting Link D89620, and Backhoe Dipper Assembly D140280	0333 00
	Scoop Type L Scoop Bucket 104327, and Scoop Type L Ripper Bucket 020-185	0334 00
	Control Assembly 4327-68IN-30024-1-1, Back Latch Assembly 419 550 73 75, Back Latch Assembly 419 550 77 40	0335 00
	Backhoe Boom Latch	0336 00
	Swing Tower Assembly D136868	0337 00
	Stabilizer Leg Assembly D94215 and Swing Beam D94401	0338 00
GROUP 7417	Hoists –	
	Mast Assembly 41706064, Crane Boom 52706059, and Crane Mast Base 52706039	0339 00
	Inner Boom Assembly 41907454 and Crane Boom 52707453	0340 00
	Boom Assembly 41707476 and Crane Boom 52707470	0341 00
	Boom Extension Assembly 41707473	0342 00
	Base/Outriggers Assembly 41706065	0343 00
	Base/Outrigger Assembly41706065 and Rotation Lock Lever Linkage	0344 00

TABLE OF CONTENTS - VOLUME 2 OF 2 - Continued

		WP Sequence No.
GROUP 7417	Hoists – Continued	
	Base/Outrigger Assembly 41706065, and Outrigger Base Assembly 52706035	0345 00
	Crane Travel Lock	0346 00
GROUP 7437	Loader Bucket Assembly or Forklift – Loader Frame and Type L Scoop Bucket 677-01739-40	0347 00
GROUP 2604	Tools and Test Equipment, Special Tools – Unit Special Tools, General Mechanic's Tool Kit 419 000 74 58, and Cab Tilting Device 419 580 05 51 00	0348 00
	Special Tools –	
	Unit Special Tools, General Mechanic's Tool Kit 419 000 74 58, and Vehicle Support Stand 419 580 70 18	0349 00
	Direct Support Special Tools, General Mechanic's Tool Kit 419 000 75 58 (Figure 1)	0350 00
	Direct Support Special Tools, General Mechanic's Tool Kit 419 000 75 58 (Figure 2)	0351 00
	Direct Support Special Tools, General Mechanic's Tool Kit 419 000 75 58 (Figure 3)	0352 00
	Direct Support Special Tools, General Mechanic's Tool Kit 419 000 75 58 (Figure 4)	0353 00
	Direct Support Special Tools, General Mechanic's Tool Kit 419 000 75 58 and Universal Puller Kit 11275	0354 00
	General Support Special Tools, General Mechanic's Tool Kit 419 000 76 58 (Figure 1)	0355 00
	General Support Special Tools, General Mechanic's Tool Kit 419 000 76 58 (Figure 2)	0356 00
	General Support Special Tools, General Mechanic's Tool Kit 419 000 76 58 (Figure 3)	0357 00
	General Support Special Tools, General Mechanic's Tool Kit 419 000 76 58 (Figure 4)	0358 00
	General Support Special Tools, General Mechanic's Tool Kit 419 000 76 58 (Figure 5)	0359 00
	Unit Special Tools, General Mechanic's Tool Kit 419 000 81 58, Cooling System Detector 001 589 83 21 00, and Cab Tilting Service 419 580 05 51 00	0360 00
	Unit Special Tools, General Mechanic's Tool Kit 419 000 81 58 and Vehicle Support Stand 419 580 70 18	0361 00
	Unit Special Tools General Mechanic's Tool Kit 419 000 82 58, and Vehicle Support Stand 419 580 70 18	0362 00
	Direct Support Special Tools, General Mechanic's Tool Kit 419 000 83 58 (Figure 1)	0363 00
	Direct Support Special Tools, General Mechanic's Tool Kit 419 000 83 58 (Figure 2)	0364 00
	Direct Support Special Tools, General Mechanic's Tool Kit 419 000 83 58 (Figure 3)	0365 00
	Direct Support Special Tools, General Mechanic's Tool Kit 419 000 84 58	0366 00

TABLE OF CONTENTS - VOLUME 2 OF 2 - Continued

WP Sequence No.

GROUP 2604 Tools and Test Equipment, Special Tools – Continued
Direct Support Special Tools, General Mechanic's Tool Kit 419 000 84 58 and Universal Puller Kit 11275 ..... 0367 00
Direct Support Special Tools, General Mechanic's Tool Kit 419 000 85 58, Spanner Wrench 3Y140510, and Spanner Wrench 678602 ..... 0368 00
Direct Support Special Tools, General Mechanic's Tool Kit 419 000 85 58 and Bushing Inserter and Remover 92091200 ..... 0369 00
General Support Special Tools, General Mechanic's Tool Kit 419 000 86 58 (Figure 1) 0370 00
General Support Special Tools, General Mechanic's Tool Kit 419 000 86 58 (Figure 2) 0371 00
General Support Special Tools, General Mechanic's Tool Kit 419 000 86 58 (Figure 3) 0372 00
General Support Special Tools, General Mechanic's Tool Kit 419 000 86 58 (Figure 4) 0373 00
General Support Special Tools, General Mechanic's Tool Kit 419 000 86 58 (Figure 5) 0374 00
GROUP 94.9401 Repair Kits 0375 00
GROUP 95, 9501 Bulk Kits 0376 00

National Stock Number Index 0377 00
Part Number Index 0378 00

REAR MATTER

UNIT, DIRECT SUPPORT AND GENERAL SUPPORT MAINTENANCE

SMALL EMPLACEMENT EXCAVATOR (SEE) AND HIGH MOBILITY MATERIAL HANDLER (HMMH)

INTRODUCTION

SCOPE

This RPSTL lists and authorizes spares and repair parts; special tools; special test, measurement, and diagnostic equipment (TMDE); and other special support equipment required for performance of Unit, Direct Support and General Support Maintenance of the SEE/HMMH. It authorizes the requisitioning, issue, and disposition of spares, repair parts and special tools as indicated by the source, maintenance and recoverability (SMR) codes.

GENERAL

In addition to the Introduction work package, this RPSTL is divided into the following work packages:

1. Repair Parts List Work Packages. Work packages containing lists of spares and repair parts authorized by this RPSTL for use in the performance of maintenance. These work packages also includes parts which must be removed for replacement of the authorized parts. Parts lists are composed of functional groups in ascending alphanumeric sequence, with the parts in each group listed in ascending figure and item number sequence. Sending units, brackets, filters, and bolts are listed with the component on which they mount. Bulk materials are listed by item name in FIG. BULK at the end of the work packages. Repair parts kits are listed separately in their own functional group and work package. Repair parts for repairable special tools are also listed in a separate work package. Items listed are shown on the associated illustrations.

2 Special Tools List Work Packages. Work packages containing lists of special tools, special TMDE, and special support equipment authorized by this RPSTL (as indicated by Basis of Issue (BOI) information in DESCRIPTION AND USABLE ON CODE (UOC) column). Tools that are components of common tool sets and/or Class VII are not listed.

3 Cross-reference Indexes Work Packages. There are two cross reference indexes work packages in this RPSTL: the National Stock Number (NSN) Index work package and the Part Number (P/N) Index work package. The National Stock Number Index work package refers you to the figure and item number. The Part Number Index work package refers you to the figure and item number.

EXPLANATION OF COLUMNS IN THE REPAIR PARTS LIST AND SPECIAL TOOLS LIST WORK PACKAGES

ITEM NO. (Column (1)). Indicates the number used to identify items called out in the illustration.

EXPLANATION OF COLUMNS IN THE REPAIR PARTS LIST AND SPECIAL TOOLS LIST WORK PACKAGES – Continued

SMR CODE (Column (2)). The SMR code containing supply/requisitioning information, maintenance level authorization criteria, and disposition instruction, as shown in the following breakout:

Source Code	**Maintenance Code**		**Recoverability Code**
xx	xx		x
1st two positions: How to get an item.	3rd position: Who can install, replace, or use the item.	4th position: Who can do complete repair* on the item.	5th position: Who determines disposition action on unserviceable items.

*Complete Repair: Maintenance capacity, capability, and authority to perform all corrective maintenance tasks of the "Repair" function in a use/user environment in order to restore serviceability to a failed item.

Source Code. The source code tells you how you get an item needed for maintenance, repair, or overhaul of an end item/equipment. Explanations of source codes follow:

Source Code	**Application/Explanation**
PA PB PC PD PE PF PG	Stock items; use the applicable NSN to requisition/request items with these source codes. They are authorized to the level indicated by the code entered in the 3rd position of the SMR code. **NOTE** Items coded PC are subject to deterioration.
KD KF KB	Items with these codes are not to be requested/requisitioned individually. They are part of a kit which is authorized to the maintenance level indicated in the 3rd position of the SMR code. The complete kit must be requisitioned and applied.

Source Code	Application/Explanation
MO-Made at unit/ AVUM level MF-Made at DS/ AVIM level MH-Made at GS level ML-Made at SRA MD-Made at depot	Items with these codes are not to be requisitioned/requested individually. They must be made from bulk material which is identified by the P/N in the DESCRIPTION AND USABLE ON CODE (UOC) column and listed in the bulk material group work package of the RPSTL. If the item is authorized to you by the 3rd position code of the SMR code, but the source code indicates it is made at higher level, order the item from the higher level of maintenance.
AO-Assembled by unit/AVUM level AF-Assembled by DS/AVIM level AH-Assembled by GS level AL-Assembled by SRA AD-Assembled by depot	Items with these codes are not to be requested/requisitioned individually. The parts that make up the assembled item must be requisitioned or fabricated and assembled at the level of maintenance indicated by the source code. If the 3rd position of the SMR code authorizes you to replace the item, but the source code indicates the item is assembled at a higher level, order the item from the higher level of maintenance.
XA	Do not requisition an XA-coded item. Order the next higher assembly. (Refer to NOTE below.)
XB	If an item is not available from salvage, order it using the CAGEC and P/N.
XC	Installation drawings, diagrams, instruction sheets, field service drawings; identified by manufacturer's P/N.
XD	Item is not stocked. Order an XD-coded item through normal supply channels using the CAGEC and P/N given, if no NSN is available.

NOTE

Cannibalization or controlled exchange, when authorized, may be used as a source of supply for items with the above source codes except for those items source coded "XA" or those aircraft support items restricted by requirements of AR 750-1.

EXPLANATION OF COLUMNS IN THE REPAIR PARTS LIST AND SPECIAL TOOLS LIST WORK PACKAGES – Continued

Maintenance Code. Maintenance codes tell you the level(s) of maintenance authorized to use and repair support items. The maintenance codes are entered in the third and fourth positions of the SMR code as follows:

Third Position. The maintenance code entered in the third position tells you the lowest maintenance level authorized to remove, replace, and use an item. The maintenance code entered in the third position will indicate authorization to the following levels of maintenance.

Maintenance Code		Application/Explanation
C	—	Crew or operator maintenance done within unit/AVUM maintenance.
O	—	Unit level/AVUM maintenance can remove, replace, and use the item.
F	—	Direct support/AVIM maintenance can remove, replace, and use the item.
H	—	General support maintenance can remove, replace, and use the item.
L	—	Specialized repair activity can remove, replace, and use the item.
D	—	Depot can remove, replace, and use the item.

Fourth Position. The maintenance code entered in the fourth position tells you whether or not the item is to be repaired and identifies the lowest maintenance level with the capability to do complete repair (perform all authorized repair functions).

NOTE

Some limited repair may be done on the item at a lower level of maintenance, if authorized by the Maintenance Allocation Chart (MAC) and SMR codes.

Maintenance Code		Application/Explanation
O	—	Unit/AVUM is the lowest level that can do complete repair of the item.
F	—	Direct support/AVIM is the lowest level that can do complete repair of the item.
H	—	General support is the lowest level that can do complete repair of the item.
L	—	Specialized repair activity is the lowest level that can do complete repair of the item.
D	—	Depot is the lowest level that can do complete repair of the item.
Z	—	Nonreparable. No repair is authorized.
B	—	No repair is authorized. No parts or special tools are authorized for maintenance of B-coded item. However, the item may be reconditioned by adjusting, lubricating, etc., at the user level.

Recoverability Code. Recoverability codes are assigned to items to indicate the disposition action on unserviceable items. The recoverability code is shown in the fifth position of the SMR code as follows:

Recoverability Code		Application/Explanation
Z	—	Nonreparable item. When unserviceable, condemn and dispose of the item at the level of maintenance shown in the third position of the SMR code.
O	—	Reparable item. When uneconomically reparable, condemn and dispose of the item at the unit level.
F	—	Reparable item. When uneconomically reparable, condemn and dispose of the item at the direct support level.
H	—	Reparable item. When uneconomically reparable, condemn and dispose of the item at the general support level.
D	—	Reparable item. When beyond lower level repair capability, return to depot. Condemnation and disposal of item are not authorized below depot level.
L	—	Reparable item. Condemnation and disposal not authorized below Specialized Repair Activity (SRA).
A	—	Item requires special handling or condemnation procedures because of specific reasons (such as precious metal content, high dollar value, critical material, or hazardous material). Refer to appropriate manuals/directives for specific instructions.

NSN (Column (3)). The NSN for the item is listed in this column.

CAGEC (Column (4)). The Commercial and Government Entity Code (CAGEC) is a five-digit code which is used to identify the manufacturer, distributor, or Government agency/activity that supplies the item.

PART NUMBER (Column (5)). Indicates the primary number used by the manufacturer (individual, company, firm, corporation, or Government activity), which controls the design and characteristics of the item by means of its engineering drawings, specifications, standards, and inspection requirements to identify an item or range of items.

NOTE

When you use an NSN to requisition an item, the item you receive may have a different P/N from the number listed.

DESCRIPTION AND USABLE ON CODE (UOC) (Column (6)). This column includes the following information:

1. The federal item name, and, when required, a minimum description to identify the item.

2. P/Ns of bulk materials are referenced in this column in the line entry to be manufactured or fabricated.

EXPLANATION OF COLUMNS IN THE REPAIR PARTS LIST AND SPECIAL TOOLS LIST WORK PACKAGES – Continued

3. Hardness Critical Item (HCI). A support item that provides the equipment with special protection from electromagnetic pulse (EMP) damage during a nuclear attack.

4. The statement END OF FIGURE appears just below the last item description in column (6) for a given figure in both the repair parts list and special tools list work packages.

QTY (Column (7)). The QTY (quantity per figure) column indicates the quantity of the item used in the breakout shown on the illustration/figure, which is prepared for a functional group, subfunctional group, or an assembly. A "V" appearing in this column instead of a quantity indicates that the quantity is variable and quantity may change from application to application.

EXPLANATION OF CROSS-REFERENCE INDEXES WORK PACKAGES FORMAT AND COLUMNS

1. National Stock Number (NSN) Index Work Package.

STOCK NUMBER Column. This column lists the NSN in National item identification number (NIIN) sequence. The NIIN consists of the last nine digits of the NSN.

NSN
(e.g., 5385-01-574-1476)
NIIN

When using this column to locate an item, ignore the first four digits of the NSN. However, the complete NSN should be used when ordering items by stock number.

FIG. Column. This column lists the number of the figure where the item is identified/located. The figures are in numerical order in the repair parts list and special tools list work packages.

ITEM Column. The item number identifies the item associated with the figure listed in the adjacent FIG. column. This item is also identified by the NSN listen on the same line.

2. Part Number (P/N) Index Work Package. P/Ns in this index are listed in ascending alphanumeric sequence (vertical arrangement of letter and number combinations which places the first letter or digit of each group in order A through Z, followed by the numbers 0 through 9 and each following letter or digit in like order).

PART NUMBER Column. Indicates the P/N assigned to the item.

FIG. Column. This column lists the number of the figure where the item is identified/located in the repair parts list and special tools list work packages.

ITEM Column. The item number is the number assigned to the item as it appears in the figure referenced in the adjacent figure number column.

SPECIAL INFORMATION

UOC. The UOC appears in the lower left corner of the Description Column heading. Usable on codes are shown as "UOC:..." in the Description Column (justified left) on the first line under the applicable item/nomenclature. Uncoded items are applicable to all models. Identification of the UOCs used in the RPSTL are:

Code	Used On
GE1	Model SEE
GE4	Model HMMH

Fabrication Instructions. Bulk materials required to manufacture items are listed in the bulk material functional group of this RPSTL. Part numbers for bulk material are also referenced in the Description Column of the line item entry for the item to be manufactured/fabricated. Detailed fabrication instructions for items source coded to be manufactured or fabricated are found in TM 5-2420-224-24P.

Index Numbers. Items which have the word BULK in the figure column will have an index number shown in the item number column. This index number is a cross-reference between the NSN / P/N index work packages and the bulk material list in the repair parts list work package.

ASSOCIATED PUBLICATIONS. The publications listed below pertain to the Tractor, Wheeled, 4 x 4 DED, Small Emplacement Excavator (SEE), and Tractor, Wheeled, 4 x 4 DED, High Mobility Material Handler (HMMH), and their components.

PUBLICATION	SHORT TITLE
TM 5-2420-224-10	Operator's Manual
TM 5-2420-224-10-HR	Hand Receipt
L05-2420-224-12	Lubrication Order
TM5-2420-224-20	Unit Maintenance Manual
TM5-2420-224-34	Direct and General Support Manual
DMWR5-2420-224	Depot Maintenance Work Requirements

HOW TO LOCATE REPAIR PARTS

1. When NSNs or P/Ns Are Not Known.

First. Using the table of contents, determine the assembly group to which the item belongs. This is necessary since figures are prepared for assembly groups and subassembly groups, and lists are divided into the same groups.

Second. Find the figure covering the functional group or subfunctional group to which the item belongs.

Third. Identify the item on the figure and note the number(s).

Fourth. Look in the repair parts list work packages for the figure and item numbers. The NSNs and part numbers are on the same line as the associated item numbers.

2. When NSN Is Known.

HOW TO LOCATE REPAIR PARTS – Continued

First. If you have the NSN, look in the STOCK NUMBER column of the NSN index work package. The NSN is arranged in NIIN sequence. Note the figure and item number next to the NSN.

Second. Turn to the figure and locate the item number. Verify that the item is the one you are looking for.

3. When P/N Is Known.

First. If you have the P/N and not the NSN, look in the PART NUMBER column of the P/N index work package. Identify the figure and item number.

Second. Look up the item on the figure in the applicable repair parts list work package.

UNIT, DIRECT SUPPORT AND GENERAL SUPPORT MAINTENANCE

SMALL EMPLACEMENT EXCAVATOR (SEE) AND HIGH MOBILITY MATERIAL HANDLER (HMMH)

ENGINE, ENGINE ASSEMBLY – DIESEL ENGINE 353-010-68-00 AND ENGINE ACCESSORY BRACKET 406 240 01 01

REPAIR PARTS LIST

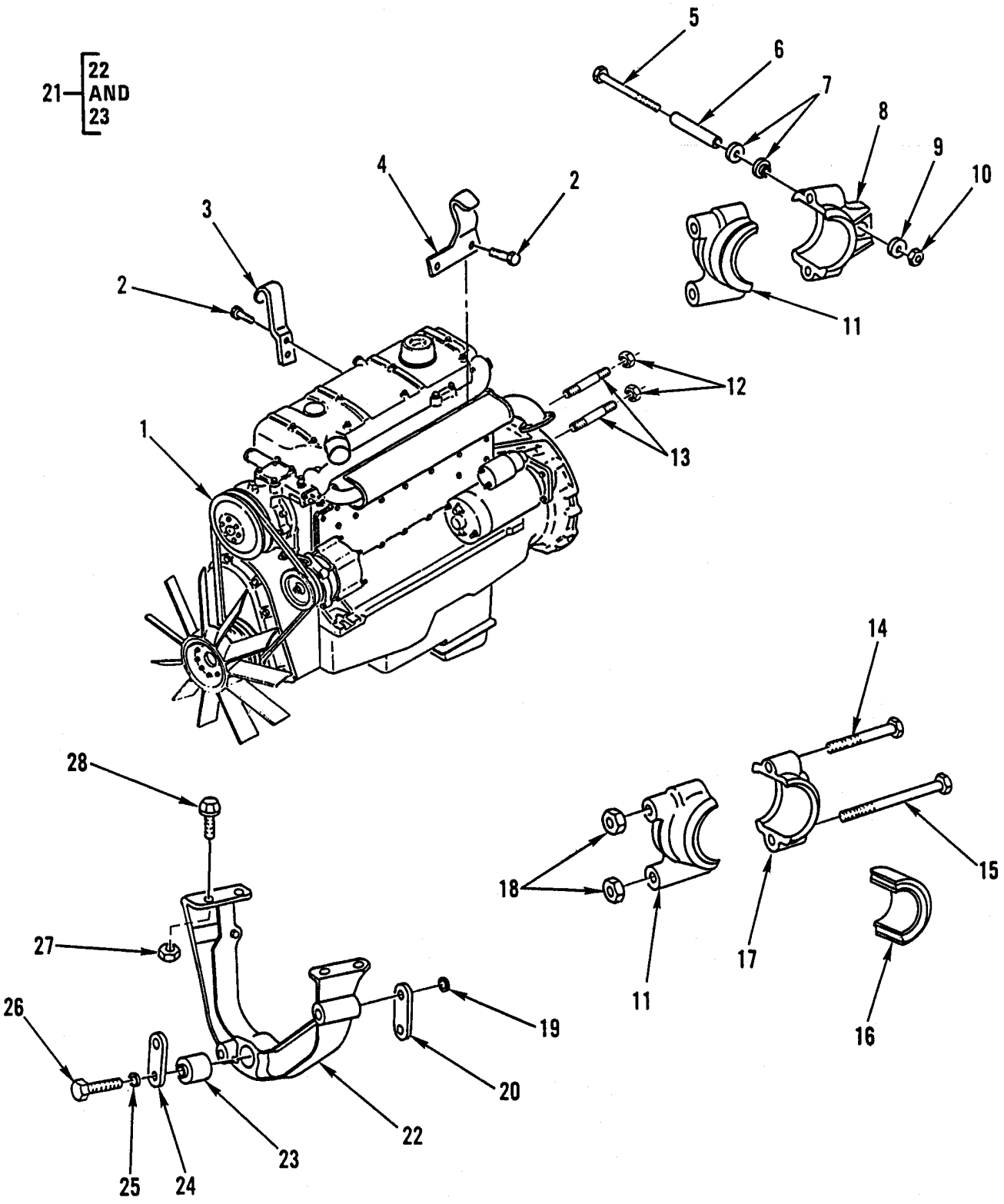

Figure 1. Engine, Engine Assembly – Diesel Engine and Engine Accessory Bracket.

(1) ITEM NO	(2) SMR CODE	(3) NSN	(4) CAGEC	(5) PART NUMBER	(6) DESCRIPTION AND USABLE ON CODES (UOC)	(7) QTY
					GROUP 01, 0100 FIG. 1 ENGINE, ENGINE ASSEMBLY – ENGINE, DIESEL 353-010-68-00, AND BRACKET, ENGINE, ACCESSORY 406 240 01 01	
1	PGFHD	2815-01-218-2170	64678	353 010 68 00	ENGINE,DIESEL	1
2	PFFZZ	5305-01-239-2584	64678	000933 010027	.SCREW,CAP,HEXAGON H	4
3	PFFZZ	5340-01-286-0945	64678	352 223 03 41	.EYE HOOK	1
4	PAFZZ	2540-01-237-3546	64678	352 223 08 41	.BRACKET,TOW HOOK	1
5	PFFZZ	5306-01-238-3174	64678	000931 010455	BOLT,MACHINE	1
6	PFFZZ	5365-01-246-0655	64678	406 241 00 53	SPACER,SLEEVE	1
7	PAFZZ	5342-01-242-4892	64678	115 150 01 49	MOUNT,RESILIENT	4
8	PFFZZ	3130-01-239-9035	64678	406 241 02 15	CAP,PILLOW BLOCK RIGHT SIDE	1
9	PFFZZ	5310-01-239-7188	64678	007349 010003	WASHER,FLAT	4
10	PFFZZ	5310-01-167-1863	S3465	4537800-712	NUT,PLAIN,HEXAGON	1
11	PFFZZ	3130-01-237-9487	64678	406 241 01 35	HOUSING,BEARING UNIT	2
12	PFFZZ	5310-01-174-7558	S3465	4537800-153	NUT,PLAIN,HEXAGON UOC:GE1	2
13	PFFZZ	5307-01-241-1600	64678	000939 012049	STUD,PLAIN UOC:GE1	2
14	PAFZZ	5305-01-238-0618	64678	000960 016284	SCREW,CAP,HEXAGON H RIGHT MOUNTING	2
15	PAFZZ	5305-01-238-0619	64678	000960 016282	SCREW,CAP,HEXAGON H LEFT MOUNTING	2
16	PFFZZ	5340-12-180-6882	D2480	3118 543	MOUNT,RESILIENT	4
17	PFFZZ	3130-01-238-8038	64678	406 241 03 15	CAP,PILLOW BLOCK LEFT SIDE	1
18	PFFZZ	5310-01-238-0642	64678	913004 016005	NUT,SELF-LOCKING,HE	4
19	PFFZZ	5310-01-237-9387	64678	406 242 00 52	WASHER,FLAT	V
20	PAFZZ	5310-01-238-8886	64678	406 241 01 31	NUT STRIP	1
21	PFFFF	5342-01-236-6669	64678	406 240 01 01	BRACKET,ENGINE ACCE	1
22	XAFZZ		19207	NPN-001	.SUPPORT,ENGINE	1
23	PFFZZ	5340-12-180-6881	D2480	0118 061 15	.MOUNT,RESILIENT	1
24	PFFZZ	5365-01-239-7944	64678	406 241 00 31	SPACER,PLATE	1
25	PFFZZ	5310-01-238-3205	64678	912004 020100	WASHER,LOCK	2
26	PFFZZ	5305-01-237-6846	64678	406 241 00 74	SCREW,CAP,HEXAGON H	2
27	PFFZZ	5310-01-238-3201	64678	913004 014002	NUT,SELF-LOCKING,HE ENG SPRT TO CYL CRKC	4
28	PAFZZ	5306-01-238-0599	64678	900170 014036	BOLT,MACHINE ENG SPRT TO CYL CRKC	2
					END OF FIGURE	

UNIT, DIRECT SUPPORT AND GENERAL SUPPORT MAINTENANCE

SMALL EMPLACEMENT EXCAVATOR (SEE) AND HIGH MOBILITY MATERIAL HANDLER (HMMH)

CRANKCASE, BLOCK, CYLINDER HEAD – DIESEL ENGINE BLOCK 353 010 27 08

REPAIR PARTS LIST

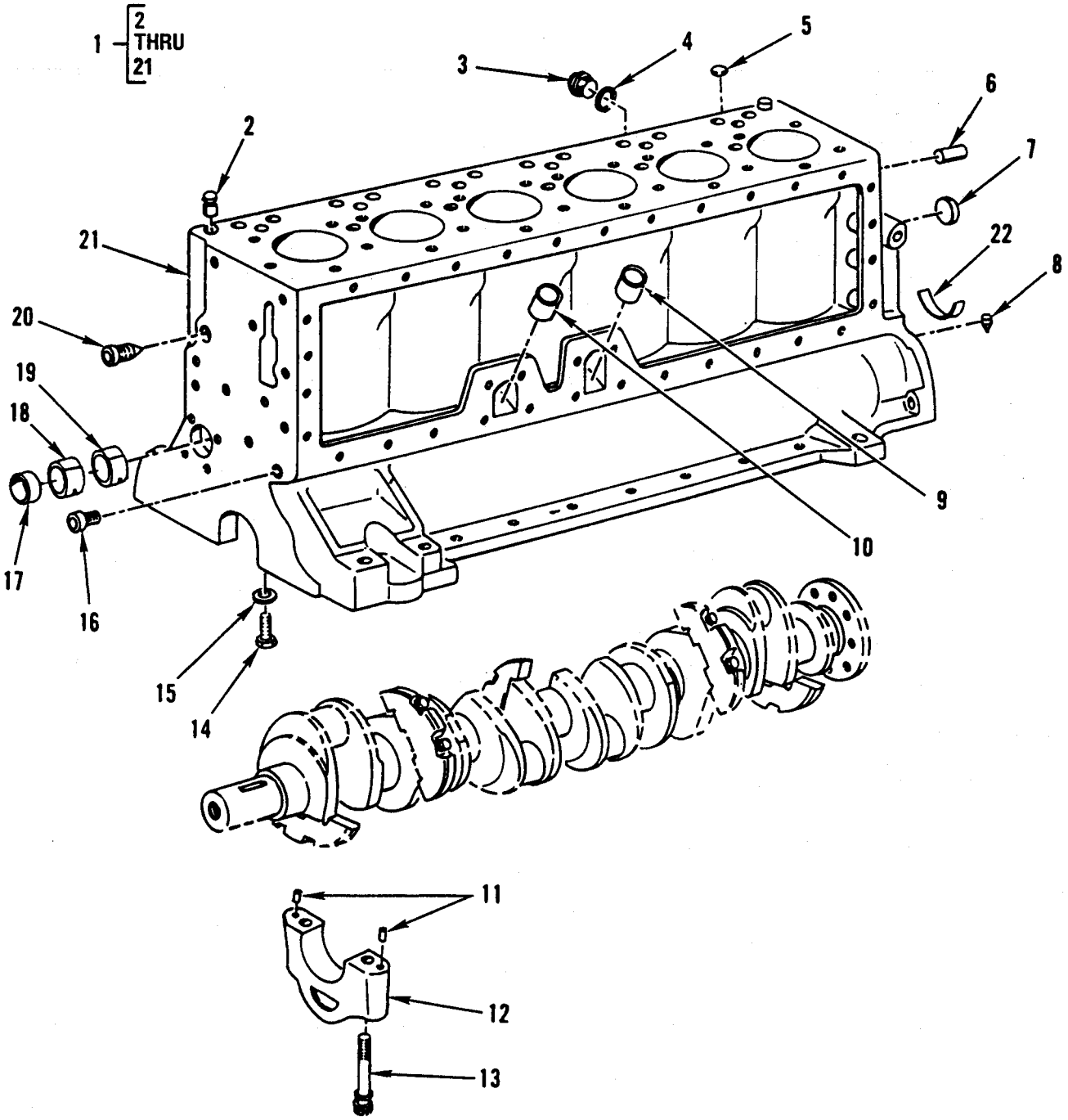

Figure 2. Crankcase, Block, and Cylinder Head – Diesel Engine Block.

(1) ITEM NO	(2) SMR CODE	(3) NSN	(4) CAGEC	(5) PART NUMBER	(6) DESCRIPTION AND USABLE ON CODES (UOC)	(7) QTY
					GROUP 0101	
					FIG. 2. CRANKCASE, BLOCK, CYLINDER HEAD – ENGINE BLOCK, DIESEL 353 010 27 08	
1	PAHHH	2815-01-236-6673	64678	353 010 27 08	ENGINE BLOCK,DIESEL	1
2	PAHZZ	5315-01-239-0688	64678	000007 014218	.PIN,STRAIGHT,HEADLE	2
3	PAOZZ	5365-01-242-8593	64678	007604 018102	.PLUG,MACHINE THREAD	1
4	PAOZZ	5365-00-137-6206	D8046	007603018101	.RING,SEAL	1
5	PAOZZ	5340-01-238-8731	64678	000443 013002	.PLUG,EXPANSION	1
6	PAHZZ	5315-01-241-6632	64678	000007 012206	.PIN,STRAIGHT,HEADLE	2
7	PAHZZ	5340-01-238-8970	64678	352 997 03 20	.PLUG,EXPANSION	1
8	PAHZZ	5315-01-170-5004	S3465	4537800-767	.PIN,SHOULDER,HEADLE	2
9	PAHZZ	5365-01-242-2762	64678	312 188 11 35	.SPACER,SLEEVE	1
10	PAHZZ	3120-01-242-0818	64678	321 992 00 25	.BUSHING,SLEEVE	1
11	PAHZZ	5315-01-244-9154	15526	7-6-16	.PIN,STRAIGHT,HEADLE FOR ENGINE SN 842119 AND BELOW	14
11	PAHZZ	5315-01-334-3812	64678	366 991 00 62	.PIN,STRAIGHT,HEADLE FOR ENGINE SN 842120 AND ABOVE	14
12	XAHZZ		64678	352 010 10 23	.CRANKCASE BRG CAP	7
13	PAHZZ	5306-01-237-4997	64678	352 011 01 71	.BOLT,EXTERNALLY REL	14
14	PAHZZ	5365-01-243-0289	64678	007604010102	.PLUG,MACHINE THREAD	6
15	PAHZZ	5330-01-171-4703	S3465	4536226-835	.SEAL RING,METAL	6
16	PAHZZ	5365-01-245-8871	15526	908 M16X1.5	.PLUG,MACHINE THREAD	2
17	PAHZZ	5340-01-238-7315	64678	403 997 06 20	.PLUG,EXPANSION	4
18	PAHZZ	3120-00-145-7464	D8046	321 051 01 12	.BEARING,CAMSHAFT	3
19	PAHZZ	3120-01-237-7669	64678	352 051 00 10	.BEARING,SLEEVE	1
20	PAHZZ	4730-01-248-6357	64678	352 011 03 35	.PLUG,PIPE	1
21	XBHHH		64678	353 010 22 08	.CRANKCASE	1
22	PAHZZ	5330-01-238-3233	64678	000 997 96 41	GASKET PART OF KIT P/N 353 010 4808	2
`					**END OF FIGURE**	

UNIT, DIRECT SUPPORT AND GENERAL SUPPORT MAINTENANCE

SMALL EMPLACEMENT EXCAVATOR (SEE) AND HIGH MOBILITY MATERIAL HANDLER (HMMH)

CRANKCASE, BLOCK, AND DIESEL CYLINDER HEAD 352 010 16 21

REPAIR PARTS LIST

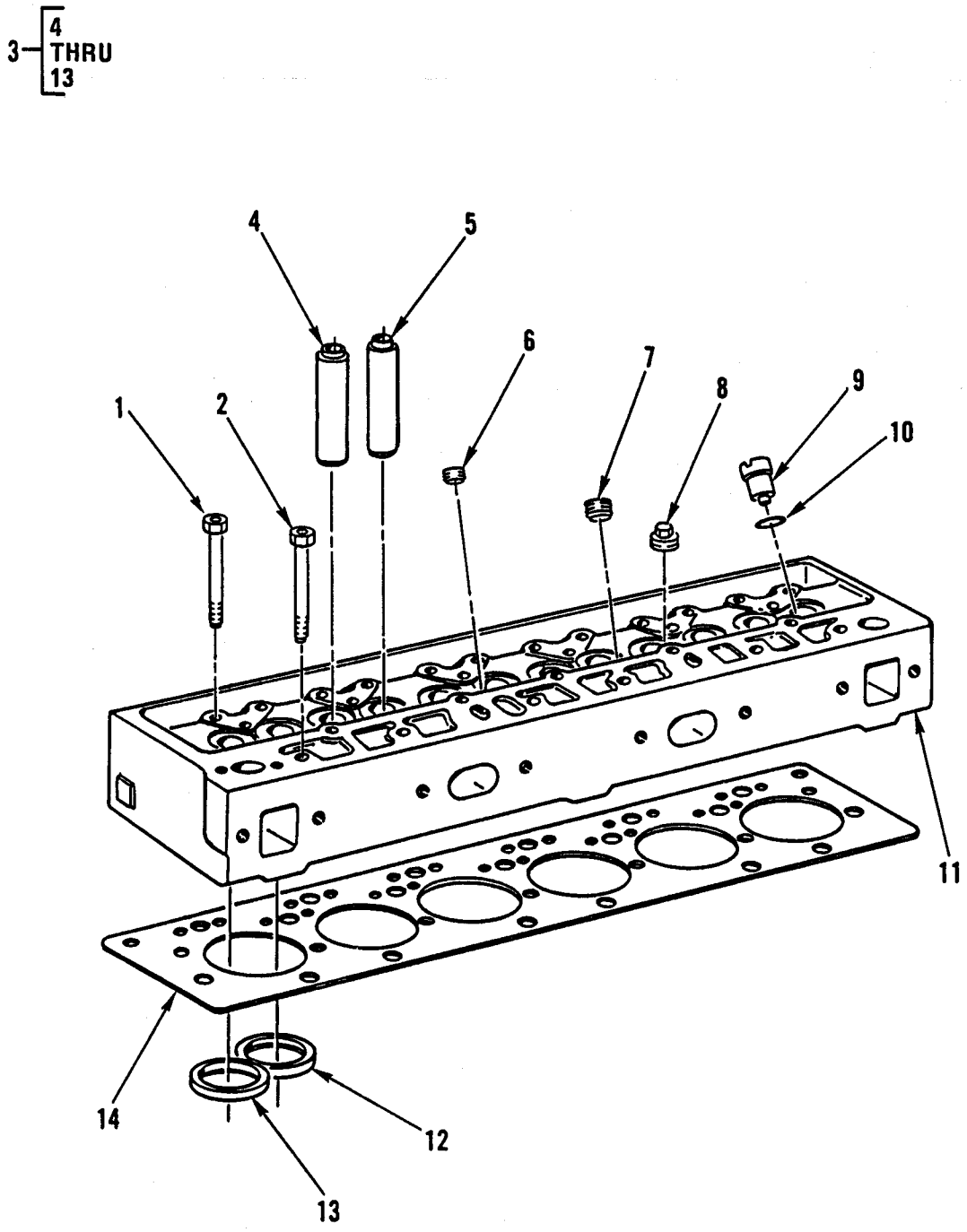

Figure 3. Crankcase, Block, and Diesel Cylinder Head.

(1) ITEM NO	(2) SMR CODE	(3) NSN	(4) CAGEC	(5) PART NUMBER	(6) DESCRIPTION AND USABLE ON CODES (UOC)	(7) QTY
					GROUP 0101	
					FIG. 3 CRANKCASE, BLOCK AND CYLINDER HEAD, DIESEL 352 010 16 21	
1	PAFZZ	5306-01-238-3188	64678	366 990 03 01	BOLT,EXTERNALLY REL	23
2	PAFZZ	5306-01-239-9405	64678	352 990 43 01	BOLT,EXTERNALLY REL	2
3	PFFFF	2815-01-237-0341	64678	352 010 16 21	CYLINDER HEAD,DIESE	1
4	PAFZZ	2815-01-236-4992	64678	352 053 37 30	.GUIDE,VALVE STEM EXHAUST, STANDARD, 15.0 MM	6
4	PAFZZ	2815-01-236-4993	64678	352 053 38 30	.GUIDE,VALVE STEM EXHAUST,15.2 MM	6
5	PAFZZ	2815-01-236-8937	64678	352 053 22 29	.GUIDE,VALVE STEM INTAKE,STANDARD, 15.0 MM	6
5	PAFZZ	2815-01-236-8938	64678	352 053 23 29	.GUIDE,VALVE STEM INTAKE 15.2 MM	6
6	PAFZZ	4730-01-247-3219	64678	352 997 00 32	.PLUG,PIPE	2
7	PAFZZ	5365-01-175-0445	S3465	4537800-793	.PLUG,MACHINE THREAD	5
8	PAFZZ	5310-01-243-9422	64678	312 016 00 61	.NUT,PLAIN,CLINCH 30MM DIA	2
8	PAFZZ	5340-01-287-5947	64678	352 016 01 61	.POST,ELECTRICAL-MEC 32MM DIA	2
9	PAOZZ	5365-01-239-0705	64678	352 017 00 53	.BUSHING,MACHINE THR	6
10	PAOZZ	5330-01-238-5869	64678	346 997 04 45	.O-RING	6
11	XAFZZ		19207	NPN-002	.CYLINDER HEAD,BARE	1
12	PAFZZ	2815-01-236-6646	64678	352 053 31 31	.INSERT,ENGINE VALVE INTAKE, STANDARD,45.07 MM	6
12	PAFZZ	2815-01-236-6643	64678	352 053 17 31	.INSERT,ENGINE VALVE INTAKE,45.37 MM.	6
12	PAFZZ	2815-01-238-0785	64678	352 053 18 31	.INSERT,ENGINE VALVE INTAKE,45.57 MM.	6
13	PAFZZ	2815-041-235-8497	64678	352 053 20 32	.INSERT,ENGINE VALVE EXHAUST,38.07 MM	6
13	PAFZZ	2815-01-236-1210	64678	352 053 16 32	.INSERT,ENGINE VALVE EXHAUST,38.37 MM	6
13	PAFZZ	2815-01-236-0373	64678	352 053 22 32	.INSERT,ENGINE VALVE EXHAUST,38.57 MM	6
14	PAFZZ	5330-01-296-8578	F1691	HS5222-001A	GASKET PART OF KIT P/N 352 010 26 21	1
					END OF FIGURE	

UNIT, DIRECT SUPPORT AND GENERAL SUPPORT MAINTENANCE

SMALL EMPLACEMENT EXCAVATOR (SEE) AND HIGH MOBILITY MATERIAL HANDLER (HMMH)

CRANKSHAFT – ENGINE CRANKSHAFT 353 030 79 02 AND CRANKSHAFT ASSEMBLY 352 030 65 02

REPAIR PARTS LIST

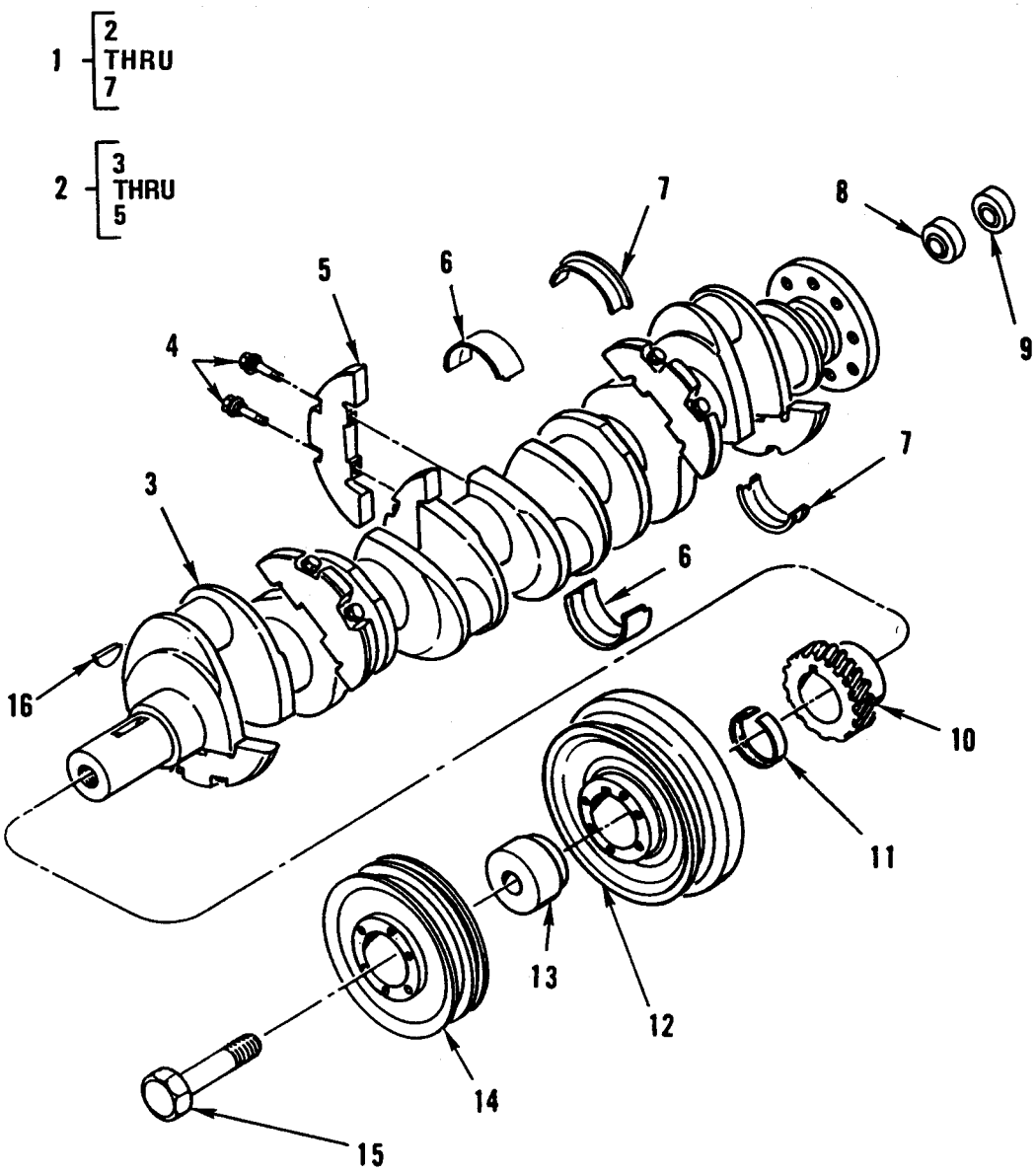

Figure 4. Crankshaft – Engine Crankshaft and Crankshaft Assembly.

(1) ITEM NO	(2) SMR CODE	(3) NSN	(4) CAGEC	(5) PART NUMBER	(6) DESCRIPTION AND USABLE ON CODES (UOC)	(7) QTY
					GROUP 0102	
					FIG. 4. CRANKSHAFT – CRANKSHAFT, ENGINE 353 030 79 02 AND CRANKSHAFT ASSEMBLY 352 030 65 02	
1	PAHHH	2815-01-235-0838	64678	353 030 79 02	CRANKSHAFT,ENGINE CRANKSHAFT BEARING SHELLS AND CONNECTING ROD BRG SHELLS	1
2	XAHHH		64678	352 030 65 02	.CRANKSHAFT ASSEMBLY	1
3	XAHZZ		19207	NPN-003	..CRANKSHAFT	1
4	PAHZZ	5306-01-242-7419	64678	352 031 02 71	..BOLT,EXTERNALLY REL USED ON ENGINE SN 941675 AND BELOW.....	12
5	PAHZZ	3040-01-235-5039	64678	366 031 01 07	..WEIGHT,COUNTERBALAN USED ON ENGINE SN 941675 AND BELOW.....	6
6	PFHZZ	3120-01-237-5293	64678	366 030 10 40	.BEARING,SLEEVE,STANDARD,88.00 MM ...	6
6	PFHZZ	3120-01-237-9626	64678	352 030 08 40	.PARTS KIT,BEARING R, 87.90 MM.....	6
6	PFHZZ	3120-01-237-9522	64678	352 030 09 40	.BEARING SET,SLEEVE,87.75 MM.....	6
6	PFHZZ	3120-01-239-6549	64678	352 030 10 40	.BEARING SET,SLEEVE, 87.50 MM.....	6
6	PFHZZ	3120-01-247-6774	64678	352 030 11 40	.BEARING SET,SLEEVE, 87.25 MM.....	6
6	PFHZZ	3120-01-238-4746	64678	352 030 12 40	.BEARING SET,SLEEVE, 87.00 MM.....	6
7	PFHZZ	3120-01-237-6887	64678	366 030 02 45	.BEARING,SLEEVE,88.00 MM,THRUST 31.80 MM.....	1
7	PFHZZ	3120-01-237-5294	64678	364 030 01 45	.BEARING,SLEEVE,87.90 MM,THRUST 31.80 MM.....	1
7	PFHZZ	3120-01-238-0808	64678	364 030 02 45	.BEARING SET,SLEEVE,87.75 MM,THRUST 31.80 MM.....	1
7	PFHZZ	3120-01-238-4747	64678	364 030 03 45	.BEARING SET,SLEEVE,87.75 MM,THRUST 32.10 MM.....	1
7	PFHZZ	3120-01-237-9523	64678	364 030 04 45	.BEARING SET,SLEEVE,87.75 MM,THRUST 32.30 MM.....	1
7	PFHZZ	3120-01-238-5933	64678	364 030 05 45	.BEARING,SLEEVE,87.50 MM,THRUST 31.80 MM.....	1
7	PFHZZ	3120-01-237-7668	64678	364 030 06 45	.BEARING,SLEEVE,87.50 MM,THRUST 32.10 MM.....	1
7	PFHZZ	3120-01-237-5295	64678	364 030 07 45	.BEARING,SLEEVE,87.50 MM,THRUST 32.30 MM.....	1

(1) ITEM NO	(2) SMR CODE	(3) NSN	(4) CAGEC	(5) PART NUMBER	(6) DESCRIPTION AND USABLE ON CODES (UOC)	(7) QTY
7	PFHZZ	3120-01-248-4531	64678	364 030 08 45	.BEARING,SLEEVE,87.25 MM,THRUST 31.80 MM.....	1
7	PFHZZ	3120-01-237-9524	64678	364 030 09 45	.BEARING SET,SLEEVE,87.25 MM,THRUST 32.30 MM.....	1
7	PFHZZ	3120-01-237-5296	64678	364 030 10 45	.BEARING,SLEEVE,87.00 MM,THRUST 31.80 MM.....	1
7	PFHZZ	3120-01-237-3959	64678	364 030 11 45	.BEARING,SLEEVE,87.00 MM,THRUST 32.30 MM.....	1
8	PAHZZ	2815-01-237-0266	64678	312 031 05 33	COVER RING,ENGINE	1
9	PAHZZ	3110-00-109-1123	21335	204KPP	BEARING,BALL,ANNULA	1
10	PAHZZ	3020-01-236-8903	64678	352 052 00 03	GEAR,SPUR.....	1
11	PFHZZ	2815-01-236-4427	64678	314 035 02 14	RING,PISTON	1
12	PFHZZ	2815-01-236-6666	64678	352 030 19 03	DAMPENER,VIBRATION	1
13	PFHZZ	3120-01-239-4672	64678	352 035 06 06	BEARING,SLEEVE.....	1
14	PFHZZ	3020-01-236-7324	64678	352 035 05 12	PULLEY,GROOVE	1
15	PAHZZ	5306-01-238-1484	64678	352 035 00 71	BOLT,EXTERNALLY REL	1
16	PAHZZ	5315-01-238-8949	15526	6888 8X13	KEY,WOODRUFF	1
					END OF FIGURE	

UNIT, DIRECT SUPPORT AND GENERAL SUPPORT MAINTENANCE

SMALL EMPLACEMENT EXCAVATOR (SEE) AND HIGH MOBILITY MATERIAL HANDLER (HMMH)

FLYWHEEL ASSEMBLY – ENGINE FLYWHEEL 352 030 39 05

REPAIR PARTS LIST

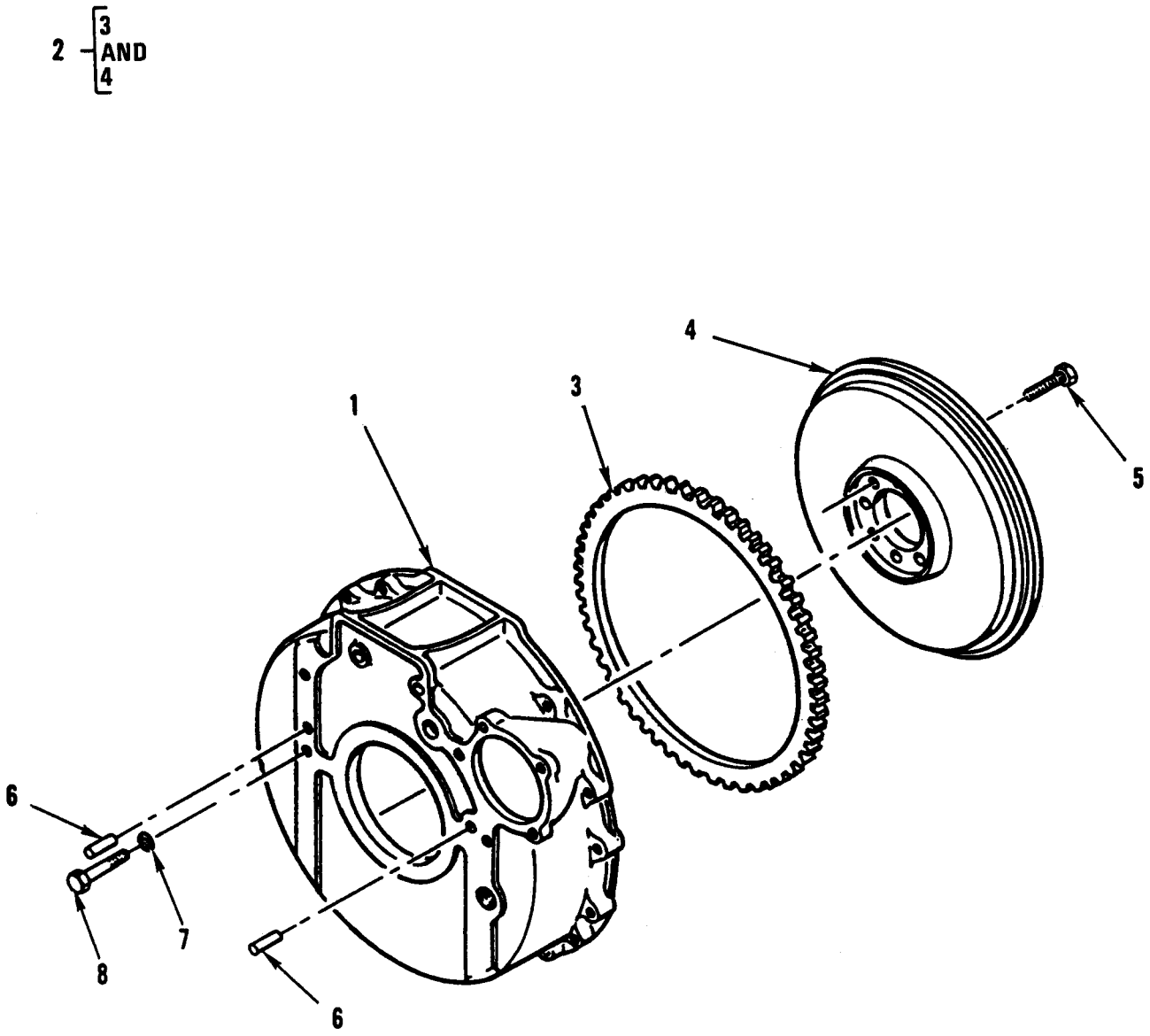

Figure 5. Flywheel Assembly – Engine Flywheel.

(1) ITEM NO	(2) SMR CODE	(3) NSN	(4) CAGEC	(5) PART NUMBER	(6) DESCRIPTION AND USABLE ON CODES (UOC)	(7) QTY
					GROUP 0103	
					FIG 5. FLYWHEEL ASSEMBLY – FLYWHEEL, ENGINE 352 030 39 05	
1	PFFZZ	2920-01-267-6066	64678	353 013 03 10	END BELL,ELECTRICAL	1
2	PFFFF	2815-12-172-9759	D8046	352 030 39 05	FLYWHEEL,ENGINE.....	1
3	PAFZZ	3020-01-235-8644	64678	352 032 11 05	.GEAR,SPUR.....	1
4	XAFZZ		19207	NPN-004	.FLYWHEEL	1
5	PFFZZ	5306-01-253-7111	64678	366 990 05 01	BOLT,MACHINE.....	8
6	PAFZZ	5315-01-238-4739	64678	000007 013100	PIN,STRAIGHT,HEADLE	2
7	PFFZZ	5310-01-172-4663	S3465	4537800-152	PUSH ON NUT	4
8	PFFZZ	5306-01-242-1675	64678	900170 012001	BOLT,MACHINE.....	4
					END OF FIGURE	

UNIT, DIRECT SUPPORT AND GENERAL SUPPORT MAINTENANCE

SMALL EMPLACEMENT EXCAVATOR (SEE) AND HIGH MOBILITY MATERIAL HANDLER (HMMH)

PISTONS, CONNECTING RODS – INTERNAL COMPRESSION PISTON 353 030 07 17, INTERNAL COMPRESSION PISTON 353 030 11 17, INTERNAL COMPRESSION PISTON 353 030 12 17, INTERNAL COMPRESSION PISTON 353 030 48 17, INTERNAL COMPRESSION PISTON 353 030 14 17, INTERNAL COMPRESSION PISTON 353 030 15 17, PISTON CONNECTING ROD 366 030 21 20 30, PISTON CONNECTING ROD 366 030 21 20 40, PISTON CONNECTING ROD 366 030 21 20 50, PISTON CONNECTING ROD 366 030 21 20 60, PISTON CONNECTING ROD 366 030 21 20 70

REPAIR PARTS LIST

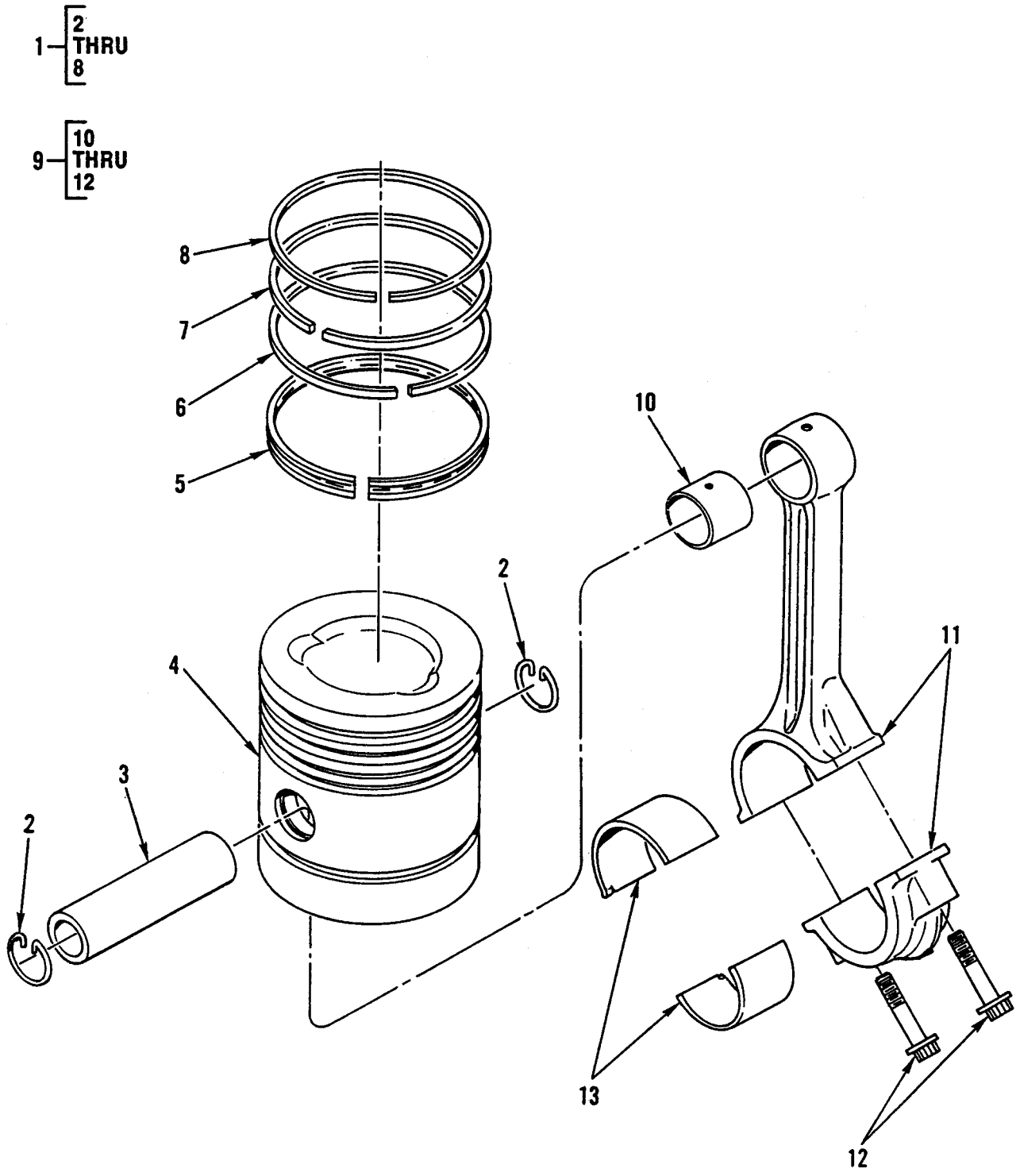

Figure 6. Pistons, Connecting Rods – Internal Compression Pistons and Piston Connecting Rods.

(1) ITEM NO	(2) SMR CODE	(3) NSN	(4) CAGEC	(5) PART NUMBER	(6) DESCRIPTION AND USABLE ON CODES (UOC)	(7) QTY
					GROUP 0104	
					FIG. 6 PISTONS, CONNECTING RODS – INTERNAL COMPRESSION PISTON 353 030 07 17, INTERNAL COMPRESSION PISTON 353 030 11 17, INTERNAL COMPRESSION PISTON 353 030 12 17, INTERNAL COMPRESSION PISTON 353 030 48 17, INTERNAL COMPRESSION PISTON 353 030 14 17, INTERNAL COMPRESSION PISTON 353 030 15 17, PISTON CONNECTING ROD 366 030 21 20 30, PISTON CONNECTING ROD 366 030 21 20 40, PISTON CONNECTING ROD 366 030 21 20 50, PISTON CONNECTING ROD 366 030 21 20 60, PISTON CONNECTING ROD 366 030 21 20 70	
1	PAHHH	2815-01-236-4991	64678	353 030 07 17	PISTON,INTERNAL COM 97.00 MM DIA.....	6
1	PFHHH	2815-01-236-8936	64678	353 030 11 17	PISTON,INTERNAL COM 97.075 MM DIA.....	6
1	PAHHH	2815-01-236-7315	64678	353 030 12 17	PISTON,INTERNAL COM 97.125 MM DIA	6
1	PFHHH	2815-01-236-4991	64678	353 030 48 17	PISTON,INTERNAL COM 97.500 MM DIA.....	6
1	PFHHH	2815-01-236-1209	64678	353 030 14 17	PISTON,INTERNAL COM 98.000 MM DIA.....	6
1	PFHHH	2815-01-236-6076	64678	353 030 15 17	PISTON,INTERNAL COM 98.500 MM DIA.....	6
2	PAHZZ	5325-01-237-7097	64678	000 994 14 37	.RING,RETAINING	2
3	PAHZZ	2815-01-234-8444	64678	362 037 00 20	.PIN,PISTON	1
4	XAHZZ		19207	NPN-005	.PISTON	1
5	KFHZZ		64678	008 037 22 18	.RING,PISTON 97.00 MM PART OF KIT P/N 353 030 07 24.....	1
5	PAHZZ	2815-01-237-6215	64678	008 037 66 18	.RING,PISTON 97.10 MM PART OF KIT P/N 02-050260-00	1
5	PAHZZ	2815-01-236-4430	64678	008 037 67 18	.RING,PISTON 97.500 MM PART OF KIT P/N 02-050360-00	1
5	PAHZZ	2815-01-236-4432	64678	008 037 68 18	.RING,PISTON 98.000 MM DIA. PART OF KIT P/N 02-050460-00.....	1
5	PAHZZ	2815-01-236-5991	64678	008 037 69 18	.RING,PISTON 98.500 MM DIA. PART OF KIT P/N 02-050560-00.....	1
6	KFHZZ		64678	352 037 13 16	.RING,PISTON 97.00 MM PART OF KIT P/N 353 030 07 24.....	1

(1) ITEM NO	(2) SMR CODE	(3) NSN	(4) CAGEC	(5) PART NUMBER	(6) DESCRIPTION AND USABLE ON CODES (UOC)	(7) QTY
6	PAHZZ	2815-01-235-8540	64678	352 037 14 16	.RING,PISTON 97.10MM PART OF KIT P/N 02-050260-00	1
6	PAHZZ	2815-01-237-6214	64678	352 037 15 16	.RING,PISTON 97.500 MM PART OF KIT P/N 02-050360-00	1
6	PAHZZ	2815-01-237-6140	64678	352 037 16 16	.RING,PISTON 98.000 MM PART OF KIT P/N 02-050460-00	1
6	PAHZZ	2815-01-237-6142	64678	352 037 17 16	.RING,PISTON 98.500 MM DIA. PART OF KIT P/N 02-050560-00.....	1
7	KFHZZ		64678	352 037 07 16	.RING,PISTON 97.00 MM PART OF KIT P/N 353 030 07 24.....	1
7	PAHZZ	2815-01-237-6704	64678	352 037 08 16	.RING,PISTON 97.10 MM PART OF KIT P/N 02-050260-00	1
7	PAHZZ	2815-01-237-0184	64678	352 037 09 16	.RING,PISTON 97.500 MM PART OF KIT P/N 02-050360-00	1
7	PAHZZ	2815-01-237-6139	64678	352 037 10 16	.RING,PISTON 98.000 MM DIA. PART OF KIT P/N 02-050460-00.....	1
7	PAHZZ	2815-01-237-6141	64678	352 037 11 16	.RING,PISTON 98.500 MM DIA. PART OF KIT P/N 02-050560-00.....	1
8	KFHZZ		64678	352 037 19 16	.RING,PISTON 97.000 MM PART OF KIT P/N 353 030 07 24.....	1
8	KFHZZ		64678	352 037 20 16	.RING,PISTON 97.100 MM PART OF KIT P/N 02-050260-00	1
8	KFHZZ		64678	352 037 21 16	.RING,PISTON 97.500 MM PART OF KIT P/N 02-050360-00	1
8	KFHZZ		64678	352 037 22 16	.RING,PISTON 98.000 MM PART OF KIT P/N 02-050460-00	1
8	KFHZZ		64678	352 037 23 16	.RING,PISTON 98.500 MM PART OF KIT P/N 02-050560-00	1
9	PFHHH	2815-01-293-5734	64678	366 030 21 20 30	CONNECTING ROD,PIST WEIGHT RANGE 1740 TO 1780,RED-RED.....	6
9	PFHHH	2815-01-293-5735	64678	366 030 21 20 40	CONNECTING ROD,PIST WEIGHT RANGE 1780 TO 1820,RED-BLUE.....	6
9	PFHHH	2815-01-293-5736	64678	366 030 21 20 50	CONNECTING ROD,PIST WEIGHT RANGE 1820 TO 1860,GREEN-GREEN	6
9	PFHHH	2815-01-293-5737	64678	366 030 21 20 60	CONNECTING ROD,PIST WEIGHT RANGE 1860 TO 1900,GREEN-WHITE	6
9	PFHHH	2815-01-293-7118	64678	366 030 21 20 70	CONNECTING ROD,PIST WEIGHT RANGE1900 TO 1940,BLUE-WHITE	6
10	PAHZZ	3120-01-237-5297	64678	352 038 21 50	.BUSHING,SLEEVE I.D. 35.25 AND O.D. 39.00 MM.....	1
10	PFHZZ	3120-01-243-9508	64678	352 038 26 50	.BUSHING,SLEEVE I.D. 35.25 AND O.D. 39.20 MM.....	1

(1) ITEM NO	(2) SMR CODE	(3) NSN	(4) CAGEC	(5) PART NUMBER	(6) DESCRIPTION AND USABLE ON CODES (UOC)	(7) QTY
10	PFHZZ	3120-01-237-9423	64678	352 038 27 50	.BUSHING,SLEEVE I.D. 35.25 AND O.D. 39.50 MM.....	1
11	XAHZZ		19207	NPN-006	.ROD,CONNECTING.....	1
12	PAHZZ	5306-01-239-9338	64678	366 038 04 71	.BOLT,EXTERNALLY REL	2
13	PAHZZ	3120-01-238-0706	64678	352 038 38 10	BEARING HALF,SLEEVE HALF 60.00 MM.....	12
13	PFHZZ	3120-01-239-1388	64678	352 038 39 10	BEARING HALF,SLEEVE HALF 59.90 MM.....	12
13	PFHZZ	3120-01-240-2714	64678	352 038 40 10	BEARING HALF,SLEEVE HALF,59.75 MM.....	12
13	PFHZZ	3120-01-240-2715	64678	352 038 41 10	BEARING HALF,SLEEVE HALF,59.50 MM.....	12
13	PFHZZ	3120-01-240-2716	64678	352 038 42 10	BEARING HALF,SLEEVE HALF,59.25 MM.....	12
13	PFHZZ	3120-01-237-7676	64678	352 038 43 10	BEARING HALF,SLEEVE HALF,59.00 MM.....	12
					END OF FIGURE	

UNIT, DIRECT SUPPORT AND GENERAL SUPPORT MAINTENANCE

SMALL EMPLACEMENT EXCAVATOR (SEE) AND HIGH MOBILITY MATERIAL HANDLER (HMMH)

VALVES, CAMSHAFTS AND TIMING SYSTEM – CYLINDER HEAD COVER

REPAIR PARTS LIST

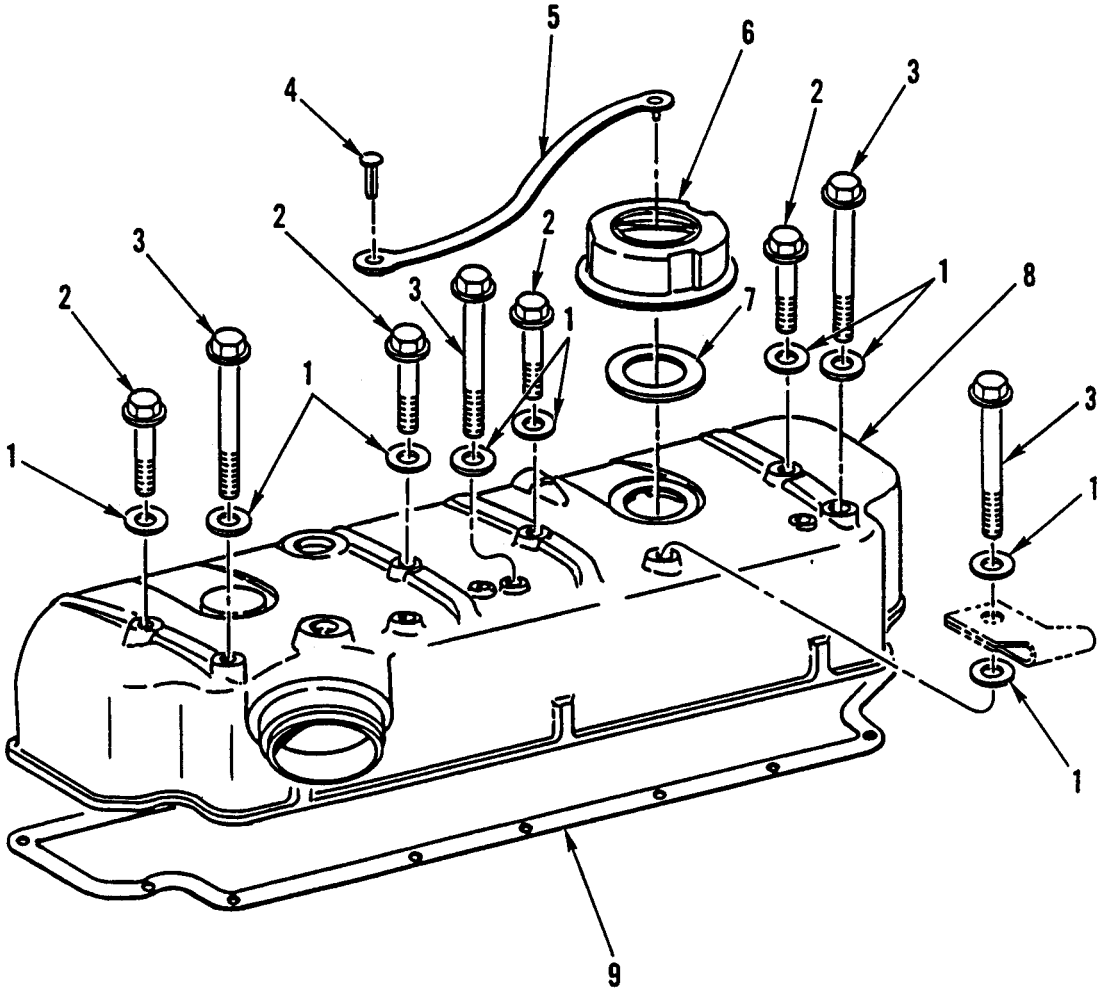

Figure 7. Valves, Camshafts and Timing System – Cylinder Head Cover.

(1) ITEM NO	(2) SMR CODE	(3) NSN	(4) CAGEC	(5) PART NUMBER	(6) DESCRIPTION AND USABLE ON CODES (UOC)	(7) QTY
					GROUP 0105	
					FIG. 7 VALVES, CAMSHAFTS AND TIMING SYSTEM – CYLINDER HEAD COVER	
1	PAOZZ	5330-01-239-0653	64678	007603 008403	GASKET PART OF KIT P/N 352 010 26 21 UOC:GE1	9
2	PAOZZ	5306-01-238-3187	64678	352 990 06 19	BOLT,EXTERNALLY REL	4
3	PAOZZ	5306-01-238-2157	64678	352 990 44 01	BOLT,MACHINE	4
4	PAOZZ	5315-01-240-6135	64678	001476 005003	PIN,GROOVED,HEADED	1
5	PAOZZ	5342-01-236-6670	64678	352 018 67 40	BRACKET,ENGINE ACCE	1
6	PFOZZ	4330-01-236-8944	D8081	707 579 9	SEPARATOR,OIL	1
7	PFOZZ	5330-01-174-7595	S3465	4537800-032	GASKET	1
8	PFOZZ	2815-01-237-6377	64678	352 010 84 30	COVER,ENGINE POPPET	1
9	PAOZZ	5330-01-229-3513	64678	352 016 09 21	GASKET	1
					END OF FIGURE	

UNIT, DIRECT SUPPORT AND GENERAL SUPPORT MAINTENANCE

SMALL EMPLACEMENT EXCAVATOR (SEE) AND HIGH MOBILITY MATERIAL HANDLER (HMMH)

VALVES, CAMSHAFTS AND TIMING SYSTEM – MECHANICAL HOUSING 366 010 01 33

REPAIR PARTS LIST

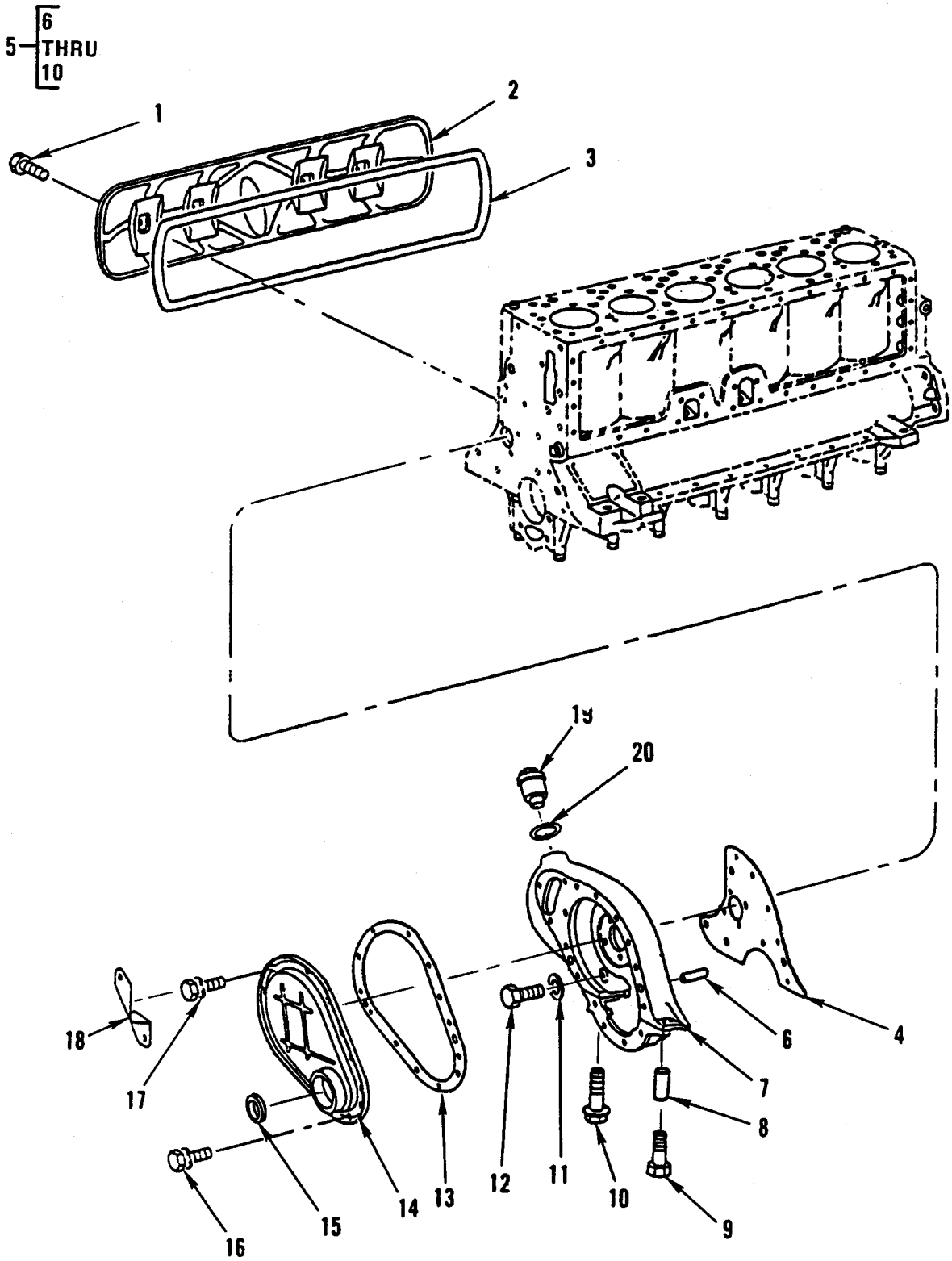

Figure 8. Valves, Camshafts, and Timing System – Mechanical Housing.

(1) ITEM NO	(2) SMR CODE	(3) NSN	(4) CAGEC	(5) PART NUMBER	(6) DESCRIPTION AND USABLE ON CODES (UOC)	(7) QTY
					GROUP 0105	
					FIG. 8 VALVES, CAMSHAFTS, AND TIMING SYSTEM – HOUSING, MECHANICAL 366 010 01 33	
1	PAFZZ	5306-01-238-1470	64678	914126 008029	BOLT,MACHINE	4
2	PAFZZ	2815-01-236-6672	64678	366-015-01-04	COVER,ENGINE POPPET	1
3	PAFZZ	5330-01-241-1570	64678	352 015 01 60	SEAL,NONMETALLIC RO PART OF KIT P/N 353 010 4808	1
4	PAFZZ	5330-00-147-5808	D8046	312 015 05 80	GASKET PART OF KIT P/N 353 010 4808	1
5	PFFFF	3040-01-236-6674	64678	366 010 01 33	HOUSING,MECHANICAL	1
6	PAFZZ	5315-01-239-5989	15526	7-8-20	.PIN,STRAIGHT,HEADLE	2
7	XAFZZ		19207	NPN-007	.CASE,TIMING	1
8	PAFZZ	5315-01-244-9154	15526	7-6-16	.PIN,STRAIGHT,HEADLE USED WITH HOUSING,P/N 366 010 01 33 ONLY	2
9	PAFZZ	5305-01-239-2585	64678	000933 008215	.SCREW,CAP,HEXAGON H USED WITH HOUSING,P/N 366 010 01 33 ONLY	1
10	PFFZZ	5305-01-238-1489	15526	931-10 M8X40 P	.SCREW,CAP,HEXAGON H USED WITH HOUSING,P/N 366 010 01 33 ONLY	1
11	PFFZZ	5310-01-174-7615	64678	000125 010518	WASHER,FLAT	3
12	PAFZZ	5306-01-243-1346	15526	933-10 M10 25 F	BOLT,MACHINE	3
13	PAFZZ	5330-01-240-7426	64678	352 015 05 20	GASKET PART OF KIT P/N 353 010 4808	1
14	PAFZZ	2815-01-235-8629	64678	352 015 02 01	COVER,TIMING GEAR I	1
15	PAFZZ	5330-01-259-4081	64678	012 997 68 47	SEAL,PLAIN ENCASED PART OF KIT P/N 353 010 4808	1
16	PAFZZ	5306-01-242-0618	64678	003 990 63 01	BOLT,ASSEMBLED WASH	5
17	PAFZZ	5306-01-238-3179	64678	003 990 65 01	BOLT,ASSEMBLED WASH	8
18	PAFZZ	5355-01-236-8876	64678	352 032 19 15	POINTER,TIMING GEAR	1
19	PAFZZ	5365-01-244-0927	64678	352 010 00 19	PLUG,MACHINE THREAD	1
20	PAFZZ	5330-01-238-5865	64678	000 997 13 48	O-RING	1
					END OF FIGURE	

UNIT, DIRECT SUPPORT AND GENERAL SUPPORT MAINTENANCE

SMALL EMPLACEMENT EXCAVATOR (SEE) AND HIGH MOBILITY MATERIAL HANDLER (HMMH)

VALVES, CAMSHAFTS, AND TIMING SYSTEM – VALVES

REPAIR PARTS LIST

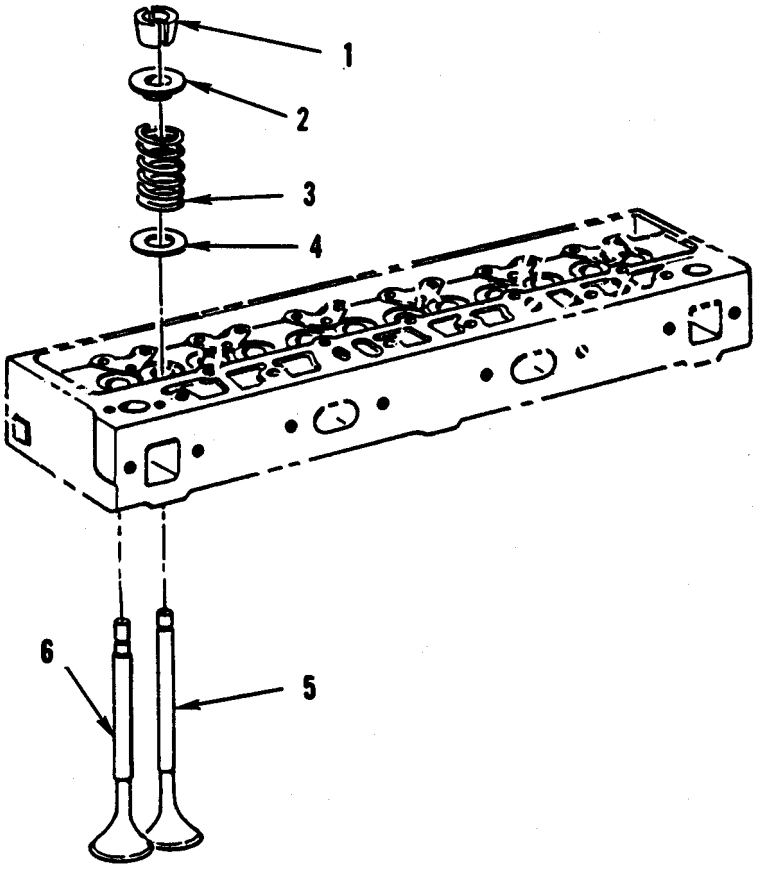

Figure 9. Valves, Camshafts, and Timing System – Valves.

(1) ITEM NO	(2) SMR CODE	(3) NSN	(4) CAGEC	(5) PART NUMBER	(6) DESCRIPTION AND USABLE ON CODES (UOC)	(7) QTY
					GROUP 0105	
					FIG. 9 VALVES, CAMSHAFTS, AND TIMING SYSTEM – VALVES	
1	PAHZZ	2815-01-235-1479	64678	312 053 01 27	LOCK,VALVE SPRING R	24
2	PAHZZ	5340-01-248-6759	64678	322 053 01 25	SEAT,HELICAL COMPRESSION.....	12
3	PAHZZ	5360-00-147-5800	64678	322 053 04 20	SPRING,HELICAL,COMP	12
4	PAHZZ	5310-01-237-5218	64678	352 990 20 40	WASHER,FLAT	12
5	PAHZZ	2815-01-318-2754	64678	352 050 00 26	VALVE,POPPET,ENGINE INTAKE	6
6	PAHZZ	2815-00-140-4310	64678	366 050 00 27	VALVE,POPPET,ENGINE EXHAUST	6
					END OF FIGURE	

UNIT, DIRECT SUPPORT AND GENERAL SUPPORT MAINTENANCE

SMALL EMPLACEMENT EXCAVATOR (SEE) AND HIGH MOBILITY MATERIAL HANDLER (HMMH)

VALVES, CAMSHAFTS, AND TIMING SYSTEM – ENGINE ROCKER ARM 352 050 10 33, ENGINE ROCKER ARM 352 050 06 34 AND ROCKER ARM SPINDLE 312 050 02 31

REPAIR PARTS LIST

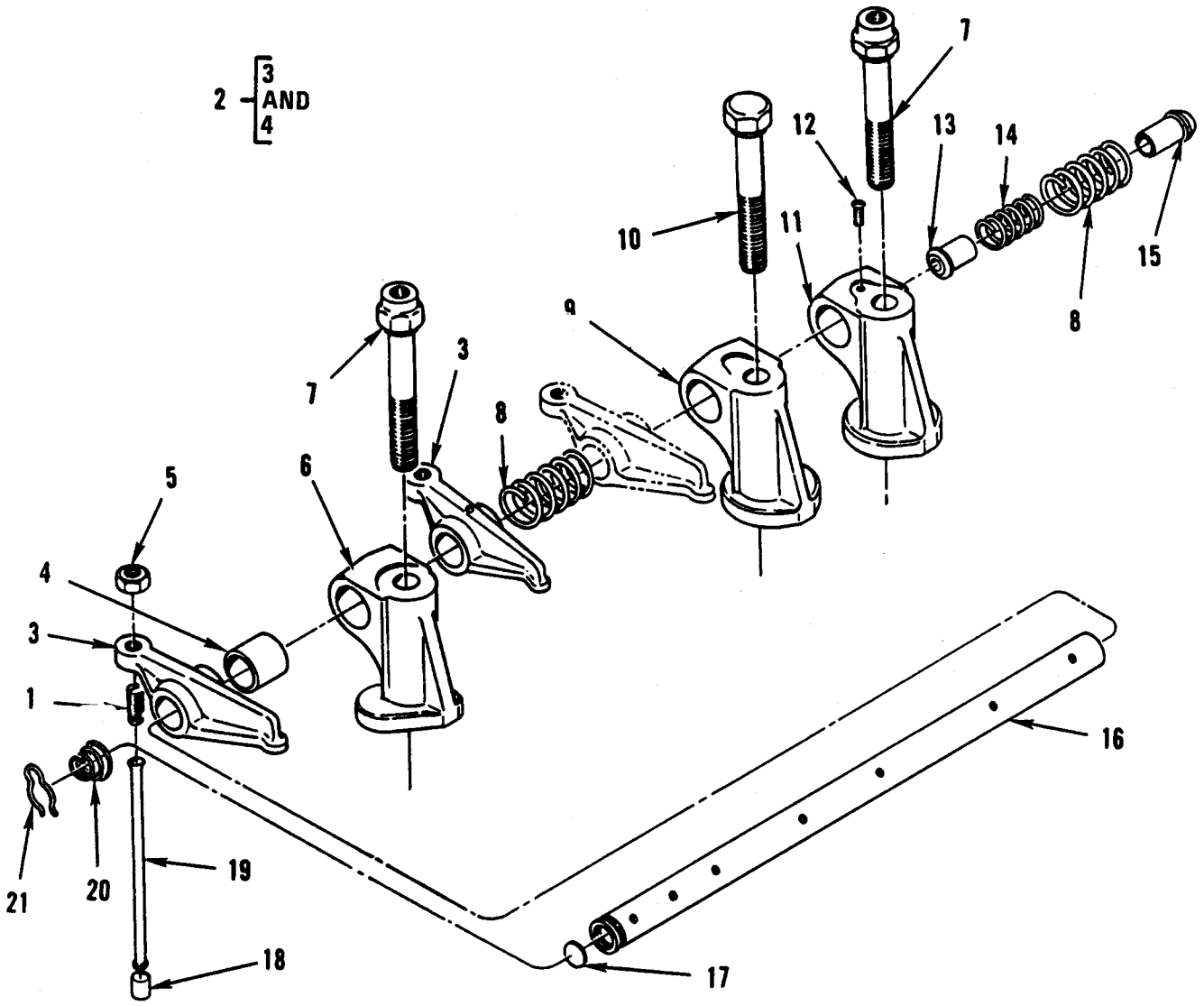

Figure 10. Valves, Camshafts, and Timing System – Engine Rocker Arm and Rocker Arm Spindle.

(1) ITEM NO	(2) SMR CODE	(3) NSN	(4) CAGEC	(5) PART NUMBER	(6) DESCRIPTION AND USABLE ON CODES (UOC)	(7) QTY
					GROUP 0105	
					FIG. 10 VALVES, CAMSHAFTS, AND TIMING SYSTEM – ROCKER ARM, ENGINE 352 050 06 34 AND SPINDLE , ROCKER ARM 312 050 02 31	
1	PAFZZ	5305-01-237-5195	64678	312 055 03 21	SETSCREW	12
2	PAFFF	2815-01-235-5047	64678	352 050 10 33	ROCKER ARM,ENGINE P POSITIONS 1, 3, 5, 7, 9, 11	6
2	PAFFF	2815-01-235-1508	64678	352 050 06 34	ROCKER ARM,ENGINE P POSITIONS 2, 4, 6, 8, 10, 12	6
3	XAFZZ		19207	NPN-008	.ROCKER,ARM	1
4	PAFZZ	3120-12-178-6524	D8900	322 055 01 50	.BUSHING,SLEEVE	1
5	PFFZZ	5310-01-237-9381	64678	312 990 02 51	NUT,PLAIN,HEXAGON	12
6	PAFZZ	5342-01-234-7983	64678	352 055 05 10	BRACKET,ENGINE ACCE	1
7	PAFZZ	5306-01-288-4518	64678	366 990 01 04	BOLT,INTERNALLY REL	4
8	PAFZZ	5360-01-239-3810	64678	312 993 07 01	SPRING,HELICAL,COMP	5
9	PAFZZ	5342-01-234-7982	64678	352 055 04 10	BRACKET,ENGINE ACCE	3
10	PAFZZ	5306-01-178-7299	15526	931-10 M12X75	BOLT,MACHINE	2
11	PAFZZ	5342-01-235-1504	64678	352 055 06 10	BRACKET,ENGINE ACCE	2
12	PAFZZ	5305-01-242-0487	15526	417-6X10	SETSCREW	2
13	PAFZZ	4730-01-234-7319	64678	352 050 00 85	NIPPLE,PIPE	1
14	PAFZZ	5360-01-239-3010	64678	352 993 10 01	SPRING,HELICAL,COMP	1
15	PAFZZ	4730-01-235-3545	64678	352 055 02 53	FERRULE,BRAZING,TUB	1
16	PAFZZ	2815-01-235-8684	64678	312 050 02 31	PUSH ROD,ENGINE POP	2
17	PAFZZ	5340-01-239-2188	64678	000470 014000	.PLUG,EXPANSION	2
18	PAFZZ	2815-01-236-6077	64678	352 054 05 01	TAPPET,ENGINE POPPE STANDARD 27.98 MM	12
18	PAFZZ	2815-01-236-6078	64678	352 054 06 01	TAPPET,ENGINE POPPE 28.18 MM	12
18	PAFZZ	2815-01-236-6079	64678	352 054 07 01	TAPPET,ENGINE POPPE 28.48 MM	12
18	PAFZZ	2815-01-237-0484	64678	352 054 08 01	TAPPET,ENGINE POPPE 28.73 MM	12
19	PAFZZ	2815-01-235-5064	64678	344 054 0005	PUSH ROD,ENGINE POP	12
20	PAFZZ	5360-01-237-5416	64678	312 993 00 05	SPRING,HELICAL,COMP	2
21	PAFZZ	5340-01-238-4948	64678	312 993 00 25	CLIP,RETAINING	2
					END OF FIGURE	

UNIT, DIRECT SUPPORT AND GENERAL SUPPORT MAINTENANCE

SMALL EMPLACEMENT EXCAVATOR (SEE) AND HIGH MOBILITY MATERIAL HANDLER (HMMH)

VALVES, CAMSHAFTS, AND TIMING SYSTEM – VIBRATION DAMPENER 362 070 00 45

REPAIR PARTS LIST

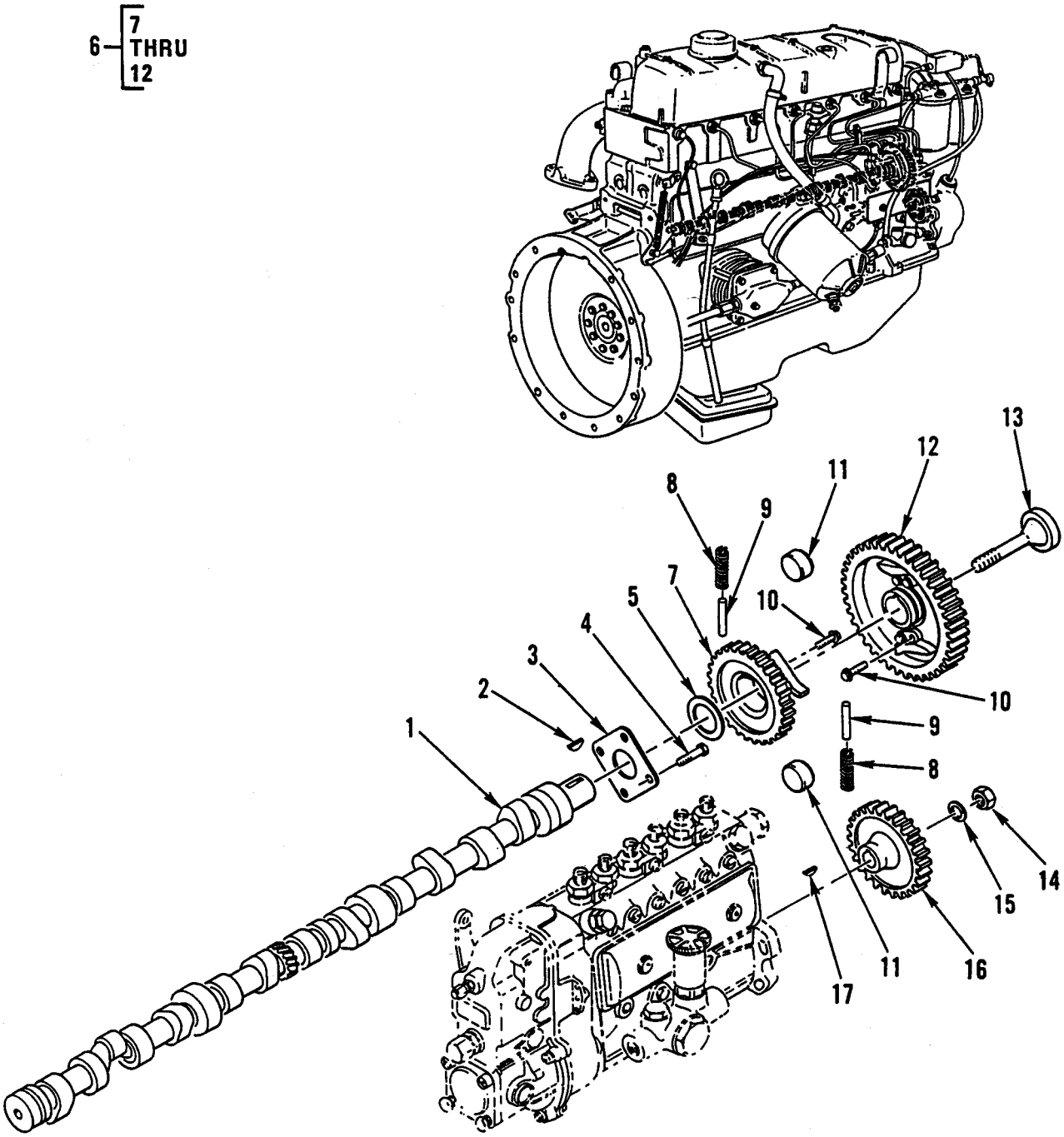

Figure 11. Valves, Camshafts, and Timing System – Vibration Dampener.

(1) ITEM NO	(2) SMR CODE	(3) NSN	(4) CAGEC	(5) PART NUMBER	(6) DESCRIPTION AND USABLE ON CODES (UOC)	(7) QTY
					GROUP 0105	
					FIG 11. VALVES, CAMSHAFTS, AND TIMING SYSTEM – DAMPENER, VIBRATION 362 070 00 45	
1	PAHZZ	2815-01-234-8613	64678	352 050 49 01	CAMSHAFT,ENGINE	1
2	PAFZZ	5315-01-239-9518	15526	6885-25	KEY,MACHINE	1
3	PAHZZ	3120-01-237-5308	64678	352 052 07 62	BEARING,WASHER,THR	1
4	PFHZZ	5306-01-244-9919	64678	352 990 07 04	BOLT,MACHINE	4
5	PFFZZ	3120-01-237-7675	64678	352 051 00 62	BEARING,WASHER,THRU	1
6	PAFFF	2815-01-257-3744	64678	362 070 00 45	DAMPENER,VIBRATION	1
7	PAFZZ	3020-01-237-1856	64678	362 070 00 13	.GEAR,SPUR	1
8	PAFZZ	5360-01-238-6244	64678	352 993 07 01	.SPRING,HELICAL,COMP	2
9	PAFZZ	5315-01-238-2364	64678	352 075 03 74	.PIN,STRAIGHT,HEADL	2
10	PFFZZ	5306-01-238-3169	64678	900170 008028	.BOLT,MACHINE	8
11	PAFZZ	3040-01-236-7252	64678	352 075 00 35	.WEIGHT,COUNTERBALAN	2
12	PAFZZ	3020-01-289-3815	64678	362 050 00 04	.GEAR,SPUR	1
13	PFFZZ	5305-01-238-0616	64678	352 075 00 71	SCREW,CAP,SOCKET HE	1
14	PFFZZ	5310-01-238-3197	15526	934 M14X1.5 F	NUT,PLAIN,HEXAGON	1
15	PAFZZ	5310-12-177-4344	64678	000 990 26 47	WASHER,SPRING TENSI	1
16	PAFZZ	3020-01-236-0670	64678	352 070 12 13	GEAR,SPUR	1
17	PAFZZ	5315-01-325-7527	64678	006888 004013	KEY,WOODRUFF	1
					END OF FIGURE	

UNIT, DIRECT SUPPORT AND GENERAL SUPPORT MAINTENANCE

SMALL EMPLACEMENT EXCAVATOR (SEE) AND HIGH MOBILITY MATERIAL HANDLER (HMMH)

ENGINE LUBRICATION SYSTEM – LUBRICATING COOLER 362 180 09 65

REPAIR PARTS LIST

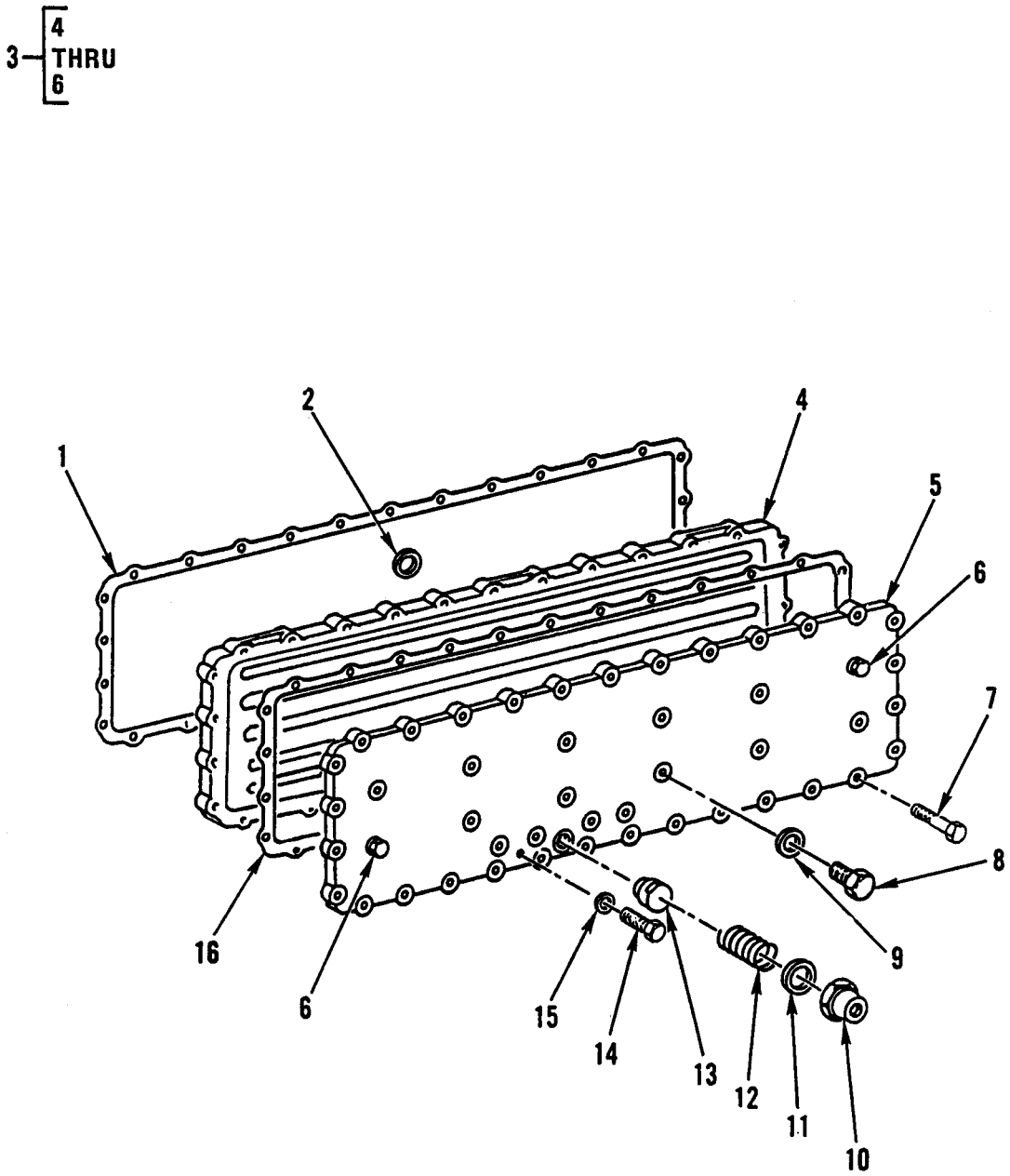

Figure 12. Engine Lubrication System – Lubricating Cooler.

(1) ITEM NO	(2) SMR CODE	(3) NSN	(4) CAGEC	(5) PART NUMBER	(6) DESCRIPTION AND USABLE ON CODES (UOC)	(7) QTY
					GROUP 0106	
					FIG. 12 ENGINE LUBRICATION SYSTEM – COOLER, LUBRICATING 362 180 09 65	
1	KFFZZ		64678	362 188 00 80	GASKET TO CYL CRKC PART OF KIT P/N 362 180 00 79	1
2	PFFZZ	5330-01-238-7248	64678	312 188 15 79	GASKET TO COVER PART OF KIT P/N 362 180 00 79	4
3	PAFFF	2930-01-237-0376	64678	362 180 09 65	COOLER,LUBRICATING	1
4	XAFZZ		64678	362 188 00 01	.COOLER,OIL	1
5	XAFZZ		64678	362 188 01 02	.COVER	1
6	PAFZZ	5305-01-239-2585	64678	000933 008215	.SCREW,CAP,HEXAGON H	2
7	PFFZZ	5306-01-242-6982	64678	000931 008054	BOLT,MACHINE	31
8	PFOZZ	5365-01-258-4770	64678	007604 014106	PLUG,MACHINE THREAD	1
9	PAOZZ	5331-00-140-7695	D8046	007603014104	O-RING	1
10	PAFZZ	4730-01-234-7819	64678	352 188 00 35	REDUCER,BOSS	1
11	PFFZZ	5330-01-174-7588	S3465	4537800-115	PACKING,PREFORMED	1
12	PAFZZ	5360-01-238-8962	64678	312 993 26 01	SPRING,HELICAL,COMP	1
13	PAFZZ	4820-01-235-3672	64678	352 188 00 32	PLUG,ROTARY,VALVE	1
14	PAFZZ	5305-01-239-2585	64678	000933 008215	SCREW,CAP,HEXAGON H	14
15	PFFZZ	5330-01-238-7281	64678	007603 008104	SEAL RING,METAL PART OF KIT P/N 362 180 00 79	14
16	PFFZZ	5330-01-238-7247	64678	312 188 14 79	GASKET COVER PART OF KIT P/N 362 180 00 79	1
					END OF FIGURE	

UNIT, DIRECT SUPPORT AND GENERAL SUPPORT MAINTENANCE

SMALL EMPLACEMENT EXCAVATOR (SEE) AND HIGH MOBILITY MATERIAL HANDLER (HMMH)

ENGINE LUBRICATION SYSTEM – LIQUID LEVEL GAUGE ROD 352 010 24 72 AND OIL PAN 352 010 68 13

REPAIR PARTS LIST

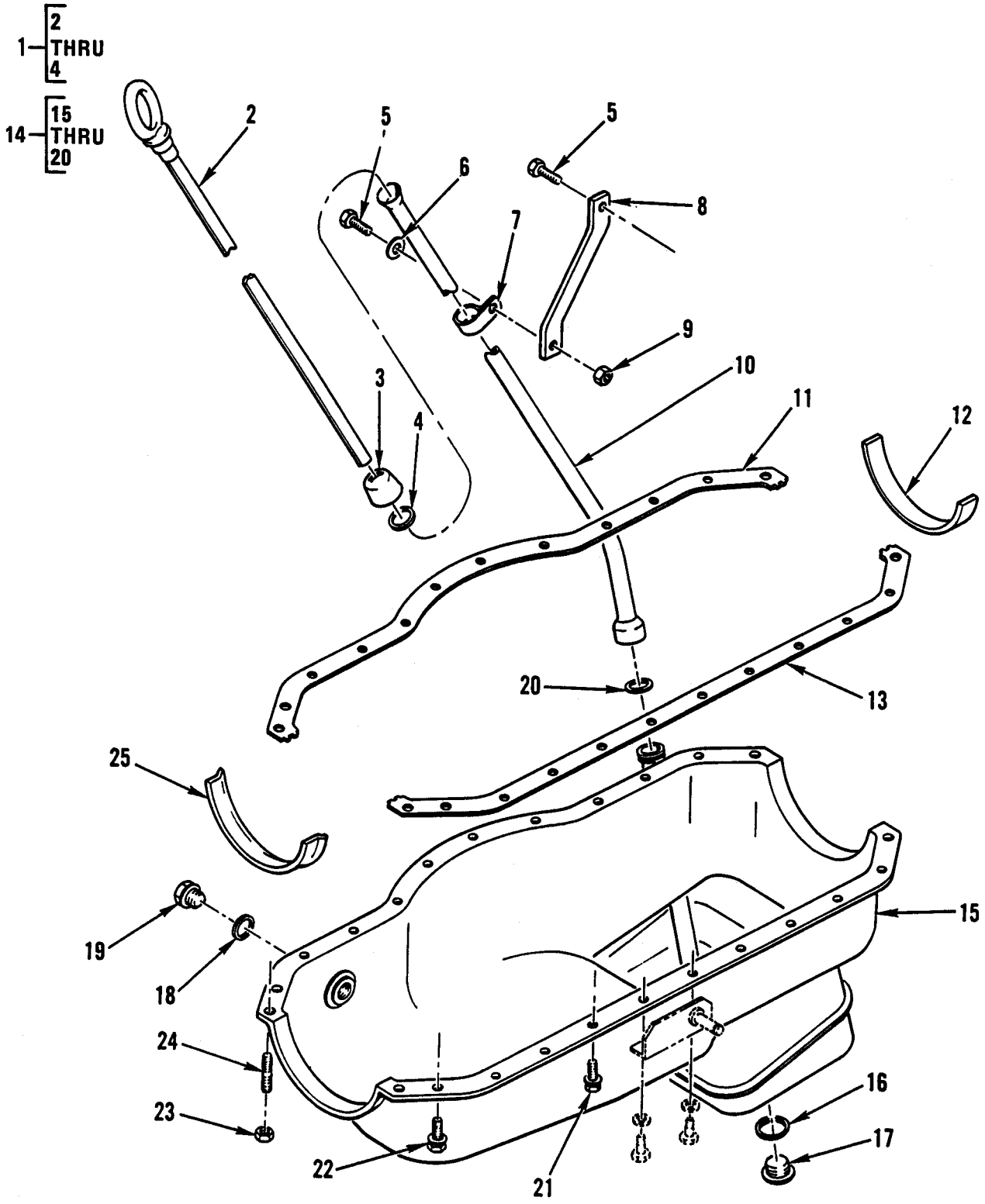

Figure 13. Engine Lubrication System – Liquid Level Gauge Rod and Oil Pan.

(1) ITEM NO	(2) SMR CODE	(3) NSN	(4) CAGEC	(5) PART NUMBER	(6) DESCRIPTION AND USABLE ON CODES (UOC)	(7) QTY
					GROUP 0106	
					FIG. 13 ENGINE LUBRICATION SYSTEM - GAUGE ROD, LIQUID LEVEL 352 010 24 72 AND OIL PAN 352 010 68 13	
1	PAOOO	6680-01-237-7492	64678	352 010 24 72	GAGE ROD,LIQUID LEV	1
2	XAOZZ		19207	NPN-009	.GAUGE,ROD	1
3	PAOZZ	2590-01-234-8441	64678	403 018 01 06	.CAP,FILLER OPENING	1
4	PAOZZ	5365-01-174-7650	S3465	4537800-238	.SPACER,RING	1
5	PFFZZ	5306-01-178-7298	S3465	4537800-674	BOLT,MACHINE	3
6	PFFZZ	5310-01-237-5224	64678	000125 008413	WASHER,FLAT	1
7	PAFZZ	5340-01-124-9927	64678	403 995 00 44	CLAMP,LOOP	1
8	PAFZZ	5340-01-237-6881	64678	352 018 63 40	BRACKET,DOUBLE ANGLE	1
9	PFFZZ	5310-01-241-6345	15526	934 8 M8X1.25 C	NUT,PLAIN,HEXAGON	1
10	PAFZZ	2590-01-235-5046	64678	352 010 41 66	FILLER NECK	1
11	KFFZZ		64678	352 014 11 22	GASKET,OIL PAN,RT PART OF KIT P/N 353 010 4808 PART OF KIT P/N 3520102280	1
12	KFFZZ		64678	352 014 24 22	GASKET,OIL PAN PART OF KIT P/N 353 010 4808 PART OF KIT P/N 3520102280	1
13	KFFZZ		64678	352 014 10 22	GASKET,OIL PAN,LT PART OF KIT P/N 353 010 4808 PART OF KIT P/N 3520102280	1
14	PFFFF	2815-01-235-8621	64678	352 010 68 13	OIL PAN	1
15	XAFZZ		19207	NPN-010	.PAN,OIL	1
16	PAOZZ	5330-01-229-3514	64678	007603 026305	.GASKET	1
17	PAOZZ	5365-01-243-2991	64678	403 997 00 32	.PLUG,MACHINE THREAD	1
18	PFFZZ	5330-01-174-7588	S3465	4537800-115	.PACKING,PREFORMED	1
19	PFFZZ	4730-01-117-8732	64678	007604 022102	.PLUG,PIPE	1
20	PFFZZ	5330-01-238-4614	64678	198 997 00 40	.O-RING	1
21	PFFZZ	5305-01-243-9401	64678	003 990 60 01	SCREW,CAP,HEXAGON H	16
22	PFFZZ	5305-01-158-2041	34914	992 4051	SCREW,CAP,HEXAGON H	2
23	PAFZZ	5310-01-241-2671	64678	999900 008004	NUT,PLAIN,HEXAGON	4
24	PAFZZ	5307-01-185-3177	64678	000939 008083	STUD,PLAIN	4
25	KFFZZ		64678	352 014 09 22	GASKET,OIL PAN,FRON PART OF KIT P/N 353 010 4808 PART OF KIT P/N 3520102280	1
					END OF FIGURE	

UNIT, DIRECT SUPPORT AND GENERAL SUPPORT MAINTENANCE

SMALL EMPLACEMENT EXCAVATOR (SEE) AND HIGH MOBILITY MATERIAL HANDLER (HMMH)

ENGINE LUBRICATION SYSTEM – ENGINE OIL PUMP ASSEMBLY 364 180 01 01

REPAIR PARTS LIST

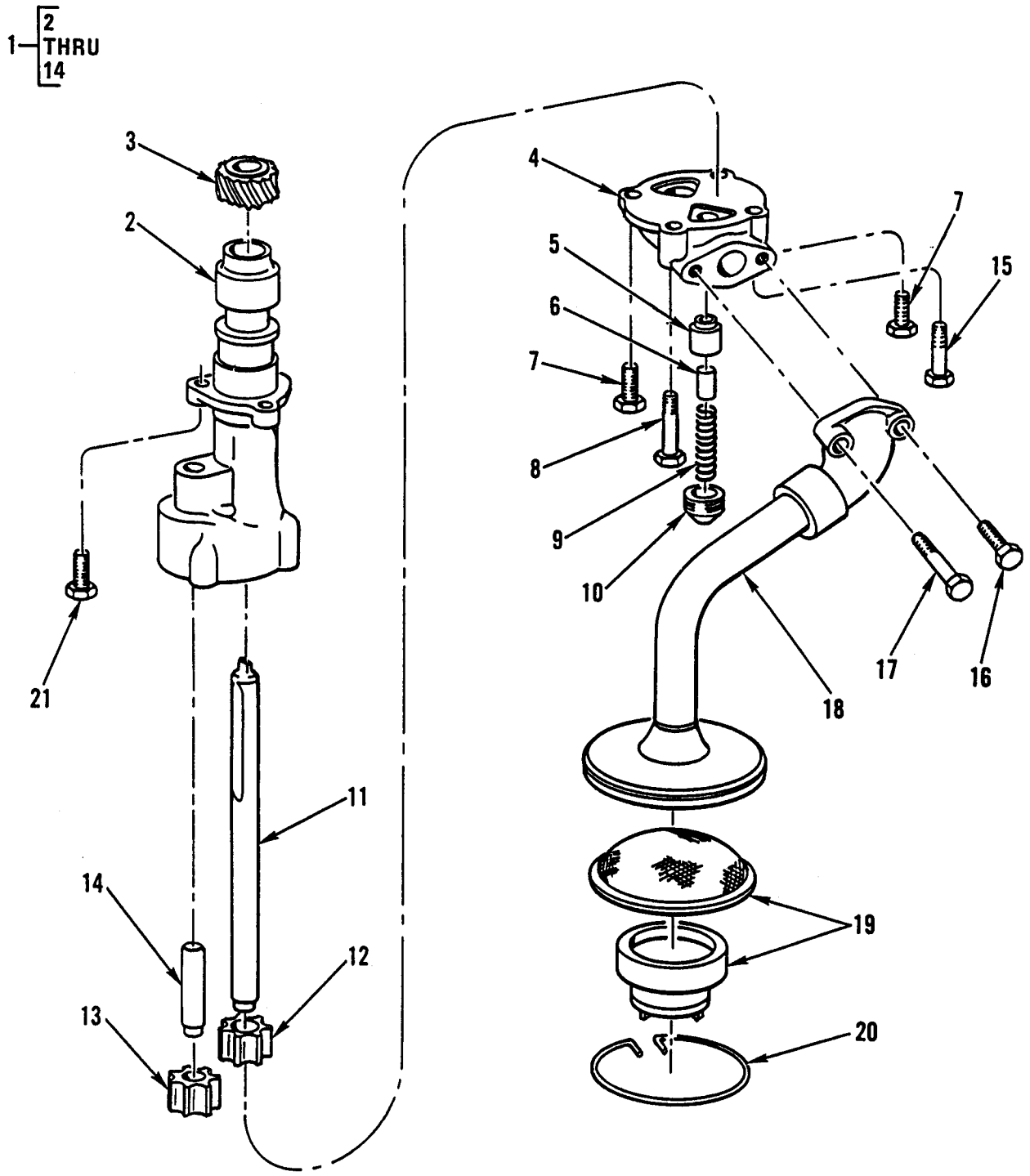

Figure 14. Engine Lubrication System – Engine Oil Pump Assembly.

(1) ITEM NO	(2) SMR CODE	(3) NSN	(4) CAGEC	(5) PART NUMBER	(6) DESCRIPTION AND USABLE ON CODES (UOC)	(7) QTY
					GROUP 0106	
					FIG. 14 ENGINE LUBRICATION SYSTEM – OIL PUMP ASSEMBLY, ENGINE 364 180 01 01	
1	PFFFF	2815-01-235-8626	64678	364 180 01 01	OIL PUMP ASSEMBLY,E	1
2	XAFZZ		19207	NPN-011	.HOUSING,PUMP	1
3	PAFZZ	3020-01-237-1852	64678	352 181 12 08	.GEAR,HELICAL	1
4	PAFZZ	2930-01-237-0319	64678	352 181 12 20	.WATER OUTLET,ENGINE	1
5	PFFZZ	3040-01-236-1258	64678	352 184 03 29	.HOUSING	1
6	PFFZZ	2940-12-127-2353	D8046	321 181 00 42	.KOLBEN	1
7	PAFZZ	5305-01-239-2585	64678	000933 008215	.SCREW,CAP,HEXAGON H	2
8	PAFZZ	5306-01-240-0839	64678	000931008314	.BOLT,MACHINE	1
9	PFFZZ	5360-01-238-7311	64678	326 993 04 01	.SPRING,HELICAL,COMP	1
10	PFFZZ	5365-01-242-8619	64678	352 997 07 30	.PLUG,MACHINE THREAD	1
11	PAFZZ	3040-01-236-7214	64678	352 181 23 05	.SHAFT,STRAIGHT	1
12	PAFZZ	3020-01-237-1853	64678	352 181 02 06	.GEAR,SPUR	1
13	PAFZZ	3020-01-237-1854	64678	352 181 01 06	.GEAR,SPUR	1
14	PAFZZ	3040-01-234-7926	64678	352 181 00 10	.SHAFT,STRAIGHT	1
15	PFFZZ	5305-12-124-3768	15526	931-10 M8X35 P	SCREW,CAP,HEXAGON H	1
16	PAFZZ	5305-01-239-2585	64678	000933 008215	SCREW,CAP,HEXAGON H	1
17	PAFZZ	5306-01-240-0839	64678	000931008314	BOLT,MACHINE	1
18	PFFZZ	4710-01-235-9120	64678	352-180-2851	TUBE ASSEMBLY,METAL	1
19	PAFZZ	2815-01-174-7403	S3465	4537800-316	CHAMBER,SUCTION	1
20	PAFZZ	5325-01-238-8966	64678	007993 070100	RING,RETAINING	1
21	PFFZZ	5306-01-174-7544	15526	933-10-M8X25 F	BOLT,MACHINE	3
					END OF FIGURE	

UNIT, DIRECT SUPPORT AND GENERAL SUPPORT MAINTENANCE

SMALL EMPLACEMENT EXCAVATOR (SEE) AND HIGH MOBILITY MATERIAL HANDLER (HMMH)

ENGINE LUBRICATION SYSTEM – FLUID FILTER 67 607 63 146, CIRCUITING VALVE COVER 67 607 31 991, AND FLUID FILTER ELEMENT 352 180 03 09

REPAIR PARTS LIST

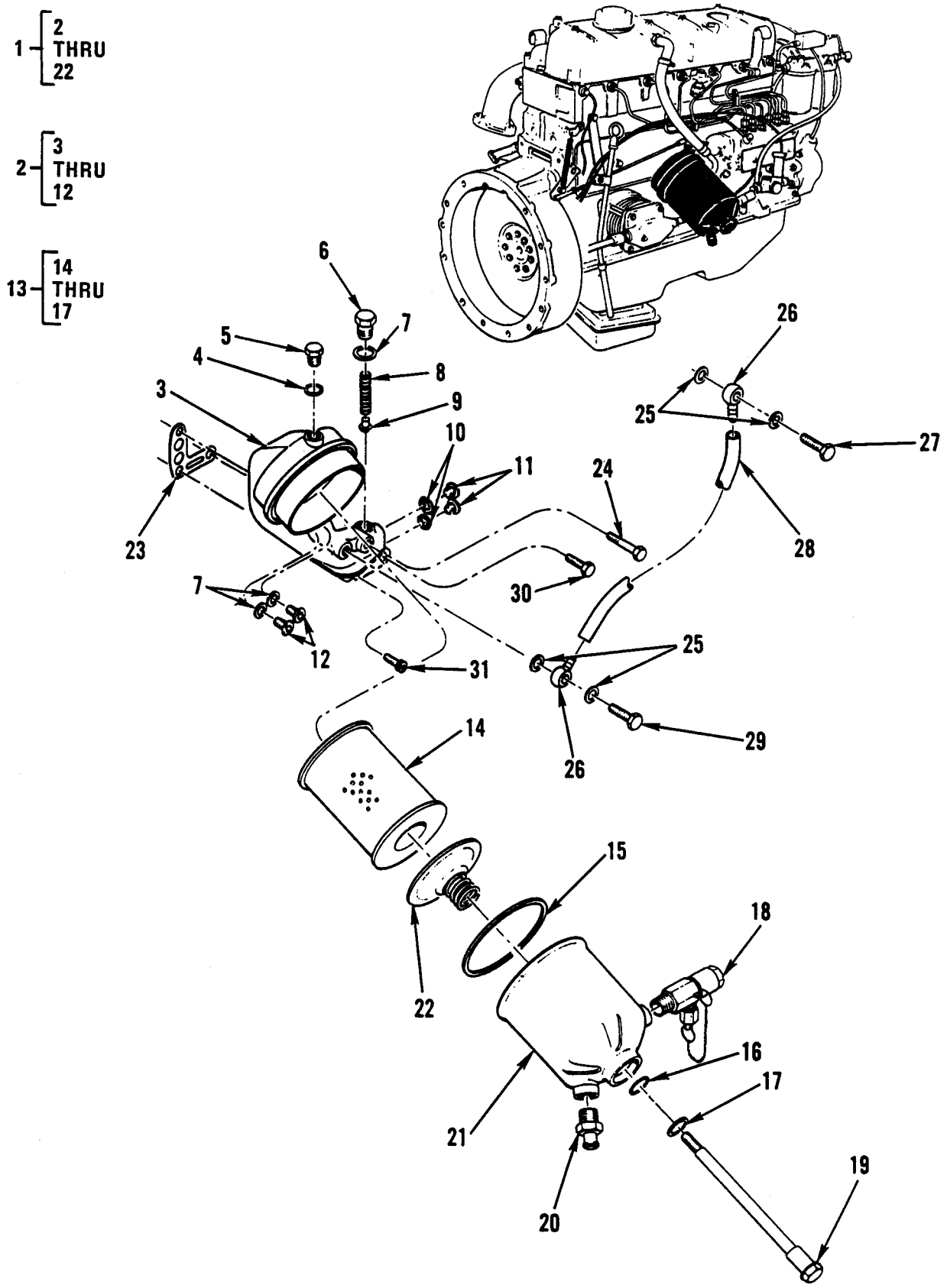

Figure 15. Engine Lubrication System – Fluid Filter, Circuiting Valve Cover, and Fluid Filter Element.

(1) ITEM NO	(2) SMR CODE	(3) NSN	(4) CAGEC	(5) PART NUMBER	(6) DESCRIPTION AND USABLE ON CODES (UOC)	(7) QTY
					GROUP 0106	
					FIG. 15 ENGINE LUBRICATION SYSTEM – FILTER, FLUID 67 607 63 146, COVER, CIRCUITING VALVE 67 607 31 991, AND FILTER ELEMENT, FLUID 352 180 03 09	
1	PAFFF	2940-01-234-8006	D8086	67 607 63 146	FILTER,FLUID	1
2	PFFFF	2940-01-237-6315	D8086	67 607 31 991	.COVER,CIRCUITING VA	1
3	XAFZZ		19207	NPN	..COVER	1
4	PAFZZ	5365-00-140-7702	D8046	007603 018100	..RING,SEAL	1
5	PAFZZ	5365-01-243-2990	64678	346 997 01 30	..PLUG,MACHINE THREAD	1
6	PAFZZ	5365-12-127-0149	D8081	0256-71	..PLUG,MACHINE THREAD	1
7	PAFZZ	5365-00-137-6206	D8046	007603018101	..RING,SEAL	3
8	PAFZZ	5360-01-238-6243	64678	181 993 06 01	..SPRING,HELICAL,COMP	1
9	PAFZZ	4820-01-234-4992	D8086	098-170	..DISK,VALVE	1
10	PAFZZ	5330-01-270-1311	64678	007603014405	..SEAL RING,METAL	2
11	PAFZZ	5365-12-178-6534	15526	908 M14X1.5	..PLUG,MACHINE THREAD	2
12	PAFZZ	5365-01-243-9557	64678	915048 018000	..PLUG,MACHINE THREAD	2
13	PAOOO	2940-01-255-1531	64678	352 180 03 09	.FILTER ELEMENT,FLU INCLUDES OIL PAN DRAIN PLUG RING SEAL	1
14	XAOZZ		64678	001 184 70 25	..INSERT,FILTER	1
15	PFOZZ	5331-00-140-7724	D8046	000 184 65 80	..O-RING	1
16	XAOZZ		64678	000 184 63 80	..PACKING,PREFORMED	1
17	PAOZZ	5330-01-270-1311	64678	007 603 014 405	..SEAL RING,METAL	1
18	PFOZZ	4820-01-300-5867	C6467	001 260 3857	.VALVE,PNEUMATIC TAN	1
19	PAOZZ	4730-01-243-1418	64678	000 184 16 71	.BOLT,FLUID PASSAGE	1
20	PAOZZ	5365-01-239-2690	64678	000 184 05 73	.PLUG,MACHINE,THREAD	1
21	PAOZZ	2910-01-236-6087	D8086	67 607 12 991	.BOWL,SEDIMENT	1
22	PFOZZ	5340-01-316-1607	64678	352 180 01 88	.HOLDER,SPRING	1
23	PAFZZ	5330-01-238-3234	64678	327 184 02 80	GASKET	1
24	PAFZZ	5306-01-238-0600	64678	914126 010004	BOLT,MACHINE	1
25	PFOZZ	5330-12-156-4806	D8046	007603010110	GASKET	4
26	PAOZZ	4730-01-235-5070	64678	915052 004011	CONNECTOR,MULTIPLE	2
27	PFOZZ	5305-01-293-1736	64678	915036 006101	SCREW,CAP,HEXAGON H	1
28	MOOZZ		64678	009 997 93 82X 262	HOSE MAKE FROM CAGE 64678 P/N 009 997 93 82, 262 MM	V
29	PAOZZ	4730-01-243-1419	64678	352 990 01 63	BOLT,FLUID PASSAGE	1
30	PAOZZ	5306-01-238-1468	64678	914126 010003	BOLT,MACHINE	1

(1) ITEM NO	(2) SMR CODE	(3) NSN	(4) CAGEC	(5) PART NUMBER	(6) DESCRIPTION AND USABLE ON CODES (UOC)	(7) QTY
31	PAOZZ	5305-01-239-3520	15526	912 8.8X10X25	SCREW,CAP,SOCKET HE	1
					END OF FIGURE	

UNIT, DIRECT SUPPORT AND GENERAL SUPPORT MAINTENANCE

SMALL EMPLACEMENT EXCAVATOR (SEE) AND HIGH MOBILITY MATERIAL HANDLER (HMMH)

MANIFOLDS – EXHAUST MANIFOLD 312 142 13 01

REPAIR PARTS LIST

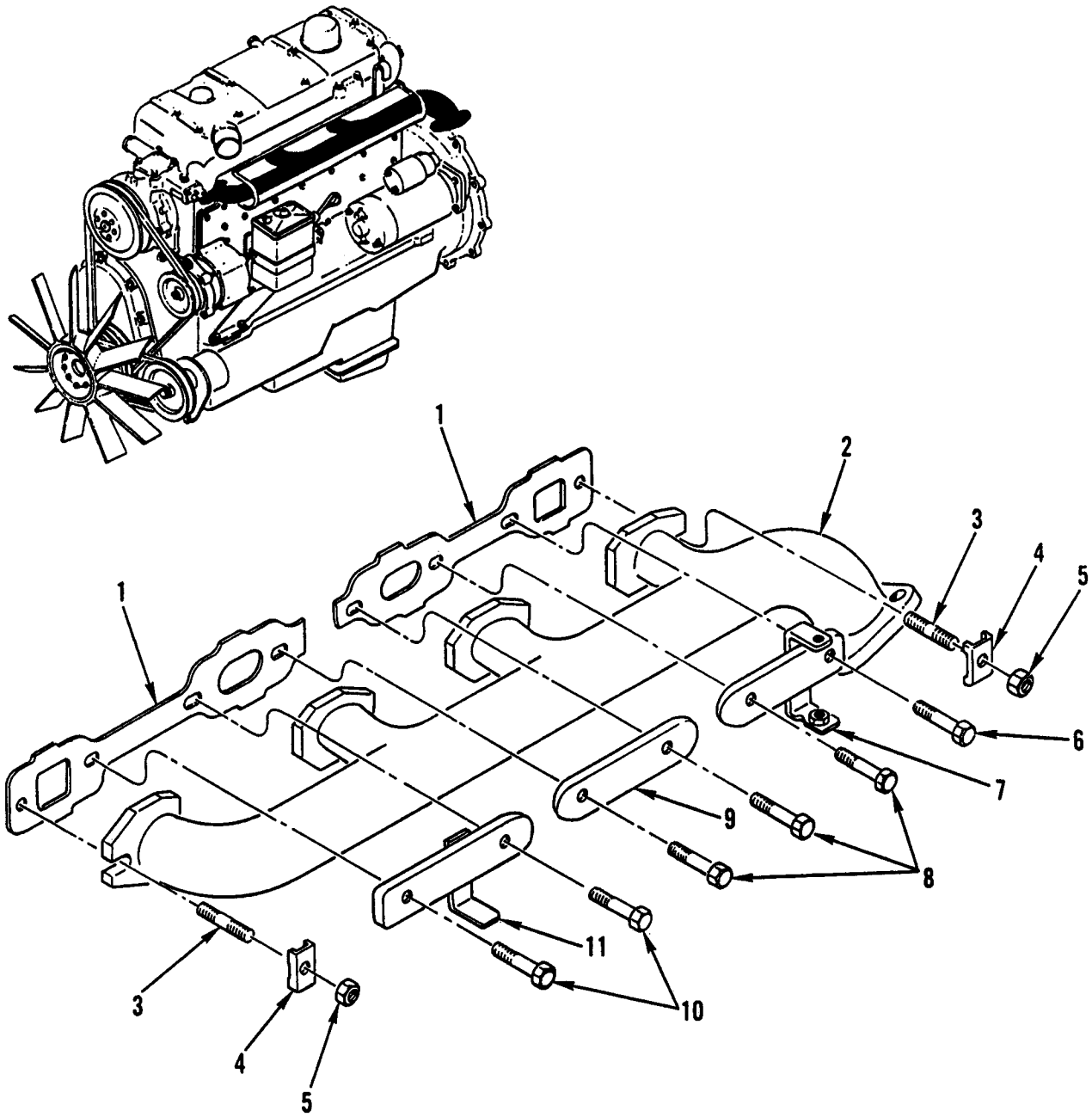

Figure 16. Manifolds – Exhaust Manifold.

(1) ITEM NO	(2) SMR CODE	(3) NSN	(4) CAGEC	(5) PART NUMBER	(6) DESCRIPTION AND USABLE ON CODES (UOC)	(7) QTY
					GROUP 0108	
					FIG. 16 MANIFOLDS – MANIFOLD, EXHAUST 312 142 13 01	
1	PAFZZ	5330-01-238-5876	64678	352 142 04 80	GASKET PART OF KIT P/N 352 010 26 21	2
2	PFFZZ	2815-01-236-7289	64678	312 142 13 01	MANIFOLD,EXHAUST	1
3	PAFZZ	5307-01-239-9364	64678	000939 010027	STUD,PLAIN.....	2
4	PAFZZ	5340-01-238-6296	64678	312 142 02 12	STRAP,RETAINING	2
5	PFFZZ	5310-01-238-3198	15526	934 M10X1.5C	NUT,PLAIN,HEXAGON	2
6	PAFZZ	5306-01-239-3497	15526	931 M10X55P	BOLT,MACHINE.....	1
7	PAFZZ	5342-01-237-0324	64678	314 140 00 38	BRACKET,ENGINE ACCE	1
8	PAFZZ	5306-01-238-3172	15526	931 M10X45 P	BOLT,MACHINE.....	3
9	PAOZZ	5340-01-238-6297	64678	312 142 04 12	STRAP,RETAINING CENTRAL.....	1
10	PFFZZ	5306-01-238-2158	15526	931 M10X50 P	BOLT,MACHINE.....	2
11	PAFZZ	5342-01-237-0323	64678	352 140 04 38	BRACKET,ENGINE ACCE	1
					END OF FIGURE	

UNIT, DIRECT SUPPORT AND GENERAL SUPPORT MAINTENANCE

SMALL EMPLACEMENT EXCAVATOR (SEE) AND HIGH MOBILITY MATERIAL HANDLER (HMMH)

COMPRESSOR ASSEMBLY (INCLUDING COMPRESSOR AND HOUSING) – COMPRESSOR PARTS KIT 352 130 02 15, COMPRESSOR CYLINDER HEAD 352 130 03 19, PISTON CONNECTING ROD 352 130 02 16, SLEEVE CYLINDER 352 130 01 08, AND PISTON ASSEMBLY 352 130 01 17

REPAIR PARTS LIST

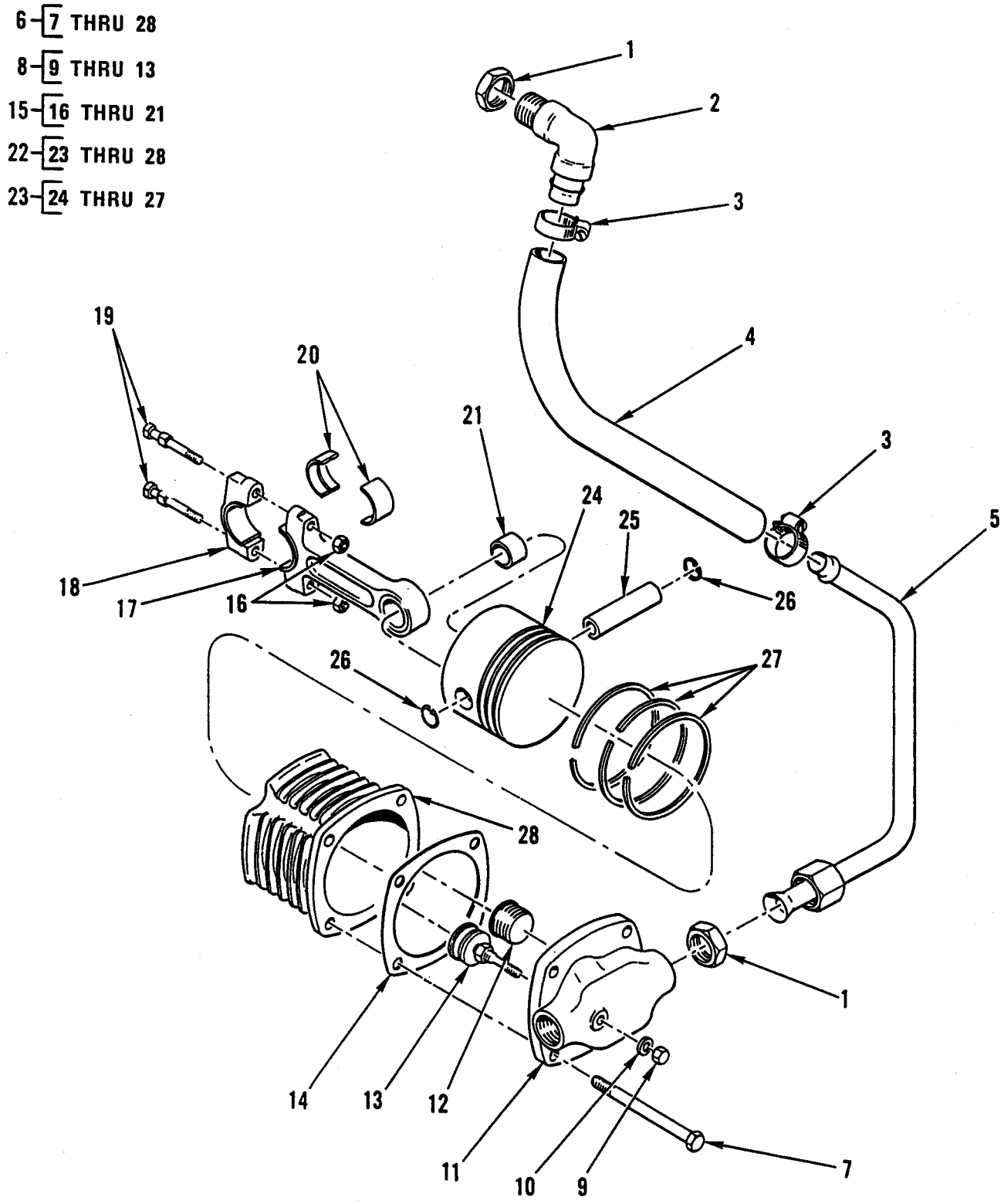

Figure 17. Compressor Assembly (Including Compressor and Housing) – Compressor Parts Kit, Compressor Cylinder Head, Piston Connecting Rod, Sleeve Cylinder, and Piston Assembly.

(1) ITEM NO	(2) SMR CODE	(3) NSN	(4) CAGEC	(5) PART NUMBER	(6) DESCRIPTION AND USABLE ON CODES (UOC)	(7) QTY
					GROUP 0121	
					FIG. 17 COMPRESSOR ASSEMBLY (INCLUDING COMPRESSOR AND HOUSING) – COMPRESSOR PARTS KIT 352 130 02 15, COMPRESSOR CYLINDER HEAD 352 130 03 19, PISTON CONNECTING ROD 352 130 02 16,SLEEVE CYLINDER 352 130 01 08, AND PISTON ASSEMBLY 352 130 01 17	
1	PFOZZ	5310-01-238-0640	64678	074305 022202	NUT,PLAIN,HEXAGON	2
2	PAOZZ	4710-01-235-9122	64678	352 130 28 01	PIPE,BENT METALLIC	1
3	PFOZZ	4730-01-237-1756	64678	916017 016000	CLAMP,HOSE	2
4	MOOZZ		64678	900271 018036X 280	HOSE MAKE FROM CAGE 64678 P/N 900271 018036,CUT TO 280 MM	1
5	PAOZZ	4710-01-235-9121	64678	352 130 20 01	TUBE ASSEMBLY,METAL	1
6	PAFFF	4310-01-237-0220	64678	352 130 02 15	PARTS KIT,COMPRESSO	1
7	PAFZZ	5306-01-240-7993	64678	000931 008136	.BOLT,MACHINE	4
8	PAFFF	4310-01-236-8892	64678	352 130 03 19	.CYLINDER HEAD,COMPR	1
9	PAFZZ	5310-12-178-9303	D8096	891 550 131 2	..NUT	1
10	PAFZZ	5330-12-156-4508	D8096	811 401 008 4	..GASKET PART OF KIT P/N 352-130-02-20..	1
11	XAFZZ		19207	NPN-013	..CYLINDER HEAD	1
12	PAFZZ	4820-01-235-1453	D8096	411 003 506 2	..VALVE,VACUUM BREAKING PART OF KIT P/N 352-130-02-20	1
13	PAFZZ	4820-01-236-6649	D8096	411 015 502 2	..VALVE,RETULATING,FL PART OF KIT P/N 352-130-02-20	1
14	PAFZZ	5330-01-238-7249	64678	352 131 02 80	.GASKET 0.65 MM PART OF KIT P/N 352-130-02-20	1
14	PAFZZ	5330-01-238-7250	64678	352 131 03 80	.GASKET 0.90 MM PART OF KIT P/N 352-130-02-20	1
15	PAFFF	4310-01-236-6711	64678	352 130 02 16	.CONNECTING ROD,PIST	1
16	PFFZZ	5310-01-238-3196	64678	321 990 02 51	..NUT,PLAIN,HEXAGON	2
17	XAFZZ		64678	352 131 01 17	..ROD,CONNECTING	1
18	XAFZZ		64678	352 131 01 18	..END CAP	1
19	PAFZZ	5305-01-238-1475	64678	321 131 01 71	..SCREW,MACHINE	2
20	PFFZZ	3120-01-242-7395	D8046	352 131 25 33	..PARTS KIT,BEARING R STANDARD 32.00 MM	1
20	PFFZZ	3120-01-246-7870	64678	352 131 26 33	..BEARING SET 31.90 MM	1
20	PFFZZ	3120-01-243-6346	64678	352 131 27 33	..BEARING SET 31.75 MM	1

(1) ITEM NO	(2) SMR CODE	(3) NSN	(4) CAGEC	(5) PART NUMBER	(6) DESCRIPTION AND USABLE ON CODES (UOC)	(7) QTY
20	PFFZZ	3120-01-243-5214	64678	352 131 28 33	..BEARING SET 31.50 MM.....	1
20	PFFZZ	3120-01-243-6347	64678	352 131 29 33	..BEARING SET 31.25 MM.....	1
21	PAFZZ	3120-01-238-5938	64678	352 131 00 50	..BUSHING,SLEEVE	1
22	PAFFF	4310-01-236-6710	64678	352 130 01 08	.CYLINDER,SLEEVE.....	1
23	XAFFF		64678	352 130 01 17	..PISTON ASSEMBLY	1
24	XAFZZ		19207	NPN-014	...PISTON	1
25	PAFZZ	4310-01-236-5993	64678	322 131 00 22	...PIN,PISTON	1
26	PAFZZ	5325-12-124-3275	15526	472-16	...RING,RETAINING	2
27	PFFZZ	4310-01-285-1361	D2342	02-0512 60 00	...RING,SET,PISTON	1
28	XAFZZ		64678	352 131 30 02	..LINER,CYLINDER	1

END OF FIGURE

UNIT, DIRECT SUPPORT AND GENERAL SUPPORT MAINTENANCE

SMALL EMPLACEMENT EXCAVATOR (SEE) AND HIGH MOBILITY MATERIAL HANDLER (HMMH)

CLUTCH – CLUTCH ASSEMBLY

REPAIR PARTS LIST

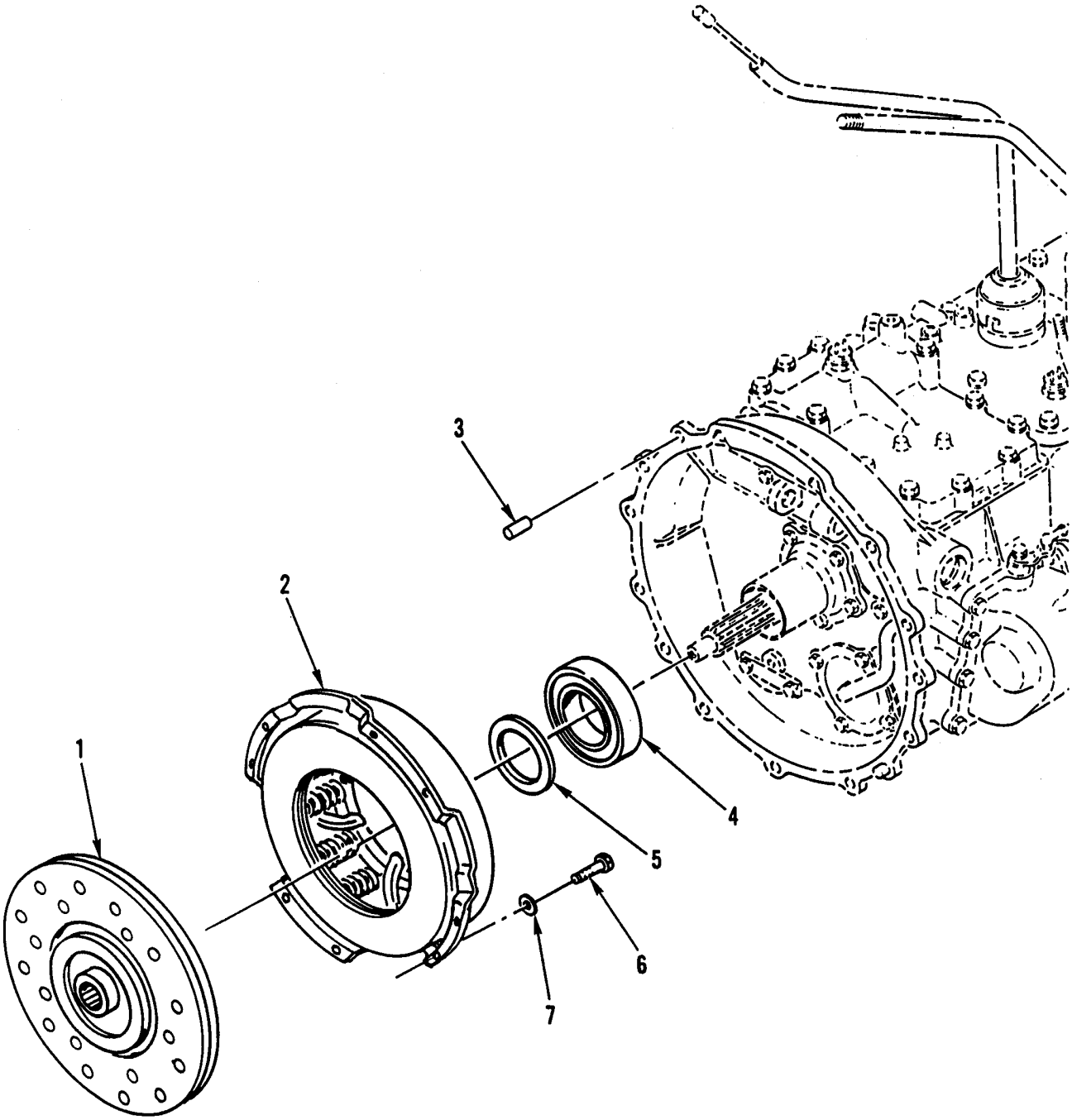

Figure 18. Clutch – Clutch Assembly.

(1) ITEM NO	(2) SMR CODE	(3) NSN	(4) CAGEC	(5) PART NUMBER	(6) DESCRIPTION AND USABLE ON CODES (UOC)	(7) QTY
					GROUP 0200, 02	
					FIG. 18 CLUTCH – CLUTCH ASSEMBLY	
1	PAFZZ	2520-01-236-0319	D8075	31 1861 999	DISK,CLUTCH	1
2	PAFZZ	2520-01-236-0663	64678	003 250 06 04	PRESSURE PLATE ASSE	1
3	PAFZZ	5315-01-239-0689	64678	000007 012203	PIN,STRAIGHT,HEADLE	2
4	PAFZZ	3110-12-176-7417	64678	000 981 7025	BEARING,BALL,ANNULA	1
5	PFFZZ	5310-01-238-1521	64678	406 252 02 52	WASHER,SHOULDERED	1
6	PFFZZ	5306-01-238-8871	64678	000933 008317	BOLT,MACHINE	8
7	PFFZZ	5310-01-174-0436	S3465	4537800-128	WASHER,SPRING TENSI	8
					END OF FIGURE	

UNIT, DIRECT SUPPORT AND GENERAL SUPPORT MAINTENANCE

SMALL EMPLACEMENT EXCAVATOR (SEE) AND HIGH MOBILITY MATERIAL HANDLER (HMMH)

CLUTCH RELEASE MECHANISM – CLUTCH LEVERS AND SHAFT

REPAIR PARTS LIST

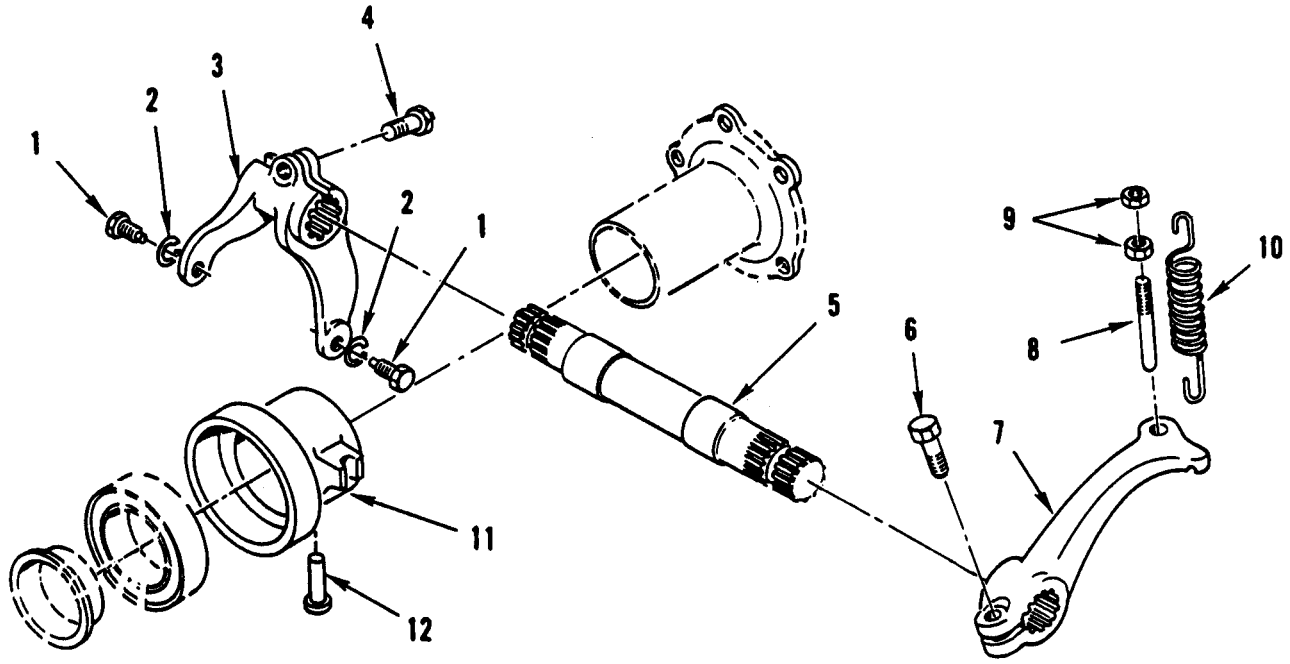

Figure 19. Clutch Release Mechanism – Clutch Levers and Shaft.

(1) ITEM NO	(2) SMR CODE	(3) NSN	(4) CAGEC	(5) PART NUMBER	(6) DESCRIPTION AND USABLE ON CODES (UOC)	(7) QTY
					GROUP 0202	
					FIG. 19 CLUTCH RELEASE MECHANISM – CLUTCH LEVERS AND SHAFT	
1	PFFZZ	5306-01-243-9369	64678	406 990 01 15	BOLT,MACHINE	2
2	PFFZZ	5310-01-171-2356	S3465	4536226-920	WASHER,SPRING TENSI	2
3	PAFZZ	3040-01-237-0471	64678	406 254 01 08	LEVER,REMOTE CONT	1
4	PFFZZ	5306-01-238-1471	64678	000933 008153	BOLT,MACHINE	1
5	PAFZZ	3040-01-237-0214	64678	406 254 00 07	SHAFT,SHOULDERED	1
6	PFFZZ	5306-01-171-4678	S3465	4536226-715	BOLT,MACHINE	1
7	PAFZZ	3040-01-237-0472	64678	419 252 00 13	LEVER,REMOTE CONT	1
8	PFFZZ	5315-01-241-6642	64678	111 295 07 33	PIN,SHOULDER,HEADLE	1
9	PFFZZ	5310-01-240-2660	64678	000439 008211	NUT,PLAIN,HEXAGON	2
10	PFFZZ	5360-01-244-4863	64678	111 993 10 10	SPRING,HELICAL,EXTE	1
11	PAFZZ	3040-01-237-0212	64678	406 254 09 10	COLLAR,SHAFT	1
12	PAFZZ	5315-01-326-0080	64678	4172530137	PIN,STRAIGHT,HEADED	1
					END OF FIGURE	

UNIT, DIRECT SUPPORT AND GENERAL SUPPORT MAINTENANCE

SMALL EMPLACEMENT EXCAVATOR (SEE) AND HIGH MOBILITY MATERIAL HANDLER (HMMH)

CLUTCH RELEASE MECHANISM – CONTROL PEDAL 406 290 04 01

REPAIR PARTS LIST

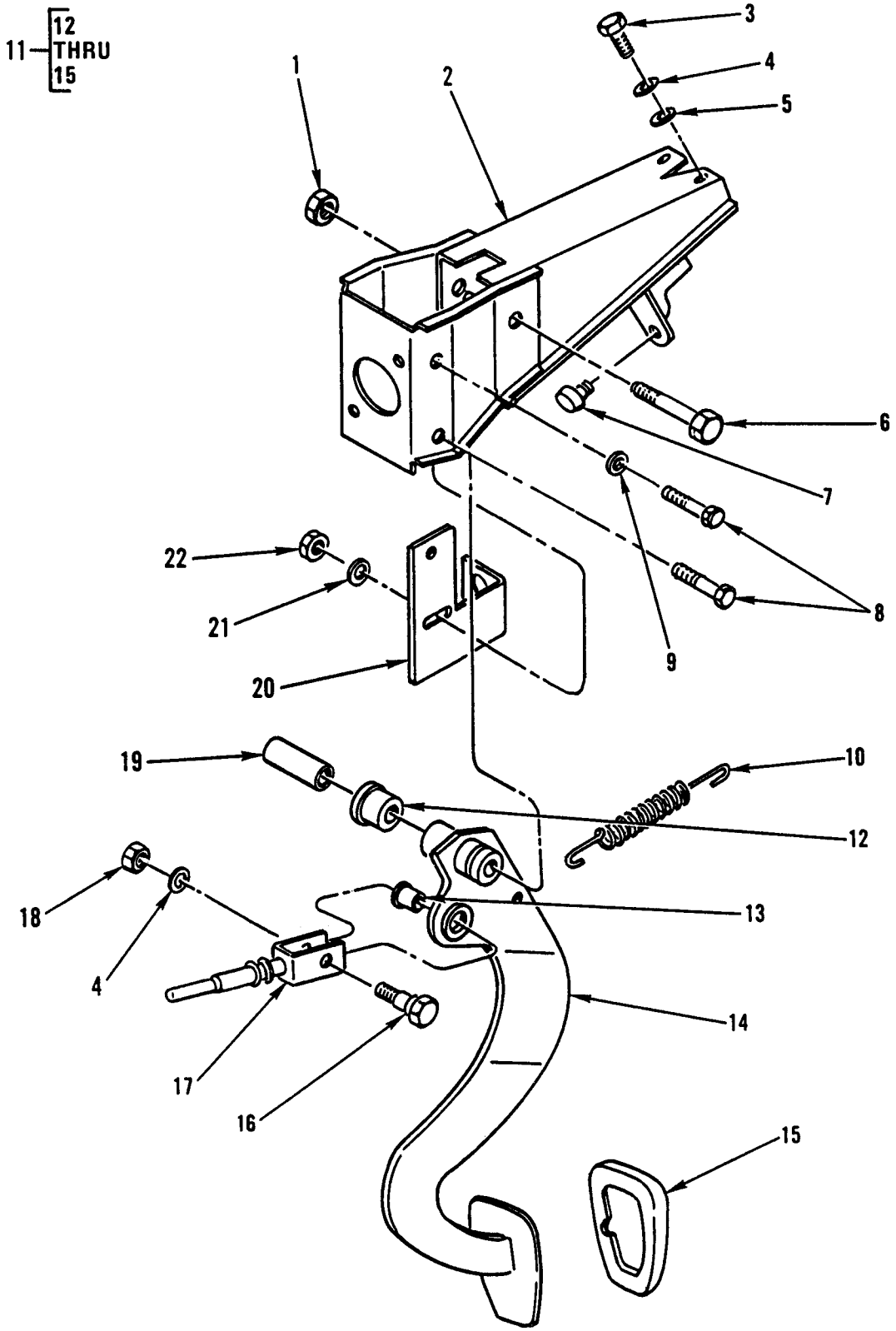

Figure 20. Clutch Release Mechanism – Control Pedal.

(1) ITEM NO	(2) SMR CODE	(3) NSN	(4) CAGEC	(5) PART NUMBER	(6) DESCRIPTION AND USABLE ON CODES (UOC)	(7) QTY
					GROUP 0202	
					FIG. 20 CLUTCH RELEASE MECHANISM – CONTROL PEDAL 406 290 04 01	
1	PFOZZ	5310-01-239-3535	64678	913004 012008	NUT,SELF-LOCKING,HE	1
2	PAOZZ	2590-01-236-4502	64678	406 290 06 33	BRACKET,TRACTOR	1
3	PFOZZ	5306-01-174-7550	S3465	4537800-129	BOLT,MACHINE	2
4	PAOZZ	5310-01-174-0436	S3465	4537800-128	WASHER,SPRING TENSI	3
5	PFOZZ	5310-01-237-5224	64678	000125 008413	WASHER,FLAT	2
6	PFOZZ	5306-01-238-4548	64678	000960 012224	BOLT,MACHINE	1
7	PAOZZ	5340-01-238-8734	64678	111 291 00 86	BUMPER,NONMETALLIC	1
8	PFOZZ	5305-01-155-5439	56161	10501757	SCREW,CAP,HEXAGON H	2
9	PFOZZ	5310-01-171-2356	S3465	4536226-920	WASHER,SPRING TENSI	1
10	PFOZZ	5360-01-239-3819	64678	406 993 00 10	SPRING,HELICAL,EXTE	1
11	PFOOO	2540-01-237-0492	64678	406 290 04 01	PEDAL,CONTROL	1
12	PFOZZ	3120-01-238-5934	64678	110 291 05 50	.BEARING,SLEEVE	2
13	PFOZZ	3120-01-238-5939	64678	110 292 01 50	.BUSHING,SLEEVE	2
14	XAOZZ		19207	NPN-015	.ARM,CONTROL	1
15	PFOZZ	2540-01-236-7319	64678	319 292 00 82	.PAD,PEDAL	1
16	PFOZZ	5306-01-240-5172	64678	110 295 05 71	BOLT,SHOULDER	1
17	PFOZZ	2590-01-237-6978	64678	406 290 07 39	ROD	1
18	PFOZZ	5310-01-384-2159	64678	000934 008020	NUT,PLAIN,HEXAGON	1
19	PFOZZ	3120-01-240-2701	64678	111 292 01 50	BUSHING,SLEEVE	1
20	PAOZZ	5340-01-238-5926	64678	406 550 37 40	BRACKET,ANGLE	1
21	PFOZZ	5310-01-240-1294	15526	9021 6	WASHER,FLAT	1
22	PFOZZ	5310-01-241-6349	64678	913004 006002	NUT,SELF-LOCKING,HE	1
					END OF FIGURE	

UNIT, DIRECT SUPPORT AND GENERAL SUPPORT MAINTENANCE

SMALL EMPLACEMENT EXCAVATOR (SEE) AND HIGH MOBILITY MATERIAL HANDLER (HMMH)

HYDRAULIC CLUTCH SYSTEM – HYDRAULIC CYLINDER ASSEMBLY 001 295 51 06

REPAIR PARTS LIST

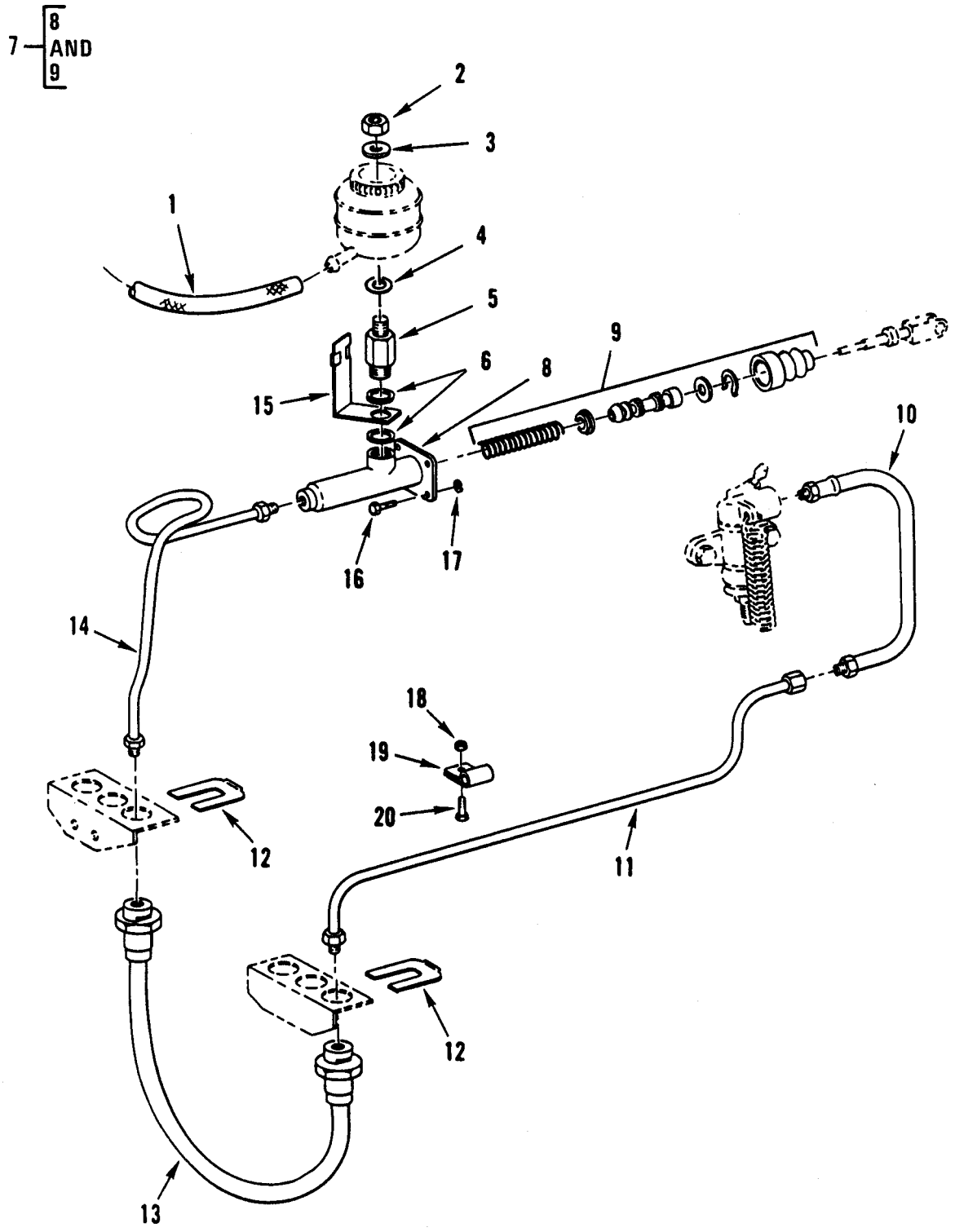

Figure 21. Hydraulic Clutch System – Hydraulic Cylinder Assembly.

(1) ITEM NO	(2) SMR CODE	(3) NSN	(4) CAGEC	(5) PART NUMBER	(6) DESCRIPTION AND USABLE ON CODES (UOC)	(7) QTY
					GROUP 0207	
					FIG. 21 HYDRAULIC CLUTCH SYSTEM – CYLINDER ASSEMBLY, HYDRAULIC 001 295 51 06	
1	PAOZZ	4720-01-238-0192	D0198	406 997 77 82	HOSE,NONMETALLIC	1
2	PFOZZ	5310-01-246-0612	64678	000936 012005	NUT,PLAIN,HEXAGON	1
3	PFOZZ	5310-01-241-6378	64678	421 292 00 76	WASHER,RECESSED	1
4	PAOZZ	5331-01-259-4085	D2456	631.160.32K001	O-RING	1
5	PFOZZ	4730-01-237-6206	64678	406 997 51 72	ADAPTER,STRAIGHT,TU	1
6	PAOZZ	5330-01-174-7588	S3465	4537800-115	PACKING,PREFORMED	2
7	PAOFF	2530-01-237-3581	64678	001 295 51 06	CYLINDER ASSEMBLY,H	1
8	XAFZZ		19207	NPN - 016	.HOUSING,CYLINDER	1
9	PFFZZ	2520-01-270-4333	D2456	RK 19781	.PARTS KIT,LINEAR AC KIT PARTS ARE NOT SOLD SEPARATELY	1
10	PFOZZ	4720-01-237-0167	64678	002 428 30 35	HOSE ASSEMBLY,NONME	1
11	PFOZZ	4720-01-236-0595	64678	340 420 28 29	HOSE,METALLIC 6 X 0.7	1
12	PFOZZ	5340-01-391-2786	64678	000 428 04 73	CLIP,RETAINING	2
13	PFOZZ	4720-01-371-1742	D2456	550E.64.1.OF	HOSE ASSEMBLY,NONME	1
14	PFOZZ	4720-01-236-0596	64678	340 420 13 29	HOSE,METALLIC	1
15	PFOZZ	5310-01-240-4161	64678	406 426 39 40	BRACKET,ANGLE	1
16	PFOZZ	5306-01-174-7550	S3465	4537800-129	BOLT,MACHINE	2
17	PFOZZ	5310-01-174-0436	S3465	4537800-128	WASHER,SPRING TENSI	2
18	PFOZZ	5310-01-241-6349	64678	913004 006002	NUT,SELF-LOCKING,HE	5
19	PFOZZ	5340-01-244-4708	64678	360 995 01 01	CLAMP,LOOP	5
20	PFOZZ	5305-01-155-5439	56161	10501757	SCREW,CAP,HEXAGON H	5
					END OF FIGURE	

UNIT, DIRECT SUPPORT AND GENERAL SUPPORT MAINTENANCE

SMALL EMPLACEMENT EXCAVATOR (SEE) AND HIGH MOBILITY MATERIAL HANDLER (HMMH)

HYDRAULIC CLUTCH SYSTEM – BRAKE FLUID RESERVOIR 0014319902

REPAIR PARTS LIST

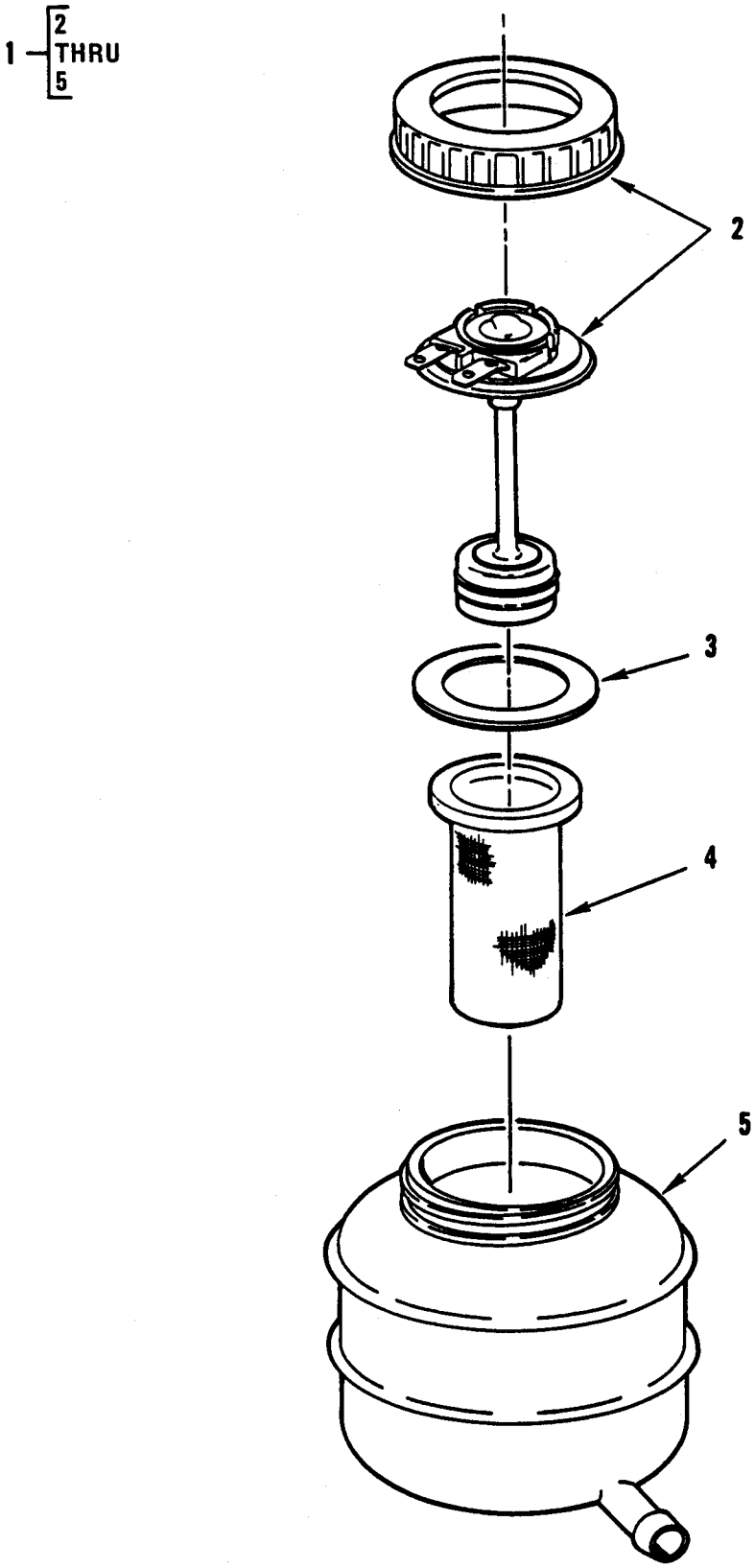

Figure 22. Hydraulic Clutch System – Brake Fluid Reservoir.

(1) ITEM NO	(2) SMR CODE	(3) NSN	(4) CAGEC	(5) PART NUMBER	(6) DESCRIPTION AND USABLE ON CODES (UOC)	(7) QTY
					GROUP 0207	
					FIG. 22 HYDRAULIC CLUTCH SYSTEM – RESERVOIR, BRAKE FLUID 0014319902	
1	PFOOO	2530-01-332-6041	64678	0014319902	RESERVOIR,BRAKE FLU.....	1
2	PFOZZ	2530-12-337-5747	D8046	000 431 7733	.COVER,EQUALIZING TA.....	1
3	PAOZZ	5330-12-317-7337	D8046	3.3501-0200.1	..GASKET	1
4	PAOZZ	4730-01-291-8663	64678	3.3556-1114.1	.STRAINER,ELEMENT,SE.....	1
5	PFOZZ	2530-01-332-6041	64678	001 431 99 02	.RESERVOIR,BRAKE FLU.....	1
					END OF FIGURE	

UNIT, DIRECT SUPPORT AND GENERAL SUPPORT MAINTENANCE

SMALL EMPLACEMENT EXCAVATOR (SEE) AND HIGH MOBILITY MATERIAL HANDLER (HMMH)

HYDRAULIC CLUTCH SYSTEM – CLUTCH SLAVE CYLINDER 263.207.00K014

REPAIR PARTS LIST

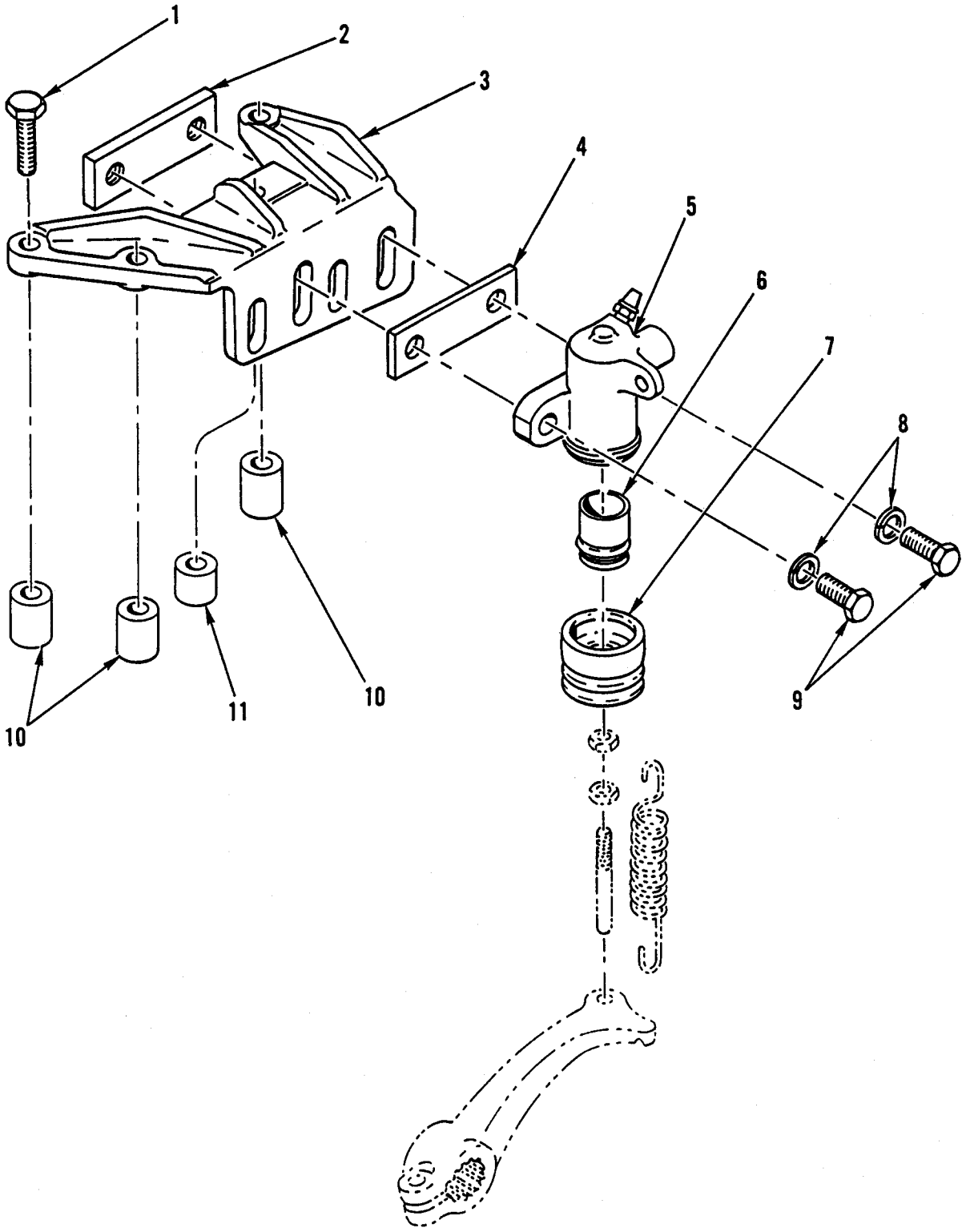

Figure 23. Hydraulic Clutch System – Clutch Slave Cylinder.

(1) ITEM NO	(2) SMR CODE	(3) NSN	(4) CAGEC	(5) PART NUMBER	(6) DESCRIPTION AND USABLE ON CODES (UOC)	(7) QTY
					GROUP 0207	
					FIG. 23 HYDRAULIC CLUTCH SYSTEM – CLUTCH SLAVE CYLINDER 263.207.00K014	
1	PFOZZ	5305-01-239-8854	64678	914141 008125	SETSCREW	3
2	PFOZZ	5310-01-241-2685	64678	406 997 50 75	NUT STRIP	1
3	PFOZZ	5342-01-237-0325	64678	406 254 01 40	BRACKET,ENGINE,ACCE	1
4	PFOZZ	5365-01-246-7421	64678	406 257 00 84	SPACER,PLATE	1
5	PAOOO	3040-01-237-6977	D2456	263.207.00K014	CLUTCH SLAVE CYLIND	1
6	KFOZZ		19207	NPN-017	.PISTON PART OF KIT P/N RK 208003K	1
7	PFOZZ	2530-01-299-0378	64678	000 295 05 83	.BOOT,DUST AND MOIST PART OF KIT P/N RK 208003K	1
8	PFOZZ	5310-01-174-0436	S3465	4537800-128	WASHER,SPRING TENSI	2
9	PFOZZ	5306-01-176-1338	S3465	4537800-245	BOLT,MACHINE	2
10	PAOZZ	5310-01-239-0646	64678	419 252 00 52	WASHER,FLAT	3
11	PAOZZ	5365-01-244-2358	64678	338 293 00 53	SPACER,SLEEVE	1
					END OF FIGURE	

UNIT, DIRECT SUPPORT AND GENERAL SUPPORT MAINTENANCE

SMALL EMPLACEMENT EXCAVATOR (SEE) AND HIGH MOBILITY MATERIAL HANDLER (HMMH)

FUEL SYSTEM, CARBURETOR, FUEL INJECTOR – FUEL INJECTOR NOZZLE 0432231887

REPAIR PARTS LIST

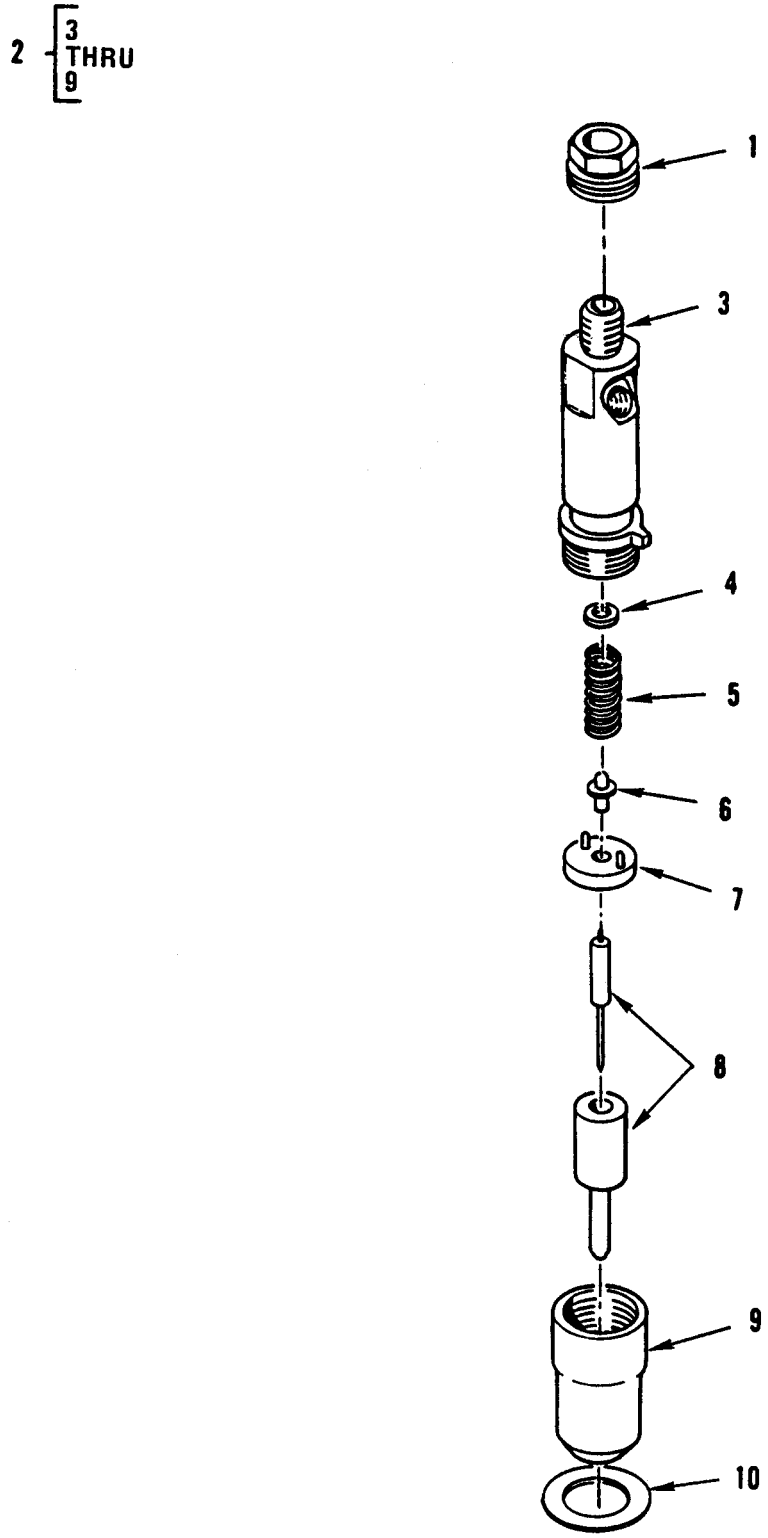

Figure 24. Fuel System, Carburetor, Fuel Injector – Fuel Injector Nozzle.

(1) ITEM NO	(2) SMR CODE	(3) NSN	(4) CAGEC	(5) PART NUMBER	(6) DESCRIPTION AND USABLE ON CODES (UOC)	(7) QTY
					GROUP 03,0301	
					FIG. 24 FUEL SYSTEM, CARBURETOR, FUEL INJECTOR – NOZZLE, FUEL INJECTOR 0432231887	
1	PAOZZ	5306-01-241-2642	64678	352 017 00 71	BOLT,EXTERNALLY RE	6
2	PAFFF	2910-01-224-5495	53867	0432231887	NOZZLE,FUEL INJECTI	6
3	XAFZZ		19207	NPN-018	.BODY,NOZZLE	1
4	PAFZZ	5365-01-173-9309	S3465	4537800-169	.SHIM 1.00 MM V	
4	PAFZZ	5365-01-183-8452	S3465	4537800-170	.SPACER,RING 1.05 MM V	
4	PAFZZ	5365-01-183-6877	S3465	4537800-171	.SPACER,RING 1.10 MM V	
4	PAFZZ	5365-01-183-6878	S3465	4537800-172	.SPACER,RING 1.15 MM V	
4	PAFZZ	5365-01-183-6879	S3465	4537800-173	.SPACER,RING 1.20 MM V	
4	PAFZZ	5365-01-183-6880	S3465	4537800-174	.SPACER,RING 1.25 MM V	
4	PAFZZ	5365-01-183-6881	S3465	4537800-175	.SPACER,RING 1.30 MM V	
4	PAFZZ	5365-01-183-6882	S3465	4537800-176	.SPACER,RING 1.35 MM V	
4	PAFZZ	5365-01-183-6883	S3465	4537800-177	.SPACER,RING 1.40 MM V	
4	PAFZZ	5365-01-176-1407	S3465	4537800-178	.SPACER,RING 1.45 MM V	
4	PAFZZ	5365-01-176-1406	S3465	4537800-179	.SPACER,RING 1.50 MM V	
4	PAFZZ	5365-01-176-1405	S3465	4537800-180	.SPACER,RING 1.55 MM V	
4	PAFZZ	5365-01-176-1404	S3465	4537800-181	.SPACER,RING 1.60 MM V	
4	PAFZZ	5365-01-176-1403	S3465	4537800-182	.SPACER,RING 1.65 MM V	
4	PAFZZ	5365-01-176-1402	S3465	4537800-183	.SPACER,RING 1.70 MM V	
4	PAFZZ	5365-01-176-4766	S3465	4537800-184	.SPACER,RING 1.75 MM V	
4	PAFZZ	5365-01-176-4765	S3465	4537800-185	.SPACER,RING 1.80 MM V	
4	PAFZZ	5365-01-176-4764	S3465	4537800-186	.SPACER,RING 1.85 MM V	
4	PAFZZ	5365-01-176-4763	S3465	4537800-187	.SPACER,RING 1.90 MM V	
4	PAFZZ	5365-01-176-4767	S3465	4537800-188	.SPACER,RING 1.95 MM V	
5	PAFZZ	5360-12-165-7851	D8015	2 434 619 017	.SPRING,HELICAL,COMP	1

(1) ITEM NO	(2) SMR CODE	(3) NSN	(4) CAGEC	(5) PART NUMBER	(6) DESCRIPTION AND USABLE ON CODES (UOC)	(7) QTY
6	PAFZZ	2910-01-174-0222	S3465	4537800-190	.PLUNGER,FUEL VALVE.....	1
7	PAFZZ	2910-12-179-3915	D8015	2 430 136 017	.DISC,FUEL SYSTEM USED WITH 49.8 MM NUT V	
7	PAFZZ	2910-01-285-1374	53867	2 430 136 015	.PLATE,INTERMEDIATE USED WITH 52.4 MM NUT V	
8	PAFZZ	2910-01-236-1282	64678	000 017 39 12	.NOZZLE,FUEL INJECTI.....	1
9	PAFZZ	4730-01-238-0148	D8015	2 433 317 244	.NUT,UNION 49.8 MM.....V	
9	PAFZZ	4730-01-285-2783	53867	2 433 349 208	.NUT,TUBE COUPLING 52.4 MM V	
10	PAFZZ	5330-01-313-0300	64678	346 017 03 60	SEAL RING,METAL.....V	
10	PAFZZ	5310-01-237-5021	64678	346 017 01 60	FLAT WASHER 1.0 MM V	
10	PAFZZ	5330-01-313-3982	64678	346 017 02 60	GASKET,METAL 1.5 MM V	
					END OF FIGURE	

UNIT, DIRECT SUPPORT AND GENERAL SUPPORT MAINTENANCE

SMALL EMPLACEMENT EXCAVATOR (SEE) AND HIGH MOBILITY MATERIAL HANDLER (HMMH)

FUEL PUMPS – METAL TUBE ASSEMBLY 352 070 37 33, METAL TUBE ASSEMBLY 352 070 36 33, METAL TUBE ASSEMBLY 352 070 35 33, METAL TUBE ASSEMBLY 352 070 34 33, METAL TUBE ASSEMBLY 352 070 33 33 AND METAL TUBE ASSEMBLY 352 070 32 33

REPAIR PARTS LIST

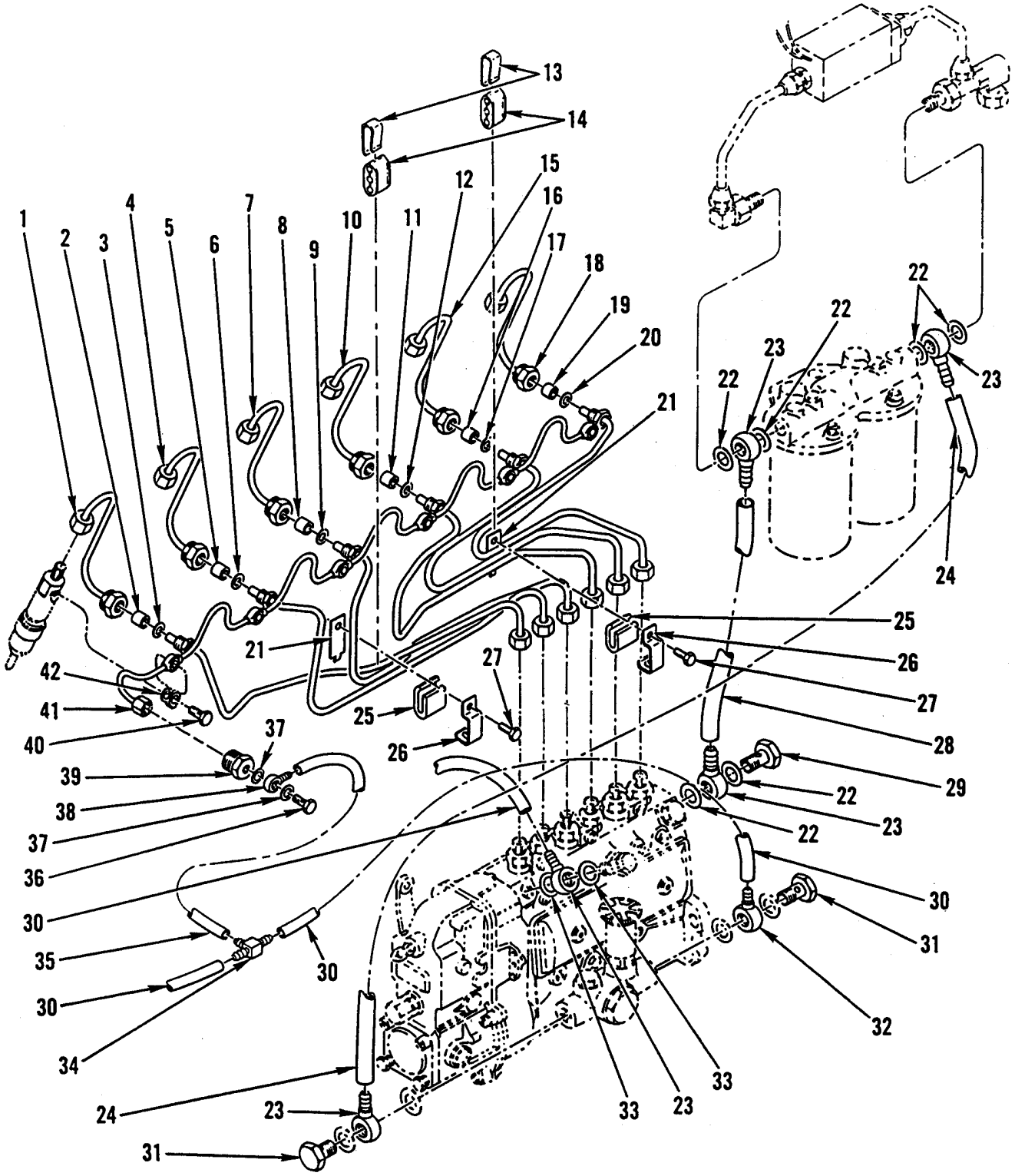

Figure 25. Fuel Pumps – Metal Tube Assemblies.

(1) ITEM NO	(2) SMR CODE	(3) NSN	(4) CAGEC	(5) PART NUMBER	(6) DESCRIPTION AND USABLE ON CODES (UOC)	(7) QTY
					GROUP 0302	
					FIG. 25 FUEL PUMPS – TUBE ASSEMBLY, METAL 352 070 37 33, TUBE ASSEMBLY, METAL 352 070 36 33, TUBE ASSEMBLY, METAL 352 070 35 33, TUBE ASSEMBLY, METAL 352 070 34 33, TUBE ASSEMBLY, METAL 352 070 33 33, AND TUBE ASSEMBLY, METAL 352 070 32 33	
1	PAOZZ	4710-01-236-1306	64678	352 070 37 33	TUBE ASSEMBLY,METAL	1
2	PAOZZ	5330-01-238-4610	64078	352 997 05 40	.PACKING,PREFORMED	1
3	PAOZZ	5310-01-239-1337	64678	006902 006102	.WASHER,FLAT	1
4	PAOZZ	4710-01-236-1305	64678	352 070 36 33	TUBE ASSEMBLY,METAL	1
5	PAOZZ	5330-01-238-4610	64678	352 997 05 40	.PACKING,PREFORMED	1
6	PAOZZ	5310-01-239-1337	64678	006902 006102	.WASHER,FLAT	1
7	PAOZZ	4710-01-235-7060	64678	352 070 35 33	TUBE ASSEMBLY,METAL	1
8	PAOZZ	5330-01-238-4610	64678	352 997 05 40	.PACKING,PREFORMED	1
9	PAOZZ	5310-01-239-1337	64678	006902 006102	.WASHER,FLAT	1
10	PAOZZ	4710-01-237-1927	64678	352 070 34 33	TUBE ASSEMBLY,METAL	1
11	PAOZZ	5330-01-238-4610	64678	352 997 05 40	.PACKING,PREFORMED	1
12	PAOZZ	5310-01-239-1337	64678	006902 006102	.WASHER,FLAT	1
13	PFOZZ	5340-01-384-7879	64678	000 429 05 40	BRACKET,ANGLE	2
14	PAOZZ	5340-12-179-6962	64678	603 428 02 84	CLAMPBLOCK,HINGE CO	2
15	PAOZZ	4710-01-235-9123	64678	352 070 33 33	TUBE ASSEMBLY,METAL	1
16	PAOZZ	5330-01-238-4610	64678	352 997 05 40	.PACKING,PREFORMED	1
17	PAOZZ	5310-01-239-1337	64678	006902 006102	.WASHER,FLAT	1
18	PAOZZ	4710-01-236-2867	64678	352 070 32 33	TUBE ASSEMBLY,METAL	1
19	PAOZZ	5330-01-238-4610	64678	352 997 05 40	.PACKING,PREFORMED	1
20	PAOZZ	5310-01-239-1337	64678	006902 006102	.WASHER,FLAT	1
21	PAOZZ	5340-01-252-5408	64678	352 995 08 48	CLAMP USED ON ENGINE S/N 134341/90 AND BELOW	2
22	PAOZZ	5331-00-140-7695	D8046	007603014104	O-RING	8
23	PAOZZ	4730-01-234-8931	64678	915052 008016	CONNECTOR,MULTIPLE	4
24	MOOZZ		64678	008 997 54 82X52 2	HOSE MAKE FROM CAGE 64678 P/N 008 997 54 82, 522 MM	1

(1) ITEM NO	(2) SMR CODE	(3) NSN	(4) CAGEC	(5) PART NUMBER	(6) DESCRIPTION AND USABLE ON CODES (UOC)	(7) QTY
25	PAOZZ	5342-01-240-2861	64678	352 078 01 86	FAIRLEAD,BLOCK USED ON ENGINE S/N 134341/90 AND BELOW	2
26	PAOZZ	5340-01-238-6298	64678	322 995 00 22	STRAP,RETAINING USED ON ENGINE S/N 134341/90 AND BELOW	2
27	PAOZZ	5305-01-243-9855	64678	007976 006309	SCREW,TAPPING USED ON ENGINE S/N 134341/90 AND BELOW	2
28	MFFZZ		64678	008 977 54 82X 207	HOSE MAKE FROM CAGE 64678 P/N 008 997 54 82, 207 MM	1
29	PFOZZ	4730-01-311-4186	64678	915036 010204	BOLT,FLUID PASSAGE	1
30	MOOZZ		64678	008 997 90 82X 710	HOSE MAKE FROM CAGE 64678 P/N 008 997 90 82, 710 MM	3
31	PAOZZ	4730-01-237-6218	64678	321 990 06 63	BOLT,FLUID PASSAGE	2
32	PFOZZ	4730-01-237-3633	64678	915052 006005	CONNECTOR,MULTIPLE	1
33	PAOZZ	5330-01-270-1311	64678	007 603 014 405	SEAL RING,METAL	4
34	PFOZZ	4730-01-237-6198	D8773	761 8027 000	TEE,HOSE	1
35	MOOZZ		64678	008 997 60 82X 500	HOSE MAKE FROM CAGE 64678, P/N 008 997 60 82,500 MM	1
36	PAOZZ	4730-01-184-1941	S3465	4537800-696	BOLT,FLUID PASSAGE	1
37	PAOZZ	5330-00-763-2689	D8046	A8X12DIN7603	SEAL	2
38	PFOZZ	4730-01-284-8957	64678	915052 004025	CONNECTOR,MULTIPLE, 8 MM	1
39	PAOZZ	5320-01-236-0667	64678	352 997 13 71	CONNECTOR,FLUID PUM FUEL TANK LINE	1
40	PAOZZ	4730-01-237-0186	64678	326 990 01 63	BOLT,FLUID PASSAGE	6
41	PAOZZ	4710-01-236-2866	64678	352 070 03 35	TUBE ASSEMBLY,METAL	1
42	PAOZZ	5330-01-238-5875	64678	352 078 00 80	GASKET PART OF KIT P/N 352 010 26 21	6
					END OF FIGURE	

UNIT, DIRECT SUPPORT AND GENERAL SUPPORT MAINTENANCE

SMALL EMPLACEMENT EXCAVATOR (SEE) AND HIGH MOBILITY MATERIAL HANDLER (HMMH)

FUEL PUMPS – CAM ACTUATOR FUEL PUMP 0 440 003 996

REPAIR PARTS LIST

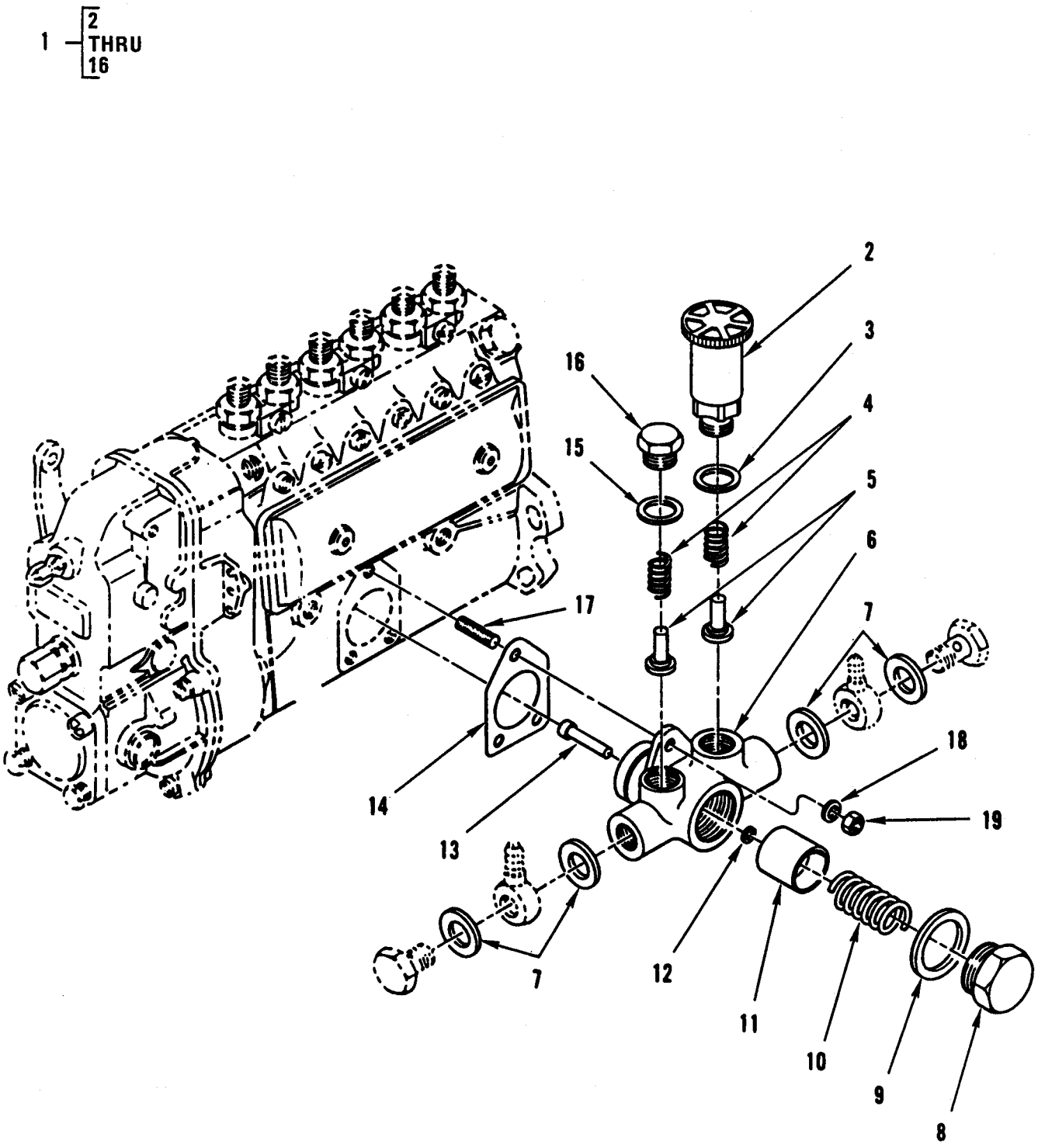

Figure 26. Fuel Pumps – Cam Actuator Fuel Pump.

(1) ITEM NO	(2) SMR CODE	(3) NSN	(4) CAGEC	(5) PART NUMBER	(6) DESCRIPTION AND USABLE ON CODES (UOC)	(7) QTY
					GROUP 0302	
					FIG. 26 FUEL PUMPS –PUMP, FUEL, CAM ACTUATOR 440 003 996	
1	PAOOO	2910-01-279-3131	D8015	0 440 003 996	PUMP,FUEL,CAM ACTUA	1
2	KFOZZ		D8015	2 447 222 020	.HANDLE,PRIMER PUMP PART OF KIT P/N 4537800-224	1
3	PAOZZ	5331-01-270-1628	D8015	1 230 203 001	.O-RING PART OF KIT P/N 4537800-224	1
4	KFOZZ		D8015	2 444 615 006	.SPRING,HELICAL,COMP PART OF KIT P/N 4537800-158	2
5	KFOZZ		D8015	2 443 203 001	.DISK,VALVE PART OF KIT P/N 4537800-158	2
6	XAOZZ		D8015	2 445 103 293	.HOUSING,FUEL PUMP	1
7	PAOZZ	5330-01-260-4738	53867	2916 710 609	.GASKET	4
8	XAOZZ		D8015	2 443 462 014	.PLUG,MACHINE THREAD	1
9	XBOZZ		D8015	2 440 105 000	.GASKET	1
10	XAOZZ		D8015	2 444 617 010	.SPRING,HELICAL,COMP	1
11	PFOZZ	4320-01-318-2773	53867	2 449 998 714	.PISTON,PUMP (21.989 TO 21.994 MM).	1
11	XBOZZ		D8015	2 449 998 715	.PUMP,PLUNGER PISTON (21.994 TO 21.999 MMM)	V
12	PAOZZ	5330-12-151-2373	D8015	2 440 210 009	.O-RING	1
13	XAOZZ		D8015	2 443 120 022	.TAPPET,INJECTION PU	1
14	PAOZZ	5330-01-174-7590	S3465	4537800-157	.GASKET	1
15	PFOZZ	5331-01-270-1628	D8015	1 230 203 001	.O-RING PART OF KIT P/N 4537800-158	2
16	XAOZZ		D8015	2 443 462 009	.PLUG,MACHINE THREAD	1
17	PAOZZ	5307-01-298-9650	53867	1 413 502 024	STUD,PLAIN	3
18	PFOZZ	5310-00-450-0459	D8015	2 916 693 005	WASHER,LOCK	3
19	PFOZZ	5310-01-171-4689	S3465	4536226-786	NUT,PLAIN,HEXAGON	3
					END OF FIGURE	

UNIT, DIRECT SUPPORT AND GENERAL SUPPORT MAINTENANCE

SMALL EMPLACEMENT EXCAVATOR (SEE) AND HIGH MOBILITY MATERIAL HANDLER (HMMH)

FUEL PUMPS – METERING FUEL PUMP 0 400 876 188

REPAIR PARTS LIST

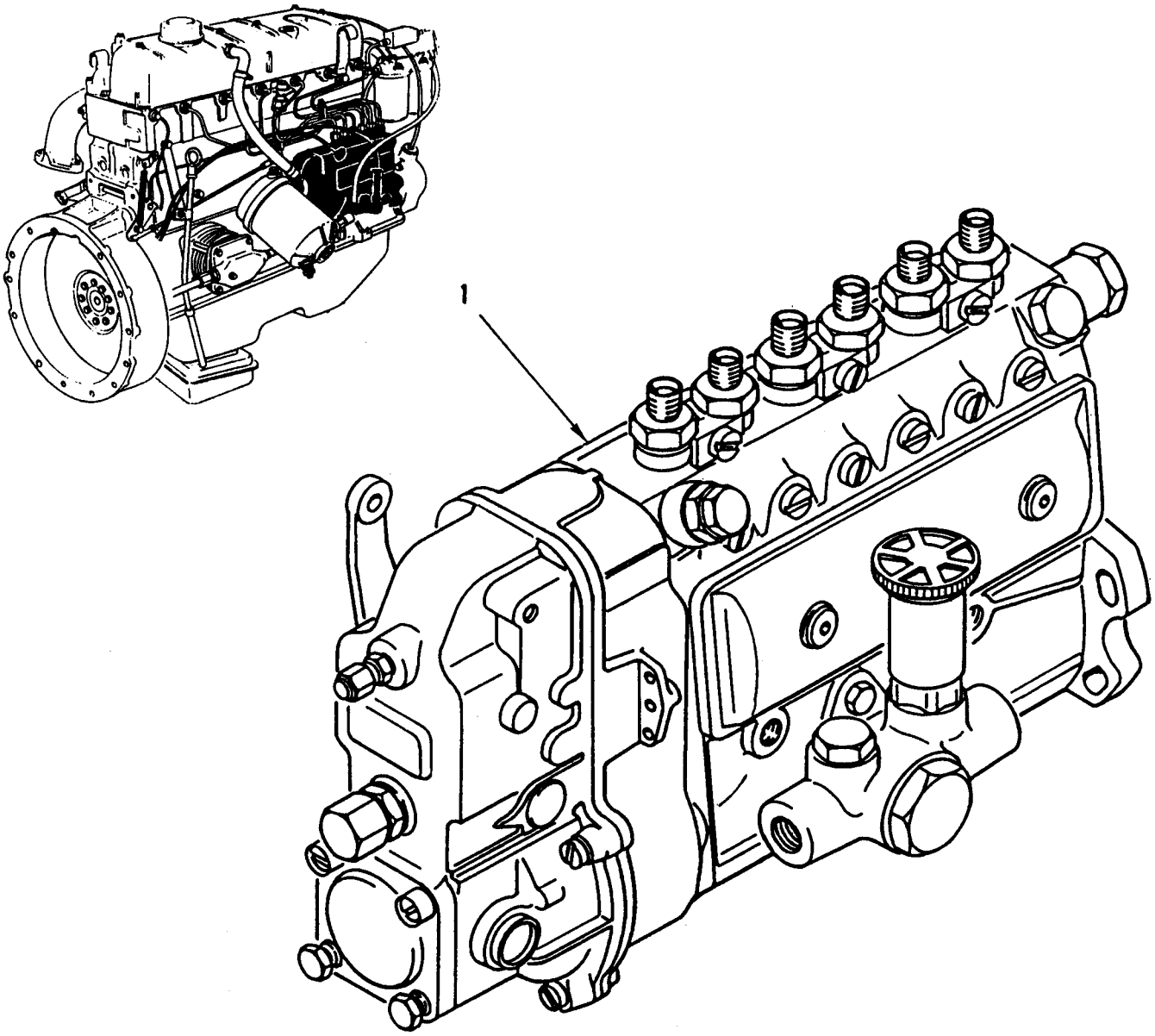

Figure 27. Fuel System – Metering Fuel Pump.

(1) ITEM NO	(2) SMR CODE	(3) NSN	(4) CAGEC	(5) PART NUMBER	(6) DESCRIPTION AND USABLE ON CODES (UOC)	(7) QTY
					GROUP 0302	
					FIG. 27 FUEL SYSTEM – PUMP, FUEL, METERING 0 400 876 188	
1	PBFDD	2910-01-236-7267	D8015	0 400 876 188	PUMP,FUEL,METERING	1
					END OF FIGURE	

UNIT, DIRECT SUPPORT AND GENERAL SUPPORT MAINTENANCE

SMALL EMPLACEMENT EXCAVATOR (SEE) AND HIGH MOBILITY MATERIAL HANDLER (HMMH)

FUEL PUMPS – FUEL INJECTION PUMP MOUNTING SUPPORT, AND CAMSHAFT

REPAIR PARTS LIST

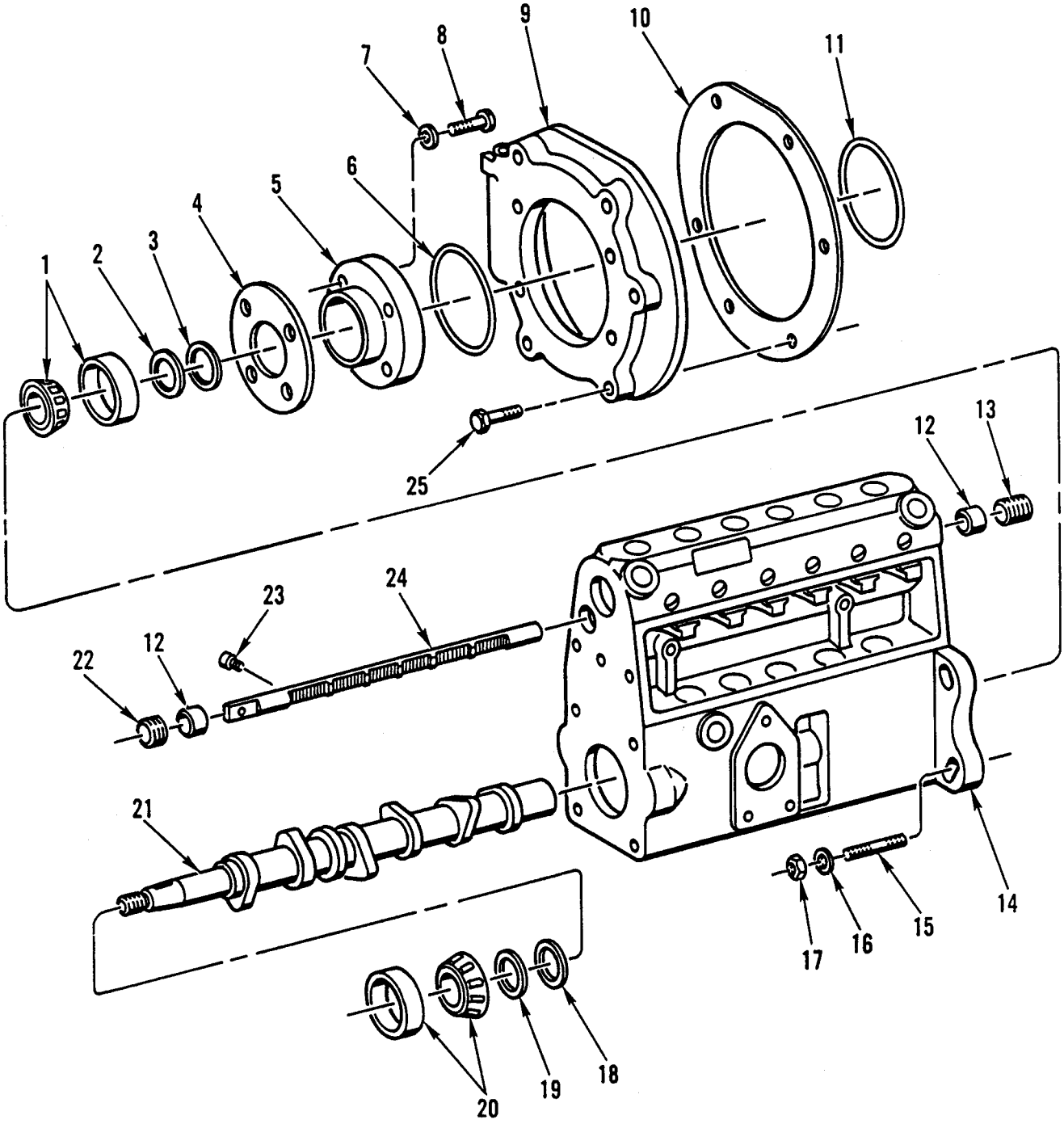

Figure 28. Fuel Pumps – Fuel Injection Pump Mounting Support and Camshaft.

(1) ITEM NO	(2) SMR CODE	(3) NSN	(4) CAGEC	(5) PART NUMBER	(6) DESCRIPTION AND USABLE ON CODES (UOC)	(7) QTY
					GROUP 0302	
					FIG. 28 FUEL PUMPS – FUEL INJECTION PUMP MOUNTING SUPPORT AND CAMSHAFT	
1	PADZZ	3110-01-185-4719	53867	1-900-910-202	BEARING,ROLLER,TAPE	1
2	PADZZ	5325-01-183-1333	53867	1-410-202-034	RING,RETAINING UOC:GE1	1
3	PFDZZ	5365-01-182-8473	D8015	1 410 102 625	SHIM 0.10MM THICK	V
3	PFDZZ	5365-12-177-2590	D8015	1 410 102 626	SHIM 0.12MM THICK	V
3	PADZZ	5365-01-291-4529	53867	1-410-102-627	SHIM 0.14MM THICK	V
3	PFDZZ	5365-01-274-2102	D8015	1 410 102 628	SHIM 0.16MM THICK	V
3	PFDZZ	5365-01-274-2103	D8015	1 410 102 629	SHIM 0.18MM THICK	V
3	PFDZZ	5365-01-184-7856	53867	1-410-102-630	SPACER,RING 0.50MM THICK	V
3	PFDZZ	5365-12-177-2593	D8015	1 410 102 631	SHIM 1.00MM THICK	V
3	PFDZZ	5365-01-180-8871	53867	1-410-102-632	SPACER,PLATE	V
4	PFDZZ	5330-01-183-1291	D8015	1 410 137 003	GASKET	1
5	PFDZZ	2910-12-189-4490	D8015	1 415 522 051	DECKEL	1
6	PADZZ	5365-00-148-1083	D8046	0019975940	RING,SEAL	1
7	PFDZZ	5310-01-167-1964	56161	10505055	WASHER,LOCK	4
8	PFDZZ	5305-12-164-8268	D8015	2 910 022 196	SCREW,MACHINE TORX DRIVE	4
9	PAFZZ	3040-01-236-7306	64678	322 076 02 35	PLATE,RETAINING,SHA	1
10	KFFZZ		64678	352 076 02 80	GASKET PART OF KIT P/N 353 010 4808	1
11	PAFZZ	5330-01-241-4026	64678	011 997 29 48	O-RING	1
12	PADZZ	5365-01-190-0336	62445	1288043	SPACER,SLEEVE	2
13	PFDZZ	3120-00-138-5807	D8015	1 410 361 001	BUSHING,GUIDE	1
14	PFDZZ	2910-01-256-5355	D8015	1 415 126 526	HOUSING,FUEL PUMP	1
15	PAFZZ	5307-01-174-7624	64678	000939 010011	STUD,PLAIN	4
16	PAFZZ	5310-01-169-8065	S3465	4537800-711	WASHER,FLAT	4
17	PFFZZ	5310-01-276-1646	64678	000934 010009	NUT,PLAIN,HEXAGON	4
18	PADZZ	5325-01-183-8686	D8015	1 410 202 042	SPACER,RING	1

(1) ITEM NO	(2) SMR CODE	(3) NSN	(4) CAGEC	(5) PART NUMBER	(6) DESCRIPTION AND USABLE ON CODES (UOC)	(7) QTY
19	PFDZZ	5365-00-451-1677	53867	1 410 101 610	SHIM 0.866 IN. OD.....V	
19	PFDZZ	5365-01-193-2928	D8015	1 410 101 612	SHIM 0.12 MM THICK V	
19	PFDZZ	5365-01-193-2929	D8015	1 410 101 614	SHIM V	
19	PFDZZ	5365-12-177-4812	D8015	1 410 101 616	SHIM 0.160 MM THICK V	
19	PADZZ	5365-01-189-6756	53867	1410101618	SHIM 0.180 MM THICK V	
19	PFDZZ	5365-00-451-3447	53867	1 410 101 620	SPACER,RING 0.866 IN. THICK.....V	
19	PFDZZ	5365-00-451-3448	D8015	1 410 101 630	SPACER,RING 0.866 IN. THICK.....V	
19	PFDZZ	5365-01-198-8209	D8015	1 230 101 608	SHIM.....V	
20	PFDZZ	3110-01-260-9878	D8015	1 900 910 201	BEARING,ROLLER,TAPE	1
21	PFDZZ	2910-01-257-1576	D8015	1 416 126 382	CAMSHAFT,FUEL PUMP.....	1
22	PFDZZ	5365-01-183-8694	D8015	1 413 344 001	RING,EXTERNALLY THR	1
23	PFDZZ	5305-12-191-0877	D8015	1 413 412 004	SETSCREW	1
24	PADZZ	3040-01-257-4921	D8015	1 416 026 005	SHAFT,SHOULDERED	1
25	PAFZZ	5305-01-238-1489	15526	931-10 M8X40 P	SCREW,CAP,HEXAGON H.....	5
					END OF FIGURE	

UNIT, DIRECT SUPPORT AND GENERAL SUPPORT MAINTENANCE

SMALL EMPLACEMENT EXCAVATOR (SEE) AND HIGH MOBILITY MATERIAL HANDLER (HMMH)

FUEL PUMPS – ACCESS COVER 1 425 627 125 REMOTE CONTROL LEVER 1 422 013 039, REMOTE CONTROL LEVER 1 422 003 106

REPAIR PARTS LIST

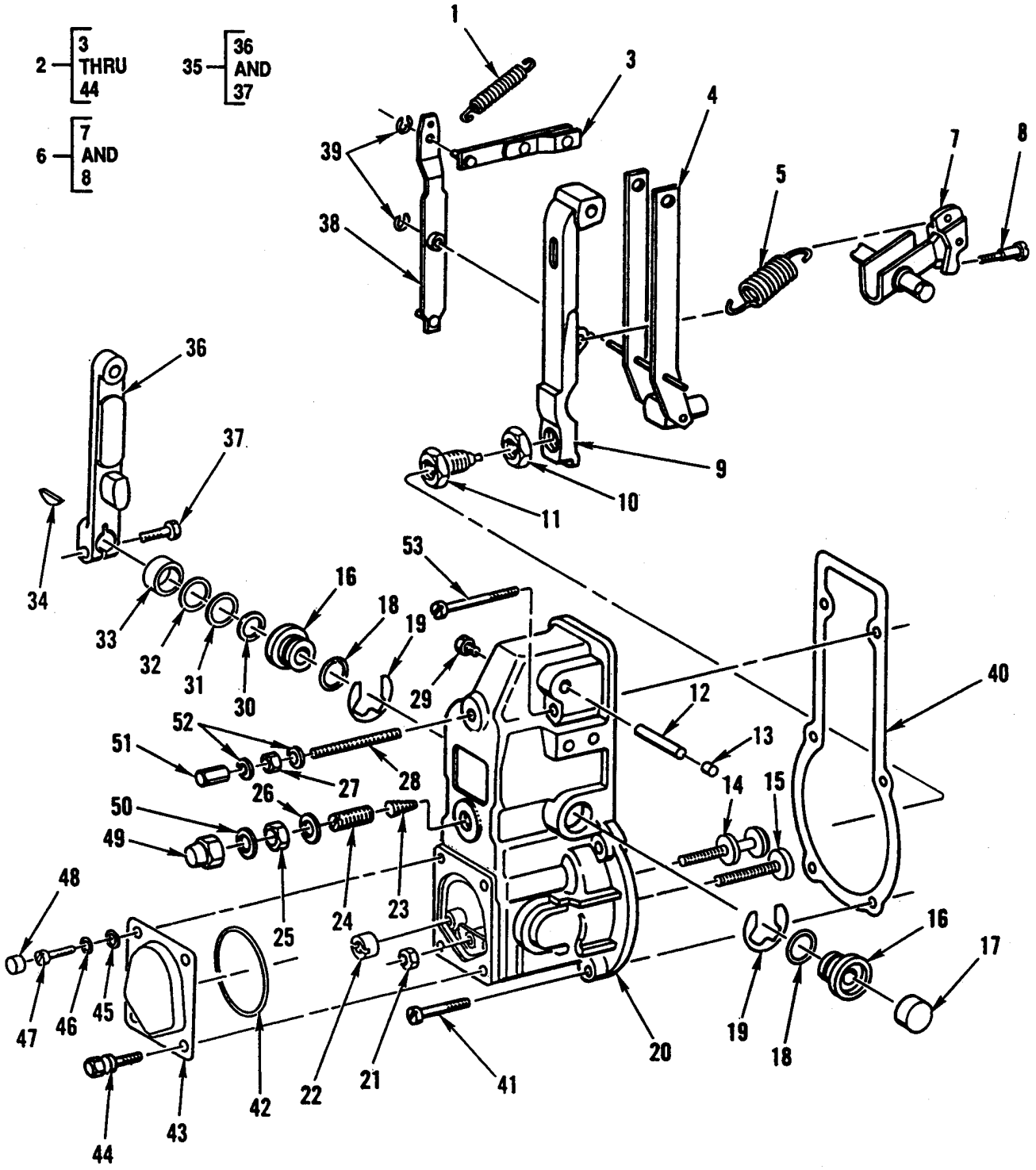

Figure 29. Fuel Pumps – Access Cover, and Remote Control Levers.

(1) ITEM NO	(2) SMR CODE	(3) NSN	(4) CAGEC	(5) PART NUMBER	(6) DESCRIPTION AND USABLE ON CODES (UOC)	(7) QTY
					GROUP 0302	
					FIG. 29 FUEL PUMPS – COVER, ACCESS 1 425 627 125, LEVER, REMOTE CONTROL 1 422 013 039, LEVER, REMOTE CONTROL 1 422 003 106	
1	PFDZZ	5360-12-182-2624	D8015	1 424 650 061	SPRING,HELICAL,EXTE	1
2	PADDD	5340-01-297-1210	53867	1 425 627 125	COVER,ACCESS	1
3	PADZZ	3040-01-299-7109	53867	1 421 901 153	.CONNECTING LINK,RIG	1
4	PADZZ	3040-01-298-5464	53867	1 421 933 037	.CONNECTING LINK,RIG	1
5	PFDZZ	5360-12-180-9127	D8015	1 424 650 005	.SPRING,HELCIAL,EXTE	1
6	PADDD	3040-01-257-1628	D8015	1 422 013 039	.LEVER,REMOTE CONTRO	1
7	XADZZ		19207	NPN-020	..LEVER	1
8	PFDZZ	5306-12-173-6484	D8015	1 423 413 000	..BOLT,SQUARE NECK	1
9	PFDZZ	3040-01-314-5175	53867	1 422 031 021	.LEVER,REMOTE CONTRO	1
10	PADZZ	5310-01-297-2679	53867	1 423 300 302	.NUT,PLAIN,HEXAGON	1
11	PADZZ	5360-01-297-8835	53867	1 420 506 620	.SPRING,HELICAL,COMP	1
12	XDDZZ		53867	1-423-000-005	.SHAFT,STRAIGHT	1
13	XBDZZ		D8015	1 420 505 040	.CAP,PROTECTIVE,DUST	2
14	PADZZ	5305-01-297-1180	53867	1 423 590 014	.SCREW,DRIVE	1
15	PFDZZ	5305-01-241-7491	D8015	1 423 410 011	.THUMBSCREW	1
16	PFDZZ	3120-01-193-6971	D8015	1 420 328 034	.BUSHING,SLEEVE	2
17	PFDZZ	2910-01-241-7434	53867	1420500005	.CAPSULE	1
18	PFDZZ	5331-01-192-3353	53867	1 900 210 013	.O-RING	2
19	PADZZ	5325-00-714-1391	D8015	2 916 080 015	.RING,RETAINING	2
20	PADZZ	3040-01-299-8819	53867	1 425 627 006	.HOUSING,MECHANICAL	1
21	PFDZZ	5310-01-185-7191	53867	2-915-011-007	.NUT,PLAIN,HEXAGON	1
22	PADZZ	5310-01-297-2698	53867	2 423 341 001	.NUT,PLAIN,ROUND	1
23	PFDZZ	5360-00-503-7218	D8015	1 424 641 000	.SPRING,GOVERNOR	1
24	PADZZ	5305-12-173-6482	D8015	1 423 401 000	.SETSCREW	1
25	PFDZZ	5310-12-173-6477	D8015	1 423 300 020	.NUT,PLAIN,HEXAGON	1

(1) ITEM NO	(2) SMR CODE	(3) NSN	(4) CAGEC	(5) PART NUMBER	(6) DESCRIPTION AND USABLE ON CODES (UOC)	(7) QTY
26	PADZZ	5331-00-499-3494	D8015	2 916 710 607	.O-RING	1
27	PFDZZ	5310-01-239-8587	D8015	2 915 051 106	.NUT,PLAIN,HEXAGON	1
28	PFDZZ	5305-01-260-7571	D8015	1 423 400 031	.SETSCREW	1
29	PFDZZ	5365-01-297-1078	53867	1 423 460 006	.PLUG,MACHINE THREAD	4
30	PFDZZ	5331-00-499-3475	D8015	1 420 210 010	.O-RING	1
31	PFDZZ	5310-12-173-6452	D8015	1 420 101 030	.WASHER,FLAT	V
32	PFDZZ	5365-00-205-3115	D8015	1 420 101 634	.SPACER,PLATE	V
33	PFDZZ	5365-12-173-6460	D8015	1420300073	.SPACER,SLEEVE	1
34	PADZZ	5315-01-175-0433	15526	6888 4X6.5	.KEY,WOODRUFF	1
35	PADDD	3040-01-298-5463	53867	1 422 003 106	.LEVER,REMOTE CONTRO UOC:GE1	1
36	XADZZ		19207	NPN-021	..LEVER	1
37	PADZZ	5305-12-196-4437	15526	933 M6 25F	..SCREW,CAP,HEXAGON H	1
38	PADZZ	3040-01-299-7108	53867	1 421 901 137	.LEVER,REMOTE CONTRO	1
39	PFDZZ	5325-12-156-4668	D8015	2 916 080 907	.RING,RETAINING	2
40	PFDZZ	5330-01-192-2130	D8015	1 421 015 047	.GASKET	1
41	PFDZZ	5305-01-241-7488	53867	2 910 011 203	.SCREW,MACHINE	4
42	XBDZZ		D8015	1 420 206 016	.PACKING,PREFORMED	1
43	PFDZZ	5340-01-296-8632	53867	1 421 038 013	.COVER,ACCESS	1
44	PADZZ	5306-12-313-4659	D8015	1 423 450 017	.BOLT,MACHINE	2
45	PADZZ	5365-01-297-2719	53867	2 420 200 021	SPACER,RING	1
46	PFDZZ	5310-12-124-0196	D8015	1 420 150 005	WASHER,SPRING TENSI	1
47	PFDZZ	5305-01-323-2766	53867	2 910 021 193	SCREW,MACHINE	2
48	PFDZZ	5340-01-297-1171	53867	2 420 505 014	CAP,PROTECTIVE,DUST	1
49	PFDZZ	5310-12-173-6479	D8015	1 423 317 044	NUT,SLEEVE	1
50	PADZZ	5331-00-499-3494	D8015	2 916 710 607	O-RING	1
51	PFDZZ	5310-01-242-9214	53867	1423317015	NUT,PLAIN,CAP	1
52	PFDZZ	5331-00-499-3493	D8015	2 916 710 602	O-RING	2
53	PFDZZ	5305-01-241-7489	D8015	2 910 011 209	SCREW,MACHINE	2
					END OF FIGURE	

UNIT, DIRECT SUPPORT AND GENERAL SUPPORT MAINTENANCE

SMALL EMPLACEMENT EXCAVATOR (SEE) AND HIGH MOBILITY MATERIAL HANDLER (HMMH)

FUEL PUMPS – COUNTERBALANCE WEIGHT 1 428 194 021 AND RELATED PARTS

REPAIR PARTS LIST

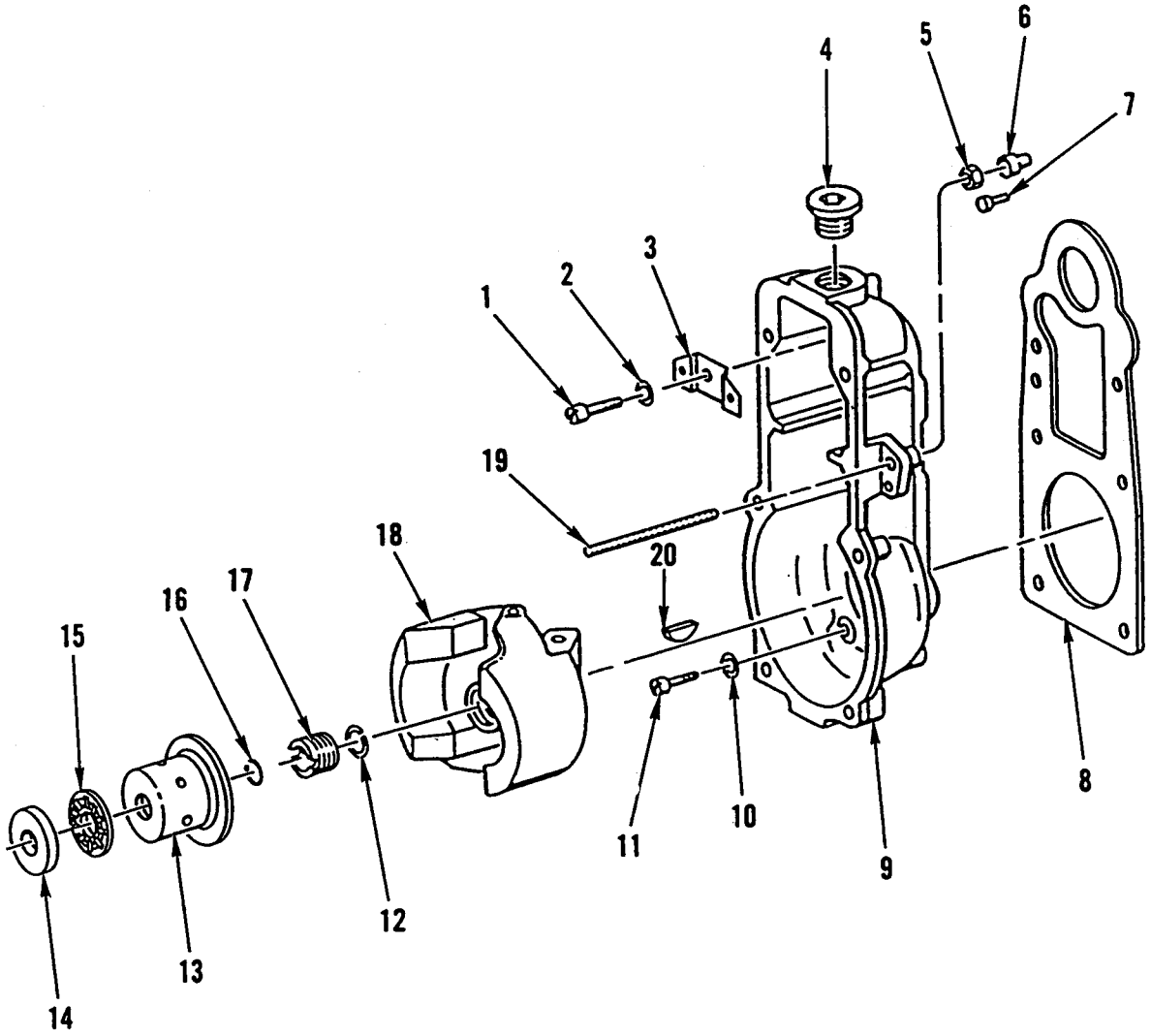

Figure 30. Fuel Pumps – Counterbalance Weight and Related Parts.

(1) ITEM NO	(2) SMR CODE	(3) NSN	(4) CAGEC	(5) PART NUMBER	(6) DESCRIPTION AND USABLE ON CODES (UOC)	(7) QTY
					GROUP 0302	
					FIG. 30 FUEL PUMPS – WEIGHT, COUNTERBALANCE 1 428 194 021 AND RELATED PARTS	
1	PFDZZ	5305-12-311-8740	D8015	2 912 732 242	SCREW,CAP,SOCKET HE TORX DRIVE.....	1
2	XBDZZ		64678	2 916 693 007	WASHER,LOCK	1
3	XDDZZ		D8015	1 421 323 000	SPACER,PLATE.....	1
4	PFDZZ	5365-01-182-5468	D8015	1 423 462 099	PLUG,MACHINE THREAD.....	1
5	PFDZZ	5310-01-185-7191	53867	2-915-011-007	NUT,PLAIN,HEXAGON	3
6	PFDZZ	2910-12-169-1427	D8015	1 420 524 000	CAP	1
7	XDDZZ		D8015	1 423 120 063	SEAL,ANTIPILFERAGE	1
8	PFDZZ	5330-01-186-0692	D8015	1 421 015 007	GASKET	1
9	PADZZ	2990-01-257-1531	D8015	1 425 121 110	HOUSING,ENGINE GOVE.....	1
10	PFDZZ	5310-01-301-1885	53867	2 916 690 005	WASHER,SPRING TENSI.....	6
11	PADZZ	5305-01-301-3932	53867	2 912 732 196	SCREW,MACHINE.....	6
12	PADZZ	5325-12-173-6457	D8015	1 420 151 001	RING,RETAINING	1
13	PFDZZ	3120-01-297-1142	53867	1 420 505 055	BUSHING,SLEEVE	1
14	PFDZZ	5365-01-297-2713	53867	1 420 101 078	SHIM.....V	
15	PFDZZ	3110-01-297-1048	53867	1 420 920 008	BEARING,ROLLER,N.....	1
16	PFDZZ	5325-01-297-1131	53867	2 916 600 006	RING,RETAINING	1
17	PFDZZ	5310-01-185-4661	D8015	1 423 341 027	NUT,PLAIN,ROUND.....	1
18	PFDZZ	3040-01-257-3743	D8015	1 428 194 021	WEIGHT,COUNTERBALAN.....	1
19	XBDZZ		D8015	1 423 400 012	STUD,PLAIN.....	1
20	PADZZ	5315-01-063-5007	53867	1 900 023 007	KEY,WOODRUFF	1
					END OF FIGURE	

UNIT, DIRECT SUPPORT AND GENERAL SUPPORT MAINTENANCE

SMALL EMPLACEMENT EXCAVATOR (SEE) AND HIGH MOBILITY MATERIAL HANDLER (HMMH)

FUEL PUMPS – VALVE BODY 1 417 413 000, AND LINEAR-ROTOR ROLLER 1 418 720 025

REPAIR PARTS LIST

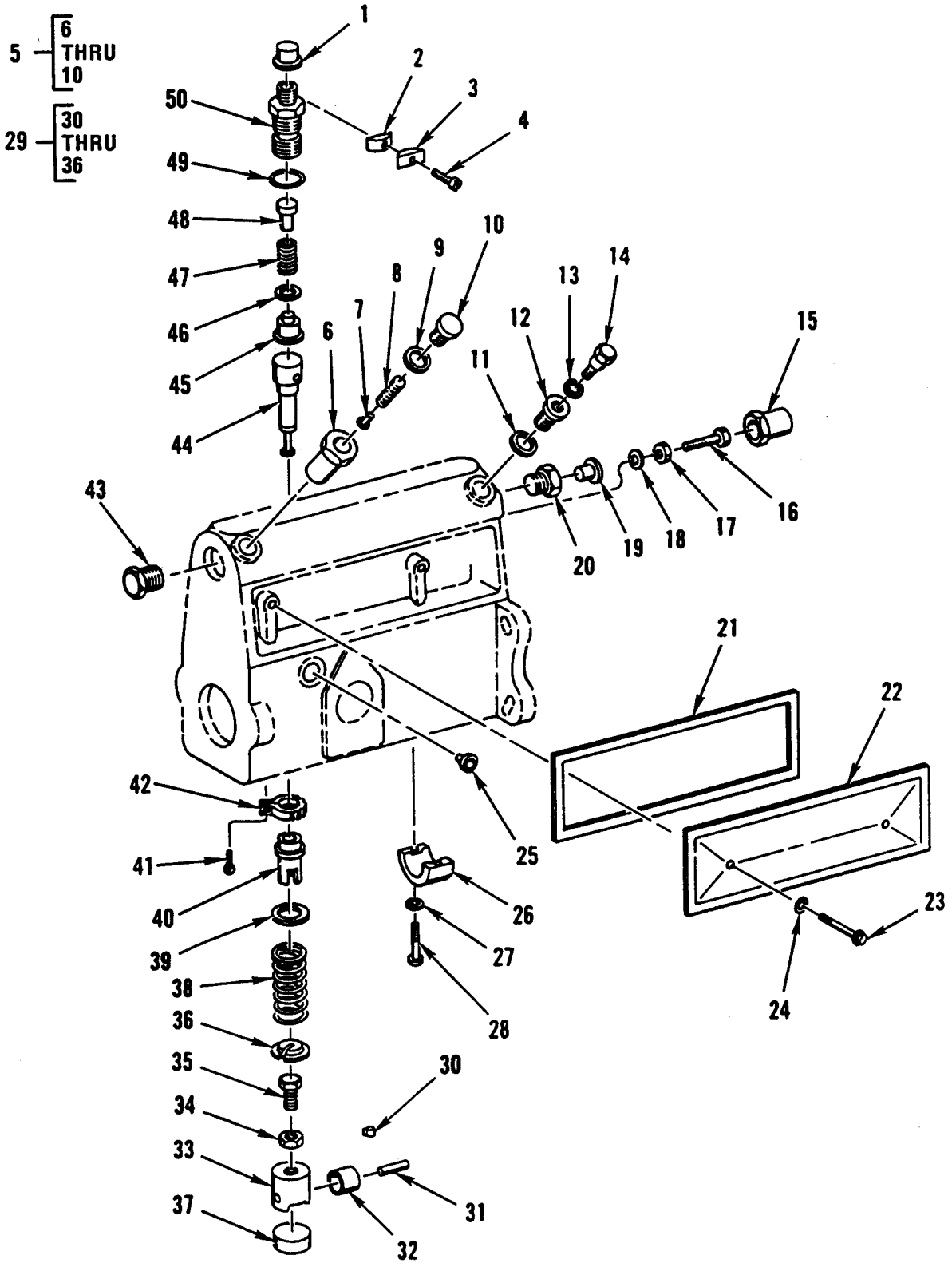

Figure 31. Fuel Pumps – Valve Body and Linear-Rotor Roller.

(1) ITEM NO	(2) SMR CODE	(3) NSN	(4) CAGEC	(5) PART NUMBER	(6) DESCRIPTION AND USABLE ON CODES (UOC)	(7) QTY
					GROUP 0302	
					FIG. 31 FUEL PUMPS – BODY,VALVE 1 417 413 000 AND ROLLER, LINEAR-ROTOR 1 418 720 025	
1	PFDZZ	5340-01-274-4390	D8015	1 410 508 011	CAP,PROTECTIVE,DUST	6
2	PFDZZ	5340-01-238-8515	D8015	1 410 023 007	CLAMP,RIM CLENCHING	3
3	PFDZZ	5340-01-238-8516	D8015	1 410 023 008	CLAMP,RIM CLENCHING	3
4	PADZZ	5305-12-146-6000	D8015	2 910 022 204	SCREW,MACHINE	3
5	PADDD	4820-01-256-5352	D8015	1 417 413 000	BODY,VALVE	1
6	XAFZZ		19207	NPN-022	.BODY,VALVE	1
7	PAFZZ	2910-01-257-3381	D8015	1 413 203 002	.CONE,VALVE	1
8	PFFZZ	5360-12-190-9015	D8015	1 414 610 026	.SPRING,HELICAL,COMP	1
9	PFFZZ	5330-12-156-4806	D8015	2 916 710 605	.GASKET	1
10	PFFZZ	6685-12-191-0878	D8015	1 413 452 004	.COVER,MERCURIAL BAR	1
11	PADZZ	5330-12-156-4524	D8286	A16X20DIN760 3CU	GASKET	1
12	PFDZZ	4730-01-239-8768	53867	1413462101	ADAPTER BUSHING	1
13	PFDZZ	5330-01-238-8316	D8015	1 410 107 005	O-RING	1
14	PFDZZ	5305-01-238-8438	D8015	1 413 453 025	SCREW,CAP,HEXAGON H	1
15	PADZZ	2910-12-180-7731	D8015	1 420 521 004	KAPPE	1
16	PFDZZ	5305-01-264-5886	D8015	2 911 062 199	SCREW,CAP,HEXAGON H	1
17	PFDZZ	5310-01-239-8587	D8015	2 915 051 106	NUT,PLAIN,HEXAGON	1
18	PFDZZ	5310-12-124-0196	D8015	1 420 150 005	WASHER,SPRING TENSI	1
19	PFDZZ	5340-01-274-4389	D8015	1 900 508 008	CAP,PROTECTIVE,DUST	1
20	PADZZ	4730-01-235-9007	D8015	1 413 455 080	REDUCER,BOSS	1
21	PADZZ	5330-01-304-7795	53867	1 411 015 097	GASKET	1
22	PFDZZ	2910-01-257-3380	D8015	1 415 626 112	COVER,FUEL PUMP	1
23	PADZZ	5305-12-169-6054	D8015	1 413 453 001	SCREW,SHOULDER	2
24	PFDZZ	5331-00-499-3493	D8015	2 916 710 602	O-RING	2
25	PADZZ	5340-12-178-3255	D8015	1 900 508 004	CAP-PLUG,PROTECTIVE	1

(1) ITEM NO	(2) SMR CODE	(3) NSN	(4) CAGEC	(5) PART NUMBER	(6) DESCRIPTION AND USABLE ON CODES (UOC)	(7) QTY
26	PADZZ	3120-01-186-0716	D8015	1 415 800 040	BEARING,SLEEVE	1
27	PADZZ	5310-01-174-1518	53867	2916710601	WASHER,FLAT	2
28	PADZZ	5305-12-174-3654	D8015	1 413 410 007	SCREW,MACHINE	2
29	PFDDD	3120-12-131-0441	D8015	1 418 720 025	ROLLER,LINEAR-ROTOR	6
30	PADZZ	2910-01-257-8781	D8015	1 413 120 090	.SLIDING PIECE,FUEL	6
31	XDDZZ		D8015	1 413 100 030	.PIN,STRAIGHT,HEADLE	6
32	PFDZZ	3120-01-201-3739	53867	1-410-202-006	.ROLLER,LINEAR-ROTOR	6
33	XADZZ		19207	NPN-023	.BODY	1
34	PFDZZ	5310-01-183-8664	53867	1-413-300-028	.NUT,PLAIN,HEXAGON	6
35	PADZZ	5305-12-162-2009	D8015	1 413 450 010	.SCREW,CAP,HEXAGON H	6
36	PFDZZ	5340-01-006-0290	D8015	1 410 120 071	.RETAINER,HELICAL CO	6
37	PFDZZ	2910-01-257-8779	D8015	1 410 551 036	CAPSULE,FUEL PUMP	6
38	PFDZZ	5360-01-194-3161	53867	1414618027	SPRING,HELICAL,COMP	6
39	PFDZZ	5340-01-207-0741	D8015	1 410 114 022	SEAT,HELICAL COMPRE	6
40	PADZZ	2910-01-257-8782	64678	1 410 326 030	DRIVER,FUEL PUMP	6
41	PADZZ	5305-12-127-3634	D8015	1 413 417 050	SCREW,MACHINE	6
42	PFDZZ	3020-01-198-5461	D8015	1 416 336 061	GEAR SECTOR,SPUR 22.70 MM DIA	V
42	PADZZ	3020-01-256-9137	D8015	1 416 336 060	GEAR SECTOR,SPUR 22.85 MM DIA	V
43	PFDZZ	5365-01-165-0623	53867	1-423-463-040	PLUG,MACHINE THREAD	1
44	PFDZZ	4820-01-257-1464	D8015	1 418 325 898	STEMFLUID VALVE	6
45	PFDZZ	4820-01-256-9105	D8015	1 418 522 055	BODY,VALVE	6
46	XDDZZ		D8015	1 410 105 001	WASHER,FLAT	6
47	PFDZZ	5360-00-138-5811	D8015	1 414 613 013	SPRING,HELICAL,COMP	6
48	PADZZ	2520-01-298-6713	64678	1 413 121 009	BREATHER	6
49	PFDZZ	5331-01-192-3354	D8015	1 530 210 003	O-RING	6
50	PFDZZ	4820-01-256-5351	D8015	1 413 372 072	BODY,VALVE	6
					END OF FIGURE	

UNIT, DIRECT SUPPORT AND GENERAL SUPPORT MAINTENANCE

SMALL EMPLACEMENT EXCAVATOR (SEE) AND HIGH MOBILITY MATERIAL HANDLER (HMMH)

AIR CLEANER – INTAKE AIR CLEANER FSG09-0160

REPAIR PARTS LIST

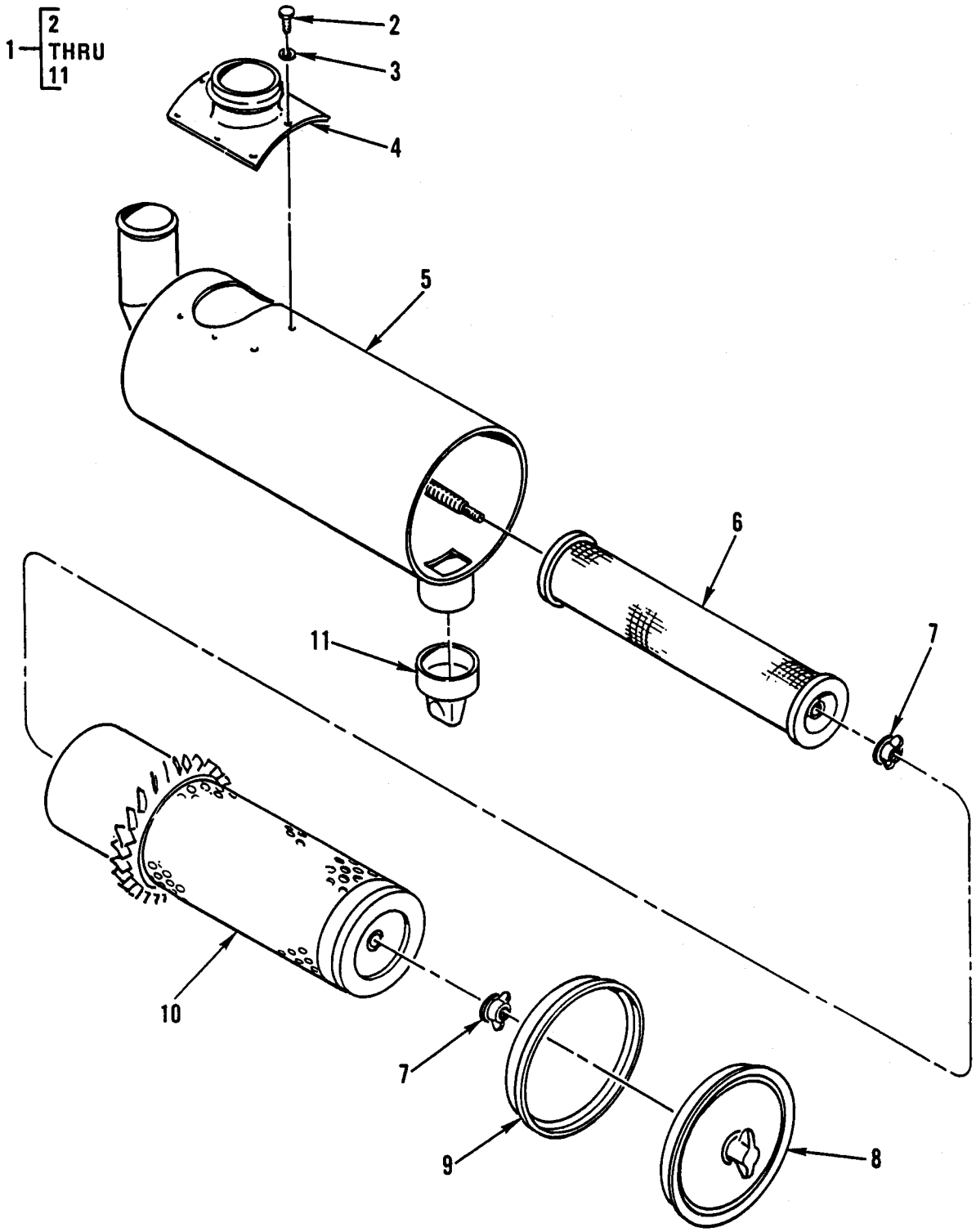

Figure 32. Air Cleaner – Intake Air Cleaner.

(1) ITEM NO	(2) SMR CODE	(3) NSN	(4) CAGEC	(5) PART NUMBER	(6) DESCRIPTION AND USABLE ON CODES (UOC)	(7) QTY
					GROUP 0304	
					FIG. 32 AIR CLEANER – AIR CLEANER, INTAKE FSG09-0160	
1	PAOOO	2940-01-241-3219	18265	FSG09-0160	AIR CLEANER,INTAKE	1
2	PFOZZ	5305-00-470-3321	96906	MS51849-74	.SCREW,MACHINE	10
3	PFOZZ	5310-00-274-8710	94135	43W6335-40	.WASHER,LOCK	10
4	PFOZZ	2940-01-241-3083	18265	P15-9839	.BRACKET,INTAKE AIR	1
5	XAOZZ		19207	NPN-024	.HOUSING,FILTER	1
6	PAOZZ	2940-01-061-4426	18265	P11-9778	.FILTER ELEMENT,INTA	1
7	PFOZZ	5310-00-735-3544	18265	P10-2144	.NUT,PLAIN,WING	2
8	PFOZZ	5340-01-241-2876	18265	P15-9837	.COVER,ACCESS	1
9	PFOZZ	5330-01-242-0726	18265	P15-9838	.GASKET	1
10	PAOZZ	2940-01-174-9142	18265	SMP18-1063	.FILTER ELEMENT,INTA	1
11	PFOZZ	2940-01-066-0149	18265	P11-2803	.VALVE,VACUATOR	1
					END OF FIGURE	

UNIT, DIRECT SUPPORT AND GENERAL SUPPORT MAINTENANCE

SMALL EMPLACEMENT EXCAVATOR (SEE) AND HIGH MOBILITY MATERIAL HANDLER (HMMH)

AIR CLEANER – AIR CLEANER DUCTS

REPAIR PARTS LIST

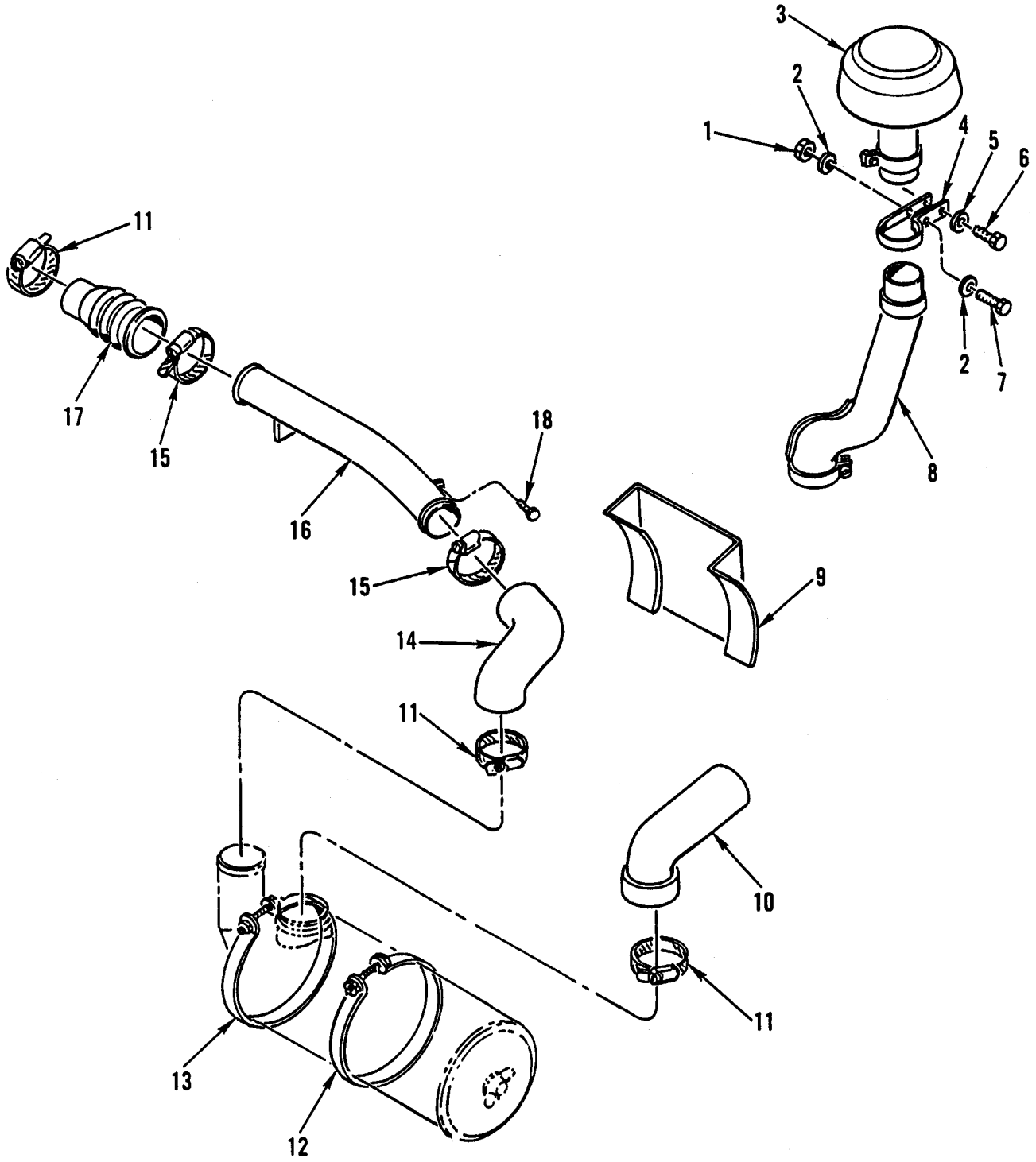

Figure 33. Air Cleaner – Air Cleaner Ducts.

(1) ITEM NO	(2) SMR CODE	(3) NSN	(4) CAGEC	(5) PART NUMBER	(6) DESCRIPTION AND USABLE ON CODES (UOC)	(7) QTY
					GROUP 0304	
					FIG. 33 AIR CLEANER – AIR CLEANER DUCTS	
1	PFOZZ	5310-01-171-4689	S3465	4536226-786	NUT,PLAIN,HEXAGON	1
2	PFOZZ	5310-01-171-2356	S3465	4536226-920	WASHER,SPRING TENSI	2
3	PAOZZ	2520-01-237-3542	64678	000 094 97 06	BREATHER	1
4	PFOZZ	5340-01-247-5474	64678	406 094 01 42	CLAMP,LOOP	1
5	PFOZZ	5310-01-239-1342	15526	137B-8	WASHER,SPRING TENSI	1
6	PFOZZ	5306-01-270-1698	64678	000933 008130	BOLT,MACHINE	1
7	PFOZZ	5306-01-247-3690	64678	000933 006022	BOLT,MACHINE	1
8	PFOZZ	4720-01-237-2833	64678	406 090 04 29	HOSE,ASSEMBLY,AIR D	1
9	PFOZZ	2940-01-237-6374	64678	419 600 00 14	BRACKET,INTAKE AIR	1
10	PFOZZ	4720-01-241-3311	64678	419 527 00 61	HOSE,PREFORMED	1
11	PFOZZ	4730-01-241-2953	64678	916017 080000	CLAMP,HOSE	3
12	PFOZZ	4730-01-241-8811	64678	900288 231100	CLAMP,HOSE 25X1.5SK	1
13	PFOZZ	4730-01-241-6595	64678	900288 231101	CLAMP,HOSE 20X1.5SKZ	1
14	PFOZZ	4720-01-241-3312	64678	419 527 01 61	HOSE,PREFORMED	1
15	PFOZZ	4730-01-241-2954	64678	916017 070000	CLAMP,HOSE	2
16	PFOZZ	2805-01-242-1397	64678	406 520 01 01	PIPE,INTAKE	1
17	PAOZZ	9390-01-248-2592	64678	406 987 91 43	BELLOWS,PROTECTION	1
18	PFOZZ	5365-01-243-0289	64678	007604010102	PLUG,MACHINE THREAD	1
					END OF FIGURE	

UNIT, DIRECT SUPPORT AND GENERAL SUPPORT MAINTENANCE

SMALL EMPLACEMENT EXCAVATOR (SEE) AND HIGH MOBILITY MATERIAL HANDLER (HMMH)

TANKS, LINES, FITTINGS, HEADERS – ENGINE FUEL TANK 919 470 00 01, FUEL TANK 419 470 72 01

REPAIR PARTS LIST

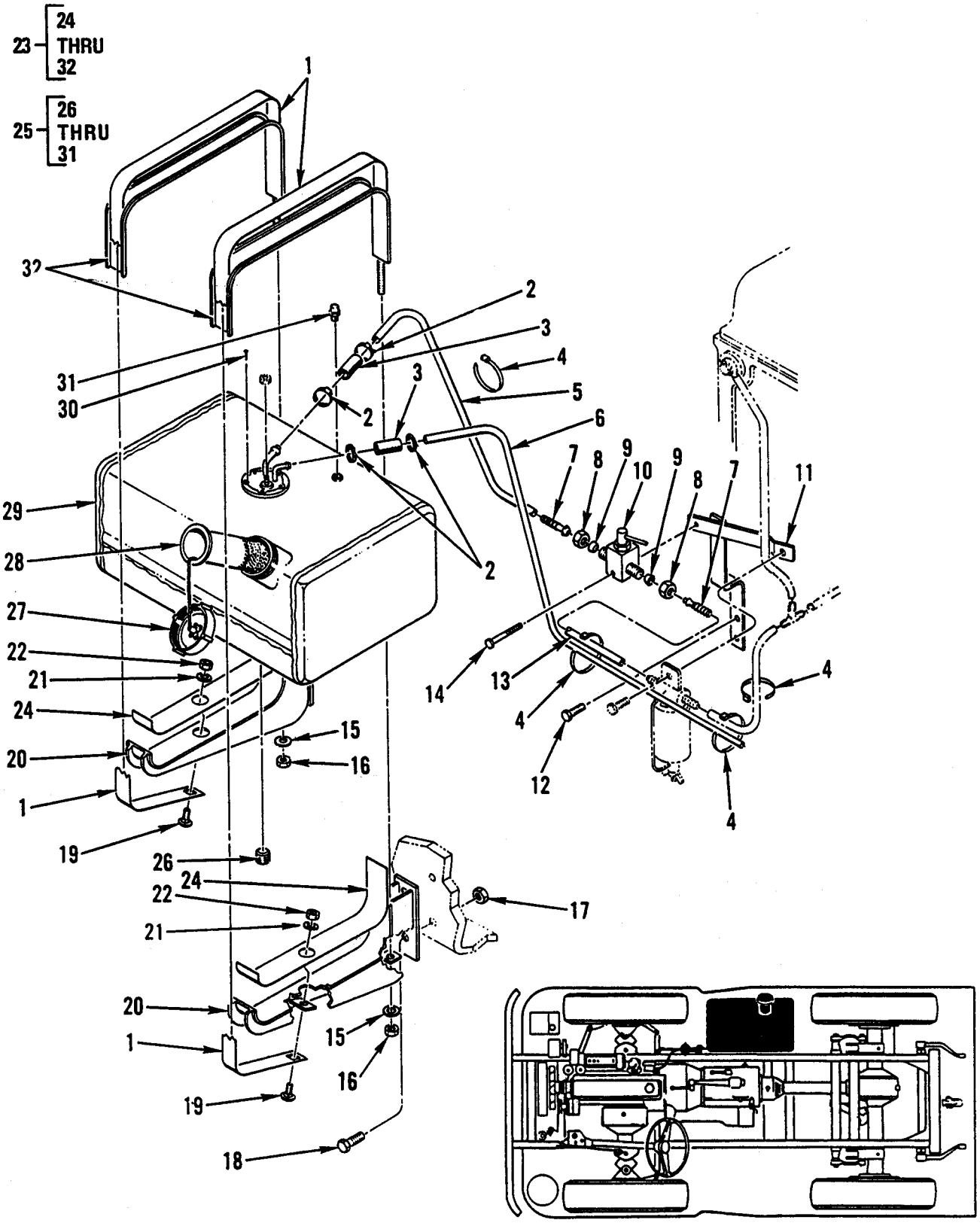

Figure 34. Tanks, Lines, Fittings, Headers – Engine Fuel Tank and Fuel Tank.

(1) ITEM NO	(2) SMR CODE	(3) NSN	(4) CAGEC	(5) PART NUMBER	(6) DESCRIPTION AND USABLE ON CODES (UOC)	(7) QTY
					GROUP 0306	
					FIG. 34 TANKS, LINES, FITTINGS, HEADERS – TANK, FUEL, ENGINE 919 470 00 01, AND TANK, FUEL 419 470 72 01	
1	PFOZZ	5340-01-239-6020	97109	B7745	STRAP,RETAINING	2
2	PFOZZ	4730-01-238-1707	64678	916002 012100	CLAMP,HOSE	4
3	MOOZZ		64678	008 997 90 82X 100	HOSE MAKE FROM CAGE 64678, P/N 008 997 90 82,100 MM	2
4	PFOZZ	5340-01-240-5728	64678	001 997 83 90	STRAP,LINE SUPPORTING	9
5	MOOZZ		64678	008 997 90 82X56	HOSE MAKE FROM CAGE 64678, P/N 008 997 90 82,560 MM	1
6	MOOZZ		64678	008 997 90 82X 630	HOSE MAKE FROM CAGE 64678, P/N 008 997 90 82,630 MM	1
7	PFOZZ	4730-01-237-1931	64678	419 476 00 25	MENDER,HOSE	2
8	PFOZZ	4730-01-241-1532	64678	915017 008100	NUT,UNION	2
9	PFOZZ	4730-01-240-6819	15526	3861 D 8L NP250	SLEEVE,COMPRESSION	2
10	PAOZZ	4820-01-237-0115	D8487	788	VALVE,BALL	1
11	PFOZZ	5340-01-266-6462	64678	419 470 00 81	BRACKET,DOUBLE ANGLE	1
12	PFOZZ	5306-01-271-2515	64678	000961 012122	BOLT,MACHINE	2
13	MOOZZ		64678	008 997 90 82X 1980	HOSE MAKE FROM CAGE 64678, P/N 008 997 90 82, CUT TO 1980 MM	1
14	PFOZZ	5306-01-174-7552	64678	000933 006127	BOLT,MACHINE	1
15	PFOZZ	5310-01-247-9269	64678	23-11670-050	WASHER,FLAT	2
16	PFOZZ	5310-01-244-3696	64678	210112 050000	NUT	2
17	PFOZZ	5310-01-238-4594	64678	913004 012009	NUT,SELF-LOCKING,HE	4
18	PFOZZ	5306-01-187-9502	56161	10516476	BOLT,MACHINE	4
19	PFOZZ	5306-01-264-3596	64678	230481 044000	BOLT,SQUARE NECK	2
20	PFOZZ	2910-01-236-4503	64678	419 470 70 42	SUPPORT,FUEL TANK	2
21	PFOZZ	5310-01-265-8213	64678	23-11670-044	WASHER,FLAT	2
22	PFOZZ	5310-00-880-8189	96906	MS51967-11	NUT,PLAIN,HEXAGON	2
23	PAOFF	2910-01-359-1179	64678	919 470 00 01	TANK,FUEL,ENGINE	1

(1) ITEM NO	(2) SMR CODE	(3) NSN	(4) CAGEC	(5) PART NUMBER	(6) DESCRIPTION AND USABLE ON CODES (UOC)	(7) QTY
24	PAOZZ	2510-01-358-8632	64678	419 987 74 60	.INSULATION PANEL,VE.....	2
25	XAOFF		64678	419 470 72 01	.TANK,FUEL.....	1
26	PAOZZ	4730-01-355-8939	98624	A-1016-E	..PLUG,PIPE.....	1
27	PFOZZ	2590-01-257-2358	98624	A1341D	..CAP,FILLER OPENING.....	1
28	PAOZZ	4730-00-107-2966	98624	EX620	..STRAINER ELEMENT,SE.....	1
29	XAOZZ		19207	NPN-025	..TANK,FUEL.....	1
30	PAOZZ	5305-01-360-1957	98624	545	..SCREW,MACHINE.....	5
31	PFOZZ	4820-01-257-4406	98624	975	..VALVE,VENT.....	1
32	PAOZZ	2510-01-358-8631	64678	419 987 73 60	.INSULATION PANEL,VE.....	2
					END OF FIGURE	

UNIT, DIRECT SUPPORT AND GENERAL SUPPORT MAINTENANCE

SMALL EMPLACEMENT EXCAVATOR (SEE) AND HIGH MOBILITY MATERIAL HANDLER (HMMH)

FUEL FILTERS – FLUID FILTER ASSEMBLY 001 092 09 01 FLUID FILTER ASSEMBLY 149 200 000, AND FLUID FILTER ELEMENT 000 092 27 05

REPAIR PARTS LIST

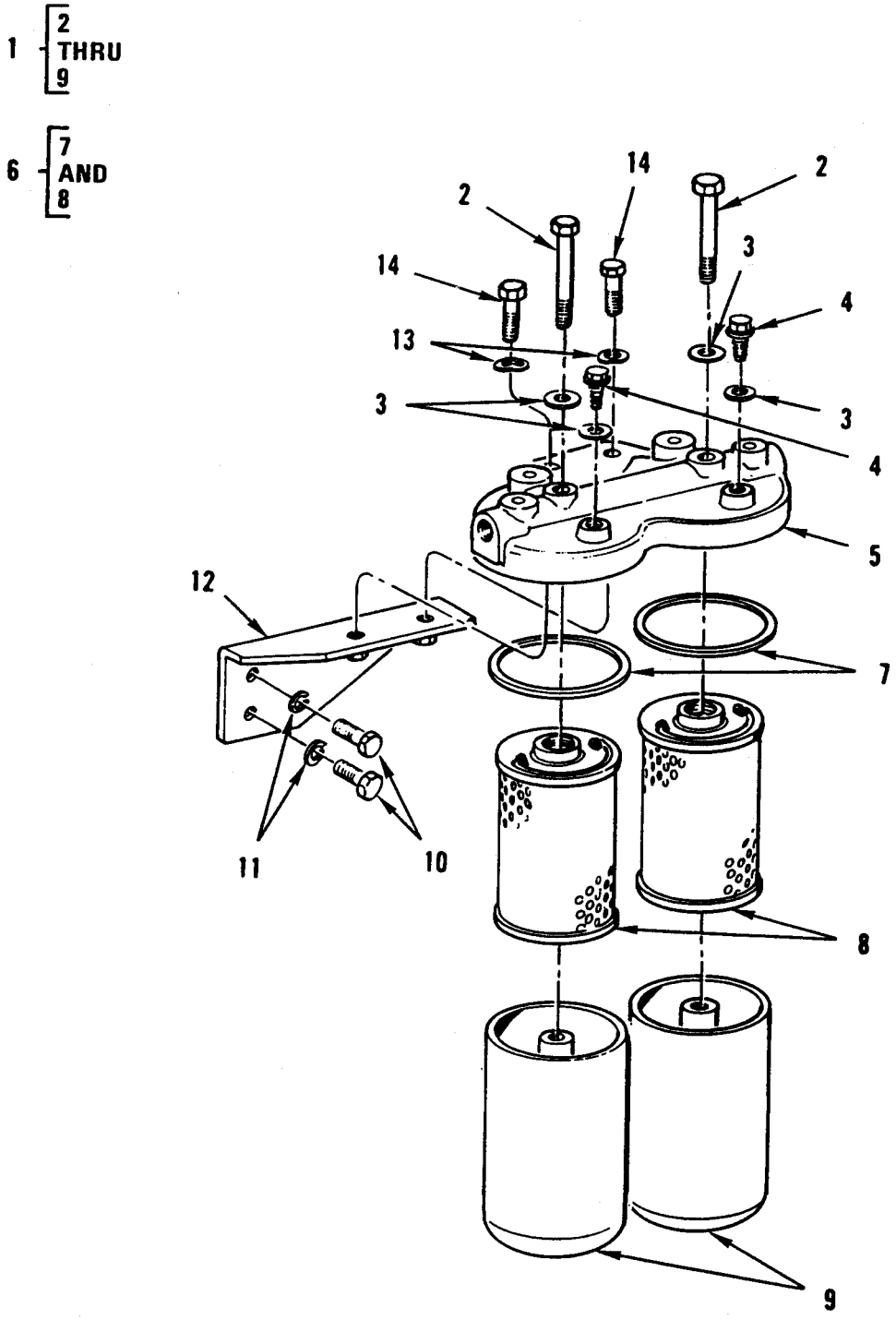

Figure 35. Fuel Filters – Fluid Filter Assemblies and Fluid Filter Element.

(1) ITEM NO	(2) SMR CODE	(3) NSN	(4) CAGEC	(5) PART NUMBER	(6) DESCRIPTION AND USABLE ON CODES (UOC)	(7) QTY
					GROUP 0309	
					FIG. 35 FUEL FILTERS – FILTER ASSEMBLY, FLUID 001 092 09 01, FILTER ASSEMBLY, FLUID 149 200 000, AND FILTER ELEMENT, FLUID 000 092 27 05	
1	PAOOO	4330-01-286-9489	64678	001 092 09 01	FILTER ASSEMBLY,FLU MANUFACTURED BY KNECHT CORP	1
1	XBOOO		D9741	149 200 000	FILTER ASSEMBLY,FLU MANUFACTURED BY HENGST CORP	1
2	PFOZZ	5306-01-174-7553	15526	931 M8X80 P	.BOLT,MACHINE USED ON KNECHT FILTER ASSEMBLY	2
2	PAOZZ	5305-01-252-9164	15526	931 M8X75 P	.SCREW,CAP,HEXAGON H USED ON HENGST FILTER ASSEMBLY	2
3	PAOZZ	5330-00-763-2689	D8046	A8X12DIN7603	.SEAL USED ON HENGST AND KNECHT	4
4	PAOZZ	5305-01-238-1483	64678	000 074 51 71	.SETSCREW USED ON HENGST AND KNECHT	2
5	PFOZZ	2940-01-236-0722	D8081	702 744 4	.HEAD,FLUID FULTER USED ON KNECHT FILTER ASSEMBLY	1
5	PFOZZ	2940-01-234-8930	64678	000 092 29 08	.HEAD,FLUID FILTER USED ON HENGST FILTER ASSEMBLY	1
6	PAOOO	2910-01-224-7367	64678	000 092 27 05	.FILTER ELEMENT,FLUI USED ON HENGST AND KNECHT	2
7	PAOZZ	5330-01-242-0747	64678	000 477 35 80	..GASKET USED ON HENGST AND KNECHT	2
8	XAOZZ		19207	NPN-026	..FILTER,ELEMENT USED ON HENGST AND KNECHT	2
9	XAOZZ		19207	NPN-027	.HOUSING,FILTER ELEM USED ON HENGST AND KNECHT	2
10	PAOZZ	5305-01-239-2584	64678	000933 010027	SCREW,CAP,HEXAGON H	2
11	PFOZZ	5310-01-237-7658	64678	912004 010102	WASHER,LOCK	2
12	PFOZZ	5340-01-288-4554	64678	352 090 06 41	BRACKET,ANGLE	1
13	PAOZZ	5310-01-173-9286	S3465	4537800-276	WASHER,SPRING TENSI	2
14	PAOZZ	5306-01-238-2159	15526	961 M12X1.5X35 F	BOLT,MACHINE	2
					END OF FIGURE	

UNIT, DIRECT SUPPORT AND GENERAL SUPPORT MAINTENANCE

SMALL EMPLACEMENT EXCAVATOR (SEE) AND HIGH MOBILITY MATERIAL HANDLER (HMMH)

FUEL FILTERS – FLUID FILTER 90 400 1-20

REPAIR PARTS LIST

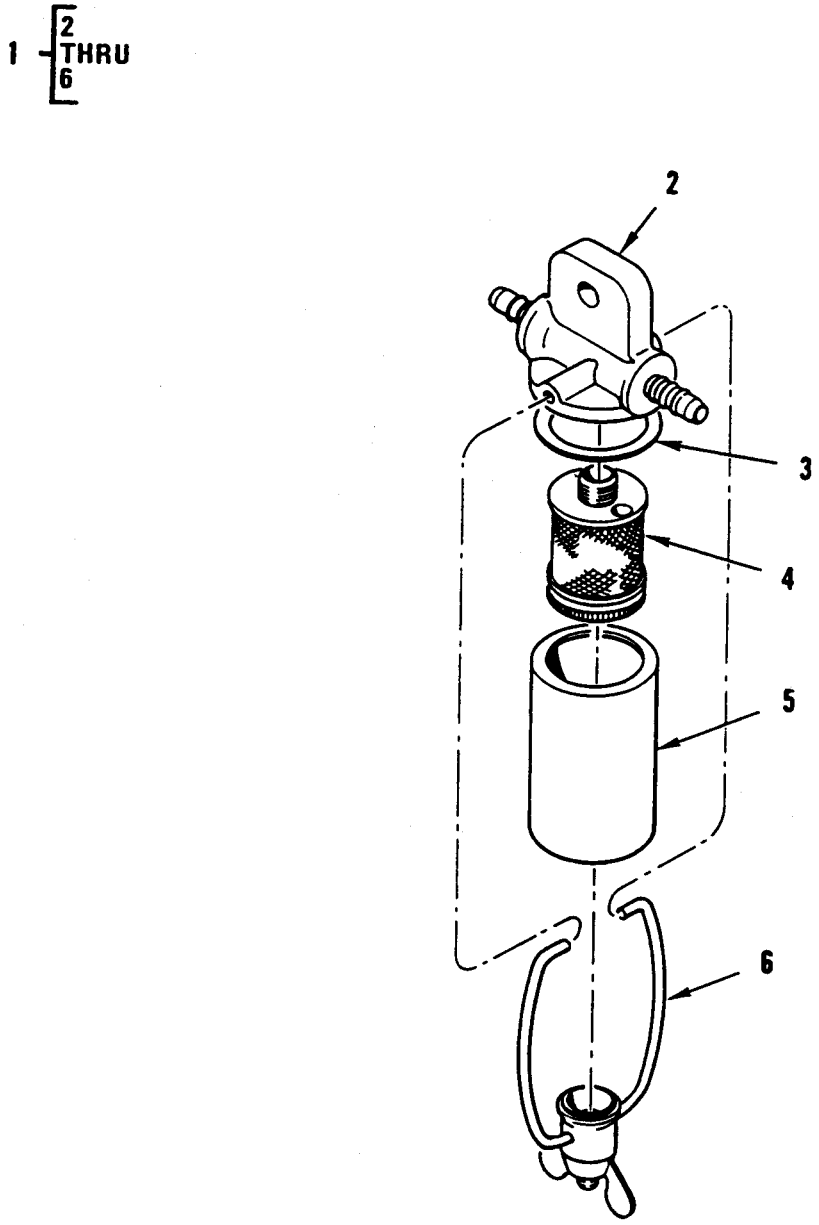

Figure 36. Fuel Filters – Fluid Filter

(1) ITEM NO	(2) SMR CODE	(3) NSN	(4) CAGEC	(5) PART NUMBER	(6) DESCRIPTION AND USABLE ON CODES (UOC)	(7) QTY
					GROUP 0309	
					FIG. 36 FUEL FILTERS – FILTER, FLUID 900 400 1-20	
1	PAOOO	2910-01-236-6054	64678	90 400 1-20	FILTER,FLUID	1
2	XAOZZ		64678	000 477 08 05	.FILTER BODY,FLUID	1
3	PAOZZ	5330-01-240-1829	D8488	90.400-022	.SEAL,PLAIN	1
4	PAOZZ	4330-12-167-1681	D8046	000 477 74 15	.FILTER ELEMENT,FLUI	1
5	XAOZZ		64678	000 477 18 16	.BOWL,SEDIMENT	1
6	PFOZZ	2910-01-236-7242	64678	000 477 09 18	.BAIL,SEDIMENT BOWL	1
					END OF FIGURE	

UNIT, DIRECT SUPPORT AND GENERAL SUPPORT MAINTENANCE

SMALL EMPLACEMENT EXCAVATOR (SEE) AND HIGH MOBILITY MATERIAL HANDLER (HMMH)

ENGINE STARTING AIDS – COLD START AID

REPAIR PARTS LIST

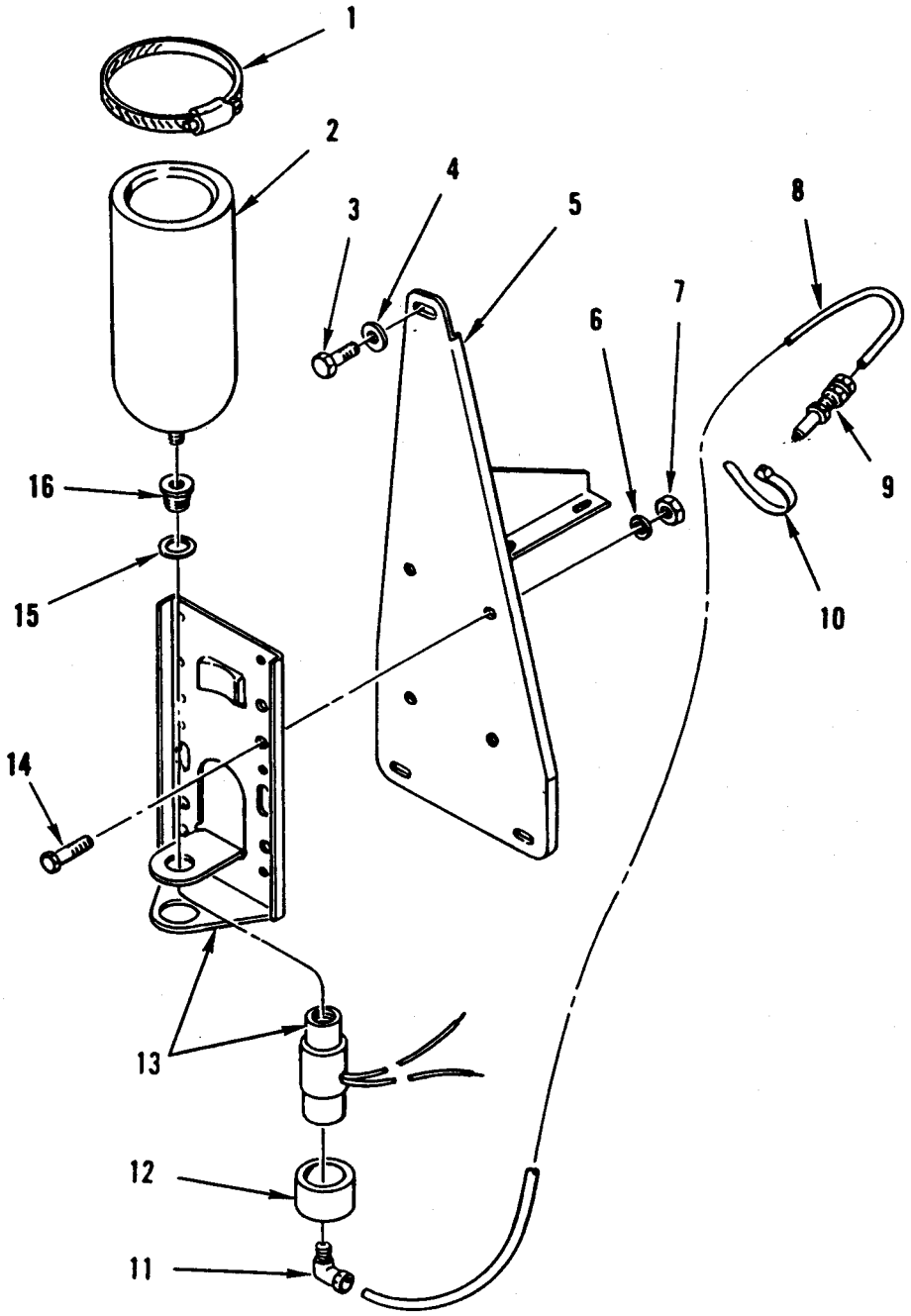

Figure 37. Engine Starting Aids – Cold Start Aid.

(1) ITEM NO	(2) SMR CODE	(3) NSN	(4) CAGEC	(5) PART NUMBER	(6) DESCRIPTION AND USABLE ON CODES (UOC)	(7) QTY
					GROUP 0311	
					FIG. 37 ENGINE STARTING AIDS – COLD START AID	
1	PAOZZ	4730-01-253-3578	53203	301 082	CLAMP,HOSE PART OF KIT P/N 64 021	1
2	PAOZZ	8120-01-234-5336	53203	20030	CYLINDER,COMPRESSED PART OF KIT P/N 64 021	1
3	PFOZZ	5305-01-158-0827	56161	10502405	SCREW,CAP,HEXAGON H M10X1.5X25	3
4	PFOZZ	5310-01-174-7615	S3465	4537800-780	WASHER,FLAT	3
5	PFOZZ	5340-01-244-1129	64678	419 550 70 40	BRACKET,ANGLE START	1
6	PFOZZ	5310-01-243-4704	64678	000125 013008	WASHER,FLAT	4
7	PFOZZ	5310-01-244-4003	64678	210980 012000	NUT,SELF-LOCKING,HE	4
8	PAOZZ	4720-01-114-6629	53203	300046	TUBING,NONMETALLIC 72 INCHES PART OF KIT P/N 64 021	1
9	PAOZZ	2910-01-244-0154	53203	230 336	NOZZLE,FUEL INJECTI PART OF KIT P/N 64 021	1
10	PFOZZ	5340-01-244-4122	06383	PLT 1MO	STRAP,LINE SUPPORTI	4
11	PAOZZ	4330-01-198-1525	53203	240 005	FILTER ELEMENT,FLUI PART OF KIT P/N 64 021	3
12	PAOZZ	5330-01-207-2769	53203	300 830	SEAL,PLAIN PART OF KIT P/N 64 021	1
13	PFOZZ	4810-01-225-0845	53203	424 000	VALVE,SOLENOID PART OF KIT P/N 64 021	1
14	PFOZZ	5305-01-158-3203	56161	10503344	SCREW,CAP,HEXAGON H	4
15	PAOZZ	5330-01-233-2062	53203	300 012	GASKET PART OF KIT P/N 64 021	1
16	PAOZZ	5342-01-228-6113	53203	300 625	CAP PART OF KIT P/N 64 021	1
					END OF FIGURE	

UNIT, DIRECT SUPPORT AND GENERAL SUPPORT MAINTENANCE

SMALL EMPLACEMENT EXCAVATOR (SEE) AND HIGH MOBILITY MATERIAL HANDLER (HMMH)

ACCELERATOR, THROTTLE OR CHOKE CONTROLS – ACCELERATOR LINKAGE AND REMOTE CONTROL LEVER 312 300 21 25

REPAIR PARTS LIST

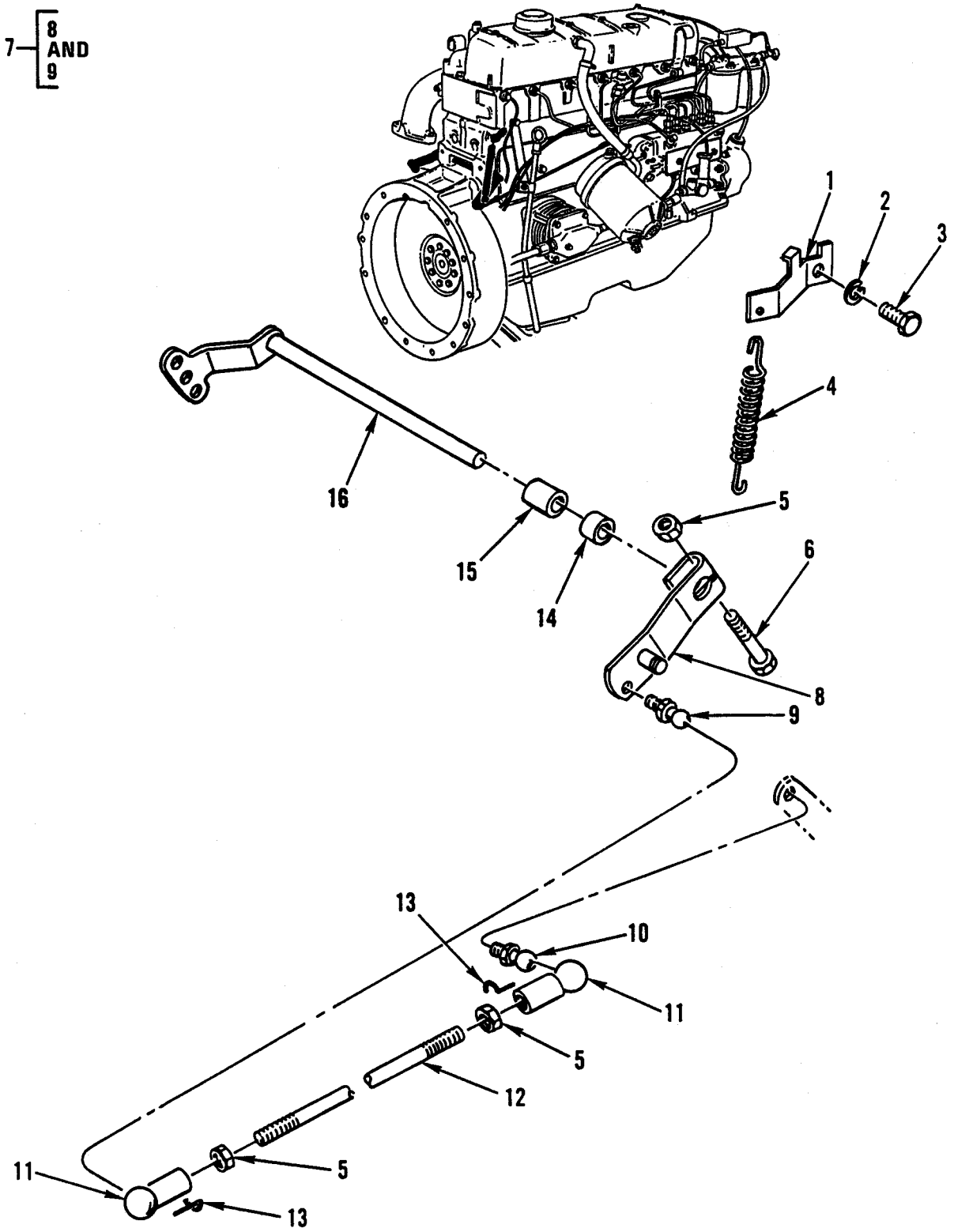

Figure 38. Accelerator, Throttle or Choke Controls – Accelerator Linkage and Remote Control Lever.

(1) ITEM NO	(2) SMR CODE	(3) NSN	(4) CAGEC	(5) PART NUMBER	(6) DESCRIPTION AND USABLE ON CODES (UOC)	(7) QTY
					GROUP 0312	
					FIG. 38 ACCELERATOR, THROTTLE OR CHOKE CONTROLS – ACCELERATOR LINKAGE AND LEVER, REMOTE CONTROL 312 300 21 25	
1	PAOZZ	5340-01-326-7641	64678	352 072 36 40	BRACKET,DOUBLE ANGLE	1
2	PFOZZ	5310-01-171-2356	S3465	4536226-920	WASHER,SPRING TENSI	1
3	PFOZZ	5306-01-175-0424	S3465	4537800-783	BOLT,MACHINE	1
4	PAOZZ	5360-01-238-0942	64678	352 993 18 10	SPRING,HELICAL,EXTE	1
5	PFOZZ	5310-01-171-4689	S3465	4536226-786	NUT,PLAIN,HEXAGON	3
6	PAOZZ	5306-01-247-7600	64678	000931006118	BOLT,MACHINE	1
7	PAOOO	2910-01-237-1915	64678	312 300 21 25	LEVER,REMOTE CONTRO	1
8	XAOZZ		19207	NPN-028	.LEVER	1
9	PFOZZ	5307-01-293-1731	64678	071803 010209	.STUD,BALL	1
10	PAOZZ	3040-01-301-9123	64678	364 991 00 15	BALL,PIVOT	1
11	PAOZZ	5340-01-239-9572	64678	000 991 24 22	ROD END,THREADED	2
12	PAOZZ	3040-01-236-2848	64678	900331 006028	CONNECTING LINK,RIG	1
13	PAOZZ	5340-01-239-1434	64678	071805 010403	CLIP,RETAINING	2
14	PAOZZ	5365-01-238-8931	64678	352 072 06 53	SPACER,SLEEVE	1
15	PAOZZ	3120-01-238-4663	64678	312 301 10 50	BUSHING,SLEEVE	1
16	PAOZZ	2910-01-236-7304	64678	352 070 52 23	LEVER,REMOTE CONTRO	1
					END OF FIGURE	

UNIT, DIRECT SUPPORT AND GENERAL SUPPORT MAINTENANCE

SMALL EMPLACEMENT EXCAVATOR (SEE) AND HIGH MOBILITY MATERIAL HANDLER (HMMH)

ACCELERATOR, THROTTLE OR CHOKE CONTROLS – FRONT THROTTLE CONTROL

REPAIR PARTS LIST

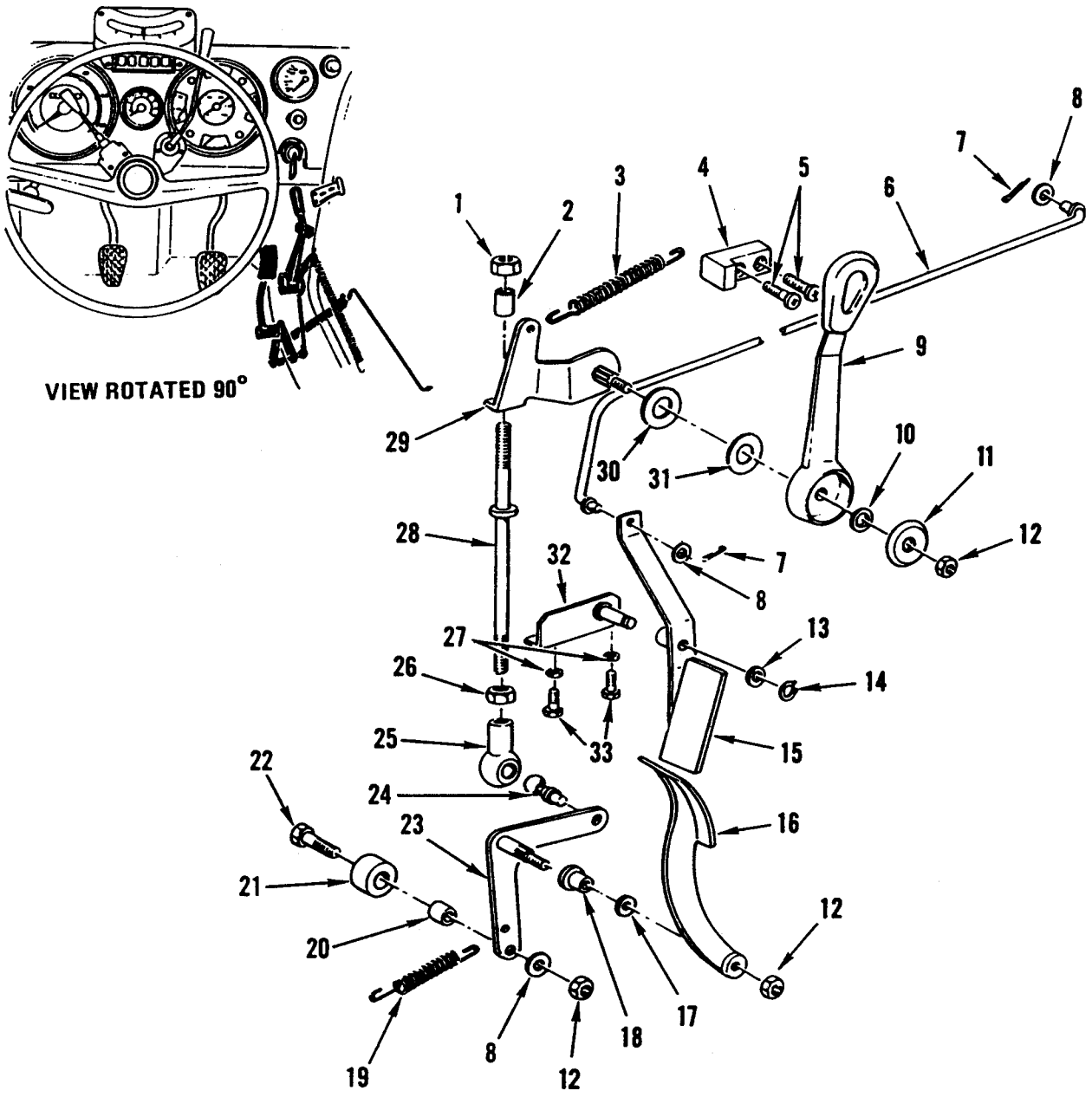

Figure 39. Accelerator, Throttle or Choke Controls – Front Throttle Control.

(1) ITEM NO	(2) SMR CODE	(3) NSN	(4) CAGEC	(5) PART NUMBER	(6) DESCRIPTION AND USABLE ON CODES (UOC)	(7) QTY
					GROUP 0312	
					FIG. 39 ACCELERATOR, THROTTLE OR CHOKE CONTROLS – FRONT THROTTLE CONTROL	
1	PFOZZ	5310-01-241-6349	64678	913004 006002	NUT,SELF-LOCKING,HE	1
2	PFOZZ	3120-01-240-2703	64678	406 302 03 62	BUSHING,SLEEVE	1
3	PFOZZ	5360-01-245-7453	64678	4069935110	SPRING,HELICAL,EXTE	1
4	PFOZZ	2530-01-238-0285	64678	419 301 00 41	LEVER,REMOTE CONTROL	1
5	PFOZZ	5305-01-240-1790	15526	7985 M6.236	SCREW,MACHINE	2
6	PFOZZ	3040-01-237-6434	64678	406 300 07 15	CONNECTING LINK,RIG	1
7	PFOZZ	5315-00-059-0158	96906	MS24665-212	PIN,COTTER	2
8	PFOZZ	5310-01-237-5224	64678	000125 008413	WASHER,FLAT	3
9	PAOZZ	3040-01-237-3565	64678	406 302 01 14	LEVER,MANUAL CONTRO	1
10	PAOZZ	5330-01-240-1833	64678	425 301 00 85	O-RING	1
11	PFOZZ	5310-01-240-1821	64678	425 302 01 62	WASHER,SPRING TENSION	1
12	PFOZZ	5310-01-239-3536	64678	913004 008004	NUT,SELF-LOCKING,HE	3
13	PFOZZ	5310-01-174-7615	S3465	4537800-780	WASHER,FLAT	1
14	PFOZZ	5325-12-156-4413	D8286	10X1DIN471	RING,RETAINING	1
15	PFOZZ	3040-01-291-5305	64678	419 300 01 25	LEVER,REMOTE CONTRO	1
16	PFOZZ	2540-12-189-8313	D8046	406 301 00 20	PEDAL,CONTROL	1
17	PFOZZ	5310-01-240-1295	15526	9021 10	WASHER,FLAT	1
18	PFOZZ	3120-01-240-2702	64678	406 301 03 50	BUSHING,SLEEVE	2
19	PFOZZ	5360-01-243-6612	64678	425 993 01 10	SPRING,HELICAL EXTE	1
20	PFOZZ	5365-01-240-7479	64678	406 302 02 53	SPACER,SLEEVE	1
21	PFOZZ	3120-01-240-4473	64678	425 301 00 11	ROLLER,LINEAR-ROTOR	1
22	PFOZZ	5306-01-171-4687	S3465	4536226-715	BOLT,MACHINE	1
23	PFOZZ	3040-01-238-1852	64678	406 300 09 04	BELL CRANK	1
24	PFOZZ	5307-01-239-2620	64678	071803 010202	STUD,BALL	1
25	PFOZZ	5340-01-239-9572	64678	000 991 24 22	ROD END,THREADED	1

(1) ITEM NO	(2) SMR CODE	(3) NSN	(4) CAGEC	(5) PART NUMBER	(6) DESCRIPTION AND USABLE ON CODES (UOC)	(7) QTY
26	PFOZZ	5310-01-171-4689	S3465	4536226-786	NUT,PLAIN,HEXAGON	1
27	PFOZZ	5310-01-171-2356	S3465	4536226-920	WASHER,SPRING TENSI	2
28	PFOZZ	5315-01-240-1362	64678	406 300 06 15	PIN,SHOULDER,HEADLESS	1
29	PAOZZ	2590-01-244-3392	64678	419 300 00 25	LEVER,ASSEMBLY,BODY	1
30	PFOZZ	5310-01-244-5958	64678	406 302 05 54	WASHER,RECESSED	1
31	PFOZZ	5310-12-311-9507	D8046	442 302 01 54	WASHER,FLAT	1
32	PFOZZ	5340-01-240-2698	64678	406 300 07 36	BRACKET,ANGLE	1
33	PFOZZ	5305-01-163-5075	56161	10503971	SCREW,CAP,HEXAGON H	2
					END OF FIGURE	

UNIT, DIRECT SUPPORT AND GENERAL SUPPORT MAINTENANCE

SMALL EMPLACEMENT EXCAVATOR (SEE) AND HIGH MOBILITY MATERIAL HANDLER (HMMH)

ACCELERATOR, THROTTLE OR CHOKE CONTROLS – REAR THROTTLE CONTROL, LINES, AND FITTINGS (SEE)

REPAIR PARTS LIST

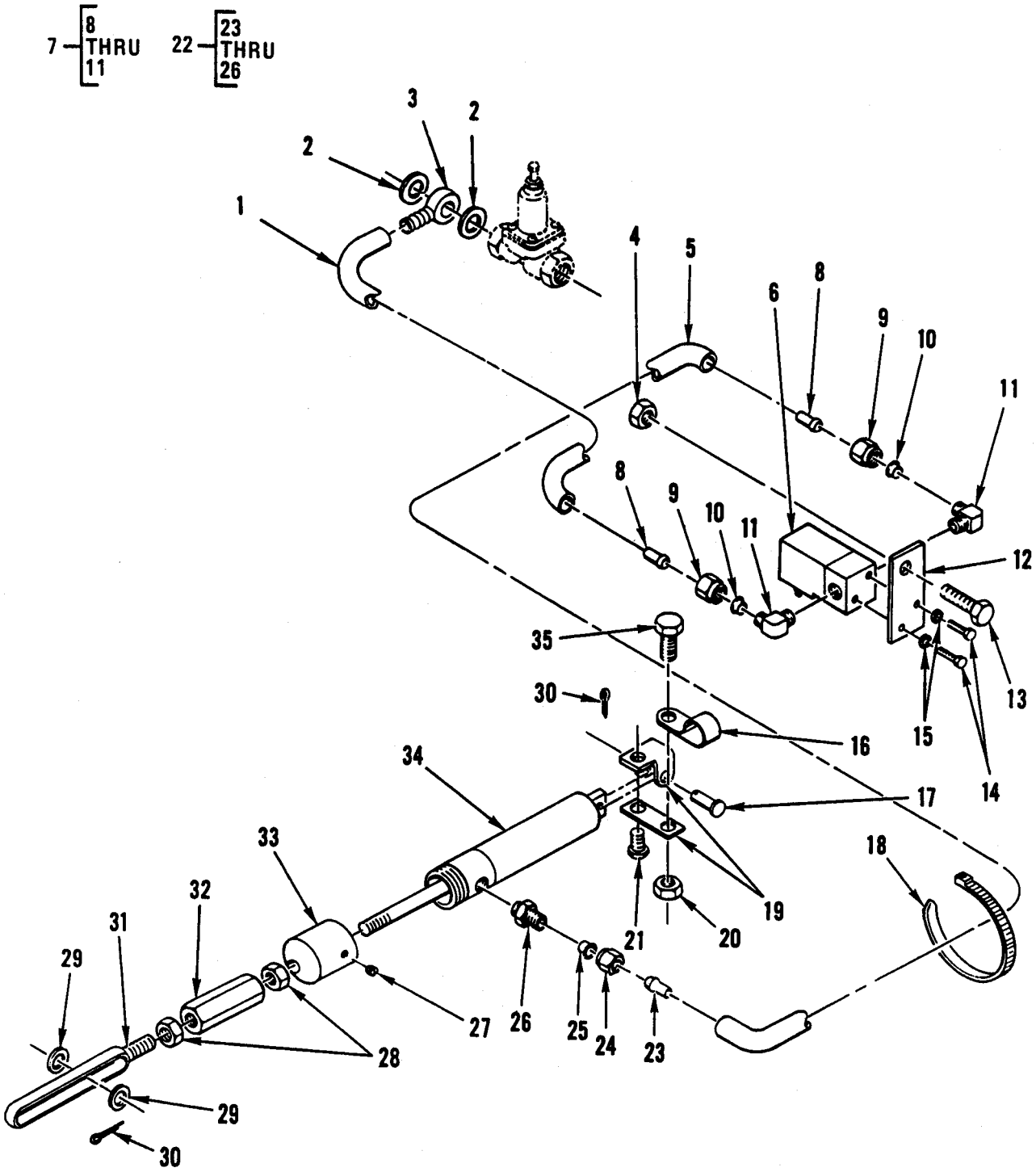

Figure 40. Accelerator, Throttle or Choke Controls – Rear Throttle Control, Lines, and Fittings (SEE).

(1) ITEM NO	(2) SMR CODE	(3) NSN	(4) CAGEC	(5) PART NUMBER	(6) DESCRIPTION AND USABLE ON CODES (UOC)	(7) QTY
					GROUP 0312	
					FIG. 40 ACCELERATOR, THROTTLE OR CHOKE CONTROLS – REAR THROTTLE CONTROL, LINES, AND FITTINGS (SEE)	
1	MOOZZ		64678	48-00100-010X 1300	TUBING,NONMETALLIC MAKE FROM CAGE 64678,P/N 48-00100-010, CUT TO 1300 MM	1
2	PAOZZ	5330-00-140-7701	64678	007603014100	SEAL RING,METAL	2
3	PAOZZ	4730-01-286-2087	D9596	0 25 355 54	CONNECTOR MULTIPLE	1
4	PFOZZ	5310-01-238-3198	15526	934 M10X1.5C	NUT,PLAIN,HEXAGON UOC:GE1	1
5	PFOZZ	4720-00-443-4746	30327	C604-1000-BLK	HOSE,NONMETALLIC	2
6	PAOZZ	4810-01-242-2777	64678	419 553 73 07	VALVE,SOLENOID UOC:GE1	1
7	PFOOO	4730-01-244-0000	02697	VS269NTA-4-2	ELBOW UOC:GE1	2
8	PAOZZ	4730-01-057-7109	93061	63NTA-4	.INSERT UOC:GE1	1
9	PAOZZ	4730-01-048-6968	93061	61NTA-4	.NUT UOC:GE1	1
10	PAOZZ	4730-01-048-6358	93061	60NTA-4	.SLEEVE,COMPRESSION UOC:GE1	1
11	XAOZZ		19207	NPN-029	.ELBOW UOC:GE1	1
12	PFOZZ	2920-01-257-3761	64678	419 553 81 40	BRACKET,SOLENOID UOC:GE1	1
13	PFOZZ	5305-01-158-0827	64678	000933 010034	SCREW,CAP,HEXAGON H	1
14	PFOZZ	5305-01-243-9404	64678	230478 010001	SCREW,CAP,HEXAGON H UOC:GE1	2
15	PAOZZ	5310-00-045-4007	96906	MS35338-41	WASHER,LOCK UOC:GE1	2
16	PFOZZ	5340-01-244-4708	64678	360 995 01 01	CLAMP,LOOP	1
17	PFOZZ	5315-01-258-0916	64678	23-11424-021	PIN,STRAIGHT,HEADED UOC:GE1	1

(1) ITEM NO	(2) SMR CODE	(3) NSN	(4) CAGEC	(5) PART NUMBER	(6) DESCRIPTION AND USABLE ON CODES (UOC)	(7) QTY
18	PFOZZ	5975-00-985-6630	96906	MS3367-3-0	STRAP,TIEDOWN,ELECT UOC:GE1	7
19	PFOZZ	5340-01-259-9566	64678	419 550 72 21	BRACKET,ANGLE UOC:GE1	1
20	PFOZZ	5310-01-241-6349	64678	913004 006002	NUT,SELF-LOCKING,HE UOC:GE1	1
21	PFOZZ	5306-01-292-0369	64678	000961 012029	BOLT,MACHINE	1
22	PFOOO	4730-01-055-4017	79470	1468X4	ADAPTER,STRAIGHT,PI UOC:GE1	1
23	PAOZZ	4730-01-057-7109	93061	63NTA-4	.INSERT UOC:GE1	1
24	PAOZZ	4730-01-048-6968	93061	61NTA-4	.NUT UOC:GE1	1
25	PAOZZ	4730-01-048-6358	93061	60NTA-4	.SLEEVE,COMPRESSION UOC:GE1	1
26	XAOZZ		19207	NPN-030	.ADAPTER UOC:GE1	1
27	PFOZZ	5305-01-259-8680	64678	23-10909-038	SETSCREW 3/8 INCH UOC:GE1	1
28	PFOZZ	5310-00-877-5796	96906	MS21044N4	NUT,SELF-LOCKING,HE UOC:GE1	2
29	PFOZZ	5310-01-244-1069	64678	000125 006417	WASHER,FLAT	2
30	PFOZZ	5315-00-839-5820	96906	MS24665-134	PIN,COTTER	2
31	PFOZZ	3040-01-255-4453	64678	419 553 72 28	CONNECTING LINK,RIG CONTROL CYL UOC:GE1	1
32	PFOZZ	5340-01-263-8565	64678	419 553 71 72	POST,ELECTRICAL—MEC UOC:GE1	1
33	PFOZZ	5310-01-257-4288	64678	419 553 70 72	NUT,SLEEVE UOC:GE1	1
34	PAOZZ	2590-01-242-3052	64678	419 553 7105	CYLINDER ASSEMBLY,A UOC:GE1	1
35	PFOZZ	5305-01-155-5439	56161	10501757	SCREW,CAP,HEXAGON H UOC:GE1	1
					END OF FIGURE	

UNIT, DIRECT SUPPORT AND GENERAL SUPPORT MAINTENANCE

SMALL EMPLACEMENT EXCAVATOR (SEE) AND HIGH MOBILITY MATERIAL HANDLER (HMMH)

ACCELERATOR, THROTTLE OR CHOKE CONTROLS – REAR THROTTLE CONTROL, LINES, AND FITTINGS (HMMH)

REPAIR PARTS LIST

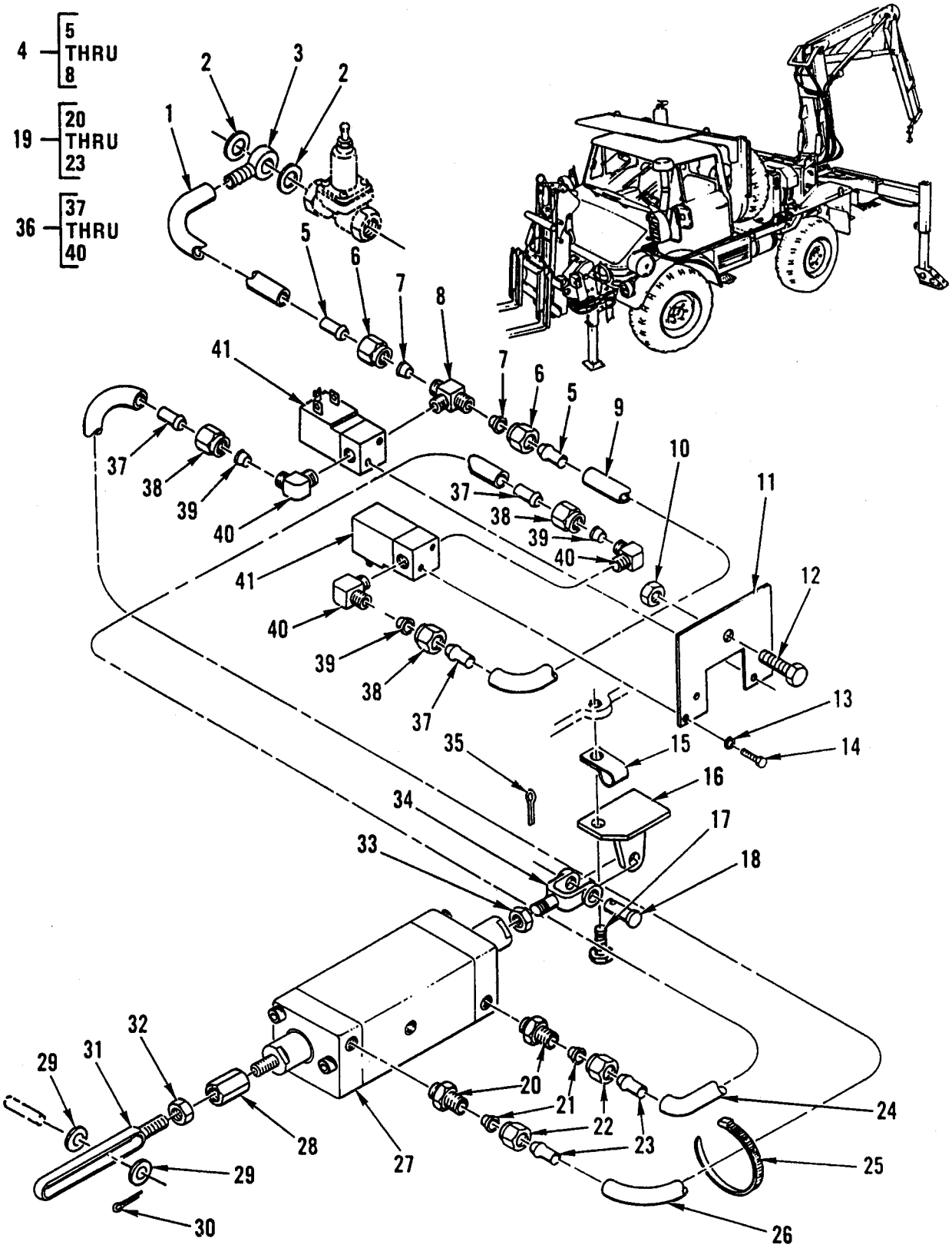

Figure 41. Accelerator, Throttle or Choke Controls – Rear Throttle Control, Lines, and Fittings (HMMH).

(1) ITEM NO	(2) SMR CODE	(3) NSN	(4) CAGEC	(5) PART NUMBER	(6) DESCRIPTION AND USABLE ON CODES (UOC)	(7) QTY
					GROUP 0312	
					FIG. 41 ACCELERATOR, THROTTLE OR CHOKE CONTROLS – REAR THROTTLE CONTROL, LINES, AND FITTINGS (HMMH)	
1	MOOZZ		64678	48-00100-010X 1700	TUBING,NONMETALLIC MAKE FROM CAGE 64678 P/N 48-00100-010, CUT TO 1700 MM	1
2	PFOZZ	5330-12-156-4511	D8286	DIN 7603-A14X 18-A/ L	GASKET UOC:GE4	2
3	PAOZZ	4730-01-286-2087	D9596	0 25 355 54	CONNECTOR,MULTIPLE UOC:GE4	1
4	PAOOO	4730-01-298-9381	93061	VS272NTA-4-2	TEE,PIPE TO TUBE UOC:GE4	1
5	PAOZZ	4730-01-057-7109	93061	63NTA-4	.INSERT,TUBE FITTING UOC:GE4	2
6	PAOZZ	4730-01-048-6968	93061	61NTA-4	.NUT,TUBE COUPLING UOC:GE4	2
7	PAOZZ	4730-01-048-6358	93061	60NTA-4	.SLEEVE,COMPRESSION, UOC:GE4	2
8	XAOZZ		19207	NPN-031	.TEE UOC:GE4	1
9	MOOZZ		64678	48-00100-010X 1.0	TUBING,NONMETALLIC MAKE FROM CAGE 64678,P/N 48-00100-010, CUT TO 1.0 FT UOC:GE4	1
10	PFOZZ	5310-01-238-3198	15526	934 M10X1.5C	NUT,PLAIN,HEXAGON	1
11	PAOZZ	5340-01-298-7784	64678	419 619 72 14	BRACKET,DOUBLE ANGLE UOC:GE4	1
12	PFOZZ	5305-01-158-0827	64678	000933 010034	SCREW,CAP,HEXAGON H UOC:GE4	1
13	PAOZZ	5310-00-045-4007	96906	MS35338-41	WASHER,LOCK UOC:GE4	4
14	PFOZZ	5305-01-243-9404	64678	230478 010001	SCREW,CAP,HEXAGON H UOC:GE4	4
15	PFOZZ	5340-01-244-4708	64678	360 995 01 01	CLAMP,LOOP UOC:GE4	1

(1) ITEM NO	(2) SMR CODE	(3) NSN	(4) CAGEC	(5) PART NUMBER	(6) DESCRIPTION AND USABLE ON CODES (UOC)	(7) QTY
16	PFOZZ	5340-01-298-0656	64678	419 550 74 21	BRACKET,ANGLE UOC:GE4	1
17	PFOZZ	5306-01-292-0369	64678	000961 012029	BOLT,MACHINE UOC:GE4	1
18	PFOZZ	5315-01-246-1863	64678	23-11424-005	PIN,STRAIGHT,HEADED UOC:GE4	1
19	PAOOO	4730-01-055-4017	797470	1468X4	ADAPTER,STRAIGHT,PI UOC:GE4	2
20	XAOZZ		19207	NPN-032	.ADAPTER UOC:GE4	1
21	PAOZZ	4730-01-048-6358	93061	60NTA-4	.SLEEVE,COMPRESSION, UOC:GE4	1
22	PAOZZ	4730-01-048-6968	93061	61NTA-4	.NUT,TUBE COUPLING UOC:GE4	1
23	PAOZZ	4730-01-057-7109	93061	63NTA-4	.INSERT,TUBE FITTING UOC:GE4	1
24	MOOZZ		64678	48-00100-010X 8.0	TUBING,NONMETALLIC MAKE FROM CAGE 64678 P/N 48-00100-010, CUT TO 8.0 FT UOC:GE4	1
25	PFOZZ	5975-00-985-6630	96906	MS3367-3-0	STRAP,TIEDOWN,ELECT UOC:GE4	12
26	PFOZZ	4720-00-443-4746	30327	C604-1000-BLK	HOSE,NONMETALLIC	2
27	PAOZZ	3040-01-298-4295	64678	419 553 72 05	CYLINDER ASSEMBLY,A UOC:GE4	1
28	PAOZZ	5310-01-299-2906	64678	419 553 72 72	NUT,PLAIN,HEXAGON UOC:GE4	1
29	PFOZZ	5310-01-244-1069	64678	000125 006417	WASHER,FLAT UOC:GE4	2
30	PFOZZ	5315-00-839-5820	96906	MS24665-134	PIN,COTTER UOC:GE4	1
31	PFOZZ	3040-01-298-8447	64678	419 553 73 28	CONNECTING LINK,RIG UOC:GE4	1
32	PAOZZ	5310-00-891-3405	64678	23-09254-007	NUT,PLAIN,HEXAGON UOC:GE4	1
33	PFOZZ	5310-00-523-0880	96906	MS35691-506	NUT,PLAIN,HEXAGON UOC:GE4	1
34	PFOZZ	5340-01-298-9727	94882	45903	CLEVIS,ROD END UOC:GE4	1
35	PFOZZ	5315-00-842-3044	96906	MS24665-283	PIN,COTTER UOC:GE4	1
36	PFOOO	4730-01-244-0000	02697	VS269NTA-4-2	ELBOW,PIPE TO TUBE UOC:GE4	3

(1) ITEM NO	(2) SMR CODE	(3) NSN	(4) CAGEC	(5) PART NUMBER	(6) DESCRIPTION AND USABLE ON CODES (UOC)	(7) QTY
37	PAOZZ	4730-01-057-7109	93061	63NTA-4	.INSERT,TUBE FITTING UOC:GE4.....	1
38	PAOZZ	4730-01-048-6968	93061	61NTA-4	.NUT,TUBE COUPLING UOC:GE4.....	1
39	PAOZZ	4730-01-048-6358	93061	60NTA-4	.SLEEVE,COMPRESSION UOC:GE4.....	1
40	XAOZZ		19207	NPN-033	.ELBOW,90 DEGREE UOC:GE4.....	1
41	PAOZZ	4810-01-242-2777	77521	419 553 73 07	VALVE,SOLENOID UOC:GE4.....	2
					END OF FIGURE	

UNIT, DIRECT SUPPORT AND GENERAL SUPPORT MAINTENANCE

SMALL EMPLACEMENT EXCAVATOR (SEE) AND HIGH MOBILITY MATERIAL HANDLER (HMMH)

EXHAUST SYSTEM, MUFFLER AND PIPES – EXHAUST MANIFOLD SCREEN

REPAIR PARTS LIST

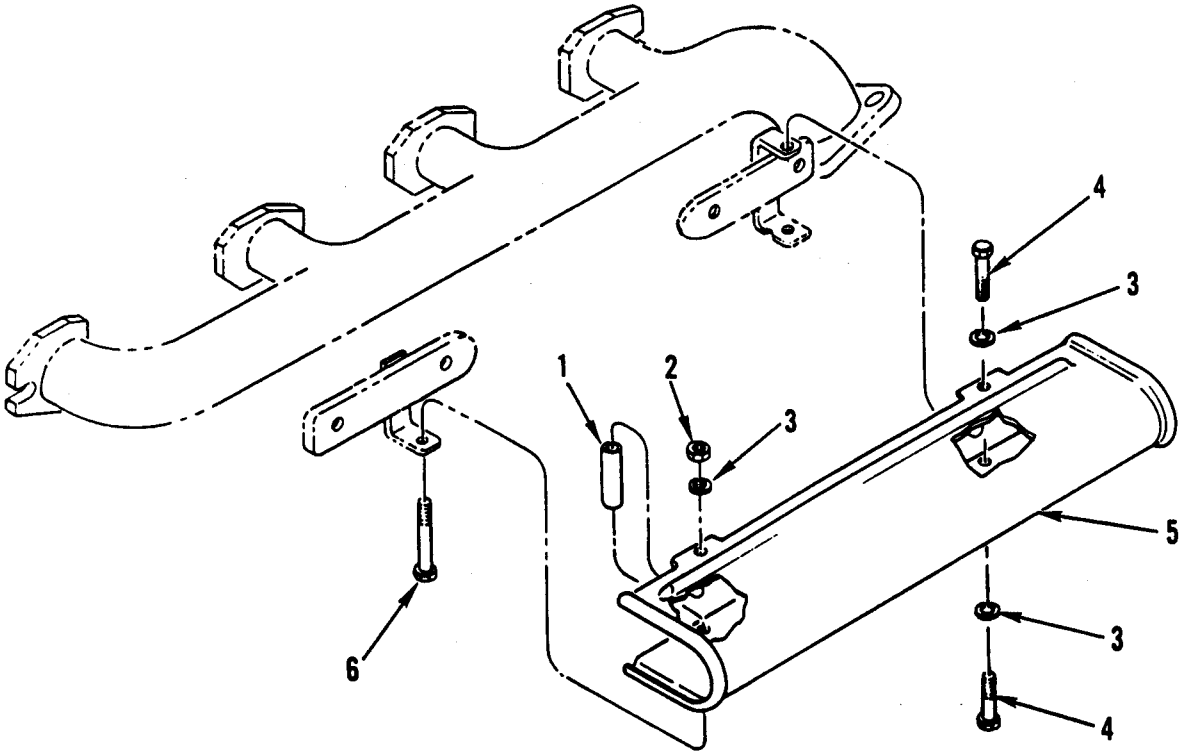

Figure 42. Exhaust System, Muffler and Pipes – Exhaust Manifold Screen.

(1) ITEM NO	(2) SMR CODE	(3) NSN	(4) CAGEC	(5) PART NUMBER	(6) DESCRIPTION AND USABLE ON CODES (UOC)	(7) QTY
					GROUP 04 GROUP 0401	
					FIG. 42 EXHAUST SYSTEM, MUFFLER AND PIPES – EXHAUST MANIFOLD SCREEN	
1	PAOZZ	5365-01-238-8930	64678	352 142 01 53	SPACER,SLEEVE	1
2	PFOZZ	5310-01-241-6345	15526	934 8 M8X1.25 C	NUT,PLAIN,HEXAGON	1
3	PAOZZ	5310-01-239-1342	15526	137B-8	WASHER,SPRING TENSI	3
4	PFOZZ	5306-01-168-7889	S3465	4537800-791	BOLT,MACHINE	2
5	PFOZZ	2815-01-236-7273	64678	352 142 04 20	GUARD,MECHANICAL DR	1
6	PAOZZ	5306-01-237-9358	15526	931 M8X90 P	BOLT,MACHINE	1
					END OF FIGURE	

UNIT, DIRECT SUPPORT AND GENERAL SUPPORT MAINTENANCE

SMALL EMPLACEMENT EXCAVATOR (SEE) AND HIGH MOBILITY MATERIAL HANDLER (HMMH)

MUFFLER AND PIPES – MUFFLER AND EXHAUST PIPE

REPAIR PARTS LIST

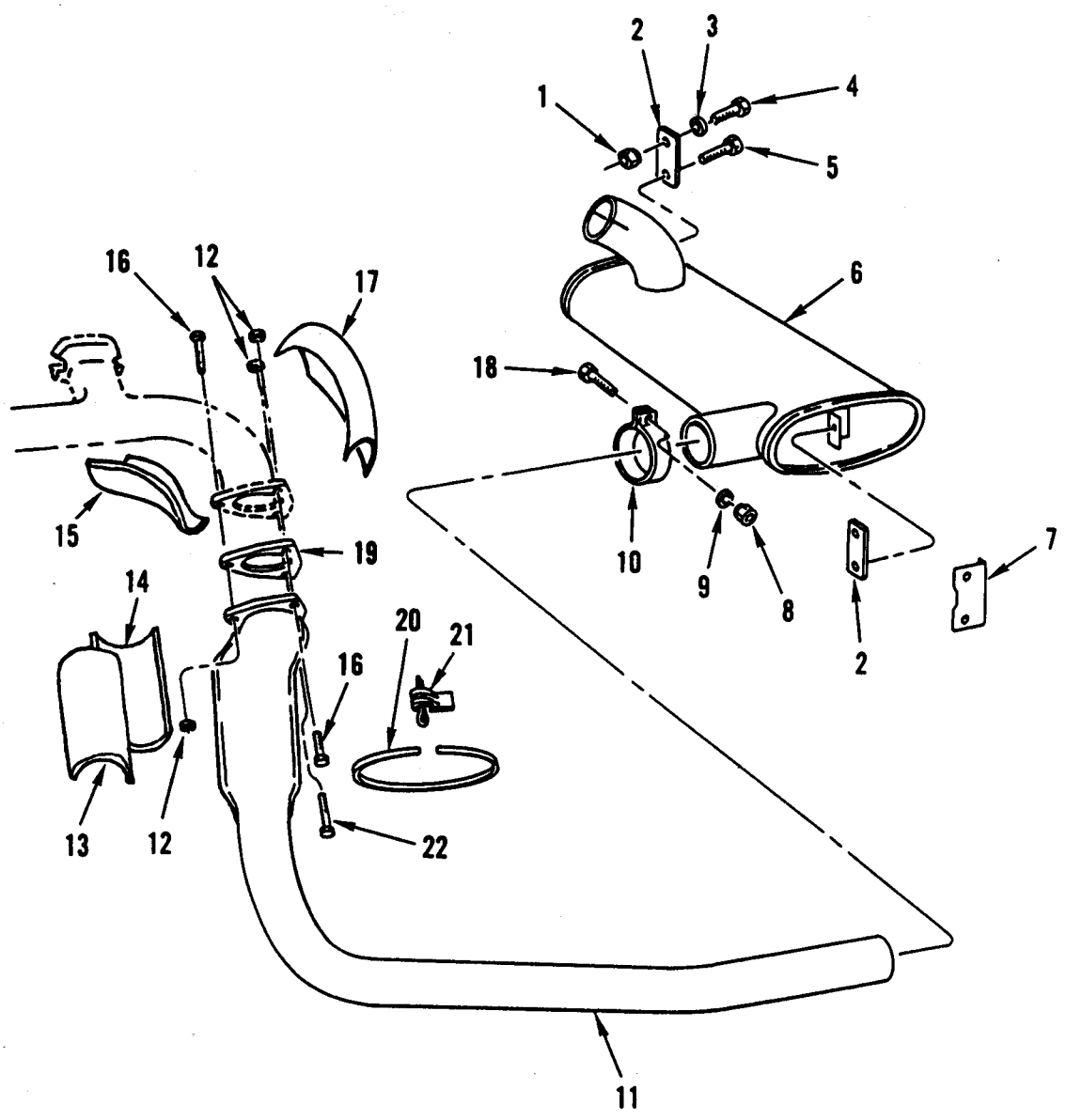

Figure 43. Muffler and Pipes – Muffler and Exhaust Pipe.

(1) ITEM NO	(2) SMR CODE	(3) NSN	(4) CAGEC	(5) PART NUMBER	(6) DESCRIPTION AND USABLE ON CODES (UOC)	(7) QTY
					GROUP 0401	
					FIG. 43 MUFFLER AND PIPES – MUFFLER AND EXHAUST PIPE	
1	PFOZZ	5310-01-167-1863	S3465	4537800-712	NUT,PLAIN,HEXAGON	4
2	PFOZZ	5340-01-240-1949	64678	406 492 01 43	CLAMP,LOOP	2
3	PFOZZ	5310-01-243-6568	15526	2093 20X8.2X0.8	WASHER,SPRING TENSI	16
4	PFOZZ	5306-01-240-5166	15526	933 M10X30 F	BOLT,MACHINE	1
5	PFOZZ	5305-12-156-4872	D8286	DIN933-M10X 25-8.8-A3P	SCREW,CAP,HEXAGON H	3
6	PAOZZ	2990-01-236-7290	64678	406 490 01 01	MUFFLER,EXHAUST	1
7	PFOZZ	2990-01-237-3549	64678	406 492 00 19	HANGER,ENGINE EXHAU	1
8	PFOZZ	5310-01-241-6345	15526	934 8 M8X1.25 C	NUT,PLAIN,HEXAGON	2
9	PFOZZ	5310-01-174-0436	S3465	4537800-128	WASHER,SPRING TENSI	2
10	PFOZZ	5340-01-240-2746	64678	071555 068502	CLAMP,LOOP	1
11	PFOZZ	2990-01-237-0042	64678	406 490 09 19	PIPE,EXHAUST	1
12	PFOZZ	5310-01-247-3704	64678	999901 010000	NUT,PLAIN,HEXAGON	3
13	PFOZZ	2510-01-237-3616	64678	406 492 04 83	INSULATION BLANKET	1
14	PFOZZ	2510-01-237-3615	64678	406 492 03 83	INSULATING BLANKET	1
15	PFOZZ	2510-01-237-3613	64678	406 492 01 83	INSULATING BLANKET	1
16	PFOZZ	5306-01-240-5165	15526	931 M10X40 P	BOLT,MACHINE	2
17	PFOZZ	2510-01-237-3614	64678	406 492 02 83	INSULATION BLANKET	1
18	PFOZZ	5306-01-238-1471	64678	000933 008153	BOLT,MACHINE	2
19	PAOZZ	5330-01-240-1842	64678	406 492 01 80	GASKET	1
20	PFOZZ	5340-01-240-2069	64678	900263 009004	STRAP,RETAINING	V
21	PFOZZ	4730-01-237-6942	64678	900262 009100	CLAMP,HOSE	4
22	PFOZZ	5306-01-240-5164	15526	931 M10X60 P	BOLT,MACHINE	1
					END OF FIGURE	

UNIT, DIRECT SUPPORT AND GENERAL SUPPORT MAINTENANCE

SMALL EMPLACEMENT EXCAVATOR (SEE) AND HIGH MOBILITY MATERIAL HANDLER (HMMH)

MUFFLER AND PIPES – EXHAUST SPARK ARRESTOR FCM07-0068

REPAIR PARTS LIST

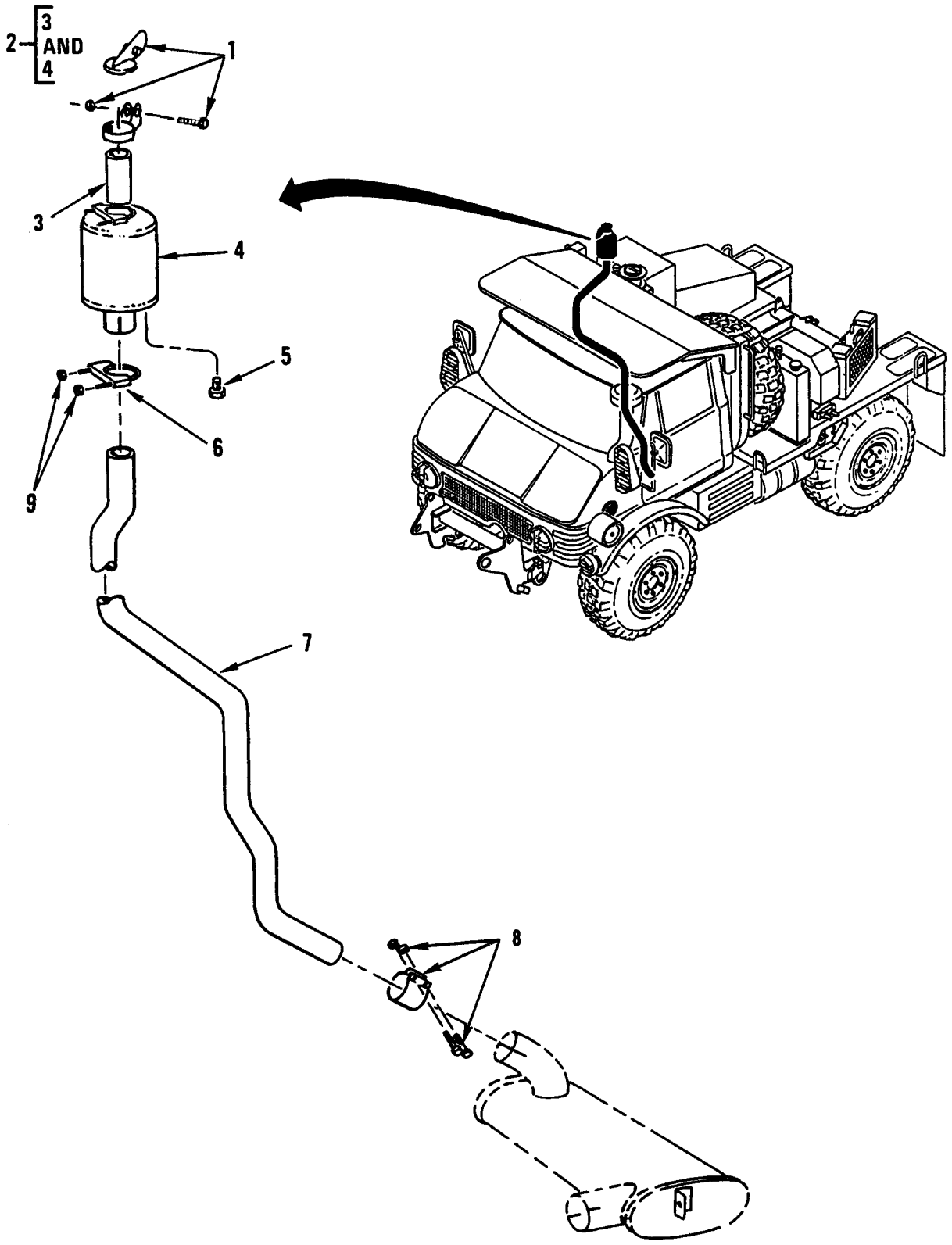

Figure 44. Muffler and Pipes – Exhaust Spark Arrestor.

(1) ITEM NO	(2) SMR CODE	(3) NSN	(4) CAGEC	(5) PART NUMBER	(6) DESCRIPTION AND USABLE ON CODES (UOC)	(7) QTY
					GROUP 0401	
					FIG. 44 MUFFLER AND PIPES – ARRESTOR, SPARK, EXHAUST FCM07-0068	
1	PAOZZ	2990-01-242-3013	18265	P27-0536	CAP ASSEMBLY,PROTEC	1
2	PAOOO	2990-00-287-0336	18265	FCM07-0068	ARRESTOR,SPARK,EXHA	1
3	XBOZZ		18265	J024731	.EXTENSION,PIPE UOC:GE1.....	1
4	XAOZZ		19207	NPN-034	.ARRESTOR	1
5	PAOZZ	4730-01-254-2989	64678	GVV-P20-5307	.PLUG,PIPE.....	1
6	PFOZZ	5340-01-244-4707	72741	656-300	CLAMP,LOOP.....	1
7	PAOZZ	2990-01-242-3009	64678	419 492 71 04	PIPE EXHAUST.....	1
8	PAOZZ	5340-01-318-1942	18265	KYX00-6044	CLAMP,LOOP.....	1
9	PFOZZ	5310-00-913-8881	96906	MS51971-3	NUT,PLAIN,HEXAGON	2
					END OF FIGURE	

UNIT, DIRECT SUPPORT AND GENERAL SUPPORT MAINTENANCE

SMALL EMPLACEMENT EXCAVATOR (SEE) AND HIGH MOBILITY MATERIAL HANDLER (HMMH)

COOLING SYSTEM, RADIATOR, EVAPORATIVE COOLER, OR HEAT EXCHANGER – ENGINE COOLANT RADIATOR SD 02.147.000

REPAIR PARTS LIST

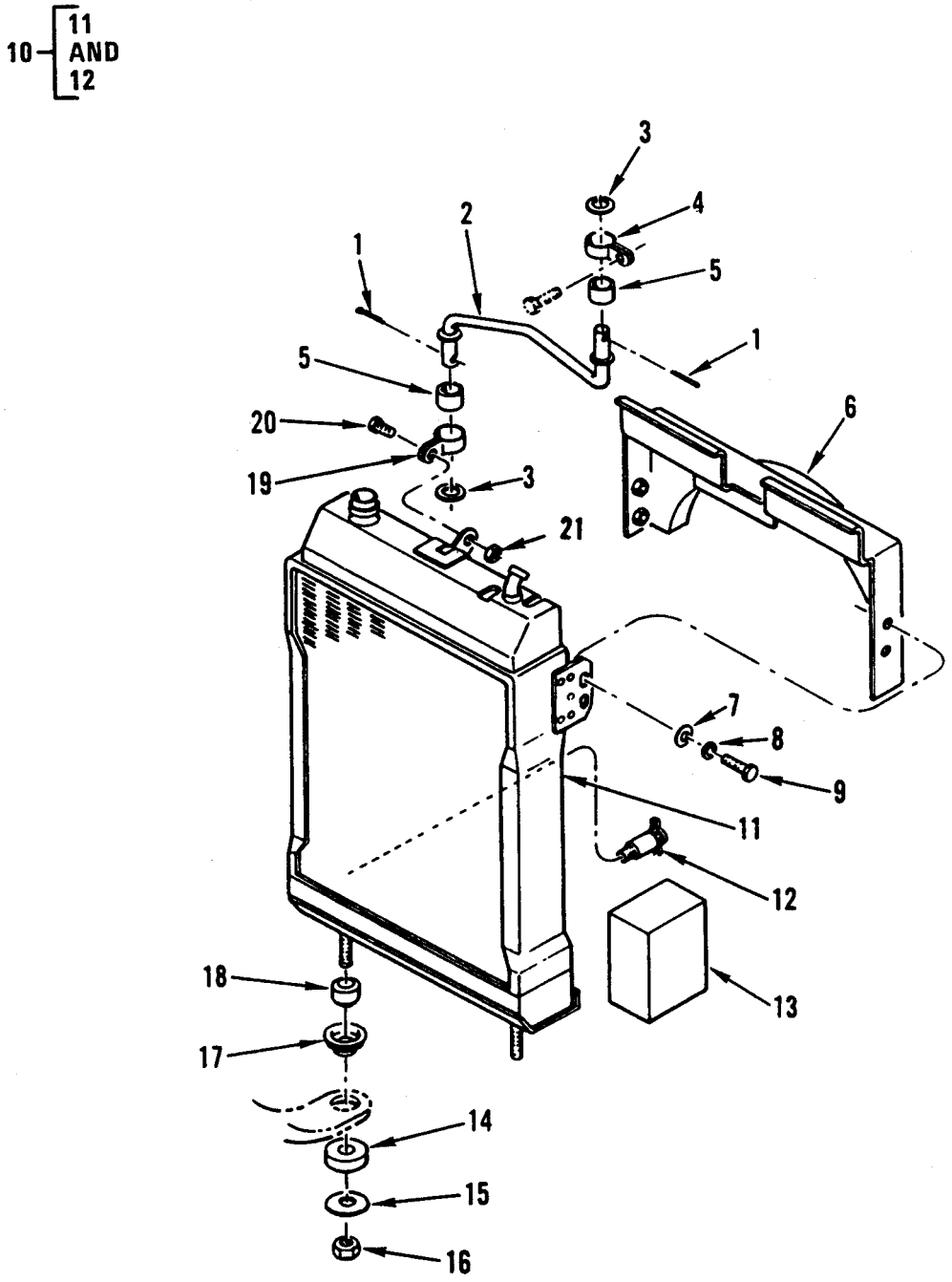

Figure 45. Cooling System, Radiator, Evaporative Cooler, or Heat Exchanger – Engine Coolant Radiator.

(1) ITEM NO	(2) SMR CODE	(3) NSN	(4) CAGEC	(5) PART NUMBER	(6) DESCRIPTION AND USABLE ON CODES (UOC)	(7) QTY
					GROUP 05 GROUP 0501	
					FIG. 45 COOLING SYSTEM, RADIATOR, EVAPORATIVE COOLER, OR HEAT EXCHANGER – ENGINE COOLANT RADIATOR SD 02.147.000	
1	PFOZZ	5315-00-059-0158	96906	MS24665-212	PIN,COTTER	2
2	PFOZZ	3040-01-237-0318	64678	416 500 00 31	BRACKET,LEVER	1
3	PFOZZ	5310-01-238-5857	64678	404 991 00 25	WASHER,FLAT	2
4	PFOZZ	5340-01-238-6022	64678	404 995 13 01	CLAMP,LOOP	1
5	PCOZZ	5365-12-122-6234	C2053	404 987 18 43	BUSHING,NONMETALLIC	2
6	PFOZZ	2930-01-236-7254	64678	416 500 00 16	SHROUD,FAN,RADIATOR	1
7	PFOZZ	5310-01-174-7613	S3465	4537800-256	WASHER,FLAT	4
8	PFOZZ	5310-01-176-6500	S3465	4536226-751	WASHER,SPRING TENSI	4
9	PFOZZ	5306-01-175-0424	S3465	4537800-783	BOLT,MACHINE	4
10	PAOFF	2930-01-236-7287	D8093	SD 02.147.000	RADIATOR,ENGINE COO	1
11	XAOZZ		19207	NPN-035	.RADIATOR	1
12	PFOZZ	4820-01-236-7152	64678	0009970136	.COCK,DRAIN	1
13	PAOZZ	5340-01-238-7328	64678	416 987 00 65	BUMPER,NONMETALLIC	1
14	PAOZZ	5365-01-241-6927	64678	404 504 02 12	BUSHING,NONMETALLIC	2
15	PFOZZ	5310-01-238-1514	64678	411 504 00 76	WASHER,FLAT	2
16	PFOZZ	5310-01-167-1863	S3465	4537800-712	NUT,PLAIN,HEXAGON	2
17	PFOZZ	5342-01-242-4068	64678	404 504 00 13	RETAINER,SPECIAL	2
18	PFOZZ	5365-01-239-1438	64678	404 504 00 12	BUSHING,NONMETALLIC	2
19	PFOZZ	5340-01-240-0964	64678	404 995 14 01	CLAMP,LOOP 2.5X20 MM	1
20	PFOZZ	5306-01-174-0376	S3465	4536226-895	BOLT,MACHINE	1
21	PFOZZ	5310-01-239-3536	64678	913004 008004	NUT,PLAIN,HEXAGON	1
					END OF FIGURE	

UNIT, DIRECT SUPPORT AND GENERAL SUPPORT MAINTENANCE

SMALL EMPLACEMENT EXCAVATOR (SEE) AND HIGH MOBILITY MATERIAL HANDLER (HMMH)

RADIATOR, EVAPORATIVE COOLER, OR HEAT EXCHANGER – COOLANT EXPANSION TANK AND RADIATOR HOSES

REPAIR PARTS LIST

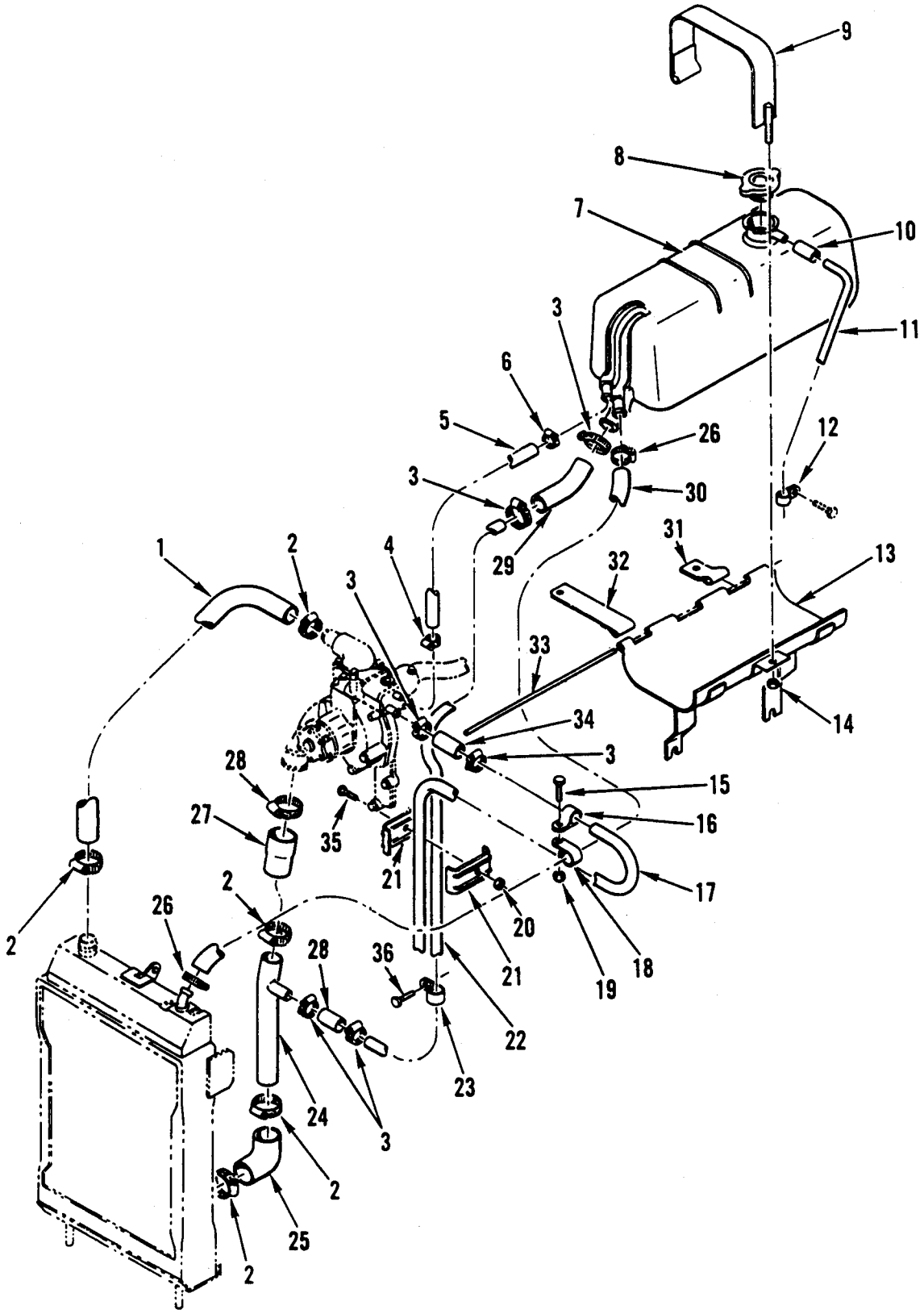

Figure 46. Radiator, Evaporative Cooler or Heat Exchanger – Coolant Expansion Tank and Radiator Hoses.

(1) ITEM NO	(2) SMR CODE	(3) NSN	(4) CAGEC	(5) PART NUMBER	(6) DESCRIPTION AND USABLE ON CODES (UOC)	(7) QTY
					GROUP 0501	
					FIG. 46 RADIATOR, EVAPORATIVE COOLER, OR HEAT EXCHANGER – COOLANT EXPANSION TANK, AND RADIATOR HOSES	
1	PAOZZ	4720-01-225-1129	64678	419 987 00 43	HOSE PREFORMED	1
2	PFOZZ	4730-01-236-0329	64678	916017 032001	CLAMP,HOSE	5
3	PFOZZ	4730-12-161-4632	D8773	SGT20-32/13C8-W2	CLAMP,HOSE	6
4	PFOZZ	5935-01-293-9132	64678	916017 016002	CLAMP,CABLE,ELECTRICAL	1
5	PAOZZ	4720-01-235-8969	64678	419 997 01 82	HOSE,NONMETALLIC 380 MM	1
6	PFOZZ	4730-01-295-3580	64678	916017 011001	CLAMP,LOOP	1
7	PAOZZ	5430-01-236-7323	64678	406 500 07 49	TANK,LIQUID STORAGE	1
8	PAOZZ	2930-01-237-3509	D8093	00 156 00	CAP,FILLER OPENING	1
9	PFOZZ	5340-01-238-5768	64678	406 500 06 74	CLAMP,LOOP	1
10	MOOZZ		64678	000 435 20 82X 50	HOSE,NONMETALLIC MAKE FROM CAGE 64678,P/N 460 997 08 82, CUT TO 50 MM	1
11	MOOZZ		64678	008 997 90 82X 900	HOSE,NONMETALLIC MAKE FROM CAGE 64678,P/N 008 997 90 82, CUT TO 900 MM	1
12	PFOZZ	5340-01-239-8036	64678	406 995 50 01	CLAMP,LOOP	1
13	PFOZZ	2510-01-237-2834	64678	406 500 07 27	SUPPORT,ASSEMBLY	1
14	PFOZZ	5310-01-239-3536	64678	913004 008004	NUT,SELF-LOCKING,HE	1
15	PFOZZ	5305-01-240-1274	15526	933 M6X14 F	SCREW,CAP,HEXAGON H	1
16	PAOZZ	5340-01-243-9363	64678	916016 022203	CLAMP,LOOP	1
17	PFOZZ	4730-01-235-5585	64678	416 501 02 56	ELBOW,PIPE	1
18	PFOZZ	5340-01-239-8963	64678	360 995 20 01	CLAMP,LOOP	1
19	PFOZZ	5310-01-241-6349	64678	913004 006002	NUT,SELF-LOCKING,HE	1
20	PFOZZ	5310-01-241-0761	64678	913004 005001	NUT,SELF-LOCKING,HE	2
21	PFOZZ	5340-01-240-0959	64678	337 995 04 32	CLAMP,BRIDGE	4
22	PFOZZ	4710-01-236-6543	64678	406 500 08 72	PIPE,METALLIC	1
23	PFOZZ	5340-01-240-0964	64678	404 995 14 01	CLAMP,LOOP	1

(1) ITEM NO	(2) SMR CODE	(3) NSN	(4) CAGEC	(5) PART NUMBER	(6) DESCRIPTION AND USABLE ON CODES (UOC)	(7) QTY
24	PFOZZ	2590-01-237-1836	64678	416 500 00 07	NECK,FILLER	1
25	PAOZZ	4720-01-225-1130	64678	419 987 01 43	HOSE,PREFORMED	1
26	PFOZZ	4730-01-237-1756	64678	916017 016000	CLAMP,HOSE	2
27	PFOZZ	4720-01-241-4846	64678	419 987 02 43	HOSE,PREFORMED	1
28	PFOZZ	5340-01-292-7317	64678	916017 05000	CLAMP,LOOP	1
29	PAOZZ	4720-01-235-8968	64678	419 997 03 82	HOSE,NONMETALLIC	1
30	PAOZZ	4720-01-225-1128	64678	419 997 02 82	HOSE,PREFORMED	1
31	PFOZZ	5340-01-244-0044	64678	406 504 07 38	CLAMP,LOOP	1
32	PFOZZ	2420-01-236-0647	64678	403 504 01 38	PLATE,MOUNTING	1
33	PFOZZ	5315-01-238-2365	64678	403 504 00 74	PIN,STRAIGHT,HEADLE	1
34	PAOZZ	4720-01-236-6634	64678	419 997 05 82	HOSE,NONMETALLIC	1
35	PFOZZ	5306-01-243-6554	15526	84 M5	BOLT,MACHINE	2
36	PFOZZ	5305-01-239-2586	15526	931-10 M10X 50 P	SCREW,CAP,HEXAGON H	1

END OF FIGURE

UNIT, DIRECT SUPPORT AND GENERAL SUPPORT MAINTENANCE

SMALL EMPLACEMENT EXCAVATOR (SEE) AND HIGH MOBILITY MATERIAL HANDLER (HMMH)

WATER MANIFOLD, HEADERS, THERMOSTATS AND HOUSING GASKET – COOLANT THERMOSTAT AND RELATED PARTS

REPAIR PARTS LIST

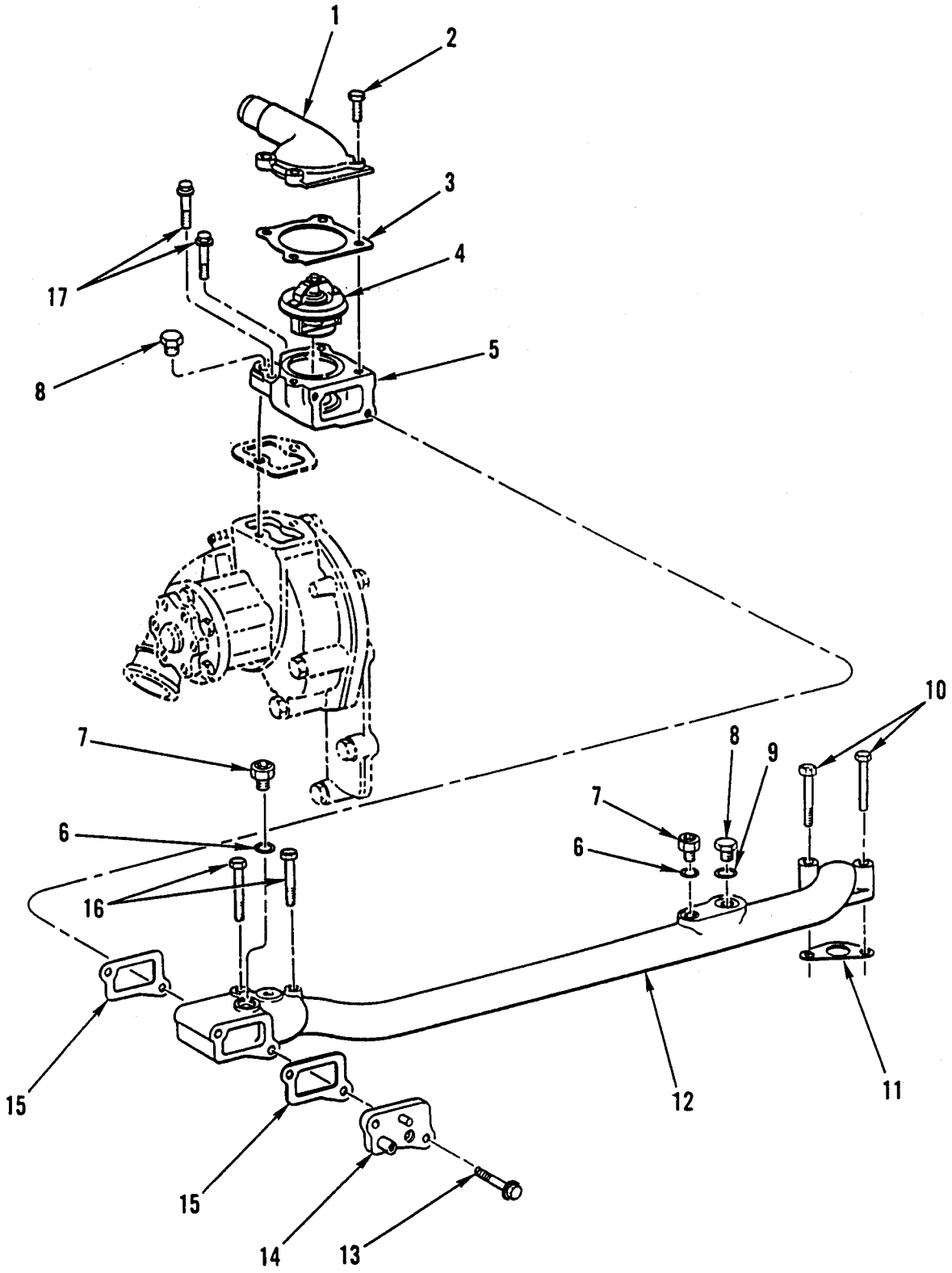

Figure 47. Water Manifold, Headers, Thermostats and Housing Gasket – Coolant Thermostat and Related Parts.

(1) ITEM NO	(2) SMR CODE	(3) NSN	(4) CAGEC	(5) PART NUMBER	(6) DESCRIPTION AND USABLE ON CODES (UOC)	(7) QTY
					GROUP 0503	
					FIG. 47 WATER MANIFOLD, HEADERS, THERMOSTATS, AND HOUSING GASKET – COOLANT THERMOSTAT, AND RELATED PARTS	
1	PFOZZ	2930-01-236-7259	64678	352 203 03 74	WATER OUTLET,ENGINE HOUSING	1
2	PAOZZ	5306-01-239-1315	64678	914126 006010	BOLT,MACHINE.....	4
3	PAOZZ	5330-01-229-3515	64678	352 203 22 80	GASKET	1
4	PAOZZ	6620-01-236-0129	64678	003 203 74 75	THERMOSTAT,FLOW CON.....	1
5	PFOZZ	2930-01-236-7260	64678	352 203 14 73	WATER OUTLET,ENGINE.....	1
6	PAOZZ	5330-01-313-3574	64678	007603 014402	GASKET	2
7	PFOZZ	5365-01-258-4770	64678	007604 014106	PLUG,MACHINE THREAD.....	2
8	PAOZZ	5365-01-183-6835	64678	007604 018101	PLUG,MACHINE THREAD.....	2
9	PAOZZ	5330-01-313-3573	64678	007603 018104	GASKET	1
10	PAOZZ	5306-01-238-1470	64678	914126 008029	BOLT,MACHINE.....	2
11	PAOZZ	5330-01-242-0751	64678	352 203 19 80	GASKET PART OF KIT P/N 352 010 26 21	2
12	PFOZZ	2930-01-236-7288	64678	352 203 33 01	MANIFOLD,FLUID COOL.....	1
13	PAOZZ	5306-01-285-4919	64678	914007 008031	BOLT,ASSEMBLED WASH.....	2
14	PAOZZ	4320-01-236-7274	64678	352-200-17-46	CONNECTOR,FLUID,PUM	1
15	PAOZZ	5330-00-619-1498	D8046	352 203 00 80	GASKET PART OF KIT P/N 352 010 26 21	2
16	PAOZZ	5306-01-238-1469	64678	914126 008030	BOLT,MACHINE.....	2
17	PAOZZ	5306-01-238-3170	64678	900170 008029	BOLT,MACHINE.....	2
					END OF FIGURE	

UNIT, DIRECT SUPPORT AND GENERAL SUPPORT MAINTENANCE

SMALL EMPLACEMENT EXCAVATOR (SEE) AND HIGH MOBILITY MATERIAL HANDLER (HMMH)

WATER PUMP – COOLING SYSTEM PUMP 353 200 37 01

REPAIR PARTS LIST

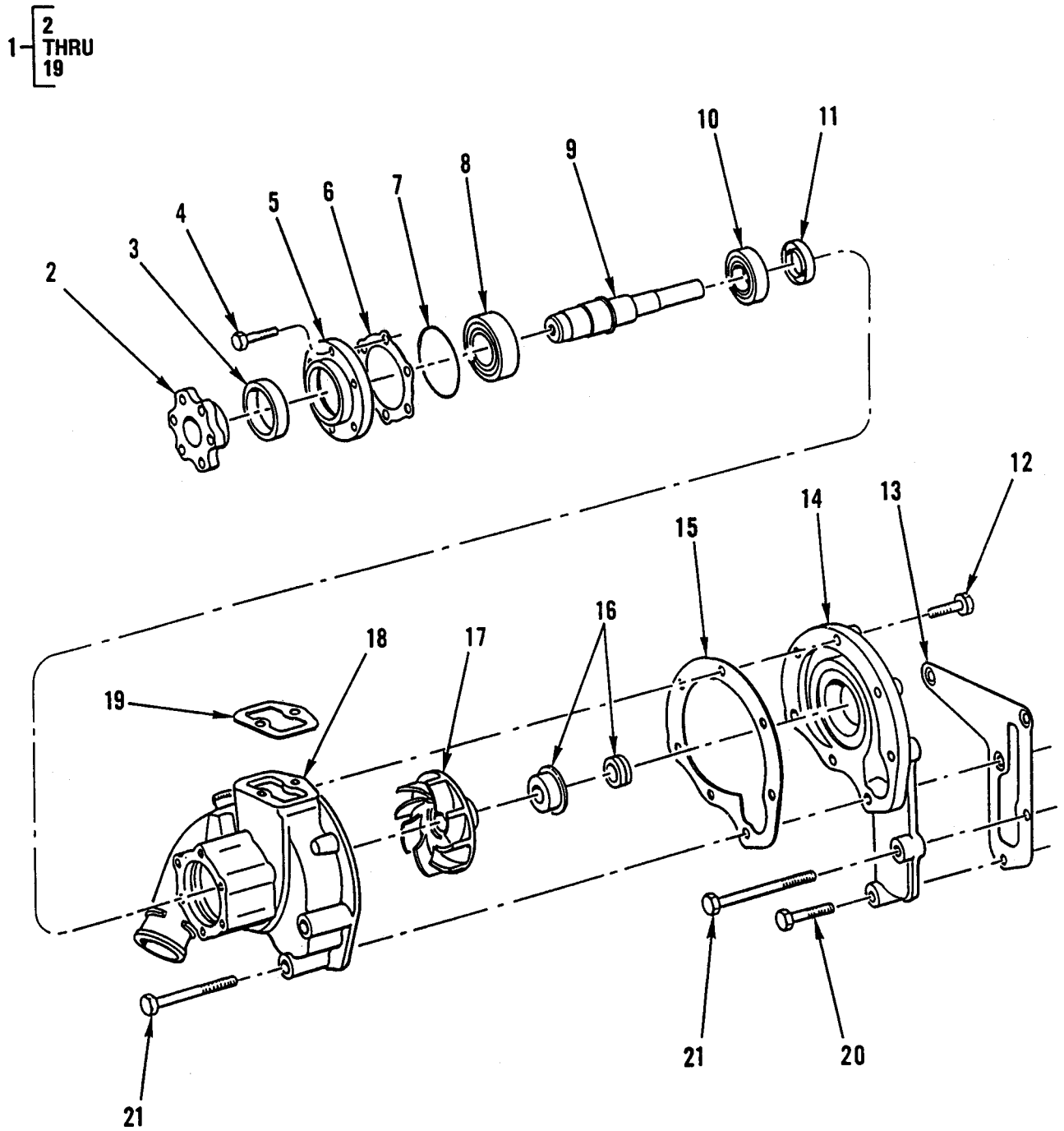

Figure 48. Water Pump – Cooling System Pump.

(1) ITEM NO	(2) SMR CODE	(3) NSN	(4) CAGEC	(5) PART NUMBER	(6) DESCRIPTION AND USABLE ON CODES (UOC)	(7) QTY
					GROUP 0504	
					FIG. 48 WATER PUMP – PUMP, COOLING SYSTEM 353 200 37 01	
1	PAOFF	2930-01-248-0135	64678	353 200 37 01	PUMP,COOLING SYSTEM	1
2	PAFZZ	3010-01-237-0450	64678	352 201 00 39	.INSERT,FLEXIBLE COU	1
3	PFFZZ	5330-12-191-2681	D2797	81-3413	.SEAL,PLAIN PART OF KIT P/N 525.545	1
4	PAFZZ	5305-01-240-0858	15526	931-10 M6X30 P	.SCREW,CAP,HEXAGON H.....	6
5	PAFZZ	5330-01-243-9463	64678	352 201 05 58	.RETAINER,OIL SEAL	1
6	PAFZZ	5330-01-358-9199	64678	352 201 22 80	.GASKET	1
7	PAFZZ	5330-01-241-4031	64678	005 997 11 45	.O-RING PART OF KIT P/N 525.545.....	1
8	PFFZZ	3110-00-554-3197	43991	6206DIN625	.BEARING,BALL,ANNULA PART OF KIT P/N 352 200 26 04.....	1
9	PAFZZ	3040-01-236-0622	64678	352 201 06 05	.SHAFT,SHOULDERED PART OF KIT P/N 352 200 26 04.....	1
10	KFFZZ		64678	000625 900205	.BEARING,BALL PART OF KIT P/N 352 200 26 04 UOC:GE1.....	1
11	PFFZZ	5330-12-304-5791	D8175	3 35 593 K	.SEAL,PLAIN PART OF KIT P/N 525.545	1
12	PAFZZ	5306-01-239-5052	64678	900170 008007	.BOLT,MACHINE.....	4
13	PFFZZ	5330-01-241-4041	64678	362 201 01 80	.GASKET PART OF KIT P/N 525.545	1
14	PAFZZ	2805-01-236-7261	64678	352 201 18 03	.COVER,TIMING GEAR,I	1
15	PFFZZ	5330-00-619-1517	D8046	352 201 04 80	.GASKET PART OF KIT P/N 525.545	1
16	PFFZZ	5330-14-410-5487	F0723	07221630730	.SEAL ASSEMBLY,SHAFT PART OF KIT P/N 525.545.....	1
17	KFFZZ		64678	352 201 05 07	.IMPELLER PART OF KIT P/N 352 200 26 04	1
18	XAOZZ		64678	353 200 00 01	.PUMP,WATER	1
19	PFOZZ	5330-00-619-1521	D8046	352 203 04 80	.GASKET PART OF KIT P/N 352 010 26 21 PART OF KIT P/N 525.545.....	1
20	PFOZZ	5306-01-240-5171	15526	933-10 M10X 35 F	BOLT,MACHINE.....	2
21	PFOZZ	5306-01-255-1005	15526	931-10 M10X 80 P	BOLT,MACHINE.....	3
					END OF FIGURE	

UNIT, DIRECT SUPPORT AND GENERAL SUPPORT MAINTENANCE

SMALL EMPLACEMENT EXCAVATOR (SEE) AND HIGH MOBILITY MATERIAL HANDLER (HMMH)

FAN ASSEMBLY – FAN, PULLEY, AND BELT

REPAIR PARTS LIST

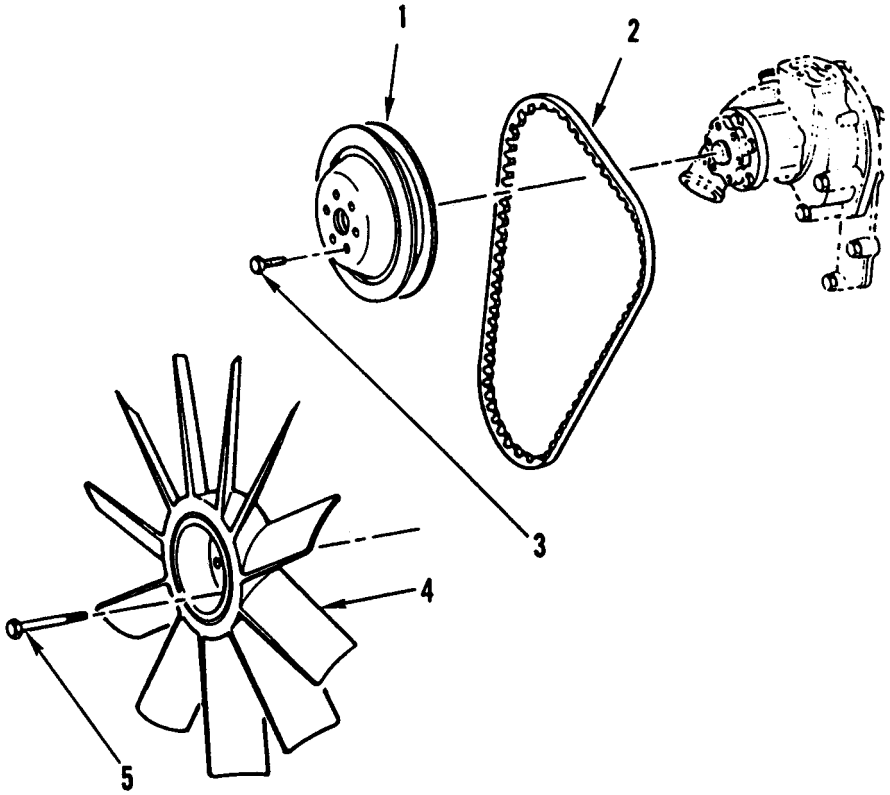

Figure 49. Fan Assembly – Fan, Pulley, and Belt.

(1) ITEM NO	(2) SMR CODE	(3) NSN	(4) CAGEC	(5) PART NUMBER	(6) DESCRIPTION AND USABLE ON CODES (UOC)	(7) QTY
					GROUP 0505	
					FIG. 49 FAN ASSEMBLY – FAN, PULLEY, AND BELT	
1	PFOZZ	3020-01-237-0496	64678	352 202 22 10	PULLEY,GROOVE	1
2	PAOZZ	3030-00-885-1286	64678	006 997 93 92	BELT,V AND WATER PUMP	1
3	PAOZZ	5306-01-239-2576	64678	000933 008006	BOLT,MACHINE	6
4	PFOZZ	2930-01-236-0646	64678	312 200 01 22	IMPELLER,FAN,AXIAL	1
5	PAOZZ	5306-01-255-1005	15526	931-10 M10X 80 P	BOLT,MACHINE	6
					END OF FIGURE	

UNIT, DIRECT SUPPORT AND GENERAL SUPPORT MAINTENANCE

SMALL EMPLACEMENT EXCAVATOR (SEE) AND HIGH MOBILITY MATERIAL HANDLER (HMMH)

ELECTRICAL SYSTEM, GENERATOR, ALTERNATOR – ALTERNATOR MOUNTING

REPAIR PARTS LIST

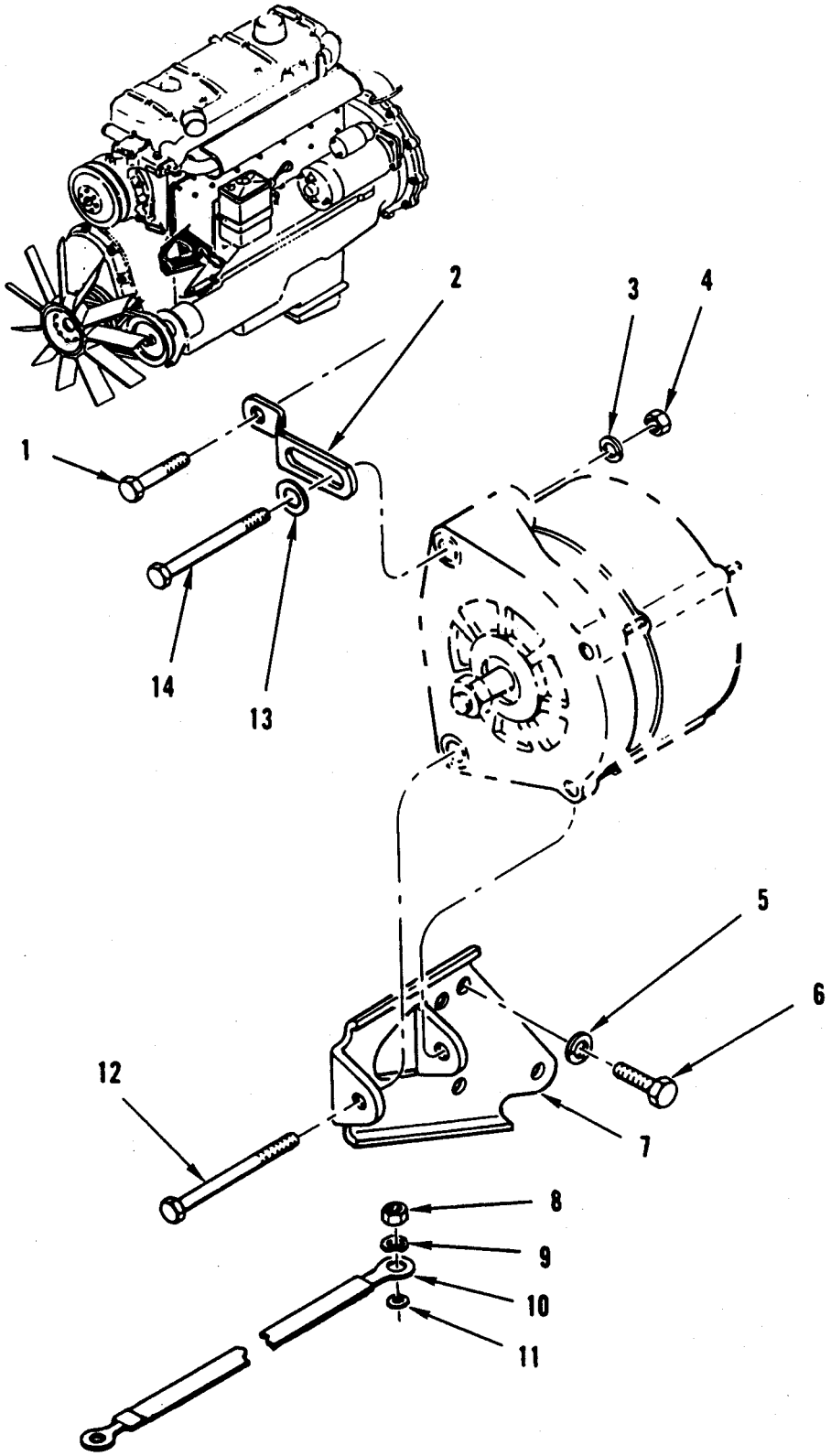

Figure 50. Electrical System, Generator, Alternator – Alternator Mounting.

(1) ITEM NO	(2) SMR CODE	(3) NSN	(4) CAGEC	(5) PART NUMBER	(6) DESCRIPTION AND USABLE ON CODES (UOC)	(7) QTY
					GROUP 06 GROUP 0601	
					FIG. 50 ELECTRICAL SYSTEM, GENERATOR, ALTERNATOR – ALTERNATOR MOUNTING	
1	PAOZZ	5306-01-239-5909	64678	000931 010137	BOLT,MACHINE	1
2	PFOZZ	5340-01-239-0668	64678	352 155 11 27	BRACKET,DOUBLE ANGLE	1
3	PFOZZ	5310-01-237-7658	64678	912004 010102	WASHER,LOCK	1
4	PAOZZ	5310-01-238-3198	15526	934 M10X1.5C	NUT,PLAIN,HEXAGON	1
5	PFOZZ	5310-01-174-0436	S3465	4537800-128	WASHER,SPRING TENSI	2
6	PAOZZ	5306-01-240-0839	64678	000931008314	BOLT,MACHINE	3
7	PFOZZ	5342-01-234-2815	64678	352 150 15 73	BRACKET,ENGINE ACCE	1
8	PFOZZ	5310-01-167-1859	S3465	4536226-892	NUT,PLAIN,HEXAGON	1
9	PFOZZ	5310-01-166-5886	S3465	4536226-752	WASHER,SPRING TENSI	1
10	PAOZZ	6150-01-234-7423	64678	330 540 02 41	LEAD,ELECTRICAL	1
11	PFOZZ	5310-01-237-5224	64678	000125 008413	WASHER,FLAT	1
12	PAOZZ	5306-01-272-9021	64678	000931 010239	BOLT,MACHINE	1
13	PAOZZ	5310-01-239-7188	64678	007349 010003	WASHER,FLAT	1
14	PAOZZ	5306-01-272-9021	64678	000931 010239	BOLT,MACHINE	1
					END OF FIGURE	

UNIT, DIRECT SUPPORT AND GENERAL SUPPORT MAINTENANCE

SMALL EMPLACEMENT EXCAVATOR (SEE) AND HIGH MOBILITY MATERIAL HANDLER (HMMH)

GENERATOR, ALTERNATOR – ALTERNATING GENERATOR 0120469579

REPAIR PARTS LIST

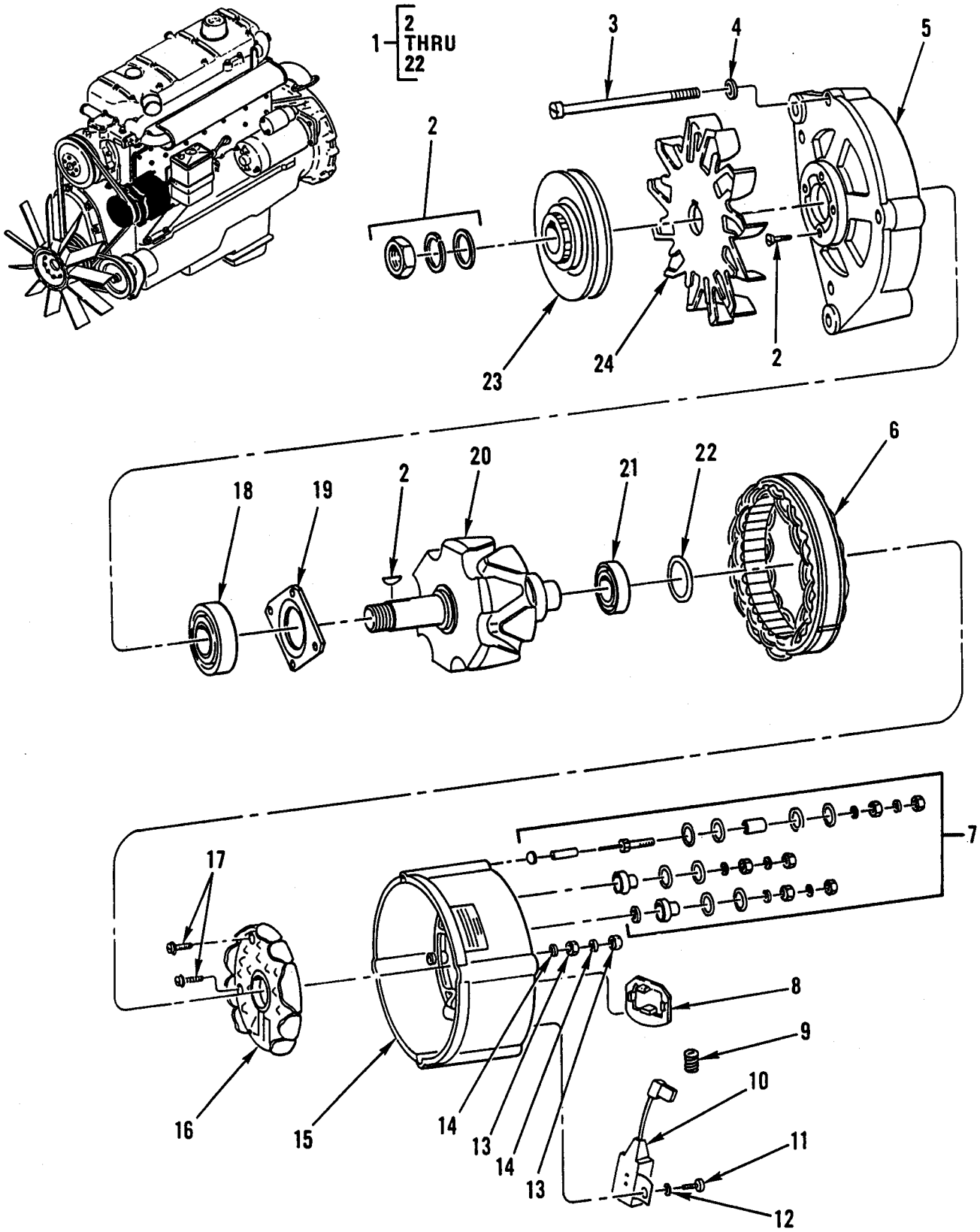

Figure 51. Generator, Alternator – Alternating Generator.

(1) ITEM NO	(2) SMR CODE	(3) NSN	(4) CAGEC	(5) PART NUMBER	(6) DESCRIPTION AND USABLE ON CODES (UOC)	(7) QTY
					GROUP 0601	
					FIG. 51 GENERATOR, ALTERNATOR – GENERATOR, ALTERNATING 0120469579	
1	PAOFF	6115-01-224-3128	53867	0120469579	GENERATOR,ALTERNATI	1
2	PAOZZ	2920-01-316-7388	S3465	2536240-606	.PARTS KIT,ENGINE GE	1
3	PAFZZ	5305-01-298-7753	53867	1 123 410 207	.SCREW,EXTERNALLY RE	4
4	PAFZZ	5310-01-176-6494	53867	2916011011	.WASHER,FLAT	4
5	XAFZZ		53867	1 125 825 019	.DRIVE END SHIELD	1
6	XAFZZ		53867	1 125 045 107	.STATOR	1
7	PAFZZ	2920-01-198-8879	53867	1127011071	.PARTS KIT,ENGINE GE	1
8	PAFZZ	5330-01-240-7128	64678	000 154 05 80	.GASKET	1
9	PAFZZ	5360-12-191-7921	D8015	1 124 625 003	.SPRING,HELICAL,COMP	2
10	PAFZZ	5910-01-239-1688	64678	001 156 67 01	.CAPACITOR.....	1
11	PAFZZ	5305-01-239-3506	15526	84 M5X10 C	.SCREW,MACHINE.....	1
12	PAFZZ	5310-01-270-1750	64678	000137 006108	.WASHER,SPRING TENSI.....	1
13	PFFZZ	5310-01-171-4689	S3465	4536226-786	.NUT,PLAIN,HEXAGON	2
14	PAFZZ	5310-01-176-6500	S3465	4536226-751	.WASHER,SPRING TENSI.....	2
15	XAFZZ		53867	1 125 885 023	.END SHIELD	1
16	PAFZZ	5961-01-239-2145	D8015	1 127 320 395	.RECTIFIER,SEMICONDU.....	1
17	PAFZZ	5305-01-239-1317	64678	007985 004151	.SCREW,MACHINE.....	2
18	PAFZZ	3110-01-176-6465	53867	1900905282	.BEARING,BALL ANNULA	1
19	XAFZZ		53867	1 121 038 005	.COVER,PLATE.....	1
20	XAFZZ		53867	1 124 035 021	.ROTOR.....	1
21	PAFZZ	3110-00-183-9965	19207	7375327	.BEARING,BALL ANNULA	1
22	PAFZZ	5330-12-193-5803	D8015	1 120 210 001	.PACKING,PREFORMED.....	1
23	PAOZZ	3020-01-235-0897	64678	352 150 04 60	PULLEY,GROOVE	1
24	XDOZZ		64678	000 155 57 18	IMPELLER,FAN,CENTRI.....	1
					END OF FIGURE	

UNIT, DIRECT SUPPORT AND GENERAL SUPPORT MAINTENANCE

SMALL EMPLACEMENT EXCAVATOR (SEE) AND HIGH MOBILITY MATERIAL HANDLER (HMMH)

GENERATOR REGULATOR (VOLTAGE) – ENGINE GENERATOR REGULATOR 0 192 053 011

REPAIR PARTS LIST

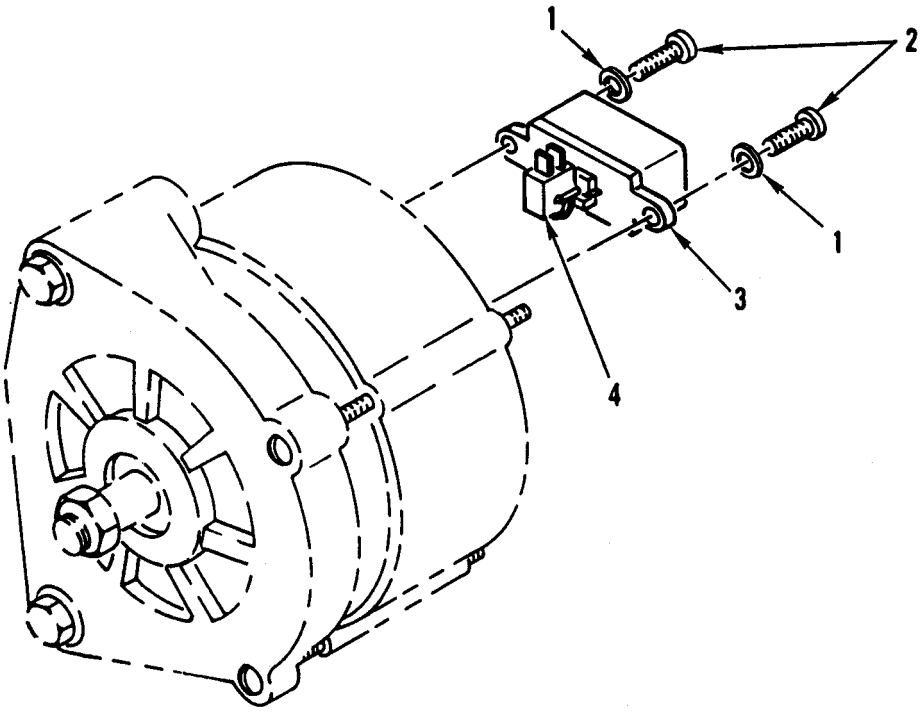

Figure 52. Generator Regulator (Voltage) – Engine Generator Regulator.

(1) ITEM NO	(2) SMR CODE	(3) NSN	(4) CAGEC	(5) PART NUMBER	(6) DESCRIPTION AND USABLE ON CODES (UOC)	(7) QTY
					GROUP 0602	
					FIG. 52 GENERATOR REGULATOR (VOLTAGE) – REGULATOR, ENGINE GENERATOR 0 192 053 011	
1	PAFZZ	5310-01-185-3176	S3465	4536226-745	WASHER,SPRING TENSI.....	2
2	PAFZZ	5305-01-240-0842	64678	007985 004148	SCREW,MACHINE.....	2
3	PAFZZ	2820-01-234-4844	D8015	0 192 053 011	REGULATOR,ENGINE GE.....	1
4	PAFZZ	5977-01-240-7223	64678	000 154 71 14	.BRUSH SET,ELECTRICA	1
					END OF FIGURE	

UNIT, DIRECT SUPPORT AND GENERAL SUPPORT MAINTENANCE

SMALL EMPLACEMENT EXCAVATOR (SEE) AND HIGH MOBILITY MATERIAL HANDLER (HMMH)

STARTING MOTOR – ELECTRICAL ENGINE STARTER 0 001 368 028, AND ATTACHING HARDWARE

REPAIR PARTS LIST

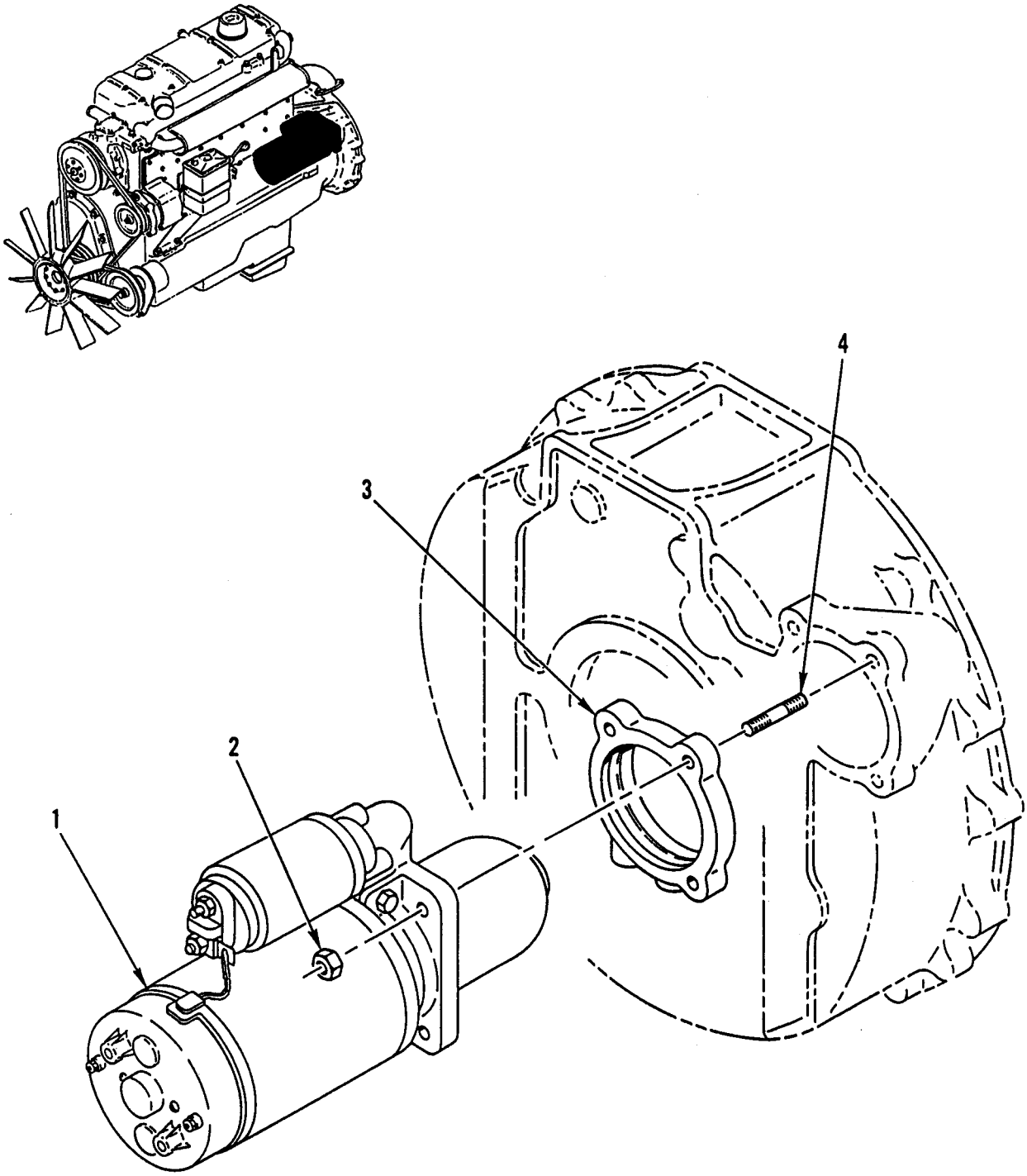

Figure 53. Starting Motor – Electrical Engine Starter and Attaching Hardware.

(1) ITEM NO	(2) SMR CODE	(3) NSN	(4) CAGEC	(5) PART NUMBER	(6) DESCRIPTION AND USABLE ON CODES (UOC)	(7) QTY
					GROUP 0603	
					FIG. 53 STARTING MOTOR – STARTER, ELECTRICAL ENGINE 0 001 368 028, AND ATTACHING HARDWARE	
1	PAOFF	2930-12-304-4786	D8015	0 001 368 028	STARTER,ENGINE,ELEC	1
2	PFOZZ	5310-01-276-1646	64678	000934 010009	NUT,PLAIN,HEXAGON	3
3	PFOZZ	2920-01-236-7307	64678	314 151 06 12	COVER,ELECTRIC MOTOR UOC:GE1.....	1
4	PAOZZ	5307-01-238-4677	64678	000 990 26 05	STUD,PLAIN UOC:GE1.....	3
					END OF FIGURE	

UNIT, DIRECT SUPPORT AND GENERAL SUPPORT MAINTENANCE

SMALL EMPLACEMENT EXCAVATOR (SEE) AND HIGH MOBILITY MATERIAL HANDLER (HMMH)

STARTING MOTOR – ELECTRICAL ENGINE STARTER

REPAIR PARTS LIST

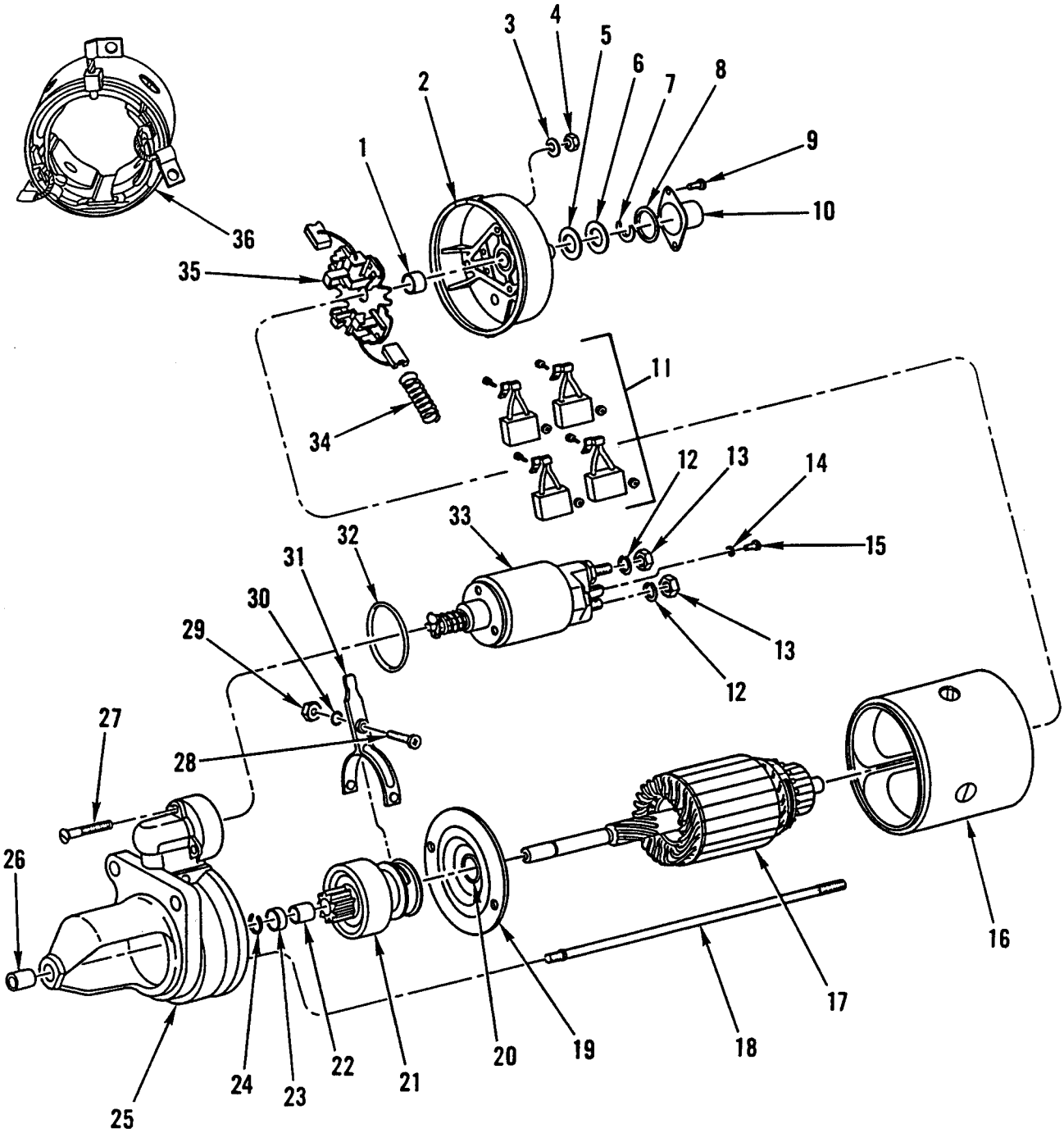

Figure 54. Starting Motor – Electrical Engine Starter.

(1) ITEM NO	(2) SMR CODE	(3) NSN	(4) CAGEC	(5) PART NUMBER	(6) DESCRIPTION AND USABLE ON CODES (UOC)	(7) QTY
					GROUP 0603 FIG. 54 STARTING MOTOR – STARTER, ELECTRICAL ENGINE	
1	PFFZZ	3120-01-174-1512	D8015	2 000 301 043	BUSHING,SLEEVE	1
2	PFFFF	2920-01-079-3997	53867	2005854094	END BELL,ELECTRICAL	1
3	PFFZZ	5310-01-249-6806	64678	000125 007408	WASHER,FLAT	2
4	PFFZZ	5310-01-185-7191	53867	2-915-011-007	NUT,PLAIN,HEXAGON	2
5	KFFZZ		D8015	2 000 101 111	WASHER PART OF KIT P/N 2-007-010-032	V
6	KFFZZ		D8015	2 000 101 110	SHIM PART OF KIT P/N 2-007-010-032	V
7	KFFZZ		D8015	2 000 116 040	WASHER,RING,LOCK PART OF KIT P/N 2-007-010-032	1
8	KFFZZ		D8015	2 001 020 000	GASKET PART OF KIT P/N 2-007-010-032	1
9	PFFZZ	5305-01-079-8092	53867	2 910 011 157	SCREW,MACHINE	2
10	PFFZZ	2920-01-174-1508	53867	2000556056	END BELL,ELECTRICAL	1
11	PAFZZ	5977-01-241-0528	D8015	2 007 014 063	BRUSH SET,ELECTRICA	1
12	PAFZZ	5310-01-174-1520	53867	2916699086	WASHER,LOCK	2
13	PFFZZ	5310-01-174-1491	53867	2915051108	NUT,PLAIN,HEXAGON	2
14	PAFZZ	5310-01-301-7811	53867	2 916 699 083	WASHER,LOCK	1
15	PFFZZ	5305-01-313-5994	53867	2 910 001 189	SCREW,CAP,SOCKET HE	1
16	XAFZZ		19207	NPN-036	HOUSING,FIELD COIL	1
17	PFFZZ	2920-01-313-2039	64678	000 151 33 15	ARMATURE,MOTOR	1
18	PFFZZ	5306-01-312-3835	53867	2 003 526 006	ROD,THREADED END	2
19	PFFZZ	5340-01-174-1494	S3465	4537769-612	PLATE,MOUNTING	1
20	PFFZZ	3120-12-164-3423	D8015	2 000 301 041	BUSHING,SLEEVE	1
21	PAFZZ	3020-01-235-8647	64678	000 151 88 13	GEAR-SLIP CLUTCH,SP	1
22	PFFZZ	3120-12-300-8428	D8015	2 000 301 044	BEARING,SLEEVE	1
23	KFFZZ		D8015	2 000 202 036	RING PART OF KIT P/N2-007-010-032	1
24	KFFZZ		D8015	2 004 601 009	RING,SNAP PART OF KIT P/N 2-007-010-032	1

(1) ITEM NO	(2) SMR CODE	(3) NSN	(4) CAGEC	(5) PART NUMBER	(6) DESCRIPTION AND USABLE ON CODES (UOC)	(7) QTY
25	PFFZZ	3040-01-313-2173	53867	2 005 834 100	HOUSING,MECHANICAL	1
26	PFFZZ	3120-01-273-7507	53867	2 000 301 000	BUSHING,SLEEVE	1
27	PFOZZ	5305-01-312-3790	53867	2 003 429 026	SCREW,MACHINE	3
28	PFFZZ	5306-01-174-1489	S3465	4537769-615	BOLT,MACHINE	2
29	XDFZZ		53867	2 915 051 107	NUT,PLAIN,HEXAGON	1
30	PFFZZ	5310-01-174-1517	S3465	4537769-628	WASHER,FLAT	1
31	XDFZZ		53867	2-001-933-175	LEVER,CONTROL	1
32	PAOZZ	5330-01-241-2514	64678	008 997 46 48	O-RING	1
33	PAOZZ	5945-01-236-5948	64678	0 331 402 010	SOLENOID,ELECTRICAL	1
34	PAFZZ	5360-12-197-1350	D8015	2 004 616 007	SPRING,HELICAL,COMP	4
35	PFFZZ	2920-01-192-5687	53867	2004336031	BRACKET,EYE,NONROTA	1
36	PFFZZ	2920-01-236-1289	D8015	2 004 114 065	WINDING,MOTOR FIELD	1
					END OF FIGURE	

UNIT, DIRECT SUPPORT AND GENERAL SUPPORT MAINTENANCE

SMALL EMPLACEMENT EXCAVATOR (SEE) AND HIGH MOBILITY MATERIAL HANDLER (HMMH)

ENGINE SAFETY CONTROLS – CUTOFF SWITCH (ELECTROMAGNETIC RELAY)

REPAIR PARTS LIST

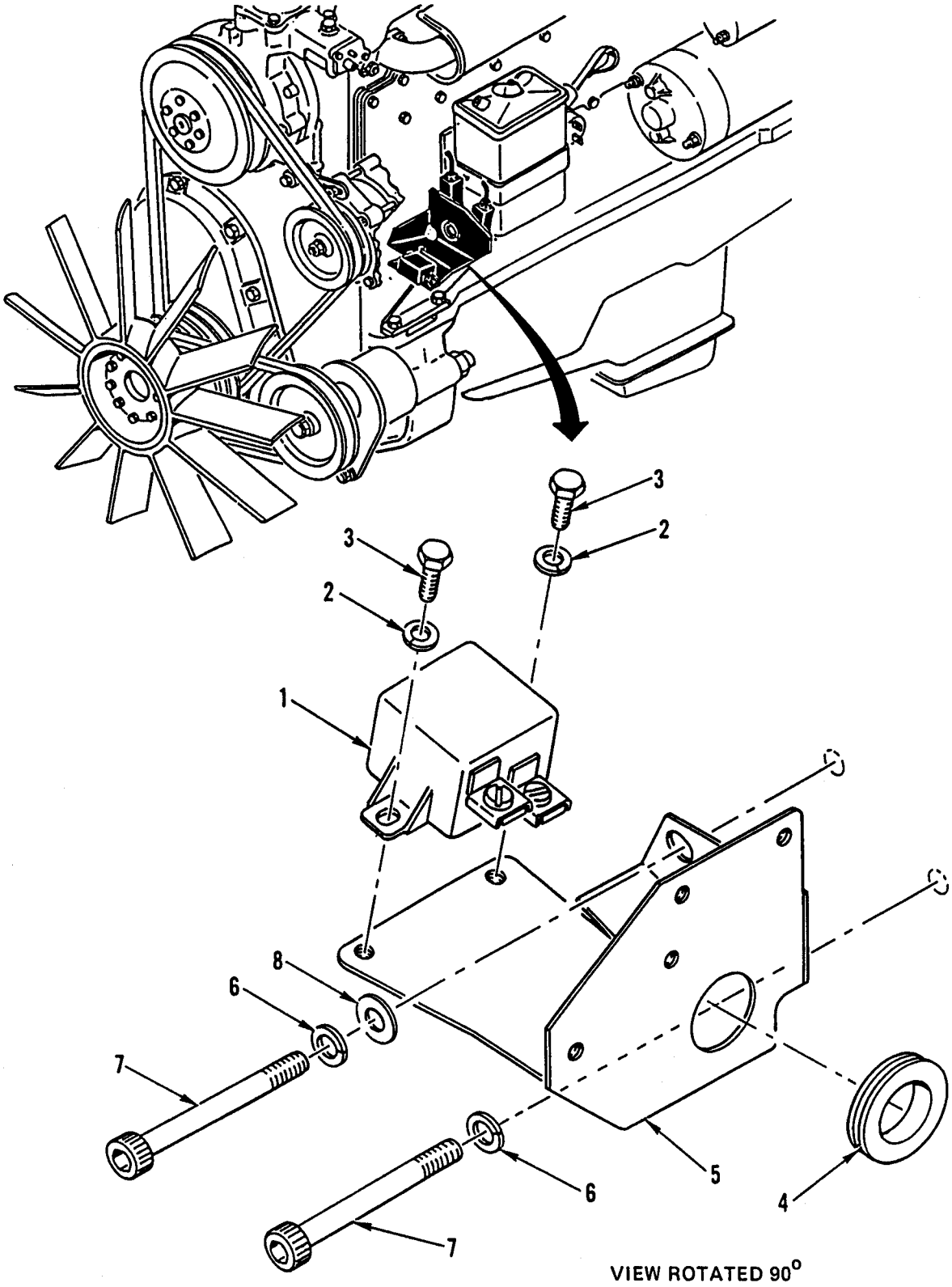

Figure 55. Engine Safety Controls – Cutoff Switch (Electromagnetic Relay).

(1) ITEM NO	(2) SMR CODE	(3) NSN	(4) CAGEC	(5) PART NUMBER	(6) DESCRIPTION AND USABLE ON CODES (UOC)	(7) QTY
					GROUP 0606	
					FIG. 55 ENGINE SAFETY CONTROLS – SWITCH, CUTOFF (RELAY, ELECTROMAGNETIC)	
1	PAOZZ	5945-01-243-6196	D8015	A 332 034 124	RELAY,ELECTROMAGNET.....	1
2	PAOZZ	5310-01-171-2356	64678	912004 006102	WASHER,SPRING TENSI.....	2
3	PAOZZ	5305-01-384-6808	64678	000933 006103	SCREW,CAP,HEXAGON H.....	2
4	PFOZZ	5325-01-285-4067	64678	100 997 08 81	GROMMET,NONMETALLIC.....	1
5	PFOZZ	5340-01-259-2474	64678	419 540 05 73	BRACKET,ANGLE UOC:GE1.....	1
6	XAOZZ		19207	NPN-037	WASHER,LOCK	2
7	PAOZZ	5305-01-386-6055	64678	000912 008 130	SCREW,CAP,SOCKET HE	2
8	PAOZZ	5310-01-237-5224	64678	000125 008418	WASHER,FLAT	1
					END OF FIGURE	

UNIT, DIRECT SUPPORT AND GENERAL SUPPORT MAINTENANCE

SMALL EMPLACEMENT EXCAVATOR (SEE) AND HIGH MOBILITY MATERIAL HANDLER (HMMH)

INSTRUMENT OR ENGINE CONTROL PANEL – ELECTRONIC TACHOMETER 333 430/009/001 VOLTMETER 000 542 27 24 LIGHT ASSEMBLY INDICATORS 4055-525

REPAIR PARTS LIST

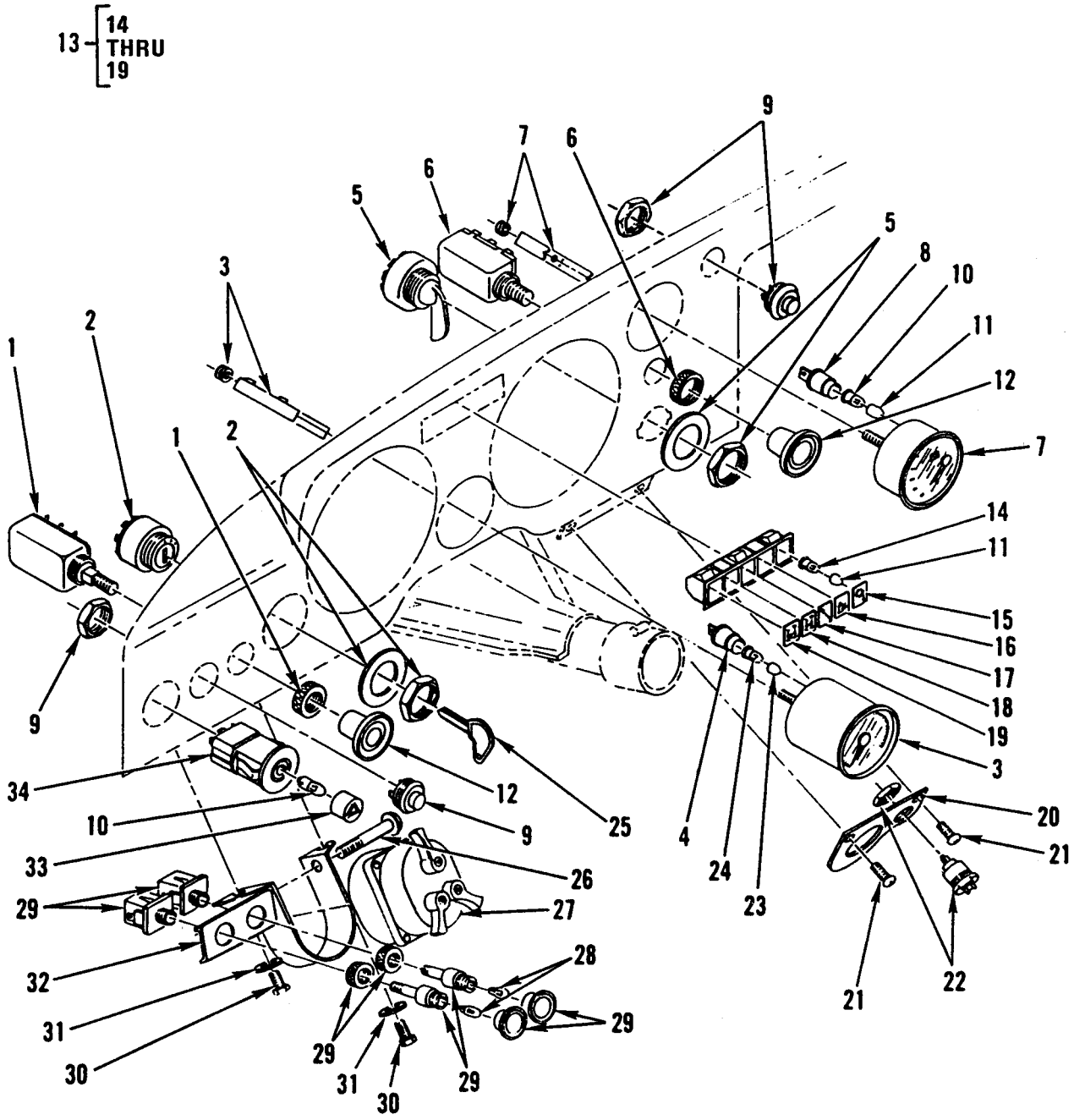

Figure 56. Instrument or Engine Control Panel – Electronic Tachometer, Voltmeter, and Light Assembly Indicators.

(1) ITEM NO	(2) SMR CODE	(3) NSN	(4) CAGEC	(5) PART NUMBER	(6) DESCRIPTION AND USABLE ON CODES (UOC)	(7) QTY
					GROUP 0607	
					FIG. 56 INSTRUMENT OR ENGINE CONTROL PANEL – TACHOMETER, ELECTRONIC 333 430/009/001, VOLTMETER 000 542 27 24, LIGHT ASSEMBLY, INDICATORS 4055-525	
1	PAOZZ	5930-01-245-4694	D0634	251 059	SWITCH,PUSH-PULL	1
2	PAOZZ	2920-01-244-2386	D8129	04 8236 20	SWITCH,LOCK,IGNITIO	1
3	PAOZZ	6680-01-235-1631	D2439	333 430/009/001	TACHOMETER,ELECTRIC	1
4	PAOZZ	6250-01-242-9092	64678	000 545 42 19	.LAMPHOLDER	1
5	PAOZZ	5930-01-245-3405	D8015	A 341 110 002	SWITCH,LEVER	1
6	PAOZZ	5930-01-245-3404	D8143	5K 939 A	SWITCH,ROTARY	1
7	PAOZZ	6625-01-246-3127	64678	000 542 27 24	VOLTMETER	1
8	PFOZZ	6210-01-308-8393	D2439	19 788 002	.LIGHT,INDICATOR UOC:GE1	1
9	PAOZZ	2920-01-244-2661	D8015	0 343 003 004	SWITCH,ENGINE START	2
10	PAOZZ	6240-01-167-1833	S3465	3503266-014	LAMP,INCANDESCENT	2
11	PFOZZ	6210-01-256-8379	97539	1813/42-G13-25	FILTER,INDICATOR LIGHT	6
12	PAOZZ	5355-01-251-0335	D8905	110 540 11 83	KNOB	2
13	PAOOO	6220-01-251-7642	C2733	4055-525	LIGHT ASSEMBLY,INDICATORS	1
14	PAOZZ	6240-01-286-7448	64678	001 544 53 94	.LAMP,INCADESCENT	5
15	PFOZZ		64678	000 542 61 27	.SIGN FACE,INTERIOR GREEN,PASSAGES	1
16	PAOZZ	6220-01-325-6645	64678	000 542 60 27	.LIGHT,INDICATOR	1
17	PFOZZ	9905-01-431-0374	64678	000 542 59 27	.SIGN FACE,INTERIOR RED	1
18	PFOZZ	9905-01-421-2958	64678	000 542 58 27	.SIGN RED,DIFFERENTIAL LOCK	1
19	PFOZZ	9905-01-421-2958	64678	000 542 57 27	.SIGN RED,POWER TAKE-OFF	1
20	PFOZZ	5365-01-266-6458	64678	419 616 00 14	SPACER,PLATE	1
21	PFOZZ	5305-01-246-8433	64678	007985006157	SCREW,MACHINE	2
22	PFOZZ	5935-01-245-4666	64678	001 545 08 26	CONNECTOR,RECEPTAC	1
23	PFOZZ	6210-01-256-8380	97539	1813/2-G13-25	FILTER,INDICATOR LI	14

(1) ITEM NO	(2) SMR CODE	(3) NSN	(4) CAGEC	(5) PART NUMBER	(6) DESCRIPTION AND USABLE ON CODES (UOC)	(7) QTY
24	PAOZZ	6240-01-224-7656	S4591	3899	LAMP,INCANDESCENT	1
25	PAOZZ	5930-12-166-1092	D8129	04823902	KEY,SWITCH	1
26	PFOZZ	5305-01-286-2631	64678	000931 006131	SCREW,CAP,HEXAGON H	1
27	PAOZZ	5930-01-287-2414	64678	419 545 70 22	SWITCH ASSEMBLY	1
28	PAOZZ	6240-01-285-7335	64678	072601 024230	LAMP,INCADESCENT	2
29	PAOZZ	5930-01-245-3410	64678	001 545 36 11	SWITCH,PUSH-PULL	2
30	PFOZZ	5305-01-155-5439	56161	10501757	SCREW,CAP,HEXAGON H	2
31	PFOZZ	5310-01-174-7613	S3465	4537800-256	WASHER,FLAT	2
32	PAOZZ	5340-01-285-7814	64678	419 540 03 73	STRAP,RETAINING	1
33	PAOZZ	5930-01-259-3864	D8095	9SK 702 331-07 4	PUSH BUTTON	1
34	PAOZZ	5930-01-245-3408	D8095	A 002 372 07	SWITCH,PUSH	1
					END OF FIGURE	

UNIT, DIRECT SUPPORT AND GENERAL SUPPORT MAINTENANCE

SMALL EMPLACEMENT EXCAVATOR (SEE) AND HIGH MOBILITY MATERIAL HANDLER (HMMH)

INSTRUMENT OR ENGINE CONTROL PANEL – LIQUID QUARTZ INDICATOR 003 540 95 47

REPAIR PARTS LIST

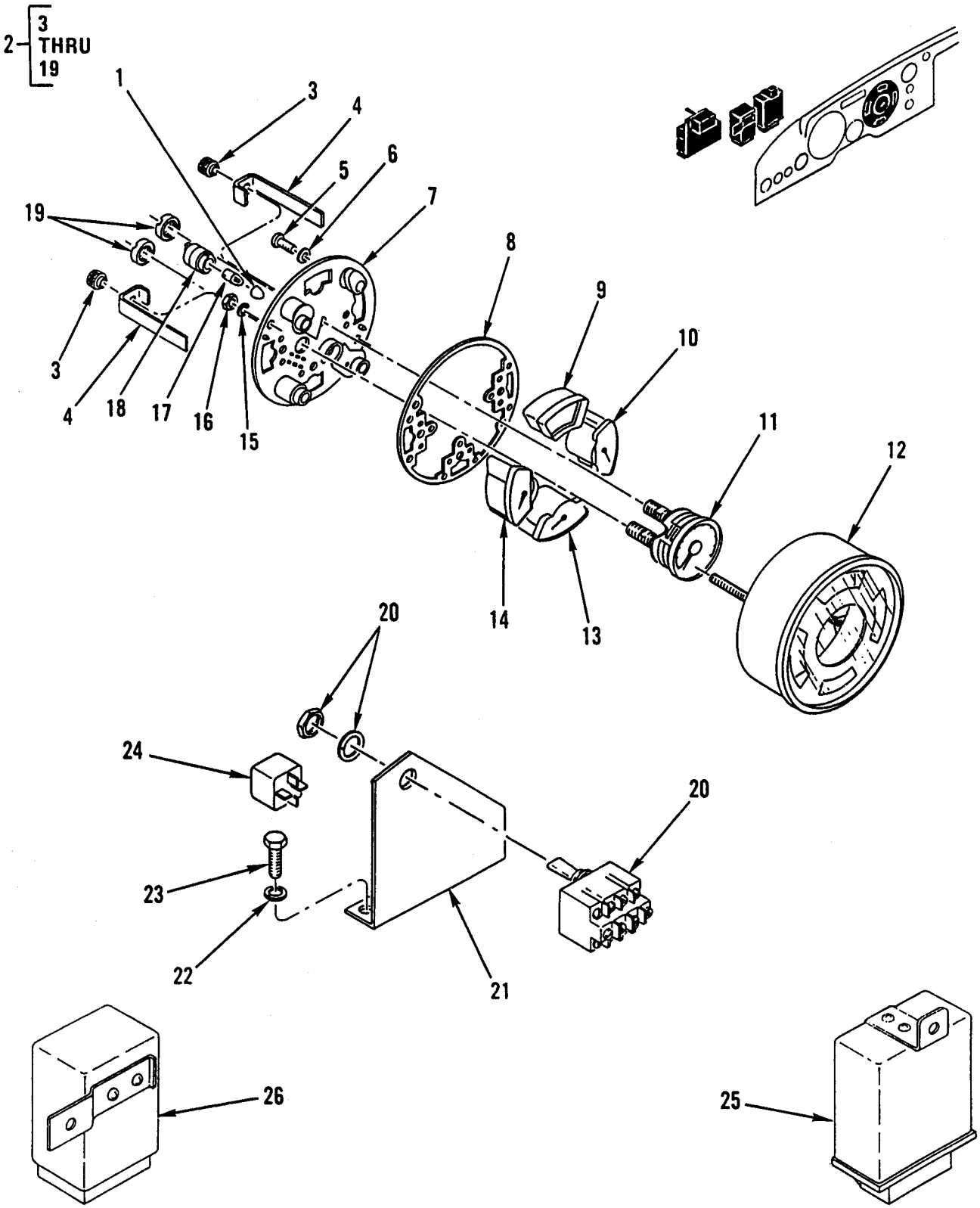

Figure 57. Instrument or Engine Control Panel – Liquid Quartz Indicator.

(1) ITEM NO	(2) SMR CODE	(3) NSN	(4) CAGEC	(5) PART NUMBER	(6) DESCRIPTION AND USABLE ON CODES (UOC)	(7) QTY
					GROUP 0607	
					FIG. 57 INSTRUMENT OR ENGINE CONTROL PANEL – INDICATOR, LIQUID QUARTZ 003 540 95 47	
1	PFOZZ	6210-01-256-8379	97539	1813/42-G13-25	FILTER,INDICATOR LI	2
2	PFOOO	6680-01-285-3372	64678	003 540 95 47	INDICATOR,LIQUID QU	1
3	XAOZZ		19207	NPN-038	.NUT,PLAIN,HEXAGON	2
4	XAOZZ		19207	NPN-039	.BRACKET,MOUNTING	2
5	XAOZZ		19207	NPN-040	.SCREW,CAP,HEXAGON H	2
6	XAOZZ		19207	NPN-041	.WASHER,LOCK	2
7	XAOZZ		19207	NPN-042	.COVER,GUAGE	1
8	XAOZZ		19207	NPN-043	.PLATE,GUAGE	1
9	PAOZZ	6220-12-182-1060	D2439	K 1 101 408	.LIGHT,WARNING	1
10	PAOZZ	6685-01-286-7536	64678	002 542 74 05	.INDICATOR,TEMPERATU	1
11	PFOZZ	6620-01-377-0381	64678	000 542 79 08	.GAGE,PRESSURE,DIAL	1
12	XAOZZ		19207	NPN-044	.HOUSING,INDICATOR	1
13	PAOZZ	6680-01-285-3373	D2439	K301.451/36/2	.INDICATOR,LIQUID QU	1
14	XDOZZ		64678	001 542 45 02	.GAGE,PRESSURE,DIAL	1
15	XAOZZ		19207	NPN-045	.WASHER,FLAT	5
16	XAOZZ		19207	NPN-046	.NUT,PLAIN,HEXAGON	5
17	PAOZZ	6240-01-167-1833	S3465	3503266-014	.LAMP,INCANDESCENT	7
18	PFOZZ	6250-01-305-5807	64678	000 545 12 19	.LAMPHOLDER	7
19	XAOZZ		19207	NPN-047	.NUT	2
20	PAOZZ	5930-01-247-7392	64678	002 545 26 07	SWITCH,TOGGLE	1
21	PFOZZ	5342-01-244-2571	64678	419 545 02 40	BRACKET,ENGINE ACCE	1
22	PFOZZ	5310-01-171-2356	64678	912004 006102	WASHER,SPRING TENSION	2
23	PFOZZ	5305-01-246-5763	64678	007985 006161	SCREW,MACHINE	2
24	PAOZZ	5945-01-251-8699	64678	002 545 66 05	RELAY,ELECTROMAGNETIC	5
25	PAOZZ	5945-01-245-9745	64678	001 545 61 05	RELAY,SOLID STATE	1
26	PAOZZ	5945-01-246-3189	D8095	A002540-01(4)	RELAY,ELECTROMAGNETIC	1
					END OF FIGURE	

UNIT, DIRECT SUPPORT AND GENERAL SUPPORT MAINTENANCE

SMALL EMPLACEMENT EXCAVATOR (SEE) AND HIGH MOBILITY MATERIAL HANDLER (HMMH)

INSTRUMENT OR ENGINE CONTROL PANEL – HYDRAULIC SUSPENSION LOCKOUT SWITCHES, SENDING UNITS, AND INDICATOR LIGHT

REPAIR PARTS LIST

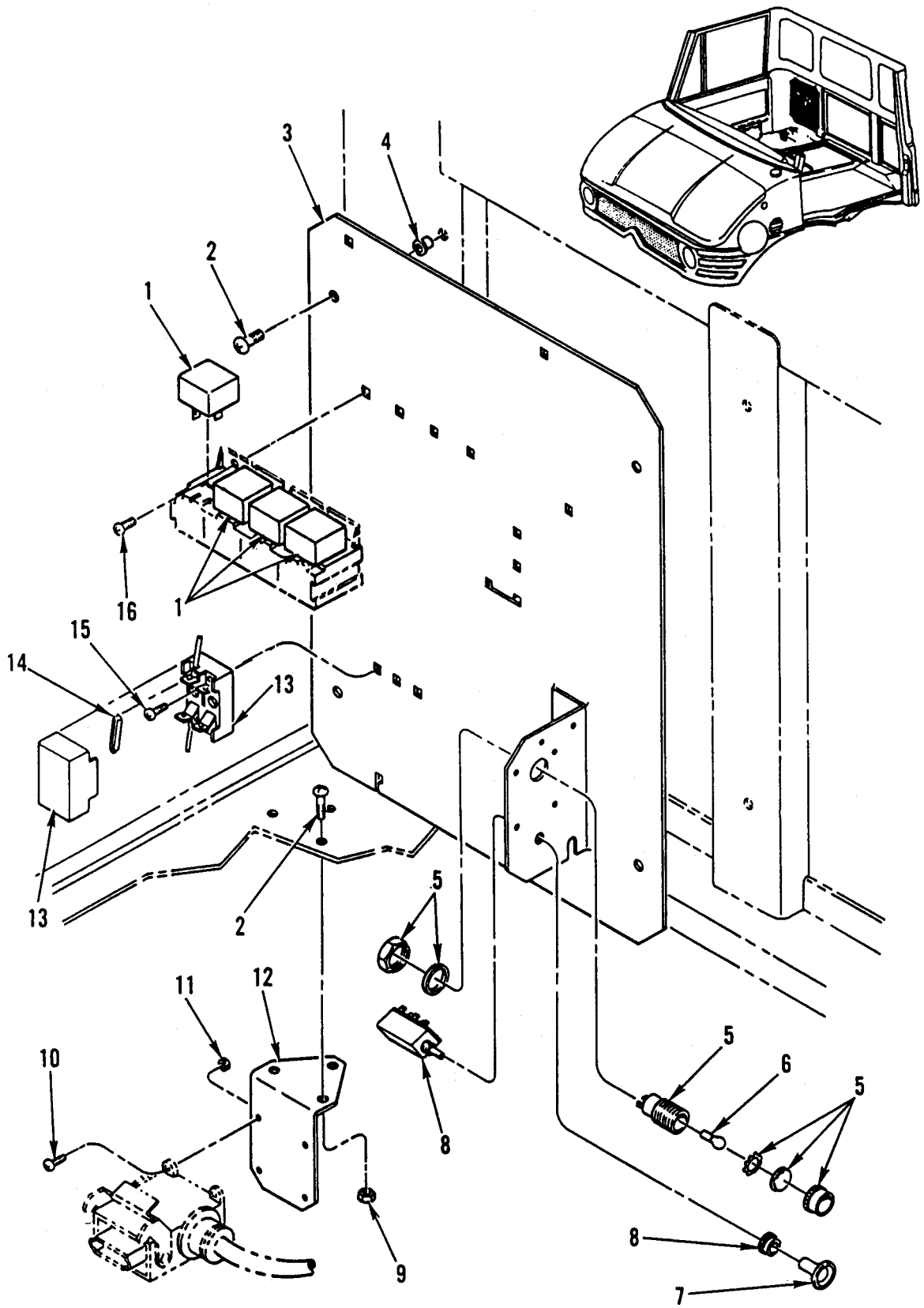

Figure 58. Instrument or Engine Control Panel – Hydraulic Suspension Lockout Switches, Sending Units, and Indicator Light.

(1) ITEM NO	(2) SMR CODE	(3) NSN	(4) CAGEC	(5) PART NUMBER	(6) DESCRIPTION AND USABLE ON CODES (UOC)	(7) QTY
					GROUP 0607	
					FIG. 58 INSTRUMENT OR ENGINE CONTROL PANEL – HYDRAULIC SUSPENSION LOCKOUT SWITCHES, SENDING UNITS, AND INDICATOR LIGHT	
1	PAOZZ	5945-01-251-8699	64678	002 545 66 05	RELAY,ELECTROMAGNET UOC:GE4.....	4
2	PFOZZ	5330-01-171-4703	S3465	4536226-835	SEAL RING,METAL UOC:GE4.....	7
3	PFOZZ	5340-01-313-0345	64678	419 540 06 73	BRACKET,MOUNTING UOC:GE4.....	1
4	PFOZZ	5310-01-315-8388	64678	913010 006105	NUT,PLAIN,BLIND,RIV UOC:GE4.....	4
5	PFOZZ	2920-01-313-2793	64678	000 545 92 15	SOCKET,LIGHT,VEHICU UOC:GE4.....	1
6	PAOZZ	6240-01-167-1833	S3465	3503266-014	LAMP,INCANDESCENT UOC:GE4.....	1
7	PFOZZ	5355-01-251-0335	D8905	110 540 11 83	KNOB UOC:GE4.....	1
8	PAOZZ	5930-01-245-3404	D8143	5K 939 A	SWITCH,ROTARY UOC:GE4.....	1
9	PFOZZ	5310-01-171-4689	S3465	4536226-786	NUT,PLAIN,HEXAGON UOC:GE4.....	3
10	PAOZZ	5305-01-254-4354	87181	DIN7985-M4X 0.7X10	SCREW,MACHINE UOC:GE4.....	4
11	PFOZZ	5310-01-248-4500	15526	934 8 M4X0.7C	NUT,PLAIN,HEXAGON UOC:GE4.....	4
12	PFOZZ	5340-01-313-0317	64678	419 545 09 40	BRACKET,ANGLE UOC:GE4.....	1
13	PFOZZ	5920-01-297-0800	D8095	8JD002289-00	FUSEHOLDER SUBASSEMBLY UOC:GE4.....	1
14	PAOZZ	5920-01-226-4269	64678	000 545 83 34	FUSE,CARTRIDGE UOC:GE4.....	2
15	PAOZZ	5305-01-298-1286	64678	007981 004325	SCREW,TAPPING UOC:GE4.....	2
16	PFOZZ	5305-01-326-0109	64678	007981 004318	SCREW,MACHINE UOC:GE4.....	2
					END OF FIGURE	

UNIT, DIRECT SUPPORT AND GENERAL SUPPORT MAINTENANCE

SMALL EMPLACEMENT EXCAVATOR (SEE) AND HIGH MOBILITY MATERIAL HANDLER (HMMH)

MISCELLANEOUS ITEMS – AUXILIARY SWITCHES

REPAIR PARTS LIST

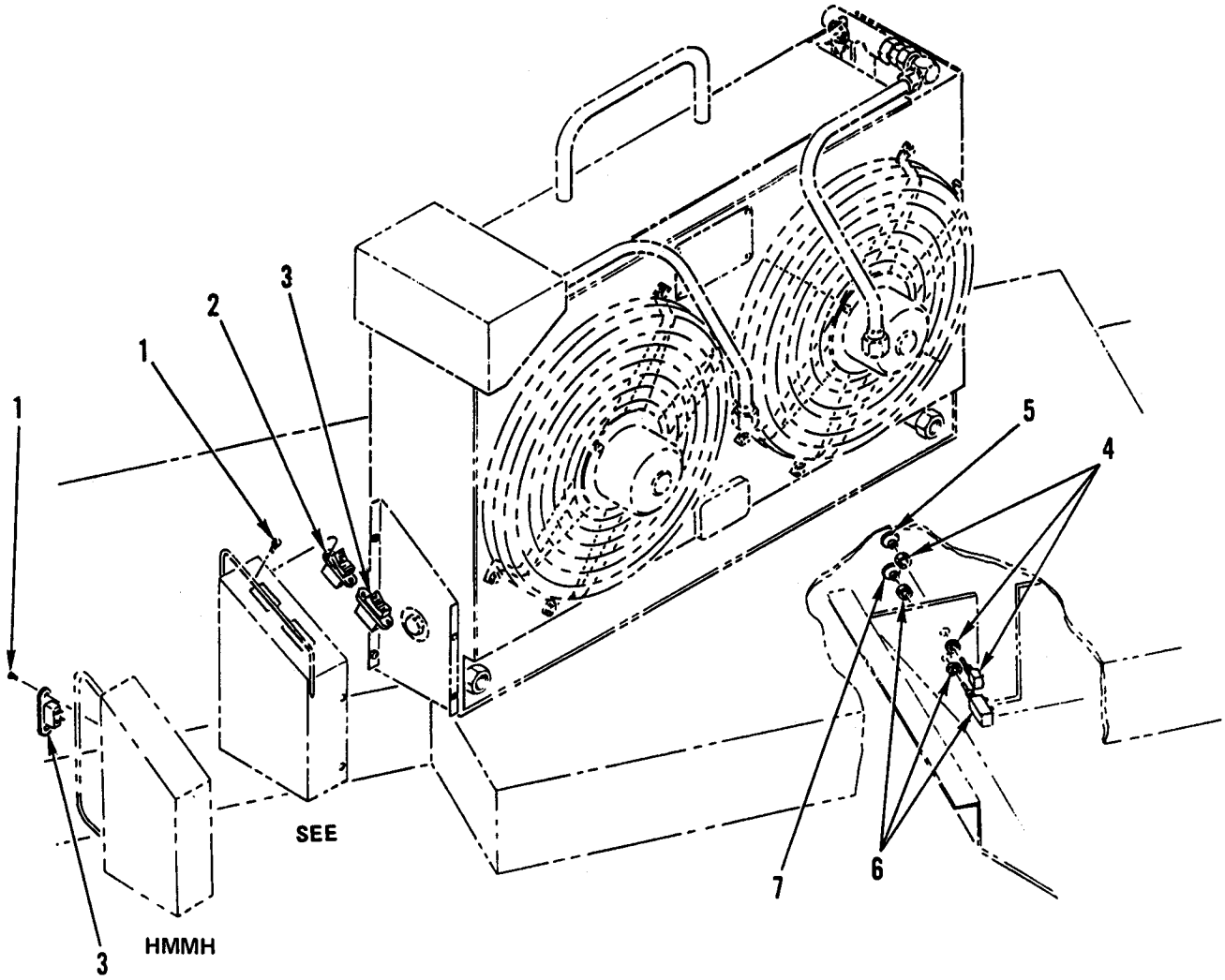

Figure 59. Miscellaneous Items – Auxiliary Switches.

(1) ITEM NO	(2) SMR CODE	(3) NSN	(4) CAGEC	(5) PART NUMBER	(6) DESCRIPTION AND USABLE ON CODES (UOC)	(7) QTY
					GROUP 0608	
					FIG. 59 MISCELLANEOUS ITEMS – AUXILIARY SWITCHES	
1	PFOZZ	5305-00-989-7435	96906	MS35207-264	SCREW,MACHINE UOC:GE1	4
1	PFOZZ	5305-00-989-7435	96906	MS35207-264	SCREW,MACHINE UOC:GE4	2
2	PAOZZ	5930-01-395-2849	91929	1TP320-7-BK	SWITCH,PUSH UOC:GE1	1
3	PAOZZ	5930-01-395-2850	91929	1TP320-2-BK	SWITCH,PUSH	1
4	PAOZZ	5930-01-242-7540	13445	50066 W/81270-508	SWITCH,PUSH-PULL	1
5	PAOZZ	5355-01-284-5523	13445	81270-508	.KNOB	2
6	PAOZZ	5930-01-242-2788	13445	50047-06	SWITCH,PUSH-PULL	1
7	PAOZZ	5355-01-290-6367	13445	81270 508	.KNOB	2
					END OF FIGURE	

UNIT, DIRECT SUPPORT AND GENERAL SUPPORT MAINTENANCE

SMALL EMPLACEMENT EXCAVATOR (SEE) AND HIGH MOBILITY MATERIAL HANDLER (HMMH)

MISCELLANEOUS ITEMS – FUSE BOX AND ATTACHING HARDWARE

REPAIR PARTS LIST

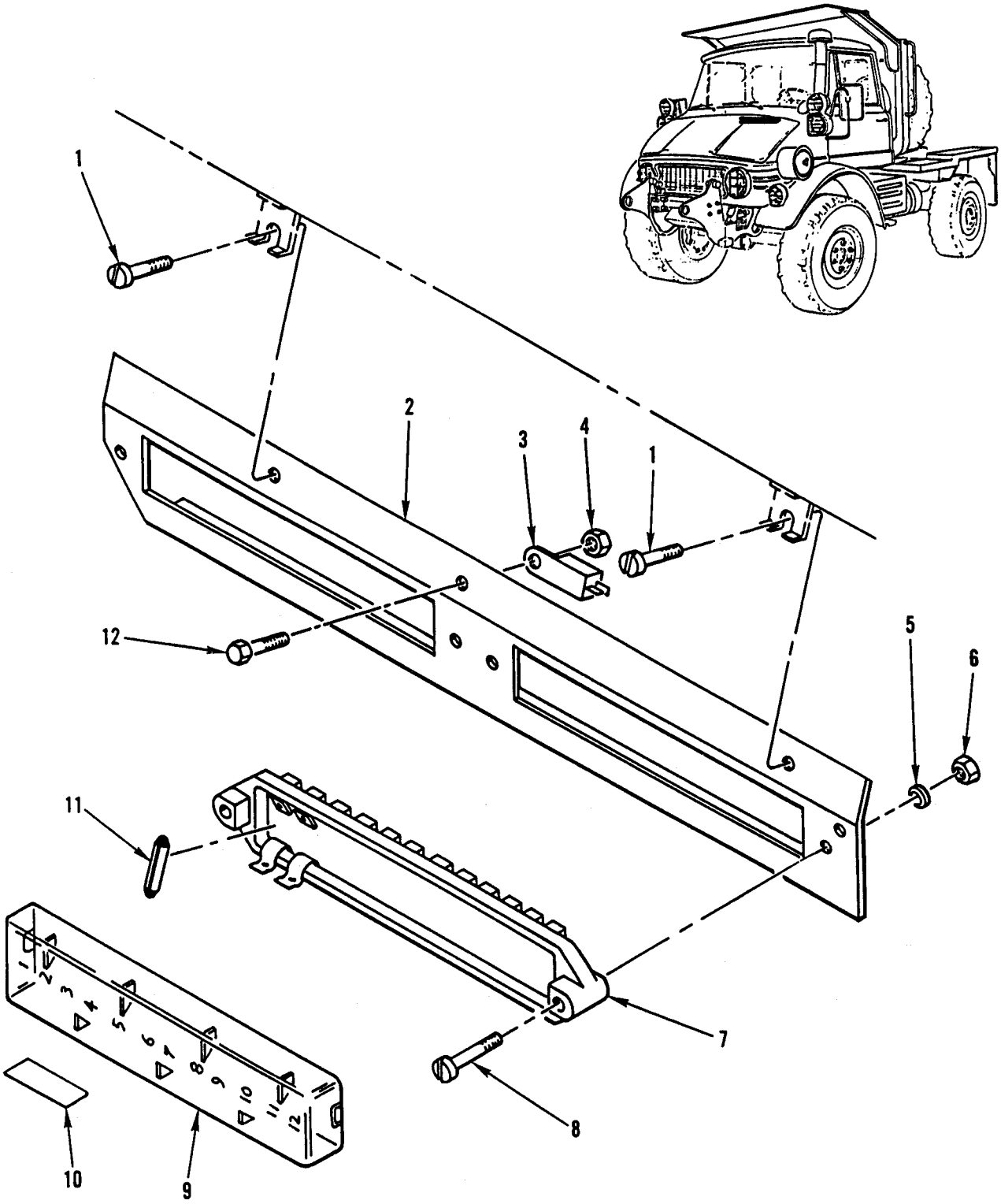

Figure 60. Miscellaneous Items – Fuse Box and Attaching Hardware.

(1) ITEM NO	(2) SMR CODE	(3) NSN	(4) CAGEC	(5) PART NUMBER	(6) DESCRIPTION AND USABLE ON CODES (UOC)	(7) QTY
					GROUP 0608	
					FIG. 60 MISCELLANEOUS ITEMS – FUSE BOX AND ATTACHING HARDWARE	
1	PFOZZ	5305-01-239-2583	15526	933 M6X20 F	SCREW,CAP,HEXAGON H	1
2	PFOZZ	5340-01-247-5357	64678	419 540 01 73	BRACKET,ANGLE	1
3	PFOZZ		64678	000 540 20 24	SEMICONDUCTOR DEVIC	1
4	PAOZZ	5310-01-241-0761	64678	913004 005001	NUT,SELF-LOCKING,HE	1
5	PFOZZ	5310-01-174-7613	S3465	4537800-256	WASHER,FLAT	4
6	PFOZZ	5310-01-241-6349	64678	913004 006002	NUT,SELF-LOCKING,HE	4
7	PFOZZ	5920-01-246-3652	64678	001 545 02 01	FUSE BOX	2
8	PFOZZ	5305-01-286-6028	64678	000084 006413	SCREW,MACHINE	4
9	PAOZZ	5340-01-316-1436	64678	000 545 23 03	COVER,ACCESS	2
10	PFOZZ	7690-01-245-7932	64678	419 545 01 00	MARKER,IDENTIFICATI RIGHT	1
10	PFOZZ	7690-01-245-7933	64678	419 545 02 00	MARKER,IDENTIFICATI LEFT	1
11	PAOZZ	5920-01-226-4268	64678	000 545 82 34	FUSE,CARTRIDGE 8 AMP	22
11	PAOZZ	5920-01-226-4269	71400	GBC16	FUSE,CARTRIDGE 16 AMP	2
12	PFOZZ	5306-01-174-0374	64678	000933 005075	BOLT,MACHINE	1
					END OF FIGURE	

UNIT, DIRECT SUPPORT AND GENERAL SUPPORT MAINTENANCE

SMALL EMPLACEMENT EXCAVATOR (SEE) AND HIGH MOBILITY MATERIAL HANDLER (HMMH)

MISCELLANEOUS ITEMS – ENGINE START SWITCH

REPAIR PARTS LIST

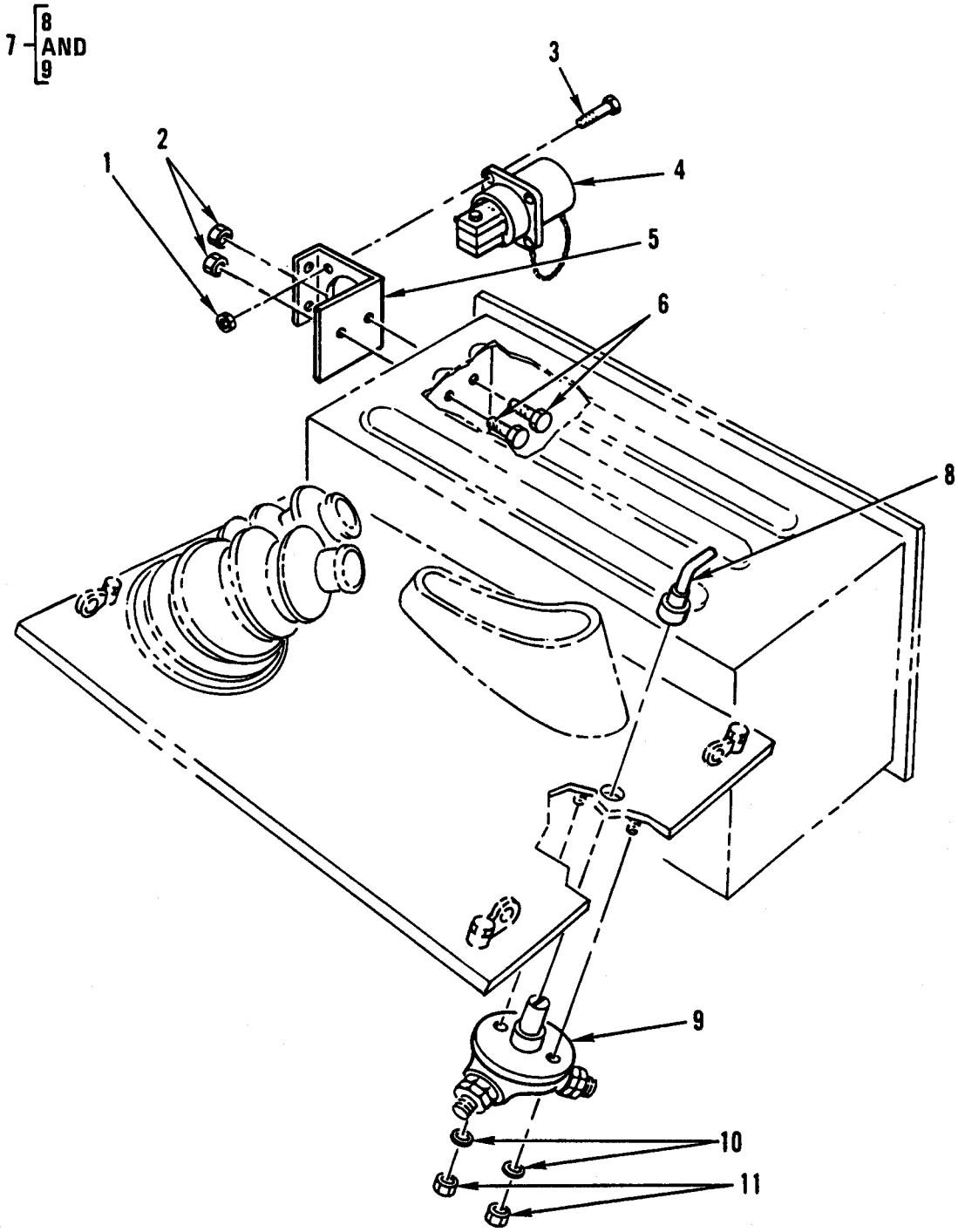

Figure 61. Miscellaneous Items – Engine Start Switch.

(1) ITEM NO	(2) SMR CODE	(3) NSN	(4) CAGEC	(5) PART NUMBER	(6) DESCRIPTION AND USABLE ON CODES (UOC)	(7) QTY
					GROUP 0608	
					FIG. 61 MISCELLANEOUS ITEMS – SWITCH, ENGINE START 0341001001	
1	PFOZZ	5310-01-241-0761	64678	913004 005001	NUT,SELF-LOCKING,HE	4
2	PFOZZ	5310-01-241-6349	64678	913004 006002	NUT,SELF-LOCKING,HE	2
3	PFOZZ	5306-01-247-9360	15526	933 M5 20F	BOLT,MACHINE	4
4	PFOZZ	5935-01-097-9974	52515	876-14888-1	CONNECTOR,RECEPTACL	1
5	PAOZZ	5340-01-249-1693	64678	419 540 00 40	BRACKET,DOUBLE ANG	1
6	PFOZZ	5305-01-155-5439	56161	10501757	SCREW,CAP,HEXAGON H	2
7	PAOOO	2920-01-224-5553	53867	0341001001	SWITCH,ENGINE START	1
8	PAOZZ	3040-01-298-5390	D8015	3342027051	.LEVER,MANUAL CONTROL BATTERY	1
9	XAOZZ		19207	NPN-048	.SWITCH	1
10	PFOZZ	5310-01-171-2356	S3465	4536226-920	WASHER,SPRING TENSI	2
11	PFOZZ	5310-01-171-4689	S3465	4536226-786	NUT,PLAIN,HEXAGON	1
					END OF FIGURE	

UNIT, DIRECT SUPPORT AND GENERAL SUPPORT MAINTENANCE

SMALL EMPLACEMENT EXCAVATOR (SEE) AND HIGH MOBILITY MATERIAL HANDLER (HMMH)

MISCELLANEOUS ITEMS – CONTROL TOWER

REPAIR PARTS LIST

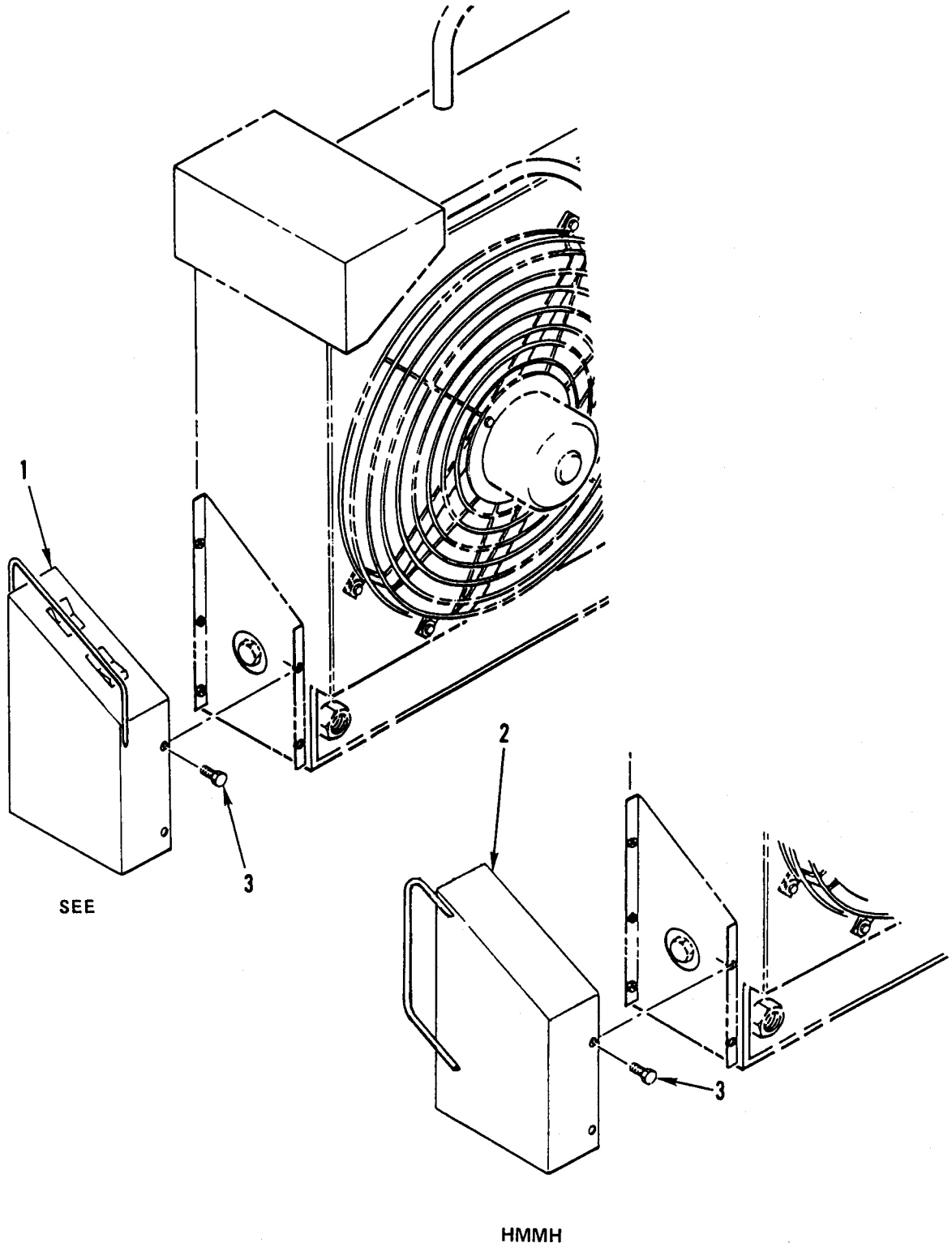

Figure 62. Miscellaneous Items – Control Tower.

(1) ITEM NO	(2) SMR CODE	(3) NSN	(4) CAGEC	(5) PART NUMBER	(6) DESCRIPTION AND USABLE ON CODES (UOC)	(7) QTY
					GROUP 0608	
					FIG. 62 MISCELLANEOUS ITEMS – CONTROL TOWER	
1	PFOZZ	2590-01-285-2915	64678	419 680 71 08	TOWER ASSEMBLY,BUCK UOC:GE1.....	1
2	PFOZZ	5340-01-296-6580	64678	419 540 70 82	COVER,ACCESS UOC:GE4.....	1
3	PFOZZ	5306-01-287-9165	64678	000933 005007	BOLT,MACHINE.....	5
					END OF FIGURE	

UNIT, DIRECT SUPPORT AND GENERAL SUPPORT MAINTENANCE

SMALL EMPLACEMENT EXCAVATOR (SEE) AND HIGH MOBILITY MATERIAL HANDLER (HMMH)

LIGHTS – HEADLIGHT 899685 AND SPECIAL CABLE ASSEMBLY 419 540 80 38

REPAIR PARTS LIST

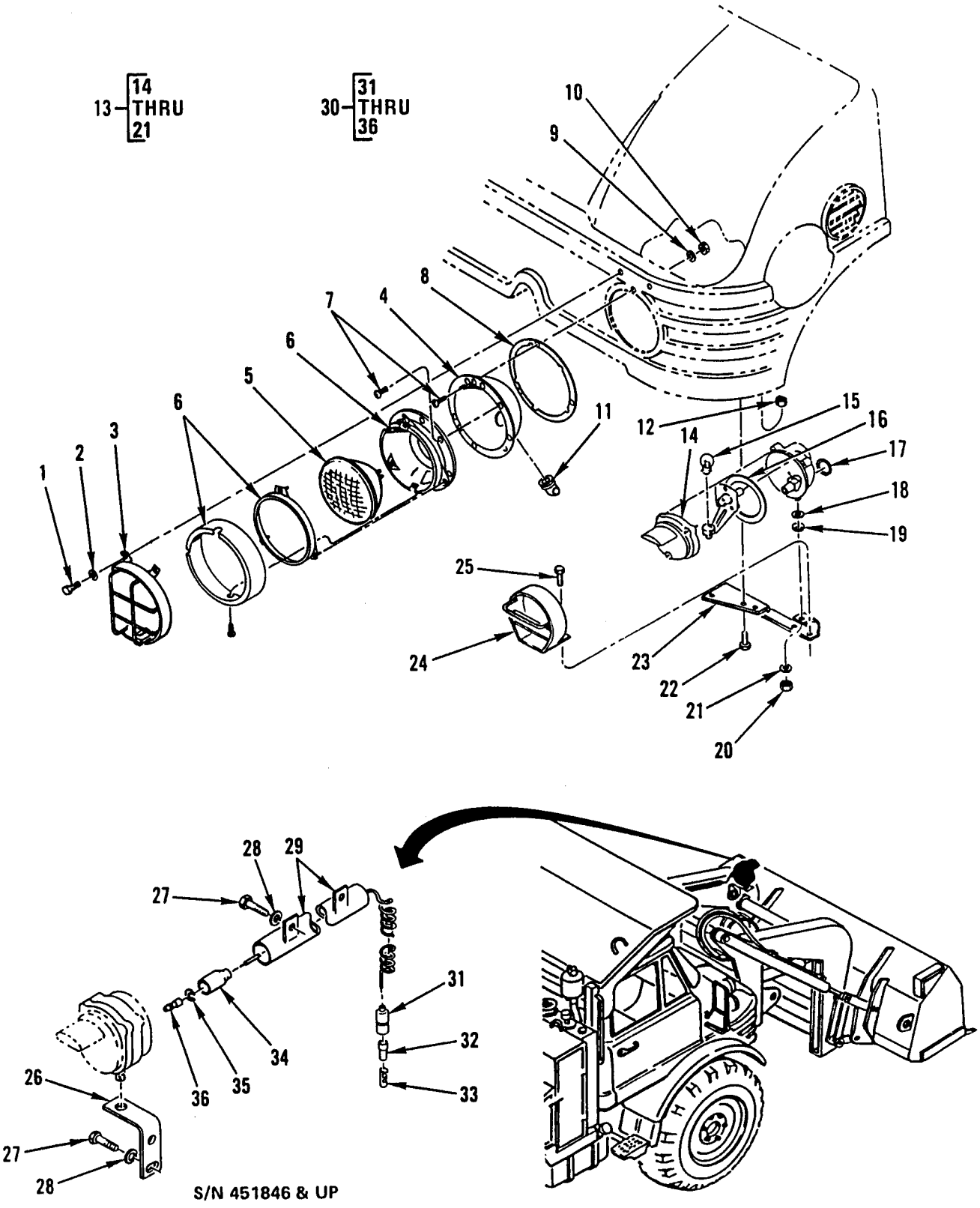

Figure 63. Lights – Headlight and Special Cable Assembly.

(1) ITEM NO	(2) SMR CODE	(3) NSN	(4) CAGEC	(5) PART NUMBER	(6) DESCRIPTION AND USABLE ON CODES (UOC)	(7) QTY
					GROUP 0609	
					FIG. 63 LIGHTS – HEADLIGHT 899685, AND CABLE ASSEMBLY, SPECIAL 419 540 80 38	
1	PFOZZ	5306-01-247-9361	64678	000933 006136	BOLT,MACHINE	6
2	PFOZZ	5310-01-244-1069	64678	000125 006417	WASHER,FLAT	6
3	PFOZZ	6220-01-249-1533	64678	419 820 72 18	GUARD,LAMP LEFT	1
3	PFOZZ	6220-01-249-1534	64678	419 820 74 18	GUARD,LAMP RIGHT	1
4	PAOZZ	6220-01-249-1535	64678	419 826 00 65	GUARD,LAMP	2
5	PAOZZ	6240-00-295-2158	24455	4800	LAMP,INCANDESCENT	2
6	PFOZZ	6220-01-362-4134	64678	000 544 81 01	HEADLIGHT	2
7	PFOZZ	5305-12-187-4934	D8286	M5X16DIN7985-4.8-B3B	SCREW,MACHINE	6
8	PAOZZ	5330-01-247-3717	D8015	1 300 141 042	GASKET	2
9	PFOZZ	5310-01-240-4043	64678	912004 005100	WASHER,LOCK	6
10	PFOZZ	5310-01-167-1859	S3465	4536226-892	NUT,PLAIN,HEXAGON	6
11	PAOZZ	5325-01-305-7515	64678	4199970081	GROMMET,NONMETALLIC	2
12	PFOZZ	5310-01-238-3198	15526	934 M10X1.5C	NUT,PLAIN,HEXAGON	2
13	PAOOO	6220-00-678-9046	73331	899685	HEADLIGHT	1
14	PAOZZ	6220-01-128-0087	13873	DGSCV-91-157	.DOOR,BLACKOUT LAMP	1
15	PAOZZ	6240-00-044-6914	08108	1683	.LAMP,INCANDESCENT	1
16	PFOZZ	5330-01-037-0663	5A910	DC8211	.GASKET	1
17	PFOZZ	5330-01-076-6172	34904	DC8226	.GASKET	1
18	PFOZZ	5310-01-100-2067	19207	11668979	.WASHER,LOCK	1
19	PFOZZ	5310-00-350-2655	19207	5294507	.WASHER,FINISHING	1
20	PFOZZ	5310-00-732-0558	96906	MS51967-8	.NUT,PLAIN,HEXAGON	1
21	PFOZZ	5310-00-637-9541	96906	MS35338-46	.WASHER,LOCK 3/8	1
22	PFOZZ	5306-01-240-5166	15526	933 M10 30F	BOLT,MACHINE	2
23	PFOZZ	6220-01-242-2306	64678	419 540 72 73	BRACKET,B/O HEADLIGHT	1

(1) ITEM NO	(2) SMR CODE	(3) NSN	(4) CAGEC	(5) PART NUMBER	(6) DESCRIPTION AND USABLE ON CODES (UOC)	(7) QTY
24	PFOZZ	6220-01-242-4868	64678	419 540 70 80	GUARD,LAMP	1
25	PFOZZ	5306-01-174-7550	S3465	4537800-129	BOLT,MACHINE	2
26	PFOZZ	6220-01-338-5991	64678	419 544 72 38	BRACKET UOC:GE1	1
27	PFOZZ	5305-12-196-4437	64678	000933 006121	SCREW,CAP,HEXAGON H UOC:GE1	4
28	PFOZZ	5310-01-174-7613	S3465	4537800-256	WASHER,FLAT UOC:GE1	4
29	PAOZZ	5975-01-336-9865	64678	419 540 70 77	CONDUIT,METAL RIGID UOC:GE1	1
30	PAOOO	6150-01-336-3540	64678	419 540 80 38	CABLE ASSEMBLY,SPEC UOC:GE1	1
31	PAOZZ	5970-01-243-1268	64678	419 545 70 45	.INSULATOR,BUSHING UOC:GE1	1
32	PAOZZ	5970-01-241-4853	64678	419 545 75 45	.INSULATOR,BUSHING UOC:GE1	1
33	PAOZZ	5940-01-242-5466	64678	419 545 73 26	.TERMINAL,QUICK DISC UOC:GE1	1
34	PAOZZ	5970-01-243-5749	64678	419 545 71 45	.INSULATOR,FEMALE RE UOC:GE1	1
35	PAOZZ	5310-01-244-4524	64678	419 990 70 40	.WASHER,SLOTTED UOC:GE1	1
36	PAOZZ	5940-01-242-0009	64678	419 545 70 28	.TERMINAL,QUICK DISC UOC:GE1	1
					END OF FIGURE	

UNIT, DIRECT SUPPORT AND GENERAL SUPPORT MAINTENANCE

SMALL EMPLACEMENT EXCAVATOR (SEE) AND HIGH MOBILITY MATERIAL HANDLER (HMMH)

LIGHTS – VEHICULAR LAMP UNIT 419 540 72 54 AND HEADLIGHT ASSEMBLY 419 544 73 01

REPAIR PARTS LIST

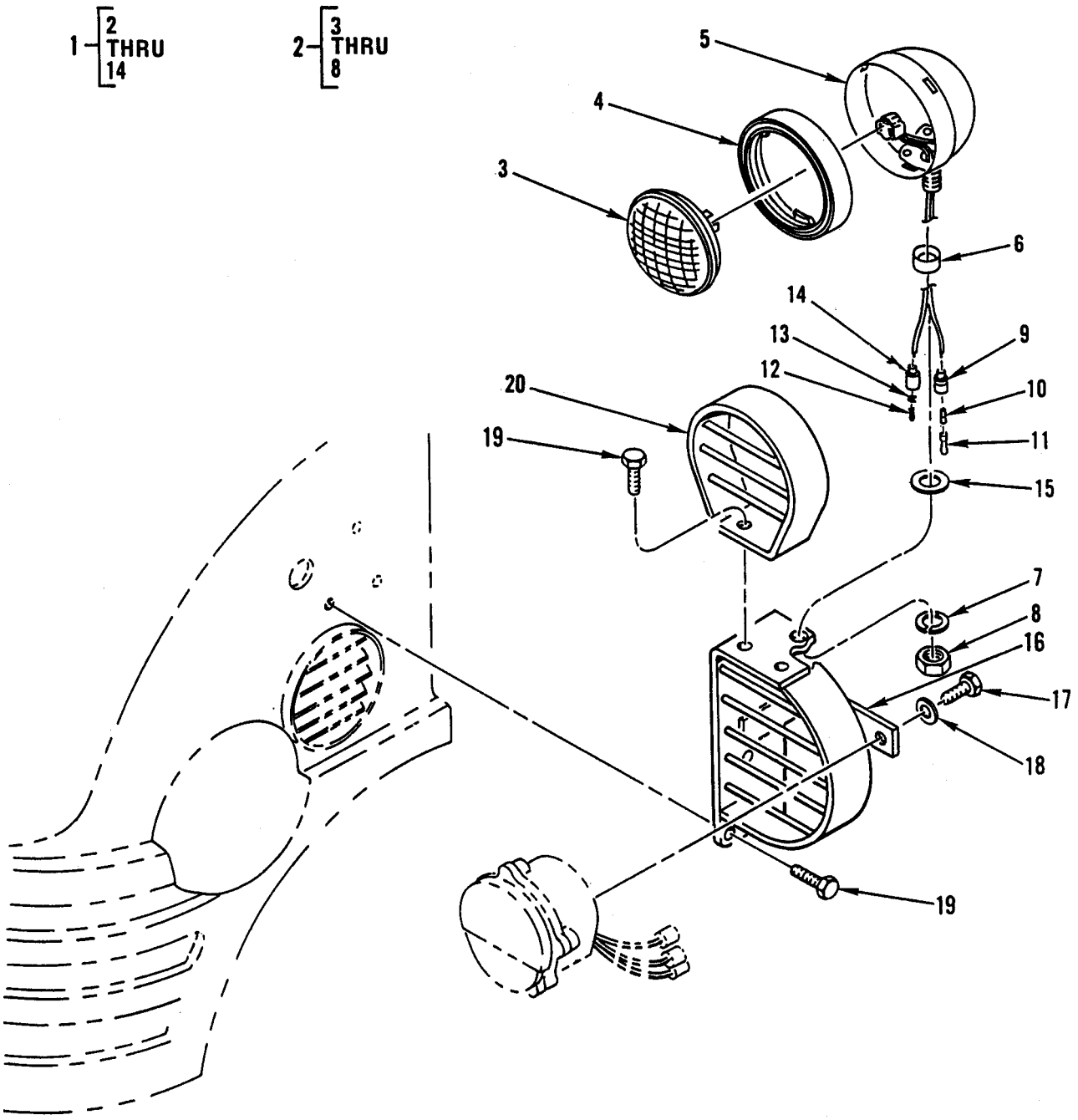

Figure 64. Lights – Vehicular Lamp Unit and Headlight Assembly.

(1) ITEM NO	(2) SMR CODE	(3) NSN	(4) CAGEC	(5) PART NUMBER	(6) DESCRIPTION AND USABLE ON CODES (UOC)	(7) QTY
					GROUP 0609	
					FIG. 64 LIGHTS – LAMP UNIT, VEHICULAR 419 540 72 54, AND HEADLIGHT ASSEMBLY 419 544 73 01	
1	PAOOO	6220-01-334-0611	64678	419 540 72 54	LAMP,UNIT,VEHICULAR	4
2	XAOOO		64678	419 544 73 01	.HEADLIGHT ASSEMBLY	1
3	PAOZZ	6240-00-519-0264	08108	4579	..LAMP,INCANDESCENT	1
4	XAOZZ		19207	NPN-049	..MOUNT,RESILIENT	1
5	XAOZZ		19207	NPN-050	..HOUSING,LAMP	1
6	XAOZZ		19207	NPN-051	..BUSHING,SLEEVE	1
7	XAOZZ		19207	NPN-052	..WASHER,LOCK	1
8	XAOZZ		19207	NPN-053	..NUT,HEXAGON	1
9	PFOZZ	5970-01-243-1268	64678	419 545 70 45	.INSULATOR,BUSHING	1
10	PAOZZ	5970-01-241-4853	64678	419 545 75 45	.INSULATOR,BUSHING	1
11	PAOZZ	5940-01-242-5466	64678	419 545 73 26	.TERMINAL,QUICK DISC	1
12	PAOZZ	5940-01-242-0009	64678	419 545 70 28	.TERMINAL,QUICK DISC	1
13	PFOZZ	5310-01-244-4524	64678	419 990 70 40	.WASHER,SLOTTED	1
14	PFOZZ	5970-01-243-5749	64678	419 545 71 45	.INSULATOR,FEMALE RE	1
15	PAOZZ	5310-01-333-3563	64678	419 544 72 84	WASHER,FLAT	4
16	PFOZZ	6220-01-242-4870	64678	419 820 70 18	GUARD,LAMP COMPOSITE LIGHT,LH	1
16	PFOZZ	3020-01-299-4118	64678	419 820 71 18	GUARD,MECHANICAL DR COMPOSITE LIGHT,RH	1
17	PFOZZ	535-01-244-8884	64678	23-10746-075	SCREW,CAP,HEXAGON H	4
18	PFOZZ	5310-00-637-9541	96906	MS35338-46	WASHER,LOCK	4
19	PFOZZ	5306-01-174-7550	S3465	4537800-129	BOLT,MACHINE	5
20	PFOZZ	6220-01-336-0130	64678	419 820 76 18	GUARD,LAMP	4
					END OF FIGURE	

UNIT, DIRECT SUPPORT AND GENERAL SUPPORT MAINTENANCE

SMALL EMPLACEMENT EXCAVATOR (SEE) AND HIGH MOBILITY MATERIAL HANDLER (HMMH)

LIGHTS – PARKING LIGHT E019521, BODY ASSEMBLY 11639541, AND FRONT LIGHT LENS 11639546

REPAIR PARTS LIST

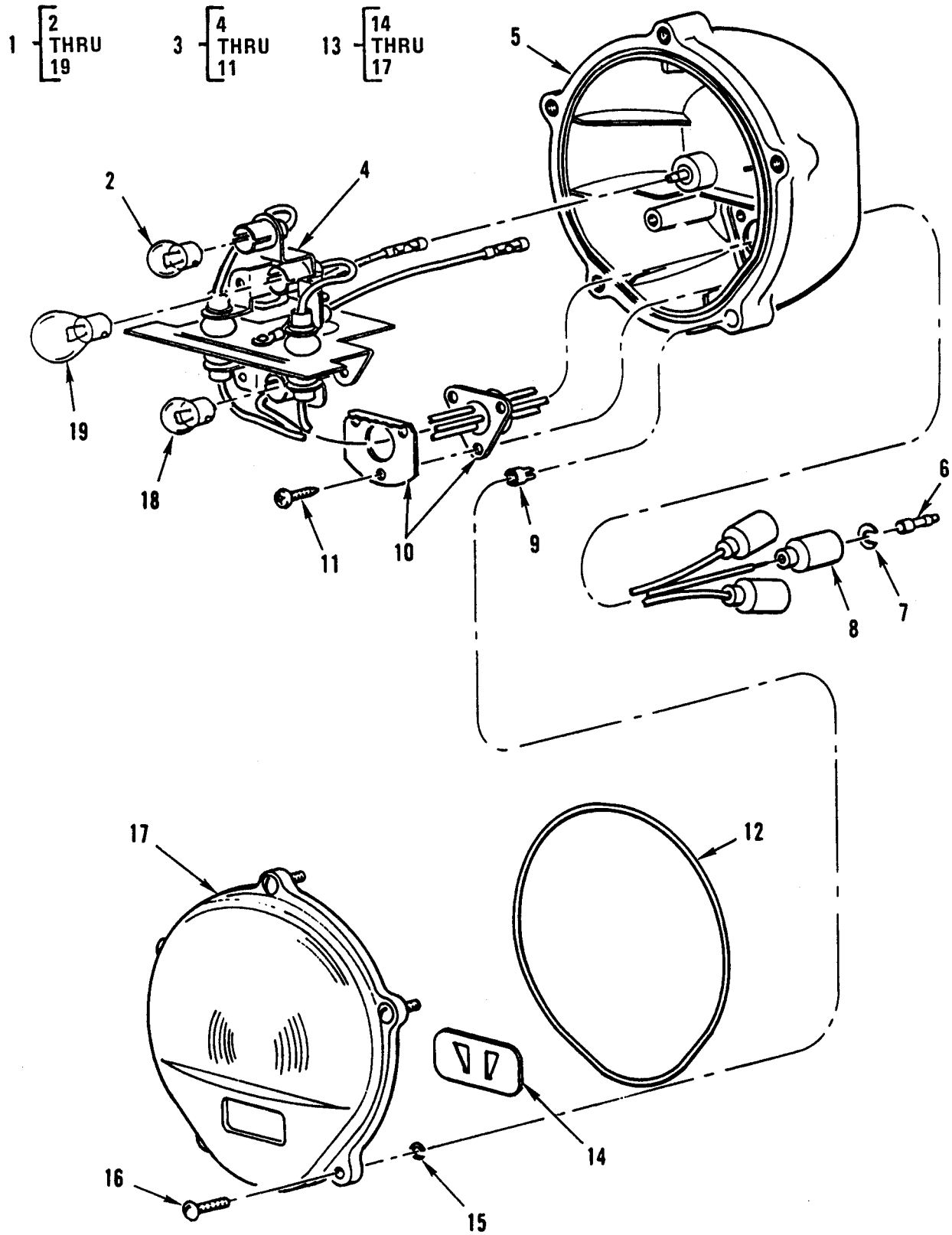

Figure 65. Lights – Parking Light, Body Assembly, and Front Light Lens.

(1) ITEM NO	(2) SMR CODE	(3) NSN	(4) CAGEC	(5) PART NUMBER	(6) DESCRIPTION AND USABLE ON CODES (UOC)	(7) QTY
					GROUP 0609	
					FIG. 65 LIGHTS – LIGHT, PARKING E019521, BODY ASSEMBLY 11639541, AND LENS, LIGHT, FRONT 11639546	
1	PAOOO	6220-00-880-1624	68505	E019521	LIGHT,PARKING	2
2	PAOZZ	6240-00-019-3093	58536	A52463-1-09	.LAMP,INCANDESCENT	1
3	XDOOO		19207	11639541	.BODY ASSEMBLY	1
4	PFOZZ	6250-01-203-5666	19207	8694539	..LAMPHOLDER	1
5	PFOZZ	6220-01-154-7699	19207	11639542	..HOUSING,LIGHT	1
6	PFOZZ	5999-00-057-2929	19204	572929	..CONTACT,ELECTRICAL	3
7	PFOZZ	5310-00-833-8567	19207	8338567	..WASHER,SLOTTED	3
8	PFOZZ	5935-00-572-9180	19207	8338566	..SHELL,ELECTRICAL CO	3
9	XBOZZ		19207	11639521	..INSERT,SCREW THREAD	5
10	PFOZZ	2590-01-030-6225	19207	11639543	..ASSEMBLY,BRACKET AND CABLE	1
11	PFOZZ	5305-00-058-1082	96906	MS51861-34	..SCREW,TAPPING	5
12	PFOZZ	5331-00-463-0200	19207	11639519-1	.O-RING	1
13	PFOOO	6220-00-179-4325	19207	11639546	.LENS,LIGHT,FRONT	1
14	PFOZZ	6220-00-893-3558	18873	HM122	..FILTER,LIGHT,CLEARA	1
15	PFOZZ	5340-00-732-0642	19207	7320642	..CLIP,RETAINING	5
16	PFOZZ	5305-00-177-5597	19207	11639536	..SCREW,EXTERNALLY RE	5
17	PFOZZ	6220-01-368-1195	19207	11639547	..LENS,LIGHT	1
18	PAOZZ	6240-00-019-0877	58451	PL1251	.LAMP,INCANDESCENT	1
19	PAOZZ	6240-00-044-6914	08108	1683	.LAMP,INCANDESCENT	1
					END OF FIGURE	

UNIT, DIRECT SUPPORT AND GENERAL SUPPORT MAINTENANCE

SMALL EMPLACEMENT EXCAVATOR (SEE) AND HIGH MOBILITY MATERIAL HANDLER (HMMH)

LIGHTS – FLOODLIGHT, ELECTRIC REAR 419 540 71 54, AND VEHICLE UTILITY LIGHT D-01-6441-76

REPAIR PARTS LIST

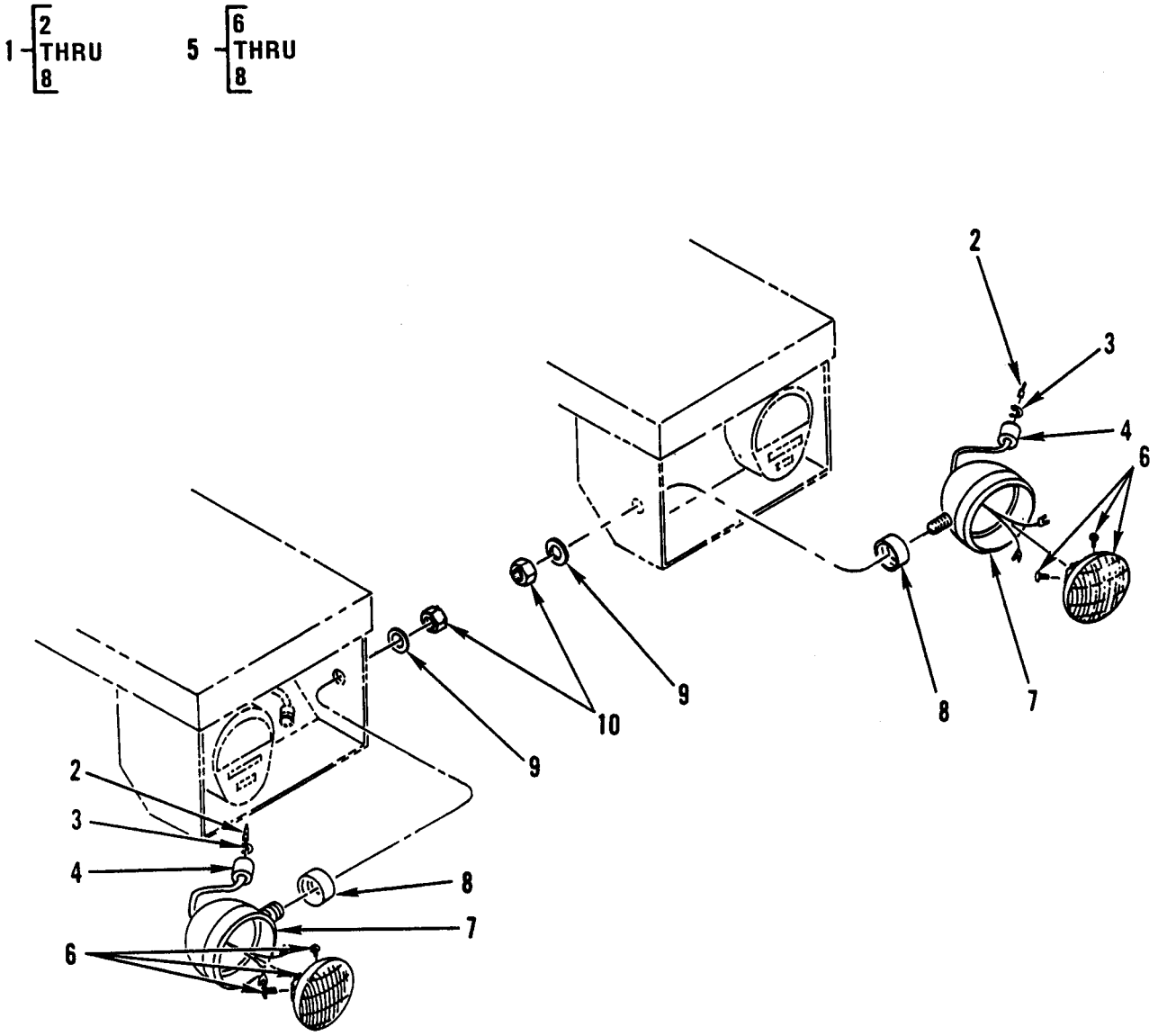

Figure 66. Lights – Electric Rear Floodlight and Vehicle Utility Light.

(1) ITEM NO	(2) SMR CODE	(3) NSN	(4) CAGEC	(5) PART NUMBER	(6) DESCRIPTION AND USABLE ON CODES (UOC)	(7) QTY
					GROUP 0609	
					FIG. 66 LIGHTS – FLOODLIGHT,ELECTRIC REAR 419 540 71 54, AND LIGHT, UTILITY, VEHICLE D-01-6441-76	
1	PAOOO	6220-01-256-3302	64678	419 540 71 54	FLOODLIGHT,ELECTRIC REAR	2
2	PAOZZ	5940-01-242-0009	64678	419 545 70 28	.TERMINAL,QUICK DISC.....	1
3	PFOZZ	5310-01-244-4524	64678	419 990 70 40	.WASHER,SLOTTED	1
4	PFOZZ	5970-01-243-5749	64678	419 545 71 45	.INSULATOR,FEMALE RE.....	1
5	PAOOO	6220-01-251-6757	81834	D-01-6441-76	.LIGHT,UTILITY,VEHIC.....	1
6	PAOZZ	6240-00-196-4518	74400	4502	..LAMP,INCANDESCENT.....	1
7	XAOZZ		19207	NPN-054	..HOUSING,LAMP	1
8	XAOZZ		19207	NPN-055	..SPACER	1
9	PFOZZ	5310-01-247-9269	64678	23-11670-050	WASHER,FLAT	2
10	PFOZZ	5310-01-244-2254	64678	230104 050001	NUT,PLAIN,HEXAGON	2
					END OF FIGURE	

UNIT, DIRECT SUPPORT AND GENERAL SUPPORT MAINTENANCE

SMALL EMPLACEMENT EXCAVATOR (SEE) AND HIGH MOBILITY MATERIAL HANDLER (HMMH)

LIGHTS – ELECTRIC FLOODLIGHT 419 540 71 54, AND VEHICLE UTILITY LIGHT D-01-6441-76

REPAIR PARTS LIST

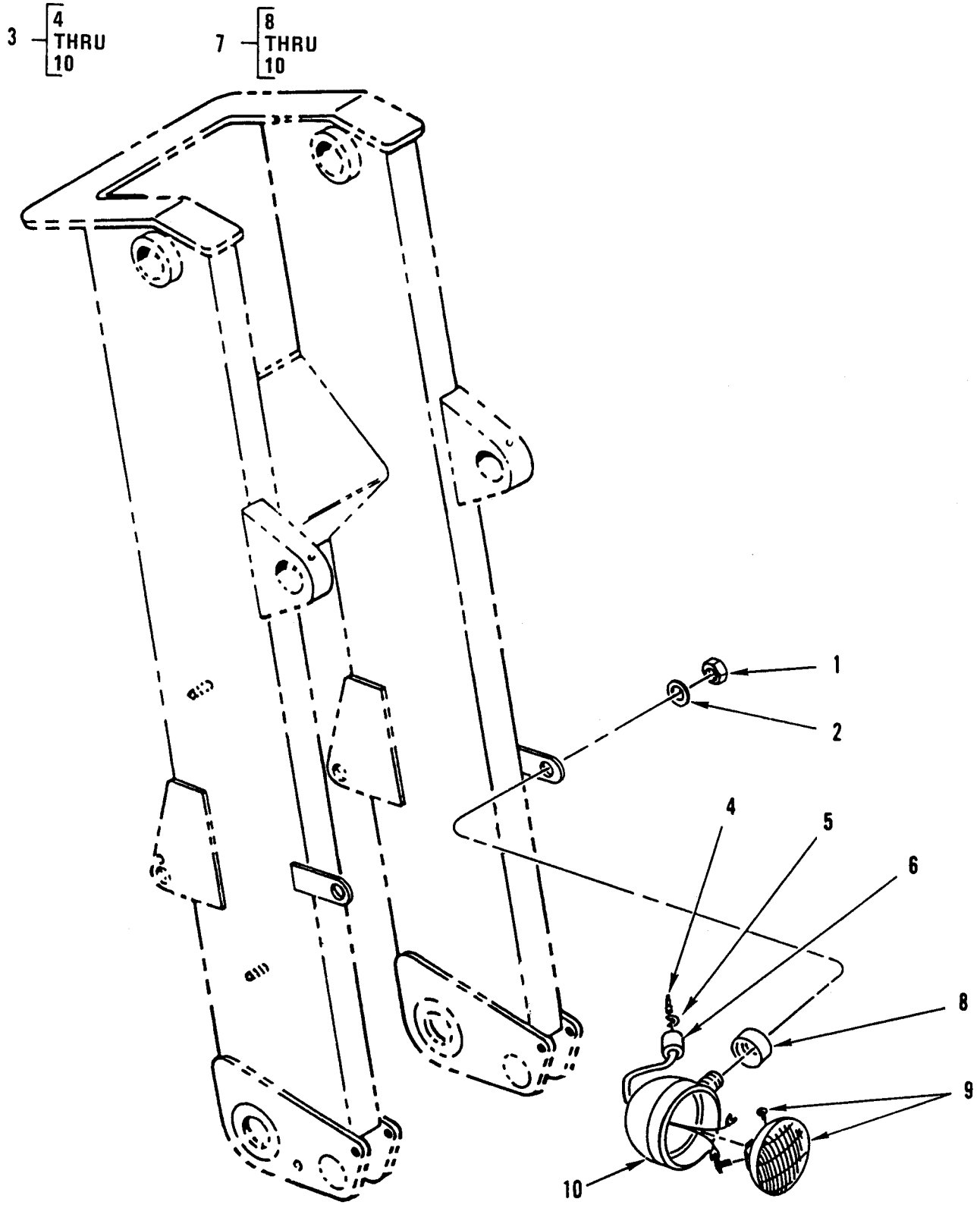

Figure 67. Lights – Electric Floodlight and Vehicle Utility Light.

(1) ITEM NO	(2) SMR CODE	(3) NSN	(4) CAGEC	(5) PART NUMBER	(6) DESCRIPTION AND USABLE ON CODES (UOC)	(7) QTY
					GROUP 0609	
					FIG. 67 LIGHTS – FLOODLIGHT, ELECTRIC 419 540 71 54, AND LIGHT, UTILITY, VEHICLE D-01-6441-76	
1	PFOZZ	5310-01-244-2254	64678	230104 050001	NUT,PLAIN,HEXAGON UOC:GE4.....	2
2	PFOZZ	5310-01-247-9269	64678	23-11670-050	WASHER,FLAT UOC:GE4.....	2
3	PAOOO	6220-01-256-3302	64678	419 540 71 54	FLOODLIGHT,ELECTRIC UOC:GE4.....	2
4	PAOZZ	5940-01-242-0009	64678	419 545 70 28	.TERMINAL,QUICK DISC UOC:GE4.....	1
5	PFOZZ	5310-01-244-4524	64678	419 990 70 40	.WASHER,SLOTTED UOC:GE4.....	1
6	PFOZZ	5970-01-243-5749	64678	419 545 71 45	.INSULATOR,FEMAL RE UOC:GE4.....	1
7	PAOOO	6220-01-251-6757	81834	D-01-6441-76	.LIGHT,UTILITY,VEHIC UOC:GE4.....	1
8	XAOZZ		19207	NPN-056	..SPACER UOC:GE4.....	1
9	PAOZZ	6240-00-196-4518	08108	4502	..LAMP,INCANDESCENT UOC:GE4.....	1
10	XAOZZ		19207	NPN-057	..HOUSING,LAMP UOC:GE4.....	1
					END OF FIGURE	

UNIT, DIRECT SUPPORT AND GENERAL SUPPORT MAINTENANCE

SMALL EMPLACEMENT EXCAVATOR (SEE) AND HIGH MOBILITY MATERIAL HANDLER (HMMH)

LIGHTS – REAR LIGHT BOX ASSEMBLY

REPAIR PARTS LIST

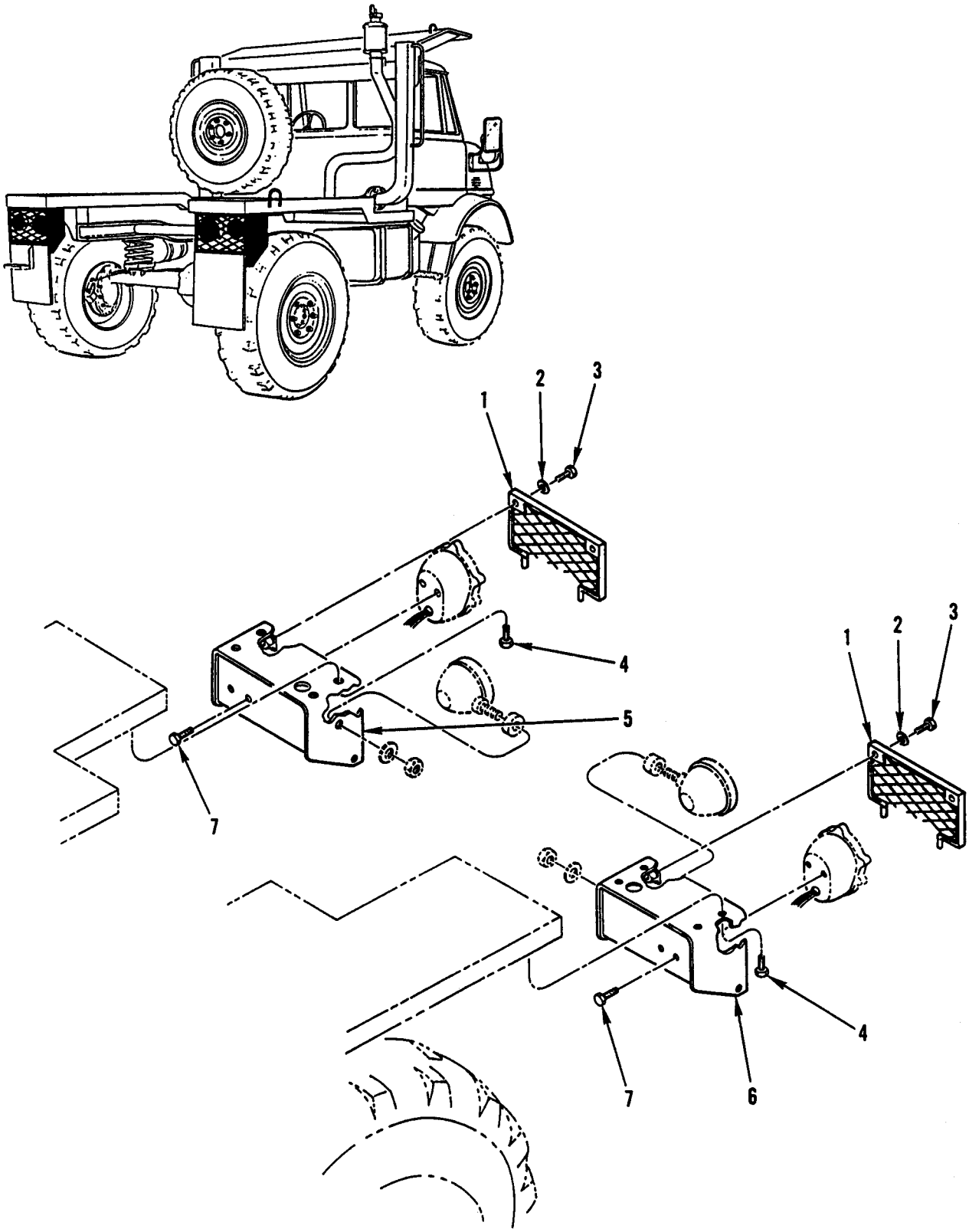

Figure 68. Lights – Rear Light Box Assembly.

(1) ITEM NO	(2) SMR CODE	(3) NSN	(4) CAGEC	(5) PART NUMBER	(6) DESCRIPTION AND USABLE ON CODES (UOC)	(7) QTY
					GROUP 0609	
					FIG. 68 LIGHTS – REAR LIGHT BOX ASSEMBLY	
1	PFOZZ	6220-01-242-0345	64678	419 540 71 80	GUARD,LAMP REAR	2
2	PFOZZ	5310-01-158-3188	56161	10502526	WASHER,LOCK	2
3	PFOZZ	5306-01-247-9361	64678	000933 006136	BOLT,MACHINE.....	4
4	PFOZZ	5306-01-240-5166	15526	933 M10 30F	BOLT,MACHINE.....	8
5	PFOZZ	2540-01-242-1212	64678	419 540 71 73	BOX,ACCESSORIES STO RIGHT.....	1
6	PFOZZ	2540-01-242-2812	64678	419 540 70 73	BOX,ACCESSORIES STO LEFT	1
7	PFOZZ	5305-01-246-0609	64678	23-09436-125	SCREW,CAP,HEXAGON H.....	4
					END OF FIGURE	

UNIT, DIRECT SUPPORT AND GENERAL SUPPORT MAINTENANCE

SMALL EMPLACEMENT EXCAVATOR (SEE) AND HIGH MOBILITY MATERIAL HANDLER (HMMH)

LIGHTS – VEHICULAR REAR TAILLIGHT 12375837, BODY ASSEMBLY 12375838, AND LIGHT LENS 12375841

REPAIR PARTS LIST

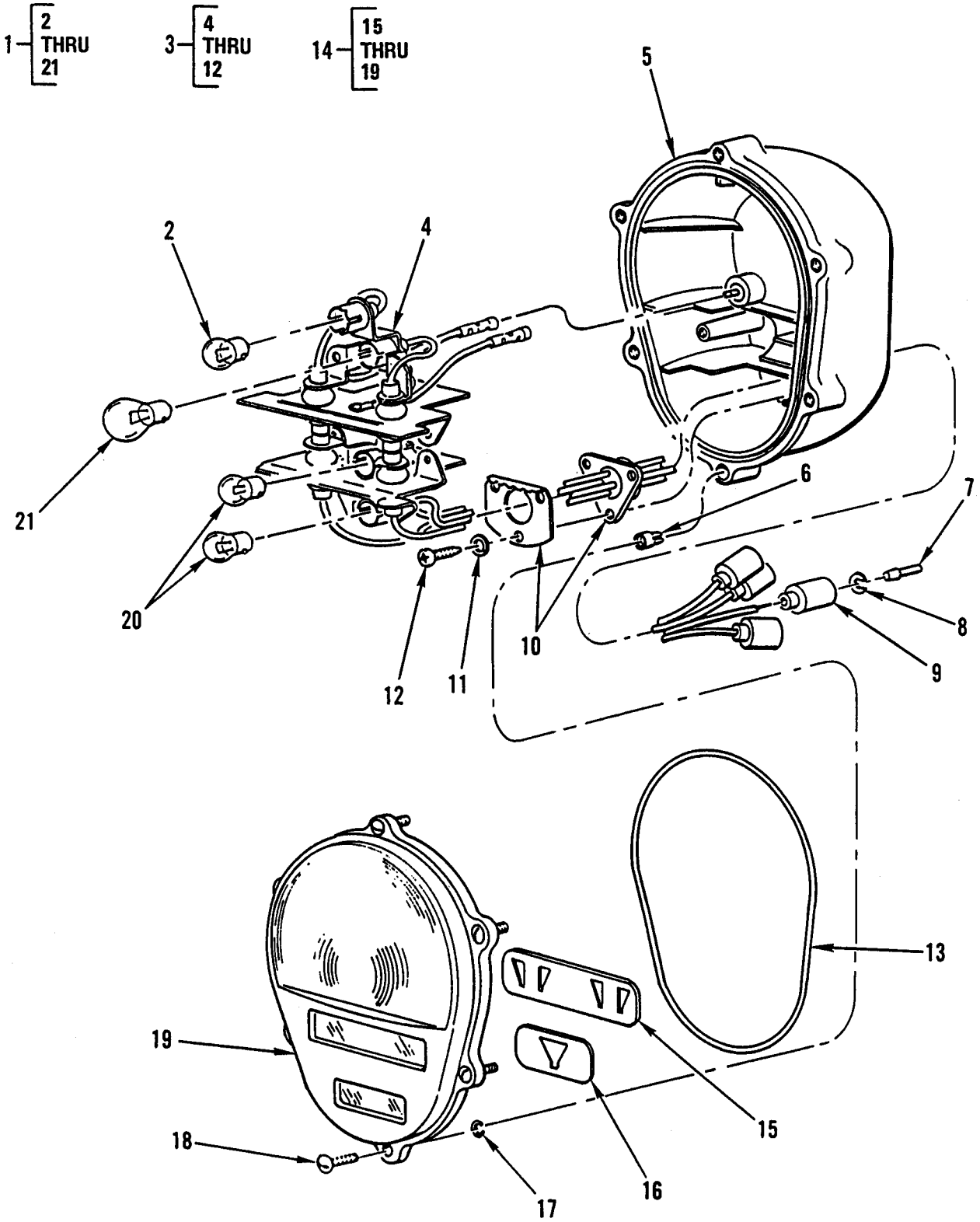

Figure 69. Lights – Vehicular Rear Taillight, Body Assembly, and Light Lens.

(1) ITEM NO	(2) SMR CODE	(3) NSN	(4) CAGEC	(5) PART NUMBER	(6) DESCRIPTION AND USABLE ON CODES (UOC)	(7) QTY
					GROUP 0609	
					FIG. 69 LIGHTS – TAILLIGHT, VEHICULAR REAR 12375837, BODY ASSEMBLY 12375838, AND LENS, LIGHT 12375841	
1	PAOOO	6220-01-372-3883	19207	12375837	TAILLIGHT,VEHICULAR REAR	2
2	PAOOO	6240-00-019-3093	58536	A52463-1-09	.LAMP,INCANDESCENT.....	1
3	XAOOO		19207	12375838	.BODY ASSEMBLY	1
4	PFOZZ	6250-01-203-5666	19207	8694539	..LAMPHOLDER	1
5	PFOZZ	6220-01-163-4900	19207	11639522	..HOUSING,LIGHT	1
6	XBOZZ		19207	11639521	..INSERT,SCREW THREAD.....	6
7	PFOZZ	5999-00-057-2929	19204	572929	..CONTACT,ELECTRICAL	4
8	PFOZZ	5310-00-833-8567	19207	8338567	..WASHER,SLOTTED	4
9	PFOZZ	5935-00-572-9180	19207	8338566	..SHELL,ELECTRICAL CO.....	4
10	PFOZZ	2590-01-030-3763	19207	11639524	..BRACKET AND CABLE ASSEMBLY	1
11	PFOZZ	5310-00-045-3299	96906	MS35338-42	..WASHER,LOCK	5
12	PFOZZ	5305-00-432-4170	96906	MS51861-35	..SCREW,TAPPING.....	5
13	PAOZZ	5331-00-462-0907	19207	11639519-2	.O-RING.....	1
14	PFOOO	6220-01-359-2870	19207	12375841	.LENS,LIGHT.....	1
15	PAOZZ	6220-00-346-8942	19207	7526015	..LENS,LIGHT.....	1
16	PAOZZ	6210-00-133-7722	19207	8747995	..FILTER,SIGNAL LIGHT.....	1
17	PFOZZ	5340-00-732-0642	19207	7320642	..CLIP,RETAINING	6
18	PFOZZ	5305-00-177-5597	19207	11639536	..SCREW,EXTERNALLY RE	6
19	XAOZZ		19207	NPN-058	..RETAINER,LENS	1
20	PAOZZ	6240-00-019-0877	58451	PL1251	.LAMP,INCANDESCENT.....	2
21	PAOZZ	6240-00-044-6914	08108	1683	.LAMP,INCANDESCENT.....	1
					END OF FIGURE	

UNIT, DIRECT SUPPORT AND GENERAL SUPPORT MAINTENANCE

SMALL EMPLACEMENT EXCAVATOR (SEE) AND HIGH MOBILITY MATERIAL HANDLER (HMMH)

LIGHTS – DOME LIGHT

REPAIR PARTS LIST

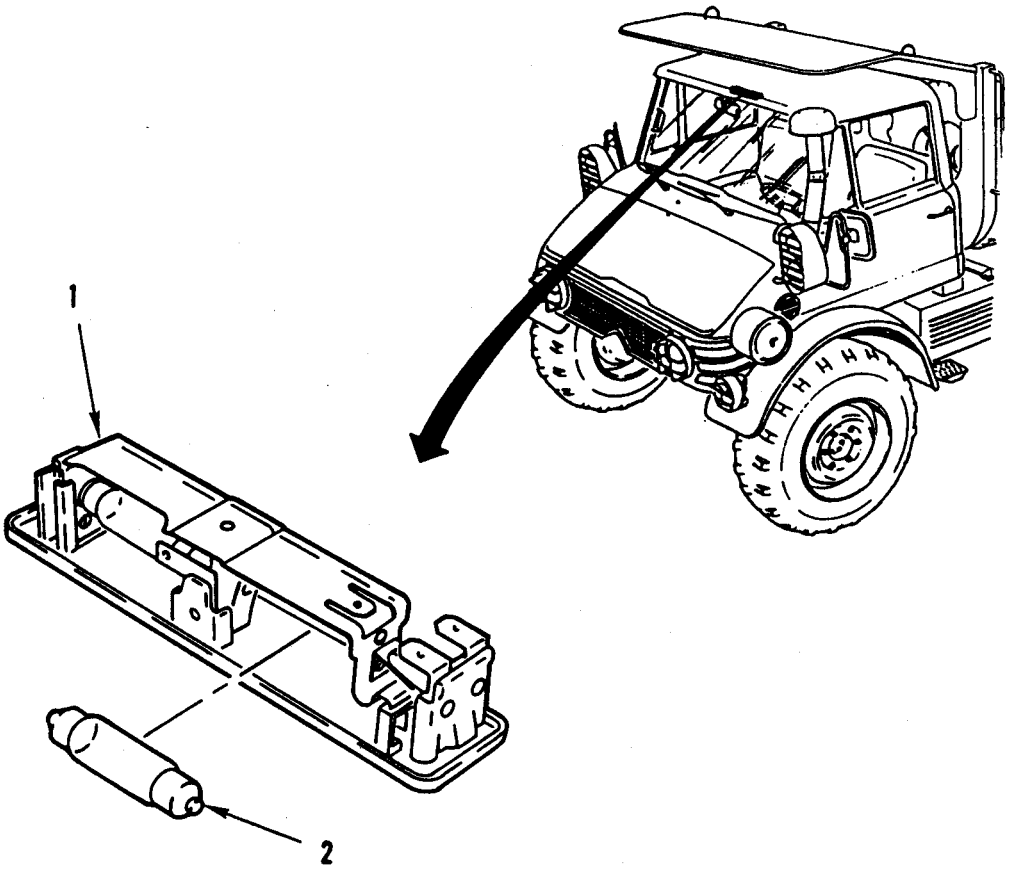

Figure 70. Lights – Dome Light.

(1) ITEM NO	(2) SMR CODE	(3) NSN	(4) CAGEC	(5) PART NUMBER	(6) DESCRIPTION AND USABLE ON CODES (UOC)	(7) QTY
					GROUP 0609	
					FIG. 70 LIGHTS – DOME LIGHT	
1	PFOZZ	6220-01-256-9835	64678	123 820 08 01	LIGHT,DOME	1
2	PAOZZ	6240-01-242-7733	64678	000 544 63 94	LAMP,INCANDESCENT 24V-10W.....	2
					END OF FIGURE	

UNIT, DIRECT SUPPORT AND GENERAL SUPPORT MAINTENANCE

SMALL EMPLACEMENT EXCAVATOR (SEE) AND HIGH MOBILITY MATERIAL HANDLER (HMMH)

SENDING UNITS AND WARNING SWITCHES – TRAILER BRAKE PRESSURE SWITCH, BRAKE PUSH SWITCH, ENGINE START SWITCH, AND HAZARD RELAY

REPAIR PARTS LIST

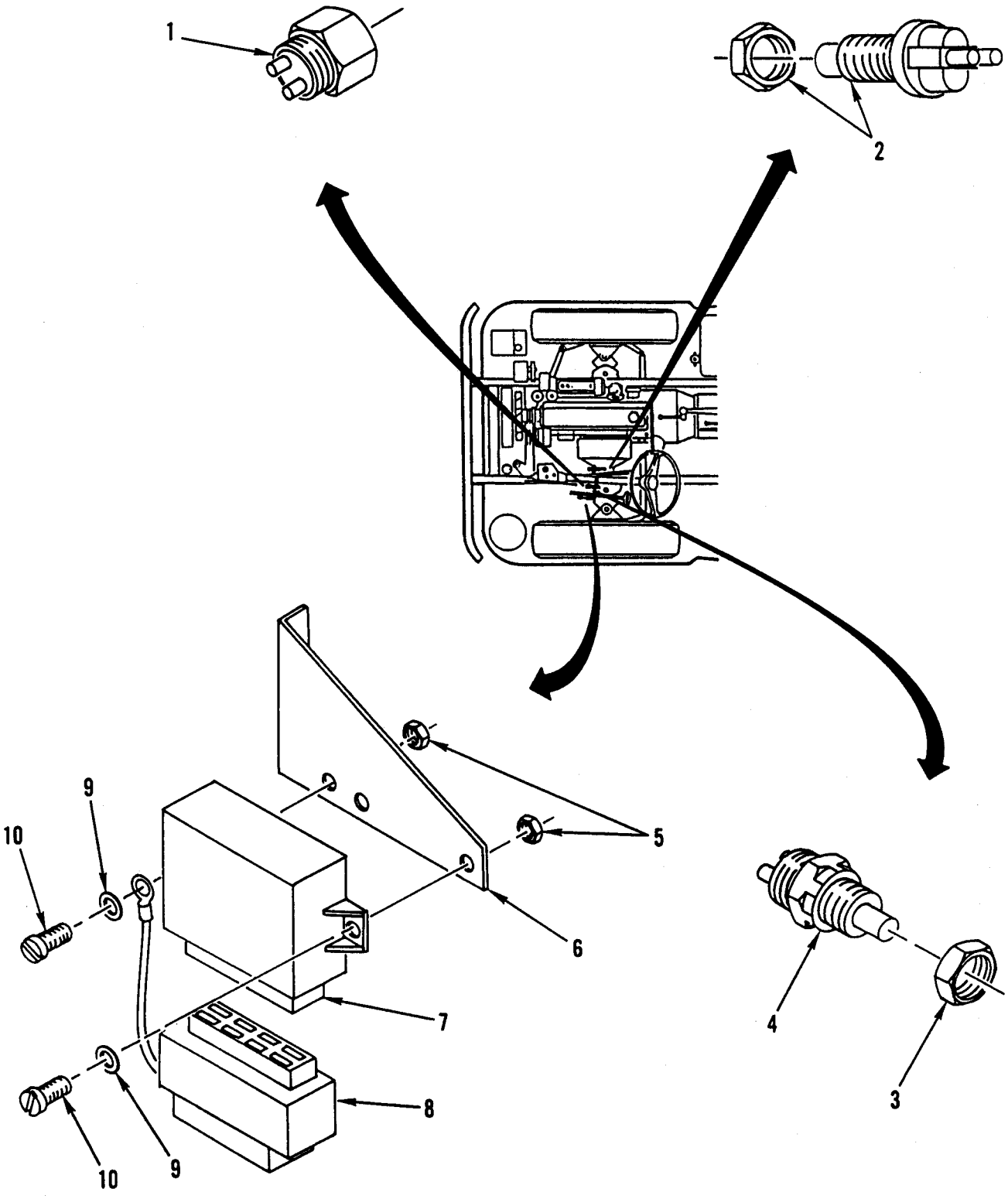

Figure 71. Sending Units and Warning Switches – Trailer Pressure Switch, Brake Push Switch, Engine Start Switch, and Hazard Relay.

(1) ITEM NO	(2) SMR CODE	(3) NSN	(4) CAGEC	(5) PART NUMBER	(6) DESCRIPTION AND USABLE ON CODES (UOC)	(7) QTY
					GROUP 0610	
					FIG. 71 SENDING UNITS AND WARNING SWITCHES – PRESSURE SWITCH, BRAKE PUSH SWITCH, ENGINE START SWITCH, AND HAZARD RELAY	
1	PAOZZ	5930-01-241-8503	64678	000 545 75 14	SWITCH,PRESSURE	1
2	PFOZZ	5930-01-237-8754	64678	000 545 35 09	SWITCH,PUSH	1
3	PFOZZ	5310-01-244-7564	64678	419 291 00 72	NUT,PLAIN,HEXAGON	1
4	PAOZZ	2920-01-224-5554	D8129	03 8878 00	SWITCH,ENGINE START	1
5	PFOZZ	5310-01-241-6349	64678	913004 006002	NUT,SELF-LOCKING,HE	2
6	PFOZZ	5340-01-286-0897	64678	404 542 16 40	BRACKET,ANGLE	1
7	PAOZZ	5945-01-246-2379	64678	002 544 78 32	RELAY,HYBRID	1
8	PAOZZ	5915-01-295-8468	64678	000 547 02 03	FILTER,RADIO FREQUE UOC:GE1	1
9	PFOZZ	5310-01-174-7613	S3465	4537800-256	WASHER,FLAT	2
10	PFOZZ	5330-01-171-4703	S3465	4536226-835	SCREW,MACHINE	2
					END OF FIGURE	

UNIT, DIRECT SUPPORT AND GENERAL SUPPORT MAINTENANCE

SMALL EMPLACEMENT EXCAVATOR (SEE) AND HIGH MOBILITY MATERIAL HANDLER (HMMH)

SENDING UNITS AND WARNING SWITCHES – ENGINE TEMPERATURE SWITCH, OIL PRESSURE SENDING UNIT, AND WATER TEMPERATURE SENDING UNIT

REPAIR PARTS LIST

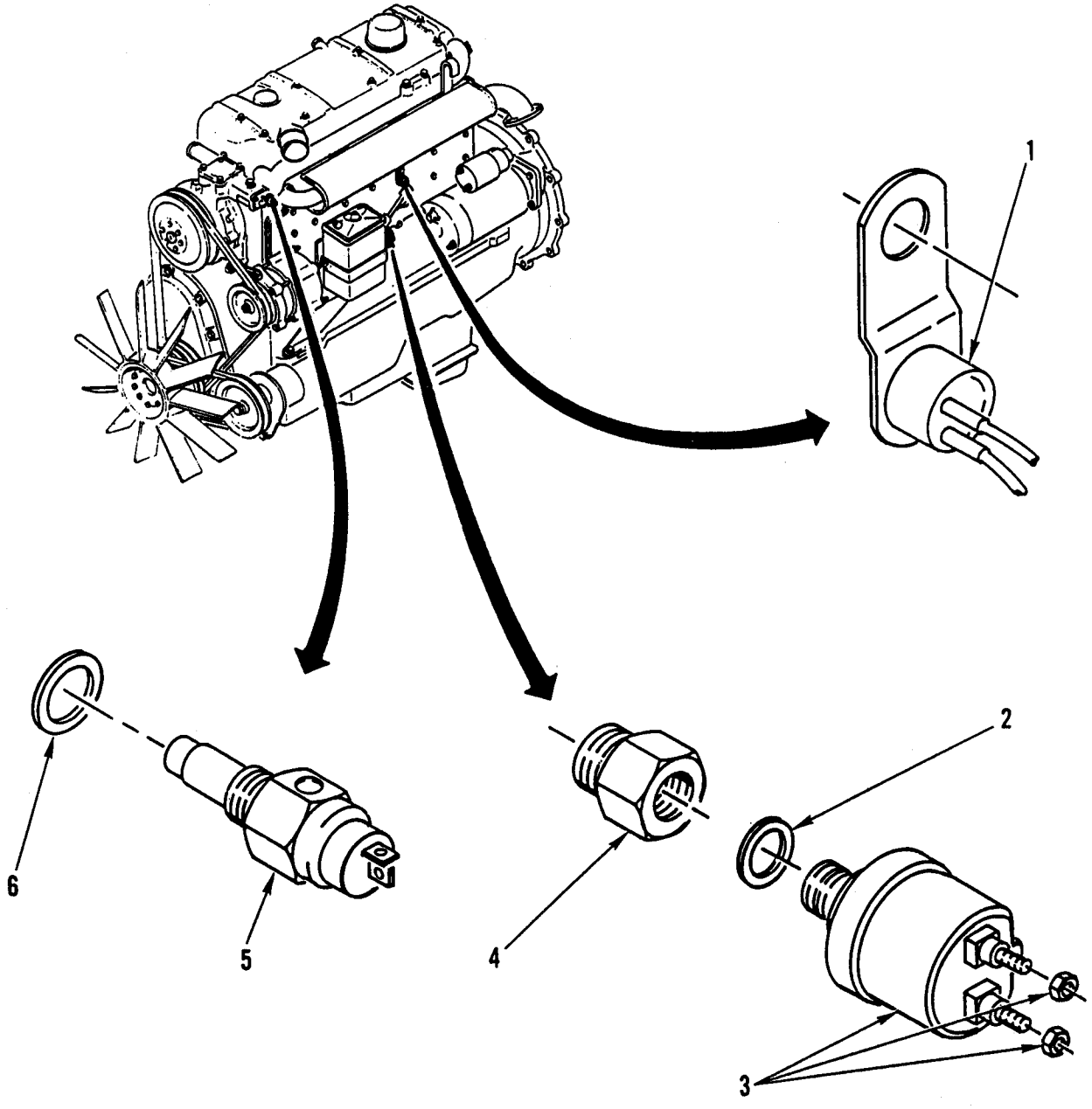

Figure 72. Sending Units and Warning Switches – Engine Temperature Switch, Oil Pressure Sending Unit, and Water Temperature Sending Unit.

(1) ITEM NO	(2) SMR CODE	(3) NSN	(4) CAGEC	(5) PART NUMBER	(6) DESCRIPTION AND USABLE ON CODES (UOC)	(7) QTY
					GROUP 0610	
					FIG. 72 SENDING UNITS AND WARNING SWITCHES – ENGINE TEMPERATURE SWITCH, OIL PRESSURE SENDING UNIT, AND WATER TEMPERATURE SENDING UNIT	
1	PAOZZ	2990-01-242-2992	53203	300 789	SWITCH,ENGINE TEMPE PART OF KIT P/N 64 021	1
2	PAOZZ	5330-01-238-7282	64678	007603 014400	SEAL RING,METAL	1
3	PAOZZ	6620-01-241-2306	D2439	360.081 034 002	TRANSMITTER,PRESSURE	1
4	PFOZZ	4730-01-234-7819	64678	352 188 00 35	REDUCER,BOSS	1
5	PAOZZ	6680-01-224-6405	64678	002-542-7317	THERMOSTAT,FLOW CONTROL UOC:GE1	1
6	PAOZZ	5330-00-140-7701	D8046	007603014100	RING,SEAL UOC:GE1	1
					END OF FIGURE	

UNIT, DIRECT SUPPORT AND GENERAL SUPPORT MAINTENANCE

SMALL EMPLACEMENT EXCAVATOR (SEE) AND HIGH MOBILITY MATERIAL HANDLER (HMMH)

SENDING UNITS AND WARNING SWITCHES – BACKUP PRESSURE SWITCH (SEE), DIFFERENTIAL LOCK PRESSURE SWITCH, PTO SWITCH, AND INTERSPEED SWITCH

REPAIR PARTS LIST

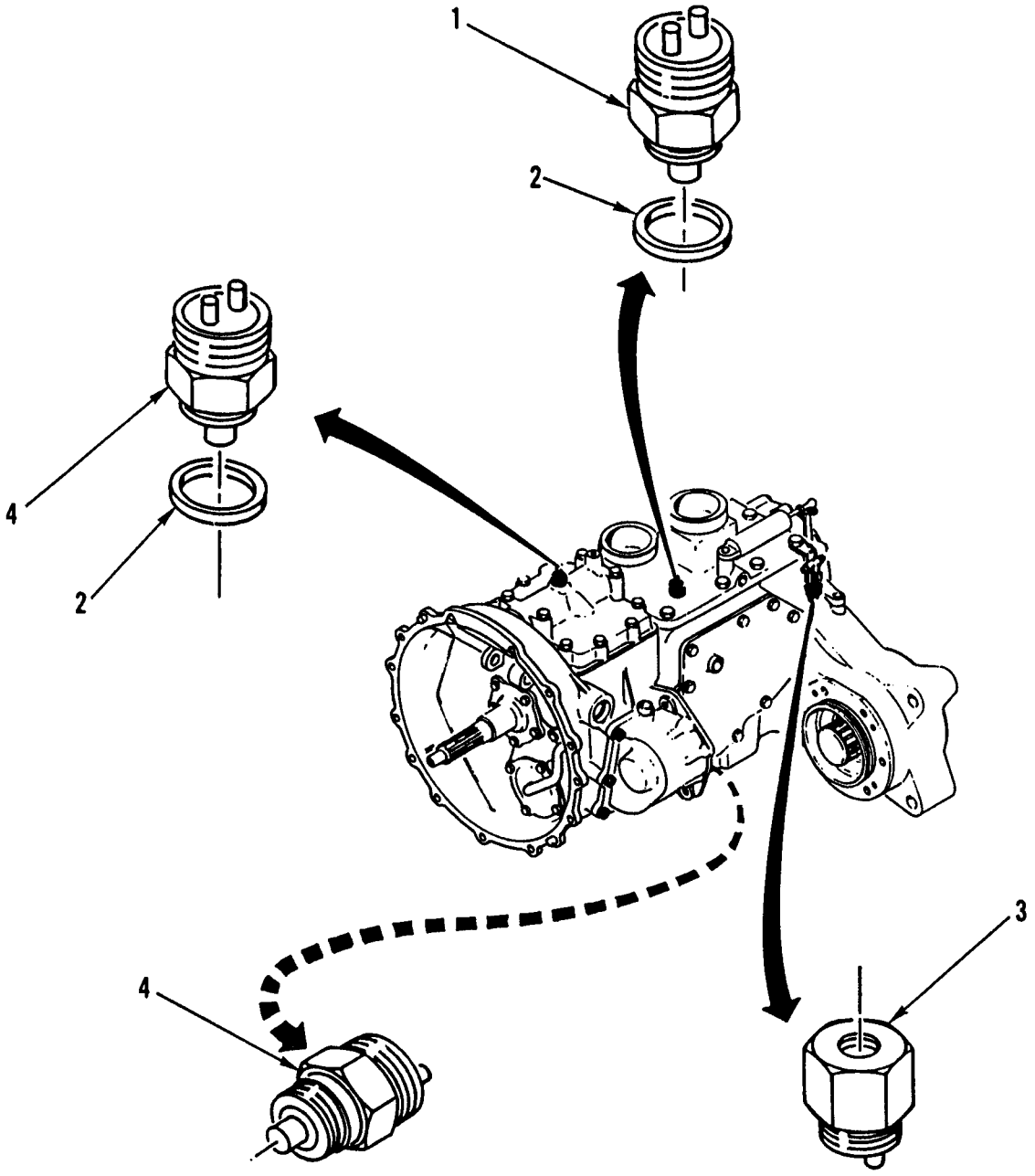

Figure 73. Sending Units and Warning Switches – Backup Pressure Switch, Differential Lock Pressure Switch, PTO Switch, and Interspeed Switch.

(1) ITEM NO	(2) SMR CODE	(3) NSN	(4) CAGEC	(5) PART NUMBER	(6) DESCRIPTION AND USABLE ON CODES (UOC)	(7) QTY
					GROUP 0610	
					FIG. 73 SENDING UNITS AND WARNING SWITCHES – BACKUP PRESSURE SWITCH, DIFFERENTIAL LOCK PRESSURE SWITCH, PTO SWITCH, AND INTERSPEED SWITCH	
1	PAOZZ	5930-01-237-3748	64678	000 545 82 09	SWITCH,PRESSURE UOC:GE1	1
1	PAOZZ	5930-01-237-3748	64678	000 545 82 09	SWITCH,PRESSURE UOC:GE4	3
2	PFFZZ	5365-00-148-1084	D8046	007603018104	RING,SEAL	2
3	PAOZZ	5930-01-241-8503	64678	000 545 75 14	SWITCH,PRESSURE	1
4	PFFZZ	5930-01-239-4436	1GN08	311 080	SWITCH,PRESSURE	1
					END OF FIGURE	

UNIT, DIRECT SUPPORT AND GENERAL SUPPORT MAINTENANCE

SMALL EMPLACEMENT EXCAVATOR (SEE) AND HIGH MOBILITY MATERIAL HANDLER (HMMH)

SENDING UNITS AND WARNING SWITCHES – AIR CLEANER PUSH SWITCH AND PARKING BRAKE PUSH SWITCH

REPAIR PARTS LIST

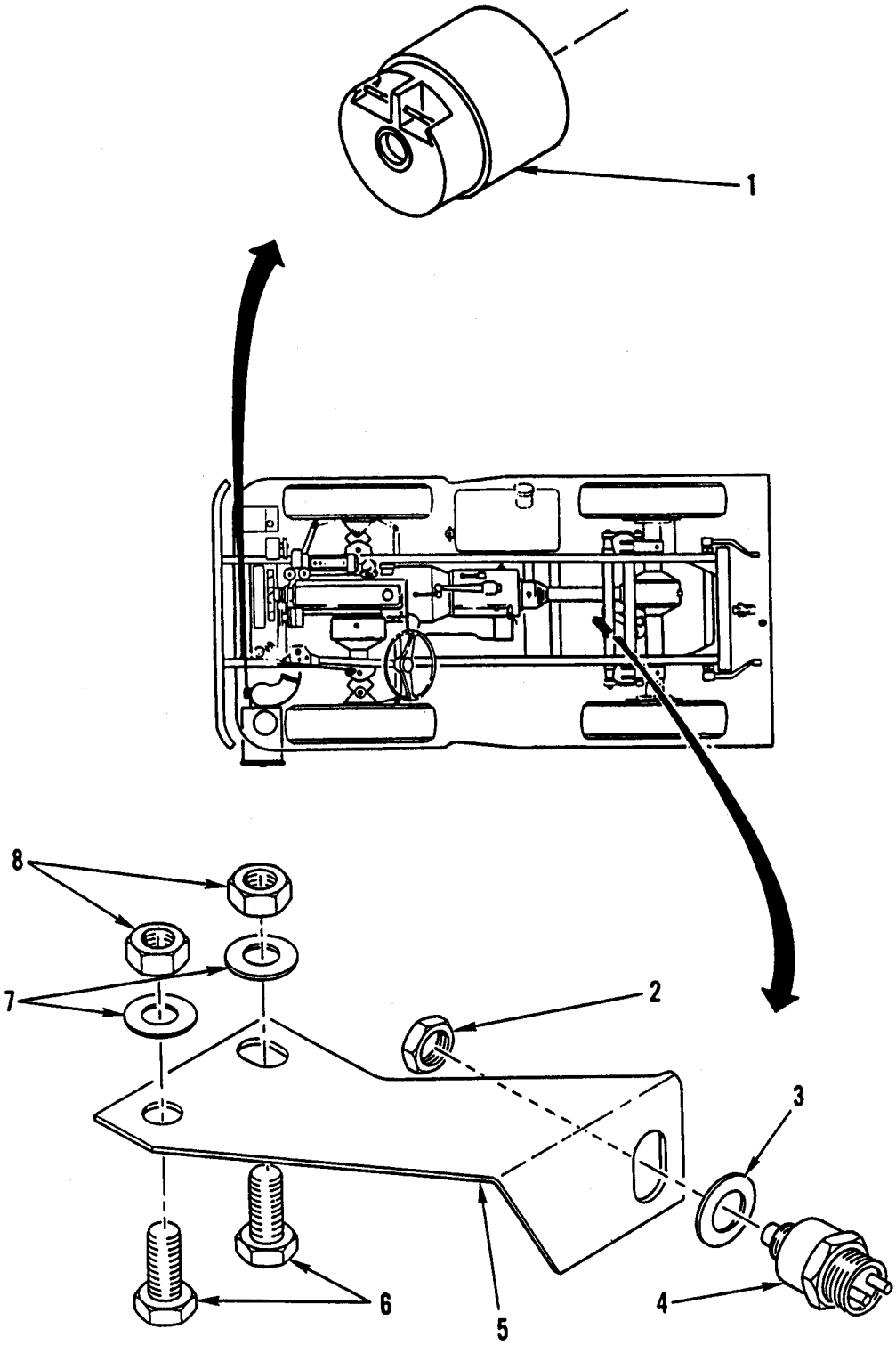

Figure 74. Sending Units and Warning Switches – Air Cleaner Push Switch and Parking Brake Push Switch .

(1) ITEM NO	(2) SMR CODE	(3) NSN	(4) CAGEC	(5) PART NUMBER	(6) DESCRIPTION AND USABLE ON CODES (UOC)	(7) QTY
					GROUP 0610	
					FIG. 74 SENDING UNITS AND WARNING SWITCHES – AIR CLEANER PUSH SWITCH, AND PARKING BRAKE PUSH SWITCH	
1	PAOZZ	2990-01-241-9396	B1385	REX 77-0075	SWITCH,VACUUM	1
2	PFOZZ	5310-01-122-5483	18876	PAN924-001-08	NUT,PLAIN,HEXAGON	1
3	PFOZZ	5310-01-012-6821	99193	S8157N49-050	WASHER,FLAT UOC:GE1	1
4	PAOZZ	5930-01-288-4161	D8143	1924 3004	SWITCH,SENSITIVE	1
5	PFOZZ	5340-01-298-4189	64678	419 542 09 40	BRACKET,ANGLE	1
6	PFOZZ	5305-01-286-5438	64678	000933 010157	SCREW,CAP,HEXAGON H	2
7	PFOZZ	5310-01-174-7615	64678	000125 010518	WASHER,FLAT UOC:GE1	2
8	PFOZZ	5310-01-167-1863	S3465	4537800-712	NUT,PLAIN,HEXAGON	2
					END OF FIGURE	

UNIT, DIRECT SUPPORT AND GENERAL SUPPORT MAINTENANCE

SMALL EMPLACEMENT EXCAVATOR (SEE) AND HIGH MOBILITY MATERIAL HANDLER (HMMH)

SENDING UNITS AND WARNING SWITCHES – FUEL LEVEL GAUGE

REPAIR PARTS LIST

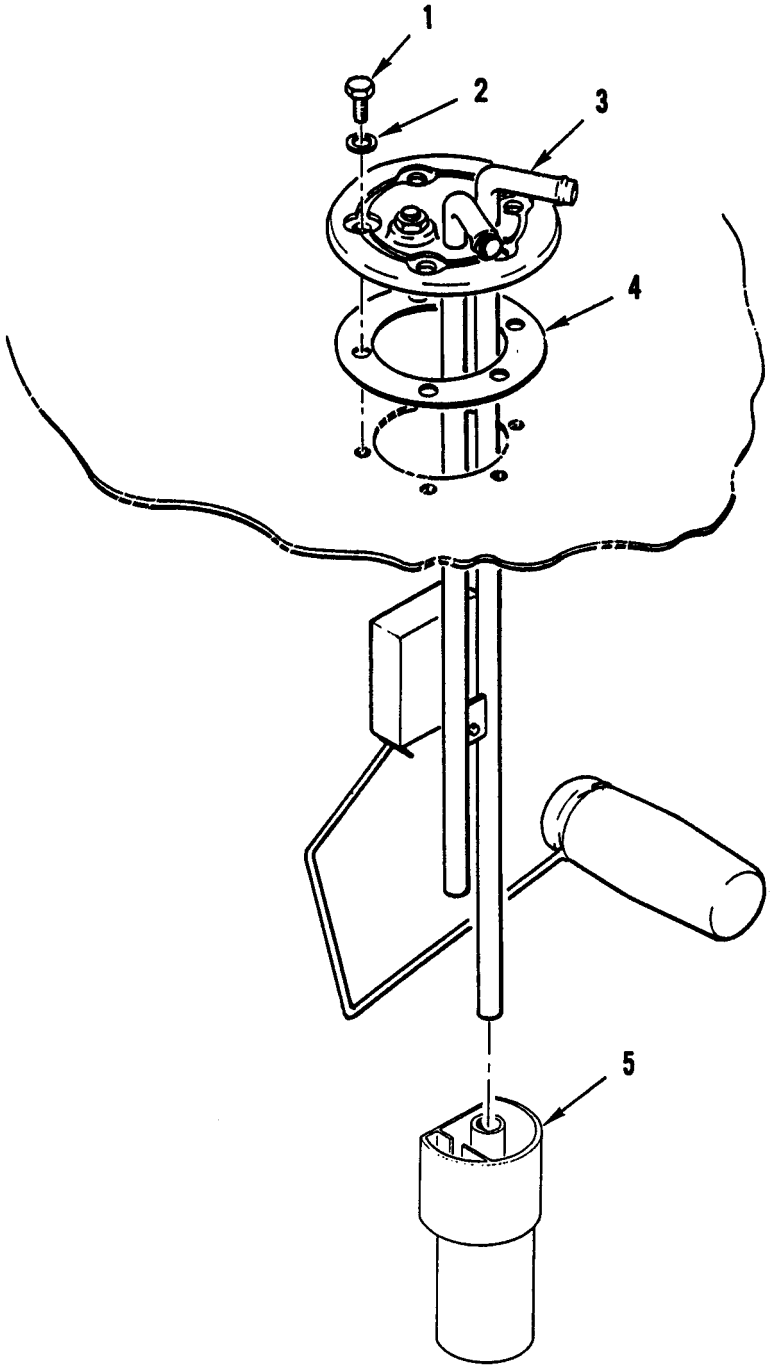

Figure 75. Sending Units and Warning Switches – Fuel Level Gauge.

(1) ITEM NO	(2) SMR CODE	(3) NSN	(4) CAGEC	(5) PART NUMBER	(6) DESCRIPTION AND USABLE ON CODES (UOC)	(7) QTY
					GROUP 0610	
					FIG. 75 SENDING UNITS AND WARNING SWITCHES – FUEL LEVEL GAGE	
1	PFOZZ	5305-01-315-9679	64678	000084 005180	SCREW,MACHINE	5
2	PFOZZ	5330-01-238-4623	64678	066 997 06 40	GASKET	5
3	PAOZZ	6680-01-235-9111	64678	419 542 00 17	TRANSMITTER,LIQUID	1
4	PAOZZ	5330-01-241-6440	D2439	2 251 243	GASKET	1
5	PAOZZ	2910-01-237-0375	64678	309 470 00 06	FILTER ELEMENT,FLUI	1
					END OF FIGURE	

UNIT, DIRECT SUPPORT AND GENERAL SUPPORT MAINTENANCE

SMALL EMPLACEMENT EXCAVATOR (SEE) AND HIGH MOBILITY MATERIAL HANDLER (HMMH)

SENDING UNITS AND WARNING SWITCHES – STE/ICE-R PRESSURE SWITCH, RESISTOR, SHUNT, AND TACHOMETER

REPAIR PARTS LIST

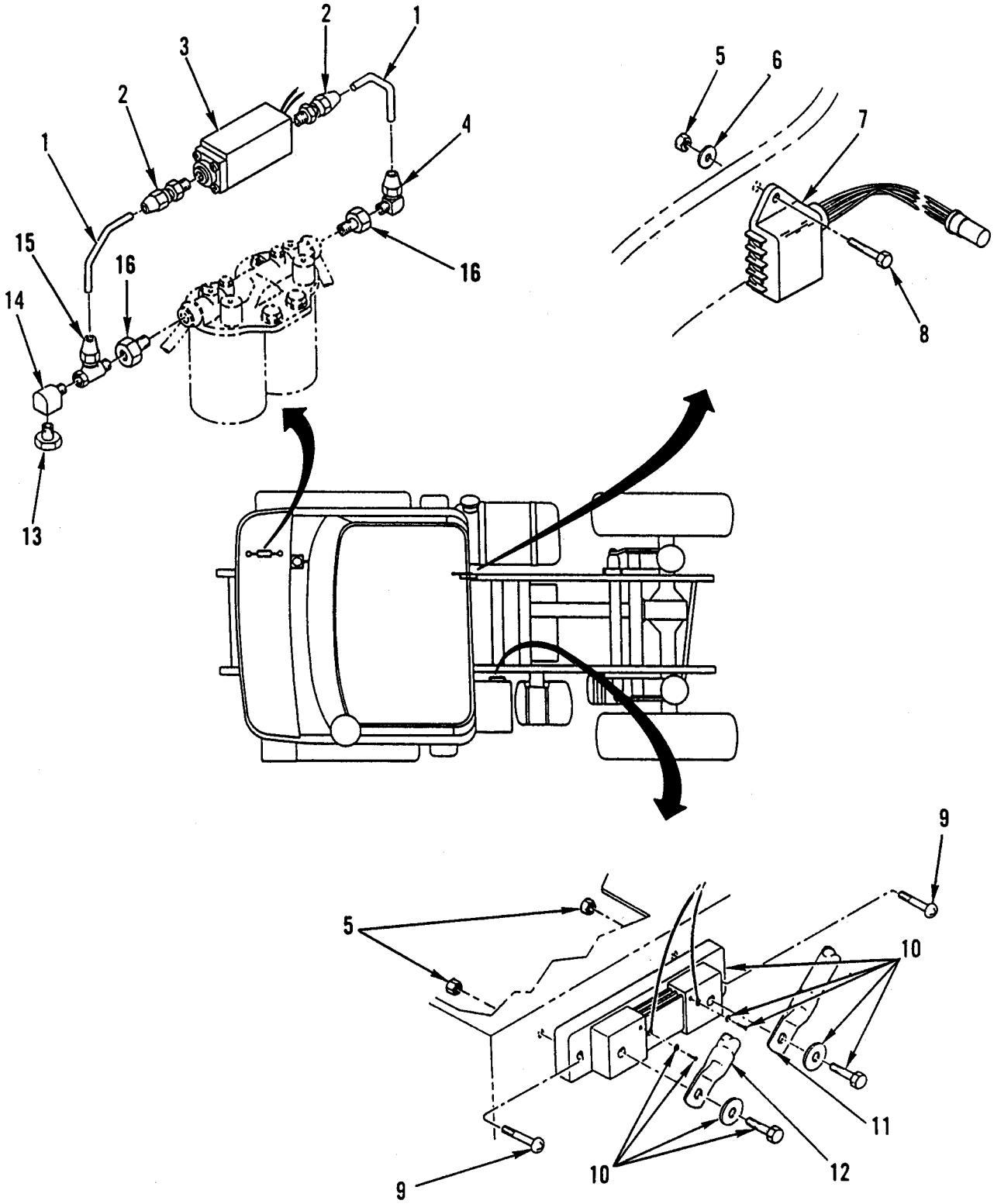

Figure 76. Sending Units and Warning Switches – STE/ICE-R Switch, Resistor, Shunt, and Tachometer.

(1) ITEM NO	(2) SMR CODE	(3) NSN	(4) CAGEC	(5) PART NUMBER	(6) DESCRIPTION AND USABLE ON CODES (UOC)	(7) QTY
					GROUP 0610	
					FIG. 76 SENDING UNITS AND WARNING SWITCHES – STE/ICE-R PRESSURE SWITCH, RESISTOR, SHUNT, AND TACHOMETER	
1	PAOZZ	4710-01-285-2761	64678	419 985 70 70	TUBE,BENT,METALLIC 1/4 INCH OD	2
2	PFOZZ	4730-00-270-4580	93061	68AB-4-4	ADAPTER,STRAIGHT,PI	2
3	PAOZZ	5930-01-148-8874	19207	12258938	SWITCH,PRESSURE.....	1
4	PFOZZ	4730-01-417-2737	93061	269CL-4-2	ELBOW,PIPE TO TUBE	1
5	PFOZZ	5310-01-171-4689	S3465	4536226-786	NUT,PLAIN,HEXAGON	1
6	PFOZZ	5310-01-281-3841	64678	23-9427-025	WASHER,FLAT	1
7	PAOZZ	5905-01-287-2241	75418	1039-07134-01	RESISTOR NETWORK,FI	1
8	PFOZZ	5306-01-247-7600	64678	000931 006118	BOLT,MACHINE.....	1
9	PFOZZ	5305-01-299-4602	64678	000933 006058	SCREW,CAP,HEXAGON H.....	2
10	PAOZZ	6625-01-169-2437	09179	12258937-1	SHUNT,INSTRUMENT 100 MILLIAMPERES..	1
11	PAOZZ	6150-01-284-5584	64678	419 540 73 38	LEAD,ELECTRICAL 410 MM LONG UOC:GE1.....	1
12	PAOZZ	6150-01-285-3344	64678	419 540 72 38	LEAD,ELECTRICAL 940 MM LONG UOC:GE1.....	1
13	PFOZZ	4730-01-284-9124	64678	23-09256-003	PLUG,PIPE 1/4 NPT.....	1
14	PFOZZ	4730-01-284-9065	93061	VS2202 P4-2	ELBOW,PIPE 90 DEGREE.....	1
15	PFOZZ	4730-01-284-9081	79470	176X4	TEE,PIPE TO TUBE	1
16	PFOZZ	4730-01-313-4573	64678	352 990 11 63	BOLT,FLUID PASSAGE	2
					END OF FIGURE	

UNIT, DIRECT SUPPORT AND GENERAL SUPPORT MAINTENANCE

SMALL EMPLACEMENT EXCAVATOR (SEE) AND HIGH MOBILITY MATERIAL HANDLER (HMMH)

HORN, SIREN – BACKUP ALARM AND ENGINE HIGH COOLANT TEMPERATURE/LOW OIL PRESSURE ALARM

REPAIR PARTS LIST

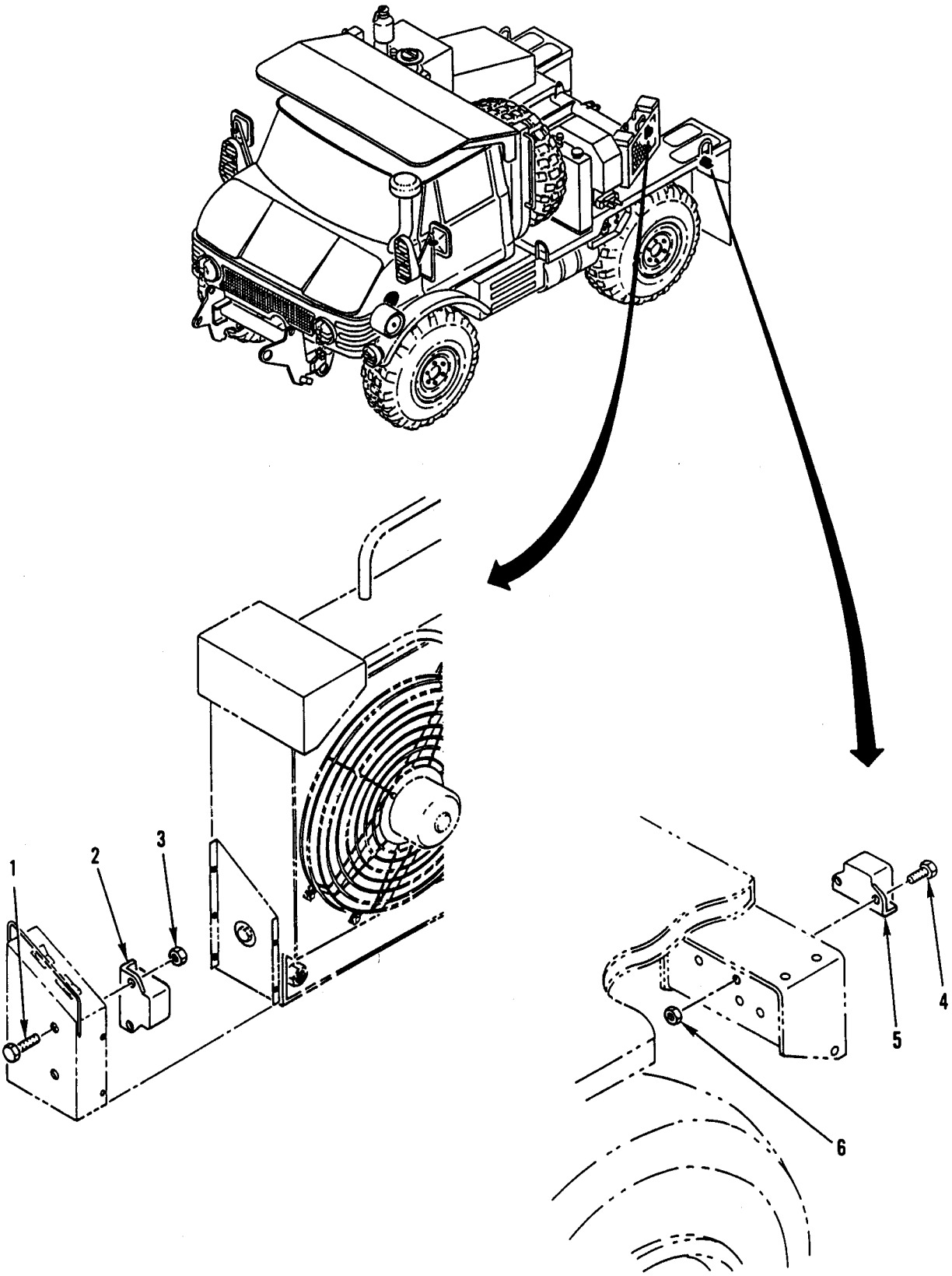

Figure 77. Horn, Siren – Backup Alarm and Engine High Coolant Temperature/Low Oil Pressure Alarm.

(1) ITEM NO	(2) SMR CODE	(3) NSN	(4) CAGEC	(5) PART NUMBER	(6) DESCRIPTION AND USABLE ON CODES (UOC)	(7) QTY
					GROUP 0611	
					FIG. 77 HORN, SIREN – BACKUP ALARM, AND ENGINE HIGH COOLANT TEMPERATURE/LOW OIL PRESSURE ALARM	
1	PAOZZ	5306-01-247-9361	64678	000933 006136	BOLT,MACHINE	2
2	PAOZZ	6350-01-306-8138	62465	CT-530-2LDW	ALARM-MONITOR	1
3	PAOZZ		D8286	DIN934-M6-6-A2L	NUT,PLAIN,HEXAGON	2
4	PAOZZ	5305-01-386-3972	64678	000933 006078	SCREW,CAP,HEXAGON H	2
5	PAOZZ	6350-01-210-8149	57013	240	ALARM,BACK-UP,VEHIC	1
6	PFOZZ	5310-01-171-4689	S3465	4536226-786	NUT,PLAIN,HEXAGON	2
					END OF FIGURE	

UNIT, DIRECT SUPPORT AND GENERAL SUPPORT MAINTENANCE

SMALL EMPLACEMENT EXCAVATOR (SEE) AND HIGH MOBILITY MATERIAL HANDLER (HMMH)

HORN, SIREN – LOW PRESSURE WARNING BUZZER

REPAIR PARTS LIST

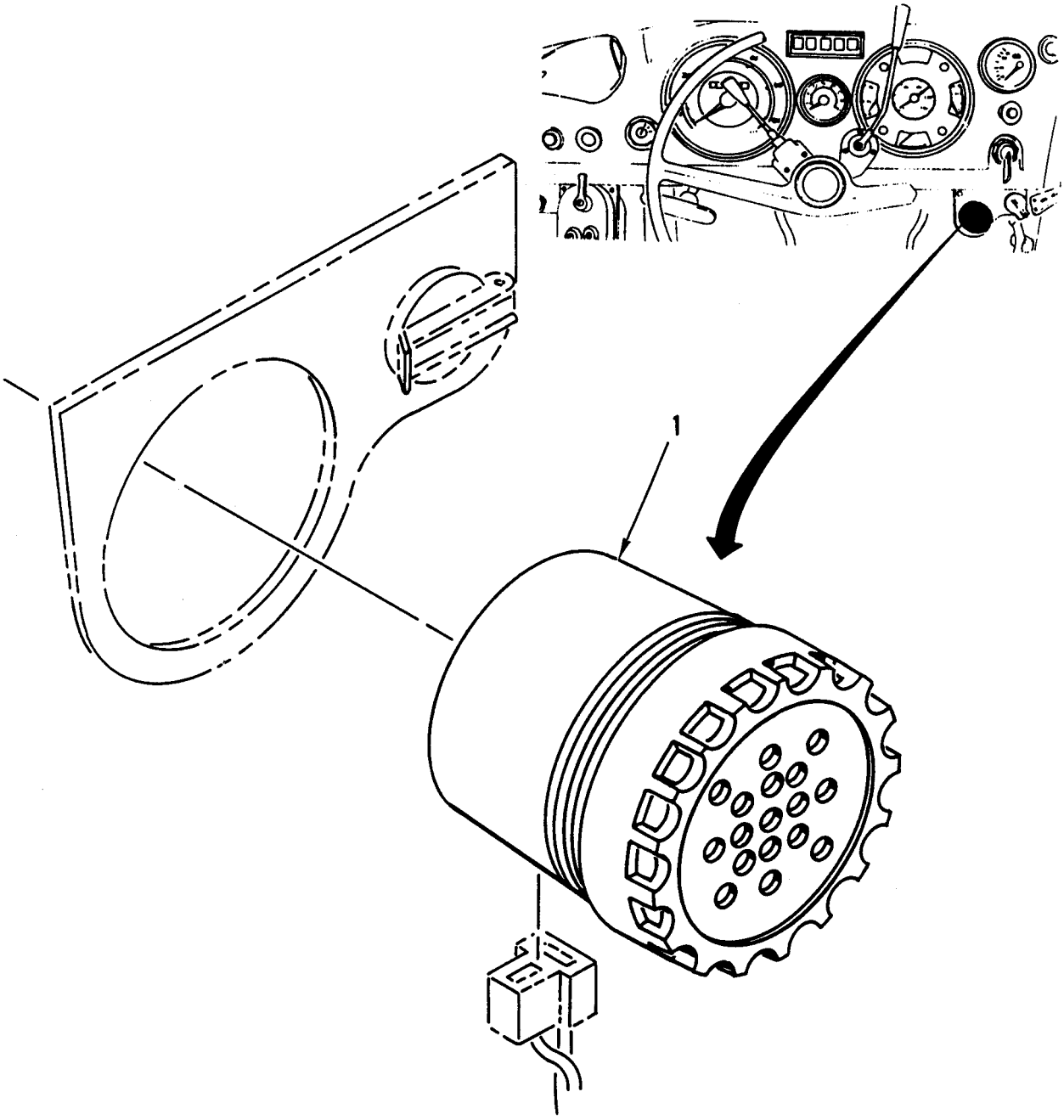

Figure 78. Horn, Siren – Low Pressure Warning Buzzer.

(1) ITEM NO	(2) SMR CODE	(3) NSN	(4) CAGEC	(5) PART NUMBER	(6) DESCRIPTION AND USABLE ON CODES (UOC)	(7) QTY
					GROUP 0611	
					FIG. 78 HORN, SIREN – LOW PRESSURE WARNING BUZZER	
1	PAOZZ	6350-01-242-9113	64678	GVM A 0005423623	BUZZER	1
					END OF FIGURE	

UNIT, DIRECT SUPPORT AND GENERAL SUPPORT MAINTENANCE

SMALL EMPLACEMENT EXCAVATOR (SEE) AND HIGH MOBILITY MATERIAL HANDLER (HMMH)

HORN, SIREN – HORN AND SWITCH

REPAIR PARTS LIST

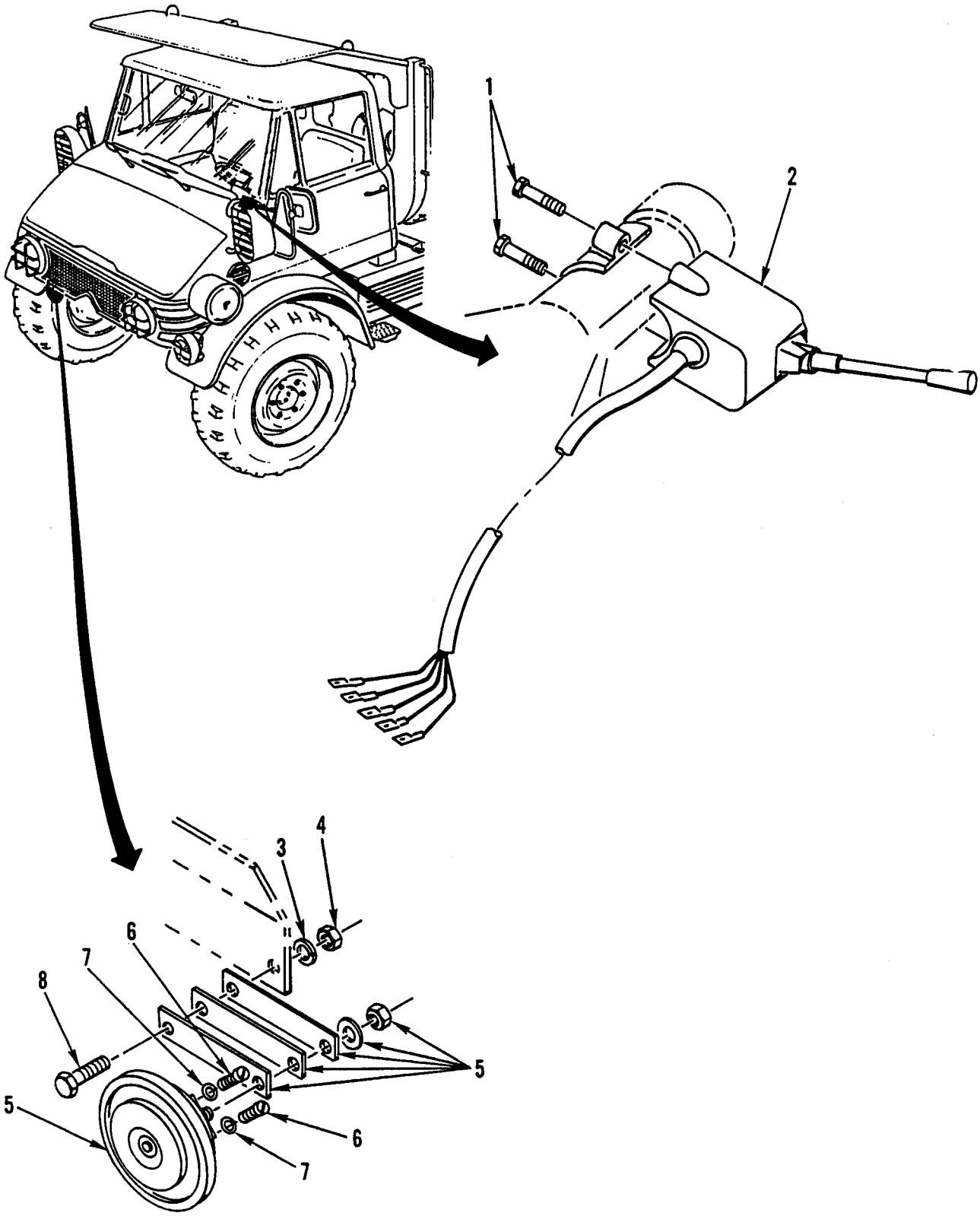

Figure 79. Horn, Siren – Horn and Switch.

(1) ITEM NO	(2) SMR CODE	(3) NSN	(4) CAGEC	(5) PART NUMBER	(6) DESCRIPTION AND USABLE ON CODES (UOC)	(7) QTY
					GROUP 0611	
					FIG. 79 HORN, SIREN – HORN AND SWITCH	
1	PFOZZ	5305-01-286-9179	64678	007985 005146	SCREW,CAP,HEXAGON H.....	2
2	PAOZZ	2590-12-193-9136	D8130	201127	CONTROL,MULTIFUNCTION	1
3	PFOZZ	5310-01-174-0436	S3465	4537800-128	WASHER,SPRING TENSI.....	2
4	PFOZZ	5310-01-241-6345	15526	934 8 M8X1.25 C	NUT,PLAIN,HEXAGON	2
5	PAOZZ	6350-01-243-2261	64678	002 542 67 20	HORN,ELECTRICAL	1
6	PFOZZ	5305-01-247-2735	15526	84 M4	SCREW,MACHINE.....	2
7	PFOZZ	5310-01-251-1663	64678	912004 004102	WASHER,SPRING TENSION	2
8	PFOZZ	5306-01-178-7298	S3465	4537800-674	BOLT,MACHINE.....	1
					END OF FIGURE	

UNIT, DIRECT SUPPORT AND GENERAL SUPPORT MAINTENANCE

SMALL EMPLACEMENT EXCAVATOR (SEE) AND HIGH MOBILITY MATERIAL HANDLER (HMMH)

BATTERIES, STORAGE (WET OR DRY) – BATTERIES AND BATTERY BOX

REPAIR PARTS LIST

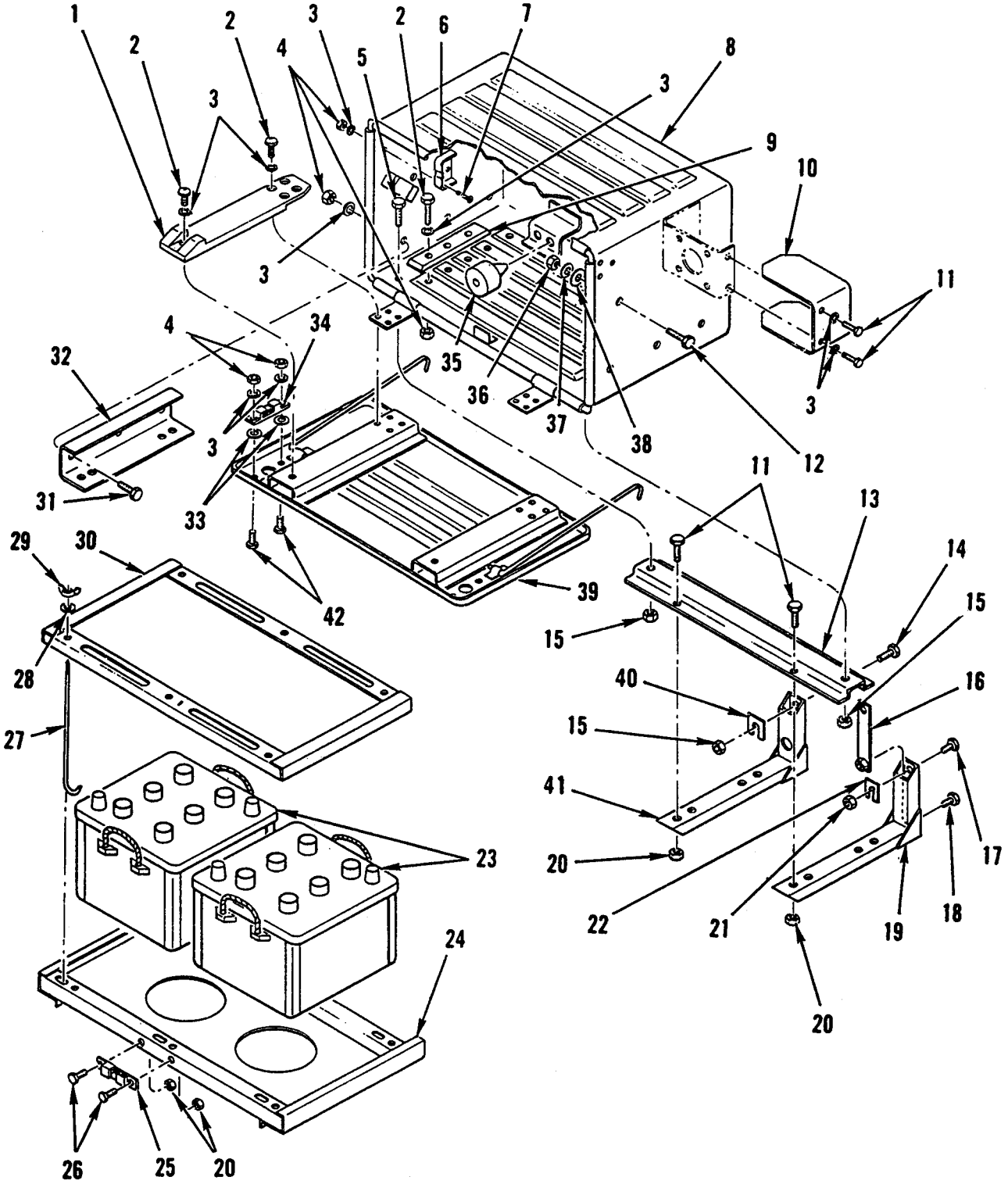

Figure 80. Batteries, Storage (Wet or Dry) – Batteries and Battery Box.

(1) ITEM NO	(2) SMR CODE	(3) NSN	(4) CAGEC	(5) PART NUMBER	(6) DESCRIPTION AND USABLE ON CODES (UOC)	(7) QTY
					GROUP 0612	
					FIG. 80 BATTERIES, STORAGE (WET OR DRY) – BATTERIES AND BATTERY BOX	
1	PFOZZ	2590-01-242-2279	64678	435 541 05 42	INSERT	2
2	PAOZZ	5305-01-247-2729	64678	914129 006003	SCREW,MACHINE	16
3	PFOZZ	5310-01-176-6500	S3465	4536226-751	WASHER,SPRING TENSI	34
4	PFOZZ	5310-01-171-4689	S3465	4536226-786	NUT,PLAIN,HEXAGON	22
5	PFOZZ	5306-01-254-5393	15526	933 M10 260P	BOLT,MACHINE	4
6	PFOZZ	5340-01-244-1130	64678	435 541 02 25	BRACKET,ANGLE	1
7	PFOZZ	5305-01-385-3366	64678	000965 006046	SCREW,MACHINE	6
8	PFOZZ	6160-01-242-2175	64678	419 540 01 14	BATTERY BOX	1
9	PFOZZ	2590-01-242-2280	64678	435 541 06 42	INSERT	2
10	PFOZZ	5340-01-242-2795	64678	419 541 00 03	COVER,ACCESS	1
11	PFOZZ	5306-01-246-9611	15526	933 M6 14F	BOLT,MACHINE	10
12	PFOZZ	5306-01-270-1698	64678	000933 008130	BOLT,MACHINE	2
13	PAOZZ	5340-01-244-2731	64678	419 541 00 40	STRAP,RETAINING	2
14	PFOZZ	5306-01-240-5166	15526	933 M10 30F	BOLT,MACHINE	2
15	PFOZZ	5310-01-167-1863	S3465	4537800-712	NUT,PLAIN,HEXAGON	6
16	PAOZZ	2590-01-242-2278	64678	419 540 00 21	SUPPORT PLATE	1
17	PFOZZ	5306-01-238-2159	15526	961 M12X1.5 35 F	BOLT,MACHINE	1
18	PFOZZ	5305-01-243-7369	64678	914140 012011	SCREW,CAP,HEXAGON H	1
19	PAOZZ	2510-01-241-8897	64678	419 540 01 51	FRAME,STRUCTURAL,VE	1
20	PFOZZ	5310-01-241-6349	64678	913004 006002	NUT,SELF-LOCKING,HE	10
21	PFOZZ	5310-01-239-3535	64678	913004 012008	NUT,SELF-LOCKING,HE	1
22	PFOZZ	5365-01-310-1100	64678	4195410084	SHIM	1
23	PAOFA	6140-01-431-1172	04055	6TLFP	BATTERY,STORAGE	2
24	PFOZZ	2590-01-242-2277	64678	435 540 01 42	PLATE ASSEMBLY,MOUNT	1
25	PFOZZ	5340-12-181-1937	C1583	313	BUTTON,DOOR	1

(1) ITEM NO	(2) SMR CODE	(3) NSN	(4) CAGEC	(5) PART NUMBER	(6) DESCRIPTION AND USABLE ON CODES (UOC)	(7) QTY
26	PFOZZ	5305-01-155-5439	56161	10501757	SCREW,CAP,HEXAGON H.....	2
27	PFOZZ	5306-01-243-9388	64678	425 541 03 44	BOLT,HOOK.....	6
28	PFOZZ	5310-01-174-7613	S3465	4537800-256	WASHER,FLAT	6
29	PFOZZ	5310-01-244-8915	C0266	M6SSN487/1	NUT,PLAIN,WING	6
30	PFOZZ	2590-01-242-1211	64678	435 540 03 23	RETAINER,BATTERY	1
31	PFOZZ	5306-01-175-0424	S3465	4537800-783	BOLT,MACHINE.....	6
32	PFOZZ	5340-01-244-1139	64678	435 541 05 11	BRACKET,DOUBLE ANGL	2
33	PFOZZ	5310-01-243-6177	64678	435 541 01 52	WASHER,FLAT	4
34	PFOZZ	2540-01-244-2567	C1583	313.0	LOCK,DOOR,VEHICULAR.....	2
35	PAOZZ	5342-01-247-6654	64678	000 987 64 40	BUMPER	4
36	PFOZZ	5310-01-241-6345	15526	934 8 M8X1.25 C	NUT,PLAIN,HEXAGON	2
37	PFOZZ	5310-01-239-1342	15526	137B-8	WASHER,SPRING TENSI.....	2
38	PFOZZ	5310-01-237-5524	64678	000125 008413	WASHER,FLAT	2
39	PFOZZ	6160-01-242-4846	64678	435 540 02 82	COVER,BATTERY BOX.....	1
40	PFOZZ	5365-01-249-7649	64678	404 541 00 84	SPACER,PLATE 1 MM.....V	
40	PFOZZ	5365-01-250-0664	64678	404 541 01 84	SPACER,PLATE 2 MM.....V	
40	PFOZZ	5365-01-249-6811	64678	404 541 02 84	SPACER,PLATE 3 MM.....V	
41	PFOZZ	2510-01-241-8896	64678	419 540 00 51	FRAME,STRUCTURAL,VE	1
42	PFOZZ	5306-01-247-9361	64678	000933 006136	BOLT,MACHINE.....	4
					END OF FIGURE	

UNIT, DIRECT SUPPORT AND GENERAL SUPPORT MAINTENANCE

SMALL EMPLACEMENT EXCAVATOR (SEE) AND HIGH MOBILITY MATERIAL HANDLER (HMMH)

BATTERIES, STORAGE (WET OR DRY) – BATTERY CABLES

REPAIR PARTS LIST

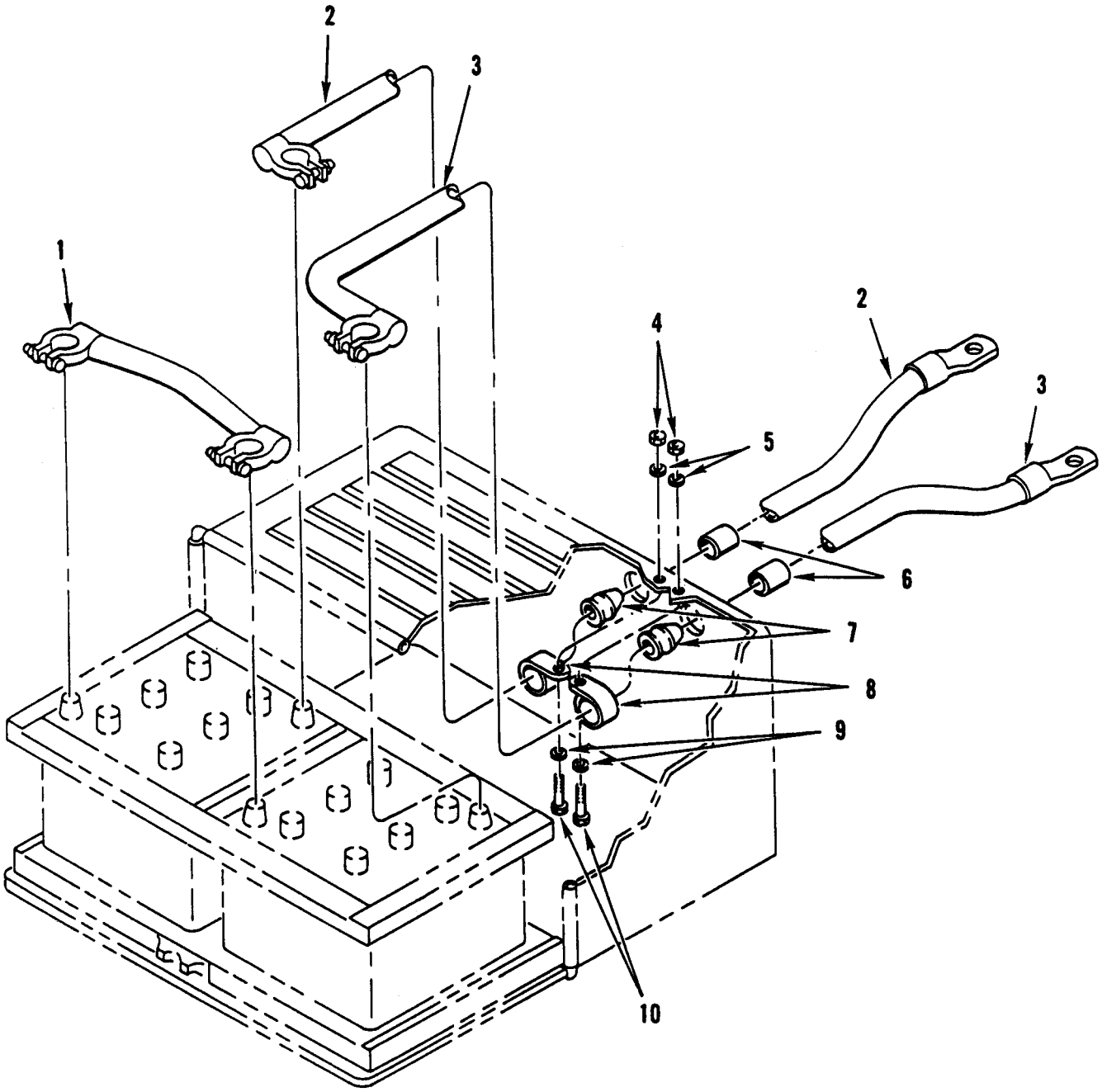

Figure 81. Batteries, Storage (Wet or Dry) – Battery Cables.

(1) ITEM NO	(2) SMR CODE	(3) NSN	(4) CAGEC	(5) PART NUMBER	(6) DESCRIPTION AND USABLE ON CODES (UOC)	(7) QTY
					GROUP 0612	
					FIG. 81 BATTERIES, STORAGE (WET OR DRY) – BATTERY CABLES	
1	PAOZZ	6140-01-247-0193	64678	416 540 00 39	LEAD,STORAGE BATTER	1
2	PAOZZ	6140-01-243-6881	64678	406 540 15 30	LEAD,STORAGE BATTER.....	1
3	PAOZZ	6140-01-243-6882	64678	406 540 19 31	LEAD,STORAGE BATTER.....	1
4	PFOZZ	5310-01-171-4689	S3465	4536226-786	NUT,PLAIN,HEXAGON	2
5	PFOZZ	5310-01-171-2356	S3465	4536226-920	WASHER,SPRING TENSI.....	2
6	PAOZZ	5365-01-248-4431	64678	421 987 50 30	SPACER,SLEEVE	2
7	PAOZZ	5325-01-248-4454	64678	425 997 02 81	GROMMET,NONMETALLIC.....	2
8	PFOZZ	5340-12-143-0057	D8773	RSGU1100-15-15	CLAMP,LOOP	2
9	PFOZZ	5310-01-174-7613	S3465	4537800-256	WASHER,FLAT	2
10	PFOZZ	5306-01-247-9361	64678	000933 006136	BOLT,MACHINE	2
					END OF FIGURE	

UNIT, DIRECT SUPPORT AND GENERAL SUPPORT MAINTENANCE

SMALL EMPLACEMENT EXCAVATOR (SEE) AND HIGH MOBILITY MATERIAL HANDLER (HMMH)

HULL OR CHASSIS WIRING HARNESS – ELECTRICAL INSTALLATION (FRONT CHASSIS)

REPAIR PARTS LIST

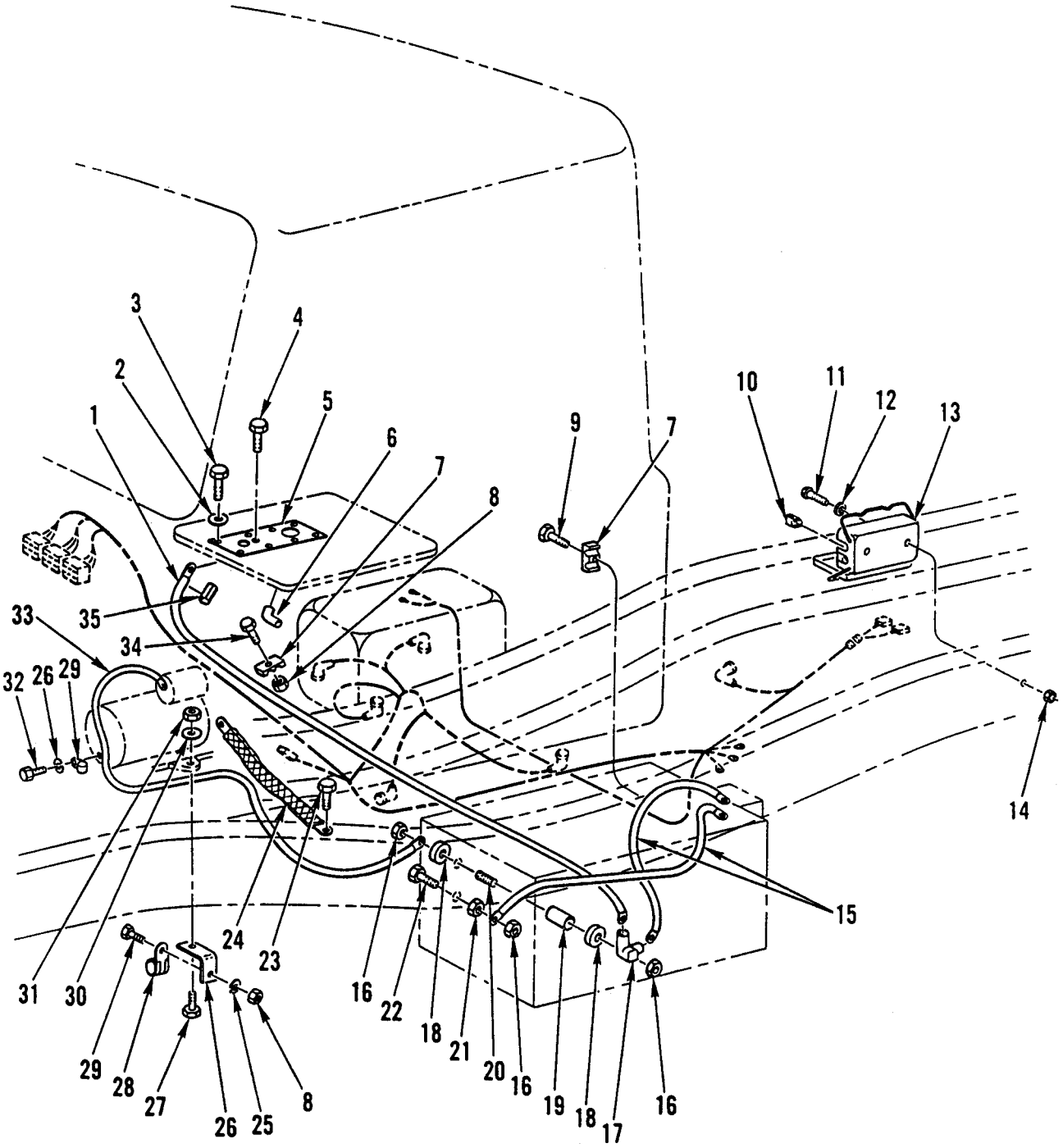

Figure 82. Hull or Chassis Wiring Harness – Electrical Installation (Front Chassis).

(1) ITEM NO	(2) SMR CODE	(3) NSN	(4) CAGEC	(5) PART NUMBER	(6) DESCRIPTION AND USABLE ON CODES (UOC)	(7) QTY
					GROUP 0613	
					FIG. 82 HULL OR CHASSIS WIRING HARNESS – ELECTRICAL INSTALLATION (FRONT CHASSIS)	
1	PAOZZ	6150-01-245-4306	64678	406 540 20 31	LEAD,ELECTRICAL	1
2	PFOZZ	5310-01-167-1954	64678	000125 005317	WASHER,FLAT	8
3	PFOZZ	5306-01-174-0374	S3465	4537800-194	BOLT,MACHINE	8
4	PFOZZ	5306-01-247-9361	64678	000933 006136	BOLT,MACHINE	2
5	PFOZZ	3110-01-245-0810	64678	419 542 00 39	PLATE,RETAINING,BEA	1
6	PAOZZ	5975-12-123-1264	D8015	2 000 558 000	CABLE NIPPLE,ELECTRICAL	5
7	PAOZZ	5340-01-244-2732	64678	383 546 00 44	STRAP,RETAINING	2
8	PFOZZ	5310-01-171-4689	S3465	4536226-786	NUT,PLAIN,HEXAGON	2
9	PFOZZ	5306-01-175-0424	S3465	4537800-783	BOLT,MACHINE	4
10	PAOZZ	5340-01-248-1220	64678	000 987 28 44	PLUG,EXPANSION	2
11	PFOZZ	5305-01-166-0616	64678	000933 005035	SCREW,CAP,HEXAGON H	2
12	PAOZZ	5310-01-240-1818	64678	912004 005103	WASHER,LOCK	2
13	PAOZZ	5975-01-257-3108	64678	001 546 54 41	JUNCTION BOX	1
14	PFOZZ	5310-01-167-1859	S3465	4536226-892	NUT,PLAIN,HEXAGON UOC:GE1	2
15	PAOZZ	6150-01-245-3279	64678	435 540 04 31	LEAD,ELECTRICAL	2
16	PFOZZ	5310-01-248-4510	64678	000934 010006	NUT,PLAIN,HEXAGON	3
17	PAOZZ	5975-12-179-7683	D2480	F0843	CABLE NIPPLE,ELECTRICAL	1
18	PAOZZ	5325-01-248-4455	64678	406 546 00 37	GROMMET,NONMETTALIC	2
19	PFOZZ	5365-01-248-4432	64678	314 991 05 40	SPACER,SLEEVE	2
20	PFOZZ	5305-01-334-3606	64678	000551 010014	SETSCREW	1
21	PFOZZ	5310-01-238-3198	15526	934 M10X1.5C	NUT,PLAIN,HEXAGON	1
22	PFOZZ	5306-01-247-9364	64678	000933 010260	BOLT,MACHINE	1
23	PFOZZ	5306-01-158-9917	1FH08	DIN933M10X20	BOLT,.MACHINE	1
24	PAOZZ	6150-01-242-1966	64678	352 540 00 41	LEAD,ELECTRICAL	1
25	PFOZZ	5310-01-171-2356	S3465	4536226-920	WASHER,SPRING TENSI	3

(1) ITEM NO	(2) SMR CODE	(3) NSN	(4) CAGEC	(5) PART NUMBER	(6) DESCRIPTION AND USABLE ON CODES (UOC)	(7) QTY
26	PAOZZ	5340-01-243-9484	64678	440 295 01 95	BRACKET,ANGLE	1
27	PAOZZ	5306-01-248-3202	15526	961 M12X1.5 30F	BOLT,MACHINE	1
28	PAOZZ	5340-12-143-0057	D8773	RSGU1100-15-15	CLAMP,LOOP	3
29	PFOZZ	5306-01-247-9361	64678	000933 006136	BOLT,MACHINE	3
30	PFOZZ	5310-01-243-4704	64678	000125 013008	WASHER,FLAT	1
31	PFOZZ	5310-01-239-3535	64678	913004 012008	NUT,SELF-LOCKING,HE	1
32	PFOZZ	5305-01-155-5439	56161	10501757	SCREW,CAP,HEXAGON H	1
33	PAOZZ	6150-01-242-0145	64678	406 540 16 30	LEAD,ELECTRICAL	1
34	PFOZZ	5306-01-247-9362	15526	933 M6 35F	BOLT,MACHINE	2
35	PAOZZ	5365-01-248-4431	64678	421 987 50 30	SPACER,SLEEVE	2
					END OF FIGURE	

UNIT, DIRECT SUPPORT AND GENERAL SUPPORT MAINTENANCE

SMALL EMPLACEMENT EXCAVATOR (SEE) AND HIGH MOBILITY MATERIAL HANDLER (HMMH)

HULL OR CHASSIS WIRING HARNESS – ELECTRICAL INSTALLATION (INSTRUMENT PANEL)

REPAIR PARTS LIST

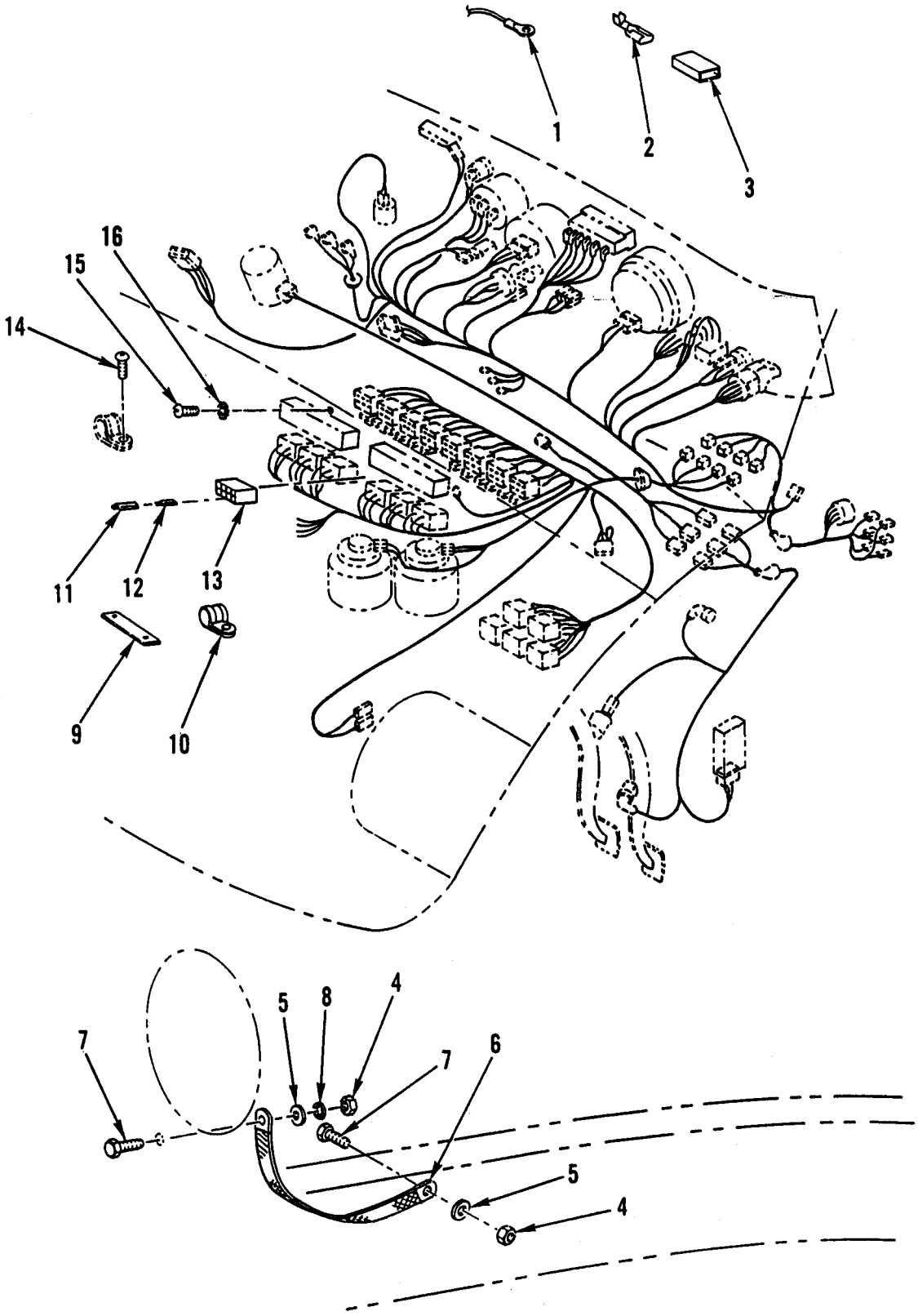

Figure 83. Hull or Chassis Wiring Harness – Electrical Installation (Instrument Panel).

(1) ITEM NO	(2) SMR CODE	(3) NSN	(4) CAGEC	(5) PART NUMBER	(6) DESCRIPTION AND USABLE ON CODES (UOC)	(7) QTY
					GROUP 0613	
					FIG. 83 HULL OR CHASSIS WIRING HARNESS – ELECTRICAL INSTALLATION (INSTRUMENT PANEL)	
1	PAOZZ	5940-00-113-3138	96906	MS20659-102	TERMINAL,LUG	1
2	PAOZZ	5999-01-224-0342	64959	G643351-1	CONTACT,ELECTRICAL	3
3	PFOZZ	5935-01-245-3623	64678	002 545 13 28	CONNECTOR BODY,PLUG	3
4	PFOZZ	5310-01-241-6345	15526	934 8 M8X1.25 C	NUT,PLAIN,HEXAGON	2
5	PFOZZ	5310-01-237-5224	64678	000125 008413	WASHER,FLAT	3
6	PAOZZ	6150-01-243-9992	64678	406 547 00 20	LEAD,ELECTRICAL	1
7	PFOZZ	5306-01-247-9363	64678	000933008212	BOLT,MACHINE	2
8	PFOZZ	5310-01-174-0436	S3465	4537800-128	WASHER,SPRING TENSI	1
9	PAOZZ	5340-01-245-0756	64678	421 429 20 40	PLATE,MENDING	1
10	PAOZZ	5340-01-245-4172	64678	360 995 06 01	CLAMP,LOOP	3
11	PAOZZ	5935-01-245-4685	64678	000 545 16 45	CONNECTOR BODY,PLUG	1
12	PAOZZ	5940-01-027-4669	64678	000 545 37 26	TERMINAL,QUICK DISC	1
13	PFOZZ	5935-01-249-5884	64678	001 545 60 28	CONNECTOR BODY,PLUG	1
14	PFOZZ	5305-01-250-9209	15526	84 M6 12	SCREW,MACHINE	1
15	PFOZZ	5305-01-247-2732	64678	007985 005157	SCREW,MACHINE	2
16	PAOZZ	5310-01-244-2265	64678	006797 005110	WASHER,LOCK	2
					END OF FIGURE	

UNIT, DIRECT SUPPORT AND GENERAL SUPPORT MAINTENANCE

SMALL EMPLACEMENT EXCAVATOR (SEE) AND HIGH MOBILITY MATERIAL HANDLER (HMMH)

HULL OR CHASSIS WIRING HARNESS – ELECTRICAL INSTALLATION (CHASSIS)

REPAIR PARTS LIST

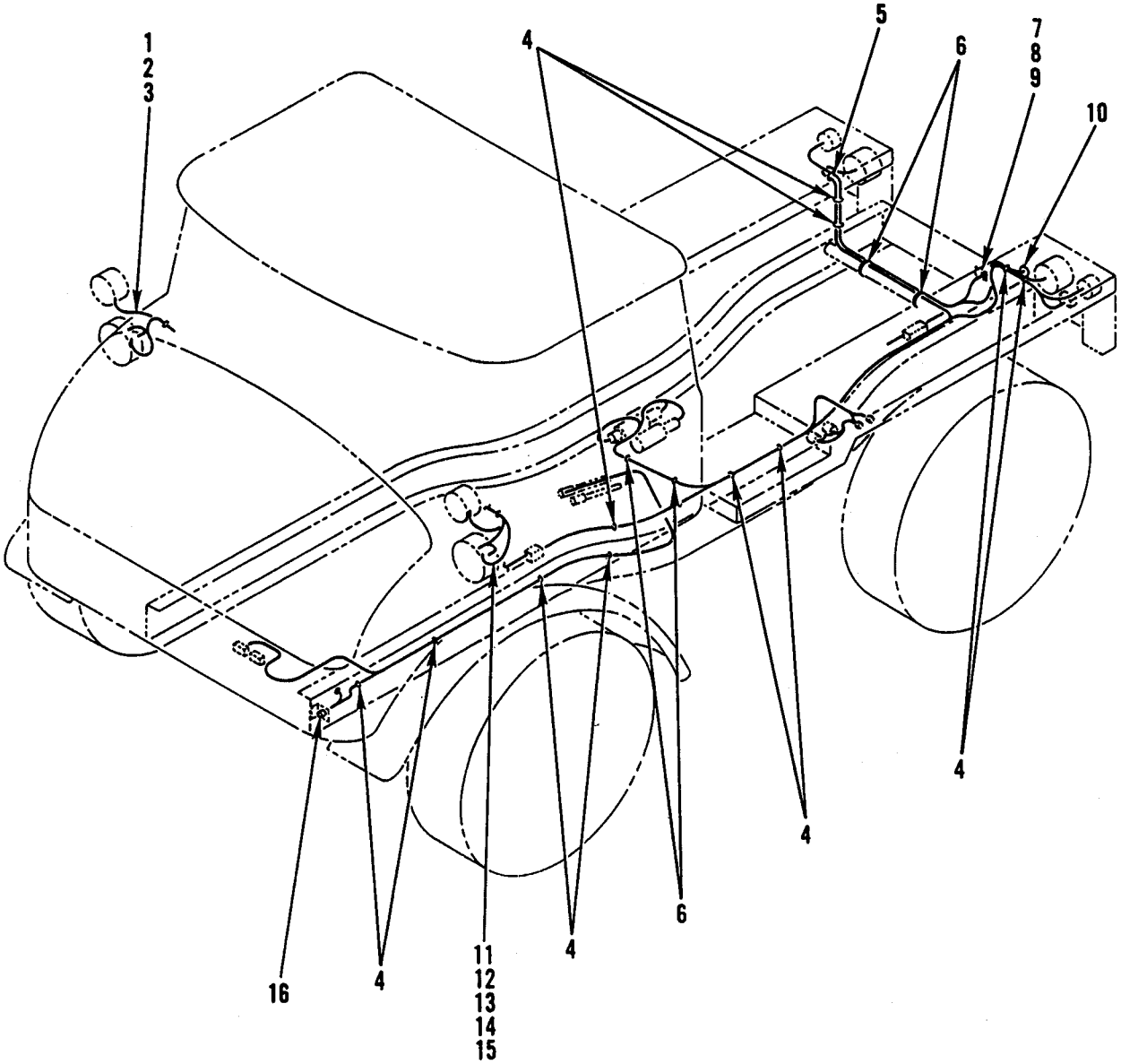

Figure 84. Hull or Chassis Wiring Harness – Electrical Installation (Chassis).

(1) ITEM NO	(2) SMR CODE	(3) NSN	(4) CAGEC	(5) PART NUMBER	(6) DESCRIPTION AND USABLE ON CODES (UOC)	(7) QTY
					GROUP 0613	
					FIG. 84 HULL OR CHASSIS WIRING HARNESS – ELECTRICAL INSTALLATION (CHASSIS)	
1	PAOZZ	5940-01-242-0009	64678	419 545 70 28	TERMINAL,QUICK DISC	3
2	PFOZZ	5310-01-244-4524	64678	419 990 70 40	WASHER,SLOTTED	3
3	PFOZZ	5970-01-243-5749	64678	419 545 71 45	INSULATOR,FEMALE RE	3
4	PFOZZ	5340-01-244-4122	06383	PLT 1MO	STRAP,LINE SUPPORTING	19
5	PFOZZ	5340-01-244-1605	64678	23-9396-001	CLIP,SPRING TENSION	4
6	PFOZZ	5975-01-101-5348	06383	PLT4H-C30	STRAP,TIEDOWN,ELECT	4
7	PFOZZ	5310-01-171-4689	S3465	4536226-786	NUT,PLAIN,HEXAGON	4
8	PFOZZ	5306-01-247-9361	64678	000933 006130	BOLT,MACHINE	4
9	PAOZZ	5935-00-773-1428	56161	10500538	COVER,ELECTRICAL CO	1
10	PFOZZ	5325-01-244-4053	64678	23-09180-233	GROMMET,NONMETALLIC	1
11	PFOZZ	5970-01-241-4853	64678	419 545 75 45	INSULATOR,BUSHING	8
12	PFOZZ	5970-01-243-1268	64678	419 545 70 45	INSULATOR,BUSHING	8
13	PAOZZ	5940-01-242-5466	64678	419 545 73 26	TERMINAL,LUG	8
14	PFOZZ	5975-01-247-3941	64678	23-9796-509	STRAP,TIEDOWN,ELECT UOC:GE1	10
15	PAOZZ	5975-01-247-3941	06383	PLT 4SO	STRAP,TIEDOWN,ELECT UOC:GE4	4
16	PFOZZ	5999-01-317-8563	79409	650086	CAP,ELECTRICAL UOC:GE4	1
					END OF FIGURE	

UNIT, DIRECT SUPPORT AND GENERAL SUPPORT MAINTENANCE

SMALL EMPLACEMENT EXCAVATOR (SEE) AND HIGH MOBILITY MATERIAL HANDLER (HMMH)

HULL OR CHASSIS WIRING HARNESS – ALTERNATOR CABLE ASSEMBLY 419 540 01 37

REPAIR PARTS LIST

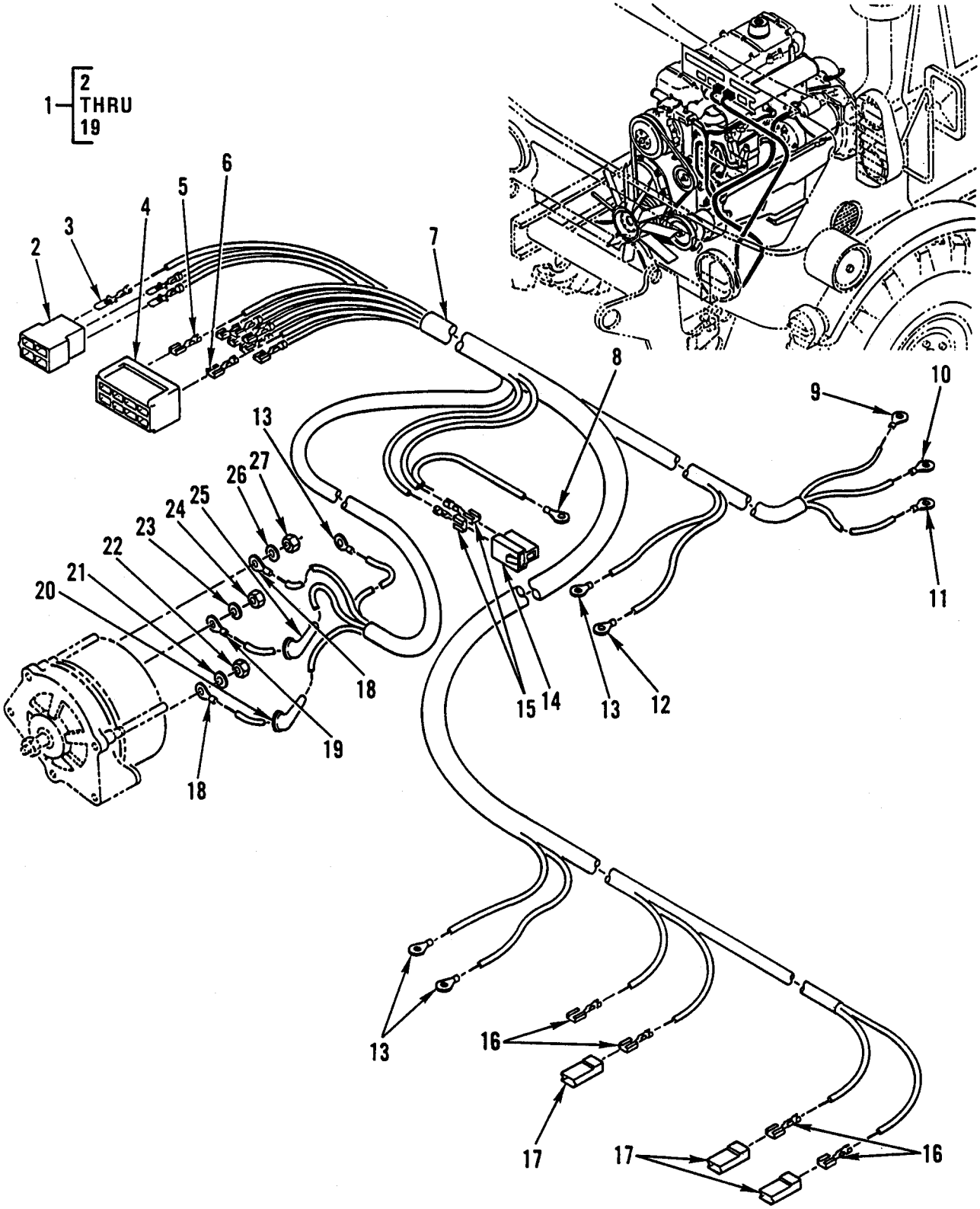

Figure 85. Hull or Chassis Wiring Harness – Alternator Cable Assembly.

(1) ITEM NO	(2) SMR CODE	(3) NSN	(4) CAGEC	(5) PART NUMBER	(6) DESCRIPTION AND USABLE ON CODES (UOC)	(7) QTY
					GROUP 0613	
					FIG. 85 HULL OR CHASSIS WIRING HARNESS – ALTERNATOR CABLE ASSEMBLY 419 540 01 37	
1	PAFFF	5995-01-244-2590	64678	419 540 01 37	WIRING HARNESS,BRAN	1
2	PFFZZ	5935-01-257-4043	64678	002 545 12 28	.CONNECTOR BODY,PLUG	1
3	PFFZZ	5999-01-224-0342	00779	42565-3	.CONTACT,ELECTRICAL	3
4	PFFZZ	5935-01-246-8570	64678	001 545 83 28 KZ	.CONNECTOR BODY,PLUG	1
5	PFFZZ	5999-01-315-7025	64678	000 545 38 26	.CONTACT,ELECTRICAL	6
6	PFFZZ	5940-01-289-5957	64678	000 545 40 26	.TERMINAL,QUICK DISC	2
7	PAFZZ	4720-01-285-6196	64678	000 546 18 30	.HOSE,NONMETALLIC	V
8	PFFZZ	5940-01-320-0610	64678	046225 006101	.TERMINAL,LUG	1
9	PFFZZ	5940-01-314-4644	64678	046225 010100	.TERMINAL,LUG	1
10	PFFZZ	5940-01-314-2811	64678	046225 006102	.TERMINAL,LUG	1
11	PFFZZ	5940-01-326-2991	64678	046234 010000	.TERMINAL,LUG	1
12	PFFZZ	5940-01-314-4642	64678	046225 004103	.TERMINAL,LUG	1
13	PFFZZ	5940-01-314-4641	64678	046225 005101	.TERMINAL,LUG	4
14	PFFZZ	5935-01-244-7616	64678	001 545 87 28	.CONNECTOR BODY,PLUG	1
15	PFFZZ	5940-01-027-4669	59730	A-250	.TERMINAL,QUICK DISC	4
16	PFFZZ	5935-01-312-6527	64678	000 545 45 26	.CONNECTOR,RECEPTACL	4
17	PFFZZ	5975-01-285-0192	64678	000 545 35 45	.BUSHING,ELECTRICAL	3
18	PFFZZ	5940-01-314-2812	64678	046225 005100	.TERMINAL,LUG	2
19	PFFZZ	5940-01-314-4643	64678	046225 006100	.TERMINAL,LUG	1
20	PAOZZ	5975-01-258-9127	64678	000 546 33 35	BOOT,DUST AND MOIST	1
21	PFOZZ	5310-01-176-6500	S3465	4536226-751	WASHER,SPRING TENSI	1
22	PFOZZ	5310-01-171-4689	S3465	4536226-786	NUT,PLAIN,HEXAGON	1
23	PAOZZ	5310-01-247-5887	64678	000137 004105	WASHER,SPRING TENSI	1
24	PFOZZ	5310-01-248-450	15526	934 8 M4X0.7C	NUT,PLAIN,HEXAGON	1
25	PAOZZ	5975-01-255-3860	D8015	1 120 524 000	BOOT,DUST AND MOIST	1
26	PFOZZ	5310-01-166-5886	15526	137 5B	WASHER,SPRING TENSI	1
27	PFOZZ	5310-01-167-1859	S3465	4536226-892	NUT,PLAIN,HEXAGON	1
					END OF FIGURE	

UNIT, DIRECT SUPPORT AND GENERAL SUPPORT MAINTENANCE

SMALL EMPLACEMENT EXCAVATOR (SEE) AND HIGH MOBILITY MATERIAL HANDLER (HMMH)

HULL OR CHASSIS WIRING HARNESS – CRANE MAST FLOODLIGHT WIRING HARNESS 51708942

REPAIR PARTS LIST

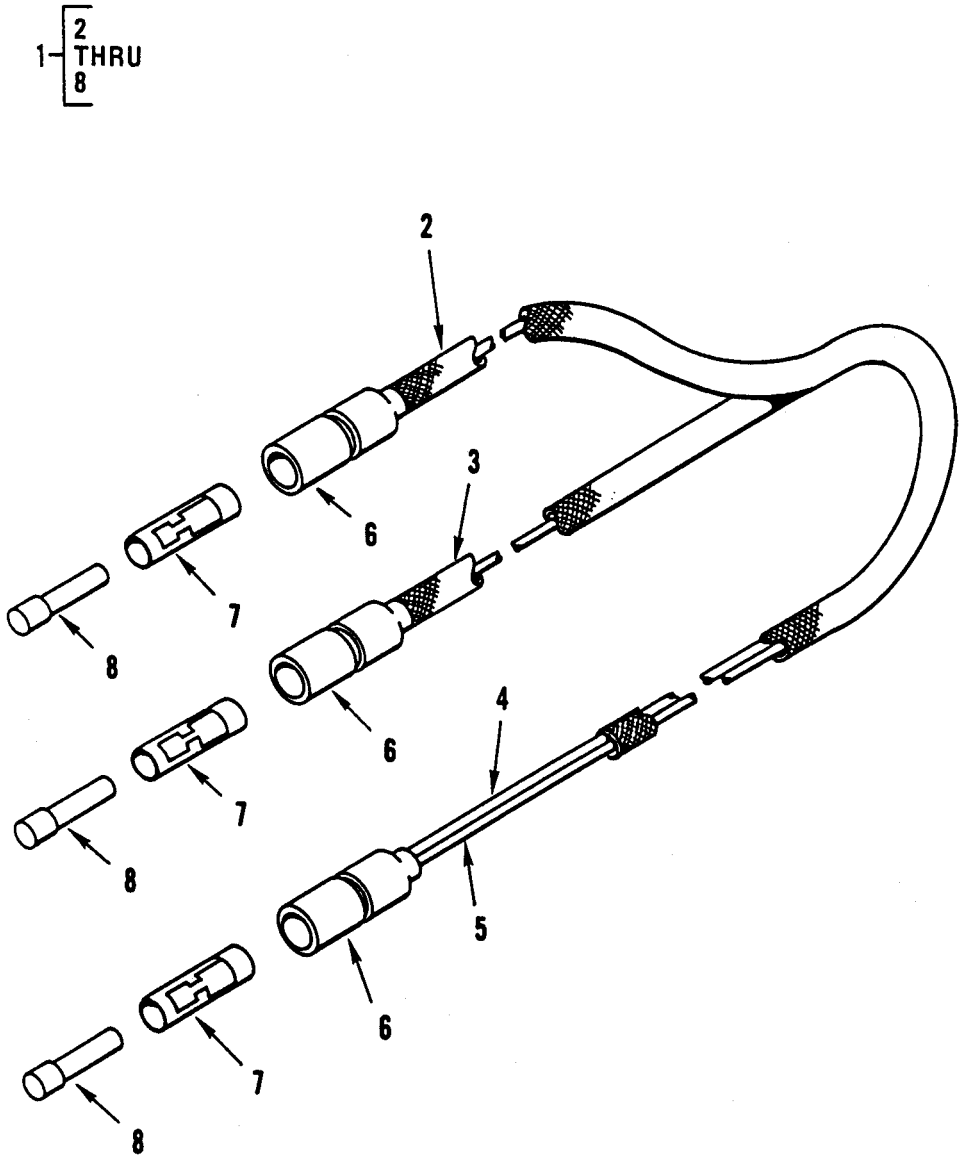

Figure 86. Hull or Chassis Wiring Harness – Crane Mast Floodlight Wiring Harness.

(1) ITEM NO	(2) SMR CODE	(3) NSN	(4) CAGEC	(5) PART NUMBER	(6) DESCRIPTION AND USABLE ON CODES (UOC)	(7) QTY
					GROUP 0613	
					FIG. 86 HULL OR CHASSIS WIRING HARNESS – CRANE MAST FLOODLIGHT WIRING HARNESS 51708942	
1	PAFFF	6150-01-306-5896	54209	51708942	WIRING HARNESS UOC:GE4.....	1
2	MFFZZ		64678	48-00102-004X 8.5	.LOOM,NONMETALLIC MAKE FROM CAGE 64678,P/N 48-00102-004, CUT TO 8.5 FT UOC:GE4.....	1
3	MFFZZ		64678	48-00102-004X 6.0	.LOOM,NONMETALLIC MAKE FROM CAGE 64678,P/N 48-00102-004, CUT TO 6.0 FT UOC:GE4.....	1
4	MFFZZ		64678	48-02223-160X 9.5	.WIRE,ELECTRICAL MAKE FROM CAGE 64678,P/N 48-02223-160, CUT TO 9.5 FT UOC:GE4.....	1
5	MFFZZ		64678	48-02223-169X 9.5	.WIRE,ELECTRICAL MAKE FROM CAGE 64678,P/N 48-02223-169, CUT TO 9.5 FT UOC:GE4.....	1
6	PFFZZ	5970-01-243-1268	64678	419 545 70 45	.INSULATOR,BUSHING UOC:GE4.....	3
7	PFFZZ	5970-01-241-4853	64678	419 545 75 45	.INSULATOR,BUSHING UOC:GE4.....	3
8	PFFZZ	5940-01-242-5466	64678	419 545 73 26	.TERMINAL,QUICK DISC UOC:GE4.....	3
					END OF FIGURE	

UNIT, DIRECT SUPPORT AND GENERAL SUPPORT MAINTENANCE

SMALL EMPLACEMENT EXCAVATOR (SEE) AND HIGH MOBILITY MATERIAL HANDLER (HMMH)

HULL OR CHASSIS WIRING HARNESS – TRAILER WIRING HARNESS 419 540 71 09, AND RECEPTACLE CONNECTOR MS75021-2

REPAIR PARTS LIST

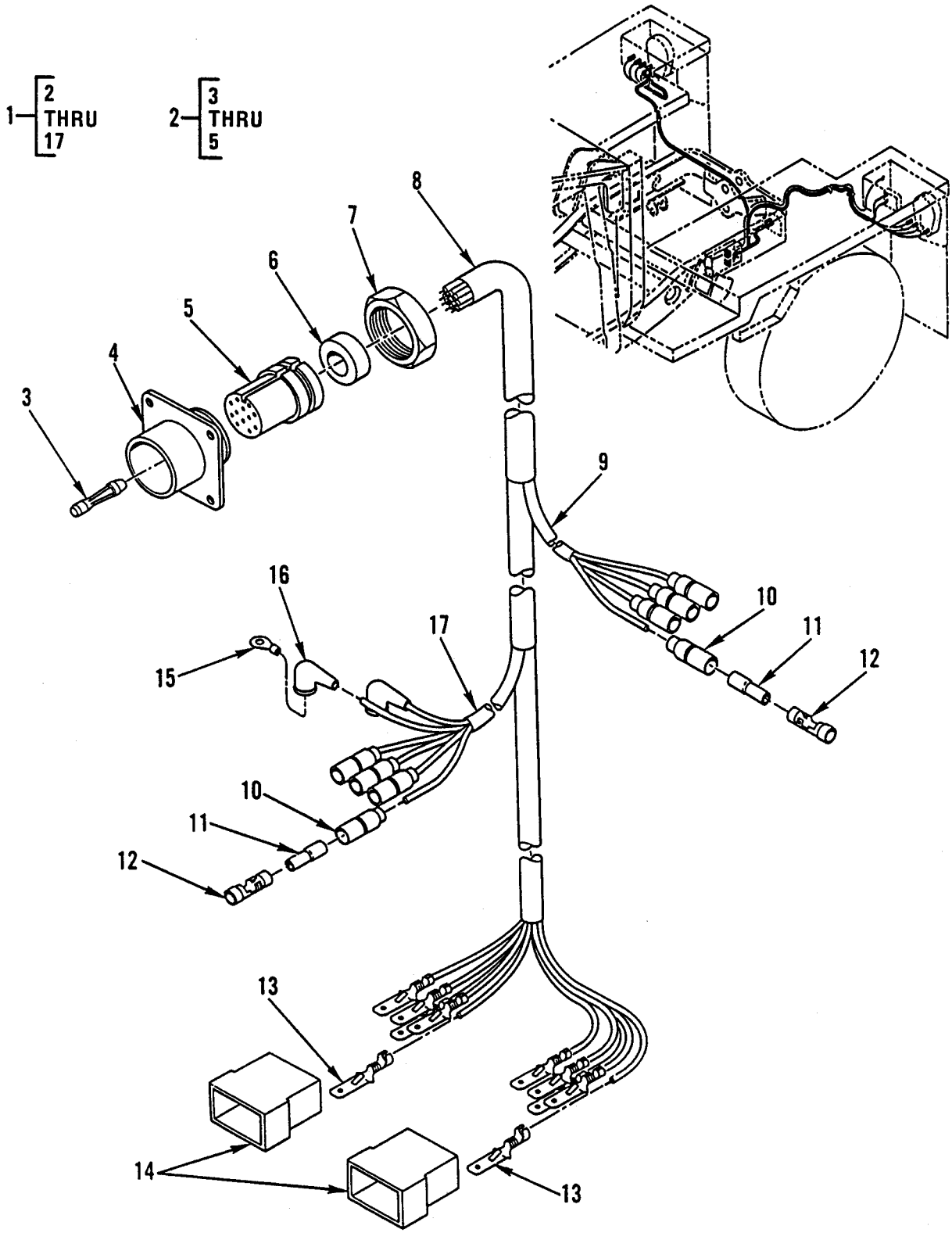

Figure 87. Hull or Chassis Wiring Harness – Trailer Wiring Harness and Receptacle Connector.

(1) ITEM NO	(2) SMR CODE	(3) NSN	(4) CAGEC	(5) PART NUMBER	(6) DESCRIPTION AND USABLE ON CODES (UOC)	(7) QTY
					GROUP 0613	
					FIG. 87 HULL OR CHASSIS WIRING HARNESS --TRAILER WIRING HARNESS 419 540 71 09, AND CONNECTOR, RECEPTACLE MS75021-2	
1	PAFFF	5995-01-242-4739	64678	419 540 71 09	WIRING HARNESS,BRAN	1
2	PAFFF	5935-00-846-3884	96906	MS75021-2	.CONNECTOR,RECEPTACL	1
3	PFFZZ	5999-00-485-8954	77820	10-33644	..CONTACT,ELECTRICAL SIZE 28	1
4	PFFZZ	5935-00-111-6189	19207	8701268	..SHELL,ELECTRICAL CO	1
5	PFFZZ	5935-01-079-5099	19207	7716684	..INSERT,ELECTRICAL C SIZE 28	1
6	PFFZZ	5365-01-247-1114	5A910	7722333	.SPACER,SLEEVE	1
7	PFFZZ	5310-01-248-3077	5A910	7723309	.NUT,PLAIN,HEXAGON	1
8	MFFZZ		77060	6824OR-400	.CONDUIT MAKE FROM CAGE 77060 P/N 68240R,CUT TO 400 MM V	
9	MFFZZ		45311	68237-R-1850	.CONDUIT,NONMETTALIC MAKE FROM CAGE 45311 P/N 68237R,CUT TO 1850 MM V	
10	PFFZZ	5970-01-243-1268	64678	419 545 70 45	.INSULATOR,BUSHING	8
11	PFFZZ	5970-01-241-4853	64678	419 545 75 45	.INSULATOR,BUSHING	8
12	PAFZZ	5940-01-242-5466	64678	419 545 73 26	.TERMINAL,QUICK DISC	8
13	PAFZZ	5999-01-224-0342	00779	42565-3	.CONTACT,ELECTRICAL	10
14	PFFZZ	5935-01-249-5884	64678	001 545 60 28	.CONNECTOR BODY,PLUG	2
15	PAFZZ	5940-00-107-1481	96906	MS20659-104	.TERMINAL,LUG	2
16	PFFZZ	5975-01-242-5468	64678	419 545 74 45	.CABLE NIPPLE,ELECTR	2
17	MFFZZ		45311	68238R-1220	.CONDUIT,NONMETALLLIC MAKE FROM CAGE 45311 P/N 68238R,CUT TO 1220 MM V	
					END OF FIGURE	

UNIT, DIRECT SUPPORT AND GENERAL SUPPORT MAINTENANCE

SMALL EMPLACEMENT EXCAVATOR (SEE) AND HIGH MOBILITY MATERIAL HANDLER (HMMH)

HULL OR CHASSIS WIRING HARNESS – AUXILIARY HEADLIGHT, FRONT COMPOSITE LIGHT, AND BLACKOUT DRIVING LIGHT WIRING HARNESS 419 540 02 37

REPAIR PARTS LIST

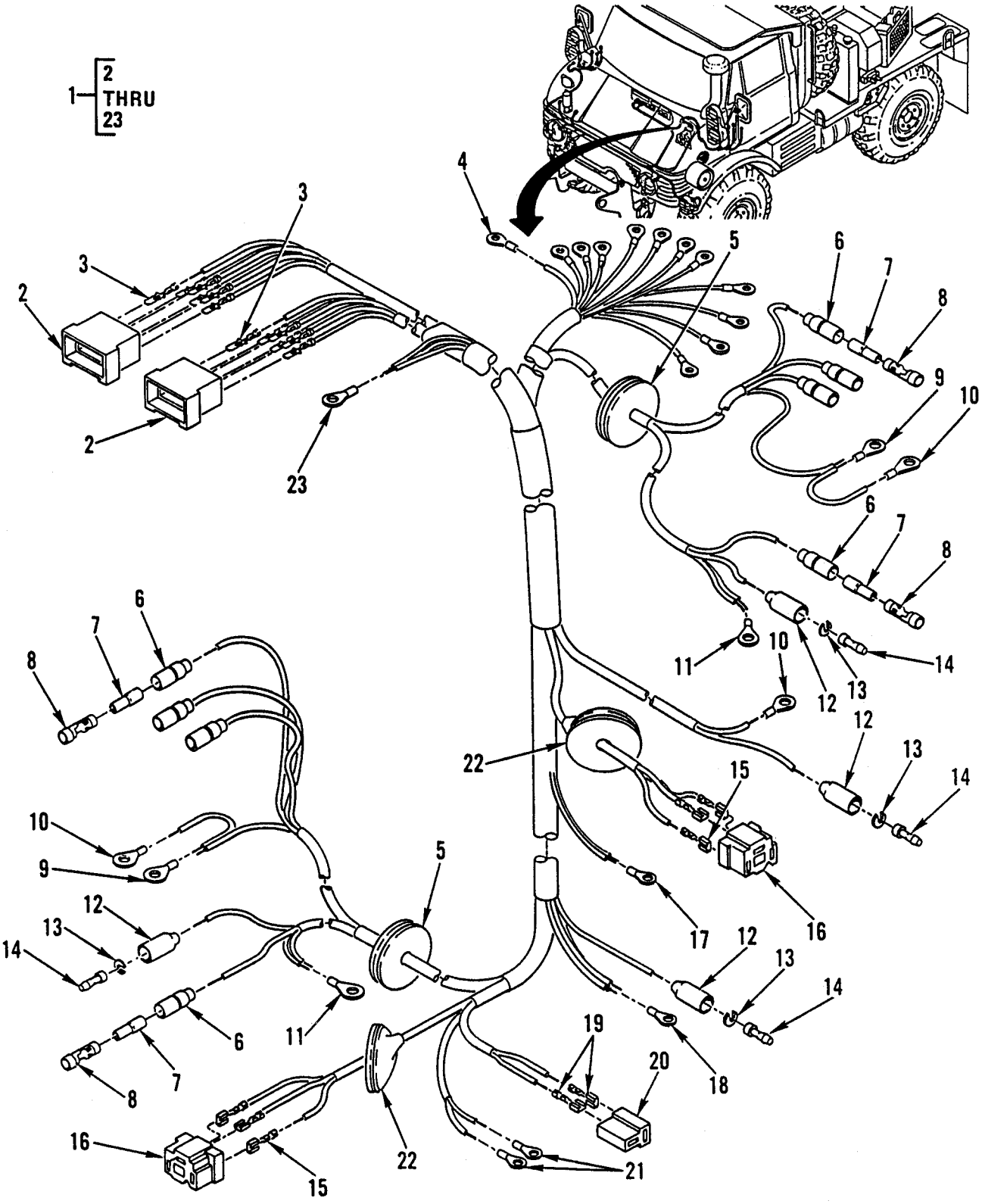

Figure 88. Hull or Chassis Wiring Harness – Auxiliary Headlight, Front Composite Light, and Blackout Driving Light Wiring Harness.

(1) ITEM NO	(2) SMR CODE	(3) NSN	(4) CAGEC	(5) PART NUMBER	(6) DESCRIPTION AND USABLE ON CODES (UOC)	(7) QTY
					GROUP 0613	
					FIG. 88 HULL OR CHASSIS WIRING HARNESS – AUXILIARY HEADLIGHT, FRONT COMPOSITE LIGHT, AND BLACKOUT DRIVING LIGHT WIRING HARNESS 419 540 02 37	
1	PAFFF	5995-01-244-0163	64678	419 540 02 37	WIRING HARNESS,BRAN	1
2	PFFZZ	5935-01-249-5884	64678	001 545 60 28	.CONNECTOR BODY,PLUG	2
3	PFFZZ	5999-01-224-0342	00779	42565-3	.CONTACT,ELECTRICAL	12
4	XAFZZ		64678	000 159 41 79	.TERMINAL,LUG	12
5	PAOZZ	5325-01-305-7515	64678	419 997 00 81	.GROMMET,NONMETALLIC	2
6	PAOZZ	5970-01-243-1268	64678	419 545 70 45	.INSULATOR,BUSHING	4
7	PAOZZ	5970-01-241-4853	64678	419 545 75 45	.INSULATOR,BUSHING	4
8	PAOZZ	5940-01-242-5466	64678	419 545 73 26	.TERMINAL,QUICK DISC	4
9	PFFZZ	5940-01-314-4639	64678	046225 010101	.TERMINAL,LUG	2
10	PFFZZ	5940-01-314-4640	64678	046225 010103	.TERMINAL,LUG	3
11	XAFZZ		64678	046225 012100	.TERMINAL,LUG	2
12	PFFZZ	5975-01-285-0192	64678	000 545 35 45	.BUSHING,ELECTRICAL	4
13	PFFZZ	5310-01-244-4524	64678	419 990 70 40	.WASHER,SLOTTED	4
14	PFFZZ	5935-01-312-6527	64678	000 545 45 26	.CONNECTOR,RECEPTACL	4
15	PFFZZ	5940-01-289-5956	64678	000 545 79 26	.TERMINAL,QUICK DISC	6
16	PFFZZ	5935-01-287-0006	64678	001 545 85 28	.CONNECTOR BODY,PLUG	2
17	PFFZZ	5940-01-314-4641	64678	046225 005101	.TERMINAL,LUG	1
18	PFFZZ	5940-01-314-2810	64678	046225 005102	.TERMINAL,LUG	1
19	PFFZZ	5940-01-027-4669	64678	000 545 37 26	.TERMINAL,QUICK DISC	2
20	PFFZZ	5935-01-244-7616	64678	001 545 87 28	.CONNECTOR BODY,PLUG	1
21	PFFZZ	5940-01-314-4642	64678	046225 004103	.TERMINAL,LUG	2
22	PAFZZ	5325-01-247-6916	64678	442 997 01 81	.GROMMET,NONMETALLIC	2
23	PFFZZ	5940-01-314-4643	64678	046225 006100	.TERMINAL,LUG	1
					END OF FIGURE	

UNIT, DIRECT SUPPORT AND GENERAL SUPPORT MAINTENANCE

SMALL EMPLACEMENT EXCAVATOR (SEE) AND HIGH MOBILITY MATERIAL HANDLER (HMMH)

HULL OR CHASSIS WIRING HARNESS – DOME LIGHT CABLE ASSEMBLY 419 540 05 37

REPAIR PARTS LIST

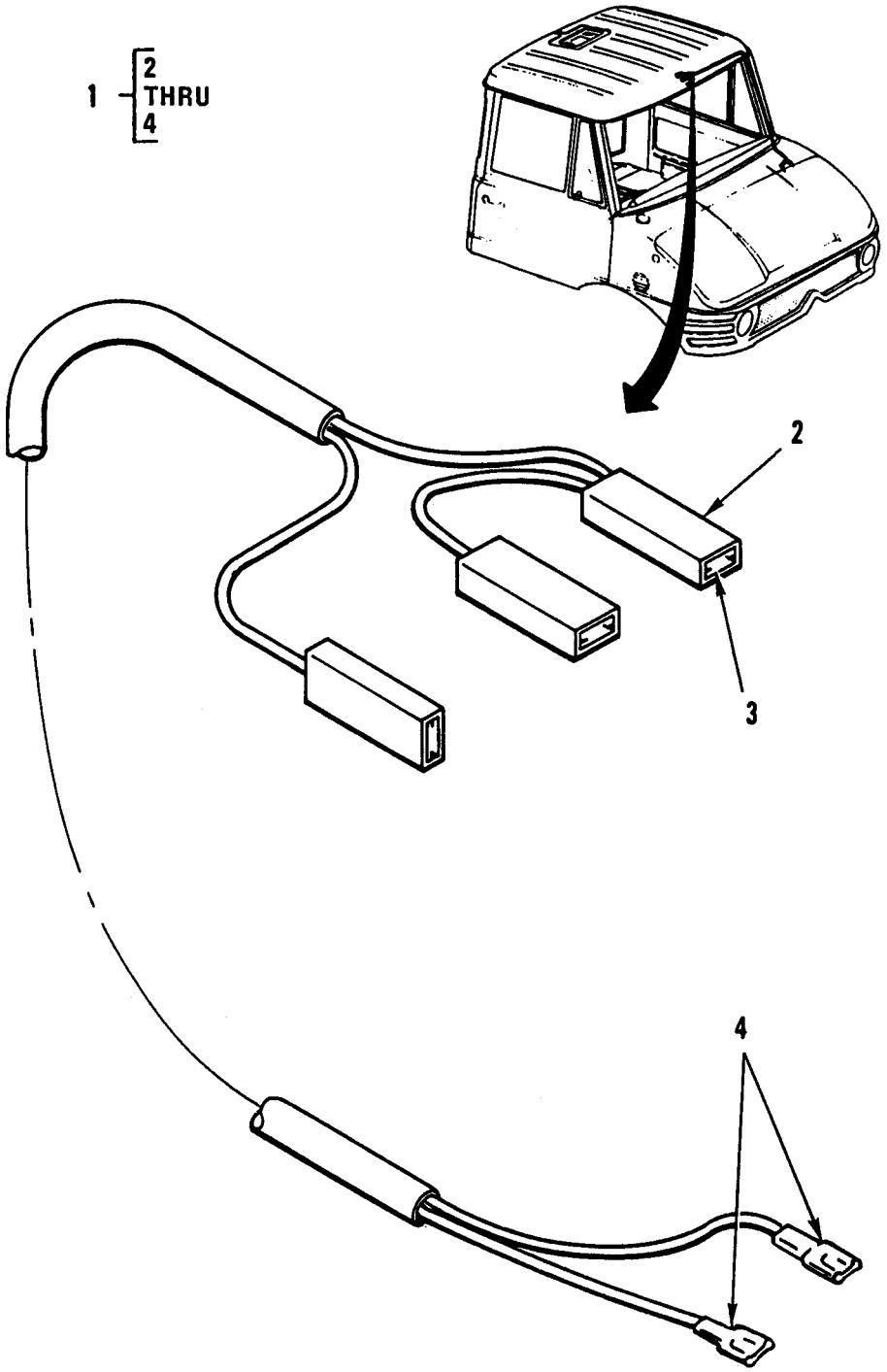

Figure 89. Hull or Chassis Wiring Harness – Dome Light Cable Assembly.

(1) ITEM NO	(2) SMR CODE	(3) NSN	(4) CAGEC	(5) PART NUMBER	(6) DESCRIPTION AND USABLE ON CODES (UOC)	(7) QTY
					GROUP 0613	
					FIG. 89 HULL OR CHASSIS WIRING HARNESS – DOME LIGHT CABLE ASSEMBLY 419 540 05 37	
1	PFFFF	6150-01-243-0232	64678	419 540 05 37	CABLE ASSEMBLY,POWE.....	1
2	PFFZZ	5975-01-285-0192	64678	000 545 35 45	.BUSHING,ELECTRICAL	3
3	PAFZZ	5640-01-027-4669	59730	A-250	.TERMINAL,QUICK DISC.....	3
4	PFFZZ	5999-01-224-0342	00779	42565-3	.CONTACT,ELECTRICAL	2
					END OF FIGURE	

UNIT, DIRECT SUPPORT AND GENERAL SUPPORT MAINTENANCE

SMALL EMPLACEMENT EXCAVATOR (SEE) AND HIGH MOBILITY MATERIAL HANDLER (HMMH)

HULL OR CHASSIS WIRING HARNESS – HAZARD WARNING LIGHT WIRING HARNESS 419 540 04 37, AND SPECIAL CABLE ASSEMBLY 380 540 2181

REPAIR PARTS LIST

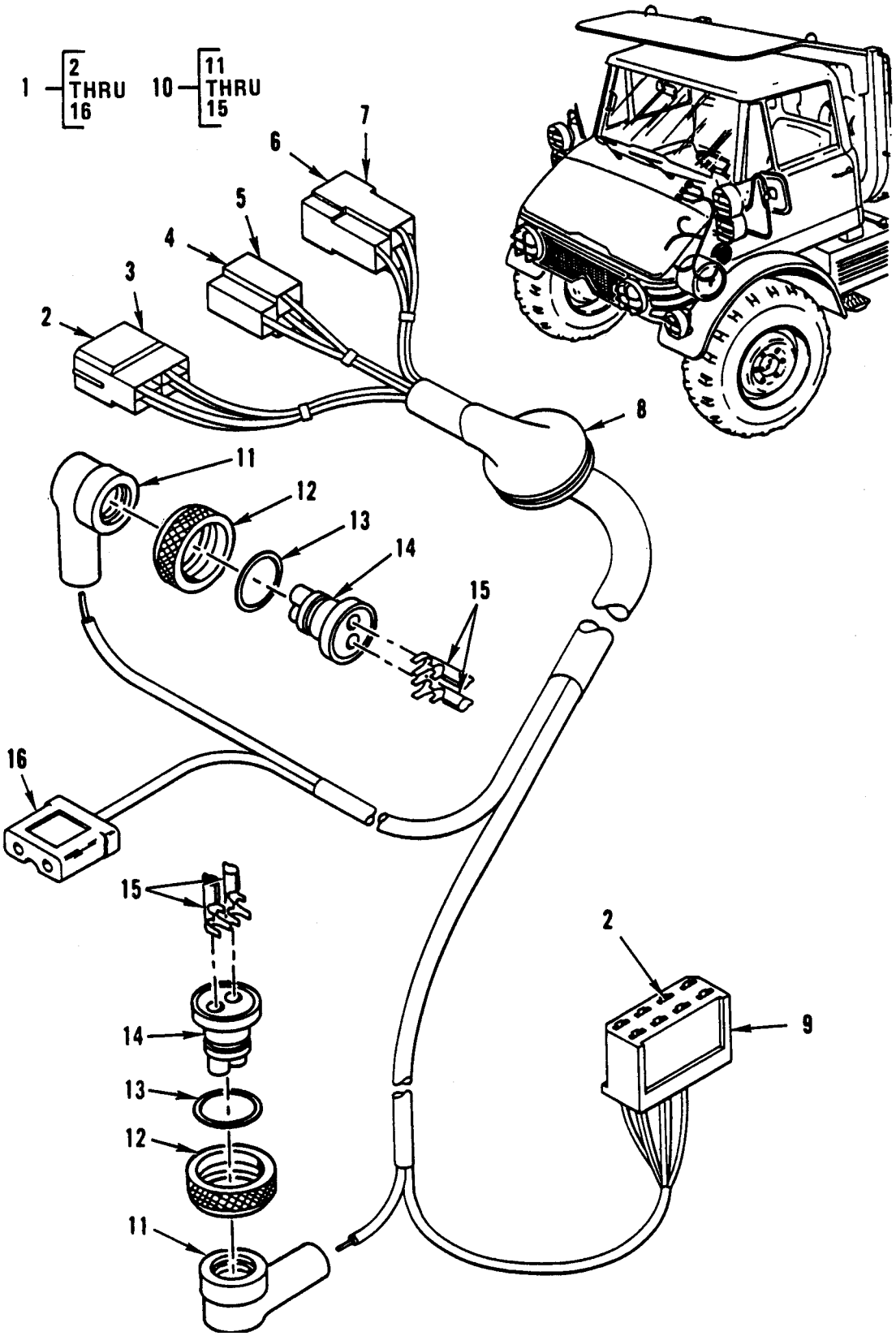

Figure 90. Hull or Chassis Wiring Harness – Hazard Warning Light Wiring Harness and Special Cable Assembly.

(1) ITEM NO	(2) SMR CODE	(3) NSN	(4) CAGEC	(5) PART NUMBER	(6) DESCRIPTION AND USABLE ON CODES (UOC)	(7) QTY
					GROUP 0613	
					FIG. 90 HULL OR CHASSIS WIRING HARNESS – HAZARD WARNING LIGHT WIRING HARNESS 419 540 04 37, AND CABLE ASSEMBLY, SPECIAL 380 540 21 81	
1	PFFFF	5995-01-243-4913	64678	419 540 04 37	WIRING HARNESS,BRAN	1
2	PFFZZ	5999-01-315-7025	64678	000 545 38 26	.CONTACT,ELECTRICAL	10
3	PFFZZ	5945-01-285-0193	64678	001 545 84 28	.BUSHING,ELECTRICAL	1
4	PFFZZ	5940-01-027-4669	56501	A-250	.TERMINAL,QUICK DISC	3
5	PFFZZ	5975-01-285-0191	64678	005 545 64 28	.BUSHING,ELECTRICAL	1
6	PFFZZ	5999-01-224-0342	00779	42565-3	.CONTACT,ELECTRICAL	3
7	PFFZZ	5975-01-285-0195	64678	005 545 66 28	.BUSHING,ELECTRICAL	1
8	PAFZZ	5325-01-247-6916	64678	442 997 01 81	.GROMMET,NONMETALLIC	1
9	PFFZZ	5975-01-285-0194	64678	007 545 05 28	.BUSHING,ELECTRICAL	1
10	PAFFF	6150-01-292-5116	64678	380 540 21 81	.CABLE ASSEMBLY,SPEC	2
11	PFFZZ	5975-01-298-4633	64678	380 546 03 35	..CABLE NIPPLE,ELECTR	1
12	PFFZZ	5310-01-313-3978	64678	000 990 20 54	..NUT,PLAIN,KNURLED	1
13	PFFZZ	5340-01-334-3519	64678	000 990 68 40	..DISK,SOLID,PLAIN	1
14	PFFZZ	5935-01-312-6628	64678	380 545 00 26	..CONNECTOR BODY,RECE	1
15	PFFZZ	5940-12-178-0428	64678	62734-2	..TERMINAL,QUICK DISC	2
16	PAFZZ	5975-01-286-1923	64678	008 545 37 28	.MOUNTING BASE,TIEDO	1
					END OF FIGURE	

UNIT, DIRECT SUPPORT AND GENERAL SUPPORT MAINTENANCE

SMALL EMPLACEMENT EXCAVATOR (SEE) AND HIGH MOBILITY MATERIAL HANDLER (HMMH)

HULL OR CHASSIS WIRING HARNESS – STE/ICE-R WIRING HARNESS 419 540 71 36

REPAIR PARTS LIST

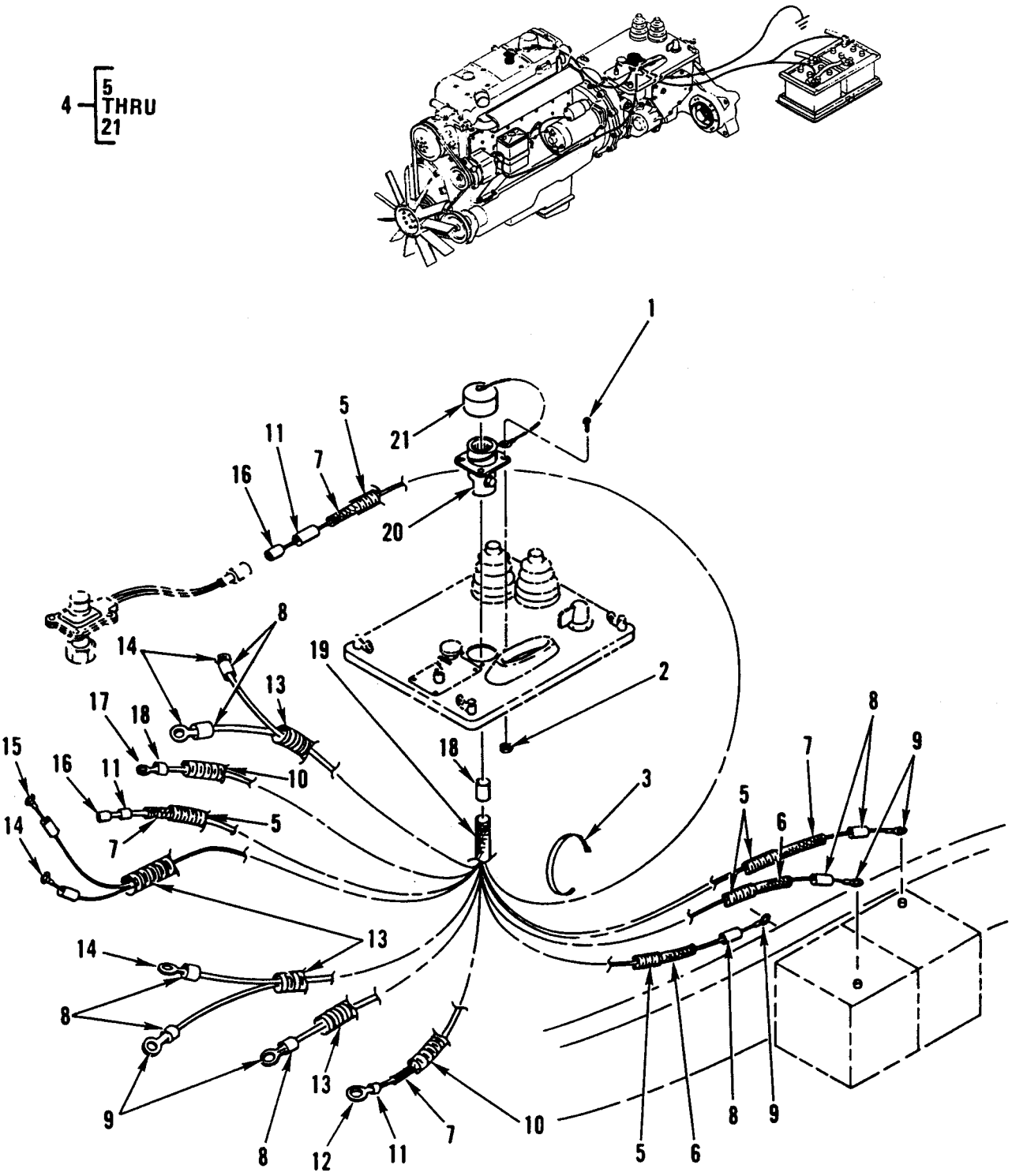

Figure 91. Hull or Chassis Wiring Harness – STE/ICE-R Wiring Harness.

(1) ITEM NO	(2) SMR CODE	(3) NSN	(4) CAGEC	(5) PART NUMBER	(6) DESCRIPTION AND USABLE ON CODES (UOC)	(7) QTY
					GROUP 0613	
					FIG. 91 HULL OR CHASSIS WIRING HARNESS – STE/ICE-R WIRING HARNESS 419 540 71 36	
1	PFOZZ	5305-01-286-6029	64678	007985 004180	SCREW,MACHINE	4
2	PFOZZ	5310-01-244-4000	64678	000934 004000	NUT,PLAIN,HEXAGON	4
3	PFOZZ	5340-01-244-4122	06383	PLT 1M0	STRAP,LINE SUPPORTI.....V	
4	PAFFF	6150-01-285-0338	64678	419 540 71 36	WIRING HARNESS,REPLACES 419 540 70 36/329-88	1
5	MFFZZ		64678	48-00102-005X 20.49	.LOOM,NON METALLIC MAKE FROM CAGE 64678,P/N 48-00102-005, CUT TO 20.49 FT	1
6	MFFZZ		64678	419 546 70 31X 12.5	.CONDUIT SHIELDED MAKE FROM CAGE 28105, P/N 92171, CUT TO 12.5 FT	1
7	MFFZZ		64678	419 546 71 31X 26.2	.CONDUIT SHIELDED MAKE FROM CAGE 21805, P/N 92171, CUT TO 26.2 FT	1
8	MFFZZ		64678	48-02461-012X 1.64	.TUBE MAKE FROM CAGE 64678,P/N M23053/4-101-0, CUT TO 1.64 FT	1
9	PFFZZ	5940-00-113-9820	96906	MS20659-128	.TERMINAL,LUG	5
10	MFFZZ		64678	48-00102-007X 11.48	.LOOM,NON METALLIC MAKE FROM CAGE 64678,P/N 48-00102-007, CUT TO 11.48 FT	1
11	MFFZZ		64678	48-02461-050X 0.49	.TUBE MAKE FROM FROM CAGE 64678, P/N TAT-125 1/2 IN,CUT TO 0.49 FT	1
12	PAFZZ	5935-01-154-6233	71468	120-1806-000	.CONNECTOR,PLUG,ELEC	1
13	MFFZZ		64678	48-00102-003X 18.49	.LOOM,NON METALLIC MAKE FROM CAGE 64678,P/N 48-00102-003,CUT TO 18.49 FT	1
14	PFFZZ	5940-00-113-3145	96906	MS20659-163	.TERMINAL,LUG	4
15	PFFZZ	5940-00-113-9819	64678	23-11194-410	.TERMINAL,LUG	1
16	PAFZZ	5935-01-149-5165	29510	SS2R	.CONNECTOR BODY,PLUG	2
17	PAFZZ	5935-01-153-8291	71468	120-1870-000	.CONNECTOR,PLUG,ELEC	1
18	MFFZZ		64678	48-02461-100X 0.49	.TUBE MAKE FROM CAGE 64678,P/N TAT-125 – 1 IN., CUT TO 0.49 FT	1
19	MFFZZ		64678	48-00102-013X 1.48	.LOOM,NON METALLIC MAKE FROM CAGE 64678,P/N 48-00102-013, CUT TO 1.48 FT	1
20	PAFZZ	5935-01-102-7124	19207	12258941	.CONNECTOR,RECEPTACL	1
21	PAFZZ	5340-01-129-7504	71468	CA121003-411	.CAP,PROTECTIVE,DUST	1
					END OF FIGURE	

UNIT, DIRECT SUPPORT AND GENERAL SUPPORT MAINTENANCE

SMALL EMPLACEMENT EXCAVATOR (SEE) AND HIGH MOBILITY MATERIAL HANDLER (HMMH)

HULL OR CHASSIS WIRING HARNESS – FORKLIFT WIRING HARNESS (5-PIN) 419 540 75 36

REPAIR PARTS LIST

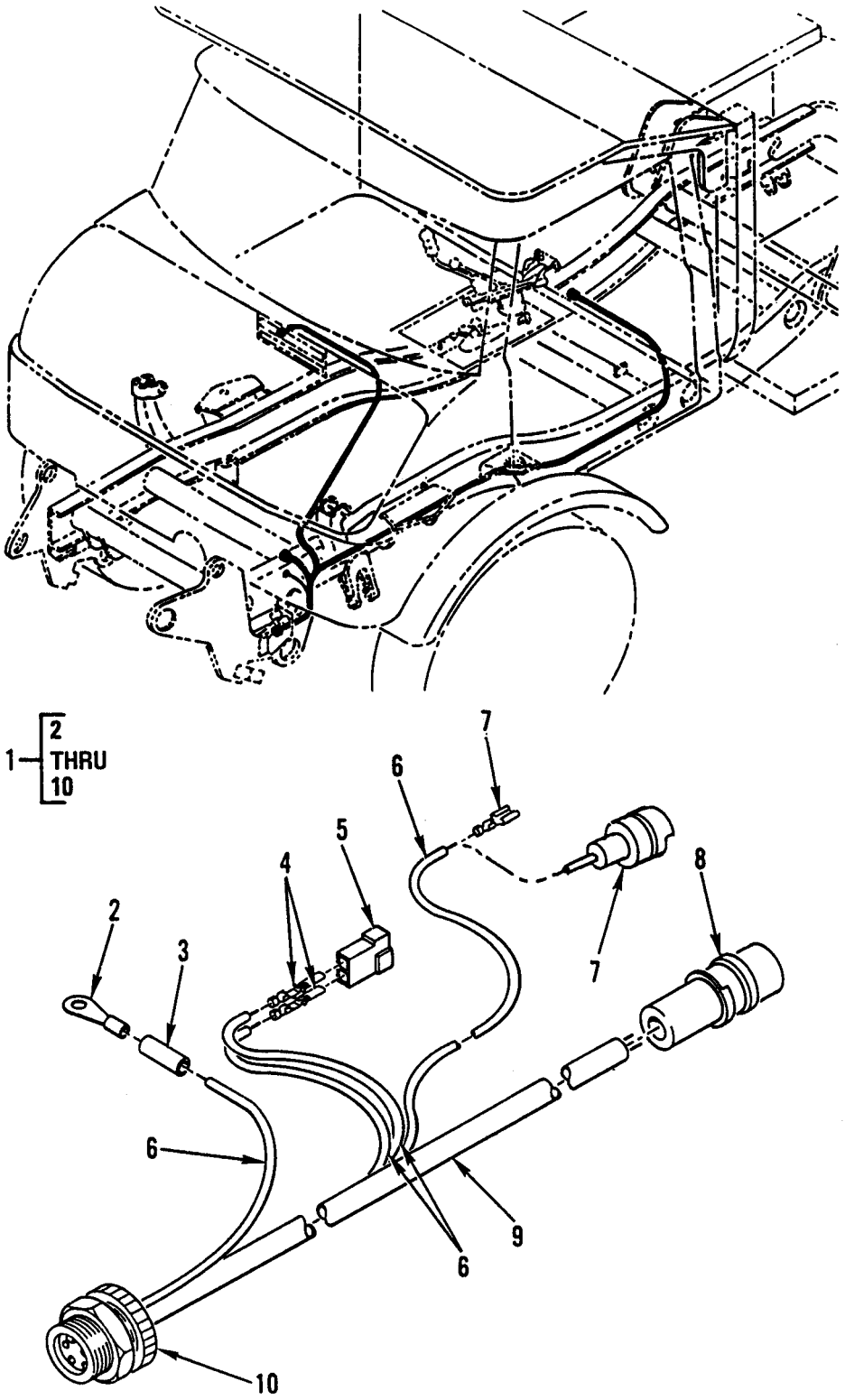

Figure 92. Hull or Chassis Wiring Harness – Forklift Wiring Harness (5-Pin).

(1) ITEM NO	(2) SMR CODE	(3) NSN	(4) CAGEC	(5) PART NUMBER	(6) DESCRIPTION AND USABLE ON CODES (UOC)	(7) QTY
					GROUP 0613	
					FIG. 92 HULL OR CHASSIS WIRING HARNESS – FORKLIFT WIRING HARNESS (5-PIN) 419 540 75 36	
1	PFFFF	6150-01-293-5728	64678	419 540 75 36	WIRING HARNESS UOC:GE4.....	1
2	PAFZZ	5940-00-113-9820	77060	12004437	.TERMINAL,LUG UOC:GE4.....	1
3	MFFZZ		64678	48-02461-025X 0.131	.INSULATION,SLEEVING MAKE FROM CAGE 83309 P/N DWP-125-25, CUT TO 0.131 FT, 2 USED ON REG UC053K & BELOW, 4 USED ON REG UC053L & ABOVE UOC:GE4.....	2
4	PAFZZ	5999-01-307-0561	00779	42241-3	.CONTACT,ELECTRICAL UOC:GE4.....	2
5	PFFZZ	5935-01-301-2605	00779	180 908-0	.CONNECTOR BODY,PLUG UOC:GE4.....	1
6	MFFZZ		64678	48-02223-160X 32.40	.WIRE,ELECTRICAL MAKE FROM CAGE 64678 P/N 48-02223-160, CUT TO 32.40 FT UOC:GE4.....	1
7	PAFZZ	5940-00-874-9033	00779	42660-2	.TERMINAL,QUICK DISC USED ON REG #UC053L & ABOVE UOC:GE4.....	1
7	PAFZZ	5935-01-153-9320	71468	120-1805-000	.CONNECTOR,PLUG,ELEC USED ON REG #UC053E THRU UC053K UOC:GE4.....	1
8	PAFZZ	5935-01-150-8323	71468	120-1807-000	.CONNECTOR BODY,PLUG UOC:GE4.....	1
9	MFFZZ		64678	48-02217-025X 10	.CONDUIT,NONMETALLIC MAKE FROM CAGE 64678 P/N 48-02217-025, CUT TO 10.53 FT UOC:GE4.....	1
10	PAFZZ	6150-01-305-5780	90129	5000110-10	.CABLE ASSEMBLY,SPEC UOC:GE4.....	1
					END OF FIGURE	

UNIT, DIRECT SUPPORT AND GENERAL SUPPORT MAINTENANCE

SMALL EMPLACEMENT EXCAVATOR (SEE) AND HIGH MOBILITY MATERIAL HANDLER (HMMH)

HULL OR CHASSIS WIRING HARNESS – FORKLIFT WIRING HARNESS (3-PIN) 419 540 74 36

REPAIR PARTS LIST

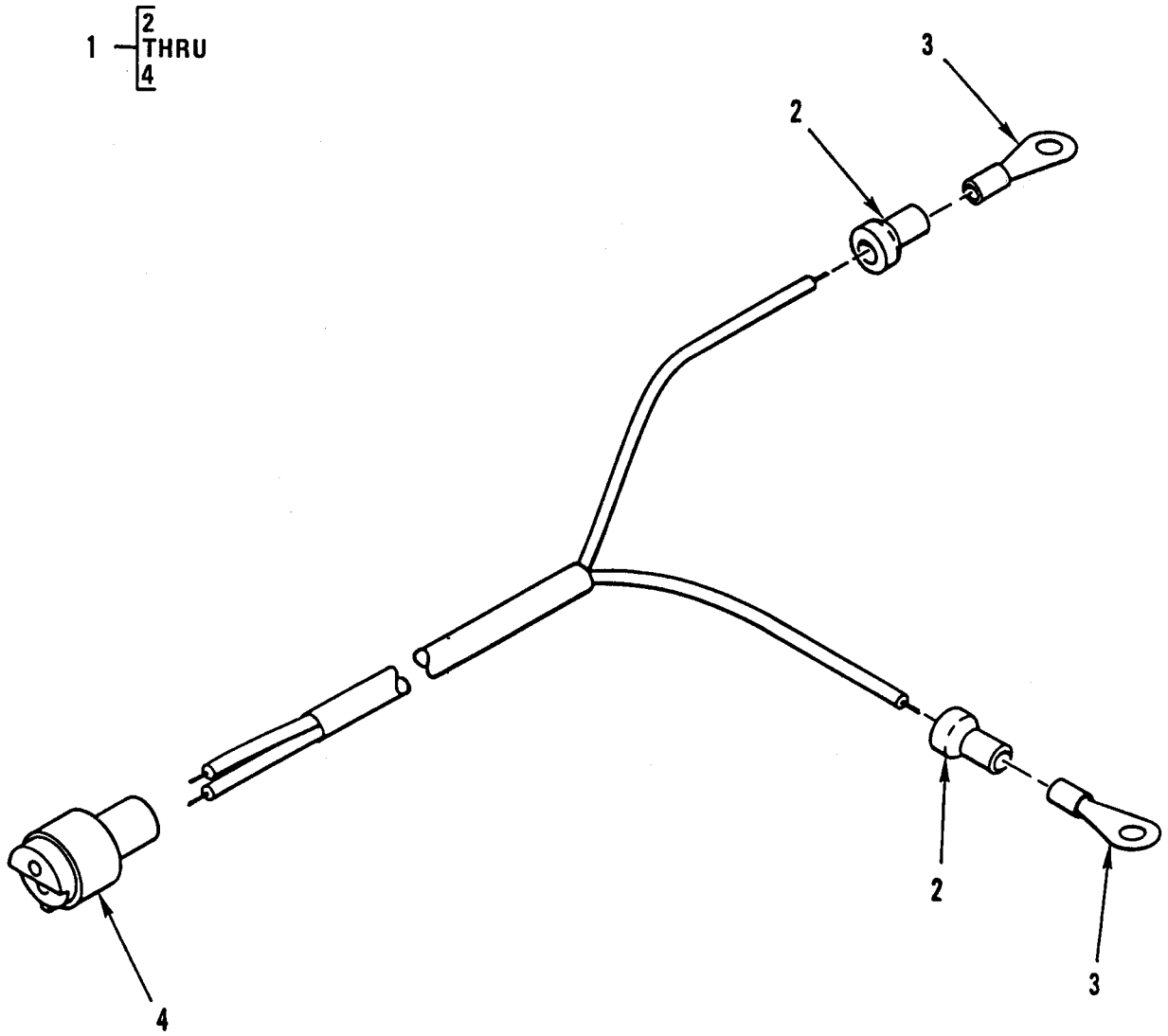

Figure 93. Hull or Chassis Wiring Harness – Forklift Wiring Harness (3-Pin).

(1) ITEM NO	(2) SMR CODE	(3) NSN	(4) CAGEC	(5) PART NUMBER	(6) DESCRIPTION AND USABLE ON CODES (UOC)	(7) QTY
					GROUP 0613	
					FIG. 93 HULL OR CHASSIS WIRING HARNESS – FORKLIFT WIRING HARNESS (3-PIN) 419 540 74 36	
1	PAFFF	6150-01-293-5727	64678	419 540 74 36	WIRING HARNESS UOC:GE4.....	1
2	MFFZZ		64678	48-02461-012X 0.13	.INSULATION,SLEEVING MAKE FROM CAGE 64678 P/N 48-02461-012, CUT TO 0.13 FT UOC:GE4.....	1
3	PAFZZ	5940-001-299-6250	00779	326854	.TERMINAL,LUG UOC:GE4.....	2
4	PAFZZ	5935-01-149-5165	29510	SS2R	.CONNECTOR BODY,PLUG UOC:GE4.....	1
					END OF FIGURE	

UNIT, DIRECT SUPPORT AND GENERAL SUPPORT MAINTENANCE

SMALL EMPLACEMENT EXCAVATOR (SEE) AND HIGH MOBILITY MATERIAL HANDLER (HMMH)

HULL OR CHASSIS WIRING HARNESS – FORKLIFT POWER CABLE 337035

REPAIR PARTS LIST

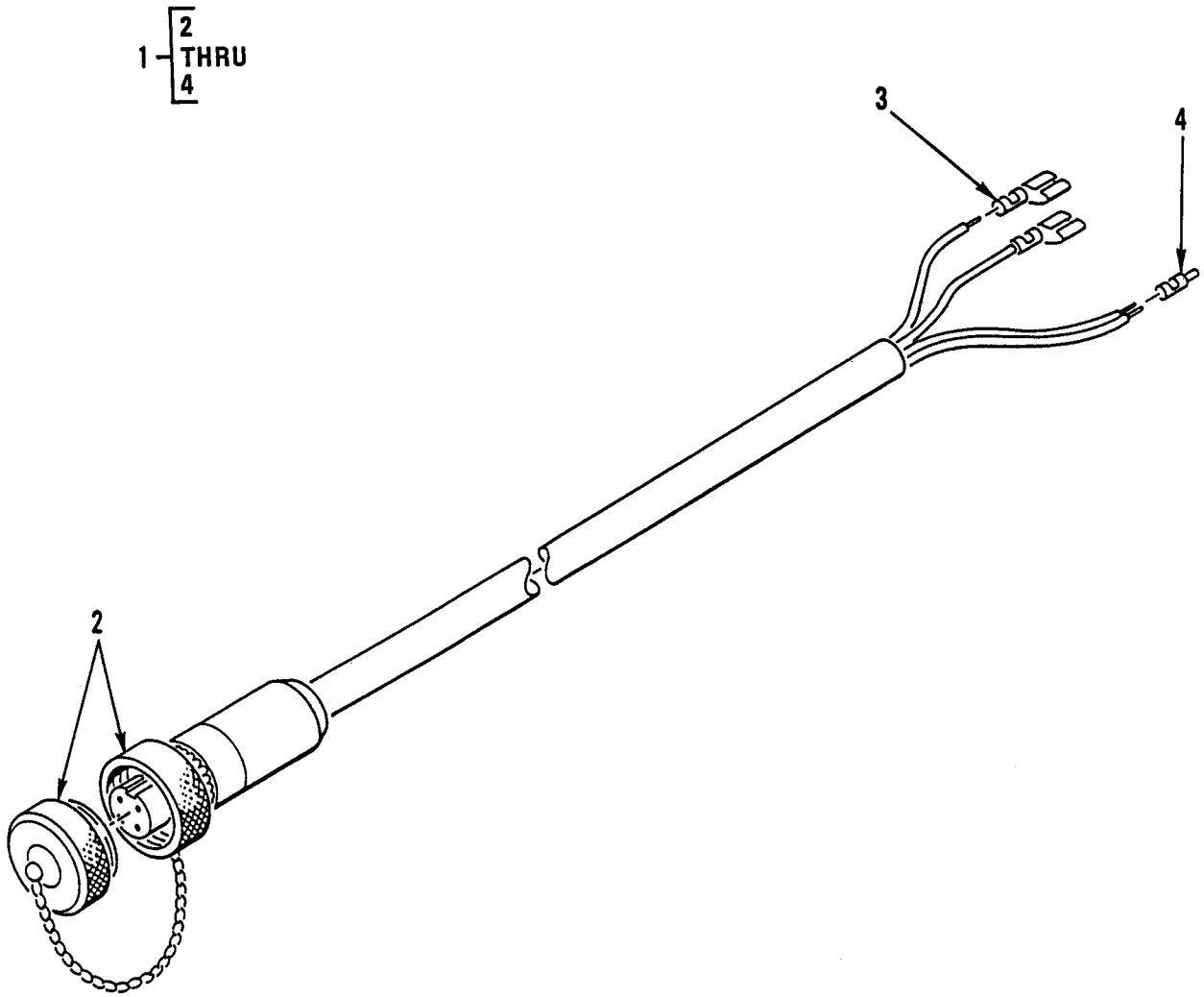

Figure 94. Hull or Chassis Wiring Harness – Forklift Power Cable.

(1) ITEM NO	(2) SMR CODE	(3) NSN	(4) CAGEC	(5) PART NUMBER	(6) DESCRIPTION AND USABLE ON CODES (UOC)	(7) QTY
					GROUP 0613	
					FIG. 94 HULL OR CHASSIS WIRING HARNESS – FORKLIFT POWER CABLE	
1	PAFFF	6150-01-300-5419	02614	337035	CABLE ASSEMBLY,POWE UOC:GE4.....	1
2	PAFZZ	5999-00-280-3499	96906	MS25274-2	.CAP,ELECTRICAL UOC:GE4.....	1
3	PAFZZ	5940-01-335-9730	02614	C-667336	.TERMINAL,TAPER RECE UOC:GE4.....	2
4	PAFZZ	5940-01-360-6074	02614	C-200260	.SPLICE,CONDUCTOR UOC:GE4.....	1
					END OF FIGURE	

UNIT, DIRECT SUPPORT AND GENERAL SUPPORT MAINTENANCE

SMALL EMPLACEMENT EXCAVATOR (SEE) AND HIGH MOBILITY MATERIAL HANDLER (HMMH)

HULL OR CHASSIS WIRING HARNESS – ELECTRICAL LEAD 419 540 70 38, AND ELECTRICAL LEAD 419 540 71 38

REPAIR PARTS LIST

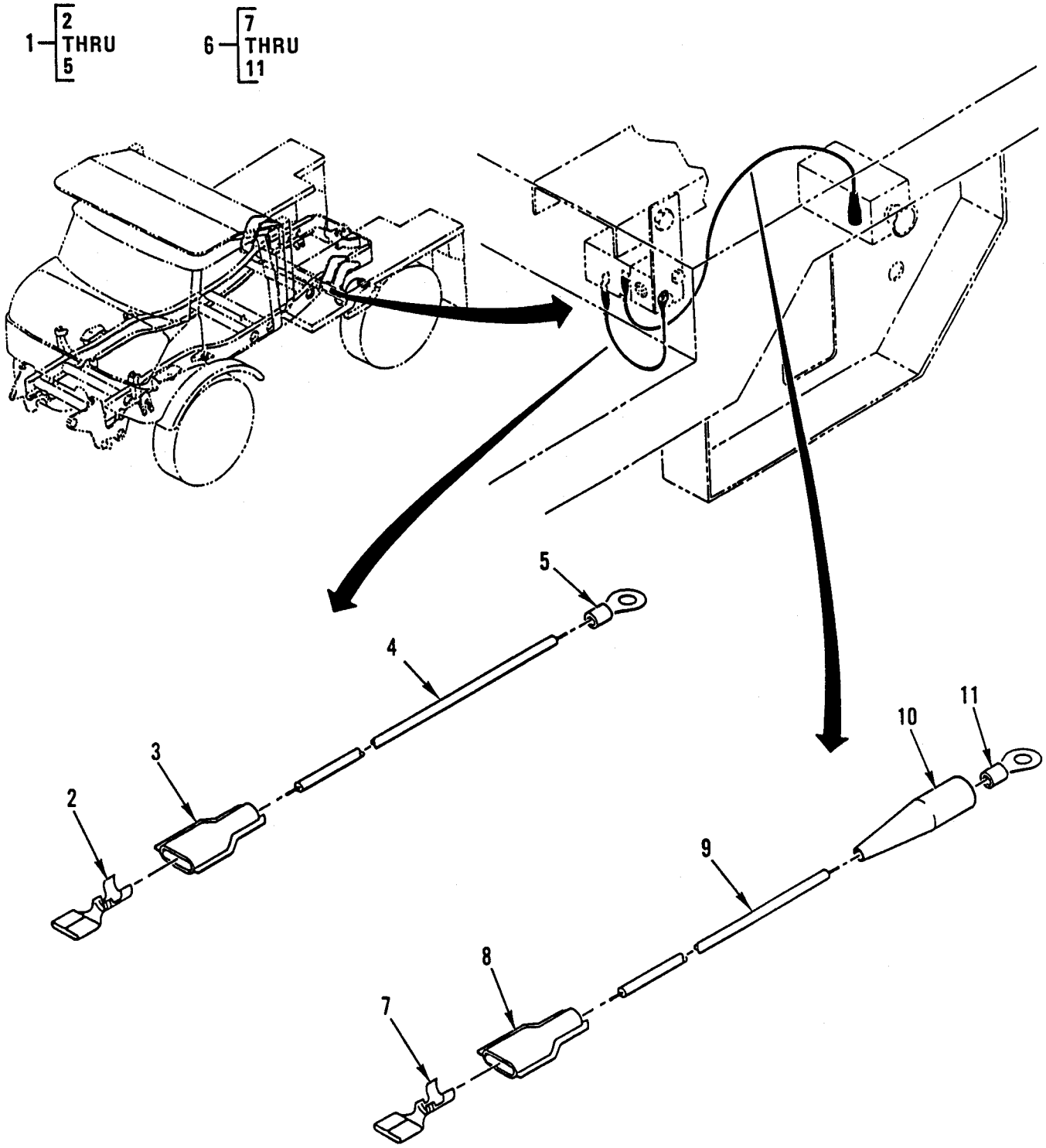

Figure 95. Hull or Chassis Wiring Harness – Electrical Leads.

(1) ITEM NO	(2) SMR CODE	(3) NSN	(4) CAGEC	(5) PART NUMBER	(6) DESCRIPTION AND USABLE ON CODES (UOC)	(7) QTY
					GROUP 0613	
					FIG. 95 HULL OR CHASSIS WIRING HARNESS – LEAD, ELECTRICAL 419 540 70 38, AND LEAD, ELECTRICAL 419 540 71 38	
1	PAFFF	6150-01-242-1968	64678	419 540 71 38	LEAD,ELECTRICAL UOC:GE4	2
1	PAFFF	6150-01-242-1968	64678	419 540 71 38	LEAD,ELECTRICAL UOC:GE1	1
2	PAOZZ	5940-00-874-9033	00779	41274	.TERMINAL,QUICK DISC	1
3	PAOZZ	5970-01-242-4586	00779	360020-1	.INSULATION SLEEVING	1
4	MOOZZ		64678	48-02223-160X 0.5	.WIRE,ELECT MAKE FROM CAGE 64678 P/N 48-02223-160, CUT TO 0.5 FEET	1
5	PAOZZ	5940-00-107-1481	96906	MS20659-104	.TERMINAL,LUG	1
6	PAFFF	6150-01-242-0146	64678	419 540 70 38	LEAD,ELECTRICAL UOC:GE4	2
6	PAFFF	6150-01-242-0146	64678	419 540 70 38	LEAD,ELECTRICAL UOC:GE1	1
7	PAOZZ	5940-00-874-9033	00779	41274	.TERMINAL,QUICK DISC	1
8	PAOZZ	5970-01-242-4586	00779	360020-1	.INSULATION SLEEVING	1
9	MOOZZ		64678	48-02223-160X 1.0	.WIRE,ELECTIRCAL MAKE FROM CAGE 64678 P/N 48-02223-160, CUT TO 1.0 FEET UOC:GE1	1
10	PAOZZ	5970-01-361-9228	64678	419 545 76 45	.INSULATION SLEEVING	1
11	PAOZZ	5940-00-107-1481	96906	MS20659-104	.TERMINAL,LUG	1
					END OF FIGURE	

UNIT, DIRECT SUPPORT AND GENERAL SUPPORT MAINTENANCE

SMALL EMPLACEMENT EXCAVATOR (SEE) AND HIGH MOBILITY MATERIAL HANDLER (HMMH)

HULL OR CHASSIS WIRING HARNESS – CAB FLOOR SEPARATION POINT TO HYDRUALIC SUSPENSION LOCKOUT WIRING HARNESS 419 540 17 37

REPAIR PARTS LIST

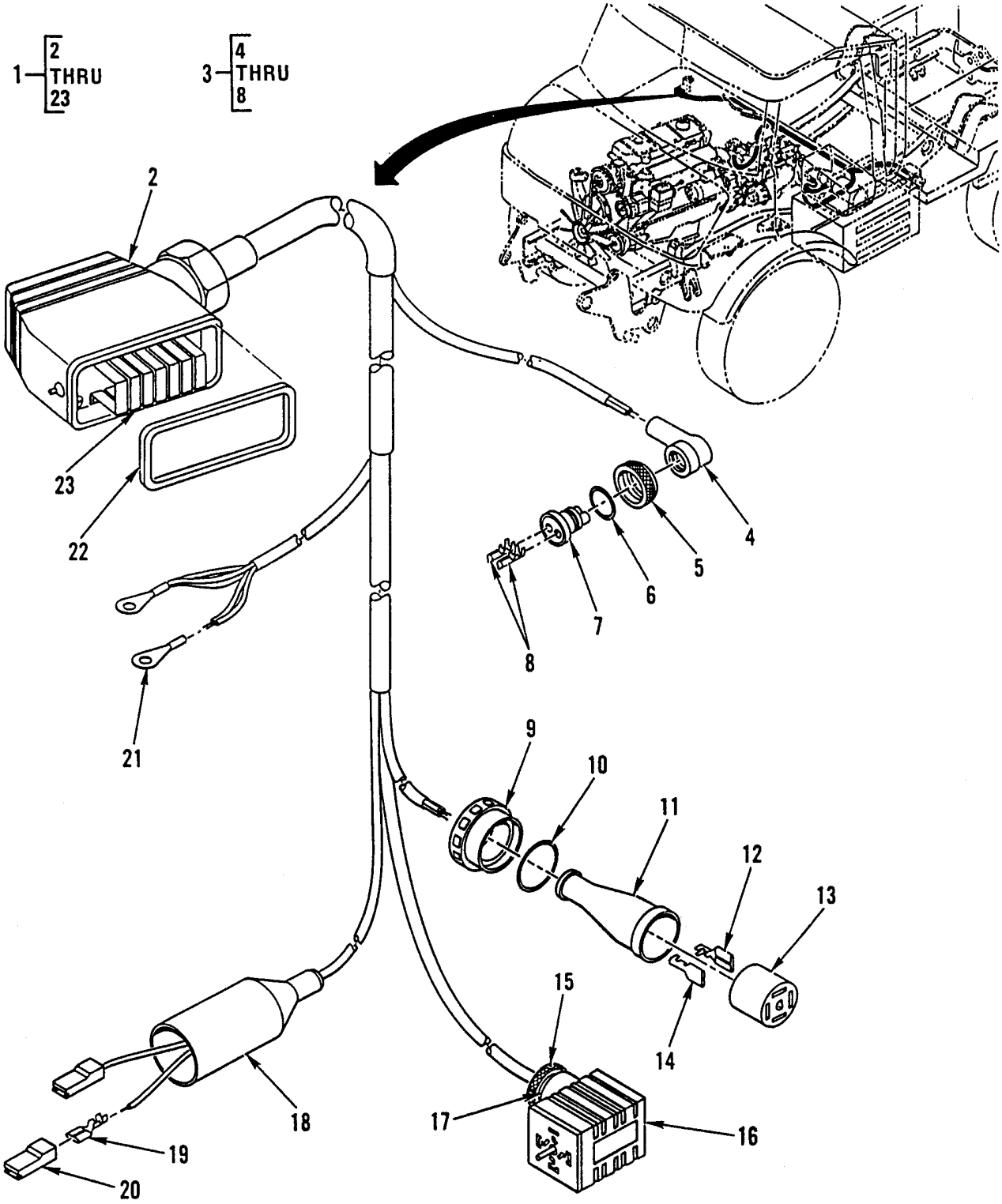

Figure 96. Hull or Chassis Wiring Harness – Cab Floor Separation Point to Hydraulic Suspension Lockout Wiring Harness and Electrical Plug Connector.

(1) ITEM NO	(2) SMR CODE	(3) NSN	(4) CAGEC	(5) PART NUMBER	(6) DESCRIPTION AND USABLE ON CODES (UOC)	(7) QTY
					GROUP 0613	
					FIG. 96 HULL OR CHASSIS WIRING HARNESS – CAB FLOOR SEPARATION POINT TO HYDRAULIC SUSPENSION LOCKOUT WIRING HARNESS 419 540 17 37, AND CONNECTOR, PLUG, ELECTRICAL 380 540 22 81	
1	PAFFF	6150-01-293-7120	64678	419 540 17 37	WIRING HARNESS UOC:GE4.....	1
2	PFFZZ	5935-01-296-6638	C1430	10.4450	.CONNECTOR BODY,RECE UOC:GE4.....	1
3	PAFFF	5935-01-290-0546	64678	380 540 22 81	.CONNECTOR,PLUG,ELEC UOC:GE4.....	1
4	PFFZZ	5975-01-298-4633	64678	380 546 03 35	..CABLE NIPPLE,ELECTR UOC:GE4.....	1
5	PFFZZ	4730-01-298-3647	64678	000 990 36 54	..NUT,UNION UOC:GE4.....	1
6	PFFZZ	5365-01-298-7833	64678	3809900140	..SPACER,RING UOC:GE4.....	1
7	PFFZZ	5935-01-296-8746	64678	380 545 02 26	..CONNECTOR BODY,RECE UOC:GE4.....	1
8	PFFZZ	5940-12-178-0428	64678	001 545 48 26	..TERMINAL,QUICK DISC UOC:GE4.....	2
9	XDFZZ		D8046	001 997 65 72	.THREAD PIECE,UNION UOC:GE4.....	1
10	PAFZZ	5330-01-313-3570	D2780	6435/564	.PACKING,PREFORMED UOC:GE4.....	1
11	PFFZZ	5340-01-336-6853	64678	002 997 07 81	.BOOT,DUST AND MOIST UOC:GE4.....	1
12	PFFZZ	5935-01-417-5980	64678	002 545 40 26	.CONNECTOR,RECEPTAC UOC:GE4.....	1
13	PFFZZ	5935-01-296-8745	D2780	6431	.CONNECTOR BODY,PLUG UOC:GE4.....	1
14	PFFZZ	5940-01-027-4669	64678	000 545 37 26	.TERMINAL,QUICK DISC UOC:GE4.....	1
15	PFFZZ	5305-12-320-0069	D8165	732 574-001	.THUMBSCREW UOC:GE4.....	1

(1) ITEM NO	(2) SMR CODE	(3) NSN	(4) CAGEC	(5) PART NUMBER	(6) DESCRIPTION AND USABLE ON CODES (UOC)	(7) QTY
16	PAFZZ	5935-01-296-6533	64678	003 545 54 26	.CONNECTOR,RECEPTACL UOC:GE4.....	1
17	PCFZZ	5330-12-174-3265	D8165	731 531-002	.SEAL,NONMETALLIC AN UOC:GE4.....	1
18	PFFZZ	5340-01-417-9872	64678	007 997 80 81	.CAP,PROTECTIVE,DUST UOC:GE4.....	1
19	PFFZZ	5935-01-312-6527	64678	000 545 45 26	.CONNECTOR,RECEPTACL UOC:GE4.....	2
20	PAFZZ	5975-01-285-0192	64678	000 545 35 45	.BUSHING,ELECTRICAL UOC:GE4.....	2
21	PFFZZ	5940-01-314-4644	64678	046225 010100	.TERMINAL,LUG UOC:GE4.....	2
22	XBOZZ		64678	000 545 36 80	.GASKET UOC:GE4.....	1
23	XAFZZ		C1430	10.4922	.CONNECTOR,RECEPTACL UOC:GE4.....	1
					END OF FIGURE	

UNIT, DIRECT SUPPORT AND GENERAL SUPPORT MAINTENANCE

SMALL EMPLACEMENT EXCAVATOR (SEE) AND HIGH MOBILITY MATERIAL HANDLER (HMMH)

HULL OR CHASSIS WIRING HARNESS – FORKLIFT CONNECTOR TO FUSE HOLDER WIRING HARNESS 419 540 18 37

REPAIR PARTS LIST

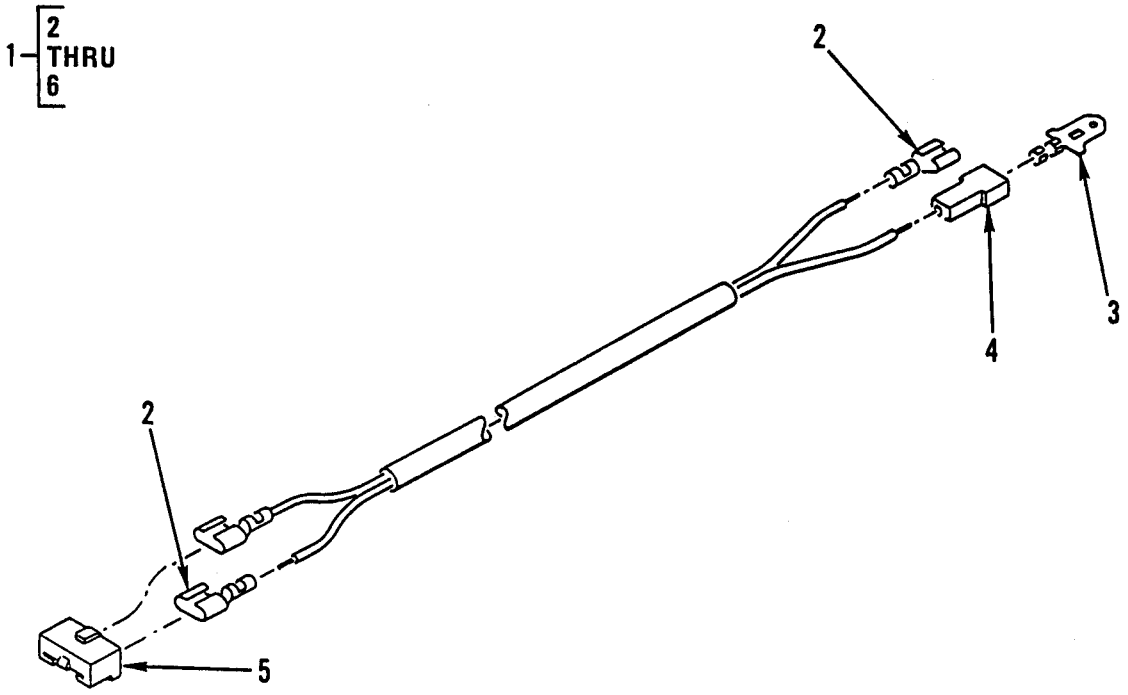

CONFIGURATION A

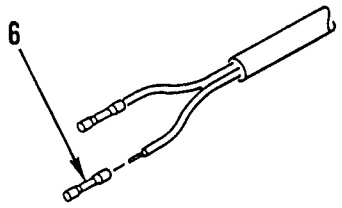

CONFIGURATION B

Figure 97. Hull or Chassis Wiring Harness – Forklift Connector to Fuse Holder Wiring Harness.

(1) ITEM NO	(2) SMR CODE	(3) NSN	(4) CAGEC	(5) PART NUMBER	(6) DESCRIPTION AND USABLE ON CODES (UOC)	(7) QTY
					GROUP 0613	
					FIG. 97 HULL OR CHASSIS WIRING HARNESS – FORKLIFT CONNECTOR TO FUSE HOLDER WIRING HARNESS 419 540 18 37	
1	XBFFF		64678	419 540 18 37	WIRING HARNESS UOC:GE4.....	1
2	PAFZZ	5999-01-315-7025	64678	000 545 38 26	.CONTACT,ELECTRICAL UOC:GE4.....	3
3	PAFZZ	5999-01-331-5711	64678	002 545 06 28	.CONTACT,ELECTRICAL UOC:GE4.....	1
4	PAFZZ	5935-01-245-3623	64678	002 545 13 28	.CONNECTOR BODY,PLUG UOC:GE4.....	1
5	PAFZZ	5935-01-244-7616	64678	001 545 87 28	.CONNECTOR BODY,PLUG UOC:GE4.....	1
6	PAFZZ	5940-01-361-5822	64678	23-1196-010	.SPLICE,CONDUCTOR UOC:GE4.....	2
					END OF FIGURE	

UNIT, DIRECT SUPPORT AND GENERAL SUPPORT MAINTENANCE

SMALL EMPLACEMENT EXCAVATOR (SEE) AND HIGH MOBILITY MATERIAL HANDLER (HMMH)

HULL OR CHASSIS WIRING HARNESS – FUSE HOLDER TO HYDRUALIC SUSPENSION LOCKOUT/REAR WALL WIRING HARNESS 419 540 16 37

REPAIR PARTS LIST

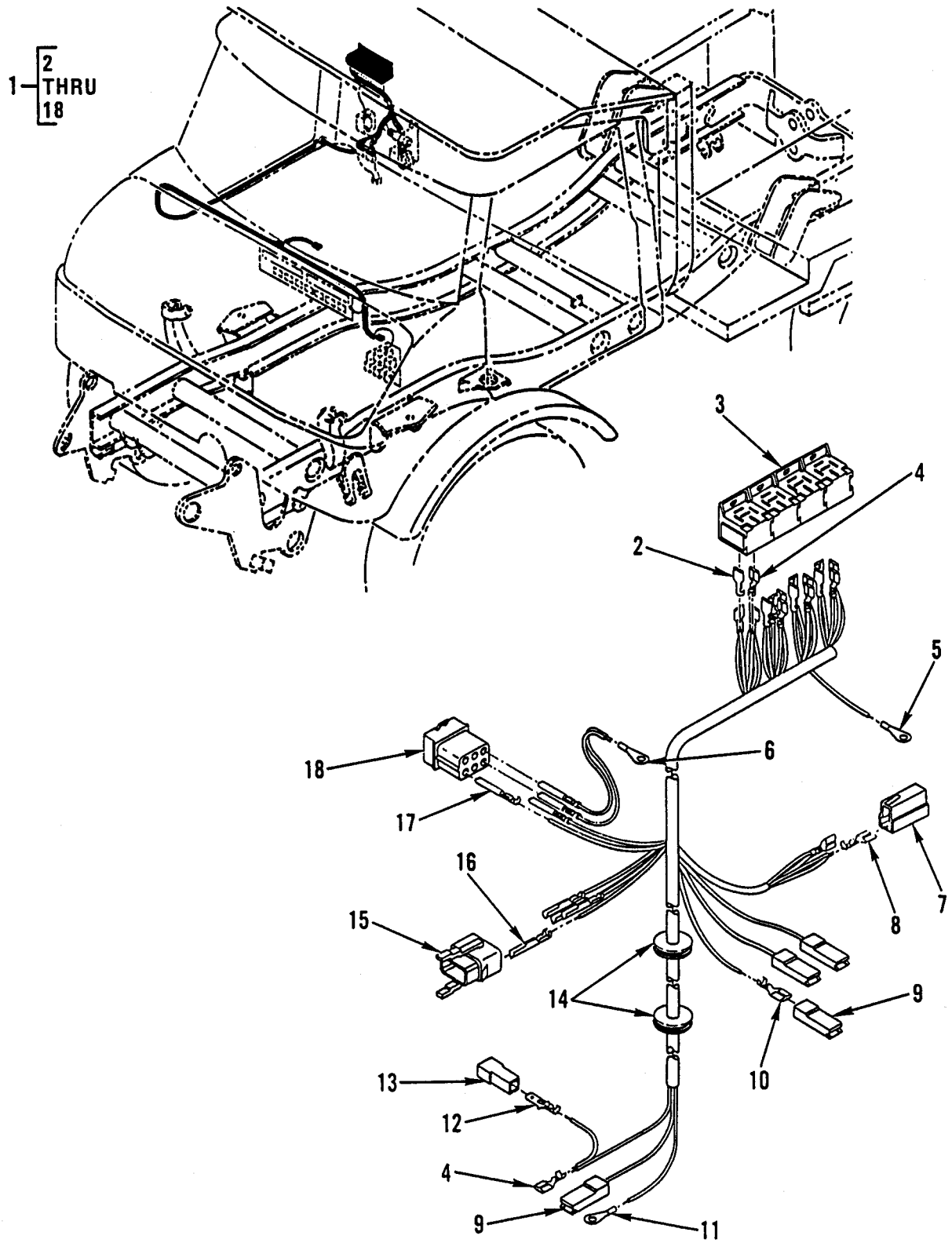

Figure 98. Hull or Chassis Wiring Harness – Fuse Holder to Hydraulic Suspension Lockout/Rear Wall Wiring Harness.

(1) ITEM NO	(2) SMR CODE	(3) NSN	(4) CAGEC	(5) PART NUMBER	(6) DESCRIPTION AND USABLE ON CODES (UOC)	(7) QTY
					GROUP 0613	
					FIG. 98 HULL OR CHASSIS WIRING HARNESS – FUSE HOLDER TO HYDRAULIC SUSPENSION LOCKOUT/REAR WALL WIRING HARNESS 419 540 16 37	
1	PAFFF	5995-01-298-4322	64678	419 540 16 37	WIRING HARNESS,BRAN UOC:GE4.....	1
2	PFFZZ	5940-01-289-5957	00779	180384-6	.TERMINAL,QUICK DISC UOC:GE4.....	1
3	PFFZZ	5935-01-296-3487	D8015	C 332 000 197 A	.SOCKET,PLUG-IN ELEC 5 USED ON REG UC053K & BELOW; 4 USED REG UC053L & ABOVE UOC:GE4.....	4
4	PFFZZ	5999-01-315-7025	64678	000 545 38 26	.CONTACT,ELECTRICAL UOC:GE4.....	17
5	PFFZZ	5940-01-315-4637	64678	046225 004102	.TERMINAL,LUG UOC:GE4.....	1
6	PFFZZ	5940-01-314-4638	64678	046225 004101	.TERMINAL,LUG UOC:GE4.....	1
7	PFFZZ	5935-01-244-7616	64678	001 545 87 28	.CONNECTOR BODY,PLUG UOC:GE4.....	1
8	PFFZZ	5940-01-027-4669	64678	000 545 37 26	.TERMINAL,QUICK DISC UOC:GE4.....	2
9	PFFZZ	5975-01-285-0192	64678	000 545 35 45	.BUSHING,ELECTRICAL 3 USED REG UC053K & BELOW; 4 USED REG UC053L AND ABOVE UOC:GE4.....	4
10	PFFZZ	5940-001-289-5959	64678	000 545 46 26	.TERMINAL,QUICK DISC UOC:GE4.....	3
11	PFFZZ	5940-01-320-0610	64678	046225 006101	.TERMINAL,LUG UOC:GE4.....	1
12	PAFZZ	5999-01-331-5711	64678	002 545 06 28	.CONTACT,ELECTRICAL UOC:GE4.....	1
13	PFFZZ	5935-01-245-3623	64678	002 545 13 28	.CONNECTOR BODY,PLUG UOC:GE4.....	1

(1) ITEM NO	(2) SMR CODE	(3) NSN	(4) CAGEC	(5) PART NUMBER	(6) DESCRIPTION AND USABLE ON CODES (UOC)	(7) QTY
14	PAFZZ	5325-01-298-2485	64678	000 997 22 81	.GROMMET,NONMETALLIC UOC:GE4.....	2
15	XDFZZ		00779	1-163036-0	.HOUSING,PIN UOC:GE4.....	1
16	PAFZZ	5999-01-297-1973	64678	008 545 06 28	.CONTACT,ELECTRICAL UOC:GE4.....	4
17	PFFZZ	5999-00-476-6327	00779	61117-1	.CONTACT,ELECTRICAL UOC:GE4.....	4
18	PFFZZ	5935-01-296-3438	D8512	1-163035-0	.CONNECTOR BODY,PLUG UOC:GE4.....	1
					END OF FIGURE	

UNIT, DIRECT SUPPORT AND GENERAL SUPPORT MAINTENANCE

SMALL EMPLACEMENT EXCAVATOR (SEE) AND HIGH MOBILITY MATERIAL HANDLER (HMMH)

HULL OR CHASSIS WIRING HARNESS – CAB FLOOR SEPARATION POINT TO REAR WALL WIRING HARNESS 419 540 13 37

REPAIR PARTS LIST

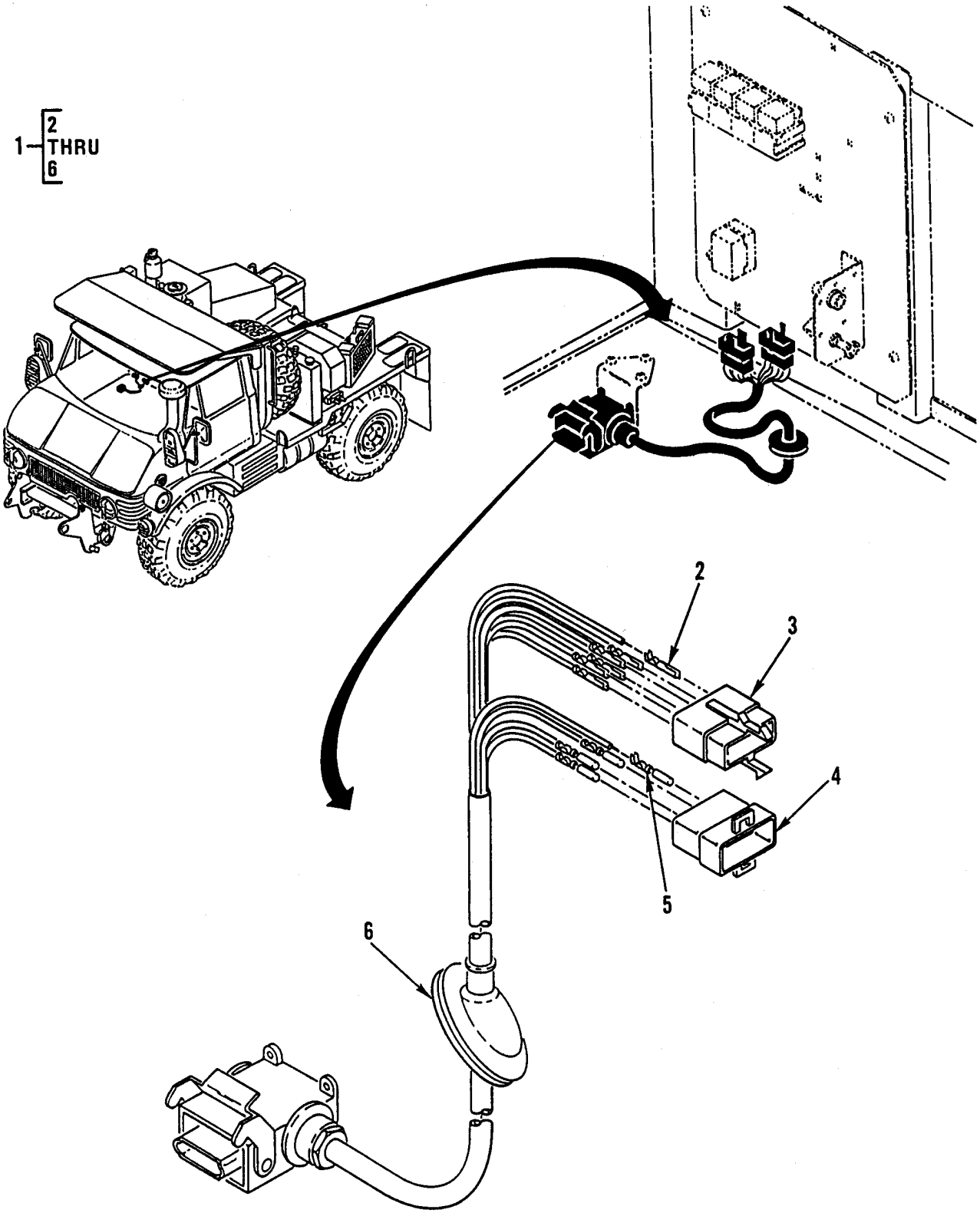

Figure 99. Hull or Chassis Wiring Harness – Cab Floor Separation Point to Rear Wall Wiring Harness.

(1) ITEM NO	(2) SMR CODE	(3) NSN	(4) CAGEC	(5) PART NUMBER	(6) DESCRIPTION AND USABLE ON CODES (UOC)	(7) QTY
					GROUP 0613	
					FIG. 99 HULL OR CHASSIS WIRING HARNESS – CAB FLOOR SEPARATION POINT TO REAR WALL WIRING HARNESS 419 540 13 37	
1	PAFFF	6150-01-364-2905	64678	419 540 13 37	WIRING HARNESS BRAN UOC:GE4.....	1
2	PAFZZ	5999-01-297-1973	64678	008 545 06 28	.CONTACT,ELECTRICAL UOC:GE4.....	6
3	XDFZZ		00779	1-163036-0	.HOUSING,PIN UOC:GE4.....	1
4	PAFZZ	5935-01-296-3438	00779	1-163035-0	.CONNECTOR BODY,PLUG UOC:GE4.....	1
5	PAFZZ	5999-01-360-7471	64678	016 545 50 28	.CONTACT,ELECTRICAL UOC:GE4.....	4
6	PAFZZ	5325-01-360-1057	64678	314 997 01 81	.GROMMET,NONMETALLIC UOC:GE4.....	1
					END OF FIGURE	

UNIT, DIRECT SUPPORT AND GENERAL SUPPORT MAINTENANCE

SMALL EMPLACEMENT EXCAVATOR (SEE) AND HIGH MOBILITY MATERIAL HANDLER (HMMH)

HULL OR CHASSIS WIRING HARNESS – FRAME WIRING HARNESS 419 540 00 37, SPECIAL CABLE ASSEMBLY 380 540 21 81, AND ELECTRICAL PLUG CONNECTOR 380 540 22 81

REPAIR PARTS LIST

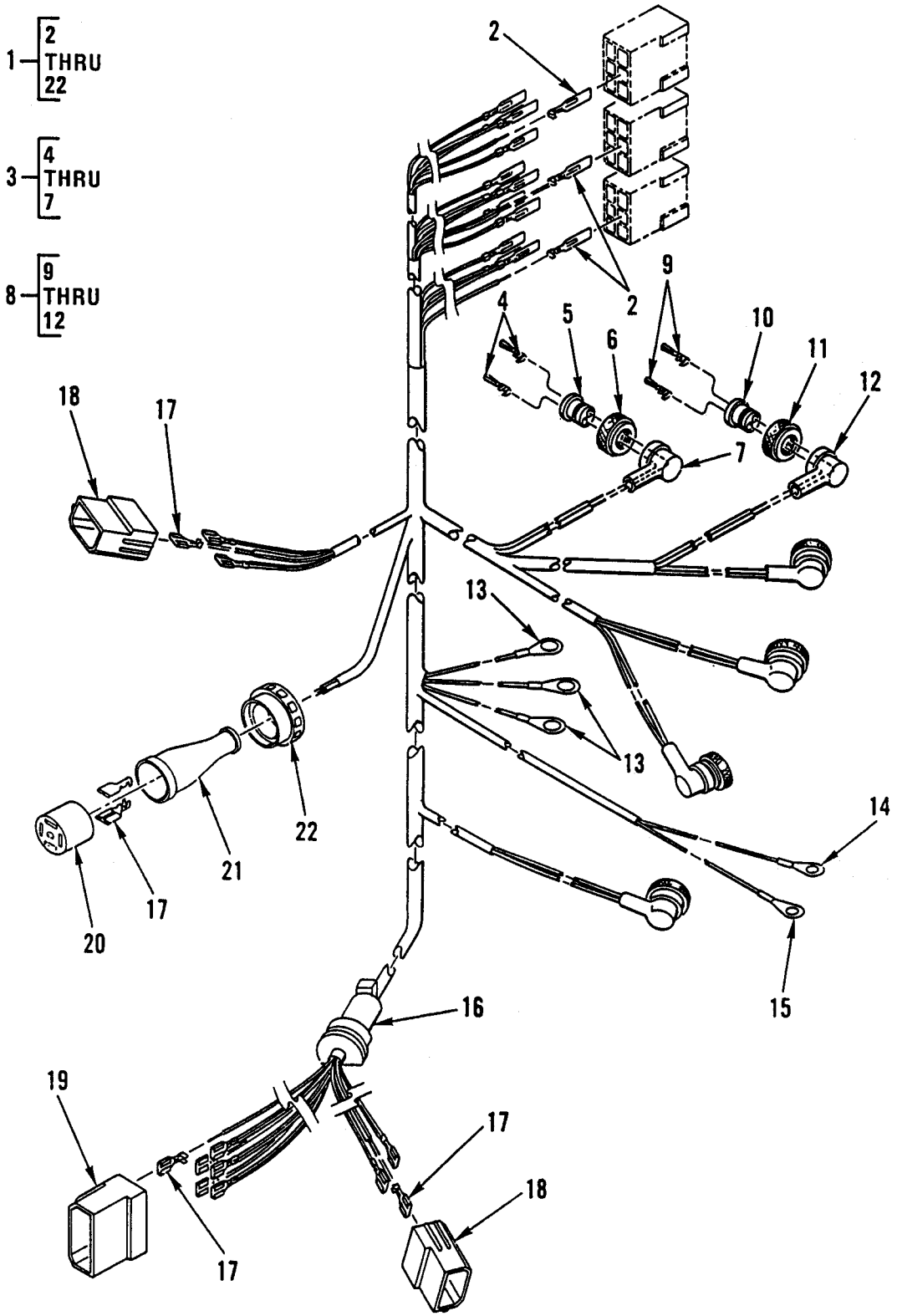

Figure 100. Hull or Chassis Wiring Harness – Frame Wiring Harness, Special Cable Assembly, and Electrical Plug Connector.

(1) ITEM NO	(2) SMR CODE	(3) NSN	(4) CAGEC	(5) PART NUMBER	(6) DESCRIPTION AND USABLE ON CODES (UOC)	(7) QTY
					GROUP 0613	
					FIG. 100 HULL OR CHASSIS WIRING HARNESS – FRAME WIRING HARNESS 419 540 00 37, CABLE ASSEMBLY, SPECIAL 380 540 21 81, AND CONNECTOR, PLUG, ELECTRICAL 380 540 22 81	
1	PAFFF	5995-01-244-0161	64678	419 540 00 37	WIRING HARNESS,BRAN	1
2	PAFZZ	5999-01-331-5711	64678	002 545 06 28	.CONTACT,ELECTRICAL	15
3	PAFFF	6150-01-292-5116	64678	380 540 21 81	.CABLE ASSEMBLY,SPEC WITH 24 MM NUT	1
4	PFFZZ	5940-12-178-0428	64678	001 545 48 26	..TERMINAL,QUICK DISC	2
5	PFFZZ	5935-01-312-6628	64678	380 545 00 26	..CONNECTOR BODY,RECE	5
6	PFFZZ	5310-01-313-3978	64678	000 990 20 54	..NUT,PLAIN,KNURLED	5
7	PFFZZ	5975-01-298-4633	64678	380 546 03 35	..CABLE NIPPLE,ELECTR	1
8	PFFZZ	5935-01-290-0546	64678	380 540 22 81	.CONNECTOR,PLUG,ELEC WITH 27 MM NUT	5
9	PAFZZ	5940-12-178-0428	D8512	62734-2	..CONNECTOR,RECEPTACL	2
10	PFFZZ	5935-01-296-8746	64678	380 545 02 26	..CONNECTOR BODY,RECE	1
11	PFFZZ	4730-01-298-3647	64678	000 990 36 54	..NUT,UNION	1
12	PFFZZ	5975-01-298-4633	64678	380 546 03 35	..CABLE NIPPLE,ELECTR	1
13	XAFZZ		64678	046225 012101	.RING,TERMINAL	3
14	XAFZZ		64678	000 159 16 79	.RING,TERMINAL	1
15	PFFZZ	5940-01-314-2812	64678	046225 005100	.TERMINAL,LUG	1
16	PFFZZ	5975-01-286-1912	64678	380 546 20 37	.BUSHING,STRAIN RELI	1
17	PFFZZ	5999-01-315-7025	64678	000 545 38 26	.CONTACT,ELECTRICAL	18
18	PFFZZ	5975-01-285-0193	64678	001 545 84 28	.BUSHING,ELECTRICAL	2
19	PFFZZ	5975-01-285-0194	64678	007 545 05 28	.BUSHING,ELECTRICAL	1
20	PFFZZ	5935-01-296-8745	D2780	6431	.CONNECTOR BODY,PLUG	1
21	PAFZZ	5340-01-336-6853	64678	002 997 07 81	.BOOT,DUST AND MOIST	1
22	XDFZZ		32780	6433	.THREAD PIECE,UNION	1
					END OF FIGURE	

UNIT, DIRECT SUPPORT AND GENERAL SUPPORT MAINTENANCE

SMALL EMPLACEMENT EXCAVATOR (SEE) AND HIGH MOBILITY MATERIAL HANDLER (HMMH)

HULL OR CHASSIS WIRING HARNESS – FRONT DISC BRAKE PAD WEAR INDICATOR WIRING HARNESS

REPAIR PARTS LIST

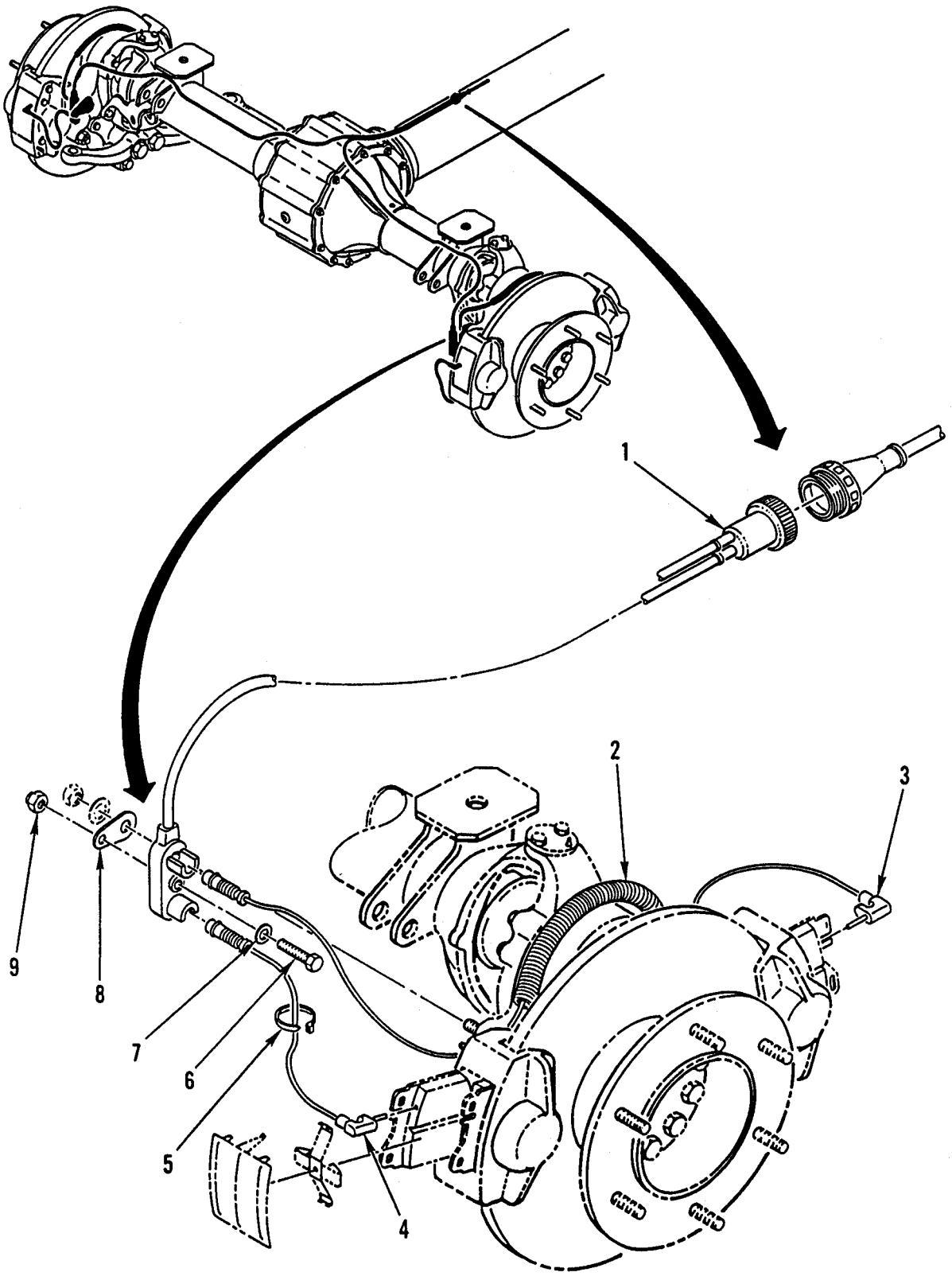

Figure 101. Hull or Chassis Wiring Harness – Front Disc Brake Pad Wear Indicator Wiring Harness.

(1) ITEM NO	(2) SMR CODE	(3) NSN	(4) CAGEC	(5) PART NUMBER	(6) DESCRIPTION AND USABLE ON CODES (UOC)	(7) QTY
					GROUP 0613	
					FIG. 101 HULL OR CHASSIS WIRING HARNESS – FRONT DISC BRAKE PAD WEAR INDICATOR WIRING HARNESS	
1	PFOOO	6150-01-332-2518	64678	435 540 05 09	CABLE ASSEMBLY,SPEC	1
2	MOOZZ		64678	000 546 16 30X 150	LOOM,NONMETALLIC MAKE FROM CAGE C2262,P/N 404110, CUT TO 150 MM	1
3	PFOZZ	2530-01-299-4085	D8129	09 8942 11	BRAKE SENSOR,PAD	2
4	PFOZZ	2530-01-298-5377	D8129	09 8942 00	SENSOR,ANTI-LOCK BR.....	2
5	PAOZZ	5975-00-074-2072	96906	MS3367-1-9	STRAP,TIEDOWN,ELECT	1
6	PFOZZ	5305-01-163-5075	56161	10503971	SCREW,CAP,HEXAGON H.....	2
7	PFOZZ	5310-01-240-1294	64678	009021006205	WASHER,FLAT	2
8	PAOZZ	5365-12-317-2833	D8046	416 421 07 94	SPACER,PLATE.....	2
9	PAOZZ	5310-01-241-6349	64678	913004006002	NUT,SELF-LOCKING,HE	2
					END OF FIGURE	

UNIT, DIRECT SUPPORT AND GENERAL SUPPORT MAINTENANCE

SMALL EMPLACEMENT EXCAVATOR (SEE) AND HIGH MOBILITY MATERIAL HANDLER (HMMH)

HULL OR CHASSIS WIRING HARNESS – MAIN WIRING HARNESS 419 540 00 05

REPAIR PARTS LIST

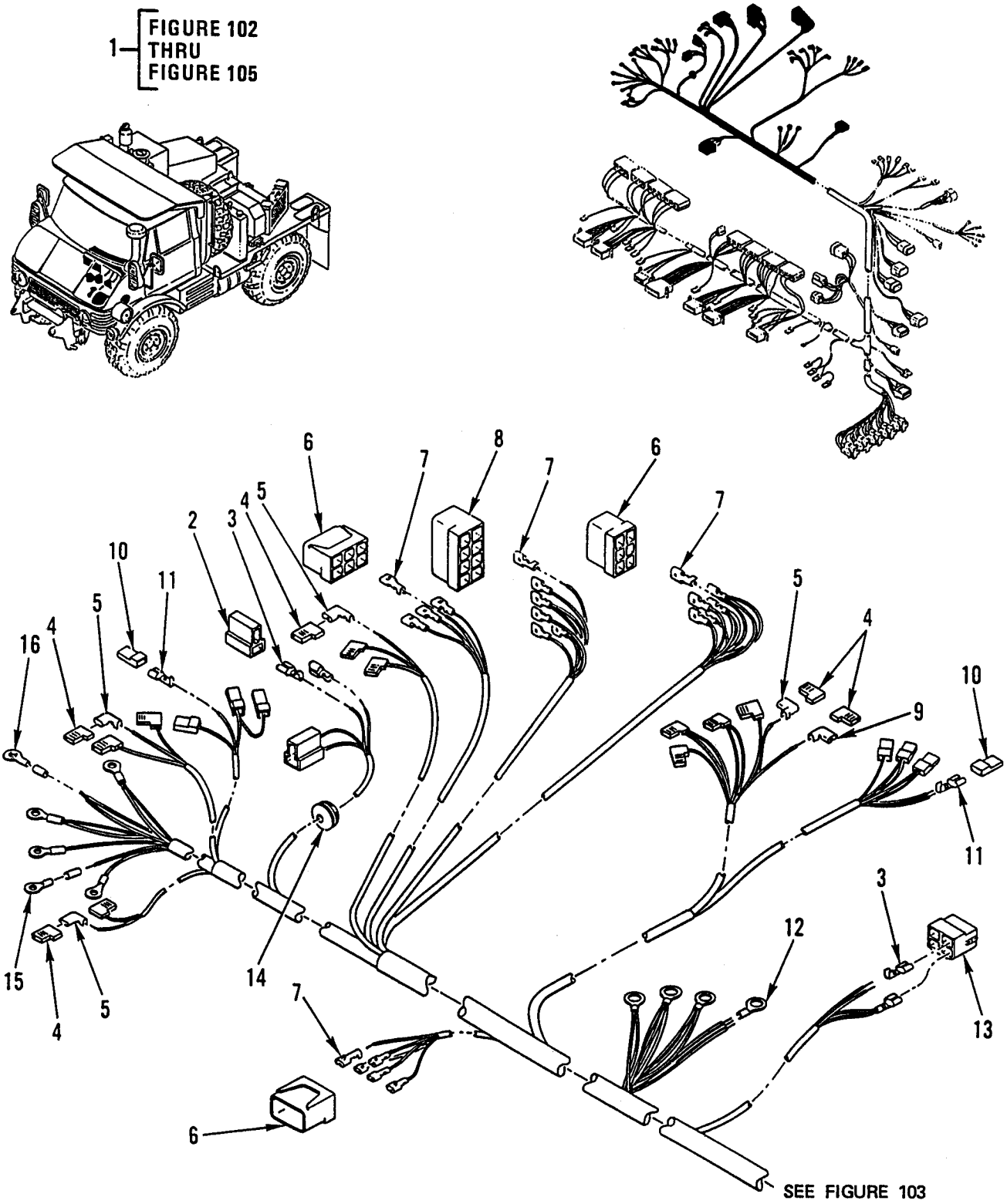

Figure 102. Hull or Chassis Wiring Harness – Main Wiring Harness (Figure 1 of 4).

(1) ITEM NO	(2) SMR CODE	(3) NSN	(4) CAGEC	(5) PART NUMBER	(6) DESCRIPTION AND USABLE ON CODES (UOC)	(7) QTY
					GROUP 0613	
					FIG. 102 HULL OR CHASSIS WIRING HARNESS – MAIN WIRING HARNESS 419 540 00 05	
1	PAFFF	5995-01-244-2591	64678	419 540 00 05	WIRING HARNESS,BRAN	1
2	PFFZZ	5935-01-244-7616	64678	001 545 87 28	.CONNECTOR BODY,PLUG.....	5
3	PFFZZ	5940-01-027-4669	64678	000 545 37 26	.TERMINAL,QUICK DISC.....	32
4	PFFZZ	5940-01-289-5960	00779	180429-3	.TERMINAL,QUICK DISC.....	14
5	PFFZZ	5975-12-166-3326	D8512	180984	.CABLE NIPPLE,ELECTR	13
6	PFFZZ	5975-01-285-0194	64678	007 545 05 28	.BUSHING,ELECTRICAL	5
7	PFFZZ	5999-01-315-7025	64678	000 545 38 26	.CONTACT,ELECTRICAL	106
8	PFFZZ	5935-01-246-8570	64678	001 545 83 28	.CONNECTOR BODY,PLUG.....	1
9	PFFZZ	5975-01-313-2044	64678	011 545 75 28	.NIPPLE,ELECTRICAL C	1
10	PFFZZ	5975-01-285-0192	64678	000 545 35 45	.BUSHING,ELECTRICAL	34
11	PFFZZ	5935-01-312-6527	64678	000 545 45 26	.CONNECTOR,RECEPTACL	32
12	PFFZZ	5940-01-314-2813	64678	046225 008102	.TERMINAL,LUG	4
13	PFFZZ	5975-01-285-0193	64678	001 545 84 28	.BUSHING,ELECTRICAL	2
14	PAFZZ	5325-01-263-0883	64678	601 997 23 81	.GROMMET,NONMETALLIC.....	1
15	PFFZZ	5940-01-314-4642	64678	046225 004103	.TERMINAL,LUG	5
16	PFFZZ	5940-01-314-4637	64678	046225 004102	.TERMINAL,LUG	3
					END OF FIGURE	

UNIT, DIRECT SUPPORT AND GENERAL SUPPORT MAINTENANCE

SMALL EMPLACEMENT EXCAVATOR (SEE) AND HIGH MOBILITY MATERIAL HANDLER (HMMH)

HULL OR CHASSIS WIRING HARNESS – MAIN WIRING HARNESS 419 540 00 05

REPAIR PARTS LIST

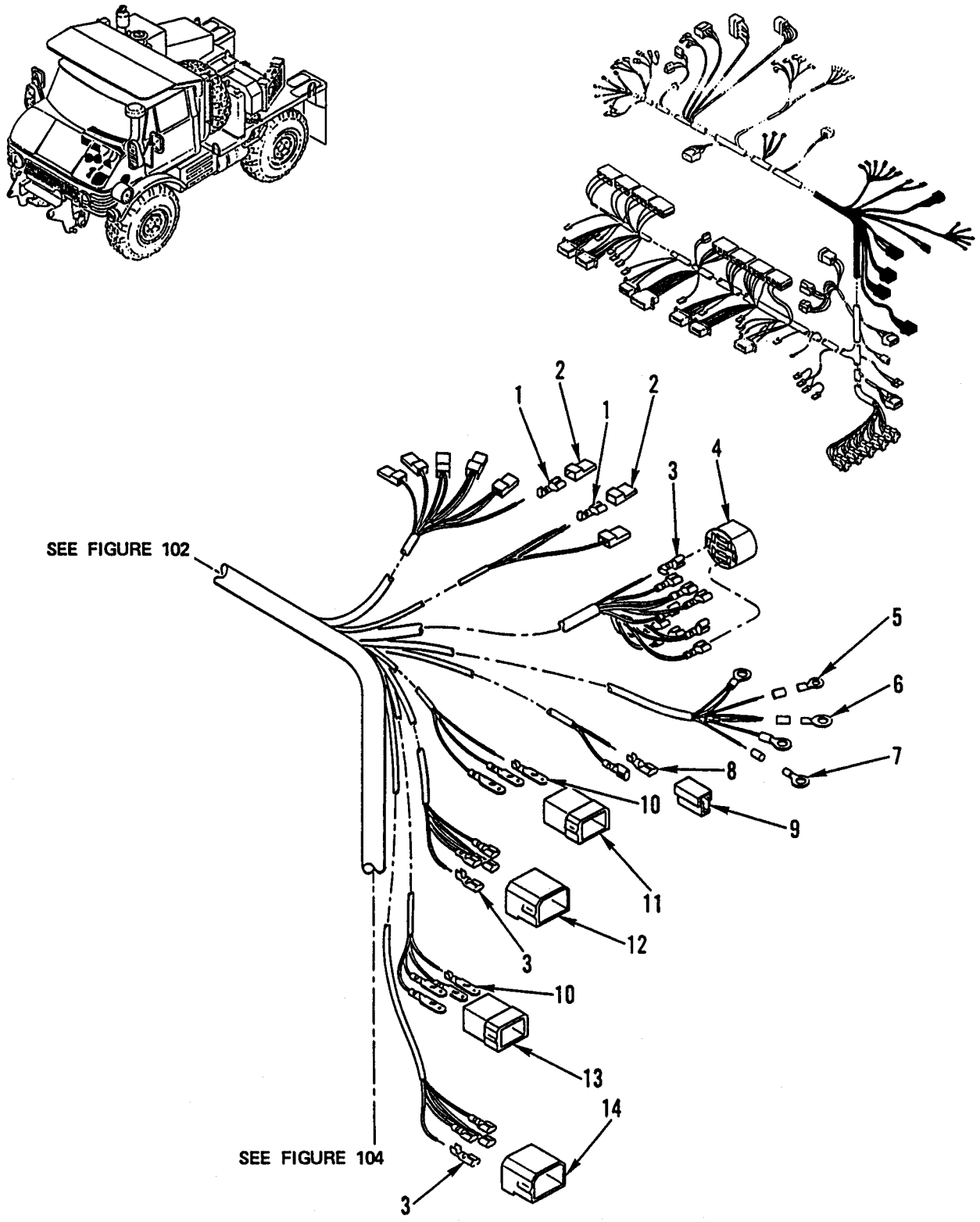

Figure 103. Hull or Chassis Wiring Harness – Main Wiring Harness (Figure 2 of 4).

(1) ITEM NO	(2) SMR CODE	(3) NSN	(4) CAGEC	(5) PART NUMBER	(6) DESCRIPTION AND USABLE ON CODES (UOC)	(7) QTY
					GROUP 0613	
					FIG. 103 HULL OR CHASSIS WIRING HARNESS – MAIN WIRING HARNESS 419 540 00 05	
1	PFFZZ	5935-01-312-6527	64678	000 545 45 26	.CONNECTOR,RECEPTACL	8
2	PFFZZ	5975-01-285-0192	64678	000 545 35 45	.BUSHING,ELECTRICAL	8
3	PFFZZ	5999-01-315-7025	64678	000 545 38 26	.CONTACT,ELECTRICAL	17
4	PFFZZ	5935-01-287-0007	D8095	1955/143	.CONNECTOR BODY,PLUG.....	1
5	PFFZZ	5940-01-314-4642	64678	046225 004103	.TERMINAL,LUG	2
6	XAFZZ		64678	046225 005103	.RING,TERMINAL.....	1
7	PFFZZ	5940-01-314-2810	64678	046225 005102	.TERMINAL,LUG	2
8	PFFZZ	5940-01-027-4669	59730	000 545 37 26	.TERMINAL,QUICK DISC.....	2
9	PFFZZ	5935-01-244-7616	64678	001 545 87 28	.CONNECTOR BODY,PLUG.....	1
10	PFFZZ	5999-01-224-0342	00779	42565-3	.CONTACT,ELECTRICAL	17
11	PFFZZ	5935-01-287-2309	64678	014 545 67 28	.CONNECTOR BODY,PLUG.....	1
12	PFFZZ	5975-01-298-8565	64678	014 545 66 28	.BUSHING,ELECTRICAL	1
13	PFFZZ	5935-01-257-4043	64678	002 545 12 28	.CONNECTOR BODY,PLUG.....	2
14	PFFZZ	5975-01-285-0193	64678	001 545 84 28	.BUSHING,ELECTRICAL	1
					END OF FIGURE	

UNIT, DIRECT SUPPORT AND GENERAL SUPPORT MAINTENANCE

SMALL EMPLACEMENT EXCAVATOR (SEE) AND HIGH MOBILITY MATERIAL HANDLER (HMMH)

HULL OR CHASSIS WIRING HARNESS – MAIN WIRING HARNESS 419 540 00 05

REPAIR PARTS LIST

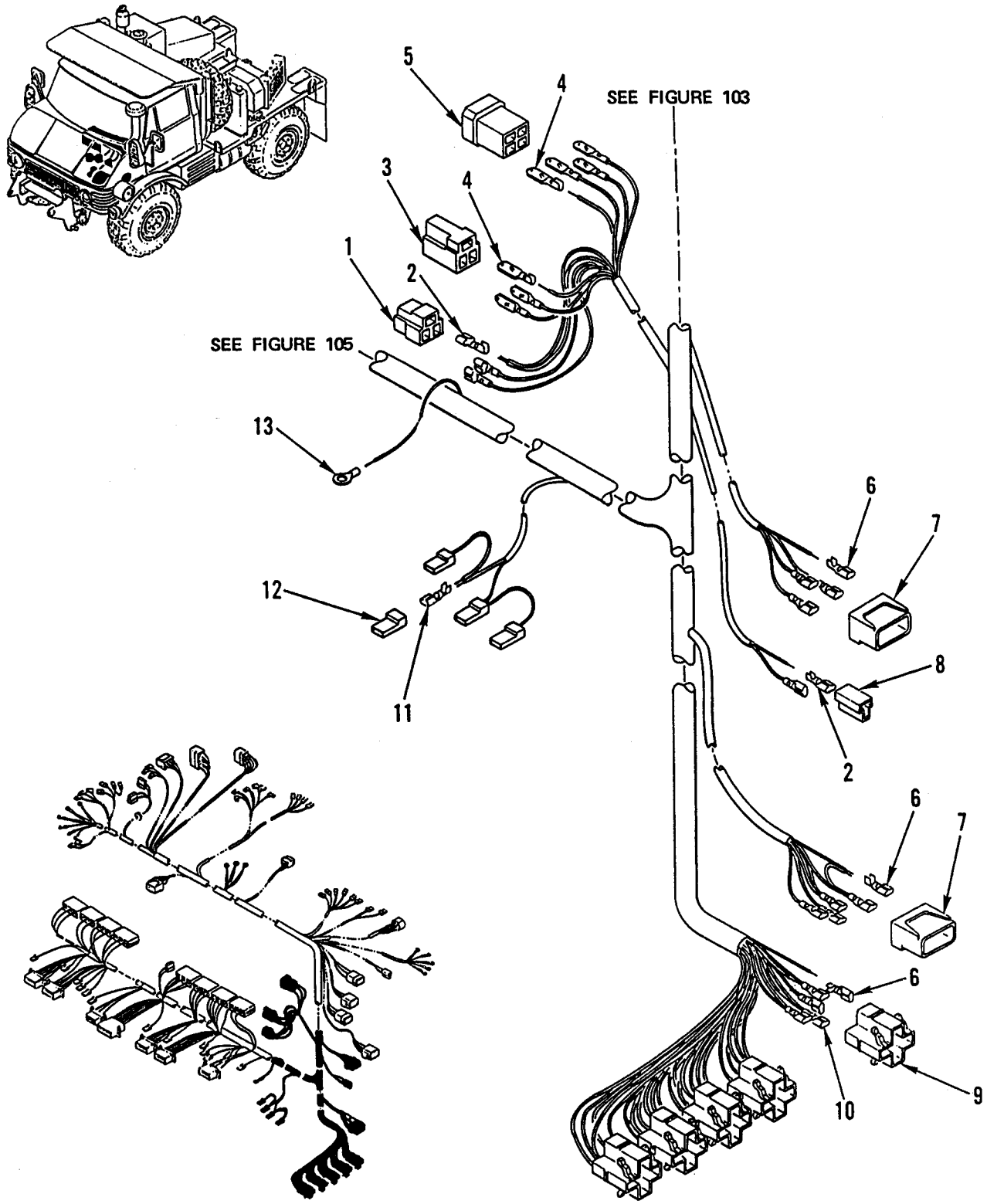

Figure 104. Hull or Chassis Wiring Harness – Main Wiring Harness (Figure 3 of 4).

(1) ITEM NO	(2) SMR CODE	(3) NSN	(4) CAGEC	(5) PART NUMBER	(6) DESCRIPTION AND USABLE ON CODES (UOC)	(7) QTY
					GROUP 0613	
					FIG. 104 HULL OR CHASSIS WIRING HARNESS – MAIN WIRING HARNESS 419 540 00 05	
1	PFFZZ	5975-01-285-0191	64678	005 545 64 28	.BUSHING,ELECTRICAL	1
2	PFFZZ	5940-01-027-4669	64678	000 545 37 26	.TERMINAL,QUICK DISC.....	5
3	PFFZZ	5975-01-285-0195	64678	005 545 66 28	.BUSHING,ELECTRICAL	1
4	PFFZZ	5999-01-224-0342	00779	42565-3	.CONTACT,ELECTRICAL	7
5	PFFZZ	5935-01-257-4043	64678	002 545 12 28	.CONNECTOR BODY,PLUG.....	1
6	PFFZZ	5999-01-315-7025	64678	000 545 38 26	.CONTACT,ELECTRICAL	32
7	PFFZZ	5975-01-285-0194	64678	007 545 05 28	.BUSHING,ELECTRICAL	2
8	PFFZZ	5935-01-244-7616	64678	001 545 87 28	.CONNECTOR BODY,PLUG.....	1
9	PFFZZ	5935-01-296-8744	D2773	6305.025	.CONNECTOR BODY,PLUG.....	5
10	PFFZZ	5940-01-289-5957	64678	000 545 40 26	.TERMINAL,QUICK DISC.....	1
11	PFFZZ	5935-01-312-6527	64678	000 545 45 26	.CONNECTOR,RECEPTACL	4
12	PFFZZ	5975-01-285-0192	64678	000 545 35 45	.BUSHING,ELECTRICAL	4
13	PFFZZ	5940-01-314-2811	64678	046225 006102	.TERMINAL,LUG	1
					END OF FIGURE	

UNIT, DIRECT SUPPORT AND GENERAL SUPPORT MAINTENANCE

SMALL EMPLACEMENT EXCAVATOR (SEE) AND HIGH MOBILITY MATERIAL HANDLER (HMMH)

HULL OR CHASSIS WIRING HARNESS – MAIN WIRING HARNESS 419 540 00 05

REPAIR PARTS LIST

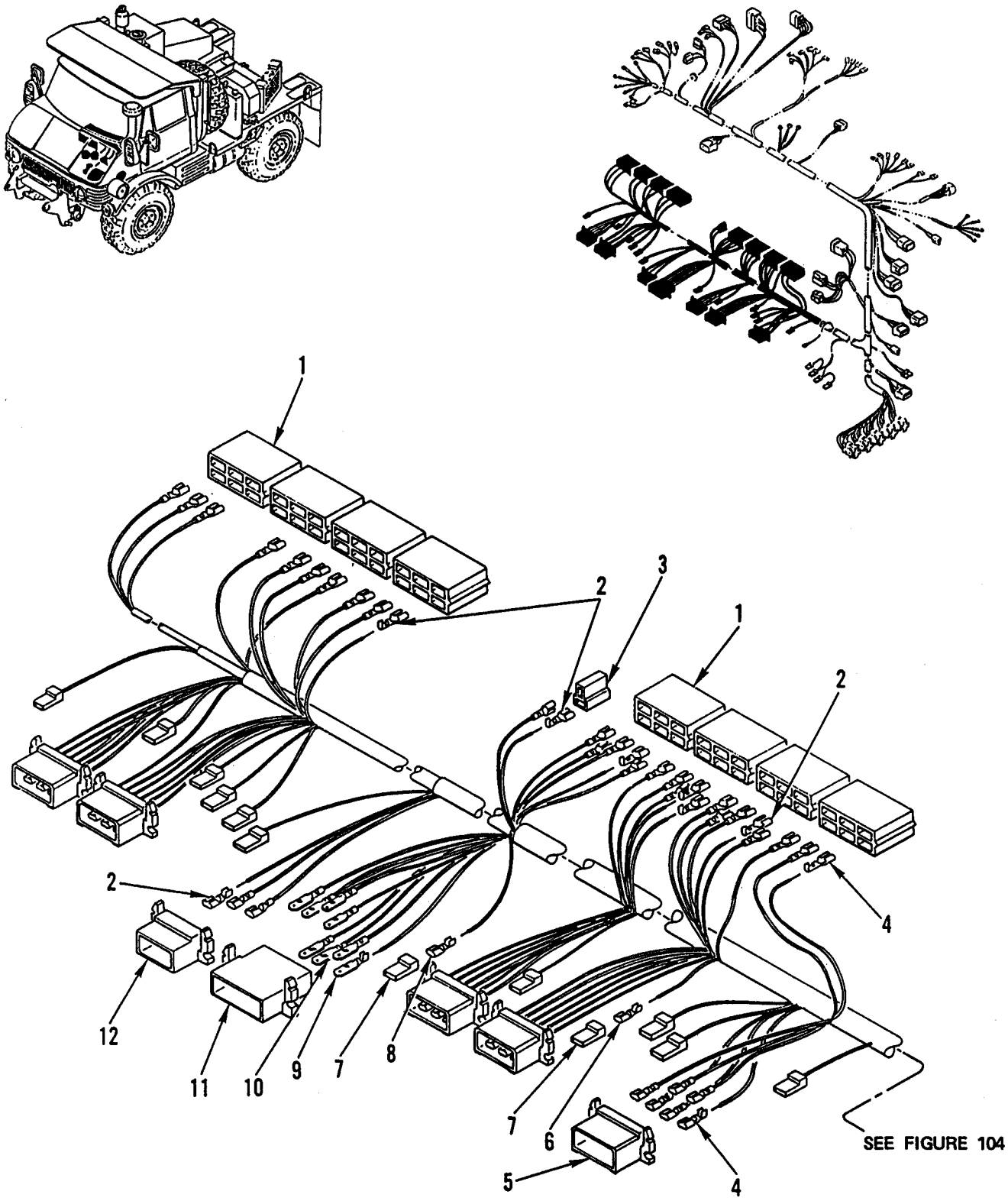

Figure 105. Hull or Chassis Wiring Harness – Main Wiring Harness (Figure 4 of 4).

(1) ITEM NO	(2) SMR CODE	(3) NSN	(4) CAGEC	(5) PART NUMBER	(6) DESCRIPTION AND USABLE ON CODES (UOC)	(7) QTY
					GROUP 0613	
					FIG. 105 HULL OR CHASSIS WIRING HARNESS – MAIN WIRING HARNESS 419 540 00 05	
1	PFFZZ	5935-01-287-5636	D8143	3739/01	.CONNECTOR BODY,PLUG.....	8
2	PFFZZ	5940-01-027-4669	64678	000 545 37 26	.TERMINAL,QUICK DISC.....	19
3	PFFZZ	5935-01-244-7616	64678	001 545 87 28	.CONNECTOR BODY,PLUG.....	1
4	PFFZZ	5999-01-315-7025	64678	000 545 38 26	.CONTACT,ELECTRICAL	42
5	PFFZZ	5970-01-289-2740	64678	001 545 81 28	.INSULATOR,SPACER.....	5
6	PFFZZ	5935-01-312-6527	64678	000 545 45 26	.CONNECTOR,RECEPTACL	10
7	PFFZZ	5975-01-285-0192	64678	000 545 35 45	.BUSHING,ELECTRICAL	12
8	PFFZZ	5940-01-289-5959	64678	000 545 46 26	.TERMINAL,QUICK DISC.....	2
9	PFFZZ	5940-01-289-5961	64678	002 545 14 28	.TERMINAL,QUICK DISC.....	2
10	PFFZZ	5999-01-224-0342	00779	42565-3	.CONTACT,ELECTRICAL	6
11	PFFZZ	5935-01-244-8320	64678	001 545 82 28	.CONNECTOR BODY,RECE.....	1
12	PFFZZ	5935-01-315-9867	64678	001 545 41 28	.CONNECTOR,RECEPTACL	1
					END OF FIGURE	

UNIT, DIRECT SUPPORT AND GENERAL SUPPORT MAINTENANCE

SMALL EMPLACEMENT EXCAVATOR (SEE) AND HIGH MOBILITY MATERIAL HANDLER (HMMH)

HULL OR CHASSIS WIRING HARNESS – SUPPRESSOR FILTER ELECTRICAL LEAD (140 MM) 419 540 08 37, AND SUPPRESSOR FILTER ELECTRICAL LEAD (170 MM) 419 540 08 37

REPAIR PARTS LIST

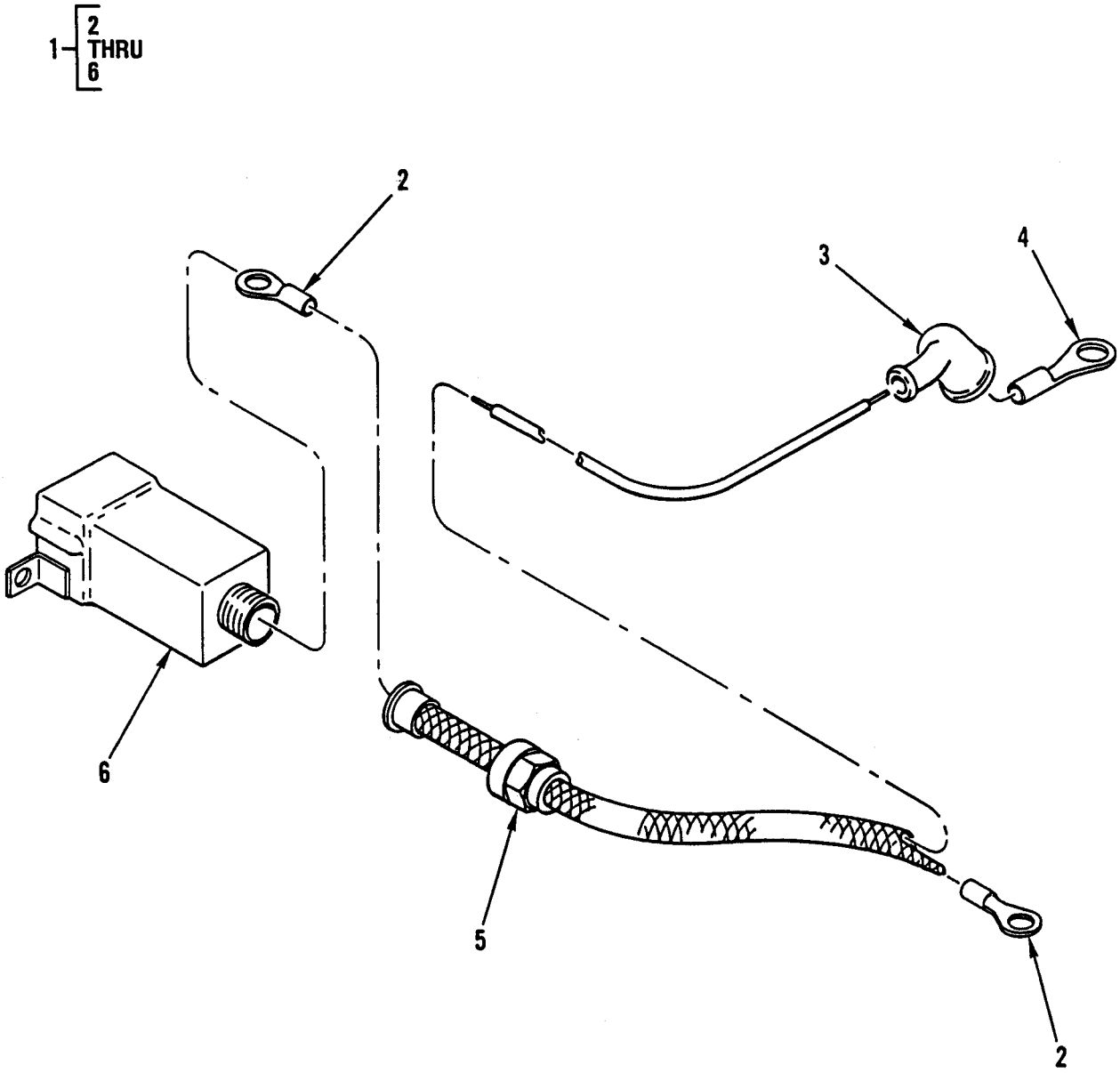

Figure 106. Hull or Chassis Wiring Harness – Suppressor Filter Electrical Lead Assemblies.

(1) ITEM NO	(2) SMR CODE	(3) NSN	(4) CAGEC	(5) PART NUMBER	(6) DESCRIPTION AND USABLE ON CODES (UOC)	(7) QTY
					GROUP 0613	
					FIG. 106 HULL OR CHASSIS WIRING HARNESS – SUPPRESSOR FILTER ELECTRICAL LEAD (140 MM) 419 540 08 37, AND SUPPRESSOR FILTER ELECTRICAL LEAD (170 MM), 419 540 08 37	
1	PAFFF	6150-01-293-7606	64678	419 540 07 37	LEAD ASSEMBLY,ELECT 140 MM.....	1
1	PAFFF	6150-01-293-7607	64678	419 540 08 37	LEAD ASSEMBLY,ELECT 170 MM.....	1
2	XBFZZ		64678	046236 005101	.TERMINAL,LUG	2
3	PFFZZ	5975-01-273-7482	53867	3 130 558 000	.CABLE NIPPLE,ELECTR	1
4	PFFZZ	5940-01-314-2813	64678	046225 008102	.TERMINAL,LUG	1
5	PFFZZ	2920-01-286-8688	D8015	1 297 010 001	.PARTS KIT,IGNITION	1
6	PFFZZ	5999-01-287-1499	64678	A000-156-17-24	.CAP,ELECTRICAL	1
					END OF FIGURE	

UNIT, DIRECT SUPPORT AND GENERAL SUPPORT MAINTENANCE

SMALL EMPLACEMENT EXCAVATOR (SEE) AND HIGH MOBILITY MATERIAL HANDLER (HMMH)

HULL OR CHASSIS WIRING HARNESS – CAP PLUG CONNECTOR TO HEATER PANEL SWITCH AND MASTER LIGHT SWITCH WIRING HARNESS 419 540 03 37

REPAIR PARTS LIST

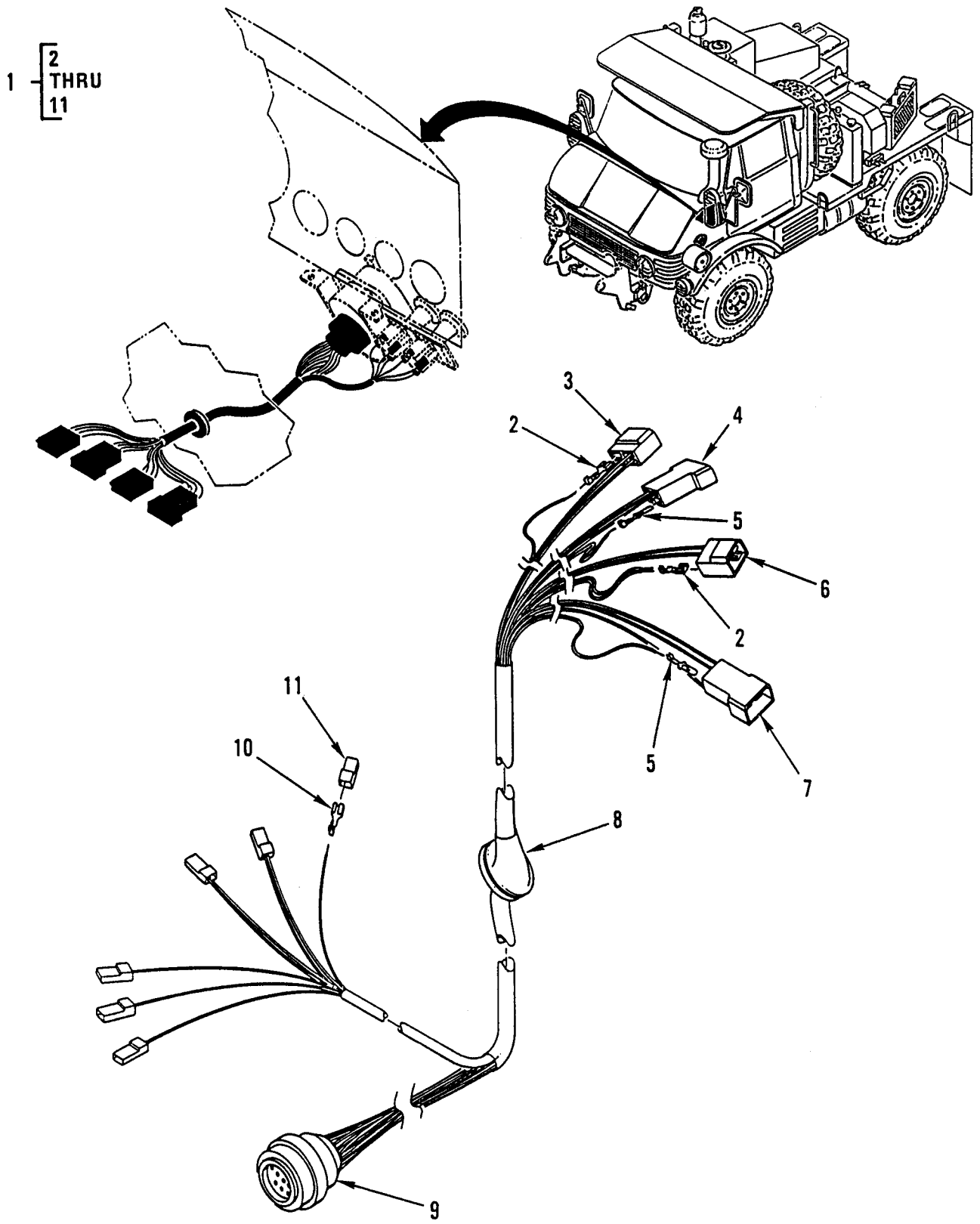

Figure 107. Hull or Chassis Wiring Harness – Cap Plug Connector to Heater Panel Switch and Master Light Switch Wiring Harness.

(1) ITEM NO	(2) SMR CODE	(3) NSN	(4) CAGEC	(5) PART NUMBER	(6) DESCRIPTION AND USABLE ON CODES (UOC)	(7) QTY
					GROUP 0613	
					FIG. 107 HULL OR CHASSIS WIRING HARNESS – CAP PLUG CONNECTOR TO HEATER PANEL SWITCH AND MASTER LIGHT SWITCH WIRING HARNESS 419 540 03 37	
1	PAFFF	5995-01-244-2592	64678	419 540 03 37	WIRING HARNESS,BRAN	1
2	PFFZZ	5999-01-315-7025	64678	000 545 38 26	.CONTACT,ELECTRICAL	7
3	PFFZZ	5975-01-285-0193	64678	001 545 84 28	.BUSHING,ELECTRICAL	1
4	PFFZZ	5935-01-257-4043	64678	002 545 12 28	.CONNECTOR BODY,PLUG.....	1
5	PFFZZ	5999-01-224-0342	00779	42565-3	.CONTACT,ELECTRICAL	8
6	PFFZZ	5975-01-298-8565	64678	014 545 66 28	.BUSHING,ELECTRICAL	1
7	PFFZZ	5935-01-287-2309	64678	014 545 67 28	.CONNECTOR BODY,PLUG.....	1
8	PAFZZ	5325-01-247-6916	64678	442 997 01 81	.GROMMET,NONMETALLIC.....	1
9	PFFZZ	5935-01-280-5421	64678	419 540 70 27	.CONNECTOR,PLUG,ELEC.....	1
10	PFFZZ	5940-01-027-4669	64678	000 545 37 26	.TERMINAL,QUICK DISC.....	6
11	PFFZZ	5975-01-285-0192	64678	000 545 35 45	.BUSHING,ELECTRICAL	6
					END OF FIGURE	

UNIT, DIRECT SUPPORT AND GENERAL SUPPORT MAINTENANCE

SMALL EMPLACEMENT EXCAVATOR (SEE) AND HIGH MOBILITY MATERIAL HANDLER (HMMH)

HULL OR CHASSIS WIRING HARNESS – CHASSIS WIRING HARNESS 419 540 70 09

REPAIR PARTS LIST

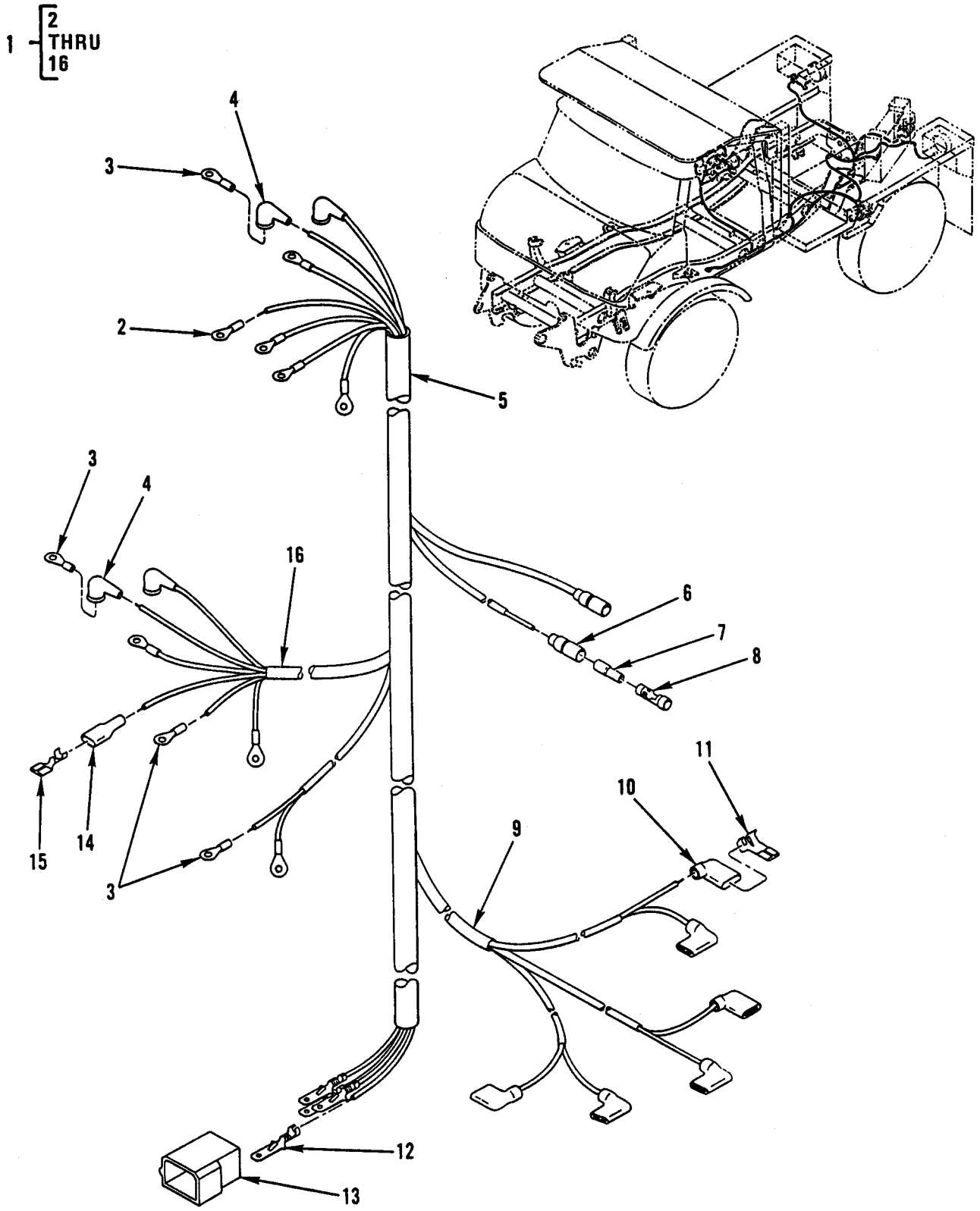

Figure 108. Hull or Chassis Wiring Harness – Chassis Wiring Harness.

(1) ITEM NO	(2) SMR CODE	(3) NSN	(4) CAGEC	(5) PART NUMBER	(6) DESCRIPTION AND USABLE ON CODES (UOC)	(7) QTY
					GROUP 0613	
					FIG. 108 HULL OR CHASSIS WIRING HARNESS – CHASSIS WIRING HARNESS 419 540 70 09	
1	PAFFF	5995-01-244-0162	64678	419 540 70 09	WIRING HARNESS,BRAN	1
2	PAFZZ	5940-00-143-4774	96906	MS25036-153	.TERMINAL,LUG	5
3	PAFZZ	5940-00-107-1481	96906	MS20659-104	.TERMINAL,LUG	9
4	PFFZZ	5975-01-242-5468	64678	419 545 74 45	.CABLE NIPPLE,ELECTR	6
5	MFFZZ		77060	6824OR-1920	.CONDUIT MAKE FROM CAGE 77060 P/N 68240R,CUT TO 1920 MM V	
6	PAFZZ	5970-01-243-1268	64678	419 545 70 45	.INSULATOR,BUSHING	2
7	PAFZZ	5970-01-241-4853	64678	419 545 75 45	.INSULATOR,BUSHING	2
8	PAFZZ	5940-01-242-5466	64678	419 545 73 26	.TERMINAL,QUICK DISC	2
9	MFFZZ		45311	68238R-1340	.CONDUIT,NONMETALLIC MAKE FROM CAGE 45311 P/N 68238R,CUT TO 1340 MM V	
10	PAFZZ	5970-01-244-3385	64678	419 545 73 45	.INSULATOR	6
11	PAFZZ	5940-01-163-7764	00779	60102-2	.TERMINAL,QUICK DISC	6
12	PAFZZ	5999-01-224-0342	00779	42565-3	.CONTACT,ELECTRICAL	4
13	PFFZZ	5935-01-257-4043	64678	002 545 12 28	.CONNECTOR BODY,PLUG	1
14	PFFZZ	5970-01-242-4586	00779	360020-1	.INSULATION SLEEVING	1
15	PAFZZ	5940-00-874-9033	00779	41274	.TERMINAL,QUICK DISC	1
16	MFFZZ		77060	68236R-2240	.CONDUIT MAKE FROM CAGE 77060 P/N 68236R,CUT TO 2240 MM V	
					END OF FIGURE	

UNIT, DIRECT SUPPORT AND GENERAL SUPPORT MAINTENANCE

SMALL EMPLACEMENT EXCAVATOR (SEE) AND HIGH MOBILITY MATERIAL HANDLER (HMMH)

RADIO INTERFERENCE SUPPRESSION – SUPPRESSOR FILTER (ELECTROLYTIC CAPACITOR)

REPAIR PARTS LIST

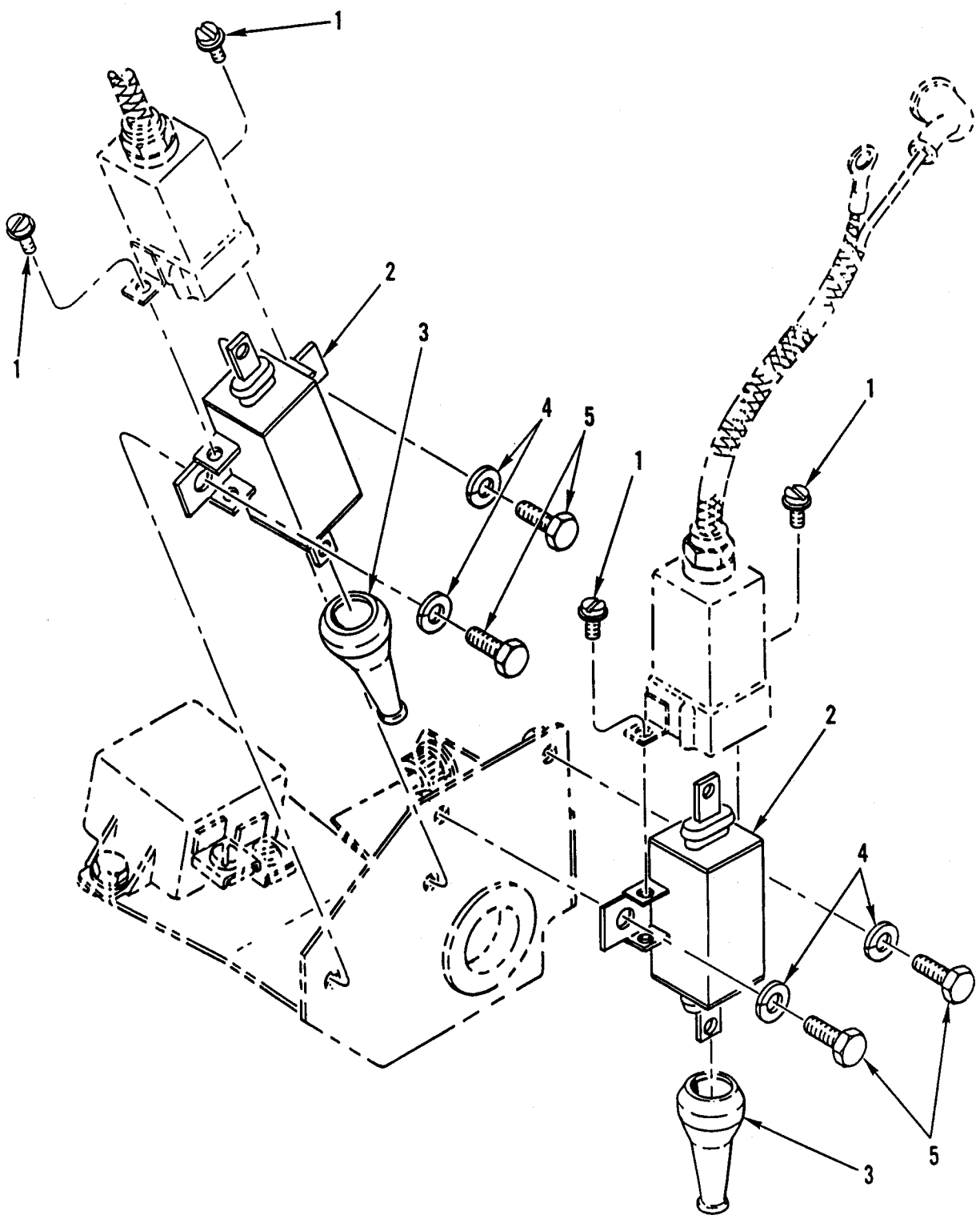

Figure 109. Radio Interference Suppression – Suppressor Filter (Electrolytic Capacitor).

(1) ITEM NO	(2) SMR CODE	(3) NSN	(4) CAGEC	(5) PART NUMBER	(6) DESCRIPTION AND USABLE ON CODES (UOC)	(7) QTY
					GROUP 0615	
					FIG. 109 RADIO INTERFERENCE SUPPRESSION – SUPRESSOR FILTER (ELECTROLYTIC CAPACITOR)	
1	PAFZZ	5305-01-239-3506	15526	84 M5X10 C	SCREW,MACHINE.....	4
2	PAOZZ	5915-01-258-7433	53867	0 290 003 030	FILTER,RADIO FREQUE	2
3	PAOZZ	5340-01-407-2313	64678	1 280 703 026	CAP,PROTECTIVE,DUST.....	2
4	PFOZZ	5310-01-171-2356	64678	912004 006102	WASHER,SPRING TENSI.....	4
5	PFOZZ	5305-01-384-6808	64678	000933 006223	SCREW,CAP,HEXAGON H.....	4
					END OF FIGURE	

UNIT, DIRECT SUPPORT AND GENERAL SUPPORT MAINTENANCE

SMALL EMPLACEMENT EXCAVATOR (SEE) AND HIGH MOBILITY MATERIAL HANDLER (HMMH)

TRANSMISSION, TRANSMISSION ASSEMBLY (MAIN AND/OR SECONDARY) – MECHANICAL TRANSMISSION 406 260 61 02

REPAIR PARTS LIST

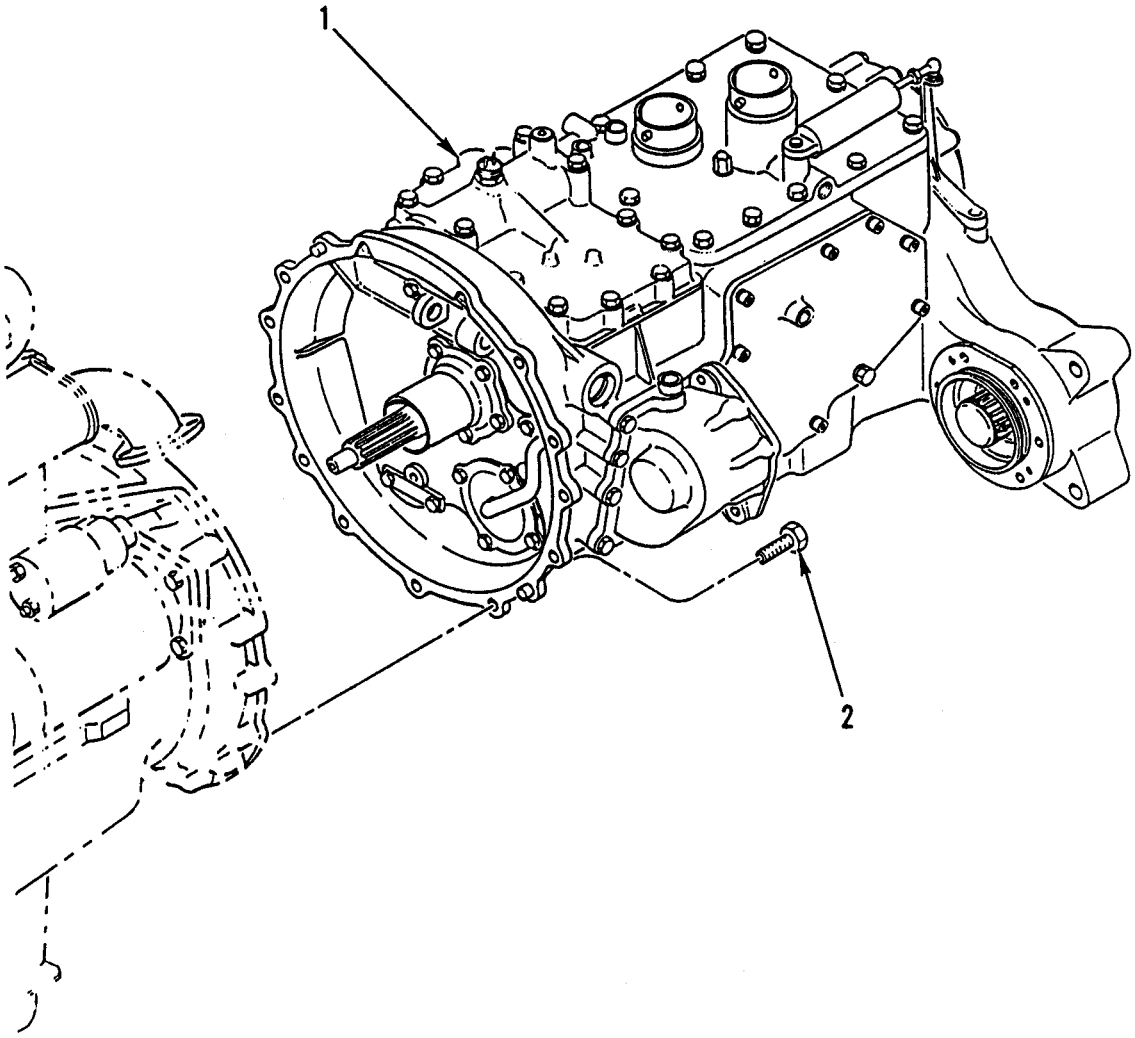

Figure 110. Transmission, Transmission Assembly (Main and/or Secondary) – Mechanical Transmission.

(1) ITEM NO	(2) SMR CODE	(3) NSN	(4) CAGEC	(5) PART NUMBER	(6) DESCRIPTION AND USABLE ON CODES (UOC)	(7) QTY
					GROUP 07 GROUP 0700	
					FIG. 110 TRANSMISSION, TRANSMISSION ASSEMBLY (MAIN AND/OR SECONDARY) – TRANSMISSION, MECHANICAL 406 260 61 02	
1	PAFHD	2520-01-218-2206	64678	406 260 61 02	TRANSMISSION,MECHAN	1
2	PFFZZ	5306-01-240-5166	15526	933 M10X30 F	BOLT,MACHINE	11
					END OF FIGURE	

UNIT, DIRECT SUPPORT AND GENERAL SUPPORT MAINTENANCE

SMALL EMPLACEMENT EXCAVATOR (SEE) AND HIGH MOBILITY MATERIAL HANDLER (HMMH)

TRANSMISSION ASSEMBLY (MAIN AND/OR SECONDARY) – TRANSMISSION HOUSING 441 260 02 11, AND TRANSFER TRANSMISSION 406 260 25 12

REPAIR PARTS LIST

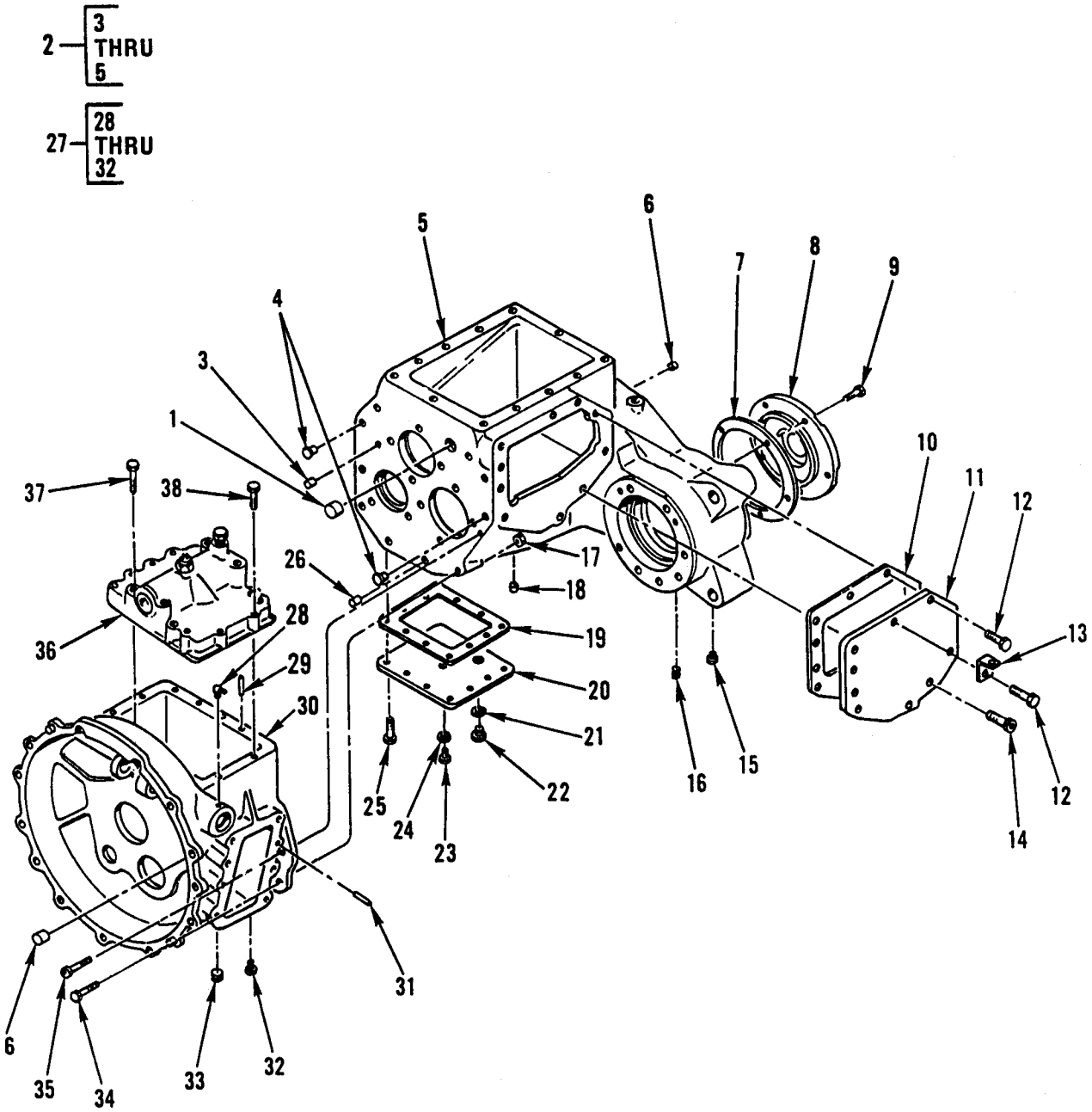

Figure 111. Transmission Assembly (Main and/or Secondary) – Transmission Housing, and Transfer Transmission.

(1) ITEM NO	(2) SMR CODE	(3) NSN	(4) CAGEC	(5) PART NUMBER	(6) DESCRIPTION AND USABLE ON CODES (UOC)	(7) QTY
					GROUP 0700	
					FIG. 111 TRANSMISSION ASSEMBLY (MAIN AND/OR SECONDARY) – HOUSING, TRANSMISSION 441 260 02 11, TRANSFER TRANSMISSION 406 260 25 12	
1	PFHZZ	4730-01-237-0273	64678	406 997 00 35	PLUG,INTERLOCK	1
2	PFHHH	2520-01-232-9446	64678	441 260 02 11	HOUSING,TRANSMISSIO	1
3	PFFZZ	5340-01-240-6273	64678	406 997 51 37	.PLUG,PROTECTIVE,DUS	1
4	PFHZZ	5315-01-240-2750	64678	406 261 01 73	.PIN,STRAIGHT,HEADED	2
5	XAHZZ		19207	NPN-059	.HOUSING	1
6	PFHZZ	5340-01-285-5118	64678	000443 018000	PLUG,EXPANSION	1
7	PFHZZ	5330-01-242-0720	64678	441 261 02 80	GASKET	1
8	PFHZZ	5340-01-259-2486	64678	411 264 02 11	COVER,ACCESS	1
9	PFHZZ	5305-01-240-2656	64678	914141 010310	SCREW,CAP,HEXAGON H	6
10	PAHZZ	5330-01-285-4939	64678	406 261 03 80	GASKET	1
11	PAHZZ	5340-01-285-5967	64678	406 260 02 21	COVER,ACCESS	1
12	PFHZZ	5305-01-320-5279	64678	914141 010600	SETSCREW SIDE COVER TO TRANSMISSION	2
13	PFHZZ	5340-01-384-6619	64678	419 551 00 40	BRACKET,ANGLE	1
14	PFHZZ	5305-01-317-0414	64678	914141 012600	SETSCREW SIDE COVER TO TRANSMISSION	8
15	PFOZZ	5365-12-177-4326	D0161	000 997 26 32	PLUG,MACHINE THREAD	1
16	PFOZZ	5365-01-256-4583	64678	186 997 00 32	PLUG,MACHINE THREAD	1
17	PFHZZ	5310-01-241-6345	15526	934 8 M8X1.25 C	NUT,PLAIN,HEXAGON	1
18	XBOZZ		64678	915042 017000	CAP-PLUG,PROTECTIVE	1
19	PFHZZ	5330-01-240-1843	64678	406 261 04 80	GASKET	1
20	XDHZZ		64678	406 261 00 21	COVER,ACCESS	1
21	PFOZZ	5330-01-240-2683	64678	007603 024105	GASKET	1
22	PFOZZ	5365-01-258-4773	64678	115 997 00 32	PLUG,MACHINE THREAD	1
23	PFOZZ	4420-01-117-8733	64678	007604 016102	PLUG	1
24	PFOZZ	5330-01-240-2685	64678	406 261 01 60	GASKET	1
25	PFHZZ	5305-01-293-5311	64678	914141 010308	SCREW,MACHINE	12
26	PFHZZ	4730-01-237-6311	64678	406 265 01 47	PLUG,INTERLOCK	2
27	PFHHH	2520-01-237-7100	64678	406 260 25 12	TRANSFER TRANSMISSI	1
28	PFOZZ	4730-01-237-6945	64678	900216-008301	.FITTING,LUBRICATION	1
29	PFHZZ	5315-01-241-0978	15526	1481 8 16	.PIN,SPRING	2
30	XAHZZ		64678	406 261 35 01	.HOUSING,XMSN	1

(1) ITEM NO	(2) SMR CODE	(3) NSN	(4) CAGEC	(5) PART NUMBER	(6) DESCRIPTION AND USABLE ON CODES (UOC)	(7) QTY
31	PFHZZ	5315-01-239-0690	64678	000007 012201	.PIN,STRAIGHT,HEADLE	2
32	PFOZZ	5365-12-177-4326	64678	000 997 26 32	.PLUG,MACHINE THREAD.....	1
33	PFHZZ	4730-01-237-0272	64678	406 265 02 47	PLUG,INTERLOCK	1
34	PAHZZ	5305-01-240-1258	64678	406 990 52 19	SCREW,EXTERNALLY RE	1
35	PFHZZ	5305-01-239-1319	64678	914141 010000	SETSCREW	8
36	PFHZZ	5340-01-240-1335	64678	440 264 03 11	COVER,ACCESS	1
37	PFHZZ	5306-01-240-7381	64678	914141 008126	BOLT,MACHINE.....	4
38	PFHZZ	5306-01-240-5168	64678	914141 008117	BOLT,MACHINE.....	5
					END OF FIGURE	

UNIT, DIRECT SUPPORT AND GENERAL SUPPORT MAINTENANCE

SMALL EMPLACEMENT EXCAVATOR (SEE) AND HIGH MOBILITY MATERIAL HANDLER (HMMH)

TRANSMISSION SHAFTS – TRANSMISSION POWER TAKE-OFF (PTO) 419 260 00 05, AND MECHANICAL HOUSING 406 260 24 12

REPAIR PARTS LIST

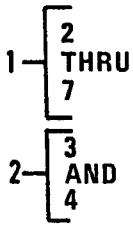

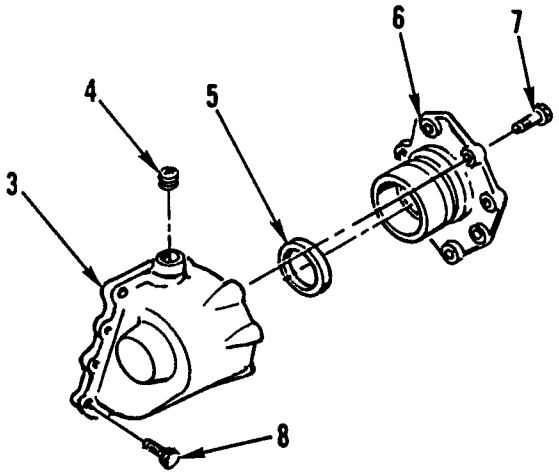

Figure 112. Transmission Shafts – Transmission Power Take-Off (PTO), and Mechanical Housing.

(1) ITEM NO	(2) SMR CODE	(3) NSN	(4) CAGEC	(5) PART NUMBER	(6) DESCRIPTION AND USABLE ON CODES (UOC)	(7) QTY
					GROUP 0701	
					FIG. 112 TRANSMISSION SHAFTS – POWER TAKE-OFF (PTO), TRANSMISSION 419 260 00 05, AND HOUSING, MECHANICAL 406 260 24 12	
1	PAFFF	2520-01-237-6143	64678	419 260 00 05	POWER TAKEOFF,TRANS.....	1
2	PAFFF	3040-01-237-1838	64678	406 260 24 12	.HOUSING,MECHANICAL.....	1
3	XAFZZ		19207	NPN-060	..HOUSING	1
4	PFFZZ	5325-01-242-4893	64678	406 264 21 50	..INSERT,SCREW THREAD.....	1
5	PFFZZ	5330-12-308-9204	D8142	DG 50.68.10 W01	.SEAL,PLAIN	1
6	PAFZZ	3040-01-236-1260	64678	406 264 43 44	.FLANGE,INTERMEDIATE.....	1
7	PFFZZ	5305-01-238-3184	64678	914141 008500	.SETSCREW	6
8	PFFZZ	5305-01-239-1319	64678	914141 010000	SETSCREW	8
					END OF FIGURE	

UNIT, DIRECT SUPPORT AND GENERAL SUPPORT MAINTENANCE

SMALL EMPLACEMENT EXCAVATOR (SEE) AND HIGH MOBILITY MATERIAL HANDLER (HMMH)

TRANSMISSION SHAFTS – FRONT AXLE PTO GEAR

REPAIR PARTS LIST

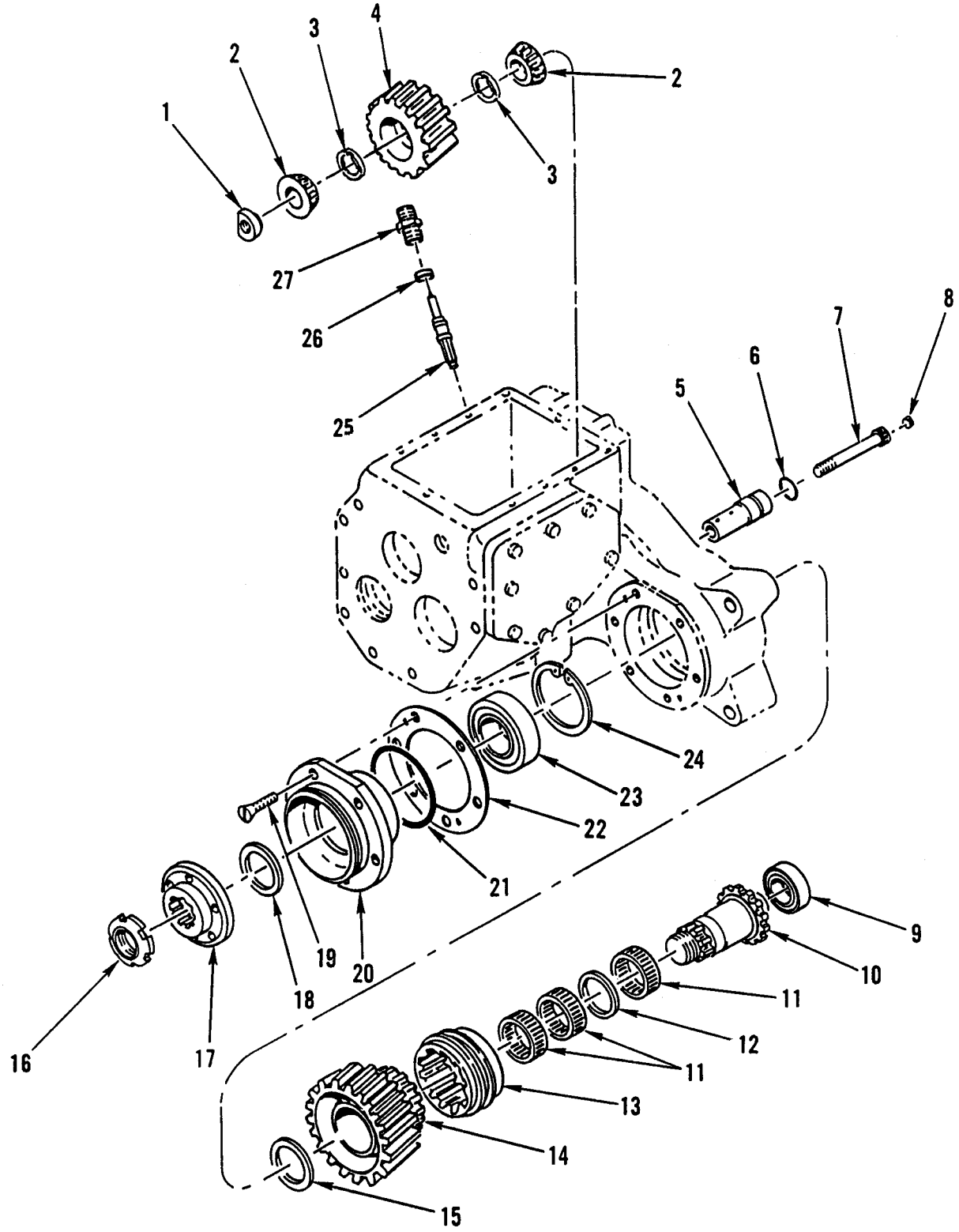

Figure 113. Transmission Shafts – Front Axle PTO Gear.

(1) ITEM NO	(2) SMR CODE	(3) NSN	(4) CAGEC	(5) PART NUMBER	(6) DESCRIPTION AND USABLE ON CODES (UOC)	(7) QTY
					GROUP 0701	
					FIG. 113 TRANSMISSION SHAFTS – FRONT AXLE PTO GEAR	
1	PFHZZ	5310-01-239-9414	64678	406 264 02 72	NUT,PLAIN,ROUND	1
2	PFFZZ	3120-12-309-0344	D3057	A45797	BEARING,ROLLER,TAPE	2
3	PFHZZ	5325-01-240-4471	64678	441 994 03 35	RING,RETAINING 2.85 MM	2
4	PFHZZ	3020-01-238-6176	64678	441 262 00 21	GEAR,SPUR	1
5	PFHZZ	2510-01-237-6436	64678	441 262 02 74	PIN,VEHICULAR LEAF	1
6	PFHZZ	5331-01-268-0875	64678	003770 026001	O-RING	1
7	PFHZZ	5305-01-240-1795	15526	912M10X100	SCREW,CAP,SOCKET HE	1
8	PFHZZ	5340-01-285-5118	64678	000443 018000	PLUG,EXPANSION	1
9	PFHZZ	3110-01-265-8758	64678	000625 306206	BEARING,BALL,ANNULA	1
10	PFHZZ	3040-01-237-6288	64678	406 264 15 18	SHAFT,SHOULDERED	1
11	PFHZZ	3110-12-149-4431	D8984	K58X64X19 B	RETAINER AND ROLLER	3
12	PFHZZ	5365-01-244-4897	64678	406 264 14 53	SPACER,RING	1
13	PFHZZ	2520-01-237-3551	64678	440 262 01 38	SYNCHRONIZER,TRANSM	1
14	PFHZZ	3020-01-238-4237	64678	406 264 53 20	GEAR CLUSTER	1
15	PFHZZ	5365-01-240-2081	64678	406 264 06 51	SPACER,RING	1
16	PFHZZ	5310-01-250-6719	64678	406 990 00 60	NUT,PLAIN,ROUND	1
17	PFHZZ	3010-01-237-7078	64678	441 264 04 44	COUPLING HALF,SHAFT	1
18	PAHZZ	5330-12-177-3601	64678	004 997 12 46	SEAL,PLAIN ENCASED	1
19	PFHZZ	5305-01-240-1263	64678	000963 006031	SCREW,MACHINE	2
20	PFHZZ	3040-01-237-3612	64678	406 264 39 44	PLATE,RETAINING,SHA	1
21	PFHZZ	5331-01-358-9198	64678	000 987 55 46	O-RING	1
22	PFHZZ	5330-01-242-0720	64678	441 261 02 80	GASKET	1
23	PFHZZ	3110-00-555-5238	52676	6211J	BEARING,BALL,ANNULA	1
24	PFHZZ	5325-01-240-4470	15526	472 100	RING,RETAINING	1
25	PFHZZ	3040-01-237-6265	64678	406 264 29 18	SHAFT,SHOULDERED	1
26	PFHZZ	3120-01-240-4168	64678	425 264 00 50	BUSHING,SLEEVE	1
27	PFHZZ	5365-01-256-4661	64678	387 260 00 86	BUSHING,MACHINE THR	1
					END OF FIGURE	

UNIT, DIRECT SUPPORT AND GENERAL SUPPORT MAINTENANCE

SMALL EMPLACEMENT EXCAVATOR (SEE) AND HIGH MOBILITY MATERIAL HANDLER (HMMH)

TRANSMISSION SHAFTS – SHOULDERED SHAFT 441 260 00 24

REPAIR PARTS LIST

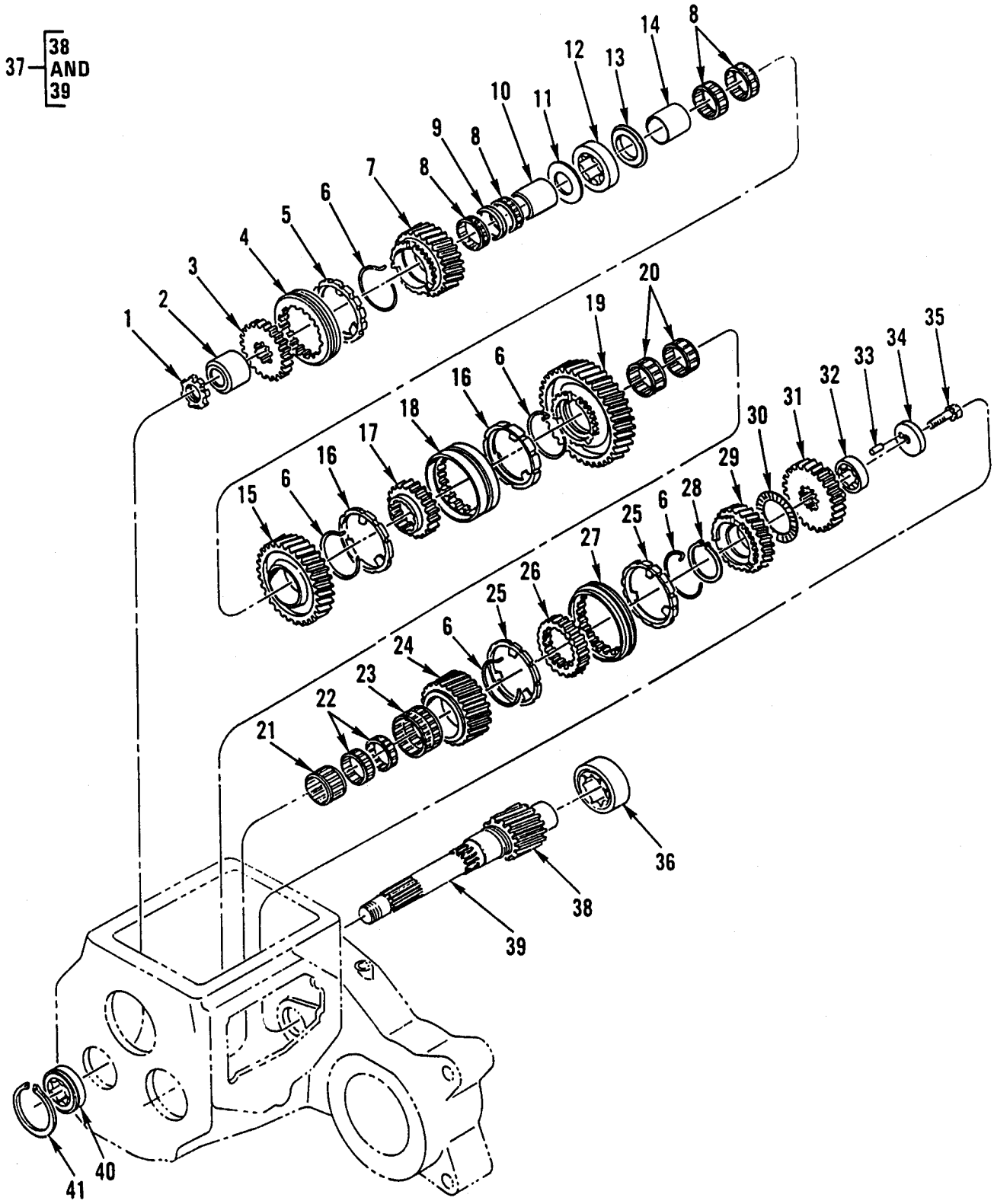

Figure 114. Transmission Shafts – Shouldered Shaft.

(1) ITEM NO	(2) SMR CODE	(3) NSN	(4) CAGEC	(5) PART NUMBER	(6) DESCRIPTION AND USABLE ON CODES (UOC)	(7) QTY
					GROUP 0701	
					FIG. 114 TRANSMISSION SHAFTS – SHOULDERED SHAFT 441 260 00 24	
1	PFHZZ	5310-01-244-5953	64678	406 263 00 72	NUT,PLAIN,ROUND	1
2	PFHZZ	4730-01-236-7359	64678	441 263 00 53	FERRULE,BRAZING,TUB	1
3	PFHZZ	3020-01-244-8499	64678	441 263 01 36	GEAR,SPUR	1
4	PFHZZ	3040-01-359-2461	64678	417 263 00 23	COLLAR,SHAFT	1
5	PFHZZ	2520-01-359-1092	64678	417 262 04 37	SYNCHRONIZER,TRANSM	1
6	PFHZZ	5325-01-243-2319	64678	441 262 00 93	RING,RETAINING	5
7	PFHZZ	3020-01-238-7062	64678	441 263 02 13	GEAR CLUSTER	1
8	PFHZZ	3110-12-309-0704	D8984	K 48X54X19	RETAINER AND ROLLER	4
9	PFHZZ	5365-01-244-7841	64678	441 264 00 53	SPACER,RING	1
10	PFHZZ	3120-01-241-2848	64678	441 263 01 50	BUSHING,SLEEVE	1
11	PFHZZ	3120-01-240-1873	64678	406 263 13 62	BEARING,WASHER,THRU	1
12	PFHZZ	3110-12-308-8853	D2457	NUPJ 208 ECP/ C3	BEARING,ROLLER,CYLI	1
13	PFHZZ	5310-01-241-6381	64678	441 263 00 62	WASHER,SHOULDERED A	1
14	PFHZZ	3120-01-241-2849	64678	441 263 00 50	BUSHING,SLEEVE	1
15	PFHZZ	3020-01-239-0379	64678	441 263 01 12	GEAR CLUSTER	1
16	PFHZZ	2520-01-359-1094	64678	417 262 01 37	SYNCHRONIZER,TRANSM	2
17	PFHZZ	3020-01-244-8500	64678	441 263 00 36	GEAR,SPUR	1
18	PFHZZ	3040-01-359-4939	64678	417 263 01 23	COLLAR,RETAINING	1
19	PFHZZ	3020-12-343-5158	64678	441 263 00 11	GEAR CLUSTER	1
20	PFHZZ	3110-12-146-8389	D8984	K 50X58X25 B	RETAINER AND ROLLER	2
21	PFHZZ	3110-12-309-0343	D8984	K47X55X28A	RETAINER AND ROLLER	1
22	PFHZZ	3110-01-315-7251	64678	002 981 82 10	BEARING,ROLLER,NEED	2
23	PFHZZ	3110-12-198-5718	D8984	F 89 134	RETAINER AND ROLLER	1
24	PFHZZ	3020-01-238-6183	64678	441 264 39 20	GEAR CLUSTER	1
25	PFHZZ	2520-01-359-1093	64678	417 262 06 37	SYNCHRONIZER,TRANSM	2
26	PFHZZ	3020-01-244-8498	64678	441 263 02 36	GEAR,SPUR	1
27	PFHZZ	3040-01-359-4938	64678	417 263 04 23	COLLAR,RETAINING	1
28	PFHZZ	5325-01-244-7824	64678	912009 055100	RING,RETAINING	1
29	PFHZZ	3020-01-239-3787	64678	441 264 47 20	GEAR CLUSTER	1
30	PFHZZ	3110-01-273-4617	60380	FNT-5578	RETAINER AND ROLLER	1
31	PAHZZ	3020-01-239-3785	64678	441 264 46 20	GEAR,SPUR	1
32	PFHZZ	3110-12-308-9413	D2456	562537.F51	BEARING,ROLLER,CYLI	1

(1) ITEM NO	(2) SMR CODE	(3) NSN	(4) CAGEC	(5) PART NUMBER	(6) DESCRIPTION AND USABLE ON CODES (UOC)	(7) QTY
33	PFHZZ	5315-01-240-1354	15526	1473 5 10	PIN,GROOVED,HEADLES.....	1
34	PFHZZ	5310-01-271-4280	64678	406 263 14 62	WASHER,FLAT	1
35	PFHZZ	5306-01-240-0840	64678	406 990 00 04	BOLT,MACHINE.....	1
36	PFHZZ	3110-12-308-8852	D2457	BC1B 319888 A	BEARING,ROLLER,CYLI	1
37	PFHHH	3040-01-237-6264	64678	441 260 00 24	SHAFT,SHOULDERED	1
38	PAHZZ	3020-01-238-4233	64678	406 264 01 30	.GEAR,HELICAL.....	1
39	XAHZZ		19207	NPN-061	.SHAFT,SHOULDERED	1
40	PFHZZ	3110-12-308-8851	D2457	6305 ENTN9/C3	BEARING,BALL,ANNULA	1
41	PFHZZ	5325-01-240-2850	64678	005417 062000	RING,RETAINING	1
					END OF FIGURE	

UNIT, DIRECT SUPPORT AND GENERAL SUPPORT MAINTENANCE

SMALL EMPLACEMENT EXCAVATOR (SEE) AND HIGH MOBILITY MATERIAL HANDLER (HMMH)

TRANSMISSION SHAFTS – COUNTERSHAFT

REPAIR PARTS LIST

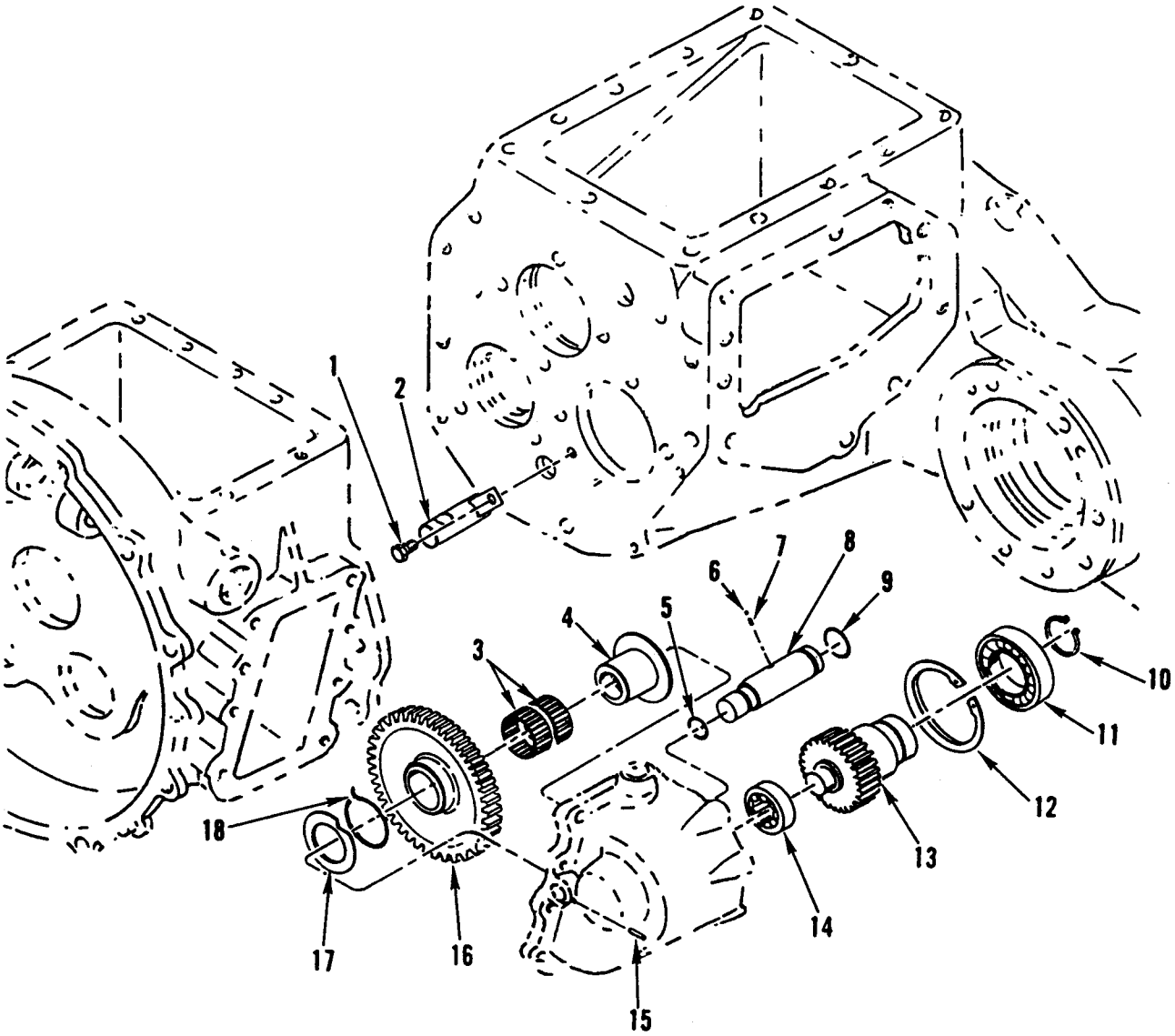

Figure 115. Transmission Shafts – Countershaft.

(1) ITEM NO	(2) SMR CODE	(3) NSN	(4) CAGEC	(5) PART NUMBER	(6) DESCRIPTION AND USABLE ON CODES (UOC)	(7) QTY
					GROUP 0701	
					FIG. 115 TRANSMISSION SHAFTS – COUNTERSHAFT	
1	PFHZZ	5306-01-240-5170	64678	914146 008100	BOLT,MACHINE	1
2	PFHZZ	4710-01-237-0062	64678	441 260 00 85	HOSE,METALLIC	1
3	PFFZZ	3110-12-309-0702	D2457	RK 455320 F2	RETAINER AND ROLLER	2
4	PFFZZ	3120-01-240-2704	64678	406 264 24 50	BUSHING,SLEEVE	1
5	PFFZZ	533001-240-1834	64678	003771 020000	O-RING	1
6	PFFZZ	3110-01-223-8905	15526	5401-5	BALL,STEEL,CHROME	1
7	PFFZZ	5360-01-244-6165	64678	002098 001029	SPRING,HELICAL,COMP	1
8	PFFZZ	3040-01-237-6284	64678	406 264 31 18	SHAFT,SHOULDERED	1
9	PFFZZ	5331-01-268-0875	64678	003770 026001	O-RING	1
10	PFFZZ	5365-01-240-2848	15526	471-50	RING,RETAINING	1
11	PFFZZ	3110-00-542-0021	81349	111-05002-0000	BEARING,BALL,ANNULA	1
12	PFFZZ	5325-01-240-2849	15526	472-90	RING,RETAINING	1
13	PFFZZ	3040-01-238-0248	64678	406 264 08 30	GEARSHAFT,SPUR	1
14	PFFZZ	3110-01-252-5343	52676	NJ 205 ECP/C3	BEARING,ROLLER,CYLI	1
15	PFFZZ	5315-01-241-0977	15526	1481-5-40	PIN,SPRING	1
16	PFFZZ	3020-01-238-1825	64678	406 264 82 20	GEAR,SPUR	1
17	PFFZZ	3120-01-240-4182	64678	406 264 08 62	BEARING,WASHER,TH	1
18	PFFZZ	5315-01-242-1350	64678	406 264 10 73	PIN,STRAIGHT,HEADLE	1
					END OF FIGURE	

UNIT, DIRECT SUPPORT AND GENERAL SUPPORT MAINTENANCE

SMALL EMPLACEMENT EXCAVATOR (SEE) AND HIGH MOBILITY MATERIAL HANDLER (HMMH)

TRANSMISSION SHAFTS – INPUT SHAFT

REPAIR PARTS LIST

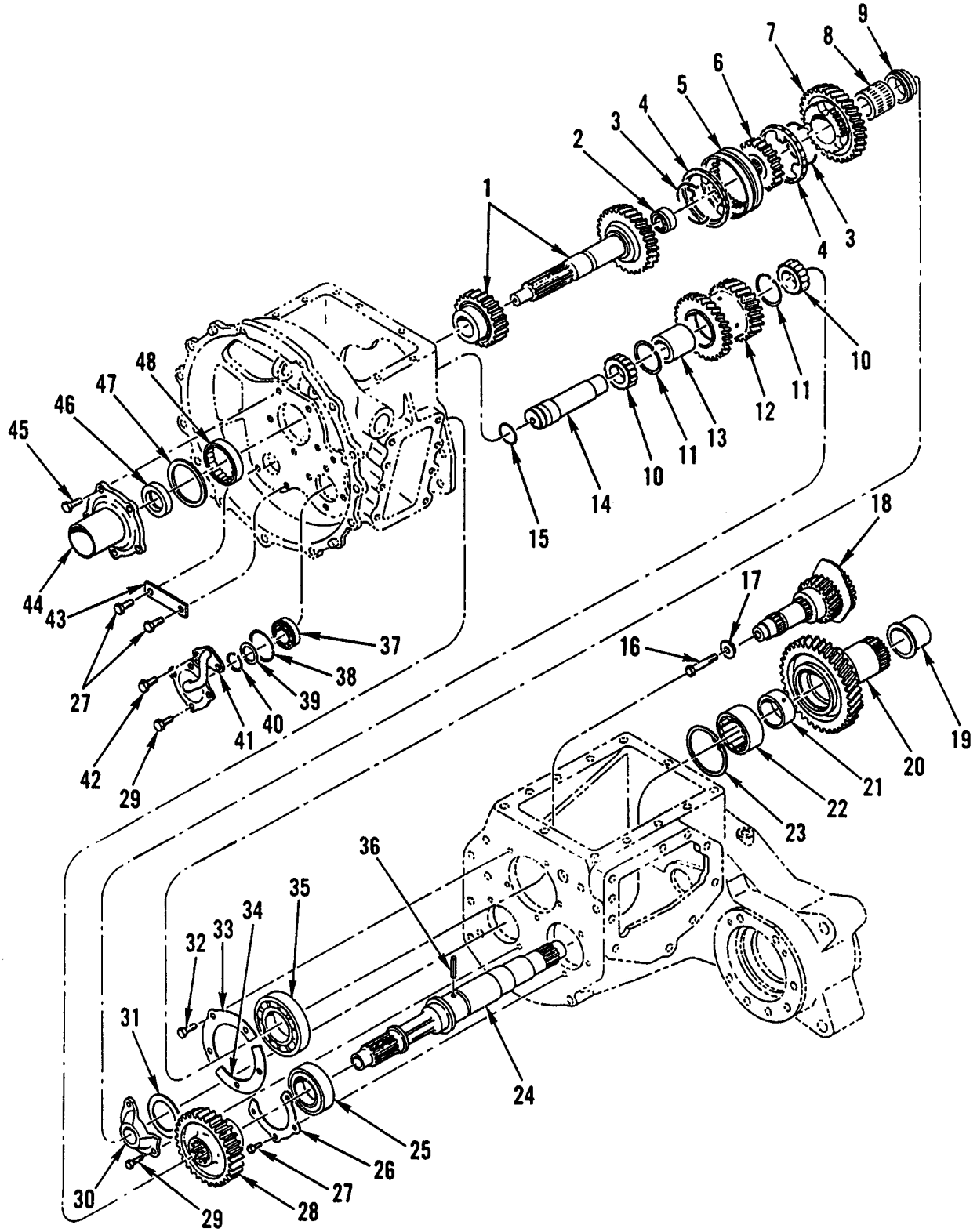

Figure 116. Transmission Shafts – Input Shaft.

(1) ITEM NO	(2) SMR CODE	(3) NSN	(4) CAGEC	(5) PART NUMBER	(6) DESCRIPTION AND USABLE ON CODES (UOC)	(7) QTY
					GROUP 0701	
					FIG. 116 TRANSMISSION SHAFTS – INPUT SHAFT	
1	PFHZZ	3040-01-281-7350	64678	406 260 63 20	GEARSHAFT,MULTIPLE	1
2	PFHZZ	3110-01-252-5345	52676	SUJ 305	BEARING,ROLLER,CYLI	1
3	PFHZZ	5325-01-243-2319	64678	441 262 00 93	RING,RETAINING	2
4	PFHZZ	2520-01-359-1092	64678	417 262 04 37	SYNCHRONIZER,TRANSM	2
5	PFHZZ	3040-01-359-2460	64678	417 263 03 23	COLLAR,SHAFT	1
6	PFHZZ	2520-01-301-2954	64678	441 264 02 46	FOLLOWER,TRANSMISSI	1
7	PFHZZ	3020-01-238-4238	64678	418 260 0119	GEAR CLUSTER	1
8	PFHZZ	3110-12-309-0342	D8984	F-95915	BEARING,ROLLER,NEED	1
9	PFHZZ	5365-01-240-4173	64678	441 264 10 53	SPACER,SLEEVE	1
10	PFHZZ	3110-12-308-9205	D2457	RN 206 ECP/ VQ138	BEARING,ROLLER,CYLI	2
11	PFHZZ	4310-01-242-7760	64678	441 994 00 35	RING,PISTON	2
12	PFHZZ	3020-01-238-6182	64678	441 264 32 20	GEAR CLUSTER	1
13	PFHZZ	5365-01-244-9924	64678	441 264 06 53	SPACER,SLEEVE	1
14	PFHZZ	3040-01-237-6285	64678	441 264 01 18	SHAFT,SHOULDERED	1
15	PCHZZ	5330-01-240-1840	64678	003770 028001	O-RING	1
16	PFHZZ	5305-01-240-8006	64678	914141 010200	SCREW,CAP,HEXAGON H	1
17	PFHZZ	5310-01-240-1296	64678	441 264 02 52	WASHER,SHOULDERED	1
18	PFHZZ	2520-01-238-1868	64678	406 262 18 02	SHAFT,AXLE,AUTOMOTI	1
19	PFHZZ	3120-01-242-2756	64678	441 263 03 50	BUSHING,SLEEVE	1
20	PFHZZ	3040-01-237-8358	64678	406 264 78 20	GEARSHAFT,SPUR	1
21	PFHZZ	5365-12-311-0613	D8984	F-205154	SPACER,SLEEVE	1
22	PFHZZ	3110-12-309-4489	D8984	F-205 087	BEARING,ROLLER,CYLI	1
23	PFHZZ	5325-01-243-2320	15526	472-75	RING,RETAINING	1
24	PAHZZ	3040-01-237-6286	64678	441 262 14 05	SHAFT,SHOULDERED	1
25	PFHZZ	3110-12-308-8281	D2457	NJ 209 ECP/C3	BEARING,ROLLER,CYLI	1
26	PFHZZ	3110-01-239-9506	64678	406 264 02 12	PLATE,RETAINING,BEA	1
27	PFHZZ	5305-01-239-9408	64678	914141 008310	SCREW,CAP,SOCKET HE	5
28	PAHZZ	3020-01-238-0262	64678	406 264 77 20	GEAR,SPUR	1
29	PFHZZ	5306-01-240-5170	64678	914146 008100	BOLT,MACHINE	7
30	PAHZZ	3040-01-237-3611	64678	406 264 07 44	PLATE,RETAINING,SHA	1
31	PFHZZ	5365-01-240-2080	64678	406 264 15 52	SPACER,RING	1
32	PFHZZ	5305-01-240-8007	64678	914141 008312	SCREW,CAP,HEXAGON H	1
33	PFHZZ	5365-01-240-1859	64678	441 262 00 39	SPACER,PLATE	1

(1) ITEM NO	(2) SMR CODE	(3) NSN	(4) CAGEC	(5) PART NUMBER	(6) DESCRIPTION AND USABLE ON CODES (UOC)	(7) QTY
34	PFHZZ	5365-01-240-1860	64678	441 262 01 39	SPACER,PLATE	1
35	PFHZZ	3110-01-335-2996	64678	006 981 37 01	BEARING,ROLLER,CYLI	1
36	PFHZZ	5315-01-241-0979	64678	007343 006007	PIN,SPRING	1
37	PFHZZ	3110-12-308-8851	D2457	6305 ENTN9/C3	BEARING,BALL,ANNULA	1
38	PFHZZ	5325-0-240-2850	64678	005417 062000	RING,RETAINING	1
39	PFHZZ	5310-01-241-0769	64678	406 264 26 52	WASHER,FLAT 2.00 MM	V
39	PFHZZ	5310-01-241-0770	64678	406 264 27 52	WASHER,FLAT 2.10 MM	V
39	PFHZZ	5310-01-241-6360	64678	406 264 37 52	WASHER,FLAT 2.20 MM	V
39	PFHZZ	5310-01-241-0771	64678	406 264 38 52	WASHER,FLAT2.30 MM	V
39	PFHZZ	5310-01-241-0772	64678	406 264 39 52	WASHER,FLAT 2.40 MM	V
40	PFHZZ	3610-01-236-4056	15526	471-25	RETAINING,RING EXTE	1
41	PFHZZ	5340-01-238-2228	64678	406 260 16 14	COVER,ACCESS	1
42	PFHZZ	5306-01-242-6983	64678	914146 008102	BOLT,MACHINE	2
43	PFHZZ	3040-01-237-3610	64678	441 263 00 73	CONNECTING LINK,RIG	1
44	PFHZZ	4730-01-237-1930	64678	406 254 09 16	INSERT,TUBE FITTING	1
45	PFHZZ	5306-01-240-5169	64678	914141 008313	BOLT,MACHINE	5
46	PFHZZ	5330-12-308-9206	D8175	3 28 990K	SEAL,PLAIN	1
47	PFHZZ	5365-01-240-1855	64678	312 283 10 52	SHIM 0.10 MM	V
47	PFHZZ	5365-01-240-1856	64678	312 283 11 52	SHIM 0.20 MM	V
47	PFHZZ	5365-01-240-2078	64678	312 283 12 52	SPACER,RING 0.40 MM	V
48	PFHZZ	3110-01-252-5344	52676	NJ 1011 ECP/ C3V8 022	BEARING,ROLLER,CYLI	1

END OF FIGURE

UNIT, DIRECT SUPPORT AND GENERAL SUPPORT MAINTENANCE

SMALL EMPLACEMENT EXCAVATOR (SEE) AND HIGH MOBILITY MATERIAL HANDLER (HMMH)

TRANSMISSION SHAFTS (MAIN SHAFT) – BEARING UNIT HOUSING 406 260 09 17

REPAIR PARTS LIST

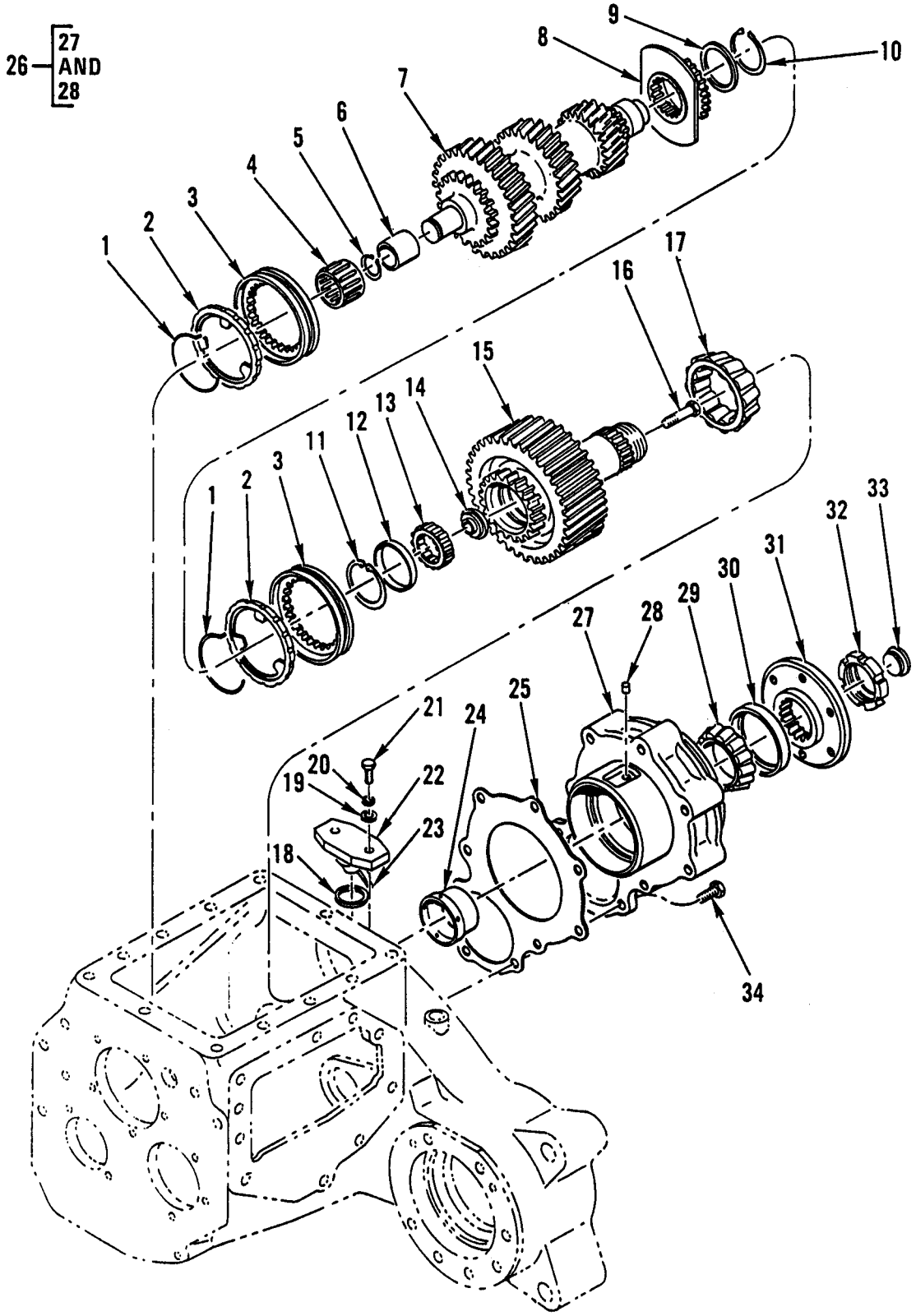

Figure 117. Transmission Shafts (Main Shaft) – Bearing Unit Housing.

(1) ITEM NO	(2) SMR CODE	(3) NSN	(4) CAGEC	(5) PART NUMBER	(6) DESCRIPTION AND USABLE ON CODES (UOC)	(7) QTY
					GROUP 0701	
					FIG. 117 TRANSMISSION SHAFTS (MAIN SHAFT) – HOUSING, BEARING UNIT 406 260 09 17	
1	PFHZZ	5325-01-243-2319	64678	441 262 00 93	RING,RETAINING	2
2	PFHZZ	2520-01-359-1092	64678	417 262 04 37	SYNCHRONIZER,TRANSM	2
3	PFHZZ	3040-01-359-2461	64678	417 263 00 23	COLLAR,SHAFT	2
4	PFHZZ	3110-12-309-0705	D8984	F-59345	RETAINER AND ROLLER	1
5	PFHZZ	5325-01-246-2612	64678	001 994 38 41	RING,RETAINING	1
6	PFHZZ	3110-12-146-8380	D8984	F-206251	RING,BEARING,INNER	1
7	PFHZZ	3040-01-237-3563	64678	417 262 00 05	GEARSHAFT,SPUR	1
8	PFHZZ	2520-01-237-6364	64678	441 262 00 34	GEAR,SPUR	1
9	PFHZZ	5310-01-242-8562	64678	000988 045100	WASHER,FLAT	1
10	PAHZZ	5325-01-243-2321	15526	471 45	RING,RETAINING	1
11	PFHZZ	5310-01-240-1822	64678	900055 058310	WASHER,SPRING TENSI	1
12	PFHZZ	5365-01-240-2079	64678	406 262 01 51	SPACER,RING	1
13	PFHZZ	3110-12-193-4106	D8984	F-50903	BEARING,ROLLER,CYLI	1
14	PFHZZ	5365-01-240-2076	64678	406 263 11 62	SPACER,STEPPED	1
15	PFHZZ	3040-01-237-7015	64678	406 264 84 20	GEARSHAFT,SPUR	1
16	PFHZZ	5305-01-240-1273	64678	914141 010114	SCREW,CAP,HEXAGON H	1
17	PFHZZ	3110-00-138-6426	60038	JM207049JM207 010	BEARING,ROLLER,TAPE	1
18	XDOZZ		64678	4062610079	GASKET	1
19	PFOZZ	5310-01-174-7613	S3465	4537800-256	WASHER,FLAT	2
20	PFOZZ	5310-01-176-6500	S3465	4536226-751	WASHER,SPRING TENSI	2
21	PFOZZ	5306-01-176-1337	S3465	4537800-368	BOLT,MACHINE	2
22	PFOZZ	5340-01-383-9781	64678	417 267 01 42	PLATE,RETAINING,SEA	1
23	PFOZZ	5330-01-384-4118	64678	417 263 00 66	SEAL,PLAIN	1
24	PFHZZ	3120-01-242-4388	64678	441 262 02 53	BUSHING,SLEEVE	1
25	PFHZZ	5330-01-240-8039	64678	441 261 00 80	GASKET	1
26	PFHZZ	3130-01-242-5888	64678	406 260 09 17	HOUSING,BEARING UNI	1
27	XAHZZ		19207	NPN-062	.HOUSING,BEARING	1
28	PFHZZ	5315-01-241-0978	15526	1481 8 16	.PIN,SPRING	1
29	PFHZZ	3110-12-164-8049	D3057	M-A 43489	BEARING,ROLLER,TAPE	1
30	PAHZZ	5330-12-177-3601	64678	004 997 12 46	SEAL,PLAIN ENCASED	1
31	PFHZZ	3010-01-237-3607	64678	406 264 19 44	COUPLING,SHAFT,RIGI	1

(1) ITEM NO	(2) SMR CODE	(3) NSN	(4) CAGEC	(5) PART NUMBER	(6) DESCRIPTION AND USABLE ON CODES (UOC)	(7) QTY
32	PFHZZ	5310-01-243-9893	64678	406 990 51 60	NUT,PLAIN,ROUND	1
33	PFHZZ	5340-01-260-9932	D2480	V4-20055	BUTTON,PLUG	1
34	PFHZZ	5305-01-289-5080	64678	914141 010313	SETSCREW	3
					END OF FIGURE	

UNIT, DIRECT SUPPORT AND GENERAL SUPPORT MAINTENANCE

SMALL EMPLACEMENT EXCAVATOR (SEE) AND HIGH MOBILITY MATERIAL HANDLER (HMMH)

TRANSMISSION TOP COVER ASSEMBLY – INTERMEDIATE SPEED CONTROLS

REPAIR PARTS LIST

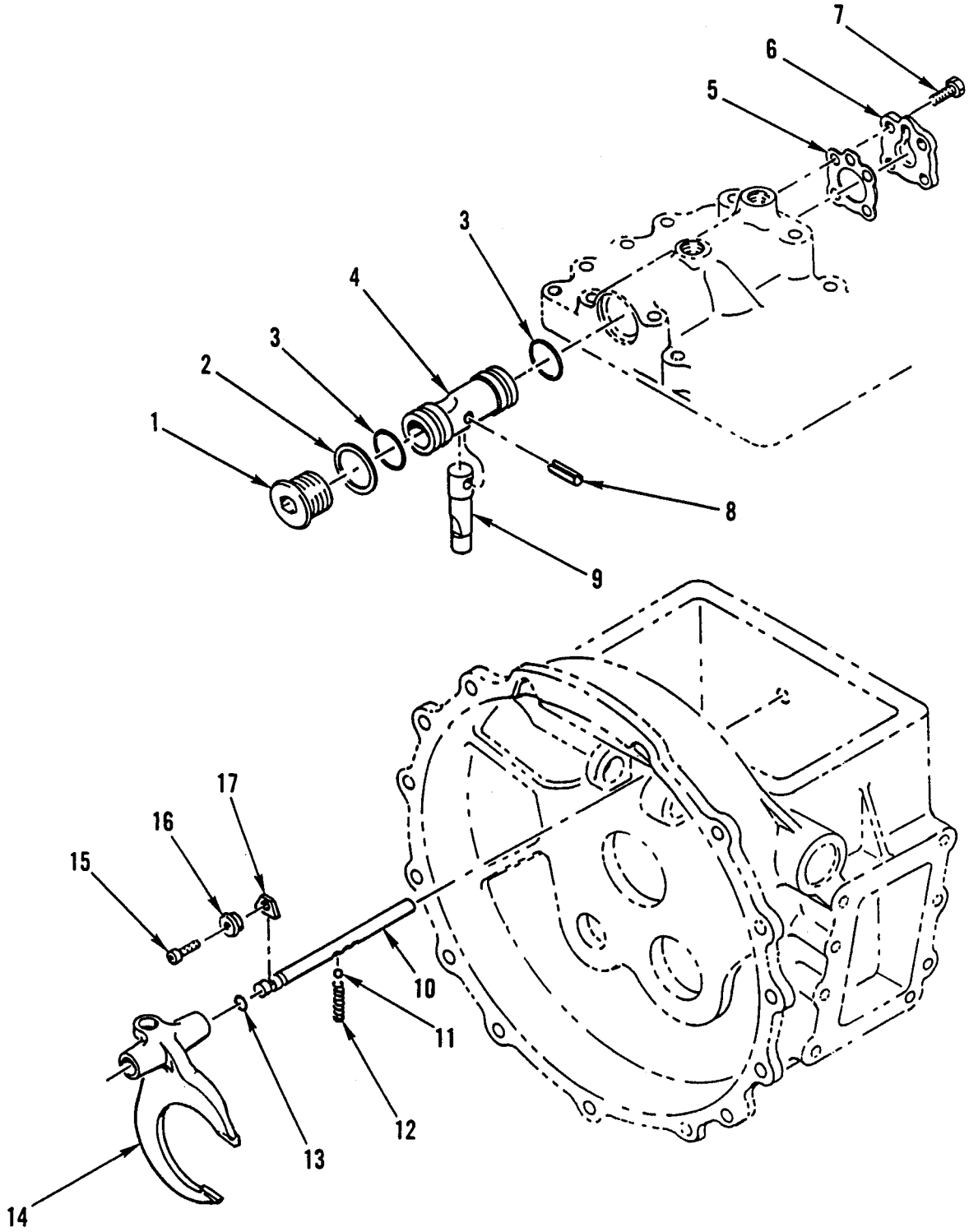

Figure 118. Transmission Top Cover Assembly – Intermediate Speed Controls.

(1) ITEM NO	(2) SMR CODE	(3) NSN	(4) CAGEC	(5) PART NUMBER	(6) DESCRIPTION AND USABLE ON CODES (UOC)	(7) QTY
					GROUP 0704	
					FIG. 118 TRANSMISSION TOP COVER ASSEMBLY – INTERMEDIATE SPEED CONTROLS	
1	PFHZZ	5365-01-244-9928	15526	908 M48X1.5	PLUG,MACHINE THREAD	1
2	PFHZZ	5365-01-240-1853	64678	441 267 07 52	SHIM 0.20 MM V	
2	PFHZZ	5365-01-240-1854	64678	441 267 08 52	SHIM 0.30 MM V	
2	PFHZZ	5365-01-240-2077	64678	441 267 29 52	SPACER,RING 0.50 MM V	
3	PFHZZ	5330-01-240-1837	64678	440 261 00 61	O-RING	2
4	PFHZZ	4320-01-237-7018	64678	441 267 06 18	PISTON,HYDRAULIC MO	1
5	PFHZZ	5330-01-240-2682	64678	441 267 10 52	GASKET 0.20 MM V	
5	PFHZZ	5365-01-240-8051	64678	441 267 30 52	SHIM 0.30 MM V	
5	PFHZZ	5365-01-240-4090	64678	441 267 11 52	SPACER,PLATE 0.50 MM V	
6	PFHZZ	5340-01-240-1336	64678	440 264 02 11	COVER,ACCESS	1
7	PFHZZ	5306-01-240-5169	64678	914141 008313	BOLT,MACHINE	4
8	PFHZZ	5315-01-241-1633	64678	007343 010000	PIN,SPRING	1
9	PFHZZ	3040-01-237-6263	64678	441 268 10 33	SHAFT,SHOULDERED	1
10	PFHZZ	3040-01-243-3548	64678	441 264 00 25	SHAFT,STRAIGHT	1
11	PFHZZ	3110-01-239-9473	15526	5401-8	BALL,BEARING	1
12	PFHZZ	5360-01-240-2052	64678	441 993 00 01	SPRING,HELICAL,COMP	1
13	PFHZZ	5330-01-240-2677	64678	012 997 65 48	O-RING	1
14	PFHZZ	2520-01-237-7077	64678	441 265 16 01	SHIFTER FORK VEHICULAR	1
15	PFHZZ	5305-01-239-9408	64678	914141 008310	SCREW,CAP,SOCKET HE	1
16	PFHZZ	2815-01-237-3618	64678	406 264 05 73	LOCK,VALVE SPRING R	1
17	PFHZZ	2530-01-237-3609	64678	406 264 01 73	DETENT PLATE	1
					END OF FIGURE	

UNIT, DIRECT SUPPORT AND GENERAL SUPPORT MAINTENANCE

SMALL EMPLACEMENT EXCAVATOR (SEE) AND HIGH MOBILITY MATERIAL HANDLER (HMMH)

TRANSMISSION TOP COVER ASSEMBLY – ACCESS COVER 406 260 53 14

REPAIR PARTS LIST

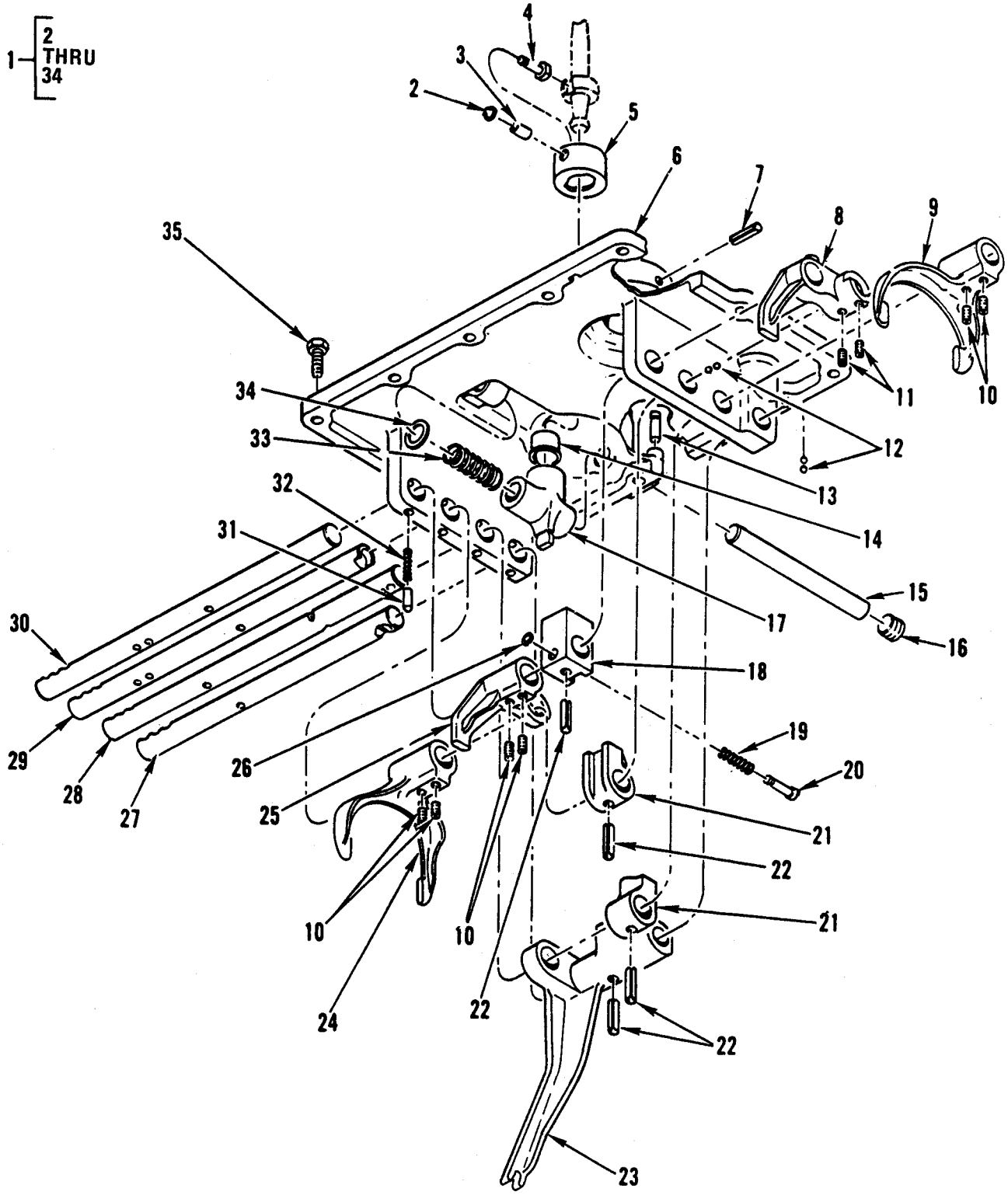

Figure 119. Transmission Top Cover Assembly – Access Cover.

(1) ITEM NO	(2) SMR CODE	(3) NSN	(4) CAGEC	(5) PART NUMBER	(6) DESCRIPTION AND USABLE ON CODES (UOC)	(7) QTY
					GROUP 0704	
					FIG. 119 TRANSMISSION TOP COVER ASSEMBLY – COVER, ACCESS 406 260 53 14	
1	PFHHH	5340-01-237-0125	64678	406 260 53 14	COVER,ACCESS	1
2	PFHZZ	5325-01-239-0698	64678	009045 006001	.RING,RETAINING	4
3	PFHZZ	3120-01-237-7673	64678	319 267 00 50	.BUSHING,SLEEVE	4
4	PFHZZ	5315-01-239-0684	64678	314 267 01 25	.PIN,GROOVED,HEADED	4
5	PFHZZ	5365-01-239-1437	64678	310 268 00 35	.BUSHING,NONMETALLIC	2
6	XAHZZ		19207	NPN-063	.COVER	1
7	PFHZZ	5315-01-238-8950	15526	1481-5X16	.PIN,SPRING	4
8	PFHZZ	3040-01-237-2877	64678	441 265 05 35	.BELL CRANK	1
9	PFHZZ	2520-01-237-2873	64678	441 265 15 01	.SHIFTER FORK,VEHICU	1
10	PFHZZ	5305-01-239-0638	64678	000914 010109	.SETSCREW,SOCKET,H	6
11	PFHZZ	5305-01-238-3183	64678	000914 010107	.SETSCREW	2
12	PFHZZ	3110-01-238-4661	15526	5401-11	.BALL,BEARING	6
13	PFHZZ	5315-01-238-3333	64678	001469 008100	.PIN,GROOVED,HEADLESS	4
14	PFHZZ	3120-01-245-8827	64678	441 268 00 50	.BUSHING,SLEEVE	1
15	PAHZZ	5315-01-238-0798	64678	406 267 01 03	.PIN,STRAIGHT,HEADLE	1
16	PFHZZ	4730-01-243-4866	64678	406 997 00 32	.PLUG,PIPE	1
17	PFHZZ	3040-01-237-6391	64678	406 265 04 07	.LEVER,MANUAL CONTRO	1
18	PFHZZ	3040-01-237-0338	64678	406 265 02 19	.CAM,CONTROL	1
19	PFHZZ	5360-01-292-9914	64678	002098 001023	.SPRING,HELICAL,COMP	1
20	PFHZZ	5315-01-239-2691	64678	406 265 05 47	.PIN,GROOVED,HEADED	1
21	PFHZZ	3040-01-236-6671	64678	441 265 00 19	.CAM,CONTROL	2
22	PFHZZ	5315-01-239-2692	64678	007343 008002	.PIN,SPRING	4
23	PFHZZ	3040-01-237-2876	64678	441 265 04 35	.BELL CRANK	1
24	PFHZZ	2520-01-237-2874	64678	441 265 12 01	.SHIFTER,FORK,VEHICU	1
25	PFHZZ	3040-01-237-2878	64678	441 265 06 35	.BELL CRANK	1
26	PFHZZ	5325-12-156-4452	64678	000471 010001	.RING,RETAINING	1
27	PFHZZ	3040-01-237-2881	64678	406 265 16 05	.LEVER,REMOTE CONTRO	1
28	PAHZZ	3040-01-236-6703	64678	441 265 06 05	.LEVER,REMOTE CONTRO	1
29	PAHZZ	3040-01-237-2882	64678	441 265 04 05	.LEVER,REMOTE CONTRO	1
30	PFHZZ	3040-01-237-2883	64678	441 265 05 05	.LEVER,REMOTE CONTRO	1
31	PFHZZ	5315-01-238-8953	64678	425 265 01 47	.PIN,SHOULDER,HEADLE	4
32	PFHZZ	5360-01-239-9203	64678	385 993 15 01	.SPRING,HELICAL,COMP	4
33	PFHZZ	5360-01-238-6246	64678	002098 002006	.SPRING,HELICAL,COMP	1

(1) ITEM NO	(2) SMR CODE	(3) NSN	(4) CAGEC	(5) PART NUMBER	(6) DESCRIPTION AND USABLE ON CODES (UOC)	(7) QTY
34	PAHZZ	5310-01-239-9361	64678	001440 018002	.WASHER,FLAT	1
35	PFHZZ	5305-01-238-3182	64678	914141 008309	SETSCREW	12
					END OF FIGURE	

UNIT, DIRECT SUPPORT AND GENERAL SUPPORT MAINTENANCE

SMALL EMPLACEMENT EXCAVATOR (SEE) AND HIGH MOBILITY MATERIAL HANDLER (HMMH)

TRANSMISSION SHIFTING COMPONENTS (TRANSMISSION SHIFT CONTROLS) – ACTUATOR CYLINDER ASSEMBLY 1378-01-00

REPAIR PARTS LIST

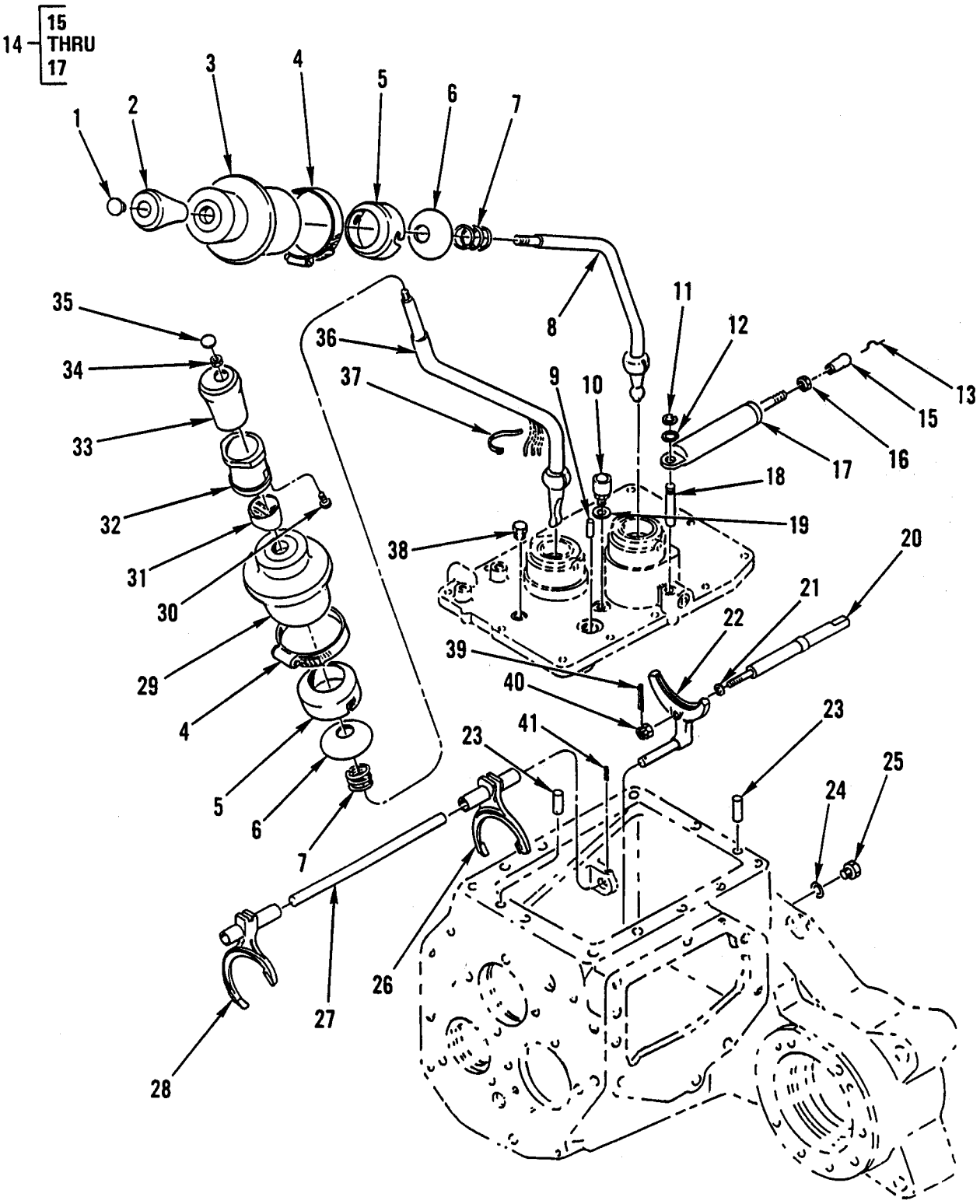

Figure 120. Transmission Shifting Components (Transmission Shift Controls) – Actuator Cylinder Assembly.

(1) ITEM NO	(2) SMR CODE	(3) NSN	(4) CAGEC	(5) PART NUMBER	(6) DESCRIPTION AND USABLE ON CODES (UOC)	(7) QTY
					GROUP 0705	
					FIG. 120 TRANSMISSION SHIFTING COMPONENTS (TRANSMISSION SHIFT CONTROLS) – CYLINDER ASSEMBLY, ACTUATOR 1378-01-00	
1	PFOZZ	9905-12-308-9537	D8236	28.51/605	PLATE,DESIGNATION	1
2	PFOZZ	5355-01-242-0034	64678	000 260 00 40	KNOB	1
3	PFOZZ	9390-01-235-8047	D2480	B 0614	BELLOWS,PROTECTION	1
4	PFOZZ	4730-00-908-3193	66295	WWD48-58H	CLAMP,HOSE	2
5	PFOZZ	3040-01-237-0182	64678	314 268 00 05	CAP,FILLER OPENING	2
6	PFFZZ	3040-01-236-4504	64678	302 267 00 08	SPHERICAL PIECE	2
7	PFFZZ	5360-01-239-9202	64678	317 993 05 01	SPRING,HELICAL,COMP	2
8	PFFZZ	3040-01-237-0474	64678	406 260 46 39	LEVER,REMOTE CONTRO	1
9	PFFZZ	5315-01-238-0797	64678	441 265 01 74	PIN,STRIGHT HEADLE	1
10	PFOZZ	2520-01-236-4667	C1863	EV1003-01-02-00	BREATHER	1
11	PFFZZ	5325-12-156-4706	D8090	DIN471-8X0,8	RING,RETAINING	1
12	PFFZZ	5310-01-237-5224	64678	000125 008413	WASHER,FLAT	1
13	PFFZZ	5340-01-266-2383	64678	071805 013402	BALL,BEARING	1
14	PBFFF	2530-01-237-6413	C1863	1378-01-00	CYLINDER ASSEMBLY,A	1
15	PFFZZ	5330-01-276-6636	64678	071805 013203	.SEAL RING,METAL	1
16	PFFZZ	5310-01-239-3536	64678	913004 008004	.NUT,SELF-LOCKING,HE	1
17	XAFZZ		19207	NPN – 064	.CYLINDER	1
18	PFFZZ	5315-01-238-3333	64678	001469 008100	PIN,GROOVED,HEADLESS	1
19	PAOZZ	5331-01-312-7600	64678	007603 010104	O-RING	1
20	PFHZZ	3040-01-237-6287	64678	441 265 01 04	SHAFT,SHOULDERED	1
21	PFHZZ	5310-01-245-7212	64678	000 993 63 26	WASHER,SPRING TENSI	17
22	PFHZZ	2520-01-237-8380	64678	406 260 14 30	SHIFTER,FORK,VEHICU	1
23	PFFZZ	5315-01-239-0690	64678	000007 012201	PIN,STRAIGHT,HEADLE	2
24	PFHZZ	5330-01-243-4847	15526	7603 CU 22X29	SEAL RING,METAL	1
25	PFHZZ	5365-01-244-4714	64678	007604 022201	PLUG,MACHINE THREAD	1
26	PFHZZ	2520-01-237-8378	64678	441 265 03 01	SHIFTER,FORK,VEHICU	1
27	PFHZZ	3040-01-237-6248	64678	404 265 00 36	SHAFT,STRAIGHT	1
28	PFHZZ	2520-01-237-8379	64678	441 265 01 01	SHIFTER,FORK,VEHICU	1
29	PFFZZ	9390-01-262-5391	D2480	85/0562	BELLOWS,PROTECTION	1
30	PFFZZ	5305-01-241-1516	15526	7982 B3.5	SCREW,TAPPING 3.5 MM	3
31	PFFZZ	3040-01-237-0183	64678	441 267 00 06	CAP,FILLER OPENING	1
32	PAFZZ	4820-01-237-0369	D0138	10 28051 M	VALVE,LINEAR,DIRECT	1

(1) ITEM NO	(2) SMR CODE	(3) NSN	(4) CAGEC	(5) PART NUMBER	(6) DESCRIPTION AND USABLE ON CODES (UOC)	(7) QTY
33	XDOZZ		D8236	17 1035.00.01	KNOB	1
34	PFOZZ	5310-01-238-0641	64678	913021 010001	NUT,PLAIN,HEXAGON	1
35	PFOZZ	2520-01-242-3948	D8236	28.51/604	CAP,INSTRUCTION,SHI	1
36	PFFZZ	3040-01-257-4947	64678	406 260 52 39	LEVER,MANUAL CONTRO	1
37	PFFZZ	5340-01-240-5728	64678	001 997 83 90	STRAP,LINE SUPPORTI	V
38	PFFZZ	5365-01-183-6835	64678	007604 018101	PLUG,MACHINE THREAD	1
39	PFHZZ	5315-00-059-0158	96906	MS24665-212	PIN,COTTER	1
40	PFHZZ	5310-01-243-3762	64678	441 990 00 55	NUT,PLAIN,SLOTTED,H	1
41	PFHZZ	5315-01-240-1357	15526	1481 6 40	PIN,SPRING	1
					END OF FIGURE	

UNIT, DIRECT SUPPORT AND GENERAL SUPPORT MAINTENANCE

SMALL EMPLACEMENT EXCAVATOR (SEE) AND HIGH MOBILITY MATERIAL HANDLER (HMMH)

TRANSMISSION SHIFTING COMPONENTS – ALL WHEEL DRIVE SELECTOR

REPAIR PARTS LIST

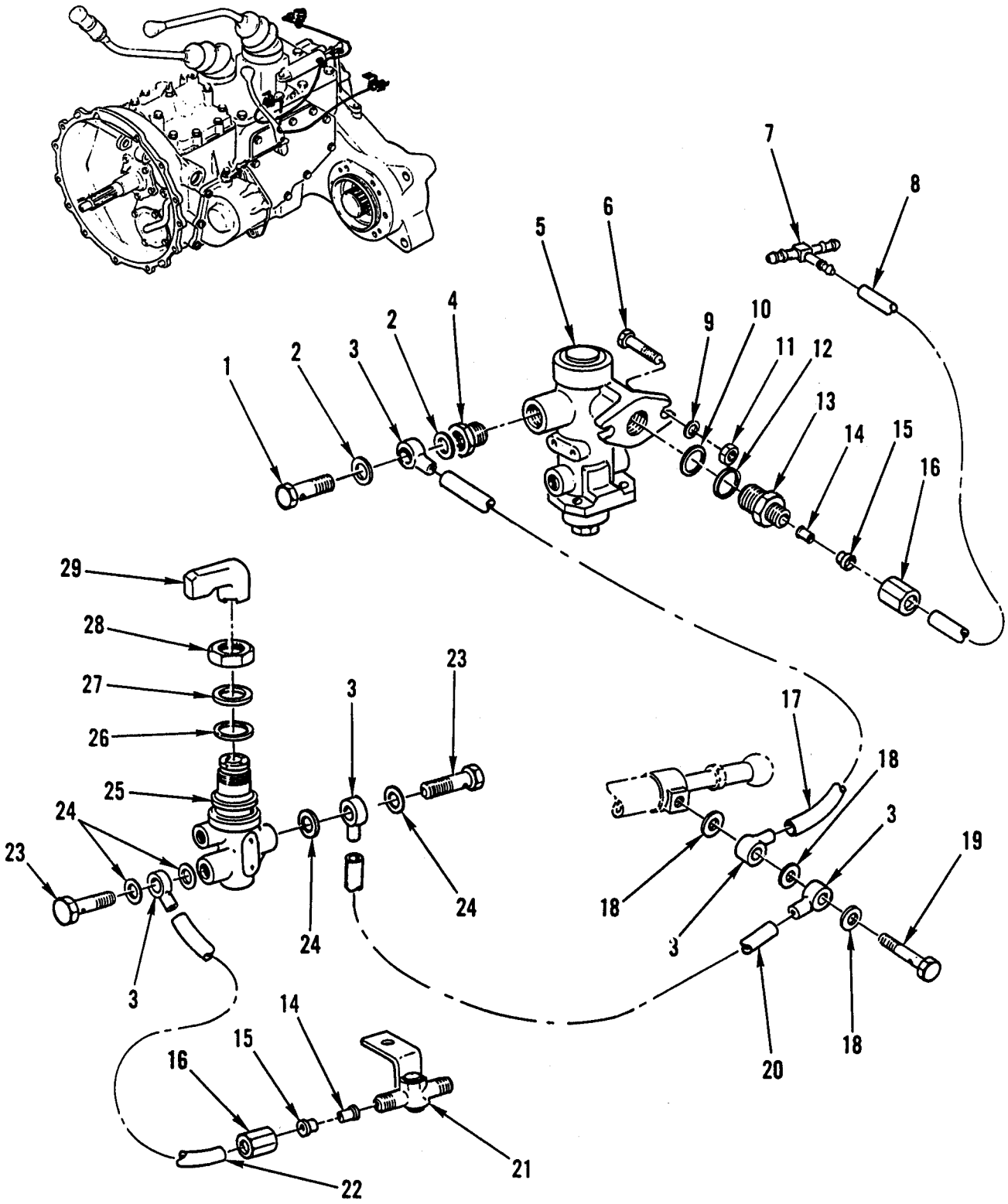

Figure 121. Transmission Shifting Components – All Wheel Drive Selector.

(1) ITEM NO	(2) SMR CODE	(3) NSN	(4) CAGEC	(5) PART NUMBER	(6) DESCRIPTION AND USABLE ON CODES (UOC)	(7) QTY
					GROUP 0705	
					FIG. 121 TRANSMISSION SHIFTING COMPONENTS – ALL WHEEL DRIVE SELECTOR	
1	PFOZZ	4730-01-299-4053	64678	915036 008202	BOLT,FLUID PASSAGE	1
2	PAOZZ	5330-01-301-5137	S3465	4538741-112	SEAL RING,METAL	2
3	PFOZZ	4730-01-235-5070	64678	915052 004011	CONNECTOR,MULTIPLE	4
4	PFOZZ	4730-01-241-2925	64678	000 990 44 68	ADAPTER,STRAIGHT,TU	1
5	PAOZZ	4820-01-240-9648	D8096	475 010 017 0	VALVE,REGULATING,FL	1
6	PFOZZ	5305-01-159-0065	56161	10501759	SCREW,CAP,HEXAGON H	2
7	PFOZZ	4730-01-241-1612	D8773	760 8037 004	TEE,HOSE	1
8	MOOZZ		64678	008 997 60 82X 310	HOSE MAKE FROM CAGE 64678 P/N 008 997 60 82, CUT TO 310 MM	1
9	PFOZZ	5310-01-250-6258	D8046	009021 008205	WASHER,FLAT	2
10	PFOZZ	5330-12-122-4223	64678	000 429 02 27	RETAINER,PACKING	2
11	PFOZZ	5310-01-239-3536	64678	913004 008004	NUT,SELF-LOCKING,HE	2
12	PAOZZ	5331-01-313-3569	64678	000 987 04 46	O-RING	2
13	PFOZZ	4730-01-253-6866	64678	003 997 20 72	REDUCER,TUBE	1
14	PFOZZ	4730-01-236-6992	64678	915062 004000	SLEEVE,FLARED,TUBE	2
15	PFOZZ	4730-01-241-6951	15526	3861 D 6S	SLEEVE,COMPRESSION	2
16	PFOZZ	4730-01-237-0071	64678	915017 006100	NUT,UNION	2
17	MOOZZ		64678	008 997 60 82X 490	HOSE MAKE FROM CAGE 64678 P/N 008 997 60 82, CUT TO 490 MM	1
18	PFOZZ	5330-01-313-2006	64678	007603 010404	SEAL RING,METAL	2
19	PFOZZ	4730-01-318-2697	64678	915047 006202	BOLT,FLUID,PASSAGE	1
20	MOOZZ		64678	008 997 60 82X 190	HOSE MAKE FROM CAGE 64678 P/N 008 997 60 82, CUT TO 190 MM	1
21	PFOZZ	5340-01-242-6050	64678	343 430 10 10	BRACKET,ANGLE	1
22	MOOZZ		64678	008 997 60 82X 110	HOSE MAKE FROM CAGE 64678 P/N 008 997 60 82, 110 MM	1
23	PFOZZ	5305-01-312-9971	64678	915036 006202	SCREW,CAP,HEXAGON H	3
24	PAOZZ	5330-01-171-4703	S3465	4536226-835	SEAL RING,METAL	6
25	PAOZZ	4820-01-241-3132	64678	001 997 69-36	VALVE,LINEAR,DIRECT	1
26	PFOZZ	5310-01-242-7450	64678	419 426 02 76	WASHER,FLAT	1
27	PFOZZ	5310-01-242-0673	64678	419 426 01 76	WASHER,FLAT	1
28	PFOZZ	5310-01-254-7274	64678	383 990 00 51	NUT,PLAIN,HEXAGON	1
29	PFOZZ	2590-01-245-6760	64678	425 268 02 42	LEVER,MANUAL CONTRO	1
					END OF FIGURE	

UNIT, DIRECT SUPPORT AND GENERAL SUPPORT MAINTENANCE

SMALL EMPLACEMENT EXCAVATOR (SEE) AND HIGH MOBILITY MATERIAL HANDLER (HMMH)

TRANSMISSION SHIFTING COMPONENTS – TRANSMISSION SHIFT VALVES, LINES, AND FITTINGS

REPAIR PARTS LIST

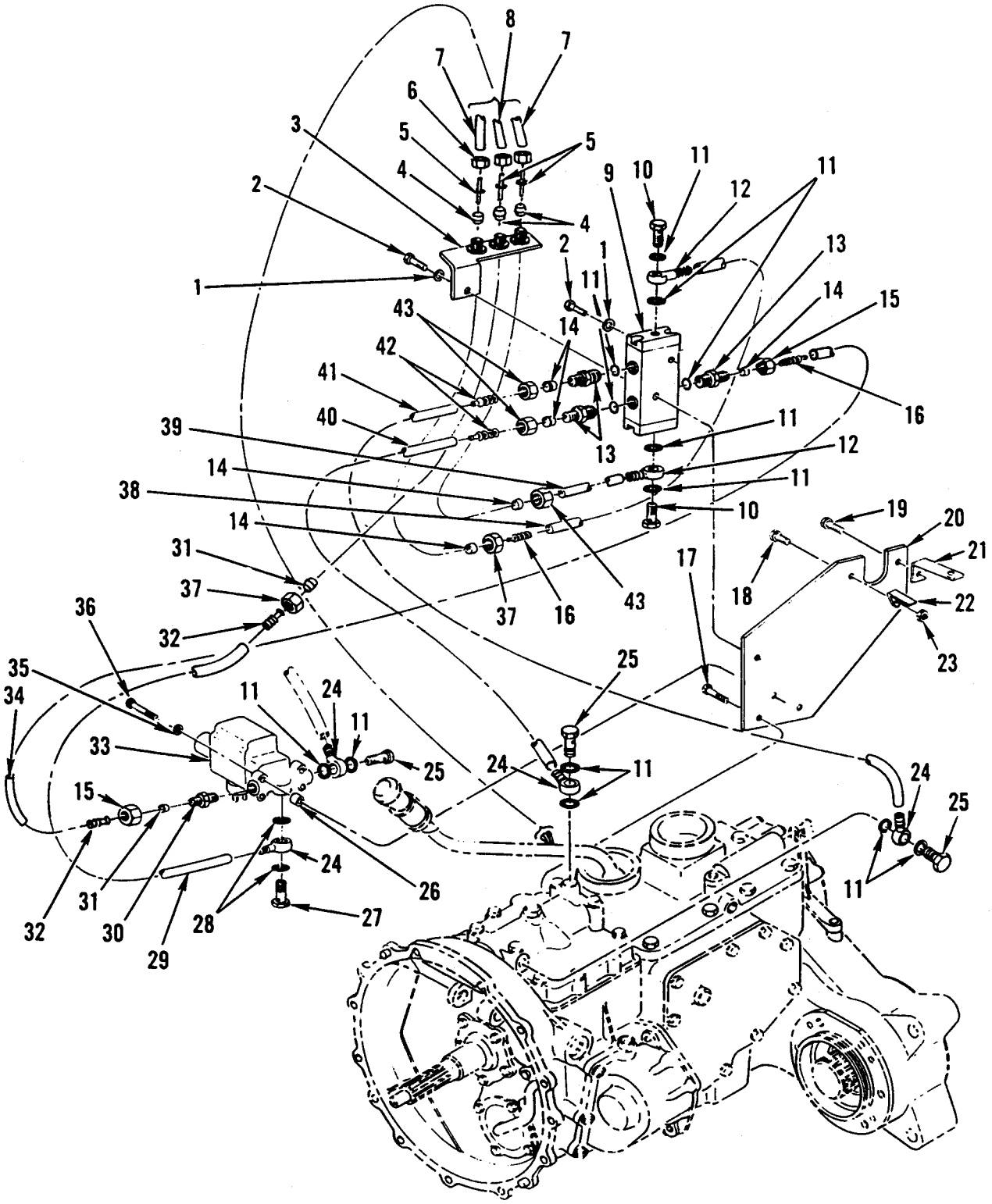

Figure 122. Transmission Shifting Components – Transmission Shift Valves, Lines, and Fittings.

(1) ITEM NO	(2) SMR CODE	(3) NSN	(4) CAGEC	(5) PART NUMBER	(6) DESCRIPTION AND USABLE ON CODES (UOC)	(7) QTY
					GROUP 0705	
					FIG. 122 TRANSMISSION SHIFTING COMPONENTS – TRANSMISSION SHIFT VALVES, LINES, AND FITTINGS	
1	PAOZZ	5310-01-240-1818	64678	912004 005103	WASHER,LOCK	2
2	PFFZZ	5305-01-239-9409	64678	000931 005039	SCREW,CAP,HEXAGON H	2
3	PFFZZ	2510-01-237-3530	64678	389 260 00 62	BRACKET,ASSEMBLY,VE	1
4	PFFZZ	4730-01-236-9999	64678	915062 002000	SLEEVE,FLARED,TUBE	3
5	PFFZZ	4730-01-237-7125	15526	3861DPR-4LL	SLEEVE,TUBE,FLARING	3
6	PFFZZ	4730-01-237-0069	64678	915017 004101	NUT,UNION	3
7	PAFZZ	4720-01-237-8347	64678	301 997 13 82	PARTS KIT,HOSE,NONM	2
8	PAFZZ	4720-01-237-8348	64678	301 997 12 82	PARTS KIT,HOSE,NONM	1
9	PAFZZ	4810-01-237-6395	C3185	571 003 104 0	VALVE,LINEAR DIRECT	1
10	PFFZZ	4730-01-290-0984	64678	915047 010202	BOLT,FLUID PASSAGE	2
11	PFFZZ	5330-01-313-2006	64678	007603 010404	SEAL RING,METAL	13
12	PFFZZ	4730-01-313-4052	5A866	915010 004202	CONNECTOR,MULTIPLE	2
13	PFFZZ	4730-01-298-9537	64678	003901 006004	ADAPTER,STRAIGHT,PI	3
14	PFFZZ	4730-01-241-6951	15526	3861 D 6S	SLEEVE,COMPRESSION	V
15	PFFZZ	4730-01-237-0071	64678	915017 006100	NUT,UNION	V
16	PFFZZ	4730-01-313-4051	64678	387 992 00 25	SLEEVE,CLINCH,TUBE	V
17	PFFZZ	5305-01-240-1272	64678	914141 010307	SCREW,CAP,HEXAGON H	2
18	PFFZZ	5305-01-155-5439	56161	10501757	SCREW,CAP,HEXAGON H	1
19	PFFZZ	5306-01-238-1471	64678	000933 008153	BOLT,MACHINE	1
20	PFFZZ	5342-01-237-3555	64678	406 265 02 39	BRACKET,ENGINE ACCE	1
21	PFFZZ	5340-01-240-7464	64678	425 476 07 36	BRACKET,ANGLE	1
22	PFFZZ	5340-01-240-4162	64678	406 265 03 39	BRACKET,ANGLE	1
23	PFFZZ	5310-01-239-3536	64678	913004 008004	NUT,SELF-LOCKING,HE	1
24	PFFZZ	4730-01-313-4053	64678	915052 004016	CONNECTOR,MULTIPLE	V
25	PFFZZ	5305-01-312-9971	64678	915036 006202	SCREW,CAP,HEXAGON,H	2
26	PFFZZ	5365-01-240-2712	64678	136 991 37 40	SPACER,SLEEVE	2
27	PFFZZ	4730-01-237-0190	64678	915036 008200	BOLT,FLUID PASSAGE	1
28	PFFZZ	5310-01-166-5859	S3465	4537800-786	WASHER,FLAT	2
29	MFFZZ		64678	008 997 60 82X 240	HOSE MAKE FROM CAGE 64678 P/N 008 997 60 82, CUT TO 240 MM	1
30	PFFZZ	4730-01-237-0163	64678	915006 004002	UNION,TUBE	1
31	PFFZZ	4730-01-237-1929	15526	3861D 6LL	SLEEVE,FLARED,TUBE	V
32	PFFZZ	4730-01-236-6992	64678	915062 004000	SLEEVE,FLARED,TUBE	V

(1) ITEM NO	(2) SMR CODE	(3) NSN	(4) CAGEC	(5) PART NUMBER	(6) DESCRIPTION AND USABLE ON CODES (UOC)	(7) QTY
33	PAFZZ	4810-01-238-0159	D0138	9417139/0734/ 24V	VALVE,SOLENOID.....	1
34	MFFZZ		64678	008 997 60 82X 460	HOSE MAKE FROM CAGE 64678 P/N 008 997 60 82, CUT TO 460 MM.....	1
35	PFFZZ	5310-01-174-7613	S3465	4537800-256	WASHER,FLAT UOC:GE1.....	2
36	PFFZZ	5306-01-171-4688	S3465	4536226-819	BOLT,MACHINE.....	2
37	PFFZZ	4730-01-237-0070	64678	915017 006104	UNION,TUBE.....V	
38	MFFZZ		64678	008 997 60 82X 290	HOSE MAKE FROM CAGE 64678 P/N 008 997 60 82, CUT TO 290 MM.....	2
39	PFFZZ	4720-01-237-0178	64678	421 420 17 26	HOSE,NONMETALLIC	1
40	MFFZZ		64678	008 997 60 82X 360	HOSE MAKE FROM CAGE 64678 P/N 008 997 60 82, CUT TO 360 MM.....	1
41	MFFZZ		64678	008 997 60 82X 250	HOSE MAKE FROM CAGE 64678 P/N 008 997 60 82, CUT TO 250 MM.....	1
42	PFFZZ	2910-01-237-3564	64678	000 276 03 29	NOZZEL,FUEL INJECTION.....V	
43	PFFZZ	4730-01-237-0071	64678	915017 006100	NUT,UNION.....V	

END OF FIGURE

UNIT, DIRECT SUPPORT AND GENERAL SUPPORT MAINTENANCE

SMALL EMPLACEMENT EXCAVATOR (SEE) AND HIGH MOBILITY MATERIAL HANDLER (HMMH)

TRANSMISSION SHIFTING COMPONENTS – MANUAL CONTROL LEVER 406 260 49 39, AND MANUAL CONTROL LEVER 406 260 50 39

REPAIR PARTS LIST

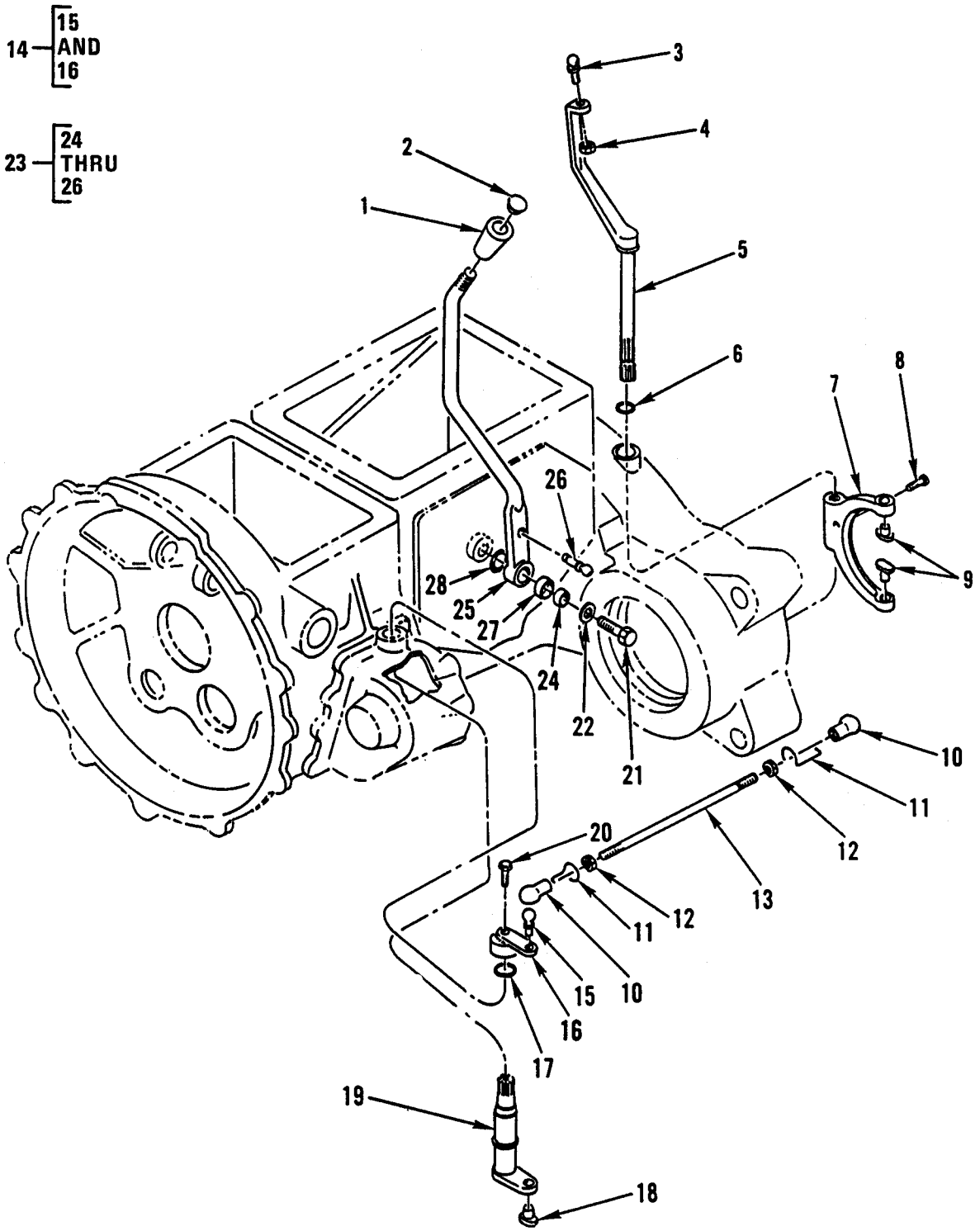

Figure 123. Transmission Shifting Components – Manual Control Levers.

(1) ITEM NO	(2) SMR CODE	(3) NSN	(4) CAGEC	(5) PART NUMBER	(6) DESCRIPTION AND USABLE ON CODES (UOC)	(7) QTY
					GROUP 0705	
					FIG. 123 TRANSMISSION SHIFTING COMPONENTS – LEVER, MANUAL CONTROL 406 260 49 39, AND LEVER, MANUAL CONTROL 406 260 50 39	
1	PFFZZ	5355-01-242-0034	64678	000 260 00 40	KNOB	1
2	PFFZZ	2520-01-242-3949	D8236	50 6174.05.02	CAP,INSTRUCTION,SHI	1
3	PFHZZ	3110-01-296-6410	64678	071803 013102	BALL,BEARING	1
4	PFHZZ	5310-01-239-3536	64678	913004008004	NUT,SELF-LOCKING,HE	1
5	PFHZZ	2520-01-236-7270	64678	406 260 48 39	LEVER,MANUAL CONTRO	1
6	PFFZZ	5330-01-240-2678	64678	404 997 02 45	O-RING	1
7	PAFZZ	2520-01-237-8381	64678	406 264 12 26	SHIFTER FORK,VEHICU	1
8	PAFZZ	5305-01-240-1277	64678	914141 006302	SCREW,CAP,HEXAGON H	1
9	PFFZZ	5315-01-244-2496	64678	441 265 00 49	PIN,STRAIGHT,HEADED	2
10	PFFZZ	3120-01-255-2740	64678	071805 013203	BEARING,PLAIN,ROD,E	2
11	PAFZZ	5340-01-266-2383	64678	071805 013402	BALL,BEARING	2
12	PFFZZ	5310-01-241-6345	15526	934 8 M8X1.25 C	NUT,PLAIN,HEXAGON	2
13	PFFZZ	5307-01-240-1226	64678	900331 008401	STUD,PLAIN	1
14	PFFFF	3040-01-237-3566	64678	406 260 49 39	LEVER,MANUAL CONTRO	1
15	PFFZZ	5307-01-240-1229	64678	071803 013207	.STUD,BALL	1
16	XAFZZ		19207	NPN-062A	.LEVER	1
17	PFFZZ	5330-01-240-1835	64678	419 997 00 48	O-RING	1
18	PFFZZ	5315-01-244-2496	64678	441 265 00 49	PIN,STRAIGHT,HEADED	1
19	PFFZZ	3040-01-236-6658	64678	406 260 03 38	SHAFT,ASSEMBLY	1
20	PFFZZ	5305-01-239-9408	64678	914141 008310	SCREW,CAP,SOCKET HE	1
21	PAFZZ	5306-01-240-5167	64678	914141 010121	BOLT,MACHINE	1
22	PFFZZ	5310-01-240-1295	64678	009021 010202	WASHER,FLAT	1
23	PFFFF	3040-01-237-3567	64678	406 260 50 39	LEVER,MANUAL CONTRO	1
24	PFFZZ	3120-12-308-8850	D2457	GYL.PG161820	.BEARING,SLEEVE	1
25	PFFZZ	3040-01-237-3567	64678	406 264 27 24	.LEVER,MANUAL CONTRO	1
26	PFFZZ	5307-01-240-1229	64678	071803 013207	.STUD,BALL	1
27	PFFZZ	3120-01-240-2705	64678	441 265 00 43	BUSHING,SLEEVE	1
28	PFFZZ	5331-01-268-8803	64678	003770 018000	O-RING	2
					END OF FIGURE	

UNIT, DIRECT SUPPORT AND GENERAL SUPPORT MAINTENANCE

SMALL EMPLACEMENT EXCAVATOR (SEE) AND HIGH MOBILITY MATERIAL HANDLER (HMMH)

TRANSMISSION SHIFTING COMPONENTS – DIFFERENTIAL LOCK LINES AND FITTINGS (FRONT)

REPAIR PARTS LIST

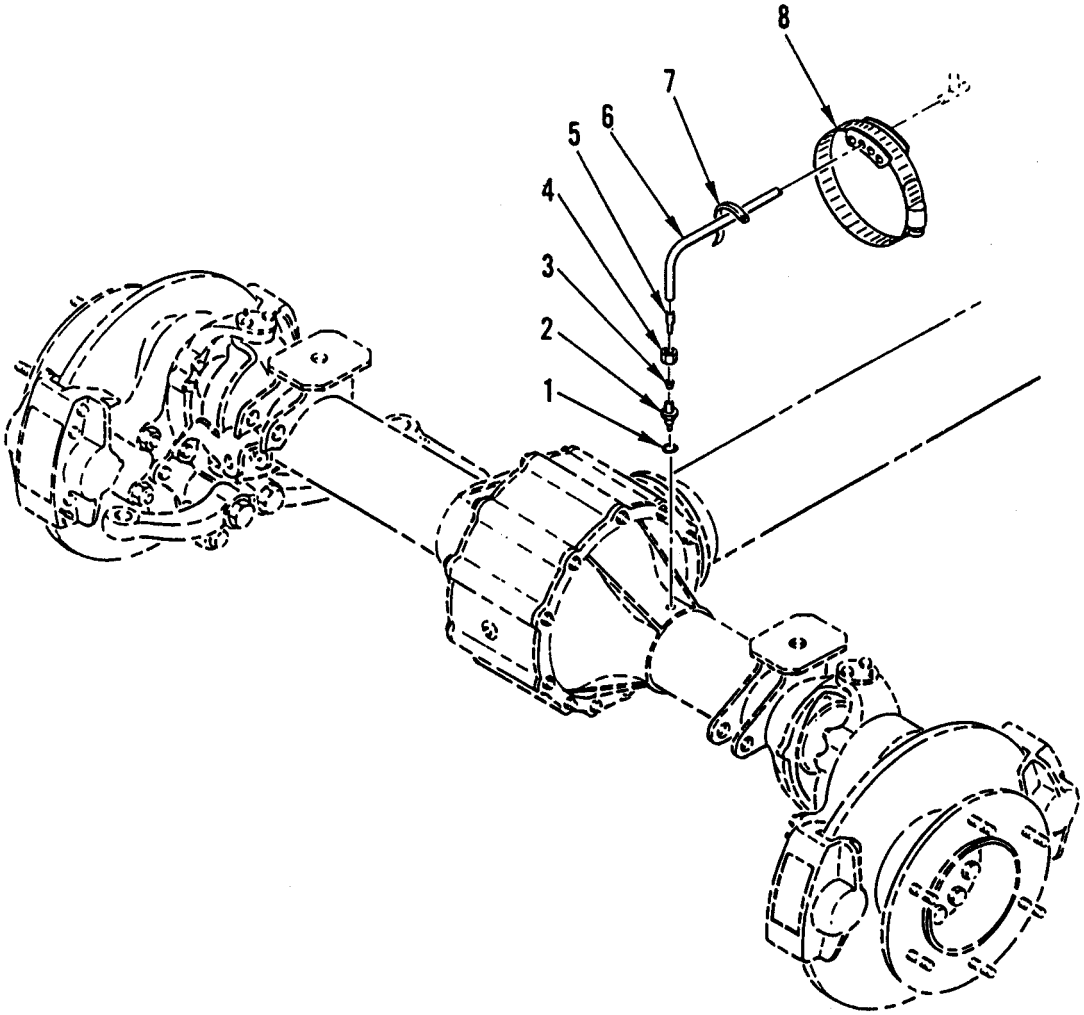

Figure 124. Transmission Shifting Components – Differential Lock Lines and Fittings (Front).

(1) ITEM NO	(2) SMR CODE	(3) NSN	(4) CAGEC	(5) PART NUMBER	(6) DESCRIPTION AND USABLE ON CODES (UOC)	(7) QTY
					GROUP 0705	
					FIG. 124 TRANSMISSION SHIFTING COMPONENTS – DIFFERENTIAL LOCK LINES AND FITTINGS (FRONT)	
1	PAOZZ	5330-01-270-1311	64678	007 603 014 405	SEAL RING,METAL	1
2	PFOZZ	4730-01-241-1617	64678	435 331 00 84	NIPPLE,BOSS	1
3	PFOZZ	4730-01-241-6951	15526	3861 D 6S	SLEEVE,COMPRESSION	1
4	PFOZZ	4730-01-237-0071	64678	915017 006100	NUT,UNION	1
5	PFOZZ	4730-01-236-6992	64678	915062 004000	SLEEVE,FLARED,TUBE	1
6	MOOZZ		64678	008 997 60 82X 1524	HOSE MAKE FROM CAGE 64678 P/N 008 997 60 82, CUT TO 1524 MM	1
7	PFOZZ	5340-01-240-5728	64678	001 997 83 90	STRAP,LINE SUPPORTI	1
8	PFOZZ	5340-12-179-6963	C0781	603 428 01 84	CLAMP,LOOP	1
					END OF FIGURE	

UNIT, DIRECT SUPPORT AND GENERAL SUPPORT MAINTENANCE

SMALL EMPLACEMENT EXCAVATOR (SEE) AND HIGH MOBILITY MATERIAL HANDLER (HMMH)

TRANSMISSION SHIFTING COMPONENTS – DIFFERENTIAL LOCK LINES AND FITTINGS (REAR)

REPAIR PARTS LIST

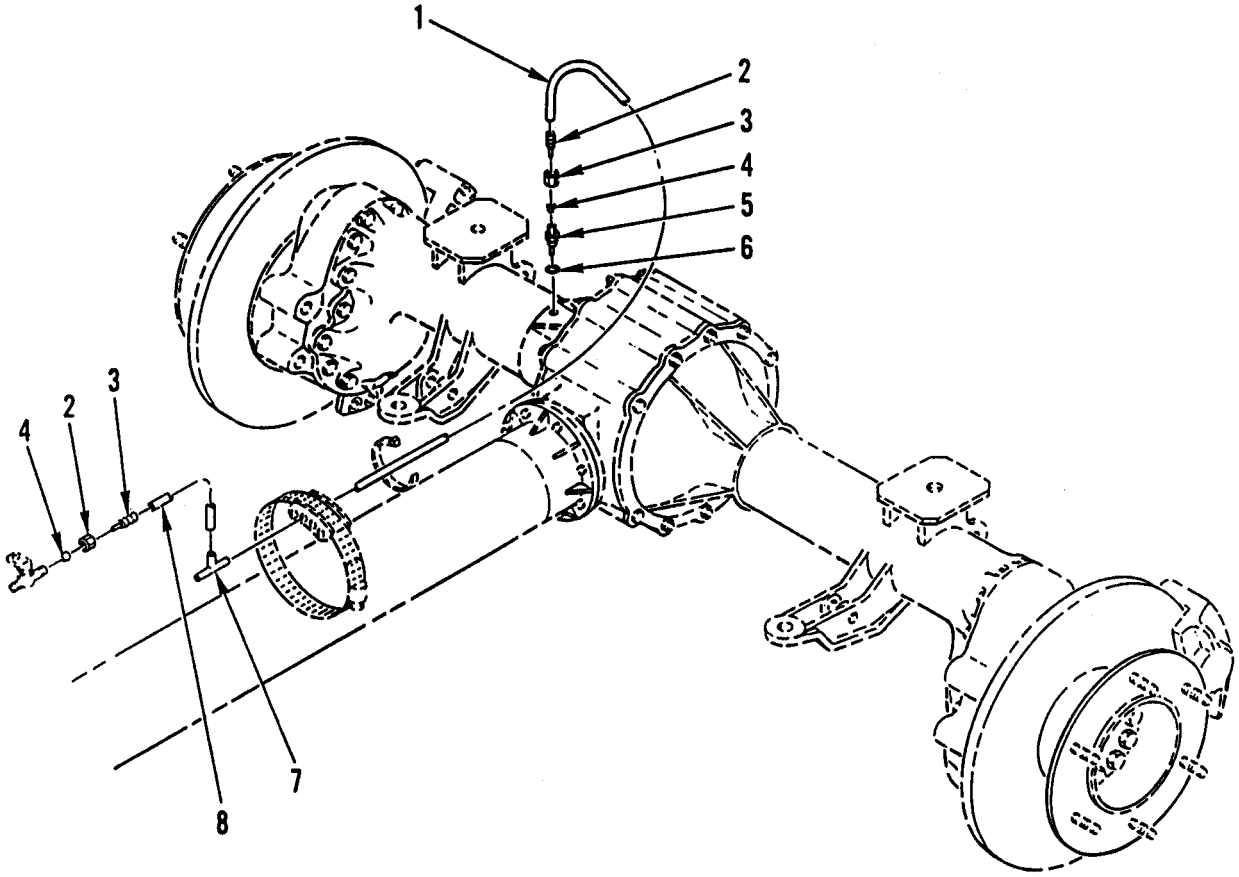

Figure 125. Transmission Shifting Components – Differential Lock Lines and Fittings (Rear).

(1) ITEM NO	(2) SMR CODE	(3) NSN	(4) CAGEC	(5) PART NUMBER	(6) DESCRIPTION AND USABLE ON CODES (UOC)	(7) QTY
					GROUP 0705	
					FIG. 125 TRANSMISSION SHIFTING COMPONENTS – DIFFERENTIAL LOCK LINES AND FITTINGS (REAR)	
1	MOOZZ		64678	008 997 60 82X 2500	HOSE MAKE FROM CAGE 64678 P/N 008 997 60 82, CUT TO 2500 MM.....	1
2	PFOZZ	4730-01-236-6992	64678	915062 004000	SLEEVE,FLARED,TUBE	2
3	PFOZZ	4730-01-237-0071	64678	915017 006100	NUT,UNION.....	2
4	PFOZZ	4730-01-241-6951	15526	3861 D 6S	SLEEVE,COMPRESSION	2
5	PFOZZ	4730-01-241-1617	64678	435 331 00 84	NIPPLE,BOSS	1
6	PFOZZ	5330-01-270-1311	64678	007 603 014 405	SEAL RING,METAL.....	1
7	PFOZZ	4730-01-241-1612	D8773	760 8037 004	TEE,HOSE.....	1
8	MOOZZ		64678	008 997 60 82X 940	HOSE MAKE FROM CAGE 64678 P/N 008 997 60 82, CUT TO 940 MM.....	1
					END OF FIGURE	

UNIT, DIRECT SUPPORT AND GENERAL SUPPORT MAINTENANCE

SMALL EMPLACEMENT EXCAVATOR (SEE) AND HIGH MOBILITY MATERIAL HANDLER (HMMH)

PROPELLER AND PROPELLER SHAFTS – PROPELLER SHAFT 416 337 21 10, AND THRUST BALL HOUSING 416 330 14 14

REPAIR PARTS LIST

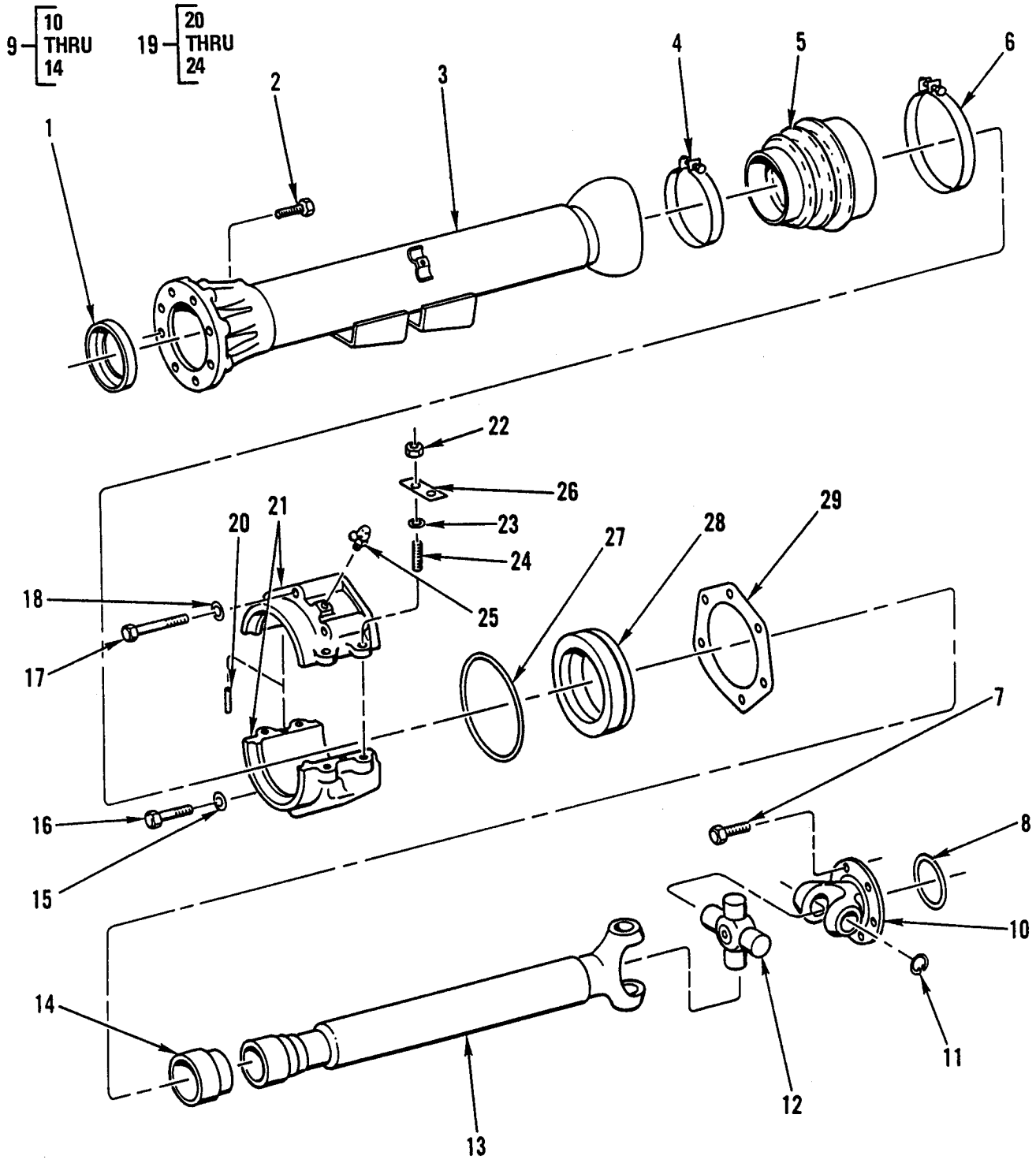

Figure 126. Propeller and Propeller Shafts – Propeller Shaft, and Thrust Ball Housing.

(1) ITEM NO	(2) SMR CODE	(3) NSN	(4) CAGEC	(5) PART NUMBER	(6) DESCRIPTION AND USABLE ON CODES (UOC)	(7) QTY
					GROUP 09, 0900	
					FIG. 126 PROPELLER AND PROPELLER SHAFTS –SHAFT, PROPELLER 416 337 21 10, AND HOUSING, THRUST BALL 416 330 14 14	
1	PAFZZ	5330-12-193-4983	64678	007 997 18 47	SEAL,PLAIN ENCASED	1
2	PFFZZ	5306-01-242-1772	64678	000960 012171	BOLT,MACHINE	8
3	PFFZZ	4710-01-242-2276	64678	440 330 02 31	TUBE ASSEMBLY,THRUS	1
4	PFFZZ	4730-01-241-1623	64678	916002 109200	CLAMP,HOSE	1
5	PFFZZ	9390-01-240-4662	64678	416 987 58 43	BELLOWS,PROTECTION	1
6	PFFZZ	4730-01-241-1622	64678	916002 160100	CLAMP,HOSE	1
7	PFFZZ	5306-01-242-0599	64678	070614 010033	BOLT,MACHINE	6
8	PFFZZ	5330-01-241-6413	64678	003 997 79 45	PACKING,PREFORMED	1
9	PAFFF	3040-01-257-8896	64678	416 337 21 10	PROPELLER SHAFT WIT	1
10	XAFZZ		19207	NPN-065	.YOKE,SHAFT	1
11	PAFZZ	5325-01-316-1365	64678	000 411 20 73	.RING,RETAINING 1.4 MM	4
11	PFFZZ	5325-12-314-1814	D8046	000411273	.RING,RETAINING 1.5 MM	4
11	PAFZZ	5325-12-314-1813	D2001	421 240 02053	.RING,RETAINING 1.6 MM	4
11	PAFZZ	5325-12-314-1812	D2001	421 240 02054	.RING,RETAINING 1.7 MM	4
11	PAFZZ	5325-12-314-1811	D2001	421 240 02055	.RING,RETAINING 1.8 MM	4
11	PAFZZ	5325-01-316-1366	64678	000 411 25 73	.RING,RETAINING 1.9 MM	4
12	PAFZZ	2520-01-301-0374	D2001	103 193 10297	.PARTS KIT,UNIVERSAL	1
13	XAFZZ		19207	NPN-066	.SHAFT,PROPELLER	1
14	PFFZZ	3120-12-173-7804	D2001	196.58.11	.BUSHING,SLEEVE NOT REQUIRED WITH NEW PROPELLER SHAFT (ITEM 9)	1
15	PFFZZ	5365-00-140-7703	D8046	007603010107	RING,SEAL	4
16	PFFZZ	5306-01-242-7414	64678	070613 010028	BOLT,MACHINE	4
17	PFFZZ	5305-01-293-1737	64678	000931 010344	SCREW,CAP,HEXAGON H	2
18	PFFZZ	5330-01-260-9864	D8191	GM 1000 M10	PACKING WITH RETAIN	2
19	PFFZZ	3830-01-241-3627	64678	416 330 14 14	HOUSING,THRUST BALL	1
20	PFFZZ	5315-01-247-0966	15526	7 6X24	.PIN,STRAIGHT,HEADLE	2
21	XAFZZ		19207	NPN-067	.HOUSING,THRUST BALL	1
22	PFFZZ	5310-01-242-0664	64678	070615 010003	.NUT,PLAIN,HEXAGON	4
23	PFFZZ	5310-01-237-7658	64678	912004 010102	.WASHER,LOCK	4
24	PFFZZ	5307-01-176-1387	S3465	4537800-011	.STUD,PLAIN	4
25	PFOZZ	4730-01-223-8690	64678	071412 008100	FITTING,LUBRICATION	1
26	PFFZZ	5365-01-244-2296	64678	406 335 04 46	SPACER,PLATE	1

(1) ITEM NO	(2) SMR CODE	(3) NSN	(4) CAGEC	(5) PART NUMBER	(6) DESCRIPTION AND USABLE ON CODES (UOC)	(7) QTY
27	PFFZZ	5330-01-243-9448	64678	011 997 30 48	O-RING	1
28	PFFZZ	2540-01-245-6703	64678	416 337 10 06	HOUSING,VEHICULAR	1
29	PFFZZ	5365-01-244-4020	64678	406 337 07 52	SPACER,PLATE 2.00 MM V	
29	PFFZZ	5365-01-244-4542	64678	406 337 08 52	SPACER,PLATE 1.80 MM V	
29	PFFZZ	5365-01-264-8503	64678	406 337 09 52	SPACER,PLATE 1.60 MM V	
29	PFFZZ	5365-01-243-9469	64678	406 337 10 52	SPACER,PLATE 1.40 MM V	
29	PFFZZ	5365-01-243-9470	64678	406 337 11 52	SPACER,PLATE 1.20 MM V	
29	PFFZZ	5365-01-244-4021	64678	406 337 12 52	SPACER,PLATE 1.00 MM V	
29	PFFZZ	5365-01-244-4537	64678	406 337 13 52	SHIM 0.10 MM V	
29	PFFZZ	5365-01-245-7229	64678	406 337 14 52	SHIM 0.15 MM V	
					END OF FIGURE	

UNIT, DIRECT SUPPORT AND GENERAL SUPPORT MAINTENANCE

SMALL EMPLACEMENT EXCAVATOR (SEE) AND HIGH MOBILITY MATERIAL HANDLER (HMMH)

PROPELLER SHAFTS – PROPELLER SHAFT 416 337 22 10, AND THRUST BALL HOUSING 416 330 13 14

REPAIR PARTS LIST

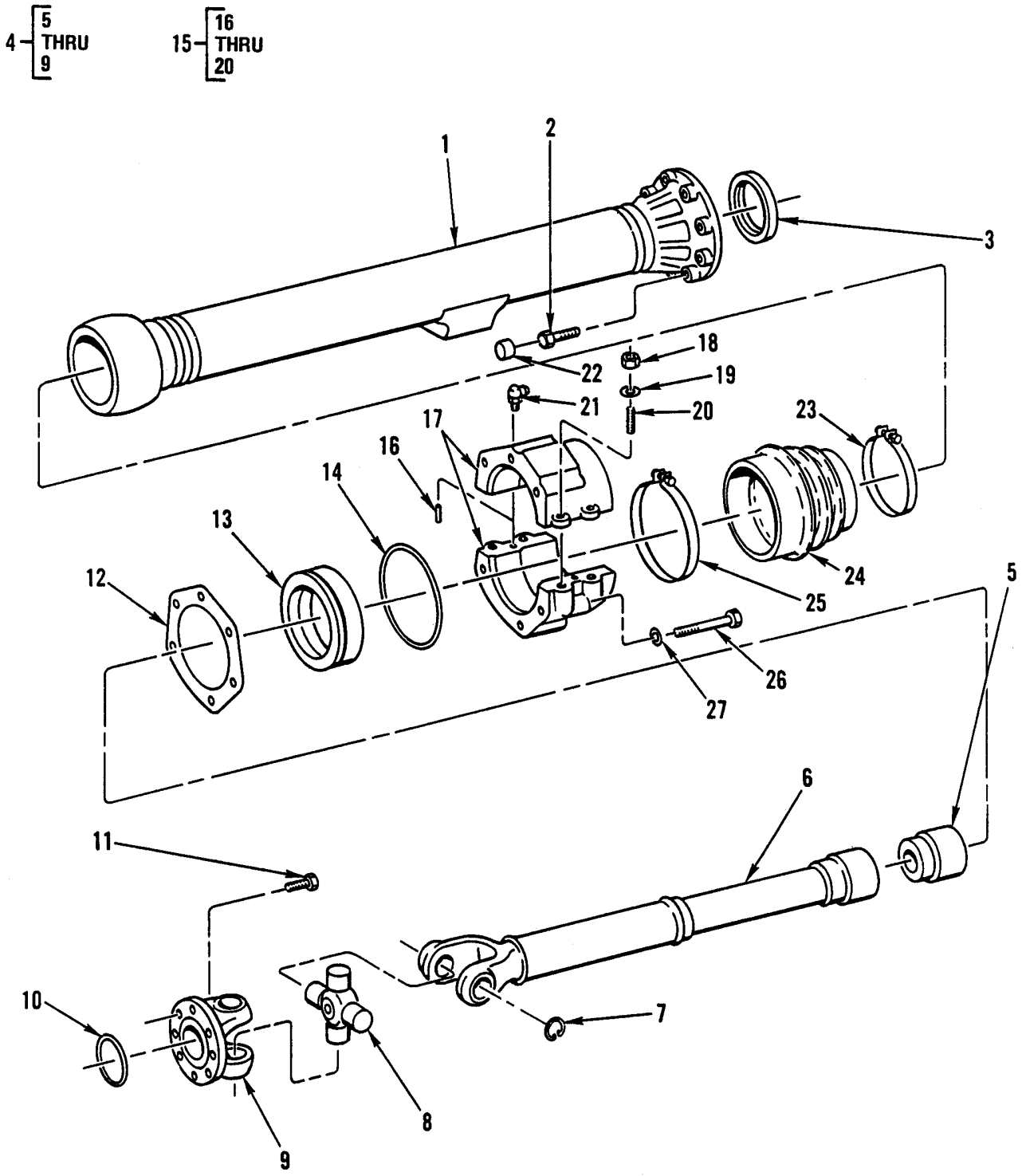

Figure 127. Propeller Shafts – Propeller Shaft, and Thrust Ball Housing.

(1) ITEM NO	(2) SMR CODE	(3) NSN	(4) CAGEC	(5) PART NUMBER	(6) DESCRIPTION AND USABLE ON CODES (UOC)	(7) QTY
					GROUP 0900	
					FIG. 127 PROPELLER SHAFTS – PROPELLER SHAFT 416 337 22 10, AND HOUSING, THRUST BALL 416 330 13 14	
1	PFFZZ	4710-01-257-3449	64678	406 350 21 31	TUBE ASSEMBLY,METAL	1
2	PFFZZ	5306-01-242-1772	64678	000960 012171	BOLT,MACHINE	8
3	PAFZZ	5330-12-193-4983	64678	007 997 18 47	SEAL,PLAIN ENCASED	1
4	PFFFF	2520-01-241-4803	64678	416 337 22 10	PROPELLER SHAFT WIT	1
5	PFFZZ	3120-12-173-7804	D2001	196.58.11	.BUSHING,SLEEVE NOT REQUIRED WITH NEW PROPELLER SHAFT (ITEM 4)	1
6	XAFZZ		19207	NPN - 068	.SHAFT,PROPELLER	1
7	PAFZZ	5325-01-316-1365	D2001	421 240 02051	.RING,RETAINING 1.4 MM	4
7	PFFZZ	5325-12-314-1814	D8046	000 411 21 73	.RING,RETAINING 1.5 MM	4
7	PAFZZ	5325-12-314-1813	D2001	421 240 02053	.RING,RETAINING 1.6 MM	4
7	PAFZZ	5325-12-314-1812	D2001	421 240 02054	.RING,RETAINING 1.7 MM	4
7	PAFZZ	5325-12-314-1811	D2001	421 240 02055	.RING,RETAINING 1.8 MM	4
7	PAFZZ	5325-01-316-1366	D2001	421 240 02056	.RING,RETAINING 1.9 MM	4
8	PAFZZ	2520-01-301-0374	D2001	103 193 10297	.PARTS KIT,UNIVERSAL	1
9	XAFZZ		19207	NPN-069	.YOKE,SHAFT	1
10	PFFZZ	5330-01-241-6413	64678	003 997 79 45	PACKING,PREFORMED	1
11	PFFZZ	5306-01-242-0599	64678	070614 010033	BOLT,MACHINE	6
12	PFFZZ	5365-01-244-4020	64678	406 337 07 52	SPACER,PLATE 2.00 MM	V
12	PFFZZ	5365-01-244-4542	64678	406 337 08 52	SPACER,PLATE 1.80 MM	V
12	PFFZZ	5365-01-264-8503	64678	406 337 09 52	SPACER,PLATE 1.60 MM	V
12	PFFZZ	5365-01-243-9469	64678	406 337 10 52	SPACER,PLATE 1.40 MM	V
12	PFFZZ	5365-01-243-9470	64678	406 337 11 52	SPACER,PLATE 1.20 MM	V
12	PFFZZ	5365-01-244-4021	64678	406 337 12 52	SPACER,PLATE 1.00 MM	V
12	PFFZZ	5365-01-244-4537	64678	406 337 13 52	SHIM 0.10 MM	V
12	PFFZZ	5365-01-245-7229	64678	406 337 14 52	SHIM 0.15 MM	V
13	PFFZZ	2540-01-245-6703	64678	416 337 10 06	HOUSING	1
14	PFFZZ	5330-01-243-9448	64678	011 997 30 48	O-RING	1
15	PFFFF	3830-01-241-3628	64678	416 330 13 14	HOUSING,THRUST BALL	1
16	PFFZZ	5315-01-247-0966	15526	7 6X24	.PIN,STRAIGHT,HEADLE	2
17	XAFZZ		19207	NPN-070	.HOUSING,THRUST BALL	1
18	PFFZZ	5310-01-242-0664	64678	070615 010003	.NUT,PLAIN,HEXAGON	4
19	PFFZZ	5310-01-237-7658	64678	912004 010102	.WASHER,LOCK	4
20	PFFZZ	5307-01-176-1387	S3465	4537800-011	.STUD,PLAIN	4

(1) ITEM NO	(2) SMR CODE	(3) NSN	(4) CAGEC	(5) PART NUMBER	(6) DESCRIPTION AND USABLE ON CODES (UOC)	(7) QTY
21	PFOZZ	4730-01-241-1626	64678	900216008201	FITTING,LUBRICATION.....	1
22	PAOZZ	5340-01-334-1489	64678	0009970420	CAP,PROTECTIVE,DUST.....	1
23	PFFZZ	4730-01-241-1623	64678	916002 109200	CLAMP,HOSE	1
24	PFFZZ	9390-01-240-4662	64678	416 987 58 43	BELLOWS,PROTECTION.....	1
25	PFFZZ	4730-01-241-1622	64678	916002 160100	CLAMP,HOSE	1
26	PFFZZ	5305-01-297-9016	64678	914141 010901	SETSCREW	6
27	PFFZZ	5310-01-242-0689	64678	000137 010201	WASHER,SPRING TENSI.....	6
					END OF FIGURE	

UNIT, DIRECT SUPPORT AND GENERAL SUPPORT MAINTENANCE

SMALL EMPLACEMENT EXCAVATOR (SEE) AND HIGH MOBILITY MATERIAL HANDLER (HMMH)

FRONT AXLE, FRONT AXLE ASSEMBLY – FRONT AXLE THRUST ARMS

REPAIR PARTS LIST

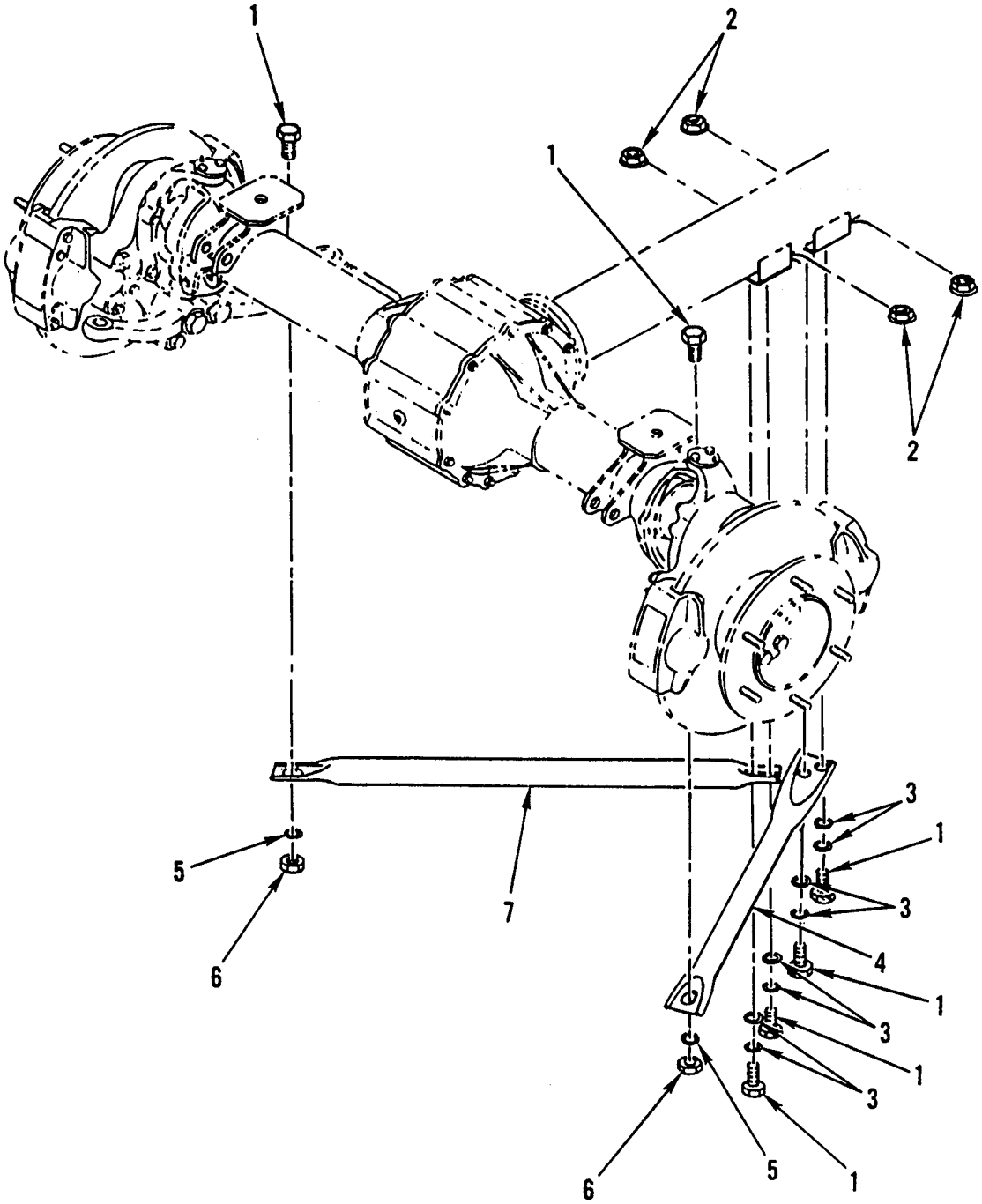

Figure 128. Front Axle, Front Axle Assembly – Front Axle Thrust Arms.

(1) ITEM NO	(2) SMR CODE	(3) NSN	(4) CAGEC	(5) PART NUMBER	(6) DESCRIPTION AND USABLE ON CODES (UOC)	(7) QTY
					GROUP 10,1000	
					FIG. 128 FRONT AXLE, FRONT AXLE ASSEMBLY – FRONT AXLE THRUST ARMS	
1	PFFZZ	5305-01-249-0891	15526	961-10 M16X 1.5 4 5 F	SCREW,CAP,HEXAGON H.....	6
2	PFFZZ	5310-01-252-0453	64678	913013 016002	NUT,PLAIN,HEXAGON	4
3	PFFZZ	3830-01-240-6811	64678	000 994 16 51	LOCK.....	8
4	PFFZZ	2510-01-241-7316	64678	416 330 08 11	FRAME SECTION,STRUC	1
5	PFFZZ	5310-01-241-3912	15526	137 B16	WASHER,SPRING TENSI.....	4
6	PFFZZ	5310-01-246-7467	64678	000934 016022	NUT,PLAIN,HEXAGON	2
7	PFFZZ	2510-01-242-3001	64678	416 330 09 11	FRAME SECTION,STRUC	1
					END OF FIGURE	

UNIT, DIRECT SUPPORT AND GENERAL SUPPORT MAINTENANCE

SMALL EMPLACEMENT EXCAVATOR (SEE) AND HIGH MOBILITY MATERIAL HANDLER (HMMH)

FRONT AXLE ASSEMBLY – FRONT AXLE VENT LINES AND FITTINGS

REPAIR PARTS LIST

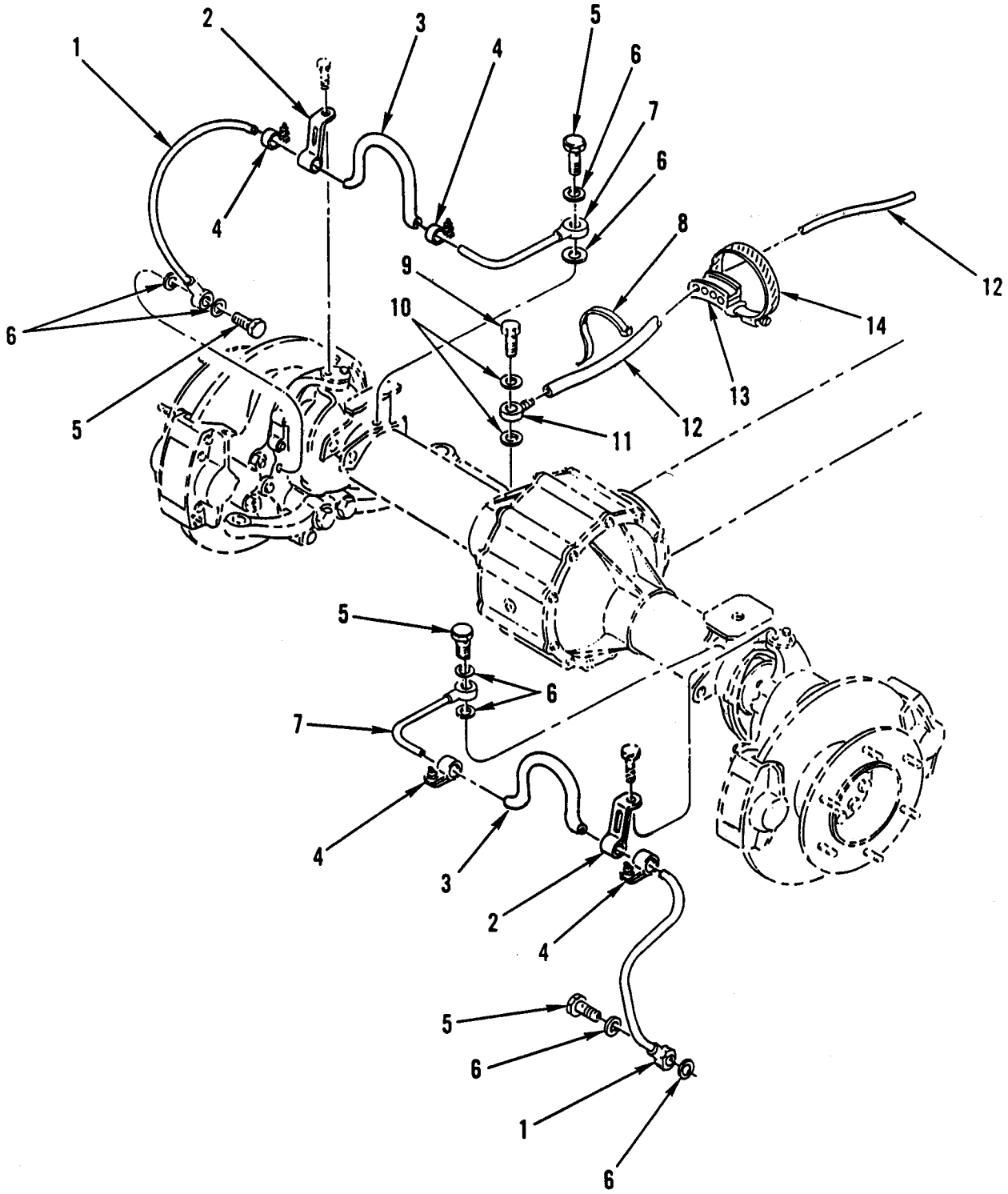

Figure 129. Front Axle Assembly – Front Axle Vent Lines and Fittings.

(1) ITEM NO	(2) SMR CODE	(3) NSN	(4) CAGEC	(5) PART NUMBER	(6) DESCRIPTION AND USABLE ON CODES (UOC)	(7) QTY
					GROUP 1000	
					FIG. 129 FRONT AXLE ASSEMBLY – FRONT AXLE VENT LINES AND FITTINGS	
1	PFOZZ	4710-01-240-6810	64678	416 330 00 66	PIPE,BREATHER	2
2	PFOZZ	5340-01-242-6117	64678	416 995 50 44	CLAMP,LOOP	2
3	PFOZZ	4720-01-241-5512	64678	411 997 04 82	TUBING,NONMETALLIC	2
4	PFOZZ	4730-01-241-8812	64678	900288 010001	CLAMP,HOSE	4
5	PAOZZ	4730-01-184-1941	S3465	4537800-696	BOLT,FLUID PASSAGE	4
6	PAOZZ	5330-00-763-2689	D8046	A8X12DIN 7603	SEAL	8
7	PFOZZ	4710-01-241-5384	64678	435 330 00 84	TUBE,METALLIC	2
8	PFOZZ	5340-01-240-5728	64678	001 997 83 90	STRAP,LINE SUPPORT	5
9	PFOZZ	4730-01-311-4186	64678	915036 010204	BOLT,FLUID PASSAGE	1
10	PAOZZ	5330-01-270-1311	64678	007 603 014 405	SEAL,RING,METAL	2
11	PFOZZ	4730-01-237-3633	64678	915052 006005	CONNECTOR,MULTIPLE,	1
12	MOOZZ		64678	008 997 90 82X 890	HOSE MAKE FROM CAGE 64678 P/N 008 997 90 82, CUT TO 890 MM	1
13	PFOZZ	5340-12-179-6962	C0781	603 428 02 84	CLAMPBLOCK,HINGE CO	1
14	PFOZZ	4730-01-241-1665	64678	916017 100000	CLAMP,HOSE	1
					END OF FIGURE	

UNIT, DIRECT SUPPORT AND GENERAL SUPPORT MAINTENANCE

SMALL EMPLACEMENT EXCAVATOR (SEE) AND HIGH MOBILITY MATERIAL HANDLER (HMMH)

FRONT AXLE ASSEMBLY – VEHICLE AXLE ASSEMBLY 419 330 01 99

REPAIR PARTS LIST

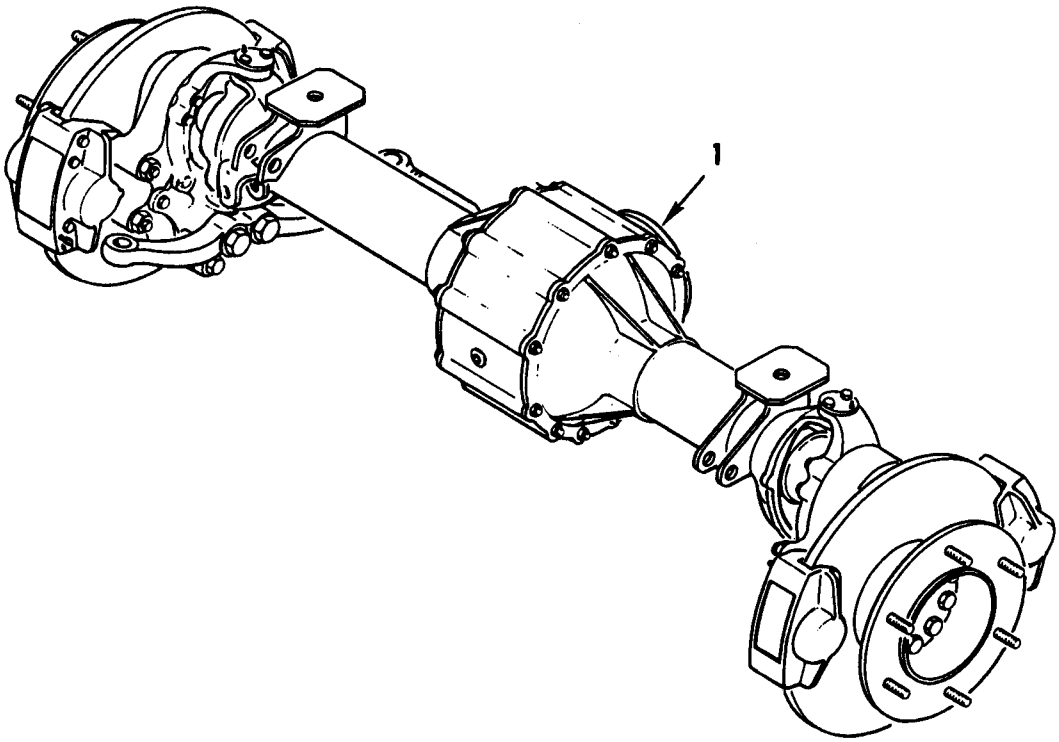

Figure 130. Front Axle Assembly – Vehicle Axle Assembly.

(1) ITEM NO	(2) SMR CODE	(3) NSN	(4) CAGEC	(5) PART NUMBER	(6) DESCRIPTION AND USABLE ON CODES (UOC)	(7) QTY
					GROUP 1000	
					FIG. 130 FRONT AXLE ASSEMBLY – AXLE ASSEMBLY, VEHICLE 419 330 01 99	
1	PAFHH	2530-01-241-1667	64678	419 330 01 99	AXLE ASSEMBLY,VEHIC	1
					END OF FIGURE	

UNIT, DIRECT SUPPORT AND GENERAL SUPPORT MAINTENANCE

SMALL EMPLACEMENT EXCAVATOR (SEE) AND HIGH MOBILITY MATERIAL HANDLER (HMMH)

FRONT AXLE ASSEMBLY – RIGHT VEHICULAR AXLE 416 330 73 29

REPAIR PARTS LIST

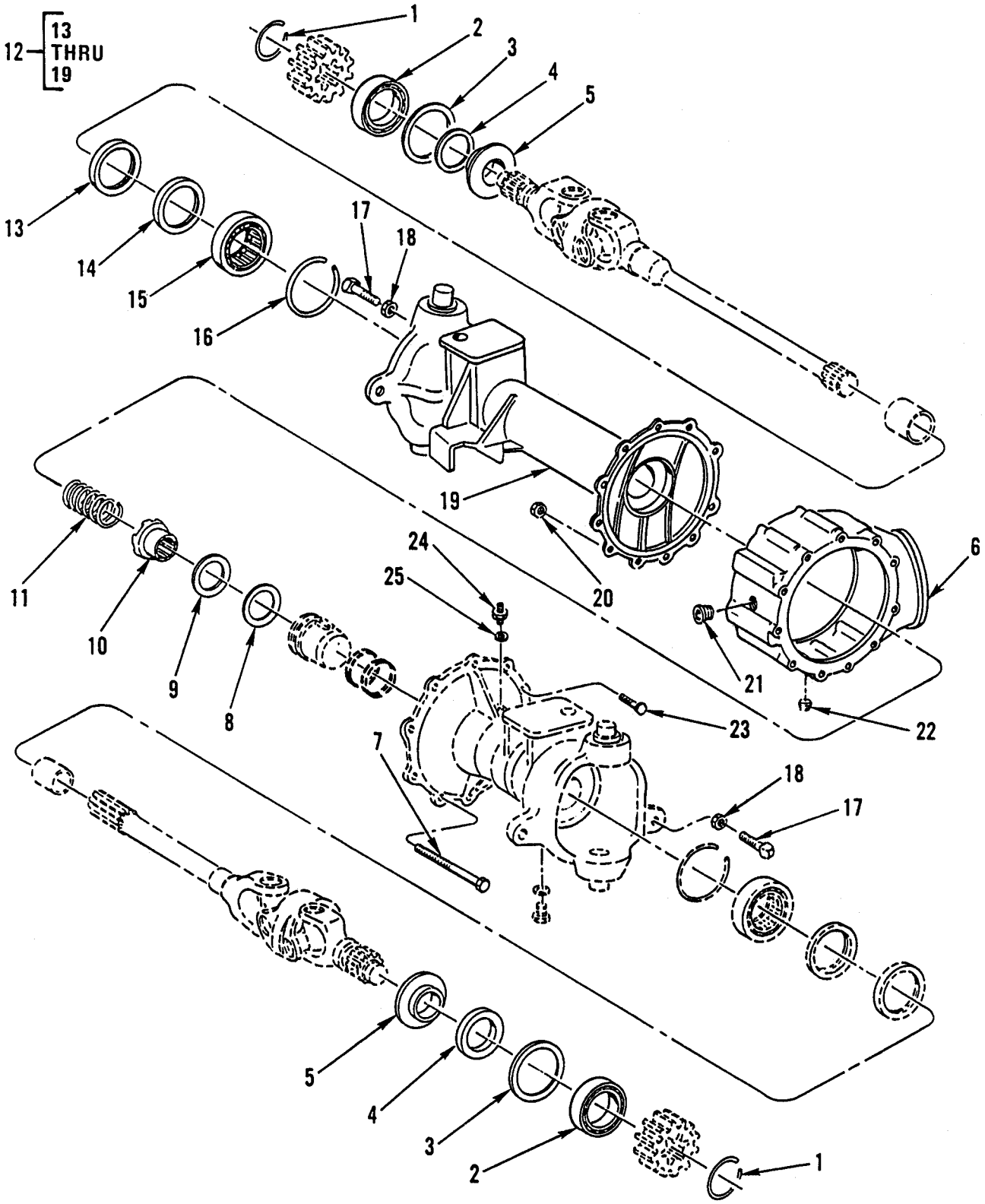

Figure 131. Front Axle Assembly – Right Vehicular Axle.

(1) ITEM NO	(2) SMR CODE	(3) NSN	(4) CAGEC	(5) PART NUMBER	(6) DESCRIPTION AND USABLE ON CODES (UOC)	(7) QTY
					GROUP 1000	
					FIG. 131 FRONT AXLE ASSEMBLY – AXLE, VEHICULAR, RIGHT 416 330 73 29	
1	PFFZZ	5325-01-245-7456	64678	000471042000	RING,RETAINING	2
2	PFFZZ	3110-01-316-5101	D2456	005 981 08 25	BEARING,BALL,THRUST	2
3	PFFZZ	5365-01-244-4019	64678	416 337 04 52	SHIM	V
3	PFFZZ	5365-01-244-2289	64678	416 337 05 52	SHIM 0.20 MM	V
3	PFFZZ	5365-01-244-4540	64678	416 337 06 52	SHIM 0.30 MM	V
4	PFFZZ	5330-01-243-9444	64678	006 997 05 47	SEAL,PLAIN	2
5	PFFZZ	5310-010-244-8949	64678	435 337 01 51	WASHER,SHOULDERED A	2
6	PFHZZ	3040-01-257-4946	64678	435 351 01 03	HOUSING,MECHANICAL	1
7	PFHZZ	5306-01-242-0602	64678	914141 012205	BOLT,MACHINE	9
8	PFHZZ	3120-01-242-0838	64678	416 335 03 62	BEARING,WASHER,THRU	1
9	PFHZZ	3120-01-242-0837	64678	416 335 02 62	BEARING,WASHER,THRU	1
10	PFHZZ	3020-01-241-1684	64678	416 335 00 36	GEAR,INTERNAL	1
11	PFHZZ	5360-01-241-6880	64678	416 993 51 01	SPRING,HELICAL,COMP	1
12	PFHHH	2530-01-241-1475	64678	416 330 73 29	AXLE,VEHICULAR,NOND RIGHT	1
13	PFHZZ	5330-12-163-3796	D2480	70/0181	.SEAL,PLAIN ENCASED	1
14	PAHZZ	5330-01-426-2523	64678	006 997 90 46	.SEAL,PLAIN ENCASED	1
15	PFHZZ	3110-12-187-0805	D8984	F-53673	.BEARING,ROLLER NEED	1
16	PFHZZ	5325-01-243-4944	64678	007993 065200	.RING,RETAINING	1
17	PFFZZ	5305-01-242-0629	64678	440 332 00 71	.SETSCREW	1
18	PFFZZ	5310-01-245-3832	64678	000936 012011	.NUT,PLAIN,HEXAGON	1
19	XAHZZ		19207	NPN-071	.HOUSING,TUBE AXLE	1
20	PFHZZ	5310-01-259-3584	64678	000934 014022	NUT,PLAIN,HEXAGON	9
21	PFOZZ	5365-01-256-4583	64678	186 997 00 32	PLUG,MACHINE THREAD	1
22	PFOZZ	5365-12-177-4326	64678	000 997 26 32	PLUG,MACHINE THREAD	1
23	PFHZZ	5305-01-298-9669	64678	914141 014400	SETSCREW	4
24	PFHZZ	4730-01-241-1617	64678	435 331 00 84	NIPPLE,BOSS	1
25	PAHZZ	5330-01-270-1311	64678	007603014405	SEAL RING,METAL	1
					END OF FIGURE	

UNIT, DIRECT SUPPORT AND GENERAL SUPPORT MAINTENANCE

SMALL EMPLACEMENT EXCAVATOR (SEE) AND HIGH MOBILITY MATERIAL HANDLER (HMMH)

FRONT AXLE ASSEMBLY – LEFT VEHICULAR AXLE 419 330 06 29

REPAIR PARTS LIST

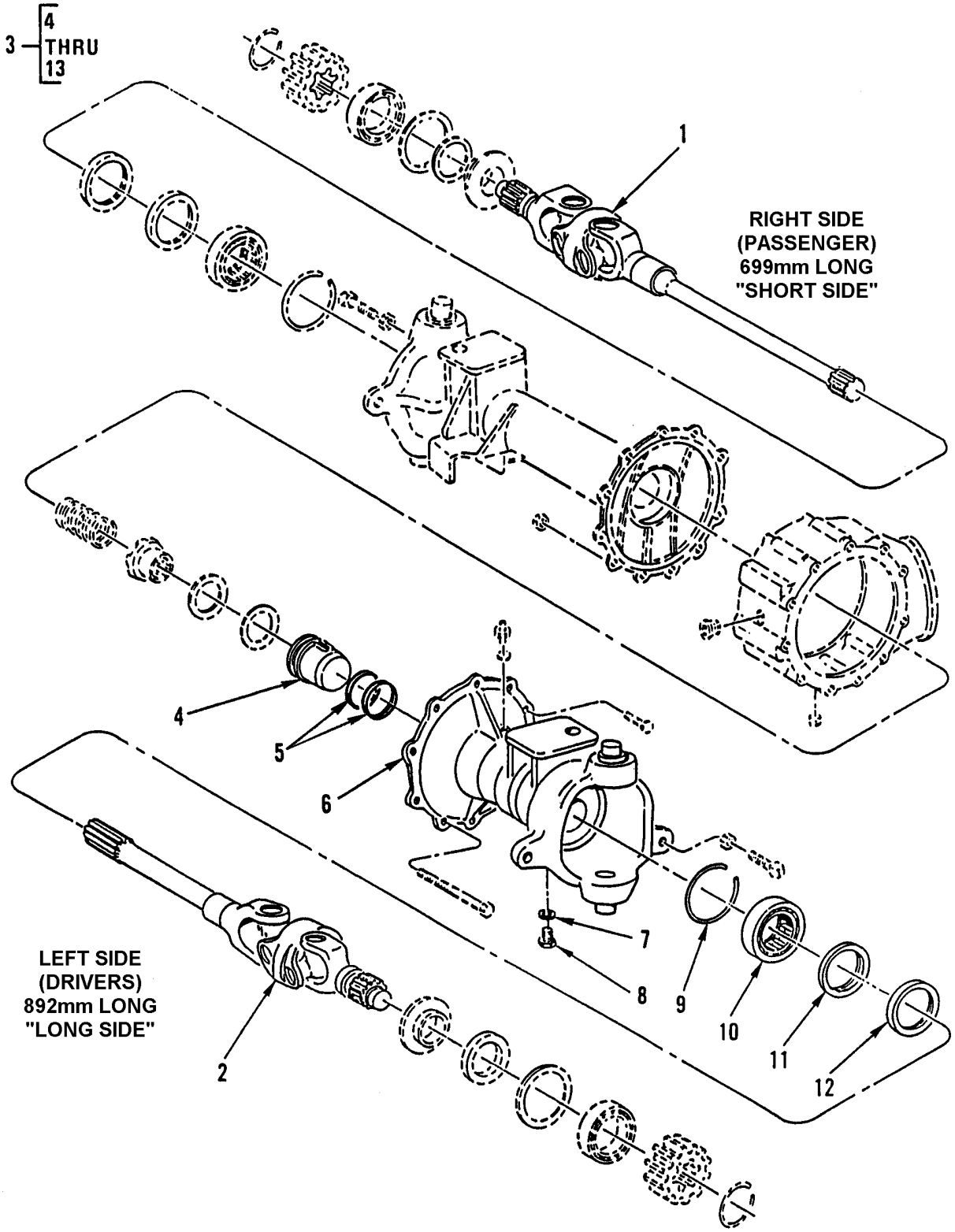

Figure 132. Front Axle Assembly – Left Vehicular Axle.

(1) ITEM NO	(2) SMR CODE	(3) NSN	(4) CAGEC	(5) PART NUMBER	(6) DESCRIPTION AND USABLE ON CODES (UOC)	(7) QTY
					GROUP 1000	
					FIG. 132 FRONT AXLE ASSEMBLY – AXLE, VEHICULAR, LEFT 419 330 06 29	
1	PFHZZ	2520-01-241-7395	64678	416 330 17 01	PROPELLER SHAFT(RIGHT SIDE – SHORT SIDE) 699 MM	1
2	PAHHH	2520-01-241-7394	64678	416 330 16 01	PROPELLER SHAFT (LEFT SIDE – LONG SIDE) 892 MM	1
3	PFHHH	2530-01-240-9354	64678	419 330 06 29	AXLE,VEHICULAR,NOND LEFT.....	1
4	PFHZZ	3040-001-240-3118	64678	416 335 02 50	.PISTON,LINEAR ACTUA	1
5	PFHZZ	5330-01-241-6414	64678	4179970041	.PACKING,PREFORMED.....	3
6	PAHZZ	5330-01-171-4703	S3465	4536226-835	.SEAL RING,METAL.....	1
7	XAHZZ		19207	NPN-072	.HOUSING,TUBE AXLE	1
8	PFHZZ	5305-01-243-0156	64678	315 990 08 01	.SCREW,CAP,HEXAGON H.....	1
9	PFHZZ	5325-01-243-4944	64678	007993 065200	.RING,RETAINING	1
10	PFHZZ	3110-12-187-0805	D8984	F-53673	.BEARING,ROLLER NEED	1
11	PAHZZ	5330-01-426-2523	64678	006 997 90 46	.SEAL,PLAIN ENCASED.....	1
12	PAHZZ	5330-12-163-3796	D2480	70/0181	.SEAL,PLAIN ENCASED.....	1
					END OF FIGURE	

UNIT, DIRECT SUPPORT AND GENERAL SUPPORT MAINTENANCE

SMALL EMPLACEMENT EXCAVATOR (SEE) AND HIGH MOBILITY MATERIAL HANDLER (HMMH)

DIFFERENTIAL – FRONT AXLE DIFFERENTIAL AND MECHANICAL HOUSING 416 335 04 01

REPAIR PARTS LIST

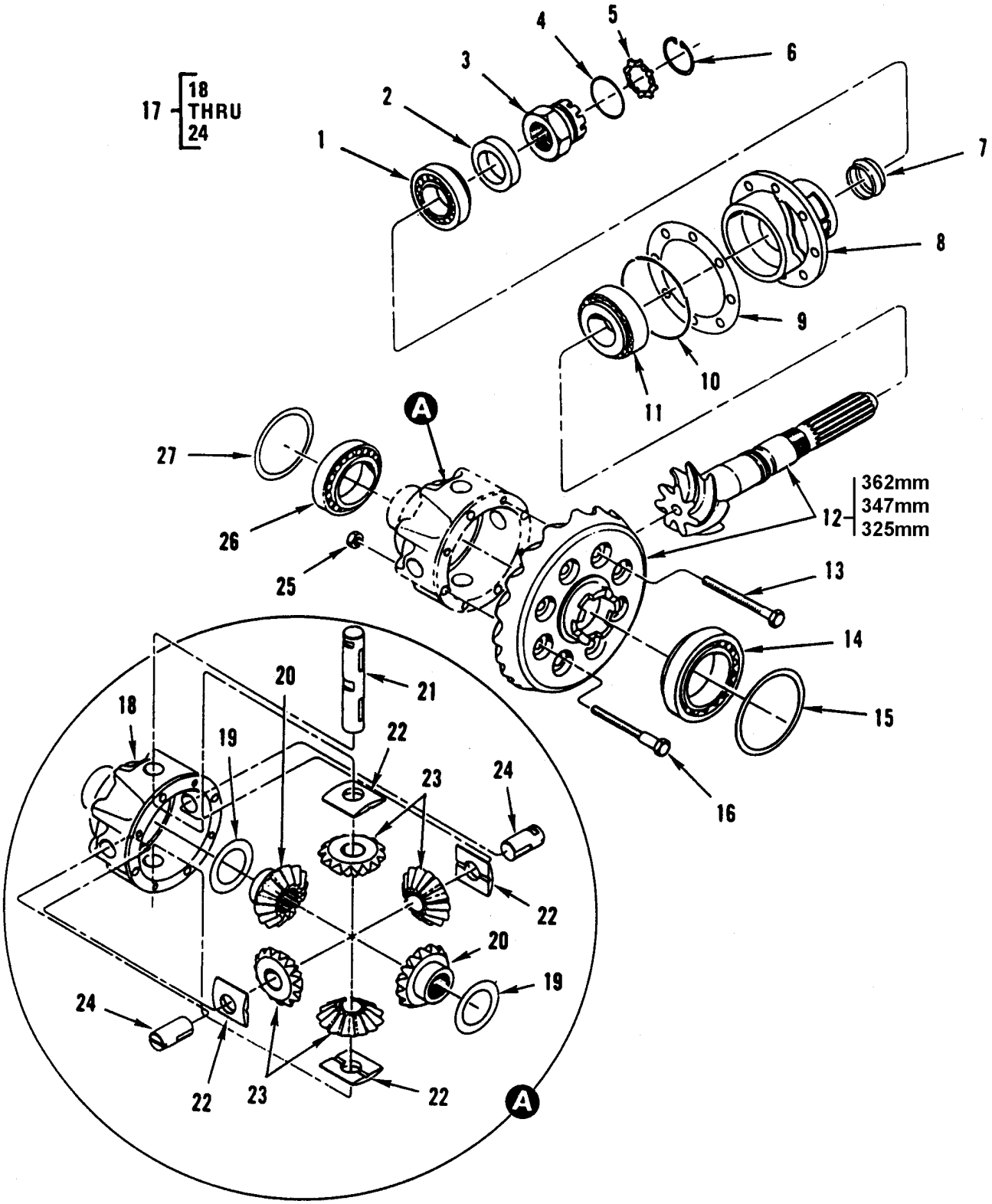

Figure 133. Differential – Front Axle Differential and Mechanical Housing.

(1) ITEM NO	(2) SMR CODE	(3) NSN	(4) CAGEC	(5) PART NUMBER	(6) DESCRIPTION AND USABLE ON CODES (UOC)	(7) QTY
					GROUP 1002	
					FIG. 133 DIFFERENTIAL – FRONT AXLE DIFFERENTIAL AND HOUSING, MECHANICAL 416 335 04 01	
1	PAHZZ	3110-12-175-9149	D2457	331753	BEARING,ROLLER,TAPE	1
2	PFHZZ	5310-01-244-1071	64678	416 337 04 51	WASHER,RECESSED	1
3	PFHZZ	5310-01-241-6334	64678	416 335 00 72	NUT,PLAIN,CASTELLAT	1
4	PFHZZ	5330-01-242-0711	64678	008 997 68 45	O-RING	1
5	PFHZZ	3020-01-241-1683	64678	416 337 01 73	GEAR,INTERNAL	1
6	PFHZZ	5325-01-242-1453	64678	009045 055000	RING,RETAINING	1
7	PFHZZ	4730-01-241-3314	64678	416 331 00 53	SLEEVE,COMPRESSION	1
8	PFHZZ	3130-01-241-6584	64678	416 353 01 11	HOUSING,BEARING UNIT	1
9	PFHZZ	5365-01-243-9913	64678	406 335 45 52	SPACER,PLATE 1.00 MM	V
9	PFHZZ	5365-01-243-9461	64678	406 335 21 52	SHIM 0.10 MM	V
9	PFHZZ	5365-01-253-3020	64678	406 335 22 52	SHIM 0.20 MM	V
9	PFHZZ	5365-01-243-9909	64678	406 335 23 52	SHIM 0.30 MM	V
9	PFHZZ	5365-01-244-4023	64678	406 335 24 52	SPACER,PLATE 0.50 MM	V
10	PFHZZ	2590-01-241-6054	64678	000 987 80 46	CORD,SEALING	1
11	PAHZZ	3110-12-175-9148	D2457	331567	BEARING,ROLLER,TAPE	1
12	PFHZZ	3020-01-261-1687	64678	416 330 03 39	GEAR SET,BEVEL,MATC	1
13	PFHZZ	5306-01-242-0603	64678	000960 012277	BOLT,MACHINE	4
14	PAHZZ	3110-01-241-6114	64678	000720 032016	BEARING,ROLLER,TAPE	1
15	PFHZZ	5365-01-249-7647	64678	406 337 28 52	SHIM 0.15 MM	V
15	PFHZZ	5365-01-247-6878	64678	406 337 16 52	SHIM 0.10 MM	V
15	PFHZZ	5365-01-247-6879	64678	406 337 17 52	SHIM 0.20 MM	V
15	PFHZZ	5365-01-247-6880	64678	406 337 18 52	SHIM 0.30 MM	V
15	PFHZZ	5365-01-251-3010	64678	406 337 19 52	SPACER,RING 0.50 MM	V
15	PFHZZ	5365-01-249-7698	64678	406 337 20 52	SPACER,RING 1.00 MM	V
16	PFHZZ	5305-01-271-4277	64678	416 990 52 19	SCREW,MACHINE	4
17	PFHHH	3040-01-240-8551	64678	416 335 04 01	HOUSING,MECHANICAL	1
18	XAHZZ		19207	NPN-073	.HOUSING,DIFFERENTIA	1
19	KFHZZ		64678	416 335 00 62	.DISC PART OF KIT P/N 435 350 00 40	2
20	KFHZZ		64678	416 335 00 15	.GEAR AXLE SHAFT PART OF KIT P/N 435 350 00 40	2
21	KFHZZ		64678	416 335 04 20	.HALF-AXLE,DIFF. PART OF KIT P/N 435 350 00 40	1
22	KFHZZ		64678	416 337 00 62	.DISC PART OF KIT P/N 435 350 00 40	4

(1) ITEM NO	(2) SMR CODE	(3) NSN	(4) CAGEC	(5) PART NUMBER	(6) DESCRIPTION AND USABLE ON CODES (UOC)	(7) QTY
23	KFHZZ		64678	416 335 00 14	.GEAR,BEVEL PART OF KIT P/N 435 350 00 40.....	4
24	KFHZZ		64678	416 335 05 20	.HALF-AXLE,DIFF. ART OF KIT P/N 435 350 00 40	2
25	PFHZZ	5310-01-241-6344	15526	934 M12X1.5 F	NUT,PLAIN,HEXAGON	8
26	PAHZZ	3110-01-241-6113	64678	000720 032013	BEARING,ROLLER,TAPE	1
27	PFHZZ	5365-01-243-9462	64678	416 337 18 52	SHIM 0.15 MM.....V	
27	PFHZZ	5365-01-247-6877	64678	416 337 01 52	SHIM 0.10 MM.....V	
27	PFHZZ	5365-01-244-2290	64678	416 337 02 52	SHIM 0.20 MM.....V	
27	PFHZZ	5365-01-244-2737	64678	416 337 03 52	SPACER,RING 0.50 MM V	
27	PFHZZ	5365-01-244-2738	64678	416 337 14 52	SPACER,RING 1.00 MM V	
27	PFHZZ	5365-01-244-2739	64678	416 337 15 52	SPACER,RING 2.00 MM V	
					END OF FIGURE	

UNIT, DIRECT SUPPORT AND GENERAL SUPPORT MAINTENANCE

SMALL EMPLACEMENT EXCAVATOR (SEE) AND HIGH MOBILITY MATERIAL HANDLER (HMMH)

PLANETARY OR FINAL DRIVE – FRONT AXLE FINAL DRIVE

REPAIR PARTS LIST

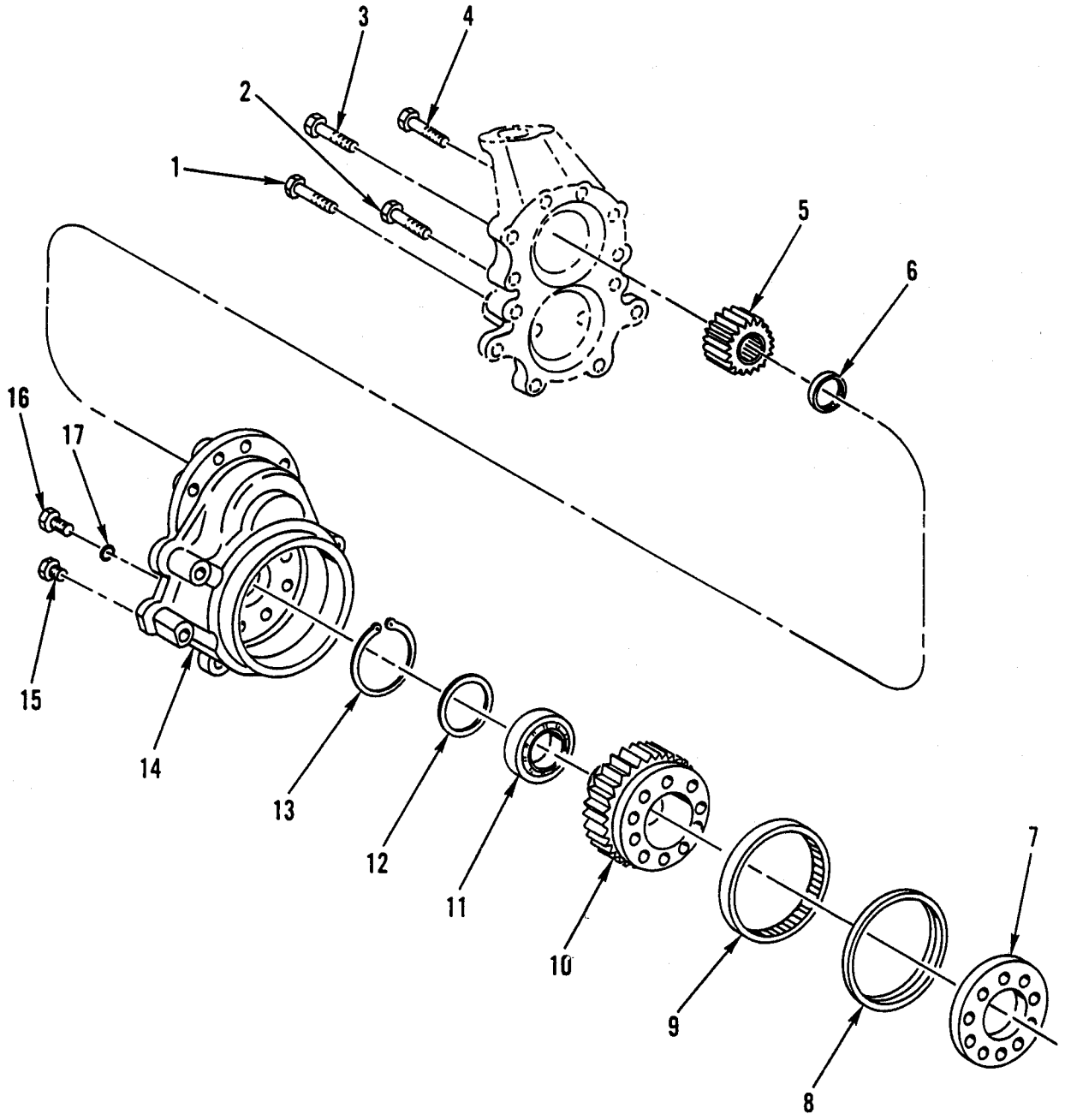

Figure 134. Planetary or Final Drive – Front Axle Final Drive.

(1) ITEM NO	(2) SMR CODE	(3) NSN	(4) CAGEC	(5) PART NUMBER	(6) DESCRIPTION AND USABLE ON CODES (UOC)	(7) QTY
					GROUP 1003	
					FIG. 134 PLANETARY OR FINAL DRIVE – FRONT AXLE FINAL DRIVE	
1	PAFZZ	5306-01-253-9020	64678	406 990 52 01	BOLT,INTERNALLY REL	2
2	PFFZZ	5306-01-242-0600	15526	960-10 60P	BOLT,MACHINE	6
3	PFFZZ	5305-01-22-6988	64678	914141 012408	SCREW,CAP,HEXAGON H	6
4	PFFZZ	5306-01-243-9370	64678	914141 012407	BOLT,MACHINE	6
5	PAFZZ	3020-01-241-4765	64678	416 336 05 10	GEAR,SPUR	2
6	PFFZZ	3110-01-248-7139	64678	001 981 77 01	BEARING,ROLLER CYL	2
7	PFFZZ	5365-01-242-1193	64678	406 337 15 51	SPACER,SLEEVE	2
8	PAOZZ	5330-12-306-1333	D8142	DGS 140.165. 12I1 5WD 01	SEAL,PLAIN	2
9	PFFZZ	3110-01-266-6463	64678	001 981 42 01	BEARING,ROLLER,CYL	2
10	PFFZZ	3020-01-240-6816	64678	406 353 05 15	GEAR,SPUR	2
11	PFFZZ	3110-12-178-6509	C1542	63 10E.TN-C3	BEARING,BALL,ANNULA	2
12	PAFZZ	5365-01-298-4204	64678	000988050100	SPACER,RING	2
12	PFFZZ	5365-01-298-4188	64678	4063340152	SHIM 0.10 MM	V
12	PFFZZ	5365-01-299-2915	64678	4063340252	SHIM 0.15 MM	V
13	PFFZZ	5310-01-251-2929	64678	900055 050300	WASHER,SPRING TENSI	2
14	PFFZZ	3040-01-240-8552	64678	416 331 04 05	HOUSING,MECHANICAL	2
15	PFOZZ	5365-01-258-4770	64678	007604 014106	PLUG,MACHINE THREAD	4
16	PFOZZ	5365-01-243-3820	64678	001 997 54 30	PLUG,MACHINE THREAD	2
17	PFOZZ	5330-01-270-1311	64678	007 603 014 405	SEAL RING,METAL	6
					END OF FIGURE	

UNIT, DIRECT SUPPORT AND GENERAL SUPPORT MAINTENANCE

SMALL EMPLACEMENT EXCAVATOR (SEE) AND HIGH MOBILITY MATERIAL HANDLER (HMMH)

STEERING AND LEANING WHEEL MECHANISM – STEERING KNUCKLE

REPAIR PARTS LIST

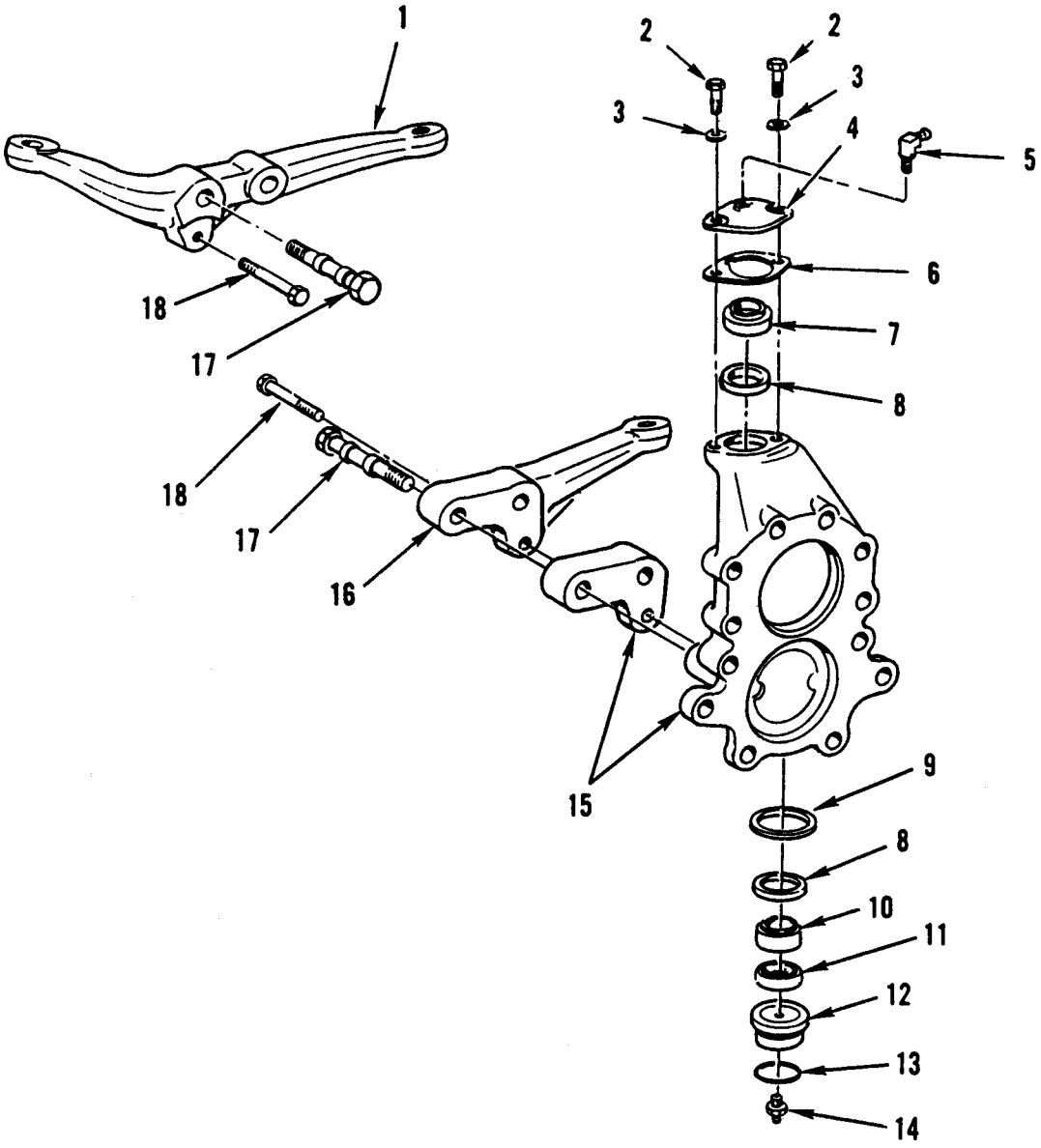

Figure 135. Steering and Leaning Wheel Mechanism – Steering Knuckle.

(1) ITEM NO	(2) SMR CODE	(3) NSN	(4) CAGEC	(5) PART NUMBER	(6) DESCRIPTION AND USABLE ON CODES (UOC)	(7) QTY
					GROUP 1004	
					FIG. 135 STEERING AND LEANING WHEEL MECHANISM – STEERING KNUCKLE	
1	PAFZZ	2530-01-240-8642	64678	416 338 14 08	ARM,STEERING,GEAR	1
2	PFFZZ	5305-12-156-4872	D8286	DIN933-M10X 25-8.8-A3P	SCREW,CAP,HEXAGON H.....	4
3	PFFZZ	5310-01-242-0689	15526	137 B 10	WASHER,SPRING TENSI.....	4
4	PFFZZ	4320-01-241-1660	64678	416 332 03 46	COVER,HYDRAULIC,PUM	2
5	PFFZZ	4730-01-223-8690	64678	071412 008100	FITTING,LUBRICATION.....	2
6	KFFZZ		64678	416 337 10 52	WASHER PART OF KIT P/N 419 330 00 12 ...	1
6	KFFZZ		64678	416 337 11 52	WASHER PART OF KIT P/N 419 300 00 12 ...	1
7	KFFZZ		64678	416 981 02 31	BEARING,TOP PART OF KIT P/N 419 330 00 12.....	1
8	KFFZZ		64678	419 331 00 59	RING,SEAL PART OF KIT P/N 419 330 00 12	2
9	KFFZZ		64678	416 332 00 51	RING PART OF KIT P/N 419 330 00 12.....	1
10	KFFZZ		64678	416 981 03 31	BEARING,BOTTOM PART OF KIT P/N 419 330 00 12.....	1
11	KFFZZ		64678	416 332 01 62	RING,SEAL PART OF KIT P/N 419 330 00 12	1
12	KFFZZ		64678	416 332 01 50	BUSHING PART OF KIT P/N 419 330 00 12...	1
13	KFFZZ		64678	003 997 08 45	RING,SEAL PART OF KIT P/N 419 330 00 12	1
14	PFFZZ	4730-01-241-1626	64678	900216008201	FITTING,LUBRICATION.....	1
15	PFFZZ	2530-01-250-1631	64678	416 330 29 20	SPINDLE,WHEEL,DRIVI	2
16	PAFZZ	2530-01-240-8641	64678	416 338 01 05	ARM,STEERING,GEAR	1
17	PAFZZ	5306-01-242-0633	64678	416 990 53 19	BOLT,EXTERNALLY REL HEX HEAD.....	4
18	PFFZZ	5305-01-298-2437	64678	914141 012203	SETSCREW	2
					END OF FIGURE	

UNIT, DIRECT SUPPORT AND GENERAL SUPPORT MAINTENANCE

SMALL EMPLACEMENT EXCAVATOR (SEE) AND HIGH MOBILITY MATERIAL HANDLER (HMMH)

REAR AXLE, REAR AXLE ASSEMBLY – REAR AXLE VENT LINES AND FITTINGS

REPAIR PARTS LIST

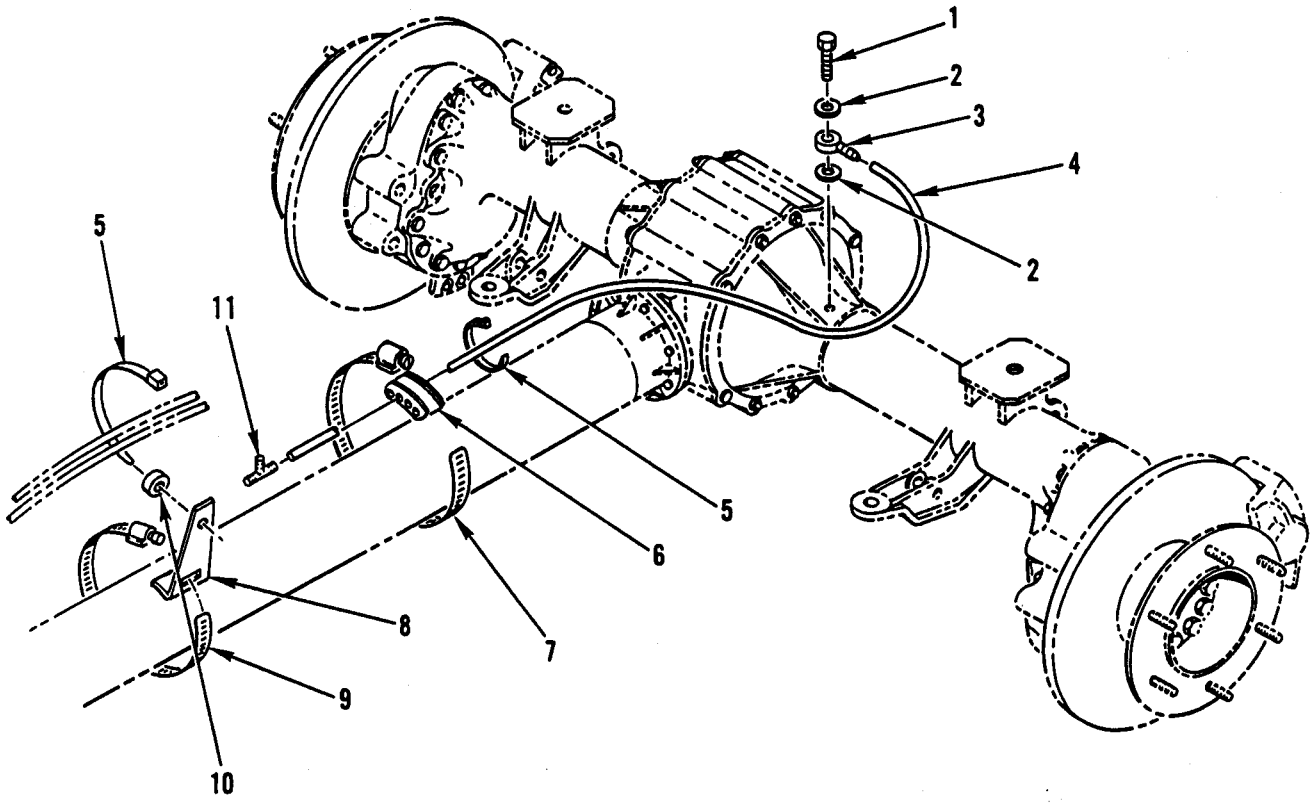

Figure 136. Rear Axle, Rear Axle Assembly – Rear Axle Vent Lines and Fittings.

(1) ITEM NO	(2) SMR CODE	(3) NSN	(4) CAGEC	(5) PART NUMBER	(6) DESCRIPTION AND USABLE ON CODES (UOC)	(7) QTY
					GROUP 11, 1100	
					FIG. 136 REAR AXLE, REAR AXLE ASSEMBLY – REAR AXLE VENT LINES AND FITTINGS	
1	PFOZZ	4730-01-237-0188	64678	915036 010200	BOLT,FLUID PASSAGE	1
2	PFOZZ	5330-01-270-1311	64678	007 603 014 405	SEAL RING,METAL	2
3	PFOZZ	4730-01-313-4057	64678	915052 006009	CONNECTOR,MULTIPLE	1
4	MOOZZ		64678	008 997 90 82X 1480	HOSE MAKE FROM CAGE 64678 P/N 008 997 90 82, CUT TO 1480 MM	1
5	PFOZZ	5340-01-240-5728	64678	001 997 83 90	STRAP,LINE SUPPORTI	9
6	PFOZZ	5340-12-179-6963	C0781	603 428 01 84	CLAMP,LOOP	2
7	PFOZZ	4730-01-241-4665	64678	916017 100000	CLAMP,HOSE	2
8	PFOZZ	5340-01-358-8028	64678	416 423 00 94	BRACKET,ANGLE	1
9	PFOZZ	4730-01-359-0932	64678	916017 090000	CLAMP,HOSE	1
10	PFOZZ	5310-01-238-1513	64678	424 990 00 40	WASHER,FLAT	1
11	PFOZZ	4730-01-241-1613	D8773	760 8032 006	TEE,HOSE UOC:GE1	1
					END OF FIGURE	

UNIT, DIRECT SUPPORT AND GENERAL SUPPORT MAINTENANCE

SMALL EMPLACEMENT EXCAVATOR (SEE) AND HIGH MOBILITY MATERIAL HANDLER (HMMH)

REAR AXLE ASSEMBLY – REAR AXLE THRUST ARM

REPAIR PARTS LIST

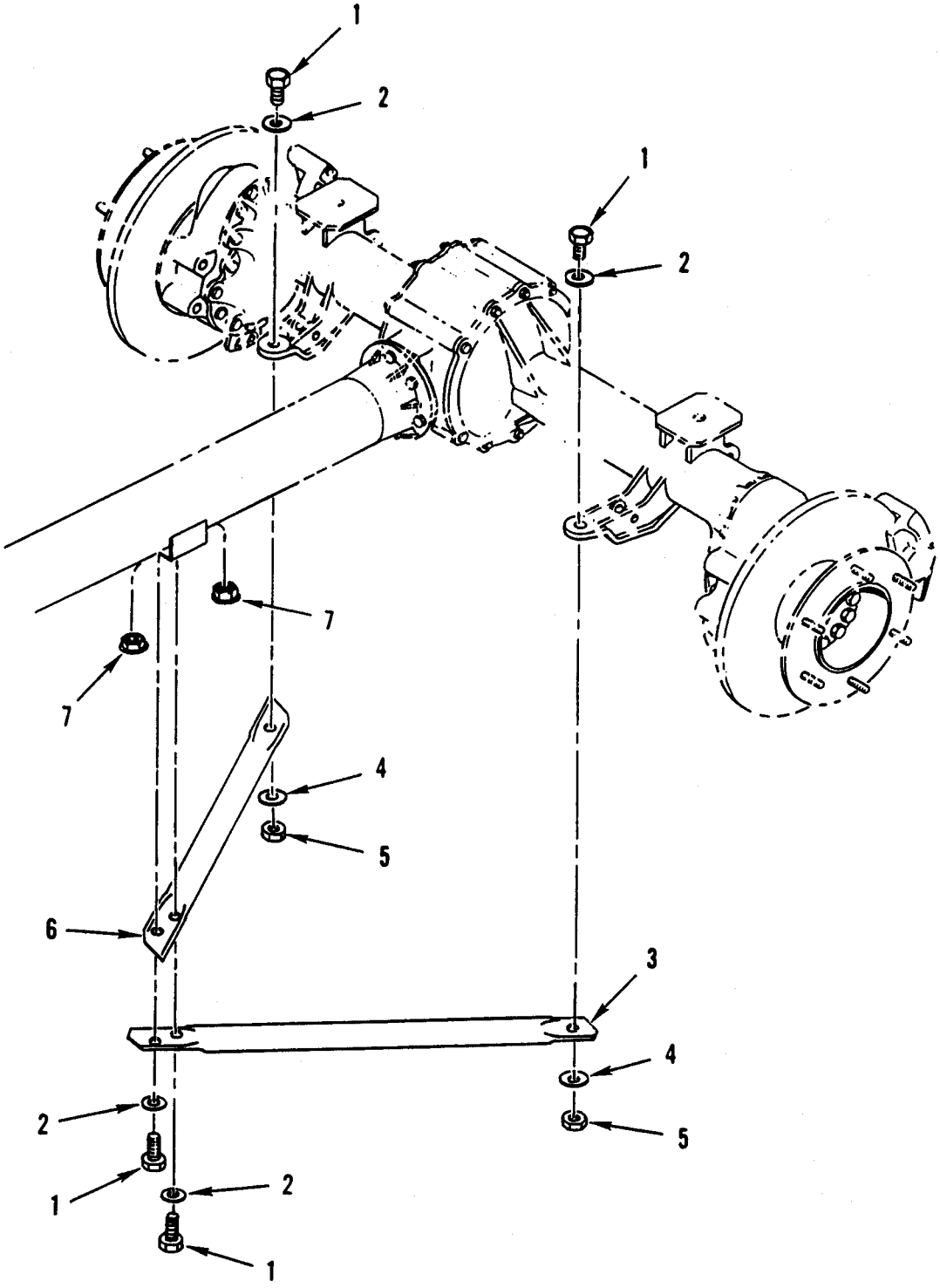

Figure 137. Rear Axle Assembly – Rear Axle Thrust Arms.

(1) ITEM NO	(2) SMR CODE	(3) NSN	(4) CAGEC	(5) PART NUMBER	(6) DESCRIPTION AND USABLE ON CODES (UOC)	(7) QTY
					GROUP 1100	
					FIG. 137 REAR AXLE ASSEMBLY – REAR AXLE THRUST ARMS	
1	PFFZZ	5305-01-242-0652	15526	960-10 M16X 1.5 5 5 P	SCREW,CAP,HEXAGON H.....	6
2	PFFZZ	3830-01-240-6811	64678	000 994 16 51	LOCK.....	6
3	PFFZZ	2510-01-241-1666	64678	416 350 02 29	FRAME SECTION,STRUC.....	1
4	PAFZZ	2590-01-241-6063	64678	416 333 00 77	PLATE,BODY	2
5	PFFZZ	5310-01-246-7467	64678	000934 016022	NUT,PLAIN,HEXAGON.....	2
6	PFFZZ	2510-01-241-1663	64678	416 350 03 29	FRAME,STRUCTURAL,VE	1
7	PFFZZ	5310-01-252-0453	64678	913013 016022	NUT,PLAIN,HEXAGON.....	4
					END OF FIGURE	

UNIT, DIRECT SUPPORT AND GENERAL SUPPORT MAINTENANCE

SMALL EMPLACEMENT EXCAVATOR (SEE) AND HIGH MOBILITY MATERIAL HANDLER (HMMH)

REAR AXLE ASSEMBLY – VEHICULAR AXLE 419 350 00 99

REPAIR PARTS LIST

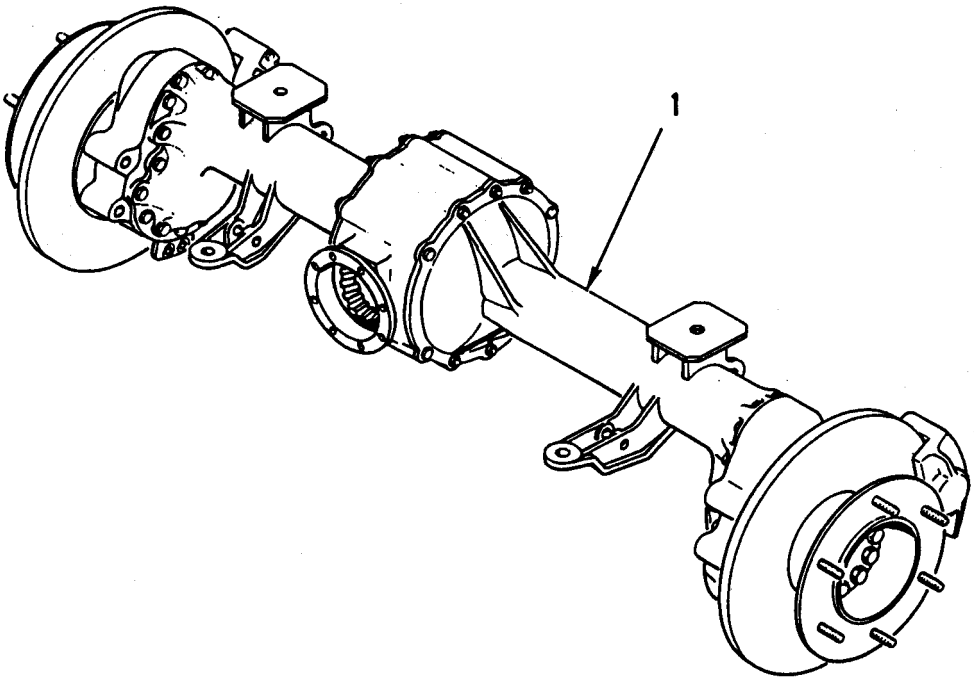

Figure 138. Rear Axle Assembly – Vehicular Axle.

(1) ITEM NO	(2) SMR CODE	(3) NSN	(4) CAGEC	(5) PART NUMBER	(6) DESCRIPTION AND USABLE ON CODES (UOC)	(7) QTY
					GROUP 1100	
					FIG. 138 REAR AXLE ASSEMBLY – AXLE, VEHICULAR 419 350 00 99	
1	PFFHH	2530-01-241-1476	64678	419 350 00 99	AXLE,VEHICULAR,NOND.....	1
					END OF FIGURE	

UNIT, DIRECT SUPPORT AND GENERAL SUPPORT MAINTENANCE

SMALL EMPLACEMENT EXCAVATOR (SEE) AND HIGH MOBILITY MATERIAL HANDLER (HMMH)

REAR AXLE ASSEMBLY – REAR AXLE

REPAIR PARTS LIST

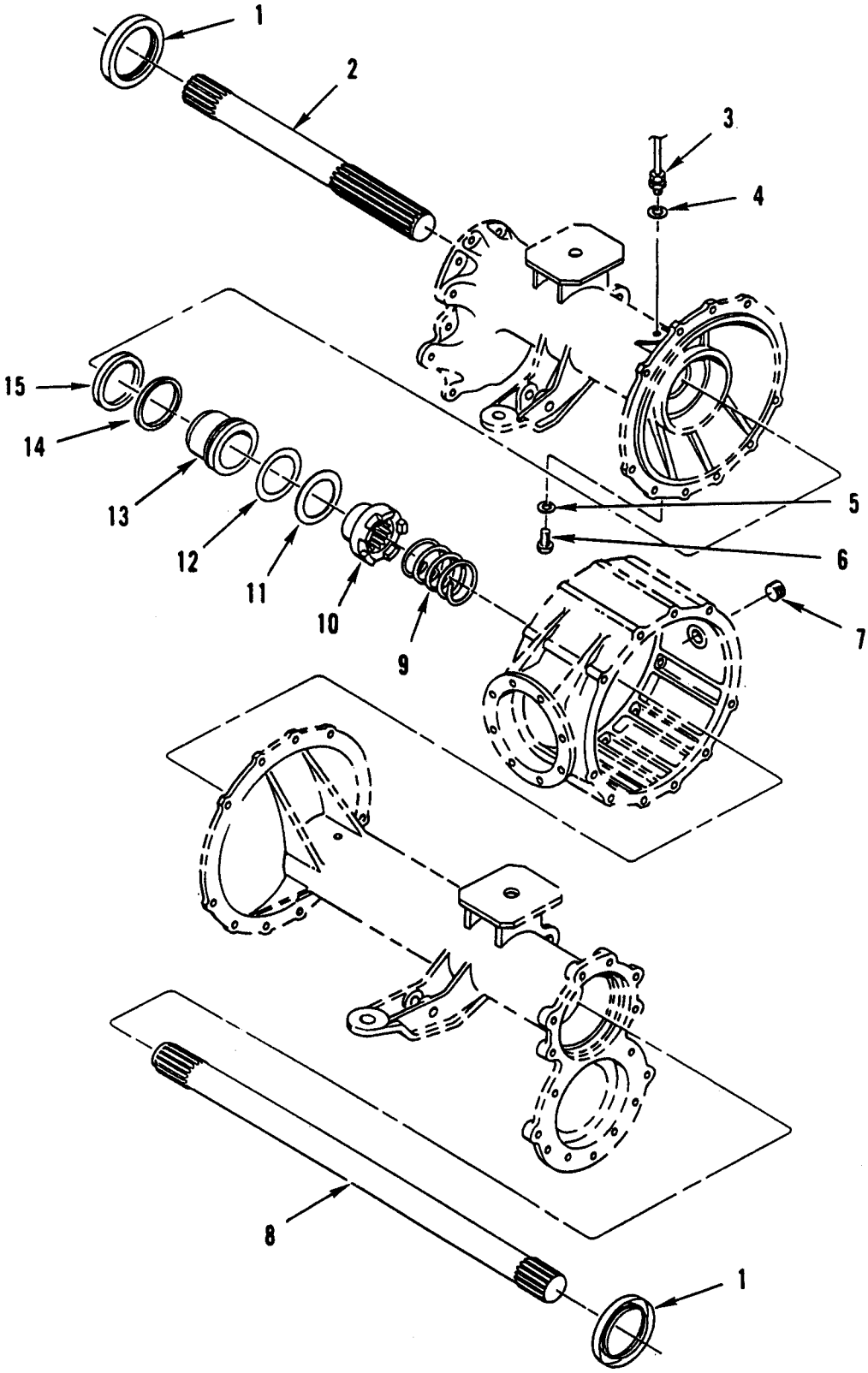

Figure 139. Rear Axle Assembly – Rear Axle.

(1) ITEM NO	(2) SMR CODE	(3) NSN	(4) CAGEC	(5) PART NUMBER	(6) DESCRIPTION AND USABLE ON CODES (UOC)	(7) QTY
					GROUP 1100	
					FIG. 139 REAR AXLE ASSEMBLY – REAR AXLE	
1	PFFZZ	5330-01-243-9444	64678	006 997 05 47	SEAL,PLAIN	2
2	PAHZZ	3040-01-241-9393	64678	416 357 07 01	SHAFT,SHOULDERED	1
3	PFOZZ	4730-01-241-1617	64678	435 331 00 84	NIPPLE,BOSS	1
4	PFOZZ	5330-01-270-1311	64678	007 603 014 405	SEAL RING,METAL	1
5	PAOZZ	5330-01-171-4703	S3465	4536226-835	SEAL RING,METAL	1
6	PFOZZ	5305-01-243-0156	64678	315 990 08 01	SCREW,CAP,HEXAGON H	1
7	PFOZZ	5365-01-256-4583	64678	186 997 00 32	PLUG,MACHINE THREAD	1
8	PFHZZ	3040-01-242-4597	64678	416 357 06 01	SHAFT,SHOULDERED	1
9	PFHZZ	5360-01-241-6880	64678	416 993 51 01	SPRING,HELICAL,COMP	1
10	PFHZZ	3020-01-241-1684	64678	416 335 00 36	GEAR,INTERNAL	1
11	PFHZZ	3120-01-242-0837	64678	416 335 02 62	BEARING,WASHER,THRU	1
12	PFHZZ	3120-01-242-0838	64678	416 335 03 62	BEARING,WASHER,THRU	1
13	PFHZZ	3040-01-240-3118	64678	416 335 02 50	PISTON,LINEAR ACTUA	1
14	PFHZZ	5330-01-241-6414	64678	4179970041	PACKING,PREFORMED	2
15	PAHZZ	5331-01-390-9267	64678	004 997 77 40	O-RING	1
					END OF FIGURE	

UNIT, DIRECT SUPPORT AND GENERAL SUPPORT MAINTENANCE

SMALL EMPLACEMENT EXCAVATOR (SEE) AND HIGH MOBILITY MATERIAL HANDLER (HMMH)

HOUSING, BEAM, HOUSING COVERS, PLUGS, SEALS, ETC. – REAR AXLE AND DIFFERENTIAL HOUSINGS

REPAIR PARTS LIST

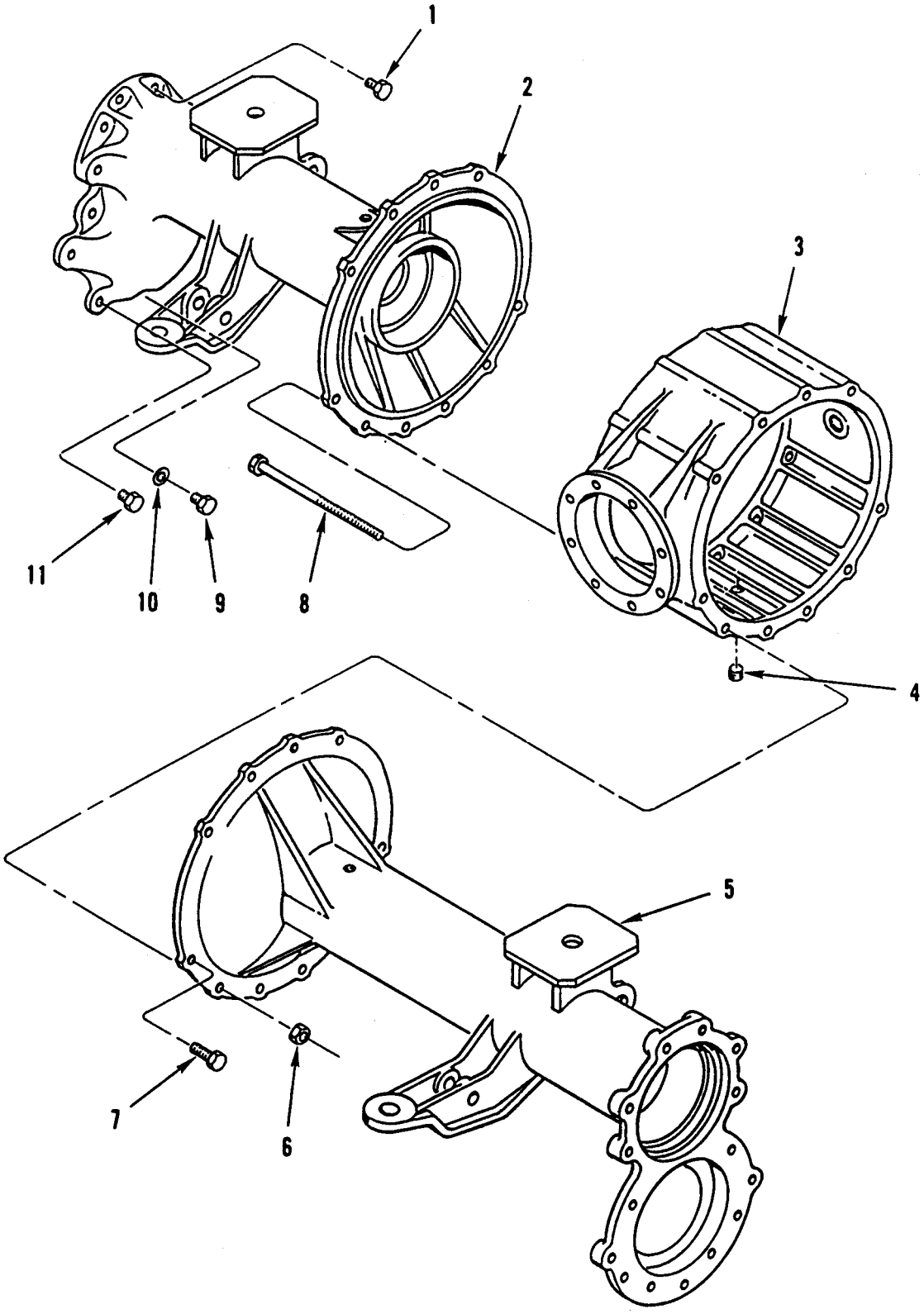

Figure 140. Housing, Beam, Housing Covers, Plugs, Seals, Etc. – Rear Axle and Differential Housings.

(1) ITEM NO	(2) SMR CODE	(3) NSN	(4) CAGEC	(5) PART NUMBER	(6) DESCRIPTION AND USABLE ON CODES (UOC)	(7) QTY
					GROUP 1101	
					FIG. 140 HOUSING, BEAM, HOUSING COVERS, PLUGS, SEALS, ETC. – REAR AXLE AND DIFFERENTIAL HOUSINGS	
1	PFOZZ	5365-01-258-4770	64678	007604 014106	PLUG,MACHINE THREAD.....	5
2	PFHZZ	3040-01-241-1670	64678	419 350 04 19	HOUSING,MECHANICAL	1
3	PFHZZ	3040-01-257-4946	64678	435 351 01 03	HOUSING,MECHANICAL	1
4	PFOZZ	5365-12-177-4326	D0161	000 997 26 32	PLUG,MACHINE THREAD.....	1
5	PFHZZ	3040-01-256-9119	64678	419 350 02 19	HOUSING,MECHANICAL	1
6	PFHZZ	5310-01-259-3584	64678	000934 014022	NUT,PLAIN,HEXAGON	9
7	PFHZZ	5306-01-242-1142	64678	914141 012404	BOLT,MACHINE.....	4
8	PFHZZ	5306-01-242-0602	64678	914141 012205	BOLT,MACHINE.....	9
9	PFOZZ	5365-12-179-6607	D0161	SP4414.16	PLUG,MACHINE THREAD.....	2
10	PAOZZ	5330-01-270-1311	64678	007 603 014 405	SEAL RING,METAL.....	6
11	PFOZZ	5365-01-243-3820	64678	001 997 54 30	PLUG,MACHINE THREAD.....	2
					END OF FIGURE	

UNIT, DIRECT SUPPORT AND GENERAL SUPPORT MAINTENANCE

SMALL EMPLACEMENT EXCAVATOR (SEE) AND HIGH MOBILITY MATERIAL HANDLER (HMMH)

DIFFERENTIAL – REAR AXLE DIFFERENTIAL AND MECHANICAL HOUSING 416 335 04 01

REPAIR PARTS LIST

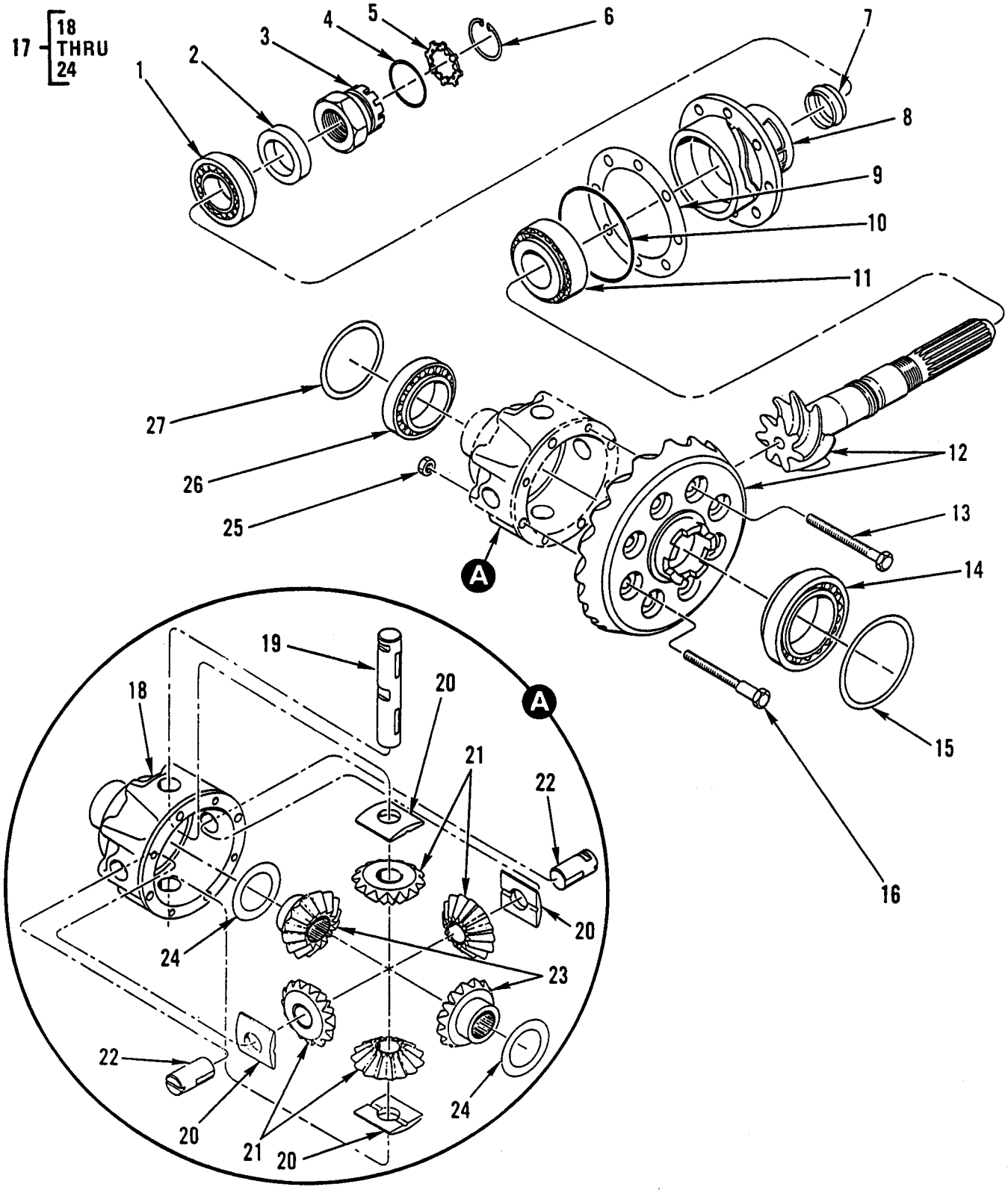

Figure 141. Differential – Rear Axle Differential and Mechanical Housing.

(1) ITEM NO	(2) SMR CODE	(3) NSN	(4) CAGEC	(5) PART NUMBER	(6) DESCRIPTION AND USABLE ON CODES (UOC)	(7) QTY
					GROUP 1102	
					FIG. 141 DIFFERENTIAL – REAR AXLE DIFFERENTIAL AND HOUSING, MECHANICAL 416 335 04 01	
1	PAHZZ	3110-12-175-9149	D2457	331753	BEARING,ROLLER,TAPE	1
2	PFHZZ	5310-01-244-1071	64678	416 337 04 51	WASHER,RECESSED	1
3	PFHZZ	5310-01-241-6334	64678	416 335 00 72	NUT,PLAIN,CASTELLATED	1
4	PFHZZ	5330-01-242-0711	64678	008 997 68 45	O-RING	1
5	PFHZZ	3020-01-241-1683	64678	416 337 01 73	GEAR,INTERNAL	1
6	PFHZZ	5325-01-242-1453	64678	009045 055000	RING,RETAINING	1
7	PFHZZ	4730-01-241-3314	64678	416 331 00 53	SLEEVE,COMPRESSION	1
8	PFHZZ	3130-01-241-6584	64678	416 353 01 11	HOUSING,BEARING UNIT	1
9	PFHZZ	5365-01-243-9913	64678	406 335 45 52	SPACER,PLATE 1.00 MM	V
9	PFHZZ	5365-01-243-9461	64678	406 335 21 52	SHIM 0.10 MM	V
9	PFHZZ	5365-01-253-3020	64678	406 335 22 52	SHIM 0.20 MM	V
9	PFHZZ	5365-01-243-9909	64678	406 335 23 52	SHIM 0.30 MM	V
9	PFHZZ	5365-01-244-4023	64678	406 335 24 52	SPACER,PLATE 0.50 MM	V
10	PFHZZ	2590-01-241-6054	64678	000 987 80 46	CORD,SEALING	1
11	PAHZZ	3110-12-175-9148	D2457	331567	BEARING,ROLLER,TAPE	1
12	PFHZZ	3020-01-261-1687	64678	416 330 03 39	GEAR SET,BEVEL,MATC	1
13	PFHZZ	5306-01-242-0603	64678	000960 012277	BOLT,MACHINE	4
14	PAHZZ	3110-01-241-6114	64678	000720 032016	BEARING,ROLLER,TAPE	1
15	PFHZZ	5365-01-247-6878	64678	406 337 16 52	SHIM 0.10 MM UOC:GE1	V
15	PFHZZ	5365-01-249-7647	64678	406 337 28 52	SHIM 0.15 MM UOC:GE1	V
15	PFHZZ	5365-01-247-6879	64678	406 337 17 52	SHIM 0.20 MM	V
15	PFHZZ	5365-01-247-6880	64678	406 337 18 52	SHIM 0.30 MM	V
15	PFHZZ	5365-01-251-3010	64678	406 337 19 52	SPACER,RING 0.50MM	V
15	PFHZZ	5365-01-249-7698	64678	406 337 20 52	SPACER,RING 1.00MM	V
16	PFHZZ	5305-01-271-4277	64678	416 990 52 19	SCREW,MACHINE	4
17	PFHHH	3040-01-240-8551	64678	416 335 04 01	HOUSING,MECHANICAL	1
18	XAHZZ		19207	NPN-074	.HOUSING,DIFFERENTIA	1
19	KFHZZ		64678	416 335 04 20	.HALF-AXLE,DIFF. PART OF KIT P/N 435 350 00 40	1
20	KFHZZ		64678	416 337 00 62	.DISC PART OF KIT P/N 435 350 00 40	4
21	KFHZZ		64678	416 335 00 14	.GEAR,BEVEL PART OF KIT P/N 435 350 00 40	4

(1) ITEM NO	(2) SMR CODE	(3) NSN	(4) CAGEC	(5) PART NUMBER	(6) DESCRIPTION AND USABLE ON CODES (UOC)	(7) QTY
22	KFHZZ		64678	416 335 05 20	.HALF-AXLE,DIFF PART OF KIT P/N 435 350 00 40	2
23	KFHZZ		64678	416 335 00 15	.GEAR AXLE SHAFT PART OF KIT P/N 435 350 00 40	2
24	KFHZZ		64678	416 335 00 62	.DISC PART OF KIT P/N 435 350 00 40	2
25	PFHZZ	5310-01-425-2386	64678	000934 012023	NUT,PLAIN,HEXAGON	4
26	PAHZZ	3110-01-241-6113	64678	000720 032013	BEARING,ROLLER,TAPE	1
27	PFHZZ	5365-01-247-6877	64678	416 337 01 52	SHIM 0.10 MM	V
27	PFHZZ	5365-01-243-9462	64678	416 337 18 52	SHIM 0.15 MM	V
27	PFHZZ	5365-01-244-2290	64678	416 337 02 52	SHIM 0.20 MM	V
27	PFHZZ	5365-01-244-2737	64678	416 337 03 52	SPACER,RING 0.50 MM	V
27	PFHZZ	5365-01-244-2738	64678	416 337 14 52	SPACER,RING 1.00 MM	V
27	PFHZZ	5365-01-244-2739	64678	416 337 15 52	SPACER,RING 2.00 MM	V

END OF FIGURE

UNIT, DIRECT SUPPORT AND GENERAL SUPPORT MAINTENANCE

SMALL EMPLACEMENT EXCAVATOR (SEE) AND HIGH MOBILITY MATERIAL HANDLER (HMMH)

PLANETARY OR FINAL DRIVE – REAR AXLE FINAL DRIVE

REPAIR PARTS LIST

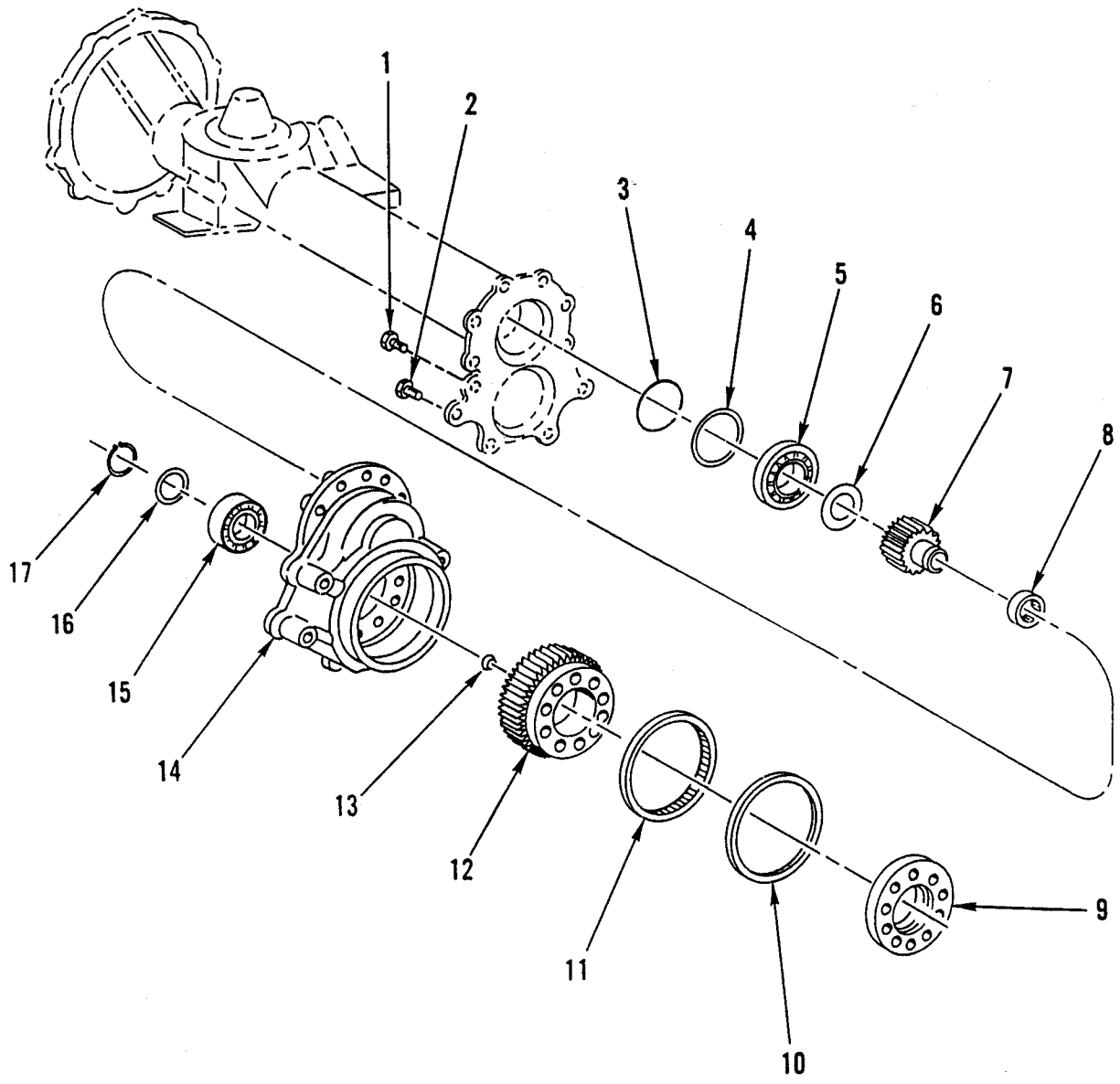

Figure 142. Planetary or Final Drive – Rear Axle Final Drive.

(1) ITEM NO	(2) SMR CODE	(3) NSN	(4) CAGEC	(5) PART NUMBER	(6) DESCRIPTION AND USABLE ON CODES (UOC)	(7) QTY
					GROUP 1103	
					FIG. 142 PLANETARY OR FINAL DRIVE – REAR AXLE FINAL DRIVE	
1	PFFZZ	5305-01-155-3875	56161	10501948	SETSCREW	12
2	PFFZZ	5306-01-187-9502	56161	10516476	BOLT,MACHINE	12
3	PFFZZ	5310-01-242-0687	64678	900055 060300	WASHER,SPRING TENS	2
4	PFFZZ	5365-01-247-7093	64678	424 337 00 51	SPACER,RING	2
5	PFFZZ	3110-12-303-5845	D2456	534 520	BEARING,BALL,ANNULAR	2
6	PFFZZ	5365-01-244-4019	64678	416 337 04 52	SHIM 0.10 MM V	
6	PFFZZ	5365-01-244-2289	64678	416 337 05 52	SHIM 0.20 MM V	
6	PFFZZ	5365-01-244-4540	64678	416 337 06 52	SHIM 0.30 MM V	
7	PAFZZ	3020-01-240-9944	64678	424 336 00 10	GEAR,SPUR	2
8	PFFZZ	3110-01-248-7139	64678	001 981 77 01	BEARING,ROLLER CYL	2
9	PFFZZ	5365-01-242-1193	64678	406 337 15 51	SPACER,SLEEVE	2
10	PAFZZ	5330-12-306-1333	D8142	DGS 140.165. 12I1 5WD 01	SEAL,PLAIN	2
11	PFFZZ	3110-01-266-6463	64678	001 981 42 01	BEARING,ROLLER,CYL	2
12	PFFZZ	3020-01-240-6816	64678	406 353 05 15	GEAR,SPUR	2
13	PFHZZ	5340-01-238-7315	64678	403 997 06 20	PLUG,EXPANSION	2
14	PFFZZ	3040-01-240-8552	64678	416 331 04 05	HOUSING,MECHANICAL	2
15	PFFZZ	3110-12-178-6509	C1542	63 10E.TN-C3	BEARING,BALL,ANNULA	2
16	PFFZZ	5365-01-298-4204	64678	000988050100	SPACER,RING	2
16	PFFZZ	5365-01-298-4188	64678	4063340152	SHIM 0.10 MM V	
16	PFFZZ	5365-01-299-2915	64678	4063340252	SHIM 0.15 MM V	
17	PFFZZ	5310-01-251-2929	64678	900055 050300	WASHER,SPRING TENSI	2
					END OF FIGURE	

UNIT, DIRECT SUPPORT AND GENERAL SUPPORT MAINTENANCE

SMALL EMPLACEMENT EXCAVATOR (SEE) AND HIGH MOBILITY MATERIAL HANDLER (HMMH)

BRAKES, HAND BRAKES – PARKING BRAKE HANDLE, PULLEY, AND CABLE

REPAIR PARTS LIST

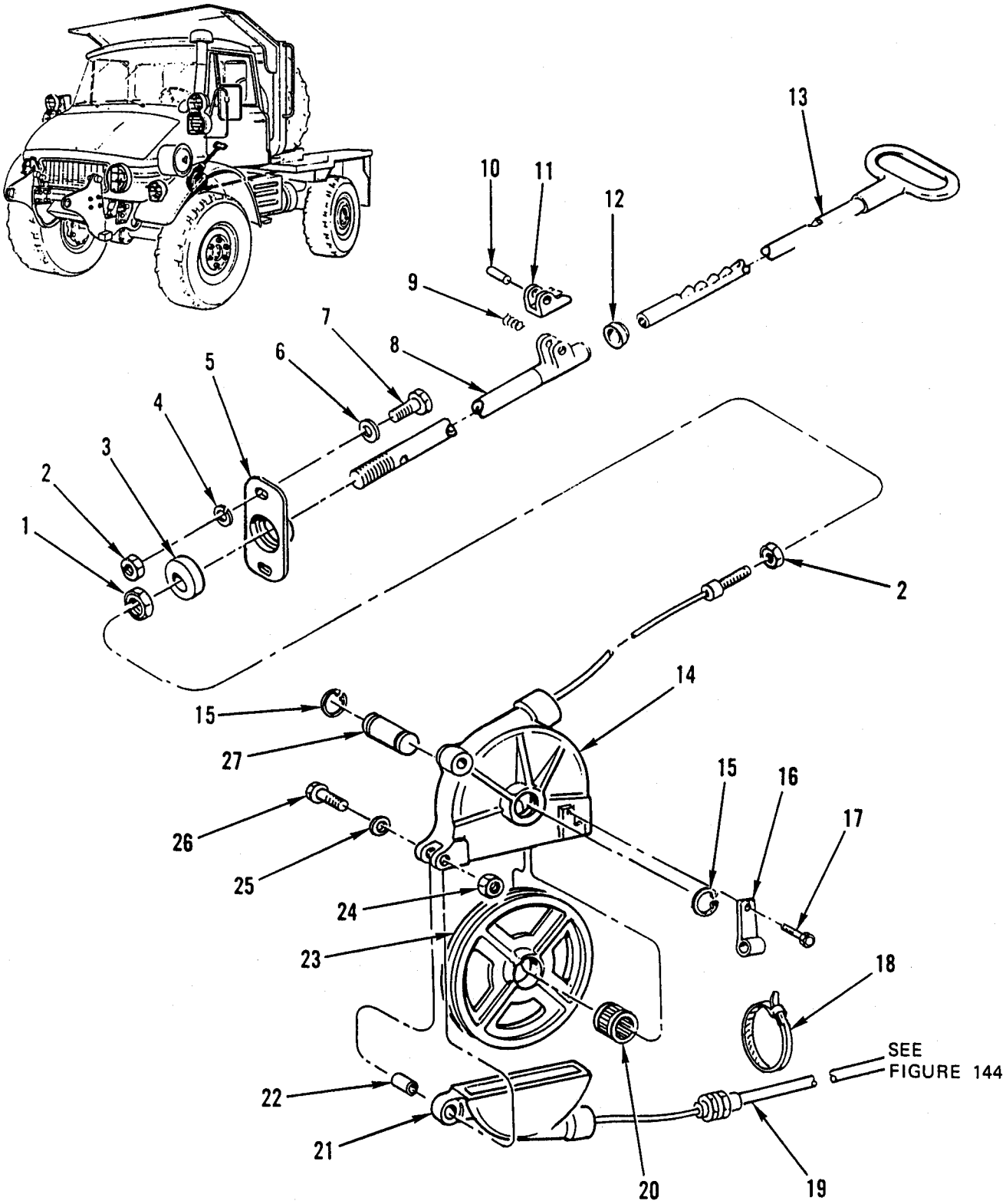

Figure 143. Brakes, Hand Brakes – Parking Brake Handle, Pulley, and Cable.

(1) ITEM NO	(2) SMR CODE	(3) NSN	(4) CAGEC	(5) PART NUMBER	(6) DESCRIPTION AND USABLE ON CODES (UOC)	(7) QTY
					GROUP 12, 1201	
					FIG. 143 BRAKES, HAND BRAKES – PARKING BRAKE HANDLE, PULLEY, AND CABLE	
1	PFOZZ	5310-01-268-2555	64678	000439 018204	NUT,PLAIN,HEXAGON	1
2	PFOZZ	5310-01-171-4689	S3465	4536226-786	NUT,PLAIN,HEXAGON	3
3	PFOZZ	5330-01-242-0694	64678	406 427 00 60	PACKING,PREFORMED	1
4	PFOZZ	5310-01-171-2356	S3465	4536226-920	WASHER,SPRING TENSI	2
5	PFOZZ	3120-01-268-2562	64678	406 427 01 93	BEARING,SLEEVE	1
6	PFOZZ	5310-00-215-7656	43999	2W1-16-23-63	WASHER,FLAT	4
7	PFOZZ	5306-01-174-0372	S3465	4536226-822	BOLT,MACHINE	2
8	PFOZZ	2530-01-241-1721	64678	406 420 01 77	GUIDE	1
9	PFOZZ	5360-01-242-0978	64678	120 993 00 20	SPRING,HELICAL,TORS	1
10	PFOZZ	5320-01-241-3862	64678	007341 006101	RIVET,SOLID	1
11	PFOZZ	3040-01-241-4812	64678	120 427 01 15	PAWL	1
12	PFOZZ	5365-01-242-7192	64678	112 427 00 86	BUSHING,NONMETALLIC	1
13	PFOZZ	5342-01-266-2657	64678	419 420 00 88	HANDLE,LOCK	1
14	PFOZZ	3040-01-240-2798	64678	406 427 04 81	HOUSING,MECHANICAL	1
15	PFOZZ	5310-01-241-6383	64678	900055 020200	WASHER,SPRING TENS	2
16	PAOZZ	5360-01-247-0673	64678	406 993 50 15	SPRING,FLAT	1
17	PFOZZ	5315-01-242-2904	64678	001476 006003	PIN,GROOVED,HEADED	1
18	PFOZZ	5340-01-240-5728	64678	001 997 83 90	STRAP,LINE SUPPORTING	V
19	PAOZZ	2590-01-289-3919	64678	013 696 001	CONTROL ASSEMBLY,PU	1
20	PAOZZ	3110-01-243-9321	64678	005 981 17 10	BEARING,ROLLER,NEED	1
21	PFOZZ	3040-01-241-4266	64678	406 427 03 81	HOUSING,MECHANICAL	1
22	PFOZZ	5365-01-242-2761	64678	406 427 07 53	SPACER,SLEEVE	1
23	PFOZZ	3020-01-241-4828	64678	406 427 02 42	PULLEY,GROOVE	1
24	PFOZZ	5310-01-239-3536	64678	913004 008004	NUT,SELF-LOCKING,HE	2
25	PFOZZ	5310-01-250-6258	15526	9021 8 S	WASHER,FLAT	2
26	PFOZZ	5305-01-243-9409	15526	931 M8 55 P	SCREW,CAP,HEXAGON H	2
27	PFOZZ	5315-01-242-4577	64678	406 427 17 74	PIN,GROOVED,HEADL	1
					END OF FIGURE	

UNIT, DIRECT SUPPORT AND GENERAL SUPPORT MAINTENANCE

SMALL EMPLACEMENT EXCAVATOR (SEE) AND HIGH MOBILITY MATERIAL HANDLER (HMMH)

HAND BRAKES – PARKING BRAKE LEVER, RIGHT WIRE ROPE ASSEMBLY 419 420 09 85, AND LEFT WIRE ROPE ASSEMBLY 419 420 08 85

REPAIR PARTS LIST

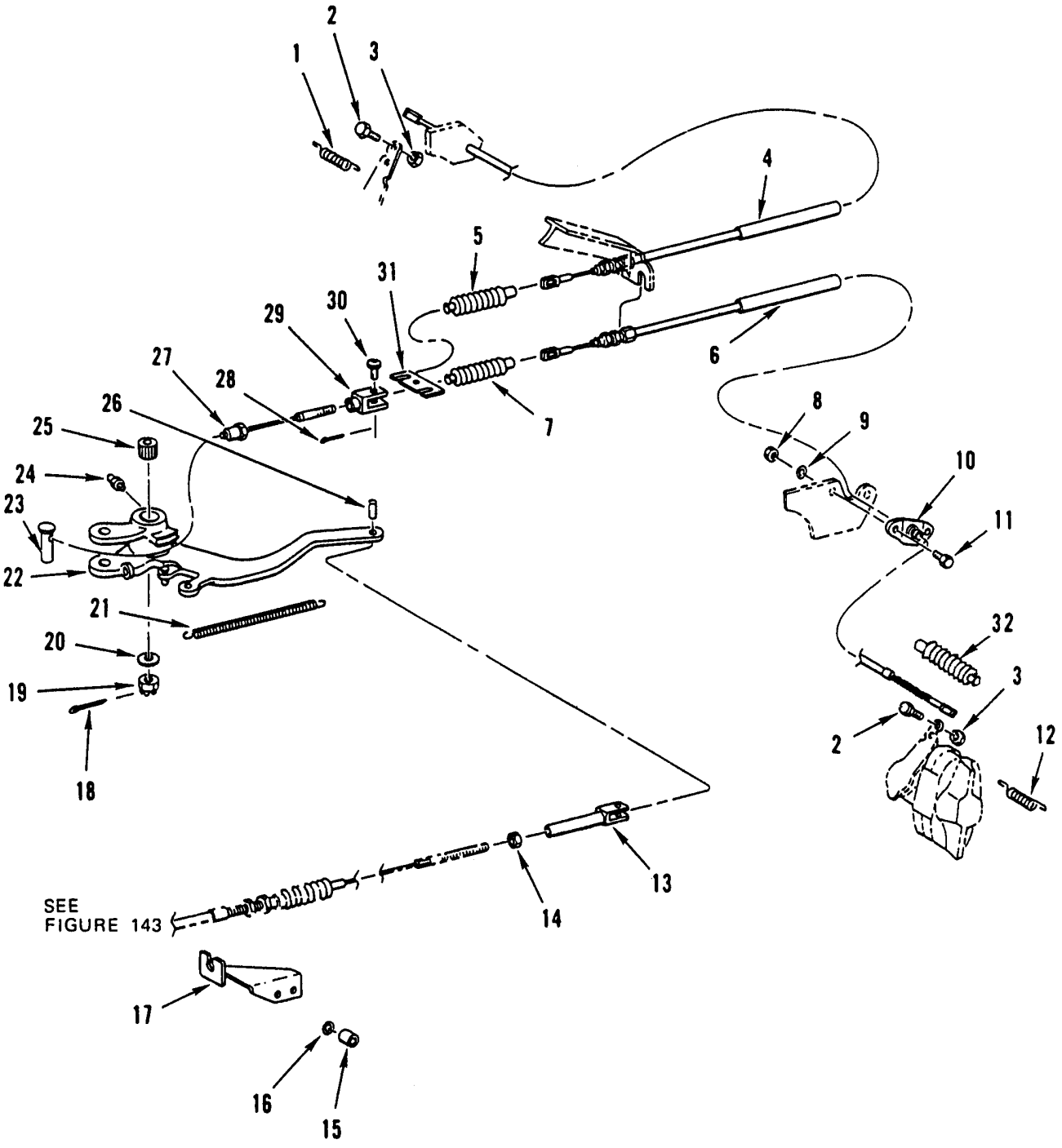

Figure 144. Hand Brakes – Parking Brake Lever, Right Wire Rope Assembly, and Left Wire Rope Assembly.

(1) ITEM NO	(2) SMR CODE	(3) NSN	(4) CAGEC	(5) PART NUMBER	(6) DESCRIPTION AND USABLE ON CODES (UOC)	(7) QTY
					GROUP 1201	
					FIG. 144 HAND BRAKES – PARKING BRAKE LEVER, WIRE ROPE ASSEMBLY, RIGHT 419 420 09 85, AND WIRE ROPE ASSEMBLY, LEFT 419 420 08 85	
1	PFOZZ	5360-12-193-9726	D8046	000 993 31 10	SPRING,HELICAL,EXTE	1
2	PFOZZ	5306-01-175-0424	S3465	4537800-783	BOLT,MACHINE	2
3	PFOZZ	5310-01-241-6349	64678	913004 006002	NUT,SELF-LOCKING,HE	2
4	PAOZZ	4010-01-278-0169	64678	419 420 09 85	WIRE ROPE ASSEMBLY RIGHT	1
5	PFOZZ	9390-01-244-4891	64678	416 357 00 91	.BELLOWS,PROTECTION	1
6	PAOZZ	4010-01-263-8311	64678	419 420 08 85	WIRE ROPE ASSEMBLY,LEFT	1
7	PFOZZ	9390-01-244-4891	64678	416 357 00 91	.BELLOWS,PROTECTION	1
8	PFOZZ	5310-01-238-3198	15526	934 M10X1.5C	NUT,PLAIN,HEXAGON	1
9	PFOZZ	5310-01-237-7658	64678	912004 010102	WASHER,LOCK	2
10	PFOZZ	5342-01-243-3718	64678	416 420 00 89	SHACKLE ASSEMBLY	1
11	PFOZZ	5306-01-243-1346	15526	933-10 M10 25 F	BOLT,MACHINE	2
12	PFOZZ	5360-12-309-9429	D1304	13.8180-00 09.1	SPRING,HELICAL,EXTE	1
13	PFOZZ	5340-01-290-8143	64678	419 421 00 28	CLEVIS,ROD END	1
14	PFOZZ	5310-01-241-6345	64678	000934008010	NUT,PLAIN,HEXAGON	1
15	PAOZZ	5365-01-244-9923	64678	406 599 01 89	SPACER,SLEEVE	1
16	PFOZZ	5325-01-017-8059	D8266	009045016000	RING,RETAINING	1
17	PAOZZ	5340-01-242-6043	64678	406 420 22 86	BRACKET,ANGLE	1
18	PFOZZ	5315-00-012-0123	96906	MS24665-355	PIN,COTTER	1
19	PFOZZ	5310-01-241-6348	64678	000935 014004	NUT,PLAIN,SLOTTED,H	1
20	PFOZZ	5310-01-247-6855	64678	000125 015013	WASHER,FLAT	1
21	PAOZZ	5360-01-242-8074	64678	315 993 02 10	SPRING,HELICAL,EXTE	1
22	PFOZZ	3040-01-240-4460	64678	406 427 04 10	LEVER,REMOTE CONTRO	1
23	PFOZZ	5315-01-318-6882	64678	4194270074	PIN,GROOVED,HEADED	1
24	PFOZZ	4730-01-241-1626	64678	900216008201	FITTING,LUBRICATION	1
25	PFOZZ	3110-12-164-4567	C0113	HK1814RSB	BEARING,ROLLER,NEED	2
26	PAOZZ	5315-01-242-2906	64678	918001 008001	PIN,STRAIGHT,HEADED	1
27	PAOZZ	4010-01-259-2497	5J536	013 687 001	WIRE ROPE ASSEMBLY	1
28	PAOZZ	5315-00-839-5821	96906	MS24665-351	PIN,COTTER	1
29	PFOZZ	5340-01-242-4129	64678	000 996 14 01	CLEVIS,ROD END	1

(1) ITEM NO	(2) SMR CODE	(3) NSN	(4) CAGEC	(5) PART NUMBER	(6) DESCRIPTION AND USABLE ON CODES (UOC)	(7) QTY
30	XDOZZ		96906	MS9465-16	PIN,STRAIGHT,HEADED.....	1
31	PFOZZ	5340-01-248-3448	64678	404 427 01 89	CLAMP,BLOCK,SECTION	1
32	XBOZZ		64678	000 427 02 96	BELLOWS,PROTECTION UOC:GE1.....	1
					END OF FIGURE	

UNIT, DIRECT SUPPORT AND GENERAL SUPPORT MAINTENANCE

SMALL EMPLACEMENT EXCAVATOR (SEE) AND HIGH MOBILITY MATERIAL HANDLER (HMMH)

SERVICE BRAKES (FRONT BRAKE) – LEFT FRONT CALIPER ASSEMBLY 419 420 06 98, RIGHT FRONT CALIPER ASSEMBLY 419 421 07 98, LEFT REAR CALIPER ASSEMBLY 419 421 08 98, RIGHT REAR CALIPER ASSEMBLY 419 421 09 98, AND HYDRAULIC BLEEDER VALVE 3.3518-0013.2

REPAIR PARTS LIST

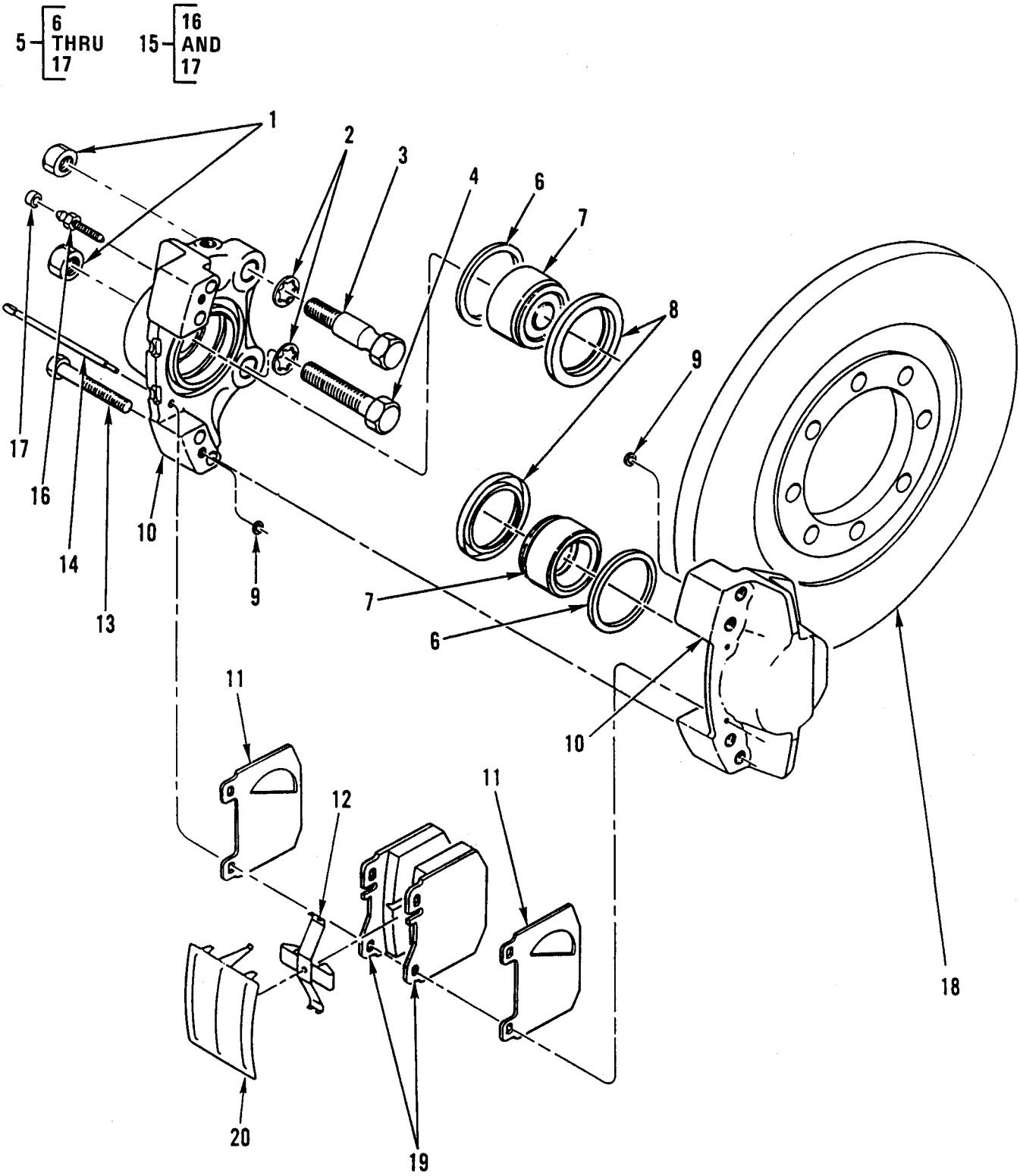

Figure 145. Service Brakes (Front Brake) – Left Front Caliper Assembly, Right Front Caliper Assembly, Left Rear Caliper Assembly, Right Rear Caliper Assembly, and Hydraulic Bleeder Valve.

(1) ITEM NO	(2) SMR CODE	(3) NSN	(4) CAGEC	(5) PART NUMBER	(6) DESCRIPTION AND USABLE ON CODES (UOC)	(7) QTY
					GROUP 1202	
					FIG. 145 SERVICE BRAKES (FRONT BRAKE)– LEFT FRONT CALIPER ASSEMBLY 419 420 06 98, RIGHT FRONT CALIPER ASSEMBLY 419 421 07 98, LEFT REAR CALIPER ASSEMBLY 419 421 08 98, RIGHT REAR CALIPER ASSEMBLY 419 421 09 98, AND HYDRAULIC BLEEDER VALVE 3.3518-0013.2	
1	PFOZZ	5310-01-242-0665	64678	000934 016013	NUT,PLAIN,HEXAGON	8
2	PFOZZ	5310-01-242-0686	64678	900050 017001	WASHER,SPRING TENSION	8
3	PAOZZ	5306-01-244-1046	64678	416 990 55 19	BOLT,SHOULDER	4
4	PFOZZ	5305-01-243-0752	64678	000960 016257	SCREW,CAP,HEXAGON H	4
5	PAOFF	2530-01-269-4809	64678	419 421 06 98	CALIPER ASSEMBLY,DI LEFT FRONT	1
5	PAOFF	2530-01-241-4726	64678	419 421 07 98	CALIPER ASSEMBLY,DI RIGHT FRONT	1
5	PAOFF	2530-01-269-4810	64678	419 421 08 98	CALIPER ASSEMBLY,DI LEFT REAR	1
5	PAOFF	2530-01-241-4250	64678	419 421 09 98	CALIPER ASSEMBLY,DI RIGHT REAR	1
6	KFFZZ		D1304	13.8101-6003.1	.PACKING,PREFORMED PART OF KIT P/N 13.0441-06011.2	2
7	XAFZZ		19207	NPN-075	.PISTON,CALIPER	2
8	KFFZZ		D1304	13.8102-6007.2	.CAP,PROTECTIVE PART OF KIT P/N 13.0441-06011.2	2
9	PAOZZ	3040-01-247-0895	64678	0004230075	.PARTS KIT,LINEAR AC	2
10	XAFZZ		19207	NPN-076	.HOUSING,CALIPER	1
11	PFFZZ	3830-01-240-6812	64678	000 421 14 20	.PLATE,PROTECTIVE	2
12	PFFZZ	5360-01-245-2380	64678	000 421 32 91	.SPRING	1
13	PAFZZ	5305-01-407-0495	64678	13.1890-0255.1	.SCREW,CAP,SOCKET HE	2
14	PFFZZ	5315-01-242-0902	64678	000 991 20 60	.PIN,SHOULDER,HEADLE	2
15	PFOOO	2530-01-285-2840	D1304	3.3518-0013.2	.VALVE,BLEEDER,HYDRA	1
16	XAOZZ		19207	NPN-077	..VALVE,BLEEDER	1
17	PFOZZ	5340-12-312-4471	64678	000 421 71 87	..CAP,PROTECTIVE,DUST	1
18	PAOZZ	2530-01-241-1669	64678	416 421 04 12	DISC,BRAKE	2
19	KFOZZ		19207	504FF	LINING PART OF KIT P/N 001 420 09 20	4
20	PAOZZ	2530-01-242-2989	D1304	13.8162-0022.1	SHIELD,BRAKE DISK	4
					END OF FIGURE	

UNIT, DIRECT SUPPORT AND GENERAL SUPPORT MAINTENANCE

SMALL EMPLACEMENT EXCAVATOR (SEE) AND HIGH MOBILITY MATERIAL HANDLER (HMMH)

SERVICE BRAKES (REAR BRAKE) – LEFT HAND SIDE CALIPER ASSEMBLY 002 423 1198, RIGHT HAND SIDE CALIPER ASSEMBLY 13.2544-0011.2, AND HYDRAULIC BLEEDER VALVE 3.3518-8000.2

REPAIR PARTS LIST

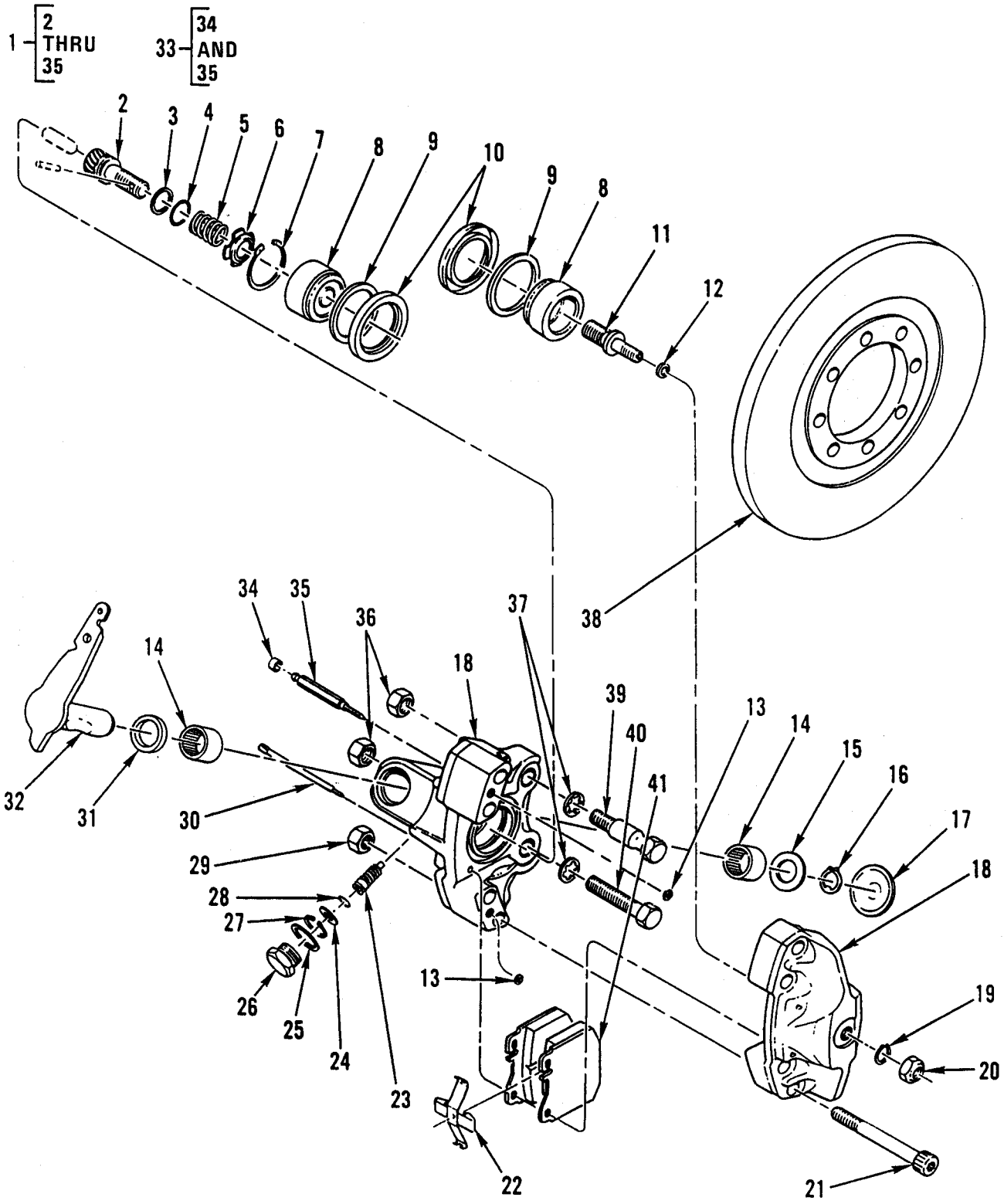

Figure 146. Service Brakes (Rear Brake) – Left Hand Side and Right Hand Side Caliper Assemblies and Hydraulic Bleeder Valve.

(1) ITEM NO	(2) SMR CODE	(3) NSN	(4) CAGEC	(5) PART NUMBER	(6) DESCRIPTION AND USABLE ON CODES (UOC)	(7) QTY
					GROUP 1202	
					FIG. 146 SERVICE BRAKES (REAR BRAKE) – CALIPER ASSEMBLY 002 423 1198, CALIPER ASSEMBLY 13.2544-0011.2, AND HYDRAULIC BLEEDER VALVE 3.3518-8000.2	
1	PAOFF	2530-01-282-1761	64678	002 423 1198	CALIPER ASSEMBLY,DI LEFT HAND SIDE .	1
1	PAOFF	2530-01-257-0868	D1304	13.2544-0011.2	CALIPER ASSEMBLY,DI RIGHT HAND SIDE	1
2	PFFZZ	2530-01-313-2866	D1304	13.8148-0020.1	.ADJUSTING SCREW,BRA.....	1
3	KFFZZ		D1304	13.8190-0130.1	.RING,SUPPORT PART OF KIT P/N 13.0471-5402.2.....	1
4	PAFZZ	2530-01-313-4598	D1304	13.0471-5407.2	.PARTS KIT,BRAKE ADJ PART OF KIT P/N 13.0471-5402.2.....	1
5	XAFZZ		19207	NPN-078	.SPRING,ADJUSTER SCR.....	1
6	XAFZZ		19207	NPN-079	.NUT,JAM	1
7	KFFZZ		D1304	13.3580-0082.1	.RING,RETAINING PART OF KIT P/N 13.0471-5402.2.....	1
8	XAFZZ		19207	NPN-080	.PISTON,CALIPER	2
9	KFFZZ		D1304	13.8101-5407.1	.PACKING,PREFORMED PART OF KIT P/N 13.0441-5417.2.....	2
10	KFFZZ		D1304	13.8102-5405.2	.CAP,PROTECTIVE PART OF KIT P/N 13.0441-5417.2.....	2
11	PFFZZ	5315-01-327-2675	64678	000 423 05 19	.PIN,SHOULDER,HEADLE.....	1
12	KFFZZ		D1304	13.8190-0253.1	.O-RING PART OF KIT P/N 13.0471-5402.2...	1
13	KFOZZ		D1304	13.8101-5717.1	.PACKING,PREFORMED PART OF KIT P/N 13.0471-5402.2.....	2
14	XAFZZ		19207	NPN-081	.BUSHING,CALIPER	2
15	XAFZZ		19207	NPN-082	.WASHER,FLAT	1
16	KFFZZ		D1304	42.2411-4400.1	.RING,RETAINING PART OF KIT P/N 13.0471-5402.2.....	1
17	KFFZZ		13040	3.330-0456.1	.WASHER,SEALING PART OF KIT P/N 13.0471-5402.2.....	1
18	XAFZZ		19207	NPN-082A	.HOUSING,CALIPER.....	1
19	KFFZZ		D1304	42.243-3000.0	.WASHER,LOCK PART OF KIT P/N 13.0471-5402.2.....	1
20	PFFZZ	5310-01-243-6562	D1304	13.8190-0144.1	.NUT,SELF-LOCKING,HE	1
21	KFOZZ		D1304	13.1890-0255.1	.SCREW,CAP,SOCKET HD PART OF KIT P/N 13.0471-5407.2.....	4
22	PFOZZ	5360-01-245-2380	64678	000 421 32 91	.SPRING	1
23	KFFZZ		D1304	13.8141-0004.1	.SHAFT,ADJUSTING PART OF KIT P/N 13.0471-5408.2.....	1

(1) ITEM NO	(2) SMR CODE	(3) NSN	(4) CAGEC	(5) PART NUMBER	(6) DESCRIPTION AND USABLE ON CODES (UOC)	(7) QTY
24	KFFZZ		D1304	41.5091-1479.3	.SHIM PART OF KIT P/N 13.0471-5408.2.....	1
25	KFFZZ		D1304	43.1102-3036.0	.RING,SEAL PART OF KIT P/N 13.0471-5408.2.....	1
26	XAFZZ		19207	NPN-083	.PLUG.....	1
27	KFFZZ		D1304	42.2412-2600.1	.RING,LOCK PART OF KIT P/N 13.0471-5408.2.....	1
28	KFFZZ		D1304	13.1890-0253.1	.PACKING,PREFORMED PART OF KIT P/N 13.0471-5408.2.....	1
29	KFOZZ		D1304	13.8190-0256.1	.NUT,PLAIN,HEXAGON PART OF KIT P/N 13.0471-5407.2.....	4
30	PFFZZ	5315-01-242-0902	64678	000 991 20 60	.PIN,SHOULDER,HEADLE.....	2
31	KFOZZ		D1304	13.8140-0001.2	.SEAL,SHAFT PART OF KIT P/N 13.0471-5402.2.....	1
32	XAFZZ		19207	NPN-084	.LEVER,BRAKE CALIPER.....	1
33	PAFZZ	4820-01-242-2957	D1304	3.3518-8000.2	.BLEEDER VALVE,HYDRA.....	1
34	PAFZZ	5340-12-121-7542	D0786	R0001	..CAP,PROTECTIVE,DUST.....	1
35	XAFZZ		19207	NPN-085	..VALVE,BLEEDER	1
36	PFOZZ	5310-01-242-0665	64678	000934 016013	NUT,PLAIN,HEXAGON	4
37	PFOZZ	5310-01-242-0686	64678	900050 017001	WASHER,SPRING TENSI.....	4
38	PAOZZ	2530-01-241-1669	64678	416 421 04 12	DISC,BRAKE.....	2
39	PFOZZ	5305-01-243-0752	64678	000960 016257	SCREW,CAP,HEXAGON H.....	2
40	PAOZZ	5306-01-244-1046	64678	416 990 55 19	BOLT,SHOULDER	2
41	KFOZZ		19207	504FF	LININGS PART OF KIT P/N 001 420 09 20.....	4
					END OF FIGURE	

UNIT, DIRECT SUPPORT AND GENERAL SUPPORT MAINTENANCE

SMALL EMPLACEMENT EXCAVATOR (SEE) AND HIGH MOBILITY MATERIAL HANDLER (HMMH)

HYDRAULIC BRAKE SYSTEM (MASTER CYLINDER) – HYDRAULIC CYLINDER 004 430 47 01

REPAIR PARTS LIST

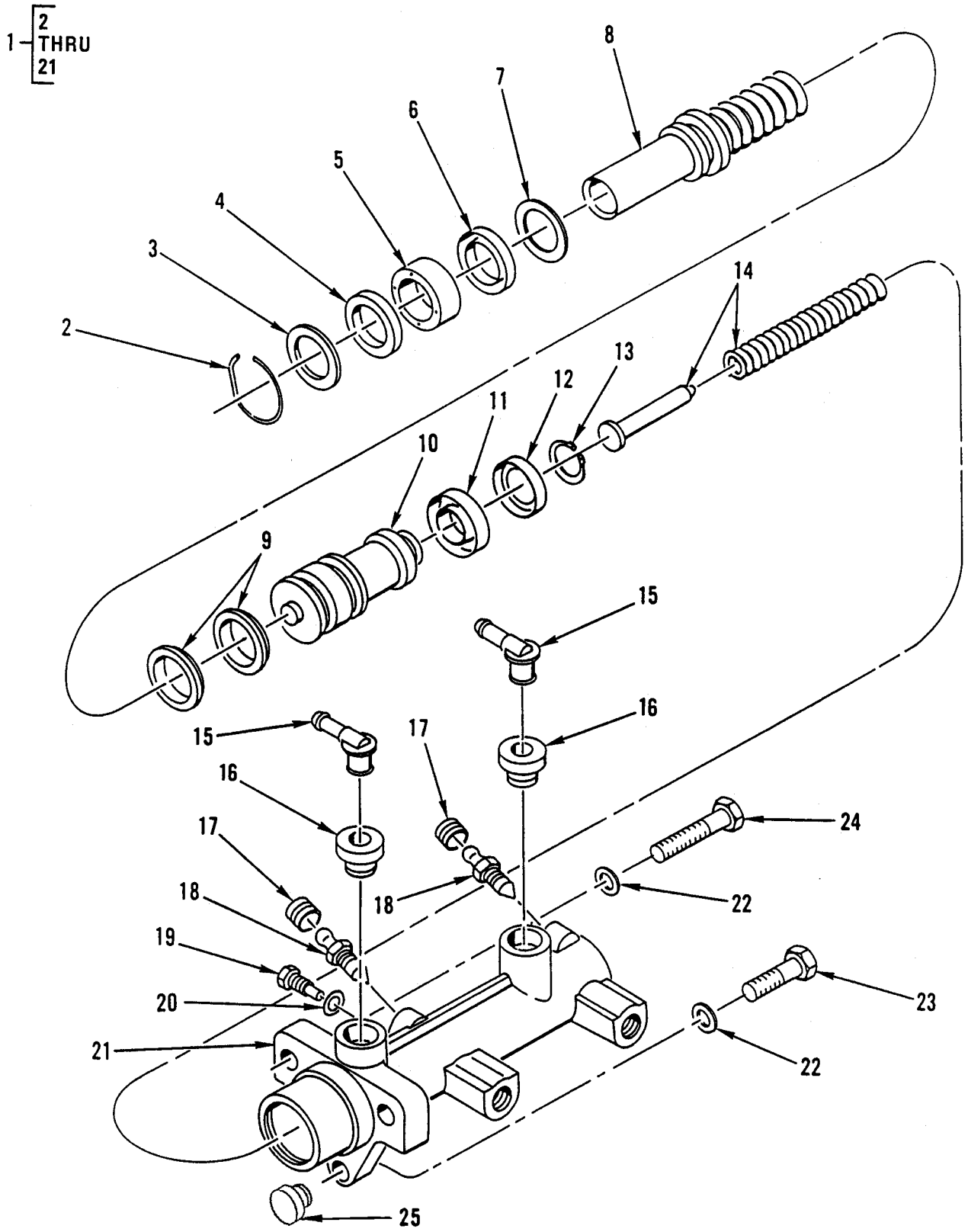

Figure 147. Hydraulic System (Master Cylinder) – Hydraulic Cylinder.

(1) ITEM NO	(2) SMR CODE	(3) NSN	(4) CAGEC	(5) PART NUMBER	(6) DESCRIPTION AND USABLE ON CODES (UOC)	(7) QTY
					GROUP 1204	
					FIG. 147 HYDRAULIC BRAKE SYSTEM (MASTER CYLINDER) – HYDRAULIC CYLINDER 004 430 47 01	
1	PAOFF	2530-01-300-3774	64678	004 430 47 01	CYLINDER,HYDRAULIC	1
2	KFFZZ		D1304	03.3320-2900.1	.RING,LOCK PART OF KIT P/N 03.0370-0934.2	1
3	KFFZZ		D1304	03.3319-6500.1	.RING,STOP PART OF KIT P/N 03.0370-0934.2	1
4	KFFZZ		D1304	03.3306-3200.1	.WIPER PART OF KIT P/N 03.0370-0934.2	1
5	KFFZZ		D1304	03.3390-0162.1	.BUSHING PART OF KIT P/N 03.0370-0934.2	1
6	KFFZZ		D1304	03.3302-0020.1	.SEAL,SECONDARY PART OF KIT P/N 03.0370-0934.2	1
7	KFFZZ		D1304	03.3319-0010.1	.DISC,STOP PART OF KIT P/N 03.0370-0934.2	1
8	KFFZZ		D1304	03.3308-3401.2	.PISTON,PRESSURE PART OF KIT P/N 03.0370-0934.2	1
9	KFFZZ		D1304	03.3301-3435.1	.CUPS,SEPARATING PART OF KIT P/N 03.0370-0934.2	2
10	KFFZZ		D1304	03.3312-3413.1	.PISTON,INTERMEDIATE PART OF KIT P/N 03.0370-0934.2	1
11	KFFZZ		D1304	03.3307-3422.1	.DISC,FILLER PART OF KIT P/N 03.0370-0934.2	1
12	KFFZZ		D1304	03.3301-3430.1	.SEAL,CUP PART OF KIT P/N 03.0370-0934.2	1
13	KFFZZ		D1034	03.3307-3402.1	.SUPPORT,RING PART OF KIT P/N 03.0370-0934.2	1
14	KFFZZ		D1304	03.3390-0301.1	.STOP,DISK PART OF KIT P/N 03.0370-0934.2	1
15	PFOZZ	4730-01-285-2871	D1304	3.3390-0129.1	.ELBOW,FLANGE TO HOS	2
16	PFOZZ	3120-01-287-2857	64678	000 431 09 50	.BUSHING,SLEEVE	2
17	PFOZZ	5340-12-312-4471	64678	000 421 71 87	.CAP,PROTECTIVE,DUST	2
18	PFOZZ	2530-01-285-8392	D1304	3.3518-6500.2	.VALVE,BLEEDER,HYDRA	2
19	PAOZZ	5305-01-286-6036	D1304	3.3529-4900.1	.SETSCREW	1
20	KFFZZ		D1304	03.3502-2900.1	.RING,SEAL PART OF KIT P/N 03.0370-0934.2	1
21	XAFZZ		19207	NPN-086	.HOUSING,CYLINDER	1
22	PFOZZ	5310-01-174-0436	S3465	4537800-128	WASHER,SPRING TENSI	3
23	PAOZZ	5306-01-301-4897	S3465	4538742-813	BOLT,MACHINE	2
24	PFOZZ	5306-01-174-0376	S3465	4536226-895	BOLT,MACHINE	1

(1) ITEM NO	(2) SMR CODE	(3) NSN	(4) CAGEC	(5) PART NUMBER	(6) DESCRIPTION AND USABLE ON CODES (UOC)	(7) QTY
25	PCOZZ	9390-01-244-4892	64678	421 292 01 97	BOOT,DUST UOC:GE1.....	1

END OF FIGURE

UNIT, DIRECT SUPPORT AND GENERAL SUPPORT MAINTENANCE

SMALL EMPLACEMENT EXCAVATOR (SEE) AND HIGH MOBILITY MATERIAL HANDLER (HMMH)

HYDRAULIC BRAKE SYSTEM – FRONT HYDRAULIC BRAKE LINES AND FITTINGS

REPAIR PARTS LIST

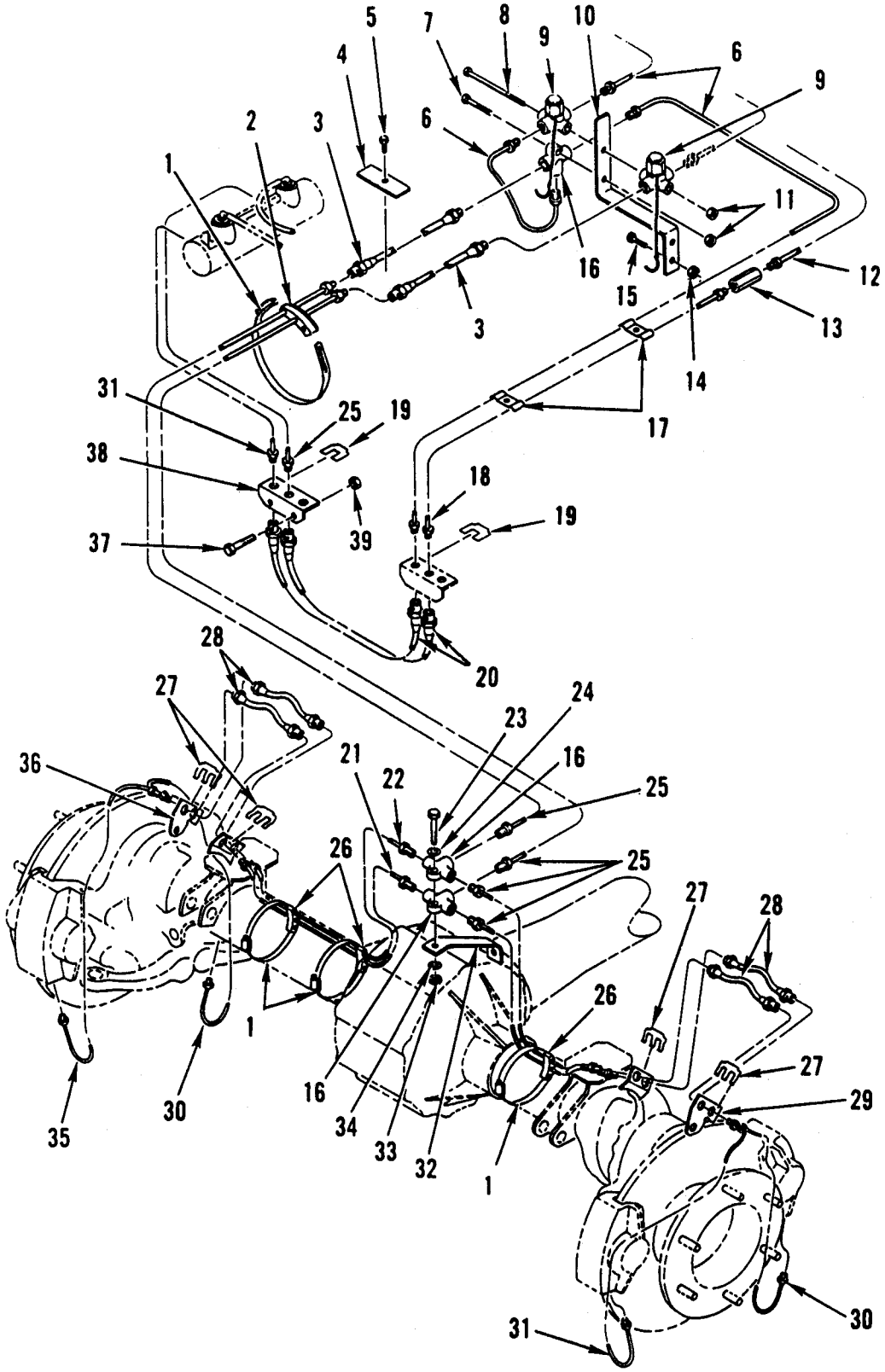

Figure 148. Hydraulic System – Front Hydraulic Brake Lines and Fittings.

(1) ITEM NO	(2) SMR CODE	(3) NSN	(4) CAGEC	(5) PART NUMBER	(6) DESCRIPTION AND USABLE ON CODES (UOC)	(7) QTY
					GROUP 1204	
					FIG. 148 HYDRAULIC BRAKE SYSTEM – FRONT HYDRAULIC BRAKE LINES AND FITTINGS	
1	PFOZZ	4730-01-241-4665	64678	916017 100000	CLAMP,HOSE	3
2	PFOZZ	5340-12-179-6964	D8236	1075	CLAMP,LOOP	2
3	PAOZZ	4720-01-241-8797	D2456	380E.56.0F	HOSE ASSEMBLY,NONME	2
4	PFOZZ	5340-01-313-4012	64678	416 351 01 45	CLAMP,BRIDGE	1
5	PFOZZ	5305-01-155-5439	56161	10501757	SCREW,CAP,HEXAGON H	1
6	PFOZZ	4710-01-241-5640	64678	406 420 13 49	TUBE,ASSEMBLY,METAL	3
7	PFOZZ	5306-01-243-9376	64678	000933 008168	BOLT,MACHINE	1
8	PFOZZ	5306-01-171-4685	64678	000931 008254	BOLT,MACHINE	1
9	PFOZZ	4730-01-241-2920	64678	3.9305-0501.3	TEE,TUBE	2
10	PAOZZ	5340-01-260-8887	64678	416 432 07 40	BRACKET,DOUBLE ANGL	1
11	PFOZZ	5310-01-239-3536	64678	913004 008004	NUT,SELF-LOCKING,HE	2
12	PFOZZ	4710-01-241-5641	64678	419 420 01 28	TUBE ASSEMBLY,METAL	1
13	PFOZZ	4730-01-242-4506	D1304	3.3511-1000.1	COUPLING,TUBE	1
14	PFOZZ	5310-01-250-4645	64678	000439 010206	NUT,PLAIN,HEXAGON	2
15	PFOZZ	5305-01-245-8754	64678	000933 010094	SCREW,CAP,HEXAGON H	2
16	PFOZZ	4730-01-241-2921	D1304	3.3513-0300.1	TEE,TUBE	3
17	PFOZZ	5340-01-312-2434	64678	406 330 01 74	STRAP,RETAINING	2
18	PFOZZ	4710-01-241-5639	64678	406 420 46 45	TUBE ASSEMBLY,METAL	1
19	PAOZZ	5340-01-391-2786	64678	000 428 04 73	CLIP,RETAINING	2
20	PFOZZ	4720-01-237-1742	64678	002 428 6035	HOSE ASSEMBLY,NONME	2
21	PFOZZ	4710-01-241-5387	64678	340 420 12 29	TUBE,METALLIC	1
22	PFOZZ	4720-01-236-0596	64678	340 420 13 29	HOSE,METALLIC 6X0.7X800 MM	1
23	PFOZZ	5306-01-255-1006	15526	933 M8 50 F	BOLT,MACHINE	1
24	PFOZZ	5310-01-237-5224	64678	000125 008413	WASHER,FLAT	1
25	PFOZZ	4710-01-241-5386	64678	340 420 08 29	TUBE,METALLIC 6X0.7X550 MM	5
26	PFOZZ	5340-12-179-6962	D8046	603 428 02 84	CLAMPBLOCK,HINGE CO	3
27	PAOZZ	5342-01-241-6066	64678	424 428 00 73	BRACKET,BRAKE HOSE	4
28	PFOZZ	4720-01-241-2934	64678	416 428 00 35	HOSE ASSEMBLY,NONME	4
29	PFOZZ	5340-01-246-1848	64678	416 335 03 46	BRACKET,ANGLE	1
30	PFOZZ	4710-01-241-5385	64678	340 420 10 29	TUBE ASSEMBLY,METAL 6X0.7X650 MM	2
31	PFOZZ	4710-01-241-3982	64678	340 420 06 29	TUBE,METALLIC 6X0.7X450 MM	2
32	PFOZZ	5340-01-312-9999	64678	406 428 00 40	BRACKET,DOUBLE ANGLE	1

(1) ITEM NO	(2) SMR CODE	(3) NSN	(4) CAGEC	(5) PART NUMBER	(6) DESCRIPTION AND USABLE ON CODES (UOC)	(7) QTY
33	PFOZZ	5310-01-241-6345	15526	934 8 M8X1.25 C	NUT,PLAIN,HEXAGON	1
34	PFOZZ	5310-01-174-0436	S3465	4537800-128	WASHER,SPRING TENSI	1
35	PFOZZ	4710-01-241-3983	64678	340 420 05 29	TUBE,METALLIC 6X0.7X400 MM	1
36	PFOZZ	5340-01-244-1135	64678	416 335 04 46	BRACKET,ANGLE	1
37	PFOZZ	5306-01-174-0372	S3465	4536226-822	BOLT,MACHINE	2
38	XDOZZ		64678	421 295 00 40	BRACKET,ANGLE	1
39	PFOZZ	5310-01-171-4689	S3465	4536226-786	NUT,PLAIN,HEXAGON	2
					END OF FIGURE	

UNIT, DIRECT SUPPORT AND GENERAL SUPPORT MAINTENANCE

SMALL EMPLACEMENT EXCAVATOR (SEE) AND HIGH MOBILITY MATERIAL HANDLER (HMMH)

HYDRAULIC BRAKE SYSTEM – REAR HYDRAULIC BRAKE LINES AND FITTINGS

REPAIR PARTS LIST

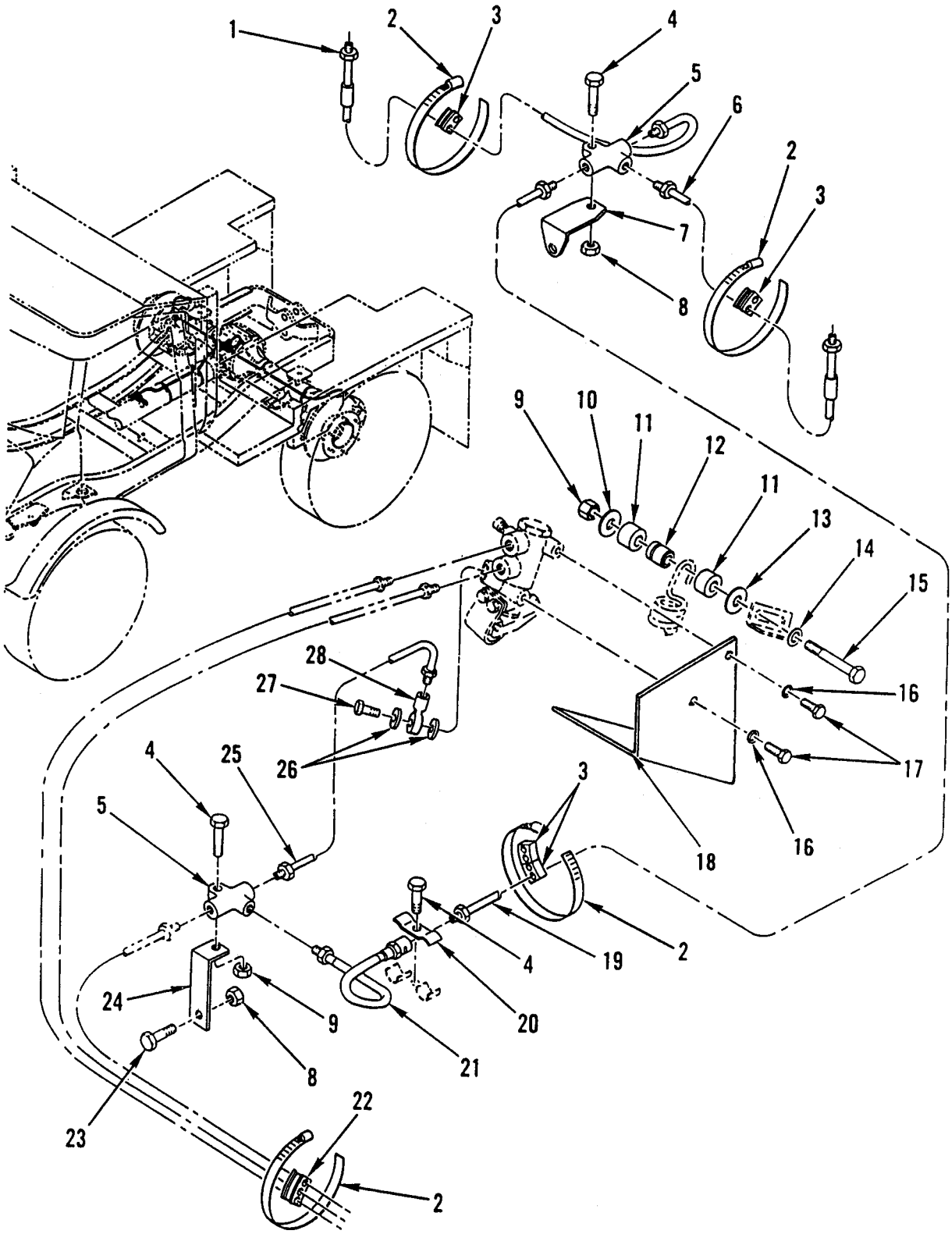

Figure 149. Hydraulic Brake System – Rear Hydraulic Brake Lines and Fittings.

(1) ITEM NO	(2) SMR CODE	(3) NSN	(4) CAGEC	(5) PART NUMBER	(6) DESCRIPTION AND USABLE ON CODES (UOC)	(7) QTY
					GROUP 1204	
					FIG. 149 HYDRAULIC BRAKE SYSTEM – REAR HYDRAULIC BRAKE LINES AND FITTINGS	
1	PFOZZ	4710-01-241-5644	64678	340 420 20 29	TUBE ASSEMBLY,METAL	1
2	PFOZZ	4730-01-241-2954	64678	916017 070000	CLAMP,HOSE	4
3	PFOZZ	5340-12-179-6963	C0781	603 428 01 84	CLAMP,LOOP	4
4	PFOZZ	5306-01-176-1338	S3465	4537800-245	BOLT,MACHINE	3
5	PFOZZ	4730-01-241-2921	D1304	3.3513-0300.1	TEE,TUBE	1
6	PFOZZ	4710-01-241-5645	64678	340 420 25 29	TUBE ASSEMBLY,METAL	1
7	PFOZZ	5340-01-244-1138	64678	406 420 26 86	BRACKET,DOUBLE ANGL	1
8	PFOZZ	5310-01-241-6345	15526	934 8 M8X1.25 C	NUT,PLAIN,HEXAGON	2
9	PFOZZ	5310-01-239-3536	64678	913004 008004	NUT,SELF-LOCKING,HE	2
10	PFOZZ	5310-01-250-6258	15526	9021 8 S	WASHER,FLAT	1
11	PFOZZ	5365-01-299-2931	64678	4194260050	SPACER,SLEEVE	2
12	PFOZZ	3830-01-241-3629	64678	421 423 00 28	SLIDE	1
13	PFOZZ	5310-01-290-6232	64678	419 426 03 76	WASHER,FLAT	1
14	PFOZZ	5310-01-237-5224	64678	000125 008413	WASHER,FLAT	1
15	PFOZZ	5305-12-186-8095	15526	931 M8 55P	SCREW,CAP,HEXAGON H	1
16	PFOZZ	5310-01-174-0436	S3465	4537800-128	WASHER,SPRING TENSI	2
17	PFOZZ	5306-01-168-7889	S3465	4537800-791	BOLT,MACHINE	2
18	PFOZZ	5340-01-249-9678	64678	406 429 00 47	BRACKET,ANGLE UOC:GE1	1
19	PFOZZ	4710-01-241-5646	64678	340 420 14 29	TUBE ASSEMBLY,METAL	1
20	PFOZZ	5340-01-244-1599	64678	000 995 03 68	STRAP,RETAINING	2
21	PAOZZ	4720-01-241-8797	D2456	380E.56.OF	HOSE ASSEMBLY,NONME	1
22	PFOZZ	5340-12-179-6962	C0781	603 428 02 84	CLAMPBLOCK,HINGE CO	2
23	PFOZZ	5306-01-174-7550	S3465	4537800-129	BOLT,MACHINE	1
24	PFOZZ	5340-01-312-9555	64678	425 542 04 40	BRACKET,ANGLE	1
25	PFOZZ	4710-01-359-1221	64678	340 420 01 29	TUBE ASSEMBLY,METAL 200 MM	1
26	PFOZZ	5330-12-156-4523	D8286	A14X20DIN7603 CU	GASKET	2
27	PFOZZ	4730-01-241-2949	D1304	3.3520-1001	BOLT,FLUID PASSAGE	1
28	PAOZZ	4730-01-256-9162	D1304	3.3521-09001.6	CONNECTOR,MULTIPLE	1
					END OF FIGURE	

UNIT, DIRECT SUPPORT AND GENERAL SUPPORT MAINTENANCE

SMALL EMPLACEMENT EXCAVATOR (SEE) AND HIGH MOBILITY MATERIAL HANDLER (HMMH)

HYDRAULIC BRAKE SYSTEM – PROPORTIONAL BRAKE VALVE (ALB VALVE) 001 431 78 12

REPAIR PARTS LIST

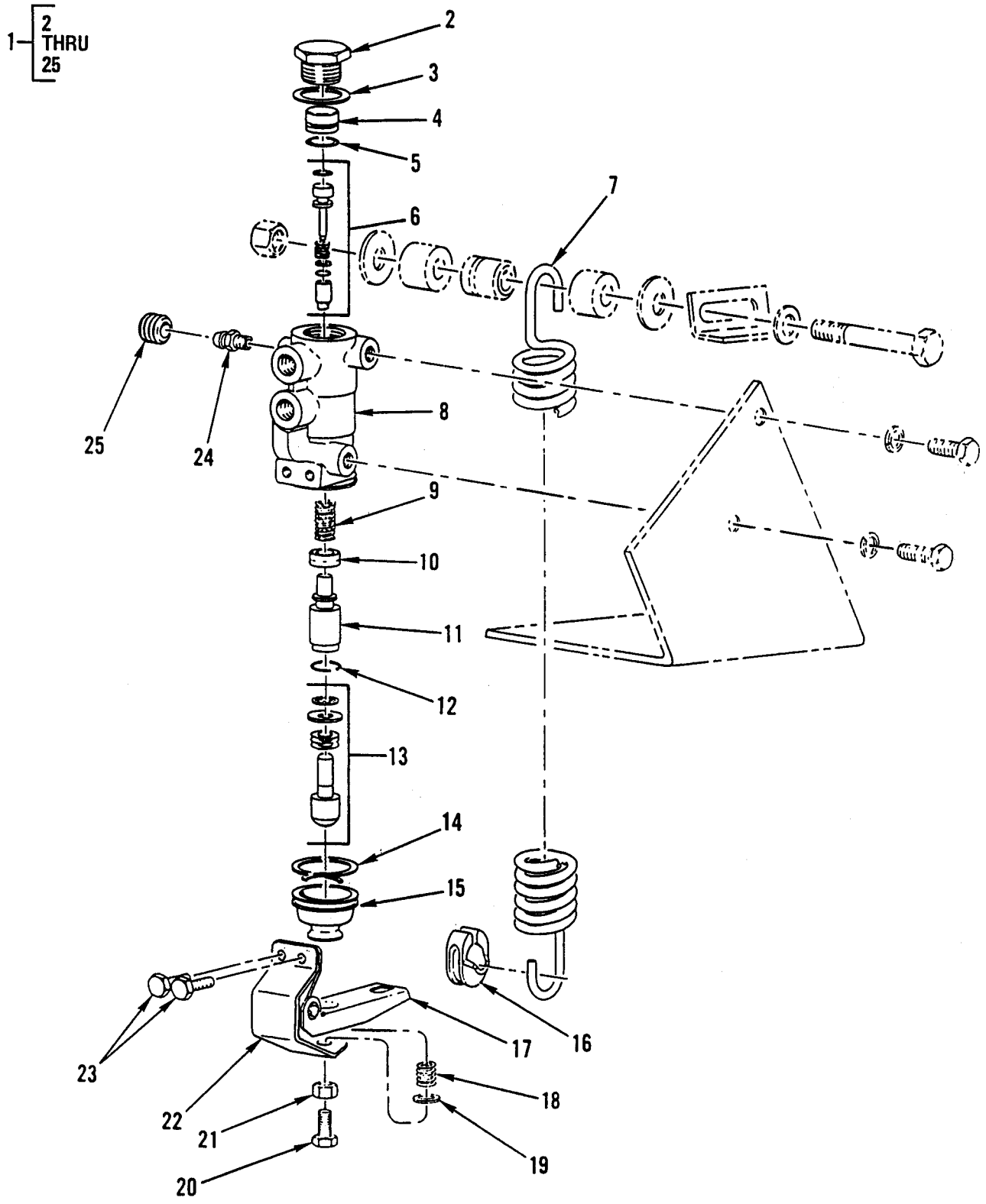

Figure 150. Hydraulic Brake System – Proportional Brake Valve (ALB Valve).

(1) ITEM NO	(2) SMR CODE	(3) NSN	(4) CAGEC	(5) PART NUMBER	(6) DESCRIPTION AND USABLE ON CODES (UOC)	(7) QTY
					GROUP 1204	
					FIG. 150 HYDRAULIC BRAKE SYSTEM – VALVE, BRAKE, PROPORTIONAL, (ALB VALVE) 001 431 78 12	
1	PAFFF	2530-01-241-4725	64678	001 431 78 12	VALVE,BRAKE,PROPORT	1
2	XAFZZ		19207	NPN-087	.PLUG	1
3	KFFZZ		D8096	A22X27DIN7603-CU	.SEAL,RING PART OF KIT P/N 468 402 001 2	1
4	XAFZZ		19207	NPN-088	.PISTON	1
5	KFFZZ		D8096	884 025 023 4	.PACKING,PREFORMED PART OF KIT P/N 468 402 001 2	1
6	XAFZZ		19207	NPN-089	.PISTON ASSEMBLY	1
7	XAFZZ		D8096	896 101 010 4	.SPRING UOC:GE1	1
8	XAFZZ		19207	NPN-090	.BODY,VALVE	1
9	XAFZZ		D8096	886 043 700 4	.SPRING	1
10	KFFZZ		D8096	897 150 727 4	.RING,SLOTTED PART OF KIT P/N 468 402 001 2	1
11	XAFZZ		19207	NPN-091	.PISTON	1
12	KFFZZ		D8096	B14 DIN 7993-ZN	.RING,SNAP PART OF KIT P/N 468 402 001 2	1
13	XAFZZ		19207	NPN-092	.BOLT,ASSEMBLY	1
14	XAFZZ		D8096	896 171 140 4	.RING,RETAINING	1
15	KFFZZ		D8096	897 753 290 4	.CAP,PROTECTIVE PART OF KIT P/N 468 402 001 2	1
16	KFFZZ		D8096	468 403 261 4	.RING PART OF KIT P/N 468 402 001 2	1
17	XAFZZ		D8096	468 403 050 4	.LEVER	1
18	XAFZZ		19207	NPN-093	.SPRING	1
19	XAFZZ		19207	NPN-094	.WASHER	1
20	XAFZZ		19207	DIN933-8.8-ZN	.SCREW,ADJUSTING	1
21	XAFZZ		19207	NPN-095	.NUT,LOCKING	1
22	XAFZZ		19207	NPN-096	.HOLDER,VALVE	1
23	XAFZZ		19207	DIN933-8.8-ZN	.SCREW,CAP,HEXAGON H	2
24	XAFZZ		19207	891 350 431 4	.SCREW,VENT	1
25	KFFZZ		D8096	898 012 000 4	.CAP,PROTECTIVE PART OF KIT P/N 468 402 001 2	1
					END OF FIGURE	

UNIT, DIRECT SUPPORT AND GENERAL SUPPORT MAINTENANCE

SMALL EMPLACEMENT EXCAVATOR (SEE) AND HIGH MOBILITY MATERIAL HANDLER (HMMH)

HYDRAULIC BRAKE SYSTEM – CLUTCH RESERVOIR 000 431 83 02

REPAIR PARTS LIST

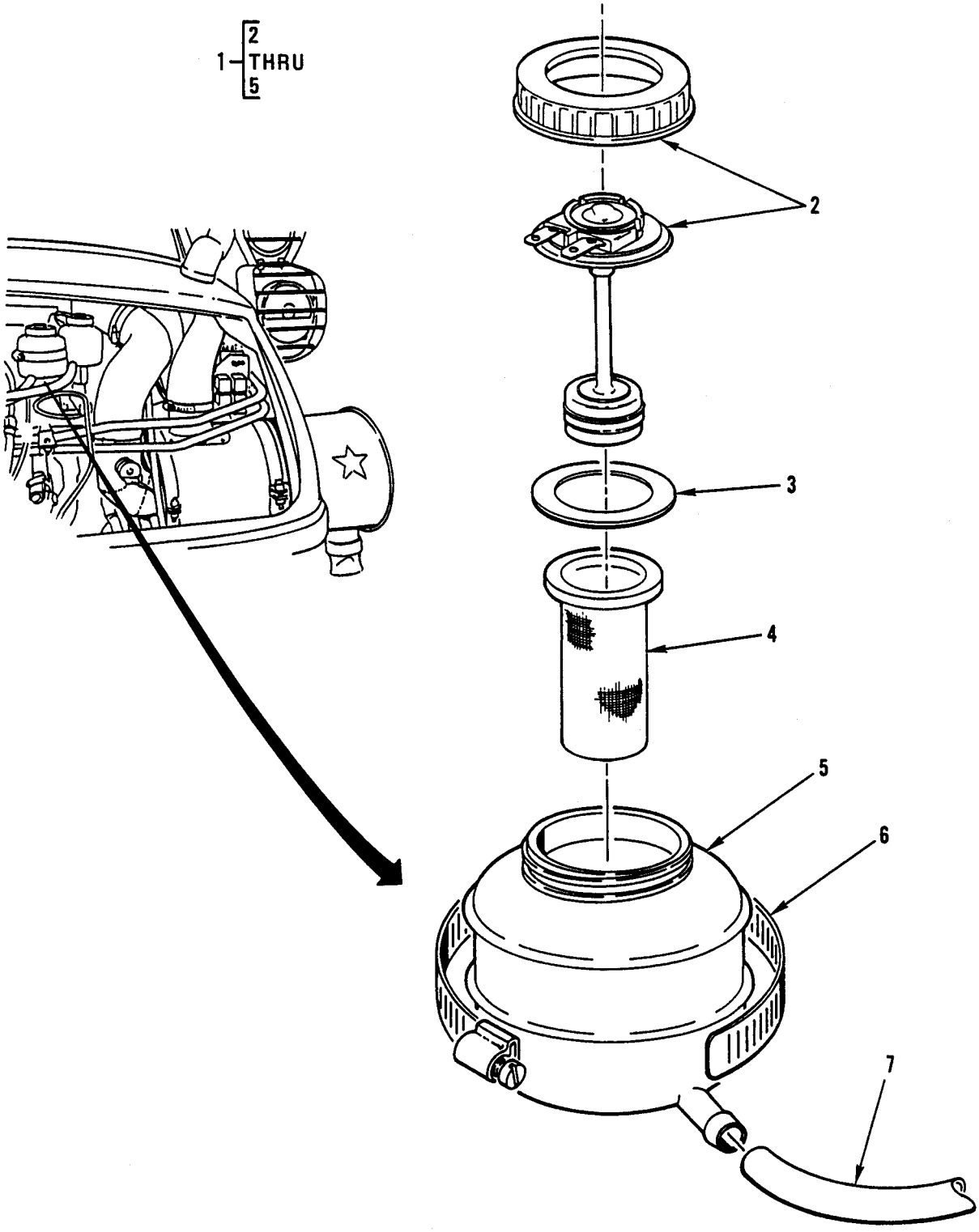

Figure 151. Hydraulic Brake System – Clutch Reservoir.

(1) ITEM NO	(2) SMR CODE	(3) NSN	(4) CAGEC	(5) PART NUMBER	(6) DESCRIPTION AND USABLE ON CODES (UOC)	(7) QTY
					GROUP 1204	
					FIG. 151 HYDRAULIC BRAKE SYSTEM – RESERVOIR,CLUTCH 000 431 83 02	
1	PAOOO	2530-01-237-6373	64678	001 431 83 02	RESERVOIR,CLUTCH	1
2	PFOZZ	2930-01-291-1429	64678	000 431 57 33	.CAP,FILLER OPENING.....	1
3	PFOZZ	5330-12-127-1802	D1304	3.3501-0200.1	.PACKING,PREFORMED.....	1
4	PFOZZ	4730-01-236-7053	64678	000 431 31 34	.STRAINER.....	1
5	XAOZZ		19207	NPN-097	.RESERVOIR.....	1
6	PAOZZ	4730-01-241-2954	64678	916017 070000	CLAMP,HOSE	1
7	PAOZZ	4720-01-238-0192	64678	406 997 78 82	HOSE,NONMETALLIC	1
					END OF FIGURE	

UNIT, DIRECT SUPPORT AND GENERAL SUPPORT MAINTENANCE

SMALL EMPLACEMENT EXCAVATOR (SEE) AND HIGH MOBILITY MATERIAL HANDLER (HMMH)

MECHANICAL BRAKE SYSTEM – BRAKE PEDAL 406 290 02 18

REPAIR PARTS LIST

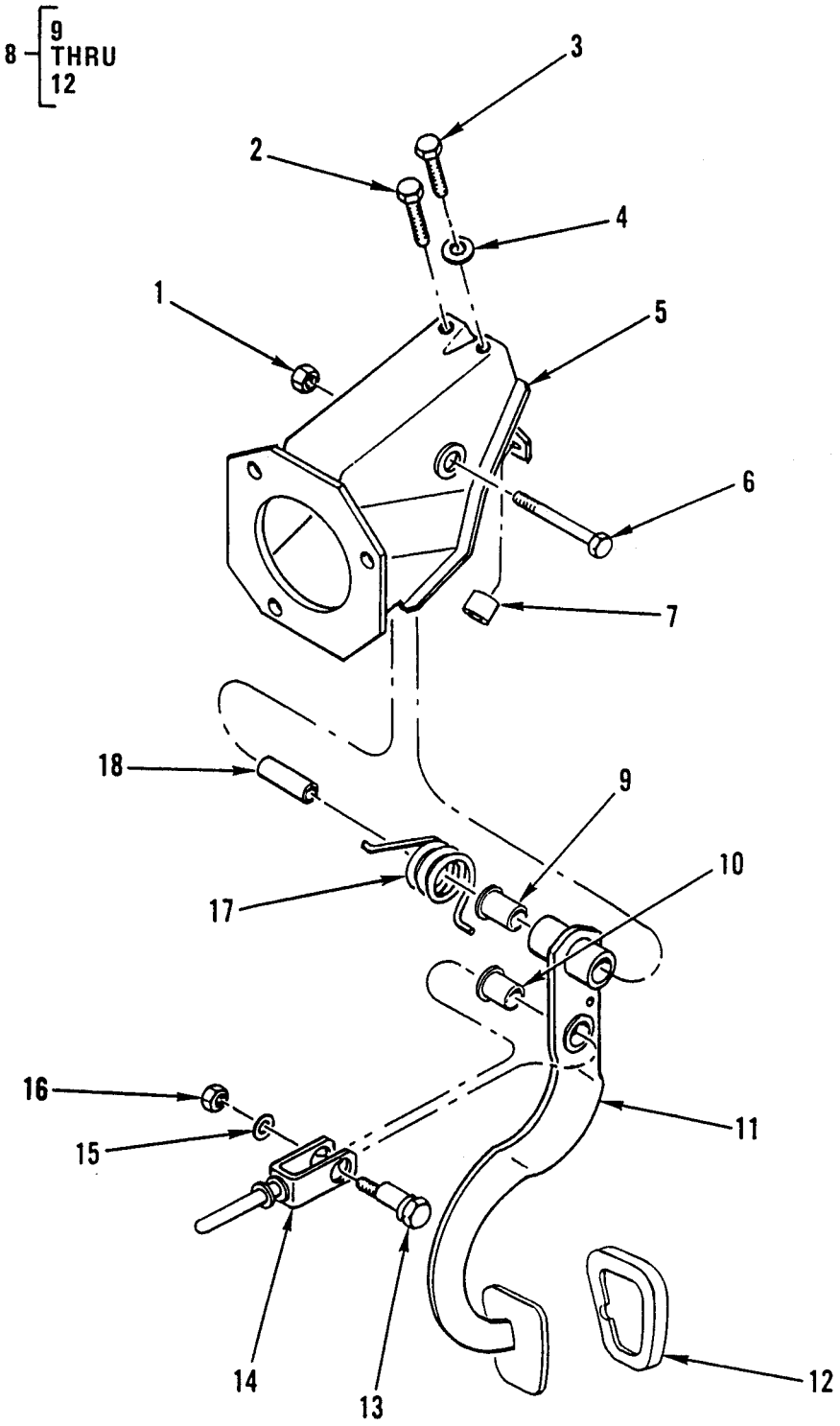

Figure 152. Mechanical Brake System – Brake Pedal.

(1) ITEM NO	(2) SMR CODE	(3) NSN	(4) CAGEC	(5) PART NUMBER	(6) DESCRIPTION AND USABLE ON CODES (UOC)	(7) QTY
					GROUP 1206	
					FIG. 152 MECHANICAL BRAKE SYSTEM – PEDAL,BRAKE 406 290 02 18	
1	PFOZZ	5310-01-239-3535	64678	913004 012008	NUT,SELF-LOCKING,HE	1
2	PFOZZ	5305-01-158-3212	56161	10501882	SCREW,CAP,HEXAGON H	1
3	PFOZZ	5306-01-174-7550	S3465	4537800-129	BOLT,MACHINE	1
4	PFOZZ	5310-01-237-5224	64678	000125 008418	WASHER,FLAT	2
5	PFOZZ	2590-01-237-3531	64678	404 290 04 33	BRACKET ASSEMBLY,VE	1
6	PFOZZ	5306-01-238-4548	64678	000960 012224	BOLT,MACHINE	1
7	PFOZZ	5365-01-241-1729	64678	404 291 00 86	BUSHING,NONMETALLIC	1
8	PAOOO	2540-01-237-3532	64678	406 290 02 18	PEDAL,BRAKE	1
9	PFOZZ	3120-01-238-5934	64678	110 291 05 50	.BEARING,SLEEVE	2
10	PFOZZ	3120-01-238-5939	64678	110 292 01 50	.BEARING,SLEEVE	2
11	XAOZZ		19207	NPN-098	.ARM,CONTROL	1
12	PCOZZ	2540-01-236-7319	64678	319 292 00 82	.PAD,PEDAL	1
13	PFOZZ	5306-01-240-5172	64678	110 295 05 71	BOLT,SHOULDER	1
14	PFOZZ	5340-01-244-4797	64678	406 290 09 39	CLEVIS,ROD END	1
15	PFOZZ	5310-01-174-0436	S3465	4537800-128	WASHER,SPRING TENSI	1
16	PFOZZ	5310-01-384-2159	64678	000934 008020	NUT,PLAIN,HEXAGON	1
17	PFOZZ	5360-01-242-2199	64678	406 993 50 10	SPRING,HELICAL,TORS	1
18	PFOZZ	3120-01-240-2701	64678	111 292 01 50	BUSHING,SLEEVE	1
					END OF FIGURE	

UNIT, DIRECT SUPPORT AND GENERAL SUPPORT MAINTENANCE

SMALL EMPLACEMENT EXCAVATOR (SEE) AND HIGH MOBILITY MATERIAL HANDLER (HMMH)

AIR BRAKE SYSTEM – AIR PRESSURE TANKS

REPAIR PARTS LIST

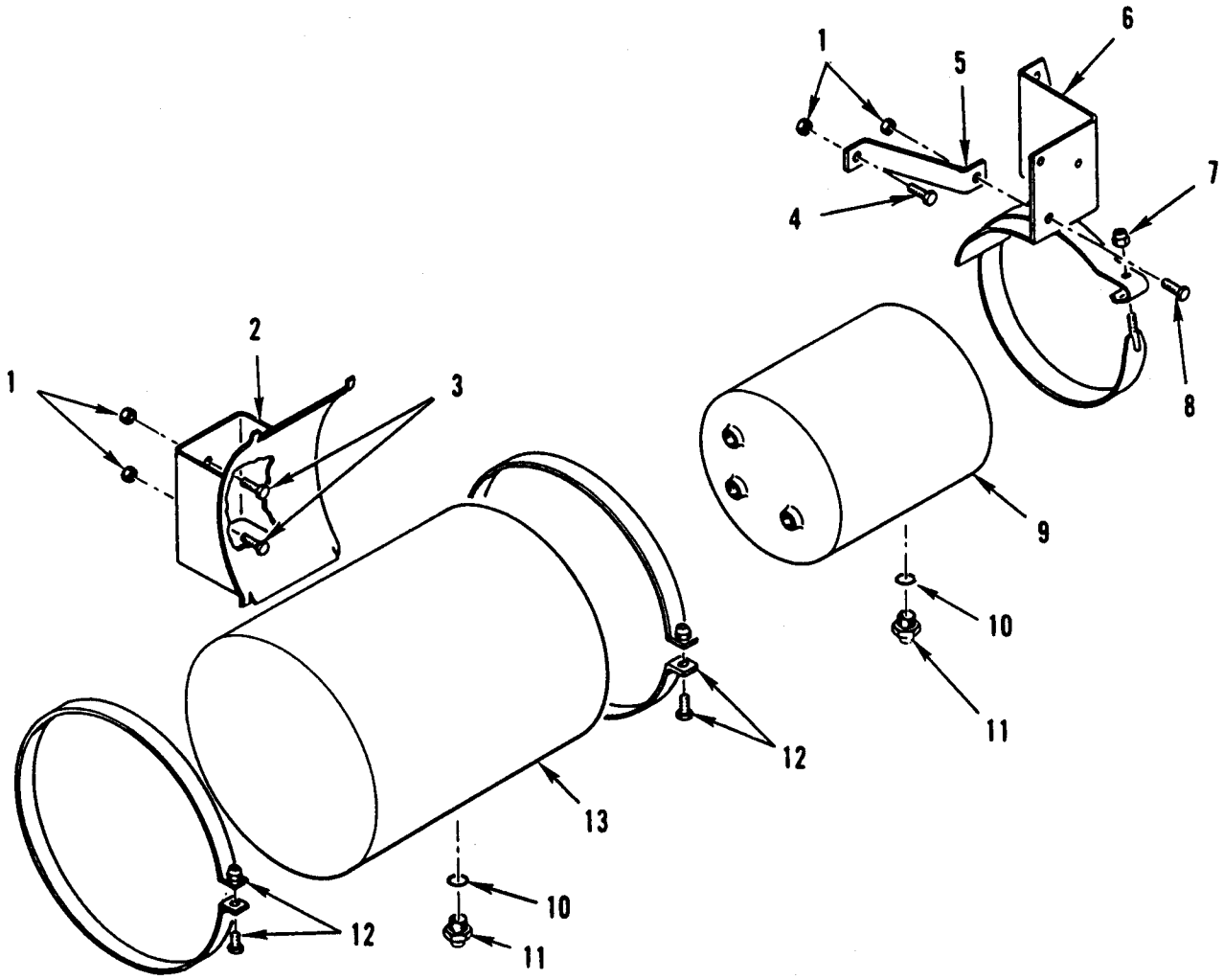

Figure 153. Air Brake System – Air Pressure Tanks.

(1) ITEM NO	(2) SMR CODE	(3) NSN	(4) CAGEC	(5) PART NUMBER	(6) DESCRIPTION AND USABLE ON CODES (UOC)	(7) QTY
					GROUP 1208	
					FIG. 153 AIR BRAKE SYSTEM – AIR PRESSURE TANKS	
1	PFOZZ	5310-01-167-1863	S3465	4537800-712	NUT,PLAIN,HEXAGON	4
2	PFOZZ	5342-01-240-8545	64678	419 420 01 86	BRACKET,ENGINE ACCE	1
3	PFOZZ	5305-12-156-4872	D8286	DIN933-M10X25-8.8-A3P	SCREW,CAP,HEXAGON H	2
4	PFOZZ	5306-01-158-9917	1FH08	DIN933M10X20	BOLT,MACHINE	1
5	PAOZZ	5340-01-265-8919	64678	419 426 01 40	BRACKET,DOUBLE ANGL	1
6	PFOZZ	2940-01-241-3084	64678	419 420 00 86	BRACKET,INTAKE AIR	1
7	PFOZZ	5310-01-238-3198	15526	934 M10X1.5C	NUT,PLAIN,HEXAGON	1
8	PAOZZ	5305-01-268-0895	64678	000933010198	SCREW,CAP,HEXAGON H	1
9	PFOZZ	2530-01-241-0059	D8046	421 432 09 15	TANK,PRESSURE	1
10	PFOZZ	5330-01-174-7588	S3465	4537800-115	PACKING,PREFORMED	3
11	PAOZZ	4820-12-178-1165	64678	000 432 24 07	COCK,DRAIN	3
12	PFOZZ	4730-01-241-2952	64678	900288-307100	CLAMP,HOSE	2
13	PFOZZ	2530-01-241-3209	64678	421 432 10 15	TANK,PRESSURE	1
					END OF FIGURE	

UNIT, DIRECT SUPPORT AND GENERAL SUPPORT MAINTENANCE

SMALL EMPLACEMENT EXCAVATOR (SEE) AND HIGH MOBILITY MATERIAL HANDLER (HMMH)

AIR BRAKE SYSTEM – AIR SYSTEM VALVES, LINES, AND FITTINGS

REPAIR PARTS LIST

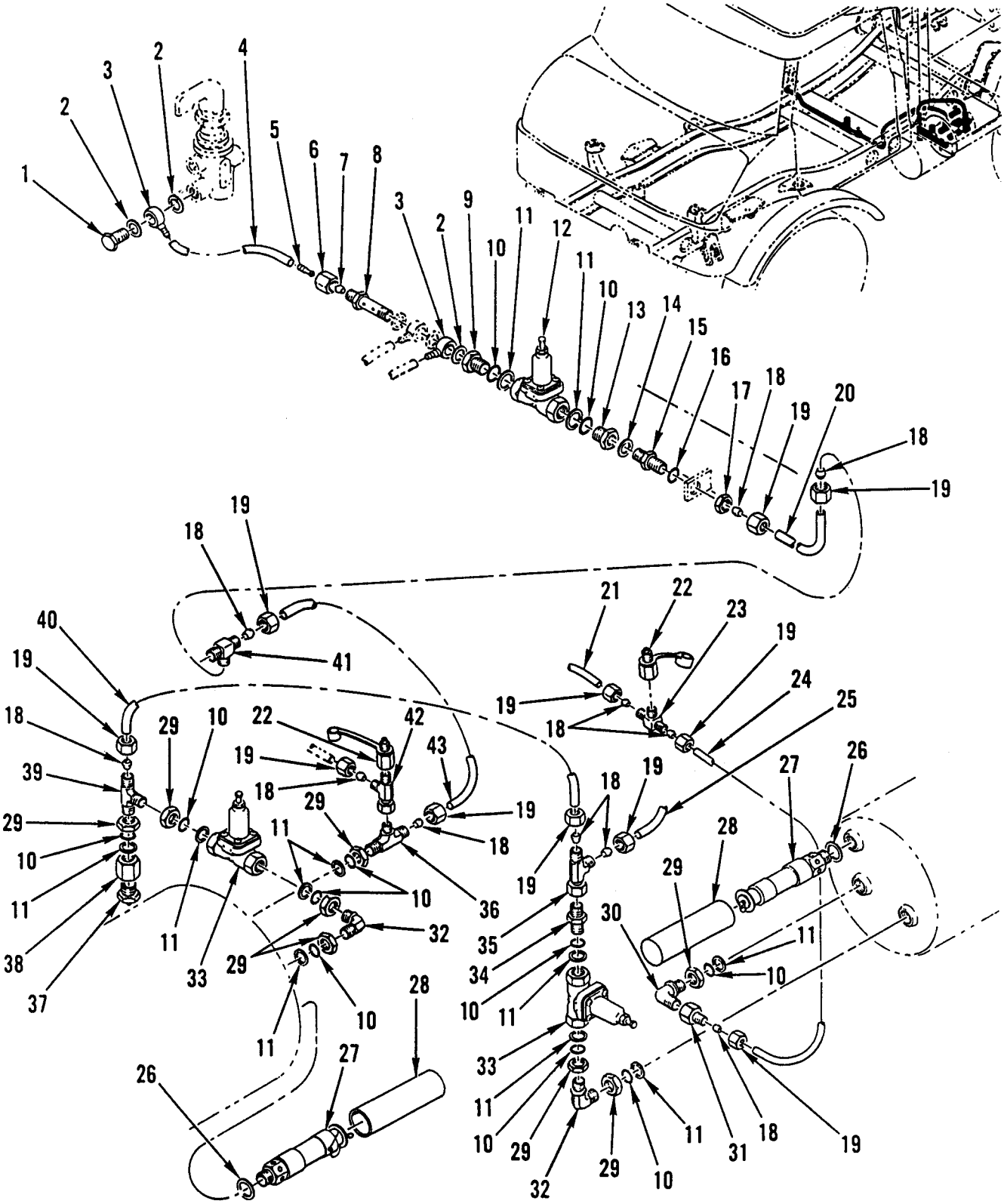

Figure 154. Air Brake System – Air System Valves, Lines, and Fittings.

(1) ITEM NO	(2) SMR CODE	(3) NSN	(4) CAGEC	(5) PART NUMBER	(6) DESCRIPTION AND USABLE ON CODES (UOC)	(7) QTY
					GROUP 1208	
					FIG. 154 AIR BRAKE SYSTEM – AIR SYSTEM VALVES, LINES, AND FITTINGS	
1	PFOZZ	5305-01-312-9971	64678	915036 006202	SCREW,CAP,HEXAGON,H.....	1
2	PFOZZ	5330-01-171-4703	S3465	4536226-835	SEAL RING,METAL.....	2
3	PFOZZ	4730-01-313-4053	64678	915052 004016	CONNECTOR,MULTIPLE, ...	1
4	MOOZZ		64678	008 997 60 82X 997	HOSE MAKE FROM CAGE 64678 P/N 008 997 60 82, CUT TO 997 MM.....	1
5	PFOZZ	4730-01-236-6992	64678	915062 004000	SLEEVE,FLARED,TUBE	1
6	PFOZZ	4730-01-237-0071	64678	915017 006100	NUT,UNION.....	1
7	PFOZZ	4730-01-241-6951	15526	3861 D 6S	SLEEVE,COMPRESSION	1
8	PFOZZ	4730-01-332-0204	64678	915040 010202	BOLT,FLUID PASSAGE	1
9	PFOZZ	4730-01-317-8853	64678	000 990 49 68	REDUCER,BOSS	1
10	PAOZZ	5331-01-313-3569	64678	000 987 04 46	O-RING.....V	
11	PFOZZ	5330-12-122-4223	64678	000 429 02 27	RETAINER,PACKING V	
12	PAOZZ	4820-01-299-0464	64678	001 429 64 44	VALVE,REGULATING,FL.....	1
13	PFOZZ	4730-01-241-1616	64678	000 990 51 68	REDUCER,BOSS	1
14	PFOZZ	3120-01-299-2934	64678	000 429 09 27	BEARING,WASHER,THRU	1
15	PFOZZ	4730-01-241-5486	64678	003910 010000	ADAPTER,STRAIGHT PI	1
16	PCOZZ	5330-01-238-5865	64678	000 997 13 48	O-RING.....	1
17	PFOZZ	5310-01-244-9920	64678	080705 016003	NUT,PLAIN,HEXAGON	1
18	PFFZZ	4730-01-241-4334	15526	3861 D 10S NP630	SLEEVE,COMPRESSION V	
19	PFFZZ	4730-01-241-4002	64678	915017 010100	NUT,UNION.....V	
20	MFFZZ		64678	000 429 23 01X 1300	LINE MAKE FROM CAGE 64678 P/N 000 429 23 01, CUT TO 1300MM UOC:GE1.....	1
21	MOOZZ		64678	000 429 23 01X 300	LINE MAKE FROM CAGE 64678 P/N 000 429 23 01, CUT TO 300 MM UOC:GE1.....	1
22	PFOZZ	4730-01-241-6618	D9596	2 68 305	COUPLING,HALF,SELF- WITH PROTECTIVE CAP	2
23	PFOZZ	4730-01-241-2929	64678	000 429 59 32	TEE,TUBE TO BOSS	1
24	MOOZZ		64678	000 429 23 01X 250	LINE MAKE FROM CAGE 64678 P/N 000 429 23 01, CUT TO 250 MM.....	1
25	MOOZZ		64678	400 206 01X580	LINE MAKE FROM CAGE 0FTJ6 P/N 400206, CUT TO 580 MM.....	1
26	PFOZZ	5365-00-148-1084	D8046	007603018104	RING,SEAL.....	2
27	PAOZZ	4810-01-241-9324	C3185	434 601 154 0	VALVE,SAFETY RELIEF.....	2

(1) ITEM NO	(2) SMR CODE	(3) NSN	(4) CAGEC	(5) PART NUMBER	(6) DESCRIPTION AND USABLE ON CODES (UOC)	(7) QTY
28	PAOZZ	5340-01-324-0468	64678	000 429 01 47	.CAP,PROTECTIVE,DUST.....	1
29	PFOZZ	5310-01-238-0640	64678	074305 022202	NUT,PLAIN,HEXAGON	7
30	PFOZZ	4730-01-241-8785	64678	000 990 77 71	ELBOW,TUBE	1
31	PFOZZ	4730-01-241-2924	64678	406 990 50 82	ADAPTER,STRAIGHT,TU	1
32	PFOZZ	4730-01-241-2916	64678	000 429 4638	ELBOW,TUBE	2
33	PFOFF	4810-01-241-4679	64678	002 429 25 44	VALVE,REGULATING,FL.....	2
34	PFOZZ	4730-01-240-4262	64678	074313 010100	NIPPLE,PIPE.....	1
35	PFOZZ	4730-01-240-9606	64678	003954 010100	TEE,PIPE.....	1
36	PFOZZ	4730-01-241-2922	64678	001 997 95 72	TEE,TUBE	1
37	PAOZZ	4820-12-178-1165	64678	000 432 24 07	COCK,DRAIN	1
38	PFOZZ	4730-01-240-9610	64678	000 429 07 34	COUPLING,TUBE	1
39	PFOZZ	4730-01-242-2860	D9596	8 53 252	TEE,TUBE TO BOSS	1
40	MOOZZ		64678	000 429 23 01X 450	HOSE MAKE FROM CAGE 64678 P/N 000 429 23 01, CUT TO 450 MM.....	1
41	PFOZZ	4730-01-247-4676	64678	003905 010002	ELBOW,PIPE.....	1
42	PFOZZ	4730-12-192-2223	D9596	162032	TEE,TUBE	1
43	MOOZZ		64678	000 429 23 01X 850	LINE MAKE FROM CAGE 64678 P/N 000 429 23 01, CUT TO 850 MM.....	1
					END OF FIGURE	

UNIT, DIRECT SUPPORT AND GENERAL SUPPORT MAINTENANCE

SMALL EMPLACEMENT EXCAVATOR (SEE) AND HIGH MOBILITY MATERIAL HANDLER (HMMH)

AIR BRAKE SYSTEM – BRAKE BOOSTER ASSEMBLY 000 431 74 14

REPAIR PARTS LIST

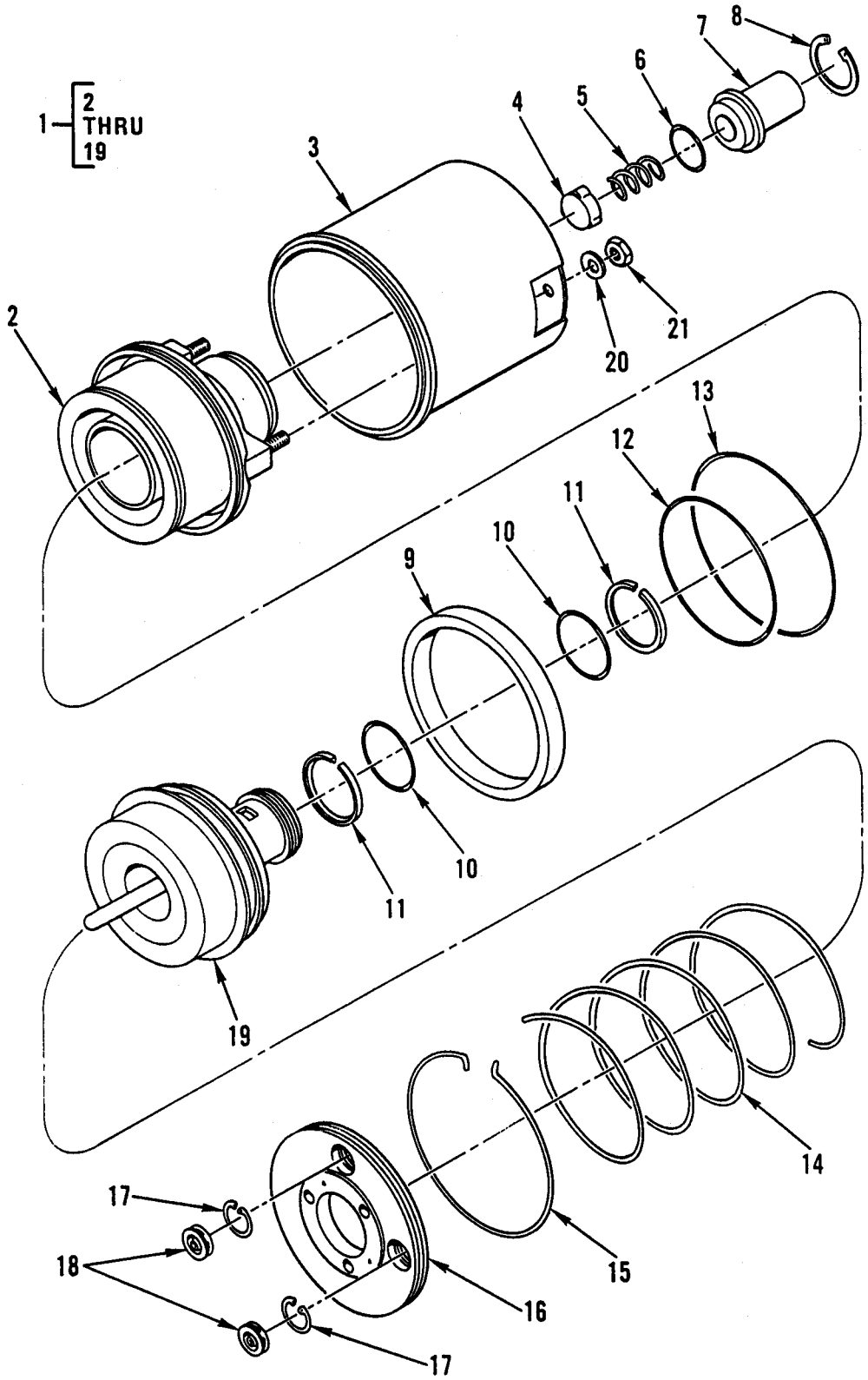

Figure 155. Air Brake System – Brake Booster Assembly.

(1) ITEM NO	(2) SMR CODE	(3) NSN	(4) CAGEC	(5) PART NUMBER	(6) DESCRIPTION AND USABLE ON CODES (UOC)	(7) QTY
					GROUP 1208	
					FIG. 155 AIR BRAKE SYSTEM – BRAKE BOOSTER ASSEMBLY 000 431 74 14	
1	PFOFF	2530-01-240-8539	64678	000 431 74 14	BRAKE BOOSTER ASSEM.....	1
2	XAFZZ		D8956	462 007 015 2	.HOUSING.....	1
3	XAFZZ		D8956	462 007 573 4	.CASE.....	1
4	KFFZZ		D8956	899 500 676 2	.VALVE PART OF KIT P/N 462 007 003 2	1
5	KFFZZ		D8956	896 013 630 4	.SPRING,PRESSURE PART OF KIT P/N 462 007 003 2.....	1
6	KFFZZ		D8956	897 080 880 4	.PACKING,PREFORMED 33.3X294 PART OF KIT P/N 462 007 003 2	1
7	XAFZZ		D8956	462 007 388 4	.THRUST PIECE	1
8	KFFZZ		D8956	810 518 028 4	.RING,RETAINING 42X1.75 DIN 472 PART OF KIT P/N 462 007 003 2	1
9	KFFZZ		D8956	897 151 490 4	.RING,GROOVED,PKG R PART OF KIT P/N 462 007 003 2.....	1
10	KFFZZ		D8956	897 080 460 4	.PACKING,PREFORMED 49.2X3 PART OF KIT P/N 462 007 003 2	2
11	XAFZZ		D8956	462 007 264 4	.RING.....	2
12	KFFZZ		D8956	897 080 480 4	.PACKING,PREFORMED 109.2X5.7 PART OF KIT P/N 462 007 003 2	1
13	KFFZZ		D8956	897 070 120 4	.PACKING,PREFORMED 140X3 PART OF KIT P/N 462 007 003 2	1
14	KFFZZ		D8956	816 028 521 4	.SPRING PART OF KIT P/N 462 007 003 2....	1
15	KFFZZ		D8956	462 007 263 4	.RING PART OF KIT P/N 462 007 003 2.....	1
16	XAFZZ		D8956	462 007 500 2	.FLANGE	1
17	KFFZZ		D8956	810 518 015 4	.RING,RETAINING PART OF KIT P/N 462 007 003 2.....	2
18	KFFZZ		D8956	462 007 600 2	.VALVE PART OF KIT P/N 462 007 003 2	2
19	XAFZZ		D8956	462 903 628 4	.HOUSING.....	1
20	PFOZZ	5310-01-237-7658	64678	912004 010102	WASHER,LOCK	3
21	PFOZZ	5310-01-238-3198	15526	934 M10X1.5C	NUT,PLAIN,HEXAGON	3
					END OF FIGURE	

UNIT, DIRECT SUPPORT AND GENERAL SUPPORT MAINTENANCE

SMALL EMPLACEMENT EXCAVATOR (SEE) AND HIGH MOBILITY MATERIAL HANDLER (HMMH)

AIR BRAKE SYSTEM – ANTIFREEZE LINES AND FITTINGS

REPAIR PARTS LIST

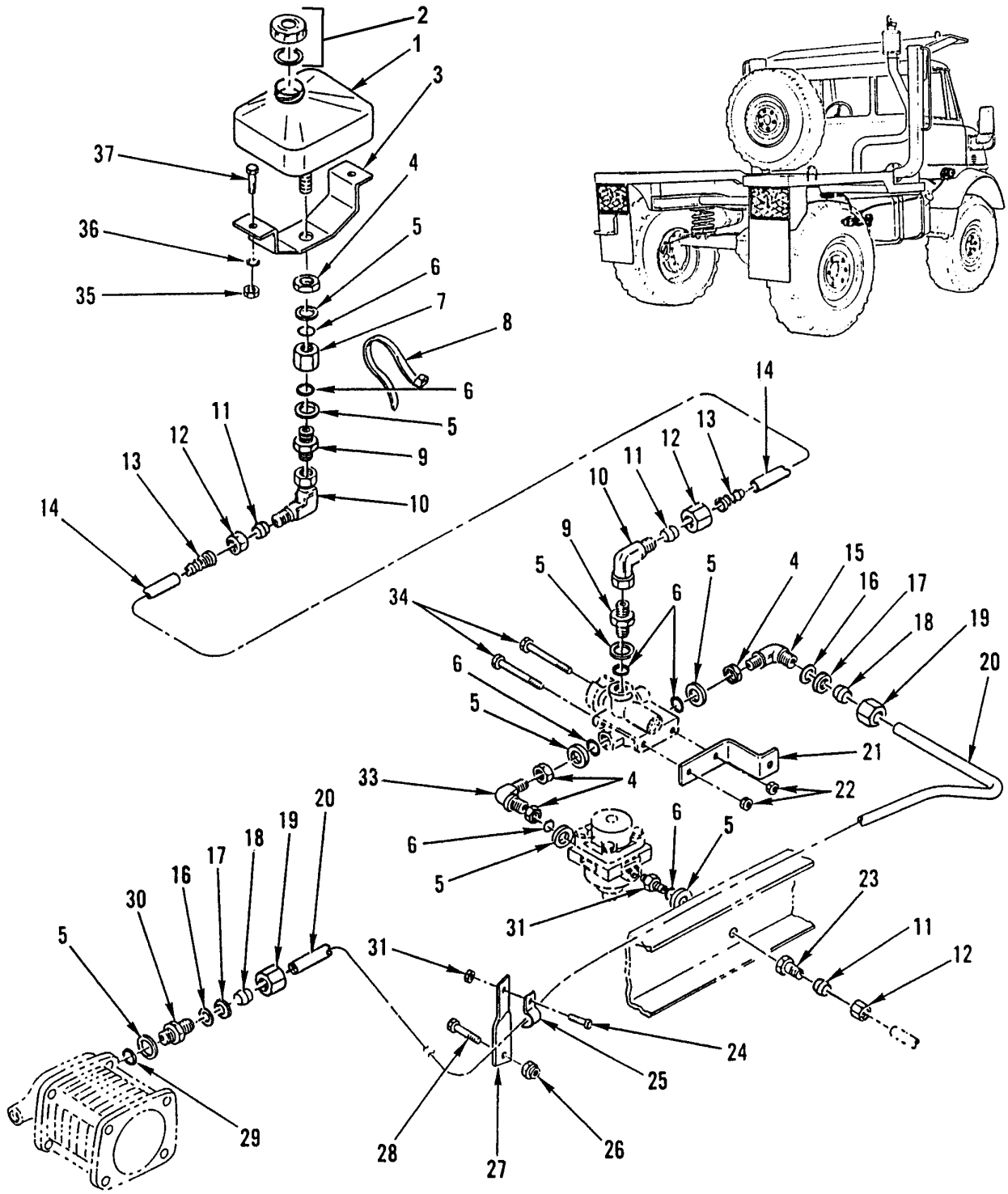

Figure 156. Air Brake System – Antifreeze Lines and Fittings.

(1) ITEM NO	(2) SMR CODE	(3) NSN	(4) CAGEC	(5) PART NUMBER	(6) DESCRIPTION AND USABLE ON CODES (UOC)	(7) QTY
					GROUP 1208	
					FIG. 156 AIR BRAKE SYSTEM – ANTIFREEZE LINES AND FITTINGS	
1	PFOZZ	2930-01-240-9861	D9648	PK 33 949-2	TANK	1
2	PAOZZ	2930-01-457-5602	64678	000 431 783304	.CAP AND GASKET UOC:GE1	1
3	PFOZZ	5340-01-265-8920	64678	419 426 08 40	BRACKET,DOUBLE ANGL	1
4	PFOZZ	5310-01-238-0640	64678	074305 022202	NUT,PLAIN,HEXAGON	4
5	PFOZZ	5330-12-122-4223	64678	000 429 02 27	RETAINER,PACKING	8
6	PAOZZ	5331-01-313-3569	64678	000 987 04 46	O-RING	7
7	PFOZZ	4730-01-240-9610	64678	000 429 07 34	COUPLING,TUBE UOC:GE1	1
8	PFOZZ	5340-01-240-5728	64678	001 997 83 90	STRAP,LINE SUPPORTI	V
9	PFOZZ	4730-01-240-4262	64678	074313 010100	ADAPTER,STRAIGHT,TU	2
10	PFOZZ	4730-01-241-1607	64678	003952 010100	ELBOW,PIPE	2
11	PFOZZ	4730-01-241-4334	15526	3861 D 10S NP630	SLEEVE,COMPRESSION	3
12	PFOZZ	4730-01-241-4002	64678	915017 010100	NUT,UNION	3
13	PFOZZ	4730-01-241-4641	D9596	023131	ADAPTER,STRAIGHT,TU UOC:GE1	2
14	MOOZZ		64678	376 987 74 27X 360	PIPE,PLASTIC MAKE FROM CAGE 64678 P/N 376 987 74 27, CUT TO 360 MM	1
15	PFOZZ	5310-01-317-0347	06721	2X3127	NUT,PLAIN,HEXAGON	1
16	PFOZZ	5330-12-156-4523	D8286	A14X20DIN7603C U	GASKET	2
17	PFOZZ	5365-01-266-8292	64678	915065 015101	SPACER,RING	2
18	PFOZZ	4730-01-240-8663	15526	3861 D 15L NP250	SLEEVE,COMPRESSION	2
19	PFOZZ	4730-01-241-4003	64678	915018 015000	NUT,UNION	2
20	MOOZZ		64678	000 551 62 56X 2000	TUBE MAKE FROM CAGE 64678 P/N 000 551 62 56, CUT TO 2000 MM	V
21	PFOZZ	5340-01-260-8879	64678	419 426 05 40	BRACKET,ANGLE	1
22	PFOZZ	5310-01-266-9167	64678	913004 008005	NUT,PLAIN,HEXAGON	2
23	PFOZZ	4730-01-241-2924	64678	406 990 50 82	ADAPTER,STRAIGHT,TU	1
24	PFOZZ	5305-01-155-5439	56161	10501757	SCREW,CAP,HEXAGON H	1
25	PFOZZ	5340-01-266-2412	64678	312 995 24 20	STRAP,RETAINING	1
26	PFOZZ	5310-01-241-6349	64678	913004 006002	NUT,SELF-LOCKING,HE	1
27	PFOZZ	3040-01-241-4815	64678	419 426 04 40	CONNECTING LINK,RIG	1
28	PFOZZ	5305-12-156-4872	D8286	DIN933-M10X25-8.8-A3P	SCREW,CAP,HEXAGON H	1

(1) ITEM NO	(2) SMR CODE	(3) NSN	(4) CAGEC	(5) PART NUMBER	(6) DESCRIPTION AND USABLE ON CODES (UOC)	(7) QTY
29	PFOZZ	5331-01-257-9160	64678	013 997 22 48	O-RING	1
30	PFOZZ	4730-01-254-8687	64678	001 997 21 72	REDUCER,PIPE	1
31	PFOZZ	5310-01-167-1863	S3465	4537800-712	NUT,PLAIN,HEXAGON	1
32	PFOZZ	4730-01-250-9362	64678	002 997 13 72	COUPLING HALF,QUICK	1
33	PFOZZ	4730-01-241-2916	64678	000 429 4638	ELBOW,TUBE	1
34	PFOZZ	5305-01-334-9657	64678	000933 008328	SCREW,CAP,HEXAGON H	2
35	PFOZZ	5310-01-239-3536	64678	913004 008004	NUT,SELF-LOCKING	2
36	PFOZZ	5310-01-174-0436	S3465	4537800-128	WASHER,SPRING TENSI	2
37	PFOZZ	5306-01-168-7889	S3465	4537800-791	BOLT,MACHINE	2
					END OF FIGURE	

UNIT, DIRECT SUPPORT AND GENERAL SUPPORT MAINTENANCE

SMALL EMPLACEMENT EXCAVATOR (SEE) AND HIGH MOBILITY MATERIAL HANDLER (HMMH)

AIR BRAKE SYSTEM – FLUID REGULATING VALVE (WABCO) 975 303 447 0

REPAIR PARTS LIST

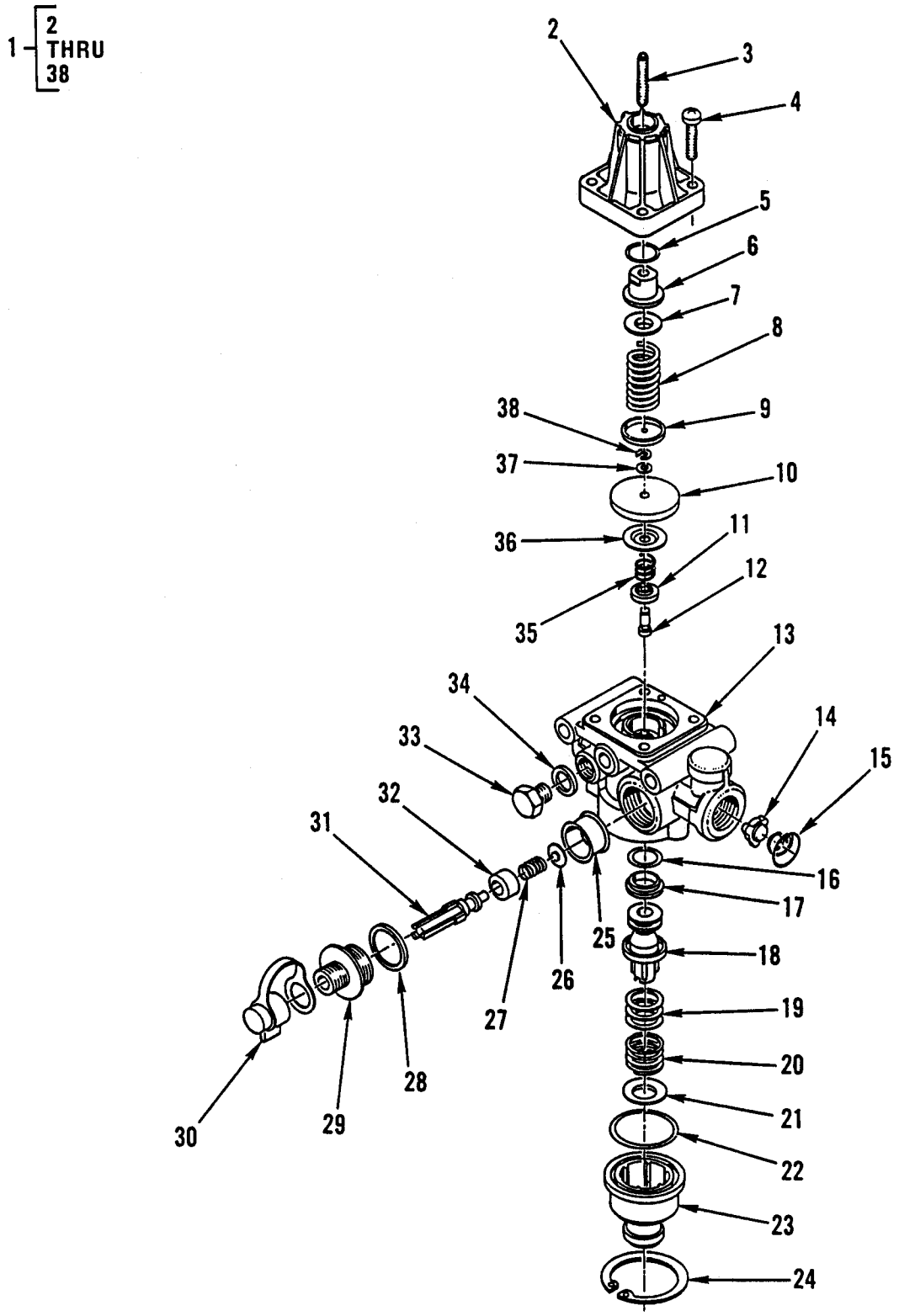

Figure 157. Air Brake System – Fluid Regulating Valve (WABCO).

(1) ITEM NO	(2) SMR CODE	(3) NSN	(4) CAGEC	(5) PART NUMBER	(6) DESCRIPTION AND USABLE ON CODES (UOC)	(7) QTY
					GROUP 1208	
					FIG. 157 AIR BRAKE SYSTEM – VALVE, REGULATING, FLUID (WABCO) 975 303 447 0	
1	PAOFF	4820-01-241-7288	65035	975 303 447 0	VALVE,REGULATING,FL	1
2	XAFZZ		D8096	975 303 650 4	.COVER	1
3	XAFZZ		D8096	810 208 016 4	.SCREW,ADJUSTING	1
4	XAFZZ		D8096	891 201 570 4	.SCREW,CAP,HEXAGON H	4
5	KFFZZ		D8096	897 070 890 4	.PACKING,PREFORMED PART OF KIT P/N 975 303 001 2	1
6	KFFZZ		D8096	975 303 430 4	.NUT PART OF KIT P/N 975 303 001 2	1
7	XAFZZ		D8096	895 072 550 4	.CAP	1
8	XAFZZ		D8096	896 514 410 4	.SPRING	1
9	XAFZZ		D8096	895 072 540 4	.CAP	1
10	KFFZZ		D8096	897 181 660 4	.DIAPHRAGM PART OF KIT P/N 975 303 001 2	1
11	KFFZZ		D8096	899 505 120 2	.VALVE PART OF KIT P/N 975 303 001 2	1
12	XAFZZ		D8096	975 303 621 2	.PISTON	1
13	XAFZZ		D8096	975 303 012 4	.HOUSING	1
14	KFFZZ		D8096	899 506 320 4	.VALVE PART OF KIT P/N 975 303 001 2	1
15	KFFZZ		D8096	896 053 180 4	.SPRING PART OF KIT P/N 975 303 001 2	1
16	KFFZZ		D8096	897 081 561 4	.PACKING,PREFORMED PART OF KIT P/N 975 303 001 2	1
17	KFFZZ		D8096	899 506 260 4	.VALVE PART OF KIT P/N 975 303 001 2	1
18	XAFZZ		D8096	975 303 622 4	.PISTON	1
19	KFFZZ		D8096	895 105 273 4	.SHIM	V
20	XAFZZ		D8096	896 514 420 4	.SPRING	1
21	XAFZZ		D8096	895 072 530 4	.CAP	1
22	KFFZZ		D8096	897 772 149 4	.PACKING,PREFORMED PART OF KIT P/N 975 303 001 2	1
23	XAFZZ		D8096	975 303 550 4	.HOUSING	1
24	KFFZZ		D8096	895 221 970 4	.RING,RETAINING PART OF KIT P/N 975 303 001 2	1
25	KFFZZ		D8096	899 381 070 4	.FILTER PART OF KIT P/N 975 303 001 2	1
26	XAFZZ		D8096	898 011 380 4	.CAP	1
27	XAFZZ		D8096	J896 515 730 4	.SPRING PART OF KIT P/N 975 303 001 2	1
28	KFFZZ		D8096	811 401 212 4	.GASKET PART OF KIT P/N 975 303 001 2	1
29	XAFZZ		D8096	893 104 300 4	.ADAPTER	1
30	XAFZZ		D8096	897 753 940 4	.CAP,PROTECTIVE	1

(1) ITEM NO	(2) SMR CODE	(3) NSN	(4) CAGEC	(5) PART NUMBER	(6) DESCRIPTION AND USABLE ON CODES (UOC)	(7) QTY
31	XAFZZ		D8096	975 303 771 4	.PLUNGER	1
32	KFFZZ		D8096	899 506 360 4	.VALVE PART OF KIT P/N 975 303 001 2	1
33	XAFZZ		D8096	893 010 030 4	.PLUG	1
34	XAFZZ		D8096	811 401 032 4	.GASKET	1
35	XAFZZ		19207	NPN-099	.SPRING	1
36	XAFZZ		19207	NPN-100	.CAP	1
37	XAFZZ		19207	NPN-101	.CAP	1
38	XAFZZ		19207	NPN-102	.CIRCLIP.....	1
					END OF FIGURE	

UNIT, DIRECT SUPPORT AND GENERAL SUPPORT MAINTENANCE

SMALL EMPLACEMENT EXCAVATOR (SEE) AND HIGH MOBILITY MATERIAL HANDLER (HMMH)

AIR BRAKE SYSTEM – FLUID REGULATING VALVE (BOSCH) 0 481 039 202

REPAIR PARTS LIST

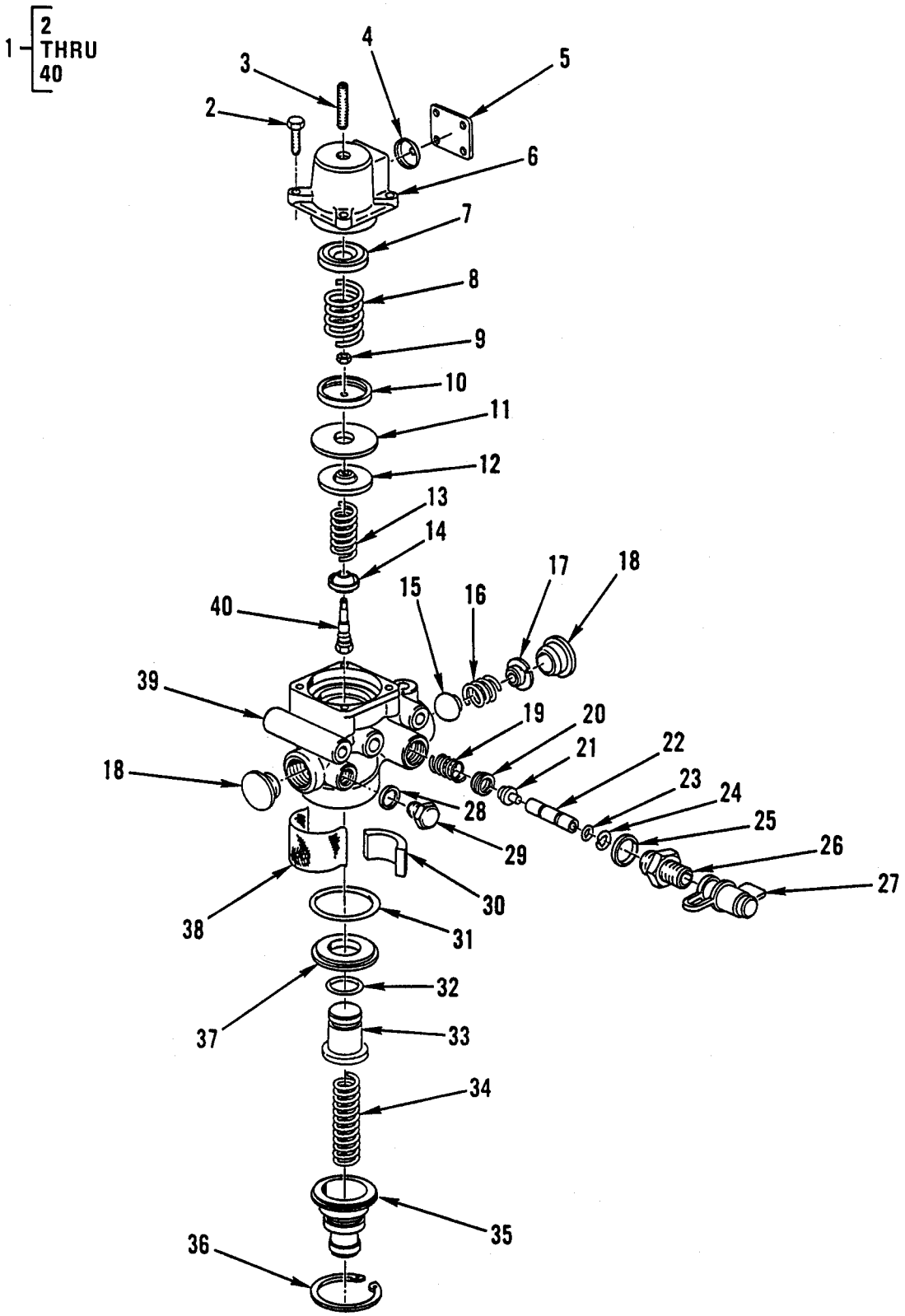

Figure 158. Air Brake System – Fluid Regulating Valve (BOSCH).

(1) ITEM NO	(2) SMR CODE	(3) NSN	(4) CAGEC	(5) PART NUMBER	(6) DESCRIPTION AND USABLE ON CODES (UOC)	(7) QTY
					GROUP 1208	
					FIG. 158 VALVE, REGULATING, FLUID (BOSCH) 0 481 039 202	
1	PAOFF	4820-01-241-5541	D8015	0 481 039 202	VALVE,REGULATING,FL	1
2	PFFZZ	5305-01-264-5886	D8015	2 911 062 199	.SCREW,CAP,HEXAGON H	4
3	XAFZZ		D8015	2 912 042 246	.SCREW,ADJUSTING	1
4	KFFZZ		D8015	00/19	.CONE.VALVE PART OF KIT P/N 1 487 010 102	1
5	XAFZZ		D8015	1 481 100 068	.PLATE	1
6	XAFZZ		D8015	1 485 500 198	.COVER	1
7	XAFZZ		D8015	1 480 526 030	.SEAT,SPRING	1
8	XAFZZ		D8015	1 484 619 064	.SPRING	1
9	XAFZZ		D8015	2 915 012 007	.NUT	1
10	XAFZZ		D8015	1 480 500 138	.PLATE,WASHER	1
11	KFFZZ		D8015	800/17	.DIAPHRAGM PART OF KIT P/N 1 487 010 102	1
12	XAFZZ		D8015	1 480 120 074	.PLATE,WASHER	1
13	XAFZZ		D8015	1 484 616 075	.SPRING	1
14	KFFZZ		D8015	00/22	.SEAL,CUP PART OF KIT P/N 1 487 010 102	1
15	KFFZZ		D8015	00/15	.SEAL,CUP PART OF KIT P/N 1 487 010 102	1
16	XAFZZ		D8015	1 484 615 041	.SPRING	1
17	XAFZZ		D8015	1 480 500 004	.DISC	1
18	XAFZZ		D8015	1 480 508 040	.CAP	2
19	XAFZZ		D8015	1 484 643 089	.SPRING	1
20	KFFZZ		D8015	801/27	.PLATE,VALVE PART OF KIT P/N 1 487 010 103	1
21	XAFZZ		19207	NPN-103	.PISTON	1
22	XAFZZ		D8015	1 480 311 003	.TAPPET	1
23	KFFZZ		D8015	801/32	.PACKING,PREFORMED PART OF KIT P/N 1 487 010 103	1
24	XAFZZ		D8015	2 916 609 056	.RETAINER	1
25	KFFZZ		D8015	801/28	.RING,SEAL PART OF KIT P/N 1 487 010 103	1
26	XAFZZ		D8015	1 483 351 008	.FITTING	1
27	KFFZZ		D8015	801/35	.CAP,CLOSURE PART OF KIT P/N 1 487 010 103	1
28	XAFZZ		D8015	2 916 710 503	.RING,SEAL	1
29	XAFZZ		D8015	2 911 272 700	.PLUG	1

(1) ITEM NO	(2) SMR CODE	(3) NSN	(4) CAGEC	(5) PART NUMBER	(6) DESCRIPTION AND USABLE ON CODES (UOC)	(7) QTY
30	KFFZZ		D8015	800/17	.FILTER,AIR PART OF KIT P/N 1 487 010 102.....	1
31	KFFZZ		D8015	800/11	.PACKING,PREFORMED PART OF KIT P/N 1 487 010 102.....	1
32	KFFZZ		D8015	800/10	.PACKING,PREFORMED PART OF KIT P/N 1 487 010 102.....	1
33	KFFZZ		D0150	0/12	.VALVE,PISTON PART OF KIT P/N 1 487 010 102.....	1
34	XAFZZ		D8015	1 484 617 034	.SPRING.....	1
35	XAFZZ		D8015	1 483 386 010	.FITTING	1
36	KFFZZ		D8015	800/16	.RING,RETAINING PART OF KIT P/N 1 487 010 102.....	1
37	XAFZZ		D8015	1 480 120 098	.RING	1
38	XAFZZ		D8015	1 481 329 006	.FILTER,SCREEN	1
39	XAFZZ		19207	NPN-104	.HOUSING.....	1
40	XAFZZ		D8015	1 483 453 002	.SCREW	1
					END OF FIGURE	

UNIT, DIRECT SUPPORT AND GENERAL SUPPORT MAINTENANCE

SMALL EMPLACEMENT EXCAVATOR (SEE) AND HIGH MOBILITY MATERIAL HANDLER (HMMH)

AIR BRAKE SYSTEM – AIR BRAKE EVAPORATOR (WABCO) S932 002 000 0

REPAIR PARTS LIST

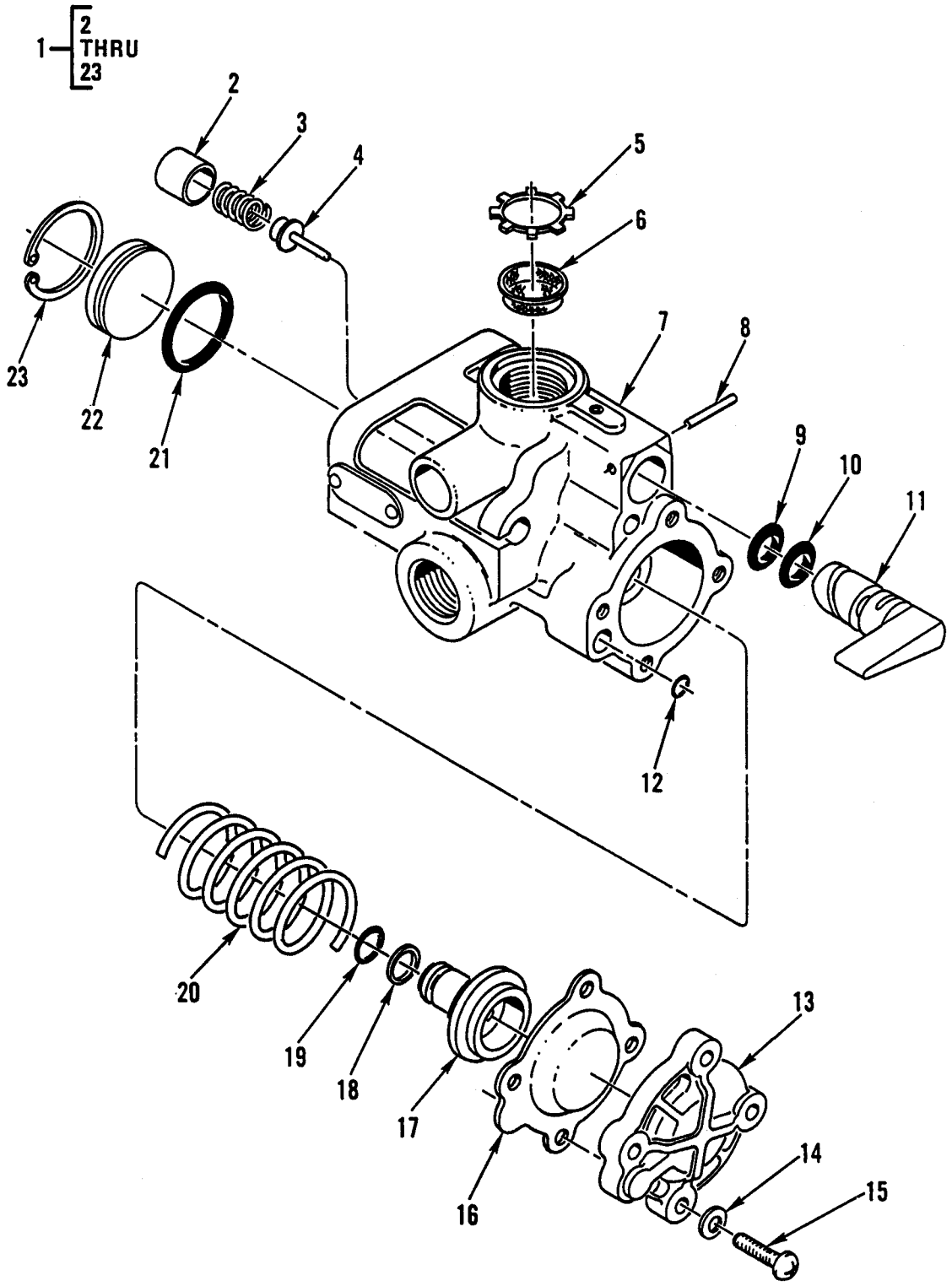

Figure 159. Air Brake System – Air Brake Evaporator (WABCO).

(1) ITEM NO	(2) SMR CODE	(3) NSN	(4) CAGEC	(5) PART NUMBER	(6) DESCRIPTION AND USABLE ON CODES (UOC)	(7) QTY
					GROUP 1208	
					FIG. 159 AIR BRAKE SYSTEM – EVAPORATOR,AIR BRAKE (WABCO) 932 002 000 0	
1	PAOFF	2530-01-240-8533	78500	S932 002 000 0	EVAPORATOR,AIR BRAK OPTIONAL WITH LA 4119-I/82388	1
2	XAFZZ		D8096	932 002 150 4	.COVER,SPRING	1
3	KFFZZ		D8096	896 513 960 4	.SPRING,PRESSURE PART OF KIT P/N 952 002 000 2	1
4	KFFZZ		D8096	899 506 190 2	.VALVE PART OF KIT P/N 952 002 000 2	1
5	XAFZZ		D8096	895 226360 4	.KEEPER,SCREEN	1
6	XAFZZ		D8096	899 381 182 2	.SCREEN	1
7	XAFZZ		D8096	932 002 013 4	.HOUSING,VALVE	1
8	XAFZZ		D8096	810 528 020 4	.PIN,ROLL	1
9	KFFZZ		D8096	897 080 550 4	.PACKING,PREFORMED PART OF KIT P/N 952 002 000 2	1
10	KFFZZ		D8096	897 080 020 4	.PACKING,PREFORMED PART OF KIT P/N 952 002 000 2	1
11	XAFZZ		D8096	932 002 500 2	.KNOB	1
12	XAFZZ		D8096	897 789 970 4	.PACKING,PREFORMED	1
13	XAFZZ		D8096	932 002 650 4	.COVER,DIAPHRAGM	1
14	XAFZZ		D8096	810 430 002 4	.WASHER,FLAT	4
15	XAFZZ		D8096	810 138 008 4	.SCREW,CAP,SOCKET HD	4
16	KFFZZ		D8096	897 132 060 2	.MEMBRANE,DIAPHRAGM PART OF KIT P/N 952 002 000 2	1
17	XAFZZ		D8096	932 002 620 4	.POPPET	1
18	XAFZZ		19207	NPN-105	.RING,BACKING	1
19	KFFZZ		D8096	899 601 750 4	.PACKING,PREFORMED PART OF KIT P/N 952 002 000 2	1
20	KFFZZ		D8096	896 513 940 4	.SPRING,PRESSURE PART OF KIT P/N 952 002 000 2	1
21	KFFZZ		D8096	897 089 961 4	.PACKING,PREFORMED PART OF KIT P/N 952 002 000 2	1
22	XAFZZ		D8096	932 002 040 4	.COVER	1
23	KFFZZ		D8096	810 518 019 4	.RING,RETAINING PART OF KIT P/N 952 002 000 2	1
					END OF FIGURE	

UNIT, DIRECT SUPPORT AND GENERAL SUPPORT MAINTENANCE

SMALL EMPLACEMENT EXCAVATOR (SEE) AND HIGH MOBILITY MATERIAL HANDLER (HMMH)

AIR BRAKE SYSTEM – AIR BRAKE EVAPORATOR (KNORR) LA 4119-I/82388

REPAIR PARTS LIST

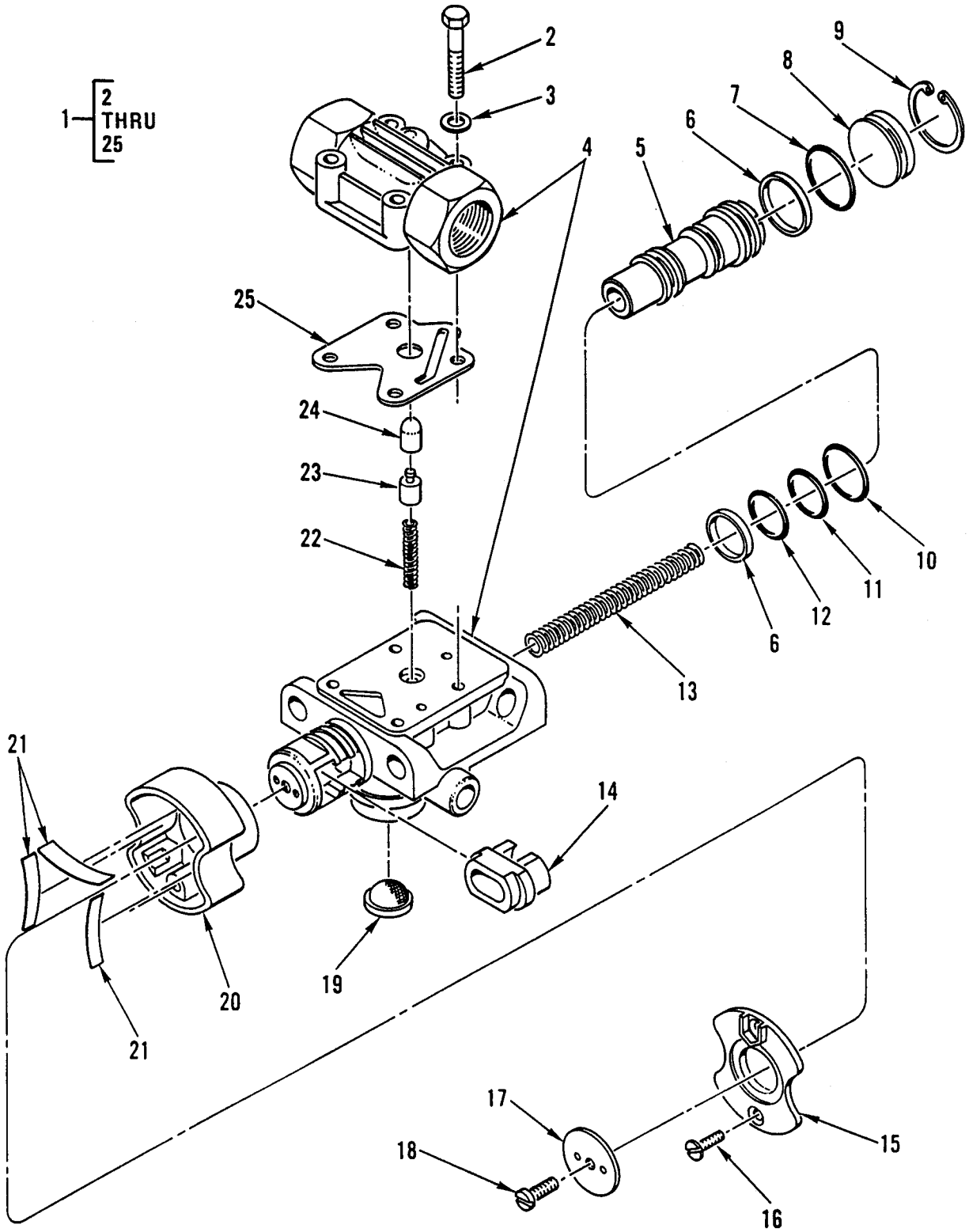

Figure 160. Air Brake System – Air Brake Evaporator (KNORR).

(1) ITEM NO	(2) SMR CODE	(3) NSN	(4) CAGEC	(5) PART NUMBER	(6) DESCRIPTION AND USABLE ON CODES (UOC)	(7) QTY
					GROUP 1208	
					FIG. 160 AIR BRAKE SYSTEM – EVAPORATOR,AIR BRAKE (KNORR) LA 4119-I/82388	
1	PFOFF	2530-01-240-8534	D1928	LA 4119-I/82388	EVAPORATOR,AIR BRAK OPTIONAL WITH 932 002 080 0	1
2	PFFZZ	5305-01-239-9409	64678	000931 005039	.SCREW,CAP,HEXAGON H	4
3	XAFZZ		D8046	000433 005304	.WASHER,FLAT	4
4	XAFZZ		19207	NPN-106	.HOUSING,VALVE	1
5	XAFZZ		D8046	000 431 9783	.PISTON	1
6	XAFZZ		D8046	000 431 22 85	.RING,BACKING	2
7	KFFZZ		D1928	4B 77746	.RING,JACKET PART OF KIT P/N I 86741	1
8	KFFZZ		D1928	4B 67947	.SEAL PART OF KIT P/N I 86741	1
9	KFFZZ		D1928	4B 68858	.RING,RETAINING PART OF KIT P/N I 86741	1
10	KFFZZ		D1928	4A 83273	.PACKING,PREFORMED PART OF KIT P/N I 86741	1
11	KFFZZ		D1928	4B 77747	.RING,JACKET PART OF KIT P/N I 86741	1
12	KFFZZ		D1928	4B 68638	.PACKING,PREFORMED PART OF KIT P/N I 86741	1
13	KFFZZ		D1928	4B 66461	.SPRING,PRESSURE PART OF KIT P/N I 86741	1
14	XAFZZ		D8046	000 431 05 24	.INSERT	1
15	XAFZZ		D8046	000 431 81 33	.COVER	1
16	XAFZZ		D8046	000 990 17 32	.SCREW	2
17	XAFZZ		D8046	000 431 46 76	.PLATE	1
18	XAFZZ		D8046	001 990 52 20	.SCREW	1
19	KFFZZ		D1928	4A 35372	.SCREEN PART OF KIT P/N I 86741	1
20	XAFZZ		D8046	000 429 04 78	.KNOB	1
21	KFFZZ		D1928	4B 67948	.SPRING,LAMINATED PART OF KIT P/N I 86741	3
22	KFFZZ		D1928	4B 72205	.SPRING,PRESSURE PART OF KIT P/N I 86741	1
23	XAFZZ		D8046	000 431 96 83	.COVER,SPRING	1
24	KFFZZ		D1928	4B 66455	.VALVE,ANGLED PART OF KIT P/N I 86741	1
25	XAFZZ		D8046	000 429 02 80	.GASKET	1
					END OF FIGURE	

UNIT, DIRECT SUPPORT AND GENERAL SUPPORT MAINTENANCE

SMALL EMPLACEMENT EXCAVATOR (SEE) AND HIGH MOBILITY MATERIAL HANDLER (HMMH)

AIR BRAKE SYSTEM – BRAKE AIR LINES AND FITTINGS

REPAIR PARTS LIST

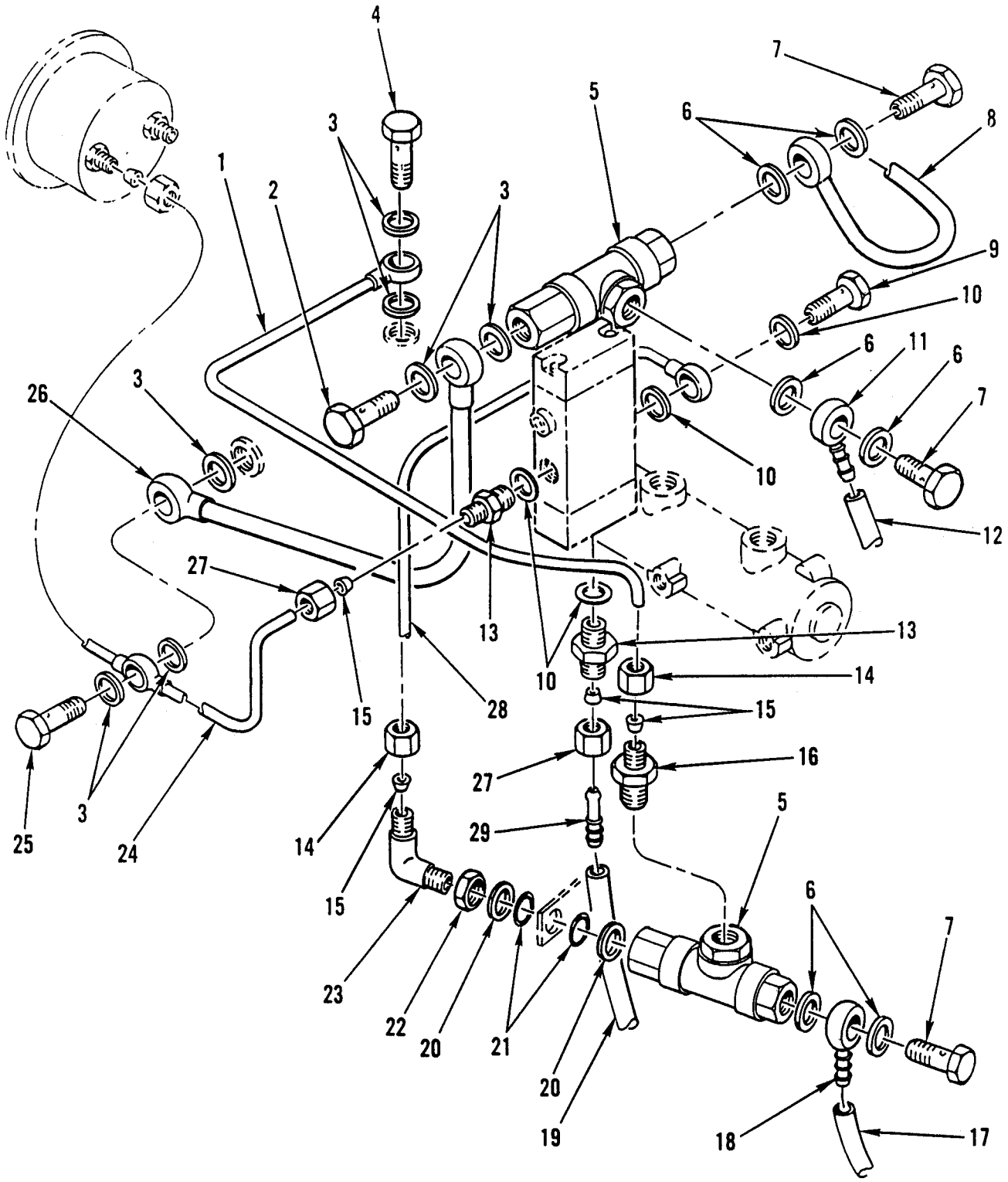

Figure 161. Air Brake System – Brake Air Lines and Fittings.

(1) ITEM NO	(2) SMR CODE	(3) NSN	(4) CAGEC	(5) PART NUMBER	(6) DESCRIPTION AND USABLE ON CODES (UOC)	(7) QTY
					GROUP 1208	
					FIG. 161 AIR BRAKE SYSTEM – BRAKE AIR LINES AND FITTINGS	
1	PFOZZ	4710-01-241-3980	64678	419 420 21 45	TUBE,METALLIC	1
2	PAOZZ	4730-01-313-4059	64678	915036 012203	BOLT,FLUID,PASSAGE	1
3	PAOZZ	5365-00-148-1084	D8046	007603 018104	RING,SEAL	7
4	PAOZZ	4730-01-241-2950	64678	421 990 54 63	BOLT,FLUID,PASSAGE	1
5	PAOZZ	4820-01-241-7234	D8096	434 208 050 0	VALVE,CHECK	2
6	PFOZZ	5330-01-270-1311	64678	007603014405	SEAL RING,METAL	6
7	PFOZZ	4730-01-311-4186	64678	915036 010204	BOLT,FLUID PASSAGE	3
8	PFOZZ	4710-01-291-5318	64678	416 420 16 28	LINE UOC:GE1	1
9	PAOZZ	5305-01-312-9971	64678	915036 006202	SCREW,CAP,HEXAGON H	1
10	PAOZZ	5330-01-313-2006	64678	007603 010404	SEAL RING,METAL	4
11	PFOZZ	4730-01-241-4333	D9596	0 25417-56	CONNECTOR,MULTIPLE	2
12	PAOZZ	4720-01-241-2941	64678	376 987 74 27	TUBING,NONMETALLIC	1
13	PFOZZ	4730-01-298-9537	64678	003901 006004	ADAPTER,STRAIGHT,PI	2
14	PFOZZ	4730-01-241-4002	64678	915017 010100	NUT,UNION	2
15	PFOZZ	4730-01-241-6951	15526	3861 D 6S	SLEEVE,COMPRESSION	V
16	PFOZZ	4730-01-253-7277	64678	002 997 81 72	REDUCER,TUBE	1
17	MOOZZ		64678	48-00100-010X 1300	TUBE,NONMETALLIC MAKE FROM CAGE 64678 P/N 48-00100-010, CUT TO 1300 MM	1
18	PFOZZ	4730-01-286-2087	D9596	0 25 355 54	CONNECTOR,MULTIPLE	1
19	MOOZZ		64678	376 987 01 27X 500	PIPE,NONMETALLIC MAKE FROM CAGE 64678 P/N 376 987 01 27, 500 MM	1
20	PFOZZ	3120-01-299-2934	64678	000 429 09 27	BEARING,WASHER,THRU	2
21	PFOZZ	5331-01-298-4182	64678	000 997 15 48	O-RING	2
22	PFOZZ	5310-01-244-9920	64678	080705 016003	NUT,PLAIN,HEXAGON	1
23	PFOZZ	4730-01-241-2927	D9596	CL6 M16X1.5Z	ELBOW,TUBE TO BOSS	1
24	PFOZZ	4710-01-241-2660	64678	406 420 01 37	TUBE,METALLIC	1
25	PAOZZ	4730-12-194-0225	64678	421 990 55 63	BOLT,FLUID PASSAGE	1
26	PFOZZ	4710-01-241-2659	64678	419 420 23 45	TUBE,METALLIC	1
27	PAOZZ	4730-01-237-0071	64678	915017 006100	NUT,UNION	2
28	MOOZZ		64678	000 429 62 01X 500	TUBE,METALLIC MAKE FROM CAGE 64678 P/N 000 429 62 01, CUT TO 500 MM	1
29	PAOZZ	4730-01-313-7274	D9596	023411	ADAPTER,STRAIGHT,TU	1
					END OF FIGURE	

UNIT, DIRECT SUPPORT AND GENERAL SUPPORT MAINTENANCE

SMALL EMPLACEMENT EXCAVATOR (SEE) AND HIGH MOBILITY MATERIAL HANDLER (HMMH)

AIR BRAKE SYSTEM – DIRECT LINEAR VALVE A571 002 0000

REPAIR PARTS LIST

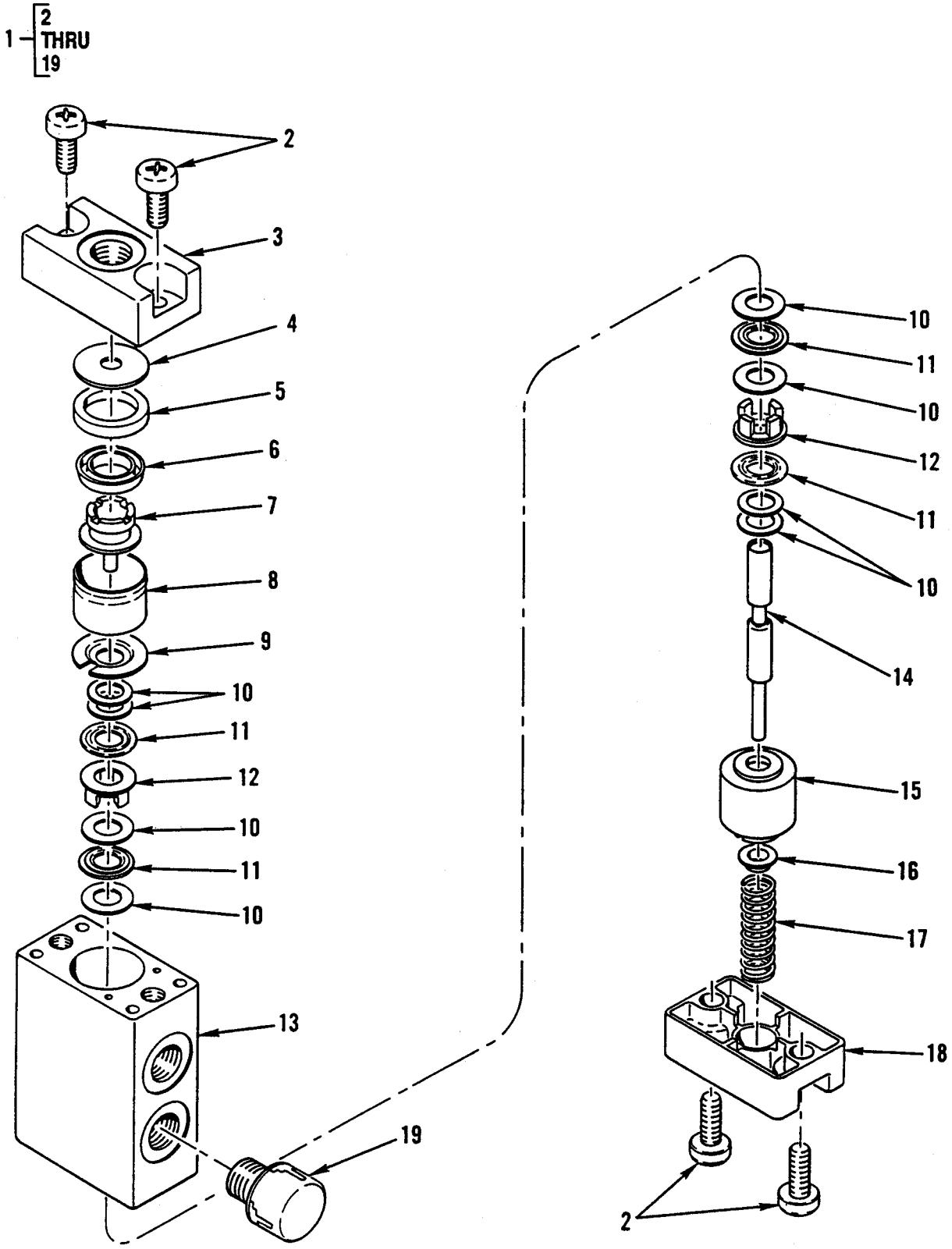

Figure 162. Air Brake System – Direct Linear Valve.

(1) ITEM NO	(2) SMR CODE	(3) NSN	(4) CAGEC	(5) PART NUMBER	(6) DESCRIPTION AND USABLE ON CODES (UOC)	(7) QTY
					GROUP 1208	
					FIG. 162 AIR BRAKE SYSTEM –VALVE, LINEAR,DIRECT A571 002 0000	
1	PFOFF	4820-01-241-4752	D8096	A571 002 0000	VALVE,LINEAR,DIRECT	1
2	XAFZZ		19207	DIN7985-4.8-ZN	.SCREW,MACHINE	4
3	XAFZZ		19207	NPN-107	.COVER	1
4	KFFZZ		D8096	895 107 920 4	.WASHER PART OF KIT P/N 000 420 5755	1
5	KFFZZ		D8096	897 551 570 4	.RING,SEAL PART OF KIT P/N 000 420 5755	1
6	KFFZZ		D8096	897 151 009 4	.RING,SLOTTED 10X15X3.5 PART OF KIT P/N 000 420 5755	1
6	KFFZZ		D8096	897 155 400 4	.RING,SLOTTED 12X18X2.7 PART OF KIT P/N 000 420 5755	1
7	XAFZZ		19207	NPN-108	.PLUNGER	1
8	XAFZZ		19207	NPN-109	.SPACER,SLEEVE	1
9	XAFZZ		19207	NPN-110	.SEAL,PLAIN	1
10	XAFZZ		19207	NPN-111	.SEALING RING	4
11	KFFZZ		D8096	897 560 030 2	.SEALING RING PART OF KIT P/N 000 420 5755	4
12	XAFZZ		19207	NPN-112	.SPACER	2
13	XAFZZ		19207	NPN-113	.HOUSING,VALVE	1
14	XAFZZ		19207	571 002 774 4	.VALVE,SPOOL	1
15	XAFZZ		19207	NPN-114	.SPACER,SLEEVE NYLON	1
16	XAFZZ		19207	NPN-115	.CAP	1
17	XAFZZ		19207	NPN-116	.SPRING,COMPRESSION	1
18	XAFZZ		19207	NPN-117	.COVER	1
19	PAOZZ	2940-01-241-4301	D8096	899 470 180 0	.AIR CLEANER,INTAKE	1
					END OF FIGURE	

UNIT, DIRECT SUPPORT AND GENERAL SUPPORT MAINTENANCE

SMALL EMPLACEMENT EXCAVATOR (SEE) AND HIGH MOBILITY MATERIAL HANDLER (HMMH)

AIR BRAKE SYSTEM – BRAKE AIR SUPPLY LINES AND FITTINGS

REPAIR PARTS LIST

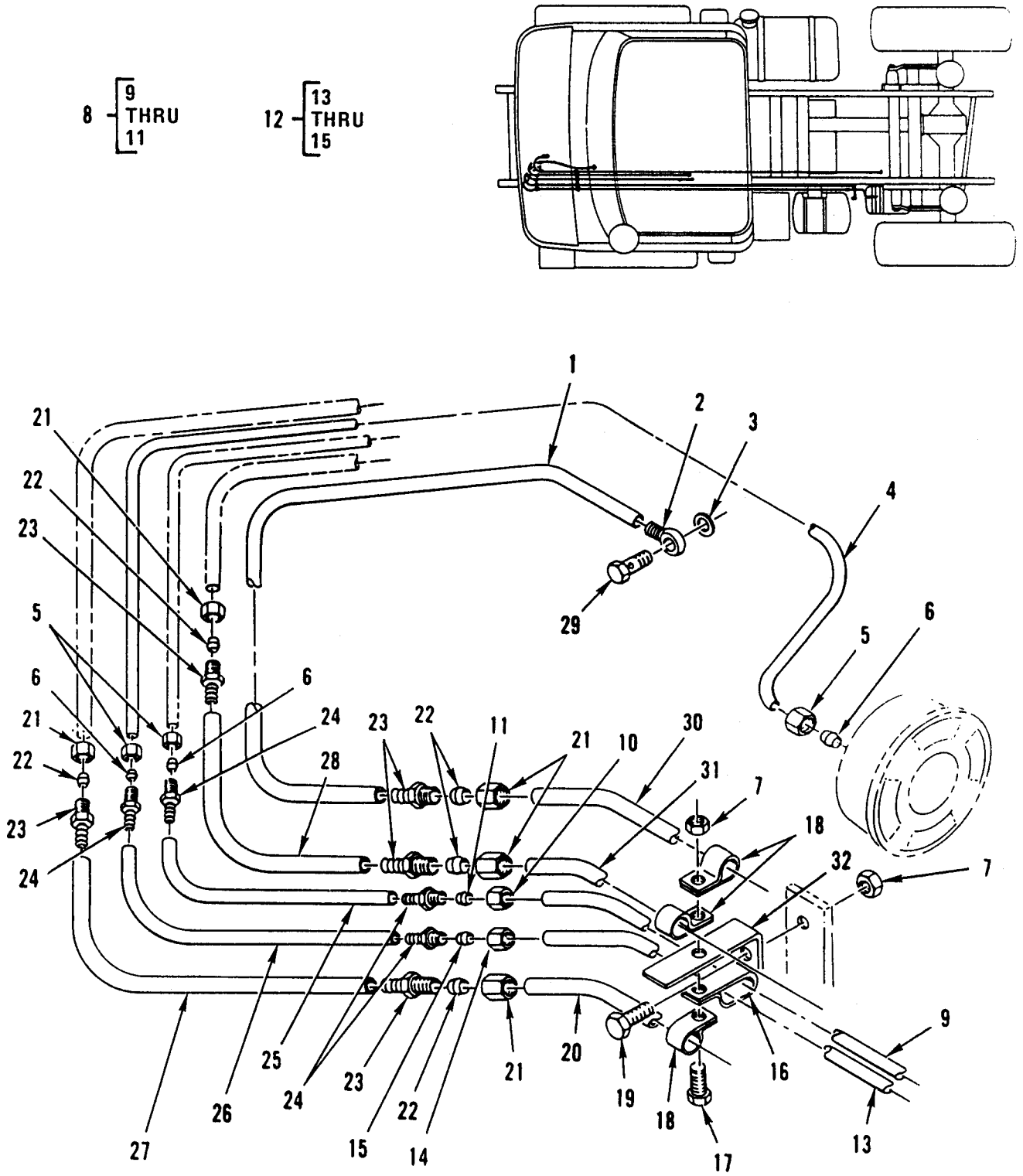

Figure 163. Air Brake System – Brake Air Supply Lines and Fittings.

(1) ITEM NO	(2) SMR CODE	(3) NSN	(4) CAGEC	(5) PART NUMBER	(6) DESCRIPTION AND USABLE ON CODES (UOC)	(7) QTY
					GROUP 1208	
					FIG. 163 AIR BRAKE SYSTEM – BRAKE AIR SUPPLY LINES AND FITTINGS	
1	MOOZZ		64678	376 987 74 27X 950	PIPE MAKE FROM CAGE 64678 P/N 376 987 74 27, CUT TO 950 MM.....	1
2	PFOZZ	4730-01-241-4333	64678	001 990 27 88	CONNECTOR,MULTIPLE	1
3	PFOZZ	5365-00-148-1084	D8046	007603 018104	RING,SEAL.....	1
4	MOOZZ		64678	000 429 62 01X 580	HOSE,NONMETALLIC MAKE FROM CAGE 64678 P/N 000 429 62 01, CUT TO 580 MM...	1
5	PFOZZ	4730-01-237-0071	64678	915017 006100	NUT,UNION.....	3
6	PFOZZ	4730-12-132-5660	D8134	D6LS	SLEEVE,CLINCH,TUBE	3
7	PFOZZ	5310-01-241-6349	64678	913004 006002	NUT,SELF-LOCKING,HE	2
8	PFOZZ	4720-01-237-0178	64678	421 420 17 26	HOSE,NONMETALLIC 1300 MM	1
9	XAOZZ		19207	NPN-118	.TUBE,METALLIC.....	1
10	PFOZZ	4730-01-237-0071	64678	915017 006100	.NUT,UNION.....	1
11	PFOZZ	4730-01-241-6951	15526	3861 D 6S	.SLEEVE,COMPRESSION	1
12	PFOZZ	4720-01-237-0178	64678	421 420 17 26	HOSE,NONMETALLIC 1223 MM	1
13	XAOZZ		19207	NPN-119	.TUBE,METALLIC.....	1
14	PFOZZ	4730-01-237-0071	64678	915017 006100	.NUT,UNION.....	1
15	PFOZZ	4730-01-241-6951	15526	3861 D 6S	.SLEEVE,COMPRESSION	1
16	PAOZZ	5340-01-244-2462	64678	304 995 10 20	CLAMP,LOOP	1
17	PFOZZ	5305-12-156-4862	D8286	DIN933-M6X20-8.8-A2P	SCREW,CAP,HEXAGON H.....	2
18	PFOZZ	5340-01-242-6118	64678	360 995 03 01	CLAMP,LOOP	3
19	PFOZZ	5306-01-247-9361	64678	000933 006136	BOLT,MACHINE.....	1
20	MOOZZ		64678	000 429 23 01X 18 50	LINE MAKE FROM CAGE 64678 P/N 000 429 23 01, CUT TO 1850 MM.....	1
21	PFFZZ	4730-01-241-4002	64678	915017 010100	NUT,UNION.....	5
22	PFFZZ	4730-01-241-4334	15526	3861 D 10S NP630	SLEEVE,COMPRESSION UOC:GE1.....	5
23	PFOZZ	4730-01-313-4074	D9596	0 23 06 1	ADAPTER,STRAIGHT,TU	5
24	PFOZZ	4730-01-313-7273	D9596	0 23 05 1	ADAPTER,STRAIGHT,TU	4
25	MOOZZ		64678	376 987 01 27X 860	TUBE,NONMETALLIC MAKE FROM CAGE 64678 P/N 376 987 01 27, CUT TO 860 MM...	1
26	MOOZZ		64678	376 987 01 27X 920	TUBE,NONMETALLIC MAKE FROM CAGE 64678 P/N 376 987 01 27, CUT TO 920 MM...	1
27	MOOZZ		64678	376 987 74 27X 850	TUBE,METALLIC MAKE FROM CAGE 64678 P/N 376 987 74 27, CUT TO 850 MM.....	1

(1) ITEM NO	(2) SMR CODE	(3) NSN	(4) CAGEC	(5) PART NUMBER	(6) DESCRIPTION AND USABLE ON CODES (UOC)	(7) QTY
28	MOOZZ		64678	376 987 74 27X 960	TUBE,NONMETALLIC MAKE FROM CAGE 64678 P/N 376 987 74 27, CUT TO 960 MM...	1
29	PFOZZ	4730-12-194-0225	64678	421 990 55 63	BOLT,FLUID PASSAGE.....	1
30	MOOZZ		64678	000 429 23 01X 25 73	TUBE,MATALLIC MAKE FROM CAGE 64678 P/N 000 429 23 01, CUT TO 2573 MM.....	1
31	MOOZZ		64678	000 429 23 01X 13 11	TUBE,METALLIC MAKE FROM CAGE 64678 P/N 000 429 23 01, CUT TO 1311 MM.....	1
32	PFOZZ	5340-12-314-4331	64678	320 434 04 40	BRACKET.....	1
					END OF FIGURE	

UNIT, DIRECT SUPPORT AND GENERAL SUPPORT MAINTENANCE

SMALL EMPLACEMENT EXCAVATOR (SEE) AND HIGH MOBILITY MATERIAL HANDLER (HMMH)

TRAILER BRAKE CONNECTIONS AND CONTROLS – TRAILER AIR SUPPLY VALVE LINES AND FITTINGS

REPAIR PARTS LIST

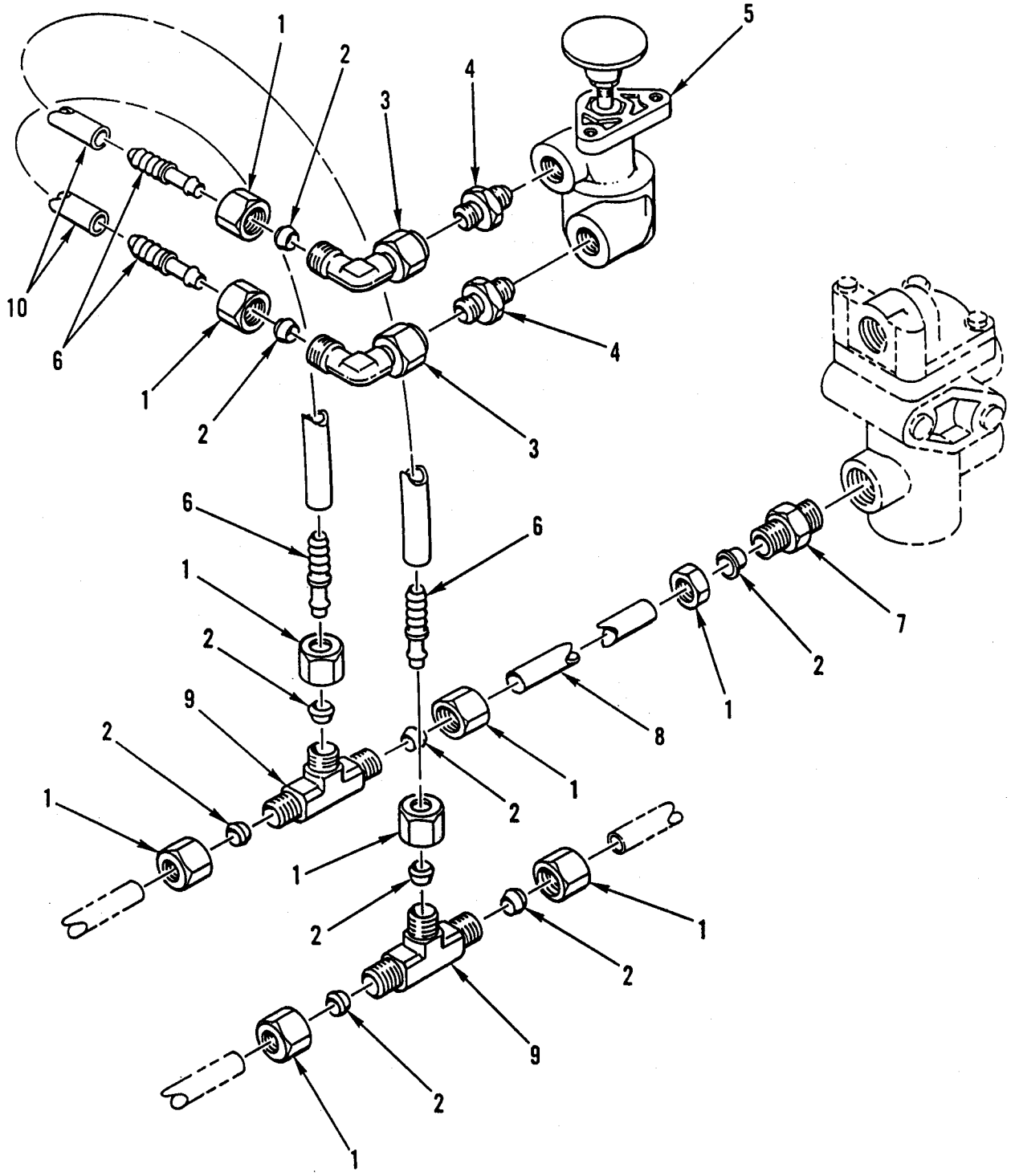

Figure 164. Trailer Brake Connections and Controls – Trailer Air Supply Valve Lines and Fittings.

(1) ITEM NO	(2) SMR CODE	(3) NSN	(4) CAGEC	(5) PART NUMBER	(6) DESCRIPTION AND USABLE ON CODES (UOC)	(7) QTY
					GROUP 1211	
					FIG. 164 TRAILER BRAKE CONNECTIONS AND CONTROLS – TRAILER AIR SUPPLY VALVE LINES AND FITTINGS	
1	PFOZZ	4730-01-241-4002	64678	915017 010100	NUT,UNION.....V	
2	PFOZZ	4730-01-241-4334	15526	3861 D 10S NP630	SLEEVE,COMPRESSION.....V	
3	PFOZZ	4730-01-241-1607	64678	003952 010100	ELBOW,PIPE.....	2
4	PFOZZ	4730-01-240-9605	D9596	7 06 10 2	ADAPTOR,STRAIGHT,PI.....	2
5	PAOZZ	4720-01-283-5991	06721	KN20031	VALVE,HAND OPERATED	1
6	PFOZZ	4730-01-241-4641	D9596	023131	ADAPTER,STRAIGHT,TU.....	4
7	PAOZZ	4730-01-241-1614	64678	000 990 91 68	ADAPTER,STRAIGHT,TU.....	1
8	MOOZZ		64678	000 429 23 01X 350	LINE MAKE FROM CAGE 64678 P/N 000 429 23 01, CUT TO 350 MM.....	1
9	PFOZZ	4730-01-240-9291	64678	003908 010002	TEE,PIPE.....	2
10	MOOZZ		64678	376 987 74 27X 350	LINE MAKE FROM CAGE 64678, P/N 376 987 74 27, CUT TO 350MM.....	2
					END OF FIGURE	

UNIT, DIRECT SUPPORT AND GENERAL SUPPORT MAINTENANCE

SMALL EMPLACEMENT EXCAVATOR (SEE) AND HIGH MOBILITY MATERIAL HANDLER (HMMH)

TRAILER BRAKE CONNECTIONS AND CONTROLS – FRONT AIR LINES AND TRAILER COUPLING

REPAIR PARTS LIST

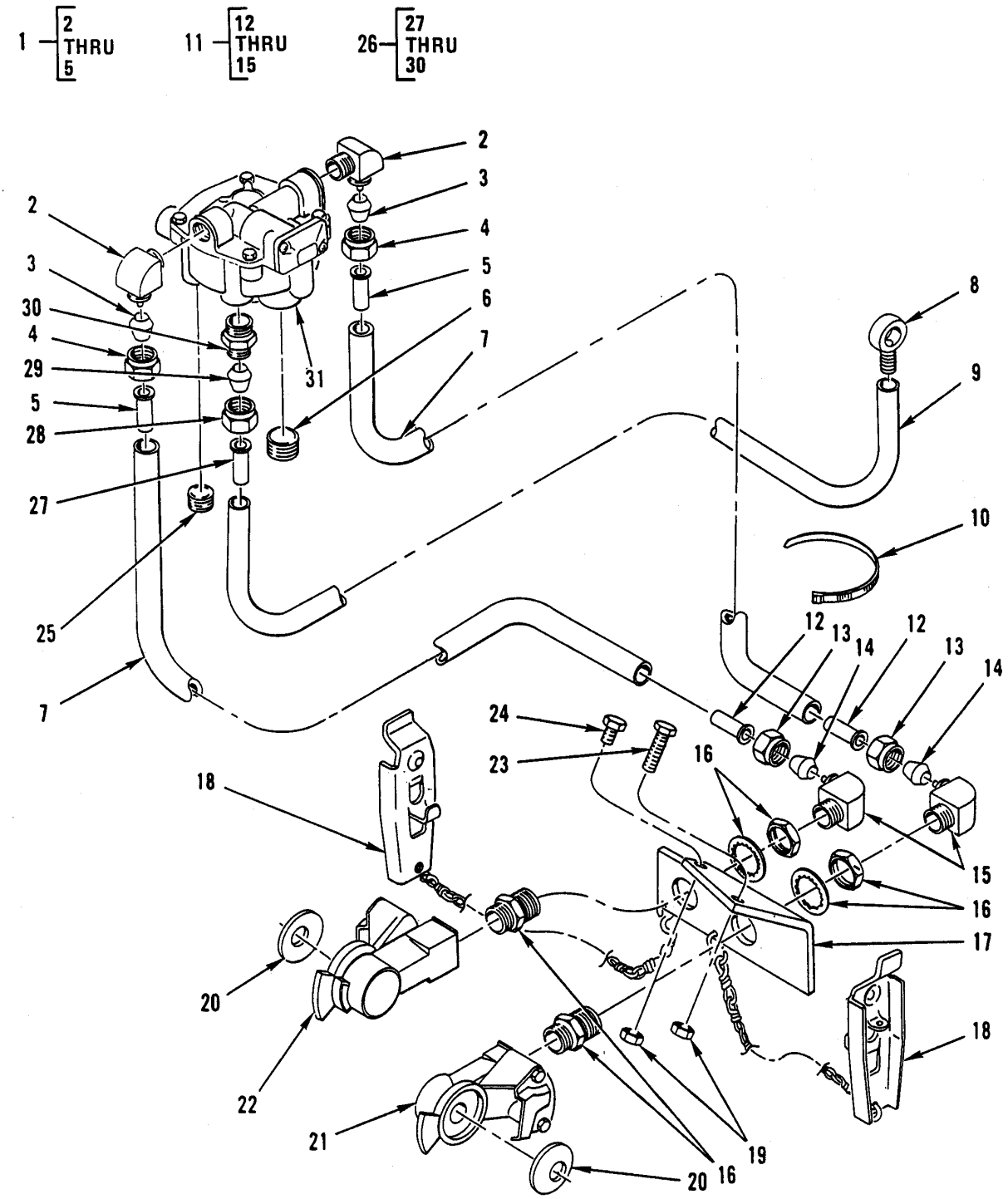

Figure 165. Trailer Brake Connections and Controls – Front Air Lines and Trailer Coupling.

(1) ITEM NO	(2) SMR CODE	(3) NSN	(4) CAGEC	(5) PART NUMBER	(6) DESCRIPTION AND USABLE ON CODES (UOC)	(7) QTY
					GROUP 1211	
					FIG. 165 TRAILER BRAKE CONNECTIONS AND CONTROLS – FRONT AIR LINES AND TRAILER COUPLING	
1	PFOOO	4730-01-244-3552	02697	VS269NTA-6-4	ELBOW,PIPE TO TUBE	2
2	XAOZZ		19207	NPN-120	.ELBOW	1
3	PAOZZ	4730-01-048-5260	93061	60NTA-6	.SLEEVE,COMPRESSION	1
4	PAOZZ	4730-01-048-7873	93061	61NTA-6	.NUT,TUBE COUPLING	1
5	PAOZZ	4730-01-056-4990	93061	63NTA-6	.INSERT,TUBE FITTING	1
6	PFOZZ	4730-01-242-1341	93061	VS211P-12	PLUG,PIPE ¾	1
7	MOOZZ		64678	48-00101-010X 510	TUBING MAKE FROM CAGE 64678 P/N 48-00101-010, CUT TO 510 MM	2
8	PAOZZ	4730-01-251-6161	D9596	0 25 367-56	ADAPTER,STRAIGHT,TU	1
9	MOOZZ		64678	48-00100-010X 1300	TUBING MAKE FROM CAGE 64678 P/N 48-00100-010, CUT TO 1300 MM	1
10	PFOZZ	5340-01-244-4122	06383	PLT 1MO	STRAP,RETAINING	5
11	PFOOO	4730-01-244-1226	02697	VS269NTA-6-6	ELEBOW,PIPE TO TUBE	2
12	PAOZZ	4730-01-056-4990	93061	63NTA-6	.INSERT,TUBE FITTING	1
13	PAOZZ	4730-01-048-7873	93061	61NTA-6	.NUT,TUBE COUPLING	1
14	PAOZZ	4730-01-048-5260	93061	60NTA-6	.SLEEVE,COMPRESSION	1
15	XAOZZ		19207	NPN-121	.ELBOW	1
16	PFOZZ	4730-01-242-4507	06721	1031520	REDUCER,PIPE	2
17	PFOZZ	5340-01-244-1131	64678	419 429 71 40	BRAKET,ANGLE	1
18	PAOZZ	2530-00-270-3878	16662	AD2583	DUMMY COUPLING,AUTO	2
19	PFOZZ	5310-01-243-9426	64678	210980 008000	NUT,SELF-LOCKING,HE M81.25	2
20	PFOZZ	5330-00-090-2128	96906	MS35748-1	PACKING,PREFORMED	2
21	PAOZZ	4730-01-244-0077	64678	12-09711-001	COUPLING,HALF,QUICK	1
22	PAOZZ	4730-01-244-5365	64466	12008	COUPLING HALF,QUICK	1
23	PFOZZ	5306-01-171-4685	S3465	4537800-321	BOLT,MACHINE M8X1.25X65 LG	1
24	PFOZZ	5305-01-159-0065	56161	10501759	SCREW,CAP,HEXAGON H M8X1.25X25 LG	1
25	PFOZZ	4730-01-244-1265	93061	VS219P-6	PLUG,PIPE	3
26	PFOOO	4730-01-096-9398	93061	68NTA-4-6	ADAPTER,STRAIGHT,PI	1
27	PAOZZ	4730-01-057-7109	93061	63NTA-4	.INSERT,TUBE FITTING	1
28	PAOZZ	4730-01-048-6968	93061	61NTA-4	.NUT,TUBE COUPLING	1
29	PAOZZ	4730-01-048-6358	93061	60NTA-4	.SLEEVE,COMPRESSION	1
30	XAOZZ		19207	NPN-122	.ADAPTER	1
31	PAOZZ	2590-01-241-4884	64678	419 429 71 44	CONTROL,TRAILER	1
					END OF FIGURE	

UNIT, DIRECT SUPPORT AND GENERAL SUPPORT MAINTENANCE

SMALL EMPLACEMENT EXCAVATOR (SEE) AND HIGH MOBILITY MATERIAL HANDLER (HMMH)

TRAILER BRAKE CONNECTIONS AND CONTROLS – REAR AIR LINES AND TRAILER FITTINGS

REPAIR PARTS LIST

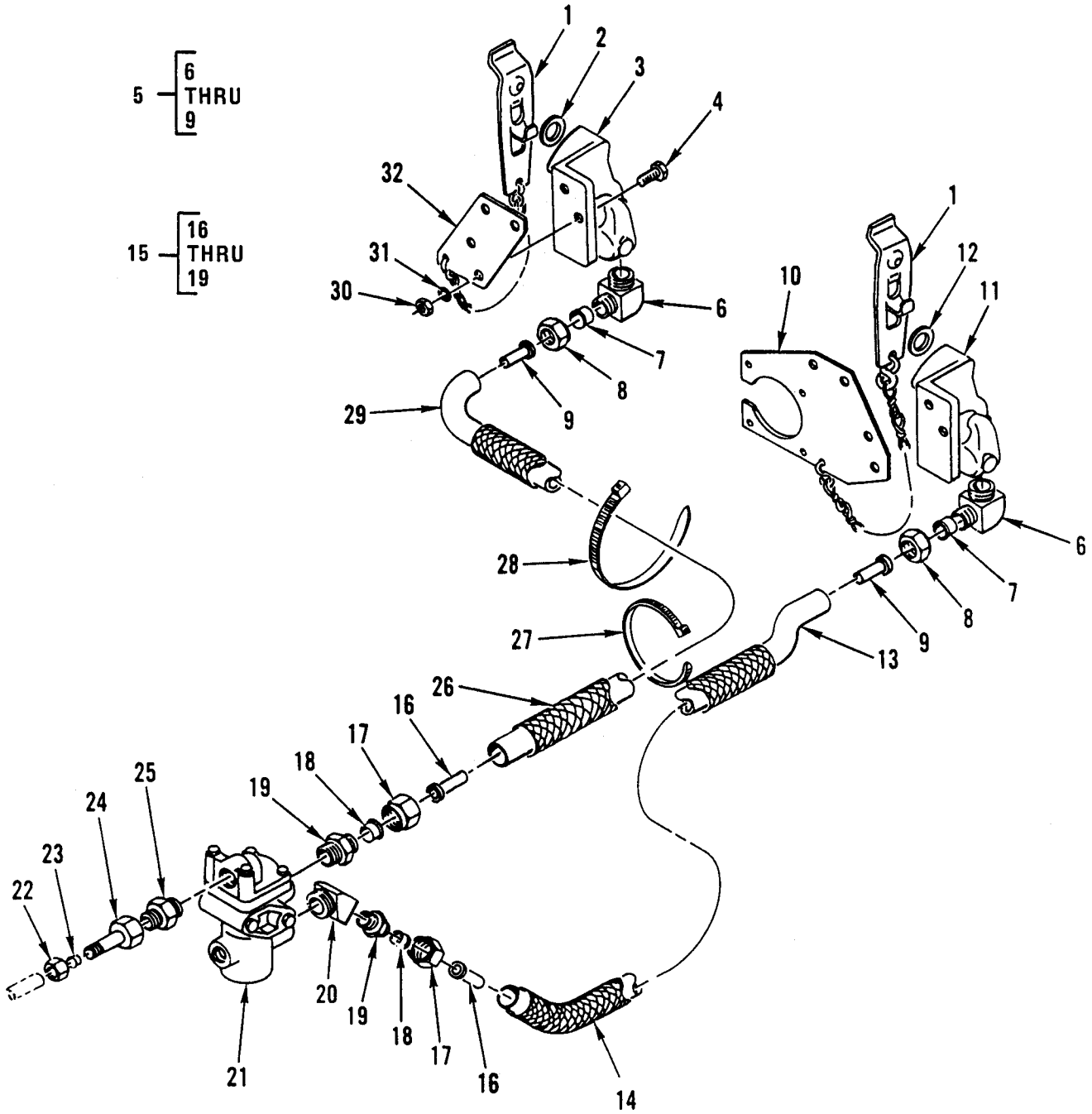

Figure 166. Trailer Brake Connections and Controls – Rear Air Lines and Trailer Fittings.

(1) ITEM NO	(2) SMR CODE	(3) NSN	(4) CAGEC	(5) PART NUMBER	(6) DESCRIPTION AND USABLE ON CODES (UOC)	(7) QTY
					GROUP 1211	
					FIG. 166 TRAILER BRAKE CONNECTIONS AND CONTROLS – REAR AIR LINES AND TRAILER FITTINGS	
1	PAOZZ	2530-00-270-3878	16662	AD2583	DUMMY COUPLING,AUTO	2
2	PAOZZ	5330-00-090-2128	06853	213630	PACKING,PREFORMED	1
3	PAOZZ	4730-01-244-9545	64678	419 429 71 30	COUPLING HALF,QUICK	1
4	PFOZZ	5306-01-176-1338	S3465	4537800-245	BOLT,MACHINE	8
5	PFOOO	4730-01-310-4665	02697	VS269NTA-8-8	ELBOW,PIPE TO TUBE	2
6	XAOZZ		19207	NPN-123	.ELBOW	1
7	PAOZZ	4730-01-049-1559	93061	60NTA-8	.SLEEVE,COMPRESSION	1
8	PAOZZ	4730-01-048-7874	93061	61NTA-8	.NUT,TUBE COUPLING	1
9	PAOZZ	4730-01-048-5261	93061	63NTA-8	.INSERT,TUBE FITTING	1
10	PFOZZ	5340-01-297-3295	64678	419 429 73 40	BRACKET,MOUNTING	1
11	PAOZZ	4730-01-244-9546	06721	1043234	COUPLING HALF,QUICK	1
12	PAOZZ	5330-00-090-2128	06853	213630	PACKING,PREFORMED	1
13	MOOZZ		64678	48-00101-020X 1725	HOSE,NONMETALLIC MAKE FROM CAGE 64678 P/N 48-00101-020, CUT TO 1725 MM	1
14	MOOZZ		64678	48-00102-009X1700	LOOM MAKE FROM CAGE 64678 P/N 48-00102-009, CUT TO 1700 MM	1
15	PFOOO	4730-01-134-7759	93061	68NTA-8-8	ADAPTER,STRAIGHT,PI	2
16	PAOZZ	4730-01-048-5261	93061	63NTA-8	.INSERT,TUBE FITTING	1
17	PAOZZ	4730-01-048-7874	93061	61NTA-8	.NUT,TUBE COUPLING	1
18	PAOZZ	4730-01-049-1559	93061	60NTA-8	.SLEEVE,COMPRESSION	1
19	XAOZZ		19207	NPN-124	.ADAPTER	1
20	PFOZZ	4730-01-244-4665	02697	VS2214)-8-8	ELEBOW,PIPE	1
21	PAOZZ	2530-01-305-3188	06721	N-20949-CA	VALVE,BRAKE PNEUMAT 4/2 WAY	1
22	PAFZZ	4730-01-241-4003	64678	915018 015000	NUT,UNION	1
23	PAFZZ	4730-01-240-8663	15526	3861 D 15L NP250	SLEEVE,COMPRESSION	1
24	PFOZZ	4730-01-241-2924	64678	406 990 50 82	ADAPTER,STRAIGHT,TU	1
25	PFOZZ	4730-01-241-5487	D9596	7 06 15 2	ADAPTER,STRAIGHT,PI	1
26	MOOZZ		64678	48-00102-009X2025	LOOM MAKE FROM CAGE 64678 P/N 48-00102-009, CUT TO 2025 MM	1
27	PFOZZ	5975-01-247-3941	06383	PLT 4SO	STRAP,TIEDOWN,ELECT	1
28	PFOZZ	5975-00-133-8696	96906	MS3367-6-9	STRAP,TIEDOWN,ELECT	2
29	MOOZZ		64678	48-00101-020X2050	TUBING MAKE FROM CAGE 64678 P/N 48-00101-020, CUT TO 2050 MM	1

(1) ITEM NO	(2) SMR CODE	(3) NSN	(4) CAGEC	(5) PART NUMBER	(6) DESCRIPTION AND USABLE ON CODES (UOC)	(7) QTY
30	PFOZZ	5310-01-241-6345	15526	934 8 M8X1.25 C	NUT,PLAIN,HEXAGON	8
31	PFOZZ	5310-01-237-5224	64678	000125 008413	WASHER,FLAT	8
32	PFOZZ	5365-01-259-4098	64678	419 429 74 40	SPACER,PLATE.....	1
					END OF FIGURE	

UNIT, DIRECT SUPPORT AND GENERAL SUPPORT MAINTENANCE

SMALL EMPLACEMENT EXCAVATOR (SEE) AND HIGH MOBILITY MATERIAL HANDLER (HMMH)

TRAILER BRAKE CONNECTIONS AND CONTROLS (TRAILER HAND BRAKE VALVE) – DIRECT ROTARY VALVE N-30103-BD, LINES AND FITTINGS

REPAIR PARTS LIST

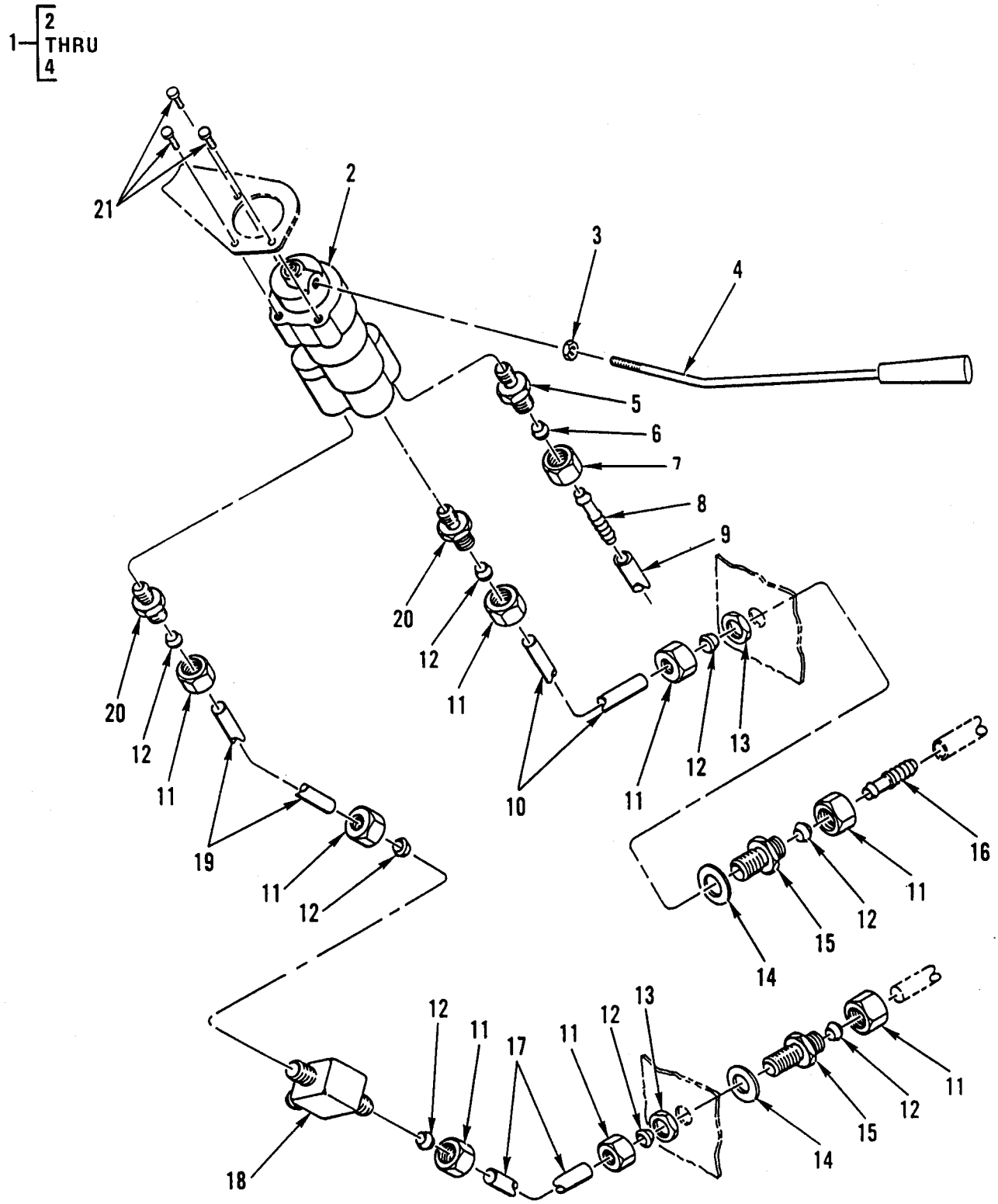

Figure 167. Trailer Brake Connections and Controls (Trailer Hand Brake Valve) – Direct Rotary Valve, Lines and Fittings.

(1) ITEM NO	(2) SMR CODE	(3) NSN	(4) CAGEC	(5) PART NUMBER	(6) DESCRIPTION AND USABLE ON CODES (UOC)	(7) QTY
					GROUP 1211	
					FIG. 167 TRAILER BRAKE CONNECTIONS AND CONTROLS (TRAILER HAND BRAKE VALVE) – VALVE, ROTARY, DIRECT N-30103-BD, LINES, AND FITTINGS	
1	PAOOO	4810-01-240-9853	D8046	419 430 7181	VALVE ROTARY,DIRCT	1
2	XAOZZ		19207	NPN-125	.VALVE	1
3	PFOZZ	5310-01-317-0347	06721	2X3127	.NUT,PLAIN,HEXAGON	1
4	PFOZZ	5340-01-334-4561	64678	102461K	.HANDLE,MANUAL CONTR	1
5	PAOZZ	4730-01-242-2855	D9596	7 06 051	.ADAPTER,STRAIGHT,PI	1
6	PFOZZ	4730-01-241-1735	64678	003861 008005	FERRULE,BRAZING,TUB	1
7	PFOZZ	4730-01-241-1532	64678	915017 008100	NUT,UNION	1
8	PFOZZ	4730-01-240-9318	64678	915062 006000	SLEEVE,COMPRESSION	1
9	MOOZZ		64678	008 997 90 82X 600	HOSE MAKE FROM CAGE 64678 P/N 008 997 90 82, CUT TO 600 MM	1
10	MOOZZ		64678	000 429 23 01X 520	HOSE MAKE FROM CAGE 64678 P/N 000 429 23 01, CUT TO 520 MM	1
11	PFOZZ	4730-01-241-4002	64678	915017 010100	NUT,UNION	V
12	PFOZZ	4730-01-241-4334	15526	3861 D 10S NP630	SLEEVE,COMPRESSION	V
13	PFOZZ	5310-01-244-9920	64678	080705 016003	NUT,PLAIN,HEXAGON	2
14	PAOZZ	5310-01-247-0977	15526	125 16	WASHER,FLAT	2
15	PFOZZ	4730-01-241-5486	64678	003910 010000	ADAPTER,STRAIGHT PI	2
16	PFOZZ	4730-01-241-4641	D9596	023131	ADAPTER,STRAIGHT,TU	1
17	MOOZZ		64678	000 429 23 01X 600	HOSE,NONMETALLIC MAKE FROM CAGE 64678 P/N 000 429 23 01, CUT TO 600 MM	1
18	PFOZZ	4730-01-241-2929	64678	000 429 59 32	TEE,TUBE TO BOSS UOC:GE1	1
19	MOOZZ		64678	000 429 23 01X 170	LINE MAKE FROM CAGE 64678 P/N 000 429 23 01, CUT TO 170 MM	1
20	PFOZZ	4730-01-240-9605	64678	004 997 93 72	ADAPTER,STRAIGHT,PI	2
21	PAOZZ	5305-01-384-3450	64678	23-10332-075	SCREW,MACHINE	3
					END OF FIGURE	

UNIT, DIRECT SUPPORT AND GENERAL SUPPORT MAINTENANCE

SMALL EMPLACEMENT EXCAVATOR (SEE) AND HIGH MOBILITY MATERIAL HANDLER (HMMH)

WHEELS AND TRACKS, WHEEL ASSEMBLY – WHEEL AND RELATED PARTS, PNEUMATIC TIRE VALVE MS51368-7

REPAIR PARTS LIST

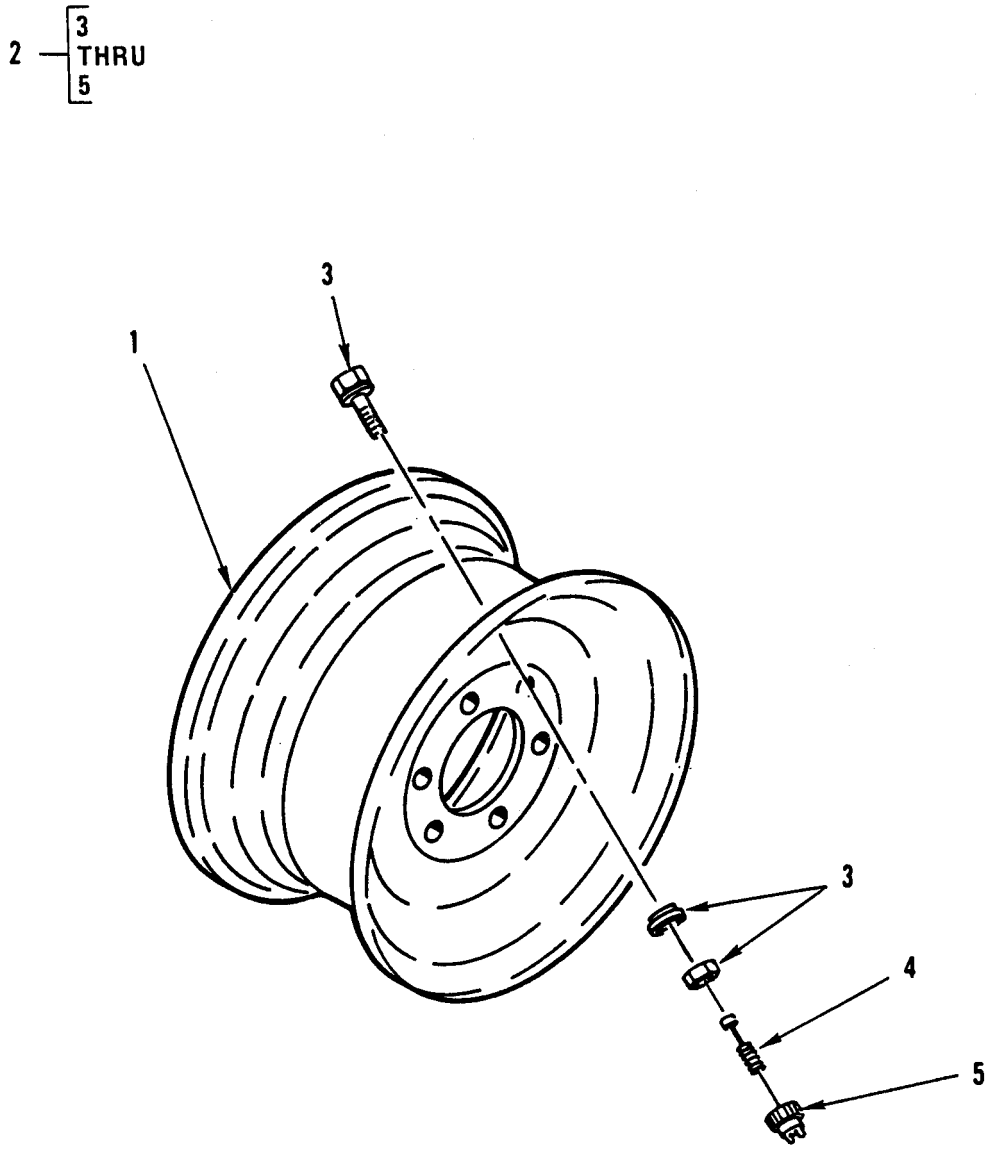

Figure 168. Wheels and Tracks, Wheel Assembly – Wheel and Related Parts, Pneumatic Tire Valve.

(1) ITEM NO	(2) SMR CODE	(3) NSN	(4) CAGEC	(5) PART NUMBER	(6) DESCRIPTION AND USABLE ON CODES (UOC)	(7) QTY
					GROUP 13, 1311	
					FIG. 168 WHEELS AND TRACKS, WHEEL ASSEMBLY – WHEEL AND RELATED PARTS, VALVE, PNEUMATIC TIRE MS51368-7	
1	PFOZZ	2530-01-241-0100	64678	406 401 11 01	RIM,WHEEL,PNEUMATIC	5
2	PAOOO	2640-00-999-7886	96906	MS51368-7	VALVE,PNEUMATIC TIR	5
3	XAOZZ		19207	NPN-126	.HOUSING,VALVE	1
4	PFOZZ	2640-00-050-1229	81348	TYV/CL2/TR C1	.VALVE CORE.....	1
5	PAOZZ	2640-00-060-3550	64678	007757 008400	.CAP,PNEUMATIC VALVE.....	1
					END OF FIGURE	

UNIT, DIRECT SUPPORT AND GENERAL SUPPORT MAINTENANCE

SMALL EMPLACEMENT EXCAVATOR (SEE) AND HIGH MOBILITY MATERIAL HANDLER (HMMH)

WHEEL ASSEMBLY – VEHICULAR WHEEL HUB 416 350 05 35, AND RELATED PARTS

REPAIR PARTS LIST

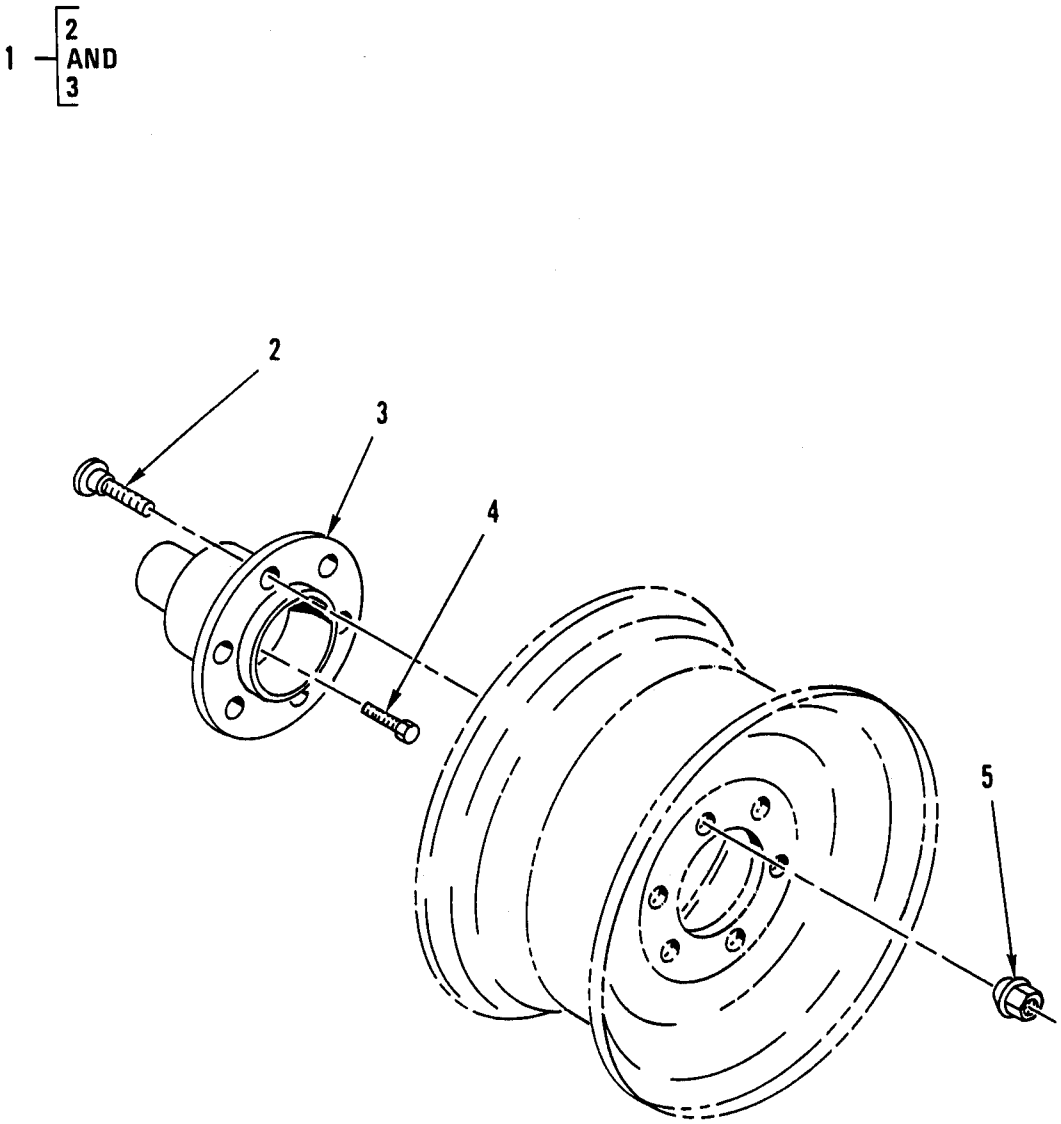

Figure 169. Wheel Assembly – Vehicular Wheel Hub and Related Parts.

(1) ITEM NO	(2) SMR CODE	(3) NSN	(4) CAGEC	(5) PART NUMBER	(6) DESCRIPTION AND USABLE ON CODES (UOC)	(7) QTY
					GROUP 1311	
					FIG. 169 WHEEL ASSEMBLY – HUB,WHEEL,VEHICULAR 416 350 05 35, AND RELATED PARTS	
1	PFOOO	2530-01-285-2724	64678	416 350 05 35	HUB,WHEEL,VEHICULAR	2
2	PAOZZ	5307-01-243-9521	64678	416 401 00 71	.STUD,SELF-LOCKING	12
3	XAOZZ		19207	NPN-127	.HUB,WHEEL	1
4	PFOZZ	5306-01-241-6268	64678	900170 016017	BOLT,MACHINE	40
5	PFOZZ	4730-01-241-3997	64678	074361 018105	NUT,TUBE COUPLING	24
					END OF FIGURE	

UNIT, DIRECT SUPPORT AND GENERAL SUPPORT MAINTENANCE

SMALL EMPLACEMENT EXCAVATOR (SEE) AND HIGH MOBILITY MATERIAL HANDLER (HMMH)

TIRES – VEHICULAR PNEUMATIC TIRE 12.5R20XLTPR12

REPAIR PARTS LIST

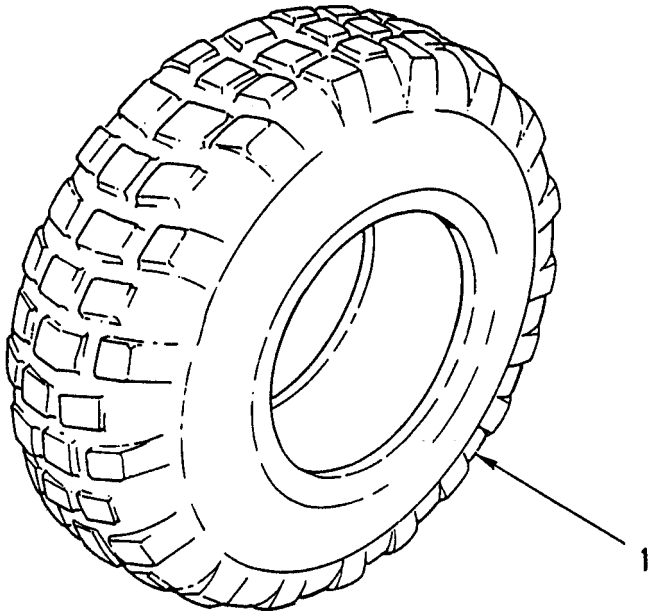

Figure 170. Vehicular Pneumatic Tire.

(1) ITEM NO	(2) SMR CODE	(3) NSN	(4) CAGEC	(5) PART NUMBER	(6) DESCRIPTION AND USABLE ON CODES (UOC)	(7) QTY
					GROUP 1313	
					FIG. 170 TIRES – TIRE,PNEUMATIC, VEHICULAR 12.5R20XLTPR12	
1	PCOFH	2610-01-220-6413	12195	12.5R20XLTPR12	TIRE,PNEUMATIC,VEHI	5
					END OF FIGURE	

UNIT, DIRECT SUPPORT AND GENERAL SUPPORT MAINTENANCE

SMALL EMPLACEMENT EXCAVATOR (SEE) AND HIGH MOBILITY MATERIAL HANDLER (HMMH)

STEERING, MECHANICAL STEERING GEAR ASSEMBLY – STEERING TIE ROD 416 330 00 03

REPAIR PARTS LIST

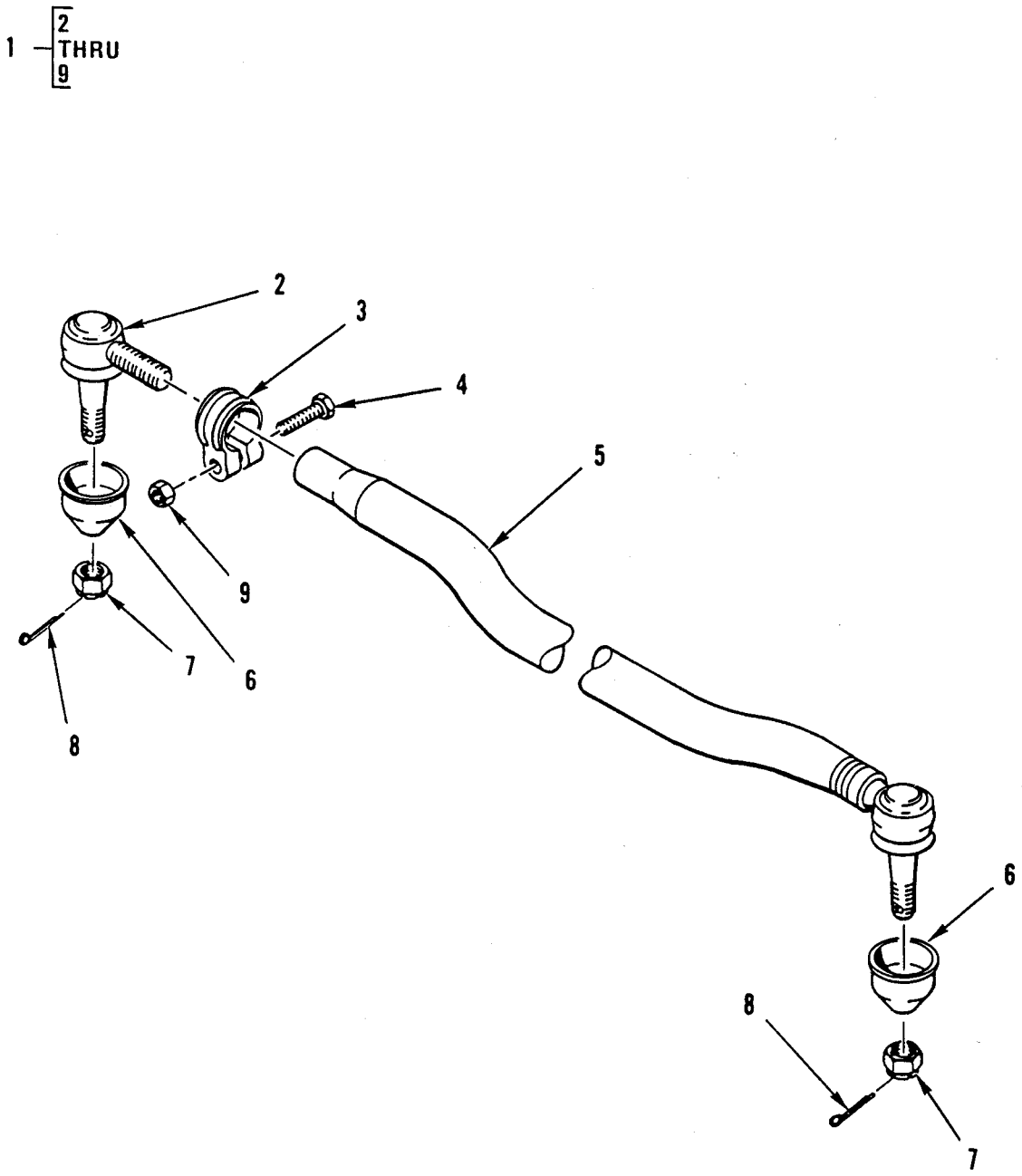

Figure 171. Steering, Mechanical Steering Gear Assembly – Steering Tie Rod.

(1) ITEM NO	(2) SMR CODE	(3) NSN	(4) CAGEC	(5) PART NUMBER	(6) DESCRIPTION AND USABLE ON CODES (UOC)	(7) QTY
					GROUP 14, 1401	
					FIG. 171 STEERING, MECHANICAL STEERING GEAR ASSEMBLY – TIE ROD, STEERING 416 330 00 03	
1	PAOOO	2530-01-241-1720	64678	416 330 00 03	TIE ROD,STEERING	1
2	XAOZZ		80468	007 330 12 35	.JOINT,BRAKE	1
3	PFOZZ	5340-12-175-8639	D9542	032 000 001 018	.CLAMP,LOOP	1
4	PFOZZ	5305-01-271-4276	15526	960 M10X1X50	.SCREW,MACHINE	1
5	XAOZZ		19207	NPN-128	.TIE ROD	1
6	XAOZZ		64678	000 330 08 85	.BOOT,VEHICULAR COMP	1
7	PFOZZ	5310-01-241-6335	64678	000937018003	.NUT,PLAIN,CASTELLAT	2
8	PFOZZ	5315-00-234-1664	96906	MS24665-495	.PIN,COTTER	2
9	PFOZZ	5310-01-245-3588	64678	000934 010010	.NUT,PLAIN,HEXAGON	1
					END OF FIGURE	

UNIT, DIRECT SUPPORT AND GENERAL SUPPORT MAINTENANCE

SMALL EMPLACEMENT EXCAVATOR (SEE) AND HIGH MOBILITY MATERIAL HANDLER (HMMH)

MECHANICAL STEERING GEAR ASSEMBLY – STEERING WHEEL AND SHAFT

REPAIR PARTS LIST

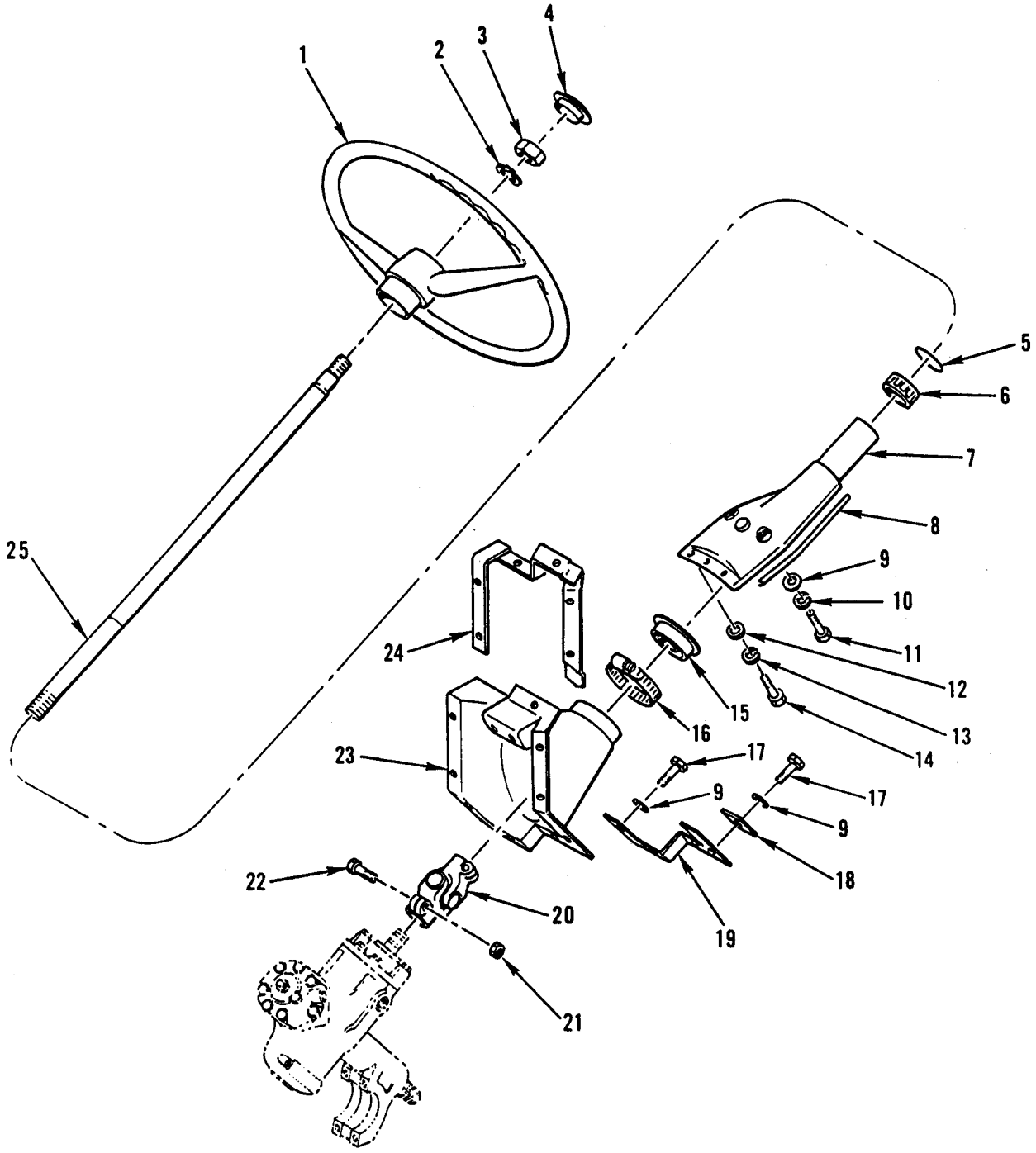

Figure 172. Mechanical Steering Gear Assembly – Steering Wheel and Shaft.

(1) ITEM NO	(2) SMR CODE	(3) NSN	(4) CAGEC	(5) PART NUMBER	(6) DESCRIPTION AND USABLE ON CODES (UOC)	(7) QTY
					GROUP 1401	
					FIG. 172 MECHANICAL STEERING GEAR ASSEMBLY – STEERING WHEEL AND SHAFT	
1	PFOZZ	2530-01-240-8640	D8236	354K450/990	STEERING WHEEL	1
2	PFOZZ	5310-01-243-9439	15526	137B 18	WASHER,SPRING,TENSI	1
3	PFOZZ	5310-01-268-2555	64678	000439 018204	NUT,PLAIN,HEXAGON	1
4	PFOZZ	5340-12-151-4794	D8236	A 50.0/1	PLUG,PROTECTIVE,DUST	1
5	PFOZZ	5325-01-386-3948	64678	001 994 19 41	RING,RETAINING	1
6	PFOZZ	3120-01-247-5894	64678	406 460 09 57	BEARING SET,SLEEVE	1
7	PFOZZ	2530-01-254-5598	64678	419 460 00 31	BRACKET,STEERING COLUMN	1
8	MOOZZ		64678	000 987 07 72X 220	GUARD,SECTION,EDGE MAKE FROM CAGE 64678 P/N 000 987 07 72, CUT TO 220 MM	2
9	PFOZZ	5310-01-237-5224	64678	000125 008413	WASHER,FLAT	2
10	PFOZZ	5310-01-174-0436	S3465	4537800-128	WASHER,SPRING TENSI	2
11	PFOZZ	5306-01-168-7889	S3465	4537800-791	BOLT,MACHINE	2
12	PFOZZ	5310-00-215-7656	43999	2W1-16-23-63	WASHER,FLAT	12
13	PFOZZ	5310-01-171-2356	S3465	4536226-920	WASHER,SPRING TENSI	2
14	PFOZZ	5305-01-155-5439	56161	10501757	SCREW,CAP,HEXAGON H	2
15	PFOZZ	5340-01-247-6917	64678	406 462 00 23	COVER,ACCESS	1
16	PFOZZ	4730-01-237-1757	64678	916017 060000	CLAMP,HOSE	1
17	PFOZZ	5305-01-386-3972	64678	000933 006078	SCREW,CAP,HEXAGON H	10
18	XDOZZ		64678	4065510376	SPACER,PLATE	1
19	PFOZZ	2510-01-243-6399	64678	406 616 50 06	FRAME,STRUCTURAL,VE	1
20	PAOZZ	2520-01-244-3668	C0897	D 116-10G	UNIVERSAL JOINT	1
21	PFOZZ	5310-01-239-3536	64678	913004 008004	NUT,SELF-LOCKING ,HE	4
22	PAOZZ	5306-01-248-3203	64678	316 990 01 14	BOLT,SHOULDER	2
23	PFOZZ	5330-01-259-2468	64678	406 462 03 97	SEAL,NONMETALLIC SP	1
24	PFOZZ	2510-01-243-6400	64678	406 610 50 73	FRAME,STRUCTURAL,VE	1
25	PFOZZ	3040-01-243-7715	64678	7360 029 307	SHAFT,SHOULDERED	1
					END OF FIGURE	

UNIT, DIRECT SUPPORT AND GENERAL SUPPORT MAINTENANCE

SMALL EMPLACEMENT EXCAVATOR (SEE) AND HIGH MOBILITY MATERIAL HANDLER (HMMH)

MECHANICAL STEERING GEAR ASSEMBLY – STEERING DRAG LINK, 3.R1044

REPAIR PARTS LIST

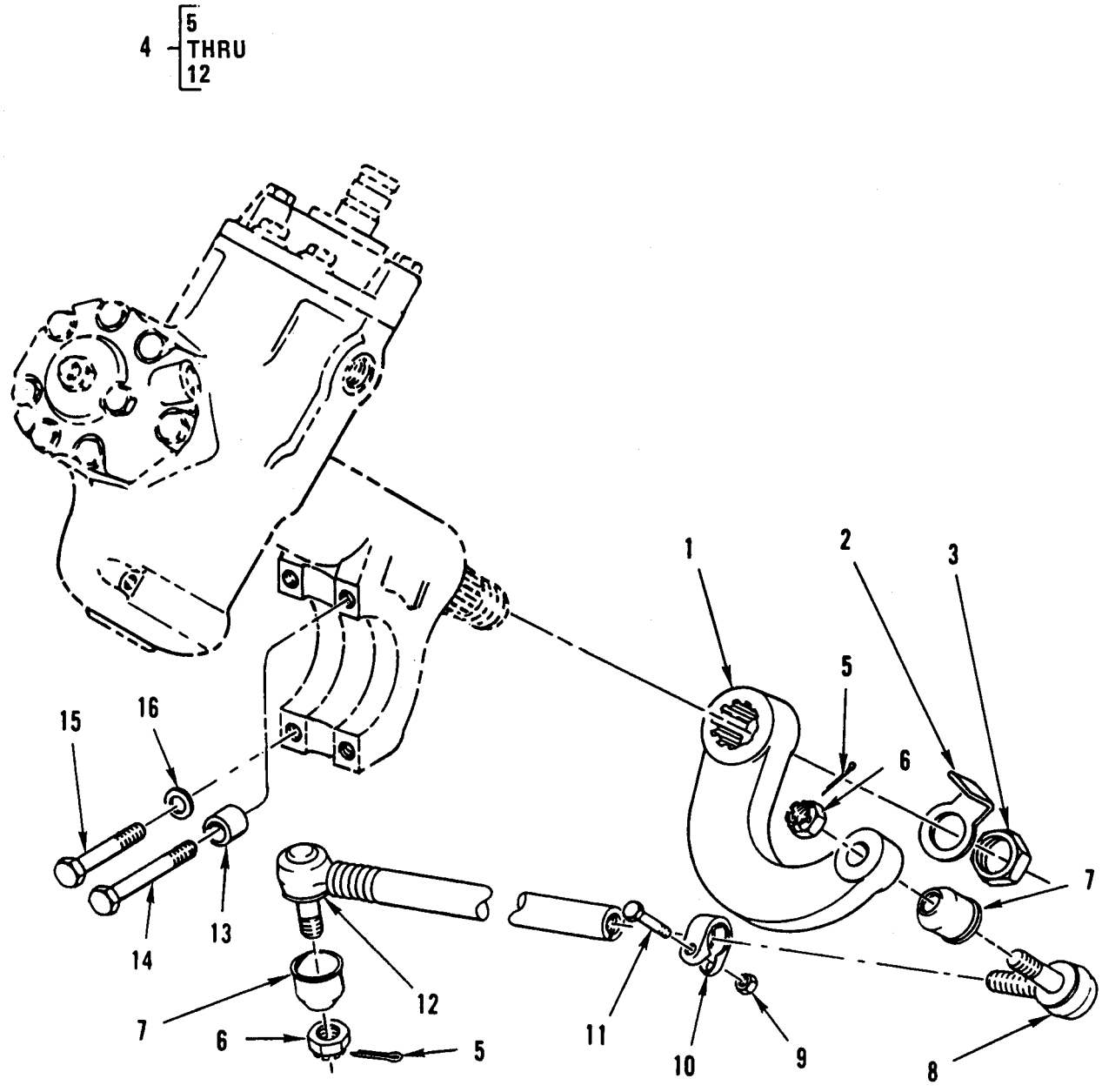

Figure 173. Mechanical Steering Gear Assembly – Steering Drag Link.

(1) ITEM NO	(2) SMR CODE	(3) NSN	(4) CAGEC	(5) PART NUMBER	(6) DESCRIPTION AND USABLE ON CODES (UOC)	(7) QTY
					GROUP 1401	
					FIG. 173 MECHANICAL STEERING GEAR ASSEMBLY – DRAG LINK, STEERING 3.R1044	
1	PFFZZ	2530-01-240-9862	64678	406 463 04 01	ARM,STEERING GEAR	1
2	PAFZZ	5310-01-288-1446	64678	403 991 50 25	WASHER,KEY	1
3	PFFZZ	5310-01-267-7418	64678	000936 035001	NUT,PLAIN,HEXAGON	1
4	PAOOO	2530-01-241-4323	F3699	3.R1044	DRAG LINK,STEERING	1
5	PFOZZ	5315-00-236-8371	96906	MS24665-441	.PIN,COTTER	2
6	PFOZZ	5310-01-288-1428	64678	000937 020014	.NUT,PLAIN,CASTELLAT	2
7	PFOZZ	5340-12-313-8108	D8046	000 330 1085	.BOOT,DUST AND MOIST	2
8	XAOZZ		64678	000 463 35 29	.BALL JOINT	1
9	PFOZZ	5310-01-239-3535	64678	913004 012008	.NUT,SELF-LOCKING,HE	1
10	PFOZZ	5340-12-192-9387	64678	000 338 26 45	.CLAMP,LOOP	1
11	XDOZZ		64678	000960 012077	.SCREW,CAP,HEXAGON H	1
12	XAOZZ		19207	NPN	.DRAG LINK	1
13	PFOZZ	5365-01-266-2435	64678	406 464 02 53	SPACER,SLEEVE	1
14	PFOZZ	5305-01-297-9024	64678	00960 014292	SCREW,CAP,HEXAGON H	1
15	PAOZZ	5306-01-263-8488	15526	960-10 M14X 1.5 9 0 P	BOLT,MACHINE	3
16	PFOZZ	2590-01-241-4885	64678	000 994 15 51	LOCK,BODY	5
					END OF FIGURE	

UNIT, DIRECT SUPPORT AND GENERAL SUPPORT MAINTENANCE

SMALL EMPLACEMENT EXCAVATOR (SEE) AND HIGH MOBILITY MATERIAL HANDLER (HMMH)

POWER STEERING GEAR ASSEMBLY – STEERING GEAR 406 460 01 01, ACCESS COVER 000 460 12 14, AND STRAIGHT SHAFT 000 462 46 12

REPAIR PARTS LIST

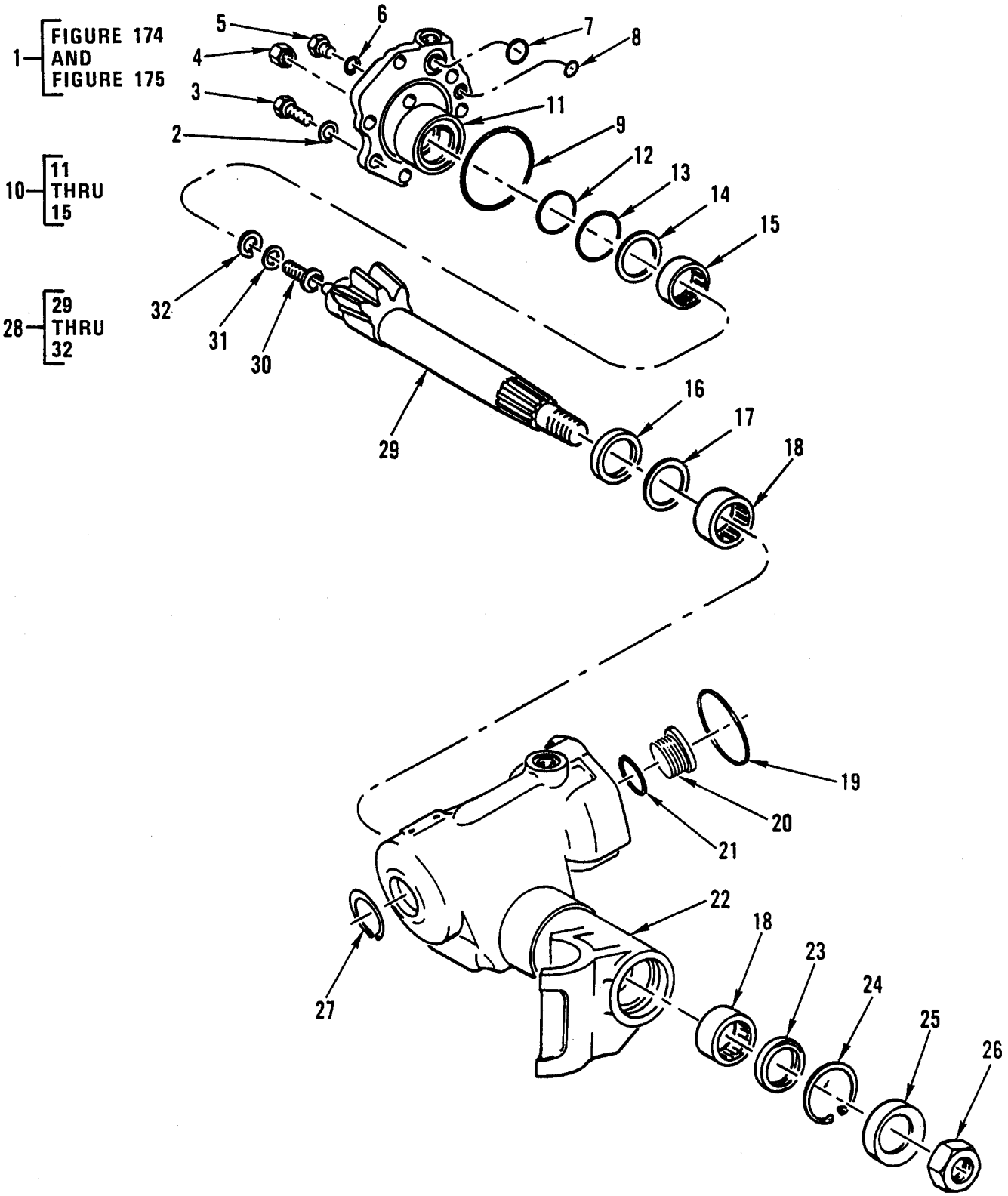

Figure 174. Power Steering Gear Assembly – Steering Gear, Access Cover, and Straight Shaft.

(1) ITEM NO	(2) SMR CODE	(3) NSN	(4) CAGEC	(5) PART NUMBER	(6) DESCRIPTION AND USABLE ON CODES (UOC)	(7) QTY
					GROUP 1407	
					FIG. 174 POWER STEERING GEAR ASSEMBLY – STEERING GEAR 406 460 01 01, COVER, ACCESS 000 460 12 14, AND SHAFT, STRAIGHT 000 462 46 12	
1	PBFDD	2530-01-240-2165	64678	406 460 01 01	STEERING GEAR	1
2	PADZZ	5310-01-250-6286	64678	001 462 27 52	.WASHER,FLAT	7
3	PFDZZ	5306-01-187-9502	56161	10516476	.BOLT,MACHINE	7
4	KFDZZ		D0741	0770 020 002	.NUT,SEALING PART OF KIT P/N 8038 633 021	1
5	PFDZZ	5365-01-291-8863	64678	007604 012102	.PLUG,MACHINE THREAD	1
6	PFDZZ	5330-01-301-5137	53465	4538741-112	.SEAL RING,METAL	1
7	PFDZZ	5331-01-263-8519	64678	005 997 00 48	.O-RING 23X3 MM	1
8	PFDZZ	5331-01-264-4232	64678	004 997 99 48	.O-RING 11X2 MM	1
9	PFDZZ	5331-01-265-1204	64678	010 997 58 48	.O-RING 96X3 MM	1
10	PADDD	5340-01-241-3949	64678	000 460 12 14	.COVER,ACCESS	1
11	XADZZ		19207	NPN–130	..COVER	1
12	PFDZZ	5331-01-264-4233	64678	009 997 99 48	..O-RING 44.8X47.6X2 MM	1
13	PFDZZ	5331-01-296-8576	64678	003 997 10 48	..O-RING 49X1.5 MM	1
14	PFDZZ	3110-01-265-9196	64678	000 462 05 28	..RING,BEARING,INNER	1
15	PFDZZ	3110-01-266-2384	D8984	000 981 27 10	..BEARING,ROLLER,NEED	1
16	PFDZZ	5325-01-317-8120	64678	0004621865	.RING,RETAINING	1
17	PFDZZ	5310-12-162-8036	D0741	8062 032 102	.WASHER,FLAT	1
18	PFDZZ	3110-01-266-2384	D8984	000 981 27 10	.BEARING,ROLLER,NEED	2
19	PFDZZ	5331-01-285-4934	64678	015 997 01 48	.O-RING	1
20	PADZZ	5340-01-240-8351	64678	000 461 02 42	.COVER,ACCESS	1
21	PFDZZ	5331-01-285-4935	64678	015 997 00 48	.O-RING	1
22	XADZZ		19207	NPN-131	.HOUSING,STEERING BO	1
23	KFDZZ		D0741	0770 198 038	.RING,SEAL PART OF KIT P/N 8038 633 021	1
24	PADZZ	5325-01-264-5810	15526	472 60	.RING,RETAINING	1
25	PFDZZ	5340-01-249-0765	64678	000 462 08 96	.CAP,PROTECTIVE,DUST	1
26	PFDZZ	5310-01-267-7418	64678	000936 035001	.NUT,PLAIN,HEXAGON	1
27	PADZZ	5325-01-243-2321	15526	471 45	.RING,RETAINING	1
28	PADDD	3040-01-240-8346	64678	000 462 46 12	.SHAFT,STRAIGHT	1
29	XADZZ		19207	NPN-132	..SHAFT	1
30	PFDZZ	5306-12-195-4132	D0741	8036 030 101	..BOLT,MACHININE	1

(1) ITEM NO	(2) SMR CODE	(3) NSN	(4) CAGEC	(5) PART NUMBER	(6) DESCRIPTION AND USABLE ON CODES (UOC)	(7) QTY
31	PADZZ	5310-01-243-4703	64678	003 462 04 52	..WASHER,FLAT 2.950 MM V	
31	PADZZ	5310-01-267-5514	64678	003 462 05 52	..WASHER,FLAT 2.975 MM V	
31	PADZZ	5310-1-266-2440	64678	003 462 06 52	..WASHER,FLAT 3.000 MM V	
31	PADZZ	5310-01-266-9162	64678	003 462 07 52	..WASHER 3.025 MM V	
31	PADZZ	5310-01-266-2362	64678	003 462 49 52	..WASHER 3.050 MM V	
31	PADZZ	5310-01-260-9726	64678	003 462 50 52	..WASHER 3.075 MM V	
31	PADZZ	5310-01-260-9727	64678	003 462 51 52	..WASHER 3.100 MM V	
31	PADZZ	5310-01-260-9728	64678	003 462 52 52	..WASHER 3.125 MM V	
31	XDDZZ		64678	003 462 53 52	..WASHER 3.150 MM V	
31	PFDZZ	5310-01-266-9164	64678	003 462 54 52	..WASHER 3.175 MM V	
31	PADZZ	5310-01-266-2363	64678	003 462 55 52	..WASHER 3.200 MM V	
31	PADZZ	5310-01-243-4962	64678	003 462 56 52	..WASHER 3.225 MM V	
31	PADZZ	5310-01-265-9187	64678	003 462 57 52	..WASHER 3.250 MM V	
31	PADZZ	5310-01-266-9165	64678	003 462 58 52	..WASHER 3.275 MM V	
32	PADZZ	2590-01-241-4886	64678	003 994 30 41	..LOCK,BODY	1

END OF FIGURE

UNIT, DIRECT SUPPORT AND GENERAL SUPPORT MAINTENANCE

SMALL EMPLACEMENT EXCAVATOR (SEE) AND HIGH MOBILITY MATERIAL HANDLER (HMMH)

POWER STEERING GEAR ASSEMBLY – POWER STEERING GEAR ASSEMBLY

REPAIR PARTS LIST

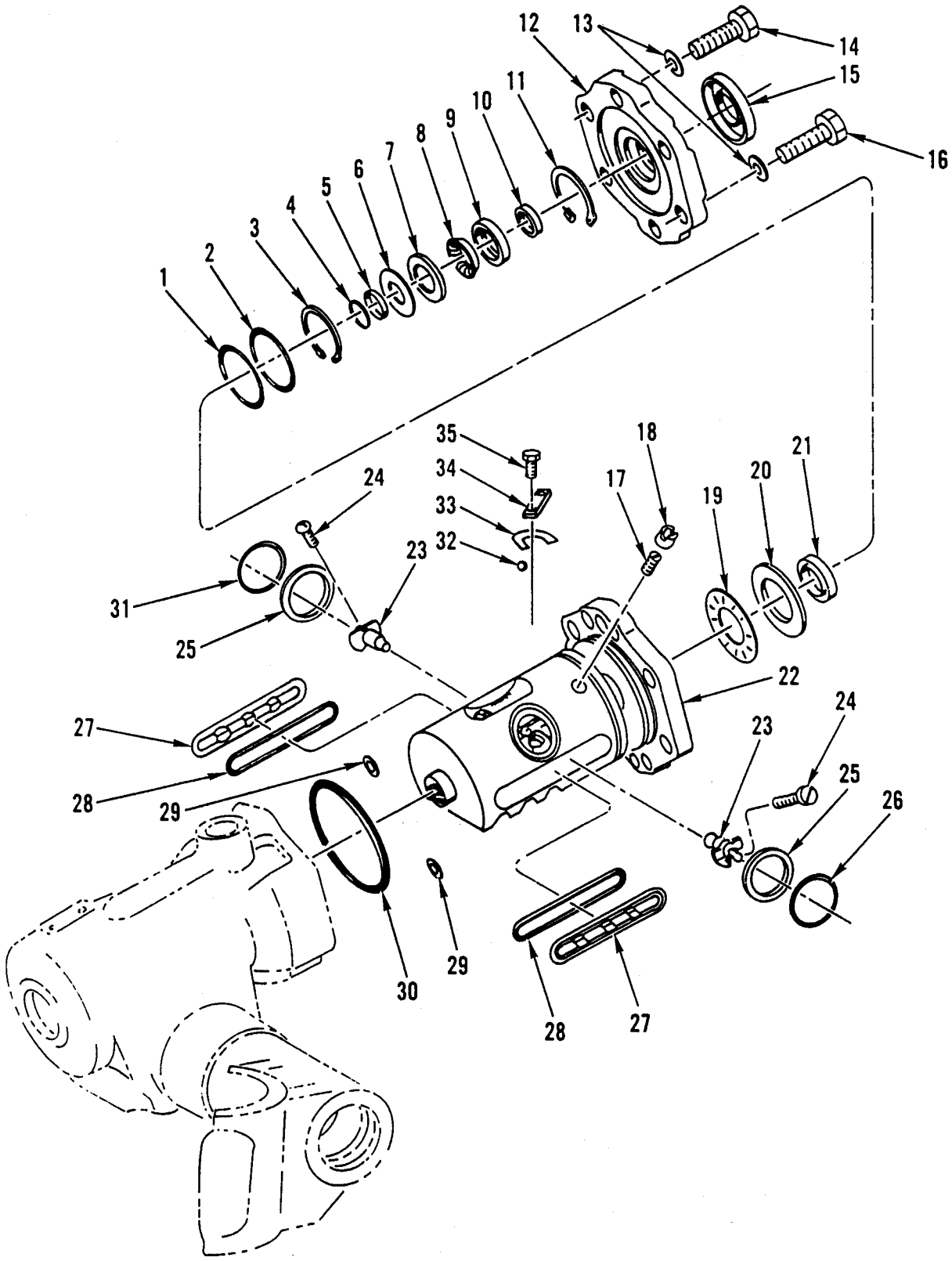

Figure 175. Power Steering Gear Assembly – Power Steering Gear Assembly.

(1) ITEM NO	(2) SMR CODE	(3) NSN	(4) CAGEC	(5) PART NUMBER	(6) DESCRIPTION AND USABLE ON CODES (UOC)	(7) QTY
					GROUP 1407	
					FIG. 175 POWER STEERING GEAR ASSEMBLY – POWER STEERING GEAR ASSEMBLY	
1	PADZZ	5330-01-243-7321	64678	010 997 57 48	.O-RING	1
2	PFDZZ	5330-01-243-9449	64678	000 462 05 60	.O-RING 92.9X95.5X2.6 MM	1
3	PFDZZ	5342-01-243-7208	64678	003 994 87 41	.LOCK,SPECIAL	1
4	PADZZ	5310-01-244-5793	64678	003 462 76 52	.WASHER	1
5	PADZZ	2530-01-241-6055	64678	001 981 69 80	.RACE,STEERING GEAR	1
6	PADZZ	5310-01-243-4962	64678	003 462 70 52	.WASHER 30.5X46.9X2 MM	2
7	PFDZZ	3110-01-243-5022	64678	001 981 34 10	.BEARING,ROLLER,NEED	2
8	PFDZZ	2530-01-240-8643	64678	000 462 04 38	.TIE ROD END,STEERIN	1
9	PFDZZ	3110-01-273-0043	64678	000 981 61 80	.SEAT,BEARING	1
10	PADZZ	5330-01-268-6780	64678	000 462 06 60	.SEAL,RING 23.8X26.4X2 MM	1
11	PADZZ	5325-01-249-7687	15526	472 37	.RING,RETAINING	1
12	PADZZ	5340-01-240-8349	64678	000 460 12 15	.COVER,ACCESS	1
13	PADZZ	5310-01-250-6286	64678	001 462 27 52	.WASHER,FLAT	6
14	PADZZ	5306-01-263-8489	64678	000961 012192	.BOLT,MACHINE	2
15	PFDZZ	5330-01-247-5845	64678	000 462 01 96	.GASKET	1
16	PFDZZ	5306-01-245-7177	15526	961-10 M12X 1.5 4 0 F	.BOLT,MACHINE	4
17	PFDZZ	5307-01-243-9337	64678	000 462 05 70	.STUD,PLAIN	2
18	PADZZ	5310-01-250-5250	64678	000546 006002	.NUT,PLAIN,ROUND	2
19	PFDZZ	3110-01-243-5023	64678	007 981 36 10	.BEARING,ROLLER,NEED	1
20	PFDZZ	5365-01-244-0971	64678	003 462 59 52	.SPACER,RING	2
21	KFDZZ		D0741	0770 198 103	.RING,SEAL PART OF KIT P/N 8038 633 021	1
22	XADZZ		19207	NPN-133	.HOUSING,SHAFT	1
23	PADZZ	3040-01-292-6421	D0741	000 462 2783	.PISTON,LINEAR ACTUA	2
24	PADZZ	5305-01-243-7327	64678	000 462 17 71	.SCREW,MACHINE	2
25	PFDZZ	2805-01-240-9308	64678	000 462 50 65	.RING,PISTON	2
26	PADZZ	5330-01-253-0067	64678	000 462 07 60	.SEAL,PLAIN,ENCASED	1
27	PFDZZ	5365-01-244-0782	64678	000 462 48 65	.RING	2
28	PFDZZ	5365-01-243-9319	64678	000 462 61 65	.RING	2
29	KFDZZ		D0741	0634 304 521	.PACKING,PREFORMED PART OF KIT P/N 8038 633 021	2
30	KFDZZ		D0741	0634 304 599	.PACKING,PREFORMED 90X3 MM PART OF KIT P/N 8038 633 021	1
31	PADZZ	5330-01-243-7209	64678	000 462 00 60	.SEAL,RING	1

(1) ITEM NO	(2) SMR CODE	(3) NSN	(4) CAGEC	(5) PART NUMBER	(6) DESCRIPTION AND USABLE ON CODES (UOC)	(7) QTY
32	PFDZZ	3110-01-243-5013	64678	002 981 06 85	.BALL,BEARING 7.989 MM.....	1
32	PFDZZ	3110-01-243-5014	64678	002 981 07 85	.BALL,BEARING 7.993 MM.....	1
32	PFDZZ	3110-01-243-5015	64678	002 981 08 85	.BALL,BEARING 7.997 MM.....	1
32	PFDZZ	3110-01-243-5016	64678	002 981 09 85	.BALL,BEARING 8.001 MM.....	1
32	PFDZZ	3110-01-243-5017	64678	002 981 10 85	.BALL,BEARING 8.005 MM.....	1
32	PFDZZ	3110-01-243-5018	64678	002 981 11 85	.BALL,BEARING 8.009 MM.....	1
32	PFDZZ	3110-01-243-5019	64678	002 981 12 85	.BALL,BEARING 8.013 MM.....	1
33	PFDZZ	3110-01-243-5012	64678	000 462 28 27	.RING,BEARING,INNER.....	2
34	PFDZZ	5340-01-240-8350	64678	000 462 02 95	.COVER,ACCESS	1
35	PADZZ	5305-01-245-8743	64678	000965005001	.SCREW,MACHINE.....	2
					END OF FIGURE	

UNIT, DIRECT SUPPORT AND GENERAL SUPPORT MAINTENANCE

SMALL EMPLACEMENT EXCAVATOR (SEE) AND HIGH MOBILITY MATERIAL HANDLER (HMMH)

HYDRAULIC PUMP OR FLUID MOTOR ASSEMBLY – CENTRIFUGAL PUMP 001 466 11 01

REPAIR PARTS LIST

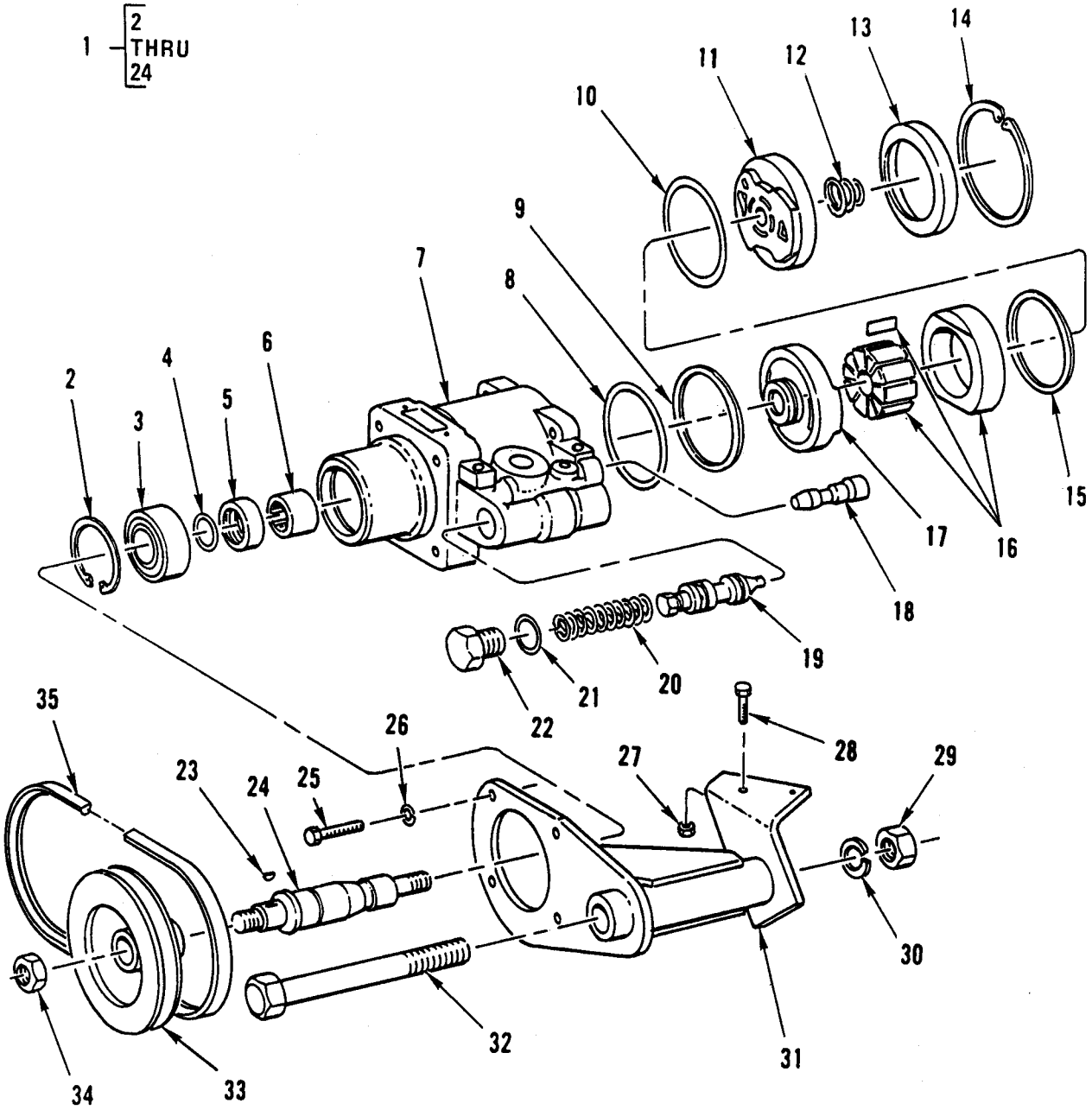

Figure 176. Hydraulic Pump or Fluid Motor Assembly – Centrifugal Pump.

(1) ITEM NO	(2) SMR CODE	(3) NSN	(4) CAGEC	(5) PART NUMBER	(6) DESCRIPTION AND USABLE ON CODES (UOC)	(7) QTY
					GROUP 1410	
					FIG. 176 HYDRAULIC PUMP OR FLUID MOTOR ASSEMBLY – CENTRIFUGAL PUMP 001 466 11 01	
1	PAFDD	5320-01-241-2454	64678	001 466 11 01	PUMP,CENTRIFUGAL	1
2	PADZZ	5325-01-244-2691	15526	472 42	.RING,RETAINING	1
3	PADZZ	3040-01-242-2933	64678	000 466 19 20	.SHAFT,SHOULDERED	1
4	XDDZZ		64678	009045020001	.RING,RETAINING	1
5	PADZZ	5330-01-247-9245	D8124	0770 198 086 B	.SEAL,PLAIN PART OF KIT P/N 7672 633 017	1
6	PFDZZ	3110-01-247-5810	64678	000 981 10 84	.RETAINER AND BALLS	1
7	XADZZ		19207	NPN-134	.HOUSING,PUMP	1
8	KFDZZ		D0741	0634 316 357	.PACKING PREFORMED PART OF KIT P/N 7672 633 017	1
9	PFDZZ	5330-12-178-7236	D0741	7672 040 175 B	.GASKET PART OF KIT P/N 7672 633 017	1
10	KFDZZ		D0741	0634 316 358	.PACKING,PREFORMED PART OF KIT P/N 7672 633 017	1
11	PFDZZ	4320-01-242-2979	64678	000 466 60 05	.COVER,HYDRAULIC,PUM	1
12	PFDZZ	5360-12-195-1413	D0741	7672 036 115 B	.SPRING,HELICAL,COMP	1
13	PADZZ	5340-01-264-1524	64678	000 466 45 05	.COVER,ACCESS	1
14	PFDZZ	5325-12-172-7279	D0741	7673 037 104	.RING,RETAINING	1
15	KFDZZ		D0741	7672 040 0350	.SPACER,RING PART OF KIT P/N 7672 633 017	2
16	PFDZZ	3020-01-243-0979	64678	000 466 07 22	.GEAR,SPUR	1
17	PADZZ	4320-01-242-2978	64678	000 466 16 05	.COVER,HYDRAULIC,PUMP	1
18	PADZZ	4320-01-244-4609	D0741	7723 041 183 B	.SLEEVE,SHAFT,PUMP	1
19	PFDZZ	3040-01-242-3018	64678	000 466 29 83	.PISTON,LINEAR ACTU	1
20	PFDZZ	5360-12-170-5573	D0741	7723 036 102	.SPRING,HELICAL,COMP	1
21	PADZZ	5330-01-174-7588	S3465	4537800-115	.PACKING,PREFORMED	1
22	PFDZZ	5365-12-195-2195	D0741	7723 030 130	.PLUG,MACHINE THREAD	1
23	PADZZ	5315-12-156-4671	D8286	4X5DIN6888	.KEY,WOODRUFF	1
24	PADZZ	3040-01-242-2933	64678	000 466 19 20	.SHAFT,SHOULDERED	1
25	PFFZZ	5306-01-174-7550	S3465	4537800-129	BOLT,MACHINE	4
26	PFFZZ	5310-01-174-0436	S3465	4537800-128	WASHER,SPRING TENSI	4
27	PFFZZ	5310-01-238-3198	15526	934 M10X1.5C	NUT,PLAIN,HEXAGON	1
28	PFFZZ	5305-01-245-8754	15526	933 M10 40F	SCREW,CAP,HEXAGON H	2
29	PFFZZ	5310-01-243-7308	64678	000934 020008	NUT,PLAIN,HEXAGON	1
30	PFFZZ	5310-01-238-3205	64678	912004 020100	WASHER,LOCK	1

(1) ITEM NO	(2) SMR CODE	(3) NSN	(4) CAGEC	(5) PART NUMBER	(6) DESCRIPTION AND USABLE ON CODES (UOC)	(7) QTY
31	PFFZZ	5342-01-245-6747	64678	406 550 42 40	BRACKET,ENGINE ACCE	1
32	PFFZZ	5305-01-243-9405	64678	000960 020150	SCREW,CAP,HEXAGON H.....	1
33	PFFZZ	3020-01-242-3121	64678	406 466 00 15	PULLEY,GROOVE	1
34	PFFZZ	5310-01-238-3201	64678	913004 014002	NUT,SELF-LOCKING,HE	1
35	PAOZZ	3030-01-247-3224	24161	9365	BELT,V	1
					END OF FIGURE	

UNIT, DIRECT SUPPORT AND GENERAL SUPPORT MAINTENANCE

SMALL EMPLACEMENT EXCAVATOR (SEE) AND HIGH MOBILITY MATERIAL HANDLER (HMMH)

HOSES, LINES AND FITTINGS – POWER STEERING LINES AND FITTINGS

REPAIR PARTS LIST

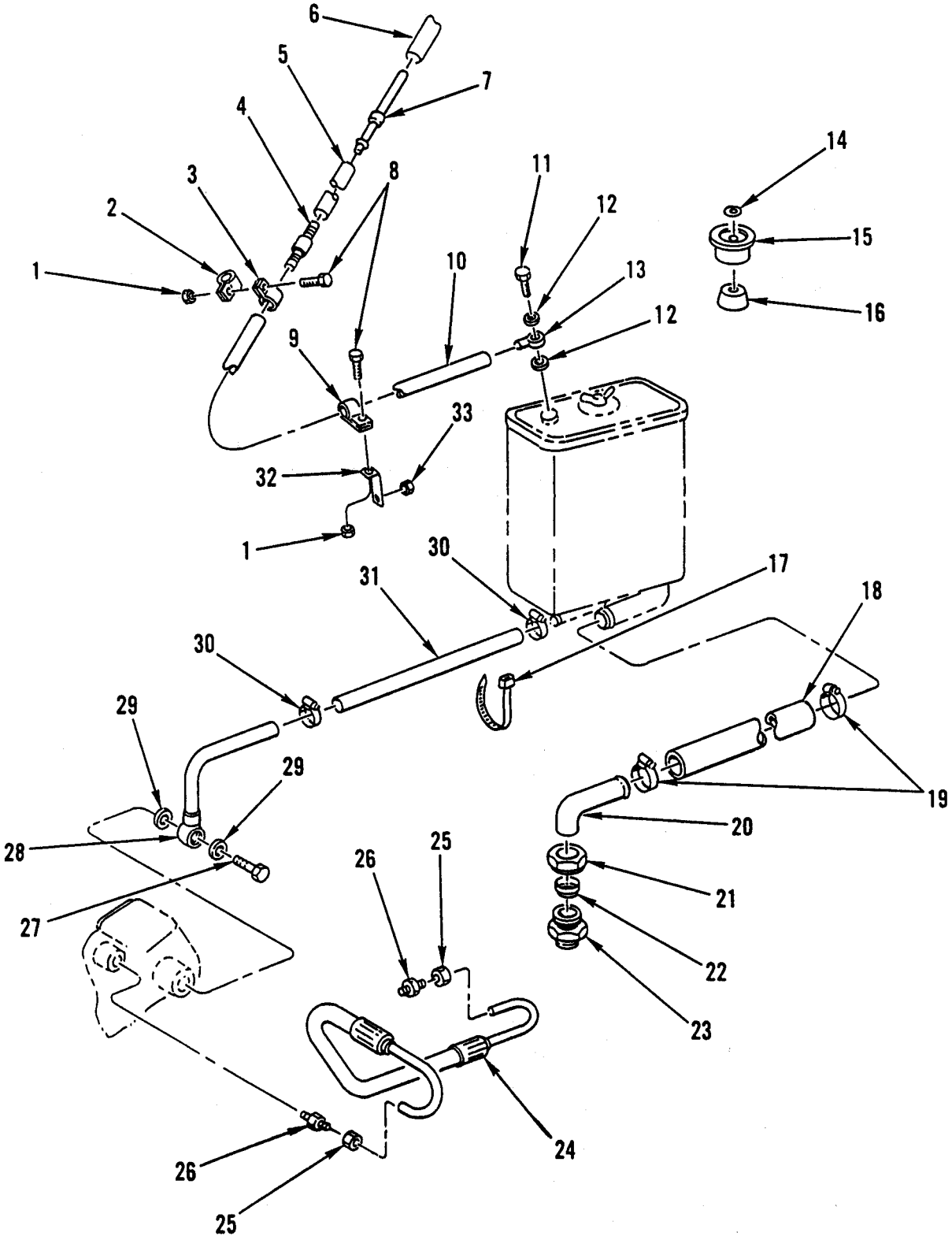

Figure 177. Hoses, Lines, and Fittings – Power Steering Lines and Fittings.

(1) ITEM NO	(2) SMR CODE	(3) NSN	(4) CAGEC	(5) PART NUMBER	(6) DESCRIPTION AND USABLE ON CODES (UOC)	(7) QTY
					GROUP 1411	
					FIG. 177 HOSES, LINES, AND FITTINGS – POWER STEERING LINES AND FITTINGS	
1	PFOZZ	5310-01-241-6349	64678	913004 006002	NUT,SELF-LOCKING,HE	2
2	PAOZZ	5342-01-247-7447	64678	916016 010210	CLAMP	1
3	PAOZZ	5340-12-143-0068	D8773	RSGU1100-8-15	CLAMP,LOOP	1
4	PFOZZ	4730-01-244-6207	64678	000 990 46 78	MENDER,HOSE	1
5	MOOZZ		64678	008 997 90 82X700	HOSE,NONMETALLIC MAKE FROM CAGE 64678 P/N 008 997 90 82, CUT TO 700 MM	1
6	MOOZZ		64678	000 435 20 82X 60	HOSE,NONMETALLIC MAKE FROM CAGE D8046 P/N 000 435 20 82, CUT TO 60 MM	1
7	PAOZZ	4710-01-244-9647	64678	406 550 00 64	PIPE SOCKET	1
8	PFOZZ	5305-01-155-5439	56161	10501757	SCREW,CAP,HEXAGON H	2
9	PFOZZ	5340-01-239-8963	64678	360 995 20 01	CLAMP,LOOP	1
10	MOOZZ		64678	073379 006203X 320	HOSE,NONMETALLIC MAKE FROM CAGE D8046 P/N 073379 006203, 320 MM	1
11	PFOZZ	5305-01-312-9971	64678	915036 006202	SCREW,CAP,HEXAGON H	1
12	PAOZZ	5330-00-140-7707	D8046	007603 010101	RING,SEAL	2
13	PFOZZ	4730-01-244-7843	64678	915052 006003	CONNECTOR,MULTIPLE	1
14	PAOZZ	5310-01-249-0646	64678	000125 008426	WASHER,FLAT	1
15	PFOZZ	5340-01-243-9527	64678	352 018 01 05	COVER,ACCESS	1
16	PFOZZ	5340-01-246-0661	64678	352 018 02 05	COVER,ACCESS	1
17	PFOZZ	5340-01-240-5728	64678	001 997 83 90	STRAP,LINE SUPPORTI	2
18	MOOZZ		64678	442 987 11 43X 500 MM	SLEEVE,RUBBER MAKE FROM CAGE 64678 P/N 442 987 11 43, CUT TO 500 MM	1
19	PAOZZ	4730-12-161-4632	64678	916017 020000	CLAMP,HOSE	2
20	PFOZZ	4710-01-242-3138	64678	440 460 02 88	TUBE ASSEMBLY,METAL	1
21	PFOZZ	4730-01-242-6908	64678	915017 022100	NUT,UNION 22 MM ALUMINUM NUT	1
22	PFOZZ	4730-01-242-3151	15526	3861D 22L	ADAPTER,STRAIGHT,TU	1
23	PFOZZ	4730-01-242-2856	D9596	709 332	FITTING	1
24	PAOZZ	4720-01-242-4516	D2497	GH1706G00380-165	HOSE ASSEMBLY,NONME	1
25	PFOZZ	4730-01-243-0023	64678	915017 012100	NUT,UNION	2
26	PAOZZ	4730-01-242-2837	64678	003901 012011	NIPPLE,PIPE	2
27	PAOZZ	4730-01-243-0041	64678	915036 015200	BOLT,FLUID PASSAGE	1
28	PFOZZ	4710-01-242-9515	64678	406 550 25 58	LINE PIPE	1
29	PAOZZ	5365-00-137-6206	D8046	007603 018101	RING,SEAL	2
30	PAOZZ	4730-01-242-2887	64678	916017 011000	CLAMP,HOSE	2

(1) ITEM NO	(2) SMR CODE	(3) NSN	(4) CAGEC	(5) PART NUMBER	(6) DESCRIPTION AND USABLE ON CODES (UOC)	(7) QTY
31	MOOZZ		64678	000 551 40 56X 430	TUBING,NONMETALLIC MAKE FROM CAGE 64678 P/N 000 51 40 56, CUT TO 430 MM.....	1
32	PFOZZ	5340-01-248-4781	64678	406 476 00 36	BRACKET,ANGLE.....	1
33	PFOZZ	5310-01-241-0761	64678	913004 005001	NUT,SELF-LOCKING,HE	1
					END OF FIGURE	

UNIT, DIRECT SUPPORT AND GENERAL SUPPORT MAINTENANCE

SMALL EMPLACEMENT EXCAVATOR (SEE) AND HIGH MOBILITY MATERIAL HANDLER (HMMH)

TANKS, RESERVOIRS – HYDRAULIC OIL TANK 67 302 70 146

REPAIR PARTS LIST

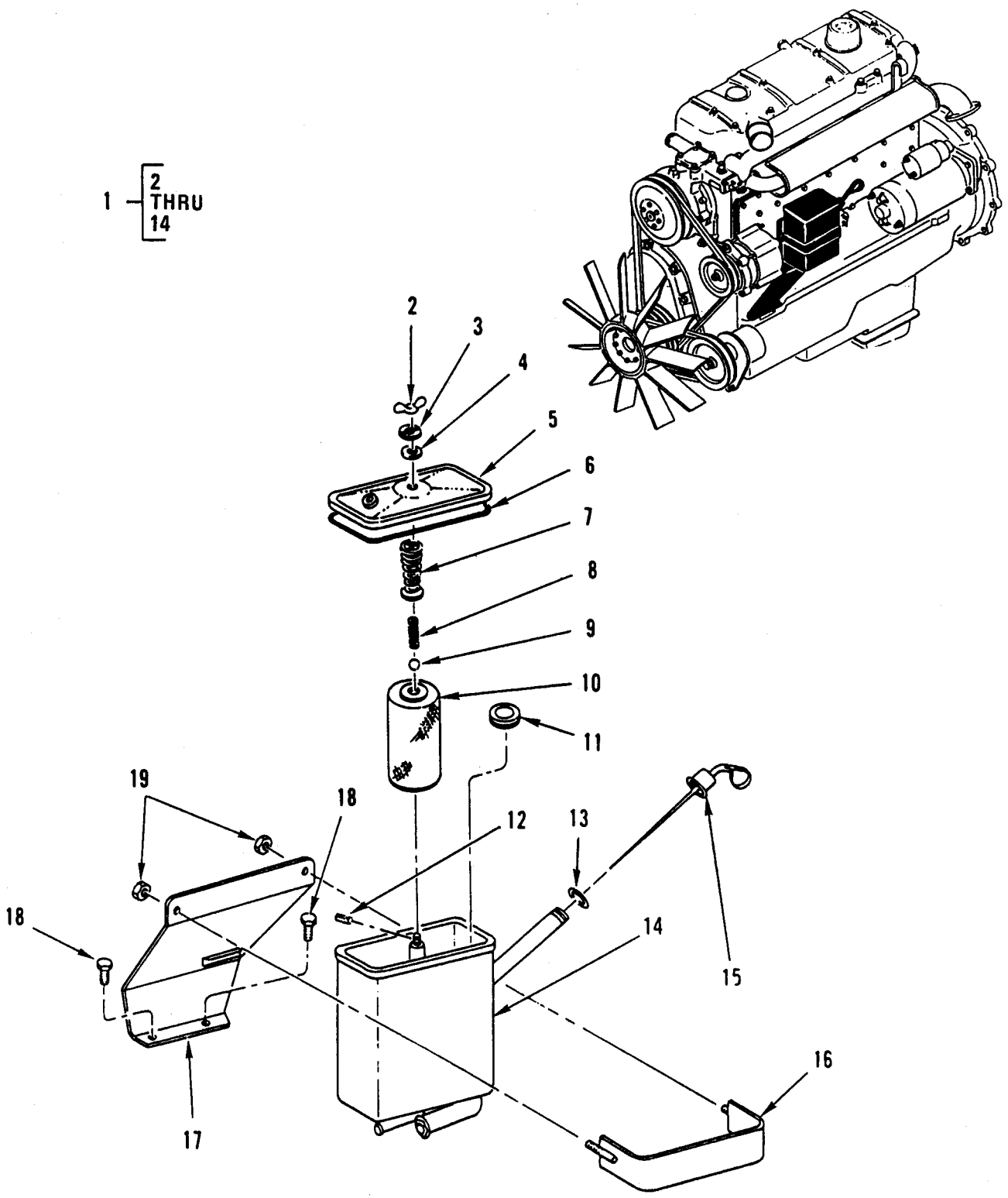

Figure 178. Tanks, Reservoirs – Hydraulic Oil Tank.

(1) ITEM NO	(2) SMR CODE	(3) NSN	(4) CAGEC	(5) PART NUMBER	(6) DESCRIPTION AND USABLE ON CODES (UOC)	(7) QTY
					GROUP 1413	
					FIG. 178 TANKS, RESERVOIRS – TANK, OIL, HYDRAULIC 67 302 70 146	
1	PFOOO	2590-01-243-6485	D8086	67 302 70 146	TANK,OIL,HYDRAULIC	1
2	PFOZZ	5310-01-248-9800	64678	000315 008006	.NUT,PLAIN,WING	1
3	PFOZZ	5310-01-327-5181	64678	007349 008006	.WASHER,FLAT	1
4	PAOZZ	5330-01-313-3588	D8086	23 008 31 141	.RETAINER,PACKING	1
5	XAOZZ		19207	NPN-135	.COVER,TANK	1
6	PFOZZ	5330-01-247-5844	D8086	23 132 33 101	.GASKET	1
7	PFOZZ	5360-01-320-5814	64678	003 993 31 01	.SPRING,HELICAL,COMP	1
8	PFOZZ	5360-12-176-1573	D8086	25 007 51 401	.SPRING,HELICAL,COMP	1
9	PFOZZ	3110-01-243-5020	15526	5401 9	.BALL,BEARING	1
10	PAOZZ	2910-01-244-5509	64678	67 302 52 206	.FILTER ELEMENT,FLUI	1
11	PAOZZ	5330-12-177-1651	D8086	23 022 33 111	.PACKING,PREFORMED	1
12	PFOZZ	5315-12-126-6719	D8286	DIN1481-2X12	.PIN,SPRING	1
13	PAOZZ	5330-01-238-4614	64678	198 997 00 40	.O-RING	1
14	XAOZZ		19207	NPN-136	.RESERVOIR	1
15	PAOZZ	6680-01-243-0448	64678	406 580 00 55	GAGE ROD,LIQUID LEV	1
16	PFOZZ	4730-01-248-6347	64678	406 500 05 74	CLAMP,HOSE	1
17	PAOZZ	5340-01-244-4580	64678	406 550 19 40	BRACKET,DOUBLE ANGL	1
18	PAOZZ	5306-01-243-9853	64678	000960 014272	BOLT,MACHINE	2
19	PFOZZ	5310-01-239-3536	64678	913004 008004	NUT,SELF-LOCKING,HE	2
					END OF FIGURE	

UNIT, DIRECT SUPPORT AND GENERAL SUPPORT MAINTENANCE

SMALL EMPLACEMENT EXCAVATOR (SEE) AND HIGH MOBILITY MATERIAL HANDLER (HMMH)

FRAME TOWING ATTACHMENTS AND DRAWBARS, FRAME ASSEMBLY – CHASSIS FRAME

REPAIR PARTS LIST

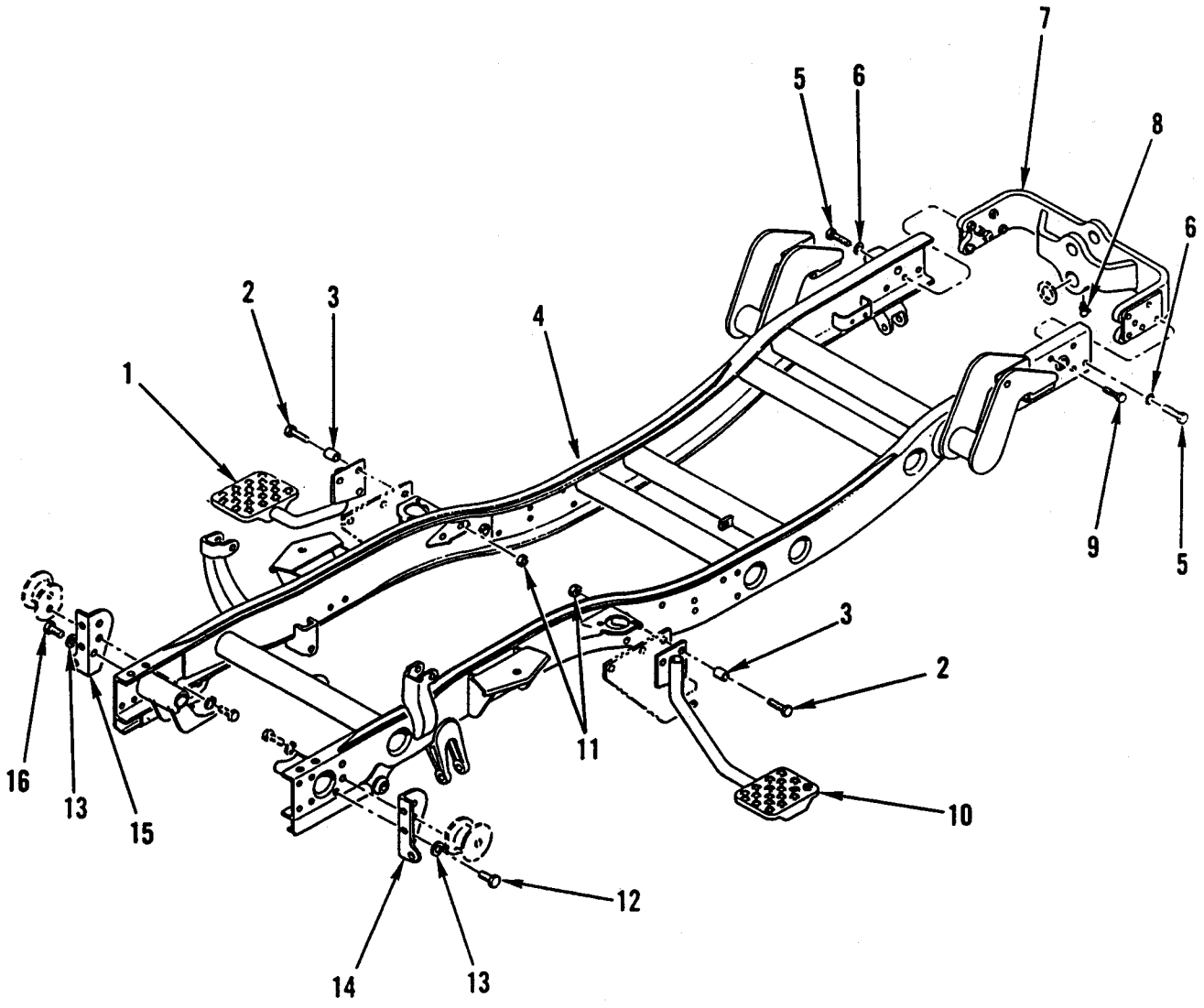

Figure 179. Frame Towing Attachments and Drawbars, Frame Assembly – Chassis Frame.

(1) ITEM NO	(2) SMR CODE	(3) NSN	(4) CAGEC	(5) PART NUMBER	(6) DESCRIPTION AND USABLE ON CODES (UOC)	(7) QTY
					GROUP 15	
					GROUP 1501	
					FIG. 179 FRAME TOWING ATTACHMENTS AND DRAWBARS, FRAME ASSEMBLY – CHASSIS FRAME	
1	PFFZZ	2590-01-242-3935	64678	419 520 01 31	RUNNING BOARD,VEHIC	1
2	PFOZZ	5306-01-243-9377	64678	000931 010342	BOLT,MACHINE	6
3	PFOZZ	3120-01-243-5166	64678	425 432 00 50	BUSHING,SLEEVE	6
4	PBFFF	2510-01-293-5732	64678	419 310 02 01	FRAME,STRUCTURAL,VE	1
5	PFOZZ	5305-01-242-0652	64678	000960016249	SCREW,CAP,HEXAGON H	8
6	PFOZZ	5310-01-305-2539	64678	2309114000	WASHER,FLAT	4
7	PFFZZ	2510-01-257-1570	64678	419 310 71 46	FRAME SECTION,STRU	1
8	PFOZZ	4730-00-172-0031	96906	MS15003-5	FITTING,LUBRICATION	1
9	PFOZZ	5305-01-158-0833	56161	10502215	SCREW,CAP,HEXAGON H	2
10	PFOZZ	2590-01-241-4902	64678	419 520 00 31	RUNNING BOARD,VEHIC	1
11	PFFZZ	5310-01-290-6034	64678	913004 010011	NUT,PLAIN,HEXAGON	4
12	PFOZZ	5306-01-248-3201	64678	000960 012225	BOLT,MACHINE	1
13	PFOZZ	5310-01-290-0633	64678	900050 013001	WASHER,LOCK	2
14	PFOZZ	2510-01-237-0279	64678	416 580 08 88	SUPPORT ASSEMBLY,LE	1
15	PFOZZ	2590-01-237-6313	64678	416 580 09 88	SUPPORT ASSEMBLY,RI	1
16	PFOZZ	5306-01-293-6630	64678	000961 012056	BOLT,MACHINE	1
					END OF FIGURE	

UNIT, DIRECT SUPPORT AND GENERAL SUPPORT MAINTENANCE

SMALL EMPLACEMENT EXCAVATOR (SEE) AND HIGH MOBILITY MATERIAL HANDLER (HMMH)

FRAME ASSEMBLY – VEHICULAR BRACKET C21452, AND STRUCTURE FRAME SECTION 419 610 75 03

REPAIR PARTS LIST

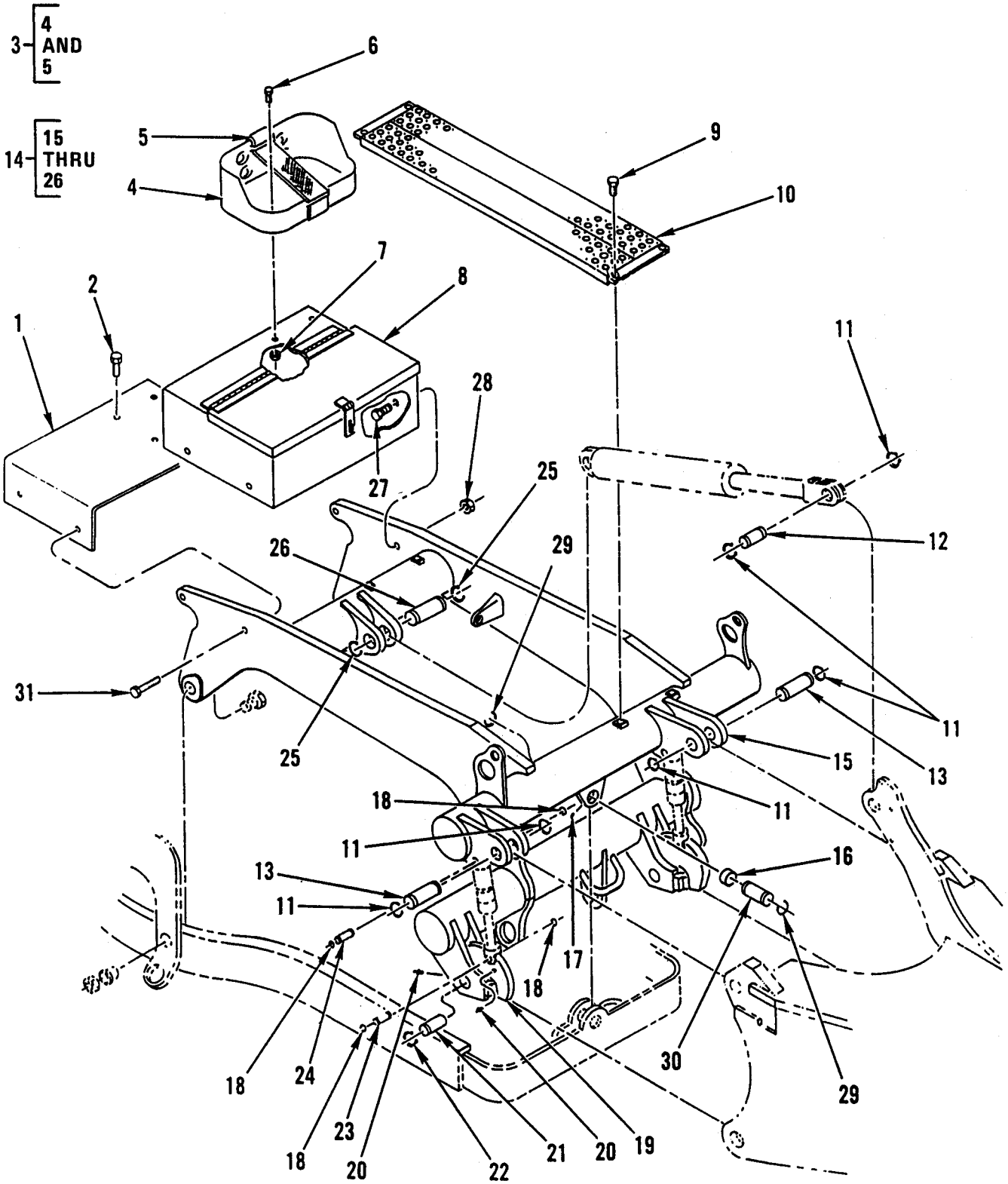

Figure 180. Frame Assembly – Vehicular Bracket and Structure Frame Section.

(1) ITEM NO	(2) SMR CODE	(3) NSN	(4) CAGEC	(5) PART NUMBER	(6) DESCRIPTION AND USABLE ON CODES (UOC)	(7) QTY
					GROUP 1501	
					FIG. 180 FRAME ASSEMBLY – BRACKET VEHICULAR, C21452, AND FRAME SECTION, STRUCTURE 419 610 75 03	
1	PFOZZ	2510-01-324-6894	64678	419 610 72 54	FLOOR,BODY,VEHICULA SN 451550 AND ABOVE	1
2	PFOZZ	5305-01-166-0613	56151	10503777	SCREW,CAP,HEXAGON H SN 451550 AND ABOVE	4
3	PFOOO	2590-00-473-6331	07860	C21452	BRACKET,VEHICULAR C.....	1
4	PFOZZ	2590-00-473-6331	19207	6566675	.BRACKET,VEHICULAR C.....	1
5	PFOZZ	5340-00-968-4060	19207	8690527	.STRAP,WEBBING.....	1
6	PFOZZ	5306-01-240-5166	15526	933 M10 30F	BOLT,MACHINE.....	4
7	PFOZZ	5310-01-238-3198	15526	934 M10X1.5C	NUT,PLAIN HEXAGON	4
8	PFOZZ	2540-01-242-2811	64678	419 580 70 05	BOX,ACCESSORIES STO TOOL	1
9	PFOZZ	5306-01-244-3973	64678	000933 010016	BOLT,MACHINE.....	4
10	PFOZZ	2510-01-257-3392	64678	419 610 71 54	FRAME SECTION,STRUC.....	1
11	PFOZZ	5325-00-420-3858	10988	D25279	RING,RETAINING	6
12	PFOZZ	5315-01-244-7034	10988	D64970	PIN,GROOVED,HEADLES MOUNTING	1
13	PFOZZ	5315-01-265-9086	10988	R54058	PIN,GROOVED,HEADLES MOUNTING	2
14	PAOFF	2510-01-304-2264	64678	419 610 75 03	FRAME SECTION,STRUC.....	1
15	PAOFF	2510-01-304-2263	64678	419 610 76 03	.FRAME SECTION,STRUC.....	1
16	PFOZZ	3120-00-587-4781	51588	B24-L	.BEARING,PLAIN,SELF-	1
17	PFOZZ	4730-00-172-0034	95879	1613B	.FITTING,LUBRICATION.....	1
18	PFOZZ	5325-01-309-8766	79136	5160-50ZD	.RING,RETAINING	8
19	PFOZZ	5342-01-309-0986	64678	419 615 70 54	.LATCH,LOCK	2
20	PFOZZ	4730-00-050-4208	96906	MS15003-1	.FITTING,LUBRICATION.....	4
21	PFOZZ	5315-01-308-1516	64678	419 615 72 15	.PIN,GROOVED,HEADLES.....	2
22	PFOZZ	5325-01-255-2809	79136	5160-175 ZD	.RING,RETAINING	4
23	PFOZZ	5315-01-307-7205	64678	419 615 71 15	.PIN,GROOVED,HEADLES.....	2
24	PFOZZ	5325-01-255-2809	64678	419 615 70 15	.RING,RETAINING	2
25	PFOZZ	5325-00-420-3858	10988	D25279	.RING,RETAINING	2
26	PFOZZ	5315-01-265-9086	10988	R54058	.PIN,GROOVED,HEADLESS	1
27	PFOZZ	5306-01-244-3972	64678	000931 012045	BOLT,MACHINE.....	4
28	PFOZZ	5310-01-244-4003	64678	210980 012000	NUT,SELF-LOCKING,HE	4
29	PFOZZ	5325-00-803-7299	96906	MS16624-1150	RING,RETAINING	2
30	PFOZZ	5315-01-244-2499	64678	419 614 70 15	PIN,GROOVED,HEADLES.....	1

(1) ITEM NO	(2) SMR CODE	(3) NSN	(4) CAGEC	(5) PART NUMBER	(6) DESCRIPTION AND USABLE ON CODES (UOC)	(7) QTY
31	PFOZZ	5305-12-156-4878	D8286	DIN933-M12X40-8.8-A3P	SCREW,CAP,HEXAGON H SN 451550 AND ABOVE	4
					END OF FIGURE	

UNIT, DIRECT SUPPORT AND GENERAL SUPPORT MAINTENANCE

SMALL EMPLACEMENT EXCAVATOR (SEE) AND HIGH MOBILITY MATERIAL HANDLER (HMMH)

FRAME ASSEMBLY – FRONT LOADER/FORKLIFT ATTACHMENT BRACKET

REPAIR PARTS LIST

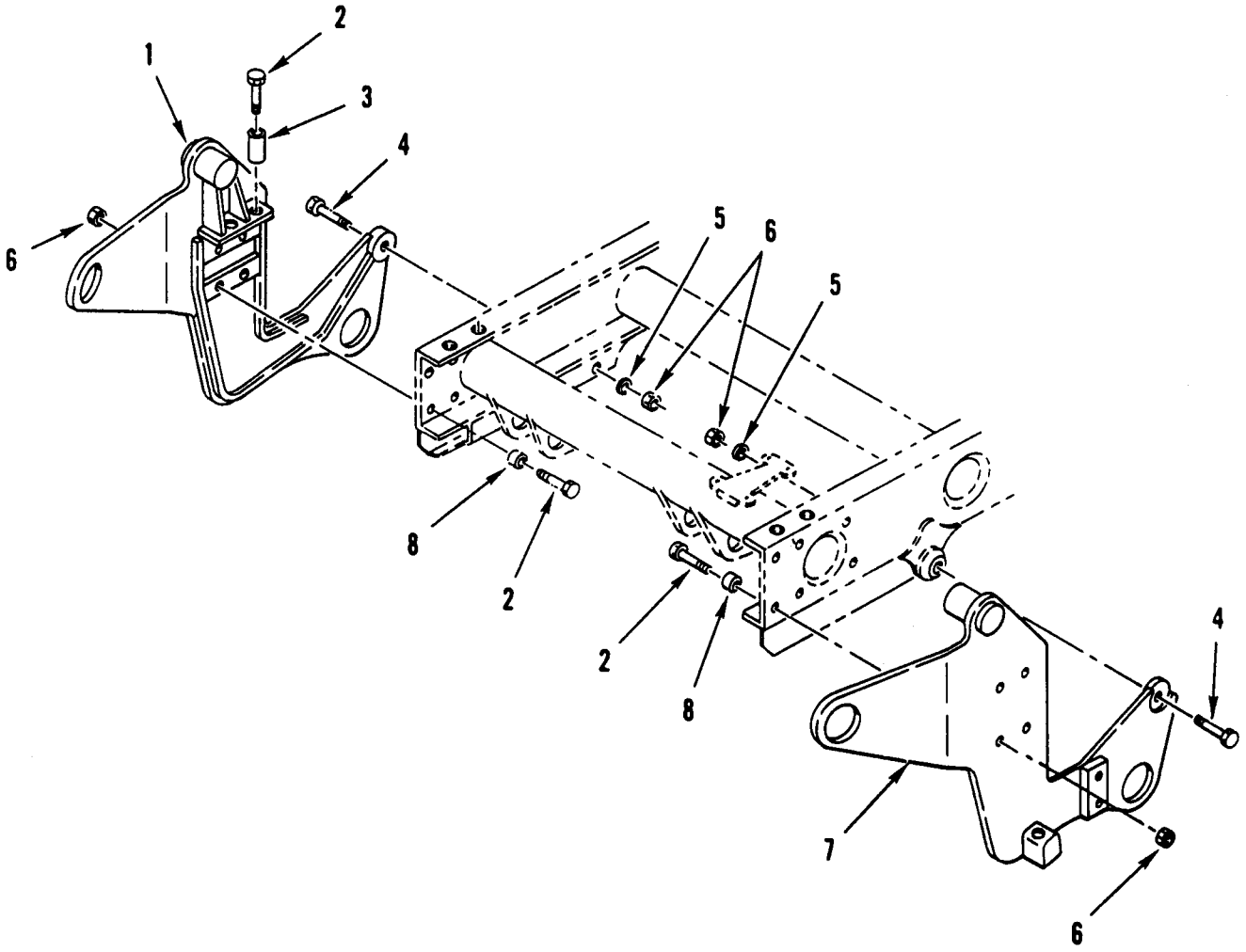

Figure 181. Frame Assembly – Front Loader/Forklift Attachment Bracket.

(1) ITEM NO	(2) SMR CODE	(3) NSN	(4) CAGEC	(5) PART NUMBER	(6) DESCRIPTION AND USABLE ON CODES (UOC)	(7) QTY
					GROUP 1501	
					FIG. 181 FRAME ASSEMBLY – FRONT LOADER/FORKLIFT ATTACHMENT BRACKET	
1	PFOZZ	3040-01-265-7243	64678	419 550 78 13	BRACKET,EYE,ROTATIN	1
2	PFOZZ	5305-01-264-5887	64678	000960 016116	SCREW,CAP,HEXAGON H	12
3	PFOZZ	5365-01-282-1586	64678	419 551 76 51	SPACER,SLEEVE	4
4	PFOZZ	5305-01-264-5888	64678	000960 016121	SCREW,CAP,HEXAGON H	2
5	PFOZZ	5310-01-244-4516	64678	419 551 70 51	WASHER,FLAT	2
6	PFOZZ	5310-01-260-2558	64678	000934 016003	NUT,PLAIN,HEXAGON	10
7	PFOZZ	2510-01-270-4351	64678	419 550 77 13	BRACKET ASSEMBLY,FR	1
8	PFOZZ	5365-01-285-9376	64678	419 551 75 51	SPACER,SLEEVE	8
					END OF FIGURE	

UNIT, DIRECT SUPPORT AND GENERAL SUPPORT MAINTENANCE

SMALL EMPLACEMENT EXCAVATOR (SEE) AND HIGH MOBILITY MATERIAL HANDLER (HMMH)

FRAME ASSEMBLY – LEFT PLATFORM

REPAIR PARTS LIST

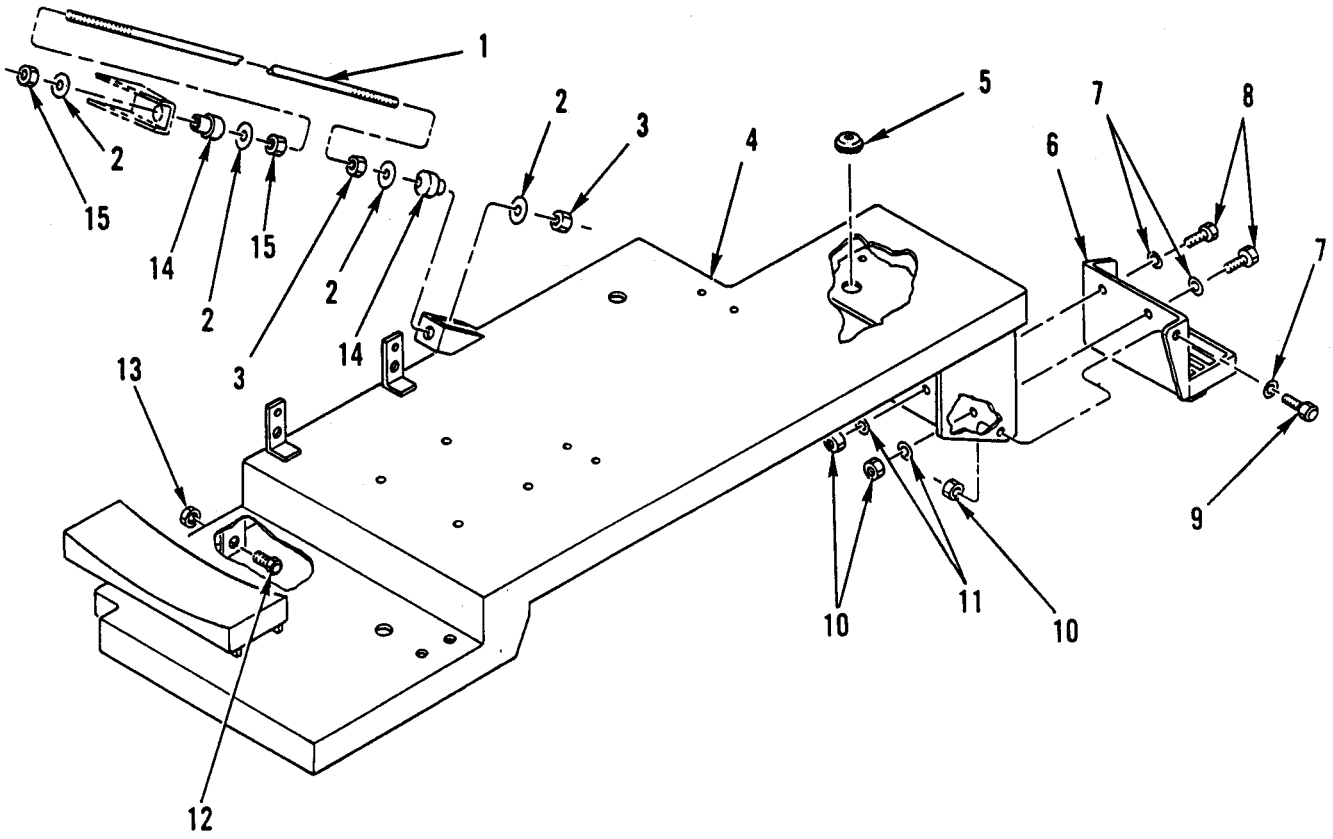

Figure 182. Frame Assembly – Left Platform.

(1) ITEM NO	(2) SMR CODE	(3) NSN	(4) CAGEC	(5) PART NUMBER	(6) DESCRIPTION AND USABLE ON CODES (UOC)	(7) QTY
					GROUP 1501	
					FIG. 182 FRAME ASSEMBLY – LEFT PLATFORM	
1	PFFZZ	5306-01-244-4042	64678	419 550 70 25	ROD,THREADED END	1
2	PFFZZ	5310-00-141-1795	88044	AN960-416	WASHER,FLAT SPECIAL	4
3	PFFZZ	5310-01-244-4511	64678	230104 050000	NUT,PLAIN,HEXAGON	2
4	PFFZZ	2510-01-294-7244	64678	419 600 74 43	PLATFORM,TAILGATE,V	1
5	PAFZZ	5325-01-244-4053	64678	23-09180-233	GROMMET,NONMETALLIC	2
6	PFFZZ	2540-01-242-3116	64678	419 520 70 31	LADDER,VEHICLE BOAR	1
7	PFFZZ	5310-01-174-7615	S3465	4537800-780	WASHER,FLAT	3
8	PFFZZ	5306-01-244-1041	64678	000933 010145	BOLT,MACHINE	2
9	PFFZZ	5305-01-158-0827	56161	10502405	SCREW,CAP,HEXAGON H	1
10	PFFZZ	5310-01-241-6345	15526	934 8 M8X1.25 C	NUT,PLAIN,HEXAGON	3
11	PFFZZ	5310-01-237-7658	64678	912004 010102	WASHER,LOCK	2
12	PFFZZ	5305-01-307-5882	64678	210933 016001	SCREW,CAP,HEXAGON H	4
13	PAFZZ	5310-01-247-7523	64678	210980 016000	NUT,SELF-LOCKING,HE TORQUE	4
14	PAFZZ	5342-01-246-8505	82372	M-401	MOUNT,RESILIENT RUBBER	2
15	PFFZZ	5310-01-244-3696	64678	210112 050000	NUT STOP	2
					END OF FIGURE	

UNIT, DIRECT SUPPORT AND GENERAL SUPPORT MAINTENANCE

SMALL EMPLACEMENT EXCAVATOR (SEE) AND HIGH MOBILITY MATERIAL HANDLER (HMMH)

FRAME ASSEMBLY – LEFT PLATFORM CONTROL PANEL GUARD

REPAIR PARTS LIST

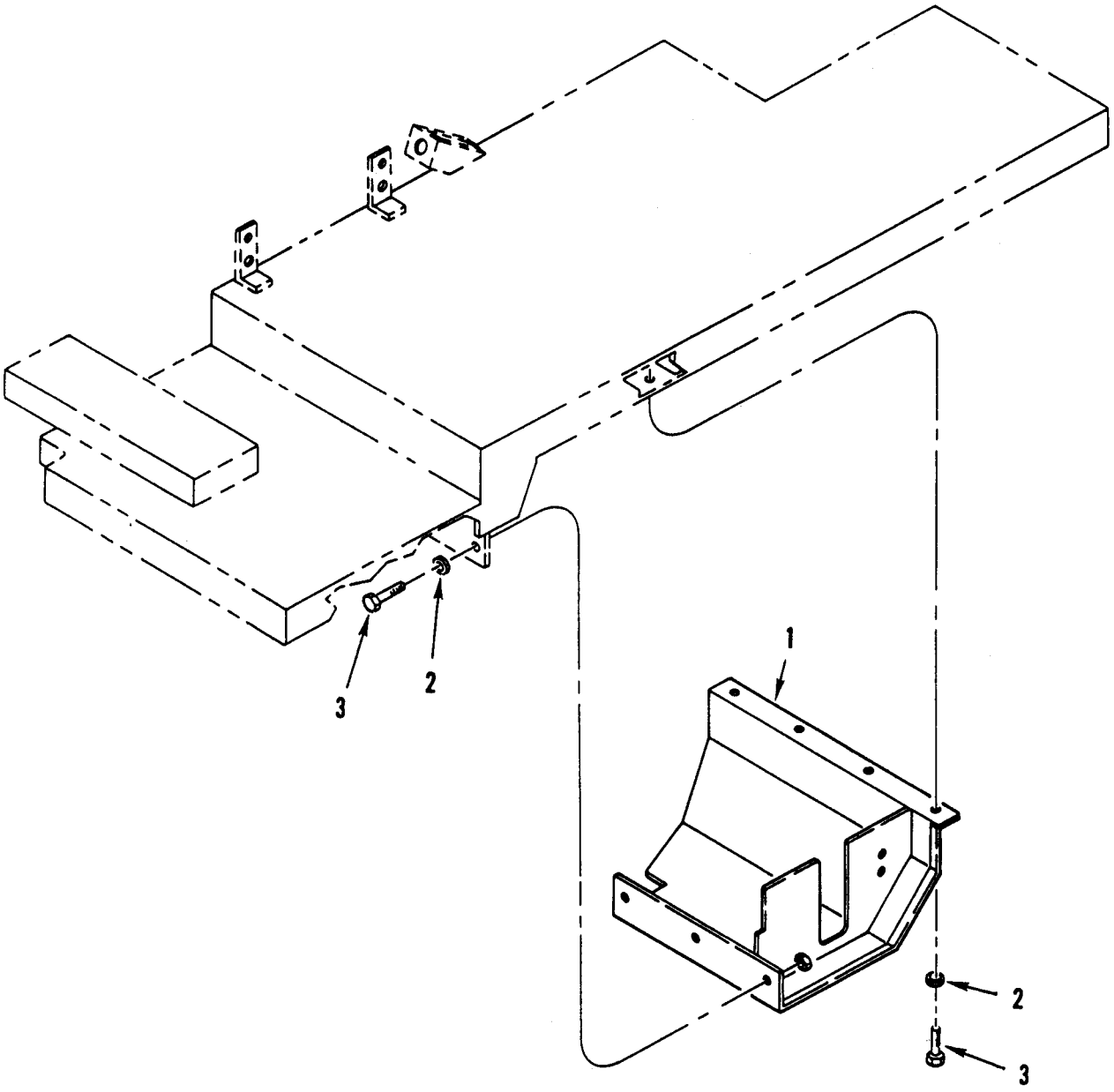

Figure 183. Frame Assembly – Left Platform Control Panel Guard.

(1) ITEM NO	(2) SMR CODE	(3) NSN	(4) CAGEC	(5) PART NUMBER	(6) DESCRIPTION AND USABLE ON CODES (UOC)	(7) QTY
					GROUP 1501	
					FIG. 183 FRAME ASSEMBLY – LEFT PLATFORM CONTROL PANEL GUARD	
1	PFOZZ	4820-01-242-6711	64678	419 610 70 46	CABINET ASSEMBLY,VA	1
2	PFOZZ	5310-01-237-5224	64678	000125 008413	WASHER,FLAT	7
3	PFOZZ	5305-01-159-0065	56161	10501759	SCREW,CAP,HEXAGON H.....	7
					END OF FIGURE	

UNIT, DIRECT SUPPORT AND GENERAL SUPPORT MAINTENANCE

SMALL EMPLACEMENT EXCAVATOR (SEE) AND HIGH MOBILITY MATERIAL HANDLER (HMMH)

FRAME ASSEMBLY – RIGHT PLATFORM

REPAIR PARTS LIST

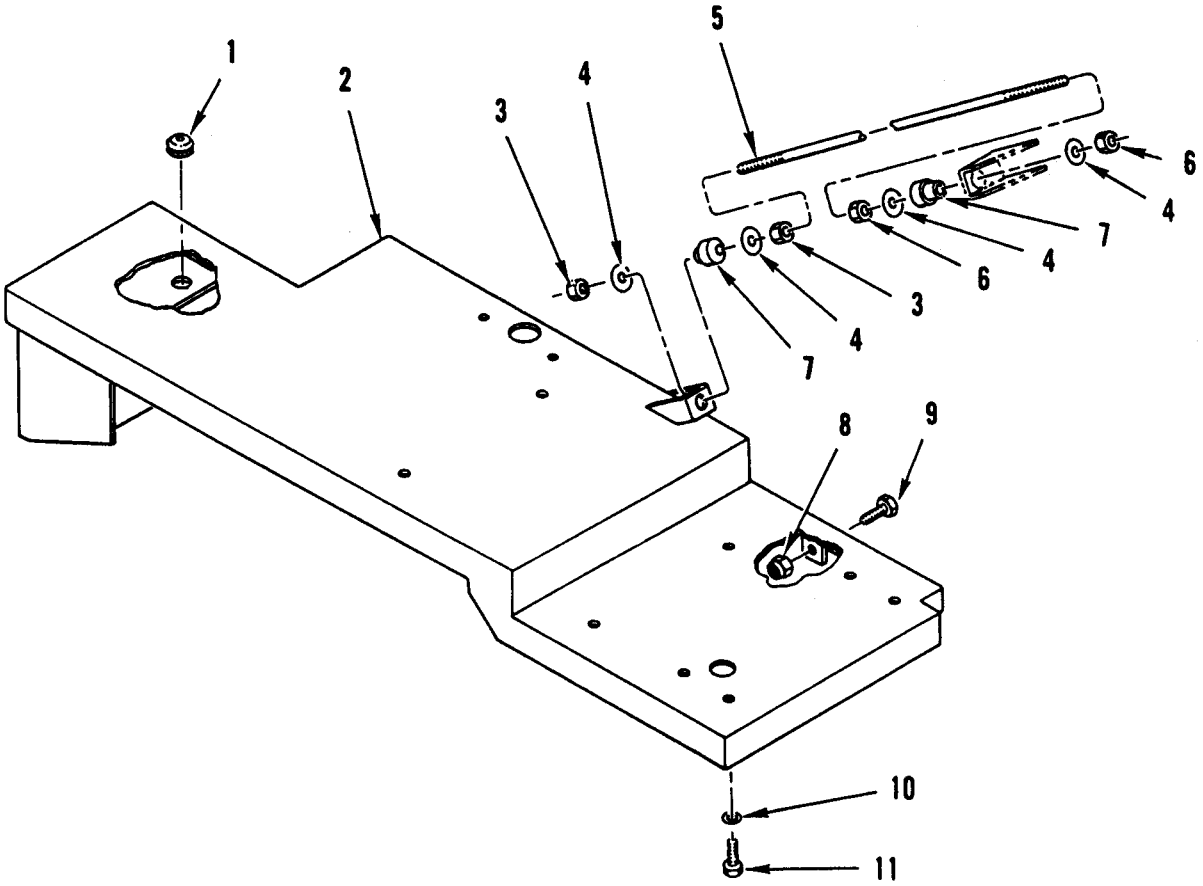

Figure 184. Frame Assembly – Right Platform.

(1) ITEM NO	(2) SMR CODE	(3) NSN	(4) CAGEC	(5) PART NUMBER	(6) DESCRIPTION AND USABLE ON CODES (UOC)	(7) QTY
					GROUP 1501	
					FIG. 184 FRAME ASSEMBLY – RIGHT PLATFORM	
1	PAFZZ	5325-01-244-4053	64678	23-09180-233	GROMMET,NONMETALLIC.....	2
2	PFFZZ	2510-01-242-1392	64678	419 600 9743	FRAME SECTION,STRUC	1
3	PFFZZ	5310-01-244-3696	64678	210112 050000	NUT	2
4	PFFZZ	5310-00-141-1795	88044	AN960-416	WASHER,FLAT	4
5	PFFZZ	5306-01-244-4042	64678	419 550 70 25	ROD,THREADED END.....	1
6	PFFZZ	5310-01-244-4511	64678	230104 050000	NUT,PLAIN,HEXAGON	2
7	PAFZZ	5342-01-246-8505	82372	M-401	MOUNT,RESILIENT	2
8	PAFZZ	5310-01-247-7523	64678	210980 016000	NUT,SELF-LOCKING,HE	4
9	PFFZZ	5305-01-307-5882	21969	DIN961M16X1.5X 50-STL 10.9-B2C	SCREW,CAP,HEXAGON H.....	4
10	PFFZZ	5310-01-246-9618	15526	127B 12	WASHER,LOCK	4
11	PFFZZ	5306-01-244-3974	64678	000933 012008	BOLT,MACHINE.....	4
					END OF FIGURE	

UNIT, DIRECT SUPPORT AND GENERAL SUPPORT MAINTENANCE

SMALL EMPLACEMENT EXCAVATOR (SEE) AND HIGH MOBILITY MATERIAL HANDLER (HMMH)

PINTLES AND TOWING ATTACHMENTS – TOWING PINTLE ASSEMBLY MS51118-1

REPAIR PARTS LIST

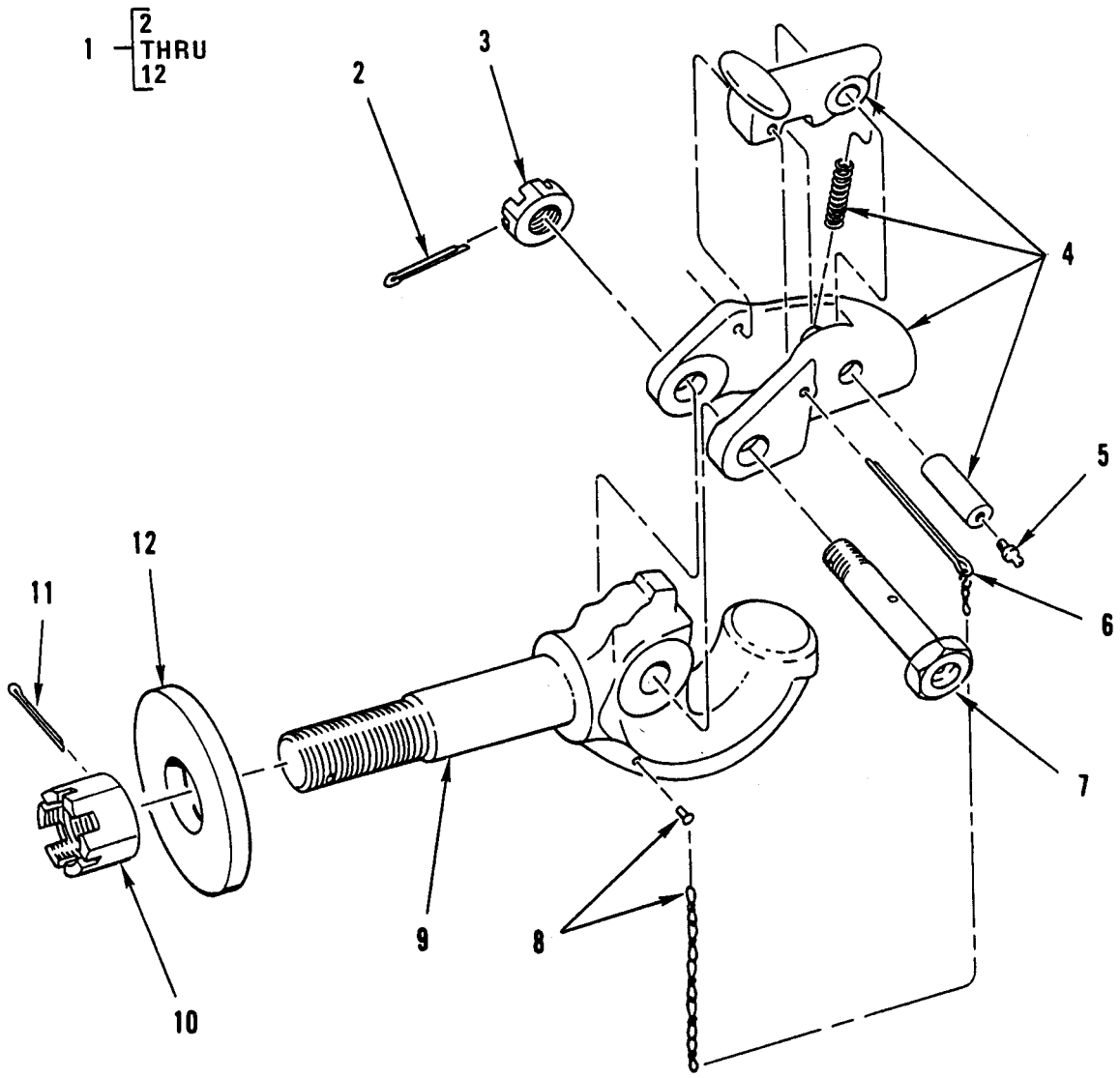

Figure 185. Pintles and Towing Attachments – Towing Pintle Assembly.

(1) ITEM NO	(2) SMR CODE	(3) NSN	(4) CAGEC	(5) PART NUMBER	(6) DESCRIPTION AND USABLE ON CODES (UOC)	(7) QTY
					GROUP 1503	
					FIG. 185 PINTLES AND TOWING ATTACHMENTS – PINTLE ASSEMBLY, TOWING MS51118-1	
1	PAOOO	2540-00-776-0103	96906	MS51118-1	PINTLE ASSEMBLY,TOW.....	1
2	PAOZZ	5315-00-298-1499	96906	MS24665-360	.PIN,COTTER	1
3	PFOZZ	5310-00-682-5684	96906	MS35692-1624	.NUT,PLAIN,SLOTTED,H	1
4	PFOZZ	2540-01-151-5703	34623	MA201-21014	.LATCH,PINTLE HOOK	1
5	PAOZZ	4730-00-050-4203	96906	MS15001-1	.FITTING,LUBRICATION.....	2
6	PAOZZ	5315-00-234-1848	96906	MS24665-629	.PIN,COTTER	1
7	PFOZZ	4730-00-102-9812	19207	8668096	.BOLT,FLUID PASSAGE.....	1
8	PAOZZ	4030-00-780-9350	96906	MS87006-13	.HOOK,CHAIN S.....	1
9	PFOZZ	2540-01-175-1692	19207	7760104	.HOOK,PINTLE.....	1
10	PFOZZ	5310-01-106-0197	19207	12255655	.NUT,PLAIN,SLOTTED,H	1
11	PAOZZ	5315-00-846-0126	96906	MS24665-628	.PIN,COTTER	1
12	PFOZZ	5365-01-244-1148	64678	419 429 70 53	.SPACER,SLEEVE	1
					END OF FIGURE	

UNIT, DIRECT SUPPORT AND GENERAL SUPPORT MAINTENANCE

SMALL EMPLACEMENT EXCAVATOR (SEE) AND HIGH MOBILITY MATERIAL HANDLER (HMMH)

SPARE WHEEL CARRIER AND TIRE LOCK – SPARE TIRE MOUNT

REPAIR PARTS LIST

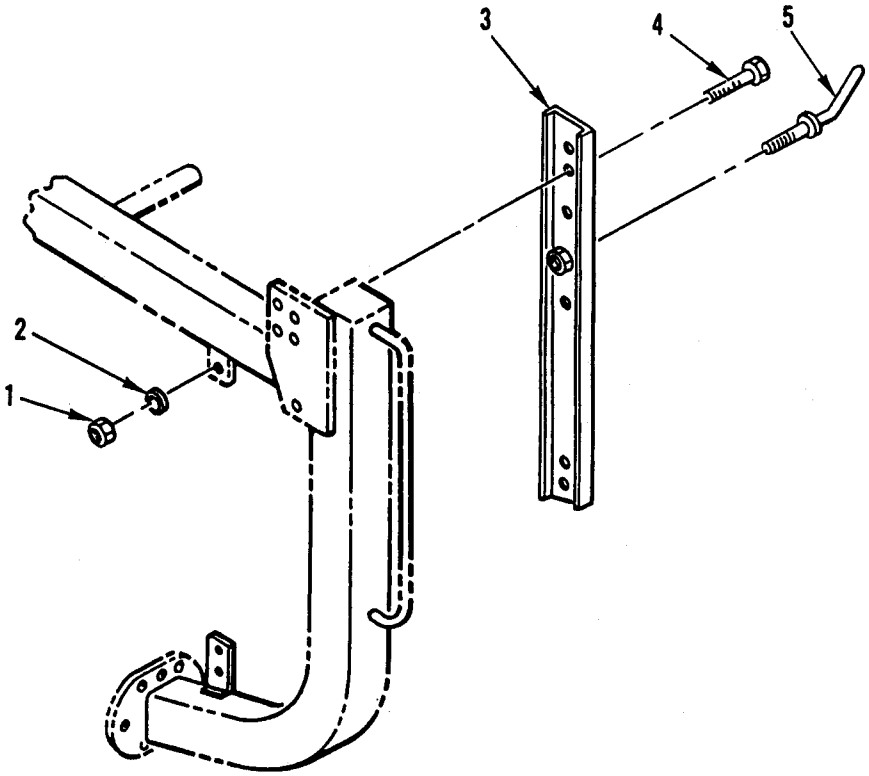

SEE

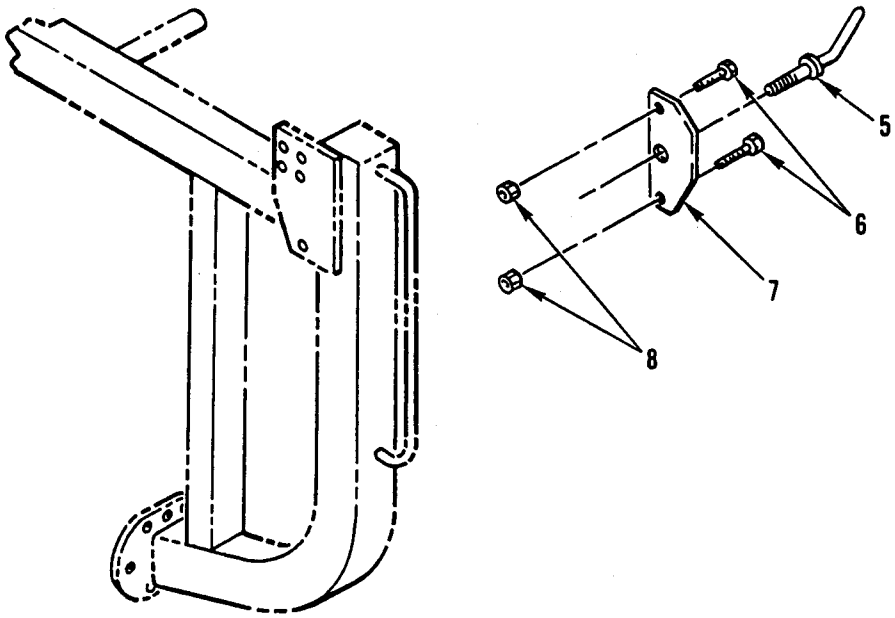

HMMH

Figure 186. Spare Wheel Carrier and Tire Lock – Spare Tire Mount.

(1) ITEM NO	(2) SMR CODE	(3) NSN	(4) CAGEC	(5) PART NUMBER	(6) DESCRIPTION AND USABLE ON CODES (UOC)	(7) QTY
					GROUP 1504	
					FIG. 186 SPARE WHEEL CARRIER AND TIRE LOCK – SPARE TIRE MOUNT	
1	PFOZZ	5310-01-238-3198	15526	934 M10X1.5C	NUT,PLAIN,HEXAGON UOC:GE1.....	4
2	PFOZZ	5310-01-174-7615	S3465	4537800-780	WASHER,FLAT UOC:GE1.....	4
3	PFOZZ	5340-01-244-4581	64678	419 400 71 23	BRACKET,DOUBLE ANGL UOC:GE1.....	1
4	PFOZZ	5306-01-244-3984	64678	210603 010000	BOLT,SQUARE NECK UOC:GE1.....	4
5	PFOZZ	2590-01-242-6712	64678	419 400 71 45	HOLDER,REAR TIRE.....	1
6	PFOZZ	5306-01-298-7336	64678	23-9691-450	BOLT,SQUARE NECK UOC:GE4.....	2
7	PFOZZ	2590-01-298-8572	64678	419 400 74 23	BRACKET,VEHICULAR C UOC:GE4.....	1
8	PAOZZ	5310-00-044-3339	19207	443339	NUT,SELF-LOCKING,HE UOC:GE4.....	2
					END OF FIGURE	

UNIT, DIRECT SUPPORT AND GENERAL SUPPORT MAINTENANCE

SMALL EMPLACEMENT EXCAVATOR (SEE) AND HIGH MOBILITY MATERIAL HANDLER (HMMH)

SPRINGS AND SHOCK ABSORBERS, SPRINGS – FRONT SPRINGS (LEFT FRONT ILLUSTRATED)

REPAIR PARTS LIST

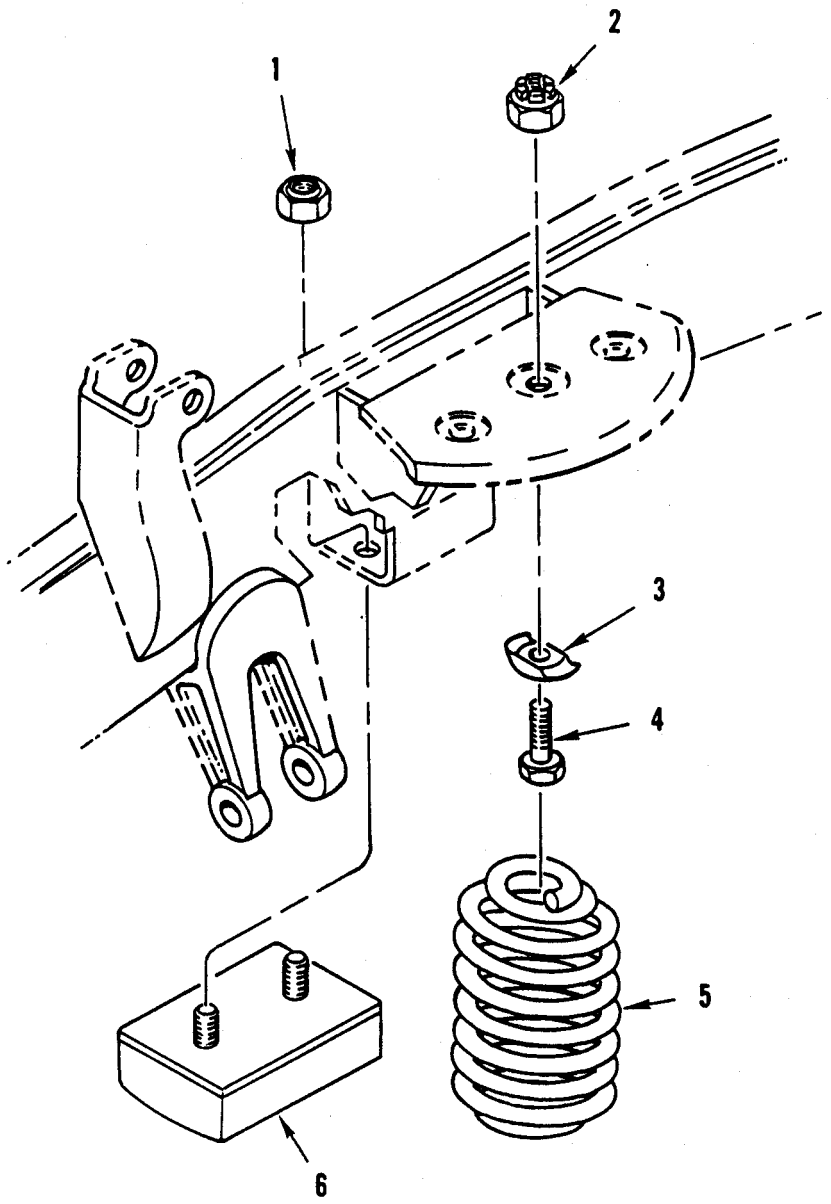

Figure 187. Springs and Shock Absorbers, Springs – Front Springs (Left Front Illustrated).

(1) ITEM NO	(2) SMR CODE	(3) NSN	(4) CAGEC	(5) PART NUMBER	(6) DESCRIPTION AND USABLE ON CODES (UOC)	(7) QTY
					GROUP 16 GROUP 1601	
					FIG. 187 SPRINGS AND SHOCK ABSORBERS, SPRINGS – FRONT SPRINGS, (LEFT FRONT ILLUSTRATED)	
1	PFFZZ	5310-01-167-1863	S3465	4537800-712	NUT,PLAIN,HEXAGON	4
2	PFFZZ	5310-01-238-3201	64678	913004 014002	NUT,SELF-LOCKING,HE	2
3	PFFZZ	5340-01-241-5473	64678	419 325 02 26	COVER,ACCESS	2
4	PFFZZ	5305-01-244-3990	15526	960 M14X1.5 60 P	SCREW,CAP,HEXAGON H.....	2
5	PFFZZ	5360-01-248-1584	64678	419 321 00 04	SPRING,HELICAL,COMP	2
6	PFOZZ	5340-01-259-4243	64678	419 323 01 44	BUMPER,NONMETALLIC	2
					END OF FIGURE	

UNIT, DIRECT SUPPORT AND GENERAL SUPPORT MAINTENANCE

SMALL EMPLACEMENT EXCAVATOR (SEE) AND HIGH MOBILITY MATERIAL HANDLER (HMMH)

SPRINGS – REAR SPRINGS (LEFT REAR ILLUSTRATED)

REPAIR PARTS LIST

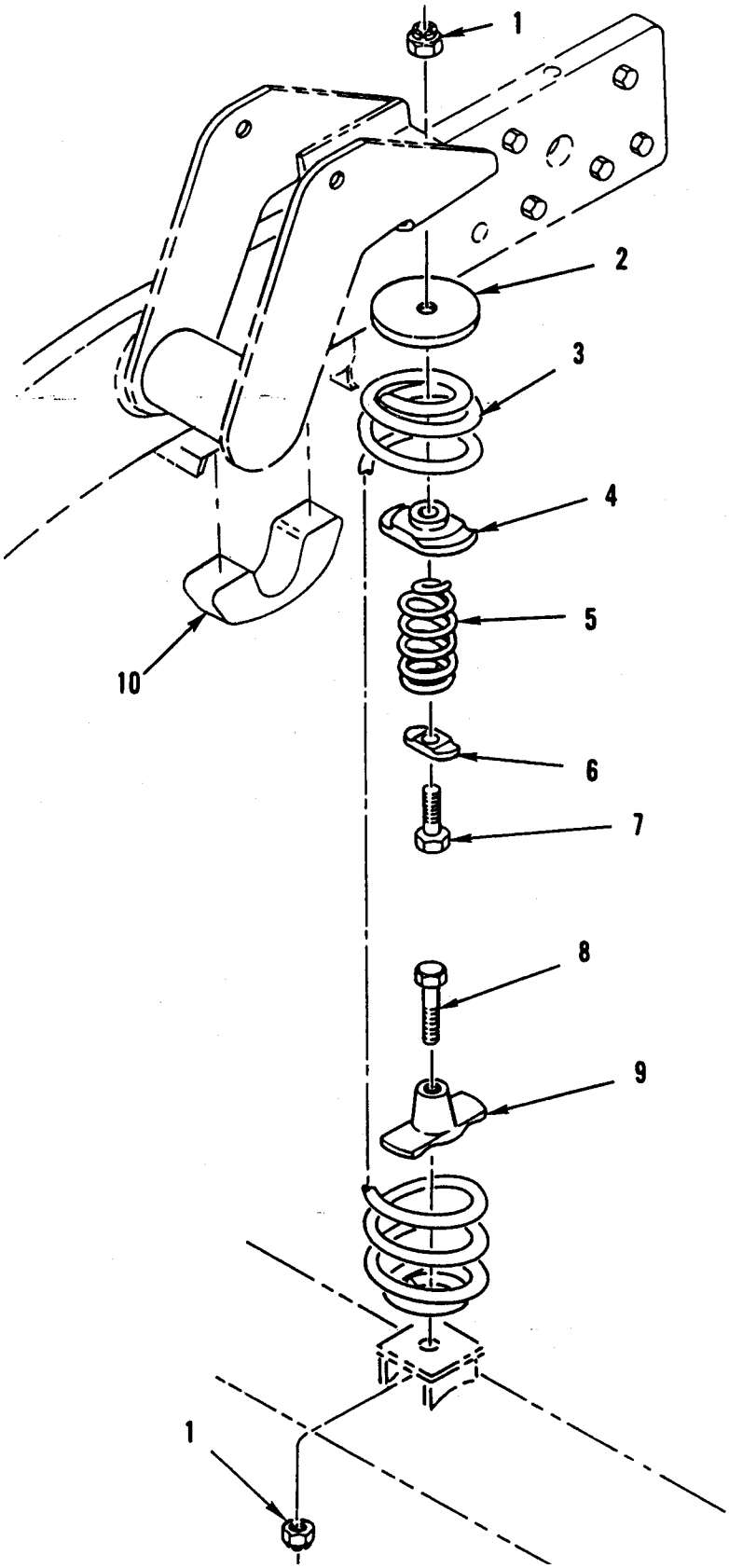

Figure 188. Springs – Rear Springs (Left Rear Illustrated).

(1) ITEM NO	(2) SMR CODE	(3) NSN	(4) CAGEC	(5) PART NUMBER	(6) DESCRIPTION AND USABLE ON CODES (UOC)	(7) QTY
					GROUP 1601	
					FIG. 188 SPRINGS – REAR SPRINGS (LEFT REAR ILLUSTRATED)	
1	PFFZZ	5310-01-238-3201	64678	913004 014002	NUT,SELF-LOCKING,HE	4
2	PFFZZ	3040-01-241-4314	64678	419 322 01 09	PLATE,RETAINING,SHA.....	2
3	PFFZZ	5360-01-248-1585	64678	419 324 00 04	SPRING,HELICAL,COMP	2
4	PFFZZ	3040-01-262-7704	64678	419 325 04 26	PLATE,RETAINING,SHA.....	2
5	PFFZZ	5360-01-248-1586	64678	419 324 00 06	SPRING,HELICAL,COMP	2
6	PFFZZ	3040-01-241-3230	64678	406 325 03 26	PAWL	2
7	PFFZZ	5306-01-244-1037	64678	000960 014138	BOLT,MACHINE.....	2
8	PFFZZ	5306-01-243-9379	64678	000960 014180	BOLT,MACHINE.....	2
9	PFFZZ	5340-01-241-4112	64678	419 325 00 15	COVER,ACCESS	2
10	PFFZZ	5340-01-325-6853	64678	406 322 00 44	MOUNT,RESILIENT	2
					END OF FIGURE	

UNIT, DIRECT SUPPORT AND GENERAL SUPPORT MAINTENANCE

SMALL EMPLACEMENT EXCAVATOR (SEE) AND HIGH MOBILITY MATERIAL HANDLER (HMMH)

SHOCK ABSORBER EQUIPMENT – FRONT DIRECTIONAL SHOCK ABSORBER 005-323-2600 (LEFT FRONT ILLUSTRATED)

REPAIR PARTS LIST

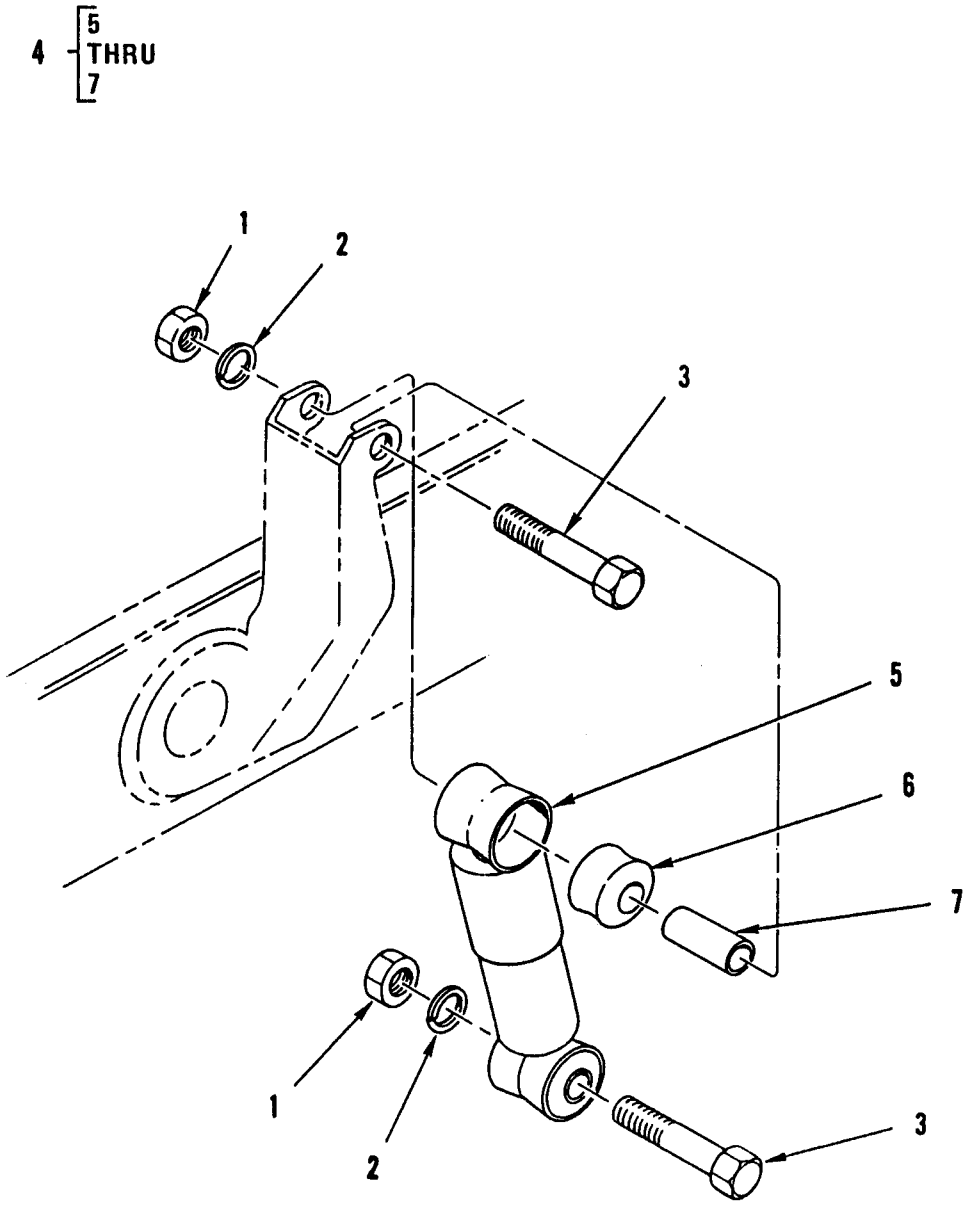

NOTE: HMMH FRONT ONLY

Figure 189. Shock Absorber Equipment – Front Directional Shock Absorber (Left Front Illustrated).

(1) ITEM NO	(2) SMR CODE	(3) NSN	(4) CAGEC	(5) PART NUMBER	(6) DESCRIPTION AND USABLE ON CODES (UOC)	(7) QTY
					GROUP 1604	
					FIG. 189 SHOCK ABSORBER EQUIPMENT – SHOCK ABSORBER, DIRECTIONAL,FRONT 005-323-2600 (LEFT FRONT ILLUSTRATED)	
1	PFOZZ	5310-01-243-5128	64678	000439 020206	NUT,PLAIN,HEXAGON	4
2	PFOZZ	5310-01-238-3205	64678	912004 020100	WASHER,LOCK	4
3	PFOZZ	5305-01-243-9407	64678	000960 020147	SCREW,CAP,HEXAGON H UOC:GE1.....	4
3	PFOZZ	5305-01-243-9407	64678	000960 020147	SCREW,CAP,HEXAGON H UOC:GE4.....	2
3	PFOZZ	5305-01-307-5881	64678	000960 020143	SCREW,CAP,HEXAGON H UOC:GE4.....	1
3	PFOZZ	5305-01-298-0644	64678	000 960 020 003	SCREW,CAP,HEXAGON H UOC:GE4.....	1
4	PFOZZ	2510-01-298-8417	64678	005-323-2600	SHOCK ABSORBER,DIRE FRONT UOC:GE4.....	2
5	PFOZZ	2510-01-256-9156	64678	004 323 96 00	.SHOCK ABSORBER,DIRE FRONT AND REAR UOC:GE1.....	4
5	PFOZZ	2510-01-256-9156	64678	004 323 96 00	.SHOCK ABSORBER,DIRE REAR UOC:GE4.....	2
6	PFOZZ	5340-12-319-7676	D8084	1-213-064-3060	.BUMBER,RUBBER UOC:GE1.....	4
6	PFOZZ	5340-12-319-7676	D8084	1-214-001-3641	.MOUNT,RESILIENT UOC:GE4.....	4
7	PFOZZ	5365-12-188-1711	D8084	1-285-055-0279	.SPACER,SLEEVE	4
					END OF FIGURE	

UNIT, DIRECT SUPPORT AND GENERAL SUPPORT MAINTENANCE

SMALL EMPLACEMENT EXCAVATOR (SEE) AND HIGH MOBILITY MATERIAL HANDLER (HMMH)

SHOCK ABSORBER EQUIPMENT – DIRECTIONAL SHOCK ABSORBER 004 323 96 00 (LEFT REAR ILLUSTRATED)

REPAIR PARTS LIST

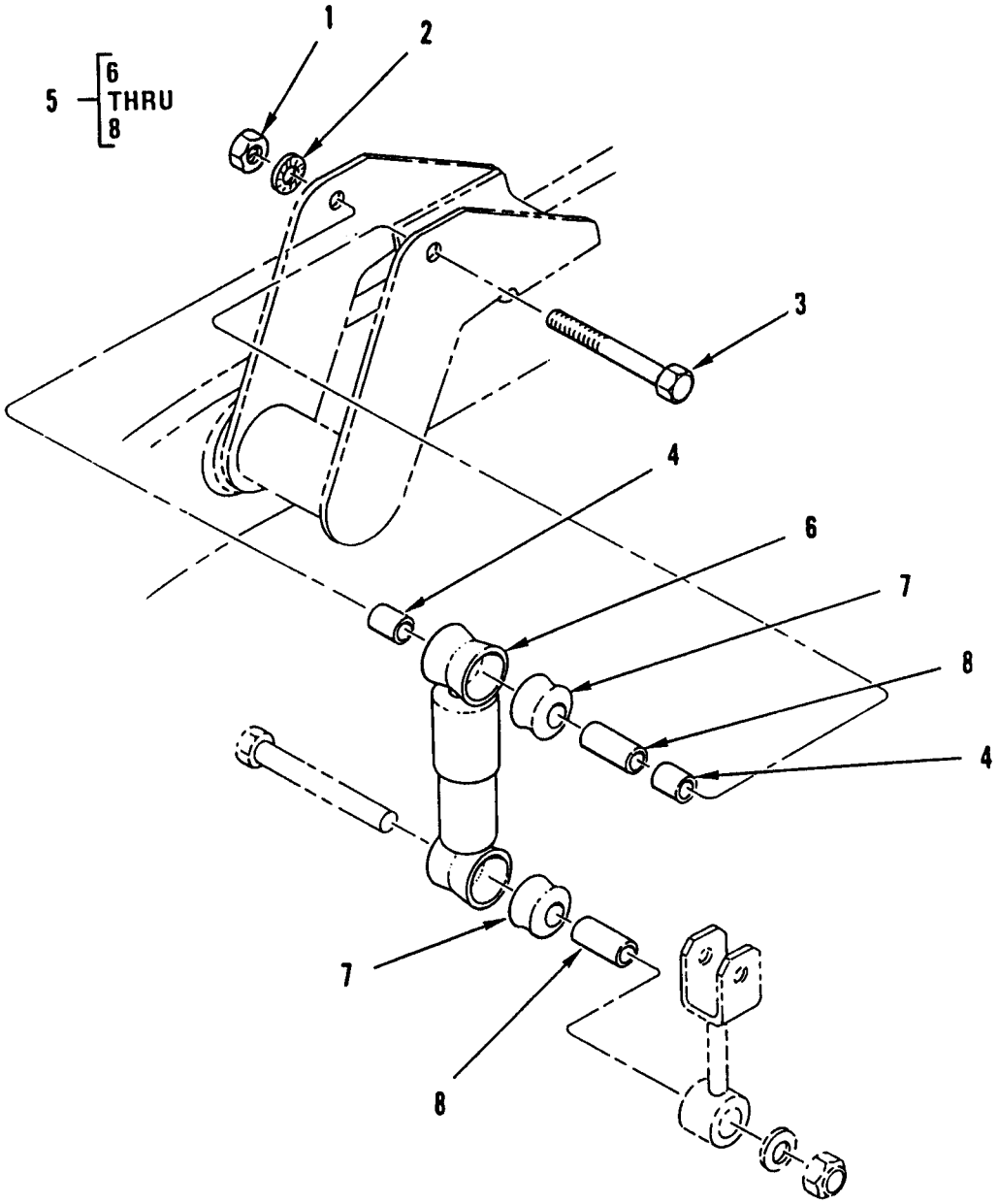

NOTE: FRONT AND REAR OF SEE HMMH REAR

Figure 190. Shock Absorber Equipment – Directional Shock Absorber (Left Rear Illustrated).

(1) ITEM NO	(2) SMR CODE	(3) NSN	(4) CAGEC	(5) PART NUMBER	(6) DESCRIPTION AND USABLE ON CODES (UOC)	(7) QTY
					GROUP 1604	
					FIG. 190 SHOCK ABSORBER EQUIPMENT-SHOCK ABSORBER, DIRECTIONAL 004 323 96 00 (LEFT REAR ILLUSTRATED)	
1	PFOZZ	5310-01-243-5128	64678	000439 020206	NUT,PLAIN,HEXAGON	2
2	PFOZZ	5310-01-243-9440	64678	900050 021001	WASHER,SPRING TENSI	2
3	PFOZZ	5305-01-243-9408	64678	000960 020149	SCREW,CAP,HEXAGON H	2
4	PFOZZ	5365-01-243-9943	64678	406 325 00 53	SPACER,SLEEVE	4
5	PFOOO	2510-01-256-9156	64678	004 323 96 00	SHOCK ABSORBER,DIRE	2
6	XAOZZ		19207	NPN-139	.SHOCK ABSORBER	1
7	PFOZZ	5340-12-302-5182	D8084	1-213-064-3060	.BUMPER,RUBBER	4
8	PFOZZ	5365-12-188-1711	D8084	1-285-055-0279	.SPACER,SLEEVE	2
					END OF FIGURE	

UNIT, DIRECT SUPPORT AND GENERAL SUPPORT MAINTENANCE

SMALL EMPLACEMENT EXCAVATOR (SEE) AND HIGH MOBILITY MATERIAL HANDLER (HMMH)

TORQUE, RADIUS, AND STABILIZER RODS – CONTROL ARMS (FRONT AND REAR)

REPAIR PARTS LIST

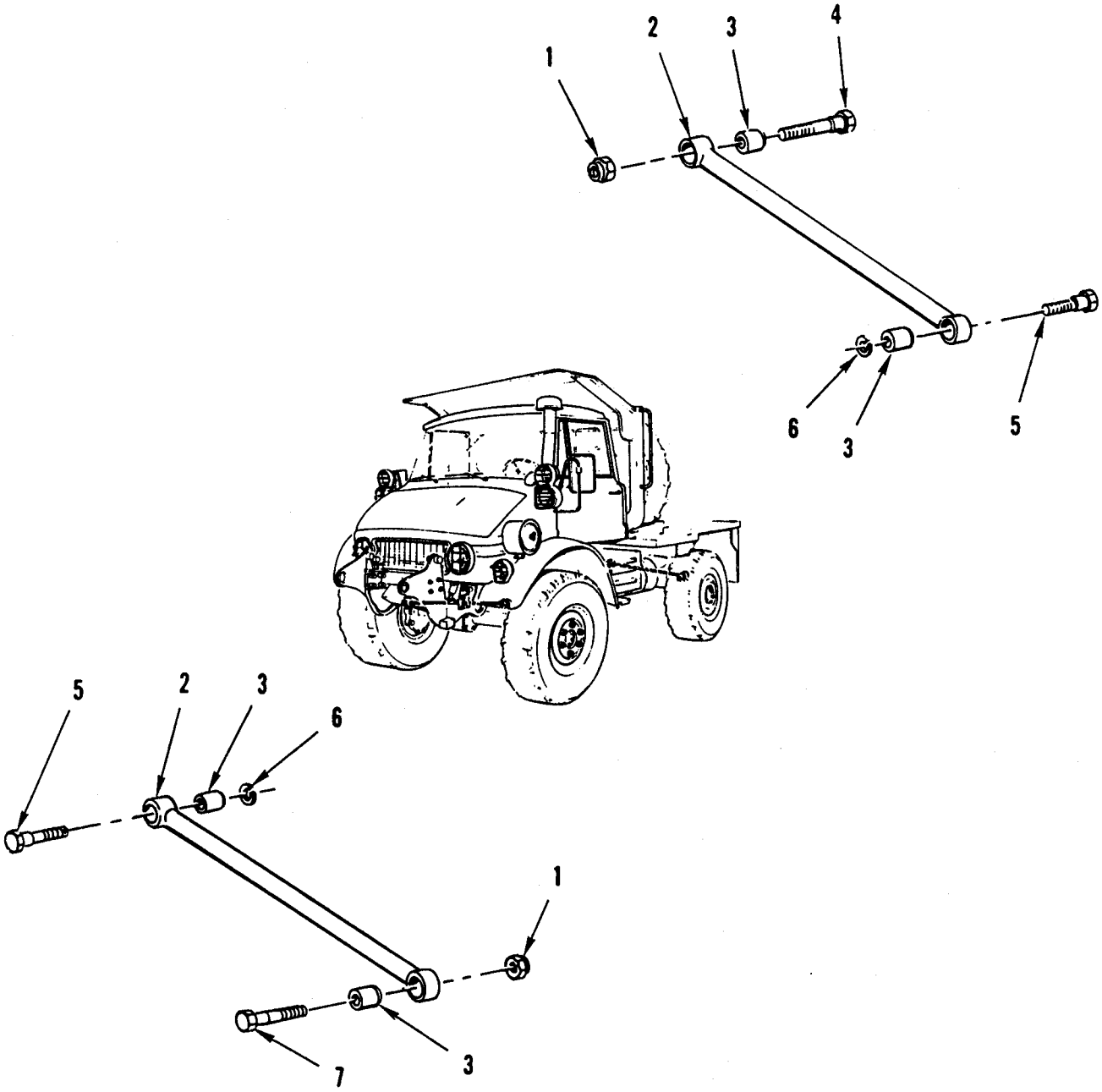

Figure 191. Torque, Radius, and Stabilizer Rods – Control Arms (Front and Rear).

(1) ITEM NO	(2) SMR CODE	(3) NSN	(4) CAGEC	(5) PART NUMBER	(6) DESCRIPTION AND USABLE ON CODES (UOC)	(7) QTY
					GROUP 1605	
					FIG.191 TORQUE, RADIUS, AND STABILIZER RODS – CONTROL ARMS (FRONT AND REAR)	
1	PFOZZ	5310-01-244-4002	64678	913004 014005	NUT,SELF-LOCKING HE	2
2	PFOZZ	2530-01-241-4239	64678	404 330 00 07	ARM,CONTROL,VEHICUL	2
3	PFOZZ	5340-12-305-5668	D8084	2-22-000 197-01	MOUNT,RESILIENT	4
4	PFOZZ	5306-01-243-9378	64678	000960 014143	BOLT,MACHINE	1
5	PAOZZ	5306-01-244-1045	64678	914125014209	BOLT,SHOULDER	2
6	PFOZZ	5310-12-312-6898	64678	440 990 00 47	WASHER,LOCK	1
7	PFOZZ	5306-01-243-9380	64678	000960 14160	BOLT,MACHINE	1
					END OF FIGURE	

UNIT, DIRECT SUPPORT AND GENERAL SUPPORT MAINTENANCE

SMALL EMPLACEMENT EXCAVATOR (SEE) AND HIGH MOBILITY MATERIAL HANDLER (HMMH)

TORQUE, RADIUS, AND STABILIZER RODS – FRONT AXLE TORSION BAR AND MOUNTING

REPAIR PARTS LIST

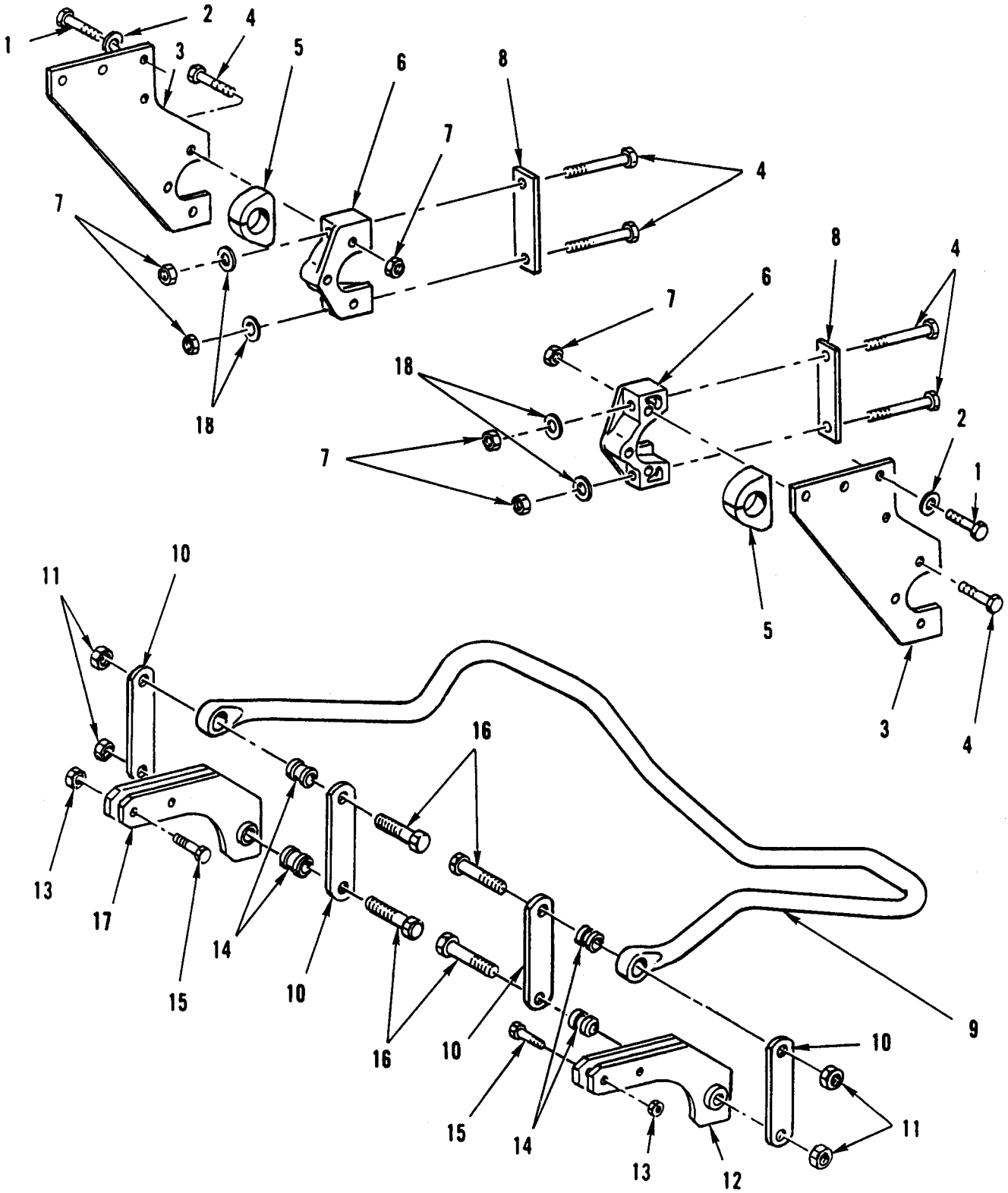

Figure 192. Torque, Radius, and Stabilizer Rods – Front Axle Torsion Bar and Mounting.

(1) ITEM NO	(2) SMR CODE	(3) NSN	(4) CAGEC	(5) PART NUMBER	(6) DESCRIPTION AND USABLE ON CODES (UOC)	(7) QTY
					GROUP 1605	
					FIG. 192 TORQUE, RADIUS, AND STABILIZER RODS – FRONT AXLE TORSION BAR AND MOUNTING	
1	PFOZZ	5306-01-174-7548	S3465	4537800-714	BOLT,MACHINE	2
2	PFOZZ	5310-01-239-7188	64678	007349 010003	WASHER,FLAT	2
3	PFOZZ	5365-01-259-4097	64678	419 323 11 25	SPACER,PLATE	2
4	PFOZZ	5305-01-290-8311	64678	000931 010356	SCREW,CAP,HEXAGON H	10
5	PFOZZ	5340-01-244-0309	64678	419 326 00 81	BUMPER,NONMETALLIC	2
6	PAOZZ	2520-01-257-4559	64678	419 323 00 63	CARRIER,CLUTCH RELE	2
7	PFOZZ	5310-01-290-6034	64678	913004 010011	NUT,PLAIN,HEXAGON	10
8	PFOZZ	5365-01-265-9018	64678	419 323 12 25	SPACER,PLATE	2
9	PFOZZ	2510-01-241-3281	64678	419 323 00 65	TORSION BAR,SUSPENS	1
10	PFOZZ	3040-01-241-3233	64678	419 323 00 16	CONNECTING LINK,RIG	4
11	PFOZZ	5310-01-238-0642	64678	913004 016005	NUT,SELF-LOCKING,CO	4
12	PAOZZ	2590-01-241-3228	64678	419 320 08 35	BELL CRANK	1
13	PFOZZ	5310-01-243-5129	64678	913019 012000	NUT,PLAIN,HEXAGON	4
14	PFOZZ	3130-01-243-6302	64678	3183200073	BEARING UNIT,PLAIN	4
15	PFOZZ	5306-01-244-1038	64678	914140 012000	BOLT,MACHINE	4
16	PFOZZ	5305-01-243-9411	15526	960-10 M16X 1.5 7 0 P	SCREW,CAP,HEXAGON H	4
17	PAOZZ	2590-01-241-3229	64678	419 320 09 35	LEVER,REMOTE CONTRO	1
18	PFOZZ	5310-01-174-7615	S3465	4537800-780	WASHER,FLAT	4
					END OF FIGURE	

UNIT, DIRECT SUPPORT AND GENERAL SUPPORT MAINTENANCE

SMALL EMPLACEMENT EXCAVATOR (SEE) AND HIGH MOBILITY MATERIAL HANDLER (HMMH)

TORQUE, RADIUS, AND STABILIZER RODS – REAR AXLE TORSION BAR AND MOUNTING

REPAIR PARTS LIST

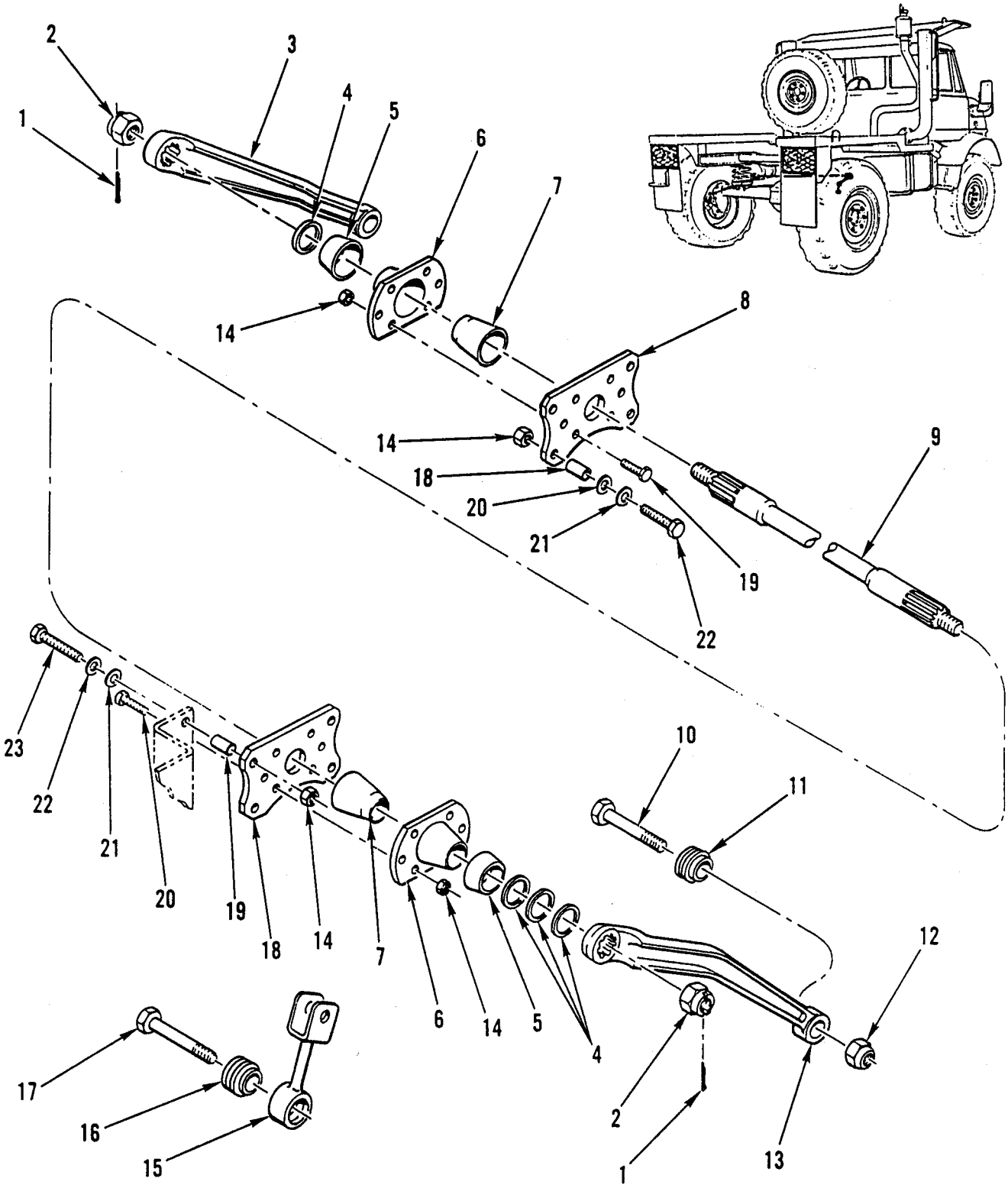

Figure 193. Torque, Radius, and Stabilizer Rods – Rear Axle Torsion Bar and Mounting.

(1) ITEM NO	(2) SMR CODE	(3) NSN	(4) CAGEC	(5) PART NUMBER	(6) DESCRIPTION AND USABLE ON CODES (UOC)	(7) QTY
					GROUP 1605	
					FIG. 193 TORQUE, RADIUS, AND STABILIZER RODS – REAR AXLE TORSION BAR AND MOUNTING	
1	PAOZZ	5315-01-243-9558	64678	00009400504	PIN,COTTER	2
2	PFOZZ	5310-01-246-1811	64678	000937 028002	NUT,PLAIN,CASTELLAT	2
3	PAOZZ	3040-01-257-4963	64678	416 326 01 69	LEVER,REMOTE CONTRO	1
4	PFOZZ	5310-01-249-0479	15526	125 34 S	WASHER,FLAT	3
5	PFOZZ	5365-01-244-1607	64678	352 323 07 51	BUSHING,NONMETALLIC	2
6	PFOZZ	3040-01-240-9901	64678	340 326 01 82	HOUSING,MECHANICAL	2
7	PFOZZ	5365-01-396-0404	64678	352 326 00 81	BUSHING,TAPERED	2
8	PFOZZ	5342-01-241-3074	64678	416 310 00 57	BRACKET,ENGINE ACCE	1
9	PFOZZ	2510-01-313-8082	64678	416 326 00 65	TORSION BAR,SUSPENS	1
10	PFOZZ	5305-01-293-0979	64678	416 990 52 01	SCREW,CAP,HEXAGON H	2
11	PFOZZ	3130-01-243-6302	64678	406 326 00 50	BEARING UNIT,PLAIN UOC:GE1	2
12	PFOZZ	5310-01-238-0642	64678	913004 016005	NUT,SELF-LOCKING,HE	2
13	PFOZZ	3040-01-257-1630	64678	406 326 01 69	LEVER,REMOTE CONTRO	1
14	PFOZZ	5310-01-167-1863	S3465	4537800-712	NUT,PLAIN,HEXAGON	20
15	PFOZZ	4710-01-263-3029	64678	416 320 05 89	TUBE,METALLIC	2
16	PFOZZ	5340-12-311-8996	D8084	1-214-071-3335	BUMPER,RUBBER	2
17	PFOZZ	5305-01-243-9408	64678	000960 020149	SCREW,CAP,HEXAGON H	2
18	PFOZZ	5342-01-241-3073	64678	406 310 00 57	BRACKET,ENGINE ACCE	1
19	PFOZZ	5365-01-245-7258	64678	416 317 02 53	SPACER,SLEEVE	2
20	PFOZZ	5305-01-244-3991	15526	931 M10 60 P	SCREW,CAP,HEXAGON H	4
21	PAOZZ	5310-01-239-7188	64678	007349 010003	WASHER,FLAT	2
22	PAOZZ	5310-01-243-9443	64678	006796 010103	WASHER,SPRING,TENSI	4
23	PFOZZ	5305-01-243-9410	15526	931 M10 70 P	SCREW,CAP,HEXAGON H UOC:GE1	4
					END OF FIGURE	

UNIT, DIRECT SUPPORT AND GENERAL SUPPORT MAINTENANCE

SMALL EMPLACEMENT EXCAVATOR (SEE) AND HIGH MOBILITY MATERIAL HANDLER (HMMH)

NATIONAL STOCK NUMBER INDEX

STOCK NUMBER	FIG.	ITEM
5310-00-009-5768	241	3
	287	2
5310-00-010-5606	287	16
5315-00-012-0123	144	18
	265	10
6240-00-019-0877	65	18
	69	20
6240-00-019-3093	65	2
	69	2
5310-00-020-0360	326	46
5305-00-022-3783	301	10
4730-00-023-5163	276	13
	278	1
	280	6
	280	20
	288	9
	291	6
5310-00-026-2892	329	8
5310-00-026-3038	335	17
5310-00-026-3051	329	18
	330	14
	335	7
5310-00-030-1350	329	5
5310-00-031-1879	333	5
3120-00-031-2167	334	7
3120-00-031-2180	330	9
3120-00-031-2221	330	24
	335	4
5310-00-036-6809	301	9
5330-00-040-9815	283	11
5310-00-044-3339	186	8
5305-00-044-4153	248	4
6240-00-044-6914	63	15
	65	19
	69	21
5310-00-045-3299	69	11
5310-00-045-4007	40	15
	41	13
	248	15
	319	38
5330-00-045-7410	300	21
2640-00-050-1229	168	4
4730-00-050-4203	185	5
	312	4
	312	14
	313	12
	314	14

STOCK NUMBER	FIG.	ITEM
4730-00-050-4203	336	8
	340	27
	341	3
4730-00-050-4207	255	4
4730-00-050-4208	180	20
	254	7
	300	7
	302	11
	303	6
	304	15
	305	9
	306	14
	307	12
	329	7
	330	16
	332	16
	334	1
	335	23
	343	11
	344	8
5305-00-051-4078	219	11
5305-00-058-1082	65	11
5315-00-058-6079	323	36
	324	5
5315-00-058-6094	324	27
5315-00-059-0158	39	7
	45	1
	120	39
2640-00-060-3550	168	5
5310-00-060-9435	344	23
5310-00-061-4651	258	11
5315-00-063-7312	323	39
	326	39
5305-00-068-0498	210	17
5305-00-068-0508	319	28
	340	15
5305-00-068-0509	311	16
5305-00-068-0510	365	4
5305-00-068-0511	271	7
	272	9
	273	8
	274	7
	344	28
5305-00-068-7837	266	14
5305-00-071-1784	216	4
5305-00-071-1786	340	18
5305-00-071-2059	286	10

STOCK NUMBER	FIG.	ITEM
5305-00-071-2066	336	29
	339	5
5305-00-071-2067	260	6
	342	20
5305-00-071-2069	241	9
5305-00-071-2070	340	25
5305-00-071-2072	340	20
5305-00-071-2073	334	2
5305-00-071-2084	340	36
5305-00-071-2505	260	11
5305-00-071-2506	218	24
	260	13
	261	3
5975-00-074-2072	101	5
5310-00-080-6004	255	18
	285	21
5310-00-081-4219	241	5
	319	26
5310-00-087-4652	248	32
	275	12
	336	26
	340	22
5310-00-088-1251	253	3
	258	1
	310	13
	336	19
5330-00-090-2128	165	20
	166	2
	166	12
3110-00-100-6170	302	22
4730-00-102-9812	185	7
5940-00-107-1481	87	15
	95	5
	95	11
	108	3
4730-00-107-2966	34	28
3110-00-108-9225	328	27
3110-00-109-1123	4	9
3120-00-111-2258	300	15
	303	8
	303	17
3120-00-111-2272	304	8
	304	14
3120-00-111-2280	306	3
5935-00-111-6189	87	4
3120-00-111-8697	329	10
	330	20
5310-00-112-1385	308	4
5940-00-113-3138	83	1
5940-00-113-3145	91	14
5940-00-113-9819	91	15
5940-00-113-9820	91	9
	92	2
5305-00-115-9406	319	7

STOCK NUMBER	FIG.	ITEM
5330-00-119-1977	234	20
	237	20
4730-00-133-3196	281	5
6210-00-133-7722	69	16
5975-00-133-8696	166	28
5355-00-135-4386	255	1
5365-00-137-6206	2	4
	15	7
	177	29
4730-00-137-7876	282	20
	289	4
	292	5
	294	6
3120-00-138-5807	28	13
5360-00-138-5811	31	47
3110-00-138-6426	117	17
2815-00-140-4310	9	6
5330-00-140-7695	12	9
	25	22
5330-00-140-7701	40	2
	41	2
	72	6
5365-00-140-7702	15	4
5330-00-140-7707	177	12
	296	7
	297	16
5330-00-140-7724	15	15
5330-00-140-7729	15	25
5310-00-141-1795	182	2
	184	4
4730-00-143-3941	263	25
	277	10
	289	13
	290	11
	291	15
	292	14
	293	11
	294	16
	295	9
5940-00-143-4774	108	2
3120-00-145-7464	2	18
5305-00-145-8368	340	10
4730-00-147-5094	290	1
5360-00-147-5800	9	3
5330-00-147-5808	8	4
5365-00-148-1084	73	2
	154	26
	161	3
	163	3
5310-00-165-8320	326	47
5330-00-166-0969	234	21
	237	21
5310-00-167-0721	219	7
5310-00-167-0721	270	9

STOCK NUMBER	FIG.	ITEM
4730-00-172-0010	266	11
4730-00-172-0031	179	8
4730-00-172-0034	180	17
	298	4
	299	4
	300	16
	302	17
	303	18
	329	6
	344	20
5305-00-177-5597	65	16
	69	18
6220-00-179-4325	65	13
5305-00-180-4966	319	37
3110-00-183-9965	51	21
6240-00-196-4518	66	6
	67	9
5365-00-205-3115	29	32
5310-00-208-1918	327	21
5310-00-209-0965	325	59
5310-00-215-7656	143	6
	172	12
4820-00-223-5576	247	8
5305-00-225-3843	271	10
5310-00-225-6408	265	11
5310-00-225-6993	340	19
	342	13
5306-00-225-8499	283	36
5306-00-226-4825	218	8
5306-00-226-4827	259	6
5306-00-226-4829	218	31
5306-00-226-4831	336	2
5306-00-226-4838	336	24
4730-00-226-6772	276	14
	280	5
5330-00-228-7196	238	3
	278	17
	279	18
	280	18
	281	3
	282	12
5315-00-234-1664	171	8
5315-00-234-1848	185	6
5315-00-236-8371	173	5
5310-00-241-6606	341	11
5330-00-248-3843	247	3
5330-00-250-0222	298	8
5310-00-261-7340	271	6
	272	8

STOCK NUMBER	FIG.	ITEM
5310-00-261-7340	273	7
	274	8
	344	18
5310-00-262-3522	265	13
5305-00-267-8952	319	10
5310-00-269-4040	309	3
4730-00-270-4580	76	2
5305-00-273-5250	325	2
4730-00-274-5828	271	21
	272	11
	273	13
	274	19
	285	16
	287	22
5310-00-274-8710	32	3
4730-00-277-9386	332	17
	343	10
4730-00-278-3208	282	11
	285	18
4730-00-279-0353	255	32
	263	12
5999-00-280-3499	94	2
2990-00-287-0336	44	2
6240-00-295-2158	63	5
5315-00-298-1499	185	2
4730-00-322-8457	277	2
6220-00-346-8943	69	5
5310-00-347-0021	319	11
5310-00-349-1807	302	19
5310-00-350-2655	63	19
5340-00-354-6774	283	8
	284	7
	285	4
	287	12
5315-00-367-4494	344	4
4730-00-370-2874	288	14
3110-00-406-3642	328	21
5310-00-407-9566	259	5
	277	32
	319	24
	336	4
	340	17
5340-00-413-0070	278	7
5315-00-414-9422	242	21
3120-00-414-9484	330	21
4730-00-415-0096	242	15
5365-00-420-3856	329	1
	329	26
5365-00-420-3858	180	11

STOCK NUMBER	FIG.	ITEM
5365-00-420-3858	180	25
	330	15
	335	2
5365-00-420-3859	329	15
	330	12
	335	12
5360-00-424-5303	326	43
5310-00-427-7243	285	24
5340-00-429-1786	280	14
5305-00-432-4170	69	12
5330-00-432-8442	302	3
	303	10
	304	9
5310-00-434-7225	201	5
	241	7
	333	19
4820-00-435-9409	242	12
4810-00-435-9412	242	19
5315-00-442-0005	335	22
4720-00-443-4746	40	5
	41	26
	BULK	41
4720-00-445-3413	359	5
5310-00-450-0459	26	18
5330-00-451-0118	243	48
	244	28
	245	32
5365-00-451-1677	28	19
5365-00-451-3447	28	19
5365-00-451-3448	28	19
5975-00-451-5001	277	6
5305-00-451-6601	304	16
4820-00-459-6191	247	7
5330-00-462-0907	69	13
5330-00-463-0200	65	12
5330-00-465-7906	318	11
4730-00-467-2597	285	13
5305-00-470-3321	32	2
5310-00-470-5747	333	20
4730-00-470-6427	271	25
	272	12
	273	12
	274	18
	283	21
	285	15
2590-00-473-6331	180	3
2540-00-474-6815	210	1
5999-00-476-6327	98	17
4820-00-477-2663	243	21
	244	21

STOCK NUMBER	FIG.	ITEM
4820-00-477-2663	245	21
5330-00-477-4869	233	42
	239	21
5340-00-479-8881	255	40
5330-00-481-6504	239	46
	240	14
5330-00-484-5449	233	28
	234	23
	237	23
5999-00-485-8954	87	3
4730-00-491-4983	280	12
5305-00-491-5995	232	2
5330-00-492-3042	306	8
5330-00-499-3475	29	30
5330-00-499-3493	29	52
	31	24
5330-00-499-3494	29	26
	29	50
5360-00-503-7218	29	23
5306-00-508-8946	210	8
6240-00-519-0264	64	3
5310-00-523-0880	41	33
5305-00-526-2347	327	19
3030-00-528-3968	229	27
3030-00-529-0354	49	2
4730-00-529-1487	342	10
5365-00-530-7968	270	12
	340	28
3110-00-542-0021	115	11
5330-00-542-1586	325	19
4730-00-542-5906	294	5
5305-00-543-4372	365	6
5310-00-551-8089	218	30
3110-00-554-3197	48	8
3110-00-555-5238	113	23
5365-00-556-8007	242	4
5360-00-556-8209	242	11
5330-00-556-8211	242	5
5330-00-556-8246	242	3
5360-00-556-8267	242	18
5330-00-556-8268	242	20
5365-00-556-8290	243	44
	244	24
	245	28
5365-00-556-8293	246	9
5310-00-567-7143	279	25
5935-00-572-9180	65	8
	69	9
5330-00-580-6586	243	13
	243	40

STOCK NUMBER	FIG.	ITEM
5330-00-580-6586	244	13
	245	13
5310-00-582-5965	210	16
	253	2
	255	8
	260	10
	261	4
	270	17
	271	11
	319	27
	340	14
5310-00-584-5272	260	5
	263	20
	284	2
	336	3
	339	4
	340	24
	342	19
5310-00-584-7888	344	11
4730-00-585-6565	275	8
	310	24
3120-00-587-4781	180	16
5330-00-589-8521	246	17
4730-00-592-1020	278	5
4730-00-595-0679	279	37
5330-00-612-6148	243	9
	243	36
	244	9
	245	9
5310-00-613-7804	329	20
5365-00-614-3687	319	30
5340-00-616-4018	276	28
4730-00-618-5372	277	3
4730-00-618-5382	292	6
5330-00-619-1498	47	15
5330-00-619-1517	48	15
5330-00-619-1521	48	19
5310-00-637-9541	63	21
	64	18
5365-00-663-1249	318	15
6220-00-678-9046	63	13
5310-00-682-5684	185	3
5360-00-700-1997	247	9
5305-00-701-7628	241	8
4730-00-706-8711	289	6
	292	7
	294	9
4730-00-707-4677	279	36
4730-00-707-4728	366	19
5330-00-708-7937	302	8
5330-00-708-7937	303	5
	304	6
4730-00-710-5571	281	4
	285	29
	286	6
	287	6
	288	2
5365-00-714-1391	29	19
4730-00-720-4914	277	19
5305-00-720-7862	327	5
5305-00-724-5796	324	12
5305-00-724-5910	329	21
5305-00-724-7218	337	7
	338	9
5305-00-724-7222	336	13
	342	27
5310-00-725-1983	264	6
5305-00-725-2317	248	33
	287	10
	333	9
	344	27
3110-00-729-4042	310	19
5310-00-732-0558	63	20
	218	4
	242	2
	255	31
	285	2
5310-00-732-0559	255	23
5340-00-732-0642	65	15
	69	17
5330-00-733-2208	342	15
3110-00-734-8247	232	8
5310-00-735-3544	32	7
5365-00-746-3328	297	2
5365-00-754-1082	243	6
	243	33
	244	6
	245	6
5365-00-754-1083	328	26
5330-00-759-5358	242	10
	243	24
	245	24
	247	5
	283	3
	283	15
	283	19
	284	16
	285	10
	286	2
	286	16

STOCK NUMBER	FIG.	ITEM
5330-00-759-5358	287	18
5330-00-760-3149	243	15
	243	29
	244	15
	245	15
	283	27
	283	40
	284	12
	285	31
	285	36
	285	40
	286	7
	287	8
5310-00-761-6882	210	13
	270	18
5305-00-762-6041	306	11
5330-00-763-2689	25	37
	35	3
	129	6
5310-00-763-8911	219	6
5310-00-763-8921	366	12
5340-00-764-5231	279	12
5310-00-768-0318	366	10
5935-00-773-1428	84	9
2540-00-776-0103	185	1
3110-00-779-3506	325	16
4030-00-780-9350	185	8
4730-00-786-2247	277	29
5330-00-789-7495	243	50
	244	30
	245	34
5340-00-790-8423	268	12
4730-00-797-6567	273	9
	283	5
4820-00-800-3572	326	20
5365-00-803-7299	180	29
5365-00-803-7301	328	42
5365-00-803-7303	256	1
	257	1
5365-00-804-3892	315	7
4730-00-804-7944	291	7
5365-00-804-9739	328	18
5365-00-804-9740	324	9
5330-00-808-7612	296	21
5310-00-809-3079	241	2
5310-00-809-4058	282	5
5310-00-809-8533	255	16
	306	10
4730-00-809-9427	277	20
4730-00-811-1848	294	1

STOCK NUMBER	FIG.	ITEM
5310-00-811-3494	321	5
4730-00-812-2434	271	26
	274	10
	277	22
5315-00-816-1794	310	28
	332	6
5305-00-821-3869	285	11
4730-00-821-7669	277	26
4730-00-822-5609	280	8
	283	1
	284	15
5310-00-823-8803	258	6
	329	19
	336	14
5310-00-823-8804	276	26
	278	8
	280	22
5310-00-830-7716	323	22
5310-00-833-8567	65	7
	69	8
5310-00-835-2036	210	11
5315-00-839-5820	40	30
	41	30
5315-00-839-5821	144	28
	218	22
5315-00-839-5822	239	25
2540-00-840-0022	219	10
4730-00-840-7236	279	4
	283	10
5315-00-842-3044	41	35
	254	1
	255	19
	258	17
	263	7
	265	6
	341	8
5315-00-844-5836	255	28
5315-00-844-5840	333	8
5315-00-846-0126	185	11
	344	14
5935-00-846-3884	87	2
5330-00-847-7586	242	17
4730-00-852-5581	282	37
5315-00-853-3814	326	36
4720-00-869-3565	284	13
5365-00-869-3574	334	9
5330-00-870-0479	247	15
	284	14
5940-00-874-9033	92	7
5940-00-874-9033	95	2

STOCK NUMBER	FIG.	ITEM
5940-00-874-9033	95	7
	108	15
5310-00-877-5796	40	28
5340-00-878-5257	282	33
5315-00-878-6867	324	2
6220-00-880-1624	65	1
5310-00-880-7744	319	36
5310-00-880-8189	34	22
4730-00-883-0643	270	19
5310-00-891-3405	41	32
6220-00-893-3558	65	14
4730-00-893-3669	277	13
4730-00-908-3193	120	4
5310-00-913-3366	216	2
	217	11
5310-00-913-8881	44	9
4730-00-916-3368	336	30
	337	12
	338	2
	340	2
	342	12
4730-00-917-4794	238	8
	272	14
	273	15
	274	3
	277	30
	288	11
5330-00-929-8171	271	24
	272	13
	273	14
	274	2
	278	3
4730-00-933-0816	282	41
5310-00-935-9021	218	19
3110-00-936-6097	232	9
5305-00-938-1539	344	12
5305-00-940-8068	335	16
5365-00-949-0255	242	16
5305-00-965-6840	344	24
2540-00-968-4060	180	5
5305-00-978-9379	270	16
5305-00-978-9384	253	4
	336	18
5305-00-978-9391	275	5
5305-00-978-9392	270	5
5305-00-978-9395	270	1
5305-00-983-5336	275	11
5305-00-983-6620	249	1
5305-00-983-6621	270	10

STOCK NUMBER	FIG.	ITEM
5305-00-983-6624	277	31
5305-00-983-7470	324	1
5305-00-983-8074	265	14
5305-00-984-3019	342	18
5310-00-984-3806	285	20
	329	16
	333	4
	336	5
5305-00-984-6219	248	14
5975-00-985-6630	40	18
	41	25
	218	37
5340-00-985-6690	225	2
	282	4
5305-00-989-7435	59	1
	59	1
5305-00-990-8632	329	17
4730-00-990-8852	277	12
5310-00-995-6719	308	12
5310-00-998-8178	241	4
	284	1
	287	4
2640-00-999-7886	168	2
5340-01-006-0290	31	36
5310-01-008-6795	334	3
4730-01-011-7736	279	21
	288	18
5310-00-012-6821	74	3
5365-01-017-8059	144	16
4730-01-024-1321	289	1
	292	2
5940-01-027-4669	83	12
	85	15
	88	19
	89	3
	90	4
	96	14
	98	8
	102	3
	103	8
	104	2
	105	2
	107	10
4730-01-027-8261	284	11
2590-01-030-3763	69	10
2590-01-030-6625	65	10
5310-01-031-1458	366	2
5330-01-037-0663	63	16
5330-01-038-3074	279	2

STOCK NUMBER	FIG.	ITEM
4730-01-042-0228	274	14
5305-01-042-2556	31	41
4730-01-046-4034	288	6
4730-01-048-5260	165	3
	165	14
4730-01-048-5261	166	9
	166	16
4730-01-048-6358	40	10
	40	25
	41	7
	41	21
	41	39
	165	29
4730-01-048-6968	40	9
	40	24
	41	6
	41	22
	41	38
	165	28
4730-01-048-7873	165	4
	165	13
4730-01-048-7874	166	8
	166	17
5330-01-049-1292	289	2
	292	4
	294	3
4730-01-049-1559	166	7
	166	18
4730-01-051-2358	289	10
	290	8
	291	12
	292	11
	293	8
	294	13
	295	5
4730-01-054-3835	283	18
	286	1
4730-01-055-4017	40	22
	41	19
4730-01-056-4990	165	5
	165	12
5970-01-057-0992	BULK	23
4730-01-057-7109	40	8
	40	23
	41	5
	41	23
	41	37
	165	27
2940-01-061-4426	32	6
5315-01-063-5007	30	20

STOCK NUMBER	FIG.	ITEM
5365-01-065-0623	31	43
5315-01-065-6012	328	30
2940-01-066-0149	32	11
5310-01-066-5480	210	15
	255	7
5305-01-067-3394	285	22
	333	16
5310-01-067-3407	286	11
2510-01-067-4718	65	3
5306-01-067-6998	201	4
	333	17
5306-01-069-0609	333	3
5310-01-069-4887	255	30
	285	3
	287	11
4730-01-074-0907	283	14
5330-01-076-6172	63	17
5310-01-078-4919	344	17
2920-01-079-3997	54	2
5130-01-079-4548	366	3
5935-01-079-5099	87	5
3040-01-080-9587	306	4
2530-01-081-1389	KITS	
5940-01-082-3321	249	29
5970-01-083-1936	BULK	24
5310-01-084-8143	255	25
5305-01-084-9154	300	12
5330-01-086-8213	306	17
2530-01-088-0614	319	22
5310-01-088-2825	218	42
5340-01-089-2881	283	34
4320-01-090-3266	306	19
4730-01-096-9138	285	8
	286	14
	287	17
4730-01-096-9398	165	26
4730-01-097-8684	318	20
5935-01-097-9974	61	4
5310-01-100-2067	63	18
5975-01-101-5348	84	6
5970-01-101-7408	BULK	25
5935-01-102-7124	91	20
5310-01-106-0197	185	10
3120-01-109-6790	327	8
	328	6
4720-01-114-6629	37	8
5330-01-115-8226	279	29
4730-01-117-8732	13	19
4420-01-117-8733	111	23
5310-01-122-5483	74	2

STOCK NUMBER	FIG.	ITEM
5305-01-124-9016	339	7
5310-01-126-3664	319	15
2590-01-126-9054	301	1
3120-01-129-2780	306	5
5305-01-129-6902	283	7
	284	9
	285	27
5340-01-129-7504	91	21
5305-01-131-2919	344	37
2590-01-131-6015	KITS	
4730-01-134-7759	166	15
5975-01-135-5917	87	8
	108	5
	BULK	14
5975-01-135-5941	108	16
	BULK	11
5310-01-137-3392	280	21
3110-01-137-6852	302	7
	303	4
5330-01-143-0134	318	10
6680-01-144-8984	317	22
	318	27
5930-01-148-8874	76	3
6680-01-148-8875	320	5
4320-01-149-4946	232	1
5935-01-149-5165	91	16
	93	4
5935-01-150-8323	92	8
4820-01-151-3797	251	1
2540-01-151-5703	185	4
4730-01-153-2765	317	20
5935-01-153-8291	91	17
5935-01-153-9320	92	7
5935-01-154-6233	91	12
6220-01-154-7699	65	5
5305-01-155-3875	142	1
5306-01-155-3907	207	1
5305-01-155-3908	199	1
4730-01-155-4089	KITS	
5330-01-155-4277	282	7
5305-01-155-5439	20	8
	21	20
	40	35
	56	30
	61	6
	80	26
	82	32
	122	18
	148	5
	156	24

STOCK NUMBER	FIG.	ITEM
5305-01-155-5439	172	14
	177	8
	332	1
	343	6
3695-01-155-5983	327	3
4730-01-156-4835	238	2
	276	29
	278	2
	280	11
	280	17
	291	1
	293	1
3120-01-156-6331	218	17
5310-01-157-7595	325	3
5305-01-158-0827	37	20
	40	13
	41	12
	182	9
5305-01-158-0833	179	9
5305-01-158-2041	13	22
5310-01-158-3188	68	2
5305-01-158-3212	152	2
5306-01-158-9917	82	23
	153	4
5305-01-159-0065	121	6
	165	24
	183	3
5305-01-159-4489	328	13
1055-01-161-8987	131	25
5310-01-163-2282	328	22
6220-01-163-4900	69	5
5305-01-163-5075	39	33
	101	6
5940-01-163-7764	108	11
5305-01-166-0613	180	2
5305-01-166-0616	82	11
	318	19
5310-01-166-5859	122	28
	202	12
	297	5
5310-01-166-5886	50	9
	85	26
	199	15
	204	15
	220	35
	222	20
	222	24
5330-01-166-5940	121	2
	174	6
6240-01-167-1833	56	10

STOCK NUMBER	FIG.	ITEM
6240-01-167-1833	57	17
	58	6
	320	3
5310-01-167-1859	50	8
	63	10
	82	14
	85	27
	196	16
	220	36
5310-01-167-1863	1	10
	43	1
	45	16
	74	8
	80	15
	153	1
	156	31
	187	1
	193	14
	208	3
5310-01-167-1954	82	2
	197	18
	22	4
5310-01-167-1964	28	7
4730-01-167-7048	279	10
5330-01-168-0885	280	2
5330-01-168-1935	306	16
3120-01-168-4515	324	30
5306-01-168-7889	42	4
	149	17
	156	37
	172	11
	212	24
	220	30
4730-01-169-7629	277	23
	289	7
	290	5
	291	9
	292	8
	293	5
	294	10
	295	2
5310-01-169-8065	28	16
5315-01-170-5004	2	8
5310-01-171-2356	19	2
	20	9
	33	2
	38	2
	39	27
	55	2
	57	22

STOCK NUMBER	FIG.	ITEM
5310-01-171-2356	61	10
	81	5
	82	25
	109	4
	143	4
	172	13
	196	24
	197	14
	199	14
	211	6
	211	15
	211	27
	212	8
	212	15
	220	27
	220	42
	221	7
	320	8
5306-01-171-4685	148	8
	165	23
5306-01-171-4687	19	6
	39	22
5306-01-171-4688	122	36
5310-01-171-4689	26	19
	33	1
	38	5
	39	26
	51	13
	58	9
	61	11
	76	5
	77	6
	80	4
	81	4
	82	8
	84	7
	85	22
	143	2
	148	39
	196	13
	204	18
	211	16
	211	22
	211	26
	212	10
	212	16
	220	18
	220	28
	220	43
	220	47

STOCK NUMBER	FIG.	ITEM
5310-01-171-4689	221	8
	276	27
	278	12
	279	15
	282	2
	282	27
	320	7
	332	3
	343	14
5330-01-171-4703	2	15
	58	2
	71	10
	121	24
	132	6
	139	5
	154	2
5330-01-171-7987	233	27
	234	24
	235	6
	236	14
	237	24
5306-01-172-4611	80	42
	82	29
	163	19
	221	14
5310-01-172-4663	5	7
	229	29
4820-01-173-9251	KITS	
5310-01-173-9286	35	13
5365-01-173-9309	24	4
2910-01-174-0222	24	6
5306-01-174-0372	143	7
	148	37
	322	1
5306-01-174-0374	60	12
	82	3
5306-01-174-0376	45	20
	147	24
5310-01-174-0436	18	7
	20	4
	21	17
	23	8
	43	9
	50	5
	79	3
	83	8
	147	22
	148	34
	149	16
	152	15

STOCK NUMBER	FIG.	ITEM
5310-01-174-0436	156	36
	172	10
	176	26
	194	8
	202	16
	207	9
	211	36
	212	23
	220	31
	229	20
	231	30
5306-01-174-1489	54	28
5310-01-174-1491	54	13
5340-01-174-1494	54	19
2920-01-174-1508	54	10
3120-01-174-1512	54	1
5310-01-174-1517	54	30
5310-01-174-1518	31	27
5310-01-174-1520	54	12
2815-01-174-7403	14	19
5306-01-174-7548	192	1
5306-01-174-7549	202	15
5306-01-174-7550	20	3
	21	16
	63	25
	64	19
	149	23
	152	3
	176	25
	194	9
	207	10
	220	5
	332	11
	343	3
5306-01-174-7552	34	14
	200	2
	221	9
	276	10
	278	10
5306-01-174-7553	35	2
5306-01-174-7554	14	21
5310-01-174-7558	1	12
5330-01-174-7588	12	11
	13	18
	21	6
	153	10
	176	21
	296	27
5330-01-174-7590	26	14
5330-01-174-7595	7	7

STOCK NUMBER	FIG.	ITEM
5310-01-174-7613	45	7
	56	31
	60	5
	71	9
	80	28
	81	9
	117	19
	122	35
	196	14
	197	13
	212	7
	212	18
5310-01-174-7615	8	11
	37	4
	39	13
	74	7
	182	7
	186	2
	192	18
	203	4
	208	2
	239	2
	332	24
5307-01-174-7624	28	15
5365-01-174-7650	13	4
2940-01-174-9142	32	10
5306-01-175-0424	38	3
	45	9
	80	31
	82	9
	144	2
	221	18
	320	9
5315-01-175-0433	29	34
5365-01-175-0445	3	7
2540-01-175-1692	185	9
2910-01-175-7229	KITS	
5306-01-176-1337	117	21
5306-01-176-1338	23	9
	149	4
	166	4
	209	9
	219	5
	276	9
5315-01-176-1342	229	26
5307-01-176-1387	126	24
	127	20
5365-01-176-1402	24	4
5365-01-176-1403	24	4
5365-01-176-1404	24	4

STOCK NUMBER	FIG.	ITEM
5365-01-176-1405	24	4
5365-01-176-1406	24	4
5365-01-176-1407	24	4
5310-01-176-4687	220	16
	220	38
5365-01-176-4763	24	4
5365-01-176-4764	24	4
5365-01-176-4765	24	4
5365-01-176-4766	24	4
5365-01-176-4767	24	4
3110-01-176-6465	51	18
5310-01-176-6494	51	4
5310-01-176-6500	45	8
	51	14
	80	3
	85	21
	117	20
	199	2
	322	2
5330-01-176-9785	302	24
	303	20
5310-01-177-0890	201	10
	334	14
3040-01-177-2436	304	20
5120-01-177-3050	352	7
	367	7
2590-01-178-2965	300	4
4320-01-178-3408	302	12
	303	12
	304	11
5130-01-178-6338	323	1
5306-01-178-7298	13	5
	79	8
5306-01-178-7299	10	10
3120-01-178-9254	300	3
2530-01-179-4327	82	6
4810-01-180-0997	342	16
5365-01-180-8871	28	3
3120-01-181-1634	298	6
	298	12
5315-01-181-2415	31	31
5365-01-182-5468	30	4
5315-01-182-7774	346	9
	358	10
	359	3
5365-01-182-8473	28	3
2920-01-182-8764	76	10
5330-01-183-1291	28	4
5365-01-183-1333	28	2
5365-01-183-6835	47	8

STOCK NUMBER	FIG.	ITEM
5365-01-183-6835	120	38
5365-01-183-6877	24	4
5365-01-183-6878	24	4
5365-01-183-6879	24	4
5365-01-183-6880	24	4
5365-01-183-6881	24	4
5365-01-183-6882	24	4
5365-01-183-6883	24	4
5365-01-183-8452	24	4
5310-01-183-8664	31	34
5305-01-183-8684	31	35
5365-01-183-8686	28	18
5365-01-183-8694	28	22
4730-01-184-1941	25	36
	129	5
5365-01-184-7856	28	3
4730-01-184-9423	282	18
5305-01-185-0070	31	28
5310-01-185-3176	52	1
5307-01-185-3177	13	24
5310-01-185-4661	30	17
3110-01-185-4719	28	1
5310-01-185-7191	29	21
	30	5
	54	4
5305-01-186-0627	31	4
5330-01-186-0692	30	8
3120-01-186-0716	31	26
5305-01-186-3341	29	24
3040-01-186-3602	KITS	
5310-01-187-5909	30	12
5306-01-187-9502	34	18
	142	2
	174	3
5365-01-189-6756	28	19
4730-01-189-8652	279	28
	279	30
5365-01-190-0336	28	12
5305-01-190-1403	31	23
5330-01-191-3163	302	23
	303	19
4820-01-192-0624	318	14
5330-01-192-2130	29	40
5330-01-192-3353	29	18
5330-01-192-3354	31	49
2920-01-192-5687	54	35
5330-01-192-9262	246	19
4730-01-192-9593	283	26
5365-01-193-2928	28	19
5365-01-193-2929	28	19

STOCK NUMBER	FIG.	ITEM
3120-01-193-6971	29	16
5310-01-194-0417	249	2
5360-01-194-3161	31	38
4730-01-195-7331	277	8
	282	23
4330-01-198-1525	37	11
3020-01-198-5461	31	42
5365-01-198-8209	28	19
5330-01-198-8439	277	1
2920-01-198-8879	51	7
4730-01-199-1883	282	13
	288	1
2920-01-199-6742	54	31
3120-01-201-3739	31	32
2920-01-201-4143	KITS	
6250-01-203-5666	65	4
	69	4
5365-01-206-6856	325	17
5340-01-207-0741	31	39
5330-01-207-2769	37	12
5306-01-209-9284	241	6
6140-01-210-1964	80	23
4820-01-210-4170	246	1
5365-01-211-0732	232	14
4935-01-212-4232	351	6
	364	6
4730-01-212-5775	233	3
4730-01-212-5776	285	35
5310-01-212-6134	233	2
	279	19
4933-01-214-6263	282	19
5340-01-215-6299	219	8
5310-01-215-7317	300	11
	303	13
	304	17
4730-01-216-9355	324	4
5365-01-217-4133	280	10
2815-01-218-2170	1	1
2520-01-218-2206	110	1
4730-01-220-2072	218	40
4730-01-220-2073	218	41
2610-01-220-6413	170	1
4730-01-223-8690	126	25
	135	5
3110-01-223-8905	115	6
5999-01-224-0342	83	2
	85	3
	87	13
	88	3
	89	4

STOCK NUMBER	FIG.	ITEM
5999-01-224-0342	90	6
	103	10
	104	4
	105	10
	107	5
	108	12
	231	3
4710-01-224-1918	349	3
	362	3
6115-01-224-3128	51	1
2910-01-224-5495	24	2
4330-01-224-5508	317	14
2910-01-224-5509	178	10
2920-01-224-5553	61	7
2920-01-224-5554	71	4
2910-01-224-7367	35	6
6240-01-224-7656	56	24
2540-01-224-9017	220	21
4810-01-225-0845	37	13
4720-01-225-1128	46	30
4720-01-225-1129	46	1
4720-01-225-1130	46	25
2940-01-225-1531	15	13
3830-01-225-5888	331	7
	331	16
	344	32
3830-01-225-9060	331	17
5920-01-226-4268	60	11
5920-01-226-4269	58	14
	60	11
5340-01-228-6113	37	16
5330-01-229-3513	7	9
5330-01-229-3514	13	16
5330-01-229-3515	47	3
5315-01-232-4322	331	8
	331	15
	344	31
5310-01-232-8491	276	22
2520-01-232-9446	111	2
5330-01-233-2062	37	15
4720-01-234-1733	283	30
5330-01-234-2618	317	12
2990-01-234-2815	50	7
2920-01-234-4844	52	3
4820-01-234-4992	15	9
8120-01-234-5336	37	2
5315-01-234-6455	144	30
4730-01-234-7319	10	13
6150-01-234-7423	50	10
5330-01-234-7625	317	15

STOCK NUMBER	FIG.	ITEM
4730-01-234-7819	12	10
	72	4
3040-01-234-7926	14	14
2990-01-234-7982	10	9
2990-01-234-7983	10	6
2815-01-234-7986	5	2
2940-01-234-8006	15	1
2910-01-234-8441	13	3
2815-01-234-8444	6	3
2815-01-234-8613	11	1
2940-01-234-8930	35	5
4730-01-234-8931	25	23
2815-01-235-0838	4	1
3020-01-235-0897	51	23
4820-01-235-1453	17	12
2815-01-235-1472	KITS	
2815-01-235-1479	9	1
2990-01-235-1504	10	11
2815-01-235-1508	10	2
6680-01-235-1631	56	3
5340-01-235-2151	317	11
5120-01-235-2605	196	28
4730-01-235-3545	10	15
4820-01-235-3672	12	13
3040-01-235-5039	4	5
2590-01-235-5046	13	10
2815-01-235-5047	10	2
2815-01-235-5064	10	19
4730-01-235-5070	15	26
	121	3
4730-01-235-5585	46	17
4710-01-235-7060	25	7
9390-01-235-8047	120	3
2815-01-235-8497	3	13
2815-01-235-8540	6	6
2815-01-235-8621	13	14
2815-01-235-8626	14	1
2815-01-235-8629	8	14
3020-01-235-8644	5	3
3020-01-235-8647	54	21
2815-01-235-8684	10	16
4720-01-235-8968	46	29
4720-01-235-8969	46	5
4720-01-235-8970	BULK	20
4720-01-235-8971	296	10
	BULK	19
4730-01-235-9007	31	20
6680-01-235-9111	75	3
4710-01-235-9120	14	18
4710-01-235-9121	17	5

STOCK NUMBER	FIG.	ITEM
4710-01-235-9122	17	2
4710-01-235-9123	25	15
6620-01-236-0129	47	4
2520-01-236-0319	18	1
4730-01-236-0329	46	2
2815-01-236-0338	6	1
2815-01-236-0373	3	13
4720-01-236-0595	21	11
4720-01-236-0596	21	14
	148	22
3040-01-236-0622	48	9
2930-01-236-0646	49	4
2420-01-236-0647	46	32
2520-01-236-0657	199	17
2520-01-236-0663	18	2
4320-01-236-0667	25	39
3020-01-236-0670	11	16
2940-01-236-0722	35	5
5977-01-236-0777	222	12
6105-01-236-0799	222	7
2815-01-236-1209	6	1
2815-01-236-1210	3	13
3040-01-236-1258	14	5
3040-01-236-1260	112	6
2910-01-236-1282	24	8
2920-01-236-1289	54	36
4710-01-236-1305	25	4
4710-01-236-1306	25	1
2530-01-236-2733	197	12
3040-01-236-2848	38	12
4710-01-236-2866	25	41
4710-01-236-2867	25	18
3610-01-236-4056	116	40
2815-01-236-4427	4	11
2815-01-236-4430	6	5
2815-01-236-4432	6	5
2590-01-236-4502	20	2
2910-01-236-4503	34	20
3040-01-236-4504	120	6
2510-01-236-4507	197	1
2510-01-236-4508	197	2
2510-01-236-4509	197	21
2510-01-236-4510	197	3
2510-01-236-4511	197	4
2590-01-236-4512	204	4
2590-01-236-4513	204	30
2590-01-236-4514	196	5
2590-01-236-4515	197	20
2520-01-236-4667	120	10
2815-01-236-4991	6	1

STOCK NUMBER	FIG.	ITEM
2815-01-236-4992	3	4
2815-01-236-4993	3	4
5945-01-236-5948	54	33
2815-01-236-5991	6	5
4310-01-236-5993	17	25
2910-01-236-6054	36	1
2815-01-236-6076	6	1
2815-01-236-6077	10	18
2815-01-236-6078	10	18
2815-01-236-6079	10	18
2910-01-236-6087	15	21
4710-01-236-6543	46	22
4720-01-236-6634	46	34
2815-01-236-6643	3	12
2815-01-236-6646	3	12
4820-01-236-6649	17	13
2935-01-236-6655	KITS	
3040-01-236-6658	123	19
2815-01-236-6666	4	12
2990-01-236-6669	1	21
2990-01-236-6670	7	5
3040-01-236-6671	119	21
2815-01-236-6672	8	2
2815-01-236-6673	2	1
3040-01-236-6674	8	5
2940-01-236-6676	35	1
3040-01-236-6703	119	28
4310-01-236-6710	17	22
4310-01-236-6711	17	15
4730-01-236-6992	121	14
	122	32
	124	5
	125	2
	154	5
4730-01-236-7053	151	4
4820-01-236-7152	45	12
5340-01-236-7156	198	14
3040-01-236-7214	14	11
3040-01-236-7252	11	11
2930-01-236-7254	45	6
2510-01-236-7257	204	30
2930-01-236-7259	47	1
2930-01-236-7260	7	5
2805-01-236-7261	48	14
2910-01-236-7267	27	1
2520-01-236-7270	123	5
2815-01-236-7273	42	5
4320-01-236-7274	47	14
2930-01-236-7287	45	10
2930-01-236-7288	47	12

STOCK NUMBER	FIG.	ITEM
2815-01-236-7289	16	2
2990-01-236-7290	43	6
2910-01-236-7304	38	16
3040-01-236-7306	28	9
2920-01-236-7307	53	3
2815-01-236-7315	6	1
2540-01-236-7319	20	15
	152	12
5430-01-236-7323	46	7
3020-01-236-7324	4	14
4730-01-236-7359	114	2
4310-01-236-8874	KITS	
5355-01-236-8876	8	18
4310-01-236-8892	17	8
3020-01-236-8903	4	10
2815-01-236-8936	6	1
2815-01-236-8937	3	5
2815-01-236-8938	3	5
4330-01-236-8944	7	6
2590-01-236-9913	211	28
4730-01-236-9999	122	4
2990-01-237-0042	43	11
4710-01-237-0062	115	2
4730-01-237-0069	122	6
4730-01-237-0070	122	37
4730-01-237-0071	121	16
	122	15
	122	43
	124	4
	125	3
	154	6
	161	27
	163	5
	163	10
	163	14
	296	3
	297	8
4820-01-237-0115	34	10
5340-01-237-0125	119	1
4730-01-237-0163	122	30
4720-01-237-0167	21	10
4720-01-237-0178	122	39
	163	8
	163	12
3040-01-237-0182	120	5
3040-01-237-0183	120	31
2815-01-237-0184	6	7
4730-01-237-0186	25	40
4730-01-237-0188	136	1
4730-01-237-0190	122	27

STOCK NUMBER	FIG.	ITEM
3040-01-237-0212	19	11
3040-01-237-0214	19	5
4310-01-237-0220	17	6
2815-01-237-0266	4	8
4730-01-237-0272	111	33
4730-01-237-0273	111	1
2510-01-237-0274	197	8
2510-01-237-0275	197	5
2510-01-237-0279	179	14
3040-01-237-0318	45	2
2930-01-237-0319	14	4
2990-01-237-0323	16	11
2990-01-237-0324	16	7
2990-01-237-0325	23	3
3040-01-237-0338	119	18
2815-01-237-0341	3	3
4820-01-237-0369	120	32
2910-01-237-0375	75	5
2930-01-237-0376	12	3
3010-01-237-0450	48	2
3040-01-237-0471	19	3
3040-01-237-0472	19	7
3040-01-237-0474	120	8
2815-01-237-0484	10	18
2540-01-237-0492	20	11
3020-01-237-0496	49	1
5340-01-237-1729	198	14
4720-01-237-1742	21	13
	148	20
4730-01-237-1756	17	3
	46	26
4730-01-237-1757	172	16
2540-01-237-1806	202	14
2540-01-237-1807	211	25
2910-01-237-1836	46	24
3040-01-237-1838	112	2
2540-01-237-1848	199	4
3020-01-237-1852	14	3
3020-01-237-1853	14	12
3020-01-237-1854	14	13
2910-01-237-1915	38	7
4710-01-237-1927	25	10
4730-01-237-1929	122	31
4730-01-237-1930	116	44
4730-01-237-1931	34	7
4720-01-237-2833	33	8
2510-01-237-2834	46	13
2520-01-237-2873	119	9
2520-01-237-2874	119	24
3040-01-237-2876	119	23

STOCK NUMBER	FIG.	ITEM
3040-01-237-2877	119	8
3040-01-237-2878	119	25
3040-01-237-2881	119	27
3040-01-237-2882	119	29
3040-01-237-2883	119	30
2930-01-237-3509	46	8
2510-01-237-3527	204	13
2510-01-237-3530	122	3
2590-01-237-3531	152	5
2540-01-237-3532	152	8
2510-01-237-3536	204	20
2520-01-237-3542	33	3
2540-01-237-3546	1	4
2510-01-237-3547	198	4
2510-01-237-3548	198	4
2990-01-237-3549	43	7
2520-01-237-3551	113	13
2990-01-237-3555	122	20
2510-01-237-3558	215	8
2510-01-237-3559	197	11
2510-01-237-3560	197	11
3040-01-237-3563	117	7
2910-01-237-3564	122	42
3040-01-237-3565	39	9
3040-01-237-3566	123	14
3040-01-237-3567	123	23
	123	25
2530-01-237-3581	21	7
2590-01-237-3603	199	13
3010-01-237-3607	117	31
2530-01-237-3609	118	17
3040-01-237-3610	116	43
3040-01-237-3611	116	30
3040-01-237-3612	113	20
2510-01-237-3613	43	15
2510-01-237-3614	43	17
2510-01-237-3615	43	14
2510-01-237-3616	43	13
2815-01-237-3618	118	16
2540-01-237-3620	39	16
2540-01-237-3621	199	8
4730-01-237-3633	25	32
	129	11
5930-01-237-3748	73	1
	73	1
3120-01-237-3959	4	7
5306-01-237-4997	2	13
5310-01-237-5021	24	10
5305-01-237-5195	10	1
5310-01-237-5218	9	4

STOCK NUMBER	FIG.	ITEM
5310-01-237-5224	13	6
	20	5
	39	8
	50	11
	55	8
	80	38
	83	5
	120	12
	148	24
	149	14
	152	4
	166	31
	172	9
	183	2
	211	37
	212	22
	216	12
	217	12
	219	3
	220	32
3120-01-237-5293	4	6
3120-01-237-5294	4	7
3120-01-237-5295	4	7
3120-01-237-5296	4	7
3120-01-237-5297	6	10
3120-01-237-5308	11	3
5360-01-237-5416	10	20
2815-01-237-6139	6	7
2815-01-237-6140	6	6
2815-01-237-6141	6	7
2815-01-237-6142	6	6
2520-01-237-6143	112	1
5340-01-237-6181	209	1
4730-01-237-6198	25	34
4730-01-237-6206	21	5
2815-01-237-6214	6	6
2815-01-237-6215	6	5
4730-01-237-6218	25	31
3040-01-237-6248	120	27
3040-01-237-6263	118	9
3040-01-237-6264	114	37
3040-01-237-6265	113	25
3040-01-237-6284	115	8
3040-01-237-6285	116	14
3040-01-237-6286	116	24
3040-01-237-6287	120	20
3040-01-237-6288	113	10
2510-01-237-6304	KITS	
2510-01-237-6305	KITS	
4730-01-237-6311	111	26

STOCK NUMBER	FIG.	ITEM
2590-01-237-6313	179	15
2510-01-237-6314	221	11
2940-01-237-6315	15	2
2510-01-237-6360	197	9
2510-01-237-6361	197	6
2510-01-237-6362	198	3
2510-01-237-6363	198	3
2520-01-237-6364	117	8
2510-01-237-6365	196	22
2540-01-237-6366	199	22
2540-01-237-6367	199	22
2540-01-237-6368	196	6
	211	17
	212	11
2530-01-237-6373	151	1
2940-01-237-6374	33	9
2815-01-237-6377	7	8
3040-01-237-6391	119	17
4810-01-237-6395	122	9
2540-01-237-6407	199	20
2540-01-237-6408	199	4
2540-01-237-6409	209	8
2530-01-237-6413	120	14
2590-01-237-6429	197	19
2590-01-237-6430	196	7
	211	18
	212	12
3040-01-237-6434	39	6
3040-01-237-6435	202	13
2510-01-237-6436	113	5
2540-01-237-6437	214	4
2540-01-237-6438	214	3
2540-01-237-6439	214	1
2540-01-237-6440	214	2
2510-01-237-6449	205	1
2510-01-237-6450	205	6
2510-01-237-6451	205	7
2510-01-237-6452	204	28
2510-01-237-6453	204	5
2510-01-237-6454	204	6
2510-01-237-6455	204	5
2540-01-237-6456	211	2
	212	2
2540-01-237-6457	211	1
2540-01-237-6458	199	8
2540-01-237-6459	204	25
2540-01-237-6460	202	10
2510-01-237-6461	207	6
2815-01-237-6704	6	7
2940-01-237-6805	36	4

STOCK NUMBER	FIG.	ITEM
5305-01-237-6846	1	26
5340-01-237-6881	13	8
3120-01-237-6887	4	7
4730-01-237-6942	43	21
4730-01-237-6945	111	28
3040-01-237-6977	23	5
2590-01-237-6978	20	17
2540-01-237-6979	212	19
2990-01-237-7006	211	12
2510-01-237-7007	202	17
2510-01-237-7008	202	3
2510-01-237-7013	202	2
3040-01-237-7015	117	15
4320-01-237-7018	118	4
2520-01-237-7077	118	14
3040-01-237-7078	113	17
2540-01-237-7083	211	34
2530-01-237-7084	212	6
5365-01-237-7097	6	2
2520-01-237-7100	111	27
4730-01-237-7125	122	5
5905-01-237-7136	222	28
6680-01-237-7492	13	1
5310-01-237-7658	35	11
	50	3
	126	23
	127	19
	144	9
	155	20
	182	11
	203	6
3120-01-237-7668	4	7
3120-01-237-7669	2	19
3120-01-237-7673	119	3
3120-01-237-7675	11	5
3120-01-237-7676	6	13
5340-01-237-8317	111	20
4720-01-237-8347	122	7
4720-01-237-8348	122	8
3040-01-237-8358	116	20
2520-01-237-8378	120	26
2520-01-237-8379	120	28
2520-01-237-8380	120	22
2520-01-237-8381	123	7
2540-01-237-8392	211	11
2540-01-237-8393	212	5
2540-01-237-8395	212	14
2540-01-237-8396	211	3
	212	3
2540-01-237-8398	211	24

STOCK NUMBER	FIG.	ITEM
4720-01-237-8408	221	4
5930-01-237-8754	71	2
5306-01-237-9358	42	6
5310-01-237-9381	10	5
5310-01-237-9387	1	19
3120-01-237-9423	6	10
3130-01-237-9487	1	11
3120-01-237-9522	4	6
3120-01-237-9523	4	7
3120-01-237-9524	4	7
3120-01-237-9526	4	6
5930-01-237-9978	222	30
4730-01-238-0148	24	9
4810-01-238-0159	122	33
4720-01-238-0192	21	1
2510-01-238-0235	196	25
2530-01-238-0242	22	1
3040-01-238-0248	115	13
2510-01-238-0249	196	27
3020-01-238-0262	116	28
2530-01-238-0285	39	4
2540-01-238-0289	202	10
5306-01-238-0599	1	28
5306-01-238-0600	15	24
5305-01-238-0616	11	13
5305-01-238-0618	1	14
5305-01-238-0619	1	15
5310-01-238-0640	17	1
	154	29
	156	4
5310-01-238-0641	120	34
5310-01-238-0642	1	18
	192	11
	193	12
3120-01-238-0706	6	13
5930-01-238-0717	73	5
2815-01-238-0785	3	12
5315-01-238-0797	120	9
5315-01-238-0798	119	15
3120-01-238-0808	4	7
3130-01-238-0838	1	17
5360-01-238-0942	38	4
5306-01-238-1468	15	30
5306-01-238-1469	47	16
5306-01-238-1470	8	1
	47	10
5306-01-238-1471	19	4
	43	18
	122	19
	319	18

STOCK NUMBER	FIG.	ITEM
5305-01-238-1475	17	19
5305-01-238-1483	35	4
5306-01-238-1484	4	15
5305-01-238-1489	8	10
	28	25
5310-01-238-1513	136	10
5310-01-238-1514	45	15
5310-01-238-1521	18	5
4710-01-238-1619	221	12
4730-01-238-1707	34	2
3020-01-238-1825	115	16
3040-01-238-1852	39	23
2520-01-238-1868	116	18
5306-01-238-2157	7	3
5306-01-238-2158	16	10
5306-01-238-2159	35	14
	80	17
5340-01-238-2228	116	41
5315-01-238-2364	11	9
5315-01-238-2365	46	33
5306-01-238-3169	11	10
5306-01-238-3170	47	17
5306-01-238-3172	16	8
5306-01-238-3174	1	5
5306-01-238-3179	8	17
5305-01-238-3182	119	35
5305-01-238-3183	119	11
5305-01-238-3184	112	7
5306-01-238-3187	7	2
5306-01-238-3188	3	1
5310-01-238-3196	17	16
5310-01-238-3197	11	14
5310-01-238-3198	16	5
	40	4
	41	10
	50	4
	63	12
	82	21
	144	8
	153	7
	155	21
	176	27
	180	7
	186	1
	201	8
	203	1
	345	18
	357	18
5310-01-238-3201	1	27
	176	34

STOCK NUMBER	FIG.	ITEM
5310-01-238-3201	187	2
	188	1
	207	5
5310-01-238-3205	1	25
	176	30
	189	2
	229	23
5330-01-238-3233	2	22
5330-01-238-3234	15	23
5315-01-238-3333	119	13
	120	18
3020-01-238-4233	114	38
3020-01-238-4236	114	19
3020-01-238-4237	113	14
3020-01-238-4238	116	7
5306-01-238-4548	20	6
	152	6
5310-01-238-4594	34	17
5330-01-238-4610	25	2
	25	5
	25	8
	25	11
	25	16
	25	19
5330-01-238-4614	13	20
	178	13
5330-01-238-4623	75	2
3110-01-238-4661	119	12
3120-01-238-4663	38	15
5307-01-238-4677	53	4
5315-01-238-4739	5	6
3120-01-238-4746	4	6
3120-01-238-4747	4	7
5340-01-238-4948	10	21
4730-01-238-5377	282	21
5340-01-238-5768	46	9
2510-01-238-5799	205	4
5310-01-238-5857	45	3
5330-01-238-5865	8	20
	154	16
5330-01-238-5869	3	10
5330-01-238-5875	25	42
5330-01-238-5876	16	1
5340-01-238-5926	20	20
3120-01-238-5933	4	7
3120-01-238-5934	20	12
	152	9
3120-01-238-5938	17	21
3120-01-238-5939	20	13
	152	10

STOCK NUMBER	FIG.	ITEM
5340-01-238-6022	45	4
3020-01-238-6176	113	4
3020-01-238-6182	116	12
3020-01-238-6183	114	24
5360-01-238-6243	15	8
5360-01-238-6244	11	8
5360-01-238-6246	119	33
5340-01-238-6296	16	4
5340-01-238-6297	16	9
5340-01-238-6298	25	26
3020-01-238-7062	114	7
2540-01-238-7091	215	13
5330-01-238-7247	12	16
5330-01-238-7248	12	2
5330-01-238-7249	17	14
5330-01-238-7250	17	14
5330-01-238-7282	72	2
5360-01-238-7311	14	9
5340-01-238-7315	2	17
5340-01-238-7328	45	13
5330-01-238-8316	31	13
5305-01-238-8438	31	14
5340-01-238-8515	31	2
5340-01-238-8516	31	3
5340-01-238-8731	2	5
5340-01-238-8734	20	7
5306-01-238-8871	18	6
5310-01-238-8886	1	20
5365-01-238-8930	42	1
5365-01-238-8931	38	14
5315-01-238-8948	4	16
5315-01-238-8949	224	3
5315-01-238-8950	119	7
5315-01-238-8953	119	31
5360-01-238-8962	12	12
5365-01-238-8966	14	20
5365-01-238-8967	119	26
5340-01-238-8970	2	7
3020-01-239-0379	114	15
5305-01-239-0638	119	10
5310-01-239-0646	23	10
5330-01-239-0653	7	1
5340-01-239-0668	50	2
5315-01-239-0684	119	4
5315-01-239-0688	2	2
5315-01-239-0689	18	3
5315-01-239-0690	111	31
	120	23
5365-01-239-0698	119	2
5365-01-239-0705	3	9

STOCK NUMBER	FIG.	ITEM
5306-01-239-1315	47	2
5305-01-239-1317	51	17
5305-01-239-1319	111	35
	112	8
5310-01-239-1337	25	3
	25	6
	25	9
	25	12
	25	17
	25	20
5310-01-239-1342	33	5
	42	3
	80	37
	220	8
3120-01-239-1388	6	13
5340-01-239-1434	38	13
5365-01-239-1437	119	5
5365-01-239-1438	45	18
5910-01-239-1688	51	10
5961-01-239-2145	51	16
5340-01-239-2188	10	17
5306-01-239-2576	49	3
5305-01-239-2583	60	1
5305-01-239-2584	1	2
	35	10
5305-01-239-2585	8	9
	12	6
	12	14
	14	7
	14	16
5305-01-239-2586	46	36
5307-01-239-2620	39	24
5365-01-239-2690	15	20
5315-01-239-2691	119	20
5315-01-239-2692	119	22
5360-01-239-3010	10	14
5306-01-239-3497	16	6
5305-01-239-3506	51	11
	109	1
5305-01-239-3520	15	31
5310-01-239-3535	20	1
	80	21
	82	31
	152	1
	173	9
5310-01-239-3536	39	12
	45	21
	46	14
	120	16
	121	11

STOCK NUMBER	FIG.	ITEM
5310-01-239-3536	122	23
	123	4
	143	24
	148	11
	149	9
	156	35
	172	21
	178	19
	219	4
7690-01-239-3660	228	8
7690-01-239-3662	228	7
7690-01-239-3663	228	6
7690-01-239-3664	228	9
7690-01-239-3665	228	10
7690-01-239-3666	228	1
5360-01-239-3810	10	8
5360-01-239-3819	20	10
5930-01-239-4436	73	4
5306-01-239-5052	48	12
5306-01-239-5909	50	1
5315-01-239-5989	8	6
5340-01-239-6020	34	1
3120-01-239-6472	4	13
3120-01-239-6549	4	6
5310-01-239-7188	1	9
	50	13
	192	2
	193	21
4730-01-239-7501	277	9
2815-01-239-7523	KITS	
4710-01-239-7526	302	15
3040-01-239-7604	301	16
3040-01-239-7605	301	5
2540-01-239-7699	212	1
5365-01-239-7944	1	24
5340-01-239-8036	46	12
5310-01-239-8587	29	27
	31	17
5305-01-239-8854	23	1
5340-01-239-8963	46	18
	177	9
	221	10
3130-01-239-9035	1	8
5360-01-239-9202	120	7
5360-01-239-9203	119	32
5306-01-239-9338	6	12
5310-01-239-9361	119	34
5307-01-239-9364	16	3
5306-01-239-9405	3	2
5305-01-239-9408	116	27

STOCK NUMBER	FIG.	ITEM
5305-01-239-9408	118	15
	123	20
5305-01-239-9409	122	2
5310-01-239-9414	113	1
3110-01-239-9473	118	11
3110-01-239-9506	116	26
5315-01-239-9518	11	2
5340-01-239-9572	38	11
	39	25
5306-01-240-0839	14	8
	14	17
	50	6
5306-01-240-0840	114	35
5305-01-240-0841	199	16
	204	16
5305-01-240-0842	52	2
5305-01-240-0858	48	4
5340-01-240-0959	46	21
5340-01-240-0964	45	19
	46	23
4730-01-240-1043	269	1
4730-01-240-1058	221	5
4730-01-240-1089	247	1
4710-01-240-1092	283	25
4710-01-240-1093	283	35
4710-01-240-1094	283	37
4710-01-240-1095	283	13
4710-01-240-1096	285	28
5307-01-240-1226	123	13
5307-01-240-1229	123	15
	123	26
5305-01-240-1258	111	34
5305-01-240-1263	113	19
5305-01-240-1271	198	5
5305-01-240-1272	122	17
5305-01-240-1273	117	16
5305-01-240-1274	46	15
5305-01-240-1277	123	8
5310-01-240-1294	20	21
	101	7
	200	3
	202	11
	209	6
	221	15
5310-01-240-1295	39	17
	123	22
5310-01-240-1296	116	17
5340-01-240-1335	111	36
5340-01-240-1336	118	6
5315-01-240-1354	114	33

STOCK NUMBER	FIG.	ITEM
5315-01-240-1357	120	41
5315-01-240-1362	39	28
5330-01-240-1661	199	5
5330-01-240-1662	199	6
5340-01-240-1777	199	3
5305-01-240-1790	39	5
5305-01-240-1795	113	7
5310-01-240-1818	82	12
	122	1
5310-01-240-1820	199	19
5310-01-240-1821	39	11
5310-01-240-1822	117	11
5330-01-240-1829	36	3
5330-01-240-1833	39	10
5330-01-240-1834	115	5
5330-01-240-1835	123	17
5330-01-240-1837	118	3
5330-01-240-1840	116	15
5330-01-240-1842	43	19
5330-01-240-1843	111	19
5365-01-240-1853	118	2
5365-01-240-1854	118	2
5365-01-240-1855	116	47
5365-01-240-1856	116	47
5365-01-240-1859	116	33
5365-01-240-1860	116	34
3120-01-240-1873	114	11
4820-01-240-1876	271	15
5340-01-240-1949	43	2
4730-01-240-1954	271	17
	277	27
3040-01-240-1959	255	35
3830-01-240-1984	344	29
3040-01-240-2048	344	2
3040-01-240-2049	344	6
3040-01-240-2050	344	6
5360-01-240-2052	118	12
4730-01-240-2063	285	32
5340-01-240-2069	43	20
5365-01-240-2076	117	14
5365-01-240-2077	118	2
5365-01-240-2078	116	47
5365-01-240-2079	117	12
5365-01-240-2080	116	31
5365-01-240-2081	113	15
4710-01-240-2083	285	12
4710-01-240-2084	287	14
4710-01-240-2085	287	21
4710-01-240-2089	272	2
2530-01-240-2165	174	1

STOCK NUMBER	FIG.	ITEM
5305-01-240-2656	111	9
5310-01-240-2660	19	9
	209	4
5310-01-240-2670	199	9
5330-01-240-2677	118	13
5330-01-240-2678	123	6
5330-01-240-2682	118	5
5330-01-240-2683	111	21
5330-01-240-2685	111	24
5340-01-240-2698	39	32
3120-01-240-2701	20	19
	152	18
3120-01-240-2702	39	18
3120-01-240-2703	39	2
3120-01-240-2704	115	4
3120-01-240-2705	123	27
5365-01-240-2712	122	26
3120-01-240-2714	6	13
3120-01-240-2715	6	13
3120-01-240-2716	6	13
4720-01-240-2738	283	23
4730-01-240-2744	302	18
5340-01-240-2746	43	10
5315-01-240-2750	111	4
2930-01-240-2763	KITS	
3040-01-240-2798	143	14
3040-01-240-2800	302	13
3040-01-240-2829	304	13
2590-01-240-2830	304	13
3040-01-240-2831	301	12
2590-01-240-2832	302	1
2590-01-240-2833	304	1
5365-01-240-2848	115	10
5365-01-240-2849	115	12
5365-01-240-2850	114	41
	116	38
4810-01-240-2856	246	18
4810-01-240-2857	246	14
5340-01-240-2861	25	25
4710-01-240-2862	284	10
4710-01-240-2863	284	5
4710-01-240-2864	283	22
4710-01-240-2865	283	31
4710-01-240-2866	271	13
4710-01-240-2867	271	14
4710-01-240-2868	273	16
4710-01-240-2869	272	10
4710-01-240-2870	271	27
4710-01-240-2871	271	8
4710-01-240-2872	273	5

STOCK NUMBER	FIG.	ITEM
4710-01-240-2873	273	17
4710-01-240-2874	273	11
4710-01-240-2875	274	16
4710-01-240-2876	274	15
4710-01-240-2877	274	13
4720-01-240-3056	287	20
4810-01-240-3065	246	15
4820-01-240-3066	242	13
3040-01-240-3086	KITS	
2590-01-240-3114	255	42
3040-01-240-3116	303	21
3040-01-240-3117	300	20
3040-01-240-3118	132	4
	139	13
3040-01-240-3119	300	5
2590-01-240-3169	333	7
5310-01-240-4043	63	9
	197	17
	198	8
	199	21
5365-01-240-4090	118	5
5340-01-240-4161	21	15
5340-01-240-4162	122	22
3120-01-240-4168	113	26
5365-01-240-4173	116	9
3120-01-240-4182	115	17
4730-01-240-4262	154	34
	156	9
4720-01-240-4271	285	1
3040-01-240-4460	144	22
5365-01-240-4470	113	24
5365-01-240-4471	113	3
3120-01-240-4473	39	21
4710-01-240-4487	286	13
4710-01-240-4488	287	13
9390-01-240-4662	126	5
	127	24
5306-01-240-5164	43	22
5306-01-240-5165	43	16
5306-01-240-5166	43	4
	63	22
	68	4
	80	14
	110	2
	180	6
	218	44
5306-01-240-5167	123	21
5306-01-240-5168	111	38
5306-01-240-5169	116	45
	118	7

STOCK NUMBER	FIG.	ITEM
5306-01-240-5170	115	1
	116	29
5306-01-240-5171	48	20
5306-01-240-5172	20	16
	152	13
5340-01-240-5728	34	4
	120	37
	124	7
	129	8
	136	5
	143	18
	156	8
	177	17
4730-01-240-6115	283	38
5315-01-240-6135	7	4
5340-01-240-6273	111	3
5340-01-240-6274	198	15
4710-01-240-6285	274	12
3830-01-240-6809	344	39
4710-01-240-6810	129	1
3830-01-240-6811	128	3
	137	2
3830-01-240-6812	145	11
3020-01-240-6816	134	10
	142	12
4730-01-240-6819	34	9
5330-01-240-7128	51	8
5977-01-240-7223	52	4
5306-01-240-7381	111	37
5330-01-240-7426	8	13
5340-01-240-7464	122	21
5365-01-240-7479	39	20
5306-01-240-7993	17	7
5305-01-240-7997	198	21
5305-01-240-8006	116	16
5305-01-240-8007	116	32
5310-01-240-8023	320	11
5330-01-240-8039	117	25
5365-01-240-8051	118	5
3040-01-240-8346	174	28
5340-01-240-8349	175	12
5340-01-240-8350	175	34
5340-01-240-8351	174	20
4720-01-240-8437	284	17
2590-01-240-8462	246	3
2920-01-240-8490	53	1
2930-01-240-8493	KITS	
2930-01-240-8495	KITS	
4320-01-240-8502	KITS	
2530-01-240-8533	159	1

STOCK NUMBER	FIG.	ITEM
2930-01-240-8534	160	1
2530-01-240-8539	155	1
4810-01-240-8543	243	8
	243	35
	244	8
	245	8
2990-01-240-8545	153	2
3040-01-240-8551	133	17
	141	17
3040-01-240-8552	134	14
	142	14
2590-01-240-8562	333	2
2590-01-240-8563	333	21
2590-01-240-8564	255	3
2590-01-240-8565	255	2
2540-01-240-8571	222	16
2590-01-240-8591	298	1
3040-01-240-8628	333	6
2590-01-240-8639	335	10
2530-01-240-8640	172	1
2530-01-240-8641	135	16
2530-01-240-8642	135	1
2530-01-240-8643	175	8
2540-01-240-8644	255	34
4810-01-240-8648	243	7
	243	34
	244	7
	245	7
4810-01-240-8656	243	22
	245	22
4730-01-240-8663	156	18
	166	23
5310-01-240-8806	344	15
5310-01-240-8807	333	23
5310-01-240-8808	271	28
	344	35
5310-01-240-8831	283	9
	284	6
	285	34
5305-01-240-8888	198	13
	215	4
4730-01-240-9291	164	9
2590-01-240-9308	175	25
4730-01-240-9318	167	8
2530-01-240-9324	132	3
2540-01-240-9440	222	2
4820-01-240-9511	247	2
5340-01-240-9523	194	6
4730-01-240-9603	221	3
4730-01-240-9605	164	4

STOCK NUMBER	FIG.	ITEM
4730-01-240-9605	167	20
4730-01-240-9606	154	35
4730-01-240-9610	154	38
	156	7
4720-01-240-9626	283	6
4720-01-240-9627	183	24
4730-01-240-9640	283	4
4820-01-240-9648	121	5
3040-01-240-9658	255	6
2930-01-240-9671	KITS	
4810-01-240-9853	167	1
2930-01-240-9861	156	1
2530-01-240-9862	173	1
2590-01-240-9901	193	6
2590-01-240-9919	304	7
3020-01-240-9944	142	7
2590-01-240-9954	304	1
2530-01-241-0059	153	9
2815-01-241-0061	242	7
2530-01-241-0100	168	1
5977-01-241-0528	54	11
5310-01-241-0706	283	33
5310-01-241-0761	46	20
	60	4
	61	1
	177	33
5310-01-241-0769	116	39
5310-01-241-0770	116	39
5310-01-241-0771	116	39
5310-01-241-0772	116	39
2590-01-241-0922	241	1
2590-01-241-0923	334	4
2590-01-241-0924	335	3
2590-01-241-0925	335	18
5315-01-241-0977	115	15
5315-01-241-0978	111	29
	117	28
5315-01-241-0979	116	36
2530-01-241-1475	131	12
2530-01-241-1476	138	1
5330-01-241-1489	204	29
5305-01-241-1516	120	30
4730-01-241-1532	34	8
	167	7
5330-01-241-1570	8	3
5307-01-241-1600	1	13
4730-01-241-1607	156	10
	164	3
4730-01-241-1612	121	7
	125	7

STOCK NUMBER	FIG.	ITEM
4730-01-241-1613	136	11
4730-01-241-1614	164	7
4730-01-241-1616	154	13
4730-01-241-1617	124	2
	125	5
	131	24
	139	3
4730-01-241-1622	126	6
	127	25
4730-01-241-1623	126	4
	127	23
4730-01-241-1626	127	21
	135	14
	144	24
5315-01-241-1633	118	8
4320-01-241-1660	135	4
2510-01-241-1663	137	6
2510-01-241-1666	137	3
2530-01-241-1667	130	1
2530-01-241-1669	145	18
	146	38
2530-01-241-1670	140	2
3020-01-241-1683	133	5
	141	5
3020-01-241-1684	131	10
	139	10
2530-01-241-1720	171	1
2530-01-241-1721	143	8
5365-01-241-1729	152	7
5340-01-241-1730	196	4
	198	11
4730-01-241-1735	167	6
6620-01-241-2306	72	3
4320-01-241-2454	176	1
5330-01-241-2514	54	32
5330-01-241-2600	204	29
2530-01-241-2601	KITS	
5306-01-241-2642	24	1
4710-01-241-2659	161	26
4710-01-241-2660	161	24
4710-01-241-2661	BULK	37
5310-01-241-2671	13	23
5310-01-241-2685	23	2
5330-01-241-2735	322	4
3120-01-241-2848	114	10
3120-01-241-2849	114	14
5340-01-241-2876	32	8
4730-01-241-2916	154	32
	156	33
4730-01-241-2920	148	9

STOCK NUMBER	FIG.	ITEM
4730-01-241-2921	148	16
	149	5
4730-01-241-2922	154	36
4730-01-241-2924	154	31
	156	23
	166	24
4730-01-241-2925	121	4
4730-01-241-2927	161	23
4730-01-241-2929	154	23
	167	18
4730-01-241-2930	154	42
4720-01-241-2934	148	28
4720-01-241-2937	285	19
4720-01-241-2941	161	12
	BULK	40
4730-01-241-2949	149	27
	297	1
4730-01-241-2950	161	4
4730-01-241-2952	153	12
4730-01-241-2953	33	11
4730-01-241-2954	33	15
	149	2
	151	6
2530-01-241-2991	KITS	
2990-01-241-3073	193	18
2990-01-241-3074	193	8
2510-01-241-3082	335	1
2940-01-241-3083	32	4
2940-01-241-3084	153	6
2590-01-241-3095	201	1
2590-01-241-3122	298	15
2590-01-241-3129	194	3
2530-01-241-3132	121	25
2590-01-241-3157	303	1
2530-01-241-3209	153	13
2540-01-241-3210	222	14
2940-01-241-3219	32	1
2590-01-241-3228	192	12
2590-01-241-3229	192	17
3040-01-241-3230	188	6
3040-01-241-3232	255	27
3040-01-241-3233	192	10
3040-01-241-3234	333	14
2510-01-241-3281	192	9
2540-01-241-3282	255	36
2590-01-241-3289	329	9
4720-01-241-3311	33	10
4720-01-241-3312	33	14
4730-01-241-3314	133	7
	141	7

STOCK NUMBER	FIG.	ITEM
3830-01-241-3627	126	19
3830-01-241-3628	127	15
3830-01-241-3629	149	12
5320-01-241-3862	143	10
5310-01-241-3912	128	5
5340-01-241-3949	174	10
5306-01-241-3966	201	13
4710-01-241-3980	161	1
4710-01-241-3981	BULK	35
4710-01-241-3982	148	31
4710-01-241-3983	148	35
5310-01-241-3994	335	25
4730-01-241-3997	169	5
4730-01-241-4002	154	19
	156	12
	161	14
	163	21
	164	1
	167	11
4730-01-241-4003	156	19
	166	22
5310-01-241-4005	246	6
5310-01-241-4006	201	11
5330-01-241-4026	28	11
5330-01-241-4031	48	7
5330-01-241-4041	48	13
5365-01-241-4059	334	11
5365-01-241-4061	333	13
5340-01-241-4112	188	9
5315-01-241-4147	245	10
5315-01-241-4148	334	15
5330-01-241-4158	KITS	
2530-01-241-4162	KITS	
2530-01-241-4163	KITS	
2530-01-241-4239	191	2
3040-01-241-4266	143	21
2940-01-241-4301	162	19
3040-01-241-4314	188	2
2590-01-241-4315	BULK	1
2530-01-241-4323	173	4
4730-01-241-4333	161	11
	163	2
4730-01-241-4334	154	18
	156	11
	163	22
	164	2
	167	12
4730-01-241-4641	156	13
	164	6
	167	16

STOCK NUMBER	FIG.	ITEM
4720-01-241-4653	271	3
	272	6
	273	2
	274	4
4730-01-241-4665	129	14
	136	7
	148	1
	297	12
4730-01-241-4674	268	1
4730-01-241-4675	271	18
	277	14
4810-01-241-4679	154	33
2530-01-241-4725	150	1
2530-01-241-4726	145	5
2530-01-241-4752	162	1
3020-01-241-4765	134	5
2520-01-241-4803	127	4
3040-01-241-4810	173	8
3040-01-241-4812	143	11
3040-01-241-4814	330	7
3040-01-241-4815	156	27
3040-01-241-4816	255	41
3040-01-241-4817	255	37
3020-01-241-4828	143	23
4730-01-241-4838	271	12
4720-01-241-4846	46	27
5970-01-241-4853	63	32
	64	10
	84	11
	86	7
	87	11
	88	7
	108	7
2510-01-241-4883	163	32
2590-01-241-4884	165	31
2590-01-241-4885	173	16
2590-01-241-4886	174	32
3040-01-241-4900	300	2
2590-01-241-4902	179	10
5310-01-241-5084	330	26
5310-01-241-5085	243	4
	243	31
	244	4
	245	4
5310-01-241-5086	329	28
	330	11
5310-01-241-5087	329	27
	330	1
	335	13
5365-01-241-5158	330	6

STOCK NUMBER	FIG.	ITEM
5365-01-241-5163	284	8
	285	5
	287	15
5365-01-241-5164	255	5
	255	15
4710-01-241-5384	129	7
4710-01-241-5385	148	30
4710-01-241-5386	148	25
4710-01-241-5387	148	21
5340-01-241-5473	187	3
4730-01-241-5486	154	15
	167	15
4730-01-241-5487	166	25
4720-01-241-5491	366	20
4720-01-241-5496	285	38
4720-01-241-5499	272	4
	273	3
4720-01-241-5512	129	3
4820-01-241-5541	158	1
2510-01-241-5553	201	9
3040-01-241-5618	302	9
3040-01-241-5619	330	2
4710-01-241-5639	148	18
4710-01-241-5640	148	6
4710-01-241-5641	148	12
4710-01-241-5644	149	1
4710-01-241-5645	149	6
4710-01-241-5646	149	19
4710-01-241-5653	273	10
2530-01-241-6053	171	2
2590-01-241-6054	133	10
	141	10
2530-01-241-6055	175	5
2590-01-241-6058	333	11
2540-01-241-6059	255	29
2590-01-241-6063	137	4
2530-01-241-6065	KITS	
5340-01-241-6066	148	27
3110-01-241-6113	133	26
	141	26
3110-01-241-6114	133	14
	141	14
5305-01-241-6222	271	1
5306-01-241-6268	169	4
5310-01-241-6334	133	3
	141	3
5310-01-241-6335	171	7
5310-01-241-6344	133	25
5310-01-241-6345	13	9
	42	2

STOCK NUMBER	FIG.	ITEM
5310-01-241-6345	43	8
	79	4
	80	36
	83	4
	111	17
	123	12
	144	14
	148	33
	149	8
	166	30
	182	10
	203	7
	220	9
	233	46
	276	11
	332	13
	343	19
5310-01-241-6348	144	19
5310-01-241-6349	20	22
	21	18
	39	1
	40	20
	46	19
	60	6
	61	2
	71	5
	80	20
	101	9
	144	3
	156	26
	163	7
	177	1
	200	8
5310-01-241-6354	298	10
	299	10
5310-01-241-6360	116	39
5310-01-241-6378	21	3
5310-01-241-6381	114	13
5310-01-241-6383	143	15
5330-01-241-6413	126	8
	127	10
5330-01-241-6414	132	5
	139	14
5330-01-241-6440	75	4
5330-01-241-6459	204	21
5330-01-241-6461	198	10
5330-01-241-6462	198	10
3120-01-241-6501	329	11
3120-01-241-6512	335	8
4720-01-241-6578	285	39

STOCK NUMBER	FIG.	ITEM
3130-01-241-6584	133	8
	141	8
4730-01-241-6595	33	13
5340-01-241-6599	284	3
4730-01-241-6618	154	22
5315-01-241-6622	344	5
5315-01-241-6623	255	21
5315-01-241-6625	330	10
5315-01-241-6626	344	38
5315-01-241-6632	2	6
5315-01-241-6634	333	10
5315-01-241-6642	19	8
2530-01-241-6814	145	5
5360-01-241-6877	246	13
5360-01-241-6880	131	11
	139	9
5365-01-241-6927	45	14
5365-01-241-6938	329	2
4710-01-241-6941	283	32
4710-01-241-6942	285	17
4710-01-241-6943	285	14
4710-01-241-6944	285	7
4730-01-241-6951	121	15
	122	14
	124	3
	125	4
	154	7
	161	15
	163	11
	163	15
4820-01-241-7234	161	5
4720-01-241-7266	BULK	16
4820-01-241-7288	157	1
2530-01-241-7297	KITS	
3830-01-241-7299	344	39
2540-01-241-7314	221	1
2510-01-241-7316	128	4
2520-01-241-7394	132	2
2520-01-241-7395	132	1
4720-01-241-7424	221	17
4720-01-241-7426	221	19
2910-01-241-7434	29	17
5305-01-241-7489	29	53
5305-01-241-7491	29	15
5120-01-241-7545	351	1
	364	1
5120-01-241-7552	351	4
	364	4
5120-01-241-7553	350	5
	363	6

STOCK NUMBER	FIG.	ITEM
5120-01-241-7554	350	4
	363	5
5120-01-241-7555	350	6
	363	7
5120-01-241-7556	350	7
	363	8
5120-01-241-7557	351	5
	364	5
5930-01-241-8503	71	1
	73	3
4730-01-241-8785	154	30
4720-01-241-8797	148	3
	149	21
4730-01-241-8811	33	12
4730-01-241-8812	129	4
2510-01-241-8896	80	41
2510-01-241-8897	80	19
4810-01-241-9324	154	27
3040-01-241-9393	139	2
2990-01-241-9396	74	1
5940-01-242-0009	63	36
	64	12
	66	2
	67	4
	84	1
6150-01-242-0145	82	33
6150-01-242-0146	95	6
	95	6
7690-01-242-0287	224	4
6220-01-242-0345	68	1
5305-01-242-0487	10	12
5340-01-242-0527	198	17
5306-01-242-0598	194	5
5306-01-242-0599	126	7
	127	11
5306-01-242-0600	134	2
5306-01-242-0602	131	37
	140	8
5306-01-242-0603	133	13
	141	13
5305-01-242-0605	201	2
5306-01-242-0618	8	16
5305-01-242-0629	131	17
5306-01-242-0633	135	17
5306-01-242-0639	255	33
5305-01-242-0652	137	1
	179	5
5310-01-242-0664	126	22
	127	18
5310-01-242-0665	145	1

STOCK NUMBER	FIG.	ITEM
5310-01-242-0665	146	36
5310-01-242-0673	121	27
5310-01-242-0676	194	4
5310-01-242-0686	145	2
	146	37
5310-01-242-0687	142	3
5310-01-242-0689	127	27
	135	3
5330-01-242-0694	143	3
5330-01-242-0711	133	4
	141	4
5330-01-242-0720	111	7
	113	22
5330-01-242-0721	204	19
5330-01-242-0726	32	9
5330-01-242-0747	35	7
5330-01-242-0751	47	11
5330-01-242-0780	204	21
3120-01-242-0818	2	10
5365-01-242-0831	255	39
3120-01-242-0837	131	9
	139	11
3120-01-242-0838	131	8
	139	12
5315-01-242-0885	344	36
5315-01-242-0890	330	13
5315-01-242-0891	329	4
5315-01-242-0895	329	24
5315-01-242-0896	335	14
5315-01-242-0902	145	14
	146	30
5340-01-242-0944	298	5
5360-01-242-0978	143	9
5365-01-242-0979	246	12
5340-01-242-0984	335	6
5365-01-242-0998	344	13
5306-01-242-1142	140	7
5310-01-242-1166	334	13
5365-01-242-1193	134	7
	142	9
5365-01-242-1194	246	7
2590-01-242-1211	80	30
2540-01-242-1212	68	5
4730-01-242-1290	276	2
4730-01-242-1291	278	18
5365-01-242-1339	247	16
4730-01-242-1341	165	6
4730-01-242-1342	317	21
	318	24
4730-01-242-1344	276	18

STOCK NUMBER	FIG.	ITEM
5315-01-242-1350	115	18
4320-01-242-1362	KITS	
	KITS	
	KITS	
2540-01-242-1382	220	45
2510-01-242-1392	184	2
2805-01-242-1397	33	16
4330-01-242-1400	318	7
4330-01-242-1401	317	8
3820-01-242-1440	3266	1
5365-01-242-1453	133	6
	141	6
2540-01-242-1463	219	1
5340-01-242-1475	287	1
5120-01-242-1516	351	3
	364	3
5306-01-242-1675	5	8
5340-01-242-1732	335	21
5306-01-242-1772	126	2
	127	2
5310-01-242-1802	243	47
	244	27
	245	31
3120-01-242-1874	299	6
	299	12
6150-01-242-1966	82	24
6150-01-242-1968	95	1
	95	1
5340-01-242-2125	330	17
5340-01-242-2126	329	25
6160-01-242-2175	80	8
6685-01-242-2181	317	16
5360-01-242-2199	152	17
6350-01-242-2255	77	5
4710-01-242-2276	126	3
2590-01-242-2277	80	24
2590-01-242-2278	80	16
2590-01-242-2279	80	1
2590-01-242-2280	80	9
2510-01-242-2281	195	1
6220-01-242-2306	63	23
3120-01-242-2756	116	19
5365-01-242-2761	143	22
5365-01-242-2762	2	9
4810-01-242-2777	40	6
	41	41
4820-01-242-2779	153	11
	154	37
5930-01-242-2788	59	6
5340-01-242-2795	80	10

STOCK NUMBER	FIG.	ITEM
2540-01-242-2811	180	8
2540-01-242-2812	68	6
4730-01-242-2828	276	1
4730-01-242-2837	177	26
4730-01-242-2840	276	5
4730-01-242-2855	167	5
4730-01-242-2856	177	23
4730-01-242-2860	154	39
4720-01-242-2871	BULK	39
2930-01-242-2873	220	4
4730-01-242-2887	177	30
5315-01-242-2904	143	17
5315-01-242-2906	144	26
5315-01-242-2908	329	3
	330	25
3040-01-242-2933	176	24
3040-01-242-2935	256	2
	257	2
2530-01-242-2940	KITS	
4320-01-242-2941	KITS	
4820-01-242-2957	146	33
4730-01-242-2972	220	10
4320-01-242-2978	176	17
4320-01-242-2979	176	11
3040-01-242-2981	254	22
2530-01-242-2989	145	20
2930-01-242-2991	220	7
2990-01-242-2992	72	1
2510-01-242-2994	276	15
2510-01-242-2995	276	8
2990-01-242-2999	229	25
2510-01-242-3001	128	7
2510-01-242-3002	220	37
2990-01-242-3009	44	7
2990-01-242-3013	44	1
2590-01-242-3014	256	3
	257	3
3040-01-242-3016	254	6
2590-01-242-3018	176	19
4820-01-242-3025	239	3
5340-01-242-3036	335	26
2590-01-242-3052	40	34
2530-01-242-3070	KITS	
	KITS	
2590-01-242-3084	332	9
2540-01-242-3086	220	20
3040-01-242-3088	306	2
3040-01-242-3089	220	15
3040-01-242-3090	220	13
2540-01-242-3095	220	22

STOCK NUMBER	FIG.	ITEM
2540-01-242-3115	203	3
2540-01-242-3116	182	6
3020-01-242-3121	176	33
5340-01-242-3130	272	5
	273	1
	274	5
4710-01-242-3138	177	20
4710-01-242-3141	276	7
4710-01-242-3142	276	6
4730-01-242-3151	177	22
5975-01-242-3238	BULK	9
2590-01-242-3935	179	1
4820-01-242-3940	317	18
2590-01-242-3941	256	7
	257	7
2520-01-242-3948	120	35
2520-01-242-3949	123	2
5340-01-242-4068	45	17
5310-01-242-4127	243	3
	243	30
	244	3
	245	3
5340-01-242-4129	144	9
5306-01-242-4253	303	14
5365-01-242-4332	285	25
3120-01-242-4388	117	24
4730-01-242-4506	148	13
4730-01-242-4507	165	16
4730-01-242-4510	282	8
4720-01-242-4516	177	24
4720-01-242-4519	218	38
4720-01-242-4520	282	15
4720-01-242-4521	282	9
4720-01-242-4522	282	16
4720-01-242-4524	276	3
4720-01-242-4525	276	4
4720-01-242-4527	280	4
4720-01-242-4528	278	4
4720-01-242-4529	278	13
4720-01-242-4535	BULK	44
5315-01-242-4575	344	16
5315-01-242-4577	143	27
5970-01-242-4586	95	3
	95	8
	108	14
3040-01-242-4594	254	14
3040-01-242-4595	254	16
3040-01-242-4597	139	8
2510-01-242-4719	195	3
2510-01-242-4720	195	13

STOCK NUMBER	FIG.	ITEM
5995-01-242-4739	87	1
3040-01-242-4742	254	4
3040-01-242-4768	306	1
2590-01-242-4769	305	1
6160-01-242-4846	80	39
2590-01-242-4861	317	1
2590-01-242-4862	317	6
6220-01-242-4868	63	24
6220-01-242-4870	64	16
5340-01-242-4871	243	45
	244	25
	245	29
4730-01-242-4885	256	5
	257	5
5340-01-242-4889	271	5
	272	7
	273	6
	274	9
5340-01-242-4892	1	7
5340-01-242-4893	112	4
5940-01-242-5466	63	33
	64	11
	84	13
	86	8
	87	12
	88	8
	108	8
5975-01-242-5468	87	16
	108	4
3130-01-242-5888	117	26
5340-01-242-6042	148	38
5340-01-242-6043	144	17
5340-01-242-6050	121	21
	297	10
5340-01-242-6054	335	24
3120-01-242-6063	302	16
3120-01-242-6064	246	5
3120-01-242-6065	329	23
5340-01-242-6117	129	2
5340-01-242-6118	163	18
5340-01-242-6183	299	5
5360-01-242-6230	246	8
5340-01-242-6248	333	18
5315-01-242-6376	334	10
6680-01-242-6701	317	23
	318	28
4820-01-242-6710	318	22
4820-01-242-6711	183	1
2590-01-242-6712	186	5
2540-01-242-6713	220	14

STOCK NUMBER	FIG.	ITEM
4730-01-242-6908	177	21
5306-01-242-6982	12	7
5306-01-242-6983	116	42
5305-01-242-6988	134	3
5305-01-242-6990	208	6
5365-01-242-7008	242	6
5315-01-242-7108	302	20
3040-01-242-7149	306	13
5360-01-242-7180	243	23
	245	23
3020-01-242-7186	229	28
5365-01-242-7192	143	12
5306-01-242-7414	126	16
5306-01-242-7419	4	4
5310-01-242-7450	121	26
3120-01-242-7501	330	19
5930-01-242-7540	59	4
6240-01-242-7733	70	2
4730-01-242-7736	220	2
4720-01-242-7745	282	10
4720-01-242-7746	279	35
4720-01-242-7747	279	24
4720-01-242-7748	280	7
4310-01-242-7760	116	11
5360-01-242-8074	144	21
4710-01-242-8107	276	24
4730-01-242-8108	220	26
	220	41
5120-01-242-8166	346	3
	358	3
5310-01-242-8562	117	9
5365-01-242-8593	2	3
5365-01-242-8619	14	10
5365-01-242-8782	15	11
5975-01-242-9017	BULK	4
6250-01-242-9092	56	4
6350-01-242-9113	78	1
3895-01-242-9130	216	26
5310-01-242-9214	29	51
4710-01-242-9515	177	28
2540-01-242-9523	210	6
4730-01-243-0023	177	25
4730-01-243-0041	177	27
3040-01-243-0074	326	2
3020-01-243-0075	327	16
4730-01-243-0076	317	4
	318	4
5305-01-243-0156	132	8
	139	6
6150-01-243-0232	89	1

STOCK NUMBER	FIG.	ITEM
5365-01-243-0289	2	14
	33	18
6680-01-243-0448	178	15
3695-01-243-0580	328	11
3695-01-243-0581	327	20
	328	12
3695-01-243-0582	328	29
3695-01-243-0583	328	32
5305-01-243-0746	243	5
	243	32
	244	5
	245	5
5305-01-243-0752	145	4
	146	39
5365-01-243-0807	333	12
5315-01-243-0923	329	22
5315-01-243-0926	329	14
3020-01-243-0979	176	16
5360-01-243-1030	302	21
2510-01-243-1243	201	6
5120-01-243-1251	345	4
	357	4
5120-01-243-1252	348	2
	361	2
5120-01-243-1253	348	5
	361	5
5120-01-243-1254	348	10
	361	10
5120-01-243-1255	349	2
	362	2
5120-01-243-1256	354	5
	369	5
5120-01-243-1257	354	8
	369	8
5970-01-243-1268	63	31
	64	9
	84	12
	86	6
	87	10
	88	6
	108	6
7690-01-243-1282	223	4
5340-01-243-1300	246	10
5306-01-243-1346	8	12
	144	11
4730-01-243-1418	15	19
4730-01-243-1419	15	29
5315-01-243-1424	243	10
7690-01-243-1945	323	18
	326	33

STOCK NUMBER	FIG.	ITEM
6350-01-243-2261	79	5
3460-01-243-2302	345	3
	357	3
5365-01-243-2319	114	6
	116	3
	117	1
5365-01-243-2320	116	23
5365-01-243-2321	117	10
	174	27
3695-01-243-2325	327	1
5365-01-243-2990	15	5
5365-01-243-2991	13	17
5340-01-243-3164	326	42
4720-01-243-3495	279	23
4730-01-243-3542	323	6
	325	47
	326	18
	328	36
3040-01-243-3548	118	10
5340-01-243-3718	144	10
5305-01-243-3751	300	13
	301	11
	302	14
	303	15
	304	12
	306	12
5310-01-243-3762	120	40
5365-01-243-3820	134	16
	140	11
5310-01-243-4703	174	31
5310-01-243-4704	37	6
	82	30
	216	23
	217	14
	345	17
	357	17
4820-01-243-4805	280	19
4720-01-243-4842	323	3
	325	44
	325	48
	326	16
	328	34
5330-01-243-4847	120	24
4730-01-243-4866	119	16
2815-01-243-4894	317	5
	318	5
5995-01-243-4913	90	1
5365-01-243-4944	131	16
	132	9
5310-01-243-4962	174	31

STOCK NUMBER	FIG.	ITEM
5310-01-243-4962	175	6
3110-01-243-5012	175	33
3110-01-243-5013	175	32
3110-01-243-5014	175	32
3110-01-243-5015	175	32
3110-01-243-5016	175	32
3110-01-243-5017	175	32
3110-01-243-5018	175	32
3110-01-243-5019	175	32
3110-01-243-5020	178	9
3110-01-243-5022	175	7
3110-01-243-5023	175	19
5310-01-243-5128	189	1
	190	1
5310-01-243-5129	192	13
5310-01-243-5132	255	13
3120-01-243-5166	179	3
3120-01-243-5214	17	20
5120-01-243-5330	349	6
	362	5
5120-01-243-5333	347	8
	360	8
5120-01-243-5334	347	11
	360	11
5120-01-243-5335	348	1
	361	1
5120-01-243-5338	347	3
	360	3
5120-01-243-5339	347	4
	360	4
5120-01-243-5340	352	4
	367	4
5120-01-243-5341	352	2
	367	2
5120-01-243-5344	345	2
	357	2
5120-01-243-5345	352	8
	367	8
5120-01-243-5348	347	7
	360	7
5120-01-243-5349	348	8
	361	8
5120-01-243-5350	348	9
	361	9
5120-01-243-5351	353	5
	368	5
5120-01-243-5352	353	7
	368	7
5120-01-243-5353	345	21
	357	21

STOCK NUMBER	FIG.	ITEM
5120-01-243-5354	349	9
	362	7
5120-01-243-5355	346	5
	358	4
5120-01-243-5356	346	2
	358	2
5120-01-243-5357	346	5
	358	12
5120-01-243-5358	347	2
	360	2
5120-01-243-5359	347	5
	360	5
5120-01-243-5360	347	6
	360	6
5120-01-243-5361	347	10
	360	10
5120-01-243-5362	348	7
	361	7
5120-01-243-5363	352	6
	367	6
5120-01-243-5364	353	1
	368	1
5120-01-243-5365	353	4
	368	4
5120-01-243-5378	346	1
	358	1
5110-01-243-5379	353	8
	368	8
5110-01-243-5380	354	1
	369	1
5110-01-243-5381	354	2
	369	2
5970-01-243-5749	63	34
	64	14
	66	4
	67	6
	84	3
5310-01-243-6176	201	3
	255	9
5310-01-243-6177	80	33
5945-01-243-6196	55	1
3120-01-243-6346	17	20
3120-01-243-6347	17	20
4320-01-243-6390	324	21
2510-01-243-6399	172	19
2510-01-243-6400	172	24
3020-01-243-6409	327	13
3020-01-243-6410	327	18
2590-01-243-6485	178	1
5306-01-243-6554	46	35

STOCK NUMBER	FIG.	ITEM
5310-01-243-6560	334	12
5310-01-243-6562	146	20
5310-01-243-6568	43	3
3130-01-243-6589	298	9
5360-01-243-6611	243	38
	244	11
5360-01-243-6612	39	19
6140-01-243-6881	81	2
6140-01-243-6882	81	3
5340-01-243-7208	175	3
5330-01-243-7209	175	31
5310-01-243-7308	176	29
5330-01-243-7321	175	1
5305-01-243-7327	175	24
5305-01-243-7369	80	18
3040-01-243-7715	172	25
9905-01-243-9256	223	7
9905-01-243-9258	223	8
9905-01-243-9259	223	16
5365-01-243-9319	175	28
3110-01-243-9321	143	20
5307-01-243-9337	175	17
5340-01-243-9363	46	16
5306-01-243-9369	19	1
5306-01-243-9370	134	4
5306-01-243-9376	148	7
5306-01-243-9377	179	2
5306-01-243-9378	191	4
5306-01-243-9379	188	8
5306-01-243-9380	191	7
5306-01-243-9387	255	24
5306-01-243-9388	80	27
5305-01-243-9401	13	21
5305-01-243-9404	40	14
	41	14
5305-01-243-9405	176	32
5305-01-243-9407	189	3
	189	3
5305-01-243-9408	190	3
	193	17
5305-01-243-9409	143	26
5305-01-243-9410	193	23
5305-01-243-9411	192	16
5310-01-243-9422	3	8
5310-01-243-9426	165	19
5310-01-243-9439	172	2
5310-01-243-9440	190	2
5310-01-243-9443	193	22
5330-01-243-9444	131	4
	139	1

STOCK NUMBER	FIG.	ITEM
5330-01-243-9448	126	27
	127	14
5330-01-243-9449	175	2
5330-01-243-9451	246	4
5330-01-243-9459	243	16
	243	28
	244	16
	245	16
5365-01-243-9461	133	9
	141	9
5365-01-243-9462	133	27
	141	27
5330-01-243-9463	48	5
5365-01-243-9469	126	29
	127	12
5365-01-243-9470	126	29
	127	12
5340-01-243-9484	82	26
3120-01-243-9508	6	10
3120-01-243-9509	334	6
5307-01-243-9521	169	2
5340-01-243-9527	177	15
5365-01-243-9557	15	12
5315-01-243-9558	193	1
5306-01-243-9853	178	18
5305-01-243-9855	25	27
5310-01-243-9893	117	32
5975-01-243-9900	BULK	3
5365-01-243-9909	133	9
	141	9
5365-01-243-9913	133	9
	141	9
5355-01-243-9930	255	11
	333	1
5365-01-243-9943	190	4
2540-01-243-9980	216	1
6150-01-243-9992	83	6
4730-01-244-0000	40	7
	41	36
4720-01-244-0016	282	40
4720-01-244-0017	282	39
5340-01-244-0044	46	31
4730-01-244-0077	165	21
4730-01-244-0080	323	5
	325	45
	326	17
	328	35
5315-01-244-0087	335	9
4730-01-244-0108	KITS	
2910-01-244-0109	KITS	

STOCK NUMBER	FIG.	ITEM
3830-01-244-0124	331	10
2910-01-244-0154	37	9
5995-01-244-0161	100	1
5995-01-244-0162	108	1
5995-01-244-0163	88	1
3020-01-244-0167	327	9
2540-01-244-0294	213	2
2540-01-244-0295	213	1
5340-01-244-0309	192	5
3460-01-244-0331	354	6
	369	6
3460-01-244-0332	354	7
	369	7
5365-01-244-0782	175	27
5365-01-244-0927	8	19
5365-01-244-0971	175	20
5306-01-244-1037	188	7
5306-01-244-1038	192	15
5306-01-244-1039	279	8
	282	6
5306-01-244-1041	182	8
	203	5
5306-01-244-1045	191	5
5306-01-244-1046	145	3
	146	40
5310-01-244-1067	326	3
5310-01-244-1069	40	29
	41	29
	63	2
	219	14
	254	24
	279	16
	282	28
5310-01-244-1071	133	2
	141	2
5340-01-244-1129	37	5
5340-01-244-1130	80	6
5340-01-244-1131	165	17
5340-01-244-1135	148	36
5340-01-244-1138	149	7
5340-01-244-1139	80	32
5365-01-244-1148	185	12
4730-01-244-1226	165	11
4730-01-244-1265	165	25
5340-01-244-1599	149	20
5340-01-244-1605	84	5
5365-01-244-1607	193	5
5310-01-244-2132	224	1
	228	4
5340-01-244-2134	111	18

STOCK NUMBER	FIG.	ITEM
4710-01-244-2231	351	2
	364	2
5310-01-244-2254	66	10
	67	1
5310-01-244-2265	83	16
5330-01-244-2273	218	39
	276	23
	278	16
	280	9
	282	38
5365-01-244-2289	131	3
	142	6
5365-01-244-2290	133	27
	141	27
5365-01-244-2296	126	26
5365-01-244-2358	23	11
2920-01-244-2386	56	2
4730-01-244-2427	349	4
	358	6
5340-01-244-2462	163	16
5315-01-244-2496	123	9
	123	18
5315-01-244-2497	332	14
5315-01-244-2499	180	30
2540-01-244-2567	80	34
2990-01-244-2571	57	21
5995-01-244-2590	85	1
5995-01-244-2591	102	1
5995-01-244-2592	107	1
2920-01-244-2661	56	9
2540-01-244-2685	220	24
5365-01-244-2691	176	2
2540-01-244-2705	79	2
5340-01-244-2731	80	13
5340-01-244-2732	82	7
5365-01-244-2737	133	27
	141	27
5365-01-244-2738	133	27
	141	27
5365-01-244-2739	133	27
	141	27
9905-01-244-3292	223	15
3695-01-244-3384	327	17
5970-01-244-3385	108	10
2590-01-244-3392	39	29
4730-01-244-3552	165	1
4730-01-244-3559	282	25
3010-01-244-3668	172	20
4910-01-244-3671	324	7
	325	32

STOCK NUMBER	FIG.	ITEM
5310-01-244-3696	34	16
	182	15
	184	3
5310-01-244-3717	327	15
5306-01-244-3971	332	25
5306-01-244-3972	180	27
5306-01-244-3973	180	9
	201	7
5306-01-244-3974	184	11
	318	26
5306-01-244-3977	254	13
5306-01-244-3984	186	4
5305-01-244-3985	327	10
5305-01-244-3986	324	20
	325	60
5305-01-244-3990	187	4
	207	8
5305-01-244-3991	193	20
5310-01-244-4000	91	2
5310-01-244-4002	191	1
5310-01-244-4003	37	7
	180	28
	254	21
5310-01-244-4009	324	25
5365-01-244-4019	131	3
	142	6
5365-01-244-4020	126	29
	127	12
5365-01-244-4021	126	29
	127	12
5365-01-244-4023	133	9
	141	9
5306-01-244-4042	182	1
	184	5
5325-01-244-4053	84	10
	182	5
	184	1
5340-01-244-4097	326	13
5340-01-244-4100	254	18
5340-01-244-4122	37	10
	84	4
	91	3
	165	10
5120-01-244-4139	349	1
	362	1
5306-01-244-4470	195	15
	195	15
5305-01-244-4477	335	15
5305-01-244-4479	210	14
4710-01-244-4482	326	31

STOCK NUMBER	FIG.	ITEM
5310-01-244-4511	182	3
	184	6
5310-01-244-4512	216	25
	217	16
5310-01-244-4516	181	5
5310-01-244-4519	210	10
5310-01-244-4520	220	19
5310-01-244-4524	63	35
	64	13
	66	3
	67	5
	84	2
	88	13
5310-01-244-4525	220	33
5365-01-244-4537	126	29
	127	12
5365-01-244-4540	131	3
	142	6
5365-01-244-4542	126	29
	127	12
5340-01-244-4576	196	23
5340-01-244-4578	332	12
	343	18
5340-01-244-4579	282	3
5340-01-244-4580	178	17
5340-01-244-4581	186	3
5340-01-244-4582	219	2
3120-01-244-4599	195	17
4320-01-244-4609	176	18
4730-01-244-4665	166	20
4730-01-244-4679	279	20
	282	26
4730-01-244-4680	282	17
4720-01-244-4683	282	36
4720-01-244-4684	280	15
5340-01-244-4707	44	6
5340-01-244-4708	21	19
	40	16
	41	15
5365-01-244-4714	120	25
4810-01-244-4761	326	40
3820-01-244-4782	326	56
5340-01-244-4791	256	9
	257	9
5340-01-244-4797	152	14
3820-01-244-4809	326	27
3040-01-244-4853	326	19
5360-01-244-4862	332	21
	343	13
5360-01-244-4863	19	10

STOCK NUMBER	FIG.	ITEM
5365-01-244-4864	324	23
9390-01-244-4890	333	24
9390-01-244-4891	144	5
	144	7
9390-01-244-4892	147	25
5365-01-244-4897	113	12
4730-01-244-5365	165	22
5310-01-244-5793	175	4
5305-01-244-5942	195	6
5310-01-244-5951	195	2
5310-01-244-5953	114	1
5310-01-244-5958	39	30
3120-01-244-5980	195	10
4820-01-244-5987	282	24
4730-01-244-6029	279	1
4720-01-244-6030	349	7
	358	5
5360-01-244-6165	115	7
4710-01-244-6198	276	25
4730-01-244-6207	177	4
5970-01-244-6762	285	33
5315-01-244-7034	180	12
5315-01-244-7035	332	20
	343	8
5340-01-244-7203	317	2
	318	2
4730-01-244-7284	282	45
	288	25
5310-01-244-7564	71	3
5935-01-244-7616	85	14
	88	20
	97	5
	98	7
	102	2
	103	9
	104	8
	105	3
5365-01-244-7824	114	28
5365-01-244-7841	114	9
4730-01-244-7843	177	13
3120-01-244-7978	302	10
2510-01-244-8034	345	12
	357	12
2510-01-244-8035	345	11
	357	11
2510-01-244-8036	345	13
	357	13
2510-01-244-8037	345	10
	357	10
5935-01-244-8320	105	11

STOCK NUMBER	FIG.	ITEM
4730-01-244-8417	280	1
3010-01-244-8464	323	27
4820-01-244-8476	323	40
2590-01-244-8481	323	20
3020-01-244-8495	324	34
3020-01-244-8496	324	31
3020-01-244-8497	328	7
3020-01-244-8498	114	26
3020-01-244-8499	114	3
3020-01-244-8500	114	17
3040-01-244-8557	320	1
4810-01-244-8574	326	26
5305-01-244-8881	218	35
5305-01-244-8882	216	24
	217	15
5305-01-244-8883	195	12
5305-01-244-8884	64	17
	319	5
5305-01-244-8885	229	22
5305-01-244-8886	254	11
	276	17
5310-01-244-8915	80	29
5310-01-244-8947	199	11
5310-01-244-8949	131	5
3120-01-244-9034	195	11
5315-01-244-9154	2	11
	8	8
4730-01-244-9545	166	3
4730-01-244-9546	166	11
4730-01-244-9547	276	19
3695-01-244-9632	327	12
3820-01-244-9642	326	23
4910-01-244-9643	345	7
	357	7
4710-01-244-9647	177	7
2520-01-244-9663	320	12
5306-01-244-9919	11	4
5310-01-244-9920	154	17
	161	22
	167	13
5365-01-244-9923	144	15
5365-01-244-9924	116	13
5340-01-244-9927	13	7
5365-01-244-9928	118	1
5340-01-245-0756	83	9
3110-01-245-0810	82	5
5360-01-245-2380	145	12
	146	22
2510-01-245-2904	209	7
6150-01-245-3279	82	15

STOCK NUMBER	FIG.	ITEM
5930-01-245-3404	56	6
5930-01-245-3404	58	8
5930-01-245-3405	56	5
5930-01-245-3408	56	34
5930-01-245-3410	56	29
5310-01-245-3588	171	9
5935-01-245-3623	83	3
	97	4
	98	13
5310-01-245-3832	131	18
4730-01-245-3882	278	15
4730-01-245-3887	243	43
	244	23
	245	27
3020-01-245-3919	328	8
5340-01-245-4135	278	11
5306-01-245-4154	242	14
5340-01-245-4172	83	10
6150-01-245-4306	82	1
5935-01-245-4666	56	22
5935-01-245-4685	83	11
5930-01-245-4694	56	1
5180-01-245-5269	350	1
	363	2
5307-01-245-6560	254	20
2540-01-245-6703	126	28
	127	13
2510-01-245-6704	345	14
	357	14
2990-01-245-6747	176	31
2590-01-245-6760	121	29
3040-01-245-6791	299	1
5306-01-245-7177	175	16
5310-01-245-7204	195	5
	195	5
5310-01-245-7212	120	21
5330-01-245-7222	117	18
5365-01-245-7229	126	29
	127	12
5365-01-245-7258	193	19
5120-01-245-7547	352	3
	367	3
5120-01-245-7548	347	9
	360	9
7690-01-245-7932	60	10
7690-01-245-7933	60	10
5306-01-245-8741	319	1
5306-01-245-8742	233	45
	254	9
5305-01-245-8743	175	35

STOCK NUMBER	FIG.	ITEM
5305-01-245-8754	148	15
5305-01-245-8754	176	28
5310-01-245-8762	229	24
5310-01-245-8763	195	7
	195	7
3120-01-245-8827	119	14
5365-01-245-8829	207	11
5365-01-245-8871	2	16
5360-01-245-8960	333	22
4820-01-245-9163	243	18
	244	18
	245	18
5945-01-245-9745	57	25
5305-01-246-0609	68	7
	254	15
	256	4
	257	4
5310-01-246-0612	21	2
	229	30
5365-01-246-0655	1	6
5340-01-246-0661	177	16
5315-01-246-0677	254	17
5310-01-246-1811	193	2
5340-01-246-1848	148	29
5340-01-246-1849	219	9
5315-01-246-1863	41	18
	254	3
5340-01-246-1891	285	26
3695-01-246-2000	327	2
5945-01-246-2379	71	7
5365-01-246-2612	117	5
5307-01-246-2825	256	8
	257	8
6625-01-246-3127	56	7
5945-01-246-3189	57	26
5920-01-246-3652	60	7
5315-01-246-4118	344	22
5305-01-246-5763	57	23
	199	7
	209	5
5120-01-246-6095	348	3
	361	3
5120-01-246-6096	348	4
	361	4
5120-01-246-6097	355	5
	370	5
5120-01-246-6098	355	3
	370	3
5120-01-246-6099	356	6
	371	6

STOCK NUMBER	FIG.	ITEM
5120-01-246-6644	346	6
5120-01-246-6644	358	7
5180-01-246-6667	351	7
	364	7
5120-01-246-6706	355	2
	370	2
5120-01-246-6707	356	8
	371	8
5305-01-246-7199	199	18
3120-01-246-7206	329	13
5365-01-246-7345	243	25
	245	25
5365-01-246-7421	23	4
5310-01-246-7467	128	6
	137	5
3120-01-246-7870	17	20
5210-01-246-8044	356	5
	371	5
5210-01-246-8045	356	2
	371	2
5305-01-246-8433	56	21
	196	21
	211	31
5340-01-246-8505	182	14
	184	7
5935-01-246-8570	85	4
	102	8
5120-01-246-9250	356	3
	371	3
5330-01-246-9410	222	17
5340-01-246-9498	206	1
5330-01-246-9583	205	2
5306-01-246-9611	80	11
5310-01-246-9618	184	10
	318	25
5120-01-246-9997	354	9
	369	9
5120-01-247-0004	355	8
	370	8
5120-01-247-0005	356	7
	371	7
6140-01-247-0193	81	1
5360-01-247-0673	143	16
5120-01-247-0752	355	4
	370	4
5120-01-247-0756	356	4
	371	4
3040-01-247-0895	KITS	
4730-01-247-0897	328	15
5315-01-247-0966	126	20

STOCK NUMBER	FIG.	ITEM
5315-01-247-0966	127	16
5310-01-247-0977	167	14
5315-01-247-1066	324	19
5365-01-247-1073	239	36
5365-01-247-1074	323	7
5365-01-247-1075	326	10
5330-01-247-1087	328	17
5365-01-247-1102	350	2
	363	3
5305-01-247-1130	328	44
5365-01-247-1151	324	6
5305-01-247-1183	255	10
5305-01-247-2729	80	2
5305-01-247-2730	204	3
5305-01-247-2732	83	15
	197	16
5305-01-247-2733	202	9
5305-01-247-2734	211	7
	211	14
	211	29
	212	9
	212	17
5305-01-247-2735	79	6
	222	5
5305-01-247-2738	211	13
5305-01-247-2740	196	3
5305-01-247-2744	211	9
5330-01-247-2776	BULK	30
5330-01-247-2777	BULK	31
5330-01-247-2778	205	5
5330-01-247-2779	BULK	32
5315-01-247-2832	211	21
5315-01-247-2837	211	33
5315-01-247-2843	197	10
4730-01-247-3219	3	6
3030-01-247-3224	176	35
4910-01-247-3231	355	6
	370	6
5355-01-247-3594	222	18
5306-01-247-3690	33	7
5305-01-247-3691	196	15
	211	23
	212	21
5310-01-247-3704	43	12
5330-01-247-3717	63	8
5330-01-247-3718	202	4
5325-01-247-3727	215	5
5120-01-247-3782	355	7
	370	7
5975-01-247-3941	84	14

STOCK NUMBER	FIG.	ITEM
5975-01-247-3941	84	15
	166	27
	282	1
4730-01-247-4676	154	41
5365-01-247-5321	198	18
5320-01-247-5353	215	10
5340-01-247-5357	60	2
5340-01-247-5474	33	4
4820-01-247-5506	233	1
4910-01-247-5507	345	5
	357	5
4730-01-247-5508	349	8
	362	6
4910-01-247-5509	345	20
	357	20
4910-01-247-5510	353	3
	368	3
3040-01-247-5669	254	2
5340-01-247-5701	282	29
5340-01-247-5707	196	17
3110-01-247-5810	176	6
5320-01-247-5819	244	1
5310-01-247-5837	254	19
5310-01-247-5838	325	22
	327	23
5330-01-247-5844	178	6
5330-01-247-5845	175	15
4010-01-247-5869	345	15
	357	15
3120-01-247-5872	352	5
	367	5
5310-01-247-5878	327	24
5310-01-247-5879	328	23
5340-01-247-5883	328	43
5310-01-247-5887	85	23
5340-01-247-5891	320	10
3120-01-247-5894	172	6
5340-01-247-5901	326	44
4730-01-247-6201	161	25
	163	29
5340-01-247-6654	80	35
5365-01-247-6655	326	45
5340-01-247-6656	345	9
	357	9
3120-01-247-6774	4	6
5306-01-247-6820	195	4
5310-01-247-6854	204	24
5310-01-247-6855	144	20
	207	7
5310-01-247-6856	208	5

STOCK NUMBER	FIG.	ITEM
5365-01-247-6877	133	27
	141	27
5365-01-247-6878	133	15
	141	15
5365-01-247-6879	133	15
	141	15
5365-01-247-6880	133	15
	141	15
5340-01-247-6895	198	6
5325-01-247-6916	88	22
	90	8
	107	8
5340-01-247-6917	172	15
3040-01-247-7015	324	18
3040-01-247-7016	323	17
5365-01-247-7093	142	4
5930-01-247-7392	57	20
5340-01-247-7447	177	2
5310-01-247-7448	326	49
5310-01-247-7449	327	4
5340-01-247-7450	345	8
	357	8
5306-01-247-7476	326	41
5310-01-247-7477	327	22
5310-01-247-7497	279	17
	282	34
5310-01-247-7498	323	13
5310-01-247-7499	326	57
5310-01-247-7500	326	25
5310-01-247-7523	182	13
	184	8
	195	9
5306-01-247-7600	38	6
	76	8
3820-01-247-7873	323	9
2910-01-247-7888	349	5
	362	4
5360-01-247-7944	323	28
	326	9
5360-01-247-7945	328	31
5360-01-247-7946	328	41
9320-01-247-8419	BULK	33
2540-01-247-8638	210	7
3120-01-247-9094	324	17
3110-01-247-9220	176	3
5330-01-247-9245	176	5
5310-01-247-9269	34	15
	66	9
	67	2
	254	12

STOCK NUMBER	FIG.	ITEM
5310-01-247-9269	276	16
3120-01-247-9329	220	12
5306-01-247-9360	61	3
5306-01-247-9361	81	10
	82	4
5306-01-247-9362	82	34
5306-01-247-9363	83	7
5306-01-247-9364	82	22
	317	17
	318	23
5305-01-247-9368	317	24
	318	29
5305-01-247-9369	323	21
5305-01-247-9371	279	7
	282	35
3820-01-247-9504	323	35
2930-01-248-0135	48	1
3040-01-248-0150	324	29
3040-01-248-0151	324	3
3040-01-248-0152	323	8
4820-01-248-0161	328	38
4810-01-248-0162	323	29
	326	8
5340-01-248-1220	82	10
5340-01-248-1341	56	25
4810-01-248-1481	326	38
3040-01-248-1575	328	25
5360-01-248-1584	187	5
5360-01-248-1585	188	3
5360-01-248-1586	188	5
5360-01-248-1590	211	32
5360-01-248-1592	198	7
9390-01-248-2592	33	17
3695-01-248-2594	327	6
5310-01-248-2680	324	26
5120-01-248-2925	346	7
	358	8
5340-01-248-3019	282	14
5315-01-248-3026	197	7
5310-01-248-3077	87	7
5306-01-248-3201	179	12
	207	3
5306-01-248-3202	82	27
5306-01-248-3203	172	22
5305-01-248-3222	198	9
	204	23
5340-01-248-3389	271	2
	274	6
5340-01-248-3448	144	31
4810-01-248-3861	323	38

STOCK NUMBER	FIG.	ITEM
5330-01-248-4413	205	3
5310-01-248-4415	279	14
	282	32
5365-01-248-4431	81	6
	82	35
5365-01-248-4432	82	19
5325-01-248-4454	81	7
5325-01-248-4455	82	18
5310-01-248-4500	58	11
	85	24
5310-01-248-4501	82	16
3120-01-248-4531	4	7
5340-01-248-4749	202	1
5340-01-248-4752	215	9
5340-01-248-4781	177	32
3040-01-248-5109	306	15
4910-01-248-5195	352	9
	367	9
3820-01-248-5197	326	35
3020-01-248-5268	328	24
4730-01-248-6347	178	16
4730-01-248-6357	2	20
2530-01-248-6743	348	6
	361	6
5340-01-248-6759	9	2
5975-01-248-7077	87	9
	BULK	12
5975-01-248-7078	87	17
	108	9
	BULK	13
3110-01-248-7139	134	6
	142	8
5306-01-248-7770	202	5
4140-01-248-7899	222	9
5340-01-248-8110	196	26
3830-01-248-8846	332	15
5310-01-248-9800	178	2
7690-01-248-9819	323	16
	326	32
2510-01-249-0045	254	23
5120-01-249-0371	324	22
5310-01-249-0479	193	4
5310-01-249-0646	177	14
5340-01-249-0765	174	25
5305-01-249-0884	199	12
5305-01-249-0891	128	1
4820-01-249-1347	323	43
6220-01-249-1533	63	3
6220-01-249-1534	63	3
6220-01-249-1535	63	4
5340-01-249-1693	61	5
5340-01-249-1808	255	17

STOCK NUMBER	FIG.	ITEM
2510-01-249-2068	345	19
	357	19
5306-01-249-3114	323	23
5307-01-249-3115	326	50
5315-01-249-3150	328	37
4910-01-249-3469	354	4
	369	4
6680-01-249-3530	320	14
5315-01-249-3806	328	10
5315-01-249-3808	324	35
5315-01-249-3809	328	5
5310-01-249-4201	204	17
5310-01-249-4209	203	2
3120-01-249-4298	331	13
3120-01-249-4299	331	12
3120-01-249-4303	323	32
	326	5
5365-01-249-4342	323	41
5340-01-249-4382	323	26
5935-01-249-5884	83	13
	87	14
	88	2
5310-01-249-6806	54	3
	204	22
5365-01-249-6811	80	40
5210-01-249-7341	356	1
	371	1
5310-01-249-7638	211	8
5310-01-249-7640	202	8
5310-01-249-7641	215	11
5310-01-249-7642	204	14
5310-01-249-7643	202	7
5365-01-249-7647	133	15
	141	15
5365-01-249-7649	80	40
5365-01-249-7687	175	11
5340-01-249-7693	222	8
5365-01-249-7698	133	15
	141	15
5306-01-249-7861	202	6
5340-01-249-8121	320	13
5315-01-249-8167	323	37
5365-01-249-8566	176	4
3040-01-249-8597	282	30
5310-01-249-8621	327	14
5340-01-249-9678	149	18
5315-01-249-9711	326	37
5315-01-250-0453	255	20
5365-01-250-0664	80	40
5360-01-250-0735	196	20
5340-01-250-1319	286	9
2530-01-250-1631	135	15

STOCK NUMBER	FIG.	ITEM
3040-01-250-1667	254	5
4710-01-250-1731	221	20
5340-01-250-3483	247	12
5310-01-250-4645	148	14
5310-01-250-5250	175	18
5310-01-250-6258	121	9
	143	25
	149	10
	194	7
	220	6
5310-01-250-6286	174	2
	175	13
5310-01-250-6719	113	16
5305-01-250-9209	83	14
4730-01-250-9362	156	32
5355-01-251-0335	56	12
	58	7
	222	25
5360-01-251-0834	243	11
	243	37
	244	10
	254	11
5310-01-251-1663	79	7
5330-01-251-1670	324	24
5310-01-251-2929	134	13
	142	17
5307-01-251-2961	366	11
5365-01-251-3010	133	15
	141	15
3120-01-251-5052	324	16
4730-01-251-6161	165	8
5340-01-251-6333	198	20
5975-01-251-6714	BULK	5
5975-01-251-6715	BULK	6
5975-01-251-6716	BULK	7
6220-01-251-6757	66	5
	67	7
6220-01-251-7642	56	13
5945-01-251-8699	57	24
	58	1
5310-01-252-0453	128	2
	137	7
5305-01-252-3057	215	3
5360-01-252-3582	211	10
5330-01-252-5317	317	19
5330-01-252-5318	318	21
3110-01-252-5343	115	14
3110-01-252-5344	116	48
3110-01-252-5345	116	2

STOCK NUMBER	FIG.	ITEM
5340-01-252-5408	25	21
3990-01-252-6655	216	27
	217	13
5305-01-252-9164	35	2
2995-01-252-9498	326	58
5330-01-253-0067	175	26
5340-01-253-0128	279	6
5365-01-253-3020	133	9
	141	9
5340-01-253-3578	37	1
5305-01-253-6477	324	8
	325	31
4730-01-253-6866	121	13
	296	28
4730-01-253-7277	161	16
5306-01-253-9020	134	1
2540-01-254-1249	216	5
4010-01-254-1420	317	3
	318	3
5340-01-254-1448	333	15
4730-01-254-2989	44	5
5305-01-254-4354	58	10
4820-01-254-4980	236	1
5306-01-254-5393	80	5
	345	16
	357	16
4730-01-254-5520	233	30
2540-01-254-5585	216	3
4910-01-254-5586	353	2
	368	2
2530-01-254-5598	172	7
4710-01-254-5635	271	22
	272	1
	274	1
4820-01-254-6116	243	2
	245	2
4810-01-254-6206	234	1
4810-01-254-6207	237	1
5365-01-254-6435	350	3
	363	4
5365-01-254-6484	326	48
5310-01-254-7274	121	28
3040-01-254-7412	328	28
4820-01-254-7418	233	35
4730-01-254-8687	156	30
2520-01-255-0915	319	4
5306-01-255-1005	48	21
	49	5
5306-01-255-1006	148	23

STOCK NUMBER	FIG.	ITEM
4820-01-255-1121	235	1
3040-01-255-1394	239	24
5365-01-255-2717	247	13
3120-01-255-2740	123	10
5365-01-255-2809	180	22
	180	24
2815-01-255-2921	KITS	
5975-01-255-3860	85	25
5355-01-255-3940	211	20
3040-01-255-4453	40	31
5340-01-255-7441	323	25
6220-01-256-3302	66	1
	67	3
4140-01-256-4575	319	31
5365-01-256-4583	111	16
	131	21
	139	7
6105-01-256-4607	319	33
4820-01-256-4881	324	11
9330-01-256-5345	BULK	27
4820-01-256-5351	31	50
4820-01-256-5352	31	5
2910-01-256-5355	28	14
7690-01-256-6418	323	30
7690-01-256-6419	326	60
7690-01-256-6420	328	1
6210-01-256-8379	56	11
	57	1
	320	4
6210-01-256-8380	56	23
5930-01-256-8856	59	2
2540-01-256-9095	199	10
2510-01-256-9103	198	1
4820-01-256-9105	31	45
2530-01-256-9119	140	5
4820-01-256-9122	242	1
3020-01-256-9137	31	42
2540-01-256-9154	210	12
2510-01-256-9156	190	5
4730-01-256-9162	149	28
6220-01-256-9835	70	1
5120-01-256-9904	354	3
	369	3
2530-01-257-0868	146	1
3830-01-257-0869	328	3
4820-01-257-1464	31	44
4720-01-257-1501	BULK	43
4320-01-257-1524	KITS	
2990-01-257-1531	30	9
2590-01-257-1532	344	1

STOCK NUMBER	FIG.	ITEM
2510-01-257-1565	198	1
2510-01-257-1570	179	7
2910-01-257-1576	28	21
4810-01-257-1584	243	1
4820-01-257-1585	245	1
3040-01-257-1628	29	6
3040-01-257-1630	193	13
9390-01-257-1865	BULK	29
4720-01-257-2351	286	4
4720-01-257-2352	286	12
2910-01-257-2358	34	27
5975-01-257-3108	82	13
4810-01-257-3315	234	2
	237	2
2530-01-257-3360	KITS	
2910-01-257-3380	31	22
2910-01-257-3381	31	7
2510-01-257-3392	180	10
4710-01-257-3449	127	1
2530-01-257-3665	171	6
4720-01-257-3704	287	5
4720-01-257-3706	286	5
4320-01-257-3731	KITS	
3830-01-257-3740	331	14
3040-01-257-3743	30	18
2815-01-257-3744	11	6
3040-01-257-3755	300	1
2530-01-257-3759	353	6
	368	6
2920-01-257-3761	40	12
3040-01-257-3764	255	38
4910-01-257-3774	218	1
5935-01-257-4043	85	2
	103	13
	104	5
	107	4
	108	13
5310-01-257-4288	40	33
4820-01-257-4406	34	31
2520-01-257-4559	192	6
3010-01-257-4590	11	7
4320-01-257-4910	230	1
3040-01-257-4921	28	24
4320-01-257-4923	KITS	
3040-01-257-4946	131	6
	140	3
3040-01-257-4947	120	36
3040-01-257-4963	193	3
4720-01-257-8700	287	9
4720-01-257-8703	271	20

STOCK NUMBER	FIG.	ITEM
3815-01-257-8776	330	18
2910-01-257-8779	31	37
2910-01-257-8780	31	29
2910-01-257-8781	31	30
2910-01-257-8782	31	40
3830-01-257-8783	331	18
4910-01-257-8789	355	1
	370	1
3040-01-257-8896	126	9
5330-01-257-9160	156	29
5330-01-257-9224	KITS	
5330-01-257-9225	KITS	
5330-01-257-9226	KITS	
5315-01-258-0916	40	17
5930-01-258-1458	319	8
9905-01-258-4325	224	7
9905-01-258-4329	224	6
5365-01-258-4770	12	8
	47	7
	134	15
	140	1
5365-01-258-4773	111	22
5340-01-258-6145	332	8
5915-01-258-7433	109	2
5975-01-258-9127	85	20
5330-01-259-2468	172	23
5340-01-259-2474	55	5
5340-01-259-2486	111	8
4010-01-259-2497	144	27
5340-01-259-2539	195	8
5340-01-259-2560	255	26
5310-01-259-3584	131	20
	140	6
5330-01-259-3825	KITS	
5930-01-259-3864	56	33
5330-01-259-4085	21	4
5365-01-259-4097	192	3
5365-01-259-4098	166	32
5365-01-259-4120	208	4
5330-01-259-4162	KITS	
	KITS	
5340-01-259-4243	187	6
5365-01-259-6379	332	4
5340-01-259-6489	326	12
5340-01-259-8204	332	23
	343	5
5305-01-259-8680	40	27
5330-01-259-9525	222	1
5340-01-259-9566	40	19
5340-01-260-0488	327	11

STOCK NUMBER	FIG.	ITEM
5340-01-260-0530	216	15
5310-01-260-2558	181	6
5330-01-260-4738	26	7
5305-01-260-7571	29	28
5340-01-260-8879	156	21
5340-01-260-8887	148	10
5340-01-260-8967	216	6
5310-01-260-9726	174	31
5310-01-260-9727	174	31
5310-01-260-9728	174	31
5330-01-260-9864	126	18
3110-01-260-9878	28	20
5340-01-260-9891	216	19
5340-01-260-9912	218	36
5340-01-260-9932	117	33
7690-01-261-0036	224	9
	323	19
	326	34
	328	2
2510-01-261-0222	344	21
4720-01-261-1039	271	9
2815-01-261-1064	KITS	
2815-01-261-1065	KITS	
3020-01-261-1687	133	12
	141	12
2815-01-261-1688	KITS	
3040-01-261-5081	299	15
4910-01-262-5234	216	11
9390-01-262-5391	120	29
3040-01-262-7704	188	4
5325-01-263-0883	102	14
5310-01-263-2207	194	1
4710-01-263-3029	193	15
9390-01-263-3625	209	2
5315-01-263-4542	344	25
5340-01-263-6240	195	14
3120-01-263-8295	193	11
4010-01-263-8311	144	6
5306-01-263-8488	173	15
5306-01-263-8489	175	14
5330-01-263-8519	174	7
5340-01-263-8543	218	9
5340-01-263-8565	40	32
5305-01-263-9997	210	9
4010-01-264-0271	216	10
5315-01-264-0283	344	26
4730-01-264-0592	317	13
5945-01-264-0673	234	3
	237	3
5310-01-264-1481	319	21

STOCK NUMBER	FIG.	ITEM
5340-01-264-1524	176	13
5306-01-264-3596	34	19
5330-01-264-4232	174	8
5330-01-264-4233	174	12
5365-01-264-5810	174	24
5305-01-264-5886	31	16
5305-01-264-5887	181	2
5305-01-264-5888	181	4
5307-01-264-6019	255	12
5365-01-264-8503	126	29
	127	12
5340-01-265-0610	165	18
	166	1
5330-01-265-1204	174	9
5320-01-265-6701	266	6
3040-01-265-7243	181	1
5310-01-265-8213	34	21
3110-01-265-8758	113	9
5340-01-265-8919	153	5
5340-01-265-8920	156	3
5365-01-265-9018	192	8
5315-01-265-9085	335	11
5315-01-265-9086	180	13
	180	26
5340-01-265-9109	255	22
5310-01-265-9187	174	31
3110-01-265-9196	174	14
3805-01-266-1495	344	30
3805-01-266-1496	344	34
3805-01-266-1497	344	33
4730-01-266-2152	233	5
5310-01-266-2362	174	31
5310-01-266-2363	174	31
3110-01-266-2383	120	13
	123	11
3110-01-266-2384	174	15
	174	18
5340-01-266-2412	156	25
5365-01-266-2435	173	13
5310-01-266-2440	174	31
5307-01-266-2602	287	3
5340-01-266-2657	143	13
5365-01-266-3237	299	9
5340-01-266-4118	285	23
6680-01-266-4445	320	6
5360-01-266-4922	233	39
5320-01-266-5051	216	7
	216	17
	216	20
	217	4

STOCK NUMBER	FIG.	ITEM
5320-01-266-5051	217	9
5365-01-266-5119	113	27
5365-01-266-6458	56	20
5340-01-266-6462	34	11
3110-01-266-6463	134	9
	142	11
5365-01-266-8292	156	17
5310-01-266-9162	174	31
5310-01-266-9164	174	31
5310-01-266-9165	174	31
5310-01-266-9167	156	22
5305-01-267-2141	317	7
4720-01-267-4266	221	2
4320-01-267-4292	KITS	
4320-01-267-4293	KITS	
4930-01-267-4380	218	7
5310-01-267-5514	174	31
4820-01-267-5982	274	11
4910-01-267-6009	218	5
2920-01-267-6066	5	1
5310-01-267-7418	173	3
	174	26
4210-01-267-8671	218	27
3040-01-267-8768	218	14
4930-01-267-9427	218	26
4730-01-268-0218	218	20
5330-01-268-0875	113	6
	115	9
5305-01-268-0895	153	8
4930-01-268-2169	218	12
5310-01-268-2555	143	1
	172	3
3120-01-268-2562	143	5
5315-01-268-3464	332	7
2520-01-268-5352	KITS	
5315-01-268-5455	323	24
	326	29
5340-01-268-5538	218	25
5330-01-268-6780	175	10
4730-01-268-7401	332	19
4320-01-268-7408	229	1
5330-01-268-8803	123	28
4930-01-268-8897	218	11
4820-01-269-0474	240	1
5306-01-269-0586	218	10
4730-01-269-4501	271	4
	272	3
	273	4
	274	17
4820-01-269-4600	244	1

STOCK NUMBER	FIG.	ITEM
2530-01-269-4809	145	5
4330-01-269-6720	318	12
4330-01-269-9431	318	9
5330-01-270-1311	15	10
	15	17
	25	33
	124	1
	125	6
	129	10
	134	17
	136	2
	139	4
	140	10
	161	6
5330-01-270-1628	26	3
	26	15
5306-01-270-1698	33	6
	80	12
	296	25
5310-01-270-1750	51	12
5340-01-270-1976	201	12
5930-01-270-2607	59	3
4820-01-270-4270	243	26
	244	2
2520-01-270-4333	21	9
2990-01-270-4350	224	2
2510-01-270-4351	181	7
6680-01-270-4631	322	3
5340-01-270-5502	142	13
3040-01-270-5921	300	14
5340-01-270-7268	236	6
	248	16
2540-01-271-0115	220	34
5306-01-271-2515	34	12
6105-01-271-2834	218	32
5305-01-271-4276	171	4
5305-01-271-4277	133	16
	141	16
5310-01-271-4280	114	34
4320-01-271-9831	365	15
2510-01-272-6726	215	7
5340-01-272-8436	208	1
5306-01-272-9021	50	12
	50	14
3110-01-273-0043	175	9
5306-01-273-4495	211	35
5310-01-273-7431	54	29
5975-01-273-7482	106	3
3120-01-273-7507	54	26
5975-01-273-8133	343	17
5305-01-274-0029	224	5

STOCK NUMBER	FIG.	ITEM
5365-01-274-2102	28	3
5365-01-274-2103	28	3
5330-01-274-2802	318	18
5340-01-274-4389	31	19
5340-01-274-4390	31	1
5310-01-276-1646	28	17
	53	2
	254	10
5330-01-276-6636	120	15
4010-01-278-0169	144	4
5130-01-278-2799	323	2
2910-01-279-3131	26	1
5935-01-280-5421	107	9
4820-01-281-0952	239	7
4820-01-281-0953	233	7
	248	2
5330-01-281-2361	KITS	
	KITS	
5310-01-281-3396	339	11
5310-01-281-3841	76	6
	218	43
3040-01-281-7350	116	1
5365-01-282-1586	181	3
2530-01-282-1761	146	1
4820-01-283-5991	164	5
4730-01-283-8607	305	17
5330-01-284-0911	KITS	
5355-01-284-5523	59	5
6150-01-284-5547	319	12
6150-01-284-5548	319	9
6150-01-284-5584	76	11
5940-01-284-6455	319	17
5365-01-284-7847	233	34
	233	37
4730-01-284-8957	25	38
4730-01-284-9065	76	14
4730-01-284-9081	76	15
4730-01-284-9083	279	11
	281	6
4730-01-284-9124	76	13
5975-01-285-0191	90	5
	104	1
5975-01-285-0192	85	17
	88	12
	89	2
	96	20
	98	9
	102	10
	103	2
	104	12
5975-01-285-0192	105	7

STOCK NUMBER	FIG.	ITEM
5975-01-285-0192	107	11
5975-01-285-0193	90	3
	100	18
	102	13
	103	14
	107	3
5975-01-285-0194	90	9
	100	19
	102	6
	104	7
5975-01-285-0195	90	7
	104	3
6150-01-285-0338	91	4
2520-01-285-0715	319	6
2520-01-285-0716	319	19
3830-01-285-0731	331	1
3830-01-285-0732	331	6
4730-01-285-0771	239	42
4310-01-285-1361	KITS	
2910-01-285-1374	24	7
4720-01-285-2296	282	46
4720-01-285-2297	281	9
3815-01-285-2300	KITS	
4710-01-285-2308	281	7
4710-01-285-2309	281	1
4710-01-285-2310	281	2
4710-01-285-2311	279	5
4710-01-285-2312	279	22
2530-01-285-2724	169	1
4710-01-285-2761	76	1
2530-01-285-2768	173	7
4730-01-285-2783	24	9
2530-01-285-2840	145	15
4730-01-285-2871	147	15
4720-01-285-2879	BULK	17
2590-01-285-2915	62	1
3830-01-285-2922	331	9
6150-01-285-3344	76	12
6680-01-285-3372	57	2
6680-01-285-3373	57	13
5325-01-285-4067	55	4
5340-01-285-4099	216	9
	216	18
	216	21
	217	3
	217	8
2930-01-285-4576	319	29
3830-01-285-4603	331	5
5306-01-285-4919	47	13
5305-01-285-4924	217	10

STOCK NUMBER	FIG.	ITEM
5330-01-285-4934	174	19
5330-01-285-4935	174	21
5330-01-285-4939	111	10
5340-01-285-5118	111	6
	113	8
5975-01-285-5702	319	14
5340-01-285-5967	111	11
4820-01-285-6152	281	8
4720-01-285-6196	85	7
5340-01-285-7758	279	13
5340-01-285-7814	56	32
2530-01-285-8392	147	18
5315-01-285-8964	331	3
5305-01-285-9331	319	25
5365-01-285-9376	181	8
3020-01-285-9668	319	3
5340-01-286-0897	71	6
5340-01-286-0945	1	3
5315-01-286-1809	331	2
5975-01-286-1912	100	16
5975-01-286-1923	90	16
3020-01-286-2046	319	2
4730-01-286-2087	40	3
	41	3
	161	18
4320-01-286-2344	KITS	
5305-01-286-2631	56	26
5305-01-286-5433	319	16
5305-01-286-5438	74	6
5305-01-286-6028	60	8
5305-01-286-6029	91	1
5305-01-286-6036	147	19
5305-01-286-6050	173	11
6240-01-286-7448	56	14
6685-01-286-7536	57	10
6145-01-286-8044	BULK	45
2920-01-286-8688	106	5
5305-01-286-9179	79	1
4330-01-286-9489	35	1
5935-01-287-0006	88	16
5935-01-287-0007	103	4
5999-01-287-1499	106	6
5905-01-287-2241	76	7
5935-01-287-2309	103	11
	107	7
5930-01-287-2414	56	27
3120-01-287-2857	147	16
5935-01-287-5636	105	1
5340-01-287-5947	3	8
5330-01-287-7722	KITS	

STOCK NUMBER	FIG.	ITEM
5306-01-287-9165	62	3
5310-01-288-1428	173	6
5310-01-288-1446	173	2
4010-01-288-1629	276	20
5305-01-288-2107	276	21
5930-01-288-4161	74	4
5306-01-288-4518	10	7
5340-01-288-4554	35	12
5970-01-289-2740	105	5
3020-01-289-3815	11	12
2590-01-289-3919	143	19
5305-01-289-5080	117	34
5940-01-289-5956	88	15
5940-01-289-5957	85	6
	98	2
	104	10
5940-01-289-5959	98	10
	105	8
5940-01-289-5960	102	4
5940-01-289-5961	105	9
3110-01-289-9249	114	30
4730-01-289-9564	279	3
4720-01-290-0729	280	3
2590-01-290-0736	BULK	15
4720-01-290-3848	279	9
2510-01-290-5021	202	2
5975-01-290-5147	BULK	8
5310-01-290-6033	179	13
	207	2
5310-01-290-6034	179	11
	192	7
5310-01-290-6133	332	2
5310-01-290-6232	149	13
5307-01-290-6258	332	5
5340-01-290-6274	221	13
5305-01-290-6301	195	16
5355-01-290-6367	59	7
5340-01-290-8143	144	13
5306-01-290-8202	344	19
5305-01-290-8311	192	4
5330-01-290-8897	KITS	
4730-01-290-9084	122	10
2930-01-291-1429	22	2
	151	2
5306-01-291-2247	239	1
5365-01-291-4529	28	3
5340-01-291-4536	279	34
3040-01-291-5305	39	15
4730-01-291-8663	22	4
5365-01-291-8863	174	5

STOCK NUMBER	FIG.	ITEM
5330-01-292-0080	221	6
5306-01-292-0369	40	21
	41	17
5330-01-292-3304	326	22
7690-01-292-5091	225	6
	KITS	
5330-01-292-5459	KITS	
3040-01-292-6421	175	23
5340-01-292-7317	46	28
4140-01-292-9751	319	34
5360-01-292-9914	119	19
5305-01-293-0979	193	10
5305-01-293-1686	196	8
5307-01-293-1731	38	9
5305-01-293-1736	15	27
5305-01-293-1737	126	17
2590-01-293-3373	217	6
5305-01-293-5311	111	25
6150-01-293-5727	93	1
6150-01-293-5728	92	1
2510-01-293-5732	179	4
2540-01-293-5733	217	1
2815-01-293-5734	6	9
2815-01-293-5735	6	9
2815-01-293-5736	6	9
2815-01-293-5737	6	9
2815-01-293-6035	319	23
2520-01-293-6048	319	20
5306-01-293-6630	179	16
2815-01-293-7118	6	9
6150-01-293-7120	96	1
6150-01-293-7606	106	1
6150-01-293-7607	106	1
5935-01-293-9132	46	4
2510-01-294-1693	196	9
5305-01-294-3033	215	12
4910-01-294-3368	346	8
	358	9
	359	2
2510-01-294-7244	182	4
5330-01-294-8485	301	2
6105-01-294-8607	319	32
4730-01-295-3580	46	6
5430-01-295-7466	318	1
5915-01-295-8468	71	8
3110-01-295-9925	263	11
4820-01-295-9968	250	1
2590-01-295-9975	313	1
4720-01-296-1757	BULK	18
3815-01-296-3034	342	1

STOCK NUMBER	FIG.	ITEM
2590-01-296-3060	315	1
5935-01-296-3438	98	18
	99	4
5935-01-296-3487	98	3
4820-01-296-5009	249	3
4820-01-296-5011	252	1
3040-01-296-5015	308	1
2590-01-296-5016	316	1
3040-01-296-5017	310	1
3040-01-296-5018	311	1
3040-01-296-5019	314	1
3110-01-296-6410	123	3
5935-01-296-6533	96	16
5935-01-296-6534	96	23
5340-01-296-6580	62	2
5935-01-296-6638	96	2
7690-01-296-7182	KITS	
2510-01-296-8457	196	1
5330-01-296-8576	174	13
5330-01-296-8578	3	14
5340-01-296-8632	29	43
5935-01-296-8744	104	9
5935-01-296-8745	96	13
	100	20
5935-01-296-8746	96	7
	100	10
3120-01-296-9849	335	20
5920-01-297-0800	58	13
3110-01-297-1048	30	15
5365-01-297-1078	29	29
5365-01-297-1131	30	16
3120-01-297-1142	30	13
5340-01-297-1171	29	48
5305-01-297-1180	29	14
5340-01-297-1210	29	2
5999-01-297-1973	98	16
	99	2
5310-01-297-2679	29	10
5340-01-297-2693	31	15
5310-01-297-2698	29	22
5365-01-297-2713	30	14
5365-01-297-2719	29	45
5340-01-297-2997	318	8
5340-01-297-3295	166	10
3120-01-297-4102	334	8
5340-01-297-8301	200	1
5340-01-297-8393	343	4
5340-01-297-8394	200	4
5360-01-297-8835	29	11
5340-01-297-8975	282	43
5305-01-297-9016	127	26

STOCK NUMBER	FIG.	ITEM
5305-01-297-9024	173	14
5305-01-297-9025	282	44
	343	15
4730-01-297-9051	296	6
4720-01-297-9081	282	46
5340-01-298-0251	267	3
5340-01-298-0260	321	4
5306-01-298-0564	KITS	
5305-01-298-0643	267	5
5305-01-298-0644	189	3
5340-01-298-0656	41	16
5340-01-298-0657	200	9
5355-01-298-1096	257	12
5305-01-298-1286	58	15
5305-01-298-1295	200	6
3120-01-298-1345	KITS	
5305-01-298-2437	135	18
5325-01-298-2485	98	14
5315-01-298-2498	346	10
	358	11
	359	4
5342-01-298-3108	233	23
5340-01-298-3224	195	14
4730-01-298-3647	96	5
	100	11
5330-01-298-4182	161	21
5330-01-298-4186	301	6
	301	13
5365-01-298-4188	134	12
	142	16
5340-01-298-4189	74	5
5365-01-298-4204	134	12
	142	16
2590-01-298-4205	195	3
2520-01-298-4242	343	1
3040-01-298-4295	41	27
2510-01-298-4316	195	13
5995-01-298-4322	98	1
5975-01-298-4633	90	11
	96	4
	100	7
	100	12
9905-01-298-5101	223	7
9905-01-298-5102	223	15
4720-01-298-5271	296	1
	297	15
2530-01-298-5377	101	4
3040-01-298-5390	61	8
3040-01-298-5463	29	35
3040-01-298-5464	29	4
2520-01-298-6713	31	48

STOCK NUMBER	FIG.	ITEM
5305-01-298-7334	257	10
5306-01-298-7336	186	6
9905-01-298-7423	223	8
5305-01-298-7753	51	3
5340-01-298-7784	41	11
5365-01-298-7833	96	6
2510-01-298-8417	189	4
4820-01-298-8422	KITS	
3040-01-298-8447	41	31
5975-01-298-8565	103	12
	107	6
2590-01-298-8572	186	7
4730-01-298-9381	41	4
4730-01-298-9537	122	13
	161	13
	296	17
	297	17
4730-01-298-9544	297	13
5307-01-298-9650	26	17
5305-01-298-9669	131	23
5305-01-298-9672	216	14
5340-01-298-9727	41	34
2530-01-299-0378	23	7
4820-01-299-0464	154	12
3040-01-299-0528	257	13
5305-01-299-2903	195	12
5310-01-299-2906	41	28
5365-01-299-2915	134	12
	142	16
5365-01-299-2931	149	11
5365-01-299-2932	297	6
3120-01-299-2934	154	14
	161	20
4730-01-299-4053	121	1
3040-01-299-4074	KITS	
2530-01-299-4085	101	3
3020-01-299-4118	64	16
5305-01-299-4602	76	9
	280	13
	282	31
5940-01-299-6250	93	3
5305-01-299-6589	321	3
3040-01-299-7108	29	38
3040-01-299-7109	29	3
4320-01-299-8781	231	1
4820-01-299-8791	KITS	
3040-01-299-8819	29	20
3040-01-299-8826	303	7
3040-01-299-8837	303	16

STOCK NUMBER	FIG.	ITEM
2590-01-299-9428	267	1
2530-01-300-0746	296	16
5365-01-300-3169	297	19
2530-01-300-3774	147	1
3040-01-300-3775	312	1
4720-01-300-4134	277	24
4720-01-300-4135	277	16
4720-01-300-4139	289	5
4720-01-300-4140	294	19
4720-01-300-4141	294	7
2530-01-300-4187	339	2
4820-01-300-4251	325	21
4820-01-300-4297	325	64
7690-01-300-4727	227	2
7690-01-300-4729	227	5
7690-01-300-4730	227	3
4820-01-300-5219	310	21
4820-01-300-5226	310	45
4820-01-300-5250	288	26
4820-01-300-5274	310	5
4820-01-300-5283	325	28
3040-01-300-5290	316	10
3830-01-300-5317	339	13
4730-01-300-5320	325	40
6150-01-300-5419	94	1
4820-01-300-5867	15	18
5130-01-300-6052	325	1
3020-01-300-6053	261	6
5310-01-300-6394	296	26
5365-01-300-6996	325	52
3120-01-300-7015	342	22
5310-01-300-7024	340	4
5310-01-300-7025	342	28
4710-01-300-8919	310	37
4710-01-300-8920	316	9
4730-01-300-9032	340	5
4730-01-300-9037	288	22
4820-01-300-9054	325	37
4820-01-300-9055	325	14
4730-01-300-9067	314	4
	316	11
5315-01-300-9069	343	9
4720-01-301-0345	275	2
4720-01-301-0348	288	10
4720-01-301-0349	288	5
4720-01-301-0350	288	17
4720-01-301-0351	291	4
4720-01-301-0352	291	18
4720-01-301-0353	293	4

STOCK NUMBER	FIG.	ITEM
4720-01-301-0354	290	4
4720-01-301-0355	289	16
2520-01-301-0374	126	12
	127	8
4710-01-301-0419	277	21
5365-01-301-0504	232	5
5340-01-301-0528	270	3
5340-01-301-0529	341	4
5310-01-301-1885	30	10
5935-01-301-2605	92	5
3040-01-301-2946	325	27
2590-01-301-2950	343	12
2520-01-301-2954	116	6
4320-01-301-2977	325	56
2590-01-301-2984	339	14
3040-01-301-2990	325	61
3040-01-301-2991	312	2
3040-01-301-2992	232	11
3040-01-301-2998	309	4
3040-01-301-2999	308	7
3040-01-301-3000	311	7
	313	8
1650-01-301-3001	315	5
3040-01-301-3002	308	9
3040-01-301-3003	311	10
3040-01-301-3004	314	13
3040-01-301-3005	313	11
3040-01-301-3006	315	6
3040-01-301-3007	316	2
3020-01-301-3008	340	26
3040-01-301-3009	312	18
3040-01-301-3010	311	13
3040-01-301-3011	314	18
3040-01-301-3012	313	15
3040-01-301-3013	315	10
3040-01-301-3014	316	5
3020-01-301-3019	342	5
3020-01-301-3020	342	26
3040-01-301-3022	311	2
3040-01-301-3036	341	5
3040-01-301-3041	265	8
3040-01-301-3042	258	14
	341	10
3040-01-301-3043	341	9
3040-01-301-3045	339	8
3020-01-301-3050	270	13
5340-01-301-3796	254	8
5315-01-301-3890	339	12
	340	32
5305-01-301-3932	30	11

STOCK NUMBER	FIG.	ITEM
4730-01-301-4236	248	28
4730-01-301-4237	248	5
4730-01-301-4263	288	21
4720-01-301-4279	292	1
4720-01-301-4280	294	8
4720-01-301-4281	294	4
3815-01-301-4351	337	9
3815-01-301-4352	336	9
9905-01-301-4631	224	8
5306-01-301-4897	147	23
5315-01-301-5240	259	7
5305-01-301-5977	265	1
5365-01-301-6008	310	11
5365-01-301-6009	258	12
5365-01-301-6010	258	7
5315-01-301-6021	325	12
5315-01-301-6022	259	3
5330-01-301-6025	KITS	
5340-01-301-6032	258	8
5310-01-301-7791	340	37
	341	6
5365-01-301-7796	325	53
3120-01-301-7802	325	7
5310-01-301-7811	54	14
5305-01-301-7846	263	19
5310-01-301-7857	264	5
5310-01-301-7864	342	25
5310-01-301-7865	325	18
5365-01-301-7870	310	9
3120-01-301-7895	260	12
3120-01-301-7896	342	4
3110-01-301-7910	263	21
5315-01-301-7911	260	8
5315-01-301-7913	263	26
5315-01-301-7914	258	15
5315-01-301-7915	339	6
5315-01-301-7916	337	4
5315-01-301-7917	336	27
5315-01-301-7918	336	28
5315-01-301-7919	340	30
5315-01-301-7920	340	33
5315-01-301-7921	266	13
5315-01-301-7922	337	8
5315-01-301-7923	341	1
5330-01-301-7928	KITS	
5305-01-301-7934	321	1
5340-01-301-7938	337	5
5360-01-301-7942	341	2
4310-01-301-8005	310	55
3020-01-301-8020	265	9

STOCK NUMBER	FIG.	ITEM
2590-01-301-8028	275	1
3040-01-301-8050	310	8
3040-01-301-8051	308	3
3040-01-301-8064	325	54
1650-01-301-8073	314	9
1650-01-301-8074	316	14
3040-01-301-8076	312	13
4820-01-301-8077	325	38
3040-01-301-8086	314	2
3040-01-301-8087	315	2
3895-01-301-8100	325	10
3040-01-301-8106	232	4
2590-01-301-8110	338	4
3930-01-301-8111	266	15
3020-01-301-8112	270	22
4820-01-301-8116	325	36
5340-01-301-8840	248	19
5340-01-301-8859	195	8
3040-01-301-9123	38	10
5360-01-301-9609	248	20
5365-01-301-9639	248	17
4710-01-301-9874	310	47
3040-01-301-9918	232	10
3040-01-301-9919	232	13
4820-01-301-9929	KITS	
4320-01-301-9930	232	15
3930-01-301-9932	262	2
2590-01-301-9933	261	5
3930-01-301-9934	260	2
4820-01-301-9935	342	17
3040-01-301-9958	342	23
3040-01-302-0516	270	14
5306-01-302-0766	259	4
3110-01-302-0794	260	4
	261	2
	262	4
	263	4
3110-01-302-0795	325	42
3120-01-302-0796	308	2
3120-01-302-0797	342	9
5340-01-302-0805	340	13
4030-01-302-0851	263	9
	265	4
5315-01-302-0860	263	24
5315-01-302-0861	266	8
5340-01-302-0882	258	16
5360-01-302-0915	325	33
5360-01-302-0916	310	27
5360-01-302-0917	310	10
5365-01-302-0921	309	11

STOCK NUMBER	FIG.	ITEM
4730-01-302-0928	277	28
4720-01-302-0929	295	1
4720-01-302-0930	295	8
3895-01-302-0931	325	5
3020-01-302-0932	265	12
3040-01-302-0933	310	49
3930-01-302-0934	261	13
3930-01-302-0935	260	14
3040-01-302-0936	308	14
5306-01-302-2371	232	17
3120-01-302-2395	308	10
3120-01-302-2396	342	8
5340-01-302-2401	340	16
5330-01-302-2413	KITS	
5330-01-302-2414	KITS	
5330-01-302-2415	KITS	
5330-01-302-2416	KITS	
5340-01-302-2430	325	34
3815-01-302-2546	336	20
3040-01-302-2547	342	21
3815-01-302-2548	340	31
3815-01-302-2549	340	34
3815-01-302-2550	340	35
4820-01-302-3054	310	20
3130-01-302-3191	264	7
5330-01-302-3195	KITS	
3040-01-302-3521	KITS	
3040-01-302-3539	260	7
5306-01-302-3568	263	6
3120-01-302-3584	325	57
	325	62
5365-01-302-3585	310	18
5305-01-302-4840	275	7
5315-01-302-4945	338	7
5315-01-302-4946	338	3
5330-01-302-4953	KITS	
3040-01-302-4954	310	33
3020-01-302-4990	325	24
5310-01-302-5951	282	42
	343	16
5340-01-302-6044	270	8
5340-01-302-6047	275	6
7690-01-302-6053	317	9
5315-01-302-6074	258	13
	341	7
5985-01-302-6109	342	11
2590-01-302-6288	266	2
2590-01-302-6289	266	9
2590-01-302-6290	263	22
2590-01-302-6291	263	2

STOCK NUMBER	FIG.	ITEM
2590-01-302-6292	264	2
5306-01-302-6572	258	5
5360-01-302-6597	325	35
3040-01-302-6647	KITS	
3040-01-302-6648	310	54
3040-01-302-6663	309	1
2590-01-302-7610	267	2
2590-01-302-7611	275	3
5340-01-302-7714	270	4
3040-01-302-8202	309	7
5340-01-302-9496	266	5
3120-01-302-9499	325	25
3120-01-302-9502	312	15
	337	11
	338	6
3120-01-302-9503	312	3
	336	10
3120-01-302-9504	342	3
5365-01-302-9507	310	25
5330-01-302-9538	KITS	
5340-01-302-9551	308	11
5340-01-302-9552	258	9
5360-01-302-9579	310	17
5365-01-302-9590	260	3
	261	1
	262	3
	263	3
5305-01-302-9929	264	3
5340-01-302-9958	336	15
5315-01-302-9984	263	8
	265	7
5365-01-303-0006	263	28
	265	3
5365-01-303-0017	310	23
4720-01-303-0052	297	14
4820-01-303-0764	248	11
5310-01-303-0931	310	16
3120-01-303-0968	314	3
	314	15
5315-01-303-1013	340	29
5365-01-303-1529	310	12
3120-01-303-1558	312	10
3120-01-303-1565	312	11
3120-01-303-1566	311	8
3120-01-303-1576	313	9
5305-01-303-1630	261	12
5310-01-303-1633	310	26
5340-01-303-1641	340	8
3020-01-303-2499	265	17
3040-01-303-2538	312	9

STOCK NUMBER	FIG.	ITEM
5330-01-303-4859	KITS	
5365-01-303-4918	261	7
	270	24
3120-01-303-5498	314	11
3120-01-303-5695	342	2
5307-01-303-5710	342	14
3120-01-303-8784	342	7
5365-01-303-9707	313	3
5340-01-304-1314	265	2
5340-01-304-1830	270	7
2510-01-304-2263	180	15
2510-01-304-2264	180	14
3040-01-304-2272	307	1
3040-01-304-2273	305	16
6610-01-304-3226	321	2
3120-01-304-3530	314	10
5120-01-304-4284	365	8
5120-01-304-4285	365	2
5330-01-304-4469	325	8
3120-01-304-4480	310	48
5330-01-304-7795	31	21
3120-01-304-8773	261	11
3120-01-304-9609	336	22
4820-01-305-2024	277	11
4720-01-305-2084	297	18
5310-01-305-2539	179	6
2530-01-305-3188	166	21
2590-01-305-3243	259	2
5975-01-305-4971	283	29
6150-01-305-5780	92	10
4720-01-305-5801	296	2
6250-01-305-5807	57	18
	320	2
4320-01-305-5827	325	11
5325-01-305-7515	63	11
	88	5
4820-01-306-1029	KITS	
6150-01-306-5896	86	1
5330-01-306-5941	247	10
6350-01-306-8138	77	2
5999-01-307-0561	92	4
4730-01-307-3515	292	18
4730-01-307-3646	277	25
5340-01-307-4272	340	11
5330-01-307-4370	KITS	
4820-01-307-4756	253	1
2510-01-307-4780	340	23
3040-01-307-4803	266	3
4730-01-307-4810	277	18
5305-01-307-5881	189	3

STOCK NUMBER	FIG.	ITEM
5305-01-307-5882	184	9
4720-01-307-6134	277	7
4720-01-307-6189	337	3
5365-01-307-7090	366	18
5365-01-307-7106	366	5
5365-01-307-7107	258	2
5365-01-307-7108	311	18
5315-01-307-7204	266	4
	266	10
5315-01-307-7205	180	23
5340-01-307-7272	200	5
4720-01-307-9367	336	6
4720-01-307-9368	336	17
4720-01-307-9369	336	16
	340	7
3120-01-308-1484	366	7
3120-01-308-1488	307	8
5315-01-308-1516	180	21
5315-01-308-1517	336	7
4720-01-308-1604	292	17
4720-01-308-1608	277	4
4720-01-308-1609	277	5
4720-01-308-1610	270	11
4720-01-308-1611	270	6
4720-01-308-1612	291	8
4720-01-308-1613	340	6
5340-01-308-2173	258	3
5310-01-308-3847	337	6
	338	8
5315-01-308-3863	337	2
5330-01-308-3865	KITS	
5330-01-308-3866	KITS	
3120-01-308-4289	366	6
5365-01-308-5926	365	11
3120-01-308-8246	366	15
3120-01-308-8247	307	11
6210-01-308-8393	56	8
5365-01-308-9194	366	8
5305-01-308-9244	365	13
5315-01-308-9313	336	23
5340-01-308-9342	311	17
5130-01-309-0285	325	50
4710-01-309-0886	359	6
5340-01-309-0986	180	19
2590-01-309-0987	366	17
3820-01-309-0995	366	14
5340-01-309-1575	270	15
5120-01-309-2042	365	9
5120-01-309-2049	365	12

STOCK NUMBER	FIG.	ITEM
5120-01-309-3478	365	3
5315-01-309-3609	265	16
3120-01-309-3760	366	16
5306-01-309-4771	258	4
5365-01-309-4845	366	13
5325-01-309-4863	366	4
4720-01-309-4917	270	20
5315-01-309-4944	365	10
5315-01-309-4947	365	14
3040-01-309-5083	365	5
5305-01-309-7060	340	12
5365-01-309-8766	180	18
5365-01-310-1100	80	22
5305-01-310-3952	263	23
5305-01-310-4557	263	10
4730-01-310-4665	166	5
3040-01-310-4839	256	6
	257	6
4730-01-311-4186	25	29
	129	9
	161	7
5340-01-312-2434	148	17
5340-01-312-2448	239	28
5360-01-312-3260	235	19
3110-01-312-3660	218	15
5305-01-312-3790	54	27
5305-01-312-3791	54	9
5306-01-312-3835	54	18
5305-01-312-3838	218	34
3110-01-312-3854	218	18
3110-01-312-3855	218	16
5935-01-312-6527	85	16
	88	14
	96	19
	102	11
	103	1
	104	11
	105	6
5935-01-312-6628	90	14
	100	5
5365-01-312-7000	218	21
5365-01-312-7011	218	33
5365-01-312-7039	218	3
5360-01-312-7134	218	23
5330-01-312-7600	120	19
5315-01-312-7696	218	13
5360-01-312-7721	210	2
5310-01-312-8896	219	12
4820-01-312-8975	296	24

STOCK NUMBER	FIG.	ITEM
4730-01-312-9175	296	5
5340-01-312-9555	149	24
4720-01-312-9594	296	29
5305-01-312-9971	121	23
	122	25
	154	1
	161	9
	177	11
	296	15
5340-01-312-9999	148	32
5330-01-313-0300	24	10
5340-01-313-0317	58	12
5340-01-313-0345	58	3
5330-01-313-2006	121	18
	122	11
	161	10
2920-01-313-2039	54	17
5975-01-313-2044	102	9
3040-01-313-2173	54	25
2920-01-313-2793	58	5
4820-01-313-2807	238	7
4820-01-313-2811	238	4
4720-01-313-2816	296	8
4720-01-313-2817	296	14
2530-01-313-2848	KITS	
4820-01-313-2860	234	22
	237	22
2530-01-313-2866	146	2
3040-01-313-2878	239	30
5310-01-313-3089	319	35
5330-01-313-3569	121	12
	154	10
	156	6
5330-01-313-3570	96	10
	231	6
5330-01-313-3573	47	9
5330-01-313-3574	47	6
5330-01-313-3587	145	9
5330-01-313-3588	178	4
5310-01-313-3978	90	12
	100	6
5310-01-313-3979	265	5
5330-01-313-3982	24	10
5340-01-313-3992	296	23
5340-01-313-4012	148	4
4730-01-313-4051	122	16
4730-01-313-4052	122	12
4730-01-313-4053	122	24
	154	3
4730-01-313-4054	296	11
4730-01-313-4055	297	3

STOCK NUMBER	FIG.	ITEM
4730-01-313-4056	291	5
4730-01-313-4057	136	3
4730-01-313-4058	296	12
4730-01-313-4059	161	2
	296	9
4730-01-313-4060	297	4
4730-01-313-4074	163	23
4730-01-313-4573	76	16
2530-01-313-4594	KITS	
2530-01-313-4598	146	4
	KITS	
2940-01-313-4600	KITS	
4320-01-313-4720	234	43
4710-01-313-4754	238	9
4730-01-313-4757	296	13
5305-01-313-5994	54	15
5340-01-313-6306	198	19
4730-01-313-7228	296	4
	297	9
4730-01-313-7273	163	24
4730-01-313-7274	161	29
3040-01-313-8072	239	27
2510-01-313-8082	193	9
4710-01-313-8093	238	1
5355-01-313-8192	239	31
5330-01-313-8759	238	6
5340-01-313-9431	340	21
5340-01-313-9432	336	5
5940-01-314-2810	88	18
	103	7
5940-01-314-2811	85	10
	104	13
5940-01-314-2812	85	18
	100	15
5940-01-314-2813	102	12
	106	4
4820-01-314-4340	240	8
5940-01-314-4637	98	5
	102	16
5940-01-314-4638	98	6
5940-01-314-4639	88	9
5940-01-314-4640	88	10
5940-01-314-4641	85	13
	88	17
5940-01-314-4642	85	12
	88	21
	102	15
	103	5
5940-01-314-4643	85	19
	88	23
5940-01-314-4644	85	9

STOCK NUMBER	FIG.	ITEM
5940-01-314-4644	96	21
3040-01-314-5175	29	9
3120-01-314-5326	218	28
7690-01-314-8012	KITS	
5975-01-314-8119	BULK	10
5305-01-315-3629	222	19
4710-01-315-6791	285	6
5999-01-315-7025	85	5
	90	2
	97	2
	98	4
	100	17
	102	7
	103	3
	104	6
	105	4
	107	2
3110-01-315-7251	114	22
4720-01-315-7617	340	3
5310-01-315-8388	58	4
5220-01-315-9337	325	9
5305-01-315-9679	75	1
5935-01-315-9867	105	12
5365-01-316-1365	126	11
	127	7
5365-01-316-1366	126	11
	127	7
5340-01-316-1436	60	9
5340-01-316-1607	15	22
3040-01-316-2671	255	14
5340-01-316-2706	210	3
4720-01-316-3028	BULK	21
3110-01-316-5101	131	2
2920-01-316-7388	51	2
5340-01-316-7532	235	16
5360-01-316-7562	266	7
2910-01-316-9259	296	22
5310-01-317-0347	156	15
	167	3
5305-01-317-0414	111	14
4710-01-317-5455	280	16
5365-01-317-8120	174	16
5999-01-317-8563	84	16
4730-01-317-8853	154	9
3040-01-317-8960	310	43
5340-01-318-1942	44	8
4730-01-318-2697	121	19
2530-01-318-2728	310	53
2815-01-318-2754	9	5
4320-01-318-2773	26	11
5315-01-318-6882	144	23

STOCK NUMBER	FIG.	ITEM
5310-01-319-2127	332	27
5940-01-320-0610	85	8
	98	11
5305-01-320-5279	111	12
5360-01-320-5814	178	7
5305-01-321-2372	325	49
5305-01-323-2766	29	47
5340-01-324-0468	154	28
4730-01-324-5071	277	15
4820-01-324-5115	249	13
4730-01-324-6491	336	31
	337	13
	338	10
2510-01-324-6894	180	1
3110-01-324-6978	325	15
4820-01-324-8520	249	20
4810-01-324-8525	249	6
3040-01-324-8544	313	2
5961-01-325-1776	249	25
5330-01-325-5183	KITS	
5330-01-325-5184	KITS	
5330-01-325-5185	KITS	
6220-01-325-6645	56	16
5340-01-325-6853	188	10
5315-01-325-7527	11	17
5315-01-326-0080	19	12
5305-01-326-0109	58	16
5940-01-326-2165	249	26
	249	31
5940-01-326-2991	85	11
6150-01-326-3012	249	28
5340-01-326-7641	38	1
5315-01-327-2675	146	11
5310-01-327-5716	263	27
4730-01-328-5929	249	5
6150-01-328-6309	249	30
5330-01-328-9315	196	29
5999-01-331-5711	97	3
	98	12
	100	2
4320-01-331-8741	231	9
2815-01-331-8769	KITS	
4730-01-332-0204	154	8
4820-01-332-0220	231	47
4730-01-332-2428	278	6
6150-01-332-2518	101	1
4720-01-332-5972	BULK	22
2520-01-332-6031	231	43
2530-01-332-6041	22	5
5340-01-332-6639	231	44
5306-01-332-7185	210	5

STOCK NUMBER	FIG.	ITEM
5365-01-332-8512	231	53
5310-01-333-3563	64	15
6105-01-333-5779	231	2
5315-01-333-6609	267	4
5340-01-333-6784	231	51
6220-01-334-0611	64	1
5340-01-334-1489	127	22
3120-01-334-2853	310	36
5340-01-334-3519	90	13
5305-01-334-3606	82	20
5330-01-334-3650	289	9
	289	14
	290	7
	290	12
	291	11
	291	16
	292	10
	292	15
	292	20
	293	7
	293	12
	294	12
	294	15
	294	17
	295	4
	295	10
5315-01-334-3812	2	11
5340-01-334-4561	167	4
5930-01-334-6711	231	48
5305-01-334-7264	231	54
5330-01-334-7390	231	49
5330-01-334-7391	231	52
7690-01-334-9559	223	9
5305-01-334-9657	156	34
3110-01-335-2996	116	35
5330-01-335-3397	231	45
5940-01-335-9730	94	3
6220-01-336-0130	64	20
6150-01-336-3540	63	30
5305-01-336-6596	319	13
5340-01-336-6853	96	11
	100	21
	231	7
9390-01-336-7091	194	2
5975-01-336-9865	63	29
6220-01-338-5991	63	26
5355-01-338-9456	332	10
	343	2
5340-01-341-8686	344	40

STOCK NUMBER	FIG.	ITEM
9905-01-342-8183	228	5
9905-01-343-1208	227	1
3040-01-344-1975	332	28
9905-01-344-2868	228	2
5305-01-344-4322	332	26
4720-01-347-4728	271	16
5340-01-347-9716	332	29
2940-01-351-5988	296	18
4730-01-355-8939	34	26
5340-01-358-8028	136	8
4720-01-358-8548	151	7
2510-01-358-8631	34	32
2510-01-358-8632	34	24
5330-01-358-9198	113	21
5330-01-358-9199	48	6
4730-01-359-0932	136	9
2520-01-359-1092	114	5
	116	4
	117	2
2520-01-359-1093	114	25
2520-01-359-1094	114	16
3040-01-359-1120	341	12
2910-01-359-1179	34	23
4710-01-359-1221	149	25
3040-01-359-2460	116	5
3040-01-359-2461	114	4
	117	3
6220-01-359-2870	69	14
3040-01-359-4938	114	27
3040-01-359-4939	114	18
5340-01-359-8848	336	12
5325-01-360-1057	99	6
5305-01-360-1957	34	30
5305-01-360-3038	63	1
	68	3
	77	1
	84	8
	219	13
	278	9
	278	14
5940-01-360-6074	94	4
5999-01-360-7471	99	5
5940-01-361-5822	97	6
5970-01-361-9228	95	10
6220-01-362-4134	63	6
6150-01-364-2905	99	1
2940-01-364-3401	318	16
6220-01-368-1195	65	17
4820-01-371-1263	271	19

STOCK NUMBER	FIG.	ITEM
6220-01-372-3883	69	1
5140-01-372-4371	345	6
	357	6
5305-01-376-9657	230	14
6620-01-377-0381	57	11
5340-01-377-2006	218	29
4710-01-384-6291	BULK	36
5330-01-426-2523	132	11
2930-01-457-5602	156	2
3120-01-461-8671	344	7
3120-01-465-9249	344	3
5340-12-121-7542	146	34
5330-12-122-4223	121	10
	154	11
	156	5
5365-12-122-6234	45	5
5310-12-124-0196	29	46
	31	18
5365-12-124-3275	17	26
5305-12-124-3768	14	15
5315-12-126-6719	178	12
5365-12-127-0149	15	6
4730-12-132-5660	163	6
5340-12-143-0057	81	8
	82	28
5340-12-143-0068	177	3
3110-12-146-8380	117	6
3110-12-146-8389	114	20
3110-12-149-4431	113	11
5330-12-151-2373	26	12
5340-12-151-4794	172	4
5365-12-156-4413	39	14
5330-12-156-4508	17	10
5330-12-156-4523	156	16
5330-12-156-4524	31	11
5365-12-156-4668	29	39
5315-12-156-4671	176	23
5365-12-156-4706	120	11
5330-12-156-4806	31	9
5305-12-156-4862	163	17
5305-12-156-4872	43	5
	135	2
	153	3
	156	28
4730-12-161-4632	46	3
	177	19
	221	16
5310-12-162-8036	174	17
5330-12-163-3796	131	13
	132	12
3120-12-164-3423	54	20
3110-12-164-4567	144	25
5340-12-164-5464	30	7
3110-12-164-8049	177	29

STOCK NUMBER	FIG.	ITEM
5305-12-164-8268	28	8
5360-12-165-7851	24	5
5975-12-166-3326	102	5
2910-12-169-1427	30	6
5360-12-170-5573	176	20
5340-12-170-8977	220	29
	220	44
5365-12-172-7279	176	14
5310-12-173-6452	29	31
5365-12-173-6460	29	33
5310-12-173-6477	29	25
5310-12-173-6479	29	49
5306-12-173-6484	29	8
3120-12-173-7804	126	14
	127	5
9390-12-174-1362	BULK	28
5330-12-174-3265	96	17
5340-12-175-8639	171	3
3110-12-175-9148	133	11
	141	11
3110-12-175-9149	133	1
	141	1
5360-12-176-1573	178	8
3110-12-176-7417	18	4
5330-12-177-1651	178	11
5365-12-177-2590	28	3
5365-12-177-2593	28	3
5330-12-177-3601	113	18
	117	30
5365-12-177-4326	111	15
	111	32
	131	22
	140	4
5310-12-177-4344	11	15
5365-12-177-4812	28	19
5940-12-178-0428	90	15
	96	8
	100	4
5340-12-178-1708	196	19
5340-12-178-3255	31	25
3110-12-178-6509	134	11
	142	15
3120-12-178-6524	10	4
5330-12-178-7236	176	9
5310-12-178-9303	17	9
5360-12-179-0225	199	23
2910-12-179-3915	24	7
5365-12-179-6607	140	9
5340-12-179-6962	25	14
	129	13
	148	26
	149	22
5340-12-179-6963	124	8
	136	6

STOCK NUMBER	FIG.	ITEM
5340-12-179-6963	149	3
	297	11
5340-12-179-6964	148	2
5340-12-180-6881	1	23
5340-12-180-6882	1	16
5360-12-180-9127	29	5
5340-12-181-1937	80	25
6220-12-182-1060	57	9
5360-12-182-2624	29	1
5305-12-186-8095	149	15
3110-12-187-0805	131	15
	132	10
5305-12-187-4934	63	7
5310-12-187-8590	220	25
	220	40
5365-12-188-1711	189	7
	190	8
2910-12-189-4490	28	5
5360-12-190-9015	31	8
5305-12-191-0877	28	23
6685-12-191-0878	31	10
5330-12-191-2681	48	3
5360-12-191-7921	51	9
5340-12-192-9387	173	10
3110-12-193-4106	117	13
5330-12-193-4983	126	1
	127	3
5330-12-193-5803	51	22
5360-12-193-9726	144	1
5360-12-195-1413	176	12
5365-12-195-2195	176	22
5306-12-195-4132	174	30
5305-12-196-4437	29	37
	63	27
	200	7
5360-12-197-1350	54	34
5305-12-197-2992	196	18
3110-12-198-5718	114	23
3120-12-300-8428	54	22
5340-12-300-9841	198	12
	215	2
5340-12-302-5182	189	6
	190	7
3110-12-303-5845	142	5
5330-12-304-5791	48	11
5340-12-305-5668	191	3
5340-12-305-5977	196	2
5330-12-305-8196	8	15
5340-12-305-8838	215	2
5330-12-306-1333	134	8

STOCK NUMBER	FIG.	ITEM
5330-12-306-1333	142	10
2540-12-306-2023	KITS	
5340-12-306-2492	198	2
5340-12-308-5919	222	10
3110-12-308-8281	116	25
3120-12-308-8850	123	24
3110-12-308-8851	114	40
	116	37
3110-12-308-8852	114	36
3110-12-308-8853	114	12
5330-12-308-9204	112	5
3110-12-308-9205	116	10
5330-12-308-9206	116	46
3110-12-308-9413	114	32
9905-12-308-9537	120	1
3110-12-309-0342	116	8
3110-12-309-0343	114	21
3110-12-309-0344	113	2
3110-12-309-0702	115	3
3110-12-309-0704	114	8
3110-12-309-0705	117	4
3110-12-309-4489	116	22
5360-12-309-9429	144	12
5330-12-310-1969	KITS	
5365-12-311-0613	116	21
5305-12-311-8740	30	1
5340-12-311-8996	193	16
5310-12-311-9507	39	31
5340-12-312-4088	207	4
5340-12-312-4471	145	17
	147	17
5310-12-312-6898	191	6
5340-12-312-7253	208	1
5306-12-313-4659	29	44
4710-12-314-1229	BULK	34
5365-12-314-1811	126	11
	127	7
5365-12-314-1812	126	11
	127	7
5365-12-314-1813	126	11
	127	7
	57	14
5365-12-317-2833	101	8
5330-12-317-7337	22	3
	151	3
5330-12-319-7677	96	22
5305-12-320-0069	96	15
5975-12-320-6661	BULK	2
5330-14-410-5487	48	16

UNIT, DIRECT SUPPORT AND GENERAL SUPPORT MAINTENANCE

SMALL EMPLACEMENT EXCAVATOR (SEE) AND HIGH MOBILITY MATERIAL HANDLER (HMMH)

PART NUMBER INDEX

PART NUMBER	FIG.	ITEM
A 002 372 07	56	34
A 332 034 124	55	1
A 341 110 002	56	5
A 50.0/1	172	4
A-1016-E	34	26
AC-1-310	238	2
	276	29
	278	2
	280	11
	280	17
	291	1
	293	1
AD2583	165	18
	166	1
ADCH8	277	13
AMPH-12	268	12
AMPH-8	277	26
AN365-1024A	327	21
AN6287-1	326	20
AN635-1024A	325	51
AN960-416	182	2
	184	4
AN960C1416L	218	30
AR10400-110WC	328	16
A000-156-17-24	106	6
A002540-01(4)	57	26
A12032	283	34
A1341D	34	27
A14X20DIN7603CU	149	26
	156	16
A16X20DIN7603CU	31	11
A2A125Z AAA N	238	7
A22X27DIN7603-CU	150	3
A27020	246	9
A27507	302	2
	303	11
	304	10
A27810	210	4
A27994	301	17
A30095	306	9
A35104	242	20
A39586	242	9
A45797	113	2

PART NUMBER	FIG.	ITEM
A52463-1-09	65	2
	69	2
A571 002 0000	162	1
A8X12DIN 7603	129	6
A8X12DIN7603	25	37
	35	3
B 0614	120	3
BACW10P53S	264	6
BC1B 319888 A	114	36
BM-150-125	331	13
BM175-125	331	12
BN25-6-40	317	5
	318	5
BR67130M	326	1
BS-1802-1951	230	3
B1140	209	2
B14 DIN 7993-ZN	150	12
B1500-045	326	47
B151 5146	319	14
B15606	201	11
B1821BH025C050N	218	24
	260	13
	261	3
B1821BH025C063N	266	14
B1821BH025C075N	319	28
	340	15
B1821BH025C088N	260	11
B1821BH025C100N	271	10
B1821BH025C125N	311	16
B1821BH025F050N	319	10
B1821BH031C075N	218	8
B1821BH031C100N	259	6
B1821BH031C125N	218	31
B1821BH031C150N	336	2
B1821BH031C325N	336	24
B1821BH038C075N	365	6
B1821BH038C100N	365	4
B1821BH038C125N	271	7
	272	9
	273	8
	274	7
	344	28
B1821BH038C150N	248	33

PART NUMBER	FIG.	ITEM
B1821BH038C150N	287	10
	333	9
	344	27
B1821BH038C175N	285	11
B1821BH038C375N	329	17
B1821BH044C075N	216	4
B1821BH044C100N	340	18
B1821BH044C250N	286	10
B1821BH050C100N	336	29
B1821BH050C100N	339	5
B1821BH050C125N	260	6
	342	20
B1821BH050C150N	241	9
B1821BH050C175N	340	25
B1821BH050C225N	340	20
B1821BH050C250N	334	2
B1821BH050C550N	340	36
B1821BH063C100N	337	7
	338	9
B1821BH063C200N	336	13
	342	27
B1821BH075C200N	344	12
B1821BH075F250N	306	12
B1821BH100C300N	335	16
B1821BH125C475N	344	24
B1821BH125C500N	339	7
B1822BS050N	276	22
B24-L	180	16
B26-35025	243	50
	244	30
	245	34
B44-4X-1/4 ID X 3/80D	359	5
B7745	34	1
C 332 000 197 A	98	3
C-200260	94	4
C-667336	94	3
C-687307	249	12
C-689940	249	13
CA121003-411	91	21
CBEA-LAN	342	16
CD0296	201	5
	241	7
	333	19
CL1FW	279	25
CL6 M16X1.5Z	161	23
CP11077	249	4
CS06120M	327	1
CT-530-2LDW	77	2
C21452	180	3
C3169X1	324	4
C51ACC125A-0189	319	8
C5147	319	17
C604-1000-BLK	40	5
	41	26
D 116-10G	172	20

PART NUMBER	FIG.	ITEM
D-01-6441-76	66	5
	67	7
DC8211	63	16
DC8226	63	17
DG 50.68.10 W01	112	5
DGS 140.165.12I1 5WD 01	134	8
DGSCV-91-157	63	14
DGS 140.165.12I1 5WD 01	142	10
DIN1481-2X12	178	12
DIN471-8X0,8	120	11
DIN7603-A14X18-A	41	2
DIN7985-M4X0.7X10	58	10
DIN7985-4.8-ZN	162	2
DIN7985M4X20-A2 STL	215	12
DIN933-M10X25-8.8-A3P	43	5
	135	2
	153	3
	156	28
DIN933-M6X20-8.8 -A2P	163	17
DIN933-8.8-ZN	150	20
	150	23
DIN933M10X20	82	23
	153	4
DIN933M6X18-8-8-B2C	77	4
DIN934-M6-6-A2L	77	3
DIN934-M6-8-A2P	276	12
DIN961M16X1.5X50 -STL 10.9-B2C	184	9
DIN965-M5X12-4.8	196	18
D120450	335	6
D120610	334	12
D121652	283	35
D121654	283	32
D121656	283	31
D121777	285	17
D121779	285	14
D121828	247	1
D121845	330	3
D123189	201	1
D123224	255	6
D123653	334	10
D123976	228	8
D123977	228	7
D124502	287	1
D124856	246	1
D124889	283	25
D125594	329	22
D125595	329	23
D125775	333	7
D126331	255	27

PART NUMBER	FIG.	ITEM
D126491	330	4
D126492	330	2
D127010	334	5
D127510	286	9
D129392	255	17
D129634	285	38
D131153	329	12
D131789	285	33
D132781	335	1
D132899	201	9
D132948	329	9
D132980	283	17
D132987	285	19
D132988	283	23
D132994	285	6
D133087	255	35
D133124	287	13
D133212	287	14
D133294	286	5
D133596	201	14
D133950	286	12
D133951	287	5
D133952	286	4
D133953	287	9
D134182	287	3
D136537	335	10
D136815	228	11
D136868	334	4
D140280	330	18
D140280-1	330	22
D144735	228	2
D25279	180	11
	180	25
	330	15
	335	2
D25280	329	15
	330	12
	335	12
D26002	335	9
D26919	329	1
	329	26
D28610	329	18
	330	14
	335	7
D30821	255	37
D30930	306	3
D30933	330	5
D31142	329	10
	330	20
D31307	210	6
D31312	335	8
D31979	268	8
D32865	304	8

PART NUMBER	FIG.	ITEM
D32865	304	14
D32930	335	22
D33023	334	8
D33047	300	15
	303	8
	303	17
D34340	300	6
	330	23
D36505	335	17
D37150	247	12
D37495	334	9
D37614	330	13
D38648	271	25
	272	12
	273	12
	274	18
	283	21
	285	15
D38683	302	21
D38858	301	8
D38943	334	7
D39140	284	13
D40236	283	8
	284	7
	285	4
	287	12
D40354	247	16
D40355	247	14
D40765	210	3
D41359	302	18
D41740	285	24
D43940	330	21
D44813	329	8
D45523	329	4
D46405	330	9
D47557	247	2
D47667	247	6
D49429	334	6
D49866	329	24
D50146	330	24
	335	4
D50372	287	20
D50379	286	13
D50696	335	11
D50698	329	13
D50732	285	39
D52522	329	3
	330	25
D53818	330	10
D55626	330	19
D58609	287	21
D58609	287	21
D59912	255	11

PART NUMBER	FIG.	ITEM
D59912	333	1
D8134 D6LS	163	6
D60159	335	20
D64799	330	17
D64970	180	12
D65886	285	1
D69234	285	7
D72359	329	14
D74249	334	13
D76195	284	8
	285	5
	287	15
D77725	330	26
D79529	255	42
D79530	255	3
D79531	255	2
D81902	255	41
D81905	255	24
D85869	333	24
D86249	255	12
D87886	255	34
D87888	255	36
D88212	255	39
D88213	255	5
	255	15
D88964	285	28
D89338	334	11
D89366	333	10
D89620	330	7
D89621	330	8
D89645	283	24
D89838	335	21
D90057	335	26
D90398	333	18
D90727	335	15
D90970	333	14
D90971	333	11
D90990	333	15
D91097	333	22
D91098	333	21
D91102	333	2
D91480	335	5
D92254	333	13
D92817	255	29
D92993	255	38
D92995	255	14
D93207	285	32
D93227	330	6
D93279	283	37
D93281	283	13

PART NUMBER	FIG.	ITEM
D93471	285	25
D93472	285	26
D94019	335	14
D94215	335	3
D94229	335	24
D94282	241	1
D94401	335	18
D94486	283	22
D94544	284	5
D94546	284	10
D95142	306	4
D95143	301	4
D95144	302	8
	303	5
	304	6
D95146	300	4
D95362	329	11
ES-2988-2	278	15
EV1003-01-02-00	120	10
EX620	34	28
E019521	65	1
E076-1336-014-13	296	16
8		
F 89 134	114	23
F-205 087	116	22
F-205154	116	21
F-206251	117	6
F-50903	117	13
F-53673	131	15
	132	10
F-59345	117	4
F-95915	116	8
FA7618HHH1094	218	38
FB1-X0HP-152/72-	280	19
65-10		
FB7230-01-0347	297	18
FB7231-01-0117	296	2
FCM07-0068	44	2
FC425-32	283	30
FD49-1001-08-06	218	40
FD49-1002-08-06	218	41
FF-371-8FO (FEM)	323	5
	325	45
	326	17
	328	35
FF-372-8FO	325	47
FF-372-8FO (MALE)	323	6
	326	18
	328	36
FF1010-1206S	282	17

PART NUMBER	FIG.	ITEM
FF1010-2016S	279	3
FF1010-2420S	279	1
FF593-12	KITS	
FF593-16	KITS	
FF9442	279	27
	279	32
FF9446-12	279	29
FF9446-16	279	33
FF4446-18	244	17
	245	17
FG 1011 EEE-0784	282	10
FG 1011 KKK-0460	279	23
FG 1556 EEE-0660	282	16
FG 1556 EEL-0740	282	9
FG 1556 HHH 0854	280	15
FG-1002-EEL.0640	282	15
FG-1556 GEE-0500	282	39
FG-1556GEE-0304	282	36
FG1002 KKK 0800	282	40
FG1002KKK0235	281	9
FG1002KKK0830	282	46
FG1002MMM0265	279	9
FG1011 EEG-0150	282	22
FG1011 HHH 0162	280	4
FG1011 HHH 0560	280	7
FG1011 HHH-0342	276	3
FG1556 HHH-10314	276	4
FL 1216 PPP-0374	279	35
FL 4729 KKK 0180	279	24
FL1806 MMM-0980	278	4
FNT-5578	114	30
FRXM17	346	7
	358	8
FSG09-0160	32	1
FXC31F350HCS8Y	218	35
F04729	213	2
F04730	213	1
F0843	82	17
F42236	210	8
GBC16	60	11
GE40ES-2RS	298	6
GH1706G00380-165	177	24
GM 1000 M10	126	18
GM1620-16	260	12
GM1620-30	308	2
GM2832-32	308	10
GVMW000589523400	354	9
	369	9
GVMW406589024300	355	3
	370	3
GVV-P20-5307	44	5
GYL.PG161820	123	24
G100438	304	20

PART NUMBER	FIG.	ITEM
G100440	302	24
	303	20
G100441	306	15
G100444	306	17
G100448	302	12
	303	12
	304	11
G100449	306	19
G100642	301	16
G100710	300	18
G100711	300	19
G101100	243	14
	243	41
	244	14
	245	14
G101309	302	13
G101533	302	7
	303	4
G102285	302	23
	303	19
G102286	300	17
G102287	301	6
	301	13
G102288	306	16
G102424	306	5
G102425	301	3
G102427	300	3
G102711	243	47
	244	27
	245	31
G102781	243	4
	243	31
	244	4
	245	4
G102782	243	5
	243	32
	244	5
	245	5
G103351	300	5
G103357	300	20
G103389	244	29
G103390	243	49
	245	33
G103550	306	13
G103558	306	6
G103774	302	15
G104378	302	20
G105090	303	21
G105693	243	11
	243	37
	244	10
	245	11
G105958	303	14

PART NUMBER	FIG.	ITEM
G106168	301	1
G106169	301	12
G107251	242	6
G107671	301	2
G107916	304	7
G107921	306	7
G107923	302	5
	303	2
	304	3
G107997	304	4
	303	9
	304	2
G107998	300	8
G108461	243	48
	244	28
	245	32
G109094	301	7
G109139	304	1
G109140	304	1
G109141	304	13
G109142	304	13
G109186	303	1
G109187	303	7
G109228	300	9
G109386	306	1
G109387	306	2
G109417	KITS	
G109423	KITS	
	KITS	
	KITS	
G109426	303	16
G109434	300	1
G109435	300	14
G109448	243	2
	245	2
G109449	243	26
	244	2
G109452	KITS	
G109504	KITS	
G109512	244	1
G109517	243	1
G109521	245	1
G109536	242	1
G110523	300	11
	303	13
	304	17
G22DU	324	17
G32122	306	8
G32126	300	10

PART NUMBER	FIG.	ITEM
G32176	302	3
	303	10
	304	9
G32303	301	9
G32351	302	19
G33075	243	45
	244	25
	245	29
G33080	243	43
	244	23
	245	27
G33081	243	21
	244	21
	245	21
G33084	243	18
	244	18
	245	18
G33089	243	12
	243	39
	244	12
	245	12
G33091	243	8
	243	35
	244	8
	245	8
G33092	243	7
	243	34
	244	7
	245	7
G33102	242	7
G33103	242	8
G33104	242	13
G33105	242	12
G33106	242	11
G33108	242	15
G33109	242	22
G33110	242	21
G33112	242	18
G33241	243	10
G33573	243	20
	244	20
	245	20
G33686	243	19
	244	19
	245	19
G33885	301	5
G33965	242	4
G34455	245	10

PART NUMBER	FIG.	ITEM
G34458	243	23
	245	23
G34463	243	46
	244	26
	245	30
G34586	242	19
G34659	243	38
	244	11
G34775	302	9
G34854	302	10
G34875	302	16
G34937	243	25
	245	25
G34938	243	22
	245	22
G34942	242	14
G35442	243	42
	244	22
	245	26
G643351-1	83	2
HB9760-2D6	318	8
HC2124FUN8H	317	14
HC8700FUN8H	318	16
HC9860-16RV	318	14
HD45110M	323	1
HH8700	318	12
HH8700C16UNSBDO	318	7
HK1814RSB	144	25
HM122	65	14
HS5222-001A	3	14
H12-2827-203	268	4
H12-38	268	9
I 86741	KITS	
ISO-80-1	218	7
ISO-80-17	218	6
ISO-80-2	218	5
ISO-80-3	218	11
ISO-80-4	218	27
ISO-80-40C	218	32
ISO-80-65	218	26
ISO-80-66	218	25
IW12140V	325	1
JM207049JM207010	117	17
J024731	44	3
J896 515 730 4	157	27
K X22,123/003/00 1	322	3
K 1 101 408	57	9
K 48X54X19	114	8
K 50X58X25 B	114	20

PART NUMBER	FIG.	ITEM
K 6158 D	341	4
KN20031	164	5
KYX00-6044	44	8
K236.040/006/002	78	1
K24852	246	19
K301.451/36/2	57	13
K47X55X28A	114	21
K58X64X19 B	113	11
LA 4119-I/82388	160	1
LP18	220	22
LTF-8-125	271	15
LUG38168300S-PG	255	13
L103135	329	25
L73300	333	6
M-A 43489	117	29
M-105	282	21
M-401	182	14
	184	7
M-5	317	21
	318	24
M-57J	317	22
	318	27
MA201-21014	185	4
MD-15W-1NCC-WLEE -AB24	234	1
MS15001-1	185	5
	312	4
	312	14
	313	12
	314	14
	336	8
	340	27
	341	3
MS15001-4	255	4
MS15002-1	266	11
MS15003-1	180	20
	254	7
	300	7
	302	11
	303	6
	304	15
	305	9
	306	14
	307	12
	329	7
	330	16
	332	16
	334	1
	343	11

PART NUMBER	FIG.	ITEM
MS15003-1	344	8
MS15003-5	179	8
MS15003-6	298	4
	299	4
	300	16
	302	17
	303	18
	329	6
	344	20
MS15720-1	336	30
	337	12
	338	2
	340	2
	342	12
MS16555-644	323	39
	326	39
MS16562-127	323	36
	324	5
MS16562-134	324	27
MS16562-138	324	2
MS16562-146	326	36
MS16562-65	255	28
MS16562-69	333	8
MS16624-1050	328	42
MS16624-1075	256	1
	257	1
MS16624-1100	270	12
	340	28
MS16624-1125	342	24
MS16624-1150	180	29
MS16625-1075	243	6
	243	33
	244	6
	245	6
MS16625-1081	324	9
MS16625-1087	328	18
MS16625-1131	315	7
MS16625-1137	328	26
MS16997-100	270	1
MS16997-105	275	11
MS16997-111	249	1
MS16997-153	324	1
MS16997-59	270	16
MS16997-66	253	4
	336	18
MS16997-80	270	10
MS16997-83	277	31
MS16997-86	342	18
MS16997-96	275	5
MS16997-97	270	5

PART NUMBER	FIG.	ITEM
MS16998-96	265	14
MS171695	344	4
MS17830-5C	341	11
MS19059-2413	268	11
MS19059-2423	310	19
MS19059-2430	302	22
MS20659-102	83	1
MS20659-104	87	15
	95	5
	95	11
	108	3
MS20659-128	91	9
MS20659-163	91	14
MS21044N08	321	5
MS21044N4	40	28
MS21206-6	344	17
MS24402-8	291	7
MS24665-134	40	30
	41	30
MS24665-212	39	7
	45	1
	120	39
MS24665-283	41	35
	254	1
	255	19
	258	17
	263	7
	265	6
	341	8
MS24665-351	144	28
	218	22
MS24665-353	239	25
MS24665-355	144	18
	265	10
MS24665-360	185	2
MS24665-441	173	5
MS24665-495	171	8
MS24665-628	185	11
	344	14
MS24665-629	185	6
MS25036-153	108	2
MS25274-2	94	2
MS27183-10	282	5
MS27183-12	241	5
	319	26
MS27183-14	255	18
	285	21
MS27183-19	241	2
MS27183-21	258	6
	329	19

PART NUMBER	FIG.	ITEM
MS27183-21	336	14
MS27183-23	255	16
	306	10
MS27183-9	276	26
	278	8
	280	22
MS28775-118	325	19
MS28775-131	296	21
MS29513-112	342	15
MS29513-117	298	8
MS3367-1-9	101	5
MS3367-3-0	40	18
	41	25
	218	37
MS3367-3-9	277	6
	343	17
MS3367-6-9	166	28
MS35206-64	248	14
MS35207-264	59	1
	59	1
MS35265-71	327	5
MS35307-415	241	8
MS35333-41	219	7
	270	9
MS35338-41	40	15
	41	13
	248	15
	319	38
MS35338-42	69	11
MS35338-45	259	5
	277	32
	319	24
	336	4
	340	17
MS35338-46	63	21
	64	18
MS35338-47	325	59
MS35338-48	260	5
	263	20
	284	2
	336	3
	339	4
	340	24
	342	19
MS35338-51	344	11
MS35338-55	344	23
MS35338-8	271	6
	272	8
	273	7
	274	8

PART NUMBER	FIG.	ITEM
MS35338-8	344	18
MS35455-49	325	2
MS35690-407	218	42
MS35691-29	210	11
MS35691-506	41	33
MS35691-87	308	12
MS35692-1624	185	3
MS35748-1	165	20
MS39233-12	279	37
MS39324-12-10	285	8
	286	14
	287	17
MS39324-4-4	289	1
	292	2
MS51118-1	185	1
MS51368-7	168	2
MS51500A6-6	277	2
MS51500A8-8	277	20
MS51501-A8	273	9
	283	5
MS51507A6	270	19
MS51508A8Z	277	15
MS51510A4	294	5
MS51519B12	282	11
	285	18
MS51520A12	282	41
MS51520A8S	276	14
	280	5
MS51521A12	281	5
MS51521A8	271	26
	274	10
	277	22
MS51523A4	292	6
MS51524A8	274	14
MS51525-A12	285	29
	286	6
	287	6
MS51525A12	281	4
	288	2
MS51525A8-10	283	14
MS51527A-16	283	10
MS51527A12	279	21
	288	18
MS51527A16	279	4
MS51527A6	277	10
MS51527A8	271	23
	272	14
	273	15
	274	3
	277	30

PART NUMBER	FIG.	ITEM
MS51527A8	280	8
	283	1
	288	11
	284	15
MS51528A12	283	26
MS51530A12S	285	35
MS51534A6-4	289	6
	292	7
	294	9
MS51534A8-6	277	29
MS51849-53	319	7
MS51849-64	319	37
MS51849-74	32	2
MS51850-106	340	10
MS51861-34	65	11
MS51861-35	69	12
MS51922-1	253	3
	258	1
	310	13
	336	19
MS51922-11	216	2
	217	11
MS51922-17	248	32
	275	12
	336	26
	340	22
MS51922-33	340	19
	342	13
MS51922-49	309	3
MS51922-53	265	11
MS51922-80	339	11
MS51922-81	308	4
MS51922-9	285	20
	329	16
	333	4
	336	25
MS51923-244	328	30
MS51943-35	218	19
MS51943-43	258	11
MS51964-41	324	12
MS51967-11	34	22
MS51967-2	270	18
MS51967-23	366	12
MS51967-5	319	36
MS51967-8	63	20
	218	4
	242	2
MS51968-17	219	6

PART NUMBER	FIG.	ITEM
MS51971-3	44	9
MS75021-2	87	2
MS87006-13	185	8
MS90725-1	210	17
MS90725-109	284	4
MS90725-162	329	21
MS90725-34	283	36
MS90727-189	306	11
MS9465-16	144	30
M23053/4-101-0	BULK	23
M25988/3-916	325	39
M5X16DIN7985-4.8	63	7
-B3B		
M6SSN487/1	80	29
M83248/1-008	325	41
M83248/1-010	325	23
M83248/1-016	325	29
M83248/1-118	325	20
N-20949-CA	166	21
N-617-19-20C.SR	218	2
N-993653	233	1
NAS1352C6-8	344	37
NJ 1011 ECP/C3VB	116	48
022		
NJ 205 ECP/C3	115	14
NJ 209 ECP/C3	116	25
NPN-001	1	22
NPN-002	3	11
NPN-003	4	3
NPN-004	5	4
NPN-005	6	4
NPN-006	6	11
NPN-007	8	7
NPN-008	10	3
NPN-009	13	2
NPN-010	13	15
NPN-011	14	2
NPN-012	15	3
NPN-013	17	11
NPN-014	17	24
NPN-015	20	14
NPN-016	21	8
NPN-017	23	6
NPN-018	24	3
NPN-020	29	7
NPN-021	29	36
NPN-022	31	6
NPN-023	31	33
NPN-024	32	5

PART NUMBER	FIG.	ITEM
NPN-025	34	29
NPN-026	35	8
NPN-027	35	9
NPN-028	38	8
NPN-029	40	11
NPN-030	40	26
NPN-031	41	8
NPN-032	41	20
NPN-033	41	40
NPN-034	44	4
NPN-035	45	11
NPN-036	54	16
NPN-037	55	6
NPN-038	57	3
NPN-039	57	4
NPN-040	57	5
NPN-041	57	6
NPN-042	57	7
NPN-043	57	8
NPN-044	57	12
NPN-045	57	15
NPN-046	57	16
NPN-047	57	19
NPN-048	61	9
NPN-049	64	4
NPN-050	64	5
NPN-051	64	6
NPN-052	64	7
NPN-053	64	8
NPN-054	66	7
NPN-055	66	8
NPN-056	67	8
NPN-057	67	10
NPN-058	69	19
NPN-059	111	5
NPN-060	112	3
NPN-061	114	39
NPN-062	117	27
NPN-062A	123	6
NPN-063	119	6
NPN-064	120	17
NPN-065	126	10
NPN-066	126	13
NPN-067	126	21
NPN-068	127	6
NPN-069	127	9
NPN-070	127	17
NPN-071	131	19
NPN-072	132	6
NPN-073	133	18
NPN-074	141	18

PART NUMBER	FIG.	ITEM
NPN-075	145	7
NPN-076	145	10
NPN-077	145	16
NPN-078	146	5
NPN-079	146	6
NPN-080	146	8
NPN-081	146	14
NPN-082	146	15
NPN-082A	146	18
NPN-083	146	26
NPN-084	146	32
NPN-085	146	35
NPN-086	147	21
NPN-087	150	2
NPN-088	150	4
NPN-089	150	6
NPN-090	150	8
NPN-091	150	11
NPN-092	150	13
NPN-093	150	18
NPN-094	150	19
NPN-095	150	21
NPN-096	150	22
NPN-097	151	5
NPN-098	152	11
NPN-099	157	35
NPN-100	157	36
NPN-101	157	37
NPN-102	157	38
NPN-103	158	21
NPN-104	158	39
NPN-105	159	18
NPN-106	160	4
NPN-107	162	3
NPN-108	162	7
NPN-109	162	8
NPN-110	162	9
NPN-111	162	10
NPN-112	162	12
NPN-113	162	13
NPN-114	162	15
NPN-115	162	16
NPN-116	162	17
NPN-117	162	18
NPN-118	163	9
NPN-119	163	13
NPN-120	165	2
NPN-121	165	15
NPN-122	165	30
NPN-123	166	6
NPN-124	166	19

PART NUMBER	FIG.	ITEM
NPN-125	167	2
NPN-126	168	3
NPN-127	169	3
NPN-128	171	5
NPN-129	173	12
NPN-130	174	11
NPN-131	174	22
NPN-132	174	29
NPN-133	175	22
NPN-134	176	7
NPN-135	178	5
NPN-136	178	14
NPN-137	189??	5
NPN-138	189??	5
NPN-139	190	6
NPN-140	196	10
NPN-141	204	8
NPN-144	211	4
NPN-145	211	19
NPN-146	212	4
NPN-147	212	13
NPN-148	216	8
NPN-149	216	22
NPN-150	217	7
NPN-151	220	23
NPN-152	222	3
NPN-153	222	6
NPN-154	222	11
NPN-155	222	15
NPN-156	222	21
NPN-157	222	22
NPN-158	222	23
NPN-159	222	26
NPN-160	222	27
NPN-161	222	29
NPN-162	222	31
NPN-163	222	32
NPN-164	231	12
NPN-165	231	15
NPN-166	231	26
NPN-167	231	27
NPN-168	231	28
NPN-169	231	29
NPN-170	231	37
NPN-171	231	38
NPN-172	231	39
NPN-173	231	40
NPN-174	231	41
NPN-175	231	42
NPN-176	231	46

PART NUMBER	FIG.	ITEM
NPN-177	238	5
NPN-178	239	37
NPN-178A	246	2
NPN-178B	246	11
NPN-181A	249	14
NPN-182	249	24
NPN-183	250	9
NPN-184	250	10
NPN-185	251	7
NPN-186	252	7
NPN-187	269	2
NPN-188	269	3
NPN-189	269	5
NPN-190	283	2
NPN-191	283	12
NPN-192	283	16
NPN-193	283	20
NPN-194	283	28
NPN-195	283	39
NPN-196	285	9
NPN-197	285	30
NPN-198	285	37
NPN-199	285	41
NPN-200	286	3
NPN-201	286	8
NPN-202	286	15
NPN-203	287	7
NPN-204	287	19
NPN-205	288	4
NPN-206	288	8
NPN-207	288	12
NPN-208	288	16
NPN-209	288	20
NPN-210	288	23
NPN-211	289	3
NPN-211A	289	8
NPN-212	289	11
NPN-214	289	15
NPN-215	290	3
NPN-216	290	6
NPN-217	290	9
NPN-218	290	13
NPN-219	291	3
NPN-220	291	10
NPN-221	291	13
NPN-222	291	17
NPN-223	292	3
NPN-224	292	9
NPN-225	292	12
NPN-226	292	16

PART NUMBER	FIG.	ITEM
NPN-227	292	19
NPN-228	293	3
NPN-229	293	6
NPN-230	293	9
NPN-231	293	13
NPN-232	294	2
NPN-233	294	11
NPN-234	294	14
NPN-235	294	18
NPN-236	295	3
NPN-237	295	6
NPN-238	295	11
NPN-239	296	19
NPN-240	302	6
NPN-241	303	3
NPN-242	304	4
NPN-243	318	17
NPN-244	325	6
NPN-245	325	13
NPN-246	325	26
NPN-247	325	58
NPN-248	325	63
NPN-249	326	14
NPN-250	326	21
NPN-251	326	55
NPN-252	327	7
NPN-253	328	4
NPN-254	331	4
NPN-254	331	11
NPN-254A	335	19
NPN-254B	336	11
NPN-254C	336	21
NPN-254D	337	10
NPN-254E	338	5
NPN-254F	342	6
NTA1423	325	16
NUPJ 208 ECP/C3	114	12
N12-30-12F	268	2
N12-65	268	10
N405P41B6	210	16
	253	2
	255	8
	270	17
	271	11
	319	27
	340	14
N8342	210	2
OR-151	318	18
OR140	318	13
PAN924-001-08	74	2
PK 33 949-2	156	1
PLGA 250 0010	263	5
PLT 1MO	37	10

PART NUMBER	FIG.	ITEM
PLT 1MO	84	4
	165	10
PLT 1M0	91	3
PLT 4S0	84	15
	166	27
	282	1
PLT2H-LO	283	29
PLT4H-C30	84	6
PL1251	65	18
	69	20
P10-2144	32	7
P11-2803	32	11
P11-9778	32	6
P15-9837	32	8
P15-9838	32	9
P15-9839	32	4
P27-0536	44	1
Q-8290	328	21
RAF7-FL20600-8-8	271	19
RB2573	249	29
RCH-302	366	3
RC860MZ090H	318	9
REX 77-0075	74	1
RK 19781	21	9
RK 208003K	KITS	
RK 455320 F2	115	3
RN 206 ECP/VQ138	116	10
RR-175C	318	15
RS-156	262	1
RSGU1100-15-15	81	8
	82	28
RSGU1100-8-15	177	3
RST-125	263	28
	265	3
RST187	309	10
R0001	146	34
R1307P015	247	3
R13773	284	3
R29799	201	12
R34485	283	6
R46103	333	12
R48272	210	1
R50949	284	17
R52049	210	7
R53984	210	12
R54058	180	13
	180	26
SD 2.147.000	45	10
SEH-30-1-1/2-100	317	20
SFL4-41A	344	9
SGT20-32/13C8-W2	46	3
	221	16
SG2ID1HPWPONCG	317	16

PART NUMBER	FIG.	ITEM
SK3-0001	238	6
SM-1-562-L3132	305	24
SM-362-L3131	307	9
SMP18-1063	32	10
SP4414.16	140	9
SSR-0275	324	25
SS100-8N	318	20
SS2R	91	16
	93	4
ST49D5-5	366	20
SUJ 305	116	2
S109444	301	14
S109445	301	14
	301	15
S207953	285	12
S2767.9136	344	26
S6145-61039	247	9
S70766.9010	344	25
S8157N49-050	74	3
S88820	285	23
S932 002 000 0	159	1
TAT-125 1/2 IN	BULK	24
TAT-125-1 IN	BULK	25
TB51CL3132	305	23
TB51FL3131	307	4
TB53CL3132	305	19
TB53FL3131	307	13
TB57CL3132B	305	18
TB57FL3131B	307	10
TB82DL3132	305	25
TB82JL3131	307	15
TR010	315	9
TYV/CL2/TR C1	168	4
VHC 2-14 EM9	268	1
VHC-12-12EF-9	282	45
	288	25
VHC-8-8-EM	277	27
VHC-8-8-M	277	12
VHC-8-8EF-9AMPH-8W/SC-10	276	18
VHC-8-8EM	271	17
VHN 12-14EM	269	1
VHN-12-12EF	288	1
VHN-8-8EF-ADCH-8 W/SC-10	276	19
VHN-8-8EM	271	18
VHN12-12EF	282	13
VHN8-8-EM	277	14
VME1-A9 1/2IN	277	11
VS211P-12	165	6
VS219P-6	165	25

PART NUMBER	FIG.	ITEM
VS2202 P4-2	76	14
VS2214)-8-8	166	20
VS269NTA-4-2	40	7
	41	36
VS269NTA-6-4	165	1
VS269NTA-6-6	165	11
VS269NTA-8-8	166	5
VS272NTA-4-2	41	4
V4-20055	117	33
WLA-5818-GRB	323	22
WWD48-58H	120	4
VS219P-6	165	25
W9C-02900	344	10
0 001 368 028	53	1
0 192 053 011	52	3
0 23 05 1	163	24
0 23 06 1	163	23
0 25 355 54	40	3
	41	3
	161	18
0 25 367-56	165	8
0 25417-56	161	11
0 290 003 030	109	2
0 331 402 010	54	33
0 343 003 004	56	9
0 400 876 188	27	1
0 440 003 996	26	1
0 481 039 202	158	1
0 542 020 002	231	1
0 545 100 112	231	10
0/12	158	33
0HD2124-C	317	8
0R-014	318	11
0R-908	318	10
00 156 00	46	8
00 835 26 04	222	9
00/15	158	15
00/19	158	4
00/22	158	14
00A103	314	4
	314	11
000 017 39 12	24	8
000 074 51 71	35	4
000 092 27 05	35	6
000 092 29 08	35	5
000 094 97 06	33	3
000 131 75 11	17	27
000 150 00 12	320	6
000 151 33 15	54	17
000 151 88 13	54	21
000 154 05 80	51	8

PART NUMBER	FIG.	ITEM
000 154 17 14	52	4
000 155 57 18	51	24
000 159 16 79	100	14
000 159 41 79	88	4
000 184 05 73	15	20
000 184 16 71	15	19
000 184 63 80	15	16
000 184 65 80	15	15
000 260 00 40	120	2
	123	1
000 276 03 29	122	42
000 280 00 58	296	24
000 295 05 83	23	7
000 330 08 85	171	6
000 330 1085	173	7
000 338 26 45	173	10
000 411 20 73	126	11
000 411 25 73	126	11
000 421 14 20	145	11
000 421 32 91	145	12
	146	22
000 421 71 87	145	17
	147	17
000 423 05 19	146	11
000 428 04 73	21	12
	148	19
000 428 21 30	297	3
000 429 01 47	154	28
000 429 02 27	121	10
	154	11
	156	4
000 429 02 80	160	25
000 427 02 96	144	32
000 429 04 78	160	20
	25	13
000 429 07 34	154	38
	156	7
000 429 09 27	154	14
	161	20
000 429 23 01	BULK	35
000 429 23 01X13 00	154	20
000 429 23 01X13 11	163	31
000 429 23 01X17 0	167	19
000 429 23 01X18 50	163	20
000 429 23 01X25 0	154	24
000 429 23 01X25 73	163	30
000 429 23 01X30 0	154	21
000 429 23 01X350	164	8

PART NUMBER	FIG.	ITEM
000 429 23 01X45 0	154	40
000 429 23 01X52 0	167	10
000 429 23 01X60 0	167	17
000 429 23 01X85 0	454	43
000 429 4638	154	32
	156	33
000 429 59 32	154	23
	167	18
000 429 62 01	BULK	34
000 429 62 01X46 0	297	7
000 429 62 01X50 0	161	28
000 429 62 01X58 0	163	4
000 431 05 24	160	14
000 431 09 50	147	16
000 431 22 85	160	6
000 431 31 34	151	4
000 431 46 76	160	17
000 431 57 33	151	2
000 431 74 14	155	1
000 431 7733	22	2
000 431 783304	156	2
000 431 81 33	160	15
000 431 96 83	160	23
000 431 9783	160	5
000 432 24 07	153	11
	154	37
000 435 20 82X50	46	10
000 435 20 82X60	177	6
000 460 12 14	174	10
000 460 12 15	175	12
000 461 02 42	174	20
000 462 00 60	175	31
000 462 01 96	175	15
000 462 02 95	175	34
000 462 2783	175	23
000 462 04 38	175	8
000 462 05 28	174	14
000 462 05 60	175	2
000 462 05 70	175	17
000 462 06 60	175	10
000 462 07 60	175	26
000 462 08 96	174	25
000 462 17 71	175	24
000 462 28 27	175	33
000 462 46 12	174	28
000 462 48 65	175	27

PART NUMBER	FIG.	ITEM
000 462 50 65	175	25
000 462 61 65	175	28
000 463 35 29	173	8
000 466 07 22	176	16
000 466 16 05	176	17
000 466 19 20	176	3
	176	24
000 466 29 83	176	19
000 466 45 05	176	13
000 466 60 05	176	11
000 477 08 05	36	2
000 477 09 18	36	6
000 477 18 16	36	5
000 477 35 80	35	7
000 477 74 15	36	4
000 506 04 80	222	17
000 540 20 24	60	3
000 542 27 24	56	7
000 542 57 27	56	19
000 542 58 27	56	18
000 542 59 27	56	17
000 542 60 09	320	12
000 542 60 27	56	16
000 542 61 27	56	15
000 542 79 08	57	11
000 544 63 94	70	2
000 544 81 01	63	6
000 545 12 19	57	18
	320	2
000 545 14 35	56	25
000 545 16 45	83	11
000 545 23 03	60	9
000 545 35 09	71	2
000 545 35 45	85	17
	88	12
	89	2
	96	20
	98	9
	102	10
	103	2
	104	12
	105	7
	107	11
000 545 36 80	96	22
000 545 37 26	83	12
	85	15
	88	19
	89	3
	90	4
	96	14
	98	8
	102	3
	103	8
	104	2
	105	2
	107	10
000 545 38 26	85	5

PART NUMBER	FIG.	ITEM
000 545 38 26	90	2
	98	4
	100	17
	102	7
	103	3
	104	6
	105	4
	107	2
000 545 40 26	85	6
	104	10
000 545 42 19	56	4
000 545 45 26	85	16
	88	14
	96	19
	102	11
	103	1
	104	11
	105	6
000 545 46 26	98	10
	105	8
000 545 75 14	71	1
	73	3
000 545 79 26	88	15
000 545 82 09	73	1
	73	1
000 545 82 34	60	11
000 545 83 34	58	14
000 545 92 15	58	5
000 546 16 30X15 0	101	2
000 546 18 30	85	7
000 546 33 35	85	20
000 547 02 03	71	8
000 550 32 83	KITS	
000 551 00 45	231	51
000 551 40 56	BULK	43
000 551 40 56X43 0	177	31
000 551 62 56	BULK	37
000 551 62 56X20 00	156	20
000 553 06 51	296	20
000 589 00 40 00	348	2
	361	2
000 589 01 13 00	347	6
	360	6
000 589 02 25 00	349	7
	358	5
000 589 03 25 00	349	4
	358	6
000 589 07 03 00	346	6
	358	7
000 589 10 53 00	353	8
	368	8
000 589 11 53 00	354	1
	369	1
000 589 18 53 00	354	2
	369	2
000 589 30 33 00	356	4
	371	4

PART NUMBER	FIG.	ITEM
000 589 34 33 00	355	2
	370	2
000 589 35 33 00	356	3
	371	3
000 589 44 33 00	346	5
	358	12
000 589 51 03 00	345	2
	357	2
000 589 52 43 00	346	2
	358	2
000 589 64 03 00	355	4
	370	4
000 589 68 33 00	356	7
	371	7
000 589 75 09 00	349	6
	362	5
000 589 75 63 00	345	20
	357	20
000 589 82 33 00	356	8
	371	8
000 723 00 72	198	20
000 805 11 69	296	18
000 814 12 01	215	9
000 821 24 60	222	28
000 824 03 20	220	14
000 824 24 99	220	26
	220	41
000 824 34 05	220	13
000 824 35 05	220	15
000 824 44 10	220	20
000 824 55 28	220	24
000 835 13 75	222	12
000 835 18 20	222	16
000 835 61 02	222	7
000 869 02 17	220	2
000 869 04 19	220	4
000 869 24 21	220	45
000 869 41 47	220	10
000 960 020 003	189	3
000 981 10 84	176	6
000 981 27 10	174	15
	174	18
000 981 61 80	175	9
000 981 7025	18	4
000 984 25 56	204	17
000 985 45 30	BULK	31
000 985 45 30X53 0	204	1
000 985 45 30X94 0	204	1
000 987 04 46	121	12
	154	10
	156	6

PART NUMBER	FIG.	ITEM
000 987 07 72	BULK	1
000 987 07 72X22 0	172	8
000 987 18 40	202	1
000 987 28 44	82	10
000 987 55 46	113	21
000 987 64 40	80	35
000 987 71 33	BULK	29
000 987 71 33X25 00	196	12
000 987 80 46	133	10
	141	10
000 990 02 48	204	9
000 990 17 32	160	16
000 990 19 30	211	13
000 990 20 54	90	12
	100	6
000 990 26 05	53	4
000 990 26 47	11	15
000 990 36 54	96	5
	100	11
000 990 44 68	121	4
000 990 46 78	177	4
000 990 49 54	231	4
000 990 49 68	154	9
000 990 51 68	154	13
000 990 58 71	156	14
000 990 68 40	90	13
000 990 77 71	154	30
000 990 78 63	297	4
000 990 91 68	164	7
000 991 20 60	145	14
	146	30
000 991 24 22	38	11
	39	25
000 993 31 10	144	1
000 993 45 26	204	14
000 993 63 26	120	21
000 994 14 37	6	2
000 994 15 51	173	16
000 994 16 51	128	3
	137	2
000 995 03 68	149	20
000 996 14 01	144	29
000 997 13 48	8	20
	154	16
000 997 15 48	161	21
000 997 22 81	98	14
000 997 26 32	111	15
	111	32
	131	22
	140	4
000 997 45 32	231	53

PART NUMBER	FIG.	ITEM
000 997 96 41	2	22
0000 0FF 0580	199	23
000007 012201	120	23
000007 012203	18	3
000007 012206	2	6
000007 013100	5	6
000007 014218	2	2
000084 005180	75	1
000084 006413	60	8
000084004151	222	5
000085 005167	222	19
00009400504	193	1
000125 005317	82	2
000125 006417	40	29
	41	29
	63	2
	219	14
	254	24
	279	16
	282	28
000125 007408	54	3
	204	22
000125 008413	13	6
	20	5
	39	8
	50	11
	80	38
	83	5
	120	12
	148	24
	149	14
	166	31
	172	9
	183	2
	211	37
	212	22
	216	12
	217	12
	219	3
	220	32
000125 008418	55	8
	152	4
000125 008426	177	14
000125 010518	8	11
	74	7
000125 013008	37	6
	82	30
	216	23
	217	14
	345	17

PART NUMBER	FIG.	ITEM
000125 013008	357	17
000125 015013	144	20
	207	7
000137 004105	85	23
000137 006108	51	12
000137 010201	127	27
00018	324	28
00025	325	49
000315 008006	178	2
00038	327	22
0004112173	127	7
000411273	126	11
0004230075	145	9
000433 005304	160	3
000439 008211	19	9
	209	4
000439 010206	148	14
000439 018204	143	1
	172	3
000439 020206	189	1
	190	1
000439 033201	296	26
000443 013002	2	5
000443 018000	111	6
	113	8
0004621865	174	16
000470 014000	10	17
000471 010001	119	26
000471042000	131	1
0005421272	320	11
000546 006002	175	18
000551 010014	82	20
000603 006039	202	5
000603 006050	202	6
000625 306206	113	9
000625 900205	48	10
000720 032013	133	26
	141	26
000720 032016	133	14
	141	14
000850	225	4
000912 006047	231	31
000912 008 130	55	7
000914 010107	119	11
000914 010109	119	10
000931 005034	276	21
000931 005039	122	2
	160	2
000931 006118	76	8
000931 006131	56	26

PART NUMBER	FIG.	ITEM
000931006118	38	6
000931 008054	12	7
000931 008136	17	7
000931 008254	148	8
000931 010137	50	1
000931 010239	50	12
	50	14
000931 010342	179	2
000931 010344	126	17
000931 010356	192	4
000931 010455	1	5
000931 012045	180	27
000931008314	14	8
	14	17
	50	6
000933 005007	62	3
000933 005035	82	11
000933 005039	198	9
	204	23
000933 005075	60	12
000933 006022	33	7
000933 006046	279	8
	282	6
000933 006058	76	9
	280	13
	282	31
000933 006078	77	4
	172	17
	254	25
000933 006103	55	3
	109	5
000933 006121	63	27
000933 006127	34	14
	200	2
	221	9
	276	10
	278	10
000933 006136	63	1
	68	3
	77	1
	80	42
	81	10
	82	4
	82	29
	84	8
	163	19
	219	13
	221	14
	278	9
	278	14
000933 006175	231	54
000933 006235	220	46
000933 008006	49	3
000933 008130	33	6

PART NUMBER	FIG.	ITEM
000933 008130	80	12
000933 008131	296	25
	211	35
000933 008153	19	4
	43	18
	122	19
	319	18
000933 008168	148	7
000933 008215	8	9
	12	6
	12	14
	14	7
	14	16
000933 008317	18	6
000933 008328	156	34
000933 010016	180	9
	201	7
000933 010027	1	2
	35	10
000933 010034	40	13
	41	12
000933 010049	233	45
	254	9
000933 010062	239	1
000933 010094	148	15
000933 010128	332	25
000933 010130	332	25
000933 010145	182	8
	203	5
000933 010157	74	6
000933 010260	82	22
	318	23
000933 012008	184	11
	318	26
000933 012020	180	31
000933 012056	319	1
000933 012080	254	13
000933 016 009	230	14
000933008212	83	7
000933010105	345	16
	357	16
000933010129	218	44
000933010198	153	8
000933010260	317	17
000934 004000	91	2
000934 008010	233	46
000934 008020	20	18
	152	16
000934 010006	82	16
000934 010009	28	17
	53	2
	254	10
000934 010010	171	9
000934 014022	131	20

PART NUMBER	FIG.	ITEM
000934 014022	140	6
000934 016003	181	6
000934 016006	195	5
	195	5
000934 016013	145	1
	146	36
000934 016022	128	6
	137	5
000934 020008	176	29
000934008010	144	14
	343	19
000935 014004	144	19
000936 012005	21	2
	229	30
000936 012011	131	18
000936 035001	173	3
	174	26
000937 020014	173	6
000937 028002	193	2
000937018003	171	7
000939 008083	13	24
000939 010011	28	15
000939 010027	16	3
000939 012049	1	13
000960 012077	173	11
000960 012171	126	2
	127	2
000960 012224	20	6
	152	6
000960 012225	179	12
000960 012277	133	13
	141	13
000960 014138	188	7
000960 014143	191	4
000960 014160	191	7
000960 014180	188	8
000960 014272	178	18
000960 014292	173	14
000960 016116	181	2
000960 016121	181	4
000960 016257	145	4
	146	39
000960 016282	1	15
000960 016284	1	14
000960 020141	229	22
000960 020143	189	3
000960 020147	189	3
	189	3
000960 020149	190	3
	193	17
000960 020150	176	32
000960016249	179	5

PART NUMBER	FIG.	ITEM
000961 012029	40	21
	41	17
000961 012056	179	16
000961 012122	34	12
000961 012164	200	6
000961 012192	175	14
000963 006031	113	19
000965 006046	80	7
00096505001	175	35
000966 004015	204	3
000966 006007	198	21
000966 008006	202	9
000988 045100	117	9
000988050100	134	12
	142	16
0009970136	45	12
0009970420	127	22
000 981 7025	18	4
001 092 09 01	35	1
001 156 67 01	51	10
001 184 70 25	15	14
001 184 93 25	296	22
001 260 3857	15	18
001 295 51 06	21	7
001 420 09 20	KITS	
	KITS	
001 429 64 44	154	12
001 431 78 12	150	1
001 431 83 02	151	1
001 431 99 02	22	1
	22	5
001 462 27 52	174	2
	175	13
001 466 11 01	176	1
001 542 45 02	57	14
001 542 73 07	320	1
001 544 53 94	56	14
001 545 02 01	60	7
001 545 08 26	56	22
001 545 36 11	56	29
001 545 41 28	105	12
001 545 48 26	96	8
	100	4
001 545 60 28	83	13
	87	14
	88	2
001 545 61 05	57	25
001 545 81 28	105	5
001 545 82 28	105	11
001 545 83 28	102	8
001 545 83 28 KZ	85	4

PART NUMBER	FIG.	ITEM
001 545 84 28	90	3
	100	18
	102	13
	103	14
	107	3
001 545 85 28	88	16
001 545 87 28	85	14
	88	20
	97	5
	98	7
	102	2
	103	9
	104	8
	105	3
001 546 54 41	82	13
001 589 43 33 00	345	21
	357	21
001 589 45 33 00	355	7
	370	7
001 589 53 21 00	356	1
	371	1
001 589 64 21 00	352	9
	367	9
001 589 65 21 00	349	5
	362	4
001 589 70 09 00	352	3
	367	3
001 589 80 21 00	352	8
	367	8
001 589 83 21 00	345	5
	357	5
001 589 83 21 09	345	6
	357	6
001 824 65 01	220	34
001 835 05 01	222	14
001 835 31 06	222	30
001 981 34 10	175	7
001 981 42 01	134	9
	142	11
001 981 69 80	175	5
001 981 77 01	134	6
	142	8
001 987 06 52	BULK	30
001 987 06 52X512	204	2
001 987 22 72	BULK	15
001 987 22 72X320	212	20
001 987 36 25	BULK	28
001 987 36 25X410	198	16
001 987 42 57	BULK	32
001 987 42 57X365	204	26
001 989 95 85	BULK	33

PART NUMBER	FIG.	ITEM
001 989 95 85X440	204	27
001 990 16 67	296	4
	297	9
001 990 27 88	163	2
001 990 52 20	160	18
001 994 19 41	172	5
001 994 38 41	117	5
001 997 21 72	156	30
001 997 54 30	134	16
	140	11
001 997 65 72	96	9
001 997 69-36	121	25
001 997 83 90	34	4
	120	37
	124	7
	129	8
	136	5
	143	18
	156	8
	177	17
001 997 95 72	154	36
001-115	313	14
	316	4
001-143	311	12
001-157	114	17
001-191	312	17
0014318602	22	1
001440 018002	119	34
00145	325	3
001469 008100	119	13
	120	18
001472 002000	204	12
001476 003007	224	3
001476 005003	7	4
001476 006003	143	17
00166	325	17
0019975940	28	6
002 423 1198	146	1
002 428 30 35	21	10
002 428 6035	148	20
002 429 25 44	154	33
002 542 67 20	79	5
002 542 74 05	57	10
002 544 78 32	71	7
002 545 06 28	97	3
	98	12
	100	2
002 545 12 28	85	2
	103	13
	104	5

PART NUMBER	FIG.	ITEM
002 545 12 28	107	4
	108	13
002 545 13 28	83	3
	97	4
	98	13
002 545 14 28	105	9
002 545 26 07	57	20
002 545 40 26	96	12
002 545 66 05	57	24
	58	1
002 981 06 85	175	32
002 981 07 85	175	32
002 981 08 85	175	32
002 981 09 85	175	32
002 981 10 85	175	32
002 981 11 85	175	32
002 981 12 85	175	32
002 981 82 10	114	22
002 997 07 81	96	11
	100	21
	231	7
002 997 13 72	156	32
002 997 59 82	BULK	44
002 997 59 82X18 0	220	11
002 997 59 82X31 0	220	3
002 997 59 82X38 0	220	1
002 997 81 72	161	16
002094	319	22
002098 001023	119	19
002098 001029	115	7
002098 002006	119	33
002353	319	21
00289	328	5
00293	323	31
	326	6
002-542-7317	72	5
003 203 74 75	47	4
003 250 06 04	18	2
003 462 04 52	174	31
003 462 05 52	174	31
003 462 06 52	174	31
003 462 07 52	174	31
003 462 49 52	174	31
003 462 50 52	174	31
003 462 51 52	174	31
003 462 52 52	174	31
003 462 53 52	174	31
003 462 55 52	174	31
003 462 56 52	174	31
003 462 57 52	174	31

PART NUMBER	FIG.	ITEM
003 462 59 52	175	20
003 462 70 52	175	6
003 462 76 52	175	4
003 540 95 47	57	2
003 545 13 14	231	48
003 545 54 26	96	16
003 990 60 01	13	21
003 990 63 01	8	16
003 990 65 01	8	17
003 993 31 01	178	7
003 994 30 41	174	32
003 994 87 41	175	3
003 997 08 45	135	13
003 997 10 48	174	13
003 997 20 72	121	13
	296	28
003 997 79 45	126	8
	127	10
003770 018000	123	28
003770 026001	113	6
	115	9
003770 028001	116	15
003771 020000	115	5
003861 008005	167	6
003901 006004	122	13
	161	13
	296	17
	297	17
003901 012011	177	26
003905 010002	154	41
003908 006001	297	13
003908 010002	164	9
003910 010000	154	15
	167	15
003952 010100	156	10
	164	3
003954 010100	154	35
004 323 96 00	189	5
	189	5
	190	5
004 430 47 01	147	1
004 997 12 46	113	18
	117	30
004 997 77 40	132	6
	139	15
004 997 93 72	167	20
004 997 99 48	174	8
00429	325	22
	327	23
00453	328	22
005 545 64 28	90	5

PART NUMBER	FIG.	ITEM
005 545 64 28	104	1
005 545 66 28	90	7
	104	3
005 981 08 25	131	2
005 981 17 10	143	20
005 997 00 48	174	7
005 997 11 45	48	7
005-323-2600	189	4
005417 062000	114	41
	116	38
005545 45 28	231	5
006 981 37 01	116	35
006 997 05 47	131	4
	139	1
006 997 90 46	131	14
	132	11
006 997 93 92	49	2
006-013	331	14
006-048 331	18	
00678	326	22
006796 010103	193	22
006797 004333	199	11
006797 005110	83	16
006797 006342	199	19
006797 008341	202	8
00682	325	60
006888 004013	11	17
006902 006102	25	3
	25	6
	25	9
	25	12
	25	17
	25	20
007 330 12 35	171	2
007 545 05 28	90	9
	100	19
	102	6
	104	7
007 603 014 405	15	17
	25	33
	124	1
	125	6
	129	10
	134	17
	136	2
	139	4
	140	10
007 981 36 10	175	19
007 997 18 47	126	1
	127	3
007 997 80 81	96	18
00713	324	35

PART NUMBER	FIG.	ITEM
00717-K-6	238	8
007341 005104	211	33
007341 006101	143	10
007343 006007	116	36
007343 008002	119	22
007343 010000	118	8
007346 006002	211	21
007349 008006	178	3
007349 010003	1	9
	50	13
	192	2
	193	21
007349 013003	194	4
007349 015003	208	5
007463 008001	209	8
007516 005501	215	3
007516 006121	196	8
007516 006503	198	13
	215	4
00753	328	44
007603 008104	12	15
007603 008403	7	1
007603 010101	177	12
	296	7
	297	16
007603 010104	120	19
007603 010404	121	18
	122	11
	161	10
007603 014102	297	2
007603 014400	72	2
007603 014402	47	6
007603 018100	15	4
007603 018101	177	29
007603 018104	47	9
	161	3
	163	3
007603 024105	111	21
007603 026305	13	16
007603010107	126	15
007603010110	15	25
007603014100	40	2
	72	6
007603014104	12	9
	25	22
007603014405	15	10
	131	25
	161	6
007603018101	2	4
	15	7
007603018104	73	2
	154	26

PART NUMBER	FIG.	ITEM
007604 012102	174	5
007604 014106	12	8
	47	7
	134	15
	140	1
007604 016102	111	23
007604 018101	47	8
	120	38
007604 018102	2	3
007604 022102	13	19
007604 022201	120	25
007604010102	2	14
	33	18
007723	319	25
007757 008400	168	5
007976 006309	25	27
007981 002206	196	3
007981 004318	58	16
007981 004325	58	15
007985 004148	52	2
007985 004151	51	17
007985 004180	91	1
007985 005146	79	1
007985 005157	83	15
007985 006127	197	15
007985 006161	57	23
	199	7
	209	5
007985 006193	211	7
	211	14
	211	29
	212	9
	212	17
007985006157	56	21
007991 006008	198	5
007993 065200	131	16
	132	9
007993 070100	14	20
008 037 22 18	6	5
008 037 66 18	6	5
008 037 67 18	6	5
008 037 68 18	6	5
008 037 69 18	6	5
008 545 06 28	98	16
	99	2
008 545 37 28	90	16
008 977 54 82X20	25	28
7		
008 997 46 48	54	32
008 997 54 82	BULK	18
008 997 54 82X52	25	24
008 997 60 82	BULK	39

PART NUMBER	FIG.	ITEM
008 997 60 82X11	121	22
0		
008 997 60 82X15	124	6
24		
008 997 60 82X19	121	20
0		
008 997 60 82X24	122	29
0		
008 997 60 82X25	122	41
0		
008 997 60 82X25	125	1
00		
008 997 60 82X29	122	38
0		
008 997 60 82X31	121	8
0		
008 997 60 82X36	122	40
0		
008 997 60 82X46	122	34
0		
008 997 60 82X49	121	17
0		
008 997 60 82X50	25	35
0		
008 997 60 82X94	125	8
0		
008 997 60 82X99	154	4
7		
008 997 68 45	133	4
	141	4
008 997 90 82	296	10
	BULK	19
008 997 90 82X10	34	3
0		
008 997 90 82X14	136	4
80		
008 997 90 82X19	34	13
80		
008 997 90 82X56	34	5
008 997 90 82X60	167	9
0		
008 997 90 82X63	34	6
0		
008 997 90 82X70	177	5
0		
008 997 90 82X71	25	30
0		
008 997 90 82X89	129	12
0		
008 997 90 82X90	46	11
0		
008877	319	31

PART NUMBER	FIG.	ITEM
009 997 93 82	BULK	16
009 997 93 82X26	15	28
2		
009 997 99 48	174	12
009021 008205	121	9
009021 010202	123	22
009021006205	101	7
009045 006001	119	2
009045 055000	133	6
	141	6
009045016000	144	16
009045020001	176	4
010 997 57 48	175	1
010 997 58 48	174	9
011 545 75 28	102	9
011 997 29 48	28	11
011 997 30 48	126	27
	127	14
01116	327	3
01120	351	1
	364	1
0118 061 15	1	23
012 997 65 48	118	13
012 997 96 47	8	15
0120469579	51	1
01211	324	10
01257	324	32
01269	326	48
013 687 001	144	27
013 696 001	143	19
013 997 22 48	156	29
01362	326	7
014 545 66 28	103	12
	107	6
014 545 67 28	103	11
	107	7
015 997 00 48	174	21
015 997 01 48	174	19
016 545 50 28	99	5
01603	351	12
	364	12
01604	323	42
01605	326	15
01607	325	31
017 997 36 48	231	45
017 997 37 48	231	52
017 997 39 48	231	49
018-7399	243	17

PART NUMBER	FIG.	ITEM
018-7399	243	27
018-7799	243	29
01837	326	42
01857-007	366	10
018668	319	20
018681	319	23
018690	319	29
018841	319	34
018886	319	32
02-050260-00	KITS	
02-050360-00	KITS	
02-050460-00	KITS	
02-050560-00	KITS	
02-0512 60 00	KITS	
02-1725	198	2
020-185	331	10
02022	323	15
023131	156	13
	164	6
	167	16
023411	161	29
02494	326	13
0256-71	15	6
02634	327	14
02649	327	20
	328	12
02835	351	6
	364	6
02921	328	15
03 8878 00	71	4
03 8880 10	73	5
03.0370-0934.2	KITS	
03.3301-3430.1	147	12
03.3301-3435.1	147	9
03.3302-0020.1	147	6
03.3306-3200.1	147	4
03.3307-3402.1	147	13
03.3307-3422.1	147	11
03.3308-3401.2	147	8
03.3312-3413.1	147	10
03.3319-0010.1	147	7
03.3319-6500.1	147	3
03.3320-2900.1	147	2
03.3390-0162.1	147	5
03.3390-0301.1	147	14
03.3502-2900.1	147	20
03009	326	11
	328	19

PART NUMBER	FIG.	ITEM
032 000 001 018	171	3
0341001001	61	7
04 8236 0	56	2
04033	324	34
04050	326	58
04052	326	59
04053	326	2
04054	326	28
	326	30
04055	326	3
04056	323	34
	326	4
04057	323	32
	326	5
04058	323	28
	326	9
04059	326	26
04060	326	19
	326	27
04061	326	23
04062	326	25
04063	326	24
04064	326	57
04065	326	38
04066	326	40
04067	326	37
04068	326	31
04069	326	35
04070	326	56
04071	326	50
04072	326	52
04073	326	51
04074	326	54
04075	326	49
04077	323	29
	326	8
04105	328	8
04106	328	7
0432231887	24	2
04337	350	1
	363	2
04350	326	10
04369	323	25
04371	323	2
04378	323	9
04379	323	10
04380	323	40
04381	323	11
04382	323	38
04383	323	17
04384	323	35

PART NUMBER	FIG.	ITEM
04386	323	14
04539	327	24
04597	326	45
04598	326	53
04605	323	37
046225 004101	98	6
046225 004102	98	5
	102	16
046225 004103	85	12
	88	21
	102	15
	103	5
046225 005100	85	18
	100	15
046225 005101	85	13
	88	17
046225 005102	88	18
	103	7
046225 005103	103	6
046225 006100	85	19
	88	23
046225 006101	85	8
	98	11
046225 006102	85	10
	104	13
046225 008102	102	12
	106	4
046225 010100	85	9
	96	21
046225 010101	88	9
046225 010103	88	10
046225 012100	88	11
046225 012101	100	13
046234 010000	85	11
046236 005101	106	2
04756	324	26
04759	324	24
04761	324	23
04780	323	13
04787	324	19
04908	350	2
	363	3
04909	350	3
	363	4
04910	351	2
	364	2
04919	350	4
	363	5
04932	323	23
04934	323	12
04937	324	11

PART NUMBER	FIG.	ITEM
04938	324	6
04939	324	7
	325	32
04942	324	21
04944	324	18
04949	324	16
04950	324	13
04951	324	3
04952	324	22
04954	323	20
04983	326	41
05CP-4	313	3
0503-12-8	288	6
05044	350	5
	363	6
05045	350	6
	363	7
05046	351	10
	364	10
05047	351	11
	364	11
05061	350	7
	363	8
05062	351	3
	364	3
05065	351	16
	364	16
05066	351	9
	364	9
05067	351	14
	364	14
05068	351	15
	364	15
05069	351	8
	364	8
05070	351	13
	364	13
0510-10-6	289	10
05144M	327	9
05152	323	16
	326	32
05243	323	7
05508	351	4
	364	4
05879	351	5
	364	5
05975	324	31
05976	324	29
05988	323	8
06DU03	327	8
	328	6
06185	326	12

PART NUMBER	FIG.	ITEM
063T-12-12	288	21
0634 304 521	175	29
0634 304 599	175	30
0634 316 357	176	8
0634 316 358 176	10	
066 997 06 40	75	2
06634	325	42
070613 010028	126	16
070614 010033	126	7
	127	11
070615 010003	126	22
	127	18
071412 008100	126	25
	135	5
071555 068502	43	10
071803 010202	39	24
071803 010209	38	9
071803 013102	123	3
071803 013207	123	15
	123	26
071805 010403	38	13
071805 013203	120	15
	123	10
071805 013402	120	13
	123	11
07221630730	48	16
072601 024230	56	28
073379 006203	BULK	22
073379 006203X32	177	10
0		
07424	323	26
074305 022202	17	1
	154	29
	156	4
074313 010100	154	34
	156	9
074361 018105	169	5
07473	327	2
07479	323	27
07493	323	41
07602	328	31
07603	328	32
07605	328	29
07607	328	38
07609	328	40
07610	328	41
07611	328	11
07612	328	10
07613	328	28
07615	328	17
07616	328	25
07617	328	23

PART NUMBER	FIG.	ITEM
07618	327	13
07620	327	4
07621	327	18
07622	327	16
07623	327	11
07625	328	43
07631	327	15
07652	328	3
07693	327	6
0770 020 002	174	4
0770 198 038	174	23
0770 198 086 B	176	5
0770 198 103	175	21
07978	325	25
07980	325	52
07982	325	34
07984	325	21
07985	325	35
07986	325	37
07987	325	18
07988	325	33
07989	325	24
07990	325	14
07991	325	27
07993	325	36
07996	325	50
07997	325	56
07998	325	38
07999	325	61
08000	325	40
08001	325	54
08002	325	28
08012	224	8
08015	325	30
08016	325	53
08019	325	15
08021	325	4
08022	325	8
08023	325	55
08067	325	10
08068	325	11
08069	325	12
08070	325	9
080705 016003	154	17
	161	22
	167	13
08071	325	5

PART NUMBER	FIG.	ITEM
08072	325	7
08073	KITS	
082101 000103	345	14
	357	14
08411	326	44
09 8942 00	101	4
09 8942 11	101	3
09576	323	3
	325	44
	325	48
	328	34
09580	323	18
	326	33
09588	327	17
09589	327	12
098-170	15	9
1 120 210 001	51	22
1 120 524 000	85	25
1 121 038 005	51	19
1 123 410 207	51	3
1 124 035 021	51	20
1 124 625 003	51	9
1 125 045 107	51	6
1 125 825 019	51	5
1 125 885 023	51	15
1 127 320 395	51	16
1 230 101 608	28	19
1 230 203 001	26	3
	26	15
1 280 703 026	109	3
1 297 010 001	106	5
1 300 141 042	63	8
1 410 023 007	31	2
1 410 023 008	31	3
1 410 101 610	28	19
1 410 101 612	28	19
1 410 101 614	28	19
1 410 101 616	28	19
1 410 101 620	28	19
1 410 101 630	28	19
1 410 102 625	28	3
1 410 102 626	28	3
1 410 102 628	28	3
1 410 102 629	28	3
1 410 102 631	28	3
1 410 105 001	31	46
1 410 107 005	31	13

PART NUMBER	FIG.	ITEM
1 410 114 022	31	39
1 410 120 071	31	36
1 410 137 003	28	4
1 410 202 042	28	18
1 410 326 030	31	40
1 410 361 001	28	13
1 410 508 011	31	1
1 410 551 036	31	37
1 411 015 097	31	21
1 413 100 030	31	31
1 413 120 090	31	30
1 413 121 009	31	48
1 413 203 002	31	7
1 413 344 001	28	22
1 413 372 072	31	50
1 413 410 007	31	28
1 413 412 004	28	23
1 413 417 050	31	41
1 413 450 010	31	35
1 413 452 004	31	10
1 413 453 001	31	23
1 413 453 025	31	14
1 413 455 080	31	20
1 413 502 024	26	17
1 414 610 026	31	8
1 414 613 013	31	47
1 415 126 526	28	14
1 415 522 051	28	5
1 415 626 112	31	22
1 415 800 040	31	26
1 416 026 005	28	24
1 416 126 382	28	21
1 416 336 060	31	42
1 416 336 061	31	42
1 417 413 000	31	5
1 418 325 898	31	44
1 418 522 055	31	45
1 418 720 025	31	29
1 420 101 030	29	31
1 420 101 078	30	14
1 420 101 634	29	32
1 420 150 005	29	46
	31	18
1 420 151 001	30	12
1 420 206 016	29	42
1 420 210 010	29	30
1 420 328 034	29	16
1 420 505 040	29	13
1 420 505 055	30	13
1 420 506 620	29	11
1 420 521 004	31	15

PART NUMBER	FIG.	ITEM
1 420 524 000	30	6
1 420 920 008	30	15
1 421 015 007	30	8
1 421 015 047	29	40
1 421 038 013	29	43
1 421 323 000	30	3
1 421 901 137	29	38
1 421 901 153	29	3
1 421 933 037	29	4
1 422 003 106	29	35
1 422 013 039	29	6
1 422 031 021	29	9
1 423 120 063	30	7
1 423 300 020	29	25
1 423 300 302	29	10
1 423 317 044	29	49
1 423 341 027	30	17
1 423 400 012	30	19
1 423 400 031	29	28
1 423 401 000	29	24
1 423 410 011	29	15
1 423 413 000	29	8
1 423 450 017	29	44
1 423 460 006	29	29
1 423 462 099	30	4
1 423 590 014	29	14
1 424 641 000	29	23
1 424 650 005	29	5
1 424 650 061	29	1
1 425 121 110	30	9
1 425 627 006	29	20
1 425 627 125	29	2
1 428 194 021	30	18
1 480 120 074	158	12
1 480 120 098	158	37
1 480 311 003	158	22
1 480 500 004	158	17
1 480 500 138	158	10
1 480 508 040	158	18
1 480 526 030	158	7
1 481 100 068	158	5
1 481 329 006	158	38
1 483 351 008	158	26
1 483 386 010	158	35
1 483 453 002	158	40
1 484 615 041	158	16
1 484 616 075	158	13
1 484 617 034	158	34
1 484 619 064	158	8
1 484 643 089	158	19
1 485 500 198	158	6

PART NUMBER	FIG.	ITEM
1 487 010 102	KITS	
1 487 010 103	KITS	
1 520 209 001	231	13
1 520 210 054	231	14
	231	18
1 530 210 003	31	49
1 530 210 066	231	17
1 540 309 002	231	34
1 540 328 014	231	16
1 540 328 015	231	19
1 540 792 036	231	20
1 540 793 089	231	33
1 541 316 015	231	44
1 543 465 007	231	21
1 545 410 026	231	43
1 547 010 059	KITS	
1 547 222 006	231	9
1 547 222 006/1	231	25
1 547 412 009	231	23
1 547 431 007	231	32
1 547 431 008	231	24
1 810 210 080	231	35
1 810 210 230	231	22
1 810 210 245	231	50
1 900 023 007	30	20
1 900 210 013	29	18
1 900 508 004	31	25
1 900 508 008	31	19
1 900 910 201	28	20
1 907 410 100	231	11
1-0390-27-075-0	207	6
1-163035-0	98	18
	99	4
1-163036-0	98	15
	99	3
1-213-064-3060	189	6
	190	7
1-214-001-3641	189	6
1-214-071-3335	193	16
1-285-055-0279	189	7
	190	8
1-410-102-627	28	3
1-410-102-630	28	3
1-410-102-632	28	3
1-410-202-006	31	32
1-410-202-034	28	2
1-413-300-028	31	34
1-423-000-005	29	12
1-423-463-040	31	43
1-900-910-202	28	1

PART NUMBER	FIG.	ITEM
1C-662225	310	27
1C-668356	264	4
1C00817HHH0480A	280	3
1C00820KKK0710A	282	46
1C01448HHH0940A	278	13
1TP320-2-BK	59	3
1TP320-7-BK	59	2
10 28051 M	120	32
10 623.4	229	14
10.4450	96	2
10.4922	96	23
10-12 070220CA	288	14
10-33644	87	3
10-6 F50G5-S	290	8
	291	12
	292	11
	293	8
	294	13
	295	5
10B82	323	24
	326	29
10X1DIN471	39	14
100 997 08 81	55	4
100440	304	19
100642	306	18
101.456	220	12
101533	304	5
102285	304	18
102461K	167	4
10293	325	43
10294	325	46
103 193 10297	126	12
	127	8
103 589 02 15 00	352	6
	367	6
1031520	165	16
103374	310	28
	332	6
1039-07134-01	76	7
104-18	220	21
104X120A	268	3
	269	4
1043234	166	11
104327	331	1
105.343	KITS	
105.344	KITS	
10500538	84	9
10501621	207	1
10501757	20	8
	21	20

PART NUMBER	FIG.	ITEM
10501757	40	35
	56	30
	61	6
	80	26
	82	32
	122	18
	148	5
	156	24
	172	14
	177	8
	332	1
	343	6
10501759	121	6
	165	24
	183	3
10501882	152	2
10501917	199	1
10501948	142	1
10502215	179	9
10502405	37	3
	182	9
10502526	68	2
10503344	37	14
10503777	180	2
10503971	39	33
	101	6
10504502	318	19
10505055	28	7
10516476	34	18
	142	2
	174	3
107-74446-12	279	28
	279	30
107358	233	29
107360	331	3
107361	331	2
1075	148	2
108 910 16 05	211	28
109X15T	247	4
109X7T	247	11
1090081	339	10
10912	KITS	
10913	KITS	
10914	KITS	
11 503	196	19
11-620	255	33
110 291 05 50	20	12
	152	9
110 292 01 50	20	13
	152	10

PART NUMBER	FIG.	ITEM
110 295 05 71	20	16
	152	13
110 540 11 83	56	12
	58	7
	222	25
110 768 00 13	199	9
110 987 00 39	196	4
	198	11
110 987 07 41	202	4
111 291 00 86	20	7
111 292 01 50	20	19
	152	18
111 295 07 33	19	8
111 993 10 10	19	10
111-05002-0000	115	11
11288GX1	337	6
	338	8
11196	324	15
11197	324	14
112 427 00 86	143	12
1127011071	51	7
11275	351	7
	364	7
1128470	317	9
113-110	241	6
113-217	333	3
113-219	285	22
	333	16
113-66	255	10
113-945	335	15
1141	246	17
11455	326	60
11456	323	30
11457	328	1
11462	224	9
	323	19
	326	34
	328	2
115 150 01 49	1	7
115 811 01 11	221	11
115 997 00 32	111	22
11639519-1	65	12
11639519-2	69	13
11639521	65	9
	69	6
11639522	69	5
11639524	69	10
11639536	65	16
	69	18
11639541	65	3

PART NUMBER	FIG.	ITEM
11639542	65	5
11639543	65	10
11639546	65	13
11639547	65	17
11668979	63	18
117 589 03 23 00	354	6
	369	6
1199478	317	15
1199479	317	12
1199489	317	13
12.5R20XLTPR12	170	1
12-09711-001	165	21
12-832	201	13
120 427 01 15	143	11
120 880 00 64	196	22
120 887 00 63	196	20
120 993 00 20	143	9
120.020/111/029	320	14
120-1805-000	92	7
120-1806-000	91	12
120-1807-000	92	8
120-1870-000	91	17
12004437	92	2
12008	165	22
120378	241	4
	284	1
	287	4
121-429	210	9
12255655	185	10
12258931-2	320	5
12258937-1	76	10
12258938	76	3
12258941	91	20
123 820 08 01	70	1
12375837	69	1
12375838	69	3
12375841	69	14
1249910040	297	6
125 16	167	14
125 34 S	193	4
125008-15-250B	309	9
1278B 10	203	2
127B 12	184	10
	318	25
1288043	28	12
129-104	210	13
129-141	243	3
	243	30
	244	3

PART NUMBER	FIG.	ITEM
129-141	245	3
129-568	335	25
13.0441-06011.2	KITS	
13.0441-5417.2	KITS	
13.0471-5402.2	KITS	
13.0471-5407.2	146	4
	KITS	
13.0471-5408.2	KITS	
13.1890-0253.1	146	28
13.1890-0255.1	145	13
	146	21
13.2544-0011.2	146	1
13.3580-0082.1	146	7
13.8101-5407.1	146	9
13.8101-5717.1	146	13
13.8101-6003.1	145	6
13.8102-5405.2	146	10
13.8102-6007.2	145	8
13.8140-0001.2	146	31
13.8141-0004.1	146	23
13.8148-0020.1	146	2
13.8162-0022.1	145	20
13.8180-00 09.1	144	12
13.8190-0130.1	146	3
13.8190-0144.1	146	20
13.8190-0253.1	146	12
13.8190-0256.1	146	29
13-512	201	4
	333	17
13DU12	324	33
130 305 163	231	2
1301328	317	10
131-10	201	10
	334	14
131-651	283	33
131-652	283	9
	284	6
	285	34
1346044C1	302	1
136 991 37 40	122	26
137 B 10	135	3
137 B14	220	33
137 B16	128	5
137 5B	85	26
137B 18	172	2
137B-8	33	5
	42	3
	80	37
	220	8

PART NUMBER	FIG.	ITEM
1378-01-00	120	14
13928-11-02-100	268	5
14DU04	325	57
	325	62
141-53	255	21
141-54	255	20
1410101618	28	19
1413462101	31	12
1414618027	31	38
1420300073	29	33
1420500005	29	17
1423317015	29	51
144	328	13
14432 PIECE 44	239	10
	239	33
1468X4	40	22
	41	19
1473 5 10	114	33
1481 6 40	120	41
1481 8 16	111	29
	117	28
1481-5-40	115	15
1481-5X16	119	7
149 200 000	35	1
153 990 06 40	211	8
1543118C1	300	2
1549803PT12	280	14
156	261	10
16015-14-90	305	12
16015-26	305	14
16048-513	246	6
16074-112	246	3
	305	3
16084-8	305	10
16098-5	305	7
16101-226	305	15
16102-229	305	11
1613B	180	17
162032	154	42
16218-115	305	2
1653-622999	247	7
1653-645438	247	8
1683	63	15
	65	19
	69	21
16917	247	13
17 1035.00.01	120	33
17047-5	246	13
1728-B	263	12

PART NUMBER	FIG.	ITEM
1728B	255	32
176X4	76	15
180 725 01 62	204	7
180 908-0	92	5
180384-6	98	2
180429-3	102	4
180984	102	5
181 993 06 01	15	8
1813/2-G13-25	56	23
1813/42-G13-25	56	11
	57	1
	320	4
186 997 00 32	111	16
	131	21
	139	7
187-1524	300	13
	301	11
	302	14
	303	15
	304	12
187-575	201	2
18701625-375B	309	5
18701750-3750	308	17
1871 001 0090	199	22
18720	328	24
19 788 002	56	8
1900905282	51	18
192-22	210	10
1924 3004	74	4
1940 000 0090	199	22
195-2155	329	5
195-81004	201	3
	255	9
1955/143	103	4
196.58.11	126	14
	127	5
198 997 00 40	13	20
	178	13
2 000 101 110	54	6
2 000 101 111	54	5
2 000 116 040	54	7
2 000 202 036	54	23
2 000 301 000	54	26
2 000 301 041	54	20
2 000 301 043	54	1
2 000 301 044	54	22
2 000 558 000	82	6
2 001 020 000	54	8
2 003 429 026	54	27

PART NUMBER	FIG.	ITEM
2 003 526 006	54	18
2 004 114 065	54	36
2 004 601 009	54	24
2 004 616 007	54	34
2 005 834 100	54	25
2 007 014 063	54	11
2 251 243	75	4
2 420 200 021	29	45
2 420 505 014	29	48
2 423 341 001	29	22
2 430 136 015	24	7
2 430 136 017	24	7
2 433 317 244	24	9
2 433 349 208	24	9
2 434 619 017	24	5
2 440 105 000	26	9
2 440 210 009	26	12
2 443 120 022	26	13
2 443 203 001	26	5
2 443 462 009	26	16
2 443 462 014	26	8
2 444 615 006	26	4
2 444 617 010	26	10
2 445 103 293	26	6
2 447 222 020	26	2
2 449 998 714	26	11
2 449 998 715	26	11
2 68 305	154	22
2 910 001 189	54	15
2 910 011 157	54	9
2 910 011 209	29	53
2 910 011 203	29	41
2 910 021 193	29	47
2 910 022 196	28	8
2 910 022 204	31	4
2 910 710 510	231	36
2 911 062 199	31	16
	158	2
2 911 272 700	158	29
2 912 042 246	158	3
2 912 732 196	30	11
2 912 732 242	30	1
2 915 012 007	158	9
2 915 051 106	29	27
	31	17
2 915 051 107	54	29
2 916 080 015	29	19
2 916 080 907	29	39
2 916 600 006	30	16
2 916 609 056	158	24
2 916 690 005	30	10
2 916 693 005	26	18

PART NUMBER	FIG.	ITEM
2 916 693 007	30	2
2 916 699 083	54	14
2 916 710 503	158	28
2 916 710 602	29	52
	31	24
2 916 710 605	31	9
2 916 710 607	29	26
	29	50
2-001-933-175	54	31
2-007-010-032	KITS	
2-011	323	33
	328	14
2-011N674-70	243	13
	243	40
	244	13
	245	13
2-014	328	39
2-014N552-90	243	9
	243	36
	244	9
	245	9
2-016	328	20
2-22-000 197-01	191	3
2-281-004	257	12
2-915-011-007	29	21
	30	5
	54	4
2C-658378	260	9
2C-678661	265	15
2X3127	156	15
2DG 170	215	2
2EE 057-2	199	13
2J-338365	270	21
2P-7112-18	230	11
2P-7112-4	230	5
2P-7112-5	230	6
2P-7112-6	230	7
2P-7112-7	230	8
2PL146ASSSBN	230	1
2W1-16-23-63	143	6
	172	12
2X3127	167	3
2000556056	54	10
20030	37	2
2004336031	54	35
2005854094	54	2
201127	79	2
2021-4-6C	277	9
2023-16-16S	278	5
2023-24-24S	279	36
2027-8-8S	276	5
202702-12-10S	284	11

PART NUMBER	FIG.	ITEM
202702-6-4S	282	18
203003-12-4-12S	279	20
	282	26
203005 8-8S	276	30
203101-12-12S	279	11
	281	6
203102-4-4S	282	19
203102-8-8S	280	12
204KPP	4	9
206186	308	5
2062-16-8S	280	1
2062-8-6S	282	37
206209-6-6S	277	23
	289	7
	290	5
	291	9
	292	8
	293	5
	294	10
	295	2
206209-8-8S	276	2
2064E	321	2
2070-6-6S	277	8
	282	23
2071-4-4S	282	20
2093 20X8.0X0.8	43	3
21-S-187-1000	328	37
210-8317	246	4
210100 020000	282	42
	343	16
210104	279	26
	279	31
210112 050000	34	16
	182	15
	184	3
210292-4S	233	2
	279	19
210603 010000	186	4
210931 016000	195	15
	195	15
210931 020001	282	44
	343	15
210931 024002	195	16
210931 024003	195	12

PART NUMBER	FIG.	ITEM
210933 010000	317	7
210933 016000	195	6
210933 016001	182	12
210980 008000	165	19
210980 012000	37	7
	180	28
	254	21
210980 016000	182	13
	184	8
	195	9
210980 024000	195	7
	195	7
2124P.E.P.4.1.4.	317	11
213 3	55	22
213-41	255	26
213-89-00-00	268	6
213630	166	2
	166	12
214-1476	283	4
214-267	271	21
	272	11
	273	13
	274	19
	285	16
	287	22
21540-002	232	10
21774-001	232	16
218-5006	247	15
	284	14
218-5007	283	3
218-5008	244	15
	245	15
	285	31
	285	36
	285	40
	286	7
	287	8
218-5009	242	17
218-5010	283	11
218-5123	283	18
	286	1
218-5124	283	38
218-596	285	13
219-1	335	23

PART NUMBER	FIG.	ITEM
22000-001	232	4
22002	232	5
2208-C-3	310	21
2215-12-16S	279	10
22191	232	13
223783	301	10
225228	239	32
22617-12	238	3
	278	17
	279	18
	280	18
	281	3
	282	12
22617-16	280	2
22617-24	279	2
22617-4	282	7
22617-6	277	1
22617-8	218	39
	276	23
	278	16
	280	9
	282	38
23	331	8
	331	15
	344	31
23 008 31 141	178	4
23 022 33 111	178	11
23 132 33 101	178	6
23-00819-150	343	7
23-00831-052	332	20
	343	8
23-00990-006	228	3
23-09014-004	332	8
23-09114-006	319	35
23-09180-233	84	10
	182	5
	184	1
23-09215-006	278	6
23-09254-007	41	32
23-09256-003	76	13
23-09436-075	279	7
	282	35
23-09436-125	68	7
	254	15
	256	4
	257	4
23-09440-075	254	11
	276	17
23-09440-575	332	26
23-09464-075	217	10
23-09596-038	279	14

PART NUMBER	FIG.	ITEM
23-09596-038	282	32
23-09901-108	332	27
23-09990-006	224	1
23-10056-075	321	3
23-10199-060	254	17
23-10332-075	167	21
23-10340-108	319	15
23-10580-100	267	5
23-10608-062	321	1
23-10746-075	64	17
	319	5
23-10909-025	257	10
23-10909-038	40	27
23-11007-100	210	5
23-11053-000	216	7
	216	17
	216	20
	217	4
	217	9
23-11058-000	219	12
23-11160-088	319	13
23-11194-410	91	15
23-11218-008	224	1
	228	4
23-11218-038	279	17
	282	34
23-11377-006	332	14
23-11424-004	332	7
23-11424-005	41	18
	254	3
23-11424-021	40	17
23-11670-044	34	21
23-11670-050	34	15
	66	9
	67	2
	254	12
	276	16
23-11670-25	319	11
23-11671-050	319	16
23-1196-010	97	6
23-9396-001	84	5
23-9427-025	76	6
	218	43
23-9588-075	216	14
23-9691-450	186	6
23-9796-509	84	14
23CC3	326	43
230	255	1
230 336	37	9
230RP	331	7
	331	16
	344	32

PART NUMBER	FIG.	ITEM
230RPP	331	17
230104 031000	254	19
230104 050000	182	3
	184	6
230104 050001	66	10
	67	1
230478 010000	317	24
	318	29
230478 010001	40	14
	41	14
230481 044000	34	19
2309	277	25
2309114000	179	6
237-6010	242	10
	243	24
	245	24
	247	5
	283	15
	283	19
	284	16
	285	10
	286	2
	286	16
	287	18
237-6012	243	15
	283	27
	283	40
	284	12
238-5007	247	10
238-5238	300	21
238-6119	242	3
238-6124	242	5
240	77	5
240 005	37	11
24847	325	64
25 007 51 401	178	8
25-104	210	15
	255	7
25-105	333	20
25-106	255	31
	285	2
25-107	286	11
25-115	255	25
25-116	255	23
25-226	287	16
25003500-375B	310	40
2503-4-4	294	1
2503-6-6	289	13
	290	11
	291	15
	292	14
	293	11
	294	16
	295	9
251 059	56	1
253584	234	19
	237	19

PART NUMBER	FIG.	ITEM
253584	237	19
2536240-606	51	2
254000	236	6
	248	16
254005	248	5
254006	235	4
	236	21
254007	234	22
	237	22
254010	248	21
254027	233	31
254031	240	12
254047	239	4
254074	248	28
254188	239	42
254220	239	28
254234	233	6
254235	235	16
255000	234	40
255001	234	36
255007	236	9
	248	13
255008	234	39
	240	11
255013	235	21
	236	2
	248	19
255014	234	43
255020	234	29
	235	11
	236	17
	237	29
	248	23
255021	234	32
	235	8
	237	32
	248	26
255025	233	24
255034	236	5
	248	17
255035	236	4
	248	18
255040	233	9
255041	233	18
255042	233	19
255072	240	8
255076	240	18
255077	240	4
255096	233	10
	239	19
255145	233	12
255189	233	14
255196	239	5
255197	239	6
255229	239	30
255232	239	27
255251	240	17

PART NUMBER	FIG.	ITEM
255252	248	12
255257	235	3
255258	235	19
255259	235	18
255266	235	2
	236	10
255271	233	16
255310	236	15
2618	277	28
263.207.00K014	23	5
269CL-4-2	76	4
2699-4A	255	40
27-5A 12906	222	18
270-012	249	2
2740-W-23	331	6
28.51/604	120	35
28.51/605	120	1
28-2044	304	16
28-2048	300	12
28DU16	324	30
2842	249	11
	249	15
	249	23
2915051108	54	13
2916 710 609	26	7
2916011011	51	4
2916699086	54	12
2916710601	31	27
29607	282	25
3 130 558 000	106	3
3 139 900 644	231	8
3 28 990K	116	46
3 35 593 K	48	11
3.R1044	173	4
3.330-0456.1	146	17
3.3390-0129.1	147	15
3.3501-0200.1	22	3
	151	3
3.3511-1000.1	148	13
3.3513-0300.1	148	16
	149	5
3.3518-0013.2	145	15
3.3518-6500.2	147	18
3.3518-8000.2	146	33
3.3520-1001	149	27
	297	1
3.3521-09001.6	149	28
3.3529-4900.1	147	19
3.3556-1114.1	22	4
3.3556-1120.2	22	2
3.9305-0501.3	148	9
3-904N552-90	289	2
	292	4
	294	3
3-908	323	4
	328	33

PART NUMBER	FIG.	ITEM
3-908N104-9	277	17
	288	13
	290	2
	291	2
	293	2
3-908N552-90	271	24
	272	13
	273	14
	274	2
	278	3
3-910N552-90	275	9
	288	15
	289	12
	290	10
	291	14
	292	13
	293	10
	295	7
3B253870	313	1
3B257870	314	1
3B260870	316	1
3B262870	311	1
3B265870	315	1
3C-553500	309	12
3C-678242	310	47
3C258870	312	1
3R2437	242	16
3Y140510	365	2
300 012	37	15
300 625	37	16
300 789	72	1
300 830	37	12
300046	37	8
301 082	37	1
301 997 12 82	122	8
301 997 13 82	122	7
301-10011-1	342	5
301-10012-1	342	26
301-10013-1	342	23
302 267 00 08	120	6
304 995 10 20	163	16
304 995 16 20	320	10
304C8	275	8
	310	24
304401	365	15
30575	329	28
	330	11
307511	233	40
309 470 00 06	75	5
31 1861 999	18	1
310 268 00 35	119	5
311 080	73	4
3112	365	11
3118 543	1	16
301 082	37	1
301 997 12 82	122	8

PART NUMBER	FIG.	ITEM
312 015 05 80	8	4
312 016 00 61	3	8
312 031 05 33	4	8
312 050 02 31	10	16
312 053 01 27	9	1
312 055 03 21	10	1
312 142 02 12	16	4
312 142 04 12	16	9
312 142 13 01	16	2
312 188 11 35	2	9
312 188 14 79	12	16
312 188 15 79	12	2
312 200 01 22	49	4
312 283 10 52	116	47
312 283 11 52	116	47
312 283 12 52	116	47
312 300 21 25	38	7
312 301 10 50 38	15	
312 589 07 33 00	355	8
	370	8
312 725 00 79	204	11
312 725 01 79	204	11
312 990 02 51	10	5
312 993 00 05	10	20
312 993 00 25	10	21
312 993 07 01	10	8
312 993 26 01	12	12
312 995 24 20	156	25
313	80	25
313.0	80	34
314 035 02 14	4	11
314 140 00 38	16	7
314 151 06 12	53	3
314 267 01 25	119	4
314 268 00 05	120	5
314 991 05 40	82	19
314 997 01 81	99	6
315 990 08 01	132	8
	139	6
315 993 02 10	144	21
31500-372	246	10
31503-33	246	8
316 990 01 14	172	22
317	266	10
317 993 05 01	120	7
3183200073	192	14
319 267 00 50	119	3
319 292 00 82	20	15
	152	12
320 434 04 40	163	32
321 051 01 12	2	18
321 131 01 71	17	19

PART NUMBER	FIG.	ITEM
321 181 00 42	14	6
321 990 02 51	17	16
321 990 06 63	25	31
321 992 00 25	2	10
321-3056	228	9
321-3058	228	10
321-4481	228	6
321-6046	228	1
32102	256	9
	257	9
322 053 01 25	9	2
322 053 04 20	9	3
322 055 01 50	10	4
322 076 02 35	28	9
322 131 00 22	17	25
322 725 00 66	204	10
322 995 00 22	25	26
323 K0012	196	2
326 990 01 63	25	40
326 993 04 01	14	9
326854	93	3
327 184 02 80	15	23
330 540 02 41	50	10
33074	324	8
331567	133	11
	141	11
331753	133	1
	141	1
333 430/009/001	56	3
3342027051	61	8
334501	260	2
334506	261	5
334511	262	2
334526	275	1
335910	237	13
337 995 04 32	46	21
337027	259	7
337028	259	3
337035	94	1
337036	263	2
337045	266	13
338 293 00 53	23	11
338032	263	22
338040	266	15
338042	266	9
338336	263	11
338341	263	17
338344	270	23
338345	261	8
	270	26
338346	870	22

PART NUMBER	FIG.	ITEM
338347	261	6
338348	261	7
	270	24
338349	261	9
	270	25
338351	249	3
338353	277	21
338355	265	5
338361	263	27
338362	264	1
338363	264	2
340 326 01 82	193	6
340 420 01 29	149	25
340 420 05 29	148	35
340 420 06 29	148	31
340 420 08 29	148	25
340 420 10 29	148	30
340 420 12 29	148	21
340 420 13 29	21	14
	148	22
340 420 14 29	149	19
340 420 20 29	149	1
340 420 25 29	149	6
340 420 28 29	21	11
341634	259	1
341635	263	1
341636	266	1
341637	259	2
341640	266	2
341641	266	3
341646	260	1
341650	260	8
341654	260	7
341996	310	5
341997	310	33
343 430 10 10	121	21
	297	10
344 054 0005	10	19
344020	227	1
344648	266	4
344652	277	18
346 017 01 60	24	10
346 017 02 60	24	10
346 017 03 60	24	10
346 589 00 07 00	360	2
346 589 00 07 00	347	2
346 589 03 15 00	355	5
	370	5
346 997 01 30	15	5
346 997 04 45	3	10
347 586 00 67	KITS	

PART NUMBER	FIG.	ITEM
347 586 01 67	KITS	
35	258	10
	341	13
350028	249	30
350029	249	28
3503266-014	56	10
	57	17
	58	6
	320	3
351204	249	5
352 010 00 19	8	19
352 010 04 80	KITS	
352 010 10 23	2	12
352 010 16 21	3	3
352 010 21 80	KITS	
352 010 24 72	13	1
352 010 41 66	13	10
352 010 68 13	13	14
352 010 84 30	7	8
352 011 01 71	2	13
352 011 03 35	2	20
352 014 09 22	13	25
352 014 10 22	13	13
352 014 11 22	13	11
352 014 24 22	13	12
352 015 01 60	8	3
352 015 02 01	8	14
352 015 03 80	322	4
352 015 05 20	8	13
352 016 01 61	3	8
352 016 09 21	7	9
352 017 00 53	3	9
352 017 00 71	24	1
352 018 01 05	177	15
352 018 02 05	177	16
352 018 63 40	13	8
352 018 67 40	7	5
352 030 07 40	4	6
352 030 08 40	4	6
352 030 09 40	4	6
352 030 10 40	4	6
352 030 11 40	4	6
352 030 12 40	4	6
352 030 19 03	4	12
352 030 39 05	5	2
352 030 65 02	4	2
352 030 79 02	4	1
352 031 02 71	4	4
352 032 11 05	5	3
352 032 19 15	8	18
352 035 00 71	4	15

PART NUMBER	FIG.	ITEM
352 035 05 12	4	14
352 035 06 06	4	13
352 037 07 16	6	7
352 037 08 16	6	7
352 037 09 16	6	7
352 037 10 16	6	7
352 037 11 16	6	7
352 037 13 16	6	6
352 037 14 16	6	6
352 037 15 16	6	6
352 037 16 16	6	6
352 037 17 16	6	6
352 037 19 16	6	8
352 037 20 16	6	8
352 037 21 16	6	8
352 037 22 16	6	8
352 037 23 16	6	8
352 038 21 50	6	10
352 038 26 50	6	10
352 038 27 50	6	10
352 038 38 10	6	13
352 038 39 10	6	13
352 038 40 10	6	13
352 038 41 10	6	13
352 038 42 10	6	13
352 038 43 10	6	13
352 050 00 26	9	5
352 050 00 85	10	13
352 050 06 34	10	2
352 050 10 33	10	2
352 050 49 01	11	1
352 051 00 10	2	19
352 051 00 62	11	5
352 052 00 03	4	10
352 052 07 62	11	3
352 053 16 32	3	13
352 053 17 31	3	12
352 053 18 31	3	12
352 053 20 32	3	13
352 053 22 29	3	5
352 053 22 32	3	13
352 053 23 29	3	5
352 053 31 31	3	12
352 053 37 30	3	4
352 053 38 30	3	4
352 054 05 01	10	18
352 054 06 01	10	18
352 054 07 01	10	18
352 054 08 01	10	18
352 055 02 53	10	15

PART NUMBER	FIG.	ITEM
352 055 04 10	10	9
352 055 05 10	10	6
352 055 06 10	10	11
352 070 03 35	25	41
352 070 12 13	11	16
352 070 32 33	25	18
352 070 33 33	25	15
352 070 34 33	25	10
352 070 35 33	25	7
352 070 36 33	25	4
352 070 37 33	25	1
352 070 52 23	38	16
352 072 06 53	38	14
352 072 36 40	38	1
352 075 00 35	11	11
352 075 00 71	11	13
352 075 03 74	11	9
352 076 02 80	28	10
352 078 00 80	25	42
352 078 01 86	25	25
352 090 06 41	35	12
352 130 01 08	17	22
352 130 01 17	17	23
352 130 02 15	17	6
352 130 02 16	17	15
352 130 03 19	17	8
352 130 20 01	17	5
352 130 28 01	17	2
352 131 00 50	17	21
352 131 01 17	17	17
352 131 01 18	17	18
352 131 02 80	17	14
352 131 03 80	17	14
352 131 25 33	17	20
352 131 26 33	17	20
352 131 27 33	17	20
352 131 28 33	17	20
352 131 29 33	17	20
352 131 30 02	17	28
352 140 04 38	16	11
352 142 01 53	42	1
352 142 04 20	42	5
352 142 04 80	16	1
352 150 04 60	51	23
352 150 15 73	50	7
352 155 11 27	50	2
352 180 01 88	15	22
352 180 03 09	15	13
352 181 00 10	14	14
352 181 01 06	14	13

PART NUMBER	FIG.	ITEM
352 181 02 06	14	12
352 181 12 08	14	3
352 181 12 20	14	4
352 181 23 05	14	11
352 184 03 29	14	5
352 188 00 32	12	13
352 188 00 35	12	10
	72	4
352 200 26 04	KITS	
352 201 00 39	48	2
352 201 04 80	48	15
352 201 05 07	48	17
352 201 05 58	48	5
352 201 06 05	48	9
352 201 18 03	48	14
352 201 22 80	48	6
352 202 22 10	49	1
352 203 00 80	47	15
352 203 03 74	47	1
352 203 04 80	48	19
352 203 14 73	47	5
352 203 19 80	47	11
352 203 22 80	47	3
352 203 33 01	47	12
352 223 03 41	1	3
352 223 08 41	1	4
352 323 07 51	193	5
352 326 00 81	193	7
352 540 0041	82	24
352 589 00 21 00	349	8
	362	6
352 589 00 33 00	349	9
	362	7
352 589 00 43 00	353	4
	368	4
352 589 01 09 00	352	4
	367	4
352 589 01 31 00	354	8
	369	8
352 589 03 07 00	347	3
	360	3
352 589 07 15 00	349	2
	362	2
352 990 01 63	15	29
352 990 06 19	7	2
352 990 07 04	11	4
352 990 11 63	76	16
352 990 20 40	9	4
352 990 43 01	3	2
352 990 44 01	7	3
352 993 07 01	11	8
352 993 10 01	10	14
352 993 18 10	38	4
352 995 08 48	25	21

PART NUMBER	FIG.	ITEM
352 997 00 32	3	6
352 997 03 20	2	7
352 997 05 40	25	2
	25	5
	25	8
	25	11
	25	16
	25	19
352 997 07 30	14	10
352 997 13 71	25	39
352-130-02-20	KITS	
352-180-2851	14	18
352-200-17-46	47	14
353 010 05 80	KITS	
353 010 22 08	2	21
353 010 27 08	2	1
353 010 68 00	1	1
353 013 03 10	5	1
353 030 01 02	4	1
353 030 07 17	6	1
353 030 07 24	KITS	
353 030 11 17	6	1
353 030 12 17	6	1
353 030 14 17	6	1
353 030 15 17	6	1
353 030 48 17	6	1
353 200 00 01	48	18
353 200 37 01	48	1
354K450/990	172	1
355 589 00 33 00	347	8
	360	8
355343	233	34
	233	37
355503	239	16
355504	239	12
355506	239	38
355508	239	20
355509	239	23
355511	239	11
355910	234	13
355912	234	5
	237	5
355920	234	10
	237	10
355921	234	11
	237	11
355926	234	27
	237	27
355930	234	7
	237	7
355931	234	6
	237	6
355932	233	41
357 832 69 23	221	19

PART NUMBER	FIG.	ITEM
360 995 01 01	21	19
	40	16
	41	15
360 995 03 01	163	18
360 995 06 01	83	10
360 995 20 01	46	18
	177	9
	221	10
360.081 034 002	72	3
360020-1	95	3
	95	8
	108	14
362 037 00 20	6	3
362 050 00 04	11	12
362 070 00 13	11	7
362 070 00 45	11	6
362 180 00 79	KITS	
362 180 09 65	12	3
362 188 00 01	12	4
362 188 00 80	12	1
362 188 01 02	12	5
362 201 01 80	48	13
363 589 02 21 00	356	5
	371	5
3631	319	33
364 030 01 45	4	7
364 030 02 45	4	7
364 030 03 45	4	7
364 030 04 45	4	7
364 030 05 45	4	7
364 030 06 45	4	7
364 030 07 45	4	7
364 030 08 45	4	7
364 030 09 45	4	7
364 030 10 45	4	7
364 030 11 45	4	7
364 180 01 01	14	1
364 991 00 15	38	10
366 010 01 33	8	5
366 030 0245	4	7
366 030 21 20 30	6	9
366 030 21 20 40	6	9
366 030 21 20 50	6	9
366 030 21 20 60	6	9
366 030 21 20 70	6	9
366 031 01 07	4	5
366 038 04 71	6	12
366 050 00 27	9	6
366 589 00 21 05	356	2
	371	2
366 990 01 04	10	7
366 990 03 01	3	1
366 990 05 01	5	5
366 991 00 62	2	11

PART NUMBER	FIG.	ITEM
366-015-01-04	8	2
3739/01	105	1
376 987 01 27	BULK	38
376 987 01 27X50	161	19
0		
376 987 01 27X86	163	25
0		
376 987 01 27X92	163	26
0		
376 987 74 27	161	12
	BULK	40
376 987 74 27X35	164	10
0		
376 987 74 27X36	156	14
0		
376 987 74 27X85	163	27
0		
376 987 74 27X95	163	1
0		
376 987 74 27X960	163	28
380 540 21 81	90	10
	100	3
380 540 22 81	96	3
	100	8
380 545 00 26	90	14
	100	5
380 545 02 26	96	7
	100	10
380 546 03 35	90	11
	96	4
	100	7
	100	12
380 546 20 37	100	16
380E.56.0F	148	3
	149	21
3809900140	96	6
381 295 04 40	221	13
381 990 03 92	215	5
383 546 00 44	82	7
383 990 00 51	121	28
385 993 15 01	119	32
3861 D 10S NP630	154	18
	156	11
	163	22
	164	2
	167	12
3861 D 15L NP250	156	18
	166	23
3861 D 6S	121	15
	122	14
	124	3
	125	4
	154	7
	161	15

PART NUMBER	FIG.	ITEM
3861 D 6S	163	11
	163	15
3861 D 8L NP250	34	9
3861D 22L	177	22
3861D 6LL	122	31
3861DPR-4LL	122	5
387 260 00 86	113	27
387 589 01 15 00	348	10
	361	10
387 589 02 15 00	349	1
	362	1
387 992 00 25	122	16
389 260 00 62	122	3
3899	56	24
3903-4-4	289	4
	292	5
	294	6
39042-311	246	7
39042-313	246	14
39042-314	246	12
39042-324	246	18
39042-325	246	16
39042-326	246	15
39042-327	246	5
4-6 C5BXS	282	8
4-6694	229	27
4-8 070120CA	233	3
4A 35372	160	19
4A 83273	160	10
4B 66455	160	24
4B 66461	160	13
4B 67947	160	8
4B 67948	160	21
4B 68638	160	12
4B 68858	160	9
4B 72205	160	22
4B 77746	160	7
4B 77747	160	11
4B050850	313	2
4B050860	315	2
4B110820	314	2
4B166820	316	10
4B262870	311	2
4B4280	334	3
4C258870	312	2
4G253870	313	11
4G257870	314	13
4G258870	312	13
4G260870	316	2
4G262870	311	10
4G265870	315	6
4X5DIN6888	176	23
4Y140510	365	3
400 206 01X580	154	25
400206	BULK	36
400774	234	34
	237	34

PART NUMBER	FIG.	ITEM
400905	236	7
400908	233	25
	248	8
	340	9
400928	239	43
401 589 01 25 00	355	6
	370	6
401011	239	26
401014	239	14
401032	235	12
401033	233	26
	248	7
401034	239	35
401072	235	15
401248	235	22
	236	11
	248	10
401272	234	15
	237	15
401273	233	13
401286	240	13
401603	236	8
402455	239	18
4026345	219	10
402664	234	18
	237	18
402964	235	17
403 018 01 06	13	3
403 504 00 74	46	33
403 504 01 38	46	32
403 589 00 31 00	347	10
	360	10
403 991 50 25	173	2
403 995 00 44	13	7
403 997 00 32	13	17
403 997 06 20	2	17
	142	13
404 265 00 36	120	27
404 290 04 33	152	5
404 291 00 86	152	7
404 330 00 07	191	2
404 427 01 99	144	31
404 504 00 12	45	18
404 504 00 13	45	17
404 504 02 12	45	14
404 541 00 84	80	40
404 541 01 84	80	40
404 541 02 84	80	40
404 542 16 40	71	6
404 987 18 43	45	5
404 991 00 25	45	3
404 995 13 01	45	4
404 995 14 01	45	19
	46	23
404 997 02 45	123	6
404070	239	41
404110	BULK	2

PART NUMBER	FIG.	ITEM
404463	233	21
	248	4
	250	2
405393	233	4
	233	33
	233	38
	234	14
	234	41
	237	14
	248	3
4055-525	56	13
405688	233	42
	234	30
	235	10
	236	18
	237	30
	239	21
	240	9
	248	24
405816	233	15
405863	239	39
405895	233	28
	234	23
	235	5
	236	13
	237	23
	248	30
	250	6
405942	239	44
	240	16
405990	234	9
	237	9
405998	240	2
406 090 04 29	33	8
406 094 01 42	33	4
406 240 01 01	1	21
406 241 00 31	1	24
406 241 00 53	1	6
406 241 00 74	1	26
406 241 01 31	1	20
406 241 01 35	1	11
406 241 02 15	1	8
406 241 03 15	1	17
406 242 00 52	1	19
406 252 02 52	18	5
406 254 00 07	19	5
406 254 01 08	19	3
406 254 01 40	23	3
406 254 09 10	19	11
406 254 09 16	116	44
406 257 00 84	23	4
406 260 02 21	111	11
406 260 03 38	123	19
406 260 09 17	117	26

PART NUMBER	FIG.	ITEM
406 260 14 30	120	22
406 260 16 14	116	41
406 260 24 12	112	2
406 260 25 12	111	27
406 260 46 39	120	8
406 260 48 39	123	5
406 260 49 39	123	14
406 260 50 39	123	23
406 260 52 39	120	36
406 260 53 14	119	1
406 260 61 02	110	1
406 260 63 20	116	1
406 261 00 21	111	20
406 261 01 60	111	24
406 261 01 73	111	4
406 261 03 80	111	10
406 261 04 80	111	19
406 261 35 01	111	30
406 262 01 51	117	12
406 262 18 02	116	18
406 263 00 72	114	1
406 263 11 62	117	14
406 263 13 62	114	11
406 263 14 62	114	34
406 264 01 30	114	38
406 264 01 73	118	17
406 264 02 12	116	26
406 264 02 72	113	1
406 264 05 73	118	16
406 264 06 51	113	15
406 264 07 44	116	30
406 264 08 30	115	13
406 264 08 62	115	17
406 264 10 73	115	18
406 264 12 26	123	7
406 264 14 53	113	12
406 264 15 18	113	10
406 264 15 52	116	31
406 264 19 44	117	31
406 264 21 50	112	4
406 264 24 50	115	4
406 264 26 52	116	39
406 264 27 24	123	25
406 264 27 52	116	39
406 264 29 18	113	25
406 264 31 18	115	8
406 264 37 52	116	39
406 264 38 52	116	39
406 264 39 44	113	20
406 264 39 52	116	39
406 264 43 44	112	6
406 264 53 20	113	14
406 264 77 20	116	28
406 264 78 20	116	20

PART NUMBER	FIG.	ITEM
406 264 82 20	115	16
406 264 84 20	117	15
406 265 01 47	111	26
406 265 02 19	119	18
406 265 02 39	122	20
406 265 02 47	111	33
406 265 03 39	122	22
406 265 04 07	119	17
406 265 05 47	119	20
406 265 16 05	119	27
406 267 01 03	119	15
406 290 02 18	152	8
406 290 04 01	20	11
406 290 06 33	20	2
406 290 07 39	20	17
406 290 09 39	152	14
406 300 06 15	39	28
406 300 07 15	39	6
406 300 07 36	39	32
406 300 09 04	39	23
406 301 00 20	39	16
406 301 03 50	39	18
406 302 01 14	39	9
406 302 02 53	39	20
406 302 03 62	39	2
406 302 05 54	39	30
406 310 00 57	193	18
406 322 00 44	188	10
406 325 00 53	190	4
406 325 03 26	188	6
406 326 00 50	193	11
406 326 01 69	193	13
406 330 01 74	148	17
406 335 04 46	126	26
406 335 21 52	133	9
	141	9
406 335 22 52	133	9
	141	9
406 335 23 52	133	9
	141	9
406 335 24 52	133	9
	141	9
406 335 45 52	133	9
	141	9
406 337 07 52	126	29
	127	12
406 337 08 52	126	29
	127	12
406 337 09 52	126	29
	127	12
406 337 10 52	126	29
	127	12
406 337 11 52	126	29
	127	12

PART NUMBER	FIG.	ITEM
406 337 12 52	126	29
	127	12
406 337 13 52	126	29
	127	12
406 337 14 52	126	29
	127	12
406 337 15 51	134	7
	142	9
406 337 16 52	133	15
	141	15
406 337 17 52	133	15
	141	15
406 337 18 52	133	15
	141	15
406 337 19 52	133	15
	141	15
406 337 20 52	133	15
	141	15
406 337 28 52	133	15
	141	15
406 350 21 31	127	1
406 353 05 15	134	10
	142	12
406 401 11 01	168	1
406 420 01 37	161	24
406 420 01 77	143	8
406 420 13 49	148	6
406 420 22 86	144	17
406 420 26 86	149	7
406 420 46 45	148	18
406 426 39 40	21	15
406 427 00 60	143	3
406 427 01 93	143	5
406 427 02 42	143	23
406 427 03 81	143	21
406 427 04 10	144	22
406 427 04 81	143	14
406 427 07 53	143	22
406 427 17 74	143	27
406 428 00 40	148	32
406 429 00 47	149	18
406 460 01 01	174	1
406 460 09 57	172	6
406 462 00 23	172	15
406 462 03 97	172	23
406 463 04 01	173	1
406 464 02 53	173	13
406 466 00 15	176	33
406 476 00 36	177	32
406 490 01 01	43	6
406 490 09 19	43	11
406 492 00 19	43	7
406 492 01 43	43	2
406 492 01 80	43	19

PART NUMBER	FIG.	ITEM
406 492 01 83	43	15
406 492 02 83	43	17
406 492 03 83	43	14
406 492 04 83	43	13
406 500 05 74	178	16
406 500 06 74	46	9
406 500 07 27	46	13
406 500 07 49	46	7
406 500 08 72	46	22
406 504 07 38	46	31
406 520 01 01	33	16
406 540 15 30	81	2
406 540 16 30	82	33
406 540 19 31	81	3
406 540 20 31	82	1
406 542 08 40	320	13
406 546 00 37	82	18
406 547 00 20	83	6
406 550 00 64	177	7
406 550 19 40	178	17
406 550 25 58	177	28
406 550 37 40	20	20
406 550 42 40	176	31
406 550 44 40	194	1
406 551 60 40	229	25
406 552 01 79	229	28
406 580 00 55	178	15
406 580 01 46 00	345	12
	357	12
406 580 02 46 00	345	11
	357	11
406 580 03 46 00	345	13
	357	13
406 580 04 51 00	345	15
	357	15
406 589 00 21 00	347	9
	360	9
406 589 00 61 00	348	7
	361	7
406 589 01 07 01	347	4
	360	4
406 589 01 07 02	347	5
	360	5
406 589 01 59 00	348	6
	361	6
406 589 02 07 00	352	2
	367	2
406 589 02 61 00	348	8
	361	8
406 589 03 14 00	347	7
	360	7
406 589 03 43 00	356	6
	371	6
406 589 03 59 00	348	5
	361	5

PART NUMBER	FIG.	ITEM
406 589 04 14 00	352	5
	367	5
406 589 04 15 00	345	3
	357	3
406 589 04 31 00	353	2
	368	2
406 589 05 33 00	346	4
	358	4
406 589 06 33 00	347	11
	360	11
406 589 06 43 00	353	5
	368	5
406 589 06 63 00	355	1
	370	1
406 589 07 33 00	348	1
	361	1
406 589 08 43 00	348	3
	361	3
406 589 09 43 00	348	4
	361	4
406 589 11 43 00	353	7
	368	7
406 589 12 43 00	354	5
	369	5
406 589 13 43 00	353	6
	368	6
406 599 01 89	144	15
406 610 50 73	172	24
406 616 06 36	209	7
406 616 50 06	172	19
406 620 02 13	197	8
406 620 03 16	197	2
406 621 00 51	197	9
406 621 00 52	197	10
406 621 01 51	197	6
406 621 01 52	197	7
406 621 10 10	197	4
406 627 05 01	197	1
406 627 06 01	197	3
406 627 50 05	197	21
406 657 51 65	215	8
406 671 00 20	205	2
406 671 52 10	205	1
406 678 01 10	205	6
406 678 02 10	205	7
406 678 02 20	205	3
406 678 03 10	205	4
406 678 04 20	205	5
406 680 00 22	197	20
406 684 00 60	214	2
406 684 00 96	197	19
406 684 02 60	214	4
406 684 07 60	214	3
406 684 08 60	214	1
406 689 53 94	196	5

PART NUMBER	FIG.	ITEM
406 720 02 05	198	3
406 720 02 55	204	5
406 720 03 05	198	3
406 720 03 55	204	5
406 720 06 30	204	30
406 720 10 30	204	30
406 720 50 04	198	19
406 720 51 04	198	19
406 723 01 05	198	18
406 723 02 34	198	7
406 723 04 34	198	6
406 723 04 51	198	4
406 723 05 51	198	4
406 725 00 47	204	20
406 752 00 50	196	11
406 725 02 10	204	6
406 725 02 20	204	21
406 725 02 53	204	4
406 725 03 10	204	28
406 725 03 20	204	21
406 725 03 53	204	13
406 725 51 98	194	2
406 727 00 98	198	10
406 727 01 98	198	10
406 727 02 98	204	19
406 727 50 71	198	14
406 727 51 71	198	14
406 752 00 50	196	11
406 760 50 02	199	10
406 766 00 05	199	5
406 766 00 70	198	12
	215	1
406 766 00 71	199	18
406 766 01 02	199	4
406 766 01 05	199	6
406 766 01 71	199	12
406 766 50 06	199	3
406 766 5001	199	4
406 831 00 94	221	4
406 869 51 20	220	7
406 880 00 14	202	14
406 880 06 14	202	17
406 880 12 06	202	2
406 880 13 06	202	2
406 880 54 56	196	9
406 881 00 82	202	7
406 881 01 27	202	13
406 887 00 56	196	7
	211	18
	212	12
406 887 02 14	196	6
	211	17
	212	11

PART NUMBER	FIG.	ITEM
406 887 50 71	196	15
	211	23
	212	21
406 887 51 45	197	12
406 919 01 61	211	34
406 919 11 37	211	32
406 984 04 31	211	9
406 987 52 51	196	29
406 987 91 43	33	17
406 990 00 04	114	35
406 990 00 60	113	16
406 990 01 15	19	1
406 990 50 82	154	31
	156	23
	166	24
406 990 51 60	117	32
406 990 52 01	134	1
406 990 52 19	111	34
406 991 50 80	215	10
406 993 00 10	20	10
406 993 50 10	152	17
406 993 50 15	143	16
406 995 50 01	46	12
406 997 00 32	119	16
406 997 00 35	111	1
406 997 50 75	23	2
406 997 51 37	111	3
406 997 51 72	21	5
406 997 77 82	21	1
406 997 78 82	151	7
406072	234	37
406127	233	27
	234	24
	235	6
	236	14
	237	24
406226	239	22
4062610079	117	18
4063340152	134	12
	142	16
4063340252	134	12
	142	16
406460	233	44
406484	234	42
4065510376	172	18
4069875242	297	19
4069935110	39	3
407136	239	46
	240	14
407229	233	8
407583	240	15
408706	233	39
408846	234	16

PART NUMBER	FIG.	ITEM
408846	237	16
409031	243	16
	243	28
	244	16
	245	16
409156	239	45
41.5091-1479.3	146	24
41NE-126	326	46
410502	233	22
410506	239	9
410507	239	40
410513	234	38
	240	10
410514	235	14
410520	234	31
	235	9
	236	19
	237	31
	248	25
410526	239	31
410540	235	13
410561	235	20
	236	3
	248	20
411 003 506 2	17	12
411 015 502 2	17	13
411 264 02 11	111	8
411 504 00 76	45	15
411 987 02 39	196	26
411 997 04 82	129	3
41140-918	KITS	
41149-GAC	305	1
41149-103	305	5
41149-13	305	13
41149-305	305	4
41149-410	305	8
41274	95	2
	95	7
	108	15
413-716	210	14
414 584 71 34	223	1
416 310 00 57	193	8
416 317 02 53	193	19
416 320 05 89	193	15
416 326 00 65	193	9
416 326 01 69	193	3
416 330 00 03	171	1
416 330 00 66	129	1
416 330 03 39	133	12
	141	12
416 330 08 11	128	4
416 330 09 11	128	7
416 330 13 14	127	15
416 330 14 14	126	19
416 330 16 01	132	2

PART NUMBER	FIG.	ITEM
416 330 17 01	132	1
416 330 29 20	135	15
416 330 72 29	132	3
416 330 73 29	131	12
416 331 00 53	133	7
	141	7
416 331 04 05	134	14
	142	14
416 332 00 51	135	9
416 332 01 50	135	12
416 332 01 62	135	11
416 332 03 46	135	4
416 333 00 77	137	4
416 335 00 14	133	23
	141	21
416 335 00 15	133	20
	141	23
416 335 00 36	131	10
	139	10
416 335 00 62	133	19
	141	24
416 335 00 72	133	3
	141	3
416 335 02 50	132	4
	139	13
416 335 02 62	131	9
	139	11
416 335 03 46	148	29
416 335 03 62	131	8
	139	12
416 335 04 01	133	17
	141	17
416 335 04 20	133	21
	141	19
416 335 04 46	148	36
416 335 05 20	133	24
	141	22
416 336 05 10	134	5
416 337 00 62	133	22
	141	20
416 337 01 52	133	27
	141	27
416 337 01 73	133	5
	141	5
416 337 02 52	133	27
	141	27
416 337 03 52	133	27
	141	27
416 337 04 51	133	2
	141	2
416 337 04 52	131	3
	142	6
416 337 05 52	131	3
	142	6
416 337 06 52	131	3

PART NUMBER	FIG.	ITEM
416 337 06 52	142	6
416 337 10 06	126	28
	127	13
416 337 10 52	135	6
416 337 11 52	135	6
416 337 14 52	133	27
	141	27
416 337 15 52	133	27
	141	27
416 337 18 52	133	27
	141	27
416 337 21 10	126	9
416 337 22 10	127	4
416 338 01 05	135	16
416 338 14 08	135	1
416 350 02 29	137	3
416 350 03 29	137	6
416 350 05 35	169	1
416 351 01 45	148	4
416 353 01 11	133	8
	141	8
416 357 00 91	144	5
	144	7
416 357 06 01	139	8
416 357 07 01	39	2
416 401 00 71	169	2
416 420 00 89	144	10
416 420 16 28	161	8
416 421 04 12	145	18
	146	38
416 421 07 94	101	8
416 423 00 94	136	8
416 428 00 35	148	28
416 432 07 40	148	10
416 500 00 07	46	24
416 500 00 16	45	6
416 500 00 31	45	2
416 501 02 56	46	17
416 540 00 39	81	1
416 580 08 88	179	14
416 580 09 88	179	15
416 580 10 88	345	8
	357	8
416 580 11 88	345	9
	357	9
416 611 50 30	207	11
416 830 03 00	222	2
416 836 00 98	221	6
416 881 00 05	202	10
416 881 01 05	202	10
416 891 02 53	208	4
416 910 00 31	212	5
416 910 00 33	211	2
	212	2
416 910 00 46	212	14
416 910 00 47	211	3

PART NUMBER	FIG.	ITEM
416 910 00 47	212	3
416 910 01 31	211	11
416 910 51 01	211	1
416 910 51 03	212	1
416 981 02 31	135	7
416 981 03 31	135	10
416 987 00 65	45	13
416 987 53 39	196	17
416 987 58 43	126	5
	127	24
416 990 52 01	193	10
416 990 52 19	133	16
	141	16
416 990 53 19	135	17
416 990 55 19	145	3
	146	40
416 993 51 01	131	11
	139	9
416 995 50 44	129	2
417 262 00 05	117	7
417 262 01 37	114	16
417 262 04 37	114	5
	116	4
	117	2
417 262 06 37	114	25
417 263 00 23	114	4
	117	3
417 263 00 66	117	23
417 263 01 23	114	18
417 263 03 23	116	5
417 263 04 23	114	27
417 267 01 42	117	22
417-6X10	10	12
41706064	336	1
41706065	340	1
41707454	337	1
41707473	339	1
41707476	338	1
4172530137	19	12
4179970041	132	5
	139	14
418 260 0119	116	7
419 000 74 58	345	1
419 000 75 58	347	1
419 000 76 58	352	1
419 000 81 58	357	1
419 000 82 58	359	1
419 000 83 58	360	1
419 000 84 58	363	1
419 000 85 58	365	1
419 000 86 58	367	1
419 181 70 51	319	2
419 181 71 51	319	3
419 252 00 13	19	7
419 252 00 52	23	10

PART NUMBER	FIG.	ITEM
419 260 00 05	112	1
419 291 00 72	71	3
419 300 00 25	39	29
419 300 01 25	39	15
419 301 00 41	39	4
419 310 02 01	179	4
419 310 71 46	179	7
419 310 72 47	267	3
419 310 73 47	267	2
419 310 74 47	267	1
419 320 08 35	192	12
419 320 09 35	192	17
419 321 00 04	187	5
419 322 01 09	188	2
419 323 00 16	192	10
419 323 00 63	192	6
419 323 00 65	192	9
419 323 01 44	187	6
419 323 11 25	192	3
419 323 12 25	192	8
419 324 00 04	188	3
419 324 00 06	188	5
419 325 00 15	188	9
419 325 02 26	187	3
419 325 04 26	188	4
419 326 00 81	192	5
419 327 01 82	297	14
419 327 02 82	296	1
	297	15
419 330 00 12	KITS	
419 330 01 99	130	1
419 330 06 29	132	3
	137	7
419 331 00 59	135	8
419 350 00 99	138	1
419 350 02 19	140	5
419 350 04 19	140	2
419 400 71 23	186	3
419 400 71 45	186	5
419 400 74 23	186	7
419 420 00 86	153	6
419 420 00 88	143	13
419 420 01 28	148	12
419 420 01 86	153	2
419 420 08 85	144	6
419 420 09 85	144	4
419 420 21 45	161	1
419 420 23 45	161	26
419 421 00 28	144	13
419 421 01 98	145	5
419 421 06 98	145	5
419 421 09 98	145	5
419 426 01 40	153	5
419 426 01 76	121	27
419 426 02 76	121	26

PART NUMBER	FIG.	ITEM
419 426 03 76	149	13
419 426 04 40	156	27
419 426 05 40	156	21
419 426 08 40	156	3
419 429 70 53	185	12
419 429 71 30	166	3
419 429 71 40	165	17
419 429 71 44	165	31
419 429 73 40	166	10
419 429 74 40	166	32
419 430 7181	167	1
419 431 72 16	234	2
419 460 00 31	172	7
419 470 00 81	34	11
419 470 70 42	34	20
419 470 72 01	34	25
419 476 00 25	34	7
419 492 71 04	44	7
419 520 00 31	179	10
419 520 00 82	194	6
419 520 01 31	179	1
419 520 70 31	182	6
419 524 00 33	194	3
419 527 00 61	33	10
419 527 01 61	33	14
419 540 00 05	102	1
419 540 00 21	80	16
419 540 00 22	200	1
419 540 00 37	100	1
419 540 00 40	61	5
419 540 00 51	80	41
419 540 01 14	80	8
419 540 01 37	85	1
419 540 01 51	80	19
419 540 01 73	60	2
419 540 02 37	88	1
419 540 03 37	107	1
419 540 03 73	56	32
419 540 04 37	90	1
419 540 05 37	89	1
419 540 05 73	55	5
419 540 06 73	58	3
419 540 07 37	106	1
419 540 08 37	106	1
419 540 13 37	99	1
419 540 16 37	98	1
419 540 17 37	96	1
419 540 18 37	97	1
419 540 70 09	108	1
419 540 70 27	107	9
419 540 70 38	95	6
	95	6
419 540 70 73	68	6
419 540 70 77	63	29
419 540 70 80	63	24

PART NUMBER	FIG.	ITEM
419 540 70 82	62	2
419 540 71 09	87	1
419 540 71 36	91	4
419 540 71 38	95	1
	95	1
419 540 71 54	66	1
	67	3
419 540 71 73	68	5
419 540 71 80	68	1
419 540 72 36	319	9
419 540 72 38	76	12
419 540 72 54	64	1
419 540 72 73	63	23
419 540 73 36	319	12
419 540 73 38	76	11
419 540 74 36	93	1
419 540 75 36	92	1
419 540 80 38	63	30
419 541 00 03	80	10
419 541 00 40	80	13
419 542 00 17	75	3
419 542 00 39	82	5
419 542 09 40	74	5
419 542 70 39	321	4
419 544 72 38	63	26
419 544 72 84	64	15
419 544 73 01	64	2
419 545 01 00	60	10
419 545 02 00	60	10
419 545 02 40	57	21
419 545 09 40	58	12
419 545 70 22	56	27
419 545 70 28	63	36
	64	12
	66	2
	67	4
	84	1
419 545 70 45	63	31
	64	9
	84	12
	86	6
	87	10
	88	6
	108	6
419 545 71 45	63	34
	64	14
	66	4
	67	6
	84	3
419 545 73 26	63	33
	64	11
	84	13
	86	8

PART NUMBER	FIG.	ITEM
419 545 73 26	87	12
	88	8
	108	8
419 545 73 45	108	10
419 545 74 45	87	16
	108	4
419 545 75 45	63	32
	64	10
	84	11
	86	7
	87	11
	88	7
	108	7
419 545 76 45	95	10
419 546 70 31X12.5	91	6
419 546 71 31X26.2	91	7
419 550 02 39	200	5
419 550 70 25	182	1
	184	5
419 550 70 39	332	23
	343	5
419 550 70 40	37	5
419 550 70 45	317	18
419 550 70 59	276	7
419 550 70 60	279	5
419 550 70 75	317	3
	318	3
419 550 70 80	318	1
419 550 71 21	332	22
419 550 71 40	254	22
419 550 71 45	318	22
419 550 71 59	276	6
419 550 71 60	280	16
419 550 71 80	318	6
419 550 71 84	319	4
419 550 72 13	254	4
419 550 72 21	40	19
419 550 72 40	254	8
419 550 72 59	276	24
419 550 72 80	317	1
419 550 73 13	254	6
419 550 73 45	319	6
419 550 73 59	276	25
419 550 73 75.	332	18
419 550 73 80	317	6
419 550 74 13	256	3
	257	3
419 550 74 21	41	16
419 550 75 13	332	15
419 550 75 60	238	1
419 550 76 13	256	6
	257	6
419 550 76 21	343	4

PART NUMBER	FIG.	ITEM
419 550 76 40	332	22
419 550 76 60	238	9
419 550 77 13	181	7
419 550 77 21	282	43
419 550 77 40.	332	18
419 550 78 13	181	1
419 550 79 13	257	13
419 550 96 59	279	22
419 550 97 59	281	7
419 550 98 59	281	2
419 550 99 59	281	1
419 551 00 40	111	13
419 551 01 40	200	9
419 551 02 40	200	4
419 551 06 40	296	23
419 551 70 05	317	2
	318	2
419 551 70 24	317	23
	318	28
419 551 70 51	181	5
419 551 70 84	332	4
419 551 70 87	254	20
419 551 70 90	318	21
419 551 70 93	332	21
	343	13
419 551 71 32	218	36
419 551 71 87	256	8
	257	8
419 551 71 90	317	19
419 551 73 40	332	12
	343	18
419 551 73 74	332	19
419 551 75 51	181	8
419 551 76 43	332	29
419 551 76 51	181	3
419 551 76 55	332	28
419 553 02 82	296	29
419 553 03 82	296	8
419 553 04 82	296	14
419 553 70 02	239	3
419 553 70 03	317	4
	318	4
419 553 70 28	254	2
419 553 70 38	256	7
	257	7
419 553 70 72	40	33
419 553 71 12	256	2
	257	2
419 553 71 28	254	5
419 553 71 38	256	5
	257	5
419 553 71 40	276	15
419 553 71 68	278	18
419 553 71 72	40	32

PART NUMBER	FIG.	ITEM
419 553 72 05	41	27
419 553 72 13	254	16
419 553 72 28	40	31
419 553 72 72	41	28
419 553 73 07	40	6
	41	41
419 553 73 28	41	31
419 553 73 65	319	19
419 553 74 13	254	14
419 553 76 40	278	11
419 553 76 68	343	12
419 553 77 40	276	8
419 553 78 40	282	14
419 553 79 40	282	3
419 553 81 40	40	12
419 553 85 40	276	20
419 553 92 40	279	13
419 553 94 40	279	34
419 553 7105	40	34
419 555 00 30	296	13
419 560 72 26	218	1
419 580 05 51 00	345	7
	357	7
419 580 70 05	180	8
419 580 70 15	225	6
	KITS	
419 580 70 18	346	8
	358	9
	359	2
419 580 70 20	216	19
419 580 71 05	216	5
419 580 71 20	216	15
419 580 71 90	216	11
419 580 72 15	KITS	
419 580 73 20	217	6
419 580 75 05	217	2
419 580 77 05	217	1
419 584 70 01	223	7
419 584 70 02	223	15
419 584 70 20	223	8
419 584 70 34	223	5
419 584 70 36	223	19
419 584 70 38	223	11
419 584 70 45	223	14
419 584 70 82	223	16
419 584 71 38	223	13
419 584 71 82	225	3
419 584 72 01	223	7
419 584 72 02	223	15
419 584 72 22	223	6
419 584 72 34	223	17
419 584 72 38	223	2
419 584 72 82	224	1
419 584 73 20	223	8

PART NUMBER	FIG.	ITEM
419 584 73 21	225	7
419 584 73 38	223	3
419 584 74 20	228	5
419 584 74 21	225	5
419 584 74 38	223	18
419 584 75 21	223	12
419 584 75 38	223	10
419 584 76 21	225	9
419 584 76 38	224	4
419 584 77 21	225	8
419 584 77 82	224	10
419 584 78 38	223	4
419 584 82 21	223	12
419 584 83 21	225	5
419 585 70 41	216	6
419 585 70 43	216	26
419 585 70 44	216	27
	217	13
419 585 71 20	216	16
419 585 71 40	216	9
	217	8
419 585 71 43	216	3
419 585 74 39	216	18
	216	21
	217	3
419 589 70 32	345	19
	357	19
419 589 70 41	345	10
	357	10
419 590 70 39	195	3
419 590 70 69	195	13
419 590 72 39	195	3
419 590 72 69	195	13
419 590 73 40	195	8
419 590 74 40	195	14
419 590 75 40	195	8
419 590 77 40	195	14
419 600 00 14	33	9
419 600 01 05	196	1
419 600 74 43	182	4
419 600 9743	184	2
419 602 70 33	201	6
419 610 70 46	183	1
419 610 71 54	180	10
419 610 72 54	180	1
419 610 75 03	180	14
419 610 76 03	180	15
419 614 70 15	180	30
419 615 70 15	180	24
419 615 70 34	305	16
419 615 70 54	180	19
419 615 71 15	180	23
419 615 71 34	307	1
419 590 77 40	195	14
419 600 00 14	33	9

PART NUMBER	FIG.	ITEM
419 615 72 15	180	21
419 616 00 14	56	20
419 619 72 14	41	11
419 620 00 09	197	11
419 620 01 09	197	11
419 640 70 71	254	23
419 650 01 29	215	7
419 650 70 02	195	1
419 680 00 03	209	3
419 680 71 08	62	1
419 683 01 15	209	1
419 695 00 25	215	6
419 720 00 01	198	1
419 720 01 01	198	1
419 727 00 30	204	29
419 727 01 30	204	29
419 810 70 16	219	1
419 811 70 14	219	9
419 615 72 15	180	21
419 616 00 14	56	20
419 619 72 14	41	11
419 620 00 09	197	11
419 620 01 09	197	11
419 640 70 71	254	23
419 650 01 29	215	7
419 650 70 02	195	1
419 680 00 03	209	3
419 680 71 08	62	1
419 683 01 15	209	1
419 695 00 25	215	6
419 720 00 01	198	1
419 720 01 01	198	1
419 727 00 30	204	29
419 811 70 41	219	2
419 820 00 11	220	37
419 820 70 18	64	16
419 820 71 18	64	16
419 820 72 18	63	3
419 820 74 18	63	3
419 820 76 18	64	20
419 826 00 65	63	4
419 832 00 17	221	12
419 832 01 17	221	20
419 832 01 23	221	17
419 836 00 98	222	1
419 882 70 04	203	3
419 985 70 70	76	1
419 987 00 43	46	1
419 987 01 43	46	25
419 987 02 43	46	27
419 987 73 60	34	32
419 987 74 60	34	24
419 990 00 63	296	12
419 990 00 70	296	5
419 990 70 40	63	35

PART NUMBER	FIG.	ITEM
419 990 70 40	64	13
	66	3
	67	5
	84	2
	88	13
419 992 70 05	195	17
419 992 71 05	195	11
419 992 72 05	195	10
419 995 70 25	282	30
419 995 70 48	282	29
419 997 00 48	123	17
419 997 00 81	88	5
419 997 01 82	46	5
419 997 02 82	46	30
419 997 03 82	46	29
419 997 05 82	46	34
4194210798	145	5
4194260050	149	11
4194270074	144	23
4195410084	80	22
4195457014	257	11
4195517674	343	9
4195580	339	9
4199970081	63	11
42.2411-4400.1	146	16
42.2412-2600.1	146	27
42.243-3000.0	146	19
421 240 02051	127	7
421 240 02053	126	11
	127	7
421 240 02054	126	11
	127	7
421 240 02055	126	11
	127	7
421 240 02056	127	7
421 292 00 76	21	3
421 292 01 97	147	25
421 295 00 40	148	38
421 420 17 26	122	39
	163	8
	163	12
421 423 00 28	149	12
421 429 20 40	83	9
421 432 09 15	153	9
421 432 10 15	153	13
421 620 03 13	197	5
421 750 08 02	196	27
421 752 01 75	196	25
421 752 50 14	196	23
421 826 00 94	198	15
421 831 01 05	221	3
421 831 50 25	221	1
421 880 01 14	202	3
421 910 00 20	212	19
421 910 00 61	211	5

PART NUMBER	FIG.	ITEM
421 910 02 20	211	25
421 910 02 24	211	12
421 910 06 20	211	24
421 910 50 20	211	30
421 911 03 11	212	6
421 918 00 37	211	10
421 918 00 60	211	20
421 987 50 30	81	6
	82	35
421 990 54 63	161	4
421 990 55 63	161	25
	163	29
42241-3	92	4
424 000	37 13	
424 336 00 10	142	7
424 337 00 51	142	4
424 428 00 73	148	27
424 589 00 15 00	345	4
	357	4
424 589 01 43 00	346	3
	358	3
424 990 00 40	136	10
4246-0410	41	26
425 264 00 50	113	26
425 265 01 47	119	31
425 268 02 42	121	29
425 301 00 11	39	21
425 301 00 85	39	10
425 302 01 62	39	11
425 432 00 50	179	3
425 476 07 36	122	21
425 541 03 44	80	27
425 542 04 40	149	24
425 589 00 21 00	353	1
	368	1
425 589 00 31 00	353	3
	368	3
425 993 01 10	39	19
425 997 02 81	81	7
425-118	333	23
42565-3	85	3
	87	13
	88	3
	89	4
	90	6
	103	10
	104	4
	105	10
	107	5
	108	12
	231	3
426 830 00 54	221	5
42660-2	92	7
43.1102-3036.0	146	25
43W6335-40	32	3

PART NUMBER	FIG.	ITEM
430-006	280	21
4327 104IN	343	1
4327-68IN-30024-1-1	332	9
434 208 050 0	161	5
434 601 154 0	154	27
435 330 00 84	129	7
435 331 00 84	124	2
	125	5
	131	24
	139	3
435 337 01 51	131	5
435 350 00 40	KITS	
	KITS	
435 351 01 03	131	6
	140	3
435 540 01 42	80	24
435 540 02 82	80	39
435 540 03 23	80	30
435 540 04 31	82	15
435 540 05 09	101	1
435 541 01 52	80	33
435 541 02 25	80	6
435 541 05 11	80	32
435 541 05 42	80	1
435 541 06 42	80	9
435 581 00 02	196	28
435 584 01 15	223	9
435 589 01 35 00	349	10
	362	8
440 261 00 61	118	3
440 262 01 38	113	13
440 264 02 11	118	6
440 264 03 11	111	36
440 295 01 95	82	26
440 330 02 31	126	3
440 332 00 71	131	17
440 460 02 88	177	20
440 990 00 47	191	6
441 260 00 24	114	37
441 260 00 85	115	2
441 260 02 11	111	2
441 261 00 80	117	25
441 261 02 80	111	7
	113	22
441 262 00 21	113	4
441 262 00 34	117	8
441 262 00 39	116	33
441 262 00 93	114	6
	116	3
	117	1
441 262 01 39	116	34
441 262 02 53	117	24
441 262 02 74	113	5
441 262 14 05	116	24

PART NUMBER	FIG.	ITEM
441 263 00 11	114	19
441 263 00 36	114	17
441 263 00 50	114	14
441 263 00 53	114	2
441 263 00 62	114	13
441 263 00 73	116	43
441 263 01 12	114	15
441 263 01 36	114	3
441 263 01 50	114	10
441 263 02 13	114	7
441 263 02 36	114	26
441 263 03 50	116	19
441 264 00 25	118	10
441 264 00 53	114	9
441 264 01 18	116	14
441 264 02 46	116	6
441 264 02 52	116	17
441 264 04 44	113	17
441 264 06 53	116	13
441 264 10 53	116	9
441 264 32 20	116	12
441 264 39 20	114	24
441 264 46 20	114	31
441 264 47 20	114	29
441 265 00 19	119	21
441 265 00 43	123	27
441 265 00 49	123	9
	123	18
441 265 01 01	120	28
441 265 01 04	120	20
441 265 01 74	120	9
441 265 03 01	120	26
441 265 04 05	119	29
441 265 04 35	119	23
441 265 05 05	119	30
441 265 05 35	119	8
441 265 06 05	119	28
441 265 06 35	119	25
441 265 12 01	119	24
441 265 15 01	119	9
441 265 16 01	118	14
441 267 00 06	120	31
441 267 06 18	118	4
441 267 07 52	118	2
441 267 08 52	118	2
441 267 10 52	118	5
441 267 11 52	118	5
441 267 29 52	118	2
441 267 30 52	118	5
441 268 00 50	119	14
441 268 10 33	118	9
441 589 00 21 00	354	4
	369	4
441 589 00 33 00	354	3

PART NUMBER	FIG.	ITEM
441 589 00 33 00	369	3
441 589 06 43 00	348	9
	361	9
441 990 00 55	120	40
441 993 00 01	118	12
441 994 00 35	116	11
441 994 03 35	113	3
441MAM1	342	10
44140-60	305	6
442 302 01 54	39	31
442 987 11 43	BULK	21
442 987 11 43X50	177	18
0 MM		
442 997 01 81	88	22
	90	8
	107	8
443339	186	8
444024	332	17
	343	10
4502	66	6
	67	9
451 42 110	346	1
	358	1
45303	254	18
4536226-715	19	6
	39	22
4536226-745	52	1
4536226-751	45	8
	51	14
	80	3
	85	21
	117	20
	199	2
	322	2
4536226-752	50	9
	199	15
	204	15
	220	35
	222	20
	222	24
4536226-786	26	19
	33	1
	38	5
	39	26
	51	13
	58	9
	61	11
	76	5
	77	6
	80	4
	81	4
	82	8
	84	7
	85	22
	143	2

PART NUMBER	FIG.	ITEM
4536226-786	148	39
	196	13
	204	18
	211	16
	211	22
	211	26
	212	10
	212	16
	220	18
	220	28
	220	43
	220	47
	221	8
	276	27
	278	12
	279	15
	282	2
	282	27
	320	7
	332	3
	343	14
4536226-819	122	36
4536226-822	143	7
	148	37
	322	1
4536226-835	2	15
	58	2
	71	10
	121	24
	132	8
	139	5
	154	2
4536226-892	50	8
	63	10
	82	14
	85	27
	196	16
	220	36
4536226-895	45	20
	147	24
4536226-920	19	2
	20	9
	33	2
	38	2
	39	27
	61	10
	81	5
	82	25
	143	4
	172	13
	196	24
	199	14
	211	6
	211	15
	211	27

PART NUMBER	FIG.	ITEM
4536226-920	212	15
	220	27
	220	42
	221	7
	320	8
4537769-612	54	19
4537769-615	54	28
4537769-628	54	30
4537800-011	126	24
	127	20
4537800-032	7	7
4537800-115	12	11
	13	18
	21	6
	153	10
	176	21
	296	27
4537800-127	202	15
4537800-128	18	7
	20	4
	21	17
	23	8
	43	9
	50	5
	79	3
	83	8
	147	22
	148	34
	149	16
	152	15
	156	36
	172	10
	176	26
	194	8
	202	16
	207	9
	211	36
	212	23
	220	31
	229	20
4537800-129	20	3
	21	16
	63	25
	64	19
	149	23
	152	3
	176	25
	194	9
	207	10
	220	5
	332	11
	343	3
4537800-151	229	26
4537800-152	5	7
	229	29
4537800-153	1	12

PART NUMBER	FIG.	ITEM
4537800-157	26	14
4537800-158	KITS	
4537800-169	24	4
4537800-170	24	4
4537800-171	24	4
4537800-172	24	4
4537800-173	24	4
4537800-174	24	4
4537800-175	24	4
4537800-176	24	4
4537800-177	24	4
4537800-178	24	4
4537800-179	24	4
4537800-180	24	4
4537800-181	24	4
4537800-182	24	4
4537800-183	24	4
4537800-184	24	4
4537800-185	24	4
4537800-186	24	4
4537800-187	24	4
4537800-188	24	4
4537800-190	24	6
4537800-194	82	3
4537800-224	KITS	
4537800-238	13	4
4537800-245	23	9
	149	4
	166	4
	209	10
	219	5
	276	9
4537800-256	45	7
	56	31
	60	5
	63	28
	71	9
	80	28
	81	9
	117	19
	122	35
	196	14
	197	13
	212	7
	212	18
4537800-276	35	13
4537800-316	14	19
4537800-321	165	23
4537800-368	117	21
4537800-674	13	5
	79	8
4537800-679	197	18
	222	4
4537800-696	25	36
	129	5
4537800-711	28	16

PART NUMBER	FIG.	ITEM
4537800-712	1	10
	43	1
	45	16
	74	8
	80	15
	153	1
	156	31
	187	1
	193	14
	208	3
4537800-714	192	1
4537800-767	2	8
4537800-780	37	4
	39	13
	182	7
	186	2
	192	18
	203	4
	208	2
	239	2
	332	24
4537800-783	38	3
	45	9
	80	31
	82	9
	144	2
	221	18
	320	9
4537800-786	122	28
	202	12
	297	5
4537800-791	42	4
	149	17
	156	37
	172	11
	212	24
	220	30
4537800-793	3	7
4538741-112	121	2
	174	6
4538742-813	147	23
4579	64	3
45903	41	34
462 007 003 2	KITS	
462 007 015 2	155	2
462 007 263 4	155	15
462 007 264 4	155	11
462 007 388 4	155	7
462 007 500 2	155	16
462 007 573 4	155	3
462 007 600 2	155	18
462 903 628 4	155	19
468 402 001 2	KITS	
468 403 050 4	150	17
468 403 261 4	150	16
4680	234	21

PART NUMBER	FIG.	ITEM
4680	237	21
47-02188-001X325 0	216	13
471 45	117	10
	174	27
471-25	116	40
471-50	115	10
472 100	113	24
472 37	175	11
472 42	176	2
472 60	174	24
472-16	17	26
472-75	116	23
472-90	115	12
475 010 017 0	121	5
48-00100-010	BULK	41
48-00100-010X1.0	41	9
48-00100-010X130 0	40	1
	161	17
	165	9
48-00100-010X170 0	41	1
48-00100-010X8.0	41	24
48-00101-010X510	165	7
48-00101-20	BULK	42
48-00101-020X172 5	166	13
48-00101-020X205 0	166	29
48-00102-003	BULK	5
48-00102-003X18. 49	91	13
48-00102-004	BULK	10
48-00102-004X6.0	86	3
48-00102-004X8.5	86	2
48-00102-005	BULK	6
48-00102-005X20.49	91	5
48-00102-007	BULK	7
48-00102-007X11.48	91	10
48-00102-009	BULK	9
48-00102-009X170 0	166	14
48-00102-009X202 5	166	26
48-00102-013	BULK	8
48-00102-013X1.4 8	91	19
48-01158-003	216	10
48-02188-001	BULK	27
48-02188-001X196 0	217	5
48-02217-025	BULK	3
48-02217-025X10.	92	9
48-02223-160	BULK	45
48-02223-160X0.5	95	4
48-02223-160X1.0	95	9

PART NUMBER	FIG.	ITEM
48-02223-160X32.40	92	6
48-02223-160X9.5	86	4
48-02223-169X9.5	86	5
48-02461-012	BULK	26
48-02461-012X0.13	93	2
48-02461-012X1.64	91	8
48-02461-025X0.131	92	3
48-02461-050X0.49	91	11
48-02461-100X0.49	91	18
4800	63	5
4862	265	1
4880	263	19
490069	239	29
490308	233	28
	234	20
	235	7
	236	12
	237	20
	248	31
	250	7
	252	4
49049-1251	332	10
	343	2
490963	233	20
490975	233	43
491795	234	33
	237	33
492-11050	241	3
	287	2
492-11062	329	20
493127	239	8
493742	239	15
493743	239	17
493779	239	13
493782	240	3
493783	240	5
493785	233	17
493792	240	6
493850	233	11
4941	365	13
494138	234	4
	237	4
494142	234	12
	237	12
494151	234	17
	237	17

PART NUMBER	FIG.	ITEM
494155	234	26
	237	26
494156	234	25
	237	25
494165	234	3
4985	275	7
5-329	328	9
5K 939 A	56	6
	58	8
5V151830	342	17
50 090.2	299	16
50 6174.05.02	123	2
50 694.2	229	3
50 864.2	229	18
5000110-10	92	10
50047-06	59	6
50066 W/81270-508	59	4
5030-L3131	307	7
5030-L3132	305	26
504FF	145	19
	146	41
504095-8S	276	1
5138-218	305	22
5138-232	307	3
5145-218-A	305	21
5145-232-A	307	2
5160-L3131	307	14
5160-L3132	305	20
5160-175 ZD	180	22
5160-50ZD	180	18
51703296	288	5
51703591	289	16
51703659	289	5
51703692	291	4
51703787	294	7
51704280	294	4
51704311	288	10
51704461	295	8
51705733	294	8
51706235	295	1
51706236	290	4
51706237	293	4
51707471	339	13
51707635	294	19
51707636	292	1
51707637	291	18
51707638	288	17
51708924	291	8
51708925	292	17
51708942	86	1

PART NUMBER	FIG.	ITEM
51709386	267	4
5192-L3131	307	5
5192-L3132	305	28
52070635	340	30
525.545	KITS	
52704340	338	7
52704341	338	3
52704342	337	4
52704745	258	14
	341	10
52705407	258	5
52705618	336	27
52705619	336	28
52706035	342	1
52706039	336	20
52706059	336	9
52706417	340	31
52706419	340	34
52706420	340	35
52707453	337	9
52707470	338	4
52707474	258	16
52707475	339	6
52707479	341	9
52708446	258	3
52708921	340	23
52708937	336	23
52710615	341	12
5294507	63	19
53 419.2	229	2
53 451.1	229	19
53 704.2/770.2	229	7
53 707.2/773.2	229	11
53 710.2/873.2	229	5
53 748.2	229	8
53 750.2/751.2	229	4
53 982.2	229	6
53 983.2	229	9
53000713	340	6
53000716	340	3
534 520	142	5
53451.1	KITS	
5357	264	3
5389 008	232	17
5401 9	178	9
5401-11	119	12
5401-5	115	6
5401-8	118	11
5422	371	9
545	34	30
55 277.2	229	15
55 281.1	KITS	
550E.64.1.OF	21	13
553499	309	7
553501	309	4

PART NUMBER	FIG.	ITEM
553520	310	50
553522	310	32
553525	310	4
553856	309	11
553861	KITS	
554886	308	3
554889	308	14
554890	308	9
554891	308	11
554989	KITS	
5555-31MD	319	30
555579	308	1
555580	308	7
557226	249	10
	249	17
562K 1565	215	13
562537.F51	114	32
568-017	310	22
568-216	308	8
568-224	309	14
568-232	310	39
568-233	308	6
568-234	308	16
568-238	310	34
568-240	310	7
568-906	310	44
571 002 0002	KITS	
571 002 774 4	162	14
571 003 104 0	122	9
572929	65	6
	69	7
5777	232	2
580 K 0011-1	199	20
580 K 0011-2	199	17
59UB08X08X06	290	1
5949	219	8
6-6 070221CA	277	3
6A025015	313	10
	316	8
6A025020	311	9
6A025022	314	12
6A025030	312	12
6C075015	316	9
6C075022	314	11
6C150015	313	9
6C150030	312	11
6C300020	311	8
6C300022	314	10
6C300030	312	10
6HX04530	312	18
6HX12007	315	10
6HX25015	316	5
6HX30015	313	15
6HX30020	311	13
6HX35022	314	18

PART NUMBER	FIG.	ITEM
6I012050	315	5
6I025087	316	14
6I030106	311	7
	313	8
6I035125	314	9
6I045143	312	9
6TLFP	80	23
6Y140520	365	5
60NTA-4	40	10
	40	25
	41	7
	41	21
	41	39
	165	29
60NTA-6	165	3
	165	14
60NTA-8	166	7
	166	18
60010235	340	8
60010844	342	21
60020114	342	9
60020115	342	4
60020116	342	7
60020154	342	8
60020207	336	22
60020209	342	3
60020210	342	2
60025254	258	8
60030064	339	2
60030067	339	14
60030068	258	12
60030069	258	7
601 997 23 81	102	14
60102-2	108	11
60102767	340	13
60102769	340	26
60102775	366	4
60102776	366	18
60102777	366	14
60102778	366	6
60102779	366	8
60102780	366	7
60102781	366	17
60102782	366	13
60102783	366	15
60102784	366	16
60104539	336	15
60104694	342	25
60105358	366	5
60105496	366	9
60106032	342	14
60106968	340	33
60107292	339	3
60107303	337	5
60107305	337	8

PART NUMBER	FIG.	ITEM
60107324	339	8
60107648	340	21
60108659	336	12
60109660	340	29
60111118	341	1
60111131	341	5
60111132	340	16
60112972	311	18
60112984	258	2
60113020	337	3
601353	265	16
601676	263	25
602580	310	45
603 428 01 84	124	8
	136	6
	149	3
	297	11
603 428 02 84	25	14
	129	13
	148	26
	149	22
60539	KITS	
605892	310	11
6-1-2248	225	1
61NTA-4	40	9
	40	24
	41	6
	41	22
	41	38
	165	28
61NTA-6	165	4
	165	13
61NTA-8	166	8
	166	17
61117-1	98	17
61260	323	43
613223	310	10
613994	310	9
615 589 01 15 00	352	7
	367	7
615128	309	13
615136	310	38
615138	308	15
615142	310	35
615144	310	6
617 589 05 23 00	354	7
	369	7
61792159-606	220	39
6202-2ARSANG15	328	27
6206DIN625	48	8
6211J	113	23
6220-21	260	10
	261	4
622897	266	5
622907	266	8

PART NUMBER	FIG.	ITEM
622908	266	7
624394	263	21
624572	310	52
6249-74-00-00	268	7
627-01041-30M	299	1
627-01042-30M	298	1
627-01228-30	271	12
627-01766-20	271	22
	272	1
	274	1
627-01767-20	273	16
627-01768-20	271	14
627-01769-20	271	27
627-01770-20	274	13
627-01771-20	274	15
627-01772-20	271	13
627-01773-20	271	8
627-01774-20	274	12
627-01775-20	274	16
627-01777-20	273	11
627-01778-20	273	17
627-01779-20	272	2
627-01780-20	273	10
627-01781-20	273	5
627-01955-20	272	10
62734	100	9
62734-2	90	15
6288	270	2
	275	4
63 10E.TN-C3	134	11
63 10E.TN-C3	142	15
63NTA-4	40	8
	40	23
	41	5
	41	23
	41	37
	165	27
63NTA-6	165	5
	165	12
63NTA-8	166	9
	166	16
6305 ENTN9/C3	114	40
	116	37
6305.025	104	9
631.160.32K001	21	4
631808	310	17
631881	260	3
	261	1
	262	3
	263	3
636 589 02 23 00	349	3
	362	3
636701	310	51
636737	227	4
636851	309	8

PART NUMBER	FIG.	ITEM
636855	308	13
636858	310	30
636861	310	2
636952	310	42
637-01747-10	344	13
637010110	344	3
6370108210	344	7
638247	309	6
638251	310	31
638253	310	3
638295	310	41
64 021	KITS	
6431	96	13
	100	20
6433	100	22
6435/564	96	10
	231	6
644532	277	16
647-01914-10	271	5
	272	7
	273	6
	274	9
647-02693-20	344	34
647-02694-20	344	30
647-02695-20	344	33
647-02986-10	344	40
647277	310	18
650086	84	16
656-300	44	6
6566675	180	4
657173	270	14
657175	270	13
657180	270	4
658211	310	25
658377	263	6
660597	265	2
660635	265	12
661037	310	53
661507	359	6
661549	260	4
	261	2
	262	4
	263	4
661785	260	14
661786	261	13
662319	310	16
662322	310	23
662325	310	49
662326	310	20
662685	310	43
662687	310	55
662688	310	46
662690	310	48
662691	310	36
662772	275	6

PART NUMBER	FIG.	ITEM
662947	310	26
663091	KITS	
665002	310	29
665595	227	2
665677	227	3
666817	277	24
666874	270	7
667976	KITS	
667977	310	14
667978	310	15
668354	261	11
668355	264	5
668357	264	7
669142	275	2
669152	227	5
669219	270	15
669220	270	3
669251	275	3
669431	249	26
	249	31
669432	249	25
669433	261	12
669490	249	27
67 302 52 206	178	10
67 302 70 146	178	1
67 607 12 991	15	21
67 607 31 991	15	2
67 607 63 146	15	1
671537	259	4
672726	263	24
673 725 00 01	204	25
673043	263	15
673346	270	8
675548	309	1
675549	309	2
677-01075-10	344	2
677-01095-20	344	39
677-01739-40	344	29
677-01754-10	344	22
677-01757-10	344	16
677-01762-10	344	5
677-01765-10	344	36
677-02113-10	344	6
677-02114-20	344	6
677-02966-40	344	1
677-02967-40	344	21
677-02983-20	344	39
677965	310	45
678239	310	1
678240	310	8
678241	310	37
678243	310	54
678525	263	26
678602	365	8
678603	365	12
678604	365	10
678605	365	9

PART NUMBER	FIG.	ITEM
678606	365	14
678662	263	9
	265	4
678667	263	8
	265	7
678995	263	18
678998	263	16
679135	263	13
679137	263	14
6797 J6	220	19
6797-J4-A	215	11
679991	KITS	
68AB-4-4	76	2
68NTA-4-6	165	26
68NTA-8-8	166	15
680212	266	12
681948PC5	265	13
68236R	BULK	11
68236R-2240	108	16
68237R	BULK	12
68237R-1850	87	9
68238R	BULK	13
68238R-1220	87	17
68238R-1340	108	9
6824OR-1920	108	5
6824OR-400	87	8
68240R	BULK	14
683252	265	8
683763	265	9
683765	265	17
685081	270	11
685082	277	7
685083	277	4
685084	277	5
685085	270	20
685086	270	6
685982	263	23
685986	263	10
6885-25	11	2
6888 4X6.5	29	34
6888 8X13	4	16
689937	249	8
	249	22
689938	249	19
689939	249	20
689941	249	6
689942	KITS	
689943	KITS	
689981	249	9
	249	21
689982	249	7
	249	18
689983	249	16
7 06 051	167	5
7 06 10 2	164	4
7 06 15 2	166	25
7 547 419 035	231	47

PART NUMBER	FIG.	ITEM
7 6X24	126	20
	127	16
7-6-16	2	11
	8	8
7-8-20	8	6
7BF81020	314	3
	314	15
7BF81220	312	15
	337	11
	338	6
7BF81520	312	3
	336	10
7P00541	344	38
7Q072015	250	3
7Q072016	252	3
7Q072020	251	3
7Q072021	248	29
	251	4
	315	3
7Q072137	316	15
7Q072145	311	5
	313	6
7Q072151	314	7
7Q072155	312	7
7Q072214	315	12
7Q072215	251	6
7Q072228	316	7
7Q072334	311	15
	313	17
7Q072338	314	20
7Q072345	312	20
7Q073912	252	6
7Q10P015	250	4
	252	2
7Q10P017	250	5
7Q10P018	250	8
	252	5
7Q10P020	251	2
7Q10P021	251	5
7Q10P214	315	11
7Q10P228	316	6
7Q10P334	311	14
	313	16
7Q10P338	314	19
7Q10P346	312	19
7R15P007	315	8
7R15P015	313	13
	316	3
7R15P020	311	11
7R15P022	314	16
7R15P030	312	16
7T61N087	316	13
7T61N106	311	3
	313	4
7T61N125	314	5
7T61N143	312	5

PART NUMBER	FIG.	ITEM
7T65I030	311	4
	313	5
7T65I035	314	6
7T65I045	312	6
7T66P012	315	4
7T66P025	316	16
7T66P030	311	6
	313	7
7T66P035	314	8
7T66P045	312	8
70/0181	131	13
	132	12
70/0183	132	12
70029451	258	9
70034350	336	16
	340	7
70034351	336	17
70034352	336	6
70034382	336	31
	337	13
	338	10
70142518	248	6
70142519	248	9
70143221	341	2
70143514	336	5
702 744 4	35	5
7029	222	13
70392190	311	17
70392525	226	7
70392685	226	8
70392813	226	3
70392814	226	11
70392815	226	9
70392864	226	13
70392866	226	10
70392867	226	12
70392888	226	14
70392890	226	6
70393044	226	2
707 579 9	7	6
707121	237	35
707554	233	36
707866	239	36
707.869	239	7
707884	239	34
708469	233	35
709 332	177	23
71-075.1000	222	10
71029523	226	15
71029524	226	4
71029526	226	1
71056001	342	11
7112-023-ONY	KITS	
7112-035-WO9	230	4
7112-036-WOX	230	12
7112-037-OEW	230	2

PART NUMBER	FIG.	ITEM
7112-041-OEM	230	10
7112-099-OBU	230	9
7112-639-OEG	230	13
711509-3	289	9
	289	14
	290	7
	290	12
	291	11
	291	16
	292	10
	292	15
	292	20
	293	7
	293	12
	294	12
	294	15
	294	17
	295	4
	295	10
711509-6	288	3
	288	7
	288	19
	288	24
71392689	226	5
7186	305	17
7200-47	243	44
	244	24
	245	28
72053301	340	5
72060708	316	12
72061096	340	12
72062011	366	2
72062107	340	37
	341	6
72063004	340	4
72063035	342	22
72063127	342	28
72066145	339	12
	340	32
72066338	258	13
	341	7
72066653	337	2
72066659	336	7
72094	327	10
72124	327	19
72164	324	20
72254	323	21
72532353	292	18
72532980	291	5
72533030	288	22
72601531	258	4
72661169	258	15
72990	329	2
73051378	232	1
73054004	250	1
73054242	251	1

PART NUMBER	FIG.	ITEM
73054304	252	1
73054490	248	11
73054558	288	26
73054650	253	1
731 531-002	96	17
732 574-001	96	15
7320642	65	15
	69	17
7360 029 307	172	25
7375327	51	21
741 614 S1	207	4
741 977 S2	208	1
741 997 S1	208	1
7462-000	232	8
7526015	69	15
7537	232	9
760 8032 006	136	11
760 8037 004	121	7
	125	7
7603 CU 22X29	120	24
761 8027 000	25	34
7672 036 115 B	176	12
7672 040 0350	176	15
7672 040 175 B	176	9
7672 633 017	KITS	
7673 037 104	176	14
77044094	340	11
7716684	87	5
7722333	87	6
7723 030 130	176	22
7723 036 102	176	20
7723 041 183 B	176	18
7723309	87	7
7760104	185	9
77796.6	229	1
784216	234	8
	237	8
785.129	239	24
785008	234	35
785009	233	32
785011	248	22
785014	234	28
	236	16
	237	28
785028	240	7
785038	248	27
785139	KITS	
785165	KITS	
785167	KITS	
	KITS	
	KITS	
785169	KITS	
785170	KITS	
785171	KITS	
785172	KITS	
785227	KITS	

PART NUMBER	FIG.	ITEM
785231	KITS	
785234	KITS	
785294	233	7
	248	2
788	34	10
794417	KITS	
	KITS	
794418	KITS	
7982 B3.5	120	30
7985 M5.197	197	16
7985 M6.236	39	5
7985 M6.236 12	196	21
	211	31
8 53 252	154	39
8-8 070221C	276	13
8-10C5BXS	275	10
8-8 070221C	276	13
	278	1
	280	6
	280	20
	288	9
	291	6
8F3924	238	4
8JD002289-00	58	13
800-52368-2	199	8
800-52369-0	199	8
800/10	158	32
800/11	158	31
800/16	158	36
800/17	158	11
	158	30
8007	266	6
801/27	158	20
801/28	158	25
801/32	158	23
801/35	158	27
8036 030 101	174	30
8038 633 021	KITS	
8062 032 102	174	17
81-3413	48	3
810 138 008 4	159	15
810 208 016 4	157	3
810 430 002 4	159	14
810 518 015 4	155	17
810 518 019 4	159	23
810 518 028 4	155	8
810 528 020 4	159	8
811 401 008 4	17	10
811 401 032 4	157	34
811 401 212 4	157	28
81270 508	59	7
	59	5
816 028 521 4	155	14
81617	283	7
	284	9
	285	27
8338566	65	8

PART NUMBER	FIG.	ITEM
8338566	69	9
8338567	65	7
	69	8
84 M5	46	35
84 M5X10 C	51	11
	109	1
84 M6 12	83	14
8426314	365	7
8489705	277	19
85/0562	120	29
8631-003	232	11
8632-027	232	15
8636	232	14
8668096	185	7
8690527	180	5
8694539	65	4
	69	4
8701268	87	4
8747995	69	16
876-14888-1	61	4
884 025 023 4	150	5
886 043 700 4	150	9
891 201 570 4	157	4
891 350 431 4	150	24
891 550 131 2	17	9
893 010 030 4	157	33
893 104 300 4	157	29
895 072 530 4	157	21
895 072 540 4	157	9
895 072 550 4	157	7
895 105 273 4	157	19
895 107 920 4	162	4
895 221 970 4	157	24
895 226360 4	159	5
896 013 630 4	155	5
896 053 180 4	157	15
896 101 010 4	150	7
896 171 140 4	150	14
896 513 940 4	159	20
896 513 960 4	159	3
896 514 410 4	157	8
896 514 420 4	157	20
897 070 120 4	155	13
897 070 890 4	157	5
897 080 020 4	159	10
897 080 460 4	155	10
897 080 480 4	155	12
897 080 550 4	159	9
897 080 880 4	155	6
897 081 561 4	157	16
897 089 961 4	159	21
897 132 060 2	159	16
897 150 727 4	150	10
897 151 009 4	162	6
897 151 490 4	155	9
897 155 400 4	162	6
897 181 660 4	157	10

PART NUMBER	FIG.	ITEM
897 551 570 4	162	5
897 560 030 2	162	11
897 753 290 4	150	15
897 753 940 4	157	30
897 772 149 4	157	22
897 789 970 4	159	12
898 011 380 4	157	26
898 012 000 4	150	25
899 381 070 4	157	25
899 381 182 2	159	6
899 470 180 0	162	19
899 500 676 2	155	4
899 505 120 2	157	11
899 506 190 2	159	4
899 506 260 4	157	17
899 506 320 4	157	14
899 506 360 4	157	32
899 601 750 4	159	19
899685	63	13
9BX10121	KITS	
9C-00092	271	28
	344	35
9C-00208	271	1
9C-01230	224	5
9C-02852	272	4
	273	3
9C-02891-06	271	4
	272	3
	273	4
	274	17
9C-02983	344	15
9C-03092	271	2
	274	6
9C-03178	272	5
	273	1
	274	5
9C-03639-001	271	20
9C-03639-004	271	3
	272	6
	273	2
	274	4
9C-03771	344	19
9CX18242	KITS	
9C03046	298	11
9C03047	298	5
9C03048	298	15
9C0304802	298	13
9C0304803	298	14
9C0304804	298	16
9C03049	298	9
9C0304902	298	2
9C0304903	298	3
9C0304904	298	17
9C0304905	298	18
9C0304906	298	7

PART NUMBER	FIG.	ITEM
9C03051	298	10
	299	10
9V03053	KITS	
9C03054	299	11
9C03055	299	5
9C03056-01	299	15
9C03057-01	299	9
9C03058	KITS	
9C03094	299	6
	299	12
9C03095	298	12
9C03237	224	6
9C03239	274	11
9C03500	299	13
9C03501	299	14
9C03502	299	16
9C03503	299	17
9C03504	299	18
9C03505	299	3
9C03506	299	2
9C03507	299	7
9C03508	299	8
9C03639-003	271	9
9C03640	224	7
9SK 702 331-07 4	56	33
9X050608	KITS	
9X121217	KITS	
9X121617	KITS	
9X141820	KITS	
90 400 1-20	36	1
90 854.4	229	10
90.400-022	36	3
900.815	220	16
	220	38
900.824	220	25
	220	40
900050 013001	179	13
	207	2
900050 017001	145	2
	146	37
900050 021001	190	2
900055 020200	143	15
900055 050300	134	13
	142	17
900055 058310	117	11
900055 060300	142	3
900170 008007	48	12
900170 008028	11	10
900170 008029	47	17
900170 012001	5	8
900170 014036	1	28
900170 016017	169	4
900203 000001	224	2
900216-008301	111	28
900216008201	127	21

PART NUMBER	FIG.	ITEM
900216008201	135	14
	144	24
900262 009100	43	21
900263 009004	43	20
900271 018036	BULK	17
900271 018036X28	17	4
0		
900271 070007	221	2
900288 010001	129	4
900288 231100	33	12
900288 231101	33	13
900288-307100	153	12
900331 006028	38	12
900331 008401	123	13
900598-8S	280	10
900729-1	276	28
900729-10	282	33
900729-24	279	6
900729-3	225	2
	282	4
900729-4	279	12
900729-8	278	7
901.706	220	17
9021 10	39	17
9021 5	204	24
9021 6	20	21
	200	3
9021 8	220	6
9021 8 S	143	25
	149	10
	194	7
9021-6	202	11
	209	6
	221	15
9049A-L3131	307	11
9049A-L3131-2	307	8
9049A-L3132	305	27
9057-014	232	6
908 M14X1.5	15	11
908 M16X1.5	2	16
908 M48X1.5	118	1
908.014	220	29
	220	44
9086-001	232	12
9091-001	232	7
9094A-L3131-1	307	6
912 8.8X10X25	15	31
912M10X100	113	7
912004 004102	79	7
912004 005100	63	9
	197	17

PART NUMBER	FIG.	ITEM
912004 005100	198	8
	199	21
912004 005103	82	12
	122	1
912004 006102	55	2
	57	22
	109	4
	197	14
912004 010102	35	11
	50	3
	126	23
	127	19
	144	
	155	20
	182	11
	203	6
912004 020100	1	25
	173	30
	189	2
	229	23
912003006000N12003	222	8
912004008102	231	30
912009 055100	114	28
9121-002	232	3
913002 010000	332	2
913002 012008	195	2
913004 005001	46	20
	60	4
	61	1
	177	33
913004 006002	20	22
	21	18
	39	1
	40	20
	46	19
	60	6
	61	2
	71	5
	80	20
	144	3
	156	26
	163	7
	177	1
	200	8
913004 008004	39	12
	45	21
	46	14
	120	16
	121	11
	122	23
	143	24

PART NUMBER	FIG.	ITEM
913004 008004	148	11
	149	9
	156	35
	172	21
	178	19
	219	4
913004 008005	156	22
913004 010011	179	11
	192	7
913004 012008	20	1
	80	21
	82	31
	152	1
	173	9
913004 012009	34	17
913004 014002	1	27
	176	34
	187	2
	188	1
	207	5
913004 014005	191	1
913004 016005	1	18
	192	11
	193	12
913004006002	101	9
913004008004	123	4
913010 006105	58	4
913013 016002	128	2
913019 012000	192	13
913021 010001	120	34
914007 008031	47	13
914022 005101	199	16
	204	16
914125014209	191	5
914126 006010	47	2
914126 008029	8	1
	47	10
914126 008030	47	16
914126 010003	15	30
914126 010004	15	24
914129 006003	80	2
914140 012000	192	15
914140 012011	80	18
914141 006302	123	8
914141 008117	111	38
914141 008125	23	1
914141 008126	111	37
914141 008309	119	35
914141 008310	116	27
	118	15
	123	20
914141 008312	116	32
914141 008313	116	45
	118	7
914141 008500	112	7

PART NUMBER	FIG.	ITEM
914141 010000	111	35
	112	8
914141 010114	117	16
914141 010121	123	21
914141 010200	116	16
914141 010307	122	17
914141 010308	111	25
914141 010310	111	9
914141 010313	117	34
914141 010600	111	12
914141 010901	127	26
914141 012203	135	18
914141 012205	131	7
	140	8
914141 012404	140	7
914141 012407	134	4
914141 012408	134	3
914141 012600	111	14
914141 014400	131	23
914146 008100	115	1
	116	29
914146 008102	116	42
915006 004002	122	30
915010 004202	122	12
915017 004101	122	6
915017 006100	121	16
	122	15
	122	43
	124	4
	125	3
	154	6
	161	27
	163	5
	163	10
	163	14
	296	3
	297	8
915017 006104	122	37
915017 008100	34	8
	167	7
915017 010100	154	19
	156	12
	161	14
	163	21
	164	1
	167	11
915017 012100	177	25
915017 022100	177	21
915018 015000	156	19
	166	22
915036 006101	15	27
915036 006202	121	23
	122	25
	154	1
	161	9

PART NUMBER	FIG.	ITEM
915036 006202	177	11
	296	15
915036 008200	122	27
915036 008202	121	1
915036 010200	136	1
915036 010204	25	29
	129	9
	161	7
915036 012203	161	2
	296	9
915036 015200	177	27
915040 010202	154	8
915042 009001	198	17
915042 015000	206	1
915043 006101	296	6
915047 006202	121	19
915047 010202	122	10
915048 018000	15	12
915052 004011	15	26
	121	3
915052 004016	122	24
	154	3
915052 004025	25	38
915052 006003	177	13
915052 006005	25	32
	129	11
915052 006009	136	3
915052 006014	296	11
915052 008016	25	23
915062 002000	122	4
915062 004000	121	14
	122	32
	124	5
	125	2
	154	5
915062 006000	167	8
915065 015101	156	17
91565A736	366	11
916002 012100	34	2
916002 109200	126	4
	127	23
916002 160100	126	6
	127	25
916016 010210	177	2
916016 022203	46	16
916017 011000	177	30
916017 011001	46	6
916017 016000	17	3
	46	26
916017 016002	46	4
916017 020000	177	19
916017 032001	46	2
916017 05000	46	28
916017 060000	172	16
916017 070000	33	15
	149	2

PART NUMBER	FIG.	ITEM
916017 070000	151	6
916017 080000	33	11
916017 090000	136	9
916017 100000	129	14
	136	7
	148	1
	297	12
918001 008001	144	26
919 470 00 01	34	23
919 551 00 04	332	5
919 550 00 01	KITS	
919 550 00 02	KITS	
919 550 00 03	KITS	
919 550 00 04	KITS	
919 559 00 04	KITS	
919 610 00 01	KITS	
919 610 00 02	KITS	
92 009.4	229	17
92 056.4	229	12
92 144.4	229	13
92-6	255	30
	285	3
	287	11
92091200	366	1
92171	BULK	4
931 M10 60 P	193	20
931 M10 70 P	193	23
931 M10X40 P	43	16
931 M10X45 P	16	8
931 M10X50 P	16	10
931 M10X55P	16	6
931 M10X60 P	43	22
931 M16 80P	195	12
931 M8 55 P	143	26
931 M8 55P	149	15
931 M8X75 P	35	2
931 M8X80 P	35	2
931 M8X90 P	42	6
931-10 M10X50 P	46	36
931-10 M10X80 P	48	21
	49	5
931-10 M12X75	10	10
931-10 M6X30 P	48	4
931-10 M8X35 P	14	15
931-10 M8X40 P	8	10
	28	25
932 002 013 4	159	7
932 002 040 4	159	22
932 002 150 4	159	2
932 002 500 4	159	11
932 002 620 4	159	17
932 002 650 4	159	13
933 M10 260P	80	5
933 M10 30F	63	22
	68	4
	80	14

PART NUMBER	FIG.	ITEM
933 M10 30F	180	6
933 M10 40F	176	28
933 M10X30 F	43	7
	110	2
933 M12 30F	216	24
	217	15
933 M12 40F	195	4
933 M5 20F	61	3
933 M6 14F	80	11
933 M6 25F	29	37
	200	7
933 M6 35F	82	34
933 M6X14 F	46	15
933 M6X20 F	60	1
933 M8 50 F	148	23
933-10 M10 25 F	8	12
	144	11
933-10 10X35 F	48	20
933-10-M8X25 F	14	21
934 M10X1.5C	16	5
	40	4
	41	10
	50	4
	63	12
	82	21
	144	8
	153	7
	155	21
	176	27
	180	7
	186	1
	201	8
	203	1
	345	18
	357	18
934 M12X1.5 F	133	25
934 M14X1.5 F	11	14
934 8 M12X1.75C	216	25
	217	16
934 8 M4X0.7C	58	11
	85	24
934 8 M8X1.25 C	13	9
	42	2
	43	8
	79	4
	80	36
	83	4
	111	17
	123	12
	148	33
	149	8
	166	30
	182	10
	203	7
	220	9

PART NUMBER	FIG.	ITEM
934 8 M8X1.25 C	276	11
	332	13
934 8M 20X2.5 C	229	24
9365	176	35
9417139/0734/24V	122	33
95-6	333	5
95-81150	329	27
	330	1
	335	13
952 002 000 2	KITS	
95708943	KITS	
960 M10X1X50	171	4
960 M12X1.5 110P	194	5
960 M14X1.5 100P	208	6
960 M14X1.5 60 P	187	4
960 45P	207	3
960-10 M14X1.5 9 0 P	173	15
960-10 M16X1.5 5 5 P	137	1
960-10 M16X1.5 7 0 P	192	16
960-10 60P	134	2
960M14X1.2560P	207	8
961 M12X1.5 30F	82	27
961 M12X1.5 35 F	80	17
961 M12X1.5X35 F	35	14
961-10 M12X1.5 4 0 F	175	16
961-10 M16X1.5 4 5 F	128	1
962948B3	216	1
975	34	31
975 303 001 2	KITS	
975 303 012 4	157	13
975 303 430 4	157	6
975 303 447 0	157	1
975 303 550 4	157	23
975 303 621 2	157	12
975 303 622 4	157	18
975 303 650 4	157	2
975 303 771 4	157	31
9795	366	19
981112	233	5
981119	236	1
981121	235	1
981173	240	1
981250	233	30
982907	282	24
982932	281	8
98306A566	346	10
	358	11
	359	4
98335A084	346	9
	358	10

PART NUMBER	FIG.	ITEM
98335A084	359	3
986747	248	1
9902.1500	218	17
9902.2800	218	18
9902.2801	218	16
992 4051	13	22
992 4175	229	21
9922.0002	218	28
9922.0029	218	14
9922.0031	218	13
9922.0033	218	33
9922.0036	218	29
9922.008	218	23
993522	237	1
9901.9371	218	12
9904.0217-9	218	10
9927.2188	218	20
9951.0019	218	15
9951.0020	218	21
9954.0055	218	3
9957.0011	218	9
9958.0005	218	34
999900 008004	13	23
999901 010000	43	12

PART NUMBER	FIG.	ITEM

By Order of the Secretary of the Army:

ERIC K. SHINSEKI
General, United States Army
Chief of Staff

Official:

JOEL B. HUDSON
Administrative Assistant to the
Secretary of the Army
0132502

DISTRIBUTION: To be distributed in accordance with the initial distribution number (IDN) 256706, requirements for TM 5-2420-224-24P-1.

RECOMMENDED CHANGES TO PUBLICATIONS AND BLANK FORMS For use of this form, see AR 25-30; the proponent agency is ODISC4.	Use Part II *(reverse)* for Repair Parts and Special Tool Lists (RPSTL) and Supply Catalogs/Supply Manuals (SC/SM).	DATE Date you filled out this form.
TO: *(Forward to proponent of publication or form) (Include ZIP Code)* AMSTA-LC-CI / TECH PUBS, TACOM-RI 1 Rock Island Arsenal Rock Island, IL 61299-7630	**FROM:** *(Activity and location) (Include ZIP Code)* Your mailing address	

PART I – ALL PUBLICATIONS (EXCEPT RPSTL AND SC/SM) AND BLANK FORMS

PUBLICATION/FORM NUMBER	DATE	TITLE
TM 5-2420-224-24P-1	30 November 2001	Unit, D.S., and G.S. Maint. Repair Parts and Special Tools List for SEE-HMMH

ITEM NO.	PAGE NO.	PARA-GRAPH	LINE NO. *	FIGURE NO.	TABLE NO.	RECOMMENDED CHANGES AND REASON *(Provide exact wording of recommended changes, if possible).*

**Reference to line numbers within the paragraph or subparagraph.*

TYPED NAME, GRADE OR TITLE	TELEPHONE EXCHANGE/AUTOVON, PLUS EXTENSION	SIGNATURE
Your Name		Your Signature

TO: (*Forward direct to addressee listed in publication*)	**FROM:** (*Activity and location*) (*Include ZIP Code*)	**DATE**
AMSTA-LC-CI / TECH PUBS, TACOM-RI 1 Rock Island Arsenal Rock Island, IL 61299-7630	Your mailing address	Date you filled out this form.

PART II – REPAIR PARTS AND SPECIAL TOOL LISTS AND SUPPLY CATALOGS/SUPPLY MANUALS

PUBLICATION NUMBER	DATE	TITLE
TM 5-2420-224-24P-1	30 November 2001	Unit, D.S., and G.S. Maint. Repair Parts and Special Tools List for SEE-HMMH

PAGE NO.	COLM NO.	LINE NO.	NATIONAL STOCK NUMBER	REFERENCE NO.	FIGURE NO.	ITEM NO.	TOTAL NO. OF MAJOR ITEMS SUPPORTED	RECOMMENDED ACTION
9					2	2		Item 2, when ordered from the parts list, does not come as a flat washer. Please give correct P/N for the flat washer.

PART III – REMARKS (*Any general remarks or recommendations, or suggestions for improvement of publications and blank forms. Additional blank sheets may be used if more space is needed.*)

SAMPLE

TYPED NAME, GRADE OR TITLE	TELEPHONE EXCHANGE/AUTOVON, PLUS EXTENSION	SIGNATURE

UASPPC V3.00

RECOMMENDED CHANGES TO PUBLICATIONS AND BLANK FORMS For use of this form, see AR 25-30; the proponent agency is ODISC4.	Use Part II *(reverse)* for Repair Parts and Special Tool Lists (RPSTL) and Supply Catalogs/Supply Manuals (SC/SM).	DATE
TO: *(Forward to proponent of publication or form) (Include ZIP Code)*	**FROM:** *(Activity and location) (Include ZIP Code)*	

PART I- ALL PUBLICATIONS (EXCEPT RPSTL AND SC/SM) AND BLANK FORMS

PUBLICATION/FORM NUMBER	DATE	TITLE
TM 5-2420-224-24P-1	30 November 2001	Unit, D.S., and G.S. Maint. Repair Parts and Special Tools List for SEE-HMMH

ITEM NO.	PAGE NO.	PARA-GRAPH	LINE NO.*	FIGURE NO.	TABLE NO.	RECOMMENDED CHANGES AND REASON *(Provide exact wording of recommended changes, if possible).*

**Reference to line numbers within the paragraph or subparagraph.*

TYPED NAME, GRADE OR TITLE	TELEPHONE EXCHANGE/AUTOVON, PLUS EXTENSION	SIGNATURE

TO: (*Forward direct to addressee listed in publication*)	**FROM:** (*Activity and location) (Include ZIP Code)*	**DATE**

PART II – REPAIR PARTS AND SPECIAL TOOL LISTS AND SUPPLY CATALOGS/SUPPLY MANUALS

PUBLICATION NUMBER	DATE	TITLE
TM 5-2420-224-24P-1	30 November 2001	Unit, D.S., and G.S. Maint. Repair Parts and Special Tools List for SEE-HMMH

PAGE NO.	COLM NO.	LINE NO.	NATIONAL STOCK NUMBER	REFERENCE NO.	FIGURE NO.	ITEM NO.	TOTAL NO. OF MAJOR ITEMS SUPPORTED	RECOMMENDED ACTION

PART III – REMARKS (*Any general remarks or recommendations, or suggestions for improvement of publications and blank forms. Additional blank sheets may be used if more space is needed.)*

TYPED NAME, GRADE OR TITLE	TELEPHONE EXCHANGE/AUTOVON, PLUS EXTENSION	SIGNATURE

THE METRIC SYSTEM AND EQUIVALENTS

'NEAR MEASURE

. Centimeter = 10 Millimeters = 0.01 Meters = 0.3937 Inches
1 Meter = 100 Centimeters = 1000 Millimeters = 39.37 Inches
1 Kilometer = 1000 Meters = 0.621 Miles

'VEIGHTS

Gram = 0.001 Kilograms = 1000 Milligrams = 0.035 Ounces
1 Kilogram = 1000 Grams = 2.2 lb.
1 Metric Ton = 1000 Kilograms = 1 Megagram = 1.1 Short Tons

LIQUID MEASURE

1 Milliliter = 0.001 Liters = 0.0338 Fluid Ounces
1 Liter = 1000 Milliliters = 33.82 Fluid Ounces

SQUARE MEASURE

1 Sq. Centimeter = 100 Sq. Millimeters = 0.155 Sq. Inches
1 Sq. Meter = 10,000 Sq. Centimeters = 10.76 Sq. Feet
1 Sq. Kilometer = 1,000,000 Sq. Meters = 0.386 Sq. Miles

CUBIC MEASURE

1 Cu. Centimeter = 1000 Cu. Millimeters = 0.06 Cu. Inches
1 Cu. Meter = 1,000,000 Cu. Centimeters = 35.31 Cu. Feet

TEMPERATURE

5/9(°F - 32) = °C
212° Fahrenheit is evuivalent to 100° Celsius
90° Fahrenheit is equivalent to 32.2° Celsius
32° Fahrenheit is equivalent to 0° Celsius
9/5C° + 32 =°F

APPROXIMATE CONVERSION FACTORS

TO CHANGE	TO	MULTIPLY BY
Inches	Centimeters	2.540
Feet	Meters	0.305
Yards	Meters	0.914
Miles	Kilometers	1.609
Square Inches	Square Centimeters	6.451
Square Feet	Square Meters	0.093
Square Yards	Square Meters	0.836
Square Miles	Square Kilometers	2.590
Acres	Square Hectometers	0.405
Cubic Feet	Cubic Meters	0.028
Cubic Yards	Cubic Meters	0.765
Fluid Ounces	Milliliters	29.573
ıts	Liters	0.473
arts	Liters	0.946
allons	Liters	3.785
Ounces	Grams	28.349
Pounds	Kilograms	0.454
Short Tons	Metric Tons	0.907
Pound-Feet	Newton-Meters	1.356
Pounds per Square Inch	Kilopascals	6.895
Miles per Gallon	Kilometers per Liter	0.425
Miles per Hour	Kilometers per Hour	1.609

TO CHANGE	TO	MULTIPLY BY
Centimeters	Inches	0.394
Meters	Feet	3.280
Meters	Yards	1.094
Kilometers	Miles	0.621
Square Centimeters	Square Inches	0.155
Square Meters	Square Feet	10.764
Square Meters	Square Yards	1.196
Square Kilometers	Square Miles	0.386
Square Hectometers	Acres	2.471
Cubic Meters	Cubic Feet	35.315
Cubic Meters	Cubic Yards	1.308
Milliliters	Fluid Ounces	0.034
Liters	Pints	2.113
Liters	Quarts	1.057
'ers	Gallons	0.264
.ms	Ounces	0.035
.ograms	Pounds	2.205
Metric Tons	Short Tons	1.102
Newton-Meters	Pounds-Feet	0.738
Kilopascals	Pounds per Square Inch	0.145
'lometers per Liter	Miles per Gallon	2.354
›meters per Hour	Miles per Hour	0.621

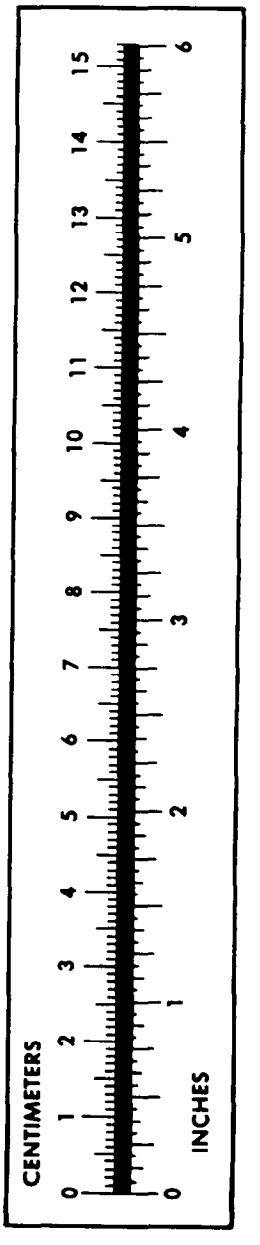

PIN: 079430-000