ARMY TM 9-2320-386-10
AIR FORCE TO 36A12-1B-1121-1

# TECHNICAL MANUAL

# EXTENDED SERVICE PROGRAM (ESP)

# OPERATOR'S MANUAL

# FOR

# 2-1/2-TON, 6X6, M44A3 SERIES TRUCKS (DIESEL)


| | |
|---|---|
| HOW TO USE THIS MANUAL | iii |
| INTRODUCTION | 1-1 |
| OPERATING INSTRUCTIONS | 2-1 |
| OPERATOR MAINTENANCE | 3-1 |
| REFERENCES | A-1 |
| COMPONENTS OF END ITEM (COEI) AND BASIC ISSUE ITEMS (BII) LISTS | B-1 |
| ADDITIONAL AUTHORIZATION LIST (AAL) | C-1 |
| EXPENDABLE/DURABLE SUPPLIES AND MATERIALS LIST | D-1 |
| STOWAGE AND SIGN GUIDE | E-1 |


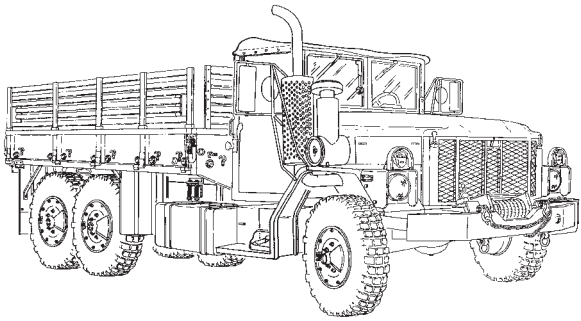

## TRUCK, CARGO: 2-1/2-TON, 6X6, M35A3 (2320-01-383-2047) (EIC: BHK); (2320-01-383-3850) (EIC: BHL)

## M35A3C (2320-01-383-2050) (EIC: BHP); (2320-01-383-2049) (EIC: BHQ)

## M36A3 (2320-01-383-2048) (EIC: BHM); (2320-01-383-2046) (EIC: BHN).


DISTRIBUTION STATEMENT A. Approved for public release; distribution is unlimited.



HEADQUARTERS, DEPARTMENT OF THE ARMY AND AIR FORCE

26 JANUARY 1996

ARMY TM 9-2320-386-10
AIR FORCE TO 36A12-1B-1121-1
C2

TECHNICAL MANUAL
NO. 9-2320-386-10
TECHNICAL ORDER
NO. 36A12-1B-1121-1

CHANGE
NO. 2

HEADQUARTERS,
DEPARTMENTS OF THE ARMY AND AIR FORCE
WASHINGTON, D.C., *19 October 2003*

# TECHNICAL MANUAL

# EXTENDED SERVICE PROGRAM (ESP)

# OPERATOR'S MANUAL
# FOR
# 2-1/2-TON, 6X6, M44A3 SERIES TRUCKS (DIESEL)

**TRUCK, CARGO: 2-1/2-TON, 6X6**
**M35A3 (2320-01-383-2047) (EIC: BHK);**
**(2320-01-383-3850) (EIC: BHL)**
**M34A3C (2320-01-383-2050) (EIC: BHP);**
**(2320-01-383-2049) (EIC: BHQ)**
**M36A3 (2320-01-383-2048) (EIC: BHM);**
**(2320-01-383-2046) (EIC: BHN).**

TM 9-2320-386-10, 26 January 1996, is changed as follows:

1. Remove old pages and insert new pages as indicated below.
2. New or changed material is indicated by a vertical bar in the margin of the page.

| Remove page | Insert page |
|---|---|
| A/(B blank) | A/(B blank) |
| i and ii | i and ii |
| 1-3 through 1-6 | 1-3 through 1-6 |
| 1-11 and 1-12 | 1-11 and 1-12 |
| 2-3 and 2-4 | 2-3 and 2-4 |
| 2-23 through 2-26 | 2-23 through 2-26 |
| 2-33 and 2-34 | 2-33 and 2-34 |
| None | 2-34.1/(2-34.2 blank) |
| 2-53 and 2-54 | 2-53 and 2-54 |
| 2-79 and 2-80 | 2-79 and 2-80 |
| 2-83 and 2-84 | 2-83 and 2-84 |
| 3-21 and 3-22 | 3-21 and 3-22 |

3. File this change sheet in front of the publication for reference purposes.

Approved for public release; distribution is unlimited.

By Order of the Secretary of the Army:

PETER J. SCHOOMAKER
*General, United States Army*
*Chief of Staff*

Official:

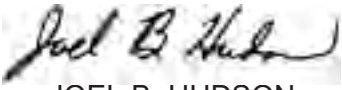

JOEL B. HUDSON
*Administrative Assistant to the*
*Secretary of the Army*
0317001

By Order of the Secretary of the Air Force:

JOHN P. JUMPER
*General, United States Air Force*
*Chief of Staff*

Official:

LESTER L. LYLES
*General, United States Air Force*
*Commander, Air Force Materiel Command*

Distribution:

To be distributed in accordance with the initial distribution number (IDN) 381003, requirements for TM 9-2320-386-10.

TECHNICAL MANUAL
NO. 9-2320-386-10
TECHNICAL ORDER
NO. 36A12-1B-1121-1

CHANGE
NO. 1

ARMY TM 9-2320-386-10
AIR FORCE TO 36A12-1B-1121-1
C1

HEADQUARTERS,
DEPARTMENT OF THE ARMY,
WASHINGTON, D.C., *1 May 2001*

# TECHNICAL MANUAL

# EXTENDED SERVICE PROGRAM (ESP)

# OPERATOR'S MANUAL
# FOR
# 2-1/2-TON, 6X6, M44A3 SERIES TRUCKS (DIESEL)

**TRUCK, CARGO: 2-1/2-TON, 6X6**
**M35A3 (2320-01-383-2047) (EIC: BHK);**
**(2320-01-383-3850) (EIC: BHL)**
**M34A3C (2320-01-383-2050) (EIC: BHP);**
**(2320-01-383-2049) (EIC: BHQ)**
**M36A3 (2320-01-383-2048) (EIC: BHM);**
**(2320-01-383-2046) (EIC: BHN).**

TM 9-2320-386-10, 26 January 1996, is changed as follows:

1. Remove old pages and insert new pages as indicated below.
2. New or changed material is indicated by a vertical bar in the margin of the page.

| Remove page | Insert page |
|---|---|
| Warning a and Warning b | Warning a through Warning c/(Warning d blank) |
| None | A/(B blank) |
| i and ii | i and ii |
| 1-3 and 1-4 | 1-3 and 1-4 |
| 1-9 through 1-16 | 1-9 through 1-14.2 and 1-15/(1-16 blank) |
| 2-3 and 2-4 | 2-3 and 2-4 |
| 2-7 and 2-8 | 2-7 and 2-8 |
| 2-15 through 2-18 | 2-15 through 2-18 |
| 2-21 and 2-22 | 2-21 and 2-22 |

Approved for public release; distribution is unlimited.

| Remove page | Insert page |
|---|---|
| 2-25 through 2-40 | 2-25 through 2-40 |
| 2-43 through 2-48 | 2-43 through 2-48 |
| 2-51 through 2-54 | 2-51 through 2-54 |
| 2-57 and 2-58 | 2-57 and 2-58 |
| 2-63 and 2-64 | 2-63 and 2-64 |
| 2-77 through 2-82 | 2-77 through 2-82 |
| 2-89 and 2-90 | 2-89 and 2-90 |
| 2-93 and 2-94 | 2-93 and 2-94 |
| 3-1 through 3-4 | 3-1 through 3-4 |
| 3-7 and 3-8 | 3-7 and 3-8 |
| 3-11 through 3-14 | 3-11 through 3-14 |
| 3-21 through 3-24 | 3-21 through 3-24 |
| 3-29 through 3-32 | 3-29 through 3-32 |
| A-1 through A-3/(A-4 blank) | A-1 through A-3/(A-4 blank) |
| B-3 through B-6 | B-3 through B-6 |
| C-1 and C-2 | C-1 through C-3/(C-4 blank) |
| D-1 and D-2 | D-1 and D-2 |
| E-1 through E-6 | E-1 through E-7/(E-8 blank) |
| Index 3 through Index 11/ (Index 12 blank) | Index 3 through Index 11/ (Index 12 blank) |
| DA Form 2028-2 | DA Form 2028-2 |

3. File this change sheet in front of the publication for reference purposes.

By Order of the Secretary of the Army:

ERIC K. SHINSEKI
*General, United States Army*
*Chief of Staff*

Official:

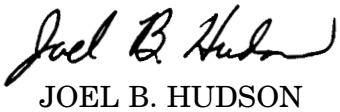

JOEL B. HUDSON
*Administrative Assistant to the*
*Secretary of the Army*
0001801

By Order of the Secretary of the Air Force:

RONALD R. FOGLEMAN
*General, United States Air Force*
*Chief of Staff*

Official:

HENRY VICCELLIO, JR.
*General, United States Air Force*
*Commander, Air Force Materiel Command*

Distribution:

To be distributed in accordance with the initial distribution number (IDN) 381003, requirements for TM 9-2320-386-10.

## WARNING

## EXHAUST GASES CAN KILL

1. DO NOT operate vehicle engine in enclosed area.
2. DO NOT idle vehicle engine with vehicle windows closed.
3. DO NOT drive vehicle with inspection plates or cover plates removed.
4. BE ALERT at all times for exhaust odors.
5. BE ALERT for exhaust poisoning symptoms. They are:
   - Headache
   - Dizziness
   - Sleepiness
   - Loss of muscular control
6. IF YOU SEE another person with exhaust poisoning symptoms:
   - Remove person from area
   - Expose to open air
   - Keep person warm
   - Do not permit person to move
   - Administer artificial respiration* or CPR, if necessary

   *For artificial respiration, refer to FM 21-11.
7. BE AWARE, the field protective mask for Nuclear-Biological-Chemical (NBC) protection will not protect you from carbon monoxide poisoning. THE BEST DEFENSE AGAINST EXHAUST POISONING IS ADEQUATE VENTILATION.

## WARNING

- Hearing protection is required for the driver and co-driver. Hearing protection is also required for all personnel working in and around this vehicle while the engine is running (reference AR 40-5 and TB MED 501).
- If required to remain inside the vehicle during extreme heat, occupants should follow the water intake, work/rest cycle, and other heat stress preventive medicine measures contained in FM 21-10, Field Hygiene and Sanitation.
- If NBC exposure is suspected, all air filter media should be handled by personnel wearing protective equipment. Consult your unit NBC officer or NBC NCO for appropriate handling and disposal instructions.

# WARNING SUMMARY

- The sudden jerking of the steering wheel in the opposite direction turned indicates air lines at the power assist cylinder have been crossed. Stop vehicle immediately and notify unit maintenance. Failure to do so may result in injury to personnel.
- If tachometer shows engine idling at high rpm and fuel shutoff switch does not stop engine, do not attempt to stall engine. Leave vehicle and notify maintenance personnel. Attempting to stall engine at high rpm may result in injury or death to personnel.
- Always wear seatbelts when operating vehicle. The use of seatbelts is essential to the safety of all personnel. Failure to wear seatbelts when operating vehicle may result in serious injury or death to personnel.
- When hazard warning lights/emergency flashers are in use, they override brake lights/stop lamp operation. Therefore, when driving with hazard warning lights/emergency flashers operating, be prepared to use hand signals to indicate a stop. Failure to do so may result in injury to personnel.
- This vehicle has been designed to operate safely and efficiently within the limits specified in this manual. Operation beyond these limits is prohibited IAW AR 750-1 without written approval from the commander, U.S. Army Tank-automotive and Armaments Command, ATTN: AMSTA-LC-CHME, Warren, MI 48397-5000.
- If buzzer stops and air pressure reading is below 65 psi (448 kPa), there may be no braking action. Shut down engine and check to see what is wrong. Failure to do so may result in injury or death to personnel.
- When operating vehicle at temperatures of 53°F (12°C) or below, ensure air dryer moisture ejector operates before shutting down engine. Failure to do this may result in equipment damage and injury or death to personnel.
- SKYSOL 100 is flammable. Wear protective goggles and gloves, use in well-ventilated area, avoid contact with skin, eyes, and clothes. Keep away from heat and flame. Never smoke when using solvent. The flashpoint for cleaning compound solvent is 146°F (63°C). Failure to do so may result in injury or death to personnel.
- If personnel become dizzy while using cleaning solvent, immediately get fresh air and medical help. If solvent contacts skin or clothes, flush with cold water. If solvent contacts eyes, immediately flush eyes with water and get medical attention.
- Vehicle operation on ice and snow can be dangerous. Operator must drive at reduced speeds and be prepared to meet sudden changes in road conditions and traffic speeds. Maintain safe stopping distances. Failure to do this may cause loss of vehicle control, resulting in injury or death to personnel.
- Do not operate vehicle on wet, smooth roads with lowered tire inflation. Do not operate vehicle at too great a speed for road conditions. Low tire inflation or excessive speeds may cause loss of vehicle control on wet, smooth roads, resulting in injury or death to personnel.

# WARNING SUMMARY (Contd)

- Never attempt to cross water deeper than 72 in. (183 cm). Limit vehicle speed while fording to 4 mph (6 kph). Failure to do so may cause vehicle to lose control resulting in injury or death to personnel.
- Do not rely on service brakes until they dry after fording operation. Continue to apply brakes until uneven braking ceases. Failure to do so may result in injury or death to personnel.
- When lowering spare wheel, hold wrench handle bar securely. Do not release bar until wheel touches ground. If bar must be released before wheel touches ground, lock shaft in place with pawl. Failure to do this may cause wheel to drop and bar to spin, resulting in injury or death to personnel.
- Super-single wheels and tires weight 382 lbs (173 kg). Do not attempt to remove and install a wheel and tire without assistance. Doing so may result in injury to personnel.

## LIST OF EFFECTIVE PAGES

NOTE: The portion of the text affected by the changes is indicated by a vertical line in the outer margins of the page.

Dates of issue for original and changed pages are:

Original . . . . . 0 . . . . . 26 January 1996

Change . . . . . 1 . . . . . 01 May 2001

Change . . . . . 2 . . . . . .19 October 2003

TOTAL NUMBER OF PAGES IN THIS PUBLICATION IS 219
CONSISTING OF THE FOLLOWING:

| Page No. | *Change No. | Page No. | *Change No. | Page No. | *Change No. |
|---|---|---|---|---|---|
| Warning a - Warning c | 1 | 2-33 | 1 | 3-4 - 3-6 | 0 |
| Warning d Blank | 1 | 2-34 | 2 | 3-7 - 3-8 | 1 |
| A | 2 | 2-34.1 Added | 2 | 3-9 - 3-10 | 0 |
| B Blank | 1 | 2-34.2 Blank Added | 2 | 3-11 | 1 |
| i | 2 | 2-35 | 0 | 3-12 | 0 |
| ii - viii | 0 | 2-36 - 2-38 | 1 | 3-13 - 3-14 | 1 |
| 1-1 - 1-2 | 0 | 2-39 | 0 | 3-15 - 3-20 | 0 |
| 1-3 | 2 | 2-40 | 1 | 3-21 | 1 |
| 1-4 - 1-5 | 0 | 2-41 - 2-42 | 0 | 3-22 | 2 |
| 1-6 | 2 | 2-43 - 2-44 | 1 | 3-23 - 3-24 | 1 |
| 1-7 - 1-8 | 0 | 2-45 | 0 | 3-25 - 3-29 | 0 |
| 1-9 - 1-10 | 1 | 2-46 - 2-48 | 1 | 3-30 - 3-31 | 1 |
| 1-11 | 2 | 2-49 - 2-50 | 0 | 3-32 - 3-34 | 0 |
| 1-12 | 1 | 2-51 | 1 | A-1 | 0 |
| 1-13 | 0 | 2-52 | 0 | A-2 - A-3 | 1 |
| 1-14 | 1 | 2-53 | 2 | A-4 Blank | 0 |
| 1-14.1 - 1-14.2 Added | 1 | 2-54 - 2-57 | 0 | B-1 - B-2 | 0 |
| 1-15 | 1 | 2-58 | 1 | B-3 - B-4 | 1 |
| 1-16 Blank | 1 | 2-59 - 2-62 | 0 | B-5 | 0 |
| 2-1 - 2-3 | 0 | 2-63 | 1 | B-6 | 1 |
| 2-4 | 2 | 2-64 - 2-77 | 0 | C-1 | 0 |
| 2-5 - 2-6 | 0 | 2-78 - 2-79 | 1 | C-2 | 1 |
| 2-7 | 1 | 2-80 | 2 | C-3 Added | 1 |
| 2-8 - 2-15 | 0 | 2-81 - 2-82 | 1 | C-4 Blank | 1 |
| 2-16 - 2-18 | 1 | 2-83 | 0 | D-1 | 0 |
| 2-19 - 2-20 | 0 | 2-84 | 2 | D-2 | 1 |
| 2-21 | 1 | 2-85 - 2-89 | 0 | E-1 | 0 |
| 2-22 | 0 | 2-90 | 1 | E-2 - E-6 | 1 |
| 2-23 - 2-25 | 2 | 2-91 - 2-93 | 0 | E-7 Added | 1 |
| 2-26 | 0 | 2-94 | 1 | E-8 Blank | 1 |
| 2-27 - 2-28 | 1 | 2-95 - 2-117 | 0 | Index 1 - Index 2 | 0 |
| 2-29 | 0 | 2-118 Blank | 0 | Index 3 - Index 11 | 1 |
| 2-30 - 2-31 | 1 | 3-1 | 1 | Index 12 Blank | 1 |
| 2-32 | 0 | 3-2 | 0 | | |
| | | 3-3 | 1 | | |

*Zero in this column indicates original page.

TECHNICAL MANUAL
NO. 9-2320-386-10

TECHNICAL ORDER
NO. 36A12-1B-1121-1

DEPARTMENTS OF THE ARMY
AND AIR FORCE
WASHINGTON, D.C., *26 January 1996*

# TECHNICAL MANUAL

# EXTENDED SERVICE PROGRAM (ESP)

# OPERATOR'S MANUAL
# FOR
# 2-1/2-TON, 6X6, M44A3 SERIES TRUCKS (DIESEL)

**TRUCK, CARGO: 2-1/2-TON, 6X6,**
**M35A3 (2320-01-383-2047) (EIC: BHK);**
**(2320-01-383-3850) (EIC: BHL)**
**M35A3C (2320-01-383-2050) (EIC: BHP);**
**(2320-01-383-2049) (EIC: BHQ)**
**M36A3 (2320-01-383-2048) (EIC: BHM);**
**(2320-01-383-2046) (EIC: BHN).**

This manual will provide operation and maintenance instructions for ESP vehicles.

**REPORTING ERRORS AND RECOMMENDING IMPROVEMENTS**

You can help improve this publication. If you find any mistakes or if you know of a way to improve the procedures, please let us know. Submit your DA Form 2028 (Recommended Changes to Publications and Blank Forms), through the Internet, on the Army Electronic Product Support (AEPS) website. The Internet address is http://aeps.ria.army.mil. If you need a password, scroll down and click on "ACCESS REQUEST FORM." The DA Form 2028 is located in the ONLINE FORMS PROCESSING section of the AEPS. Fill out the form and click on SUBMIT. Using this form on the AEPS will enable us to respond quicker to your comments and better manage the DA Form 2028 program. You may also mail, fax or E-mail your letter or DA Form 2028 direct to: AMSTA-LC-CI Tech Pubs, TACOM-RI, 1 Rock Island Arsenal, Rock Island, IL 61299-7630. The E-mail address is TACOM-TECH-PUBS@ria.army.mil. The fax number is DSN 793-0726 or Commercial (309) 782-0726.

DISTRIBUTION STATEMENT A — Approved for public release; distribution is unlimited.

# TABLE OF CONTENTS


| | | Page |
|---|---|---|
| | HOW TO USE THIS MANUAL | iii |
| CHAPTER 1 | INTRODUCTION | 1-1 |
| Section I. | General Information | 1-2 |
| II. | Equipment Description | 1-5 |
| III. | Principles of Operation | 1-14 |
| CHAPTER 2 | OPERATING INSTRUCTIONS | 2-1 |
| Section I. | Description and Use of Operator's Controls and Indicators | 2-1 |
| II. | Operator Preventive Maintenance Checks and Services (PMCS) | 2-15 |
| III. | Operation Under Usual Conditions | 2-48 |
| IV. | Operation Under Unusual Conditions | 2-78 |
| V. | Operation of Special Purpose Kits | 2-91 |
| CHAPTER 3 | OPERATOR MAINTENANCE | 3-1 |
| I. | Lubrication Instructions | 3-1 |
| II. | Operator Troubleshooting | 3-1 |
| III. | Operator Maintenance Procedures | 3-19 |
| APPENDIX A | REFERENCE | A-1 |
| APPENDIX B | COMPONENTS OF END ITEM (COEI) AND BASIC ISSUE ITEMS (BII) LISTS | B-1 |
| APPENDIX C | ADDITIONAL AUTHORIZATION LIST (AAL) | C-1 |
| APPENDIX D | EXPENDABLE/DURABLE SUPPLIES AND MATERIALS LIST | D-1 |
| APPENDIX E | STOWAGE AND SIGN GUIDE | E-1 |
| INDEX | | INDEX-1 |

# HOW TO USE THIS MANUAL

## ABOUT YOUR MANUAL

Spend some time looking through this manual. You'll find that it takes a positive approach and clearly states only what you can do. Before attempting any questionable operation which is not specifically authorized in this manual, clearance must be obtained from your supervisor.

Features added to improve the convenience of this manual and increase your efficiency are:

a. **Accessing Information** – This includes physical entry features such as the bleed-to-edge indicators on the cover and edge of the manual. Troubleshooting guides for specific systems lead directly to step-by-step directions for problem solving and maintenance tasks.

b. **Illustrations** – A variety of methods are used to make locating and identifying components easier. Locator illustrations with keyed text, exploded views, and cut-away diagrams make the information in this manual easier to understand and follow.

c. **Keying Text With Illustrations** – Instructions/text are located together with figures that illustrate the specific task you are working on. Generally, the task steps and illustrations are located on adjacent pages.

## USING YOUR MANUAL: EXAMPLE 1

**TASK:** You are starting your ESP vehicle engine and are in need of instructions to complete this procedure.

**OPERATING INSTRUCTION STEPS:**

1. Look at the cover of this manual. You will see chapter and appendix titles listed from top to bottom on the right-hand side.
2. Look at the right edge of the manual. On some of the pages you will see bleed-to-edge indicators (black bars) that are aligned with bars on the cover. These are the locations of titles in the text.
3. Look for OPERATING INSTRUCTIONS in the list on the cover.

ARMY TM 9-2320-386-10

TECHNICAL MANUAL

EXTENDED SERVICE PROGRAM (ESP)

OPERATOR'S MANUAL

FOR

2-1/2-TON, 6X6, M44A3 SERIES TRUCKS (DIESEL)

| | |
|---|---|
| HOW TO USE THIS MANUAL | iii |
| INTRODUCTION | 1-1 |
| OPERATING INSTRUCTIONS | 2-1 |
| OPERATOR MAINTENANCE | 3-1 |
| REFERENCES | A-1 |
| COMPONENTS OF END ITEM (COEI) AND BASIC ISSUE ITEMS (BII) LISTS | B-1 |
| ADDITIONAL AUTHORIZATION LIST (AAL) | C-1 |
| EXPENDABLE/DURABLE SUPPLIES AND MATERIALS LIST | D-1 |
| STOWAGE AND SIGN GUIDE | E-1 |

TRUCK, CARGO: 2-1/2-TON, 6X6, M35A3 (2320-01-383-2047) (EIC: BHK); (2320-01-383-3850) (EIC: BHL) M35A3C (2320-01-383-2050) (EIC: BHP); (2320-01-383-2049) (EIC: BHQ) M36A3 (2320-01-383-2048) (EIC: BHM); (2320-01-383-2046) (EIC: BHN).

DISTRIBUTION STATEMENT A. Approved for public release; distribution is unlimited.

HEADQUARTERS, DEPARTMENT OF THE ARMY

# HOW TO USE THIS MANUAL (Contd)

4. Turn to page 2-1 with the edge indicator matching the black bar for OPERATING INSTRUCTIONS. (Page number is listed next to title.)
5. Look through the list of section titles until you find Section III, OPERATION UNDER USUAL CONDITIONS.
6. Turn to page 2-48 as indicated.
7. Look through the list of paragraph titles in paragraph 2-11, OPERATION UNDER USUAL CONDITIONS, until you locate Starting the Engine (Above +20°F) (-6.7°C).

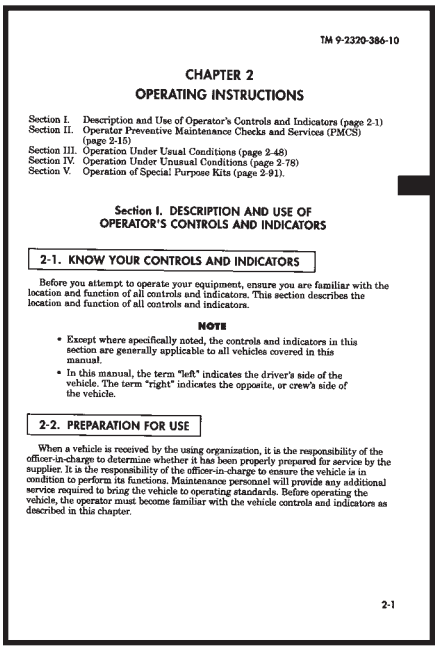

TM 9-2320-386-10

CHAPTER 2
OPERATING INSTRUCTIONS

Section I. Description and Use of Operator's Controls and Indicators (page 2-1)
Section II. Operator Preventive Maintenance Checks and Services (PMCS) (page 2-15)
Section III. Operation Under Usual Conditions (page 2-48)
Section IV. Operation Under Unusual Conditions (page 2-78)
Section V. Operation of Special Purpose Kits (page 2-91).

Section I. DESCRIPTION AND USE OF OPERATOR'S CONTROLS AND INDICATORS

2-1. KNOW YOUR CONTROLS AND INDICATORS

Before you attempt to operate your equipment, ensure you are familiar with the location and function of all controls and indicators. This section describes the location and function of all controls and indicators.

NOTE

- Except where specifically noted, the controls and indicators in this section are generally applicable to all vehicles covered in this manual.
- In this manual, the term "left" indicates the driver's side of the vehicle. The term "right" indicates the opposite, or crew's side of the vehicle.

2-2. PREPARATION FOR USE

When a vehicle is received by the using organization, it is the responsibility of the officer-in-charge to determine whether it has been properly prepared for service by the supplier. It is the responsibility of the officer-in-charge to ensure the vehicle is in condition to perform its functions. Maintenance personnel will provide any additional service required to bring the vehicle to operating standards. Before operating the vehicle, the operator must become familiar with the vehicle controls and indicators as described in this chapter.

2-1

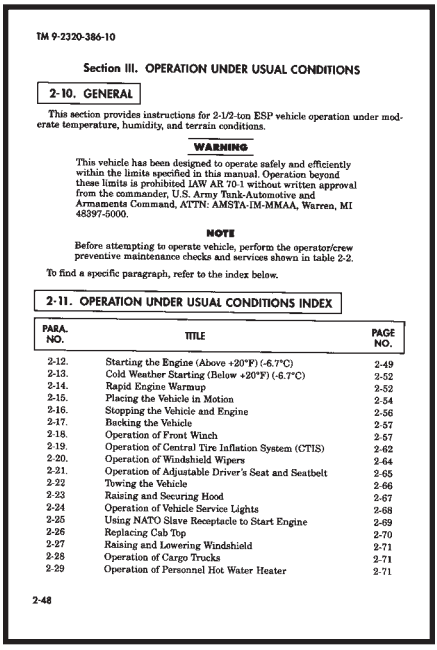

TM 9-2320-386-10

Section III. OPERATION UNDER USUAL CONDITIONS

2-10. GENERAL

This section provides instructions for 2-1/2-ton ESP vehicle operation under moderate temperature, humidity, and terrain conditions.

WARNING

This vehicle has been designed to operate safely and efficiently within the limits specified in this manual. Operation beyond these limits is prohibited IAW AR 70-1 without written approval from the commander, U.S. Army Tank-Automotive and Armamentsa Command, ATTN: AMSTA-IM-MMAA, Warren, MI 48397-5000.

NOTE

Before attempting to operate vehicle, perform the operator/crew preventive maintenance checks and services shown in table 2-2.

To find a specific paragraph, refer to the index below.

2-11. OPERATION UNDER USUAL CONDITIONS INDEX

| PARA. NO. | TITLE | PAGE NO. |
|---|---|---|
| 2-12. | Starting the Engine (Above +20°F) (-6.7°C) | 2-49 |
| 2-13. | Cold Weather Starting (Below +20°F) (-6.7°C) | 2-52 |
| 2-14. | Rapid Engine Warmup | 2-52 |
| 2-15. | Placing the Vehicle in Motion | 2-54 |
| 2-16. | Stopping the Vehicle and Engine | 2-56 |
| 2-17. | Backing the Vehicle | 2-57 |
| 2-18. | Operation of Front Winch | 2-57 |
| 2-19. | Operation of Central Tire Inflation System (CTIS) | 2-62 |
| 2-20. | Operation of Windshield Wipers | 2-64 |
| 2-21. | Operation of Adjustable Driver's Seat and Seatbelt | 2-65 |
| 2-22 | Towing the Vehicle | 2-66 |
| 2-23 | Raising and Securing Hood | 2-67 |
| 2-24 | Operation of Vehicle Service Lights | 2-68 |
| 2-25 | Using NATO Slave Receptacle to Start Engine | 2-69 |
| 2-26 | Replacing Cab Top | 2-70 |
| 2-27 | Raising and Lowering Windshield | 2-71 |
| 2-28 | Operation of Cargo Trucks | 2-71 |
| 2-29 | Operation of Personnel Hot Water Heater | 2-71 |

2-48

# HOW TO USE THIS MANUAL (Contd)

8. Turn to paragraph 2-12 on page 2-49 as indicated.
9. Starting on page 2-49 and continuing through page 2-51, you will find directions for starting the engine listed in progressive order.
10. Before performing the operating instruction steps, take time to examine and familiarize yourself with the complete operation procedure and required PMCS which starts on page 2-15.
11. Procedures include everything you must do to accomplish a basic operations task.
12. Numbered callouts, found with the art and text and arranged in a clockwise pattern, will make it easier for you to identify and locate instruments and controls.
13. Pay particular attention to all notes, cautions, and warnings. They are designed to assist you with your task, prevent damage to the vehicle and its components, and protect you from injury.

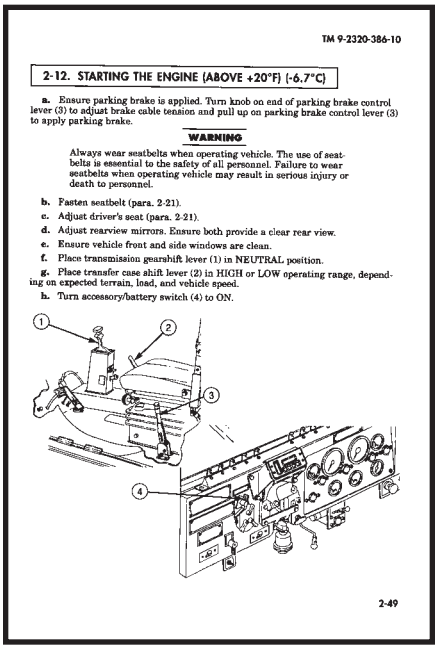

TM 9-2320-386-10

2-12. STARTING THE ENGINE (ABOVE +20°F) (-6.7°C)

a. Ensure parking brake is applied. Turn knob on end of parking brake control lever (3) to adjust brake cable tension and pull up on parking brake control lever (3) to apply parking brake.

WARNING

Always wear seatbelts when operating vehicle. The use of seatbelts is essential to the safety of all personnel. Failure to wear seatbelts when operating vehicle may result in serious injury or death to personnel.

b. Fasten seatbelt (para. 2-21).
c. Adjust driver's seat (para. 2-21).
d. Adjust rearview mirrors. Ensure both provide a clear rear view.
e. Ensure vehicle front and side windows are clean.
f. Place transmission gearshift lever (1) in NEUTRAL position.
g. Place transfer case shift lever (2) in HIGH or LOW operating range, depending on expected terrain, load, and vehicle speed.
h. Turn accessory/battery switch (4) to ON.

2-49

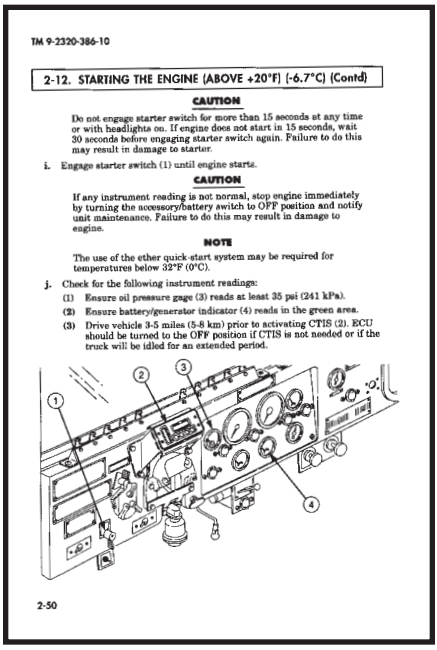

TM 9-2320-386-10

2-12. STARTING THE ENGINE (ABOVE +20°F) (-6.7°C) (Contd)

CAUTION

Do not engage starter switch for more than 15 seconds at any time or with headlights on. If engine does not start in 15 seconds, wait 30 seconds before engaging starter switch again. Failure to do this may result in damage to starter.

i. Engage starter switch (1) until engine starts.

CAUTION

If any instrument reading is not normal, stop engine immediately by turning the accessory/battery switch to OFF position and notify unit maintenance. Failure to do this may result in damage to engine.

NOTE

The use of the ether quick-start system may be required for temperatures below 32°F (0°C).

j. Check for the following instrument readings:
(1) Ensure oil pressure gage (3) reads at least 35 psi (241 kPa).
(2) Ensure battery/generator indicator (4) reads in the green area.
(3) Drive vehicle 3-5 miles (5-8 km) prior to activating CTIS (2). ECU should be turned to the OFF position if CTIS is not needed or if the truck will be idled for an extended period.

2-50

# HOW TO USE THIS MANUAL (Contd)

## USING YOUR MANUAL: EXAMPLE 2

**TASK:** Your ESP vehicle tires have inadequate tire inflation and you need instructions to correct this condition.

**TROUBLESHOOTING STEPS:**

1. Look at the cover of this manual. You will see chapter and appendix titles listed from top to bottom on the right-hand side.
2. Look at the right edge of the manual. On some of the pages you will see bleed-to-edge indicators (black bars) that are aligned with bars on the cover. These are the locations of chapters and appendices in the text.
3. Look for OPERATOR MAINTENANCE in the list on the cover.
4. Turn to those pages with the edge indicator matching the black bar for Chapter 3, OPERATOR MAINTENANCE. (Page 3-1 is listed next to title.)
5. Locate Section II, OPERATOR TROUBLE-SHOOTING on page 3-1.
6. Look through the list of paragraph titles in paragraph 3-3, TROUBLESHOOTING SYMPTOM INDEX, until you locate CENTRAL TIRE INFLATION SYSTEM (CTIS) on page 3-3.
7. Look for symptom number 24 Inadequate tire inflation/deflation under various road conditions.
8. Turn to page 3-12 as indicated, and perform the steps indicated.

TM 9-2320-386-10

3-2. GENERAL (Contd)

**WARNING**

Operation of a deadlined vehicle, without preliminary inspection, may cause injury to personnel and/or damage to equipment.

**NOTE**

Operators should perform the corrective action in the order listed until the malfunction is corrected. If none of the steps correct the malfunction, notify unit maintenance.

**b. Omissions.** This manual cannot list all malfunctions that may occur. If a malfunction occurs that is not listed in table 3-1, notify unit maintenance.

**c. Symptom Index.** To find a specific malfunction, refer to the symptom index.

3-3. TROUBLESHOOTING SYMPTOM INDEX

| MALFUNCTION NO. | MALFUNCTION | TROUBLESHOOTING PROCEDURE PAGE |
|---|---|---|
| | **ENGINE** | |
| 1. | Engine starter switch is engaged but engine fails to start | 3-4 |
| 2. | Engine cranks but does not start | 3-5 |
| 3. | Engine cranks but fails to start at outside temperatures below 0°F (-18°C) | 3-5 |
| 4. | Engine starts but misfires, runs rough, or lacks power | 3-6 |
| 5. | Engine overheats as indicated by engine coolant temperature gauge | 3-6 |
| 6. | Low engine oil pressure | 3-7 |
| 7. | Excessive exhaust smoke after engine reaches normal operating temperature of 160°F to 230°F (71°C to 110°C) | 3-7 |
| | **TRANSMISSION** | |
| 8. | No response to gear shift lever movement | 3-8 |
| 9. | Rough shifting | 3-8 |
| 10. | Lubricant leakage | 3-8 |
| | **TRANSFER CASE** | |
| 11. | Transfer case shift lever will not shift or slips out of gear | 3-8 |
| 12. | Transfer case lubricant leakage | 3-8 |
| | **FRONT AND REAR AXLES** | |
| 13. | Front axle is noisy | 3-8 |
| 14. | Rear axle is noisy | 3-8 |

3-2

TM 9-2320-386-10

*Table 3-1. Troubleshooting (Contd).*

| MALFUNCTION<br>TEST OR INSPECTION<br>CORRECTIVE ACTION |
|---|
| Step 5. Check aftercooler for debris or deposits.<br>If debris or deposits are found, notify unit maintenance. |
| Step 6. Check outside of radiator core for obstructions.<br>If clogged, remove debris. Refer to table 2-1. |
| Step 7. Check radiator fan.<br>If fan is not turning, check for loose or broken drivebelt.<br>If loose or broken, notify unit maintenance. |
| Step 8. Check radiator fan clutch operation.<br>If fan is not turning, notify unit maintenance. |
| Step 9. Check for loose or broken water pump drivebelt.<br>If loose or broken, notify unit maintenance.<br>END OF TESTING! |
| **CENTRAL TIRE INFLATION SYSTEM (CTIS)** |
| **24. INADEQUATE TIRE INFLATION/DEFLATION UNDER VARIOUS ROAD CONDITIONS** |
| Step 1. Check air lines for broken or restricted tubes.<br>If tubing is broken or restricted, notify unit maintenance. |
| Step 2. Check tires for punctures.<br>If punctured, notify unit maintenance. |
| Step 3. If problem persists, inflate/deflate tires manually (para. 3-9) and notify unit maintenance.<br>END OF TESTING! |
| **25. ELECTRONIC CONTROL UNIT (ECU) FAILS TO OPERATE** |
| Step 1. Accessory/battery switch should be in the ON position.<br>If in OFF position, turn ON. |
| Step 2. Check the four pin and nine pin wiring harness connectors on ECU and power manifold for proper connection.<br>If loose, reconnect. |
| Step 3. Check one pin and nine pin wiring harness connectors on power manifold for proper connection. If loose, reconnect. |

3-12

# HOW TO USE THIS MANUAL (Contd)

## USING YOUR MANUAL: EXAMPLE 3

**TASK:** You need to check the fluid levels, and are in need of instruction to complete this procedure.

**MAINTENANCE PROCEDURES:**

1. Look at the cover of this manual. You will see chapter and appendix titles listed from top to bottom on the right-hand side.
2. Look at the right edge of the manual. On some of the pages you will see bleed-to-edge indicators (black bars) that are aligned with bars on the cover. These are the locations of chapters and appendices in the text.
3. Look for OPERATOR MAINTENANCE in the list on the cover.
4. Turn to those pages with the edge indicator matching the black bar for Chapter 3, OPERATOR MAINTENANCE. (Page 3-1 is listed next to title.)
5. Locate Section III, OPERATOR MAINTENANCE PROCEDURES on page 3-1.
6. Look through the paragraph titles in paragraph 3-5, MAINTENANCE PROCEDURES INDEX, until you locate Checking Fluid Levels, para. 3-7 on page 3-20.
7. Turn to paragraph 3-7, CHECKING FLUID LEVELS on page 3-20.
8. Procedures include everything you must do to accomplish a basic maintenance task, such as checking fluid levels.
9. Before beginning a maintenance task, familiarize yourself with the entire maintenance procedure.
10. Pay particular attention to all notes, cautions, and warnings. They are designed to assist you with your task, prevent damage to the vehicle and its components, and protect you from injury.

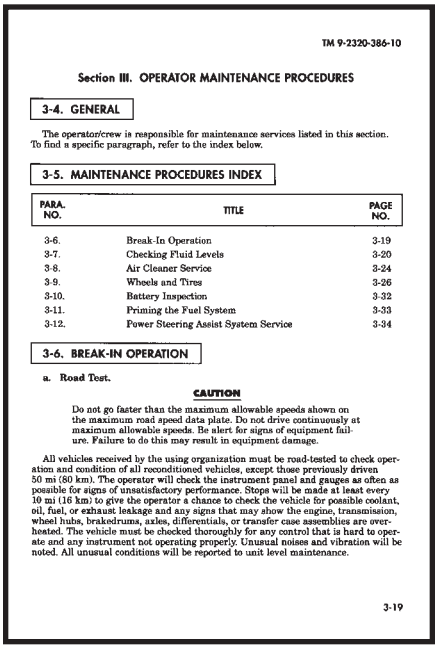

TM 9-2320-386-10

Section III. OPERATOR MAINTENANCE PROCEDURES

3-4. GENERAL

The operator/crew is responsible for maintenance services listed in this section. To find a specific paragraph, refer to the index below.

3-5. MAINTENANCE PROCEDURES INDEX

| PARA. NO. | TITLE | PAGE NO. |
|---|---|---|
| 3-6. | Break-In Operation | 3-19 |
| 3-7. | Checking Fluid Levels | 3-20 |
| 3-8. | Air Cleaner Service | 3-24 |
| 3-9. | Wheels and Tires | 3-26 |
| 3-10. | Battery Inspection | 3-32 |
| 3-11. | Priming the Fuel System | 3-33 |
| 3-12. | Power Steering Assist System Service | 3-34 |

3-6. BREAK-IN OPERATION

a. Road Test.

CAUTION

Do not go faster than the maximum allowable speeds shown on the maximum road speed data plate. Do not drive continuously at maximum allowable speeds. Be alert for signs of equipment failure. Failure to do this may result in equipment damage.

All vehicles received by the using organization must be road-tested to check operation and condition of all reconditioned vehicles, except those previously driven 50 mi (80 km). The operator will check the instrument panel and gauges as often as possible for signs of unsatisfactory performance. Stops will be made at least every 10 mi (16 km) to give the operator a chance to check the vehicle for possible coolant, oil, fuel, or exhaust leakage and any signs that may show the engine, transmission, wheel hubs, brakedrums, axles, differentials, or transfer case assemblies are overheated. The vehicle must be checked thoroughly for any control that is hard to operate and any instrument not operating properly. Unusual noises and vibration will be noted. All unusual conditions will be reported to unit level maintenance.

3-19

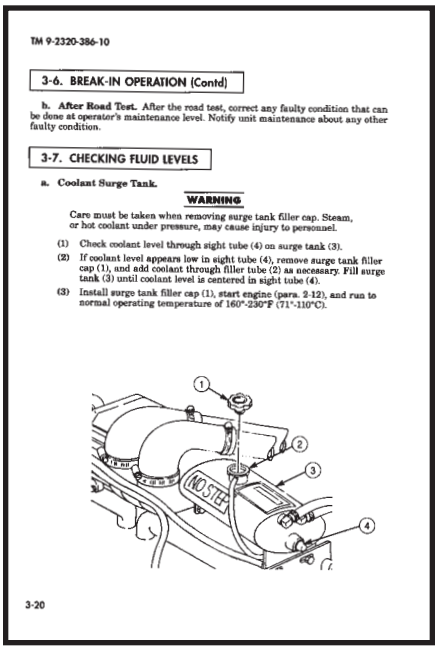

TM 9-2320-386-10

3-6. BREAK-IN OPERATION (Contd)

b. After Road Test. After the road test, correct any faulty condition that can be done at operator's maintenance level. Notify unit maintenance about any other faulty condition.

3-7. CHECKING FLUID LEVELS

a. Coolant Surge Tank.

WARNING

Care must be taken when removing surge tank filler cap. Steam, or hot coolant under pressure, may cause injury to personnel.

(1) Check coolant level through sight tube (4) on surge tank (3).

(2) If coolant level appears low in sight tube (4), remove surge tank filler cap (1), and add coolant through filler tube (2) as necessary. Fill surge tank (3) until coolant level is centered in sight tube (4).

(3) Install surge tank filler cap (1), start engine (para. 2-12), and run to normal operating temperature of 160°-230°F (71°-110°C).



3-20

# HOW TO USE THIS MANUAL (Contd)

## USING THIS MANUAL: EXAMPLE 3 (Contd)

11. An exploded diagram of the component, removed from the vehicle, shows part locations, attachments, and assembly relationships.
12. Numbered callouts, found with the art and text and arranged in a clockwise pattern, will make it easier for you to identify parts and locations.
13. Examine this manual and you will discover it is easier to use when you understand its design. We hope it will encourage you to use it often.

# CHAPTER 1
# INTRODUCTION

Section I. General Information (page 1-2)
Section II. Equipment Description (page 1-5)
Section III. Principles of Operation (page 1-14)

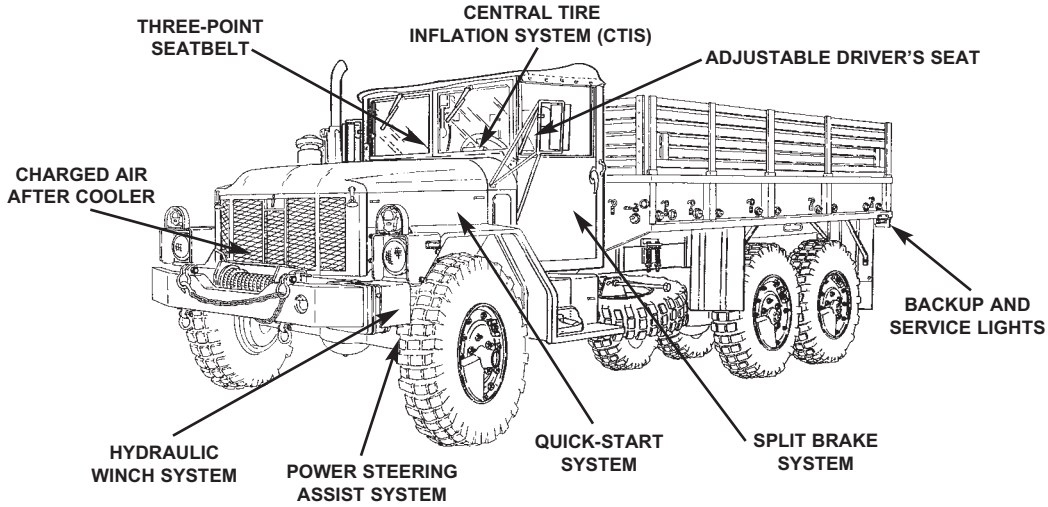


**M35A3**

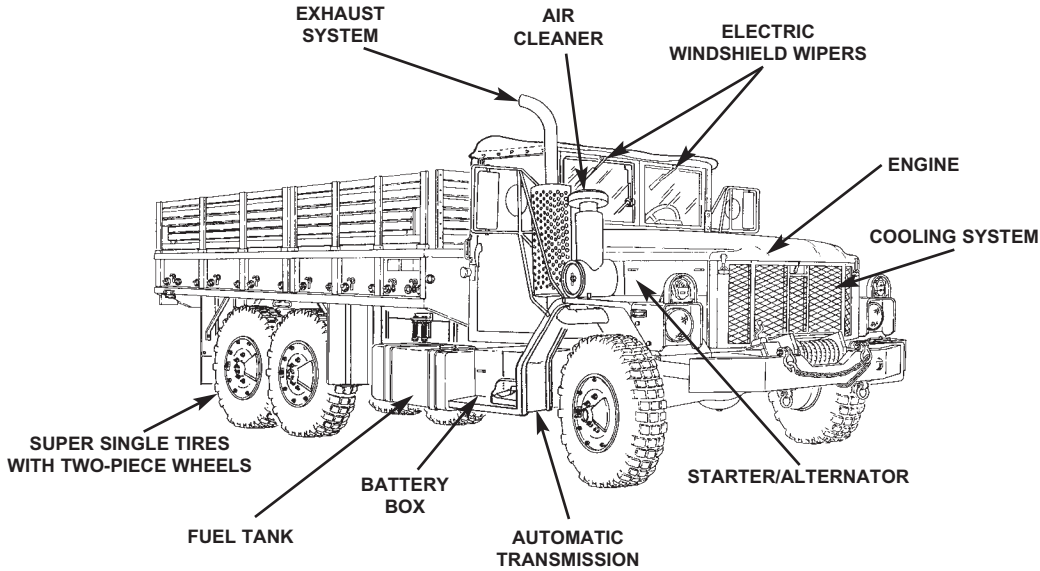


**M36A3**

# Section I. GENERAL INFORMATION

## 1-1. SCOPE

**a.** This manual contains instructions for operating and servicing 2-1/2-ton, 6x6, M44A2 series vehicles which have been remanufactured through the Extended Service Program (ESP). These vehicles are:

**(1)** M35A3, Cargo Truck, WO/W and W/W (Fixed Side)
**(2)** M35A3C, Cargo Truck, WO/W and W/W (Dropside)
**(3)** M36A3, Cargo Truck, WO/W and W/W (Long Wheelbase)

**b.** The material presented here provides operators with information and procedures needed to provide the safest and most efficient operation and servicing of these vehicles. This information includes:

**(1)** Vehicle limitations.
**(2)** The function of controls.
**(3)** Operation instructions for vehicle.
**(4)** Cautions and warnings to operators regarding safety to personnel and equipment.
**(5)** Operator maintenance checks and services.
**(6)** Troubleshooting procedures to be followed by operator if the vehicle malfunctions.
**(7)** Operator forms and records.

## 1-2. MAINTENANCE FORMS AND PROCEDURES

Department of the Army forms and procedures used for equipment maintenance will be those prescribed by DA Pam 738-750, The Army Maintenance Management System (TAMMS).

## 1-3. CORROSION PREVENTION AND CONTROL (CPC)

Corrosion Prevention and Control (CPC) of Army materiel is a continuing concern. It is important that any corrosion problems with ESP vehicles be reported so that the problems can be corrected and improvements can be made to prevent the problems in future items.

## 1-3. CORROSION PREVENTION AND CONTROL (CPC) (Contd)

While corrosion is typically associated with rusting of metals, it can also include deterioration of other materials, such as rubber and plastic. Unusual cracking, softening, swelling, or breaking of these materials may be a corrosion problem.

If a corrosion problem is identified, it can be reported using Standard Form 368, Product Quality Deficiency Report. Use of key words such as corrosion, rust, deterioration, or cracking will ensure that the information is identified as a CPC problem.

The form should be submitted to the address specified in DA Pam 738-750.

## 1-4. DESTRUCTION OF ARMY MATERIEL TO PREVENT ENEMY USE

Procedures for destruction of Army materiel to prevent enemy use can be found in TM 750-244-6.

## 1-5. REPORTING EQUIPMENT IMPROVEMENT RECOMMENDATIONS (EIRs)

If your vehicle needs improvement, let us know. Send us an EIR. You, the user, are the only one who can tell us what you don't like about your equipment. Let us know why you don't like the design or performance. The preferred method for submitting QDRs is through the Army Electronic Product Support (AEPS) website under the Electronic Deficiency Reporting System (EDRS). The web address is: https://aeps.ria.army.mil. This is a secured site requiring a password which can be applied for on the front page of the website. If the above method is not available to you, put it on a SF 368, Product Quality Deficiency Report (PQDR), and mail it to us at: U.S. Army Tank-automotive and Armaments Command, ATTN: AMSTA-TR-E/PQDR MS 267, 6501 E. 11 Mile Road, Warren, MI 48397-500. We'll send you a reply.

## 1-6. WARRANTY INFORMATION

Extended Service Program (ESP) vehicles have an engine (Caterpillar) warranty of 150,000 miles or three years. They also have a transmission (Allison) warranty of two years with unlimited mileage. The warranty starts on the date found in block 23, DA Form 2408-9 in the log book.

## 1-7. USE OF THE METRIC SYSTEM

The equipment/system described herein contains metric components and requires metric common and special tools; therefore, metric units in addition to U.S. standard units will be used throughout this publication.

## 1-8. LIST OF ABBREVIATIONS

The following is a list of special abbreviations that appear in this manual. For a list of standard abbreviations that appear in this manual, refer to MIL-STD-12.

**AAL** – Additional Authorization List
**AC** – Alternating Current
**Ah** – Ampere hour
**AOAP** – Army Oil Analysis Program
**AR** – Army Regulation
**ATAAC** – Air-To-Air After Cooler
**BFS** – Brake Fluid, Silicone
**BII** – Basic Issue Item
**C** – Country
**cm** – Centimeter
**cmm** – Cubic meters per minute
**C/MR** – Change when Maintenance Requires
**CAGEC** – Commercial and Government Entity Code
**cfm** – Cubic feet per minute
**COEI** – Components of End Item
**Contd** – Continued
**CPC** – Corrosion Prevention and Control
**CTIS** – Central Tire Inflation System
**CW** – Chain (and) Wire Rope (lubricating oil)
**°C** – Celsius
**DA** – Department of the Army
**DF** – Diesel Fuel
**E** – Emergency
**ECU** – Electronic Control Unit
**EIR** – Equipment Improvement Recommendations
**EIR MD** – Equipment Improvement Report and Maintenance Digest
**ESP** – Extended Service Program
**FSCM** – Federal Supply Code for Manufacturer
**°F** – Fahrenheit
**GAA** – Grease, Automotive, and Artillery
**GO** – Lubricating Oil
**g** – Gram
**H** – Highway
**HP** – Horsepower
**J** – Joules
**JP** – Jet propulsion
**kg** – Kilogram
**km** – Kilometer
**kPa** – Kilopascal
**L** – Liter
**LCD** – Liquid Crystal Display
**LO** – Lubrication Order
**m** – Meter
**$m^3$/min** – Cubic meters per minute
**MIL-STD** – Military Standard
**ml** – Milliliter
**mm** – Millimeter
**MT** – Metric ton
**N** – Neutral
**N** – Newton
**NATO** – North Atlantic Treaty Organization
**NBC** – Nuclear, Biological, Chemical
**NEU** – Neutral
**NSN** – National Stock Number
**N·m** – Newton meter
**OC** – On-Condition
**OEA** – Oil, Engine (arctic)
**OE/HDO** – Lubricating Oil, Internal Combustion Engine, Tactical
**PMCS** – Preventive Maintenance Checks and Services
**PPS** – Priority Pressure Switch
**psi** – Pounds per square inch
**R** – Reverse
**RPM** – Revolutions per minute
**S** – Snow
**SF** – Standard Form
**STE/ICE-R** – Simplified Test Equipment for Internal Combustion Engines-Reprogrammable
**TAMMS** – The Army Maintenance Management System
**TB** – Technical Bulletin
**TM** – Technical Manual
**TP** – Technical Publication
**v** – Volts

## 1-9. GLOSSARY

The following list shows definitions of military terms that appear in this manual. Other terms in this manual are defined in the paragraph where they first appear.

**Angle of Approach** – Angle between front tires and front bumper

**Angle of Departure** – Angle between rear tires and rear bumperettes

**Fording** – Crossing through water

**Grade** – Steepness of terrain

**Hydraulic** – Operated by oil pressure

**Operator** – Driver of vehicle

**Paulin** – Canvas cover or tarpaulin (tarp)

**Slaving** – Jump-starting

# Section II. EQUIPMENT DESCRIPTION

## 1-10. EQUIPMENT DESCRIPTION INDEX


| PARA. NO. | TITLE | PAGE NO. |
|---|---|---|
| 1-11. | Equipment Characteristics, Capabilities, and Features | 1-5 |
| 1-12. | Location and Description of Major Components | 1-7 |
| 1-13. | Differences Between Models | 1-8 |
| 1-14. | Equipment Data | 1-9 |
| 1-15. | Permissible Fuels | 1-12 |
| 1-16. | Tabulated Data | 1-13 |


## 1-11. EQUIPMENT CHARACTERISTICS, CAPABILITIES, AND FEATURES

**a.** Equipment Characteristics and Capabilities.

The M35A3, M35A3C, and M36A3 cargo trucks are used for transporting troops or heavy loads. The trucks have a new engine and automatic transmission, and rebuilt transfer case and axles. Other new subsystems include new cooling, exhaust, air intake, split-brakes, fuel, electrical, power-assist steering, driver's seatbelt, super-single tires with two-piece wheels, Chemical Agent Resistant Coating (CARC) paint, Simplified Test Equipment/Internal Combustion Engine-Reprogrammable (STE/ICE-R), and Central Tire Inflation System (CTIS).

## 1-11. EQUIPMENT CHARACTERISTICS, CAPABILITIES, AND FEATURES (Contd)

All ESP vehicles have improved mobility and can traverse all types of roads and cross-country terrain in extreme high or low temperatures and humidity. The trucks are capable of fording hard-bottom water crossings up to 30 inches (76 centimeters) without a deepwater fording kit, and 72 inches (183 centimeters) with the fording kit. Front lifting shackles and vehicle tiedown brackets provide a means of lifting and securing the truck during transport.

**b.** Equipment Features.

**(1)** Engine is a Caterpillar 3116 Air-to-Air After Cooler (ATAAC) diesel, 170 HP, 420 lb-ft (570 N•m), designed to meet or exceed performance requirements of the 2-1/2-ton ESP vehicle.

**(2)** Automatic transmission is an Allison AT1545P or AT545, 4-speed, which shifts automatically in all forward ranges and requires no operator action uncommon to standard automatic transmission.

**(3)** Transfer case is a Rockwell T-136, 2-speed, which in conjunction with the transmission, provides up to 8 forward and 2 rearward speed ranges to front and rear differentials.

**(4)** Front and rear axles are Rockwell C-240.

**(5)** Wheels are two-piece Motorwheel 20 x 11.00.

**(6)** Tires are Michelin 14.5 R20XL tubeless radials with a minimum life of 10,000 miles (16,090 km).

**(7)** Power assist steering cylinder and drag link are manufactured by Sycon.

**(8)** Central Tire Inflation System (CTIS), designed by CM Automotive Systems, allows the truck operator to monitor and regulate tire pressure from driver's compartment before and during vehicle operation.

**(9)** Air cleaner element has a capacity of 26.9 hours at 580 cfm (16 $m^3$/min) and is manufactured by Nelson.

## 1-12. LOCATION AND DESCRIPTION OF MAJOR COMPONENTS

This illustration shows the location of major equipment and components of ESP vehicles.

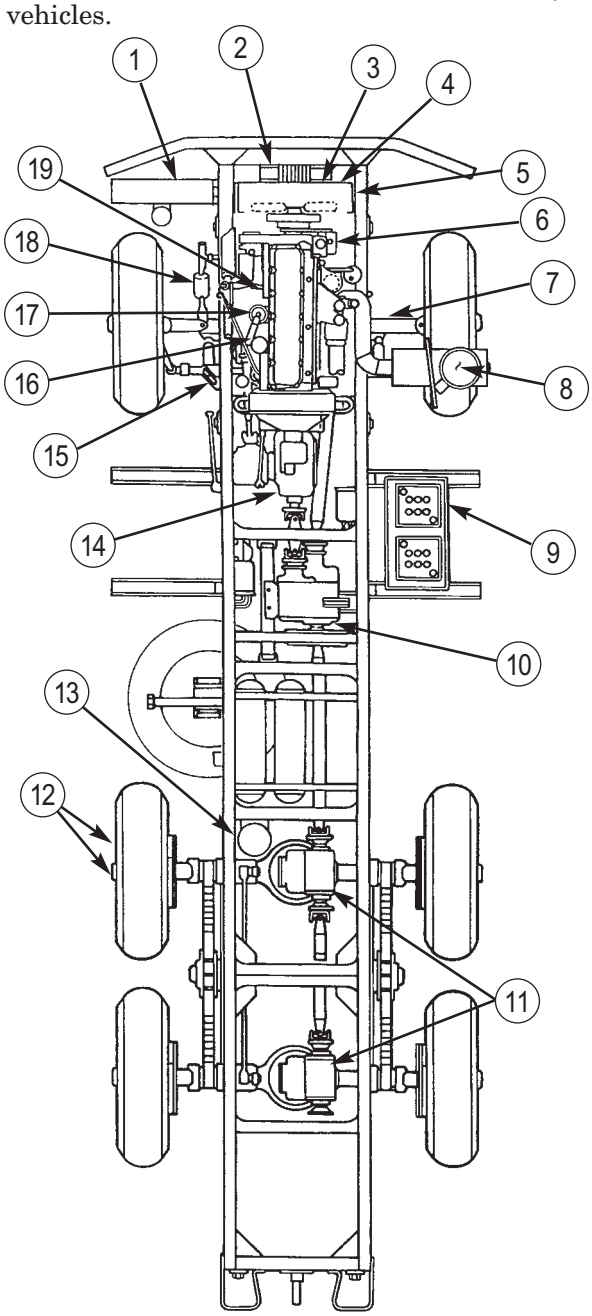


1. Front winch hydraulic oil reservoir
2. Front winch
3. Transmission oil cooler (oil-to-air)
4. Charged air cooler
5. Radiator
6. Surge tank
7. Front axle
8. Air cleaner
9. Batteries
10. Transfer case
11. Rear axles
12. Wheels/tires
13. Air dryer
14. Automatic transmission
15. Power assist steering cylinder
16. Engine oil dipstick
17. Engine oil fill
18. Drag link
19. Engine

## 1-13. DIFFERENCES BETWEEN MODELS

This table shows major equipment and component differences between models of ESP vehicles, arranged in a tabular format for easy referencing by operators.

*Table 1-1. Differences Between Models.*

| EQUIPMENT/FUNCTION | M35A3 | M35A3C | M36A3 |
|---|---|---|---|
| Personnel/Cargo Operations | X | X | X |
| Front Winch | X | X | X |
| Wheelbases: | | | |
| 154 in. (391 cm) | X | X | |
| 190 in. (483 cm) | | | X |
| Body: | | | |
| Cargo Dropside | | X | |
| Cargo (Permanent Sides) | X | | X |
| Fuel Tank: | | | |
| Single Tank | | | |
| 50 gal. (189 L) | X | X | X |
| Tires: | | | |
| 14.5R20 XL | X | X | X |
| Length Overall: | | | |
| With Winch | | | |
| 278.3 in. (707 cm) | X | X | |
| 343 in. (871 cm) | | | X |
| Without Winch | | | |
| 264.3 in. (671 cm) | X | X | |
| 329 in. (836 cm) | | | X |
| Width Overall: | | | |
| 96 in. (244 cm) | X | | X |
| 97.8 in. (248 cm) | | X | |
| Ground Clearance: | | | |
| 13 in. (33 cm) | X | X | X |
| Transmission: | | | |
| Automatic | X | X | X |
| Central Tire Inflation System | X | X | X |

## 1-14. EQUIPMENT DATA

| | STANDARD | METRIC |
|---|---|---|
| 1. CAPACITIES | | |
| Cooling System: | | |
| Dry | 29 qt | 27.4 L |
| Drain and Refill | 27 qt | 26 L |
| Engine Crankcase: | | |
| Dry | 21 qt | 19.9 L |
| W/Filter | 19 qt | 18 L |
| WO/Filter | 18 qt | 17 L |
| Fuel Tank | 50 gal. | 189.3 L |
| Transmission: | | |
| Dry | 21 qt | 19.9 L |
| Drain and Refill | 10 qt | 9.5 L |
| After Rebuild | 16 qt | 15.1 L |
| Front Winch: | | |
| Winch Gearcase | 2.75 pt | 1.3 L |
| Winch End Frame Housing | 1.25 pt | 0.6 L |
| Winch Hydraulic Reservoir: | | |
| Dry | 42 qt | 39.7 L |
| Drain and Refill | 39 qt | 36.9 L |
| Master Cylinder Reservoir | 2 qt | 1.9 L |
| Front and Rear Axle Differentials: | | |
| Drain and Refill | 6 qt | 5.7 L |
| Transfer Case: | | |
| Drain and Refill | 7 qt | 6.6 L |
| Steering Gear: | | |
| Drain and Refill | 3.13 pt | 1.48 L |
| 2. ENGINE | | |
| Manufacturer | Caterpillar | |
| Model | 3116 ATAAC | |
| Type | Diesel, four-cycle, in-line 6 cylinder, turbocharged | |
| Weight | 1,198 lb | 544 kg |
| Displacement | 403 cu. in. | 6.6 L |
| Operating Speed (Full Load) | 2,700 RPM | |
| Brake Horsepower | 170 HP | |
| Maximum Torque (@ 1,550 RPM) | 420 lb-ft | 570 N•m |
| Oil Pressure | 35-70 psi | 241-483 km/L |
| Compression Ratio | 18:1 | |
| Fuel Consumption (Approx.) | 7-8 mpg | 3-3.4 km/L |
| Firing Order | 1, 5, 3, 6, 2, 4 | |
| 3. FUEL SYSTEM | | |
| Fuel Pump Location | On front of engine | |
| Fuel Filter/Water Separator: | | |
| Manufacturer | DAVCO | |

## 1-14. EQUIPMENT DATA (Contd)

| | STANDARD | METRIC |
|---|---|---|
| 4. COOLING SYSTEM | | |
| Radiator Filler Cap Pressure | 10 psi | 69 kPa |
| Thermostat: | | |
| Starts To Open | 178°F | 81°C |
| Fully Open | 198°F | 92°C |
| Radiator: | | |
| Manufacturer | G & O | |
| Type | Cross flow | |
| Charged Air Cooler: | | |
| Manufacturer | G & O | |
| Transmission Oil Cooler (Internal-to-Radiator): | | |
| Manufacturer | G & O | |
| Transmission Oil Cooler (Oil-to-Air): | | |
| Manufacturer | Hayden | |
| 5. ELECTRICAL SYSTEM | | |
| Batteries: | | |
| Model | 6TL | |
| Voltage | 12 volts | |
| Weight (Filled) | 74 lb | 33.6 kg |
| Number of Batteries | 2 | |
| Rating | 120 ampere-hour | |
| Alternator: | | |
| Manufacturer | Prestolite | |
| Model | AMA-5102UT | |
| Voltage Output | 28 volts | |
| Armature Speed (Peak) | 8000 RPM | |
| Manufacturer | Leece-Neville | |
| Model | 3002AC | |
| Voltage Output | 28 volts | |
| Armature Speed (Peak) | 8000 RPM | |
| Starter: | | |
| Manufacturer | Prestolite | |
| Model | EO-33405 | |
| Voltage | 28 volt | |
| Specification | MIL-G-46795-F (AT) | |
| Capacity (Peak) | 8.5 HP | |

## 1-14. EQUIPMENT DATA (Contd)

| | STANDARD | METRIC |
|---|---|---|
| 6. TRANSMISSION (AUTOMATIC) | | |
| Manufacturer | Allison | |
| Model | AT1545P or AT545 | |
| Type | Constant mesh, spur type, planetary | |
| Weight: | | |
| AT1545P | | |
| Dry | 302 lb | 137 kg |
| Wet | 320 lb | 145 kg |
| AT545 | | |
| Dry | 289 lb | 131 kg |
| Wet | 321 lb | 146 kg |
| Speeds | Four forward, one reverse | |
| Gear Ratios: | | |
| First Speed | 3.45 to 1 | |
| Second Speed | 2.25 to 1 | |
| Third Speed | 1.41 to 1 | |
| Fourth Speed | 1.00 to 1 | |
| Reverse | 5.02 to 1 | |
| 7. WHEELS | | |
| Manufacturer | Motorwheel | |
| Size | 20 x 11.00 | |
| 8. TIRES | | |
| Manufacturer | Michelin | |
| Size | 14.5 R20XL | |
| 9. CENTRAL TIRE INFLATION SYSTEM (CTIS) | | |
| Manufacturer: | CM Automotive | |
| Type | Electronic system | |
| 10. POWER STEERING SYSTEM | | |
| Drag link: | | |
| Manufacturer | Sycon | |
| Model | 1-83504-1 | |
| Power Assist Cylinder: | | |
| Manufacturer | Sycon | |
| Model | 1-85610 | |

## 1-15. PERMISSIBLE FUELS

**NOTE**

Primary fuels listed below must be used whenever possible. Alternate I fuels are most desirable if primary fuels are not available, with emergency fuel the least desirable.

*Table 1-2. Permissible Fuels.*

| FUEL | TEMPERATURE LIMITS |
|---|---|
| **Primary Fuels** | |
| Diesel fuel, AA-52557, grade DF-2 (NATO code no. F-54) | Do not use below +32°F (0°C) |
| Diesel fuel, AA-52557, grade DF-A (NATO code no. F-54) | All temperatures |
| Turbine fuel, aviation, kerosene type, MIL-DTL-83133, grade JP-8 (NATO code no. F-34) | Do not use below -58°F (-50°C) |
| **Alternate I Fuels** | |
| Turbine fuel, MIL-DTL-5624, grade JP-5 (NATO code no. F-44) | Do not use below -51°F (-46°C) |
| Diesel fuel, MIL-F-16884 (NATO code no. F-75 or F-76) | Do not use below +15°F (-9°C) |
| **Emergency Fuel** | |

**WARNING**

Never mix JP-4 turbine fuel with other fuels outside of vehicle fuel tank. Any mixing should be done by adding fuels to fuel tank. JP-4 turbine fuels are highly combustible and may explode, resulting in injury to personnel.

**CAUTION**

If engine runs rough when using any emergency fuel, add 10% to 30% diesel fuel to smooth engine performance. Failure to add diesel fuel may result in damage to pistons, clogging of fuel filter, and early failure of fuel injectors.

| | |
|---|---|
| Turbine fuel, MIL-DTL-5624, grade JP-4 (NATO code no. F-40) | Do not use below -72°F (-58°C) |

## 1-16. TABULATED DATA

This paragraph lists vehicle weights, specifications, and performance data for easy reference by the operator.

*Table 1-3. Vehicle Weights.*

| VEHICLE | CURB WEIGHT | PAYLOAD | TOWED LOAD | GROSS VEHICLE WEIGHT (GVW) |
|---|---|---|---|---|
| M35A3: | | | | |
| W/W | 14,600 lb (6,628 kg) | 5,000 lb (2,270 kg) | 6,000 lb (2,724 kg) | 19,580 lb (8,889 kg) |
| WO/W | 13,900 lb (6,311 kg) | 5,000 lb (2,270 kg) | 6,000 lb (2,724 kg) | 18,900 lb (8,581 kg) |
| M35A3C: | | | | |
| W/W | 14,740 lb (6,692 kg) | 5,000 lb (2,270 kg) | 6,000 lb (2,724 kg) | 19,700 lb (8,944 kg) |
| WO/W | 14,040 lb (6,374 kg) | 5,000 lb (2,270 kg) | 6,000 lb (2,724 kg) | 19,020 lb (8,635 kg) |
| M36A3: | | | | |
| W/W | 15,980 lb (7,255 kg) | 5,000 lb (2,270 kg) | 6,000 lb (2,724 kg) | 20,960 lb (9,516 kg) |
| WO/W | 15,280 lb (6,937 kg) | 5,000 lb (2,270 kg) | 6,000 lb (2,724 kg) | 20,280 lb (9,207 kg) |

*Table 1-4. Performance Data.*

| VEHICLE | ANGLE OF APPROACH | ANGLE OF DEPARTURE | TURNING RADIUS | CRUISING RANGE |
|---|---|---|---|---|
| M35A3: | | | | |
| W/W | 40° | 41° | 36 ft (11 m) | 375 mi (603 km) |
| WO/W | 51° | 41° | 36 ft (11 m) | 375 mi (603 km) |
| M35A3C: | | | | |
| W/W | 40° | 41° | 36 ft (11 m) | 375 mi (603 km) |
| WO/W | 51° | 41° | 36 ft (11 m) | 375 mi (603 km) |
| M36A3: | | | | |
| W/W | 40° | 25° | 45 ft (14 m) | 375 mi (603 km) |
| WO/W | 51° | 25° | 45 ft (14 m) | 375 mi (603 km) |

| | GRADE CAPABILITY | SIDE SLOPE CAPABILITY | BRIDGE CLASSIFICATION | |
|---|---|---|---|---|
| | | | EMPTY | W/PAYLOAD |
| All vehicles | 60% | 20% | 6 | 8 |

# Section III. PRINCIPLES OF OPERATION

## 1-17. GENERAL

This section explains how components of the ESP vehicles work. A functional description of these components and their related parts will be covered in the following paragraphs. To find the operation of a specific system or component, see the Principles of Operation Index below.

## 1-18. PRINCIPLES OF OPERATION INDEX


| PARA. NO. | TITLE | PAGE NO. |
|---|---|---|
| 1-19. | Engine System Operation | 1-14 |
| 1-20. | Fuel System Operation | 1-14.1 |
| 1-20.1. | Compressed Air System Operation | 1-14.1 |
| 1-21. | Central Tire Inflation System (CTIS) Operation | 1-14.1 |
| 1-22. | Cooling System Operation | 1-15 |
| 1-23. | Electrical System Operation | 1-15 |
| 1-24. | Simplified Test Equipment/Internal Combustion Engines – Reprogrammable (STE/ICE-R) | 1-15 |
| 1-25. | Front Winch Operation | 1-15 |


## 1-19. ENGINE SYSTEM OPERATION

The Caterpillar 3116 engine has a 403 cu. in. (6.6 L) displacement, with 4.13 in. (105 mm) bore and 5.0 in. (127 mm) stroke. The engine is a four-stroke cycle, in-line 6 cylinder with direct fuel injection. The engine is turbocharged with an air-to-air aftercooler (ATAAC) system, and is rated 170 hp at 2700 RPM.

The engine lubricating oil, which is both cooled and filtered, is supplied by a gear-type pump. Bypass valves provide unrestricted flow of lubrication oil to the engine parts when oil viscosity is high, or if either the oil cooler or the oil filter elements should become clogged.

## 1-20. FUEL SYSTEM OPERATION

A mechanical governor, transfer pump, and high-pressure unit injection fuel system provide engine response and fuel economy for ESP vehicles.

The transfer pump creates a vacuum that draws fuel from the fuel tank. It then pumps fuel under low pressure to the fuel/water separator where water and contaminants are removed. Filtered fuel is then carried to the injectors. The injectors use a plunger-and-barrel system to create the high pressures needed for injection. Inside the injector, a spring-loaded needle valve lifts from its seat to allow high pressure fuel to be injected into each cylinder. Excess fuel is routed from the engine cylinder head back to the governor and then to the fuel tank. A fuel shutoff solenoid mounted on the fuel pump cuts the flow of fuel to the injectors when the operator turns the accessory switch off.

## 1-20.1. COMPRESSED AIR SYSTEM OPERATION

The ESP vehicles are equipped with a compressed air system that supplies clean dry filtered air to operate air-actuated or assisted accessories throughout the vehicle.

The air is supplied from engine air compressor through an air dryer and stored in two air reservoirs.

The air from reservoirs is piped along frame rails back to two rear couplings. The left side air coupling is the service coupling and is used to supply air to operate trailer brakes. The right side air coupling is the emergency coupling and is used to release spring brakes if trailer is so equipped and to connect an air hose to manually inflate vehicle tires.

The air reservoirs also supply air forward to air pressure gauge, two air hydraulic brake boosters, steering assist cylinder, drag link assist, air horns, transfer case air cylinder, front axle engagement switch, and cooling fan actuator and clutch.

## 1-21. CENTRAL TIRE INFLATION SYSTEM (CTIS) OPERATION

The CTIS allows the operator to manually select a tire pressure suitable to the terrain being traversed. The system incorporates an Electronic Control Unit (ECU) and air regulating system which provides and maintains the correct air pressure to all tires at the same time. The ECU controls the manifold, which automatically directs compressed air to inflate the tires, or signals the deflation port to deflate the tires according to the operator-selected terrain setting. The ECU monitors and regulates air system pressure in 30-minute intervals and compensates for thermal tire pressure changes as recommended by the tire manufacturer.

## 1-21. CENTRAL TIRE INFLATION SYSTEM (CTIS) OPERATION (Contd)

The CTIS is activated and deactivated with an ON/OFF button on the ECU. In the event the unit is not deactivated prior to engine shutdown, it will automatically activate when the engine is started again.

Terrain switches on the ECU are pressed by the operator for the terrain conditions, which are identified as emergency, sand/mud/snow, cross-country, and highway. Once the terrain switch has been pressed for desired pressure setting, the air system inflates and maintains all tires to the appropriate tire pressure corresponding to a recommended vehicle speed. Provided operator does not experience overspeed conditions, no additional operator inputs are required once presets have been selected.

The air regulating system consists of a controller overspeed signal generator, power manifold, and wheel valves. If the operator exceeds the recommended vehicle speed in either emergency, sand/mud/snow, or cross-country modes, an overspeed warning will activate, (flashing max speed display) alerting the operator of the overspeed condition and to signal operator to either decrease vehicle speed or select a higher tire pressure on the ECU. In the event the operator fails to slow down or select a higher tire pressure in approximately one minute, the system will automatically increase air pressure to the tires to the next higher tire pressure setting.

In the event of one or more small air leaks anywhere in the system, such as from a tire puncture or leak at a connecting line, pressure can be maintained by pressing a terrain switch on the control panel. When doing so the initial test pressure sequence begins. If the air feeder lines cannot hold at least 6 psi (41 kPa) the controller display will read FLAT in the upper right corner, indicating to the vehicle operator that a large air leak, such as a damaged/disconnected air line or a flat tire, exists. When FLAT is indicated, the vehicle operator may elect to call for assistance, or try to drive to a repair center using the vehicle's run flat mode.

Should a particular tire or connecting line experience catastrophic failure or a leak which exceeds the capacity of the compressor, the CTIS may be turned off, allowing the wheel valves to keep each tire individually isolated. Additionally, the damaged portion will remain isolated, as a safety measure, until it is repaired. A priority pressure switch in the manifold monitors the pressure in the air reservoirs and isolates the CTIS if this pressure drops below 75 psi (517 kPa). Minimum requirement for the operation of priority systems (brakes, power steering assist, horn) is less than 75 psi (517 kPa), so safe operation is assured. If the CTIS suffers complete failure, the operator accesses a manual wheel valve at each wheel and inflates each tire from an external air source. If tire pressure falls below 10 psi (69 kPa), CTIS will not inflate tire. The CTIS should be deactivated during operation in extreme cold, 0° to -65°F (-18° to -54°C). Extremely cold temperatures can cause air seals located at each wheel to fail.

## 1-22. COOLING SYSTEM OPERATION

The engine has a pressurized cooling system with a shunt line. The system can safely operate at a temperature higher than the normal boiling point of water, which prevents pitting and wear inside the water pump.

ESP vehicles have a 10-plate transmission oil cooler located in the radiator outlet tank and an auxiliary oil cooler in front of the radiator. The oil coolers are designed to keep the automatic transmission running at a safe operating temperature.

Major components of the cooling system are the radiator, charged air cooler, water pump, surge tank, water thermostat regulator, fan, and fan actuator.

## 1-23. ELECTRICAL SYSTEM OPERATION

The ESP series electrical system operates similarly to the M44A2 series electrical systems.

## 1-24. SIMPLIFIED TEST EQUIPMENT/INTERNAL COMBUSTION ENGINES - REPROGRAMMABLE (STE/ICE-R)

The STE/ICE-R system is a reprogrammable version of the STE/ICE system commonly used to test the serviceability of standard M44A2, 2-1/2-ton vehicles. When in operation, test data are transmitted from transducers to a permanently-mounted Diagnostic Connector Assembly (DCA) located on the instrument panel on the passenger side of the vehicle. The data are then transferred through a DCA cable to the Vehicle Test Meter (VTM). The VTM uses the data received, and stored vehicle information, to give a result.

The STE/ICE-R can measure standard voltage, current, resistance, pressure, temperature, and speed. Special tests, such as the compressor unbalance test and starter system evaluations, are also performed by STE/ICE-R.

## 1-25. FRONT WINCH OPERATION

The ESP vehicle uses the same front winch commonly found on the M44A2 series vehicles. The front winch is powered by a hydraulic system that transmits pressurized fluid from an engine-driven pump to drive hydraulic winch motor attached to the rear of the winch at the input shaft. The pump is driven by the engine and creates a vacuum that draws oil from the reservoir to a bypass valve. When the winch is not engaged, the bypass valve routes the oil, via the filter, back to the reservoir. To engage the winch, the lower air valve lever on the shift tower is pulled out and up, and compressed air closes the bypass valve reservoir return port and opens the control valve supply port. The control valve determines the direction of drum rotation by routing the oil in either a clockwise or counterclockwise direction through the hydraulic motor by engaging the upper air valve lever on the control tower. The upper air valve uses compressed air to open and close the ports on the control valve.

# CHAPTER 2
# OPERATING INSTRUCTIONS

Section I. Description and Use of Operator's Controls and Indicators (page 2-1)
Section II. Operator Preventive Maintenance Checks and Services (PMCS) (page 2-15)
Section III. Operation Under Usual Conditions (page 2-48)
Section IV. Operation Under Unusual Conditions (page 2-78)
Section V. Operation of Special Purpose Kits (page 2-91).

## Section I. DESCRIPTION AND USE OF OPERATOR'S CONTROLS AND INDICATORS

### 2-1. KNOW YOUR CONTROLS AND INDICATORS

Before you attempt to operate your equipment, ensure you are familiar with the location and function of all controls and indicators. This section describes the location and function of all controls and indicators.

**WARNING**

Hearing protection is required when maintaining vehicle with engine running.

**NOTE**

- Except where specifically noted, the controls and indicators in this section are generally applicable to all vehicles covered in this manual.
- In this manual, the term "left" indicates the driver's side of the vehicle. The term "right" indicates the crew's side of the vehicle.

### 2-2. PREPARATION FOR USE

When a vehicle is received by the using organization, it is the responsibility of the officer-in-charge to determine whether it has been properly prepared for service by the supplier. It is the responsibility of the officer-in-charge to ensure the vehicle is in condition to perform its functions. Maintenance personnel will provide any additional service required to bring the vehicle to operating standards. Before operating the vehicle, the operator must become familiar with the vehicle controls and indicators as described in this chapter.

## 2-3. CHASSIS CONTROLS AND INDICATORS

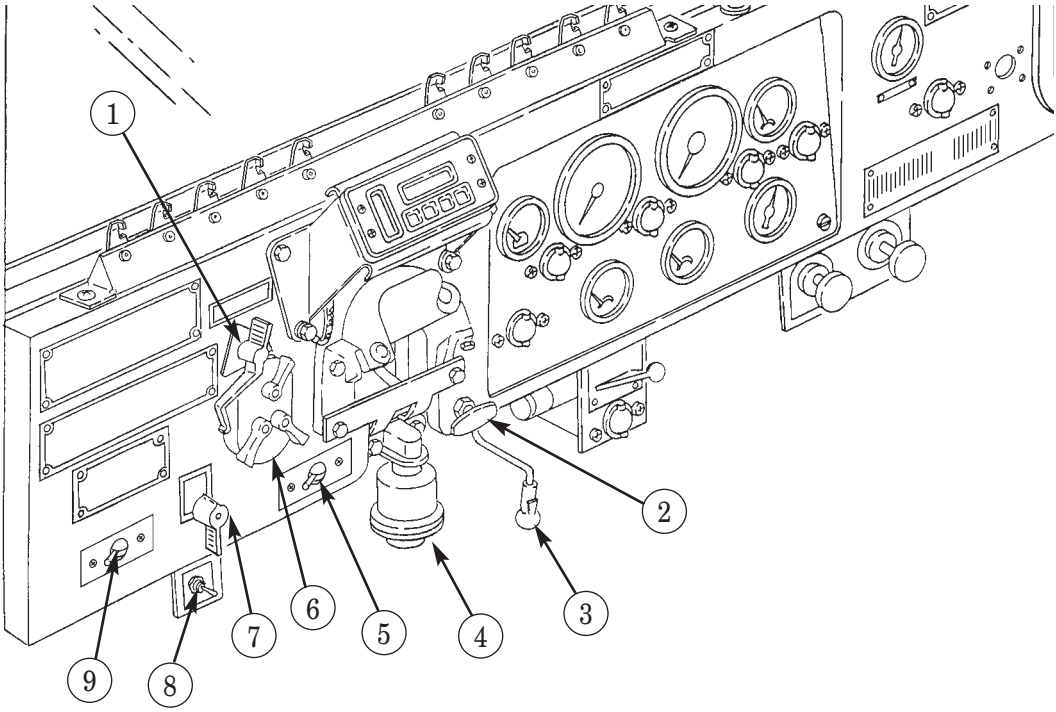


| Key | Item and Function |
|---|---|
| 1 | Battery/accessory switch routes power to starter system, instrument panel gauges, fuel pump, and low pressure warning buzzer. |
| 2 | Throttle control sets engine speed at desired rpm without maintaining pressure on accelerator pedal. Throttle control locks in desired position when pulled out. Rotating control handle clockwise or counterclockwise unlocks it. |
| 3 | Windshield washer lever, when pulled up, activates spray pump. |
| 4 | Air cleaner indicator shows yellow band when engine air cleaner filter needs servicing. |
| 5 | Fuel shutoff switch activates fuel solenoid to shut off fuel flow from transfer pump and stop engine. |
| 6 | Light switch controls operation of vehicle lights. |
| 7 | Engine start switch routes electrical current to starter to crank engine. |
| 8 | Personnel heater blower switch is positioned in HIGH or LOW to control flow of forced air to personnel compartment (cab). |
| 9 | Quick-start switch is activated and held for two to three seconds to allow quick-start valve to open and fill with ether. When released, injects ether through atomizers and into air intake. |

## 2-3. CHASSIS CONTROLS AND INDICATORS (Contd)

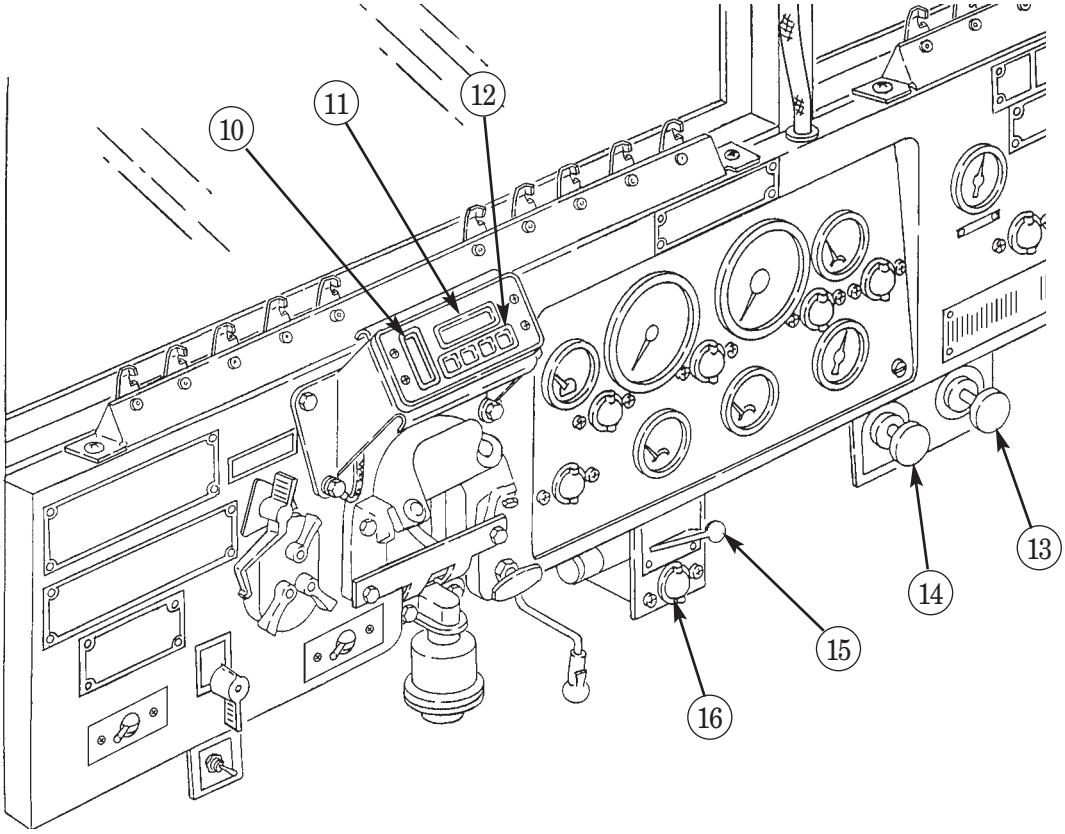


| Key | Item and Function |
|---|---|
| 10 | The Electronic Control Unit (ECU) power button is used to turn on the ECU, which controls and monitors CTIS operation. |
| 11 | Liquid Crystal Display (LCD) gives operator current tire pressure and maximum speed for terrain setting selected. |
| 12 | Four terrain buttons, (Highway, Cross Country, Mud/Sand/Snow, and Emergency.) Represents pre-determined pressure set points (table 2-3). |
| 13 | Temperature control knob is pulled out all the way to provide maximum amount of heat to personnel compartment. |
| 14 | Defroster knob is pulled out to direct flow of hot air onto windshield to prevent frosting. |
| 15 | Front wheel drive lever engages/disengages front wheel drive power. |
| 16 | Front wheel drive indicator light indicates front wheel drive is activated. |

## 2-3. CHASSIS CONTROLS AND INDICATORS (Contd)

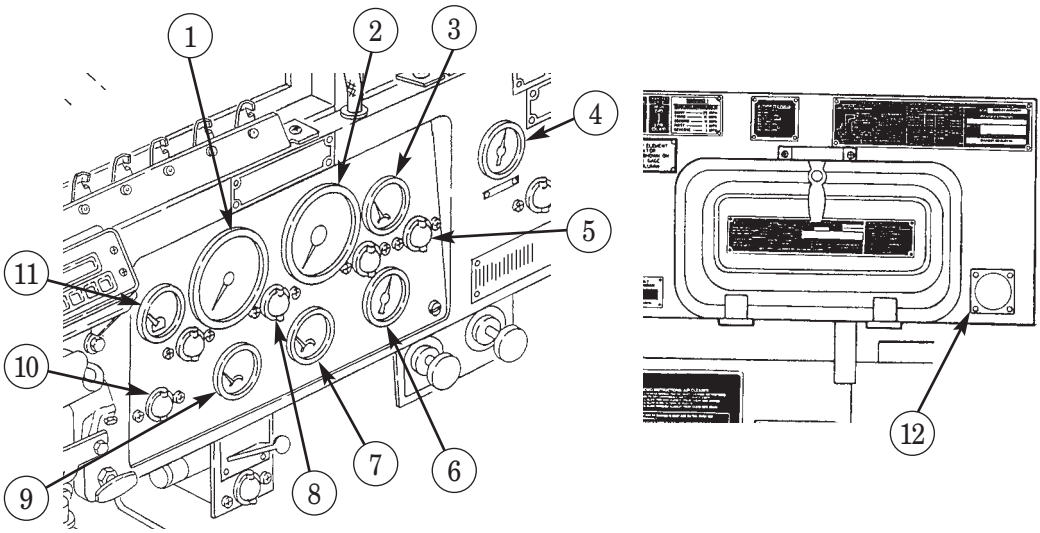


| Key | Item and Function |
|---|---|
| 1 | Speedometer/odometer indicates vehicle speed in miles per hour (mph) and total distance traveled in miles. Tripmeter indicates distance traveled in kilometers. |
| 2 | Tachometer indicates engine speed in revolutions per minute (rpm) and operating time in hours and tenths of hours. Normal idle speed is 750-850 RPM. |
| 3 | Engine coolant temperature gauge indicates temperature of engine coolant. Normal operating temperature is 160°-230°F (71°-110°C). |
| 4 | Transmission temperature gauge indicates temperature of transmission oil when engine is running. Normal operating temperature is 160°-200°F (71°-93°C). |
| 5 | Low air pressure indicator light indicates air pressure in air reservoirs is below 60 psi (414 kPa). |
| 6 | Air pressure gauge indicates air pressure in reservoir tanks. Normal pressure is 90-120 psi (586-827 kPa). |
| 7 | Battery gauge indicates when batteries are charging or discharging. |
| 8 | Parking brake indicator light indicates parking brake has been engaged. |
| 9 | Fuel gauge indicates fuel level in fuel tank. |
| 10 | High beam indicator shows headlights are on high beam. |
| 11 | Oil pressure gauge indicates engine oil pressure when engine is running. Normal operating pressure is 35-70 psi (241-483 kPa). |
| 12 | Diagnostic Connector Assembly (DCA) connects the Vehicle Test Meter (VTM) to the vehicle's test points for STE/ICE-R. |

## 2-3. CHASSIS CONTROLS AND INDICATORS (Contd)

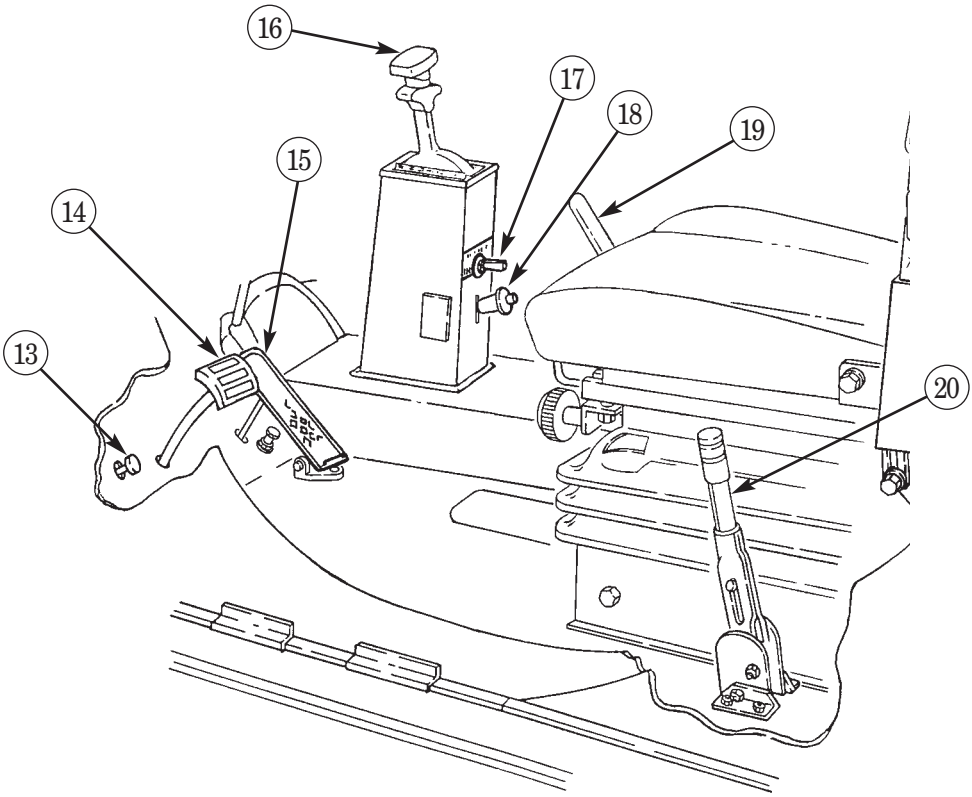


| Key | Item and Function |
|---|---|
| 13 | Dimmer switch is depressed to raise or lower headlight beam. |
| 14 | Service brake pedal is depressed to slow or stop vehicle. |
| 15 | Accelerator pedal controls engine speed. When pressed down, engine speed increases. When released, engine speed decreases. |
| 16 | Transmission select lever is used to select vehicle drive gears. |
| 17 | Winch air control valve lever three-position valve activates pay-in or pay-out of winch cable. |
| 18 | Winch air valve lever is pulled up and out to engage bypass valve for winch operations. |
| 19 | Transfer case shift lever is pushed down to LOW position for heavy load operations, and pulled up to HIGH position for light load operations. |
| 20 | Parking brake lever is pulled up to apply parking brake. The knob at top of handle is turned to set brake cable tension. |

## 2-3. CHASSIS CONTROLS AND INDICATORS (Contd)

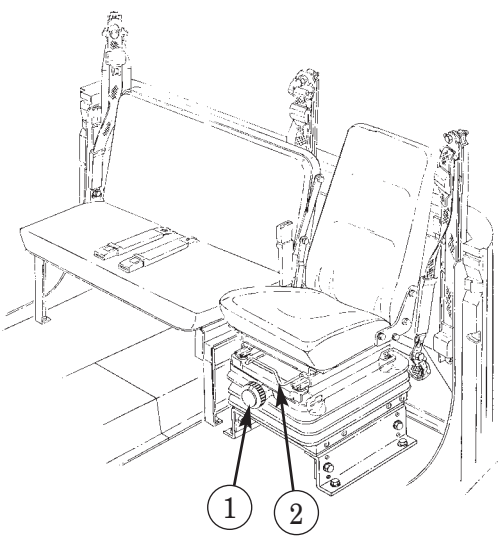


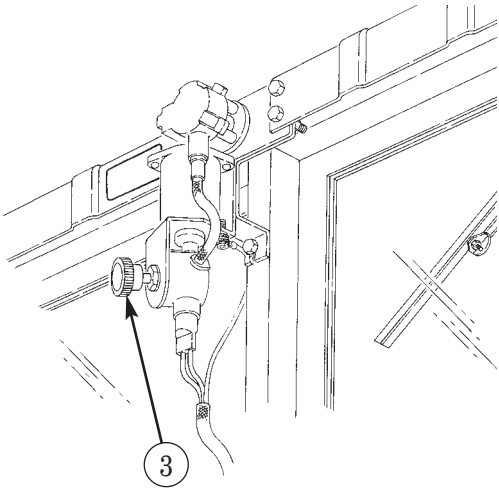


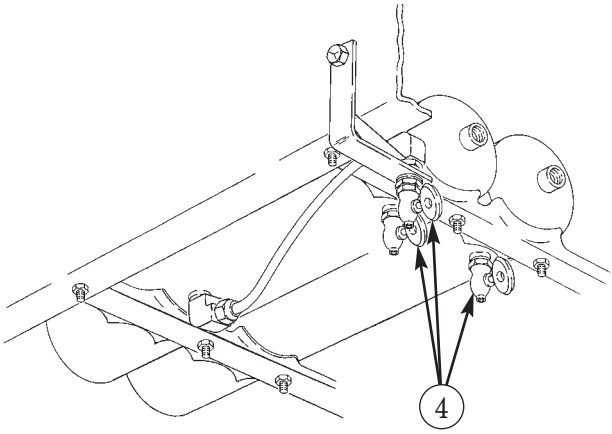


| Key | Item and Function |
|---|---|
| 1 | Seat spring tension adjustment handwheel is turned to adjust the driver's seat spring tension to the operator's body weight. |
| 2 | Horizontal control lever is pulled up to adjust driver's seat forward or backward. |
| 3 | Windshield wiper control knob turns windshield wipers to LOW, HIGH, or OFF position. |
| 4 | Air reservoir drain valves are opened to release air pressure and moisture from air reservoirs. |

## 2-3. CHASSIS CONTROLS AND INDICATORS (Contd)

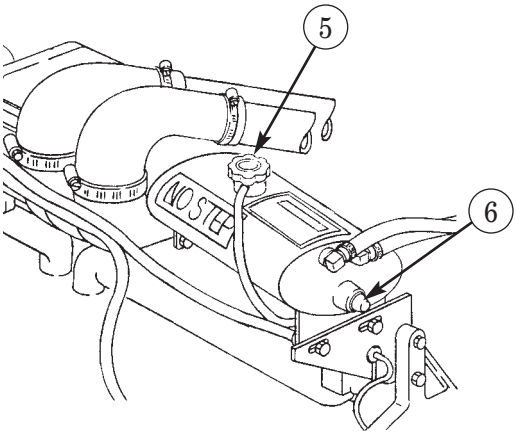


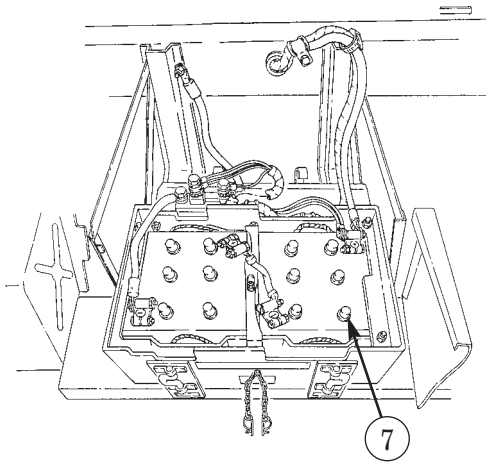


| Key | Item and Function |
|---|---|
| 5 | Surge tank cap is removed to add coolant. |
| 6 | Sight tube is checked to ensure coolant is at its proper level. |
| 7 | Battery filler caps are removed to check battery fluid level. |

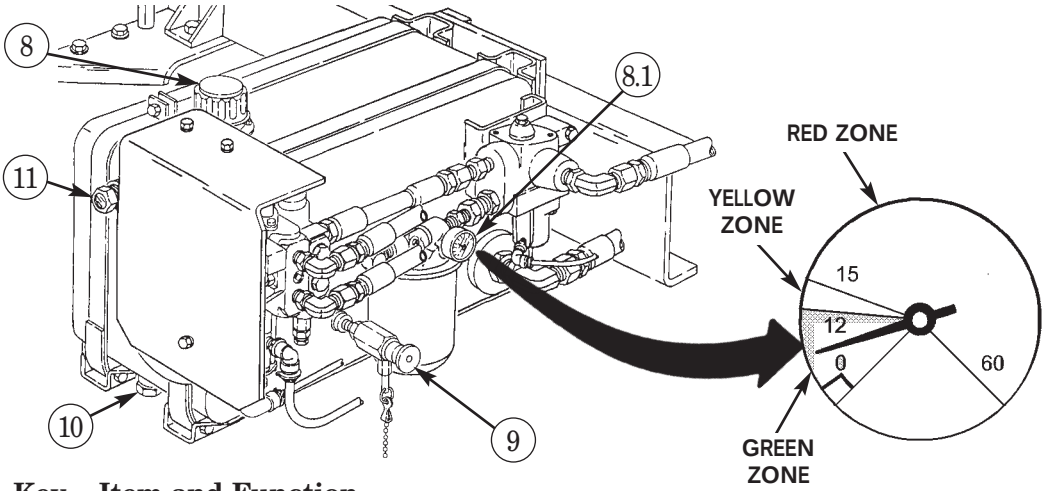


| Key | Item and Function |
|---|---|
| 8 | Winch oil reservoir cap is removed to add oil. |
| 8.1 | Winch pressure dial indicator gauge shows if oil filter needs changing. |
| 9 | Winch oil reservoir AOAP valve is opened to sample oil. |
| 10 | Winch oil reservoir drainplug is removed to drain oil. |
| 11 | Winch oil reservoir sightglass is checked to ensure oil is at proper level. |

## 2-3. CHASSIS CONTROLS AND INDICATORS (Contd)

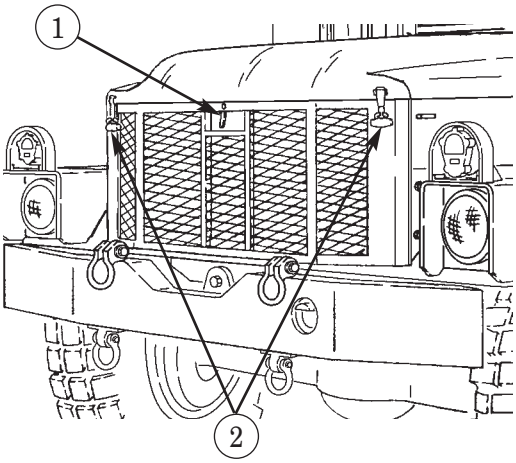


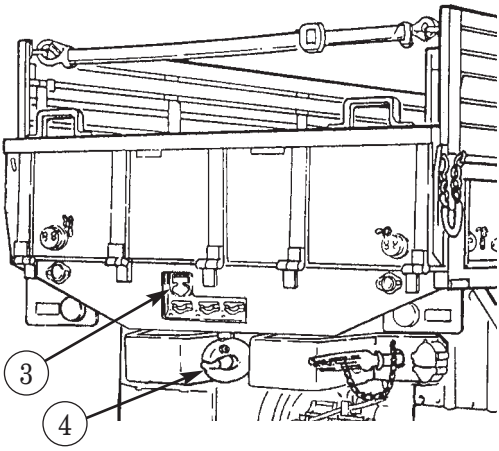


| Key | Item and Function |
|---|---|
| 1 | Hood latch secures hood in closed position. |
| 2 | Hood holddown latches are used with hood latch to secure hood in closed position. |
| 3 | Trailer power outlet receptacle provides electric power for trailer. |
| 4 | Towing pintle hook is opened to attach trailer towing bar. |

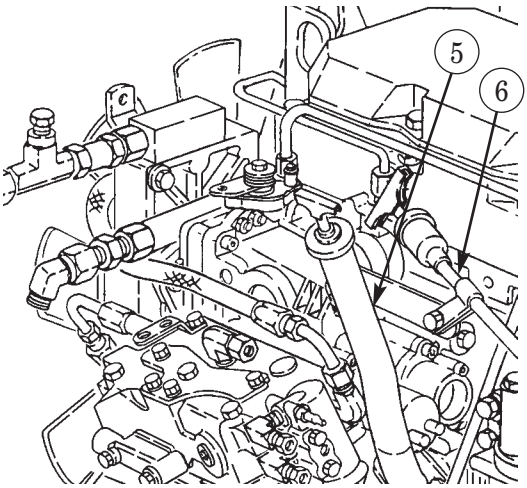


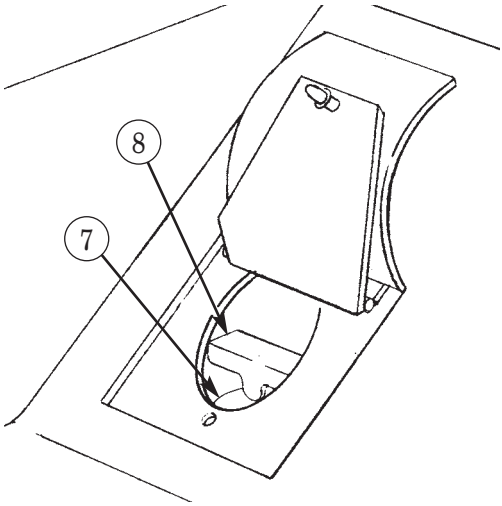


| Key | Item and Function |
|---|---|
| 5 | Oil fill tube is opened to fill engine crankcase. |
| 6 | Oil dipstick tube is removed to check engine oil level. |
| 7 | Transmission fill tube is opened to fill transmission oil level. |
| 8 | Transmission dipstick tube is removed to check transmission oil level. |

## 2-4. SPECIAL PURPOSE KITS CONTROLS AND INDICATORS

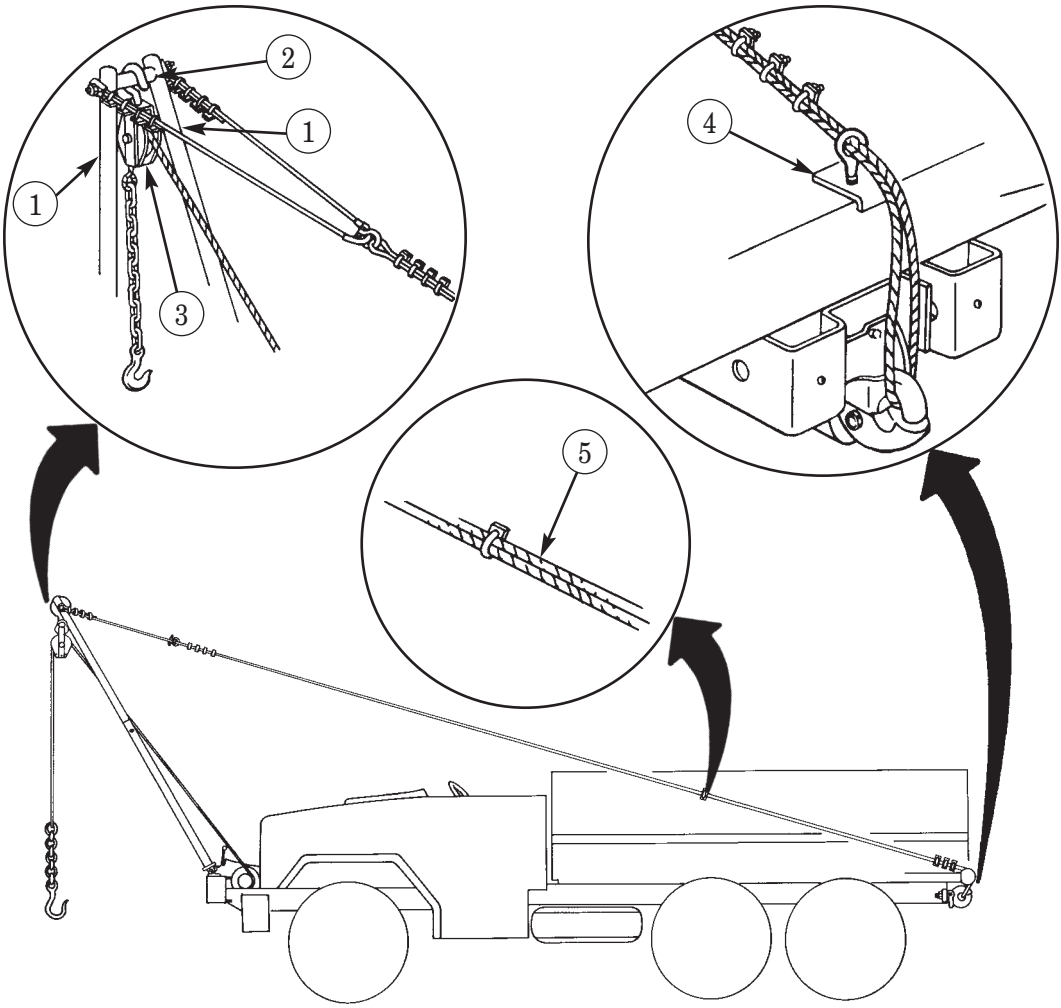


**a. A-frame Kit.** Installed on ESP vehicles equipped with a front winch for loading and unloading equipment. A-frame load limit is 3,000 lb (1,362 kg).

| Key | Item and Function |
|---|---|
| 1 | Tube and leg assemblies are attached to lifting shackle brackets and apex spreader to form an A-frame for lifting. |
| 2 | Apex spreader positions the A-frame and supports the sheave assembly. |
| 3 | Sheave assembly supports front winch cable in the lifting position. |
| 4 | Plate assembly protects cable assembly and truck bed from wear and distortion. |
| 5 | Cable assembly is attached to A-frame and inverted pintle hook to maintain the A-frame in a 60° angle position. |

## 2-4. SPECIAL PURPOSE KITS CONTROLS AND INDICATORS (Contd)

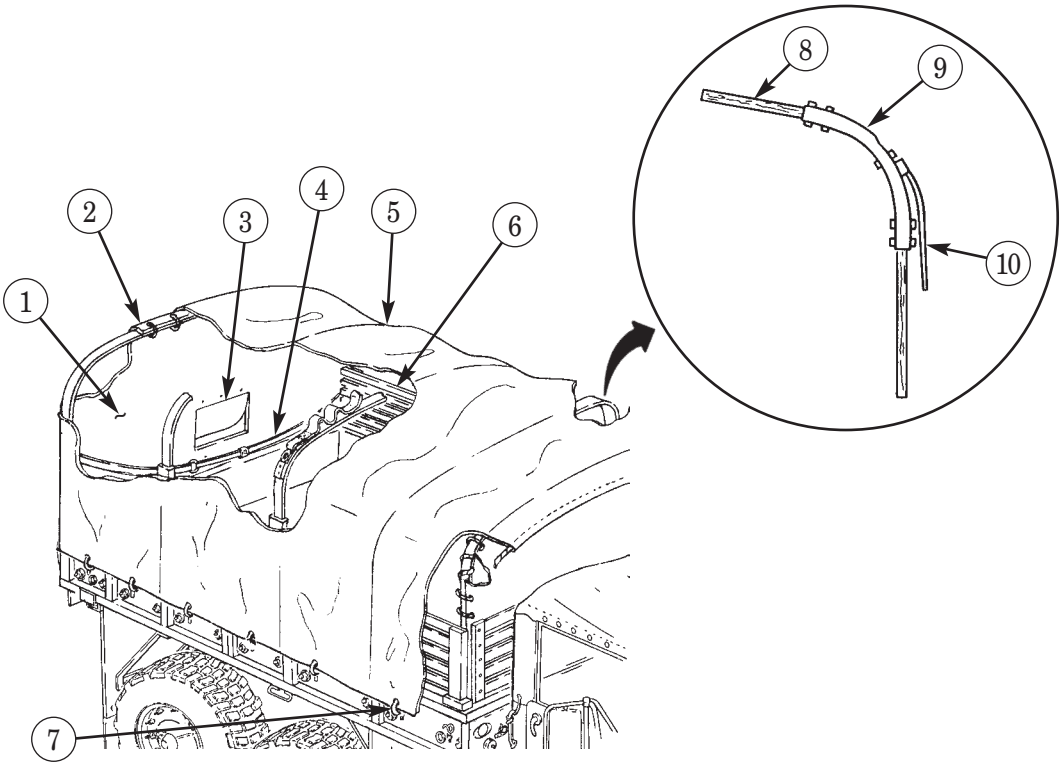


**b. Bow and Tarp Kits.**

| Key | Item and Function |
|---|---|
| 1 | End curtains protect front and rear ends of the cargo compartment. |
| 2 | Lashing rope secures end curtain to crossbow. |
| 3 | End flap opens and closes for ventilation. |
| 4 | Safety strap of tailgate protects passengers against falling from the vehicle. |
| 5 | Tarpaulin protects top and sides of cargo bed. |
| 6 | Troop seats can be stowed in up position when handling cargo or down for seating. |
| 7 | Lashing hooks are used to secure sides of tarpaulin to truck bed. |
| 8 | Cross bows support top of tarpaulin. |
| 9 | Stave and corner assemblies support crossbows. |
| 10 | Straps secure tarpaulin to corners of stave and corner assemblies. |

## 2-4. SPECIAL PURPOSE KITS CONTROLS AND INDICATORS (Contd)

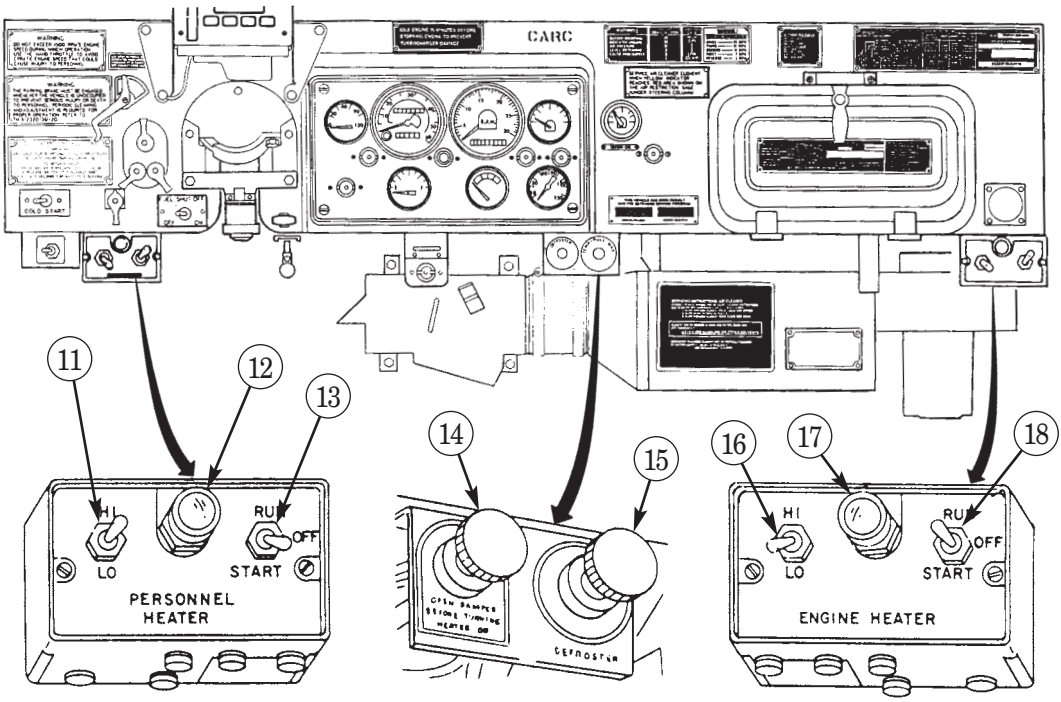


**c. Arctic Winterization Kit.**

| Key | Item and Function |
|---|---|
| 11 | Hi-lo switch controls the rate of fuel burning and speed of blower in personnel heater. |
| 12 | Red indicator light illuminates when personnel heater is operating. |
| 13 | Start-off-run switch is positioned down to start personnel heater, up to run heater, and in center position to stop heater. |
| 14 | Air control knob is pulled all the way out for maximum air flow, and pushed in to lower or shut off air flow. |
| 15 | Defroster control knob is pulled all the way out for maximum defroster operation, pushed in for maximum heater operation, and placed halfway out for combination defroster/heater operation. |
| 16 | Hi-lo switch controls the rate of fuel burning and speed of blower in power plant (engine) heater. |
| 17 | Red indicator light illuminates when power plant heater is operating. |
| 18 | Start-off-run switch is positioned down to start power plant (engine) heater, up to run heater, and in center position to stop heater. |

## 2-4. SPECIAL PURPOSE KITS CONTROLS AND INDICATORS (Contd)

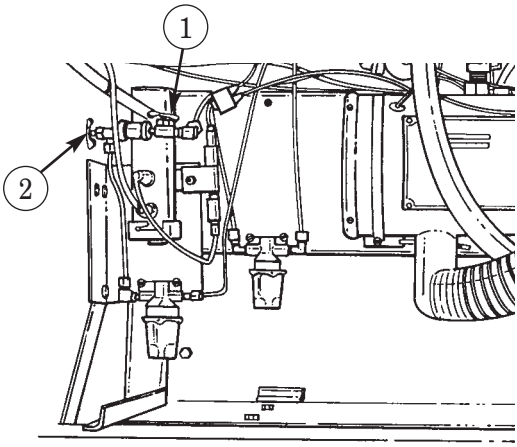


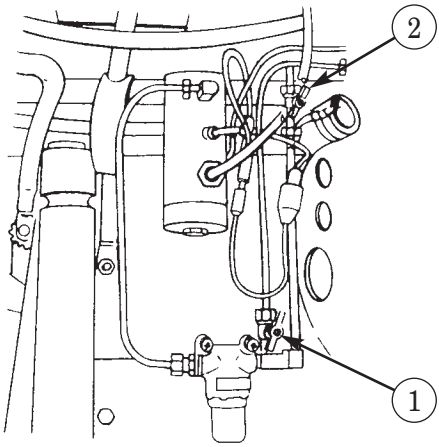


**c. Arctic Winterization Kit (Contd).**

| Key | Item and Function |
|---|---|
| 1 | Power plant heater shutoff cock is opened (turned left) to let fuel enter power plant heater combustion chamber. |
| 2 | Personnel heater shutoff cock is opened (turned left) to let fuel enter personnel heater combustion chamber. |

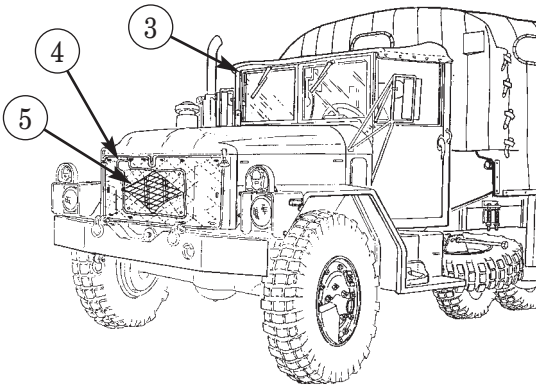


| Key | Item and Function |
|---|---|
| 3 | Hardtop closure replaces canvas cover on cab for arctic temperature operations. |
| 4 | Quilted radiator cover is attached to brush guard to maintain normal operating temperatures under arctic operating conditions. |
| 5 | Aperture flap is opened or closed to control amount of air passing through radiator. |

## 2-4. SPECIAL PURPOSE KITS CONTROLS AND INDICATORS (Contd)

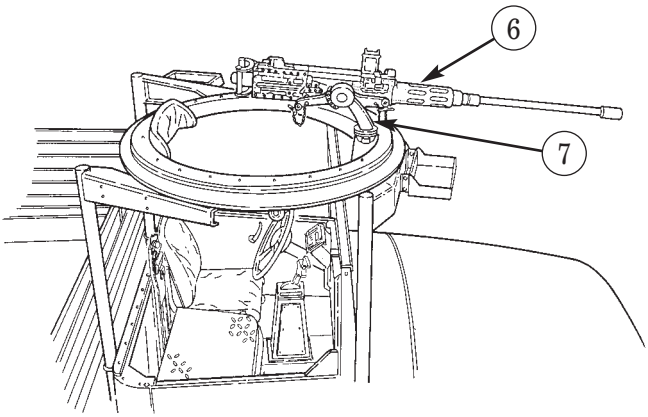


**e. Machine Gun Mount Kit.**

| Key | Item and Function |
|---|---|
| 6 | Gun travels full circle around track of mount. |
| 7 | Bracket permits up or down and swivel movement of machine gun. |

## 2-4. SPECIAL PURPOSE KITS CONTROLS AND INDICATORS (Contd)

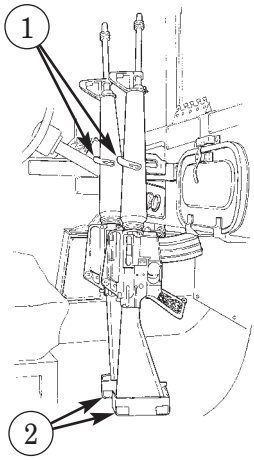


**f. Rifle Mount Kit.**

| Key | Item and Function |
|---|---|
| 1 | Catch assembly holds weapons safely in place for travel. Assembly is pulled out and up to free rifle when needed. |
| 2 | Stock brace holds stock of rifle in position for travel. |

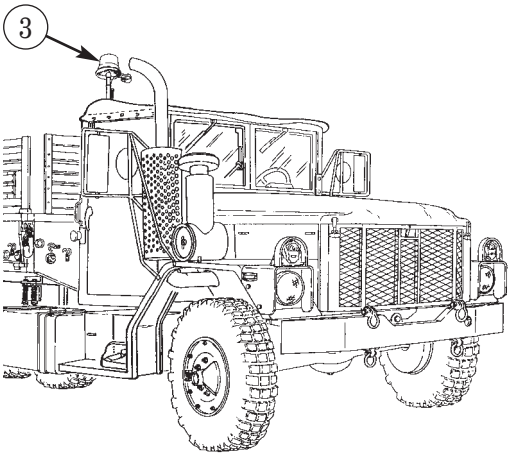


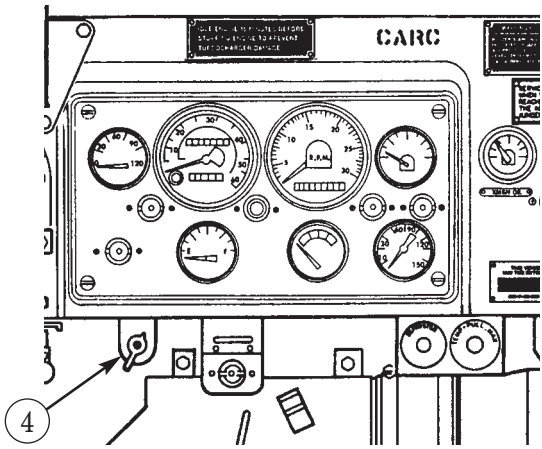


**g. Convoy Warning Light.**

| Key | Item and Function |
|---|---|
| 3 | Warning light illuminates and rotates when turned on. |
| 4 | Light switch turns warning light on/off. |

# Section II. OPERATOR PREVENTIVE MAINTENANCE CHECKS AND SERVICES (PMCS)

## 2-5. GENERAL

The best way to maintain ESP vehicle components covered by this manual is to inspect them on a regular basis so that minor faults can be discovered and corrected before they result in serious damage, failure, or injury. This section contains systematic instructions for inspection, adjustment, and correction of components to avoid costly repairs or major breakdowns. This is referred to as Preventive Maintenance Checks and Services (PMCS).

## 2-6. PREVENTIVE MAINTENANCE CHECKS AND SERVICES INDEX


| PARA. NO. | TITLE | PAGE NO. |
|---|---|---|
| 2-7. | Preventive Maintenance Checks and Services (PMCS) | 2-15 |
| 2-8. | Cleaning Instructions and Precautions | 2-17 |
| 2-9. | Class Leakage Definitions | 2-19 |


## 2-7. PREVENTIVE MAINTENANCE CHECKS AND SERVICES (PMCS)

Operator/Crew Preventive Maintenance Checks and Services, table 2-2, lists the inspection and care of your equipment required to keep it in good operating condition.

**a. Item Number.** This column will be used as a source of item numbers for the TM Number column on DA Form 2404, Equipment Inspection and Maintenance Worksheet, in recording results of PMCS.

**b. Interval.**

NOTE

- Observe all warnings and cautions.
- Designated intervals are performed under usual operating conditions. PMCS intervals must be performed more frequently when operating under unusual conditions.

**(1)** BEFORE OPERATION checks and services are performed prior to the equipment leaving its containment area (motorpool or other control or dispatch point) or performing its intended mission.

**(2)** DURING OPERATION checks begin when the equipment is being used for its intended mission.

**(3)** AFTER OPERATION checks and services begin when the equipment is taken out of its mission mode or returned to its containment area (motorpool or other control or dispatch point).

## 2-7. PREVENTIVE MAINTENANCE CHECKS AND SERVICES (PMCS) (Contd)

**(4)** WEEKLY OPERATION checks and services are performed once a week.

**c. Item To Check/Service.** This column identifies the component or system to be checked or serviced.

**d. Procedure.** The procedure column of your PMCS table specifies the required checks and services. Carefully follow these instructions. If you do not have the tools, or if the procedure tells you to, have unit maintenance personnel do the work.

**(1)** Troubleshoot malfunctions. (Refer to chapter 3, Operator Troubleshooting.)

**(2)** Use DA Form 2404 and report non-repairable item(s) to unit maintenance personnel.

**(3)** Tools included with vehicle are to be used when performing preventive maintenance checks and services. Wiping cloths are sometimes needed to remove dirt or grease.

**e. Not Fully Mission Capable If.** a vehicle is not able to perform the prescribed mission, equipment will be reported as not ready or available. (Refer to DA Pam 738-750.)

NOTE

The term "mission capable" indicates the equipment is on hand and able to perform its combat mission. (Refer to DA Pam 738-750.)

**f. Troublespots.**

WARNING

Skysol 100 is flammable and will not be used near open flame. A fire extinguisher will be kept nearby when solvent is used. Use in well-ventilated areas. Failure to do this may result in injury to personnel.

NOTE

Dirt, grease, oil, and debris may cover up a serious problem. Clean as you check. Follow precautions printed on container. Use Skysol 100 on all metal surfaces. Use soap and water on rubber or plastic material.

**(1)** Check all bolts, nuts, and screws. If loose, bent, broken, or missing, either tighten or notify unit maintenance.

**(2)** Look for loose or chipped paint, rust, and gaps at welds. If a cracked or broken weld is found, notify unit maintenance.

**(3)** Inspect electrical wires and connectors for cracked or broken insulation. Look for bare wires and loose or broken connections. Tighten loose connections. If insulation is cracked or broken, wires are bare, or connections are broken, notify unit maintenance.

**(4)** Check hoses and fluid lines for wear, damage, and leaks. Ensure clamps and fittings are tight. (Refer to para. 2-9 for information on leaks.)

NOTE

If tire pressure falls below 10 psi (69 kPa), CTIS will not inflate tire.

**g. Correct Assembly or Stowage.** Check each component or assembly to assure installation is in the right place and there are no missing parts.

## 2-8. CLEANING INSTRUCTIONS AND PRECAUTIONS

Cleaning is an after-operation service performed by operator/crew to keep the vehicle in a state of readiness. Facilities and materials available to operators for vehicle cleaning can vary greatly in differing operating conditions. However, vehicles must be kept as clean as available cleaning equipment, materials, and tactical situations permit.

**a. General Cleaning Precautions.**

**(1)** All cleaning procedures must be accomplished in well-ventilated areas.

**(2)** Protective gloves, clothing, and/or respiratory equipment must be worn whenever caustic, toxic, or flammable cleaning solutions are used.

**(3)** Diesel fuel or gasoline must never be used for cleaning.

**(4)** A fire extinguisher must be available and ready during all cleaning operations involving solvents.

**b. Special Precautions.**

**(1)** Do not allow cleaning compounds to come into contact with rubber, leather, vinyl, or canvas materials.

**(2)** Do not allow Naval Jelly to contact painted surfaces.

**(3)** Do not use steam, or air under pressure, in cleaning vehicle cab interiors.

**(4)** Do not steam-clean any part of vehicle that has been rustproofed.

**(5)** Mildew must be removed with a bristle brush before tarpaulin can be properly cleaned and aired.

**(6)** The radiator is always cleaned from behind first in order to blow debris, insects, or other obstructions out and away from radiator core. Low-pressure water or air can be used in cleaning radiator core of obstructions.

**c. Cleaning Materials.** Cleaning materials are found in Appendix D.

**d. General Guidelines.** A general guideline to cleaning materials used in removing contaminants from various vehicle surfaces is found in table 2-1, General Cleaning Instructions.

*Table 2-1. General Cleaning Instructions.*

| CLEANING MATERIALS USED TO REMOVE | | | |
|---|---|---|---|
| **Surface** | **Oil / Grease** | **Salt / Mud / Dust / Debris** | **Surface Rust / Corrosion** |
| Body | Skysol 100**, running water, and damp or dry rags. | High pressure water, soapy warm water, soft brush, and damp or dry rags. | Wire brush and Naval Jelly, dry rags, and lubricating oil. * |
| Cab Interior (Metals) | Skysol 100**, and damp or dry rags. | Damp and dry rags. | Wire brush and Naval Jelly, dry rags, and lubricating oil.* |
| Cab Interior/ Cab Top (Material) | Saddle soap, warm water, soft brush, and dry rags. | Soft brush, soapy warm water, and damp or dry rags. | Not applicable. |
| Engine/ Transmission | Skysol 100**, running water, and rags. - | High pressure water, soapy warm water, soft wire brush, and damp or dry rags. | Bristle brush, warm soapy water, and dry rags. |
| Frame | Skysol 100**, running water, and rags. | High pressure water, soapy warm water, wire brush, and damp or dry rags. | Wire brush and Naval Jelly, dry rags, and lubricating oil. * |
| Glass | Glass cleaning solution and clean, dry rags. | Glass cleaning solution and clean, dry rags. | Not applicable. |
| Radiator | Not applicable. | Low pressure water, air, soapy warm water, and damp or dry rags. | Not applicable. |
| Rubber Insulation | Damp or dry rags. | Damp or dry rags. | Not applicable. |
| Tires | Soapy water and bristle brush. | High pressure water and bristle brush. | Not applicable. |
| Wire Rope | Cleaning compound and wire brush. | Wire brush. | Wire brush and lubricating oil. * |
| Wood | Detergent, warm water, and damp or dry rags. | Low pressure water, soapy warm water, and damp or dry rags. | Not applicable. |

* After cleaning, apply light grade of lubricating oil to all unprotected surfaces to prevent continued rust.

** WARNING: Skysol 100 is flammable and will not be used near open flame. A fire extinguisher will be kept nearby when solvent is used. Use only in well-ventilated places. Failure to do this may result in injury to personnel.

## 2-9. CLASS LEAKAGE DEFINITIONS

Wetness around seals, gaskets, fittings, or connections indicates leakage. A stain also denotes leakage. If a fitting or connector is loose, tighten it. If broken or defective, report it. Use the following as a guide:

**a. Class I.** Leakage indicated by wetness or discoloration not great enough to form drops.

**b. Class II.** Leakage great enough to form drops but not enough to cause drip from item being checked/inspected.

**c. Class III.** Leakage great enough to form drops that fall from the item being checked/inspected.

**CAUTION**

Operation is allowable with Class I or II leakage except for brake and fuel system. Any brake fluid or fuel leakage must be reported. WHEN IN DOUBT, NOTIFY YOUR SUPERVISOR. When operating with Class I or II leaks, check fluid levels more frequently. Class III leaks must be reported to your supervisor or to unit maintenance. Failure to do this may result in damage to vehicle and/or components.

*Table 2-2. Operator/Crew Preventive Maintenance Checks and Services.*

| ITEM NO. | INTERVAL | ITEM TO CHECK/ SERVICE | PROCEDURE | NOT FULLY MISSION CAPABLE IF: |
|---|---|---|---|---|
| 1 | Before Operation | | **NOTE**<br>Perform Weekly as well as Before Operation PMCS if:<br>**a.** You are the assigned operator, but have not operated the vehicle since the last weekly inspection.<br>**b.** You are operating the vehicle for the first time.<br>**MAKE THE FOLLOWING WALK-AROUND CHECKS:**<br>**VEHICLE EXTERIOR**<br>**NOTE**<br>Item 1 will be accomplished as the walk-around inspection is performed. | |
| | | | **a.** Visually check for underinflated and unserviceable tires and security of mount (including spare). Check tires for leaks, cuts, gouges, cracks, or bulges. Remove all penetrating objects. | **a.** Tires have leaks, cuts, gouges, cracks, or bulges which could result in tire failure during operation and cannot be replaced with spare tire. |
| | | | **b.** Visually check for obvious damage to body and cab that would impair operation. | |
| | | | **NOTE**<br>• Step 1 applies to M35A3C dropside vehicles only.<br>• Steps 2 through 5 apply only if vehicle is to be used to transport troops. | |
| | | | **(1)** Check for missing or damaged dropside hinges (1) and pins (2). | **(1)** Dropside hinges and pins are missing or damaged. |
| | | | **(2)** Check for missing or damaged troop seat retainer pins (4). | **(2)** Troop seat retainer pins are missing or damaged. |
| | | | **(3)** Check for missing or damaged seat latches (3). | **(3)** Troop seat latches are missing or damaged. |
| | | | **(4)** Check for missing or damaged safety strap (5). | **(4)** Safety strap is missing or damaged. |

*Table 2-2. Operator/Crew Preventive Maintenance Checks and Services (Contd).*

| ITEM NO. | INTERVAL | ITEM TO CHECK/ SERVICE | PROCEDURE | NOT FULLY MISSION CAPABLE IF: |
|---|---|---|---|---|
| 1 (Contd) | Before Operation (Contd) | | | |
| | | | **(5)** Check security of center-mounted troop seats (if installed). | **(5)** Mission requires center-mounted troop seats and seats are not securely fastened. |
| | | | **(6)** Check tailgate (6) for damage, security, and ease of operation. | **(6)** Mission requires tailgate and it is inoperative. |
| | | | **(7)** Check for missing or damaged retaining pins (7). | **(7)** Mission requires tailgate and any retaining pins are missing or damaged. |
| | | | **c.** Look under vehicle for evidence of fluid leakage (fuel, oil, brake fluid, coolant). | **c.** Any brake fluid leakage is evident. Class III leakage of oil, coolant, or fuel is evident, except if coolant leakage is from overflow on surge tank. |

*Table 2-2. Operator/Crew Preventive Maintenance Checks and Services (Contd).*

| ITEM NO. | INTERVAL | ITEM TO CHECK/ SERVICE | PROCEDURE | NOT FULLY MISSION CAPABLE IF: |
|---|---|---|---|---|
| | | | **ENGINE COMPARTMENT**<br>**WARNING**<br>Secure hood in raised position with safety hook before servicing engine. | |
| 2 | Before Operation (Contd) | Surge tank | **a.** Check that coolant is present in sight tube (2) of surge tank (3) to ensure the engine cooling system is at proper level.<br>**b.** With engine cold, if coolant is low, remove surge tank cap (1) and fill until coolant level is centered in sight tube (2). Install surge tank cap (1) on surge tank (3). | |
| | | | **VEHICLE INTERIOR** | |
| 3 | | Fire extin-guisher | **a.** Check for missing or damaged fire extinguisher.<br>**b.** Check gauge for proper pressure of about 150 psi (1034 kPa).<br>**c.** Check for missing or damaged seal. | |
| 4 | | Seat and seatbelts | **NOTE**<br>Vehicle operation with inoperative seatbelts may violate AR 385-55.<br>**a.** Check all seatbelts (4) for security, damage, and operation of buckle and clasp.<br>**b.** Check operation of seat adjustment mechanism (6) on driver's seat (5). | **a.** Seatbelt buckle or clasp is damaged or not secure.<br>**b.** Seat adjustment lock is broken or missing. |

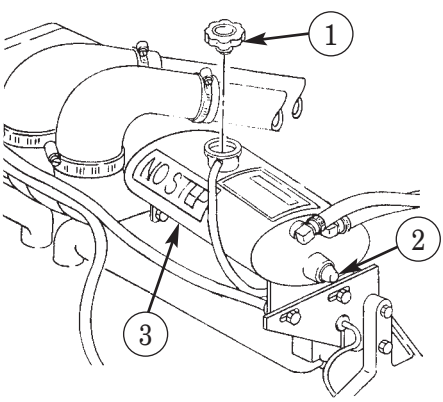


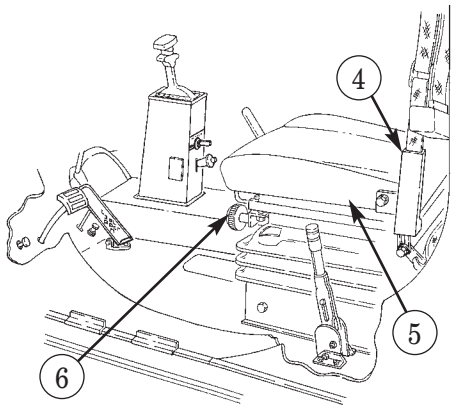

*Table 2-2. Operator/Crew Preventive Maintenance Checks and Services (Contd).*

| ITEM NO. | INTERVAL | ITEM TO CHECK/ SERVICE | PROCEDURE | NOT FULLY MISSION CAPABLE IF: |
|---|---|---|---|---|
| 5 | Before Operation (Contd) | Instruments | **WARNING**<br>Hearing protection is required when maintaining vehicle with engine running.<br>**CAUTION**<br>If oil pressure reading is below normal, or if temperature reading is over 230°F (110°C), shut down engine at once, or engine may be damaged.<br>Start engine (para. 2-12) and check engine instruments on instrument panel for steady, normal readings as follows:<br>**a.** Oil pressure gauge (7) – 35-70 psi (241-483 kPa).<br>**b.** Speedometer (8) – indicates vehicle speed. Listen for unusual noises.<br>**c.** Tachometer (9) – idle: 750-850 rpm.<br>**d.** Engine temperature gauge (10) – 160°-230°F (71°-110°C).<br>**e.** Transmission temperature gauge (11) – 160°-200°F (71°-93°C).<br>**f.** With engine at idle speed (750-850 rpm), listen for air buzzer and watch air indicator light (12). | Instruments do not read within limits given.<br>**a.** Oil pressure reads less than 35 psi (241 kPa).<br>**d.** Temperature reads more than 230°F (110°C).<br>**e.** Temperature reads more than 200°F (93°C) when engine is at normal operating temperature.<br>**f.** Air buzzer and/or indicator light will not come on below 65 psi (448 kPa), or will not shut off above 65 psi (448 kPa). |

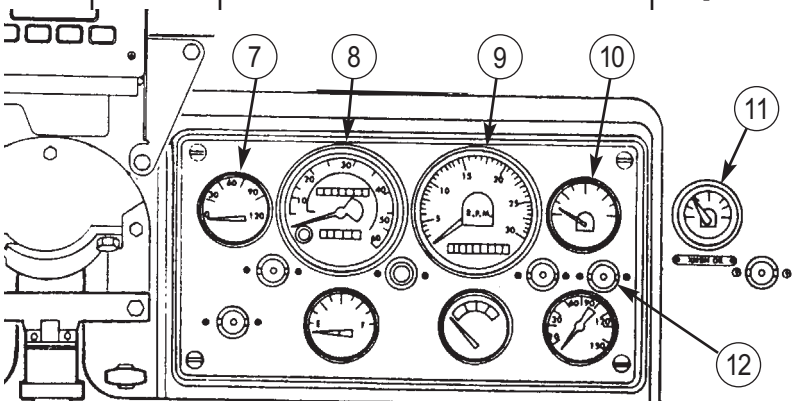

*Table 2-2. Operator / Crew Preventive Maintenance Checks and Services (Contd).*

| ITEM NO. | INTERVAL | ITEM TO CHECK / SERVICE | PROCEDURE | NOT FULLY MISSION CAPABLE IF: |
|---|---|---|---|---|
| 5 (Contd) | Before Operation (Contd) | Instruments (Contd) | **WARNING**<br>If air pressure reading is below 60 psi (414 kPa), braking will require excessive pedal force. Shut down engine and check to see what is wrong. Failure to obtain correct air pressure may result in injury or death to personnel. | |
| | | | **g.** Air pressure gauge (1) – 90-120 psi (621-827 kPa). | **g.** Air pressure gauge reads 60 psi (414 kPa) or below. |
| | | | **h.** Battery/generator gauge (2) – in green area. | **h.** Battery/generator gauge needle is in red area. |
| | | | **i.** Fuel gauge (3) – indicates fuel level. | |
| 6 | | Service brakes | Operate service brakes (11) to determine stopping ability. Check for pulling to one side, grabbing, or other abnormal operation. | Service brakes do not operate properly, or brake pedal goes within two inches of floorboard. |
| 7 | | Transmission | **a.** Shift transmission through all driving ranges. | Transmission control lever is stiff or binding. |
| | | | **b.** Run engine for at least one minute. Shift to FIRST and then to REVERSE to clear hydraulic circuits of air. Shift to NEUTRAL and allow engine to idle (1000-1500 RPM). Open access door (5) located in floor on passenger side of personnel compartment and remove dipstick (4) from filler tube (6). If transmission temperature is below 160°F (71°C), ensure dipstick (4) shows fluid level is within COLD RUN band (7). If fluid level is not within COLD RUN band, add as necessary, or notify unit maintenance to drain. | |

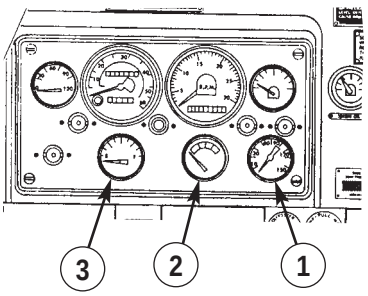


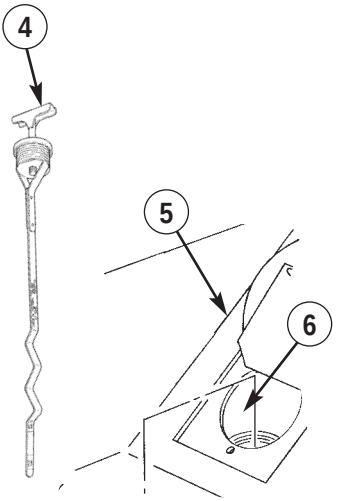


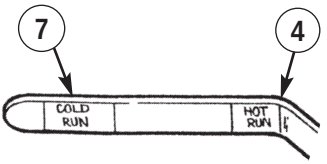

*Table 2-2. Operator/Crew Preventive Maintenance Checks and Services (Contd).*

| ITEM NO. | INTERVAL | ITEM TO CHECK/ SERVICE | PROCEDURE | NOT FULLY MISSION CAPABLE IF: |
|---|---|---|---|---|
| 8 | Before Operation (Contd) | Parking brake | **WARNING**<br>Ensure adequate air pressure has been attained prior to performing step a, and be prepared to apply the service brakes if necessary.<br>**CAUTION**<br>• Do not hold engine speed at 2,000 RPM for more than five seconds while performing step a.<br>• Do not exceed thirty seconds when performing entire step a, and do not exceed five seconds at 2,000 rpm. Doing so may cause damage to transmission.<br>**a.** Engage parking brake lever (10) and place transmission select lever (8) in DRIVE. Slowly raise engine RPM to 2,000. If vehicle moves, stop engine and proceed to step b. | |
| | | | **b.** Adjust parking brake, as required, by turning knob (9) on top of parking brake lever (10) clockwise to increase braking action; counterclockwise to decrease braking action. | **b.** Vehicle continues to move with parking brake (10) applied after adjustment. |
| 9 | | Airbrake kit | Check operation of airbrake (trailer) kit, if installed, and mission requires pulling load. | |
| | | | **a.** Apply airbrakes on trailer and slowly pull trailer (para. 2-42). | **a.** Trailer can be moved after brakes are applied. |
| | | | **b.** Check operation of trailer stoplights. | |
| 10 | | Deepwater fording kit | Ensure battery caps are tight and master cylinder reservoir filler caps have been sealed, if kit is installed (para. 2-46). | |
| 11 | During Operation | Transfer case | Check shifting operations for unusual noises, stiffness, or jumping out of gear. | Transfer case is inoperative, noisy, stiff, or jumps out of gear. |
| 12 | | Front and rear drive axles and propeller shafts | Listen for unusual noises or vibrations. Vibrations, clicking, or clunking noise indicates worn U-joints or damaged propeller shafts. If leakage is observed, notify unit maintenance to check free play. | Excessively worn U-joints or damaged propeller shafts. |

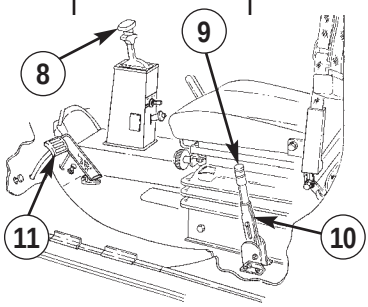

*Table 2-2. Operator/Crew Preventive Maintenance Checks and Services (Contd).*

| ITEM NO. | INTERVAL | ITEM TO CHECK/ SERVICE | PROCEDURE | NOT FULLY MISSION CAPABLE IF: |
|---|---|---|---|---|
| 13 | During Operation (Contd) | Suspension | Check for excessive bouncing and swaying. | |
| 14 | | Power assist steering | **WARNING**<br>The sudden jerking of the steering wheel in the opposite direction turned indicates air lines at the power assist cylinder have been crossed. Stop vehicle immediately and notify your supervisor. Failure to do this may result in injury to personnel. | |
| | | | **a.** Check steering for smooth response to turning. If steering wheel suddenly jerks in the opposite direction turned, stop vehicle immediately and notify your supervisor.<br>**NOTE**<br>• Steering will seem as if it is binding if power assist is inoperative.<br>• If binding is caused by inoperative power assist, vehicle is still mission capable. | **a.** Steering wheel jerks in the opposite direction turned. |
| | | | **b.** Check for unusual free play, wandering, binding, or shimmy. | **b.** Steering action is loose or binds, or steering is inopertive (unless inoperative power assist causes binding). |
| 15 | | Central tire inflation system | **NOTE**<br>• Check CTIS with engine operating at 1300 RPM.<br>• If CTIS is inoperative, the unit may be turned off and tires manually inflated or deflated to desired pressure. If pressure other than highway setting is selected, operator must observe speed/pressure limitations displayed in the cab.<br>**a.** Turn ECU switch (1) on and check display on ECU (2). Ensure tires deflate and inflate to the correct tire pressure for the terrain condition selected. | |

*Table 2-2. Operator/Crew Preventive Maintenance Checks and Services (Contd).*

| ITEM NO. | INTERVAL | ITEM TO CHECK/ SERVICE | PROCEDURE | NOT FULLY MISSION CAPABLE IF: |
|---|---|---|---|---|
| 15 (Contd) | During Operation (Contd) | Central tire inflation system (Contd) | **NOTE**<br>If tire pressure falls below 10 psi (69 kPa), CTIS will not inflate tires.<br>**b.** If correct tire pressure cannot be attained, deactivate CTIS by switching ECU (2) to OFF position. Manually inflate/deflate tires (para. 3-9). | |
| | | 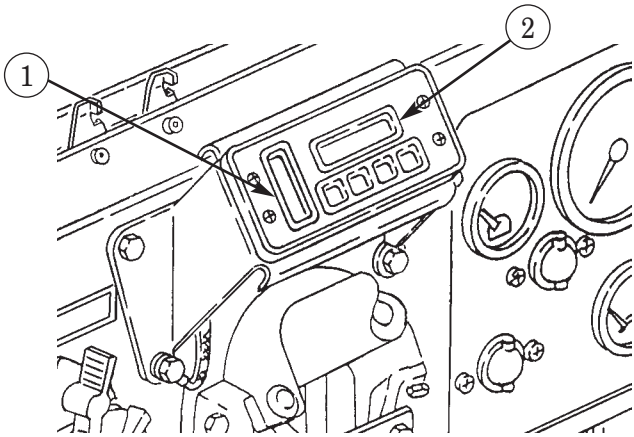 | | |
| 16 | After Operation | | **MAKE THE FOLLOWING WALK-AROUND CHECKS:**<br>**VEHICLE EXTERIOR**<br>**NOTE**<br>Item 16 will be accomplished as the walk-around inspection is performed.<br>Check condition of:<br>**a.** Windshield.<br>**b.** Windshield wipers.<br>**c.** Mirrors (left and right).<br>**d.** All locking and fastening devices.<br>**e.** Operation of doors and side windows.<br>**f.** Operation of headlights, taillights, stoplights, turn signals, and side marker lights, and convoy lights, if installed. | |

*Table 2-2. Operator / Crew Preventive Maintenance Checks and Services (Contd).*

| ITEM NO. | INTERVAL | ITEM TO CHECK / SERVICE | PROCEDURE | NOT FULLY MISSION CAPABLE IF: |
|---|---|---|---|---|
| 17 | After Operation (Contd) | Steering system | **NOTE**<br>Steering knuckle boots discovered to be torn on top or sides are serviceable only if packed with grease until repaired. A tear at the bottom of boot will not retain lubrication in the joints. Notify unit maintenance if boots are torn.<br><br>**a.** Check steering knuckle boots (1) for tears.<br><br>**b.** Check power assist cylinder (3), drag link (2), regulator (6), manual shutoff valve (5), and hoses (4) for looseness and damage. Notify unit maintenance if loose or damaged. | **b.** Steering components are loose or damaged. |

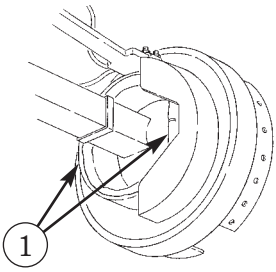


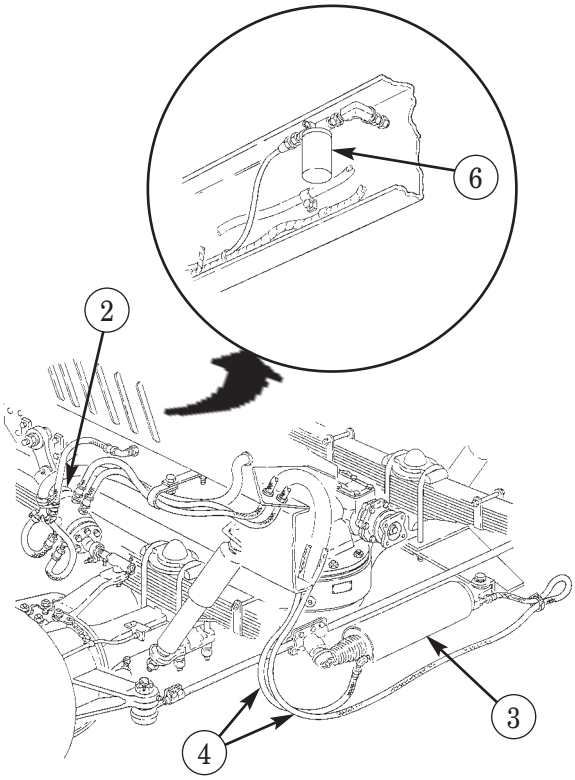


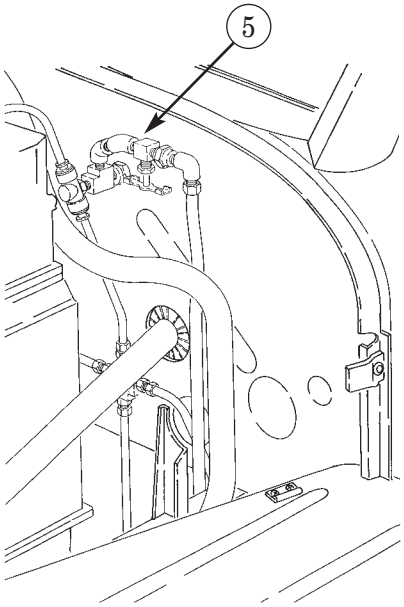

*Table 2-2. Operator/Crew Preventive Maintenance Checks and Services (Contd).*

| ITEM NO. | INTERVAL | ITEM TO CHECK/ SERVICE | PROCEDURE | NOT FULLY MISSION CAPABLE IF: |
|---|---|---|---|---|
| 18 | After Operation (Contd) | Air cleaner | **WARNING**<br>• If NBC exposure is suspected, all air filter media should be handled by personnel wearing protective equipment. Consult your unit NBC officer or NBC NCO for appropriate handling and disposal instructions.<br>• NBC contaminated filters must be handled using adequate precautions (FM 21-40) and must be disposed of by trained personnel.<br>**CAUTION**<br>Do not service the air cleaner with the engine running, since this will allow dirt to enter the engine and may cause abnormal wear.<br>**a.** Check air cleaner (8) and precleaner (7) for clogging and accumulation of dust and debris.<br>**b.** Service air cleaner (8), if needed (para. 3-8).<br> 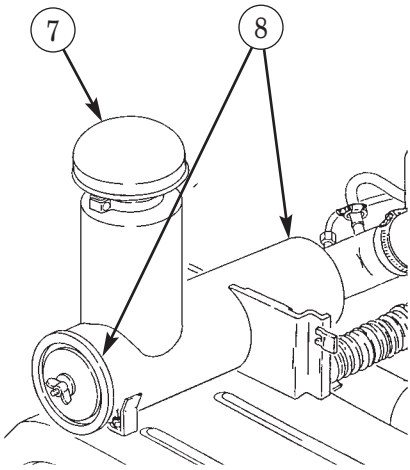 | **a.** Element or precleaner is clogged and cannot be cleared. |

*Table 2-2. Operator/Crew Preventive Maintenance Checks and Services (Contd).*

| ITEM NO. | INTERVAL | ITEM TO CHECK/ SERVICE | PROCEDURE | NOT FULLY MISSION CAPABLE IF: |
|---|---|---|---|---|
| 19 | After Operation (Contd) | Air dryer | Check exhaust port (1) for obstructions such as mud and debris. Clean if necessary.<br> 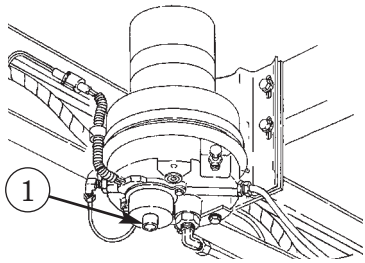 <br> | |
| 20 | | Parking brake-drum | **NOTE**<br>Do not set parking brake after cleaning parking brake drum if temperature is below 32°F (0°C).<br>Check for mud and other debris. Clean as required. | |
| | | | **ENGINE COMPARTMENT**<br>**WARNING**<br>• Hearing protection is required when maintaining vehicle with engine running.<br>• Secure hood in raised position with safety hook before servicing engine. | |
| 21 | | Engine oil level | **NOTE**<br>All fill and check levels are accomplished with vehicle on level ground.<br>**a.** Check engine oil level. Do not check oil level with engine running.<br>**b.** Remove dipstick (2) from dipstick tube (3), wipe clean, and install. Remove dipstick (2) again and check that oil level is in correct position between FULL and ADD marks on dipstick (2).<br>**CAUTION**<br>Do not fill above FULL mark on dipstick. Excessively high oil pressures may cause engine damage. | |

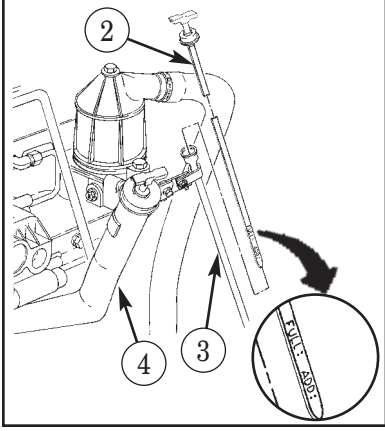

*Table 2-2. Operator/Crew Preventive Maintenance Checks and Services (Contd).*

| ITEM NO. | INTERVAL | ITEM TO CHECK/SERVICE | PROCEDURE | NOT FULLY MISSION CAPABLE IF: |
|---|---|---|---|---|
| 21 (Contd) | After Operation | Engine oil level | **c.** Add oil through oil fill tube (4) if necessary. | |
| 22 | | Fuel/water separator | **a.** Inspect fuel/water separator (7) for leaks, damage, or loose mounting hardware.<br>**b.** Open drainvalve (6) and drain 1/2 pt (0.25 L) of fuel and water into a container.<br>**c.** Check for contaminated fuel. If fuel is contaminated, notify unit maintenance. | **a.** Fuel/water separator is leaking, damaged, or loose. |
| 23 | | Fuel filter | Check fuel filter (5) for cracks, leaks, and security. | Any class III fuel leakage. |

| LUBRICANT MIL SYMBOL (NATO CODE) SPECIFICATION | EXPECTED TEMPERATURES | |
|---|---|---|
| | °F | °C |
| SAE 15W40 (O-1236) MIL-PERF-2104 | -4 to +122 | -20 to +50 |
| OEA (O-183) MIL-PERF-46167 | -50 to -4 | -46 to -20 |

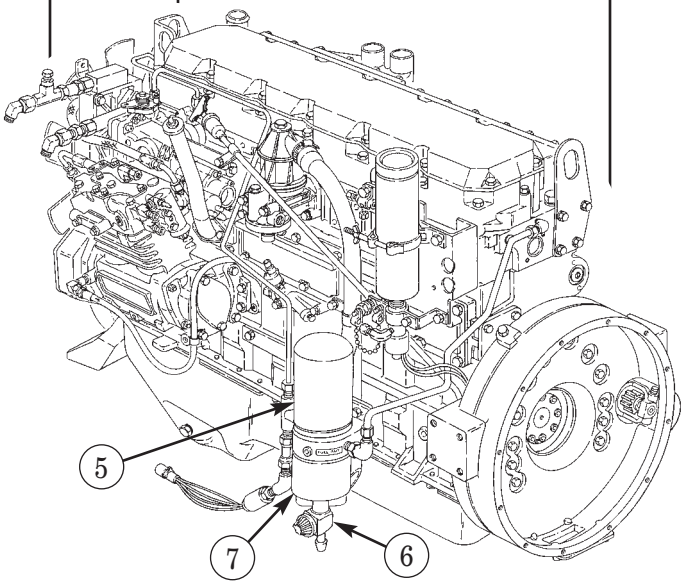

*Table 2-2. Operator / Crew Preventive Maintenance Checks and Services (Contd).*

| ITEM NO. | INTERVAL | ITEM TO CHECK / SERVICE | PROCEDURE | NOT FULLY MISSION CAPABLE IF: |
|---|---|---|---|---|
| 24 | After Operation (Contd) | Radiator, charged air cooler, and transmission auxiliary oil cooler | **a.** Check for cracks, leaks, security, and debris blocking fins. | **a.** Any class III coolant leakage is evident or debris blocking the radiator or charged air cooler fins. |
| | | | **b.** Check all hoses and tubes for deterioration, leakage, and secure connections. | **b.** Any class III leakage is evident. |
| 25 | | Water pump | Check water pump (4) for leaks. If leaking, notify unit maintenance. | Any class III coolant leakage is evident. |
| 26 | | Fan and fan drive | Inspect fan (2), fan drive (3), and fan actuator tube (1) for excessive looseness, leaks, and breaks. If loose, notify unit maintenance. | Fan or fan drive is loose. |
| 27 | | Engine oil filter | Check engine oil filter (5) for cracks, leaks, and looseness. Notify unit maintenance if cracked, leaking, or loose. | Any class III oil leakage is evident. |

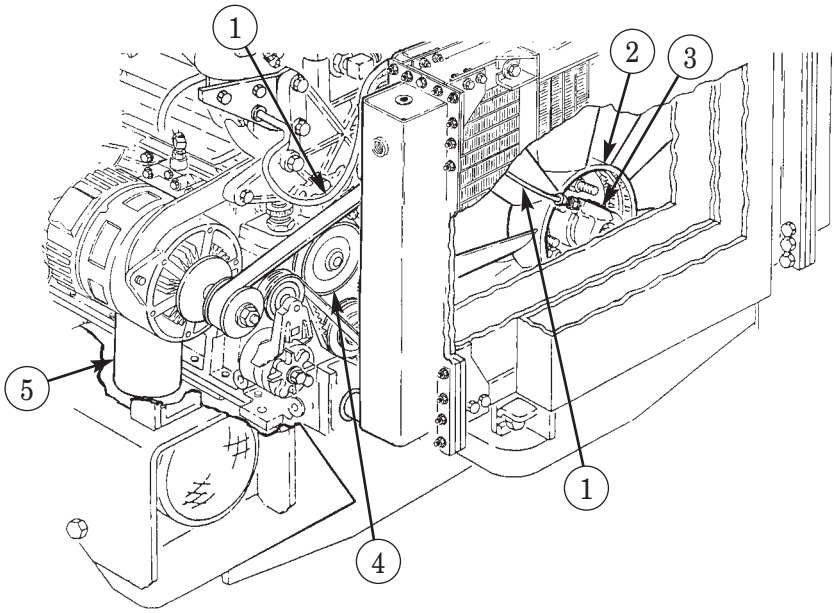

*Table 2-2. Operator/Crew Preventive Maintenance Checks and Services (Contd).*

| ITEM NO. | INTERVAL | ITEM TO CHECK/ SERVICE | PROCEDURE | NOT FULLY MISSION CAPABLE IF: |
|---|---|---|---|---|
| 28 | After Operation (Contd) | Master cylinder reservoir | **WARNING**<br>Thoroughly clean exterior of master cylinder reservoir caps before removing. Dirt, water, or grease will contaminate brake fluid, causing brake system failure and injury to personnel.<br><br>**a.** Check master cylinder reservoir (6) for leaks.<br><br>**b.** Check brake fluid level in master cylinder reservoir (6) through clear sides. Brake fluid level should be at bottom ring of master cylinder reservoir opening. Add fluid as required. | **a.** Any leakage is evident. |

| LUBRICANT MIL SYMBOL (NATO CODE) SPECIFICATION | EXPECTED TEMPERATURES |
|---|---|
| BFS<br>(H-547)<br>MIL-B-46176 | All Temperatures |

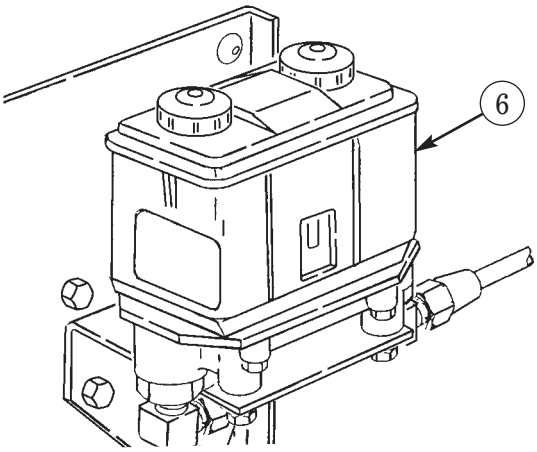

*Table 2-2. Operator/Crew Preventive Maintenance Checks and Services (Contd).*

| ITEM NO. | INTERVAL | ITEM TO CHECK/ SERVICE | PROCEDURE | NOT FULLY MISSION CAPABLE IF: |
|---|---|---|---|---|
| 29 | After Operation (Contd) | Trans-mission oil level | **VEHICLE INTERIOR ENGINE RUNNING**<br>**WARNING**<br>Hearing protection is required when maintaining vehicle with engine running.<br>**CAUTION**<br>• Do not permit dirt, dust, or grit to enter transmission filler tube. Thoroughly clean access door, dipstick handle, and end of filler tube. Serious internal transmission damage may result if transmission is contaminated.<br>• Do not check transmission oil level if transmission oil temperature gauge indicates over 200°F (93°C). Stop engine and allow transmission to cool.<br>**NOTE**<br>• Always check transmission oil level at least twice. Consistency is important in maintaining accuracy.<br>• The only purpose of Cold Check is to determine if transmission has enough oil to be safely operated until a Hot Check can be made.<br>**a.** Run engine for at least one minute. Shift to FIRST and then to REVERSE to clear hydraulic circuits of air. Shift to NEUTRAL and allow engine to idle (1000-1500 RPM). Open access door (2) located in floor on passenger side of personnel compartment and remove dipstick (1) from filler tube (3). If transmission temperature is below 160°F (71°C), ensure dipstick (1) shows fluid level is within COLD RUN band (4). If fluid level is not within COLD RUN band, add as necessary, or notify unit maintenance to drain. | |

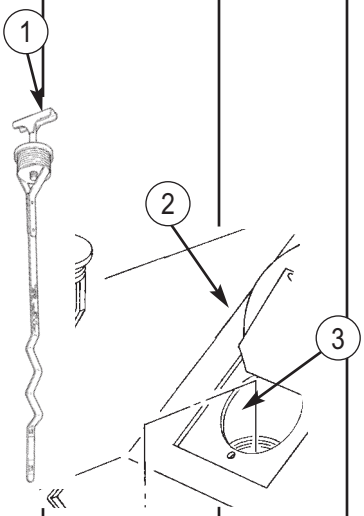

*Table 2-2. Operator/Crew Preventive Maintenance Checks and Services (Contd).*

| ITEM NO. | INTERVAL | ITEM TO CHECK/ SERVICE | PROCEDURE | NOT FULLY MISSION CAPABLE IF: |
|---|---|---|---|---|
| 29 | After Operation (Contd) | Trans-mission oil level | **b.** After the indicated transmission oil temperature on the gauge is within normal operating range, 160°-200°F (71°-93°C). Park vehicle on level surface and shift to NEUTRAL. Check transmission dipstick (1) again and add fluid until level is within HOT RUN band (5), or notify unit maintenance to drain. | |

| LUBRICANT MIL SYMBOL (NATO CODE) SPECIFICATION | EXPECTED TEMPERATURES | |
|---|---|---|
| | °F | °C |
| SAE 15W40 (O-1236) MIL-PERF-2104 | -4 to +122 | -20 to +50 |
| OEA (O-183) MIL-PERF-46167 | -50 to -4 | -46 to -20 |

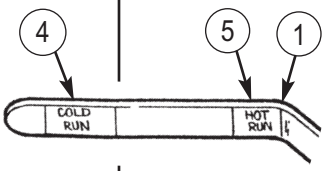

*Table 2-2. Operator/Crew Preventive Maintenance Checks and Services (Contd).*

| ITEM NO. | INTERVAL | ITEM TO CHECK/ SERVICE | PROCEDURE | NOT FULLY MISSION CAPABLE IF: |
|---|---|---|---|---|
| 30 | After Operation (Contd) | Air cleaner indicator | Check air cleaner indicator (6) at bottom of instrument panel. If yellow band is showing after air cleaner has been serviced, air intake system or air cleaner indicator tube are clogged. Notify unit maintenance. 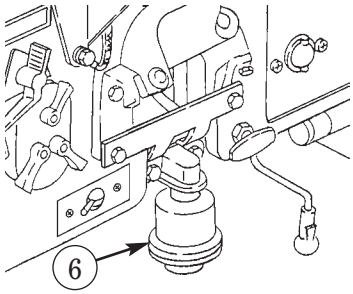  | Yellow band is seen on the indicator with engine running and the filter cannot be cleaned or replaced. |
| 31 | | Horn | Check operation if tactical situation permits. | |
| 32 | | Fuel shutoff switch | **WARNING** If tachometer shows engine idling at high RPM and fuel shutoff switch does not stop engine, do not attempt to stall engine. Notify your supervisor. Attempting to stall engine at high RPM may result in injury or death to personnel. **NOTE** If tachometer shows engine is idling at normal RPM and battery switch does not stop engine, engage fuel shutoff switch to stall engine. | |
| | | | Move fuel shutoff switch (7) to ON position to turn off fuel to the engine. | Engine does not stop. |

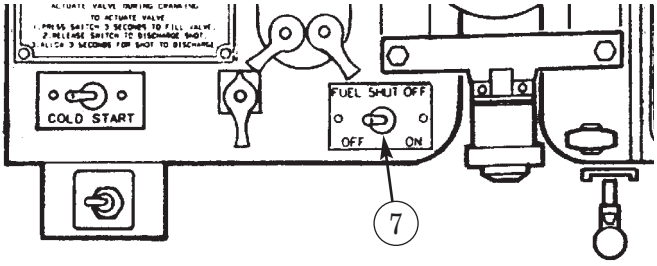

*Table 2-2. Operator / Crew Preventive Maintenance Checks and Services (Contd).*

| ITEM NO. | INTERVAL | ITEM TO CHECK / SERVICE | PROCEDURE | NOT FULLY MISSION CAPABLE IF: |
|---|---|---|---|---|
| | | | **VEHICLE EXTERIOR ENGINE RUNNING** | |
| 33 | After Operation (Contd) | Air dryer | **WARNING**<br>When operating at temperatures of 53°F (12°C) or below, make sure air dryer moisture ejector operates before shutting down engine. Failure to do this may result in equipment damage and injury or death to personnel.<br>Check air dryer (1) for proper operation; listen for moisture ejector (2). Notify unit maintenance if ejector valve is inoperative. | Air dryer moisture ejector does not operate. |
| 34 | | Exhaust system | **WARNING**<br>• Exhaust gases can kill. Operate vehicle only in a well-ventilated area. Failure to do this may result in injury or death to personnel.<br>• Do not touch hot exhaust system components with bare hands. Injury to personnel may result.<br>• Hearing protection is required when maintaining vehicle with engine running.<br>Check exhaust pipes, exhaust guard, couplings, and muffler for leaks and loose clamps. | Any major exhaust leak or defective component. |
| 35 | | Front winch | **CAUTION**<br>Before opening hydraulic reservoir, ensure area around reservoir filler cap is clean. Do not allow dirt, dust, or water to enter reservoir. Failure to do this will cause damage to internal components.<br>**NOTE**<br>• If mission requires front winch operation and winch is inoperative, notify your supervisor.<br>• Ensure vehicle is on level ground.<br>**a.** Check oil level in hydraulic reservoir (5). Oil level should be visible in sight glass (6). If low, remove fillercap (3) and fill reservoir (5) with oil until oil level is centered in sight glass (6). | |

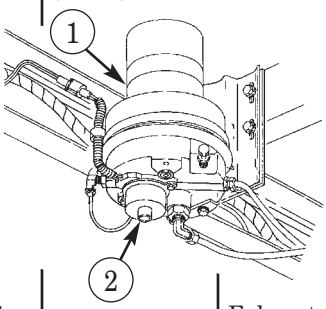

*Table 2-2. Operator/Crew Preventive Maintenance Checks and Services (Contd).*

| ITEM NO. | INTERVAL | ITEM TO CHECK/ SERVICE | PROCEDURE | NOT FULLY MISSION CAPABLE IF: |
|---|---|---|---|---|
| 35 (Contd) | After Operation (Contd) | Front winch (Contd) | | |

| LUBRICANT MIL SYMBOL (NATO CODE) SPECIFICATION | EXPECTED TEMPERATURES °F | °C |
|---|---|---|
| SAE 15W40 (O-1236) MIL-PERF-2104 | -4 to +122 | -20 to +50 |
| OEA (O-183) MIL-PERF-46167 | -50 to -4 | -46 to -20 |

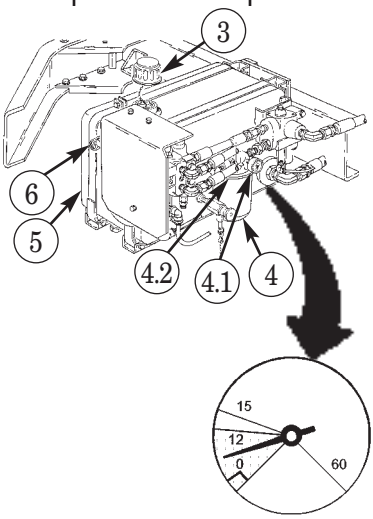


**b.** Check winch oil filter (4) for leaks.

**b.** Mission requires use of front winch and any class III oil leakage is evident.

**b.1.** Check pressure dial indicator gauge (4.1) on filter housing (4.2). With engine running, dial indicator gauge (4.1) must operate in the green or yellow zones. Notify unit maintenance if dial indicator is operating in red zone (service filter).

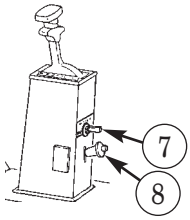


**c.** Start engine (para. 2-12) and check winch, winch control switch (7), and winch control valve lever (8) for proper operation (para. 2-18).

**c.** Mission requires use of front winch and winch is inoperative.

**WARNING**

Wear hand protection when handling winch cable. Broken wires may cause injury to personnel.

**d.** Inspect all hydraulic lines and hoses for signs of deterioration and leakage. Notify unit maintenance if lines are deteriorated or leaking.

**d.** Mission requires use of front winch and any class III leakage is evident.

**e.** Unwind winch cable (9) (para. 2-18). Check winch cable for kinks, frays, and breaks.

**e.** Mission requires use of front winch and frays, kinks, or breaks are evident.

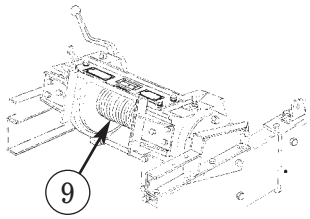


**f.** Wind cable (9) on winch drum (para. 2-18).

**g.** Lubricate winch cable (9).

| LUBRICANT MIL SYMBOL (NATO CODE) SPECIFICATION | EXPECTED TEMPERATURES °F | °C | LUBRICANT MIL SYMBOL (NATO CODE) SPECIFICATION | EXPECTED TEMPERATURES °F | °C |
|---|---|---|---|---|---|
| SAE 15W40 (O-1236) MIL-PERF-2104 | -4 to +122 | +20 to +50 | OEA (O-183) MIL-PERF-46167 | -50 to -4 | -46 to -20 |

*Table 2-2. Operator/Crew Preventive Maintenance Checks and Services (Contd).*

| ITEM NO. | INTERVAL | ITEM TO CHECK/ SERVICE | PROCEDURE | NOT FULLY MISSION CAPABLE IF: |
|---|---|---|---|---|
| | | | **VEHICLE EXTERIOR ENGINE NOT RUNNING** | |
| 36 | After Operation (Contd) | Air dryer heater | **WARNING**<br>• Use caution when checking air dryer heater. A malfunctioning heater may be too hot to touch and cause injury to personnel.<br>• Air dryer heater operates at temperatures of 53°F (12°C) and below. Air dryer heater failure may result in equipment damage and injury or death to personnel.<br>**NOTE**<br>• Air dryer heater must be checked immediately after shutting down engine.<br>• Air dryer heater only operates at temperatures of 53°F (12°C) and below.<br>With engine shut off, ensure air dryer heater (1) is functioning properly. Touch heater (1). If functioning properly, heater (1) should feel warm. | Air dryer heater fails to operate at temperatures of 53°F (12°C) and below. |
| 37 | | Air reservoirs | Open drainvalves (3) on air reservoirs (2) and exhaust air completely. | |

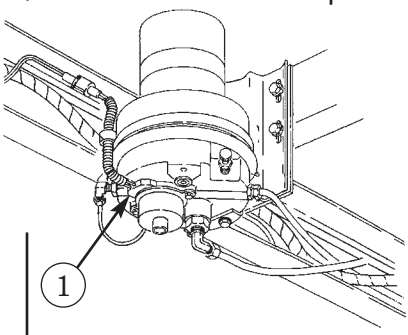


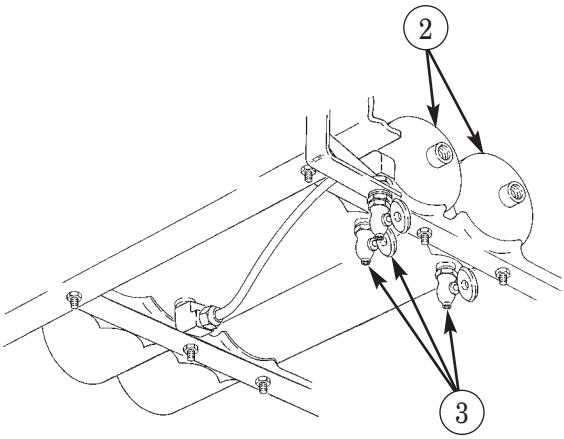

*Table 2-2. Operator/Crew Preventive Maintenance Checks and Services (Contd).*

| ITEM NO. | INTERVAL | ITEM TO CHECK/ SERVICE | PROCEDURE | NOT FULLY MISSION CAPABLE IF: |
|---|---|---|---|---|
| 38 | Weekly | Batteries | **WARNING**<br>• Do not smoke, allow open flames, or make sparks when working near batteries. Batteries may explode, causing injury or death to personnel.<br>• Remove all jewelry such as rings, dog tags, bracelets, etc. If jewelry contacts battery terminal, a direct short may result in instant heating of tools, damage to equipment, and injury or death to personnel.<br><br>**a.** Remove battery cell caps (5) to check that fluid level is to split-rings.<br><br>**NOTE**<br>• If fluid level is below split-rings, or is boiling, notify unit maintenance.<br>• When temperature drops below 32°F (0°C), run engine 15 minutes to allow water added to battery by maintenance personnel to mix with electrolyte.<br><br>**b.** Check cables and posts (4) for tightness, damage, and corrosion.<br>**c.** Visually check batteries (6) for cracked or leaking casing, broken, burnt, or corroded terminal posts (4).<br> 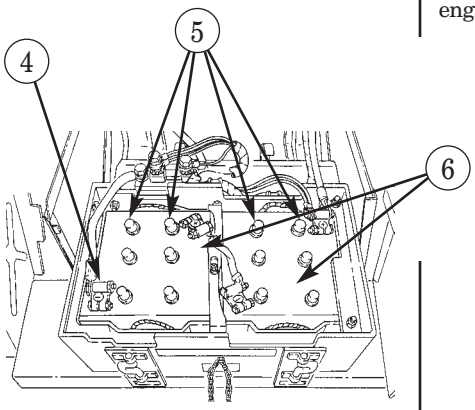 | **c.** One or more batteries are missing, leaking, unserviceable, or will not crank engine. |

*Table 2-2. Operator/Crew Preventive Maintenance Checks and Services (Contd).*

| ITEM NO. | INTERVAL | ITEM TO CHECK/ SERVICE | PROCEDURE | NOT FULLY MISSION CAPABLE IF: |
|---|---|---|---|---|
| 39 | Weekly (Contd) | Fuel system | **WARNING**<br>Do not perform fuel system checks or inspection while smoking or near fire, flame, or sparks. Fuel may ignite, causing injury or death to personnel. | |
| | | | **a.** Check fuel tanks for leaks and broken supports. | **a.** Any class III fuel leaks. |
| | | | **b.** Check fuel lines and hoses for leaks and damage. Ensure all connections are secure. | **b.** Any class III fuel leaks. |
| 40 | | Frame | **NOTE**<br>If any of the following conditions are found, notify unit maintenance. | |
| | | | Visually check frame side rails, cross-members, and underbody supports for broken bolts, obvious cracks, broken welds, loose rivets, and rusted-through conditions. | Any obvious broken bolts; cracked, loose, broken, or missing side rails, cross-members, welds, bolts, rivets; or rusted-through conditions. |

*Table 2-2. Operator / Crew Preventive Maintenance Checks and Services (Contd).*

| ITEM NO. | INTERVAL | ITEM TO CHECK / SERVICE | PROCEDURE | NOT FULLY MISSION CAPABLE IF: |
|---|---|---|---|---|
| 41 | Weekly (Contd) | Cargo body | **a.** Check for missing or broken mounting bolts (1). | **a.** Any mounting bolts are missing or broken. |
| | | | **b.** Check side racks (2) and troop seats (3) for cracks and breaks. | |
| | | | **c.** Check T-bolts of dropside locking handles (4) for presence and security. | **c.** Mission requires use of dropsides and any dropside T-bolts are missing. |
| | | | **d.** Check dropside rack locking pins (5) and safety latch (6) for presence and security. | **d.** Mission requires use of dropsides and any locking pins are missing. |

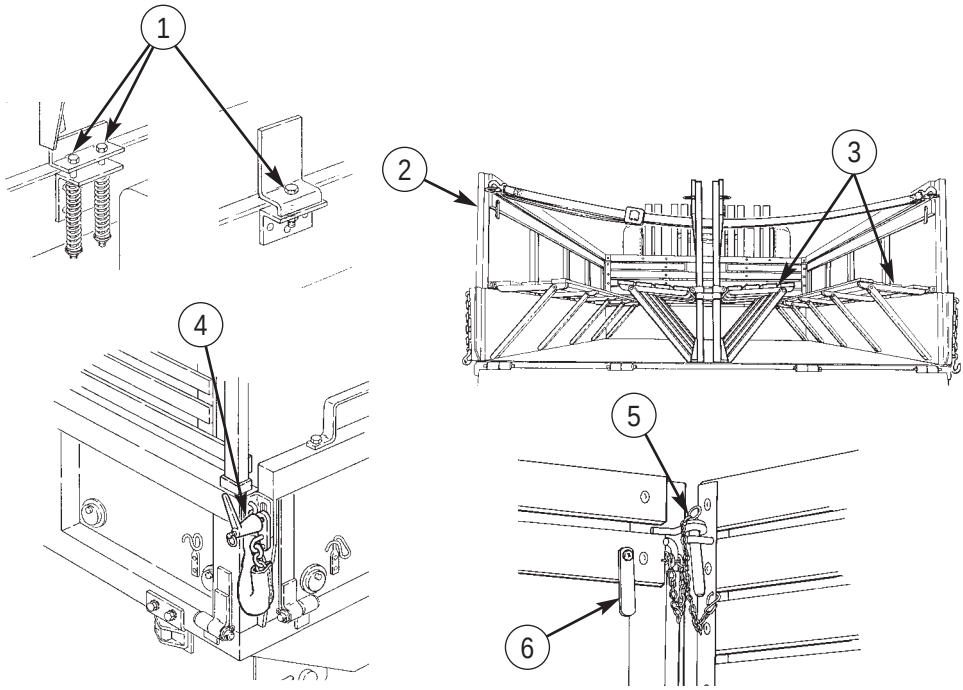

*Table 2-2. Operator / Crew Preventive Maintenance Checks and Services (Contd).*

| ITEM NO. | INTERVAL | ITEM TO CHECK / SERVICE | PROCEDURE | NOT FULLY MISSION CAPABLE IF: |
|---|---|---|---|---|
| 42 | Weekly (Contd) | Electrical system | **a.** Check wiring for loose connections, wear, and frayed wires. Notify unit maintenance if wiring has loose connections, or is worn or frayed.<br>**b.** Check engine ground strap (1) and transmission ground strap (2) for fraying and security. Notify unit maintenance if either ground strap is loose or missing.<br> 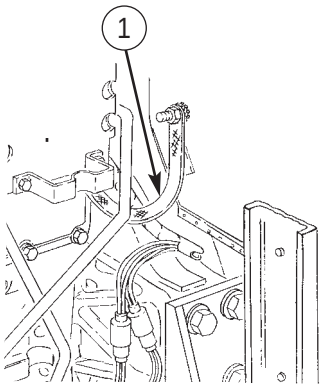 <br> 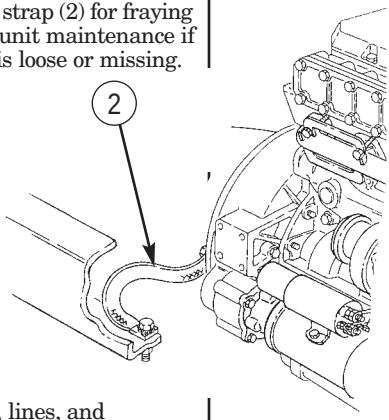 | |
| 43 | | Compressed air system | Check air reservoirs, lines, and fittings for signs of deterioration, breaks, cracks, and looseness. Notify unit maintenance if deteriorated, broken, cracked, or loose. | |
| 44 | | Drivebelts | **WARNING**<br>Secure hood in raised position with safety hook before servicing engine.<br>Check drivebelts (3) for cracks, breaks, fraying, and looseness. Notify unit maintenance if cracked or broken.<br> 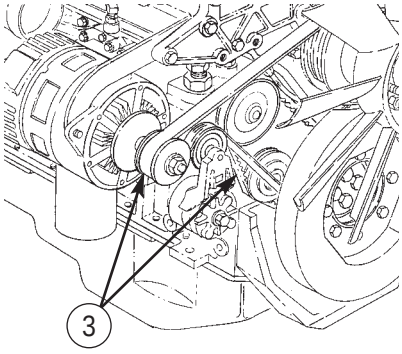 | Any drivebelt too loose, broken, cracked, 1/8 in. (3.18 mm) in depth or worn (50 percent of belt thickness), or has frays more than 2 in. (51 mm) long. |

*Table 2-2. Operator / Crew Preventive Maintenance Checks and Services (Contd).*

| ITEM NO. | INTERVAL | ITEM TO CHECK / SERVICE | PROCEDURE | NOT FULLY MISSION CAPABLE IF: |
|---|---|---|---|---|
| 45 | Weekly (Contd) | Quick-start cylinder | Check cylinder fluid level:<br>**a.** Loosen wingnut (5) and unscrew cylinder (4) from valve (6).<br>**NOTE**<br>Vehicles built after Serial No. 504923 will have quick-start cylinder mounted on brushguard, not on engine.<br>**b.** Remove and shake cylinder (4). If cylinder (4) feels less than two-thirds full, replace cylinder (4). | |
| | | | 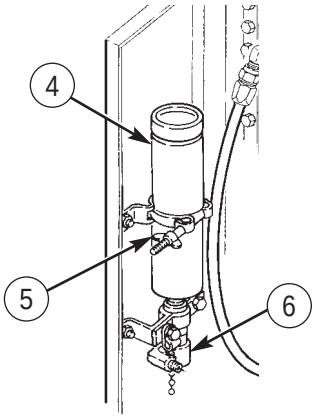 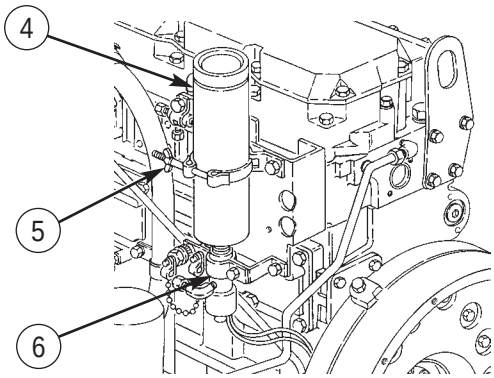 | |
| 46 | | Windshield wiper fluid level | Check to see if wiper fluid is full in container (7). If low, add fluid as required.<br> 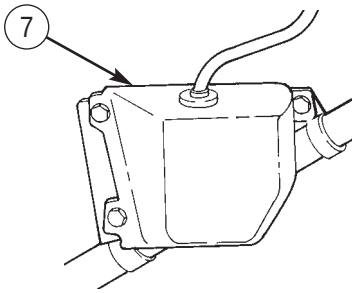 | |

*Table 2-2. Operator/Crew Preventive Maintenance Checks and Services (Contd).*

| ITEM NO. | INTERVAL | ITEM TO CHECK/ SERVICE | PROCEDURE | NOT FULLY MISSION CAPABLE IF: |
|---|---|---|---|---|
| 47 | Weekly (Contd) | Deleted | **WARNING**<br>Hearing protection is required when maintaining vehicle with engine running. | |
| 48 | | Air compressor | Start engine (para. 2-12) and check air compressor for loose bolts. Check for missing, leaking, or damaged hose lines. | Any hose lines are missing, leaking, or damaged. |
| 49 | | Central tire inflation system | **a.** Allow air pressure to build to normal operating pressure.<br>**b.** Increase to 1300 RPM and press ON switch.<br>**c.** Check air lines, hoses, and hubs for leaks. If leaking, notify unit maintenance. | |

*Table 2-2. Operator/Crew Preventive Maintenance Checks and Services (Contd).*

| ITEM NO. | INTERVAL | ITEM TO CHECK/ SERVICE | PROCEDURE | NOT FULLY MISSION CAPABLE IF: |
|---|---|---|---|---|
| 50 | Weekly (Contd) | Tire inflation | **NOTE**<br>CTIS ECU unit must be switched OFF to manually inflate tires.<br><br>Gauge tires for correct air pressure using ECU and tire inflation gauge and hose assembly. Manually inflate as necessary. For normal operation of vehicle, tire pressure should be as follows:<br><br>ROAD CONDITION — PRESSURE<br>Highway — 43-47 psi (296-324 kPa)<br>Cross-Country — 31-35 psi (214-241 kPa)<br>Sand/Mud/Snow — 18-22 psi (124-152 kPa)<br>Emergency — 11-15 psi (76-103 kPa) | |
| 51 | | Wheel nuts | **WARNING**<br>If two or more stud nuts are loose or missing, notify your supervisor.<br><br>Use wheel stud nut wrench and handle to ensure all wheel studs and nuts are present and tight. If stud nuts are loose, tighten and have unit maintenance retighten to proper torque. | Two or more studs and/or nuts are missing or broken. |
| 52 | | Front winch | **a.** Check hydraulic oil reservoir for damage and leakage. | **a.** Mission requires use of front winch and class III leakage is evident. |
| | | | **b.** Check bypass valve, winch pump, and control valve for damage, leakage, and security of mounting. Notify unit maintenance if leaking or damaged. | **b.** Mission requires use of front winch and class III leakage is evident. |
| | | | **c.** Check operation of winch engagement and control levers for range of motion. | **c.** Mission requires use of front winch and levers will not move or are too loose when used. |
| | | | **d.** Check hydraulic oil lines and hoses for deterioration, breaks, cracks, and looseness. | **d.** Mission requires use of front winch and class III leakage is evident. |

*Table 2-2. Operator/Crew Preventive Maintenance Checks and Services (Contd).*

| ITEM NO. | INTERVAL | ITEM TO CHECK/ SERVICE | PROCEDURE | NOT FULLY MISSION CAPABLE IF: |
|---|---|---|---|---|
| 53 | Weekly (Contd) | A-frame kit | Check cable, clamps, and A-frame for security of mounting and condition (if installed). | A-frame kit is required for the mission and it is not mounted or is bent, cable is frayed or broken, or clamps are loose. |
| 54 | | Winterization kits | Check operation and condition of: | |
| | | | **a.** Swingfire heater, if installed (para. 2-48). | **a.** Heater is non-operational and temperature range requires use. |
| | | | **b.** Fuel burning personnel heater, if installed (para. 2-48). | **b.** Any leakage of fuel. |
| | | | **c.** Power plant heater, if installed (para. 2-48). | **c.** Any leakage of fuel. |
| | | | **d.** Radiator cover and thermal barrier, if installed (para. 2-48). | |
| | | | **e.** Cargo body arctic kit, if installed | **e.** Any leakage of fuel. |
| 55 | | Bow and tarpaulin kit | **a.** Check bows (4) for cracks and breaks. | |
| | | | **b.** Check tarpaulin straps (2) for security. Tighten if necessary. | |
| | | | **c.** Check tarpaulin (3) for rips, tears, or punctures. | |
| | | | **d.** Check for loose or broken tiedowns (1) and lacing. | |

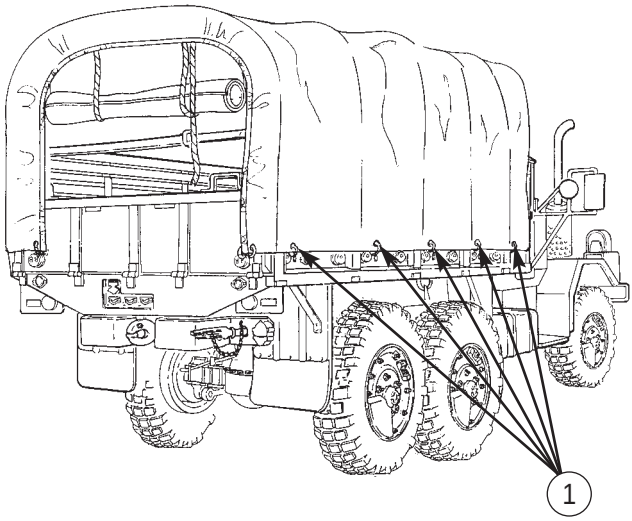

*Table 2-2. Operator/Crew Preventive Maintenance Checks and Services (Contd).*

| ITEM NO. | INTERVAL | ITEM TO CHECK/ SERVICE | PROCEDURE | NOT FULLY MISSION CAPABLE IF: |
|---|---|---|---|---|
| | | | **CAUTION**<br>Do not lubricate springs, alternator, water pump or shock absorbers. Damage to components may result. | |
| 56 | Monthly | Oil can points | Lubricate hinges and latches, transfer case linkage, accelerator cable, accelerator linkage, highbeam selector switch, parking brake lever, and spare tire carrier boom roller. | |

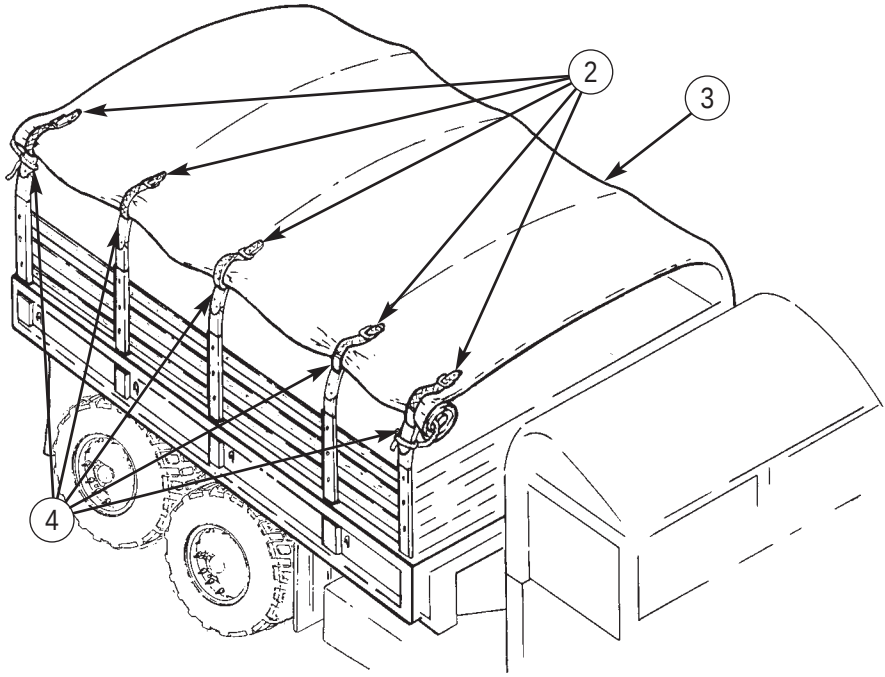


| LUBRICANT MIL SYMBOL (NATO CODE) SPECIFICATION | EXPECTED TEMPERATURES | |
|---|---|---|
| | °F | °C |
| SAE 15W40<br>(O-1236)<br>MIL-PERF-2104 | -4 to +122 | -20 to +50 |
| OEA<br>(O-183)<br>MIL-PERF-46167 | -50 to -4 | -46 to -20 |

# Section III. OPERATION UNDER USUAL CONDITIONS

## 2-10. GENERAL

This section provides instructions for 2-1/2-ton ESP vehicle operation under moderate temperature, humidity, and terrain conditions.

**WARNING**

- This vehicle has been designed to operate safely and efficiently within the limits specified in this manual. Operation beyond these limits is prohibited IAW AR 750-1 without written approval from the commander, U.S. Army Tank-automotive and Armaments Command, ATTN: AMSTA-LC-CHME, Warren, MI 48397-5000.
- Hearing protection is required for the driver and co-driver. Hearing protection is also required for all personnel working in and around this vehicle while the engine is running (reference AR 40-5 and TB MED 501).
- If required to remain inside the vehicle during extreme heat, occupants should follow the water intake, work/rest cycle, and other heat stress preventive medicine measures contained in FM 21-10, Field Hygiene and Sanitation.

**NOTE**

Before attempting to operate vehicle, perform the operator/crew preventive maintenance checks and services shown in table 2-2.

To find a specific paragraph, refer to the index below.

## 2-11. OPERATION UNDER USUAL CONDITIONS INDEX


| PARA. NO. | TITLE | PAGE NO. |
|---|---|---|
| 2-12. | Starting the Engine (Above +20°F) (-6.7°C) | 2-49 |
| 2-13. | Cold Weather Starting (Below +20°F) (-6.7°C) | 2-52 |
| 2-14. | Rapid Engine Warmup | 2-52 |
| 2-15. | Placing the Vehicle in Motion | 2-54 |
| 2-16. | Stopping the Vehicle and Engine | 2-56 |
| 2-17. | Backing the Vehicle | 2-57 |
| 2-18. | Operation of Front Winch | 2-57 |
| 2-19. | Operation of Central Tire Inflation System (CTIS) | 2-62 |
| 2-20. | Operation of Windshield Wipers | 2-64 |
| 2-21. | Operation of Adjustable Driver's Seat and Seatbelt | 2-65 |
| 2-22 | Towing the Vehicle | 2-66 |
| 2-23 | Raising and Securing Hood | 2-67 |
| 2-24 | Operation of Vehicle Service Lights | 2-68 |
| 2-25 | Using NATO Slave Receptacle to Start Engine | 2-69 |
| 2-26 | Replacing Cab Top | 2-70 |
| 2-27 | Raising and Lowering Windshield | 2-71 |
| 2-28 | Operation of Cargo Trucks | 2-71 |
| 2-29 | Operation of Personnel Hot Water Heater | 2-77 |

## 2-12. STARTING THE ENGINE (ABOVE +20°F) (-6.7°C)

**a.** Ensure parking brake is applied. Turn knob on end of parking brake control lever (3) to adjust brake cable tension and pull up on parking brake control lever (3) to apply parking brake.

**WARNING**

Always wear seatbelts when operating vehicle. The use of seatbelts is essential to the safety of all personnel. Failure to wear seatbelts when operating vehicle may result in serious injury or death to personnel.

**b.** Fasten seatbelt (para. 2-21).

**c.** Adjust driver's seat (para. 2-21).

**d.** Adjust rearview mirrors. Ensure both provide a clear rear view.

**e.** Ensure vehicle front and side windows are clean.

**f.** Place transmission gearshift lever (1) in NEUTRAL position.

**g.** Place transfer case shift lever (2) in HIGH or LOW operating range, depending on expected terrain, load, and vehicle speed.

**h.** Turn accessory/battery switch (4) to ON.

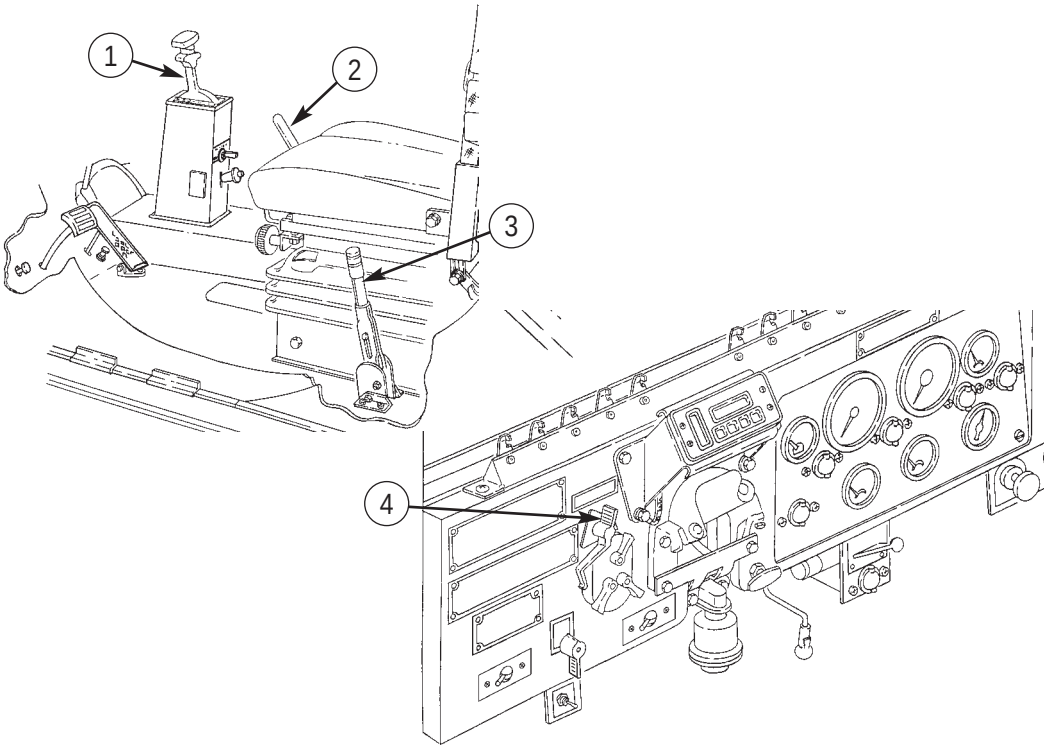

## 2-12. STARTING THE ENGINE (ABOVE +20°F) (-6.7°C) (Contd)

**CAUTION**

Do not engauge starter switch for more than 15 seconds at any time or with headlights on. If engine does not start in 15 seconds, wait 30 seconds before engaging starter switch again. Failure to do this may result in damage to starter.

**i.** Engage starter switch (1) until engine starts.

**CAUTION**

If any instrument reading is not normal, stop engine immediately by turning the accessory/battery switch to OFF position and notify unit maintenance. Failure to do this may result in damage to engine.

**NOTE**

The use of the ether quick-start system may be required for temperatures below 32°F (0°C).

**j.** Check for the following instrument readings:

**(1)** Ensure oil pressure gauge (3) reads at least 35 psi (241 kPa).

**(2)** Ensure battery/generator indicator (4) reads in the green area.

**(3)** Drive vehicle 3-5 miles (5-8 km) prior to activating CTIS (2). ECU should be turned to the OFF position if CTIS is not needed or if the truck will be idled for an extended period.

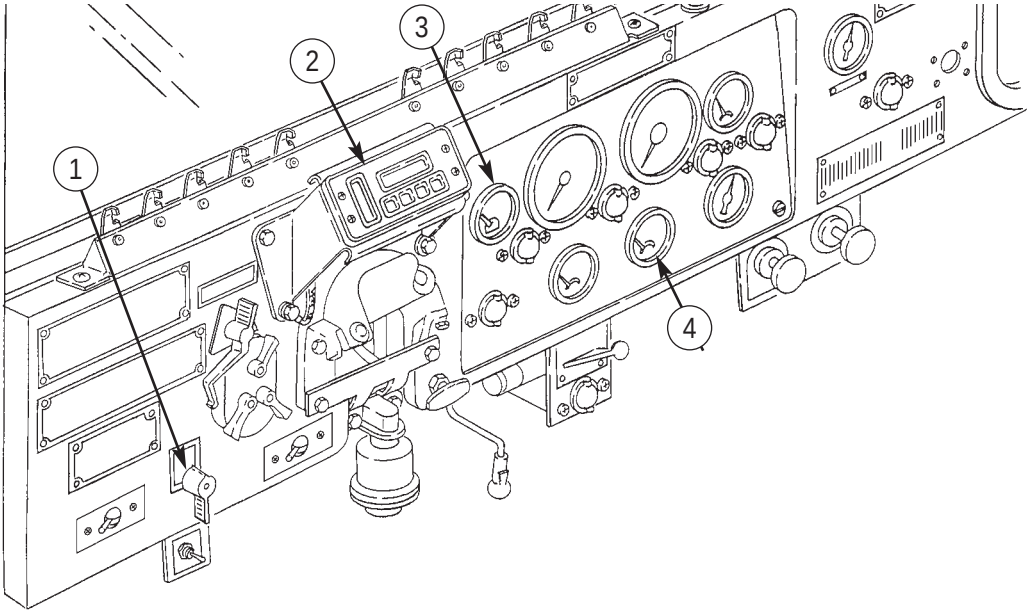

## 2-12. STARTING THE ENGINE (ABOVE +20°F) (-6.7°C) (Contd)

**WARNING**

- Do not place vehicle in motion until warning buzzer stops and air pressure gauge reads at least 90 psi (621 kPa). Failure to do this may result in brake failure, causing injury or death to personnel.
- If buzzer stops and air pressure reading is below 65 psi (448 kPa), there may be no braking action. Shut down engine and check to see what is wrong. Failure to do so may result in injury or death to personnel.
- If NBC exposure is suspected, all air filter media should be handled by personnel wearing protective equipment. Consult your unit NBC officer or NBC NCO for appropriate handling or disposal instructions.
- NBC contaminated filters must be handled using adequate precautions (FM 21-40) and must be disposed of by trained personnel.

**(4)** Ensure air pressure gauge (6) reads 90-120 psi (621-827 kPa).

**(5)** Ensure air cleaner indicator (7) does not show yellow.

**(6)** Ensure engine is operated at low loads until engine reaches normal operation temperature 160°F- 230°F (71°C-110°C).

**k.** Stop engine immediately and notify unit maintenance if any of the following occurs:

**(1)** Engine is vibrating or making excessive noise.

**(2)** Oil pressure does not register or suddenly drops below 35 psi (241 kPa).

**(3)** Engine temperature rises sharply to 230°F (110°C) or more, or suddenly falls below 160°F (71°C).

**(4)** Engine temperature rises suddenly.

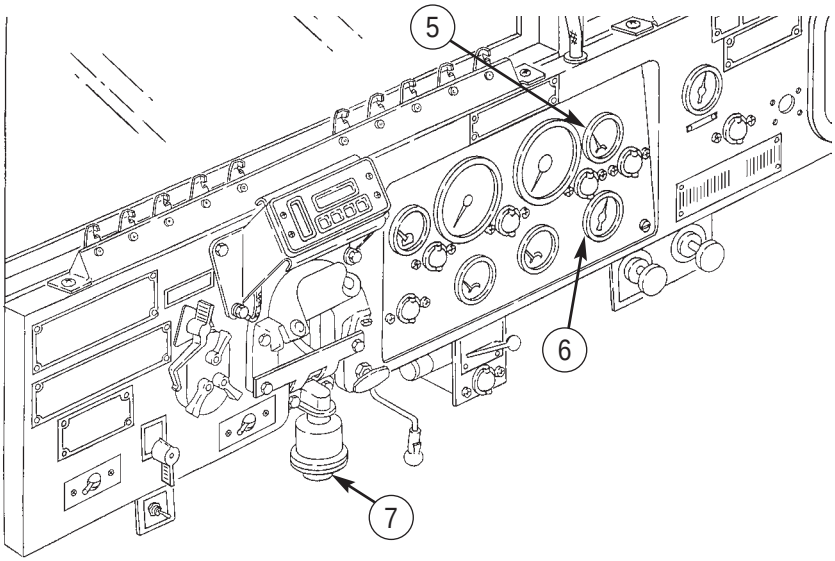

## 2-13. COLD WEATHER STARTING (BELOW +20°F) (-6.7°C)

**CAUTION**

Ensure engine has achieved and maintained an operating temperature of 160°F (71°C) or more for at least 15 minutes before shutdown. Failure to do so may result in engine damage.

**a.** Push temperature control knob (2) to CLOSED position.

**b.** Place heater switch (5) in OFF position.

**c.** Start engine (para. 2-12) and raise engine rpm to 1200 for 2 minutes or until engine runs smoothly.

**NOTE**

Perform step d. if engine cranks, but fails to start.

**d.** Operating quick-start system.

**CAUTION**

- Do not engage starter switch for more than 15 seconds at any time, or with headlights on. If engine does not start in 15 seconds, wait 30 seconds before engaging starter switch. Failure to do this may result in damage to starter.
- Do not operate start-aid unless engine is idling rough or being cranked. Doing this may result in damage to engine.

**(1)** Engage starter switch (1).

**(2)** While the engine is cranking, press and hold start-aid button (6) for at least 2 to 3 seconds, then release.

**(3)** Wait 3 to 4 seconds, then repeat steps 1 and 2 if engine does not start.

**e.** Raise engine RPM to 1200 rpm for 2 minutes, or until engine runs smoothly. Repeat quick-start operation if necessary.

**f.** After 2 minutes, or after engine is running smoothly, return engine to normal idle.

**g.** Perform steps j. and k. of para. 2-12.

## 2-14. RAPID ENGINE WARMUP

The following procedures are intended for use only under extreme or unusual conditions, such as heavy windshield frost or when it is difficult to achieve normal operating temperature.

**WARNING**

Parking brake and service brake must be applied during the engine/transmission cycling. The vehicle must also be blocked and personnel kept clear of vehicle path. Failure to do so may result in injury to personnel or damage to equipment.

## 2-14. RAPID ENGINE WARM-UP (Contd)

**CAUTION**

Shifting between neutral and drive is essential since continuous operation in gear with the brakes locked will overheat the transmission and cause serious damage. Ensure transmission temperature gauge does not exceed 200°F (93°C) during the following procedures.

**NOTE**

Use only the accelerator pedal to achieve an engine idle speed of 1400 rpm.

**a.** Apply service brake (8) and engage parking brake by pulling parking brake lever (7) up. Place the transmission shift lever (6) in DRIVE position and accelerate to 1400 rpm for 30 seconds using accelerator pedal (9).

**b.** Return engine to normal idle (750-850 rpm), place transmission shift lever (6) in NEUTRAL, apply service brake (8), depress the accelerator pedal (9) to increase engine rpm to 1200 rpm for 30 seconds, then return engine to normal idle.

**c.** Repeat steps a. and b. for a total of 8 minutes or until engine temperature is 160°F (71°C).

**d.** Pull temperature control knob (2), move heater switch (4) to HIGH, and windshield wiper control to HIGH.

**CAUTION**

Ensure engine reaches and maintains an operating temperature of 160°F (71°C) or above prior to or during step e. If engine temperature does not reach 160°F (71°C) or falls below this temperature, repeat steps a. and b. until correct engine temperature is maintained.

**e**. Place transmission shift lever (6) in NEUTRAL and pull throttle control (3) to increase engine rpm to 2150 until normal operating temperature is achieved.

**f.** Perform steps j. and k. of para. 2-12.

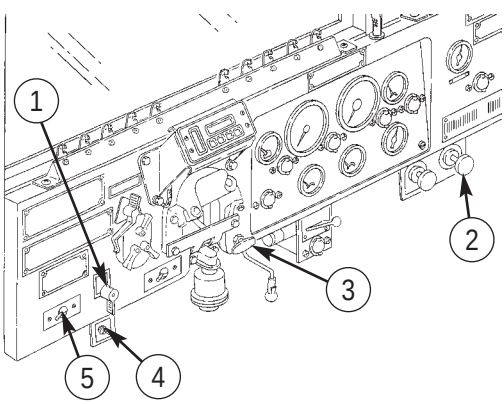


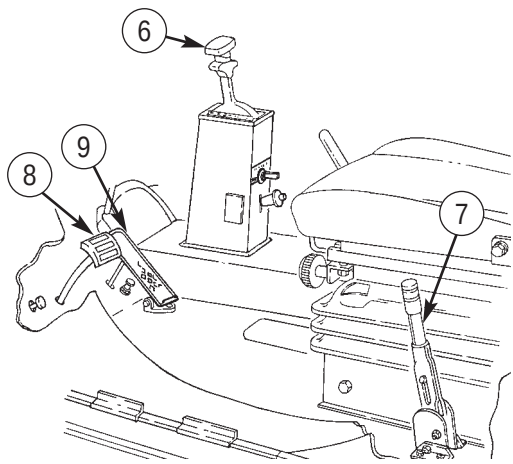

## 2-15. PLACING THE VEHICLE IN MOTION

**a.** Ensure front winch, tools, and auxiliary equipment are locked and stowed for travel.

**b.** Start engine (paras. 2-12 and 2-13).

**c.** Set light switch (2) to desired position (para. 2-24).

NOTE

- When going forward on upgrade terrain, or reverse on downgrade terrain, do not release parking brake until transmission is engaged.
- During vehicle operation on extreme slopes, the operator may experience loping or hunting idle and an oil pressure drop to 5-8 psi (35-55 kPa) when engine speed falls within a 700-900 RPM range. Though not desirable, these sudden drops in engine performance are normal and will not cause damage to the engine.

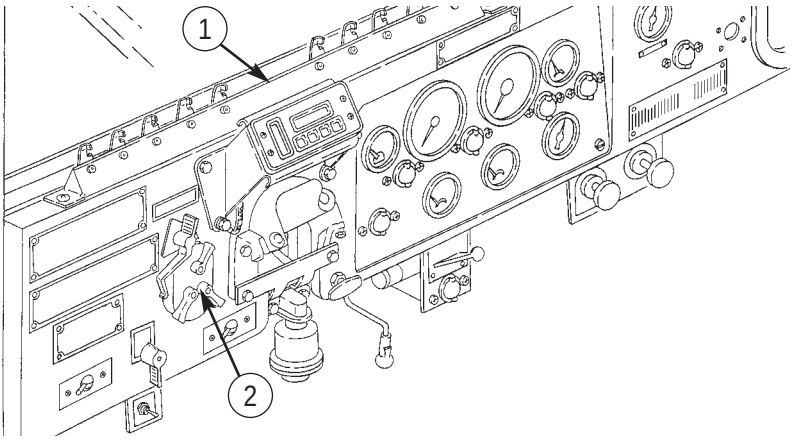


**d.** Push parking brake lever (5) down to release parking brake.

**e.** Check ECU (1) for correct pressure setting (para. 2-19).

**f.** Place transmission gearshift lever (3) in DRIVE or REVERSE positions, as desired.

**g.** Depress accelerator pedal (6) to increase vehicle speed.

CAUTION

- Do not allow engine speed to exceed 2700 rpm as shown on tachometer in any transmission gearshift lever position.
- Do not downshift transmission gearshift lever more than one position at a time.
- When shifting from 2 (second) position to 1 (first) position, or from NEUTRAL position to REVERSE position, vehicle must be brought to a complete stop. Failure to do this may result in damage to transmission.
- When down-shifting, vehicle speed must not exceed speed of next lower gear as shown on data plate. Doing this may result in damage to transmission.

## 2-15. PLACING THE VEHICLE IN MOTION (Contd)

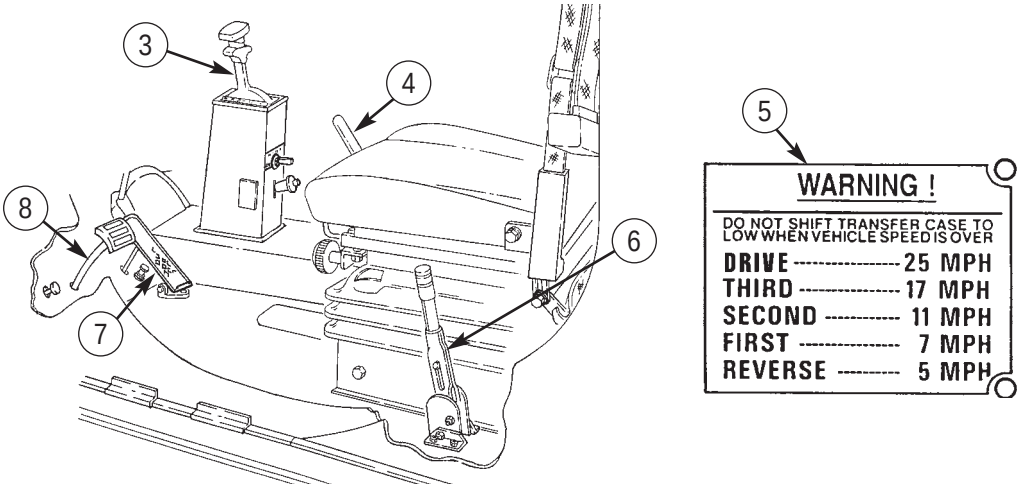


**NOTE**

Manually shifting the transmission is not done under normal driving conditions; however, shifting the transmission manually may be required under unusual or adverse conditions.

**h.** When lower gear is desired, depress service brake pedal (7) as necessary, until vehicle speed is within range for next lower gear. Shift transmission gearshift lever (3) to next lower position.

**CAUTION**

Before shifting transfer case from HIGH to LOW, ensure vehicle speed is equal to or lower than speed shown on data plate for transmission gear being used.

**i.** When vehicle is heavily loaded, or when road conditions are bad, additional traction can be obtained as follows:

**(1)** Depress service brake pedal (7) as necessary, until vehicle is slowed to equal to, or lower than, speed shown on data plate (8) for transfer case.

**(2)** Shift transfer case shift lever (4) to LOW.

**(3)** Depress accelerator pedal (6) to bring vehicle to desired speed.

**WARNING**

- Do not let vehicle coast downhill with transmission in NEUTRAL position. Doing this may cause vehicle to increase speed and go out of control, resulting in injury or death to personnel.
- Do not use hand throttle as a cruise control. Use of hand throttle may cause damage to equipment and/or injury to personnel.

## 2-15. PLACING THE VEHICLE IN MOTION (Contd)

**CAUTION**

Do not apply constant pressure to service brake pedal when going down a steep grade. Doing this may result in overheated brake linings.

**j.** When driving vehicle down steep grades, transmission may be shifted into a lower gear to slow vehicle. Pump service brake pedal (1) as necessary to control vehicle speed.

## 2-16. STOPPING THE VEHICLE AND ENGINE

**a.** Release accelerator pedal (2).

**b.** Depress service brake pedal (1) evenly until vehicle comes to a complete stop.

**CAUTION**

If brakes fail, shift transmission into low range and pump brakes until vehicle comes to a stop.

**c.** Allow engine speed to drop to idle (750-850 rpm) as shown on tachometer (7).

**d.** Place transmission gearshift lever (3) in NEUTRAL position.

**e.** Pull parking brake lever (4) up to apply parking brake.

**f.** **Chock vehicle.** On level ground set chocks in front of and behind wheels. If vehicle is parked on a slope, place both chocks on the downhill side.

**g.** When level ground is not available, park vehicle on a slope with the least grade and face vehicle in the ascending direction.

**CAUTION**

- Allow engine to cool at idle speed for five minutes after operation. Failure to do this may result in damage to engine and turbocharger.
- Ensure engine has achieved an operating temperature of 160°F (71°C) for at least fifteen minutes before shutdown.

**h.** Turn off CTIS by holding OFF button for two seconds on ECU (8).

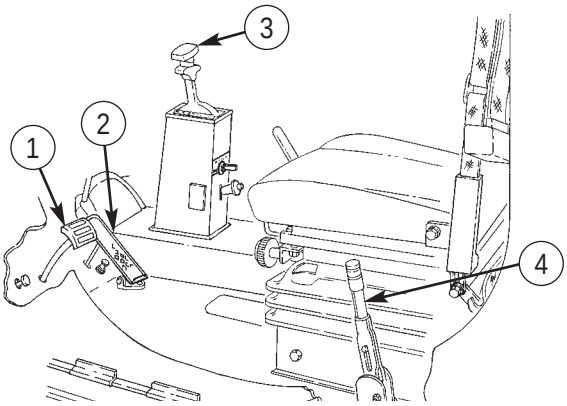

## 2-16. STOPPING THE VEHICLE AND ENGINE (Contd)

**i.** Allow engine to cool at idle speed for five minutes after operation. If temperature gauge (6) reads above 230°F (110°C) after five minutes, perform the following steps and notify unit maintenance.

**j.** Place accessory/battery switch (5) and all other switches in OFF position.

**k.** Unfasten seatbelt (para. 2-21).

**WARNING**

If tachometer shows engine idling at high rpm and fuel shutoff switch does not stop engine, do not attempt to stall engine. Leave vehicle and notify unit maintenance. Attempting to stall engine at high RPM may result in injury or death to personnel.

**l.** Release service brake pedal (1) and position wheel chocks.

**m.** Perform after operation PMCS. Refer to table 2-2.

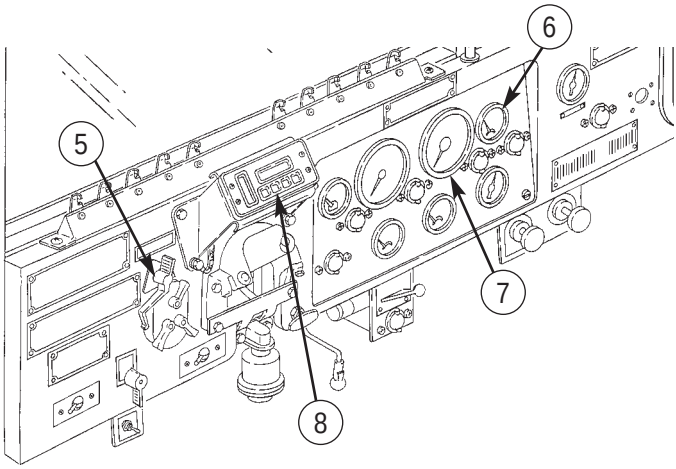


## 2-17. BACKING THE VEHICLE

Refer to para. 2-15 and perform steps as necessary to backup the vehicle.

## 2-18. OPERATION OF FRONT WINCH

**a. Preparation for Use.**

**(1)** Check front winch hydraulic reservoir fluid level (para. 3-7).

**WARNING**

Do not operate front winch under load with less than four turns of cable on drum. Doing this may cause injury to personnel or damage to equipment.

## 2-18. OPERATION OF FRONT WINCH (Contd)

**CAUTION**

Do not proceed with front winch operation if the oil level is low. Damage to internal components may result.

**(2)** Park vehicle facing object to be winched, if possible.

**(3)** Place transmission gear shift lever (1) in NEUTRAL and pull parking brake lever (2) up to apply parking brake.

**WARNING**

- Do not exceed 1500 RPM engine speed during winch operation. Use the hand throttle to avoid erratic engine speed that could cause injury to personnel.
- Wear hand protection when handling winch cable. Broken wires may cause injury to personnel.
- Direct all personnel to stand clear of winch cable during winch operation. A snapped winch cable may result in injury to personnel.

**(4)** Pull out drum lock knob (8), rotate it a quarter of a turn clockwise, and release into a shallow slot on nut (9).

**(5)** Move winch clutch control lever (3) to the OUT position (toward center of vehicle).

**NOTE**

Shackle pin may have to be removed from the left shackle to pass the winch hook through shackle.

**(6)** Unhook winch cable chain hook (5) from right lifting shackle (6) and pass hook (5) through left lifting shackle (4).

**b. Pulling Load.**

**(1)** Pull hook (5) up over center of front bumper (7) and out to the load (10) to be pulled.

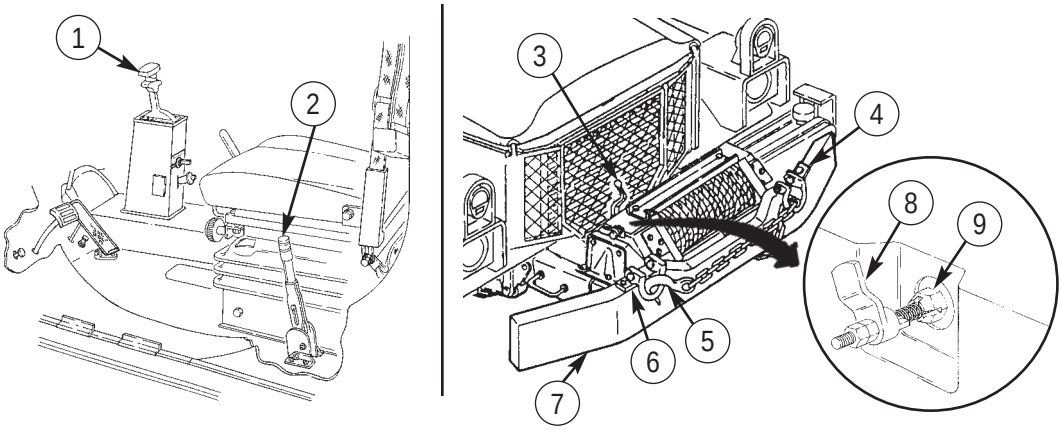

## 2-18. OPERATION OF FRONT WINCH (Contd)

**WARNING**

When hooking up for winching operations, position throat (open part) of hook upward in case overloading straightens out hook. Failure to do so may result in death or injury to personnel.

**(2)** Fasten winch cable (11) to load (10) being pull.

**NOTE**

For an excessively heavy load, use a snatch block. To pull load that is not in a direct line, use snatch block and utility chain.

**(3)** To pull a load (12) that is not in direct line, use snatch block (14) and utility chain (15) as shown. Ensure from drum lock knob (8) is disengaged.

**(4)** Move winch clutch control lever (3) to the IN position (toward passenger side of vehicle).

**(5)** Start engine (para. 2-12).

**(6)** Place winch control valve lever (16) to the ENGAGE position.

**(7)** Hold winch control switch (15) in PAY IN position.

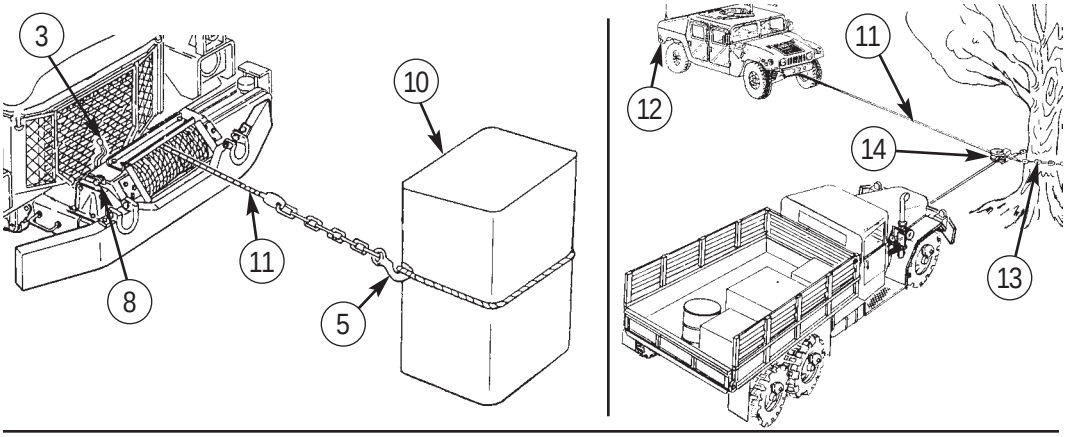


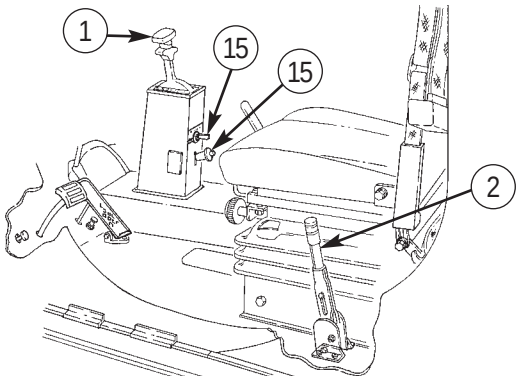

## 2-18. OPERATION OF FRONT WINCH (Contd)

**c. Stopping the Winch.**

**(1)** Place winch control valve lever (3) in the ENGAGE position.

**(2)** Release winch control switch (2).

**(3)** Place winch control valve lever (3) in DISENGAGE position.

**d. Lowering Load or Unwinding Slack Cable.**

NOTE

Keep tension on cable when unwinding under power to keep cable from crossing coils.

**(1)** Place winch control valve lever (3) in the ENGAGE position.

**(2)** Place transmission gear shift lever (1) in NEUTRAL and set parking brake lever (4).

**(3)** Hold winch control switch (2) in PAY OUT position.

**e. Winding the Winch Cable on Drum.**

WARNING

Wear hand protection when handling winch cable. Broken wires may cause injury to personnel.

**(1)** Attach load to end of winch cable (5). If no load is available, attach winch cable (5) to a tree or another vehicle which has its brakes applied.

**(2)** Release parking brake lever (4).

**(3)** Hold winch control switch (2) in PAY IN position.

NOTE

Ensure first layer of winch cable goes onto drum in order and that each additional layer starts back across the drum. If necessary, use a wooden block to assist in cable alignment.

**(4)** When winch cable (5) is fully wound on drum, release winch control switch (2).

**(5)** Place winch control lever (3) in DISENGAGE position.

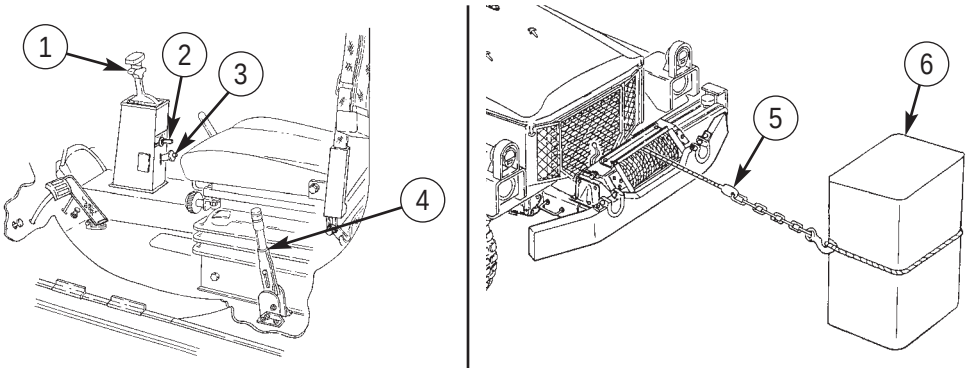

## 2-18. OPERATION OF FRONT WINCH (Contd)

**f. Locking Front Winch for Travel.**

**(1)** Position cable chain (9) under bumper (11), through left lifting shackle (8), across bumper (11), and attach hook (12) to right lifting shackle (13).

**(2)** Move winch clutch control lever (7) to OUT position, toward center of vehicle to release drum.

**(3)** Pull drum lock knob (14), rotate drum lock knob (14) a quarter turn counterclockwise, and release drum lock knob (14) into deep slot on nut (15).

**(4)** Rotate drum until lock knob (14) plunger slips into nearest hole on drum flange (10).

**(5)** Service and stow equipment used in winching.

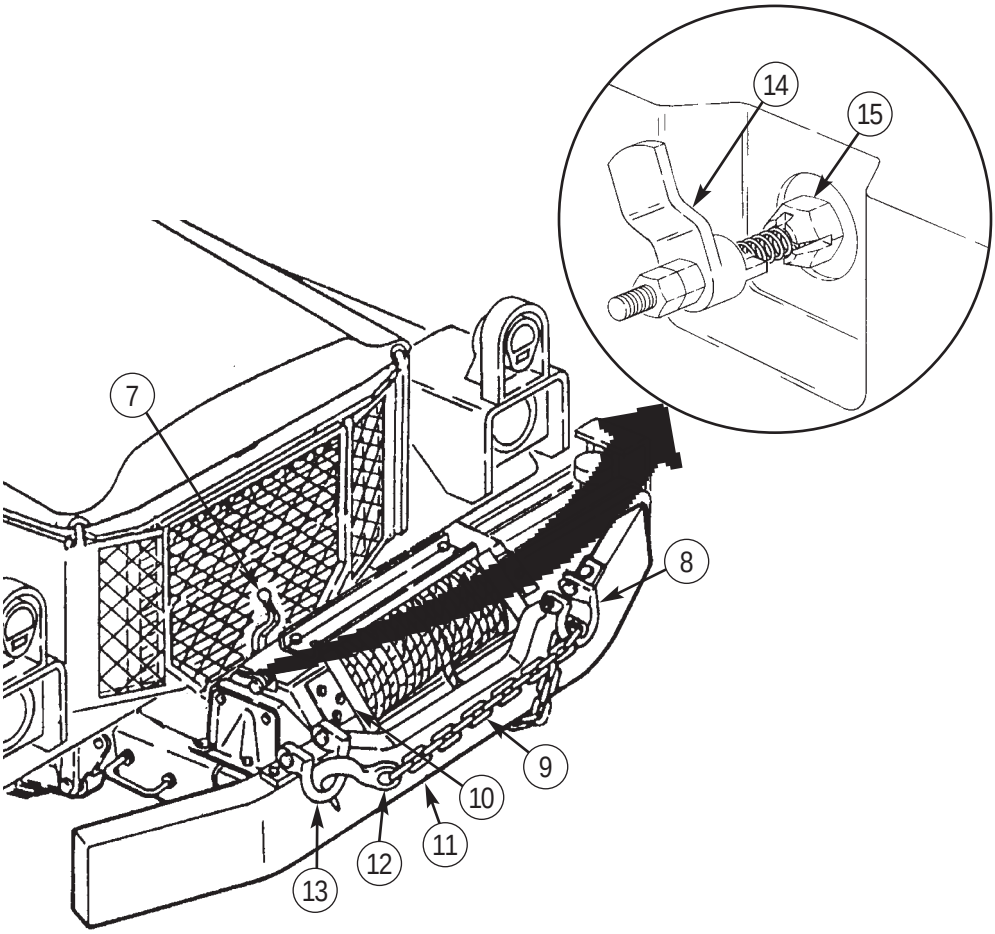

## 2-19. OPERATION OF CENTRAL TIRE INFLATION SYSTEM (CTIS)

**a. Normal Operation.**

NOTE

- When the accessory/battery switch is turned to the ON position, CTIS will resume its previously selected mode of operation. It should not be necessary to press the ON button to activate the CTIS.
- The CTIS activates a pressure check cycle every 30 minutes to ensure proper tire pressure.
- The Electronic Control Unit (ECU) will remember the last terrain setting used.
- When tire pressure is at correct level, PSI SETPOINT will be displayed on the Liquid Crystal Display (LCD) in capital letters. If the system is inflating or deflating, TIRE PRESSURE will be shown in lower case letters with the selected terrain name flashing.

NOTE

If tire pressure falls below 10 psi, CTIS will not inflate tire.

**(1)** Start engine (para. 2-12) and allow vehicle air pressure to reach normal operating pressure of 90-120 psi (621-827 kPa).

**(2)** Drive the vehicle 3-5 miles (5-8 km) to allow seals to seat properly, especially in cold environments.

NOTE

- The terrain buttons correspond to a predetermined tire pressure for the selected terrain (table 2-3).
- Terrain selection may be aborted by pressing the same button again or a different terrain button. PRESSURE ADJUST ABORT will be shown on the LCD, followed by the normal display for a particular terrain setting after the set point is reached.
- During blackout operation, the backlighting of the LCD display can be turned off by momentarily pressing the OFF button. To switch the backlighting ON, the CTI system must first be turned OFF, by pressing and holding the OFF button for two seconds, and then press the ON button which activates the CTI system and backlighting operation.

**(3)** Turn CTIS on with the ON button and select the desired terrain setting by pressing the appropriate terrain button on the ECU (table 2-3).

**(4)** When the accessories/battery switch is turned off, the CTIS ECU will also be turned off. Turn off ECU separately.

**(5)** Turn off CTIS/ECU by pressing and holding the OFF button until display clears (2 seconds or more) prior to engine shutdown.

**b. Overspeed Conditions.**

NOTE

- The maximum speed shown on the LCD will flash for approximately one minute prior to switching to next highest terrain setting.
- The ECU will not automatically switch settings if highway mode has been selected.

If an overspeed condition occurs, the ECU (para. 2-3) will automatically switch to the next highest terrain setting if the overspeed condition persists for longer than one minute.

## 2-19. OPERATION OF CENTRAL TIRE INFLATION SYSTEM (CTIS) (Contd)

**c. Run Flat Mode.**

CAUTION

If tire condition deteriorates and cannot maintain at least fifty percent of its lowest set point, run flat mode should be aborted to prevent equipment damage.

NOTE

- By pressing a terrain switch on the control panel, a vehicle operator can start a pressure check cycle, beginning with the initial test pressure sequence. After the initial test pressure sequence has started, if air feeder lines and tires cannot hold at least 6 psi (41 kPa), the system will sense a failure and the control panel display will read FLAT. With the presence of a flat tire indicated, the vehicle operator may elect to call for assistance, or he may try to drive to a repair center using the vehicle's run flat mode.
- Run flat mode supplies pressure to the air lines and to all wheel valves and allows maximum possible air pressure to the damaged tire.
- RUN FLAT ACTIVE will be displayed on the LCD and the tire pressure will be indicated in flashing lower case PSI.

**(1)** Run flat mode is engaged by pressing and holding for three seconds the terrain button that the tire failure occurred in.

NOTE

- PRESSURE ADJ. ABORT will be shown on the LCD, followed by the normal display for the selected terrain when the set point is reached.
- By aborting any setting, the ECU will be in a stand by mode. Ensure the correct terrain button is pressed and the CTIS is allowed to complete a cycle to start the auto timer in the ECU.

**(2)** Run flat mode can be aborted by pressing any terrain switch.

CAUTION

In the event of CTIS failure, pressure/speed limitations displayed on data plate must be observed when manually inflating/deflating tires.

**(3)** In the event of system failure, tires may be inflated manually (para. 3-9).

*Table 2-3. Required CTIS Limits.*

| CONDITION | SET POINTS | TIRE PRESSURE RANGE | ALLOWABLE DRIVING SPEED RANGE |
|---|---|---|---|
| Highway | 45 psi | 43-47 psi (296-324 kPa) | 0-56 All Speeds |
| Cross-Country | 33 psi | 31-35 psi (214-241 kPa) | 0-36 mph |
| Sand/Mud/Snow | 20 psi | 18-22 psi (124-152 kPa) | 0-16 mph |
| Emergency | 13 psi | 11-15 psi (76-103 kPa) | 0-5 mph |

**d. Operation in Extreme Cold.**

Turn OFF the CTIS during operation in extreme cold, -0° to -65°F (-18° to -54°C).

## 2-20. OPERATION OF WINDSHIELD WIPERS

**General.** The M35A3, M35A3C, and M36A3 series vehicles are equipped with an electrical windshield wiper motor. Power for the motor is provided by the batteries.

**a.** Turn vehicle accessory/battery switch ON.

**b.** Turn windshield wiper motor (2) ON by turning motor knob (1) right (clockwise).

**c.** Turn knob (1) slowly to the right (clockwise) at 45 degree angle. Once wipers (3) activate, they are set on LOW setting.

**d.** Turn knob (1) further to the right (clockwise) at 90 degree angle, and wipers (3) will be set in HIGH position.

**e.** Turn knob (1) left (counterclockwise) until wipers (3) stop. The wipers (3) will be set in OFF position.

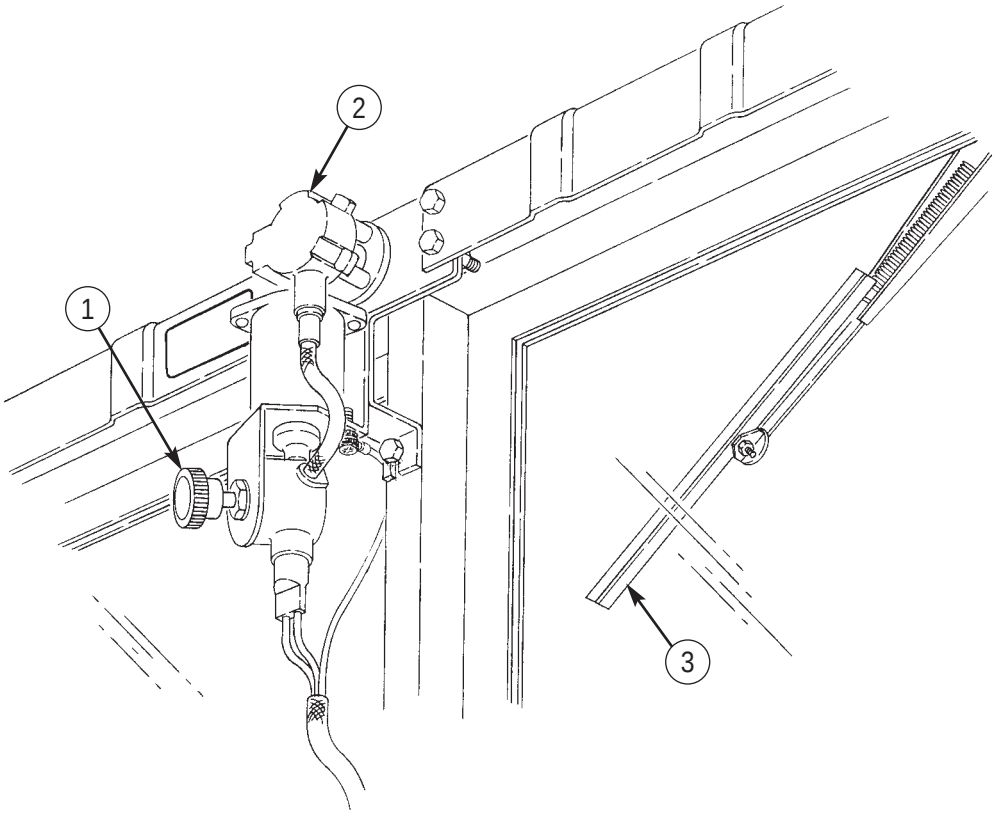

## 2-21. OPERATION OF ADJUSTABLE DRIVER'S SEAT AND SEATBELT

**a. Seat Adjustment.**

WARNING

Always wear seatbelts when operating vehicle. The use of seatbelts is essential to the safety of all personnel. Failure to wear seatbelts when operating vehicle may result in serious injury or death to personnel.

**General.** The M35A3, M35A3C, and M36A3 are equipped with an adjustable driver's seat (1).

**(1)** To position seat (1) horizontally, pull lever (2) up and slide seat (1) to desired position.

**(2)** Release lever (2) to lock the seat (1) into desired position.

NOTE

Operator must be in seat for accurate adjustment.

**(3)** To adjust spring tension for the driver's seat (1), set handwheel (3) at operator's body weight. Seat will automatically adjust back to normal spring tension when operator's weight is removed.

**b. Seatbelt Adjustment.**

**(1)** Pull shoulder harness strap (7) and lap belt (8) across body and fasten latch plate (9) to belt buckle (4).

**(2)** Ensure seatbelt is not twisted in any way.

**(3)** Remove all slack from seatbelt by pulling down on shoulder harness strap (7) and releasing.

**(4)** Ensure shoulder harness strap (7) fits snugly against shoulders and chest, and lap belt (8) fits snugly across hips (not across waist).

**(5)** To adjust seatbelt, pull shoulder harness strap (7) or lap belt (8) through latch plate (6).

**(6)** To release seatbelt, push the release button (5) on belt buckle (4) and release the latch plate (6).

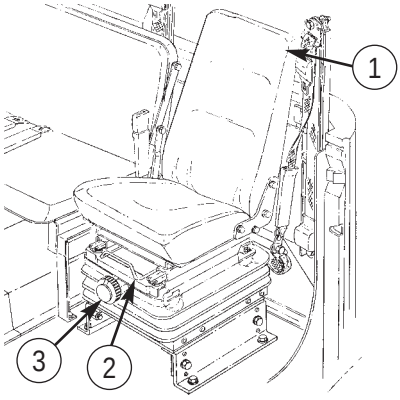


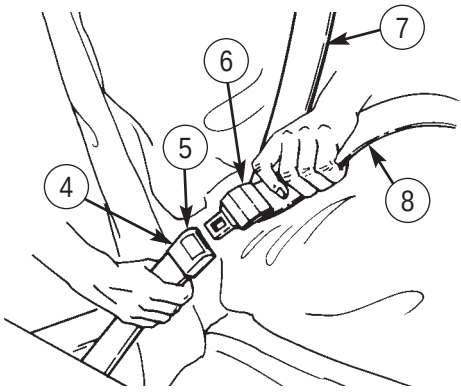

## 2-22. TOWING THE VEHICLE

**WARNING**

- Personnel must not occupy the vehicle in tow. Injury or death may result.
- When hooking or unhooking the tow bar lunette from a disabled vehicle, set the parking brake or chock the wheels of the disabled vehicle before hooking or unhooking the towbar lunette. If disabled vehicle is not chocked, or parking brake not set, disabled vehicle may move, causing injury to personnel or damage to equipment.

**CAUTION**

- Do not use towing as a means to start the engine of an ESP vehicle.
- Do not exceed 15 mph (24 kph) while towing any type of wheeled vehicle.
- Do not tow an ESP vehicle without first placing the transmission and transfer case in neutral.

**NOTE**

- Normal towing procedures for an ESP vehicle does not require the removal of propeller shaft.
- In the event a towed vehicle has become disabled because of damage to the transmission, transfer case, or axles, notify unit maintenance.

**a.** Set parking brake (7).

**b.** Remove lifting shackles and attach towbar to lifting shackle brackets (2) of disabled vehicle and pintle hook (1) of towing vehicle.

**c.** Connect utility chains (3) to spring hangers (4) on disabled vehicle and secure utility chains (3) to towing vehicle.

**d.** Place transfer case shift lever (6) and transmission gearshift lever (5) in NEUTRAL position.

**e.** Release parking brake lever (7).

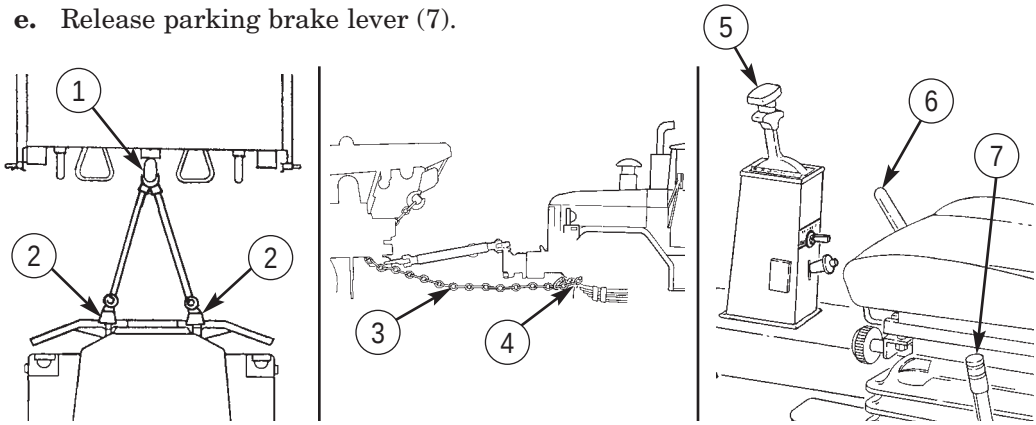

## 2-23. RAISING AND SECURING HOOD

**WARNING**

Secure hood in raised position with safety hook before servicing engine. Failure to do so may cause injury to personnel.

**NOTE**

Assistant will help with this procedure.

**a.** Remove two holddown latches (1) from brushguard (3).

**b.** Push hood latch (4) to left and hold, lift hood (2), and release hood latch (4).

**c.** Raise hood (2) to position shown.

**d.** Remove hood support hook (6) from hood retaining clip (7).

**e.** Swing hood support hook (6) up and fasten to hood support latch (5).

**NOTE**

Left and right side panels are removed the same.

**f.** Turn two side panel latches (8) to DOWN position.

**g.** Lower side panel (9), slide toward front of vehicle, and remove side panel (9) from fender (10).

**h.** To install side panel (9) and lower hood (2), reverse steps a through g.

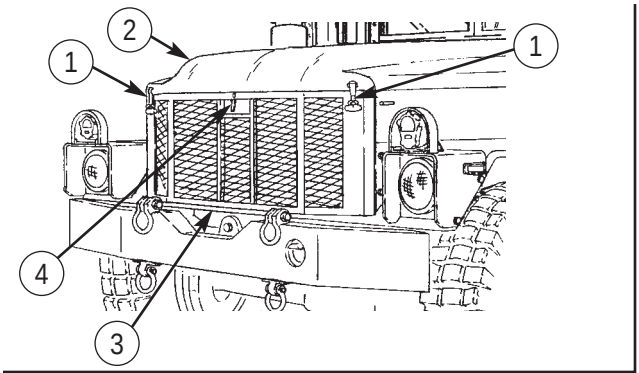


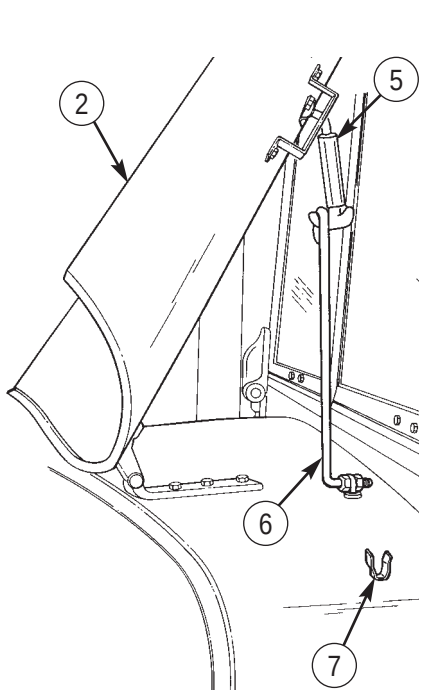


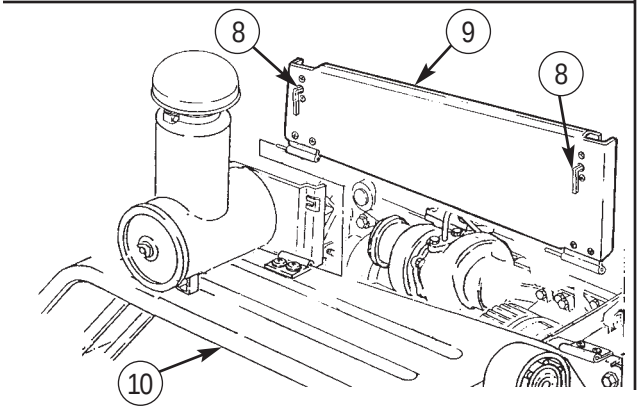

## 2-24. OPERATION OF VEHICLE SERVICE LIGHTS

Select and set light switch for lighting required. See following chart for switch positions.

**WARNING**

When hazard warning lights/emergency flashers are in use, they override brake lights/stop lamp operation. Therefore, when driving with hazard warning lights/emergency flashers operating, be prepared to use hand signals to indicate a stop. Failure to do so may result in injury to personnel.

**CAUTION**

To move main switch lever from OFF to any ON position except B.O. marker, unlock switch must be lifted to UNLOCK position. Failure to do this may result in damage to light switch.

**NOTE**

- For turn signals, move main switch to either service drive or stoplight position. Move turn signal control lever up for right turn and down for left turn. Move to neutral to deactivate turn signals.
- During blackout operation, the back lighting of the LCD display on the (CTIS) ECV can be turned off by momentarily pressing the off button, for no longer than two seconds. To switch backlighting ON, the CTIS system must be turned off by pressing and holding the off button for more than two seconds, then pressing the on button which will reactivate the CTIS system.

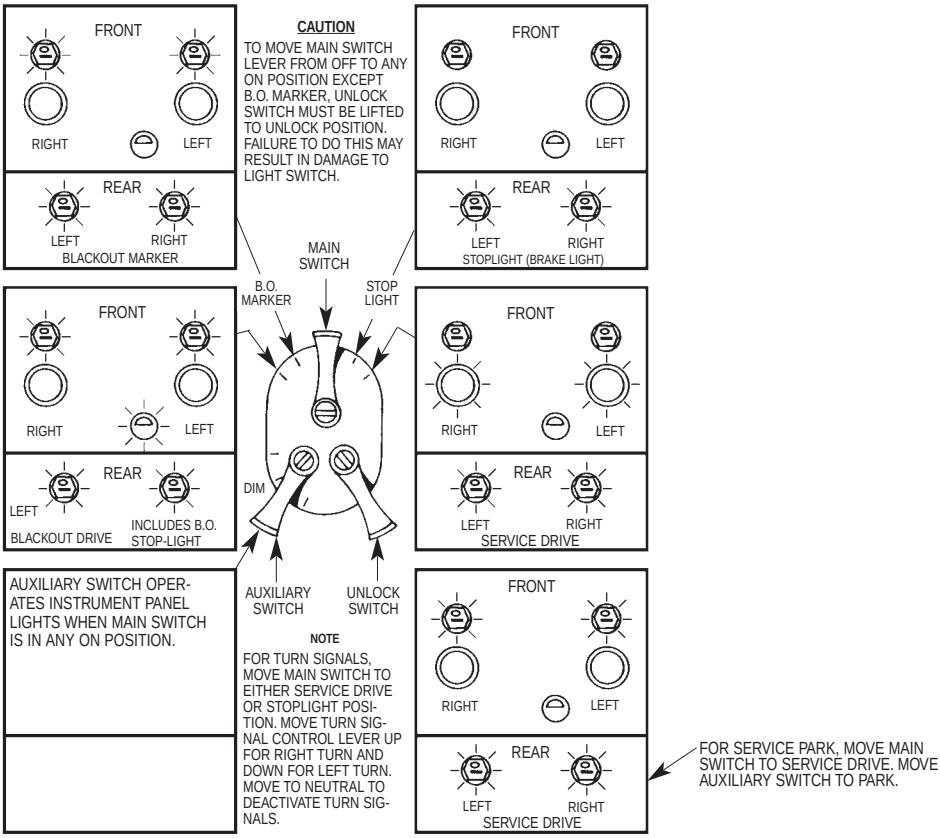

## 2-25. USING NATO SLAVE RECEPTACLE TO START ENGINE

**a.** Position right side of slaving (recharging) vehicle to right side of disabled vehicle.

**b.** Shutoff slaving vehicle engine.

**CAUTION**

When slaving, always connect slave cable to disabled vehicle first. Damage to batteries or cable may result from improperly connecting cable.

**NOTE**

Make sure electrical switches on both vehicles are in OFF position.

**c.** Remove cover (3) from slave receptacle (1) and connect slave cable (2) to slave receptacle (1) on disabled vehicle. Repeat procedure on slaving vehicle.

**d.** Start slaving vehicle engine and set idle speed at 1000-1100 rpm.

**e.** Start slaved vehicle engine.

**f.** After engine starts and is running smoothly, disconnect slave cable (2) from both vehicles.

**g.** Put cover (3) back on receptacle (1).

**h.** Clean and stow slave cable (2).

**i.** Observe battery/generator indicator (4) on slaved vehicle. If indicator (4) does not reach green area, notify maintenance personnel.

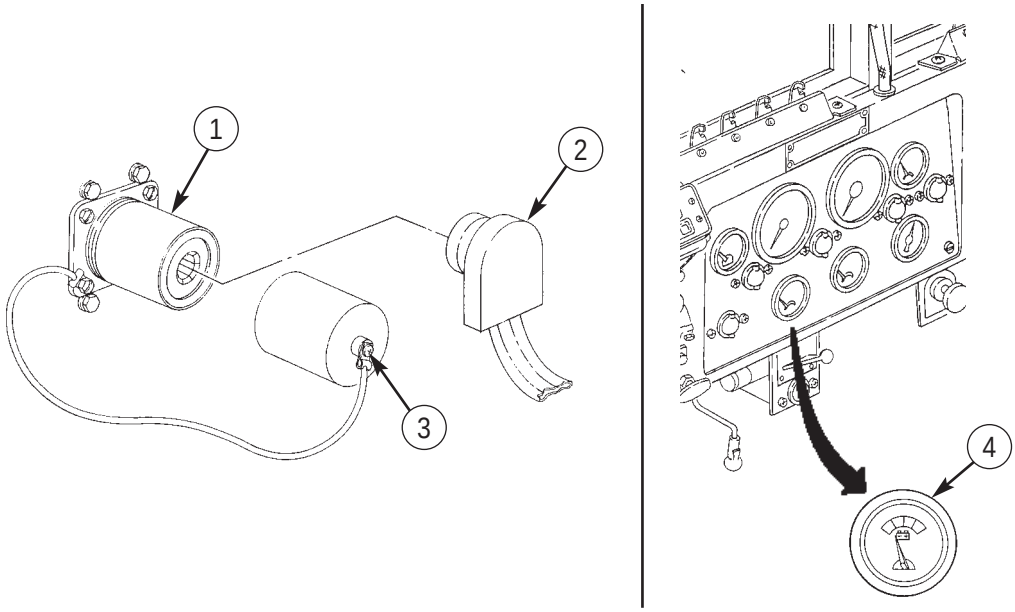

## 2-26. REPLACING CAB TOP

**a. Installing Cab Top.**

NOTE

Assistant will help with this procedure.

**(1)** Raise windshield (para. 2-27) if necessary.

**(2)** Install pillar post (2) on cab (3) and lower crossbar (1) and insert pin (5) and cotter pin (4) on each side of crossbar (1).

**(3)** Install three cross supports (8) for roof on windshield (6) and pillar (10).

**(4)** Pull up side roof rails (9) to meet windshield (6) and insert tab of side roof rails (9) into slot of windshield (6).

**(5)** Push down on two fasteners (7) to lock side roof rails (9) on windshield (6).

**(6)** Slide cover (11) into windshield channel (12).

**(7)** Pull cover (11) over windshield (6) to meet crossbar (1).

**(8)** Slide cover (11) down and into channel of pillar post (2).

**(9)** Install cover (11) on side roof rails (9) with twelve fastener studs (14) and two snaps (13).

**(10)** Tie lashing rope (15) to side handles (17) and hooks (16) at the rear of cab (3).

**b. Removing Cab Top.**

**(1)** To remove cover (11), reverse steps 1 through 9 of task a.

**(2)** Clean cover (11) (para. 2-7), and stow cover (11) and pillar post (2) behind cab seats.

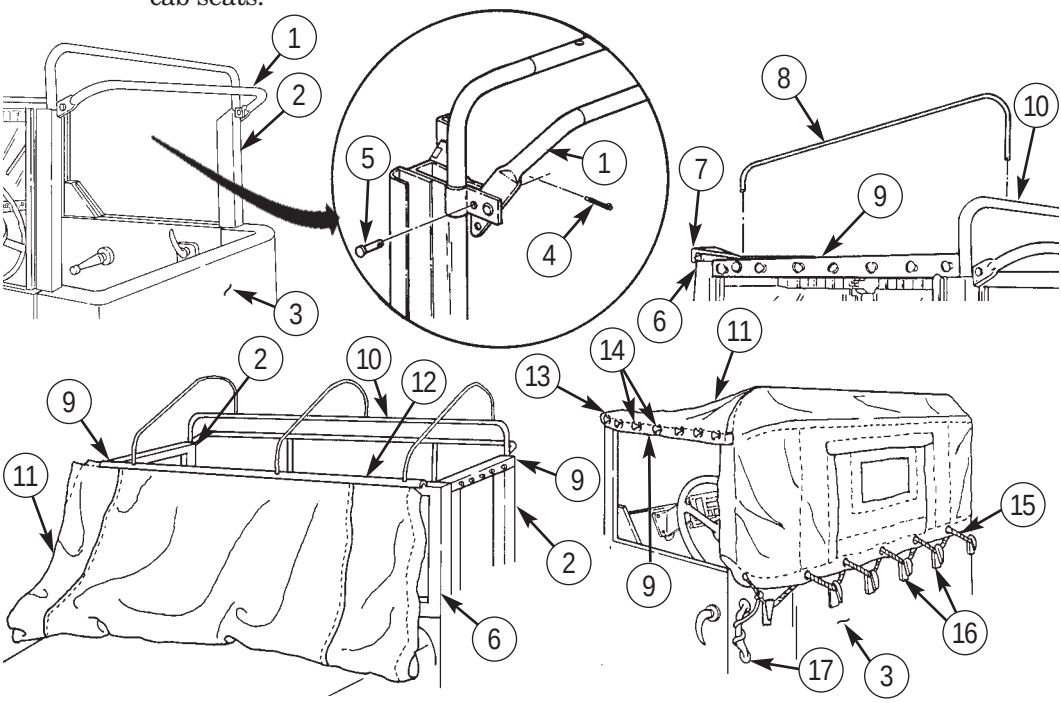

## 2-27. RAISING AND LOWERING WINDSHIELD

**a. Raising Windshield.**

**(1)** Pull back latches (4) and release windshield (2) from hood (3).

**(2)** Raise windshield (2) into place and tighten knob (1) on each side of windshield (2).

**b. Lowering Windshield.**

To lower windshield (2), reverse steps 1 and 2 of task a.

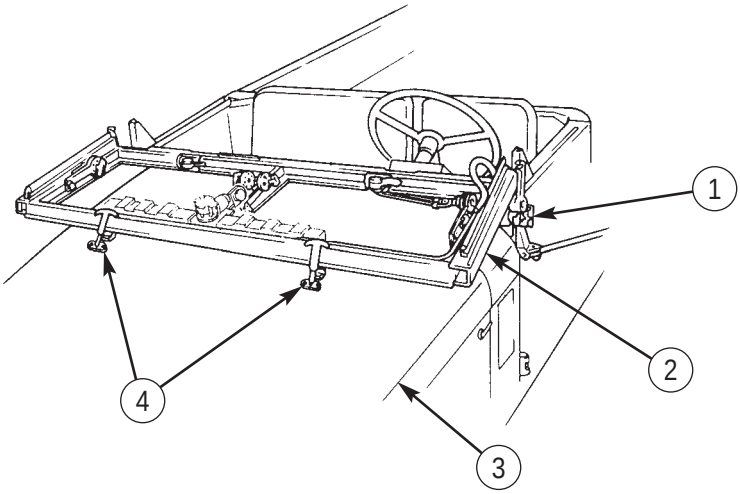


## 2-28. OPERATION OF CARGO TRUCKS

**a. General.** M35A3 and M35A3C cargo trucks have 7 ft. 6 in. by 12 ft. 3 in. (2.3 by 3.7 m) cargo beds. M36A3 cargo trucks have 7 ft. 4 in. by 17 ft. 6 in. (2.2 by 5.3 m) cargo beds. All can be equipped with bow and tarp kit.

**b. Lowering Tailgate.**

WARNING

- On M35A3C dropside vehicles, make sure forward end of dropsides are secured before lowering tailgate. Failure to do this may result in injury to personnel.
- Ensure tailgate is supported when hook or T-bolts are removed. Failure to do so may result in injury to personnel.

## 2-28. OPERATION OF CARGO TRUCKS (Contd)

**NOTE**

Assistant will help with this procedure.

**(1)** On M35A3C dropside vehicles, rotate locking handle (1) counterclockwise to loosen T-bolt (2). Grasp ring (5), rotate T-bolt (2), and remove from slot (4) on each side of tailgate (3). Grasp tailgate top (3), pull and lower while holding.

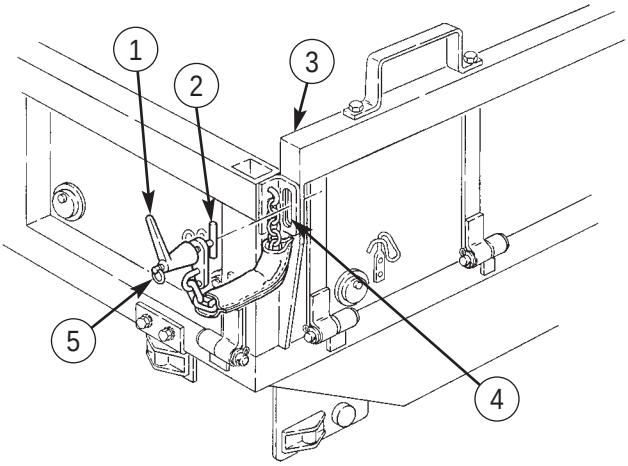


**(2)** On M35A3 cargo vehicles, remove hook (8) from slot (6) on each side of tailgate (7), grasp tailgate (7), and lower while holding.

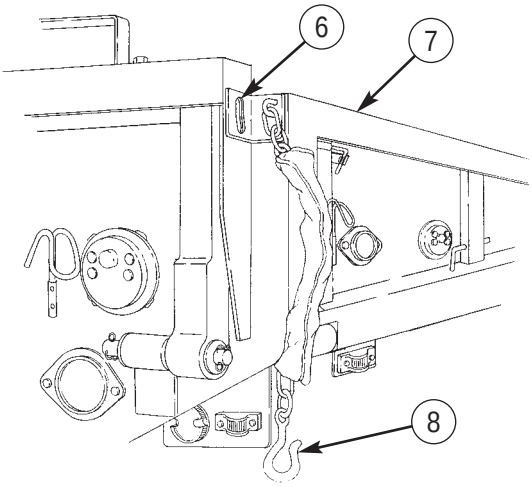

## 2-28. OPERATION OF CARGO TRUCKS (Contd)

**c. Lowering and Raising Troop Seats.**

**(1)** To lower troop seats (9), pull troop seat supports (10) forward 45 degrees, release latches (11), and lower troop seats (9).

**(2)** Adjust each troop seat support (10) to contact both side and floor of cargo body.

**(3)** To raise troop seats (9), reverse steps 1 and 2.

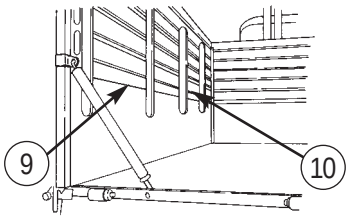


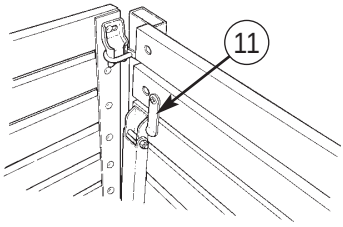


**d. Removing Front and Side Racks.**

NOTE

Assistant will help with this procedure

**(1)** Lower tailgate. Refer to task b.

**(2)** Raise troop seats. Refer to task c.

**(3)** Unhook safety strap (12).

**(4)** On M35A3C dropside vehicles:

**(a)** Unhook stabilizer (17) from truck bed (18) and secure in up position.

**(b)** Pull back side rack locking pin handles (15) from corners of cargo body (16).

**(c)** Lift front and side rack locking pins (19) out of retainer rings (20).

**(5)** Lift and remove side racks (14).

**(6)** Lift and remove front rack (13).

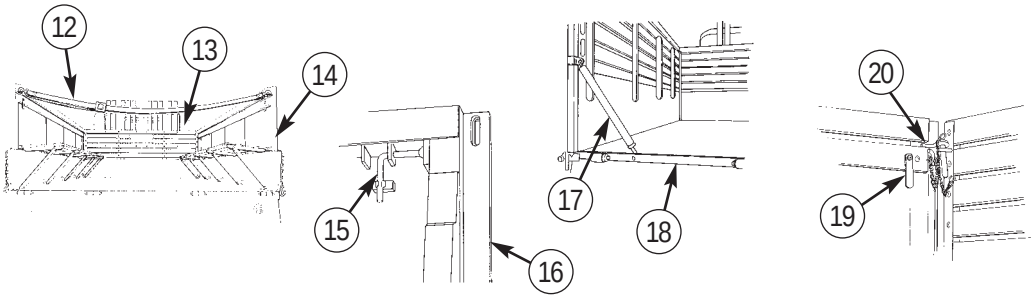

## 2-28. OPERATION OF CARGO TRUCKS (Contd)

**(7)** Remove cotter pin (2) and washer (1) from stabilizer (4).

**(8)** Remove stabilizer (4) from side rack (3).

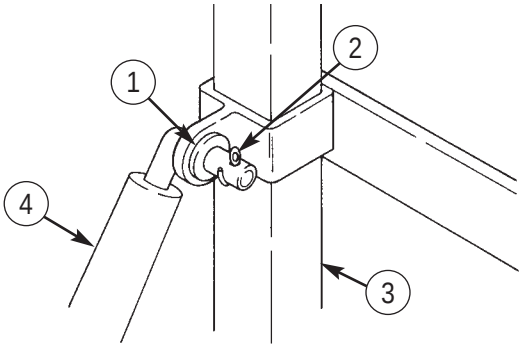


**e. Installing Front and Side Racks.**

**(1)** To install front (6) and side (5) racks, reverse steps 1 through 8 of task d.

**(2)** When installing front rack (6) on cargo truck without dropsides, be sure front rack retainer clip (7) is inserted inside rack retainer ring (8).

**f. Lowering and Raising Dropsides.**

**(1)** Lower tailgate. Refer to task b.

**(2)** If front and side racks are installed, remove. Refer to task d.

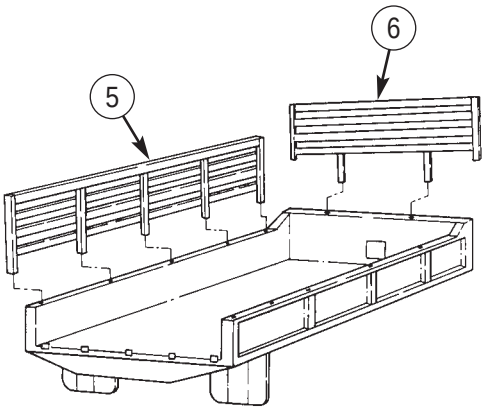


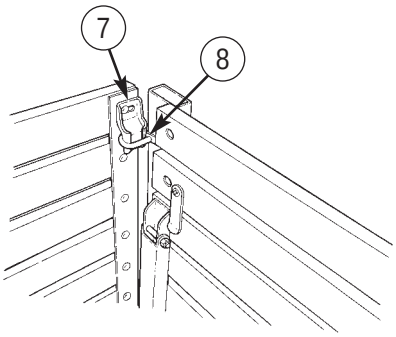

## 2-28. OPERATION OF CARGO TRUCKS (Contd)

**(3)** At front of cargo body, rotate locking handle (9) counterclockwise to loosen. Grasp ring (10), turn T-bolt (12) 90 degrees, and withdraw locking handle (9).

**NOTE**

Assistant will help with step 4.

**(4)** Grasp dropside (11) and carefully lower. Do not allow dropside (11) to fall freely.

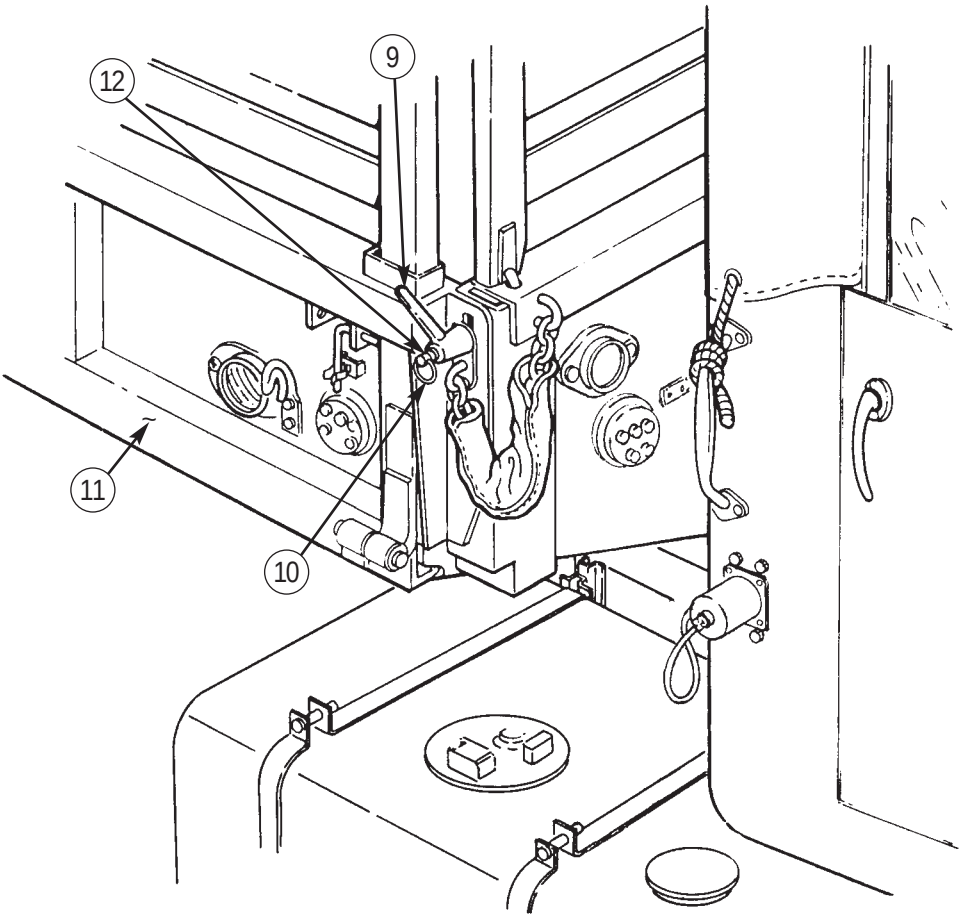

## 2-28. OPERATION OF CARGO TRUCKS (Contd)

**(5)** To raise dropside (6):

**(a)** Raise dropside (6) and install locking handle (14) at front of dropside (6). Grasp ring (15) and turn T-bolt (8) 90 degrees to secure.

**NOTE**

If front and side racks are installed, perform steps b and c.
If front and side racks are not installed, go to step d.

**(b)** Insert front and side rack locking pin (9) through retainer ring (8).

**(c)** Install stabilizer (10) with washer (11) and cotter pin (13).

**(d)** Raise opposite dropside (6) as necessary, and secure in place.

**NOTE**

If front and side racks are installed, perform step e.
If front and side racks are not installed, go to step f.

**(e)** Raise tailgate (1), and install left and right locking handles (4). Grasp ring (3) and turn each T-bolt (2) 90 degrees to secure.

**(f)** Raise tailgate (1) and install hooks (7) on both sides of cargo body/tailgate.

**(g)** Hook safety strap (5).

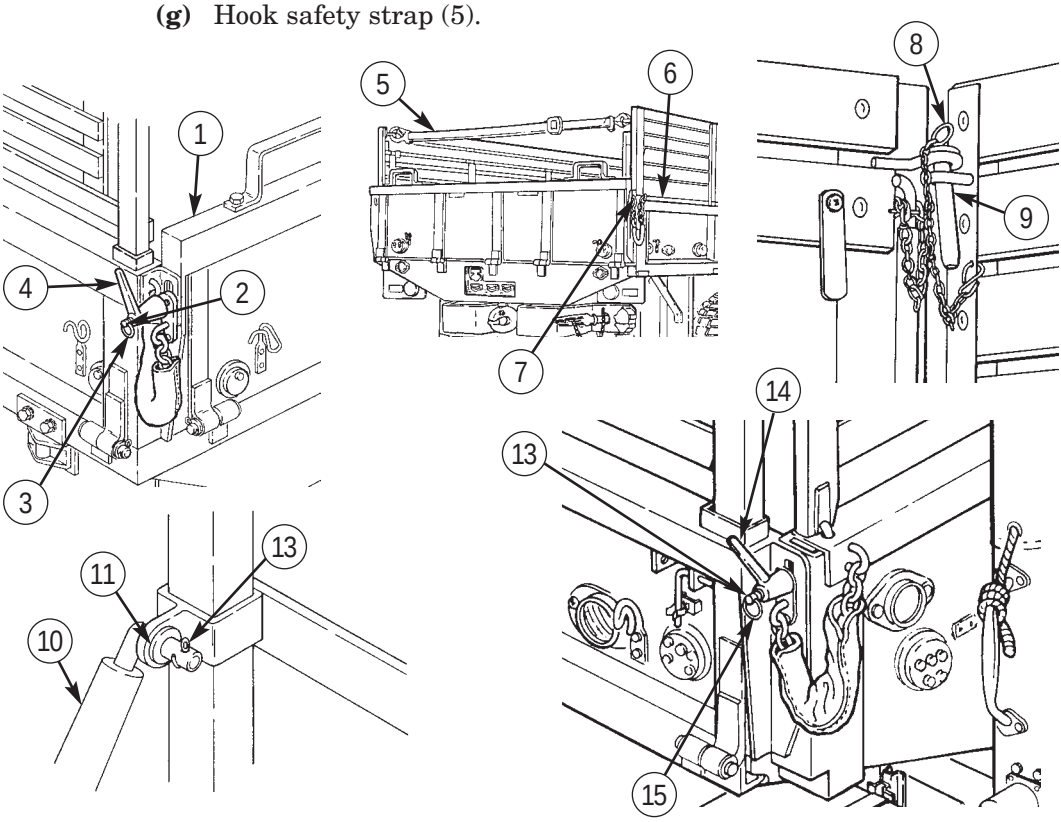

## 2-29. OPERATION OF PERSONNEL HOT WATER HEATER

**a.** Push temperature control knob (1) to CLOSED position.

**b.** Start engine (para. 2-12) and allow engine to reach normal operating temperature 160°-230°F (71°-110°C).

**c.** Pull temperature control knob (1) to OPEN position.

**d.** Place heater switch (3) to HIGH or LOW position.

**e.** Pull defroster control knob (2) out to defrost windows; push defroster control knob (2) in to heat cab.

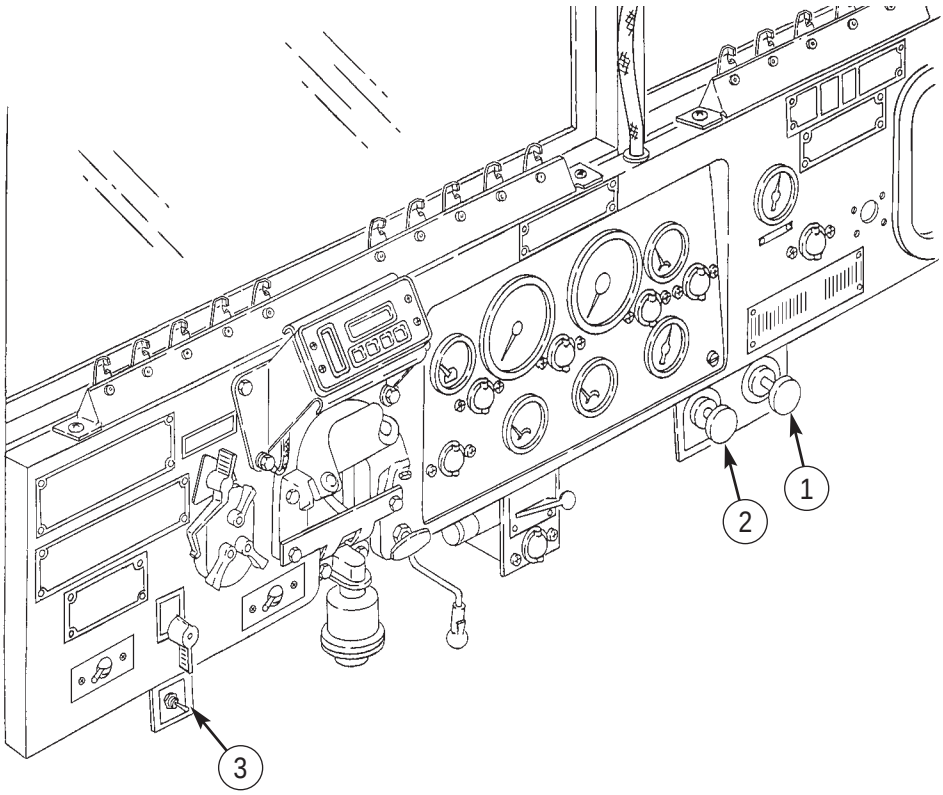

## Section IV. OPERATION UNDER UNUSUAL CONDITIONS

### 2-30. SPECIAL INSTRUCTIONS

**WARNING**

- If NBC exposure is suspected, all air filter media should be handled by personnel wearing protective equipment. Consult your unit NBC officer or NBC NCO for appropriate handling and disposal instructions.
- Hearing protection is required for the driver and co-driver. Hearing protection is also required for all personnel working in and around this vehicle while the engine is running (reference AR 40-5 and TB MED 501).
- If required to remain inside the vehicle during extreme heat, occupants should follow the water intake, work/rest cycle, and other heat stress preventive medicine measures contained in FM 21-10, Field Hygiene and Sanitation.

**a. General.** Special instructions for operating and maintaining vehicles under unusual conditions are included in this section. Unusual conditions are extreme temperatures, humidity, and/or terrain. Special care with cleaning and lubrication must be taken in order to keep vehicles operational when operating under unusual conditions.

**b. Cleaning.** Refer to para. 2-8 for cleaning instructions and precautions.

**c. Lubrication.** Refer to table 2-2 and para. 3-7 for proper operator's lubricating instructions.

**d. Driving Instructions.**

**(1)** FM 21-305 contains special driving instructions for operating wheeled vehicles.

**(2)** AR 600-55 contains instructions on driver selection, testing, and licensing.

**(3)** FM 9-207 contains instructions on vehicle operation in extreme cold of 0° to -65°F (-18° to -54°C) or below. Other documents with information on cold weather vehicle operation are:

**(a)** FM 31-70: Basic Cold Weather Manual

**(b)** FM 31-71: Northern Operations

**(c)** FM 90-6 (HTF): Mountain Operations

**e. Reporting Materiel Failure.** Report failure of vehicle, body equipment, or kits on Standard Form 368 (Quality Deficiency Report — Equipment Improvement Recommendations) as presented by DA Pam 738-750 and as stated in para. 1-5 of this manual.

## 2-31. OPERATION UNDER UNUSUAL CONDITIONS INDEX


| PARA. NO. | TITLE | PAGE NO. |
|---|---|---|
| 2-32. | Operation in Extreme Cold | 2-79 |
| 2-33. | Operation in Ice or Snow | 2-82 |
| 2-34. | Operation in Extreme Heat | 2-84 |
| 2-35. | Operation in Dusty or Sandy Areas | 2-87 |
| 2-36. | Operation in Rainy or Humid Conditions | 2-88 |
| 2-37. | Operation in Deep Mud | 2-89 |
| 2-38. | Fording Operation | 2-90 |


## 2-32. OPERATION IN EXTREME COLD

**a. General.** The operator must always be alert to changes in weather. The operator must take care of assigned vehicle in order to prevent damage to vehicle because of sudden changes in weather. The operator should be cautious when starting or driving a vehicle that has not been operated for a long period. Lubricants may thicken and cause parts failure. Tires may freeze to the ground or may freeze flat on the bottom if underinflated. The operator should be alert to such possibilities to prevent extensive damage to the vehicle.

**b. Before Operation.**

**(1)** Turn OFF CTIS (para. 2-19).

**(1.1)** Perform “before operation” PMCS (table 2-2).

**(2)** Start power plant heater, if equipped, to warm engine coolant, engine, and batteries before attempting to start engine (para. 2-43).

**(3)** Deleted

**(4)** Deleted

**c. Starting Engine.**

CAUTION

Do not operate power plant heater with engine running. Doing this may result in overheated engine.

## 2-32. OPERATION IN EXTREME COLD (Contd)

**(1)** When temperature gauge (1) reads at least 150°F (66°C), shut off power plant heater (para. 2-43) and start engine (para. 2-13).

**NOTE**

If vehicle has been exposed to extreme cold before starting, notify your supervisor. Warm up control linkage, gearcases, and wheel hubs before placing vehicle in motion.

**(2)** Check instrument readings. If any reading is not normal, stop engine. Report condition(s) to unit maintenance if operator troubleshooting (table 3-1) cannot correct malfunction. Normal instrument readings are:

**(a)** Engine oil pressure gauge (5) should read 35-70 psi (241-483 kPa).

**(b)** Air pressure gauges (3) should read 90-120 psi (586-827 kPa).

**(c)** Voltmeter (4) should read in green area.

**(d)** Engine coolant temperature gauge (1) should read 160°-230°F (71°-110°C).

**(e)** Transmission temperature gauge (2) should read 160°-200°F (71°-93°C).

**(3)** If vehicle is to be operated in ice or snow, perform para. 2-33a starting at step 3.

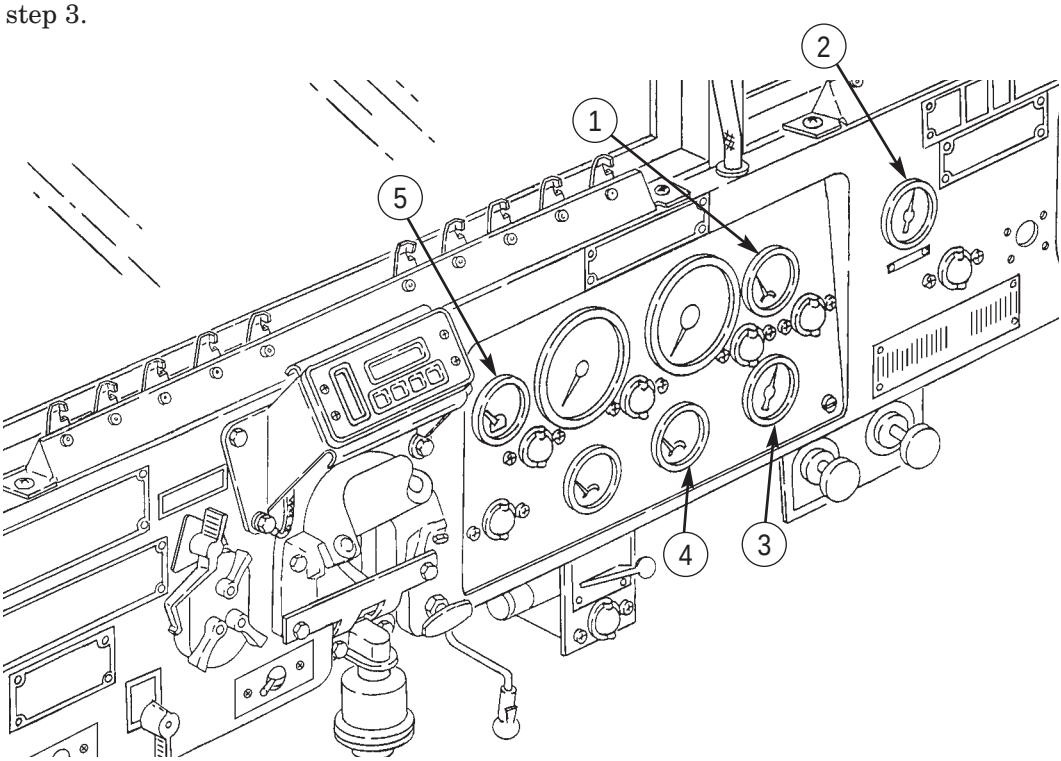

## 2-32. OPERATION IN EXTREME COLD (Contd)

**d. Driving Vehicle.**

CAUTION

Do not exceed 5 mph (8 km/h) when operating vehicle with transfer case in LOW and transmission in "1" (first). Failure to do this will result in damage to internal engine components.

NOTE

During operation in extreme cold 0° to -65°F (-18° to -54°C), CTIS must be turned OFF.

**(1)** Place transmission gearshift lever (6) in "1" (first) position and transfer case shift lever (7) in LOW position. Drive vehicle slowly for 100 yds (91 m) to warm up gearcases and tires.

**(2)** If vehicle is to be operated on ice or snow, perform steps in para. 2-33b.

**e. Stopping or Parking.**

CAUTION

- Operator must take every precaution to prevent snow from blowing into engine compartment when parked. Snow may melt and later form ice to jam engine controls.
- Ensure engine has achieved and maintained an operating temperature of 160°F (71°C) for at least 15 minutes before engine shutdown. Failure to do so may result in engine damage.

NOTE

Do not idle engine for more than 15 minutes.

**(1)** Park in sheltered area out of wind if possible. Park so vehicle does not face into the wind if sheltered area is not available.

**(2)** Park vehicle with wood planks, brush, mats, or canvas under wheels if a long shutdown period in open area is anticipated.

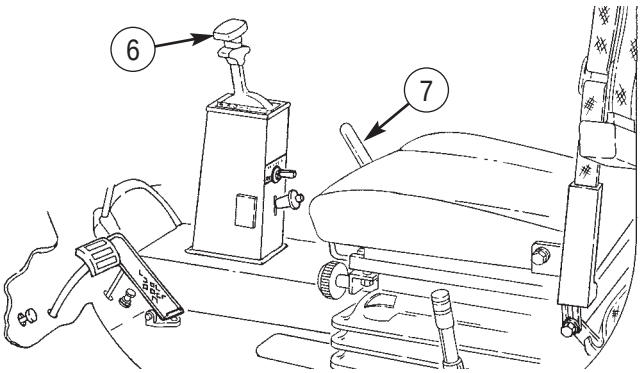

## 2-32. OPERATION IN EXTREME COLD (Contd)

**CAUTION**

Do not apply parking brake. Doing this may cause brakeshoes to freeze to brakedrum resulting in damage to parking brake system.

**(3)** Stop vehicle and engine (para. 2-16).

**(4)** Place chocks in front or behind wheels if parking on a grade.

**CAUTION**

Water must be drained from fuel filters, air reservoirs, and fuel tank as soon as possible after operation in extreme cold. Failure to do this may cause water to freeze, resulting in damage to fuel and air sytems.

**f. After Operation.**

**(1)** Perform "after operation" PMCS (table 2-2).

**(2)** Fill fuel tanks as soon as possible.

**(3)** Remove all ice and snow from underside of vehicle, air cleaner intake, and fuel tank.

**(4)** Operate power plant heater, if so equipped, for short standby periods (para. 2-43). If power plant heater will not be used, or is not installed, notify unit maintenance to store batteries in a warm place.

## 2-33. OPERATION IN ICE OR SNOW

**a. Before Operation.**

**NOTE**

If vehicle is to be operated in extreme cold, perform steps in para. 2-32b and 2-32c, then proceed to step (3).

**(1)** Perform "before operation" PMCS (table 2-2).

**(2)** Start engine (para. 2-12).

**CAUTION**

Do not attempt operation when only one driving wheel is equipped with tire chains. Doing this may result in damage to tires and powertrain.

**NOTE**

Use tire chains on intermediate tires. Remove tire chains as soon as mission allows or when operating on dry pavement.

**(3)** Operation on snow or on ice requires use of tire chains on intermediate driving wheels. (Refer to FM 21-305 for installation of tire chains.)

**NOTE**

- Perform step (4) if tire chains are not available and reinflate to normal pressure after operation.
- During operation in extreme cold 0° to -65°F (-18° to -54°C), tires must be manually deflated to 18-22 psi (124-152 kPa) (para. 3-9).

**(4)** Place ECU (1) to "S" (sand/mud/snow) setting to deflate tires to 18-22 psi (124-152 kPa) (para. 2-19).

**(5)** Remove wheel chocks from vehicle wheels, if used.

## 2-33. OPERATION IN ICE OR SNOW (Contd)

**WARNING**

Vehicle operation on ice and snow can be dangerous. Operator must drive at reduced speeds and be prepared to meet sudden changes in road conditions and traffic speeds. Maintain safe stopping distances. Failure to do this may cause loss of vehicle control, resulting in injury or death to personnel.

**b. Driving Vehicle.**

**(1)** Place vehicle in motion by placing transmission select lever (2) in "1" (first) position, transfer case lever (3) in LOW, and release parking brake lever (4). Begin movement slowly without causing wheels to spin or engine to race. Place transfer case lever (2) in HIGH position when vehicle is underway.

**WARNING**

Pump brakes gradually when stopping vehicle on ice or snow. Sudden stops will cause vehicle wheels to lock, engine to stall, and a loss of power steering. Failure to do this will result in injury or death.

**(2)** If rear end skidding occurs:

**(a)** Turn steering wheel in direction of the skid.

**(b)** Let up on accelerator pedal (6) and apply brake pedal (5) in a gradual, pumping manner.

**c. After Operation.**

**(1)** Perform steps in para. 2-32f.

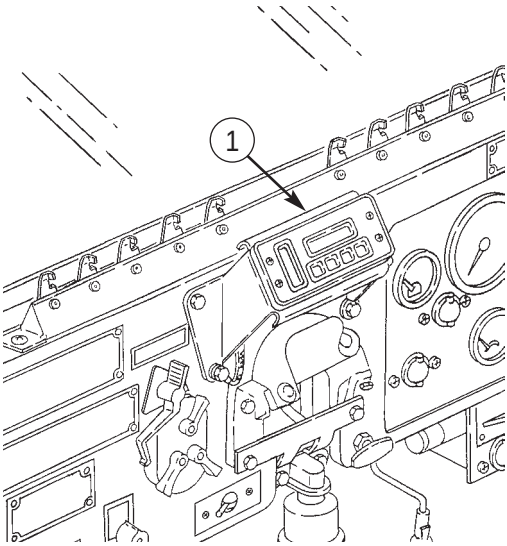


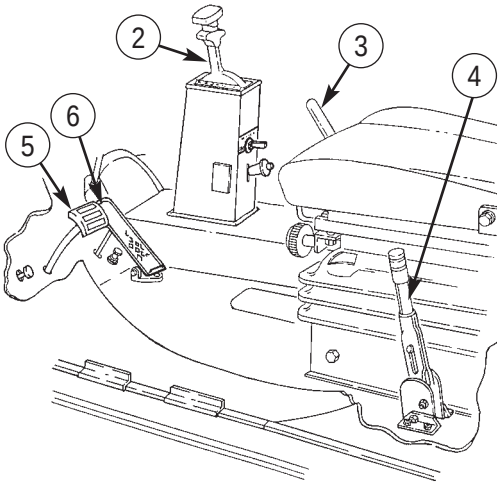

## 2-34. OPERATION IN EXTREME HEAT

**a. General.** Extreme heat exists when outside temperature exceeds 95°F (35°C). The effect of extreme heat on vehicle engine is a decrease in engine efficiency. Operators must adjust driving when operating in extreme heat.

**b. Before Operation.**

**(1)** Perform "before operation" PMCS (table 2-2).

WARNING

Compressed air used for cleaning purposes will not exceed 30 psi (207 kPa). Use only with effective chip guarding and personal protective equipment (goggles/shield, gloves, etc.).

**(2)** Check for sand and insects embedded in front of radiator, charged air cooler, and auxillary transmission oil cooler. Blow out all such obstructions with compressed air.

**(3)** If vehicle is to be operated in deep sand, place ECU (1) to "S" (sand/mud/snow) setting to deflate tire pressure to 18-22 psi (124-152 kPa) (para. 2-19).

NOTE

Avoid continuous vehicle operation at high speeds. Avoid long, hard pulls on steep grades with transfer case shift lever in LOW position.

**c. Driving Vehicle.**

**(1)** Start engine (para. 2-12).

NOTE

If vehicle is to be operated in dusty or sandy areas, place transmission select lever in "2" (second) position and transfer case shift lever in LOW position.

**(2)** Place vehicle in motion (para. 2-15).

**(3)** Frequently check air cleaner indicator (5). If indicator (5) shows yellow, stop the vehicle and engine (para. 2-16) and perform emergency air cleaner service (para. 3-8).

**(4)** Frequently check engine coolant temperature gauge (2), engine oil pressure gauge (4), and transmission oil temperature gauge (3). Engine or transmission is overheating if one or more of the following conditions exist:

**(a)** Engine coolant temperature is more than 230°F (110°C) as indicated by engine coolant temperature gauge (2).

**(b)** Engine oil pressure drops below 15 psi (103 kPa) with engine at idle as indicated by engine oil pressure gauge (4).

**(c)** Transmission oil temperature exceeds 200°F (93°C) as indicated by transmission oil temperature gauge (3).

## 2-34. OPERATION IN EXTREME HEAT (Contd)

**(5)** If engine overheating occurs:

NOTE

Do not raise vehicle hood. Engine will cool faster at idle with hood closed.

**(a)** Park vehicle, allowing engine to idle.

CAUTION

If engine temperature continues to rise or does not show signs of decreasing after two minutes of idling, shut down engine and refer to troubleshooting (table 3-1).

**(b)** Observe engine coolant temperature gauge (2), transmission oil temperature gauge (5), and engine oil pressure gauge (4) for indications that engine or transmission is steadily cooling.

**(c)** Shut off engine when engine coolant temperature reaches normal operating temperature of 160°-230°F (71°-110°C) as indicated by engine coolant temperature gauge (2).

**(d)** Perform troubleshooting procedures as listed in table 3-1, after engine has cooled to normal operating temperature of 160°-230°F (71°-110°C).

WARNING

Extreme care should be taken when removing surge tank filler cap if temperature gauge reads above 160°F (71°C). Steam or hot coolant under pressure will cause injury.

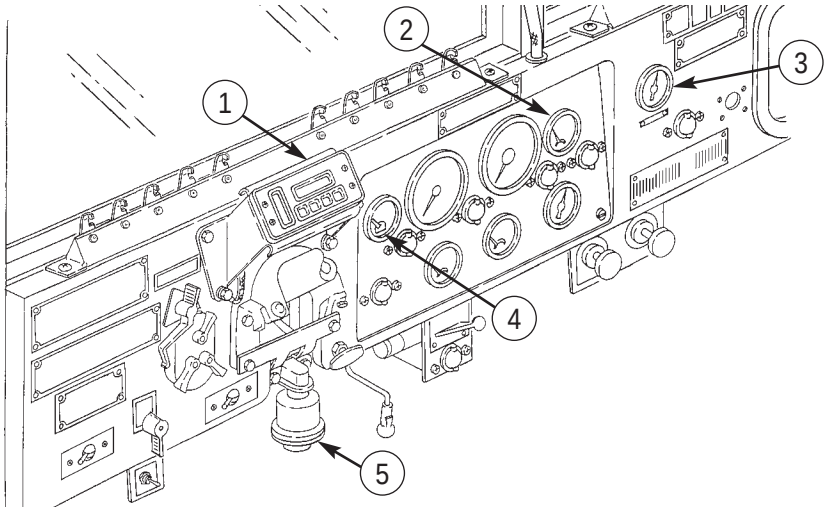

## 2-34. OPERATION IN EXTREME HEAT (Contd)

**(e)** Place a thick cloth over surge tank filler cap (1). Carefully turn cap (1) counterclockwise to first stop to allow pressure to escape.

**(f)** Remove cap (1) when cooling system pressure is vented and check coolant level. Surge tank (2) should be filled approximately to bottom of filler neck.

**CAUTION**

Ensure engine is running before adding coolant to hot engine. Failure to do this may result in damage to engine.

**(g)** Add engine coolant as required (para. 3-7). Install surge tank filler cap (1) after filling, and start engine (para. 2-12).

**(h)** Proceed with operation. Report any overheating to unit maintenance upon completion of operation.

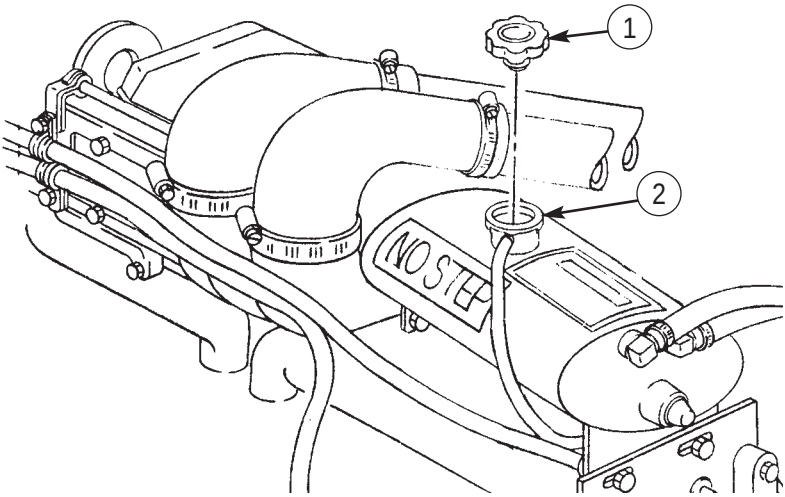


**d. Stopping or Parking**

**(1)** Park vehicle in a sheltered area out of sun if possible.

**(2)** If shelter is not available, cover vehicle with paulin. When entire vehicle cannot be covered, protect windows, cab, and engine compartment with paulin to prevent entry of sand or dust.

**(3)** Check batteries daily and service as required when operating in extreme heat.

**e. After Operation.**

**WARNING**

Compressed air used for cleaning purposes will not exceed 30 psi (207 kPa). Use only with effective chip guarding and personal protective equipment (goggles/shield, gloves, etc.).

## 2-34. OPERATION IN EXTREME HEAT (Contd)

**(1)** At end of daily operation, use low air pressure to remove all sand from vehicle engine compartment, and areas around brakes, drums, and spring seats.

CAUTION

Do not allow dust or sand to enter fuel tank when filling. Doing this may result in damage to fuel system.

**(2)** Fill fuel tank (TM 9-2320-361-10). Tighten filler cap securely after filling.

**(3)** Perform "after operation" PMCS (table 2-2).

**(4)** Reinflate tires to proper operating pressure, if deflated (para. 2-19).

## 2-35. OPERATION IN DUSTY OR SANDY AREAS

**a. General.** Vehicles operating in dusty or sandy areas require frequent servicing of the air cleaner, cooling system, and lubrication points. Operators should be alert to engine overheating. If engine overheating occurs, refer to para. 2-34b, step 5.

**b. Before Operation.** Perform steps in para. 2-34b.

**c. Driving Vehicle.**

**(1)** Start engine (para. 2-12).

NOTE

When driving on hard-baked sand, try not to break through the crust. A roadbed of canvas or planking should be set down for short distances.

**(2)** Place vehicle in motion (para. 2-15).

**(3)** If vehicle is to be operated in extreme heat, perform steps in para. 2-34c.

CAUTION

Do not attempt to jump vehicle out of deep sand with quick transmission gear changes. Doing this may result in damage to equipment.

**(4)** If vehicle becomes stuck in deep sand, use second vehicle with winch for recovery operation (para. 2-18).

**d. Stopping or Parking.**

**(1)** Park vehicle in a sheltered area out of blowing dust or sand whenever possible. If sheltered area is not available, park so vehicle does not face into wind.

**(2)** If sheltered area is not available, cover vehicle with paulin. When entire vehicle cannot be covered, protect windows, cab, and engine compartment with paulin to prevent entry of sand or dust.

**(3)** Stop vehicle and engine (para. 2-16).

## 2-35. OPERATION IN DUSTY OR SANDY AREAS (Contd)

**e. After Operation.**

**WARNING**

Compressed air used for cleaning purposes will not exceed 30 psi (207 kPa). Use only with effective chip guarding and personal protective equipment (goggles/shield, gloves, etc.).

**(1)** At end of daily operation, use low air pressure to remove all sand from vehicle engine compartment, and areas around brakes, drums, and spring seats.

**CAUTION**

Do not allow dust or sand to enter fuel tank when filling. Doing this may result in damage to fuel system.

**(2)** Fill fuel tank (TM 9-2320-361-10). Tighten filler cap securely after filling.

**(3)** Perform "after operation" PMCS (para. 2-8).

**(4)** Reinflate tires to proper operating pressure, if deflated (para. 2-19).

## 2-36. OPERATION IN RAINY OR HUMID CONDITIONS

**a. General.** Materiel inactive for long periods in hot, humid weather can rust rapidly. Fungus growth may develop in the fuel tank as well as on canvas paulin, seats, and other components. Frequent inspection, cleaning (refer to para. 2-7), and lubrication are necessary to maintain the readiness of vehicles in rainy or humid conditions. Fuel filters and air reservoirs must be drained frequently because of high condensation in fuel and air systems.

**WARNING**

Do not operate vehicle on wet, smooth roads with lowered tire inflation. Do not operate vehicle at too great a speed for road conditions. Low tire inflation or excessive speeds may cause loss of vehicle control on wet, smooth roads, resulting in injury or death to personnel.

**b. Before Operation.** If vehicle is to be operated cross-country in heavy rain, place ECU to "C" (cross-country) setting to deflate tire pressure to 73 psi (503 kPa) (para. 2-19).

**c. Driving Vehicle.** Perform steps in para. 2-33b.

**d. After Operation.**

**(1)** Perform "after operation" PMCS (para. 2-8).

**(2)** Notify unit maintenance to drain water from fuel tank. Fill fuel tank (TM 9-2320-361-10).

**(3)** Reinflate tires to proper operating pressure (para. 2-19).

## 2-37. OPERATION IN DEEP MUD

**a. General.**

CAUTION

Do not attempt operation when only one driving wheel is equipped with tire chains. Doing this may result in damage to tires and powertrain.

**(1)** Prolonged operation in deep mud requires the use of tire chains on driving wheels. Refer to FM 21-305 for installation of tire chains.

**(2)** If tire chains are not available, deflate tire pressure to 18-22 psi (124-152 kPa) (para. 2-19).

**b. Before Operation.**

**(1)** Perform "before operation" PMCS (table 2-2).

**(2)** Place ECU (1) to "S" (sand/mud/snow) setting to deflate tire pressure to 18-22 psi (124-152 kPa).

**c. Driving Vehicle Cross-Country.**

**(1)** Start engine (para. 2-12).

**(2)** Engage front wheel drive (2) (para. 2-3).

NOTE

When placing the vehicle in motion in deep mud, ensure front wheels are in straight-ahead position.

**(3)** Place vehicle in motion (para. 2-15) with transmission select lever (3) in "1" (first) position, and transfer case shift lever (4) in LOW position, and release parking brake lever (5). Begin movement gradually, without causing wheels to spin or engine to race.

**(4)** If rear end skidding occurs, turn steering wheel in direction of skid. Let up on accelerator pedal (7). Pump brake pedal (6) gradually to recover from skid.

**(5)** Be prepared to downshift transmission select lever (3), if necessary, to prevent vehicle from getting stuck in mud.

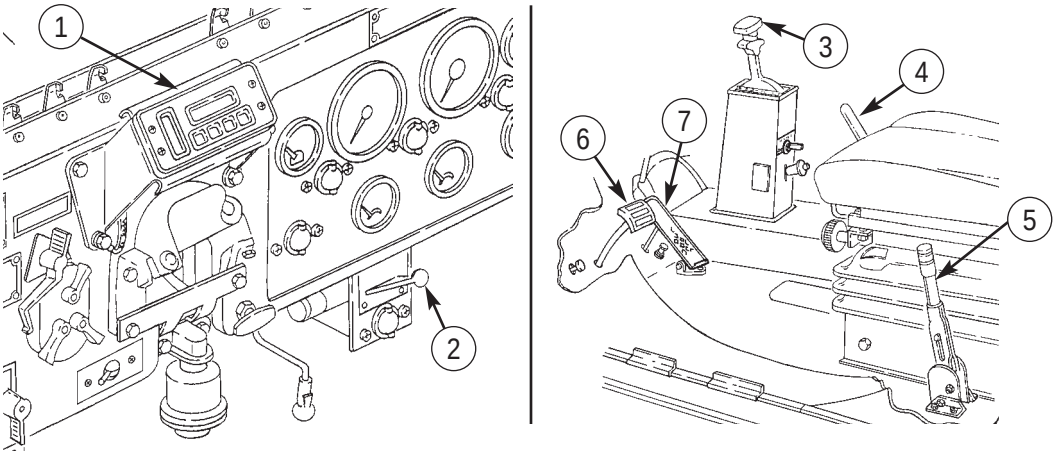

## 2-37. OPERATION IN DEEP MUD (Contd)

**CAUTION**

Do not attempt to jump vehicle out of deep mud with quick transmission gear changes. Doing this may result in damage to equipment.

**(6)** If vehicle becomes stuck in deep mud, use second vehicle with winch for recovery operation (para. 2-18).

**d. Driving Vehicle on Roads.**

**WARNING**

Do not operate vehicle on wet, smooth roads with lowered tire inflation. Do not operate vehicle at too great a speed for road conditions. Low tire inflation or excessive speeds may cause loss of vehicle control on wet, smooth roads resulting in injury or death to personnel.

**(1)** Perform steps in task c, as necessary.

**(2)** Approach large water-filled chuckholes with caution. Chuckhole depth is difficult to determine, and vehicle may become stuck.

**e. After Operation.**

**(1)** Wash all mud from vehicle as soon as possible, before it has time to dry and harden.

**(2)** If vehicle front winch was used, clean (table 2-1) and lubricate (table 2-2).

**(3)** Perform “after operation” PMCS (table 2-2).

## 2-38. FORDING OPERATION

**CAUTION**

Never attempt to cross water deeper than 30 in. (76 cm) unless fording (deepwater) kit is installed. Doing this may result in damage to components.

**a.** To ford water more than 30 in. (76 cm) in depth, refer to para. 2-46.

**b.** If vehicle is accidentally submerged in water deeper than 30 in. (76 cm):

**(1)** Recover vehicle using second vehicle with front winch (para. 2-18).

**(2)** Notify unit maintenance.

# Section V. OPERATION OF SPECIAL PURPOSE KITS

## 2-39. GENERAL

**a.** Certain operating and weather conditions require additional equipment to be added to the vehicle. The using activity informs maintenance personnel to install special support equipment when needed.

**b.** Special purpose kits for ESP vehicles are listed in table 2-4.

*Table 2-4. Special Purpose Kits.*

| KIT DESCRIPTION | M35A3 | M35A3C | M36A3 |
|---|---|---|---|
| A-frame (vehicles w/w only) | X | X | X |
| Airbrake (trailer) | X | X | X |
| Alternator Conversion (60 to 100 amp) | X | X | X |
| Automatic Alarm (chemical agent) | X | X | X |
| Bow and Tarp | X | X | X |
| Cargo Body Arctic | X | | |
| Cargo Body Arctic Closure | | X | |
| Closure – Hardtop | X | X | X |
| Convoy Warning Light | X | X | X |
| Decontamination Mounting | X | X | X |
| Deepwater Fording | X | X | X |
| Heater, Arctic Winterization | X | X | X |
| Machine Gun Mount | X | X | X |
| M14/M15 Rifle Mounting | X | X | X |
| Modification – Front Bumper Step | X | X | X |
| Pioneer Tool Bracket Kit | X | X | X |
| Personnel Heater (fuel burning) | X | X | X |
| Troop Seat – Center Mounted | X | X | |
| Winterization, Arctic, Swingfire Heater | X | X | X |
| Winterization, Arctic, Truck – Multifuel Heater | X | X | X |

## 2-39. GENERAL (Contd)

**c.** Some kits listed in table 2-6 require special operating procedures. To find a specific paragraph, refer to the index below:

## 2-40. OPERATION OF SPECIAL PURPOSE KITS INDEX


| PARA. NO. | TITLE | PAGE NO. |
|---|---|---|
| 2-41. | Operation of A-frame Kit | 2-92 |
| 2-42. | Operation of Airbrake (Trailer) Kit | 2-93 |
| 2-43. | Operation of Arctic Winterization Kit | 2-95 |
| 2-44. | Bow and Tarp Kit | 2-99 |
| 2-45. | Operation of Cargo Body Arctic Kit | 2-105 |
| 2-46. | Operation of Fording (Deepwater) Kit | 2-109 |
| 2-47. | Operation of Troop Seat – Center Mounted Kit | 2-111 |
| 2-48. | Operation of Swingfire Heater | 2-112 |


## 2-41. OPERATION OF A-FRAME KIT

**a. General.** The A-frame kit is installed on M35A3, M35A3C, and M36A3 vehicles equipped with a front winch to provide a means for lifting, moving, loading, and unloading materials and equipment when standard cranes are not available. A-frame load capacity is 3,000 lb (1,362 kg).

**b. Safety Precautions.** When using an A-frame assembly, the operator should be aware of the following operating instructions for personnel safety and maintaining equipment in operating condition:

**(1)** Do not attempt to lift more than 3,000 lb (1,362 kg) with A-frame kit.

**(2)** Do not drop poles (2) below 60 degree angle with ground surface.

**(3)** Do not allow load to swing.

**(4)** Avoid hitting overhead obstacles.

**(5)** Prevent kinking and twisting of winch cable (1).

**(6)** Do not use winch cable (1) to tie load.

**(7)** Do not allow cable chain (4) to contact snatch block (3).

**c. Preparation for Use.**

**(1)** Perform “before operation” PMCS (table 2-2).

## 2-41. OPERATION OF A-FRAME KIT (Contd)

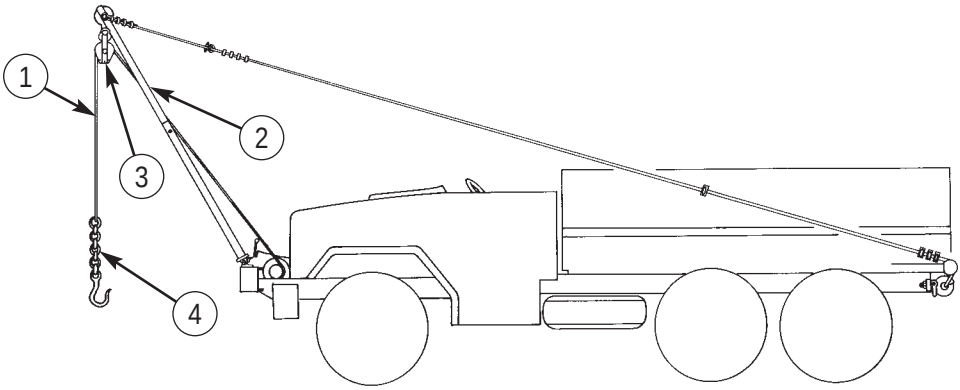


**WARNING**

Vehicle will become charged with electricity if A-frame contacts or breaks high voltage wire. Do not leave vehicle while high voltage line is in contact with A-frame or vehicle. Signal nearby personnel to have electrical power turned off. Failure to do so may result in injury or death to personnel.

**NOTE**

A-frame kit is installed and rigged by maintenance personnel.

**(2)** Maneuver vehicle into position for operation.

**(3)** Park vehicle and apply parking brake.

**d. Operating A-frame.** Operate front winch to raise, lower, or hold load. Refer to para. 2-18.

## 2-42. OPERATION OF AIRBRAKE (TRAILER) KIT

**a. General.** The airbrake (trailer) kit is installed on vehicles hauling trailers or artillery equipped with airbrakes. It is used when heavy payloads are to be hauled and separate braking of the trailer is desired.

**b. Coupling Trailer to Vehicle.**

**NOTE**

- Refer to appropriate trailer TM for complete trailer operation procedures.
- Attaching yoke of trailer or artillery load to pintle hook requires two or more crewmembers, depending on size and weight of load.

## 2-42. OPERATION OF AIRBRAKE (TRAILER) KIT (Contd)

**(1)** Remove cotter pin (8), lift lever (5), insert yoke (6) of trailer or artillery load into pintle hook (7) of vehicle, lower lever (5), and install cotter pin (8).

**(2)** Connect load air line (2) to left side service air coupling (1) of towing vehicle. If towed trailer is equipped with spring brakes, connect other load air line from trailer to right emergency side air coupling (not shown).

**WARNING**

Air shutoff valves must be turned on to charge trailer brake system. Failure to do so may result in trailer brake failure causing injury or death to personnel.

**(3)** Pull up handles (9) to charge trailer brake system.

**(4)** Connect trailer brakelight cable (4) to electric receptacle (3).

**c. Airbrake Kit Operation.**

**(1)** Start engine (para. 2-12) and operate vehicle as necessary.

**NOTE**

Airbrake hand control should be engaged slowly to provide steady, even braking.

**(2)** Pull down airbrake hand control (10) to apply brakes of towed load.

**WARNING**

- Make sure air shutoff valves are turned off after uncoupling trailer. Failure to do so may result in vehicle brake failure causing injury or death to personnel.
- Hearing protection is required while towing a trailer or at speeds in excess of 40 mph.

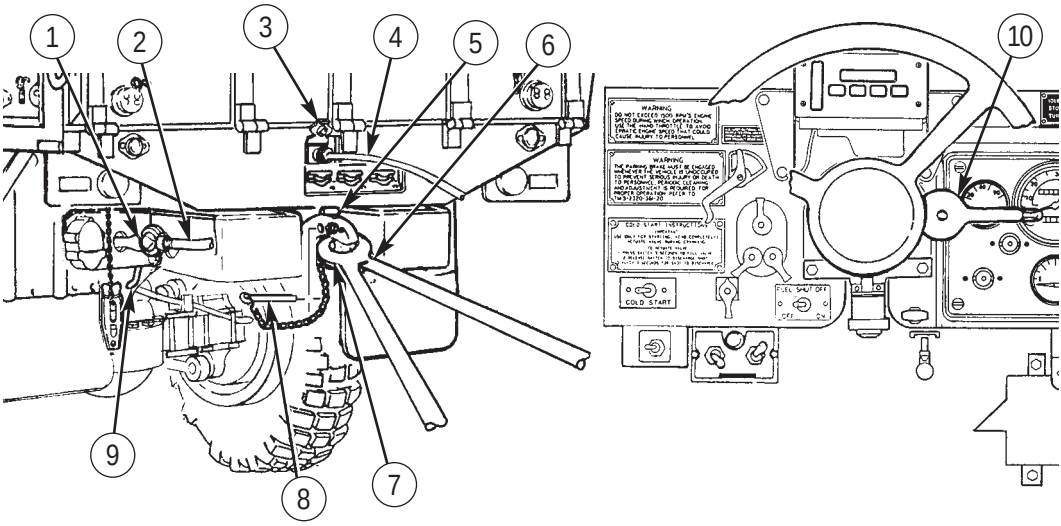

## 2-43. OPERATION OF ARCTIC WINTERIZATION KIT

**a. General.** The arctic winterization kit is installed to permit continued operation of vehicles in temperatures -25°F (-32°C) or less. The kit includes a hardtop closure, fuel burning personnel heater, power plant heater, swingfire heater, radiator cover, and thermal barrier.

**b. Special Arctic Winterization Kits.** All ESP vehicles may be equipped with one of two types of special arctic winterization kits:

**(1) Multifuel Heater Arctic Winterization Kit –** Includes the arctic winterization kit listed above as well as the cargo body arctic kit. All heaters draw fuel from vehicle fuel tank.

**(2) Swingfire Heater Arctic Winterization Kit –** Includes the arctic winterization kit as well as the cargo body arctic kit. Fuel burning personnel heater draws fuel from vehicle fuel tank. Power plant heater and cargo body heater are powered by swingfire heater (refer to para. 2-48) which has its own fuel tank and may use only gasoline.

**c. Hardtop Closure.** Refer to para. 2-4.

**d. Operation of Fuel Burning Personnel Heater and Power Plant Heater.**

NOTE

This procedure covers multifuel heater operation only. For coverage of systems equipped with swingfire heater, refer to para. 2-48.

**(1) General.** Fuel burning personnel heater provides heat to warm vehicle cab and defrost windshield while engine is running. Power plant heater preheats engine coolant, engine, and batteries in preparation for starting in extreme cold or to maintain engine in standby readiness. Since operating procedures for these heaters are similar, they will be explained together.

CAUTION

Do not operate fuel burning personnel heater and power plant heater at the same time. Doing so may result in overworked electric fuel pump.

NOTE

Refer to para. 2-4 for location and function of heater controls and indicators.

**(2)** Open personnel heater shutoff valve, or power plant heater shutoff valve as necessary by turning counterclockwise.

## 2-43. OPERATION OF ARCTIC WINTERIZATION KIT (Contd)

**(3)** Turn accessory power switch (1) to ON position.

NOTE

HI-LO and RUN-OFF-START switches and red indicator light for fuel burning personnel heater and power plant heater are the same.

**(4)** Depress red indicator light (2) to check operation of circuit. If red indicator light (2) does not illuminate, contact your supervisor.

NOTE

- RUN-OFF-START switch is spring-loaded and will return to OFF position from START position if not held down.
- If red indicator light for fuel burning personnel heater or power plant heater does not illuminate with two minutes, turn RUN-OFF-START switch to OFF position. Wait three minutes before trying to start heater again. If red indicator light does not illuminate after two attempts, notify your supervisor.
- If RUN-OFF-START switch is turned to RUN position before red indicator light illuminates, heater will not operate.
- For power plant heater operation, perform steps 5 through 8. For fuel burning personnel heater operation, perform steps 9 through 13.

**(5)** Set HI-LO switch (4) on power plant heater control to HI or LO, as necessary, and turn RUN-OFF-START switch (3) to START position until red indicator light (2) illuminates.

CAUTION

Do not operate power plant heater with engine running, or engine may overheat.

**(6)** As soon as red indicator light (2) illuminates, turn RUN-OFF-START switch (3) to RUN position, and run power plant heater as necessary.

**(7)** Start engine (para. 2-12 or 2-13), if required.

NOTE

- Red indicator light will remain on until fuel in heater burns away and heater cools.
- Do not turn accessory switch to OFF while engine is running.

## 2-43. OPERATION OF ARCTIC WINTERIZATION KIT (Contd)

**(8)** Turn RUN-OFF-START switch (3) to OFF position, and accessory power switch (1) to OFF position.

**NOTE**

Engine must be running to operate fuel burning personnel heater.

**(9)** Pull air control knob (6) out all the way.

**(10)** Turn RUN-OFF-START switch (7) on fuel burning personnel heater control to START position until red indicator light (2) illuminates.

**(11)** As soon as red indicator light (2) illuminates, turn RUN-OFF-START switch (7) to RUN position, with no hesitation at OFF position.

**CAUTION**

Heat cab before defrosting windshield. Failure to do so may result in damage to windshield from sudden temperature change.

**(12)** Set HI-LO switch (8) on HI or LO, as necessary, and adjust air control knob (6) and damper control knob (5) as necessary.

**(13)** After heater operation, turn RUN-OFF-START switch (7) on fuel burning personnel heater control to OFF position.

**(14)** Close power plant heater shutoff valve or fuel burning personnel heater shutoff valve, as necessary, by turning clockwise.

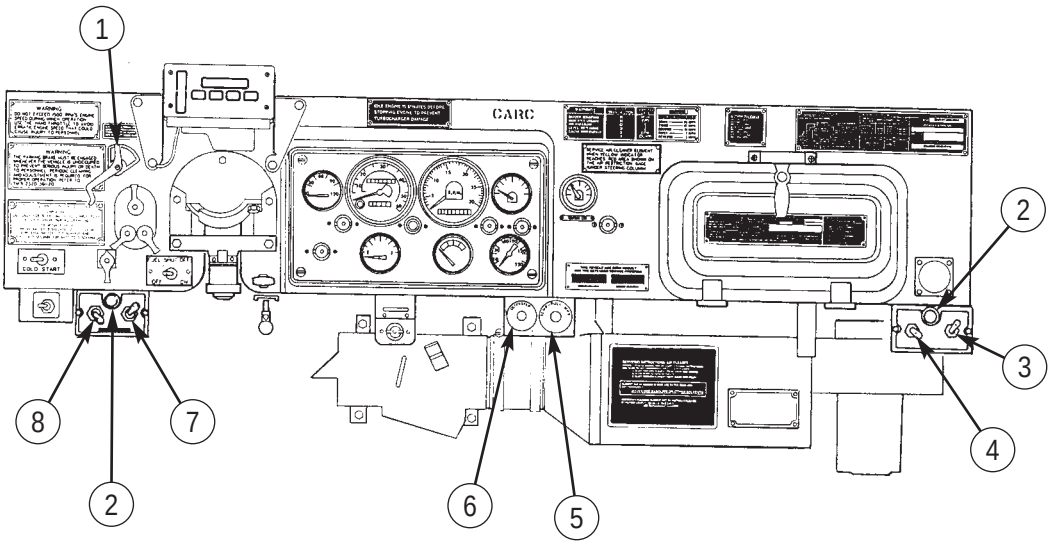

## 2-43. OPERATION OF ARCTIC WINTERIZATION KIT (Contd)

**e. Operation of Radiator Cover.**

**(1) General.** The radiator cover is used to help engine reach and maintain proper operating temperature and keep snow and ice off radiator and charged air cooler coils.

**(2)** Start engine (para. 2-12 or 2-13) with radiator cover aperture flap (2) closed.

**(3)** Roll up and secure aperture flap (2) when temperature gauge reading exceeds 180°F (82°C).

**CAUTION**

Failure to remove the radiator cover when temperature gauge reading exceeds 230°F (110°C) may result in overheated engine.

**(4)** Remove radiator cover (1) if temperature gauge exceeds 230°F (110°C).

**f. Operation of Slave Receptacle.** Refer to para. 2-25.

**g. Thermal Barrier.** Adds insulation to vehicle cab so more warm air is retained in arctic conditions.

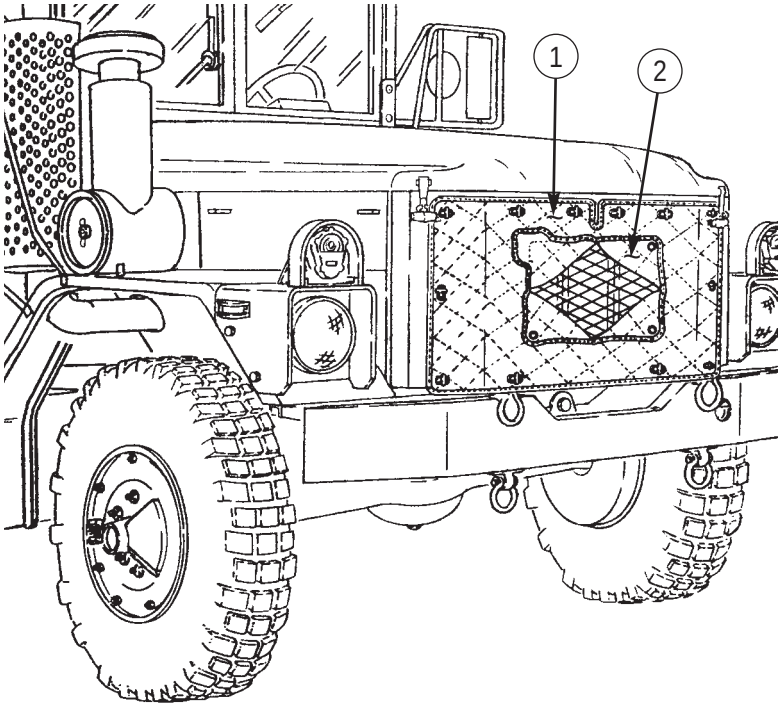

## 2-44. BOW AND TARP KIT

**NOTE**

This procedure requires two personnel.

**a. Bow Installation.**

**(1)** On cargo trucks with dropsides (M35A3C), remove stave and corner assemblies (1) from storage sockets in front of rack (2). On cargo trucks without dropsides (M35A3, M36A3), remove stave and corner assemblies (1) from storage area on cargo bed.

**(2)** Unbuckle two straps (3), one on each side of truck, and remove crossbows (4) from storage area under cargo body.

**(3)** Position crossbow (4) in ends of two stave and corner assemblies (1). On cargo trucks with dropsides (M35A3C), secure with latches (7). On cargo trucks without dropsides (M35A3, M36A3), secure with four screws (8).

**(4)** Position bow assemblies (4) in side rack sockets (6).

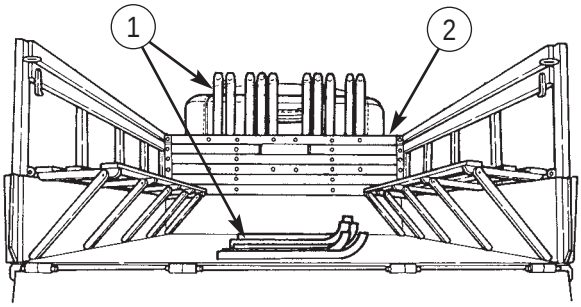


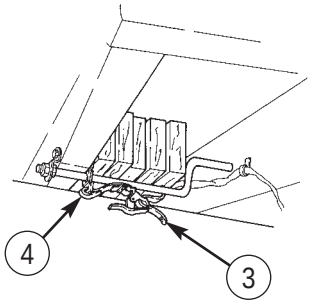


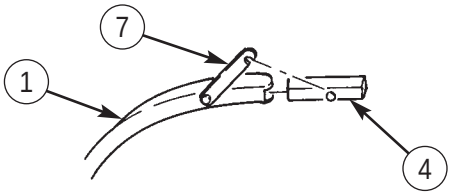


**M35A3C**

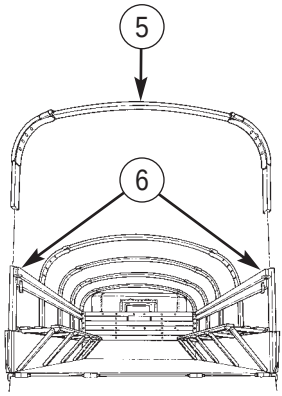


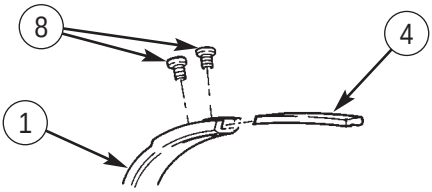


**M35A3, M36A3**

## 2-44. BOW AND TARP KIT (Contd)

**b. End Curtain Installation.**

**(1)** Put two lashing ropes (2) through center two eyelets (1) of rear end curtain (8) and pull lashing ropes (2) through until knots at ends of lashing ropes (2) touch eyelets (1).

**(2)** Position rear end curtain (8) on bow assembly (3).

**(3)** Lace one lashing rope (2) around bow assembly (3) and through all eyelets (7) on one side of rear end curtain (8). Repeat for other lashing rope (2).

**(4)** Loop lashing rope (2) around lashing hook (6). Pull lashing rope (2) tight and tie to lashing hook (6). Repeat for other lashing rope (2).

**NOTE**

Do not tie or lash bottom of rear end curtain when transporting troops.

**(5)** Join safety strap (4) to two side rail eyelets (5).

**(6)** Perform steps 1 through 4 to install front end curtain (9).

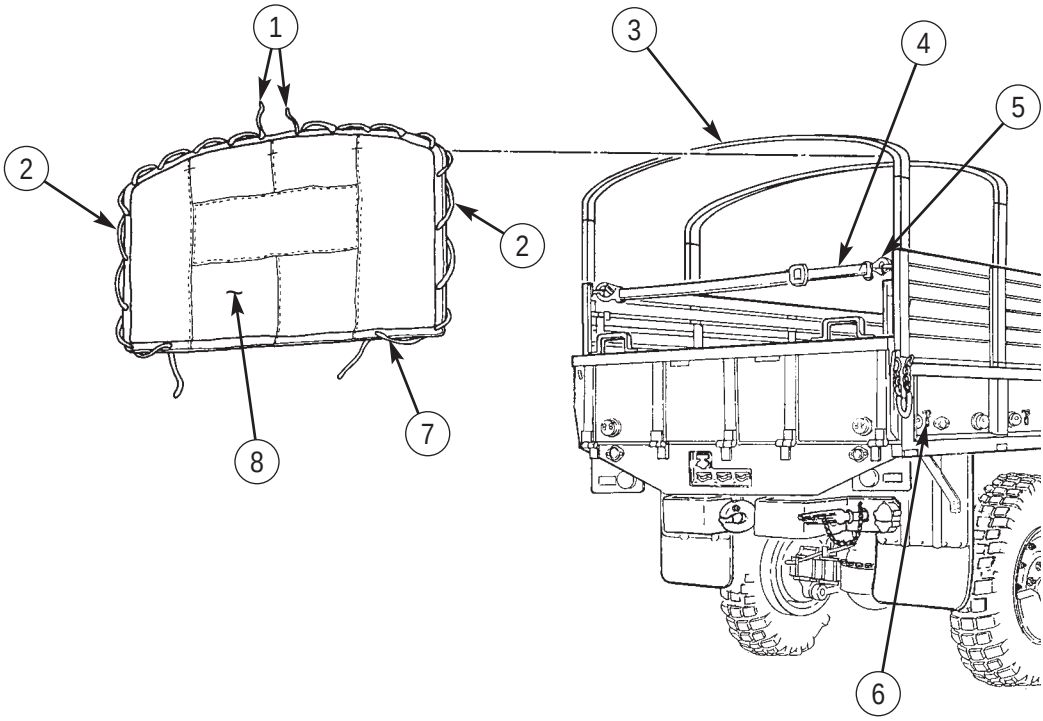

## 2-44. BOW AND TARP KIT (Contd)

**c. Tarp Installation.**

**(1)** Place folded tarp (10) across top center bow assembly (11) with half marked FRONT facing front of vehicle.

**(2)** Unfold front of tarp (10) over bow assemblies (11) all the way, then unfold other end of tarp (10) toward rear of truck.

**(3)** Unfold one side of tarp (10), then unfold other side toward sides of vehicle. Allow loose tarp (10) sides to drape over side of truck.

**CAUTION**

Make sure lashing ropes are tied snugly but not too tightly. Tarp may tear if lashing ropes are tied too tightly.

**(4)** Tie lashing ropes (12) to lashing hooks (13) on each side of vehicle.

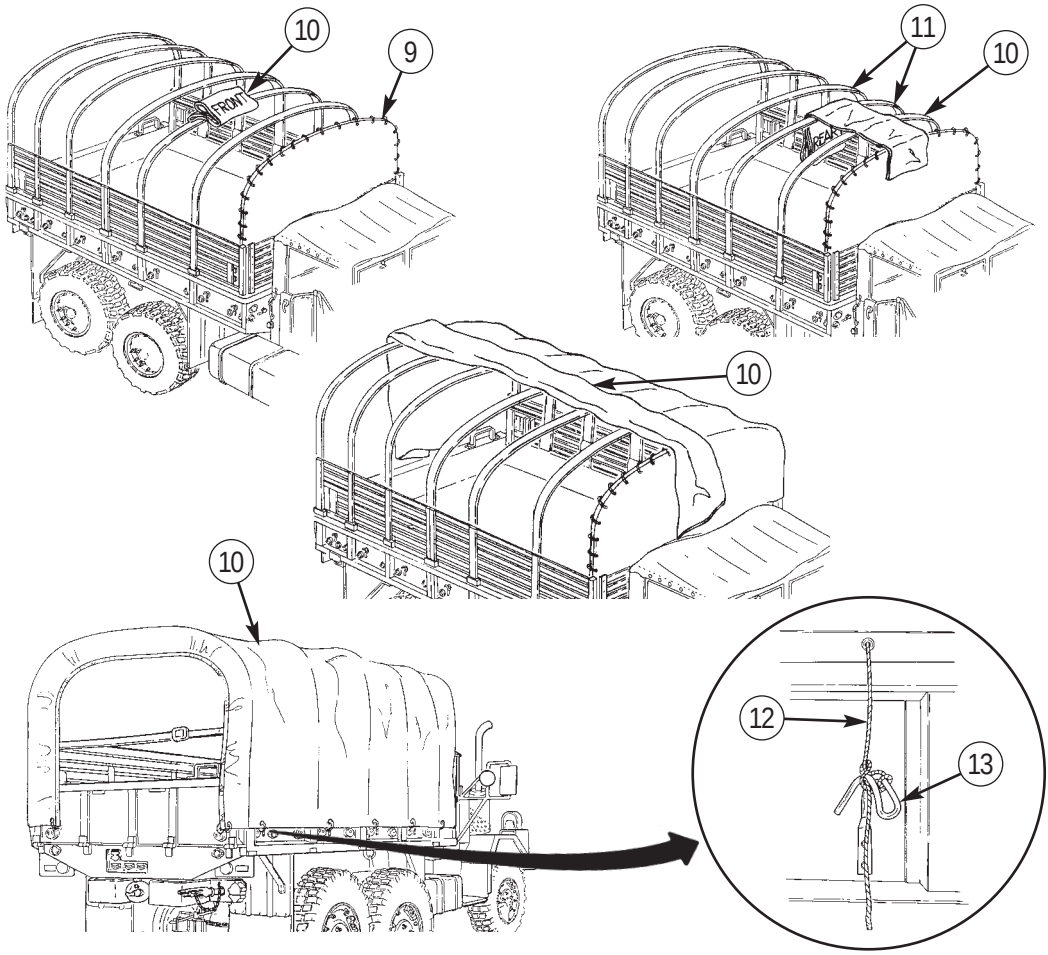

## 2-44. BOW AND TARP KIT (Contd)

**d. Raising Tarp for Ventilation.**

**(1)** Remove rear end curtain (6), if installed.

**(2)** Untie all lashing ropes (5).

**(3)** Fold up tarp (1) into three to five folds until straps (2) attached to stave and corner assemblies (4) are exposed.

**(4)** Fasten folded tarp (1) in place using straps (2) and buckles (3) attached to outside of tarp (1).

**(5)** Tie front and rear lashing ropes (5) to end stave and corner assemblies (4).

**e. Tarp Removal.**

CAUTION

Do not fold or stow tarp when wet. Doing so may result in damage to tarp.

**(1)** Remove tarp (1) from vehicle and lay tarp (1) flat on ground, with buckles (3) on top.

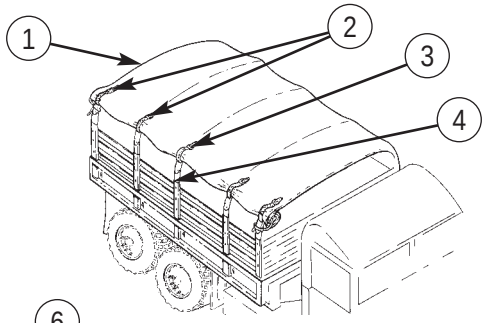


**(2)** Fold eyelet side of tarp (1) to first row of buckles (3).

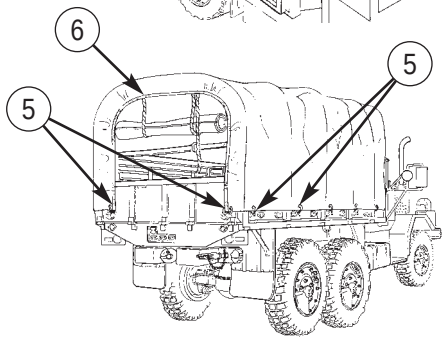


**(3)** Fold tarp (1) over again, and then one more time.

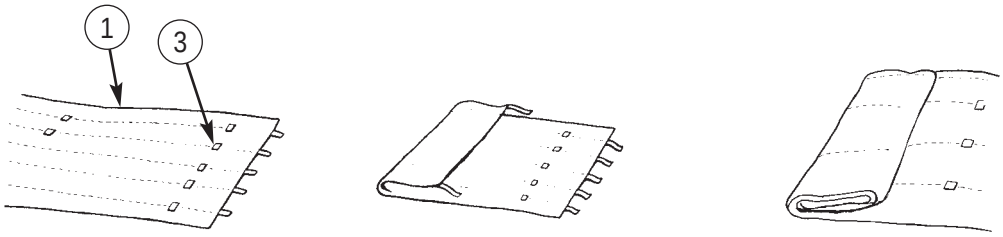

## 2-44. BOW AND TARP KIT (Contd)

**(4)** Fold other side of tarp (1) once, to the row of buckles.

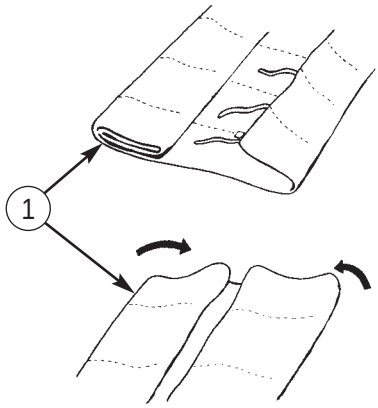


**(5)** Then fold tarp (1) again, until the two folds meet.

**(6)** Now fold the side of tarp (1) with three folds over the side with four folds.

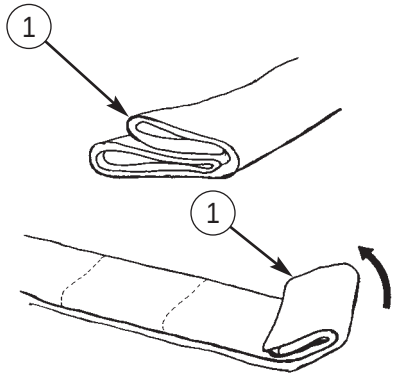


**(7)** Next fold tarp (1) end halfway to the first seam, and then over again, until inner edge of tarp (1) is at middle.

**(8)** Repeat folding on opposite end until both folded ends meet.

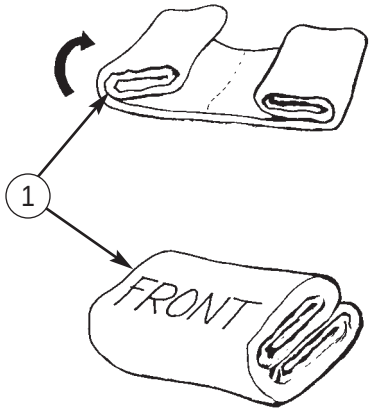


**(9)** Place folded tarp (1) front end up and with chalk, mark FRONT. Make sure that letters are large enough to be easily seen.

## 2-44. BOW AND TARP KIT (Contd)

**(10)** Turn folded tarp (1) over and mark REAR.

**(11)** Place tarp (1) on wood platform or pallet for storage.

**f. End Curtain Removal.**

**(1)** Remove end curtains (4) and fold them to approximately same dimensions as tarp (1).

**(2)** Place end curtains (4) on same wood platform or pallet as tarp (1) for storage.

**(3)** Remove safety strap (3) and store with end curtains (4) and tarp (1).

**g. Bow Removal.**

**(1)** Remove bow assemblies (2).

**(2)** On cargo trucks with dropsides (M35A3C), raise latches (10). On cargo trucks without dropsides (M35A3, M36A3), remove four screws (9).

**(3)** Separate crossbows (8) from stave and corner assemblies (5).

**(4)** On cargo trucks with dropsides (M35A3C), store stave and corner assemblies (5) in storage sockets in front of rack (6). On cargo trucks without dropsides (M35A3, M36A3), store in storage area on cargo bed.

**(5)** Stow crossbows (8) in storage area under cargo body. Strap together by buckling two straps (7), one on each end.

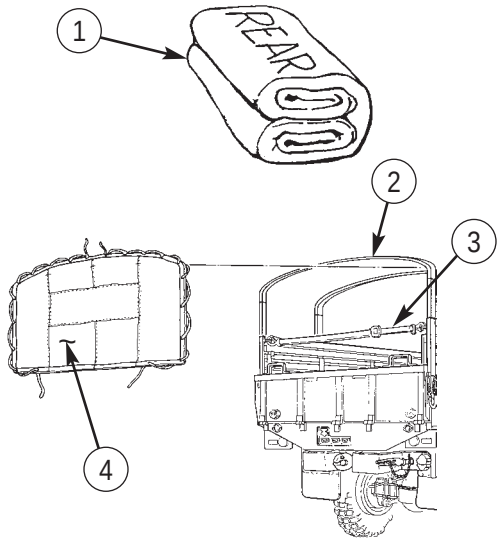


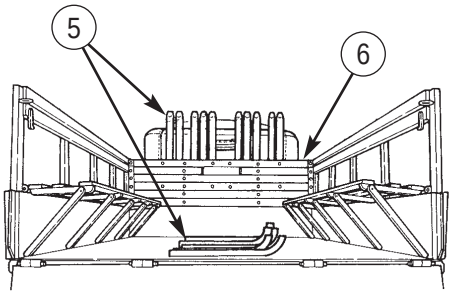


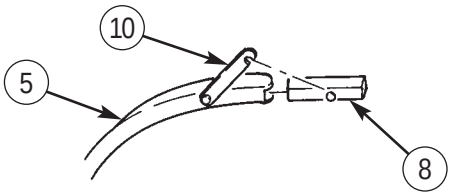


**M35A3C**

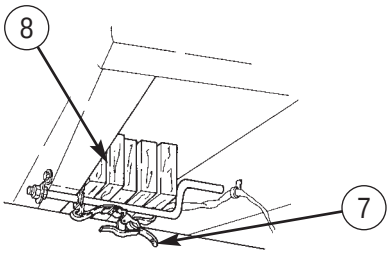


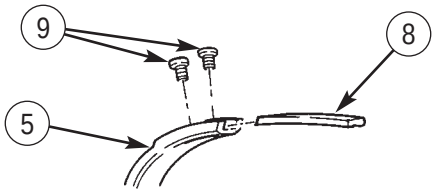


**M35A3, M36A3**

## 2-45. OPERATION OF CARGO BODY ARCTIC KIT

**a. General.** The cargo body arctic kit is installed to permit cargo and troop transport in temperatures -25°F (-32°C) or below. The kit includes a body heater, insulated body enclosure, lighting system, and a speaking tube.

**b. Operation of Body Heater.**

**(1) General.** The body heater provides heat to warm the cargo body. On M35A3 cargo vehicles, body heater may be either a swingfire heater or a multifuel heater. M35A3C cargo vehicles with dropsides may only use multifuel heater.

NOTE

Step 2 applies to vehicles equipped with multifuel heater only.

**(2)** Open fuel tank shutoff valve (1) by turning counterclockwise.

NOTE

- Step 3 applies to vehicles equipped with swingfire heater only.
- Swingfire heater should be in operation before performing step 3. Refer to para. 2-48.

**(3)** Remove lockpin (2) and open door (3). Install swingfire heater and adjust fuel regulator knob as necessary (para. 2-48). Close door (3) and install lockpin (2).

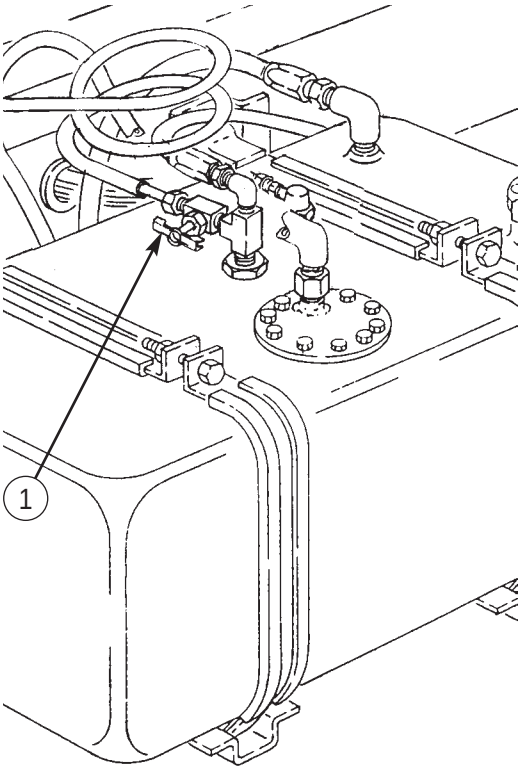


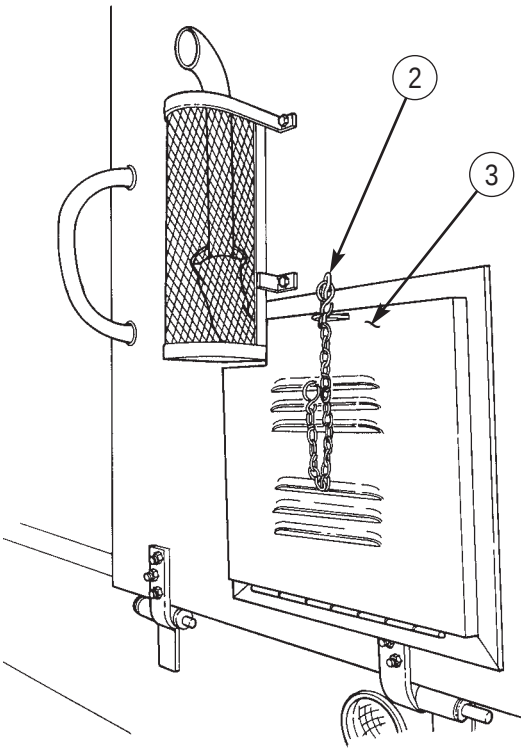

## 2-45. OPERATION OF CARGO BODY ARCTIC KIT (Contd)

**(4)** Open diverter (2) by turning diverter control lever (1) clockwise.

NOTE

Steps 5 through 12 apply to vehicles equipped with multifuel heater only.

**(5)** Depress red indicator light (4) to check operation of circuit. If red indicator light (4) does not illuminate, notify your supervisor.

**(6)** Set HI-LO switch (3) on control box (6) to HI or LO position, depending upon heating needs.

NOTE

- RUN-OFF-START switch is spring-loaded and will return to OFF position from START position if not held down.
- If red indicator light does not illuminate withing two minutes, turn RUN-OFF-START switch to OFF position. Wait three minutes before trying to start heater again. If red indicator light does not illuminate after two attempts, notify your supervisor.

**(7)** Turn RUN-OFF-START switch (5) on control box (6) to START position. Hold in that position until red indicator light (4) illuminates.

NOTE

If RUN-OFF-START switch is turned to RUN position before red indicator light illuminates, heater will not operate.

**(8)** As soon as red indicator light (4) illuminates, turn RUN-OFF-START switch (5) to RUN position, with no hesitation at OFF position.

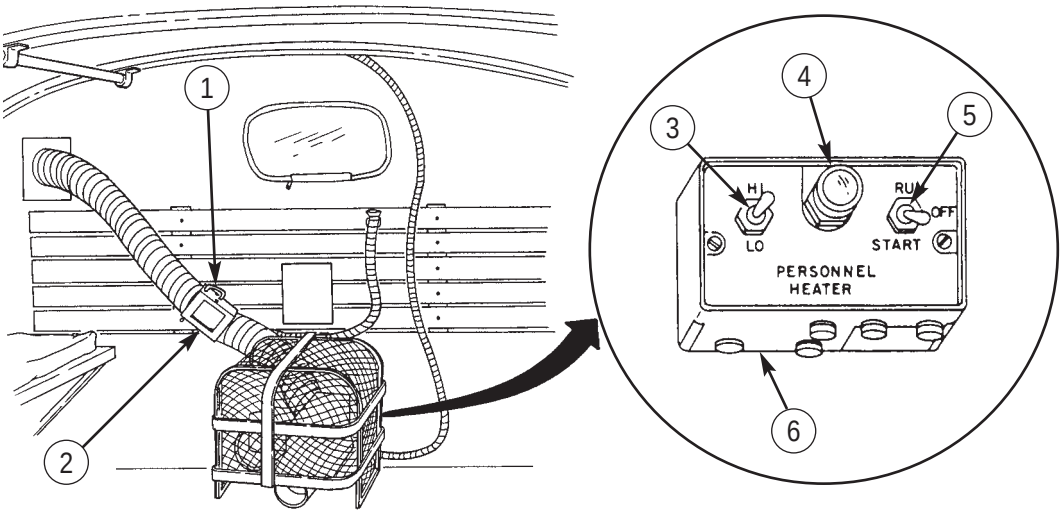

## 2-45. OPERATION OF CARGO BODY ARCTIC KIT (Contd)

**(9)** Adjust hot air flow with diverter control lever (1) on diverter (2).

**NOTE**

Blower motor will continue to run for one to three minutes after RUN-OFF-START switch is turned to OFF position. Red indicator light will remain on until fuel in heater burns away and heater cools.

**(10)** After heater operation, turn RUN-OFF-START switch (5) to OFF position.

**(11)** Close fuel tank shutoff valve (7) by turning clockwise.

**(12)** Close diverter (2) by turning diverter control lever (1) counterclockwise.

**NOTE**

Step 13 applies to vehicles equipped with swingfire heater only.

**(13)** After heater operation, remove lockpin (8) and open door (9). Remove and shut down swingfire heater (para. 2-48). Close door (9) and install lockpin (8).

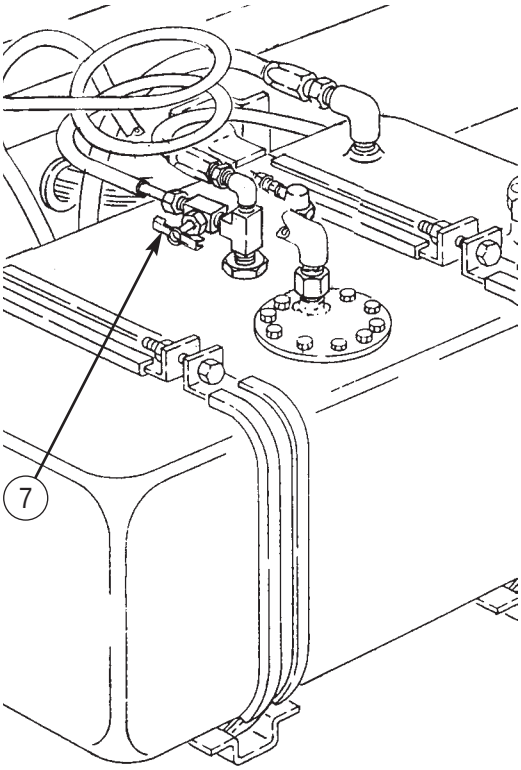


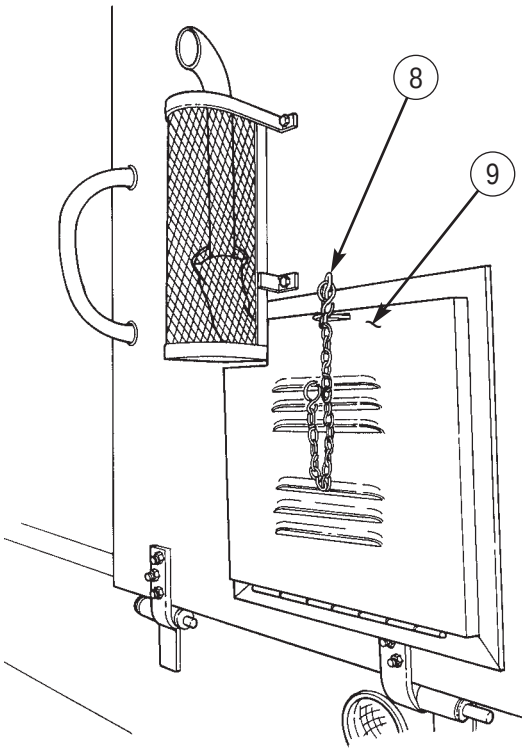

## 2-45. OPERATION OF CARGO BODY ARCTIC KIT (Contd)

**c. Insulated Body Enclosure.**

**General.** The insulated body enclosure (2) protects troops and cargo and retains warm air in arctic conditions. A step assembly is installed for easy access to rear door. Window covers (1) on inside of insulated body enclosure (2) have zippers for easy closing and opening.

**d. Operation of Lighting System.**

**General.** Two domelights (3) provide illumination for interior of insulated body enclosure (2). Domelights are operated by switch (4) on inside rear of insulated body enclosure (2).

**e. Speaking Tube.**

**General.** Speaking tube at inside front of insulated body enclosure (2) permits communication between personnel in cab and personnel in cargo body.

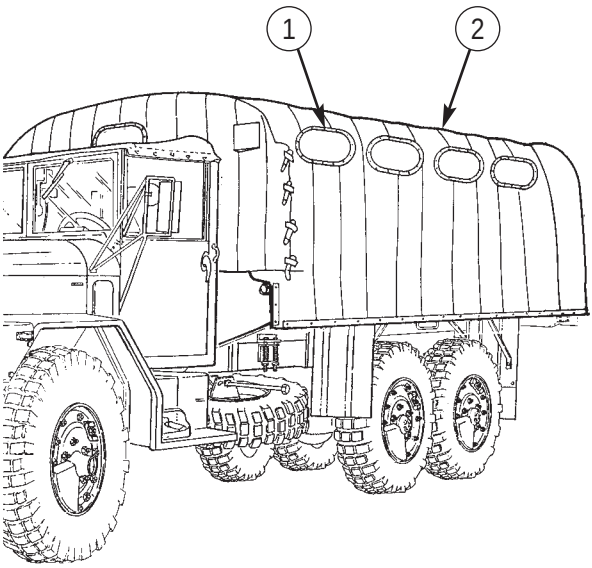


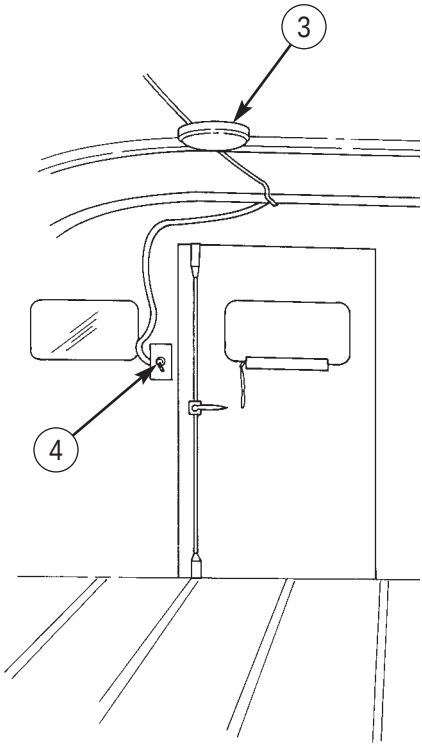

## 2-46. OPERATION OF FORDING (DEEPWATER) KIT

**a. General.** Salt water causes considerable damage to vehicle components. For this reason, do not drive needlessly in or through salt water. Vehicle components that do come in contact with salt water must be washed with fresh water as soon as possible. The vehicle will ford water up to 30 in. (76 cm) in depth without a fording kit and 72 in. (183 cm) with kit installed.

**WARNING**

Never attempt to cross water deeper than 72 in. (183 cm). Limit vehicle speed while fording to 4 mph. Failure to do so may cause vehicle to lose control, resulting in injury or death to personnel.

**b. Operator Preparation for Fording.**

**(1)** Tighten filler caps on battery, and fuel tank. Make sure engine oil and transmission oil dipsticks are installed securely.

**(2)** Check that filler caps on master cylinder reservoir are sealed.

a. Remove filler caps from master cylinder reservoir.

b. Remove rubber damper from filler caps and check for presence of sealant in air vent groove of filler caps. If sealant is not present, notify unit maintenance

**(3)** Secure all loose objects on vehicle.

**c. Fording Operation.**

**(1)** Start engine (para. 2-12 or 2-13).

**(2)** Place vehicle in motion (para. 2-15) with transfer case shift lever (2) in LOW and transmission gearshift lever (1) in “1” (first) position. Engage front wheel drive (3).

**(3)** Maintain constant vehicle speed while fording. Try to exit water in area with gentle slope.

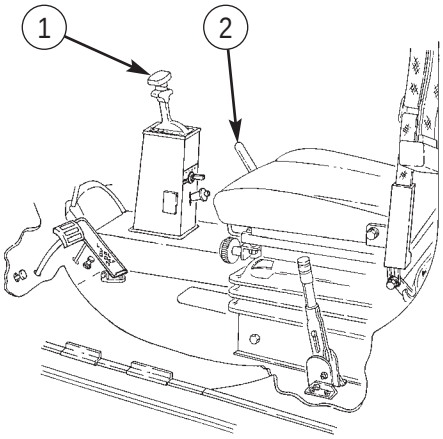


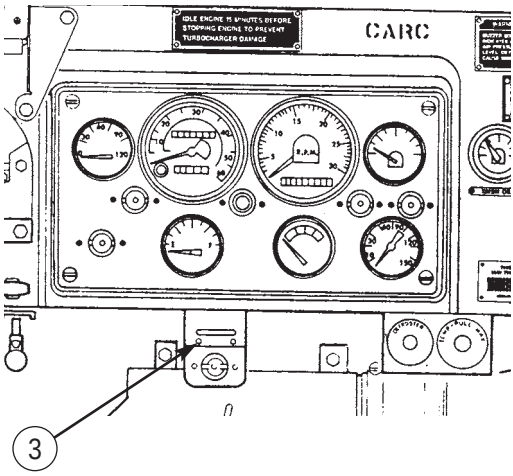

## 2-46. OPERATION OF FORDING (DEEPWATER) KIT (Contd)

**(4)** Move fording valve control lever (2) to the right immediately upon leaving water.

**WARNING**

Do not rely on service brakes until they dry after fording operation. Continue to apply brakes until uneven braking ceases. Failure to do so may result in injury or death to personnel.

**d. After Fording Maintenance.**

**(1)** Stop vehicle (para. 2-16) on firm, level surface and disengage front wheel drive (1).

**CAUTION**

All parts of vehicle that were in contact with salt water during fording operation must be washed with fresh water a soon as possible. Failure to do so may result in corrosion damage to equipment.

**(2)** Use fresh water to wash all parts of vehicle that were in contact with salt water during fording operation.

**(3)** Notify unit maintenance to service vehicle as soon as possible.

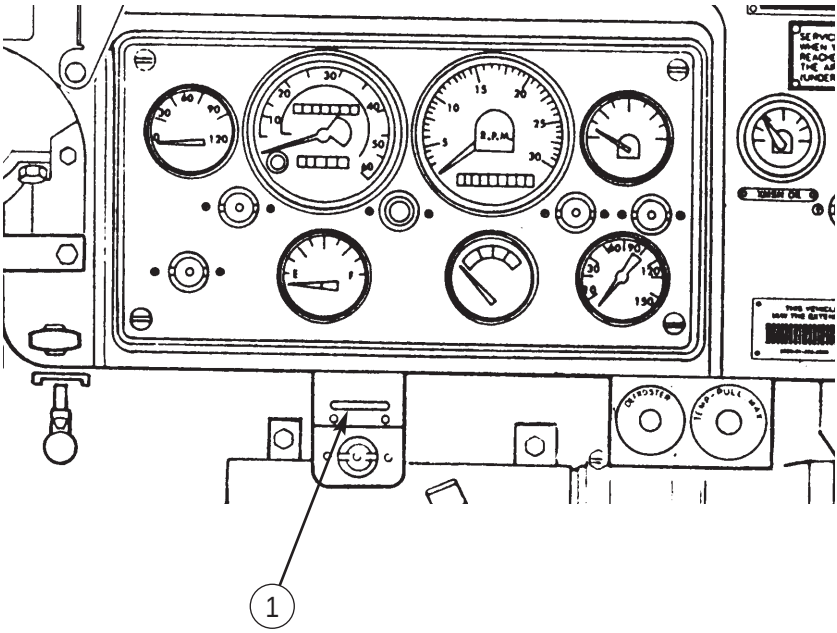

## 2-47. OPERATION OF TROOP SEAT - CENTER MOUNTED KIT

**a. General.** The troop seat – center-mounted kit is installed to double troop transport capacity on M35A3 and M35A3C cargo trucks.

**b.** To operate troop seats (1), refer to para. 2-28. Troop seats (1) are installed on opposite sides of pocket assemblies (2).

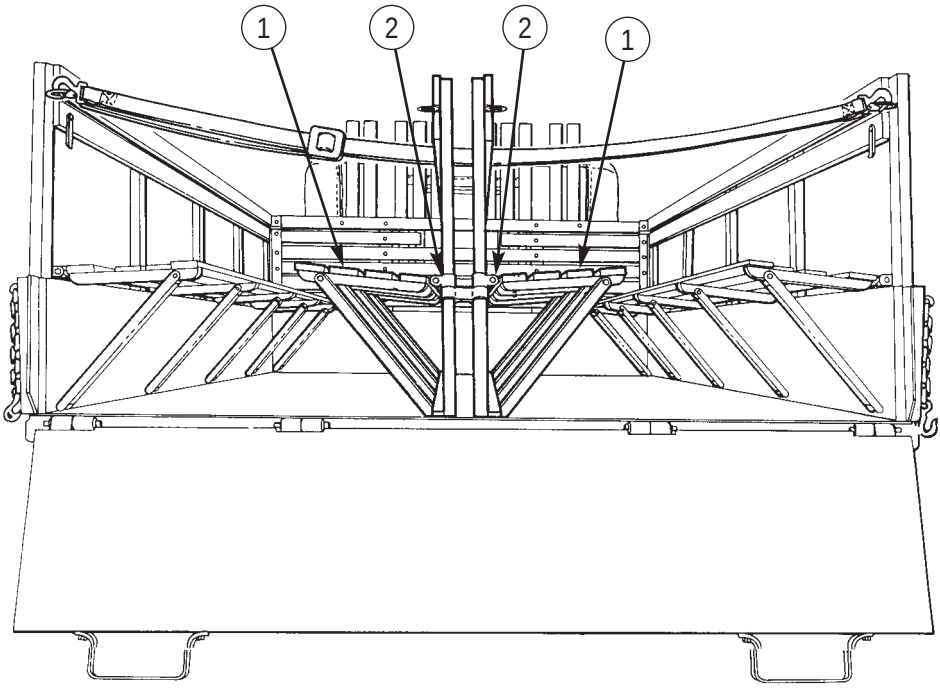

## 2-48. OPERATION OF SWINGFIRE HEATER

**a. General.** The swingfire heater is a portable heater that can be used to heat the cargo body enclosure, engine and battery compartment of M35A3 cargo trucks equipped with swingfire heater arctic winterization kit. It may also be used to thaw frozen equipment.

**CAUTION**

Use only gasoline to operate swingfire heater. Using any other fuel may result in damage to swingfire heater.

**NOTE**

Each swingfire heater has its own fuel tank.

**b. Operation of Swingfire Heater.**

**(1)** Remove fuel tank cap (5) from swingfire heater (7) and fill fuel tank (4) with gasoline. Install fuel tank cap (5) on swingfire heater (7).

**(2)** Depress pressure pin (3) to check operation of air shutoff valve. If pressure pin (3) does not return to out position, notify your supervisor.

**(3)** Loosen wingnut (6) by turning counterclockwise and open cover (1).

**(4)** Turn diaphragm valve (8) all the way clockwise.

**(5)** Close cover (1) and tighten wingnut (6) by turning clockwise.

**(6)** Make sure fuel regulator knob (2) is closed by turning clockwise.

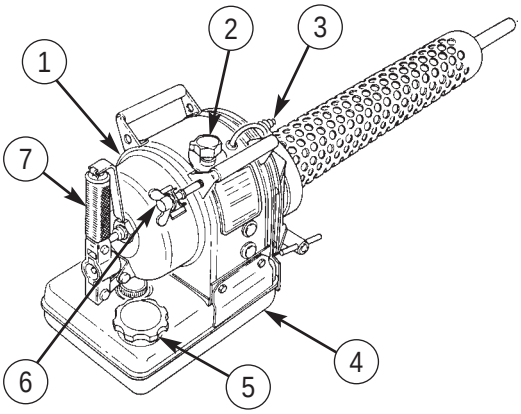


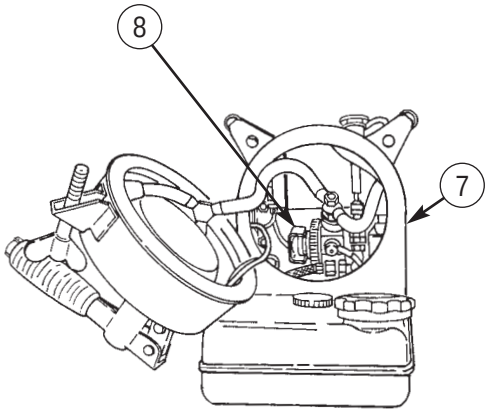

## 2-48. OPERATION OF SWINGFIRE HEATER (Contd)

**(7)** Raise power receptacle cover (9) and install one end of starter cable (10) in power receptacle (11). Install other end of starter cable (10) in starter cable receptacle (14).

**(8)** Squeeze ignition switch (13) against pump lever (12) and hold there one minute for every 10°F (-12°C) below 0°F (-18°C), then release.

**NOTE**

It may be necessary to loosen wingnut and open cover slightly so pulsating sounds can be heard more clearly.

**(9)** Move pump lever (12) forward and backward three or four times, then turn fuel regulator knob (2) one to one-and-a-half turns counterclockwise. Continue moving pump lever (12) and adjust fuel regulator knob (2) until pulsating sounds come to equal intervals.

**(10)** When pulsating sounds come to equal intervals, stop moving pump lever (12).

**(11)** Let swingfire heater (7) run three to five minutes. Adjust fuel regulator knob (2) if pulsations are not at equal intervals.

**(12)** Close cover (1) if opened and tighten wingnut (6) by turning clockwise.

**(13)** Remove starter cable (10) from starter cable receptacle (14) and power receptacle (11). Close power receptacle cover (9).

**(14)** Install swingfire heater (7) in mixing pipe (refer to task c.), turboheater (refer to task d.), or water jacket (refer to task e.), as necessary.

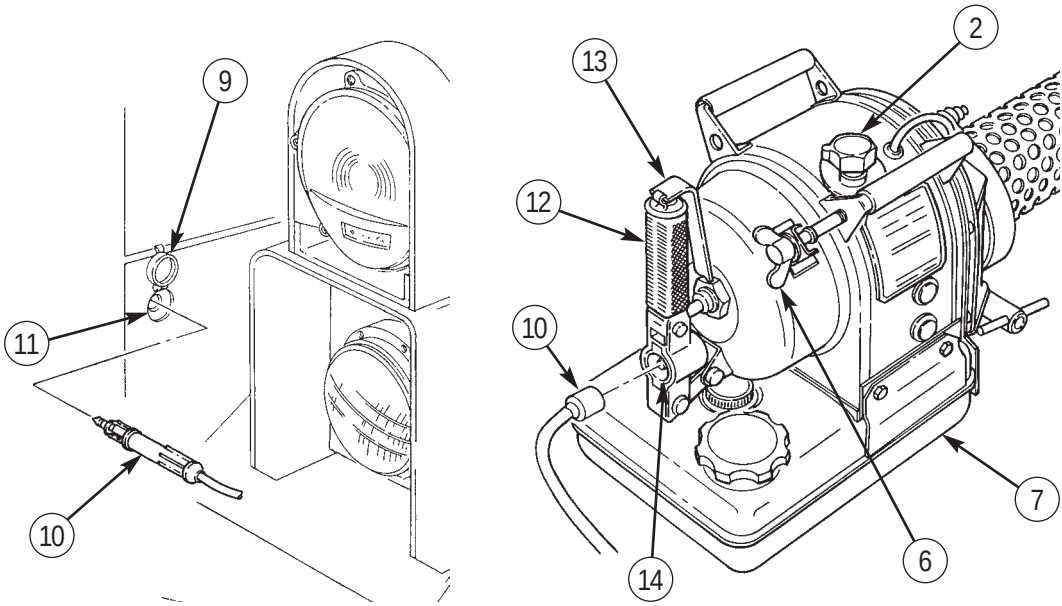

## 2-48. OPERATION OF SWINGFIRE HEATER (Contd)

**(15)** After heater operation, remove swingfire heater (6) from mixing pipe (refer to task c.), turboheater (refer to task d.), or water jacket (refer to task e.) as necessary. Close fuel regulator knob (2) by turning clockwise.

**(16)** After swingfire heater (6) stops, loosen wingnut (1) by turning counterclockwise and remove cover (7).

**(17)** Turn diaphragm valve (8) all the way counterclockwise.

**(18)** Install cover (7) and tighten wingnut (1) by turning clockwise.

**c. Operation of Mixing Pipe.**

**(1) General.** Mixing pipe is installed on swingfire heater to thaw frozen brake lines, brakedrums, gear parts, tires, and other equipment.

**(2)** Open wingnut (5) all the way counterclockwise.

**(3)** Make sure gasket (4) is flat against body of swingfire heater (6).

NOTE

Swingfire heater should be in operation when installed. Refer to task b.

**(4)** Install mixing pipe (3) on swingfire heater (6) and tighten wingnut (5) by turning clockwise.

WARNING

Exhaust gases from mixing pipe can kill. Operate swingfire heater with mixing pipe in well-ventilated area only. Failure to do so may result in injury or death to personnel.

**(5)** Direct hot air from mixing pipe (3) at equipment to be thawed.

**(6)** After equipment is thawed, loosen wingnut (5) by turning counterclockwise and remove mixing pipe (3).

**(7)** Install swingfire heater (6) in turboheater (refer to task d.), or water jacket (refer to task e.), or stow (refer to task f.), as necessary.

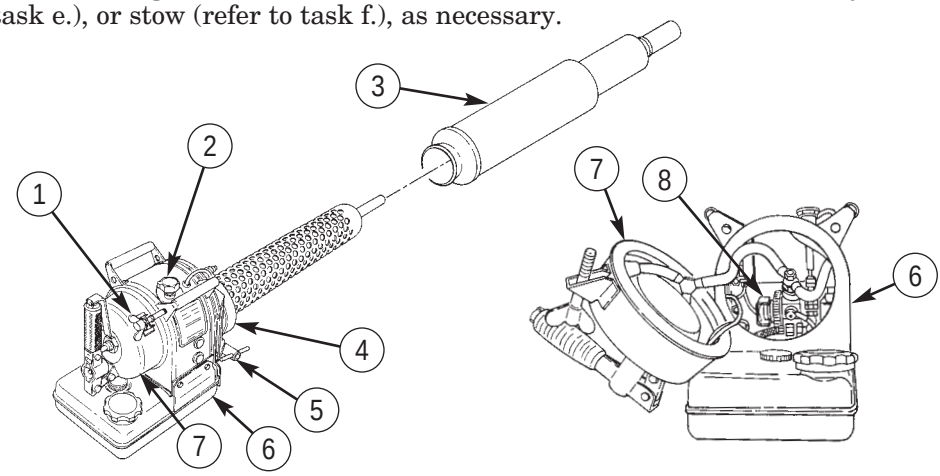

## 2-48. OPERATION OF SWINGFIRE HEATER (Contd)

**d. Operation of Turboheater.**

**(1) General.** Swingfire heater is installed in turboheater to provide heated air for cargo body enclosure.

**(2)** Open wingnut (5) all the way counterclockwise.

**(3)** Make sure gasket (4) is flat against body of swingfire heater (6).

**(4)** Raise catch (14) and open access door (12).

NOTE

- Make sure swingfire heater is installed with pump lever straight up.
- Swingfire heater should be in operation when installed. Refer to task b. of this paragraph.

**(5)** Open door (13) (refer to para. 2-43) and install swingfire heater (6) in turboheater (9). Tighten wingnut (5) by turning clockwise.

**(6)** Make sure overheating switch (11) is in OPERATION position.

**(7)** Close access door (12) and install catch (14).

**(8)** Adjust air flow by moving diverters (15).

WARNING

Box assembly will become hot after continued operation. Be careful when opening access door. Failure to do so may result in injury to personnel.

**(9)** If swingfire heater (6) suddenly stops and fuel tank is not empty, raise catch (14) and open access door (12). Do not allow skin to contact box (10) if hot.

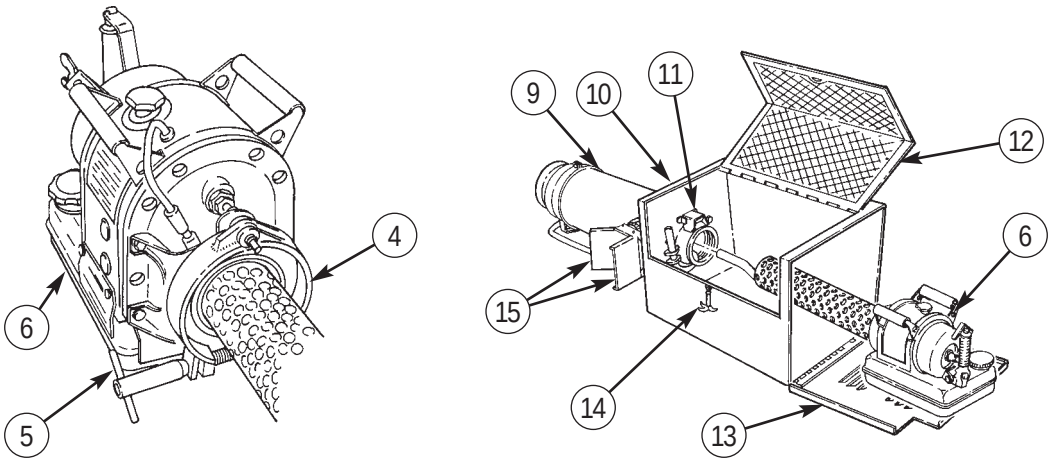

## 2-48. OPERATION OF SWINGFIRE HEATER (Contd)

**(10)** If overheating switch (2) is not in OPERATION position, allow swingfire heater (5) to cool. Place overheating switch (2) in OPERATION position. Operate swingfire heater (5) (task b), close access door (3), and install catch (6). If swingfire heater (5) will not operate, notify unit maintenance.

**WARNING**

Box assembly and exhaust pipe will become hot after continued operation. Be careful when opening access door and when removing swingfire heater. Failure to do this may result in injury to personnel.

**(11)** After operation, raise catch (6) and open access door (3). Do not allow skin to contact box (1) if hot. Open door (4) (refer to paragraph 2-45), loosen wingnut (9) by turning counterclockwise, and remove swingfire heater (5). Do not allow skin to contact exhaust pipe (7).

**(12)** Install swingfire heater (5) in mixing pipe (refer to task c.), water jacket (refer to task e.), or stow (refer to task f.), as necessary.

**e. Operation of Water Jacket.**

**(1) General.** Swingfire heater is installed in water jacket to heat engine coolant and battery compartment to permit easy starting in arctic conditions.

**(2)** Open wingnut (9) all the way counterclockwise.

**(3)** Make sure gasket (8) is flat against body of swingfire heater (5).

**NOTE**

- Water jacket is located on right side of vehicle under fender.
- Make sure swingfire heater is installed with pump lever straight up.
- Swingfire heater should be in operation when installed. Refer to task b. of this paragraph.

**(4)** Remove cap (11) and install swingfire heater (5) in water jacket (10). Tighten wingnut (9) by turning clockwise.

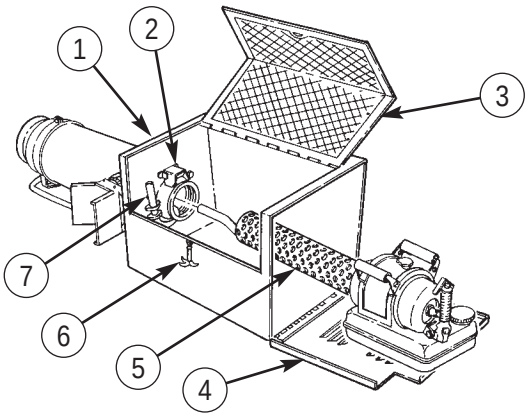

## 2-48. OPERATION OF SWINGFIRE HEATER (Contd)

**(5)** Allow swingfire heater (5) to run until temperature gauge reads 190°F (88°C).

**(6)** When temperature gauge reads 190°C (88°C), loosen wingnut (9) by turning counterclockwise and remove swingfire heater (5). Start engine (para. 2-12).

**(7)** Install cap (11) on end of water jacket (10).

**(8)** Install swingfire heater (5) in mixing pipe (refer to task c.), turboheater (refer to task e.), or stow (refer to task f.), as necessary.

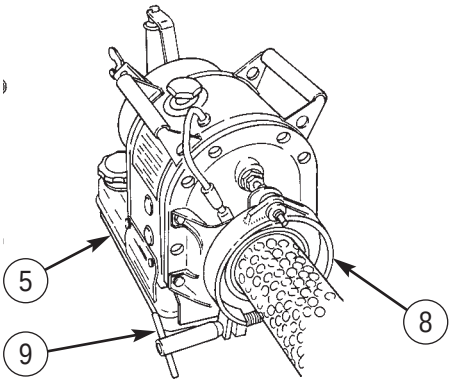


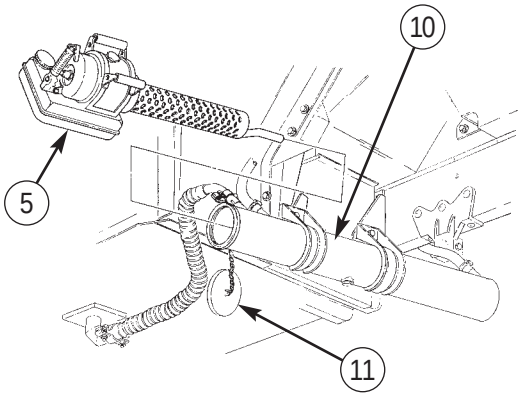


**f. Stowage of Swingfire Heater and Mixing Pipe.**

**(1) General.** Swingfire heater and mixing pipe are stowed under companion seat.

**(2)** Shut off swingfire heater (5) (refer to task b.).

**WARNING**

Mixing pipe will become hot after continued operation. Do not remove mixing pipe until cool. Failure to do so may result in injury to personnel.

**(3)** Position mixing pipe (12) on stowage brackets (17). Place straps (18) over mixing pipe (12) and install latches (16) on stowage brackets (17).

**(4)** Position swingfire heater (5) on stowage brackets (15). Place strap (13) over swingfire heater (5) and install hook (14) on stowage bracket (15).

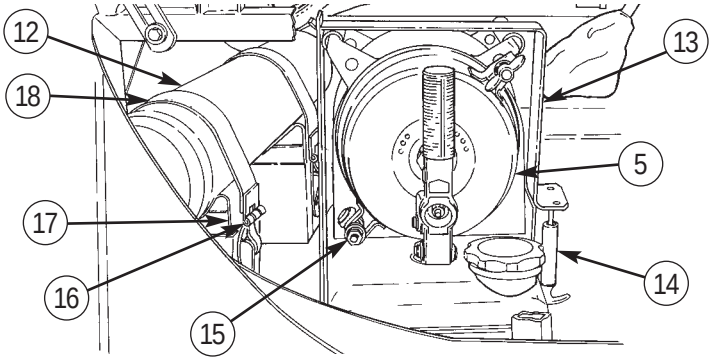

# CHAPTER 3
# OPERATOR MAINTENANCE

Section I. Lubrication Instructions (page 3-1)
Section II. Operator Troubleshooting (page 3-1)
Section III. Operator Maintenance Procedures (page 3-19)

## Section I. LUBRICATION INSTRUCTIONS

### 3-1. GENERAL

Lubrication instructions are found in table 2-2 and para. 3-7. All lubrication instructions are mandatory.

## Section II. OPERATOR TROUBLESHOOTING

### 3-2. GENERAL

**a. Scope.** The troubleshooting table contains instructions that will help the operator identify and correct simple vehicle malfunctions during operations. The table also helps the operator identify major mechanical difficulties that must be referred to maintenance personnel. Major vehicle systems covered in this section include:

- Engine
- Transmission
- Transfer case
- Front and rear axles
- Parking brake system
- Wheels and tires
- Steering
- Front winch
- Cooling system
- Central Tire Inflation System (CTIS)
- Compressed air system
- Slave receptacle
- Special purpose kits

Below these major headings are the symptoms and the corrective action.

## 3-2. GENERAL (Contd)

**WARNING**

- Operation of a deadlined vehicle, without preliminary inspection, may cause injury to personnel and/or damage to equipment.
- Hearing protection is required for the driver and co-driver. Hearing protection is also required for all personnel working in and around this vehicle while the engine is running (reference AR 40-5 and TB MED 501).

**NOTE**

Operators should perform the corrective action in the order listed until the malfunction is corrected. If none of the steps correct the malfunction, notify unit maintenance.

**b. Omissions.** This manual cannot list all malfunctions that may occur. If a malfunction occurs that is not listed in table 3-1, notify unit maintenance.

**c. Symptom Index.** To find a specific malfunction, refer to the symptom index.

## 3-3. TROUBLESHOOTING SYMPTOM INDEX


| MALFUNCTION NO. | MALFUNCTION | TROUBLESHOOTING PROCEDURE PAGE |
|---|---|---|
| | **ENGINE** | |
| 1. | Engine starter switch is engaged but engine fails to start | 3-4 |
| 2. | Engine cranks but does not start | 3-5 |
| 3. | Engine cranks but fails to start at outside temperatures below 0°F (-18°C) | 3-5 |
| 4. | Engine starts but misfires, runs rough, or lacks power | 3-6 |
| 5. | Engine overheats as indicated by engine coolant temperature gauge | 3-7 |
| 6. | Low engine oil pressure | 3-7 |
| 7. | Excessive exhaust smoke after engine reaches normal operating temperature of 160°F to 230°F (71°C to 110°C) | 3-7 |
| | **TRANSMISSION** | |
| 8. | No response to gear shift lever movement | 3-8 |
| 9. | Rough shifting | 3-8 |
| 10. | Lubricant leakage | 3-8 |
| | **TRANSFER CASE** | |
| 11. | Transfer case shift lever will not shift or slips out of gear | 3-8 |
| 12. | Transfer case lubricant leakage | 3-8 |
| | **FRONT AND REAR AXLES** | |
| 13. | Front axle is noisy | 3-8 |
| 14. | Rear axle is noisy | 3-8 |

## 3-3. TROUBLESHOOTING SYMPTOM INDEX (Contd)

MALFUNCTION
TEST OR INSPECTION
CORRECTIVE ACTION


**PARKING BRAKE SYSTEM**
15. Parking brake does not hold vehicle . . . . . 3-9
16. Parking brake drags or overheats . . . . . 3-9

**WHEELS AND TIRES**
17. Wheel wobbles or shimmies . . . . . 3-9
18. Excessive or uneven tire wear . . . . . 3-10
19. Vehicle wanders or pulls to one side on level surface or highway . . . . 3-10

**STEERING**
20. Hard steering . . . . . 3-10
21. Oil leaks . . . . . 3-10

**FRONT WINCH**
22. Winch drum does not turn or pay out cable . . . . . 3-11

**COOLING SYSTEM**
23. Engine temperature exceeds 230°F (110°C) . . . . . 3-11

**CENTRAL TIRE INFLATION SYSTEM (CTIS)**
24. Inadequate tire inflation/deflation under various road conditions . . . . 3-12
25. Electronic Control Unit (ECU) fails to operate . . . . . 3-12
26. Tires will not inflate/deflate . . . . . 3-13

**COMPRESSED AIR SYSTEM**
27. Deleted
28. Water appears when air reservoirs are drained . . . . . 3-13
29. Long or continuous purge cycle . . . . . 3-14
30. Insufficient air pressure as indicated by low air pressure buzzer or air pressure gauge . . . . . 3-14

**SLAVE RECEPTACLE**
31. Slave cable connected but engine will not turn over . . . . . 3-14


## SPECIAL PURPOSE KITS


**ARCTIC WINTERIZATION KIT**
32. Engine fails to reach operating temperature . . . . . 3-15
33. Engine temperature exceeds 230° F (110°C) . . . . . 3-15
34. Fuel burning personnel heater fails to start when RUN-OFF-START switch is held in start position . . . . . 3-15
35. Power plant heater fails to start when RUN-OFF-START switch is held in start position . . . . . 3-16
36. Heater fails to continue burning . . . . . 3-16
37. Windshield defrosters not operating . . . . . 3-17

## 3-3. TROUBLESHOOTING SYMPTOM INDEX (Contd)


| MALFUNCTION NO. | MALFUNCTION | TROUBLESHOOTING PROCEDURE PAGE |
|---|---|---|
| | **SPECIAL PURPOSE KITS (Contd)** | |
| 38. | Engine oil pan shroud not receiving heat (power plant heater only) | 3-17 |
| 39. | Engine coolant system not receiving heat (power plant heater only) | 3-17 |
| | **DEEPWATER FORDING KIT** | |
| 40. | Fording control handle inoperative | 3-17 |
| | **A-FRAME KIT** | |
| 41. | Winch inoperative | 3-18 |
| 42. | A-frame inoperative or misaligned | 3-18 |


*Table 3-1. Troubleshooting.*

| MALFUNCTION<br>TEST OR INSPECTION<br>CORRECTIVE ACTION |
|---|

**NOTE**

If corrective action does not correct malfunction, notify unit maintenance.

## ENGINE

### 1. ENGINE STARTER SWITCH IS ENGAGED BUT ENGINE FAILS TO START

Step 1. Check to see if accessory/battery switch is off.

If off, turn accessory/battery switch on (para. 2-3).

Step 2. Check battery gauge for proper battery voltage (para. 2-3).

Service batteries if gauge does not display proper voltage (para. 3-10).

Step 3. Visually check to see if battery cables, terminals, and connections are loose, broken, or corroded. Check battery for proper water level.

If loose, broken, corroded, or if battery water level is low, notify unit maintenance.

Step 4. Ensure transmission is in neutral (para. 2-15).

END OF TESTING!

*Table 3-1. Troubleshooting (Contd).*

| MALFUNCTION<br>TEST OR INSPECTION<br>CORRECTIVE ACTION |
|---|

**2. ENGINE CRANKS BUT DOES NOT START**

Step 1. Check battery gauge for proper battery voltage.

Service battery if gauge does not display proper voltage (para. 3-10).

**NOTE**

Do not completely fill fuel tank before visually checking for leaks in fuel system.

Step 2. Check to see if fuel gauge indicates empty.

If empty, add fuel (para. 1-16).

**NOTE**

Whenever fuel tank is completely drained and then refilled, the fuel system must be primed (para. 3-11).

Step 3. Check to see if fuel shutoff switch is activated.

If so, push to reset (para. 2-3).

**NOTE**

Assistant will help with step 4.

Step 4. Check fuel solenoid for proper operation.

a. Raise and secure hood (para. 2-23).

b. Direct assistant to engage accessory/battery switch. A clicking noise should be heard.

c. If fuel solenoid is not heard cycling, notify unit maintenance.

END OF TESTING!

**3. ENGINE CRANKS BUT FAILS TO START AT OUTSIDE TEMPERATURES BELOW 0°F (-18°C)**

Step 1. Perform malfunction 2, steps 1 through 4.

Step 2. Check quick-start system operation (para. 2-13).

If engine fails to start after using quick-start system, check cylinder fluid level.

a. Raise and secure hood (para. 2-23).

b. Remove cylinder from valve and shake. If cylinder is empty, replace cylinder.

*Table 3-1. Troubleshooting (Contd).*

| MALFUNCTION<br>TEST OR INSPECTION<br>CORRECTIVE ACTION |
|---|

Step 3. Engine still fails to start.

Refer to FM 9-207: Operation and Maintenance of Ordnance Materiel in Extreme Cold Weather (0°F to -65°F).

END OF TESTING!

**4. ENGINE STARTS BUT MISFIRES, RUNS ROUGH, OR LACKS POWER**

Step 1. Check to see if fuel shutoff switch is activated.

If so, push to reset (para. 2-3).

Step 2. Inspect accelerator pedal for full travel.

Adjust accelerator pedal travel, notify unit maintenance.

Step 3. Check vehicle for dragging brakes, low tire inflation, or cargo overload limit.

a. If defects are evident during check, adjust or replace components.

b. Correct overload condition.

Step 4. Check engine idle speed is set within specifications.

If engine idle speed setting is incorrect, notify unit support maintenance.

Step 5. Check for restricted air cleaner.

If restricted, clean air cleaner element (para. 3-8).

Step 6. Check fuel supply system for water and impurities.

Drain fuel from fuel/water separator into a container until fuel is clear (para. 2-3). If fuel is not clear before approximately one pint (0.473 L) has drained, notify unit maintenance. Dispose of used fuel properly.

Step 7. Check fuel filter for looseness.

If loose, notify unit maintenance to tighten fuel filter properly.

Step 8. Check drain valve for leaks.

If leaking, notify unit maintenance.

Step 9. Check throttle and accelerator cables for binding and sticking.

If cable(s) are binding or sticking, notify unit maintenance.

END OF TESTING!

*Table 3-1. Troubleshooting (Contd).*

| MALFUNCTION<br>TEST OR INSPECTION<br>CORRECTIVE ACTION |
|---|

**5. ENGINE OVERHEATS AS INDICATED BY ENGINE COOLANT TEMPERATURE GAUGE**

**WARNING**

Extreme care should be taken when removing surge tank filler cap if temperature gauge reads above 160°F (71°C). Contact with steam or hot coolant under pressure may result in injury to personnel.

Step 1. Check aftercooler and radiator core for obstructions.

If clogged, remove debris. Refer to table 2-1.

Step 2. Check coolant level (para. 3-7).

If low, add coolant as required.

Step 3. Check for leakage from radiator and surge tank hoses and hose connections.

If loose, tighten. If still leaking, notify unit maintenance.

Step 4. Check engine oil level (para. 3-7).

If low, add oil (table 2-2).

Step 5. Check radiator fan.

If fan is not turning, check for loose or broken engine drivebelt.

If loose or broken, notify unit maintenance.

Step 6. Check for loose or broken water pump drivebelt.

If loose or broken, notify unit maintenance.

END OF TESTING!

**6. LOW ENGINE OIL PRESSURE**

Check engine oil level (para. 3-7).

a. If low, add oil (table 2-2).

b. If low pressure condition continues, notify unit maintenance.

END OF TESTING!

**7. EXCESSIVE EXHAUST SMOKE AFTER ENGINE REACHES NORMAL OPERATING TEMPERATURE OF 160°F TO 230°F (71°C TO 110°C)**

Check for restricted air cleaner.

a. If restricted, clean air cleaner element (para. 3-8).

b. If air cleaner is still restricted, notify unit maintenance.

END OF TESTING!

*Table 3-1. Troubleshooting (Contd).*

| MALFUNCTION<br>TEST OR INSPECTION<br>CORRECTIVE ACTION |
|---|

## TRANSMISSION

**8. NO RESPONSE TO GEAR SHIFT LEVER MOVEMENT**

Check transmission fluid level (para. 3-7).

END OF TESTING!

**9. ROUGH SHIFTING**

Check transmission fluid level (para. 3-7).

END OF TESTING!

**10. LUBRICANT LEAKAGE**

Check for loose drainplug.

a. If loose, tighten.

b. If leaking continues, notify unit maintenance.

END OF TESTING!

## TRANSFER CASE

**11. TRANSFER CASE SHIFT LEVER WILL NOT SHIFT OR SLIPS OUT OF GEAR**

Notify unit maintenance.

**12. TRANSFER CASE LUBRICANT LEAKAGE**

Check for loose drainplug.

If loose, tighten drainplug.

END OF TESTING!

## FRONT AND REAR AXLES

**13. FRONT AXLE IS NOISY**

Notify unit maintenance.

**14. REAR AXLE IS NOISY**

Notify unit maintenance.

*Table 3-1. Troubleshooting (Contd).*

| MALFUNCTION<br>TEST OR INSPECTION<br>CORRECTIVE ACTION |
|---|

## PARKING BRAKE SYSTEM

### 15. PARKING BRAKE DOES NOT HOLD VEHICLE

Step 1. Check parking brake control lever position.

If partially applied, pull parking brake control lever all the way up.

Step 2. Check parking brake control lever adjustment.

Turn knob on end of lever clockwise to increase braking action (para. 2-3).

Step 3. If parking brake still fails to hold vehicle, notify unit maintenance.

END OF TESTING!

### 16. PARKING BRAKE DRAGS OR OVERHEATS

Step 1. Check parking brake control lever position.

If partially applied, release parking brake.

Step 2. Check parking brake control lever adjustment.

Turn knob on end of lever counterclockwise to decrease braking action (para. 2-3).

Step 3. If parking brake still drags, notify unit maintenance.

END OF TESTING!

## WHEELS AND TIRES

### 17. WHEEL WOBBLES OR SHIMMIES

Step 1. Check for loose wheel stud nuts and missing wheel studs.

a. Tighten wheel stud nuts if loose (para. 3-9).

b. Notify unit maintenance if wheel studs are missing and to torque wheel stud nuts.

Step 2. Check for damaged wheel and uneven tire wear.

a. Check air pressure in tires. Turn accessory/battery switch to ON position and check that tire pressure setting is at correct pressure for selected terrain.

Adjust if necessary (para. 2-19).

b. Check air pressure in tires using tire and gauge hose assembly (Appendix B).

If air pressure does not match ECU pressure, notify unit maintenance.

*Table 3-1. Troubleshooting (Contd).*

| MALFUNCTION<br>TEST OR INSPECTION<br>CORRECTIVE ACTION |
|---|

c. Replace worn or damaged wheel and tire with spare (para. 3-9).

Step 3. Notify unit maintenance if condition continues.

END OF TESTING!

**18. EXCESSIVE OR UNEVEN TIRE WEAR**

Perform malfunction 17, step 2.

END OF TESTING!

**19. VEHICLE WANDERS OR PULLS TO ONE SIDE ON LEVEL SURFACE OR HIGHWAY**

Perform malfunction 17, step 2.

END OF TESTING!

## STEERING

**20. HARD STEERING**

Step 1. Check air pressure in tires.

Inflate or deflate tires to correct air pressure (para. 3-9).

Step 2. Check that manual shutoff valve is open (para. 3-12).

Step 3. Check power steering assist cylinder, drag link, and lines for leaks and damage.

a. Tighten loose fittings.

**NOTE**

In the event of a catastrophic failure to the power steering assist system, the manual shutoff valve can be closed and operation of the vehicle continued using manual steering.

b. If steering assist cylinder, drag link, or lines are broken or damaged, notify unit maintenance.

END OF TESTING!

**21. OIL LEAKS**

Step 1. Check for loose or missing plugs.

a. If loose, tighten.

b. If missing, notify unit maintenance.

Step 2. Check for damaged steering components. If damaged, notify unit maintenance.

END OF TESTING!

*Table 3-1. Troubleshooting (Contd).*

| MALFUNCTION<br>TEST OR INSPECTION<br>CORRECTIVE ACTION |
|---|

## FRONT WINCH

**WARNING**

Wear hand protection when handling winch cable.
Broken wires may cause injury to personnel.

### 22. WINCH DRUM DOES NOT TURN OR PAY OUT CABLE

Step 1. Check hydraulic reservoir oil level (para. 3-7).

If low, add oil (table 2-2).

Step 2. Check to see if drum lock knob is engaged.

Pull out drum lock knob, rotate it a quarter of a turn clockwise, and release into a shallow slot on nut (para. 2-18).

Step 3. Check to see if cable is binding.

Free cable from drum.

Step 4. Check if winch clutch control lever is engaged.

Move winch clutch control lever to proper position (para. 2-18).

END OF TESTING!

## COOLING SYSTEM

**WARNING**

Extreme care should be taken when removing surge tank filler cap if temperature gauge reads above 160°F (71°C). Contact with steam or hot coolant under pressure may result in injury to personnel.

### 23. ENGINE TEMPERATURE EXCEEDS 230°F (110°C)

Step 1. Check coolant level (para. 3-7).

If low, add coolant.

Step 2. Check engine oil level (para. 3-7).

If low, add oil (table 2-2).

Step 3. Check for leakage from radiator, surge tank hoses, and hose connections.

If loose, tighten. If still leaking, notify unit maintenance.

Step 4. Check transmission oil cooler for leaks.

If leaking, notify unit maintenance.

*Table 3-1. Troubleshooting (Contd).*

| MALFUNCTION<br>TEST OR INSPECTION<br>CORRECTIVE ACTION |
|---|

Step 5. Check aftercooler for debris or deposits.
If debris or deposits are found, notify unit maintenance.

Step 6. Check outside of radiator core for obstructions.
If clogged, remove debris. Refer to table 2-1.

Step 7. Check radiator fan.
If fan is not turning, check for loose or broken drivebelt.
If loose or broken, notify unit maintenance.

Step 8. Check radiator fan clutch operation.
If fan is not turning, notify unit maintenance.

Step 9. Check for loose or broken water pump drivebelt.
If loose or broken, notify unit maintenance.

END OF TESTING!

## CENTRAL TIRE INFLATION SYSTEM (CTIS)

### 24. INADEQUATE TIRE INFLATION/DEFLATION UNDER VARIOUS ROAD CONDITIONS

Step 1. Check air lines for broken or restricted tubes.
If tubing is broken or restricted, notify unit maintenance.

Step 2. Check tires for punctures.
If punctured, replace with spare tire and notify unit maintenance.

Step 3. If problem persists, inflate/deflate tires manually (para. 3-9) and notify unit maintenance.

END OF TESTING!

### 25. ELECTRONIC CONTROL UNIT (ECU) FAILS TO OPERATE

Step 1. Accessory/battery switch should be in the ON position.
If in OFF position, turn ON.

Step 2. Check for loose wiring harness connectors on back of ECU.
If loose, reconnect.

Step 3. Check for loose wiring harness connectors on power manifold.
If loose, reconnect.

*Table 3-1. Troubleshooting (Contd).*

| MALFUNCTION<br>TEST OR INSPECTION<br>CORRECTIVE ACTION |
|---|

Step 4. If ECU continues to fail to operate, notify unit maintenance.

Step 5. If problem persists, inflate/deflate tires manually (para. 3-9) and notify unit maintenance.

END OF TESTING!

**26. TIRES WILL NOT INFLATE/DEFLATE**

Step 1. Check for loose wiring harness connectors on power manifold. If loose, reconnect.

Step 2. Check for loose wiring harness connectors on back of ECU. If loose, reconnect.

Step 3. Visually inspect ECU, manifold, and wheel valves for damage. If damaged, notify unit maintenance.

Step 4. Check tire pressure. If below 10 psi (69 kPa), CTIS will not inflate tire.

Step 5. If problem persists, inflate/deflate tires manually (para. 3-9) and notify unit maintenance.

END OF TESTING!

## COMPRESSED AIR SYSTEM

**27.** Deleted

**28. WATER APPEARS WHEN AIR RESERVOIRS ARE DRAINED**

Notify unit maintenance.

*Table 3-1. Troubleshooting (Contd).*

| MALFUNCTION<br>TEST OR INSPECTION<br>CORRECTIVE ACTION |
|---|

**29. LONG OR CONTINUOUS PURGE CYCLE**

Notify unit maintenance.

**30. INSUFFICIENT AIR PRESSURE AS INDICATED BY LOW AIR PRESSURE BUZZER OR AIR PRESSURE GAUGE**

Step 1. Check to see if air reservoir drain valves are open.
If open, close air reservoir drain valves (para. 2-3).

Step 2. Check air compressor operation.
a. Start engine (para. 2-12) and allow air pressure to build.
b. Touch outlet line of air compressor.
c. If compressor outlet line is warm, proceed to step 3.
d. If compressor outlet line is cold, notify unit maintenance.

Step 3. Check air lines for loose connections or damage.
a. Tighten loose connections.
b. If air lines are damaged, notify unit maintenance.

Step 4. Deleted

Step 5. Notify unit maintenance if condition continues.

END OF TESTING!

## SLAVE RECEPTACLE

**31. SLAVE CABLE CONNECTED BUT ENGINE WILL NOT TURN OVER**

Step 1. Check for poor receptacle connections.
Make proper connections.

Step 2. Check if slave receptacle battery cables are loose or disconnected.
If loose or disconnected, notify unit maintenance.

*Table 3-1. Troubleshooting (Contd).*

| MALFUNCTION<br>TEST OR INSPECTION<br>CORRECTIVE ACTION |
|---|

## SPECIAL PURPOSE KITS: ARCTIC WINTERIZATION KIT

**32. ENGINE FAILS TO REACH OPERATING TEMPERATURE**

Check to see if radiator cover aperture flap is open (para. 2-43).

Roll flap down closed if open.

**33. ENGINE TEMPERATURE EXCEEDS 230°F (110°C)**

Check to see if radiator cover aperture flap is closed (para. 2-43).

Roll flap open and secure if closed.

**34. FUEL BURNING PERSONNEL HEATER FAILS TO START WHEN RUN-OFF-START SWITCH IS HELD IN START POSITION**

**WARNING**

- Exhaust gases can kill. Do not operate engine coolant heater in closed area occupied by personnel. Doing so may result in injury to personnel.
- Do not perform fuel system checks or services while smoking or near fire, flames, or sparks. Always keep a fire extinguisher nearby. Fuel may ignite causing injury to personnel.

**NOTE**

If RUN-OFF-START switch is turned to RUN position before red indicator light illuminates, heater will not operate.

Step 1. Press PRESS-TO-TEST button on heater control box to check operation of circuit.

If red indicator light does not illuminate, notify unit maintenance.

Step 2. Check to see if HI-LO switch on heater control box is set to HI.

Set HI-LO switch to HI.

Step 3. Check fuel level on fuel gauge.

Fill fuel tank if necessary (para. 1-16).

Step 4. Check to see if personnel heater shutoff cock is closed. Refer to (para. 2-4).

Open personnel heater shutoff cock.

END OF TESTING!

*Table 3-1. Troubleshooting (Contd).*

| MALFUNCTION<br>TEST OR INSPECTION<br>CORRECTIVE ACTION |
|---|

**35. POWER PLANT HEATER FAILS TO START WHEN RUN-OFF-START SWITCH IS HELD IN START POSITION**

**WARNING**

Exhaust gases can kill. Do not operate power plant heater in closed area occupied by personnel. Doing so may result in injury to personnel.

**CAUTION**

Do not operate fuel burning personnel heater and power plant heater at the same time. Doing so may result in overworked electric fuel pump.

**NOTE**

If RUN-OFF-START switch is turned to RUN position before red indicator light illuminates, heater will not operate.

Step 1. Press PRESS-TO-TEST button on heater control box to check operation of circuit.

If red indicator light does not illuminate, notify unit maintenance.

Step 2. Check fuel level on fuel gauge.

Fill fuel tank if necessary.

Step 3. Check to see if power plant heater shutoff cock is closed (para. 2-4).

Open power plant heater shutoff cock.

**NOTE**

Select HI position if engine is cold. Select LO position if engine is already well heated. When in HI position, heater will automatically change to LO position when coolant temperature exceeds 190°F (88°C), and automatically change to HI position when coolant temperature drops below 120°F (49°C).

**36. HEATER FAILS TO CONTINUE BURNING**

Check fuel level on fuel gauge.

Fill fuel tank if necessary.

*Table 3-1. Troubleshooting (Contd).*

| MALFUNCTION<br>TEST OR INSPECTION<br>CORRECTIVE ACTION |
|---|

**37. WINDSHIELD DEFROSTERS NOT OPERATING**

Step 1. Check adjustment of defroster control handle.

Adjust defroster control handle.

Step 2. Check for restrictions in defroster deflectors.

Clear restriction.

**38. ENGINE OIL PAN SHROUD NOT RECEIVING HEAT (POWER PLANT HEATER ONLY)**

Step 1. Check to see if power plant heater is operating (para. 2-28).

Start heater. If inoperative, notify unit maintenance.

Step 2. Check to see if power plant heater exhaust tube is disconnected from oil pan shroud.

Connect heater exhaust tube.

**39. ENGINE COOLANT SYSTEM NOT RECEIVING HEAT (POWER PLANT HEATER ONLY)**

Step 1. Check to see if power plant heater is operating (para. 2-28).

If inoperative, notify unit maintenance.

Step 2. Check to see if one or more coolant shutoff cocks are closed at engine.

Open coolant shutoff cock(s).

## DEEPWATER FORDING KIT

**40. FORDING CONTROL HANDLE INOPERATIVE**

Check to see if wire is attached to fording control valve.

If not attached, notify unit maintenance.

*Table 3-1. Troubleshooting (Contd).*

| MALFUNCTION<br>TEST OR INSPECTION<br>CORRECTIVE ACTION |
|---|

## A-FRAME KIT

**41. WINCH INOPERATIVE**

Check winch.

Refer to malfunction 22.

**42. A-FRAME INOPERATIVE OR MISALIGNED**

Step 1. Check to see if cable is installed in towing pintle.

If not, install cable in towing pintle and lock pintle in closed position.

Step 2. Check for loose cable clamps and frays or breaks in cable.

If cable clamps are loose, or cable broken or frayed, notify unit maintenance.

Step 3. Check to see if A-frame is bent.

If A-frame is bent, notify unit maintenance.

# Section III. OPERATOR MAINTENANCE PROCEDURES

## 3-4. GENERAL

The operator/crew is responsible for maintenance services listed in this section. To find a specific paragraph, refer to the index below.

## 3-5. MAINTENANCE PROCEDURES INDEX


| PARA. NO. | TITLE | PAGE NO. |
|---|---|---|
| 3-6. | Break-In Operation | 3-19 |
| 3-7. | Checking Fluid Levels | 3-20 |
| 3-8. | Air Cleaner Service | 3-24 |
| 3-9. | Wheels and Tires | 3-26 |
| 3-10. | Battery Inspection | 3-32 |
| 3-11. | Priming the Fuel System | 3-33 |
| 3-12. | Power Steering Assist System Service | 3-34 |


## 3-6. BREAK-IN OPERATION

**a. Road Test.**

CAUTION

Do not go faster than the maximum allowable speeds shown on the maximum road speed data plate. Do not drive continuously at maximum allowable speeds. Be alert for signs of equipment failure. Failure to do this may result in equipment damage.

All vehicles received by the using organization must be road-tested to check operation and condition of all reconditioned vehicles, except those previously driven 50 mi (80 km). The operator will check the instrument panel and gauges as often as possible for signs of unsatisfactory performance. Stops will be made at least every 10 mi (16 km) to give the operator a chance to check the vehicle for possible coolant, oil, fuel, or exhaust leakage and any signs that may show the engine, transmission, wheel hubs, brakedrums, axles, differentials, or transfer case assemblies are overheated. The vehicle must be checked thoroughly for any control that is hard to operate and any instrument not operating properly. Unusual noises and vibration will be noted. All unusual conditions will be reported to unit level maintenance.

## 3-6. BREAK-IN OPERATION (Contd)

**b. After Road Test.** After the road test, correct any faulty condition that can be done at operator's maintenance level. Notify unit maintenance about any other faulty condition.

## 3-7. CHECKING FLUID LEVELS

**a. Coolant Surge Tank.**

WARNING

Care must be taken when removing surge tank filler cap. Steam, or hot coolant under pressure, may cause injury to personnel.

**(1)** Check coolant level through sight tube (4) on surge tank (3).

**(2)** If coolant level appears low in sight tube (4), remove surge tank filler cap (1), and add coolant through filler tube (2) as necessary. Fill surge tank (3) until coolant level is centered in sight tube (4).

**(3)** Install surge tank filler cap (1), start engine (para. 2-12), and run to normal operating temperature of 160°-230°F (71°-110°C).

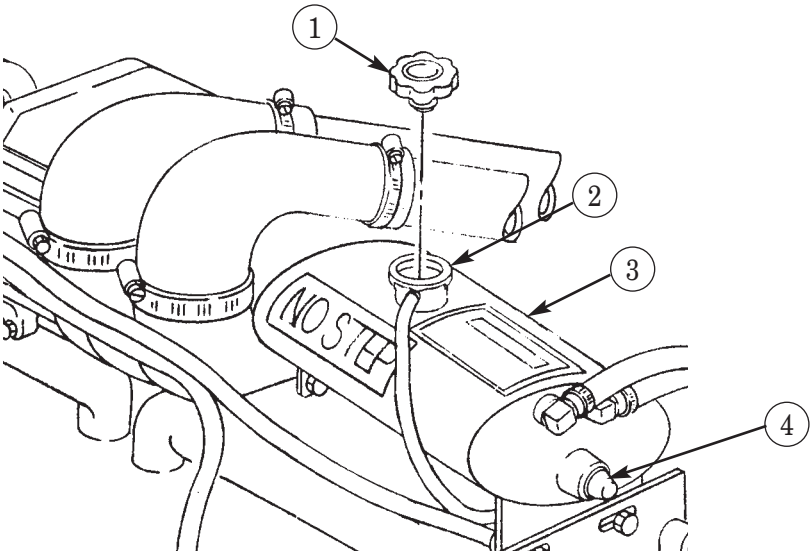

## 3-7. CHECKING FLUID LEVELS (Contd)

**b. Engine Crankcase Oil Level.**

CAUTION

Check oil level in engine approximately one minute after shutting down engine. Never operate engine with oil level below ADD level mark or above FULL level mark on dipstick. Engine operation with improper oil levels may cause internal engine component damage.

**(1)** Ensure vehicle is parked on level ground.

**(2)** Engine dipstick (5) is located on the left side of the engine (9).

**(3)** Remove dipstick (5) from dipstick tube (7).

**(4)** Wipe dipstick (5) clean and return to dipstick tube (7).

**(5)** Withdraw dipstick (5) slowly to prevent false reading.

**(6)** If engine oil is below ADD level mark on dipstick (5), remove oil filler cap (6) from oil fill tube (8) and add engine oil (table 2-2) as necessary.

**(7)** Install oil filler cap (6) on oil fill tube (8).

**(8)** Recheck engine oil level. Ensure oil level is positioned between the FULL and ADD level marks on dipstick (5).

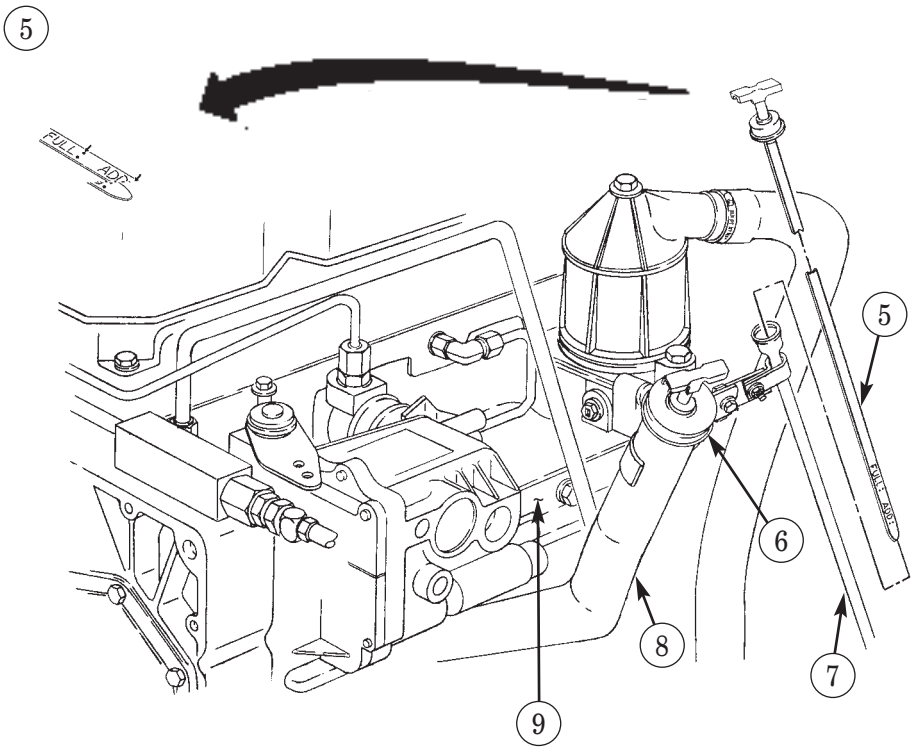

## 3-7. CHECKING FLUID LEVELS (Contd)

**c. Transmission Oil Level.**

WARNING

Hearing protection is required when maintaining vehicle with engine running.

CAUTION

- Do not permit dirt, dust, or grit to enter transmission filler tube. Thoroughly clean access door, dipstick handle, and end of filler tube. Serious internal transmission damage may result if transmission is contaminated.
- Do not check transmission oil level if transmission oil temperature gauge indicates over 200°F (93°C). Stop engine and allow transmission to cool.

NOTE

- Transmission oil level is checked daily with engine running. Transmission oil dipstick is located under the access door on the floor of cab in front of companion seat.
- Ensure parking brake is applied and transmission is in neutral position before starting engine.

**(1)** Start engine (para. 2-12).

**(2)** Open access door (2) and remove dipstick (1) from filler tube (3).

**(3)** Wipe dipstick (1) clean and return to filler tube (3).

**(4)** Withdraw dipstick (1) slowly to prevent false reading.

**(5)** If transmission oil temperature is below 160°F (71°C), oil level should be between COLD RUN level marks on dipstick (1).

**(6)** If transmission oil temperature is 160°-200°F (71°-93°C), oil level should be between HOT RUN level marks on dipstick (1).

**(7)** Return dipstick (1) to filler tube (3) and recheck oil level.

**(8)** If oil level is not within limits, add oil (table 2-2) or drain oil as necessary, notify unit maintenance.

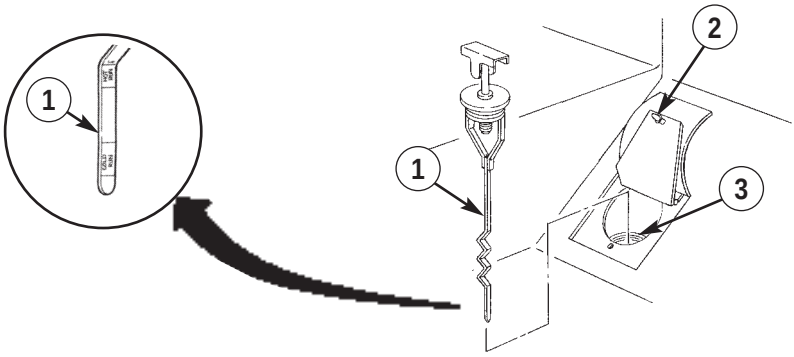

## 3-7. CHECKING FLUID LEVELS (Contd)

**d. Front Winch Hydraulic Oil Reservoir Level.**

CAUTION

Before opening hydraulic reservoir, ensure area around reservoir filler cap is clean. Do not allow dirt, dust, or water to enter reservoir. Failure to do this may cause damage to internal components.

**(1)** Check oil level through sight glass (6) on hydraulic oil reservoir (5).

**(2)** If oil level is not seen in sight glass (6), remove cap (4) and add oil as necessary (table 2-2). Fill hydraulic oil reservoir (5) until oil level is centered in sight glass (6).

**e. Master Cylinder Reservoir Oil Level.**

WARNING

Clean master cylinder reservoir filler cap and surrounding area before removing cap. System contamination may result in injury to personnel or damage to equipment.

**(1)** Remove two filler caps (7) from master cylinder reservoir (8).

**(2)** Check that oil level is to bottom ring of opening.

**(3)** Fill master cylinder reservoir (8) to bottom ring of opening as necessary (table 2-2).

**(4)** Install two filler caps (7) on master cylinder reservoir (8).

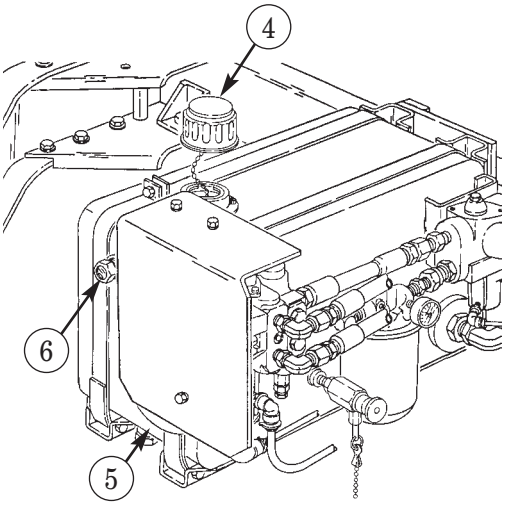


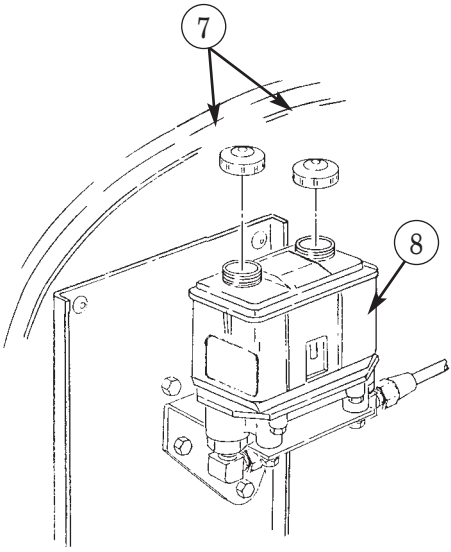

## 3-8. AIR CLEANER SERVICE

**WARNING**

If NBC exposure is suspected, all air filter media should be handled by personnel wearing protective equipment. Consult your unit NBC officer or NBC NCO for appropriate handling or disposal instructions.

**a. General.** Air cleaner service is required whenever the yellow band is visible in window of air cleaner indicator (1). The operator will service the air cleaner in an emergency situation only. Notify unit maintenance as soon as possible.

**CAUTION**

Do not operate engine without an air cleaner element. Doing this may result in internal engine component damage.

**b. Removal.**

**(1)** Loosen wingnut (6) and remove cover flange (2) from air cleaner (4).

**NOTE**

Inspect seal on cover flange (2) for damage. If damaged, notify unit maintenance.

**(2)** Remove wingnut (3) and filter element (5) from air cleaner (4).

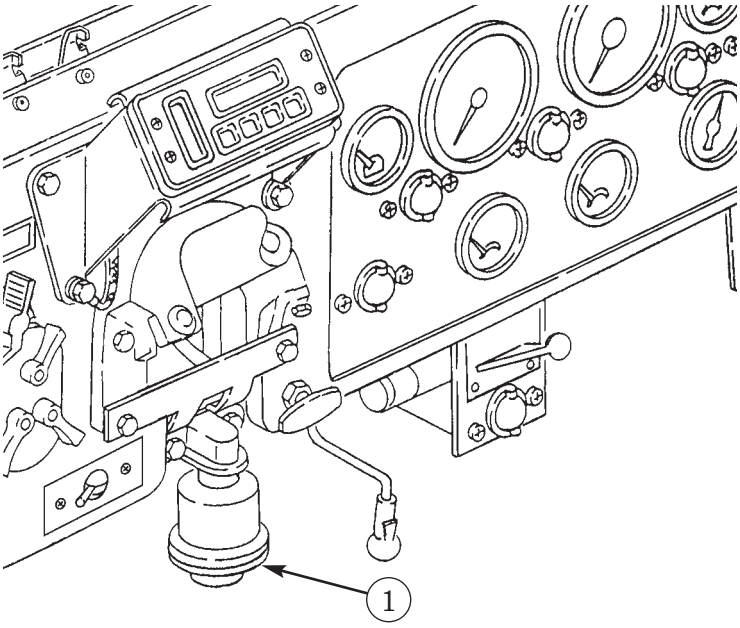

## 3-8. AIR CLEANER SERVICE (Contd)

**WARNING**

Compressed air used for cleaning purposes will not exceed 30 psi (207 kPa). Use only with effective chip guarding and personal protective equipment (goggles/shields, gloves, etc.).

**(3)** Clean filter element (5) by tapping lightly, or use compressed air to loosen and remove dirt.

**c. Installation.**

**(1)** Install filter element (5) in air cleaner (4) with wingnut (3).

**(2)** Install cover flange (2) on air cleaner (4) and tighten wingnut (6).

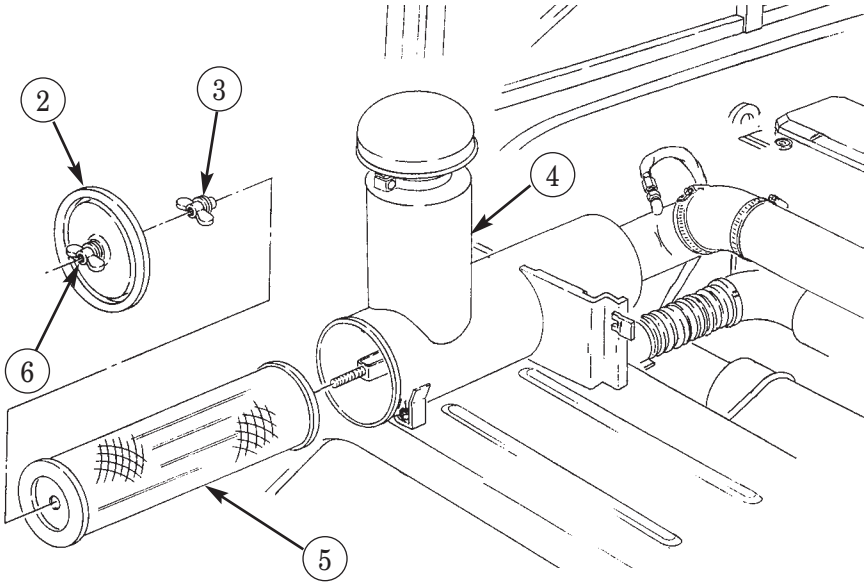

## 3-9. WHEELS AND TIRES

**a. General.** Tires are checked as part of preventive maintenance checks and services (refer to table 2-2). If tire becomes flat while operating, stop vehicle immediately if tactical situation permits.

**b. Spare Wheel Replacement.**

NOTE

This procedure requires two personnel.

**(1) Removal.**

**(a)** Park vehicle on level ground with engine off and parking brake applied.

**(b)** Remove two nuts (3) from studs (5) and bracket (2).

WARNING

When lowering spare wheel, hold wrench handle bar securely. Do not release bar until wheel touches ground. If bar must be released before wheel touches ground, lock shaft in place with pawl. Failure to do this may cause wheel to drop and bar to spin, resulting in injury or death to personnel.

**(c)** Using wheel stud nut wrench and wrench handle bar, turn shaft (8) clockwise to take the tension off the pawl (1) so it can be released.

**(d)** Using wheel stud nut wrench and wrench handle bar, turn shaft (8) counterclockwise until spare wheel (7) is lowered to ground.

**(e)** Remove plate (6) from spare wheel (7).

**(2) Installation.**

**(a)** Position plate (6) and two studs (5) on spare wheel (7).

WARNING

Pawl must rest on shaft gear teeth before raising spare wheel. Failure to do this may cause wheel to drop and bar to spin, resulting in injury or death to personnel.

**(b)** Using wheel stud wrench and wrench handle bar, turn shaft (8) clockwise until spare wheel (7) is raised into place against bracket (2).

WARNING

Ensure studs are fully seated in slots before installing nuts. Wheels may drop during operation of vehicle, resulting in injury or death to personnel.

**(c)** Install two nuts (3) on studs (5) of plate (6) over slots (4) in bracket (2).

**(d)** Tighten two nuts (3).

## 3-9. WHEELS AND TIRES (Contd)

**c. Jacking Procedure.**

**(1) Raising Vehicle.**

WARNING

Do not work under vehicle that is supported by jack only. Jack may slip, causing vehicle to fall, and result in injury or death to personnel.

NOTE

- This task is shown for the right front wheel only, but is the same for all wheels.
- If ground is soft, place a solid object such as wood block or field expedient dunnage under hydraulic jack for support.

**(a)** Park vehicle on level ground, with engine off, parking brake applied, and wheels chocked.

**(b)** Remove hydraulic jack (14) and handle (11) from toolbox.

**(c)** If ground is soft, place a solid object such as a wood block (13) on ground under axle housing (10) and position hydraulic jack (14) on wood block (13).

**(d)** Turn jack screw (15) until it is completely extended.

**(e)** Turn bleeder valve (12) clockwise, with slotted end of jack handle (11), until it stops.

**(f)** Insert jack handle (11) in hydraulic jack (14) and move handle up and down until wheel (9) has been raised off ground.

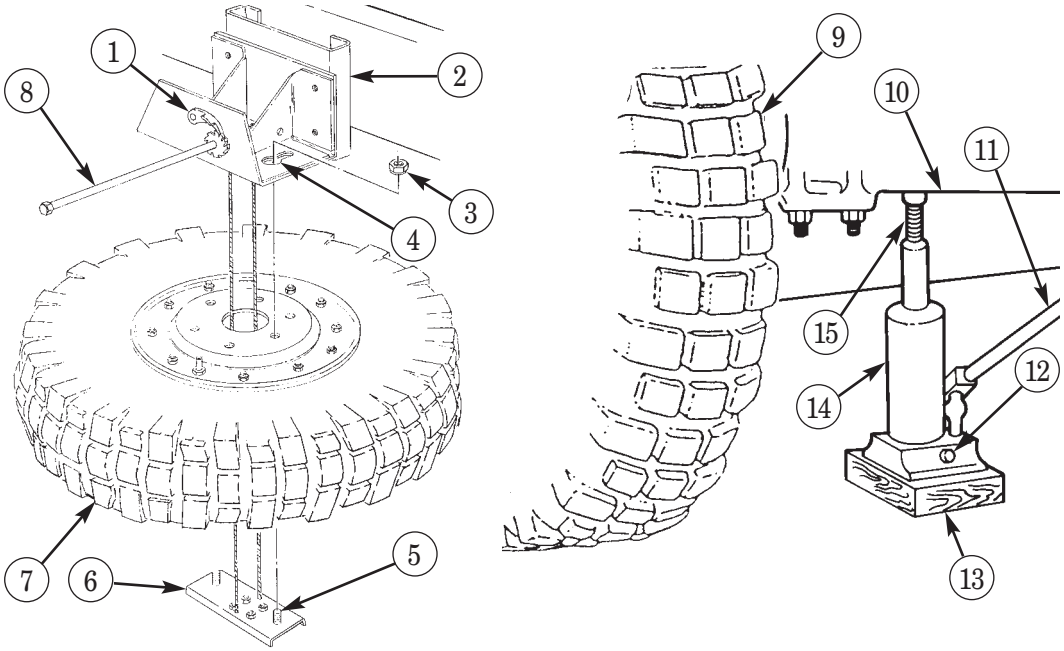

## 3-9. WHEELS AND TIRES (Contd)

**(2) Lowering Vehicle.**

**(a)** Turn bleeder valve (6) slowly counterclockwise with slotted end of jack handle (5), and wheel (3) will gently lower to ground.

**(b)** Remove wooden block (7), hydraulic jack (8), and handle (5) from under axle housing (4).

**(c)** Turn jack screw (9) until it is completely down and place tools in toolbox.

**d. Chocking Wheels.**

WARNING

Keep hands out from between chocks and tires. Failure to do so may result in injury to personnel.

NOTE

Wheels must be chocked before performing any under-vehicle maintenance, or when parking on a grade.

**(1)** On level ground set chocks (1) in front of and behind tire (2) not being raised. If vehicle is parked on a slope, place chocks (1) on the downhill side.

**(2)** After use, remove chocks (1) from tire (2).

**e. Wheel Replacement.**

**(1) Removal.**

WARNING

- Completely deflate tires before removing from axles if there is obvious damage to wheel components. Injury or death to personnel may result from exploding wheel components.
- Super-single wheels and tires together weigh 382 lbs (173 kg). Do not attempt to remove and install a wheel and tire without assistance. Doing so may result in injury to personnel.

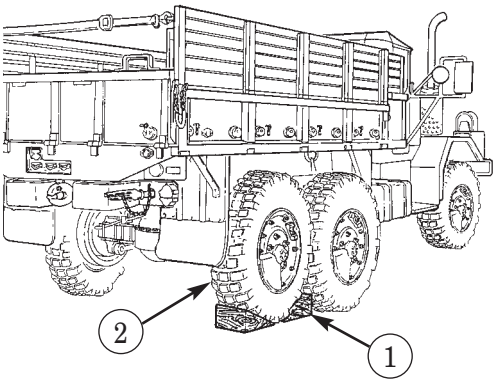


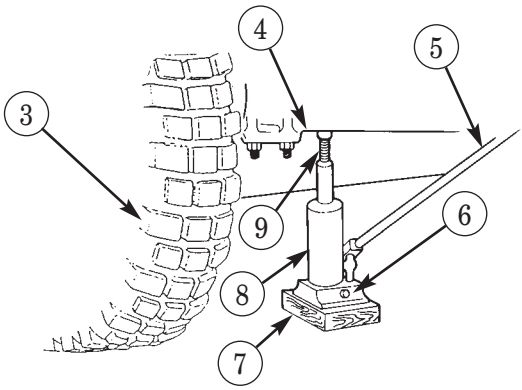

## 3-9. WHEELS AND TIRES (Contd)

**(a)** Remove two nuts (10), screws (8), lockwashers (9), and stone shield (19) from drive flange (13) and wheel assembly (12).

NOTE

- Wheel stud nuts on left side have left-hand threads and must be turned to the clockwise to loosen. Wheel stud nuts on right side have right-hand threads and must be turned to the counterclockwise to loosen. Studs and nuts are stamped (L) left and (R) right.
- Match hollow stud-to-wheel position prior to removing wheel.

**(b)** Disconnect tube (11) from adapter (18).

**(c)** Remove adapter (18) and elbow (17) from hollow wheel stud (15).

**(d)** Using wheel stud nut wrench, loosen, but do not remove, six wheel stud nuts (16).

**(e)** Position hydraulic jack and raise wheel assembly off ground. Refer to task c.

CAUTION

Do not slide wheel on threaded studs. Sliding wheel may damage threads.

**(f)** Remove six wheel stud nuts (16) with wheel stud nut wrench.

**(g)** Grip wheel assembly (12), pull toward you, and remove from wheel studs (14) and (15).

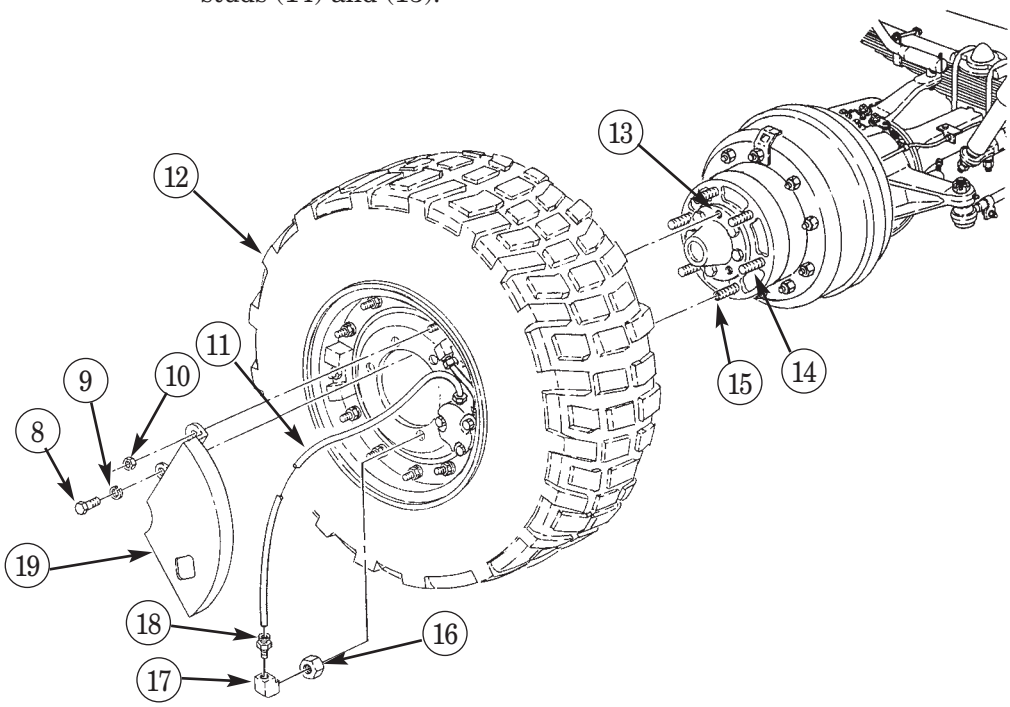

## 3-9. WHEELS AND TIRES (Contd)

**(2) Installation.**

CAUTION

When installing stud nuts, ensure that curved (ball seat) surface of nut is toward wheel to ensure proper seating. Failure to do this may result in damage to wheel

NOTE

- Nuts have left-hand threads on left wheel assembly and right-hand threads on right wheel assembly. Studs and nuts are stamped (L) left and (R) right.
- Use jack handle as a prybar to raise wheel over wheel studs.
- Do not remove wheel valve or counterweight if replacing wheel assembly with spare tire. Notify your supervisor.

**(a)** Remove spare wheel from spare wheel carrier and install unserviceable wheel in carrier. Refer to task b.

**(b)** Lift wheel assembly (5) and position on wheel studs (7) and (8).

**(c)** Install and hand-tighten six wheel stud nuts (9) on wheel studs (7) and (8).

**(d)** Lower wheel assembly (5) to ground. Refer to task c.

**(e)** Using wheel stud nut wrench, tighten wheel stud nuts (9) alternately, in tightening sequence shown.

**(f)** Install elbow (10) and adapter (11) on hollow wheel stud (8).

**(g)** Connect tube (4) on adapter (11).

NOTE

Perform step h if wheel assembly is replaced with spare tire.

**(h)** Install cap (9) (Appendix B, Item 10) on hollow wheel stud (8).

**(i)** Install stone shield (12) on drive flange (6) and wheel assembly (5) with two nuts (3), lockwashers (2), and screws (1).

NOTE

- Have lockwasher replaced and stud nuts checked and tightened to specified torque by maintenance personnel as soon as possible.
- Return unserviceable wheel and tire assembly to maintenance personnel for repair, replacement, or exchange.

**(3) Tire Gauging.**

WARNING

Stand clear of tire while gauging and inflating. Injury or death to personnel may result from wheel components if tire explodes.

**(a)** Remove tire inflation gauge (20) and hose (15) assembly (Appendix B, Item 4) from stowage compartment.

**(b)** Start at one corner of vehicle and gauge all tires. Apply tire gauge air chuck (19) on wheel valve stem (18) and press down to read tire pressure on gauge dial (17).

## 3-9. WHEELS AND TIRES (Contd)

**(4) Manual Tire Inflation.**

**(a)** Remove tire inflation gauge (20) and hose (15) assembly (Appendix B, Item 4) from tool box.

**(b)** Connect one end of hose (15) to emergency side air coupling (13) and open air shutoff valve (14). If necessary, start engine (para. 2-12), if not started.

**(c)** Apply air chuck (19) on wheel valve stem (18) and press down firmly. Depress air chuck lever (16) to inflate tire. Release air chuck lever (16) momentarily to read tire pressure on gauge dial (17). Adjust tire pressure as necessary.

**(d)** When tire inflation operation is completed, remove air chuck (19) from wheel valve stem (18).

**(e)** Close air shutoff valve and remove hose (15) from trailer air coupling.

**(f)** Return tire inflation gauge (20) and hose (15) assembly to toolbox.

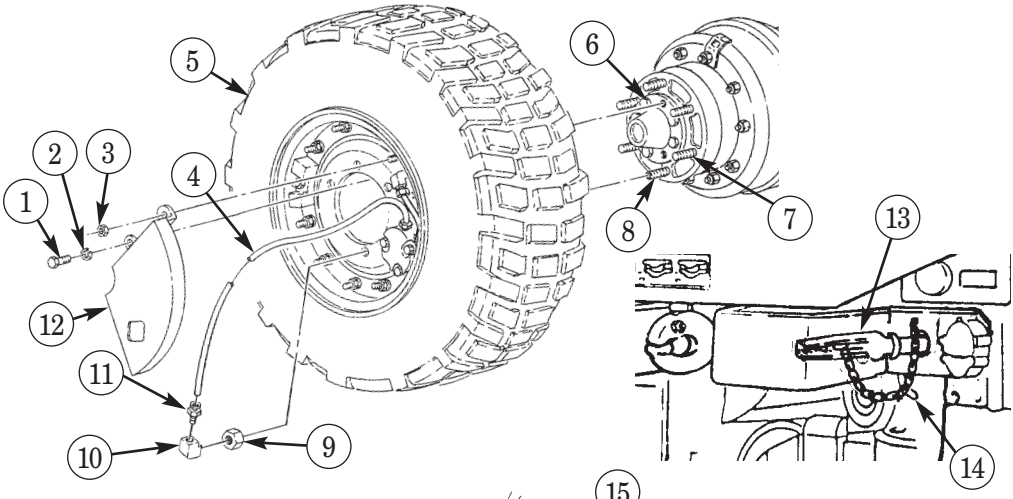


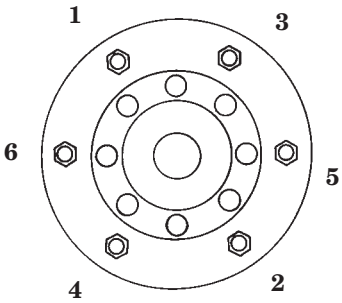


**TIGHTENING SEQUENCE**

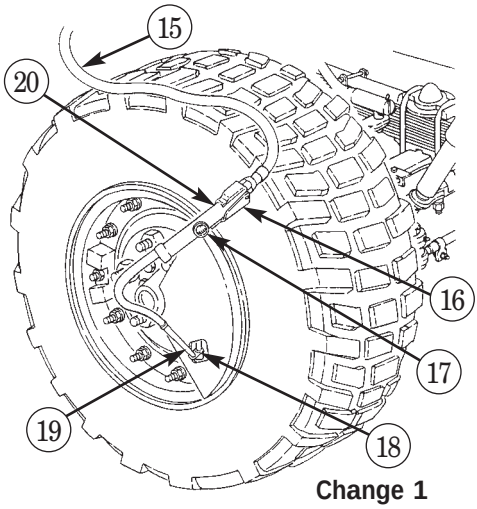

## 3-10. BATTERY INSPECTION

**WARNING**

Do not smoke, allow open flames, sparks, or wear jewelry when working near batteries. Battery gases may explode, causing injury or death to personnel.

**a.** Park vehicle with engine off and parking brake applied.

**b.** Turn handle (5) down and open battery compartment door (4).

**c.** Remove two retainer pins (3) from handles (2).

**d.** Release handles (2) and pull battery box (1) onto running board (6).

**e.** Remove all battery filler caps (9) and check fluid level in each cell. If fluid level is low, notify unit maintenance. Replace filler caps (9).

**WARNING**

When checking battery connections, do not let tools touch vehicle. This may cause a direct short, arcing, tool will heat to red hot, and battery may explode, resulting in serious injury or death to personnel.

**f.** Check cable-to-clamp connections (10), clamp-to-post connections (8), and ground connection (7) for tightness. If connections require tightening, notify unit maintenance.

**g.** Push battery box (1) in place and position with handles (2).

**h.** Secure handles (2) with two retainer pins (3).

**i.** Close battery compartment door (4) and turn handle (5) up to secure in place.

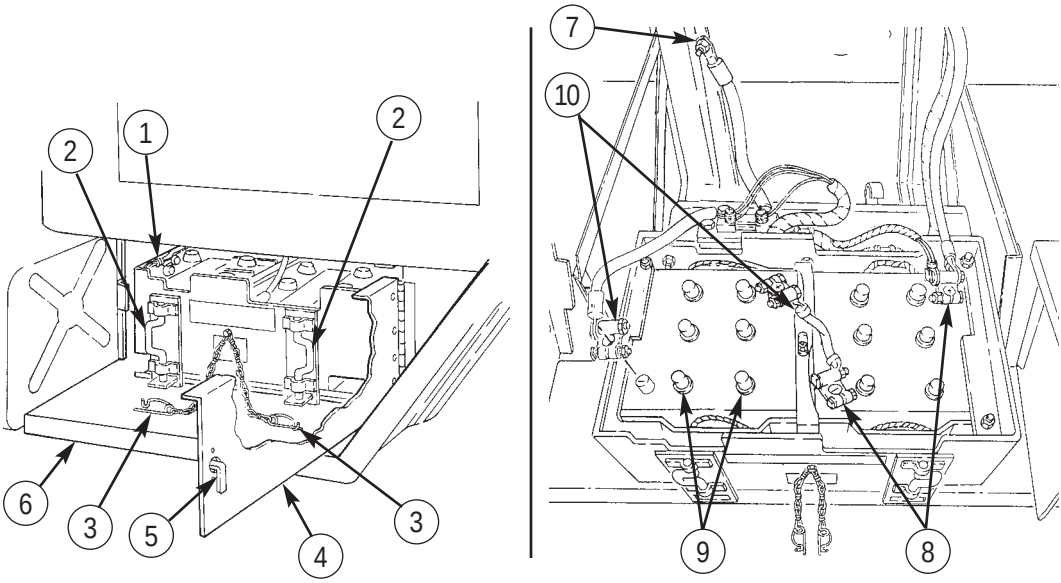

## 3-11. PRIMING THE FUEL SYSTEM

**CAUTION**

Do not engage starter switch for more than 15 seconds at a time or with headlights on. If engine does not start in 15 seconds, wait 30 seconds before engaging starter switch again. Failure to do this may result in damage to starter.

**NOTE**

The fuel system must be primed if fuel system has been drained for maintenance, or if vehicle has been run out of fuel.

**a.** Set throttle half-open by pressing accelerator pedal (1) or engaging throttle control (4).

**b.** Place accessory/battery switch (3) in ON position.

**c.** Engage starter switch (2) for 15 seconds.

**d.** Allow at least 30 seconds before engaging starter switch (2) again. Repeat steps b and c until engine starts.

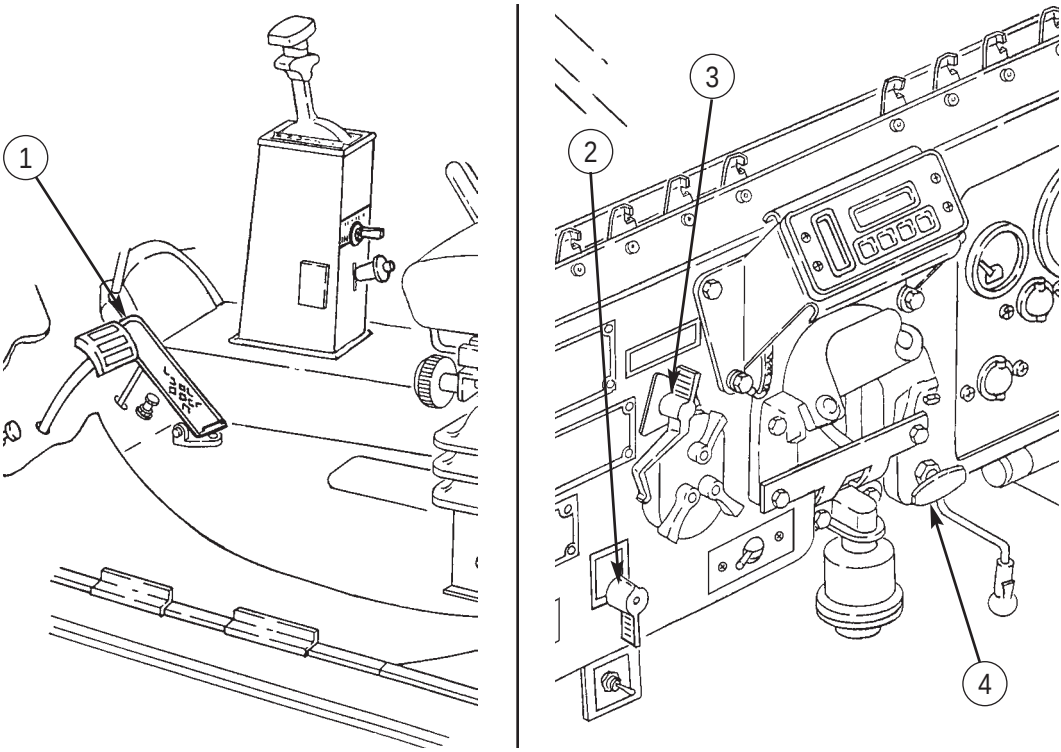

## 3-12. POWER STEERING ASSIST SYSTEM SERVICE

**General.** Closing the manual shutoff valve must be done prior to inspecting and servicing the components of the power steering assist system. In the event of a catastrophic failure of the power assist steering system, the manual shutoff valve can be closed and operation of the vehicle continued using manual steering.

**WARNING**

Manual shutoff valve must be closed prior to inspecting or servicing the power steering assist system. Small parts under pressure may shoot out with high velocity, causing injury to personnel.

**a.** Raise and secure hood (para. 2-23).

**b.** Close manual shutoff valve (1) on firewall (2).

**c.** Turn steering wheel (3) back and forth to exhaust remaining air from power steering assist system.

**d.** Check for loose, broken, or cracked air lines, and power steering assist components. Tighten loose fitting(s). Notify unit maintenance if power steering assist components are damaged.

**e.** Open manual shutoff valve (1).

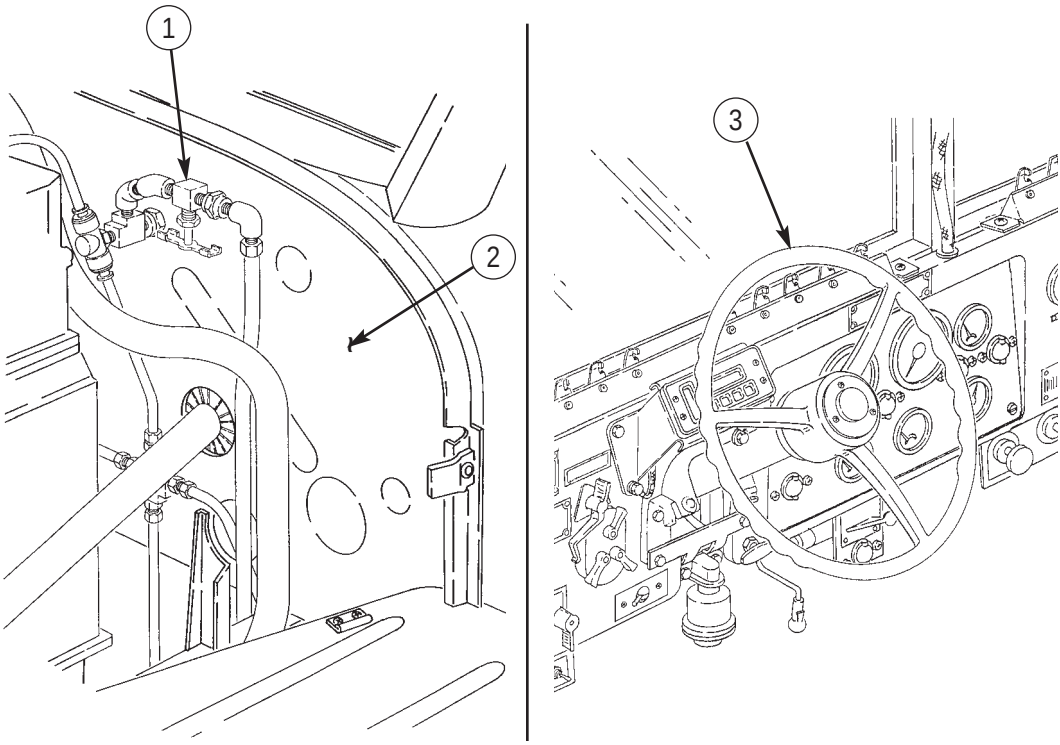

# APPENDIX A
# REFERENCES

## A-1. SCOPE

This appendix lists all forms, field manuals, and technical manuals for use with this manual.

## A-2. PUBLICATIONS INDEX

The following index should be consulted frequently for latest changes or revisions and for new publications relating to material covered in this manual.

Consolidated Index of Army Publications and Blank Forms ..... DA PAM 25-30
The Army Maintenance Management System (TAMMS) ..... DA PAM 738-750

## A-3. FORMS

The following forms pertain to this manual. (See DA PAM 25-30 for Consolidated Index of Army Publications and Blank Forms. See DA PAM 738-750, The Army Maintenance Management System (TAMMS), for instructions on the use of maintenance forms pertaining to this manual.)

Equipment Control Record ..... DA Form 2408-9
Equipment Inspection and Maintenance Worksheet ..... DA Form 2404
Field Organizations Unit Status Report ..... AR 220-1
Maintenance Request ..... DA Form 2407
Packaging Improvement Report ..... DD Form 6
Preventive Maintenance Schedule and Record ..... DD Form 314
Processing and Deprocessing Record for Shipment, Storage, and Issue of Vehicles and Spare Engines ..... DD Form 1397
Quality Deficiency Report (Category 11) ..... SF 368
Recommended Changes to Publications and Blank Forms ..... DA Form 2028
Recommended Changes to Equipment Technical Publications . DA Form 2028-2
Report of Discrepancy (ROD) ..... SF 364

## A-4. FIELD MANUALS

Army Motor Transport Units and Operations ..... FM 55-30
Basic Cold Weather Manual ..... FM 31-70
Field Hygiene and Sanitation ..... FM 21-10
First Aid for Soldiers ..... FM 21-11
Manual for the Wheeled Vehicle Driver ..... FM 21-305
Mountain Operations ..... FM 90-6 (HTF)

# APPENDIX A (Contd)

## A-4. FIELD MANUALS (Contd)

Northern Operations ..... FM 31-71
Nuclear, Biological, and Chemical (NBC) Decontamination ..... FM 3-5
Nuclear, Biological, and Chemical (NBC) Defense ..... FM 21-40
Nuclear, Biological, and Chemical (NBC) Protection ..... FM 3-4
Operation and Maintenance of Ordnance Materiel in
Cold Weather (0°-65°F) ..... FM 9-207
Petroleum Supply Point Equipment Operations ..... FM 10-69
Petroleum Tank Vehicle Operations ..... FM 10-71
Route Reconnaissance and Classification ..... FM 5-36
Vehicle Recovery Operations ..... FM 20-22

## A-5. TECHNICAL MANUALS

Chemical, Biological, and Radiological (CBR)
Decontamination ..... TM 3-220
Chemical, Toxicological, and Missile Fuel Handlers
Protective Clothing ..... TM 10-277
Cooling Systems: Tactical Vehicles ..... TM 750-254
Deepwater Fording of Ordnance Materiel ..... TM 9-238
Equipment Improvement Report and
Maintenance Summary ..... TM 43-0143
Marking, Packing, and Shipment of Supplies and Equipment ..... TM 746-10
Operator's and Organization Maintenance
Manual for Chemical Alarm ..... TM 3-6665-225-12
Operator's and Organizational Maintenance
Manual Including Repair Parts and Special
Tools List for Decontamination Apparatus ..... TM 3-4230-214-12&P
Operator's Manual for 2-1/2-Ton, 6x6,
M44A2 Series Trucks (Multifuel) ..... TM 9-2320-361-10
Operator's, Organizational, Direct Support,
and General Support Maintenance Manual
for Lead-Acid Storage Batteries ..... TM 9-6140-200-14
Operation and Maintenance of Ordnance
Materiel in Extreme Cold Weather (0°-65°F) ..... TM 9-207
Organizational Care, Maintenance, and Repair
of Pneumatic Tires and Inner Tubes ..... TM 9-2610-200-24
Principles of Automotive Vehicles ..... TM 9-8000
Procedures for Destruction of Tank-Automotive Equipment
to Prevent Enemy Use ..... TM 750-244-6

# APPENDIX A (Contd)

## A-5. TECHNICAL MANUALS (Contd)

Rigging ..... TM 5-725
Standards and Criteria for Technical Inspection and
Classification of Tires .....TM 9-2610-201-14
Use and Care of Hand Tools and Measuring Tools ..... TM 9-243
Welding Theory and Application ..... TM 9-237

## A-6. TECHNICAL BULLETINS

Color, Marking, and Camouflage Painting of
Military Vehicles ..... TB 43-0209
Non-Aeronautical Equipment, Army Oil
Analysis Program (AOAP) ..... TB 43-0210
Occupational and Environmental Health:
Hearing Conservation ..... TB MED 501
Standards for Oversea Shipment or Domestic Issue of Special
Purpose Vehicles, Combat, Tactical, Construction, and Selected
Industrial and Troop Support. ..... TB 9-2300-281-35
Quarterly Equipment Improvement Report and
Maintenance Digest: Tank and Automotive Equipment ..... TB-43-0001-39
Safety, Inspection and Testing of Lifting Devices ..... TB 43-0142
Security of Tactical Wheeled Vehicles ..... TB 9-2300-422-20
Use of Antifreeze Solutions and Cleaning
Components in Engine Cooling Systems ..... TB 750-651

## A-7. OTHER PUBLICATIONS

Army Materiel Policy and Retail Maintenance Operation ..... AR 750-1
Army Medical Department Expendable/Durable Items ..... CTA 8-100
Charging System Troubleshooting (The Easy Way) ..... DA PAM 750-33
Expendable/Durable Items (except Medical, Class V,
Repair Parts, and Heraldic Items) ..... CTA 50-970
Hearing Conservation ..... DA PAM 40-501
Preventive Medicine .....AR 40-5

# APPENDIX B
# COMPONENTS OF END ITEM (COEI) AND BASIC ISSUE ITEMS (BII) LISTS

## Section I. INTRODUCTION

### B-1. SCOPE

This appendix lists Components of the End Item (COEI) and Basic Issue Items (BII) for ESP vehicles to help you inventory items required for safe and efficient operation.

### B-2. GENERAL

The Components of End Item (COEI) and Basic Issue Items (BII) lists are divided into the following sections:

**a. Section II, Components of End Item (COEI).** This listing is for informational purposes only, and is not authority to requisition replacements. These items are part of the end item, but are removed and separately packaged for transportation or shipment. As part of the end item, these items must be with the end item whenever it is issued or transferred between property accounts. Illustrations are furnished to assist you in identifying the items.

**b. Section III, Basic Issue Items (BII).** These are the minimum essential items required to place ESP vehicles in operation, to operate them, and to perform emergency repairs. Although shipped separately packaged, BII must be with the vehicle during operation and whenever it is transferred between property accounts. The illustrations will assist you with hard-to-identify items. This manual is your authority to request/requisition replacement BII, based on Table of Orgainzation and Equipment/Modified Table of Organization and Equipment (TOE/MTOE) authorization of the end item.

### B-3. EXPLANATION OF COLUMNS

The following provides an explanation of columns found in the tabular listings:

**a. Column (1) – Illustration Number (Illus Number).** This column indicates the number of the illustration in which the item is shown.

**b. Column (2) – National Stock Number.** Indicates the national stock number assigned to the item and will be used for requisitioning purposes.

## B-3. EXPLANATION OF COLUMNS (Contd)

**c. Column (3) – Description.** Indicates the Federal item name and, if required, a minimum description to identify and locate the item. The last line for each item indicates the Commercial and Government Entity Code (CAGEC) (in parentheses) followed by the part number. If item needed differs for different models of this equipment, the model is shown under the Usable On Code (UOC) heading in this column. If no UOC appears in the column, the item is applicable to all vehicle models.
These codes are identified as:

| TRUCK | MODEL | UOC |
|---|---|---|
| Cargo, Fixed Size | M35A3, wo/winch | ESQ |
| Cargo, Fixed Size | M35A3, w/winch | ESP |
| Cargo, Dropside | M35A3C, wo/winch | ESS |
| Cargo, Dropside | M35A3C, w/winch | ESR |
| Cargo, Long Wheelbase | M36A3, wo/winch | ESU |
| Cargo, Long Wheelbase | M36A3, w/winch | EST |

**d. Column (4) – Unit of Measure (U/M).** Indicates the measure used in performing the actual operational/maintenance function. This measure is expressed by a two-character alphabetical abbreviation: EA.

**e. Column (5) – Quantity Required (Qty Rqr).** Indicates the quantity of the item authorized to be used with/on the vehicle.

## B-4. CAGE CODES

The Commercial and Government Entity Code (CAGEC) is a five digit numeric code which is used to identify the manufacturer, distributor, or government agency, etc., that supplies the item. The codes used in this appendix are:

| CODE | MANUFACTURER |
|---|---|
| 19207 | U.S. Army Tank-automotive and Armaments Command |
| 96906 | Military Standards |

# Section II. COMPONENTS OF END ITEM (COEI)

## B-5. GENERAL

These items are installed in the vehicle at the time of manufacture or rebuild. (None authorized for ESP series vehicles.)

# Section III. BASIC ISSUE ITEMS (BII)

## B-6. GENERAL

These are the minimum essential items required to place and maintain ESP vehicles in operation. Although shipped separately packaged, BII must accompany the vehicle during operation and whenever it is transferred between property accounts. The illustrations will assist you to identify each basic issue item.

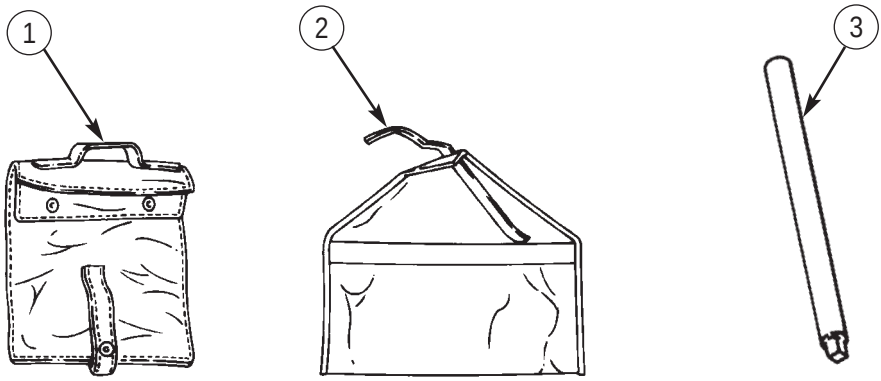


| (1) Illus Number | (2) National Stock Number | (3) Description CAGEC and Part Number | Usable On Code | (4) U/M | (5) Qty Rqr |
|---|---|---|---|---|---|
| 1 | 2540-00-670-2459 | BAG: pamphlet, cotton duck, 3-in. x 9-1/4-in. x 11-1/4-in. (in map compartment) (19207) 11676920 | | EA | 1 |
| 2 | 5140-00-772-4142 | BAG: tool, cotton duck, 10-1/8-in. x 20-1/4-in. w/flap (in toolbox) (19207) 7724142 | | EA | 1 |
| 3 | 5120-00-243-2419 | BAR: handle, socket, wrench, wheel stud nut, 3/4-in. diameter x 30-in. long (in toolbox) (19207) 6196147 (used with WRENCH #11676946) | | EA | 1 |

## Section III. BASIC ISSUE ITEMS (Contd)

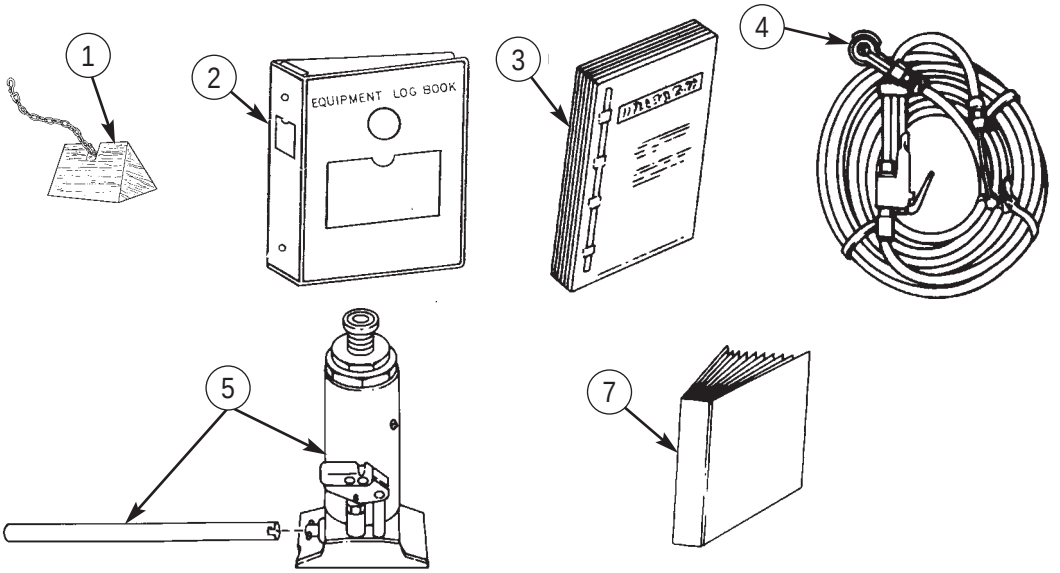


| (1) Illus Number | (2) National Stock Number | (3) Description CAGEC and Part Number | Usable On Code | (4) U/M | (5) Qty Rqr |
|---|---|---|---|---|---|
| 1 | 2540-00-678-3469 | CHOCK: wheel (96906) MS52127-3 | | EA | 2 |
| 2 | 7510-00-889-3494 | BINDER: equipment log book, 3-ring, loose leaf, 2-1/2x8x10 includes (19207) 11677003 | EA | 1 | |
| 3 | 7510-01-065-0166 | FOLDER: equipment record, vinyl, camouflage color, transparent window cover, four envelopes (72094) 43986-1 | | EA | 1 |
| 4 | 4910-01-038-2820 | GAUGE AND HOSE ASSEMBLY: 30-ft hose (tire inflation) (in toolbox) (19207) 11677140-5 | | EA | 1 |
| 5 | 5120-00-595-8396 | JACK: hydraulic, 8-ton, 9-in. closed (max.), 19-1/2-in. open (min.), w/operating lever (in toolbox) (19207) 12300922 | | EA | 1 |
| 6 | Deleted | | | | |
| 7 | | MANUAL: technical (operator's) (in pamphlet bag) TM 9-2320-386-10 | | EA | 1 |
| 8 | Deleted | | | | |

## Section III. BASIC ISSUE ITEMS (Contd)

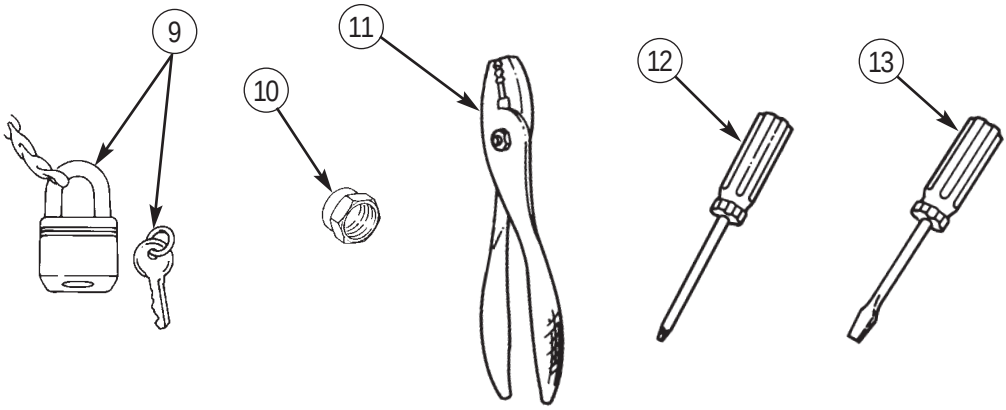


| (1) Illus Number | (2) National Stock Number | (3) Description CAGEC and Part Number | Usable On Code | (4) U/M | (5) Qty Rqr |
|---|---|---|---|---|---|
| 9 | 5340-00-682-1508 | PADLOCK: key operated, size 1-1/2-in., w/clevis, chain, and 2 keys (in toolbox) (96906) MS35647-3 | | EA | 1 |
| 10 | 4730-00-174-4558 | PIPE: cap, 3/8-in. NPT, brass (93061) 213P-6 | | EA | 1 |
| 11 | 5120-00-223-7397 | PLIERS: common, slip joint, straight nose, combination w/cutter, 8-in. long (in toolbag) (19207) 11655775-3 | | EA | 1 |
| 12 | 5120-00-234-8913 | SCREWDRIVER: cross tip, straight, Phillips, no. 2 tip, plastic handle, 4-in. blade, 7-1/2-in. long max. (in toolbag) (19207) 11655777-12 | | EA | 1 |
| 13 | 5120-00-222-8852 | SCREWDRIVER: flat tip, flared sides, plastic handle, round-blade, 1/4-in. wide top, 4-in. blade, 8-in. long max. (in toolbag) (19207) 11655777-2 | | EA | 1 |

## Section III. BASIC ISSUE ITEMS (Contd)

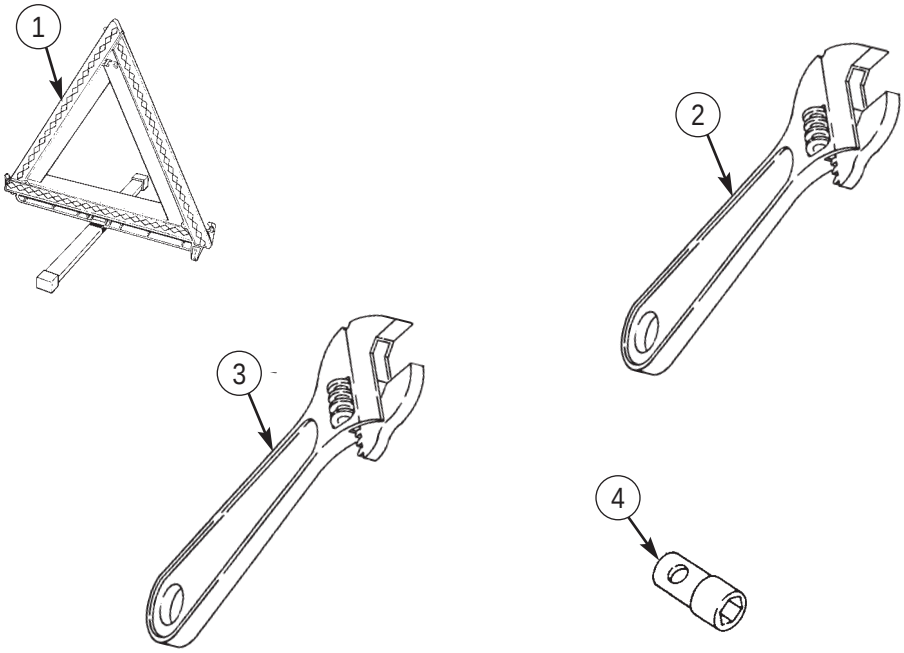


| (1) Illus Number | (2) National Stock Number | (3) Description CAGEC and Part Number | Usable On Code | (4) U/M | (5) Qty Rqr |
|---|---|---|---|---|---|
| 1 | 9905-00-148-9546 | WARNING DEVICE: highway, triangular, reflective (in toolbox) (19207) 11669000 | | EA | 1 |
| 2 | 5120-00-240-5328 | WRENCH: adjustable, open-end, heavy duty, 8-in. long, 0.95-in. jaw opening (in toolbag) (19207) 11655778-3 | | EA | 1 |
| 3 | 5120-00-264-3796 | WRENCH: adjustable, open-end, heavy duty, 12-in. long, 1.32-in. jaw opening (in toolbag) (19207) 11655778-5 | | EA | 1 |
| 4 | 5120-00-293-1289 | WRENCH: socket, spare tire mounting, 1-1/2-in. hex x 5-3/4-in. long (in toolbox) (19207) 11676946 (used with BAR #6196147) | | EA | 1 |

# APPENDIX C
# ADDITIONAL AUTHORIZATION LIST (AAL)

## Section I. INTRODUCTION

### C-1. SCOPE

This appendix lists additional items you are authorized for support of ESP vehicles.

### C-2. GENERAL

This list identifies items that do not have to accompany the vehicle and do not have to be turned in with it. These items are all authorized to you by Common Table of Allowance (CTA), MTOE, Table of Distribution and Allowance (TDA), or Joint Table of Allowance (JTA).

### C-3. EXPLANATION OF LISTING

National stock numbers, descriptions, and quantities are provided to help you identify and request the additional items you require to support this equipment. If item required differs for different models of this equipment, the model and the assigned Usable On Code (UOC) is shown. These codes are identified as:

| TRUCK | MODEL | UOC |
|---|---|---|
| Cargo, Fixed Side | M35A3, wo/winch | ESQ |
| Cargo, Fixed Side | M35A3, w/winch | ESP |
| Cargo, Dropside | M35A3C, wo/winch | ESS |
| Cargo, Dropside | M35A3C, w/winch | ESR |
| Cargo, Long Wheelbase | M36A3, wo/winch | ESU |
| Cargo, Long Wheelbase | M36A3, w/winch | EST |

## Section II. ADDITIONAL AUTHORIZATION LIST

| (1) NATIONAL STOCK NUMBER | (2) DESCRIPTION CAGEC & PART NUMBER | USABLE ON CODE | (3) U/M | (4) QTY AUTH |
|---|---|---|---|---|
| 5110-00-293-2336 | AX: single bit, 4-lb head weight, 35-1/2-in. to 36-1/2-in. long (19207) 6150925 | | EA | 1 |
| 3940-00-111-6693 | BLOCK: snatch, 1/2-in. diameter wire rope, single 6-in. sheave, w/swivel hook, 5-ton safe working load (19207) 11631700 | ESP, ESR, EST | EA | 1 |
| 7240-01-337-5269 | CAN: gasoline, military type, 5-gallon (81349) MIL-C-53109 | | EA | 1 |
| | CHAIN ASSEMBLY: tire, single, type TS, size 14.50-in. x 20-in. (4N506) S05SV | | PR | 1 |
| 4010-00-473-6166 | CHAIN: utility, single leg, 5/8-in. link, 16-ft long, w/grab hook and 2 pear-shaped link ends (19207) 7077063 | | EA | 1 |
| 4320-00-720-1618 | DECONTAMINATION APPARATUS: portable, DS-2, 1-1/2-qt ABC-M11 w/bracket (81361) D5-51-269 | | EA | 2 |
| 5120-00-243-7326 | EXTENSION, SOCKET WRENCH: 1/2-in. sq. drive, 5-in. long (80372) 41B311200 | | EA | 1 |
| 4210-01-149-1356 | FIRE EXTINGUISHER: w/ bracket, purple-k (19207) 12255633-1 | | EA | 1 |
| 6545-00-922-1200 | FIRST AID KIT: general purpose, 12 unit (19207) 11677011 | | EA | 1 |
| 5120-00-288-6574 | HANDLE: mattock, pick, railroad or clay (19207) 11677021 | | EA | 1 |
| 5120-00-236-7590 | HANDLE, SOCKET WRENCH: hinged 1/2 in. drive end, 14-1/2-in. to 19-in. long (19207) 11655786-1 | | EA | 1 |
| 5120-00-221-7959 | HANDLE, SOCKET WRENCH: hinged 3/4-in. drive, 17-3/4-in. to 23-in. long (47805) 5668 | | EA | 1 |
| 5120-00-243-2395 | MATTOCK: pick type, 5-lb, w/o handle (19207) 11677022 | | EA | 1 |
| 5120-00-293-3336 | SHOVEL: hand, round point, D-handle, short size (19207) 11655784 | | EA | 1 |

## Section II. ADDITIONAL AUTHORIZATION LIST (Contd)

| (1) NATIONAL STOCK NUMBER | (2) DESCRIPTION CAGEC & PART NUMBER USABLE ON CODE | (3) U/M | (4) QTY AUTH |
|---|---|---|---|
| 5120-00-189-7985 | SOCKET, SOCKET WRENCH: 1/2-in. sq. drive, 12 point, 3/4-in. regular length (05506) ST-1224 | EA | 1 |
| 7240-00-177-6154 | SPOUT: can, gasoline, flexible nozzle, 1-1/4-in. OD x 16-in. long (19207) 11677020 | EA | 1 |
| 5120-00-222-1592 | WRENCH, BOX: 7/8 in.-3/4 in. (80212) P460 | EA | 1 |

# APPENDIX D
# EXPENDABLE/DURABLE SUPPLIES AND MATERIALS LIST

Section I. Introduction (page D-1)
Section II. Expendable/Durable Supplies and Materials List (page D-2)

## Section I. INTRODUCTION

### D-1. SCOPE

This appendix lists expendable/durable supplies and materials you will need to maintain ESP vehicles. This listing is for informational purposes only and is not authority to requisition listed items. These items are authorized to you by CTA 50-970, Expendable/Durable Items (except Medical, Class V, Repair Parts, and Heraldic Items), or CTA 8-100, Army Medical Department Expendable/Durable Items.

### D-2. EXPLANATION OF COLUMNS

**a. Column (1) – Item Number.** This number is assigned to the entry in the listing and is referenced in the INITIAL SETUP of applicable tasks under the heading of Materials/Parts.

**b. Column (2) – Level.** This column identifies the lowest level of maintenance that requires the listed item.

C — Operator/Crew
O — Unit Maintenance
F — Direct Support Maintenance
H — General Support Maintenance

**c. Column (3) – National Stock Number.** This is the National Stock Number assigned to the item; use it to request or requisition the item.

**d. Column (4) – Description.** This column indicates the Federal item name and, if required, a description to identify the item. The last line for each item indicates the Commercial and Government Entity Code for Manufacturer (CAGEC) in parentheses followed by the part number.

**e. Column (5) – Unit of Measure (U/M).** This column indicates the measure used in performing the actual maintenance function. This measure is expressed by a alphabetical abbreviation (e.g., EA, GAL., OZ). If the unit of measure differs from the unit of issue, requisition the lowest unit of issue that will satisfy your requirements. Adjust when higher category maintenance requirements are involved.

## Section II. EXPENDABLE/DURABLE SUPPLIES AND MATERIALS LIST

| (1) ITEM NUMBER | (2) LEVEL | (3) NATIONAL STOCK NUMBER | (4) DESCRIPTION CAGEC AND PART NUMBER | (5) UNIT MEASURE |
|---|---|---|---|---|
| 1 | C | | ANTIFREEZE: permanent, ethylene glycol [-60°F (-51°C)] inhibited (A-A-870) type I, heavy-duty, (81349) MIL-A-46153 | |
| | | 6850-00-181-7929 | 1-Gallon Container | GAL. |
| 2 | C | | BRAKE FLUID, AUTOMOTIVE, (81349) MIL-B-46176 | |
| | | 9150-01-102-9455 | 1-Gallon Container | GAL. |
| 3 | C | | CLEANING COMPOUND, Naval Jelly | |
| 4 | C | | DETERGENT, GENERAL, liquid (81349) MIL-D-16791 | |
| | | 7930-00-531-9716 | 1 Gallon Can | GAL. |
| 5 | | | Deleted | |
| 6 | C | | GREASE, AUTOMOTIVE AND ARTILLERY: (81349) MIL-PERF-10924 | |
| | | 9150-01-197-7693 | 14-Ounce Cartridge | OZ |
| 7 | C | | GREASE, AUTOMOTIVE AND ARTILLERY: (81349) MIL-PERF-10924 | |
| | | 9150-01-197-7690 | 1-3/4-Pound Can | LB |
| 8 | C | | LUBRICATING OIL, GEAR: OE/HDO 15W40, multi-purpose, (81349) MIL-PERF-2104 | |
| | | 9150-00-191-2772 | 55-Gallon Drum | GAL. |
| 9 | C | | LUBRICATING OIL, GEAR: OEA, multi-purpose, (81349) MIL-PERF-46167 | |
| | | 9150-00-491-7197 | 55-Gallon Drum | GAL. |
| 10 | C | | RAG, WIPING: unbleached cotton and cotton-synthetic, mixed colors (58536) A-A-531 | |
| | | 7920-00-205-1711 | 50-Pound Bale | EA |
| 10.1 | C | | SOLVENT, CLEANING COMPOUND: (0K209) SKYSOL 100 | |
| | | 6850-01-381-4423 | 5 Gallon Can | GAL. |

# APPENDIX E
# STOWAGE AND SIGN GUIDE

## E-1. SCOPE

This appendix shows the location for stowing various items on ESP vehicles. A sign guide is also provided to show location of data plates.

## E-2. STOWAGE LOCATIONS

| KEY | LOCATION |
|---|---|
| 1 | Map compartment inside cab, right side instrument panel |
| 2 | Batteries – vehicle right side storage compartment |
| 3 | Toolbox – vehicle left side |
| 4 | Gas can bracket, left access step |

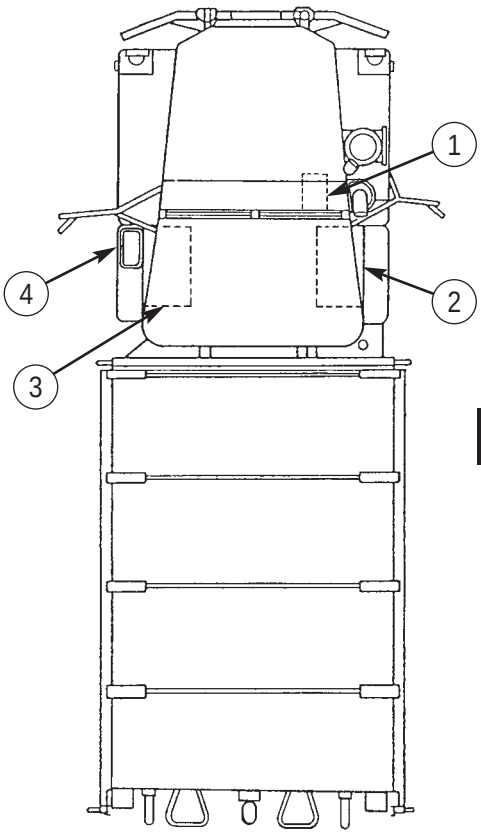

## E-3. SIGN GUIDE

**Locations of Vehicle Decals and Data Plates**

| KEY | ITEM | APPLICABLE MODELS |
|---|---|---|
| 1 | Warning: The parking brake must be engaged | All |
| 2 | U.S. Army National Guard dedicated procurements | All |
| 3 | Accessory switch | All |
| 4 | Caution: Engine shutdown | All |
| 5 | Central Tire Inflation System (CTIS) | All |
| 6 | Idle engine 5 minutes before stopping engine. | All |
| 7 | CARC stencil | All |
| 8 | Service air cleaner element | All |
| 9 | XMSN Oil | All |
| 10 | Warnings: Low air pressure and transfer case shifting | All |
| 11 | Authorized fuels | All |
| 12 | Identification data | All |
| 13 | Servicing data/publication data plates | All |
| 14 | Heater manufacturer | All |
| 15 | Air cleaner servicing instructions | All |
| 16 | This vehicle has been rebuilt IAW the ESP | All |
| 17 | Temp-pull, max | All |
| 18 | Defroster | All |
| 19 | Front wheel drive in-out | All |
| 20 | Throttle lock | All |
| 21 | Fuel shut off | All |
| 22 | Start | All |
| 23 | Heater blower | All |
| 24 | Cold start | All |
| 25 | Cold start instructions | All |
| 26 | Warning: Do not exceed 1500 rpm with winch; use hand throttle | All w/winch |
| 27 | Star | All |
| 28 | Winch rating | All w/winch |
| 29 | Warning: Do not use winch to pay out line loads | All w/winch |

## E-3. SIGN GUIDE (Contd)

### Locations of Vehicle Decals and Data Plates (Contd)

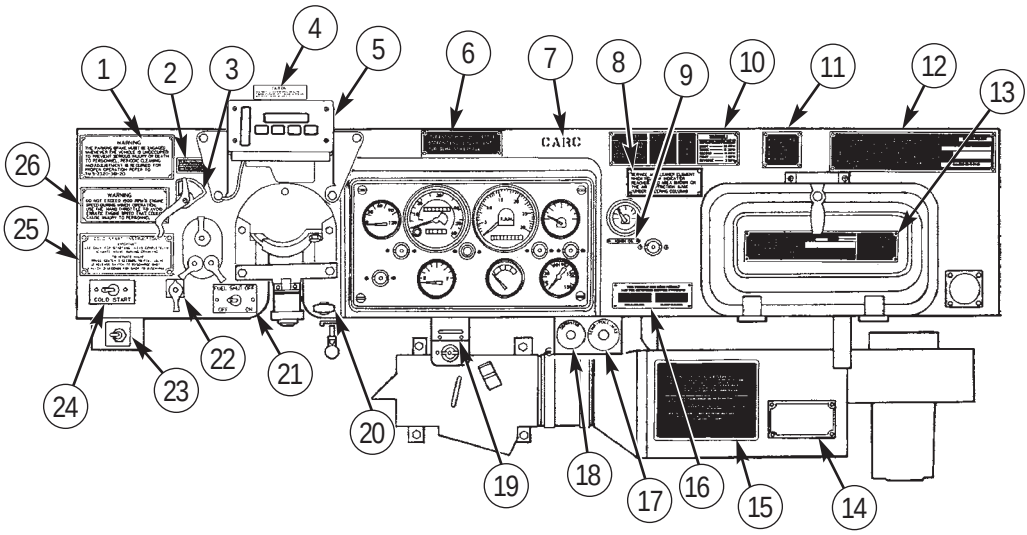


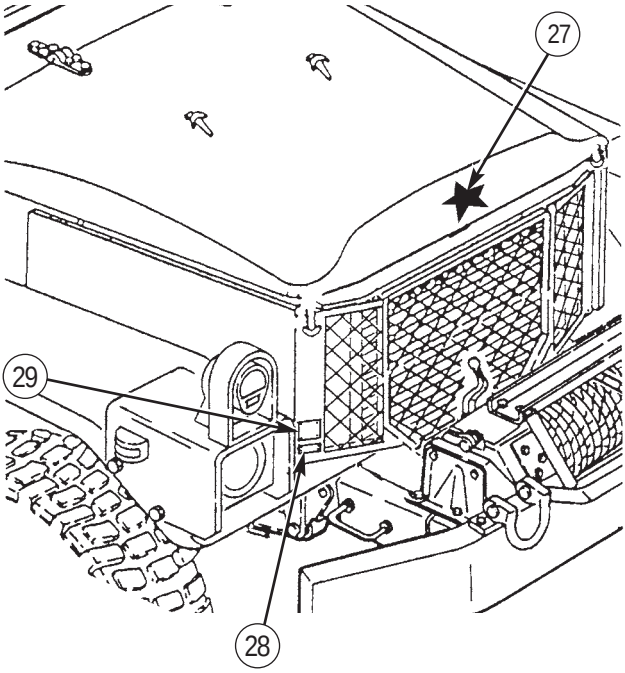

## E-3. SIGN GUIDE (Contd)

**Locations of Vehicle Decals and Data Plates (Contd)**

| KEY | ITEM | APPLICABLE MODELS |
|---|---|---|
| 30 | Warning: Secure hood in raised position with safety hook | All |
| 31 | No step | All |
| 32 | Caution: Pull out drumlock before operating winch | All w/winch |
| 33 | Winch assy P/N S/N | All w/winch |
| 34 | Caution: Do not force clutch lever | All w/winch |
| 35 | Winch spool direction, in-out | All w/winch |
| 36 | Winch control valve, engage-disengage | All w/winch |
| 37 | Caution: Steam cleaning will remove rustproofing | All |
| 38 | Caution: Turn all electrical switches off | All |
| 39 | 24V | All |

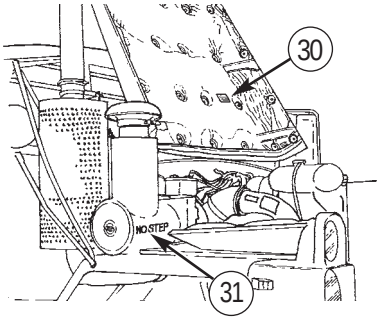


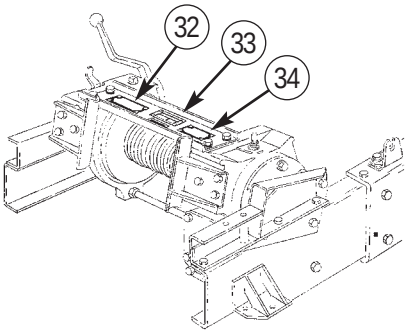


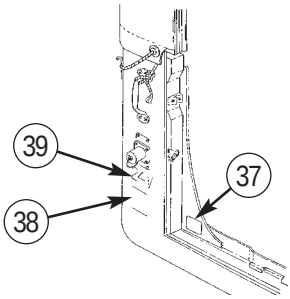


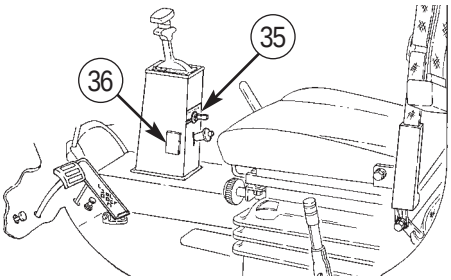

## E-3. SIGN GUIDE (Contd)

**Locations of Vehicle Decals and Data Plates (Contd)**

| KEY | ITEM | APPLICABLE MODELS |
|---|---|---|
| 40 | Caution: High intensity noise; hearing protection required when engine is running | All |
| 41 | No step | All |
| 42 | Warning: Fan may operate at any time when engine is running | All |
| 43 | Warning: Keep hands clear | All |

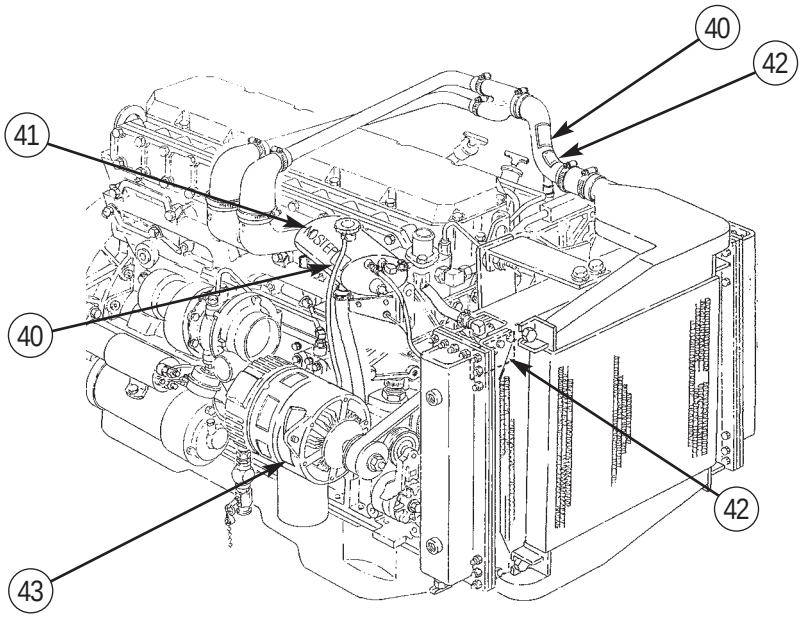

## E-3. SIGN GUIDE (Contd)

**Locations of Vehicle Decals and Data Plates (Contd)**

| KEY | ITEM | APPLICABLE MODELS |
|---|---|---|
| 44 | Transport data plate | All |
| 45 | Sling and tie-down | All |
| 46 | Tie-down | All |
| 47 | Sling | All |
| 48 | Use only MIL-B-46176 | All |
| 49 | Caution: High intensity noise; hearing protection required | All |
| 50 | Warning: Hand throttle | All |

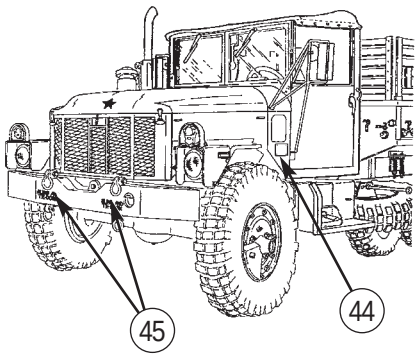


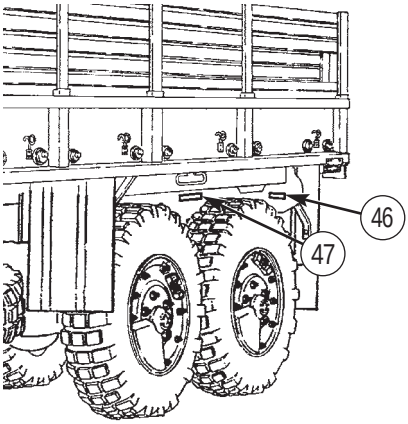


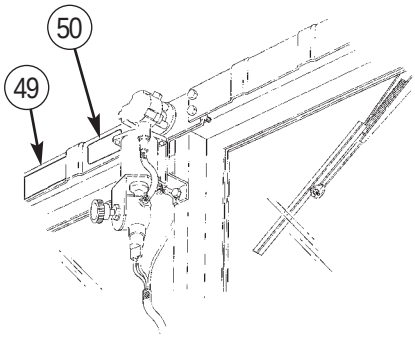


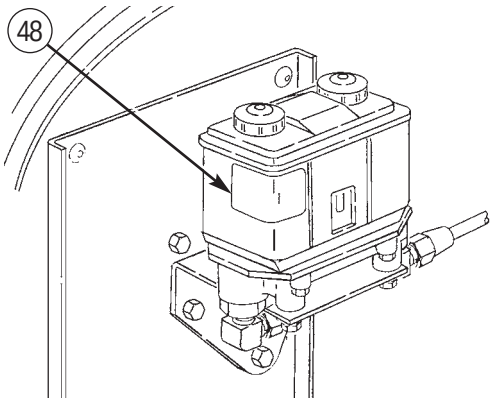

## E-3. SIGN GUIDE (Contd)

**Locations of Vehicle Decals and Data Plates (Contd)**

| KEY | ITEM | APPLICABLE MODELS |
|---|---|---|
| 51 | Star | All |
| 52 | Caution: Secure side panel locks | M35A3C |
| 53 | Caution: Troop seats, bows and staves | M35A3C |
| 54 | Sling | All |
| 55 | Tie-down | All |
| 56 | 24V | All |
| 57 | Caution: Turn all electrical switches | All |

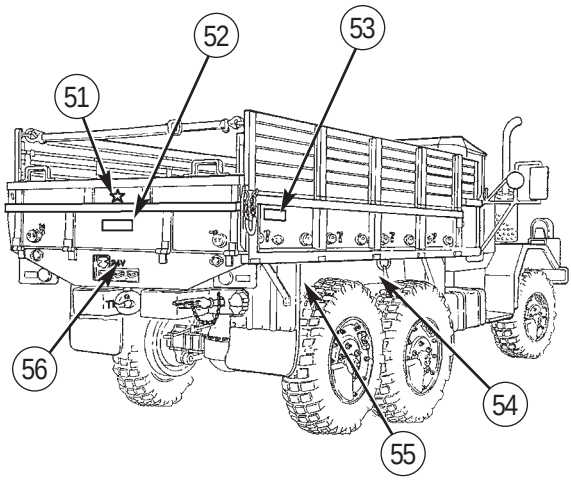


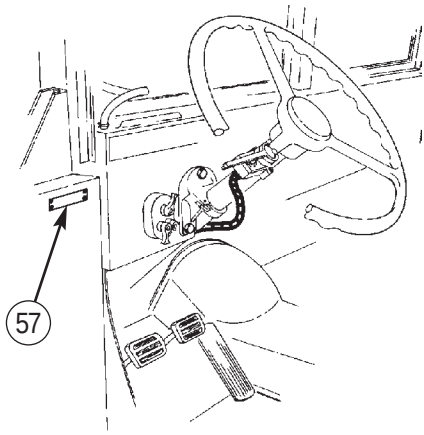

# INDEX


| | Para. | Page |
|---|---|---|
| **A** | | |
| Abbreviations, list of | 1-8 | 1-4 |
| Additional Authorization List (AAL), Appendix C: | | |
| Additional authorization list | | C-1 |
| Explanation of listing | C-3 | C-1 |
| General | C-2 | C-1 |
| Scope | C-1 | C-1 |
| A-frame kit, operation of: | | |
| General | 2-41a | 2-92 |
| Operating A-frame | 2-41d | 2-93 |
| Preparation for use | 2-41c | 2-92 |
| Safety precautions | 2-41b | 2-92 |
| Troubleshooting | 3-3 | 3-4 |
| Airbrake (trailer) kit, operation of: | | |
| Airbrake kit operation | 2-42c | 2-94 |
| Coupling trailer to vehicle | 2-42b | 2-93 |
| General | 2-42a | 2-93 |
| Air cleaner: | | |
| Controls and indicators | 2-3 | 2-2 |
| Filter (PMCS) | 2-8 | 2-29 |
| Service | 3-8 | 3-24 |
| Appendix A - References: | | |
| Field manuals | A-4 | A-1 |
| Forms | A-3 | A-1 |
| Other publications | A-7 | A-3 |
| Publications index | A-2 | A-1 |
| Scope | A-1 | A-1 |
| Technical bulletins | A-6 | A-3 |
| Technical manuals | A-5 | A-2 |
| Appendix B - Components of End Item (COEI) and Basic Issue Items (BII) List | | B-1 |
| Appendix C - Additional Authorization List (AAL): | | C-2 |
| Additional authorization list | | C-2 |
| Explanation of listing | C-3 | C-1 |
| General | C-2 | C-1 |
| Scope | C-1 | C-1 |
| Appendix D - Expendable/Durable Supplies and Materials List: | | |
| Expendable/durable supplies and materials list | | D-2 |
| Explanation of columns | D-2 | D-1 |
| Scope | D-1 | D-1 |
| Appendix E - Stowage and Sign Guide: | | |
| Scope | E-1 | E-1 |
| Sign guide | E-3 | E-2 |
| Stowage locations | E-2 | E-1 |
| Arctic winterization kit: | | |
| PMCS | | 2-15 |
| Troubleshooting | 3-3 | 3-1 |

# INDEX (Contd)


| | Para. | Page |
|---|---|---|
| **A (Contd)** | | |
| Arctic winterization kit, operation of: | | |
| General | 2-43a | 2-95 |
| Hardtop closure | 2-43c | 2-95 |
| Operation of fuel burning personnel heater and power plant heater | 2-43d | 2-95 |
| Operation of radiator cover | 2-43c | 2-98 |
| Operation of slave receptacle | 2-43f | 2-98 |
| Special arctic winterization kit | 2-43b | 2-95 |
| Thermal barrier | 2-43g | 2-98 |
| Army materiel to prevent enemy use, destruction of | 1-4 | 1-2 |
| **B** | | |
| Backing the vehicle | 2-17 | 2-57 |
| Basic issue items list | B-6 | B-3 |
| Batteries (PMCS) | 2-8 | 2-17 |
| Battery inspection | 3-10 | 3-32 |
| Bow and tarp kit: | | |
| Bow installation | 2-44a | 2-99 |
| Bow removal | 2-44g | 2-104 |
| End curtain installation | 2-44b | 2-100 |
| End curtain removal | 2-44f | 2-104 |
| Raising tarp for ventilation | 2-44d | 2-102 |
| Tarp installation | 2-44c | 2-101 |
| Tarp removal | 2-44e | 2-102 |
| Brake system (PMCS) | 2-8 | 2-27 |
| Break-in operation: | | |
| After road test | 3-6b | 3-20 |
| Road test | 3-6a | 3-19 |
| **C** | | |
| Cab top, replacing: | | |
| Installing cab top | 2-26a | 2-70 |
| Removing cab top | 2-26b | 2-70 |
| Capabilities and features, equipment characteristics | 1-11 | 1-6 |
| Cargo body arctic kit, operation of: | | |
| General | 2-45a | 2-105 |
| Insulated body enclosure | 2-45c | 2-108 |
| Operation of body heater | 2-45b | 2-105 |
| Operation of lighting system | 2-45d | 2-108 |
| Speaking tube | 2-45e | 2-108 |
| Cargo trucks, operation of: | | |
| General | 2-28a | 2-71 |
| Installing front and side racks | 2-28e | 2-74 |
| Lowering and raising dropsides | 2-28f | 2-74 |
| Lowering and raising troop seats | 2-28c | 2-73 |
| Lowering tailgate | 2-28b | 2-71 |
| Removing front and side racks | 2-28d | 2-73 |

# INDEX (Contd)


| | Para. | Page |
|---|---|---|
| **C (Contd)** | | |
| Cargo trucks (PMCS) | 2-8 | 2-33 |
| Central Tire Inflation System (CTIS) operation | 1-21 | 1-14.1 |
| Central Tire Inflation System (CTIS), operation of: | | |
| Normal operation | 2-19a | 2-62 |
| Overspeed conditions | 2-19b | 2-62 |
| Run flat mode | 2-19c | 2-63 |
| Central Tire Inflation System (CTIS) troubleshooting | 3-3 | 3-12 |
| Chapter 1 - Introduction Index | | 1-1 |
| Chapter 2 - Operating Instructions Index | | 2-1 |
| Chapter 3 - Maintenance Instructions Index | | 3-1 |
| Chassis controls and indicators | 2-3 | 2-2 |
| Checks and services, preventive maintenance (PMCS): | | |
| General | 2-5 | 2-15 |
| Index | 2-6 | 2-15 |
| Preventive maintenance checks and services | 2-7 | 2-15 |
| Table 2-2. Operator/Crew Preventive Maintenance Checks and Services | | 2-20 |
| Class leakage definitions | 2-9 | 2-19 |
| Cleaner, air: | | |
| Controls and indicators | 2-1 | 2-1 |
| Filter (PMCS) | 2-8 | 2-17 |
| Service | 3-8 | 3-24 |
| Cleaning instructions and precautions | 2-8 | 2-17 |
| Cold, operation in extreme | 2-32 | 2-79 |
| Cold weather starting (below +20°F) (-6.7°C) | 2-13 | 2-52 |
| Components of End Item (COEI) and Basic Issue Items (BII) List, Appendix B | B-5 | B-2 |
| Compressed air system operation | 1-20.1 | 1-14.1 |
| Controls and indicators: | | |
| Index | | 2-1 |
| Know your controls and indicators | 2-1 | 2-1 |
| Preparation for use | 2-2 | 2-1 |
| Cooling system data, engine and | 1-14 | 1-9 |
| Cooling system operation | 1-22 | 1-15 |
| Corrosion prevention and control (CPC) | 1-3 | 1-2 |
| **D** | | |
| Data, description and, vehicle: | | |
| Designations | 1-10 | 1-60 |
| General | 1-1 | 1-1 |
| Vehicle description and data index | 1-14 | 1-8 |
| Data, equipment | 1-14 | 1-9 |
| Data, tabulated | 1-16 | 1-13 |
| Deep mud, operation in: | | |
| After operation | 2-37e | 2-90 |
| Before operation | 2-37b | 2-89 |
| Driving vehicle cross-country | 2-37c | 2-89 |
| Driving vehicle on roads | 2-37d | 2-90 |
| General | 2-37a | 2-89 |

# INDEX (Contd)


| | Para. | Page |
|---|---|---|
| **D (Contd)** | | |
| Deepwater fording kit: | | |
| Controls and indicators | 2-46 | 2-109 |
| Operation | 2-46 | 2-109 |
| PMCS | 2-7 | 2-15 |
| Troubleshooting | 3-3 | 3-17 |
| Definitions, class leakage | 2-9 | 2-19 |
| Description and data, vehicle: | | |
| Designations | 1-10 | 1-60 |
| General | 1-1 | 1-1 |
| Vehicle description and data index | 1-14 | 1-8 |
| Destruction of Army materiel to prevent enemy use | 1-4 | 1-3 |
| Differences between models | 1-13 | 1-8 |
| Driver's seat and seatbelt, operation | 2-21 | 2-65 |
| Dusty or sandy areas, operation in: | | |
| After operation | 2-35e | 2-88 |
| Before operation | 2-35b | 2-87 |
| Driving vehicle | 2-35c | 2-87 |
| General | 2-35a | 2-87 |
| Stopping or parking | 2-35d | 2-87 |
| **E** | | |
| Electrical system operation | 1-23 | 1-15 |
| Engine and cooling system data | 1-14 | 1-9 |
| Engine system operation | 1-19 | 1-14 |
| Equipment characteristics, capabilities, and features | 1-11 | 1-6 |
| Equipment data | 1-14 | 1-9 |
| Expendable/durable supplies and materials list, Appendix D: | | |
| Expendable/durable supplies and materials list | | D-1 |
| Explanation of columns | D-2 | D-1 |
| Scope | D-1 | D-1 |
| Extreme cold, operation in: | | |
| After operation | 2-32f | 2-82 |
| Before operation | 2-32b | 2-79 |
| Driving vehicle | 2-32d | 2-81 |
| General | 2-32a | 2-79 |
| Starting engine | 2-32c | 2-79 |
| Stopping or parking | 2-32e | 2-81 |
| Extreme heat, operation in: | | |
| After operation | 2-34e | 2-86 |
| Before operation | 2-34b | 2-84 |
| Driving vehicle | 2-34c | 2-84 |
| General | 2-34a | 2-84 |
| Stopping or parking | 2-34d | 2-86 |
| **F** | | |
| Features, equipment characteristics, capabilities, and | 1-11 | 1-5 |
| Fluid capacities | 1-14 | 1-9 |
| Fluid levels, checking | 3-7 | 3-20 |

# INDEX (Contd)


| | Para. | Page |
|---|---|---|
| **F (Contd)** | | |
| Fording (deepwater) kit, operation of: | | |
| After fording maintenance | 2-46d | 2-110 |
| Fording operation | 2-46c | 2-109 |
| General | 2-46a | 2-109 |
| Operator preparation for fording | 2-46b | 2-109 |
| Preventive maintenance checks and services | 2-7 | 2-15 |
| Fording operation | 2-38 | 2-90 |
| Fuels, permissible, table 1-2 | 1-15 | 1-12 |
| Fuel system operation | 1-20 | 1-14.1 |
| Fuel system, priming the | 3-11 | 3-33 |
| Front winch, operation of: | | |
| Locking front winch for travel | 2-18f | 2-61 |
| Lowering load or unwinding slack cable | 2-18d | 2-60 |
| Operation | 1-25 | 1-15 |
| Preparation for use | 2-18a | 2-57 |
| Pulling load | 2-18b | 2-58 |
| Stopping the winch | 2-18c | 2-60 |
| Troubleshooting | 3-3 | 3-11 |
| Winding the winch cable on drum | 2-18e | 2-60 |
| **G** | | |
| General cleaning instructions, table 2-1 | 2-8 | 2-18 |
| Glossary | 1-9 | 1-5 |
| **H** | | |
| Hood, raising and securing | 2-23 | 2-67 |
| How to use this manual | | iii |
| **I** | | |
| Ice or snow, operation on: | | |
| After operation | 2-33c | 2-83 |
| Before operation | 2-33a | 2-82 |
| Driving vehicle | 2-33b | 2-83 |
| Index, chapter 1 - introduction | | 1-1 |
| Index, chapter 2 - operation instructions | | 2-1 |
| Index, chapter 3 - maintenance instructions | | 3-1 |
| Indicators, controls and: | | |
| Index | | 2-1 |
| Know your controls and indicators | 2-1 | 2-1 |
| Preparation for use | 2-2 | 2-1 |
| Inspection, battery | 3-10 | 3-32 |
| Installing cab top, raising windshield and | 2-26 | 2-70 |
| Instructions, lubrication | 3-1 | 3-1 |
| **J** | | |
| Jumper to start engine, using NATO slave | 2-25 | 2-69 |
| **L** | | |
| Leakage definitions, class | 2-9 | 2-19 |

## INDEX (Contd)


| | Para. | Page |
|---|---|---|
| **L (Contd)** | | |
| List, basic issue items | B-6 | B-3 |
| List of abbreviations | 1-8 | 1-3 |
| Location and description of major components | 1-12 | 1-7 |
| Lubrication instructions | 3-1 | 3-1 |
| **M** | | |
| M35A3, cargo truck, wo/w and w/w | 1-1 | 1-2 |
| M35A3C, cargo truck with dropsides, wo/w and w/w | 1-1 | 1-2 |
| M36A3, cargo truck with extra-long wheelbases, wo/w and w/w | 1-1 | 1-2 |
| M35A3, M35A3C, and M36A3 cargo trucks (PMCS) | 2-7 | 2-15 |
| Major components, location and description | 1-12 | 1-7 |
| Manual, how to use | | iii |
| Maintenance digest (EIR MD), equipment improvement report, and maintenance forms and procedures | 1-2 | 1-1 |
| Maintenance forms and procedures | 1-2 | 1-2 |
| Maintenance procedures: | | |
| General | 3-4 | 3-19 |
| Maintenance procedures index | 3-5 | 3-19 |
| Metric system, use of the | 1-7 | 1-3 |
| Models, differences between | 1-13 | 1-8 |
| **O** | | |
| Operation, break-in: | | |
| After road test | 3-6b | 3-20 |
| Road test | 3-6a | 3-19 |
| Operation, Central Tire Inflation System (CTIS) | 1-21 | 1-14.1 |
| Operation of Central Tire Inflation System (CTIS) | 2-19 | 2-62 |
| Operation, cooling system | 1-22 | 1-15 |
| Operation, compressed air system | 1-20.1 | 1-14.1 |
| Operation, electrical system | 1-23 | 1-15 |
| Operation, engine system | 1-19 | 1-14 |
| Operation, fording | 2-38 | 2-90 |
| Operation, front winch | 1-25 | 1-15 |
| Operation, fuel system | 1-20 | 1-14.1 |
| Operation in deep mud: | | |
| After operation | 2-37e | 2-90 |
| Before operation | 2-37b | 2-89 |
| Driving vehicle cross-country | 2-37c | 2-89 |
| Driving vehicle on roads | 2-37d | 2-90 |
| General | 2-37a | 2-89 |
| Operation in dusty or sandy areas: | | |
| After operation | 2-35e | 2-88 |
| Before operation | 2-35b | 2-87 |
| Driving vehicle | 2-35c | 2-87 |
| General | 2-35a | 2-87 |
| Stopping or parking | 2-35d | 2-87 |

# INDEX (Contd)


| | Para. | Page |
|---|---|---|
| **O (Contd)** | | |
| Operation in extreme cold: | | |
| After operation | 2-32f | 2-82 |
| Before operation | 2-32b | 2-79 |
| Driving vehicle | 2-32d | 2-81 |
| General | 2-32a | 2-79 |
| Starting engine | 2-32c | 2-79 |
| Stopping or parking | 2-32e | 2-81 |
| Operation in extreme heat: | | |
| After operation | 2-34e | 2-86 |
| Before operation | 2-34b | 2-84 |
| Driving vehicle | 2-34c | 2-84 |
| General | 2-34a | 2-84 |
| Stopping or parking | 2-34d | 2-86 |
| Operation in rainy or humid conditions: | | |
| After operation | 2-36d | 2-88 |
| Before operation | 2-36b | 2-88 |
| Driving vehicle | 2-36c | 2-88 |
| General | 2-36a | 2-88 |
| Operation of A-frame kit: | | |
| General | 2-41a | 2-92 |
| Operating A-frame kit | 2-41d | 2-93 |
| Preparation for use | 2-41c | 2-92 |
| Safety precautions | 2-41b | 2-92 |
| Operation of arctic winterization kit: | | |
| General | 2-43a | 2-95 |
| Hardtop closure | 2-43c | 2-95 |
| Operation of fuel burning personnel heater and power plant heater | 2-43d | 2-95 |
| Operation of radiator cover | 2-43e | 2-98 |
| Operation of slave receptacle | 2-43f | 2-98 |
| Special arctic winterization kits | 2-43b | 2-95 |
| Thermal barrier | 2-43g | 2-98 |
| Operation of airbrake (trailer) kit: | | |
| Airbrake kit operation | 2-42c | 2-94 |
| Coupling trailer to vehicle | 2-42b | 2-93 |
| General | 2-42a | 2-93 |
| Operation of cargo body arctic kit: | | |
| General | 2-42a | 2-105 |
| Insulated body enclosure | 2-45c | 2-108 |
| Operation of body heater | 2-45b | 2-105 |
| Operation of lighting system | 2-45d | 2-108 |
| Speaking tube | 2-45e | 2-108 |
| Operation of cargo trucks: | | |
| General | 2-28a | 2-71 |
| Installing front and side racks | 2-28e | 2-74 |
| Lowering and raising dropsides | 2-28f | 2-74 |
| Lowering and raising troop seats | 2-28c | 2-73 |
| Lowering tailgate | 2-28b | 2-71 |
| Removing front and side racks | 2-28d | 2-73 |

# INDEX (Contd)


| | Para. | Page |
|---|---|---|
| **O (Contd)** | | |
| Operation of Central Tire Inflation System (CTIS) | | |
| Normal operation | 2-19a | 2-62 |
| Overspeed conditions | 2-19b | 2-62 |
| Run flat mode | 2-19c | 2-63 |
| Operation of fording (deepwater) kit: | | |
| After fording maintenance | 2-46d | 2-110 |
| Fording operation | 2-46c | 2-109 |
| General | 2-46a | 2-109 |
| Operator preparation for fording | 2-46b | 2-109 |
| Operation of front winch: | | |
| Locking front winch for travel | 2-18f | 2-61 |
| Lowering load or unwinding slack cable | 2-18d | 2-60 |
| Preparation for use | 2-18a | 2-57 |
| Pulling load | 2-18b | 2-58 |
| Stopping the winch | 2-18c | 2-60 |
| Winding the winch line on the drum | 2-18e | 2-60 |
| Operation of personnel hot water heater kit | 2-29 | 2-77 |
| Operation of slave receptacle | 2-25 | 2-55 |
| Operation of special purpose kits: | | |
| General | 2-39 | 2-91 |
| Index | 2-40 | 2-92 |
| Operation of troop seat - center mounted kit | 2-47 | 2-111 |
| Operation of vehicle service lights | 2-24 | 2-68 |
| Operation of windshield washer | 2-3 | 2-2 |
| Operation on ice or snow: | | |
| After operation | 2-33c | 2-83 |
| Before operation | 2-33a | 2-82 |
| Driving vehicle | 2-33b | 2-83 |
| Operation under unusual conditions: | 2-30 | 2-78 |
| Index | 2-31 | 2-79 |
| Special instructions | 2-30 | 2-78 |
| Operation under unusual conditions | | 2-78 |
| Operation under usual conditions | | 2-48 |
| Operator maintenance | | 3-1 |
| Operator Preventive Maintenance Checks and Services (PMCS) | 2-7 | 2-15 |
| Operator's controls and indicators | 2-1 | 2-1 |
| **P** | | |
| Permissible fuels, table 1-2 | 1-15 | 1-12 |
| Personnel hot water heater kit, operation of | 2-29 | 2-77 |
| Placing the vehicle in motion | 2-15 | 2-55 |
| Power steering assist system service | 3-12 | 3-34 |
| Precautions, cleaning instructions and | 2-8 | 2-17 |
| Preparation for use | 2-2 | 2-1 |

# INDEX (Contd)


| | Para. | Page |
|---|---|---|
| **P (Contd)** | | |
| Preventive Maintenance Checks and Services (PMCS): | | |
| Cleaning instructions and precautions | 2-7 | 2-15 |
| General | 2-5 | 2-15 |
| Index | 2-6 | 2-15 |
| Preventive Maintenance Checks and Services (PMCS) | 2-8 | 2-15 |
| Table 2-2. Operator/Crew Preventive Maintenance Checks and Services | | 2-20 |
| Priming the fuel system | 3-11 | 3-33 |
| Principles of operation: | | |
| General | 1-17 | 1-14 |
| Index | 1-18 | 1-14 |
| Procedures, maintenance forms and | 1-2 | 1-2 |
| **R** | | |
| Rainy or humid conditions, operation in: | | |
| After operation | 2-36d | 2-88 |
| Before operation | 2-36b | 2-88 |
| Driving vehicle | 2-36c | 2-88 |
| General | 2-36a | 2-88 |
| Raising and lowering windshield | 2-27 | 2-71 |
| Raising and securing hood | 2-23 | 2-67 |
| Rapid engine warmup | 2-14 | 2-52 |
| References, Appendix A: | | |
| Field manuals | A-4 | A-1 |
| Forms | A-3 | A-1 |
| Other publications | A-7 | A-3 |
| Publications index | A-2 | A-1 |
| Scope | A-1 | A-1 |
| Technical bulletins | A-6 | A-3 |
| Technical manuals | A-5 | A-2 |
| Replacing cab top | 2-26 | 2-70 |
| Reporting Equipment Improvement Recommendations (EIRs) | 1-5 | 1-3 |
| Reporting of errors | | ii |
| **S** | | |
| Seatbelt, driver's seat and, operation: | 2-21 | 2-65 |
| Simplified Test Equipment/Internal Combustion Engines - Reprogrammable (STE/ICE-R) | 1-24 | 1-15 |
| Slave receptacle to start engine, using NATO | 2-25 | 2-69 |
| Special purpose kits controls and indicators: | | |
| A-frame kit | 2-4a | 2-9 |
| Arctic winterization kit | 2-4c | 2-11 |
| Bow and tarp kit | 2-4b | 2-10 |
| Convoy warning light | 2-4g | 2-14 |
| Deepwater fording kit | 2-4d | 2-13 |
| Machine gun mount kit | 2-4e | 2-13 |
| Rifle mount kit | 2-4f | 2-14 |

# INDEX (Contd)


| | Para. | Page |
|---|---|---|
| **S (Contd)** | | |
| Special purpose kits, operation of: | | |
| General | 2-39 | 2-91 |
| Operation of special purpose kits index | 2-40 | 2-92 |
| Starting (below +20°F) (-6.7°C), cold weather | 2-13 | 2-52 |
| Starting the engine (above +20°F) (-6.7°C) | 2-12 | 2-49 |
| Stopping the vehicle and engine | 2-16 | 2-56 |
| Stowage and sign guide, Appendix E: | | |
| Scope | E-1 | E-1 |
| Sign guide | E-3 | E-2 |
| Stowage locations | E-2 | E-1 |
| Summary, warning | | a |
| Swingfire heater, operation of: | 2-48 | 2-112 |
| General | 2-48a | 2-112 |
| Operation of mixing pipe | 2-48c | 2-114 |
| Operation of swingfire heater | 2-48b | 2-112 |
| Operation of turboheater | 2-48d | 2-115 |
| Operation of water jacket | 2-48e | 2-116 |
| Stowage of swingfire heater and mixing pipe | 2-48f | 2-117 |
| **T** | | |
| Table 1-1. Differences Between Models | 1-13 | 1-8 |
| Table 1-2. Permissible Fuels | 1-15 | 1-12 |
| Table 1-3. Weights | 1-16 | 1-13 |
| Table 1-4. Performance Data | 1-16 | 1-13 |
| Table 2-1. General Cleaning Instructions | 2-8 | 2-18 |
| Table 2-2. Operator/Crew Preventive Maintenance Checks and Services | 2-9 | 2-20 |
| Table 2-3. Required CTIS Limits | 2-19 | 2-63 |
| Table 3-1. Troubleshooting | 3-3 | 3-2 |
| Tabulated data | 1-16 | 1-13 |
| Tarp kit, bow and: | | |
| Bow installation | 2-44a | 2-99 |
| Bow removal | 2-44g | 2-104 |
| End curtain installation | 2-44b | 2-100 |
| End curtain removal | 2-44f | 2-104 |
| Raising tarp for ventilation | 2-44d | 2-102 |
| Tarp installation | 2-44c | 2-101 |
| Tarp removal | 2-44e | 2-102 |
| Tire Inflation System, Central (CTIS) | 1-21 | 1-15 |
| Tires, wheels and: | 3-9 | 3-26 |
| Chocking wheels | 3-9d | 3-31 |
| General | 3-9a | 3-26 |
| Jacking procedure | 3-9c | 3-27 |
| Manual tire inflation | 3-9e | 3-31 |
| Spare wheel replacement | 3-9b | 3-26 |
| Wheel replacement | 3-9e | 3-28 |

# INDEX (Contd)


| | Para. | Page |
|---|---|---|
| **T (Contd)** | | |
| Tools and equipment: | | |
| Basic issue items | B-6 | B-3 |
| Expendable/durable supplies and materials | D-1 | D-1 |
| Top, replacing cab | 2-26 | 2-70 |
| Towing the vehicle | 2-22 | 2-66 |
| Troop seat - center-mounted kit, operation of: | 2-47 | 2-111 |
| General | 3-2 | 3-2 |
| Troubleshooting symptom index | 3-3 | 3-2 |
| Troubleshooting, table 3-1 | 3-3 | 3-4 |
| **U** | | |
| Unusual conditions, operation under | | 2-78 |
| Use of the metric system | 1-7 | 1-3 |
| Using NATO slave receptacle to start engine | 2-25 | 2-69 |
| Usual conditions, operation under | | 2-48 |
| **V** | | |
| Van body heater (primary and secondary) kits, operation of: | | |
| General | 2-45a | 2-105 |
| Operation of body heater | 2-45b | 2-105 |
| Vehicle, backing the | 2-17 | 2-57 |
| Vehicle service lights, operation of | 2-24 | 2-68 |
| **W** | | |
| Warmup, rapid engine | 2-14 | 2-52 |
| Warning summary | | a |
| Warranty information | 1-6 | 1-3 |
| Weights, table 1-3 | 1-16 | 1-13 |
| Wheels and tires: | | |
| Chocking wheels | 3-9d | 3-28 |
| General | 3-9a | 3-26 |
| Jacking procedure | 3-9c | 3-27 |
| Spare wheel replacement | 3-9b | 3-26 |
| Wheel replacement | 3-9e | 3-28 |
| Winch system operation, front | 1-25 | 1-15 |
| Windshield wipers, operation of | 2-20 | 2-64 |
| Winterization kit, arctic: | | |
| PMCS | 2-7 | 2-16 |
| Troubleshooting | 3-3 | 3-1 |

By Order of the Secretary of the Army:

DENNIS J. REIMER
*General, United States Army*
*Chief of Staff*

Official:

YVONNE M. HARRISON
*Administrative Assistant to the*
*Secretary of the Army*
01241

RECOMMENDED CHANGES TO EQUIPMENT TECHNICAL PUBLICATIONS

THEN. . .JOT DOWN THE DOPE ABOUT IT ON THIS FORM. CAREFULLY TEAR IT OUT, FOLD IT AND DROP IT IN THE MAIL!

# SOMETHING WRONG WITH THIS PUBLICATION?

FROM: (PRINT YOUR UNIT'S COMPLETE ADDRESS)
596th Mt. CMR 440
APO AE 09175

DATE SENT 12 Nov 95

| PUBLICATION NUMBER | PUBLICATION DATE | PUBLICATION TITLE |
|---|---|---|
| TM 9-2320-386-10 | | OPERATOR'S MANUAL 2-1/2-Ton, 6x6 M44A3 |

BE EXACT. . .PIN-POINT WHERE IT IS

| PAGE NO. | PARA-GRAPH | FIGURE NO. | TABLE NO. |
|---|---|---|---|
| 2-59 | 2-18 | — | — |

IN THIS SPACE TELL WHAT IS WRONG AND WHAT SHOULD BE DONE ABOUT IT:

Problem
Item number 13 in the second illustration is a utility chain. In the text utility chain is called out as 15 in step (3) Additionally the winch control switch in step (7) is called out as 15.

Corrective Action Suggested:
Change (15) in STEP (3) To (13)

SAMPLE

PRINTED NAME, GRADE OR TITLE, AND TELEPHONE NUMBERS
William Miller, SSG 348-6549

SIGN HERE:
William Miller

DA FORM 1 JUL 79 2028-2

PREVIOUS EDITIONS ARE OBSOLETE.

P.S.—IF YOUR OUTFIT WANTS TO KNOW ABOUT YOUR RECOMMENDATION MAKE A CARBON COPY OF THIS AND GIVE IT TO YOUR HEADQUARTERS.

REVERSE OF FORM 2028-2

SAMPLE

FILL IN YOUR UNIT'S ADDRESS

FOLD BACK

TEAR ALONG PERFORATED LINE

DEPARTMENT OF THE ARMY
596th Mt. CMR 440
APO AE, 09175

AMSTA-LC-CI/TECH PUBS, TACOM-RI
1 ROCK ISLAND ARSENAL
ROCK ISLAND, IL 61299-7630

RECOMMENDED CHANGES TO EQUIPMENT TECHNICAL PUBLICATIONS

# SOMETHING WRONG WITH THIS PUBLICATION?

*THEN . . . JOT DOWN THE DOPE ABOUT IT ON THIS FORM. CAREFULLY TEAR IT OUT. FOLD IT AND DROP IT IN THE MAIL!*

FROM: (PRINT YOUR UNIT'S COMPLETE ADDRESS)

DATE SENT

| PUBLICATION NUMBER | PUBLICATION DATE | PUBLICATION TITLE |
|---|---|---|
| TM 9-2320-386-10 | 26 January 1996 | OPERATOR'S MANUAL 2-1/2 TON, 6X6 M44A3 |

BE EXACT. . .PIN-POINT WHERE IT IS

| PAGE NO. | PARA-GRAPH | FIGURE NO. | TABLE NO. |
|---|---|---|---|
| | | | |

IN THIS SPACE TELL WHAT IS WRONG AND WHAT SHOULD BE DONE ABOUT IT:

PRINTED NAME, GRADE OR TITLE, AND TELEPHONE NUMBERS

SIGN HERE:

**DA FORM 1 JUL 79 2028-2**

PREVIOUS EDITIONS ARE OBSOLETE.

P.S.—IF YOUR OUTFIT WANTS TO KNOW ABOUT YOUR RECOMMENDATION MAKE A CARBON COPY OF THIS AND GIVE IT TO YOUR HEADQUARTERS.

REVERSE OF FORM 2028-2

FILL IN YOUR
UNIT'S ADDRESS

FOLD BACK

DEPARTMENT OF THE ARMY

TEAR ALONG PERFORATED LINE

AMSTA-LC-CI/TECH PUBS, TACOM-RI
1 ROCK ISLAND ARSENAL
ROCK ISLAND, IL 61299-7630

## THE METRIC SYSTEM AND EQUIVALENTS

**LINEAR MEASURE**

1 Centimeter = 10 Millimeters = 0.01 Meters = 0.3937 Inches
1 Meter = 100 Centimeters = 1,000 Millimeters = 39.37 Inches
1 Kilometer = 1,000 Meters = 0.621 Miles

**SQUARE MEASURE**

1 Sq Centimeter = 100 Sq Millimeters = 0.155 Sq Inches
1 Sq Meter = 10,000 Sq Centimeters = 10.76 Sq Feet
1 Sq Kilometer = 1,000,000 Sq Meters = 0.386 Sq Miles

**CUBIC MEASURE**

1 Cu Centimeter = 1,000 Cu Millimeters = 0.06 Cu Inches
1 Cu Meter = 1,000,000 Cu Centimeters = 35.31 Cu Feet

**LIQUID MEASURE**

1 Milliliter = 0.001 Liters = 0.0338 Fluid Ounces
1 Liter = 1,000 Milliliters = 33.82 Fluid Ounces

**TEMPERATURE**

5/9 (°F -32) = °C
212° Fahrenheit is equivalent to 100° Celsius
90° Fahrenheit is equivalent to 32.2° Celsius
32° Fahrenheit is equivalent to 0° Celsius
9/5 °C +32 = °F

**WEIGHTS**

1 Gram = 0.001 Kilograms = 1,000 Milligrams = 0.035 Ounces
1 Kilogram = 1,000 Grams = 2.2 Lb

## APPROXIMATE CONVERSION FACTORS

| TO CHANGE | TO | MULTIPLY BY |
|---|---|---|
| Inches | Centimeters | 2.540 |
| Feet | Meters | 0.305 |
| Yards | Meters | 0.914 |
| Miles | Kilometers | 1.609 |
| Square Inches | Square Centimeters | 6.451 |
| Square Feet | Square Meters | 0.093 |
| Square Yards | Square Meters | 0.836 |
| Square Miles | Square Kilometers | 2.590 |
| Acres | Square Hectometers | 0.405 |
| Cubic Feet | Cubic Meters | 0.028 |
| Cubic Yards | Cubic Meters | 0.765 |
| Fluid Ounces | Milliliters | 29.573 |
| Pints | Liters | 0.473 |
| Quarts | Liters | 0.946 |
| Gallons | Liters | 3.785 |
| Ounces | Grams | 28.349 |
| Pounds | Kilograms | 0.454 |
| Short Tons | Metric Tons | 0.907 |
| Pound-Feet | Newton-Meters | 1.356 |
| Pounds Per Square Inch | Kilopascals | 6.895 |
| Miles Per Gallon | Kilometers Per Liter | 0.425 |
| Miles Per Hour | Kilometers Per Hour | 1.609 |

| TO CHANGE | TO | MULTIPLY BY |
|---|---|---|
| Centimeters | Inches | 0.394 |
| Meters | Feet | 3.280 |
| Meters | Yards | 1.094 |
| Kilometers | Miles | 0.621 |
| Square Centimeters | Square Inches | 0.155 |
| Square Meters | Square Feet | 10.764 |
| Square Meters | Square Yards | 1.196 |
| Square Kilometers | Square Miles | 0.386 |
| Square Hectometers | Acres | 2.471 |
| Cubic Meters | Cubic Feet | 35.315 |
| Cubic Meters | Cubic Yards | 1.308 |
| Milliliters | Fluid Ounces | 0.034 |
| Liters | Pints | 2.113 |
| Liters | Quarts | 1.057 |
| Liters | Gallons | 0.264 |
| Grams | Ounces | 0.035 |
| Kilograms | Pounds | 2.205 |
| Metric Tons | Short Tons | 1.102 |
| Newton-Meters | Pound-Feet | 0.738 |
| Kilopascals | Pounds Per Square Inch | 0.145 |
| Kilometers Per Liter | Miles Per Gallon | 2.354 |
| Kilometers Per Hour | Miles Per Hour | 0.621 |

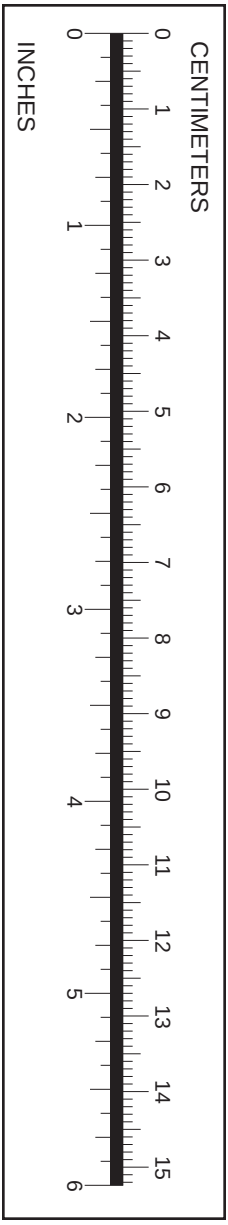

PIN 074962-000