TECHNICAL MANUAL
UNIT, DIRECT SUPPORT AND GENERAL SUPPORT MAINTENANCE
REPAIR PARTS AND SPECIAL TOOLS LIST

AIR CONDITIONER,COMPACT, HORIZONTAL,
MULTIPLE POWER INPUT, 36,000 BTU/HR
208 VOLT, 3 PHASE, 50/60/400 HERTZ
MODEL MH-40-MP
NSN 4120-01-330-6543

DISTRIBUTION STATEMENT A: Approved for public release; distribution is unlimited.

HEADQUARTERS, DEPARTMENT OF THE ARMY
10 DECEMBER 1995

CHANGE

NO. 1

HEADQUARTERS
DEPARTMENT OF THE ARMY
WASHINGTON, D.C., 30 SEPTEMBER 1996

UNIT, DIRECT SUPPORT AND GENERAL SUPPORT MAINTENANCE REPAIR PARTS AND SPECIAL TOOLS LIST

AIR CONDITIONER, COMPACT, HORIZONTAL, MULTIPLE POWER INPUT, 36,000 BTU/HR 208 VOLT, 3 PHASE, 50/60/400 HERTZ MODEL MH-40-MP NSN 4120-01-330-6543

DISTRIBUTION STATEMENT A: Approved for public release; distribution is unlimited

TM 9-4120-404-24P, 10 December 1995, is changed as follows:

1. Remove and insert pages as indicated below. New or changed text material is indicated by a vertical bar in the margin. An illustration change is indicated by a miniature pointing hand.

Remove pages	Insert pages
i and ii	i and ii
11-l and 11-2	11-l and 11-2
l-25 through l-28	l-25 through l-28
l-37 and l-38	l-37 and l-38

2. Retain this sheet in front of manual for reference purposes.

TM 9-4120-404-24P
C1

By Order of the Secretary of the Army:

DENNIS J. REIMER
General, United States Army
Chief of Staff

Official:
JOEL B. HUDSON
Administrative Assistant to the
Secretary of the Army
02557

DISTRIBUTION:
To be distributed in accordance with DA Form 12-25-E, block no. 6300, requirements for TM 9-4120-404-24P.

TECHNICAL MANUAL

NO. 9-4120-404-24P

HEADQUARTERS
DEPARTMENT OF THE ARMY
WASHINGTON, D.C., 10 December 1995

UNIT, DIRECT SUPPORT AND GENERAL SUPPORT MAINTENANCE REPAIR PARTS AND SPECIAL TOOLS LIST

AIR CONDITIONER, COMPACT HORIZONTAL, MULTIPLE POWER INPUT, 36,000 BTU/HR 206 VOLT, 3 PHASE, 50/60/400 HERTZ MODEL MH-40-MP NSN 4120-01-330-6543

Current as of 5 May 1995

REPORTING ERRORS AND RECOMMENDING IMPROVEMENTS

You can help improve this manual. If you find any mistakes, or if you know of a way to improve these procedures, please let us know. Mail your letter or DA Form 2028 (Recommended Changes to Publications and Blank Forms), or DA Form 2028-2 located in the back of this manual directly to: Commander, US Army Aviation and Troop Command, ATTN: AMSAT-I-MP, 4300 Goodfellow Blvd., St. Louis, MO 63120-I 798. You may also submit your recommended changes by E-mail directly to <mpmt%avma28@st-louis-emh7.army.mil>. A reply will be furnished directly to you. Instructions for sending an electronic 2028 may be found at the back of this manual immediately preceding the hard copy 2028.

DISTRIBUTION STATEMENT A: Approved for public release; distribution is unlimited

TABLE OF CONTENTS

		PAGE	ILLUS/ FIGURE
Section I	Introduction	1	
Section II	Repair Part	1-1	
Group 01	Fabric Cover and Access Panels	1 - 1	1
Group 02	Louvers, Guards, Filters, Metal Covers and Information Plates	2-1	2
	Condenser Outlet Air Louver Assembly (Left)	3-1	3
	Condenser Outlet Air Louver Assembly (Right)	4-1	4
Group 03	Heating Elements and Switches	5-1	5

Group 04	Condensate Drain Assembly	6-I	6
Group 05	vaporator Fan Assembly	7-I	7
Group 06	Condenser Fans and Condenser Louver Controls		
	Condenser Fan Assembly	8-I	8
	Louver Actuator Cables	9-1	9
Group 07	Ventilation Damper and Actuator	I0-I	10
Group 08	Electrical System		
	Circuit Breaker, Logic Box, Motor Controller, Transformer and Rectifier	11-1	11
	Control Panel Assembly	12-I	12
	Relay and EMI Filter	13-I	13
	Terminal Boards and Coil Frost Switch	14-I	14
	Wiring Harnesses	15-I	15
Group 09	Refrigeration System	16-I	16
	Compressor	17-I	17
Group 10	Housing	18-I	18
Group 11	Loose/Accessory ttems	19-I	19
Group 12	Bulk Materials List	Bulk-I	
Seclion Ill	Special Tools List	(Not Applicable)	
Section IV	Cross-Reference Indexes		
	National Stock Number Index	I-1	
	Part Number Index	i-11	
	Figure and Item Number Index	I-31	

UNIT, DIRECT SUPPORT AND GENERAL SUPPORT MAINTENANCE REPAIR PARTS AND SPECIAL TOOLS LIST

SECTION I. INTRODUCTION

1. SCOPE. This RPSTL lists and authorizes spares and repair parts; special tools; special test, measurement, and diagnostic equipment (TMDE); and other special support equipment required for performance of unit, direct support and general support maintenance of the Air Conditioner. It authorizes the requisitioning, issue, and disposition of spares, repair parts and special tools as indicated by the source, maintenance and recoverability (SMR) codes.

2. GENERAL. In addition to Section I, Introduction, this Repair Parts and Special Tools List is divided into the following sections:

a. Section II. Repair Parts List. A list of spares and repair parts authorized by this RPSTL for use in the performance of maintenance. This list also includes parts which must be removed for replacement of the authorized parts. Parts lists are composed of functional groups in ascending alphanumeric sequence, with the parts in each group listed in ascending figure and item number sequence. Bulk materials are listed in item name sequence. Repair parts kits are listed separately in functional groups in Section II. Repair parts for repairable special tools are also listed in this section. Items listed are shown in the associated illustration(s)/figure(s).

b. Section III. Special Tools List. A list of special tools, special TMDE, and other special support equipment authorized by this RPSTL (as indicated by Basis of Issue (BOI) information in DESCRIPTION AND USABLE ON CODE column) for the performance of maintenance.

c. Section IV. Cross-Reference Index. A list, in National Item Identification Number (NIIN) sequence, of all national stock numbered items appearing in the listing, followed by a list in alphanumeric sequence of all part numbers appearing in the listings. National stock numbers and part numbers are cross referenced to each illustration figure and item number appearance. The figure and item number index lists figure and item numbers in alphanumeric sequence and cross references NSN, CAGEC and part number.

3. EXPLANATION OF COLUMNS (SECTIONS II AND III).

a. ITEM NO. (Column (1)). Indicates the number used to identify items called out in the illustration.

b. SMR Code (Column (2)). The Source, Maintenance, and Recoverability (SMR) code is a 5-position code containing supply/requisitioning information, maintenance category authorization criteria, and disposition instruction, as shown in the following breakout:

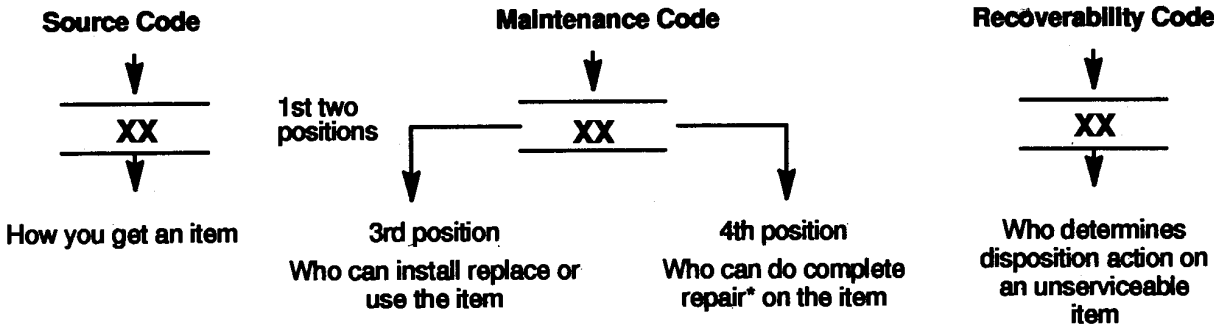

* Complete Rear: Maintenance capacity, capability, and authority to perform all corrective maintenance tasks of the "Repair" function in a use/user environment in order to restore serviceability to a failed item.

(1) Source Code. The source code tells you how you get an item needed for maintenance, repair, or overhaul of an end item/equipment. Explanations of source codes follows:

Source Code	Explanation
PA PB PC** PD PE PF PG	Stocked items; use the applicable NSN to request/requisition items with these source codes. They are authorized to the category indicated by the code entered in the 3rd position of the SMR code. **NOTE: Items coded PC are subject to deterioration.
KD KF KB	Items with these codes are not to be requested/requisitioned individually. They are part of a kit which is authorized to the maintenance category indicated in the 3rd position of the SMR code. The complete kit must be requisitioned and applied.
MO - (Made at org AVUM Level) MF - (Made at DS/AVUM Level) MH - (Made at GS Level) ML - (Made at Specialized Repair Activity (SRA)) MD - (Made at Depot)	Items with these codes are not to be requested/requisitioned individually. They must be made from bulk material which is identified by the part number in the DESCRIPTION and USABLE ON CODE (UOC) column and listed in the Bulk Material group of the repair parts list in the RPSTL. If the item is authorized to you by the 3rd position code of the SMR code, but the source code indicates it is made at a higher level, order the item from the higher level of maintenance.
AO - (Assembled by org AVUM Level) AF - (Assembled by DS/AVUM Level) AH - (Assembled by GS Category) AL - (Assembled by SRA) AD - (Assembled by Depot)	Items with these codes are not to be requested/requisitioned individually. The parts that make up the assembled item must be requisitioned or fabricated and assembled at the level of maintenance indicated by the source code. If the 3rd position code of the SMR code, authorizes you to replace the item, but the source code indicates the items are assembled at a higher level, order the item from the higher level of maintenance.

XA - Do not requisition an "XA"-coded item. Order its next higher assembly. (Also, refer to the NOTE below.)

XB - If an "XB" item is not available from salvage, order it using the CAGEC and part number given.

XC - Installation drawing, diagram, instruction sheet, field service drawing, that is identified by manufacturer's part number.

XD - Item is not stocked. Order an "XD"-coded item through normal supply channels using the CAGEC and part number given, if no NSN is available.

NOTE

Cannibalization or controlled exchange, when authorized, may be used as a source of supply for items with the above source codes, except for those source coded "XA" or those aircraft support items restricted by requirements of AR 750-1.

(2) Maintenance Code. Maintenance codes tell you the level(s) of maintenance authorized to USE and REPAIR support items. The maintenance codes are entered in the third and fourth positions of the SMR code as follows:

(a) The maintenance code entered in the third position tells you the lowest maintenance level authorized to remove, replace, and use an item. The maintenance code entered in the third position will indicate authorization to the following levels of maintenance.

Maintenance Code	Application/Explanation
C-	Crew or operator maintenance done within unit/AVUM maintenance.
O-	Unit level/AVUM maintenance can remove, replace, and use the item.
F-	Direct support/AVIM maintenance can remove, replace, and use the item.
H-	General support maintenance can remove, replace, and use the item.
L-	Specialized repair activity can remove, replace, and use the item.
D-	Depot can remove, replace, and use the item.

(b) The maintenance code entered in the fourth position tells whether or not the item is to be repaired and identifies the lowest maintenance level with the capability to do complete repair (i.e., perform all authorized repair functions). This position will contain one of the following maintenance codes.

NOTE

Some limited repair may be done on an item at a lower level of maintenance, if authorized by the Maintenance Allocation Chart (MAC) and SMR codes.

Maintenance Code	Application/Explanation
O-	Unit /AVUM is the lowest level that can do complete repair of the item.
F-	Direct support /AVIM is the lowest level that can do complete repair of the item.
H-	General Support is the lowest level that can do complete repair of the item.
L-	Specialized repair activity is the lowest level that can do complete repair of the item.
D-	Depot is the lowest level that can do complete repair of the item.
Z-	Nonreparable. No repair is authorized.
B-	No repair is authorized. No parts or special tools are authorized for the maintenance of a "B" coded item. However, the item may be reconditioned by adjusting, lubricating, etc., at the user level.

(3) Recoverability Code. Recoverability codes are assigned to items to indicate the disposition action on unserviceable items. The recoverability code is entered in the fifth position of the SMR Code as follows:

Recoverability Codes	Application/Explanation
Z-	Nonreparable item. When unserviceable, condemn and dispose of the item at the level of maintenance shown in 3rd position of SMR Code.
O-	Reparable item. When not economically reparable, condemn and dispose of the item at unit or AVUM level.
F-	Reparable item. When uneconomically reparable, condemn and dispose of the item at the direct support or AVIM level.
H-	Reparable item. When uneconomically reparable, condemn and dispose of the item at the general support level.
D-	Reparable item. When beyond lower level repair capability, return to depot. Condemnation and disposal of item not authorized below depot level.
L-	Reparable item. Condemnation and disposal not authorized below specialized repair activity (SRA).
A-	Item requires special handling or condemnation procedures because of specific reasons (e.g., precious metal content, high dollar value, critical material, or hazardous material). Refer to appropriate manuals/directives for specific instructions.

c. CAGEC (Column (3)). The Commercial and Government Entity Code (CAGEC) is a 5-digit numeric code which is used to identify the manufacturer, distributor, or Government agency/activity that supplies the item.

d. PART NUMBER (Column (4)). Indicates the primary number used by the manufacturer, (individual, company, firm, corporation, or Government activity), which controls the design and characteristics of the item by means of its engineering drawings, specifications, standards, and inspection requirements to identify an item or range of items.

NOTE

When you use an NSN to requisition an item, the item you receive may have a different part number from the number listed.

e. DESCRIPTION AND USABLE ON CODE (UOC) (Column (5). This column includes the following information:

(1) The Federal item name and, when required, a minimum description to identify the item.

(2) The physical security classification of the item is indicated by the parenthetical entry, e.g., Phy Sec C1 (C)-Confidential, Phy Sec C1 (S)-Secret, Phy Sec C1 (T)-Top-Secret.

(3) Items that are included in kits and sets are listed below the name of the kit or set.

(4) Spare/repair parts that make up an assembled item are listed immediately following the assembled item line entry.

(5) Part numbers of bulk materials are referenced in this column in the line entry for the item to be manufactured/fabricated.

(6) When the item is not used with all serial numbers of the same model, the effective serial numbers are shown on the last line(s) of the description (before UOC).

(7) The usable on code, when applicable (reference paragraph 5, Special Information).

(8) In the Special Tools List Section, the basis of issue (BOI) appears as the last line(s) in the entry for each special tool, special TMDE, and other special support equipment. When density of equipment supported exceeds density spread indicated in the basis of issue, the total authorization is increased proportionately.

(9) The statement “END OF FIGURE” appears just below the last item description in Column (5) for a given figure in both Section II and Section III.

f. QTY (Column (6)). The QTY (quantity per figure) column indicates the quantity of the item used in the breakout shown on the illustration/figure, which is prepared for a functional group, subfunctional group, or an assembly. A "V" appearing in this column instead of a quantity indicates that the quantity is variable and may vary from application to application.

4. EXPLANATION OF INDEX FORMAT AND COLUMNS (SECTION IV).

a. NATIONAL STOCK NUMBER (NSN) INDEX.

(1) STOCK NUMBER Column. This column lists the NSN in national item identification number (NIIN) sequence. The NIIN consists of the last nine digits of the NSN, i.e.

NSN
5305-01-574-1 467
NIIN

When using this column to locate an item, ignore the first four digits of the NSN. Use the complete NSN (13 digits) when requisitioning items by stock number.

(2) FIG. Column. This column lists the number of the figure where the item is identified/located. The figures are in numerical order in Section II and Section III.

(3) ITEM Column. The item number identifies the item associated with the figure listed in the adjacent FIG. column. This item is also identified by the NSN listed on the same line.

b. PART NUMBER INDEX. Part numbers in this index are listed in ascending alphanumeric sequence (i. e., vertical arrangement of letter and number combinations which place the first letter or digit of each group in order A through Z, followed by the numbers 0 through 9, and each following letter or digit in like order).

(1) CAGEC Column. The Commercial and Government Entity Code (CAGEC) is a 5-digit numeric code used to identify the manufacturer, distributor, or Government agency/activity that supplies the item.

(2) PART NUMBER Column. Indicates the primary number used by the manufacturer (individual, firm, corporation, or Government activity), which controls the design and characteristics of the item by means of its engineering drawings, specifications, standards, and inspection requirements to identify an item or range of items.

(3) STOCK NUMBER Column. This column lists the NSN for the associated part number and manufacturer identified in the PART NUMBER and CAGEC columns to the left.

(4) FIG. Column. This column lists the number of the figure where the item is identified/located in Section II and Section III.

(5) ITEM Column. The item number is that number assigned to the item as it appears in the figure referenced in the adjacent figure number column.

c. FIGURE AND ITEM NUMBER INDEX.

(1) FIG. Column. This column lists the number of the figure where the item is identified/located in Section II and Section III.

(2) ITEM Column. The item number is that number assigned to the item as it appears in the figure referenced in the adjacent figure number column.

(3) STOCK NUMBER Column. This column lists the NSN for the item.

(4) CAGEC Column. The Commercial and Government Entity Code (CAGEC) is a 5-digit numeric code used to identify the manufacturer, distributor, or Government agency/activity that supplies the item.

(5) PART NUMBER Column. Indicates the primary number used by the manufacturer (individual, firm, corporation, or Government activity), which controls the design and characteristics of the item by means of its engineering drawings, specifications, standards, and inspection requirements to identify an item or range of items.

5. SPECIAL INFORMATION.

a. USABLE ON CODE. The usable on code appears in the lower left comer of the Description column heading. Usable on codes are shown as "UOC:.." in the Description Column justified left) on the last line of the applicable item description/nomenclature. Uncoded items are applicable to all models. Identification of the usable on codes used in this RPSTL are:

Code	Used On
EYS	MH-40-MP

b. FABRICATION INSTRUCTIONS. Bulk materials required to manufacture items are listed in the Bulk Material Functional Group of this RPSTL. Part numbers for bulk materials are also referenced in the description column of the line item entry for the item to be manufactured/fabricated. Detailed fabrication instructions for items source coded to be manufactured or fabricated are found in TM 9-4120-404-14.

c. ASSEMBLY INSTRUCTIONS. Detailed assembly instructions for items source coded to be assembled from component spare/repair parts are found in TM 9-4120-404-14. Items that make up the assembly are listed immediately following the assembly item entry or reference is made to an applicable figure.

d. INDEX NUMBERS. Items which have the word BULK in the figure column will have an index number shown in the item number column. This index number is a cross-reference between the National Stock Number/Part Number Index and the bulk material list in Section II.

e. ASSOCIATED PUBLICATIONS. The publications listed below pertain to the Air Conditioner and its components.

Publication	Short Title
TM 9-4120-404-14	Operator, Unit, Direct Support and General Support Maintenance Manual.

6. HOW TO LOCATE REPAIR PARTS.

a. When National Stock Numbers or Part Numbers are NOT Known.

(1) First. Using the table of contents, determine the assembly or subassembly group to which the item belongs. This is necessary since figures are prepared for assembly groups and subassembly groups, and listings are divided into the same groups.

(2) Second. Find the figure covering the assembly group or subassembly group to which the item belongs.

(3) Third. Identify the item on the figure and use the Figure and Item Number Index to find the NSN.

b. When National Stock Number or Part Number is Known.

(1) First. Using the of National Stock Number and Part Number Indexes find the pertinent National Stock Number or Part Number. The NSN index is in National Item Identification Number (NIIN) sequence (see paragraph 4.a.). The part numbers in the Part Number index are listed in ascending alphanumeric sequence (see paragraph 4.b.). Both indexes cross-reference you to the illustration/figure and item number of the item you are looking for.

(2) Second. Turn to the figure and item number, verify that the item is the one you are looking for, then locate the item number in the repair parts list for the figure.

7. ABBREVIATIONS. Abbreviations used in this manual are listed in MIL-STD-12.

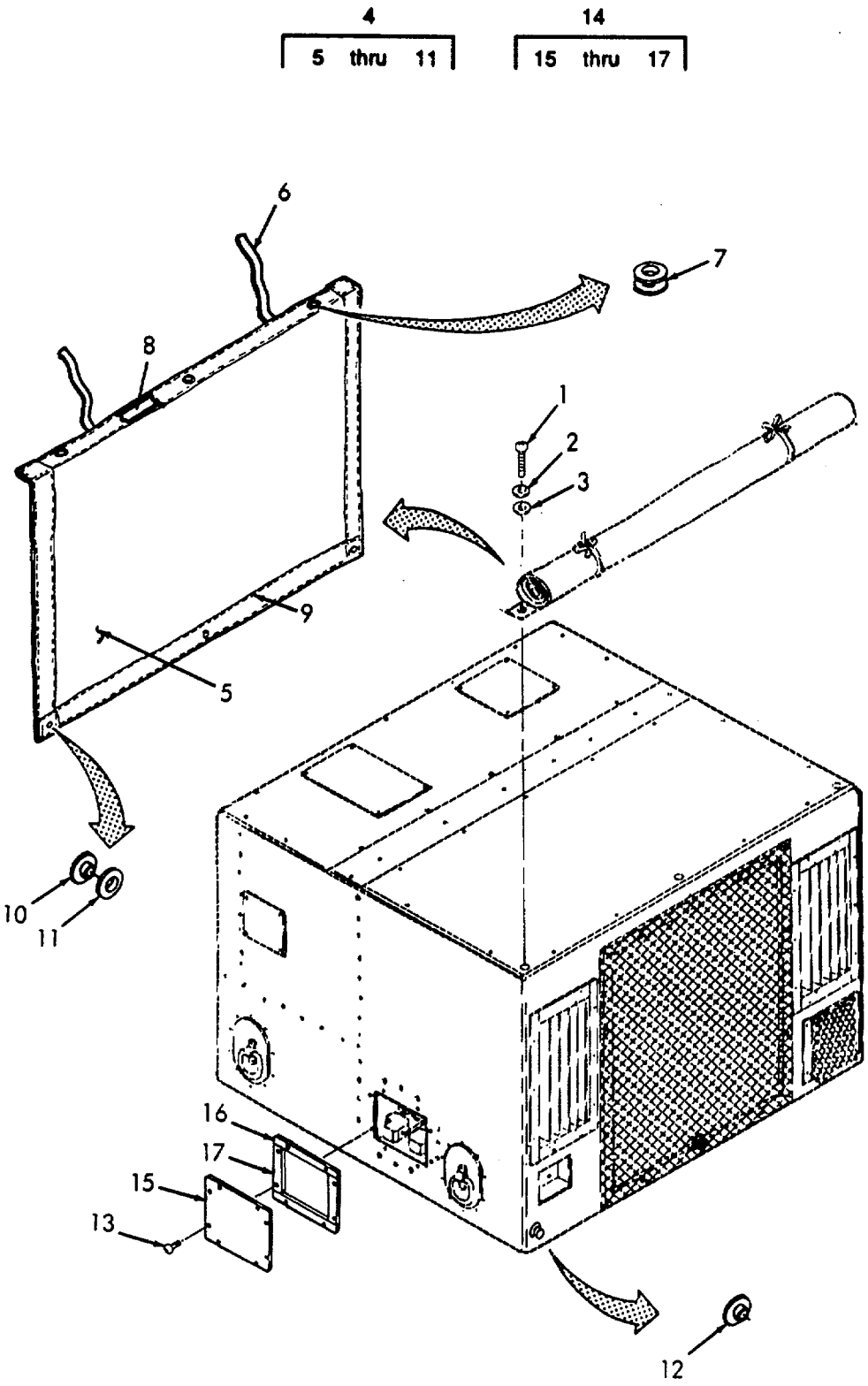

FIGURE 1. Fabric Cover and Access Panels.

(1) ITEM NO	(2) SMR CODE	(3) CAGEC	(4) PART NUMBER	(5) DESCRIPTION AND USABLE ON CODES (UOC)	(6) QTY
				GROUP 01 FABRIC COVER AND ACCESS PANELS	
				Figure 1. FABRIC COVER AND ACCESS PANELS	
1	PAOZZ	96906	MS35207-266	Screw	3
2	PAOZZ	96906	MS35338-43	Washer, Lock	3
3	PAOZZ	96906	MS27183-42	Washer, Flat	3
4	PAOOO	97403	13216E6361	Cover, Fabric	1
5	XAOZZ	97403	13216E6361/1	Cloth, Coated	1
6	XAOZZ	81349	M1L-W-27265	Webbing, Textile	2
7	XAOZZ	97403	13216E6361/3	Grommet, Metallic	3
8	XAOZZ	97403	13216E6361/4	Sheet	1
9	XAOZZ	97403	13216E6361/5	Thread, Nylon	V
10	XBOZZ	96906	MS27980-1N	Button, Snap	3
11	XBOZZ	96906	MS27980-6N	Socket, Snap	3
12	PAOZZ	96906	MS27980-18N	Fastener	3
13	PAOZZ	96906	MS24693-S51	Screw	8
14	XBOOO	97403	13216E6337	Cover, Access	1
15	XBOZZ	97403	13216E6337/1	Sheet	1
16	MOOZZ	97403	13216E6337/2	Rubber, Cellular Make From Gasket, P/N MIL-R-6130, Type II, Grade A, Cond. Soft, .060 thk.	2
17	MOOZZ	97403	13216E6337/3	Rubber, Cellular Make From Gasket, P/N MIL-R-6130, Type II, Grade A, Cond. Soft, .060 thk.	2
				END OF FIGURE	

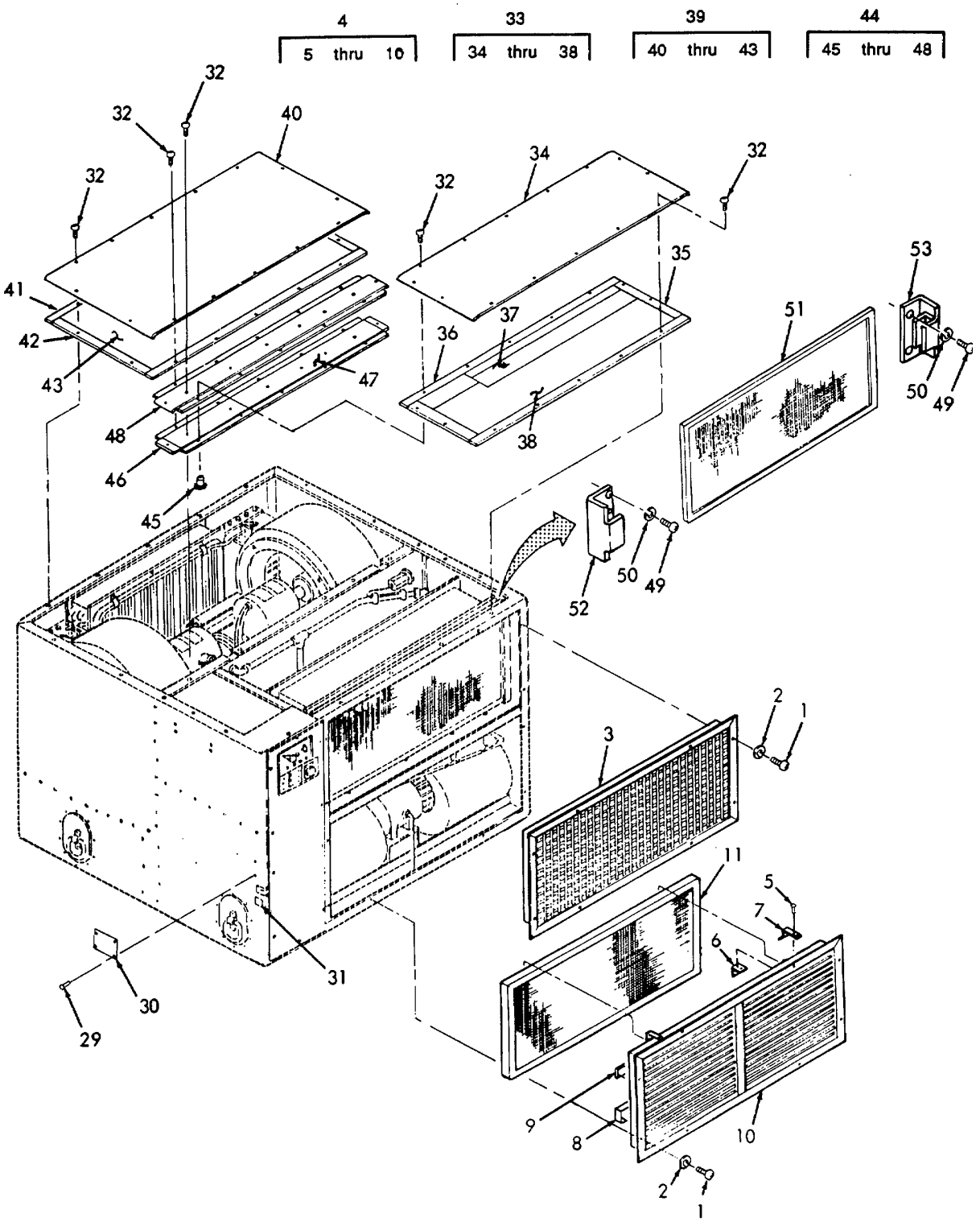

FIGURE 2. Louvers, Guards, Filters, Metal Covers and Information Plates. (Sheet 1 of 2)

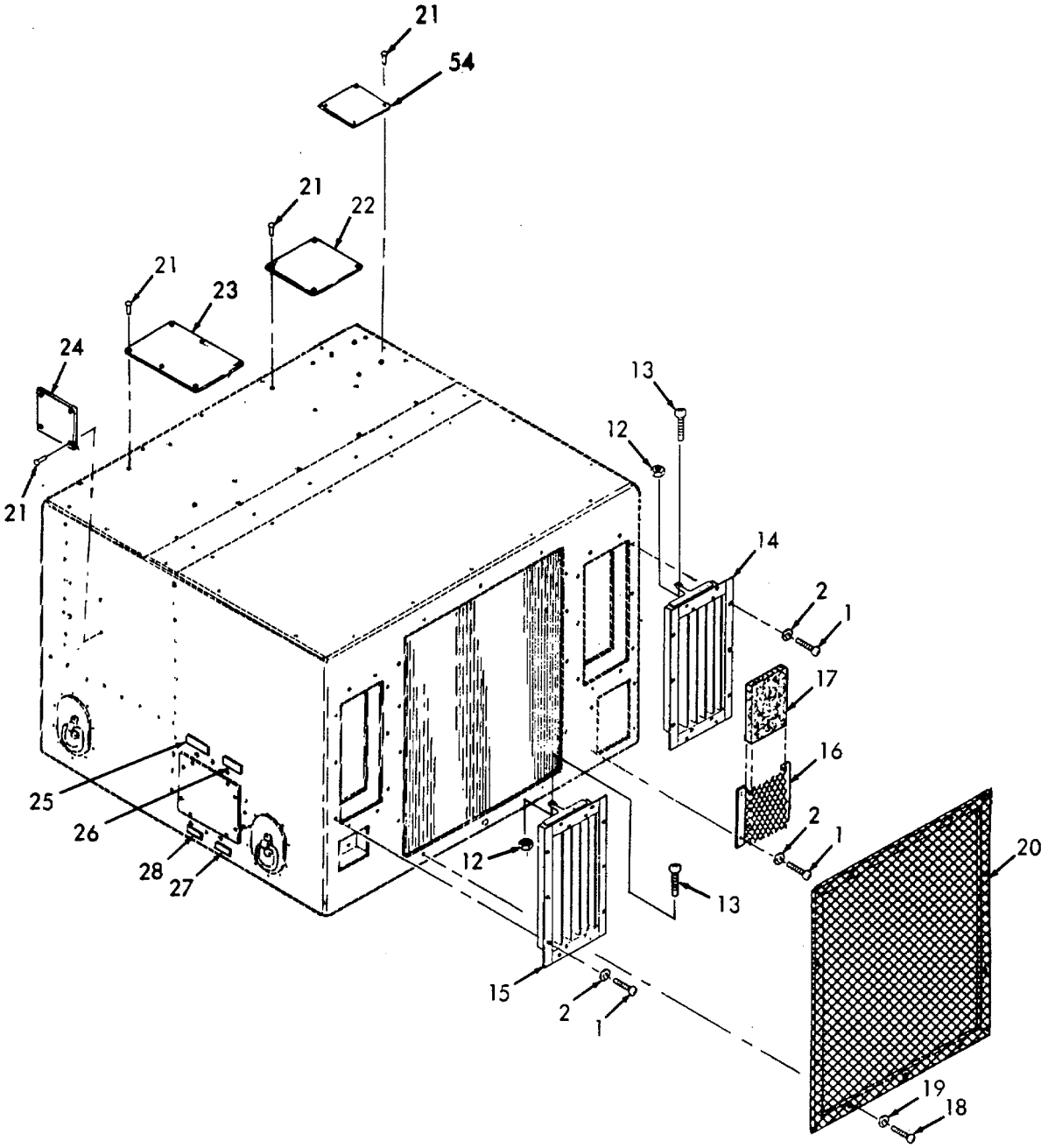

FIGURE 2. Louvers, Guards, Filters, Metal Covers and Information Plates. (Sheet 2 of 2)

(1) ITEM NO	(2) SMR CODE	(3) CAGEC	(4) PART NUMBER	(5) DESCRIPTION AND USABLE ON CODES (UOC)	(6) QTY
				GROUP 02 LOUVERS, GUARDS, FILTERS, METAL COVERS, AND INFORMATION PLATES	
				Figure 2. LOUVERS, GUARDS, FILTERS, METAL COVERS, AND INFORMATION PLATES	
1	PAOZZ	96906	MS35206-246	Screw	40
2	PAOZZ	96906	MS35338-42	Washer, Lock	40
3	XBOZZ	97403	13216E6318	Louver, Metal	1
4	XBOOO	97403	13216E6080-5	Louver W/Clips	1
5	PAOZZ	97403	13214E3789-11	Rivet,	8
6	XBOZZ	97403	13216E6080-5/2	S h e e t	4
7	XBOZZ	97403	13216E6080-5/3	S h e e t	4
8	MOOZZ	97403	13216E6080-5/5	Gasket, Flex, Poly Make From Gasket, P/N AMS3570 1/2 thk. x 3/4 W, 2.5 lb/cu.ft.	2
9	MOOZZ	97403	13216E6080-5/6	Gasket, Flex, Poly Make From Gasket, P/N AMS3570 1,/8 thk. x 3/4 W, 2.5 lb/cu.ft.	2
10	XAOZZ	97403	13229E6696	Louver, Metal	1
11	PAOZZ	97403	13216E6292-3	Filter, Air Cond.	1
12	PAOZZ	96906	MS21044N3	Nut	2
13	PAOZZ	96906	MS35207-264	Screw	2
14	XBOOO	97403	13225E9520	Louver Assembly Right. See FIG. 4 for Assy. Brkdn.	1
15	XBOOO	97403	13225E9521	Louver Assembly Left. See FIG. 3for Assy Brkdn.	1
16	XBOZZ	97403	13216E6316	Guard, Ventilation	1
17	PAOZZ	97403	13216E6088-3	Filter, Ventilation	1
18	PAOZZ	96906	MS35207-266	Screw	8
19	PAOZZ	96906	MS35338-43	Washer, Lock	8
20	XBOZZ	97403	13225E9514	Guard, Condenser	1
21	PAOZZ	96906	MS20470AD4-5	Rivet, Solid	18
22	XBOZZ	97403	13229E6699	Schematic Diagram	1
23	XBOZZ	97403	13229E6697	Plate, Fluid Diagram	1
24	XBOZZ	67302	1801-002	ID Plate	1
25	XBOZZ	97403	13218E6957	Plate, Instruction	1
26	XBOZZ	97403	13218E6958	Plate, Instruction	1
27	XBOZZ	97403	13216E6180	Plate, Designation	1
28	XBOZZ	97403	13216E6179	Plate, Designation	1
29	PAOZZ	96906	MS20470AD4-4	Rivet, Solid Univ. HD, .062 Dia. x .25 LG.	4
30	XBOZZ	97403	13218E7548	Plate, Danger	1

(1) ITEM NO	(2) SMR CODE	(3) CAGEC	(4) PART NUMBER	(5) DESCRIPTION AND USABLE ON CODES (UOC)	(6) QTY
31	XBOZZ	97403	13216E6358	Plate, Instruction	1
32	PAOZZ	96906	MS24693-S274	Screw	33
33	XBOOO	97403	13216E6314	Cover, Front	1
34	XBOZZ	97403	13216E6314/1	Sheet	1
35	MOOZZ	97403	13216E6314/2	Rubber, Cellular Make From Gasket, P/N MIL-R-61'30, Type II Grade A, Cond. Soft, .060 thk.	2
36	MOOZZ	97403	13216E6314/3	Rubber, CeIlular Make From Gasket, P/N MIL-R-6130, Type II, Grade A, Cond. Soft, .060 thk.	2
37	MOOZZ	97403	13216E6314/4	Insulation Sheet Make From Insulation, P/N MIL-1-14511, .25 thk.	1
38	MOOZZ	97403	13216E6314/5	Insulation Sheet Make From Insulation, P/N MIL-1-14511 ,.25thk.	1
39	XBOOO	97403	13216E6282	Cover, Rear	1
40	XBOZZ	97403	13216E628211		1
41	MOOZZ	97403	13216E628213	Rubber, Cellular Make From Gasket, P/N MIL-R-6130, Type II, Grade A, Cond. Soft, .060 thk.	2
42	MOOZZ	97403	13216E628214	Rubber, Cellular Make From Gasket, P/N MIL-R-6130, Type II, Grade A, Cond. Soft, .060 thk.	2
43	MOOZZ	97403	13216E6282/5	Insulation Sheet Make From Insulation, P/N MIL-1-14511,.25 thk.	1
44	XBOOO	97403	13229E6695	Cover, Center	1
45	PAOZZ	96906	MS27130-S26K	Nut Bind Rivet	10
46	MOOZZ	97403	13229E6695/3	Rubber, Cellular Make From Gasket, P/N MIL-R-6130, Type II, Grade A, Cond. Soft, .060 thk.	2
47	MOOZZ	97403	13229E6695/4	Flexible Poly. Foam Make From Gasket, P/N AMS 3570, 2.5LB/CU.FT. .25 thk	1
48	XBOZZ	97403	13229E669511	Sheet	1
49	PAOZZ	96906	MS35207-265	Screw.	4
50	PAOZZ	96906	MS35338-43	Washer, Lock	4
51	PAOZZ	97403	13219E1032	Mist Eliminator	1
52	XBOZZ	97403	13219E1031	Bracket, Mist Elim. Right	1
53	XBOZZ	97403	13219E1030	Bracket, Mist Elim Left	1
54	XBOZZ	97403	13230E5864	Plate, Caution	1
				END OF FIGURE	

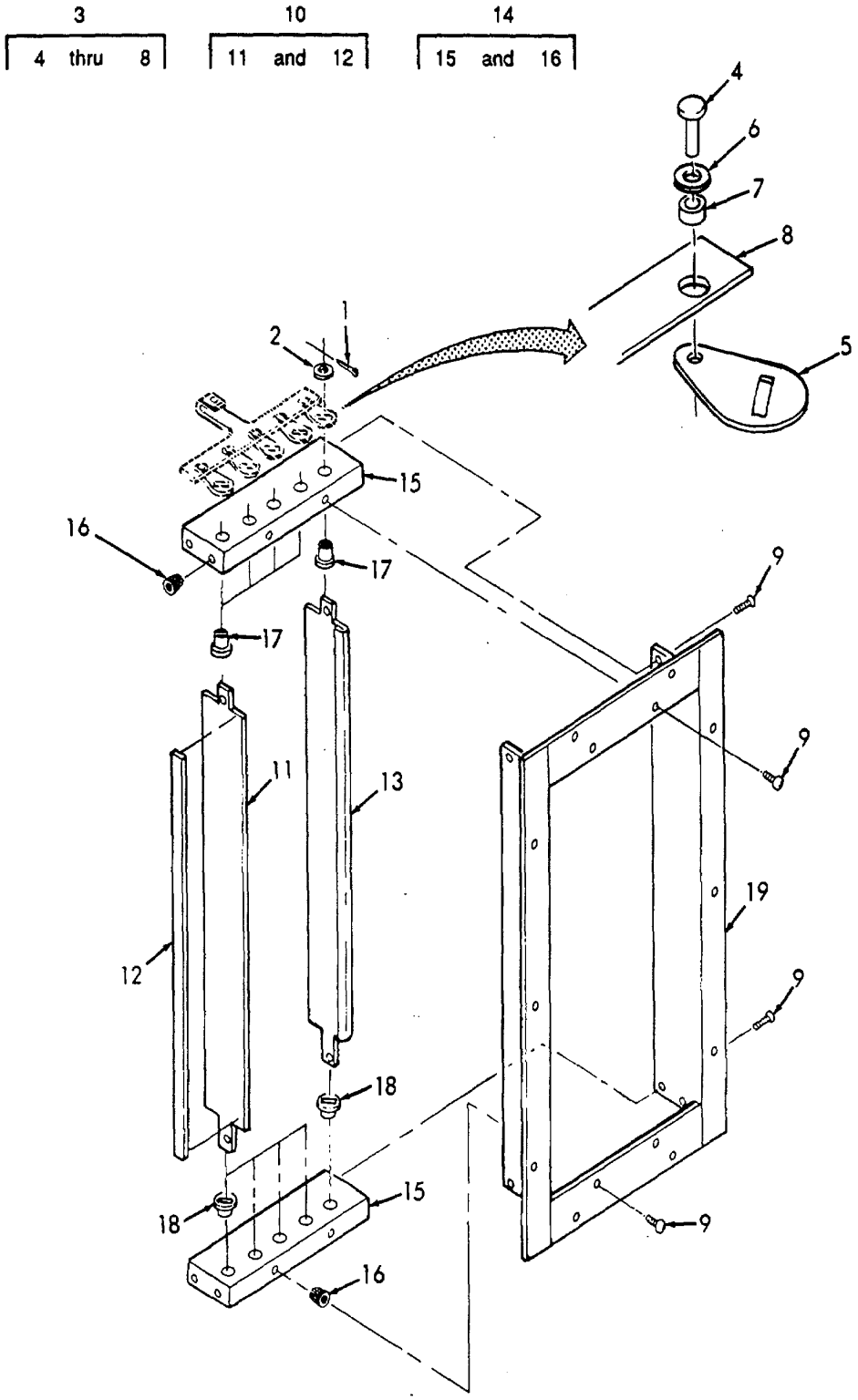

FIGURE 3. Condenser Outlet Air Louver Assembly (Left).

(1) ITEM NO	(2) SMR CODE	(3) CAGEC	(4) PART NUMBER	(5) DESCRIPTION AND USABLE ON CODES (UOC)	(6) QTY
				GROUP 02 LOUVERS, GUARDS, FILTERS, METAL COVERS, AND INFORMATION PLATES	
				Figure 3 CONDENSER OUTLET AIR LOUVER ASSEMBLY (LEFT)	
1	PAOZZ	96906	MS24665-151	Pin	5
2	PAOZZ	96906	MS17188-1	Washer	5
3	XAOOO	97403	13225E9518	Connecting Link/Arm	1
4	PAOZZ	96906	MS20470AD2-4	Rivet, Solid	5
5	XBOZZ	97403	13225E9528	Arm, Louver Blade	5
6	PAOZZ	96906	MS27183-1	Washer, Flat	5
7	XAOZZ	97403	13216E6112	Spacer, Sleeve	5
8	XAOZZ	97403	13225E9529	Link	1
9	PAOZZ	96906	MS24693-S26	Screw	12
10	PAOOO	97403	13225E9525-2	Blade, Louver	4
11	XAOZZ	97403	13225E9525-2/1	Sheet	1
12	MOOZZ	97403	13225E9525-2/2	Rubber, Cellular Make From Gasket, P/N MIL-R-6130, Type II, Grade A, Cond. Soft, .060 thk.	1
13	PAOZZ	97403	13225E9524-1	Blade, Louver	1
14	XAOOO	97403	13225E9523	Plate, Bearing	2
15	XAOZZ	97403	13225E9523/1	Plate.	1
16	PAOZZ	96906	MS21209C0620	Insert, Screw Thrd	6
17	PAOZZ	97403	13216E6103-1	Bearing Upper	5
18	PAOZZ	97403	13216E6103-2	Bearing Lower	5
19	XAOZZ	97403	13225E9522	Frame, Louver	1
				END OF FIGURE	

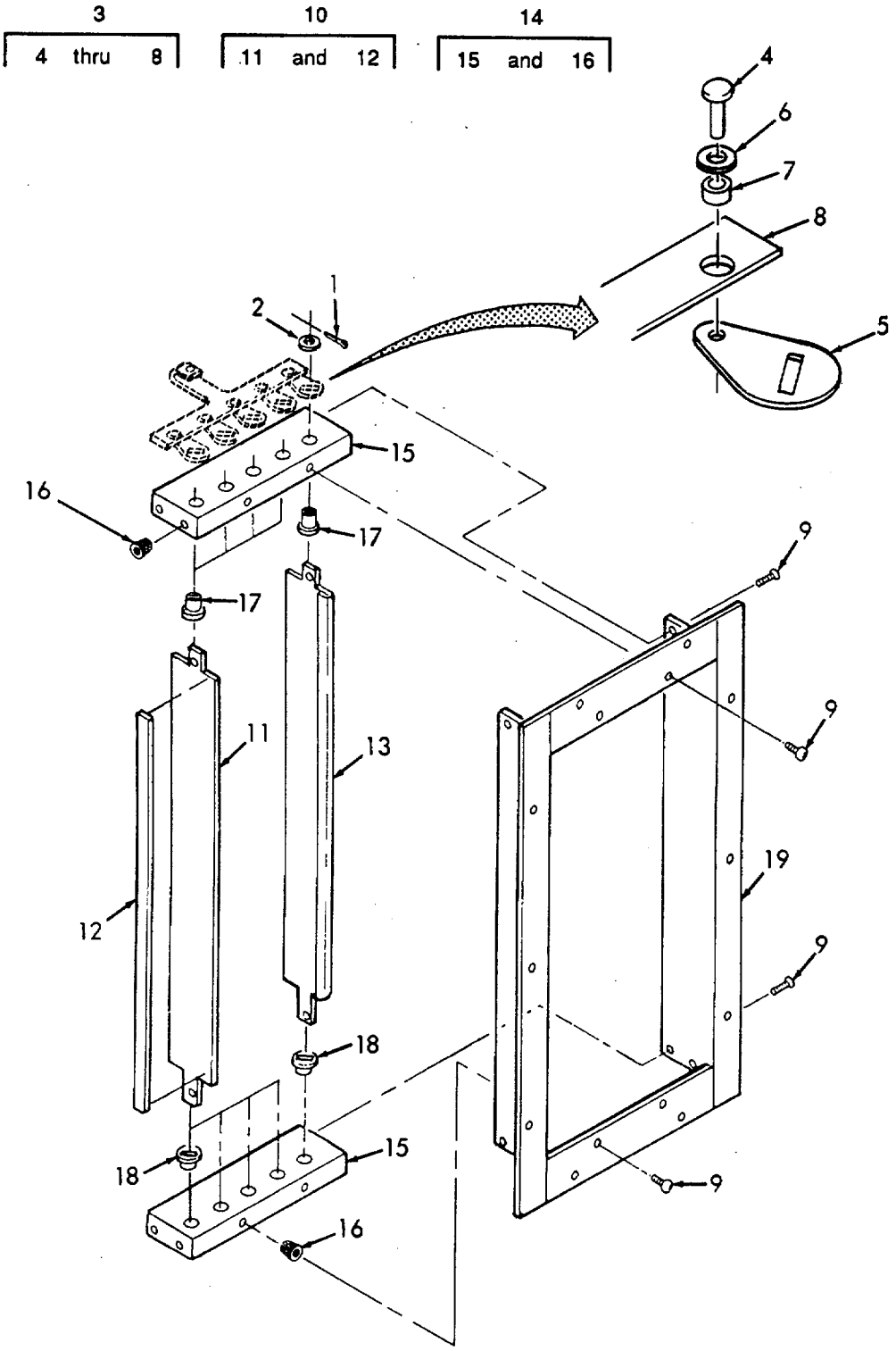

FIGURE 4. Condenser Outlet Air Louver Assembly (Right).

(1) ITEM NO	(2) SMR CODE	(3) CAGEC	(4) PART NUMBER	(5) DESCRIPTION AND USABLE ON CODES (UOC)	(6) QTY
				GROUP 02 LOUVERS, GUARDS, FILTERS, METAL COVERS, AND INFORMATION PLATES	
				Figure 4 CONDENSER OUTLET AIR LOUVER ASSEMBLY (RIGHT)	
1	PAOZZ	96906	MS24665-151	Pin	5
2	PAOZZ	96906	MS17188-1	Washer	5
3	XAOOO	97403	13225E9519	Connecting Link/Arm	1
4	PAOZZ	96906	MS20470AD2-4	Rivet, Solid.	5
5	XBOZZ	97403	13225E9528	Arm, Louver Blade	5
6	PAOZZ	96906	MS27183-1	Washer, Flat	5
7	XAOZZ	97403	13216E6112	Spacer, Sleeve	5
8	XAOZZ	97403	13225E9529	Link	1
9	PAOZZ	96906	MS24693-S26	Screw	12
10	PAOOO	97403	13225E9525-1	Blade, Louver	4
11	XAOZZ	97403	13225E9525-1/1		1
12	MOOZZ	97403	13225E9525-1/2	Rubber, Cellular Make From Gasket, P/N MIL-R-6130, Type II, Grade A, Cond. Soft, .060 thk.	1
13	PAOZZ	97403	13225E9524-2	Blade, Louver	1
14	XAOOO	97403	13225E9523	Plate, Bearing	2
15	XAOZZ	97403	13225E9523/1	Plate	1
16	PAOZZ	96906	MS21209C0620	Insert, Screw Thrd	6
17	PAOZZ	97403	13216E6103-1	Bearing Upper	5
18	PAOZZ	97403	13216E6103-2	Bearing Lower	5
19	XAOZZ	97403	13225E9522	Frame, Louver	1
				END OF FIGURE	

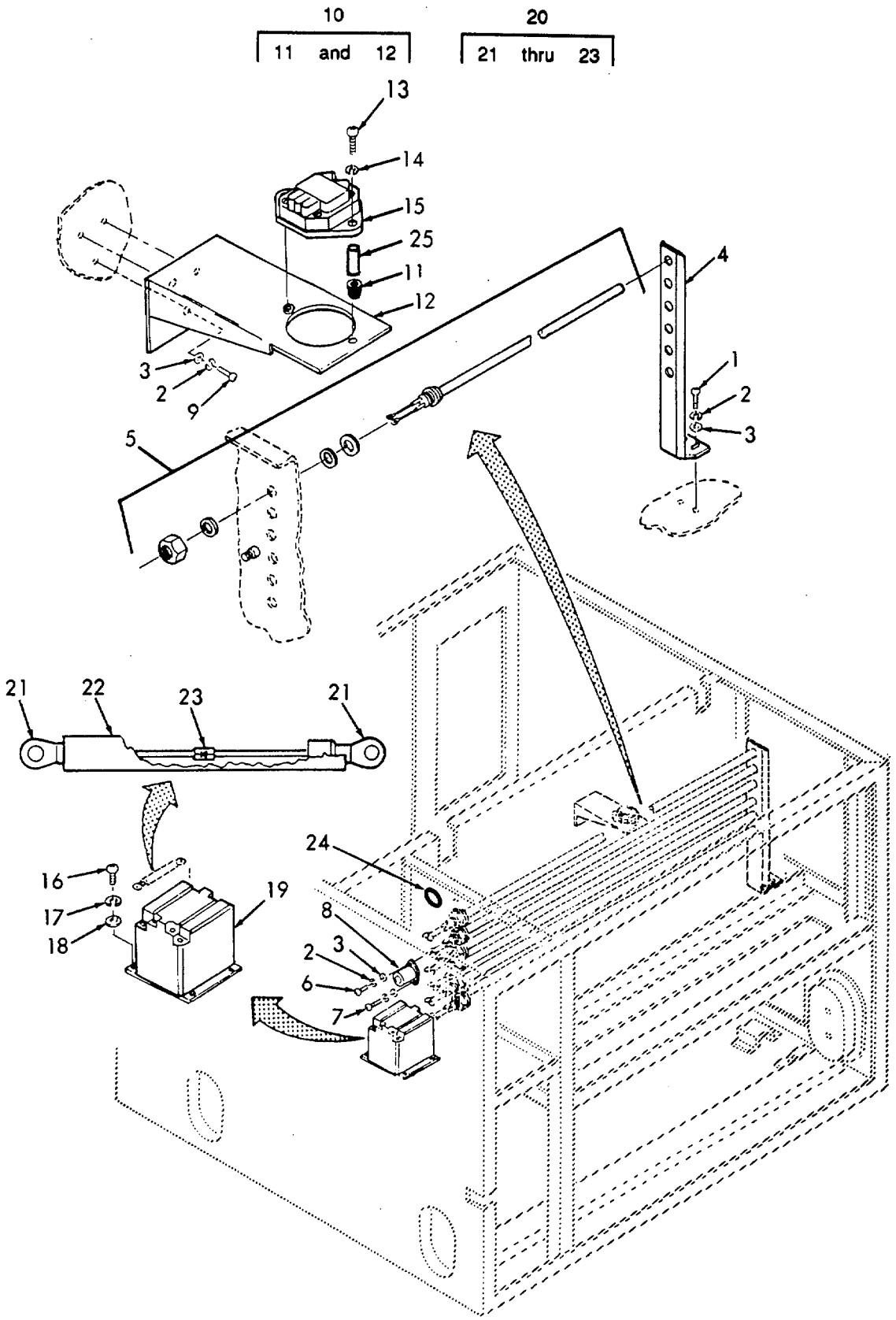

FIGURE 5. Heating Elements and Switches.

(1) ITEM NO	(2) SMR CODE	(3) CAGEC	(4) PART NUMBER	(5) DESCRIPTION AND USABLE ON CODES (UOC)	(6) QTY
				GROUP 03 HEATING ELEMENTS AND SWITCHES	
				Figure 5 HEATING ELEMENTS AND SWITCHES	
1	PAOZZ	96906	MS35207-265	Screw	2
2	PAOZZ	96906	MS35338-43	Washer, Lock	7
3	PAOZZ	96906	MS27183-42	Washer, Flat	7
4	XBOZZ	97403	13226E5917	Support, Heater	1
5	PAOZZ	97403	13228E4258-5	Heating Element (Includes Attaching Hardware)	6
6	PAOZZ	96906	MS35207-264	Screw	1
7	PAOZZ	96906	MS35207-262	Screw	1
8	PAOZZ	81349	NL422B03-008	Insulator	1
9	PAOZZ	96906	MS35207-267	Screw	3
10	XBOOO	97403	13229E6668	Bracket, Thermo Sw	1
11	PAOZZ	96906	MS27130-S9K	Nut, Blind Rivet	2
12	XAOZZ	97403	13229E6668/1	Sheet	1
13	PAOZZ	96906	MS35206-238	Screw	2
14	PAOZZ	96906	MS35338-41	Washer, Lock	2
15	PAOZZ	97403	13216E6224	Switch, Thermostat	1
16	PAOZZ	96906	MS35206-245	Screw	4
17	PAOZZ	96906	MS35338-42	Washer, Lock	4
18	PAOZZ	96906	MS27183-41	Washer, Flat	4
19	PAOZZ	96906	MS24192-D1	Relay	1
20	PAOOO	97403	13229E4287	Diode, W/Terminals	1
21	PAOZZ	96906	MS25036-149	Terminal, Lug	2
22	MOOZZ	97403	13229E4287/3	Insulation Sleeving Make From Insulation Sleeving P/N M23053/5-107-9 .375 ID Min., Cut to Length	1
23	PAOZZ	97403	13219E0897	Diode	1
24	PAOZZ	96906	MS35489-430	Grommet	1
25	PAOZZ	97403	13216E6159-7	Post Spacer	2
				END OF FIGURE	

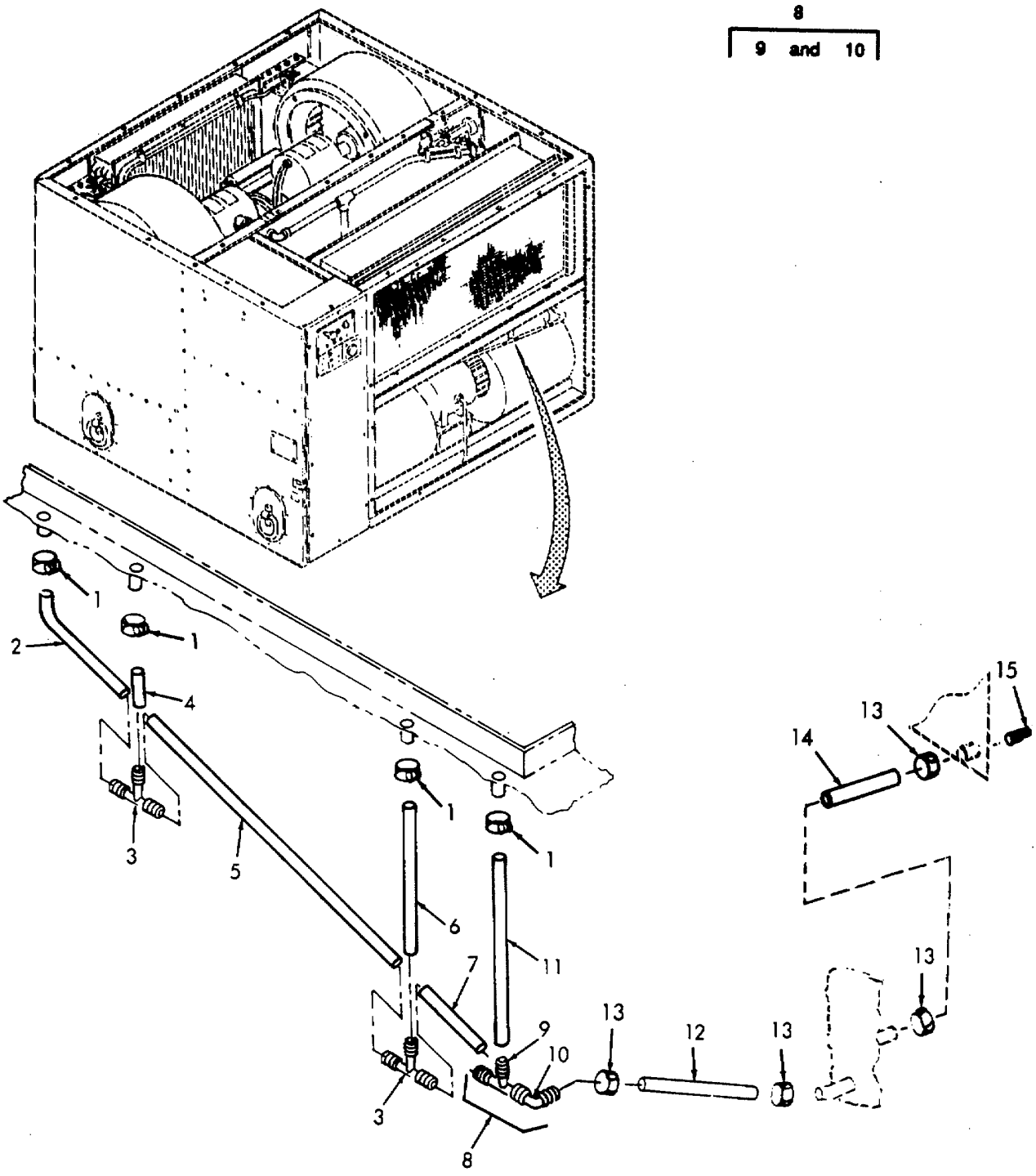

FIGURE 6. Condensate Drain Assembly.

(1) ITEM NO	(2) SMR CODE	(3) CAGEC	(4) PART NUMBER	(5) DESCRIPTION AND USABLE ON CODES (UOC)	(6) QTY
				GROUP 04 CONDENSATE DRAIN	
				Figure 6 CONDENSATE DRAIN ASSEMBLY	
1	PAOZZ	96906	MS35842-10	Clamp	4
2	MOOZZ	97403	13229E6700/273	Tubing	1
				Make From Tube, P/N ZZ-T-831, Type VI, Class 6 .625 In. ID, Cut To Length	
3	PAOZZ	97403	13229E5336-11	Tee, Barbed	2
4	MOOZZ	97403	13229E6700/275	Tubing	1
				Make From Tube, P/N ZZ-T-831, Type VI, Class 6 .625 In. ID, Cut To Length	
5	MOOZZ	97403	13229E6700/276	Tubing	1
				Make From Tube, P/N ZZ-T-831, Type VI, Class 6 .625 In. ID, Cut To Length	
6	MOOZZ	97403	13229E6700/277	Tubing	1
				Make From Tube, P/N ZZ-T-831, Type VI, Class 6 .625 In. ID, Cut To Length	
7	MOOZZ	97403	13229E6700/278	Tubing	1
				Make From Tube, P/N ZZ-T-831, Type VI, Class 6 .625 In. ID, Cut To Length	
8	PAOOO	97403	13229E5334	Elbow and Tee.....	1
9	XAOZZ	97403	13229E5336-11	Tee, Barbed.....	1
10	XAOZZ	97403	13229E5335-6	Elbow, Barbed.	1
11	MOOZZ	97403	13229E6700/280	Tubing	1
				Make From Tube, P/N ZZ-T-831, Type VI, Class 6 .625 In. ID, Cut To Length	
12	MOFZZ	97403	13229E6700/282	Tubing	1
				Make From Tube, P/N ZZ-T-831, Type VI, Class 6 .625 In. ID, Cut To Length	
13	PAFZZ	96906	MS35842-11	Clamp.....	4
14	MFFZZ	97403	13229E6700/292	Tubing	1
				Make From Tube, P/N ZZ-T-831, Type VI, Class 6 .625 In. ID, Cut To Length	
15	PAOZZ	81348	WW-P-471 TY III, STY A	Pipe-Fitting.	1
				END OF FIGURE	

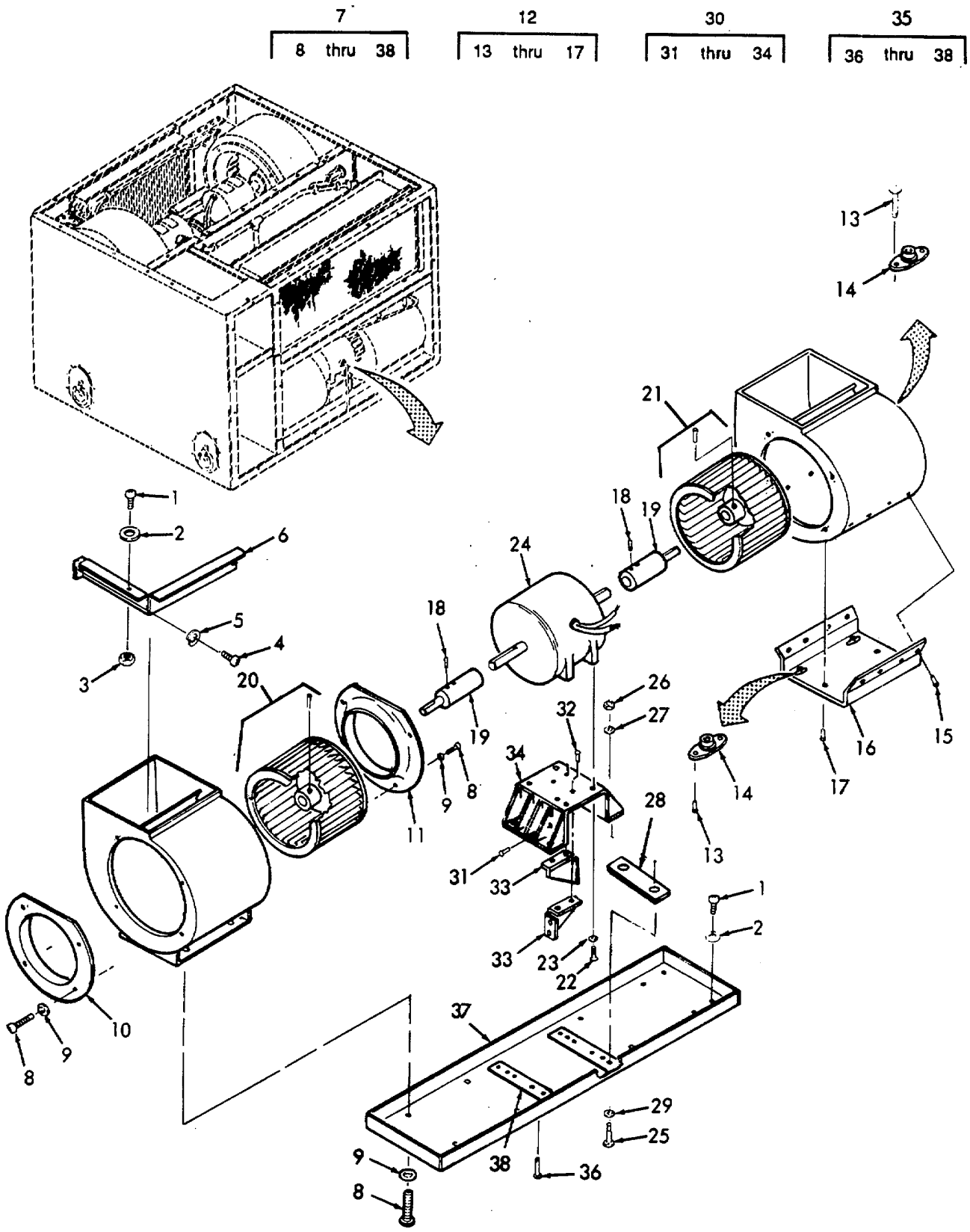

FIGURE 7. Evaporator Fan Assembly.

(1) ITEM NO	(2) SMR CODE	(3) CAGEC	(4) PART NUMBER	(5) DESCRIPTION AND USABLE ON CODES (UOC)	(6) QTY
				GROUP 05 EVAPORATOR FAN ASSEMBLY	
				Figure 7 EVAPORATOR FAN ASSEMBLY	
1	PAFZZ	96906	MS35207-264	Screw	6
2	PAFZZ	96906	MS27183-42	Washer, Flat	8
3	PAFZZ	96906	MS21044N3	Nut	2
4	PAFZZ	96906	MS35207-265	Screw	4
5	PAFZZ	96906	MS35338-43	Washer, Lock	4
6	XBFZZ	97403	13225E9542	Duct, Scroll	2
7	XBFFF	97403	13229E7867	Evaporator Fan Assy.	1
8	PAFZZ	96906	MS35206-244	Screw	24
9	PAFZZ	96906	MS27183-41	Washer, Flat	24
10	XBFZZ	97403	13230E6360	Bell, Inlet	2
11	XBFZZ	97403	13230E6359	Bell, Inlet	2
12	XBFFF	97403	13225E9543	Scroll, Evaporator	2
13	PAFZZ	97403	13214E3791-2	Rivet, Blind	24
14	PAFZZ	97403	13216E4538-2	Nut-Anchor, Two Lug	12
15	PAFZZ	96906	MS20470AD4-4	Rivet, Solid	8
16	XBFZZ	97403	13225E9543/6	Sheet	1
17	PAFZZ	96906	MS20426AD4-4	Rivet, Solid	2
18	PAFZZ	96906	MS18065-14	Setscrew	4
19	PAFZZ	97403	13225E9552-4	Shaft, Extension	2
20	PAFZZ	97403	13230E6354	Impeller Fan, Centr CW. (Includes Setscrew)	1
21	PAFZZ	97403	13230E6355	Impeller Fan, Centr CCW. (Includes Setscrew)	1
22	PAFZZ	96906	MS90726-31	Screw	4
23	PAFZZ	96906	MS27183-12	Washer, Flat	4
24	PAFZZ	97403	13229E6671	Motor, AC	1
25	PAFZZ	80204	B1821BH025 F100N	Screw	4
26	PAFZZ	96906	MS51922-5	Nut	4
27	PAFZZ	96906	MS27183-10	Washer, Flat	4
28	PAFZZ	97403	13230E5863	Spacer	2
29	PAFZZ	97403	13221E9322-1	Washer, Flat Round	4
30	XBFFF	97403	13225E9541	Bracket, Evap Motor	1
31	PAFZZ	96906	MS20470AD4-6	Rivet, Solid	4
32	PAFZZ	96906	MS20426AD4-6	Rivet, Solid	4
33	XBFZZ	97403	13225E9541/2	Sheet	2
34	XBFZZ	97403	13225E9541/1	Sheet	1

(1) ITEM NO	(2) SMR CODE	(3) CAGEC	(4) PART NUMBER	(5) DESCRIPTION AND USABLE ON CODES (UOC)	(6) QTY
35	XBFFF	97403	13225E9540	Chassis	1
36	PAFZZ	97403	13214E3791-2	Rivet, Blind	8
37	XBFZZ	97403	13225E9540/1	Sheet	1
38	XBFZZ	97403	13225E954012	Sheet	2
				END OF FIGURE	

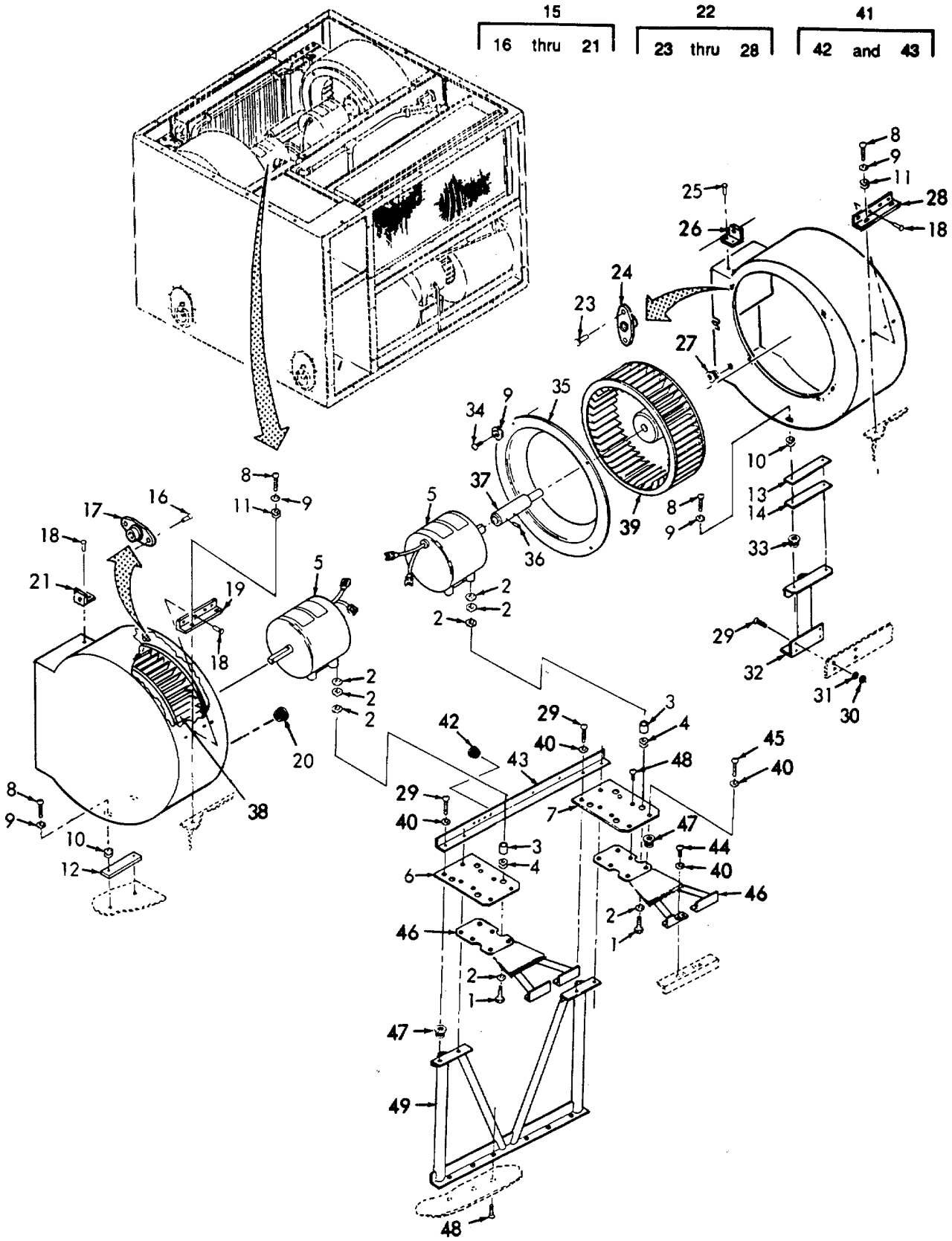

FIGURE 8. Condenser Fan Assembly.

(1) ITEM NO	(2) SMR CODE	(3) CAGEC	(4) PART NUMBER	(5) DESCRIPTION AND USABLE ON CODES (UOC)	(6) QTY
				GROUP 06 CONDENSER FANS AND CONDENSER LOUVER CONTROLS	
				Figure 8 CONDENSER FAN ASSEMBLY	
1	PAFZZ	96906	MS90726-35	Screw	8
2	PAFZZ	97403	13221E9322-1	Washer, Flat Round	32
3	PAFZZ	97403	13225E9526-2	Bushing.	8
4	PAFZZ	96906	MS35489-101	Grommet	8
5	PAFZZ	97403	13229E4276	Motor, AC	2
6	XBFZZ	97403	13225E9553	Plate, Motor Mtg	1
7	XBFZZ	97403	13225E9554	Plate, Motor Mtg	1
8	PAFZZ	96906	MS35206-248	Screw	8
9	PAFZZ	96906	MS27183-7	Washer, Flat	8
10	PAFZZ	96906	MS35489-4	Grommet	4
11	PAFZZ	96906	MS35489-33	Grommet	4
12	XBFZZ	97403	13225E9555	Spacer .188 in. thk.	1
13	XBFZZ	97403	13229E5338-1	Spacer .063 in. thk.	V
14	XBFZZ	97403	13229E5338-2	Spacer .125 in. thk.	V
15	XBFFF	97403	13225E9516	Scroll, Condenser	1
16	PAFZZ	97403	13214E3791-2	Rivet, Blind	8
17	PAFZZ	97403	13216E4538-2	Nut-Anchor, Two Lug	4
18	PAFZZ	96906	MS20470AD4-6	Rivet, Solid	6
19	XAFZZ	97403	13225E9516/8	Sheet	1
20	PAFZZ	96906	MS27130-S25K	Nut, Blind, Rivet	2
21	XAFZZ	97403	13225E9516/4	Sheet	1
22	XBFFF	97403	13225E9517	Scroll, Condenser	1
23	PAFZZ	97403	13214E3791-2	Rivet, Blind	8
24	PAFZZ	97403	13216E4538-2	Nut-Anchor, Two Lug	4
25	PAFZZ	96906	MS20470AD4-6	Rivet, Solid	6
26	XAFZZ	97403	13225E9517/2	Sheet	1
27	PAFZZ	96906	MS27130-S13K	Nut, Blind Rivet	2
28	XAFZZ	97403	13225E9517/9	Sheet	1
29	PAFZZ	96906	MS35207-265	Screw	8
30	PAFZZ	96906	MS21044N3	Nut	4
31	PAFZZ	96906	MS27183-42	Washer, Flat	4
32	XBFFF	97403	13225E9544	Support, Scroll	1
33	PAFZZ	88044	NAS1330H08K 161L	Nut, Blind Rivet	2
34	PAFZZ	96906	MS35206-247	Screw	8
35	XBFZZ	97403	13230E6358	Bell, Inlet	2
36	PAFZZ	96906	MS18065-14	Setscrew	4

(1) ITEM NO	(2) SMR CODE	(3) CAGEC	(4) PART NUMBER	(5) DESCRIPTION AND USABLE ON CODES (UOC)	(6) QTY
37	PAFZZ	97403	13225E9552-3	Shaft, Extension	2
38	PAFZZ	97403	13230E6356	Impeller Fan, Centr CW. (Includes Setscrew)	1
39	PAFZZ	97403	13230E6357	Impeller Fan, Centr CCW. (Includes Setscrew)	1
40	PAFZZ	96906	MS35338-43	Washer, Lock	16
41	XBFFF	97403	13229E5337	Angle, Actuator Mtg	1
42	PAFZZ	96906	MS27130-S94K	Nut, Blind Rivet	4
43	XAFZZ	97403	13229E5337/1	Angle	1
44	PAFZZ	96906	MS35207-265	Screw	8
45	PAFZZ	96906	MS35207-266	Screw	4
46	XBFFF	97403	13225E9548	Brace, Condenser	2
47	PAFZZ	88044	NAS1330H03K 166L	Nut, Blind Rivet	16
48	PAFZZ	96906	MS24693-S275	Screw	1
49	XBFZZ	97403	13225E9549	Support, Condenser	1

END OF FIGURE

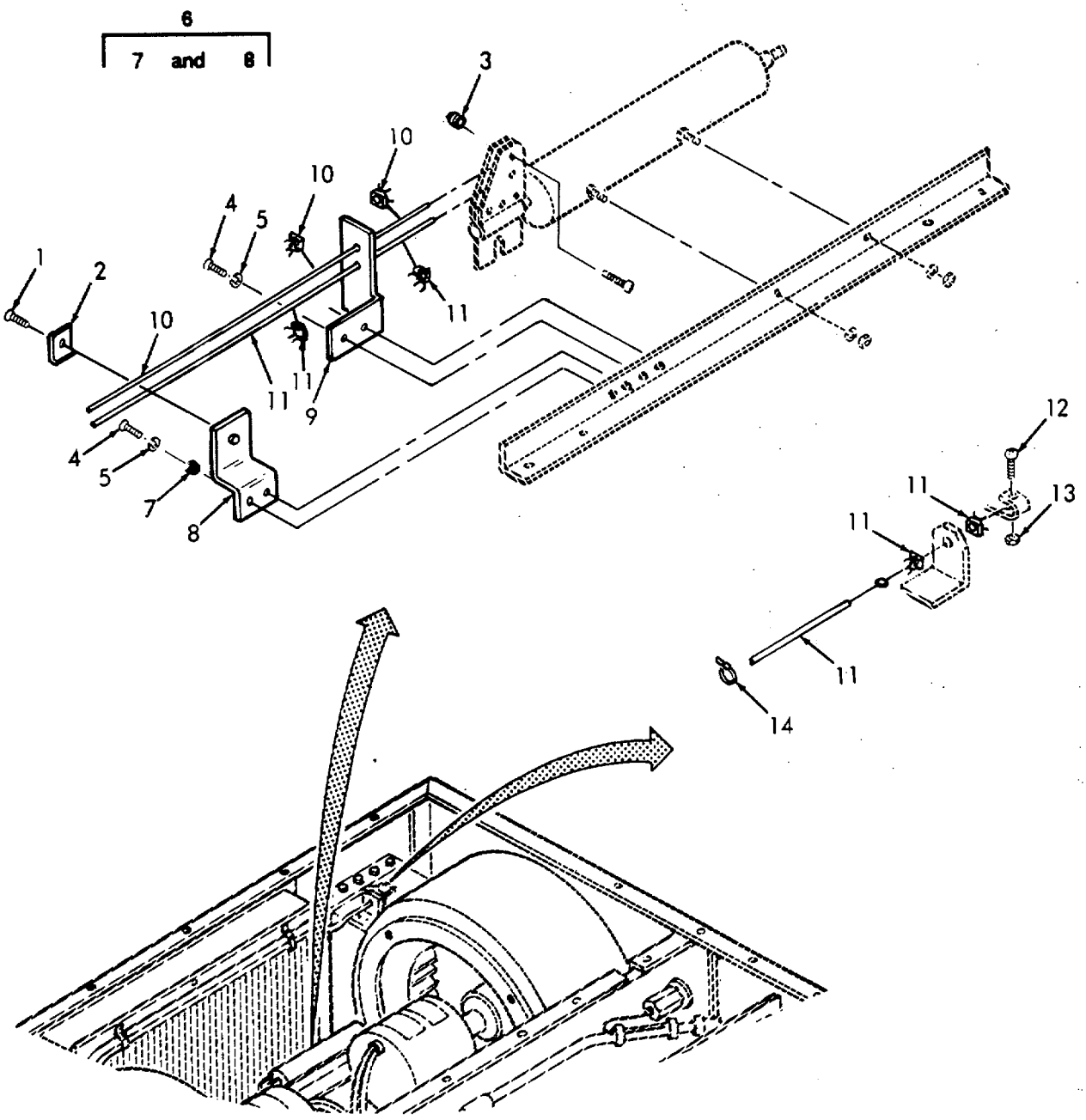

FIGURE 9. Louver Actuator Cables.

(1) ITEM NO	(2) SMR CODE	(3) CAGEC	(4) PART NUMBER	(5) DESCRIPTION AND USABLE ON CODES (UOC)	(6) QTY
				GROUP 06 VENTILATION DAMPER AND ACTUATOR	
				Figure 9 LOUVER ACTUATOR CABLES	
1	PAOZZ	96906	MS35206-247	Screw	1
2	PAOZZ	97403	13225E9509	Clip, Cable Push / Pull	1
3	XBOZZ	97403	13216E6107	Post, Mechanical	2
4	PAOZZ	96906	MS35206-246	Screw.	4
5	PAOZZ	96906	MS35338-42	Washer, Lock	4
6	XBOOO	97403	13225E9560	Bracket, Cable Clip	1
7	PAOZZ	88044	NAS133OH08K 106L	Nut, Blind Rivet, Keyed, Steel, 164-32 UNC-3B	2
8	XAOZZ	97403	13225E9560/1	Sheet	1
9	XBOZZ	97403	13225E9508	Bracket, Control	1
10	PAOZZ	97403	13216E6328-2	Control Assembly Push / Pull W/Cable Fasteners	1
11	PAOZZ	97403	13216E6328-3	Control Assembly Push / Pull W/Cable Fasteners	1
12	PAOZZ	96906	MS35207-264	Screw	2
13	PAOZZ	96906	MS21044N3	Nut	2
14	PAOZZ	96906	MS3367-5-9	Strap	5
				END OF FIGURE	

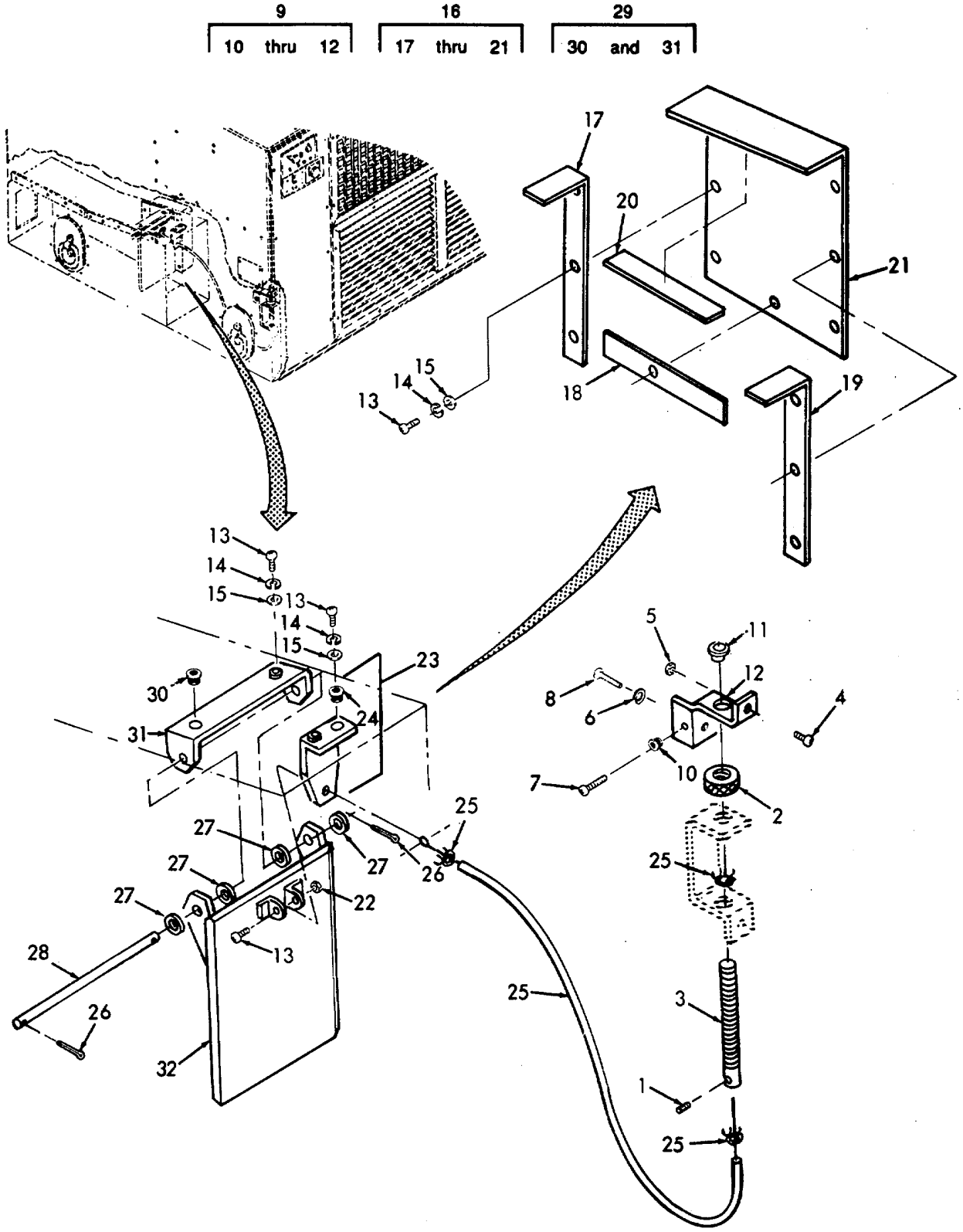

FIGURE 10. Ventilation Damper and Actuator.

(1) ITEM NO	(2) SMR CODE	(3) CAGEC	(4) PART NUMBER	(5) DESCRIPTION AND USABLE ON CODES (UOC)	(6) QTY
				GROUP 07 VENTILATION DAMPER AND ACTUATOR	
				Figure 10 VENTILATION DAMPER AND ACTUATOR	
1	PAFZZ	96906	MS51021-22	Setscrew	1
2	PAFZZ	97403	13216E6326	Nut, Actuator	1
3	XBFZZ	97403	13216E6327-1	Actuator Damper	1
4	PAFZZ	96906	MS24693-S25	Screw	1
5	PAFZZ	96906	MS35649-262	Nut.	1
6	PAFZZ	96906	MS35338-42	Washer, Lock	1
7	PAFZZ	96906	MS24693-S29	Screw	1
8	PAFZZ	96906	MS35206-245	Screw	1
9	XBFFF	97403	13216E6325-1	Bracket, Actuator	1
10	PAFZZ	96906	MS27130-S7K	Nut, Blind Rivet	1
11	XBFZZ	88044	NAS77-A7-25	Bushing	.1
12	XAFZZ	97403	13216E6325-1/1	Sheet	1
13	PAFZZ	96906	MS35207-265	Screw	10
14	PAFZZ	96906	MS35338-43	Washer, Lock	9
15	PAFZZ	96906	MS27183-42	Washer, Flat	9
16	XBFFF	97403	13216E6323	Cover, Damper	1
17	MFFZZ	97403	13216E6323/2	Rubber, Cellular Make From Gasket, P/N MIL-R-6130, Type II, Grade A, Cond. Soft, .060 thk.	1
18	MFFZZ	97403	13216E6323/3	Rubber, Cellular Make From Gasket, P/N MIL-R-6130, Type II, Grade A, Cond. Soft, .060 thk.	1
19	MFFZZ	97403	13216E6323/4	Rubber, Cellular Make From Gasket, P/N MIL-R-6130, Type II, Grade A, Cond. Soft, .060 thk.	1
20	MFFZZ	97403	13216E6323/5	Rubber, Cellular Make From Gasket, P/N MIL-R-6130, Type II, Grade A, Cond. Soft, .060 thk.	1
21	XAFZZ	97403	13216E6323/1	Sheet	1
22	PAFZZ	96906	MS21044N3	Nut	1
23	XBFFF	97403	13216E6321	Bracket, Control	1
24	PAFZZ	96906	MS27130-S26K	Nut, Blind Rivet	2
25	PAFZZ	97403	13216E6328-1	Control Assembly Push / Pull W/Cable Fasteners	1
26	PAFZZ	96906	MS9245-23	Pin	2
27	PAFZZ	81352	AN960-10L	Washer	4
28	XBFZZ	97403	13216E6324-1	Shaft, Damper	1

(1) ITEM NO	(2) SMR CODE	(3) CAGEC	(4) PART NUMBER	(5) DESCRIPTION AND USABLE ON CODES (UOC)	(6) QTY
29	XBFFF	97403	13216E6322	Bracket, Damper	1
30	PAFZZ	96906	MAS271 30-S26K	Nut, Blind Rivet	2
31	XAFZZ	97403	13216E6322/1	Sheet	1
32	XBFZZ	97403	13216E6319	Damper, Ventilation	1
				END OF FIGURE	

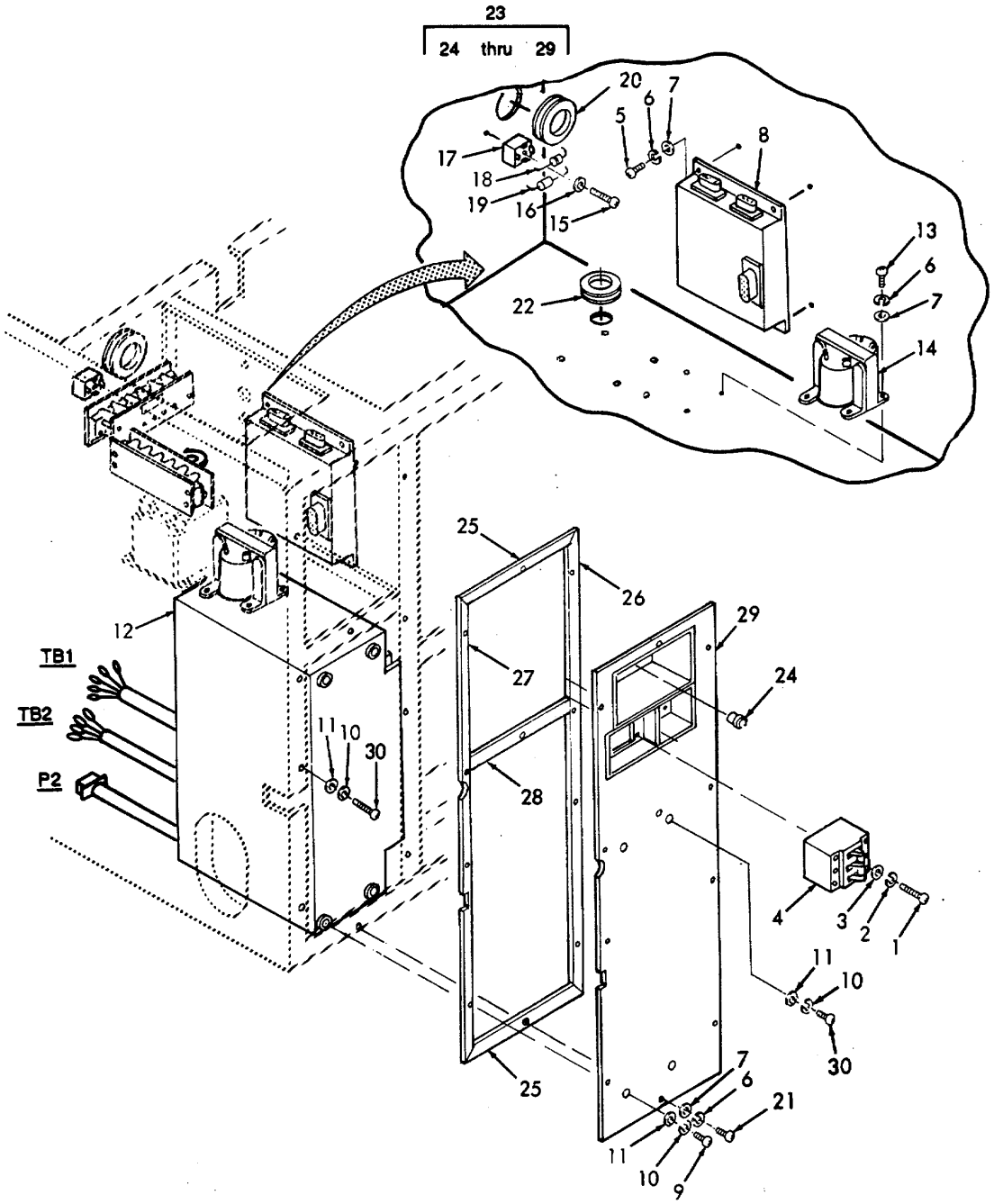

FIGURE 11. Circuit Breaker, Logic Box, Motor Controller, Transformer, and Rectifier.

SECTION II

(1) ITEM NO	(2) SMR CODE	(3) CAGEC	(4) PART NUMBER	(5) DESCRIPTION AND USABLE ON CODES (UOC)	(6) QTY
				GROUP 08 ELECTRICAL SYSTEM FIG. 11 CIRCUIT BREAKER, LOGIC BOX, MOTOR CONTROLLER, TRANSFORMER AND RECTIFIER	
1	PAOZZ	96906	MS35206-228	Screw	6
2	PAOZZ	96906	MS35338-41	Washer, Lock	6
3	PAOZZ	96906	MS271 83-6	Washer, Flat	6
4	PAOZZ	81349	M55629/5-425	Circuit Breaker	1
5	PAOZZ	96906	MS35206-247	Screw	4
6	PAOZZ	96906	MS35338-42	Washer, Lock	19
7	PAOZZ	96906	MS271 83-41	Washer, Flat	19
8	PAOZZ	97403	13229E6660-2	Logic Box Assembly	1
9	PAOZZ	96906	MS35206-279	Screw	2
10	PAOZZ	96906	MS35338-44	Washer, Lock	5
11	PAOZZ	96906	MS271 83-9	Washer, Flat	5
12	PAOZZ	67302	4001-001	Motor Controller	1
13	PAOZZ	96906	MS35206-245	Screw	4
14	PAOZZ	97403	13229E4214	Transformer	1
15	PAOZZ	96906	MS35206-234	Screw	1
16	PAOZZ	96906	MS271 83-43	Washer, Flat	1
17	PAOZZ	97403	13227E8321	Rectifier	1
18	PAOZZ	81349	M39014/5-2661	Capacitor	1
19	PAOZZ	97403	13229E4264	Capacitor	1
20	PAOZZ	96906	MS35489-54S	Grommet	1
21	PAOZZ	96906	MS35206-246	Screw	11
22	PAOZZ	96906	MS35489-156	Grommet	1
23	XBOOO	97403	13229E6693	Panel, Access	1
24	PAOZZ	96906	MS27130-S133K	Nut, Blind Rivet	1
25	MOOZZ	97403	13229E6693/5	Rubber, Cellular Make From Gasket, P/N MIL-R-6130, Type II, Grade A, Cond. Soft, .125 thk. Cut To Length	2
26	MOOZZ	97403	13229E6693/4	Rubber, Cellular Make From Gasket, P/N MIL-R-6130, Type II, Grade A, Cond. Soft, .125 thk. Cut To Length	1
27	MOOZZ	97403	13229E6693/6	Rubber, Cellular Make From Gasket, P/N MIL-R-6130, Type II, Grade A, Cond. Soft, .125 thk. Cut To Length	1
28	MOOZZ	97403	13229E6693/7	Rubber Cellular Make From Gasket, P/N MIL-R-6130, Type II, Grade A, Cond. Soft, .125 thk. Cut To Length	1

(1) ITEM NO	(2) SMR CODE	(3) CAGEC	(4) PART NUMBER	(5) DESCRIPTION AND USABLE ON CODES (UOC)	(6) QTY
29	XAOZZ	97403	13229E6693/1	. Sheet	1
30	PAOZZ	96906	MS35206-281	screw . . .*	1
				END OF FIGURE	

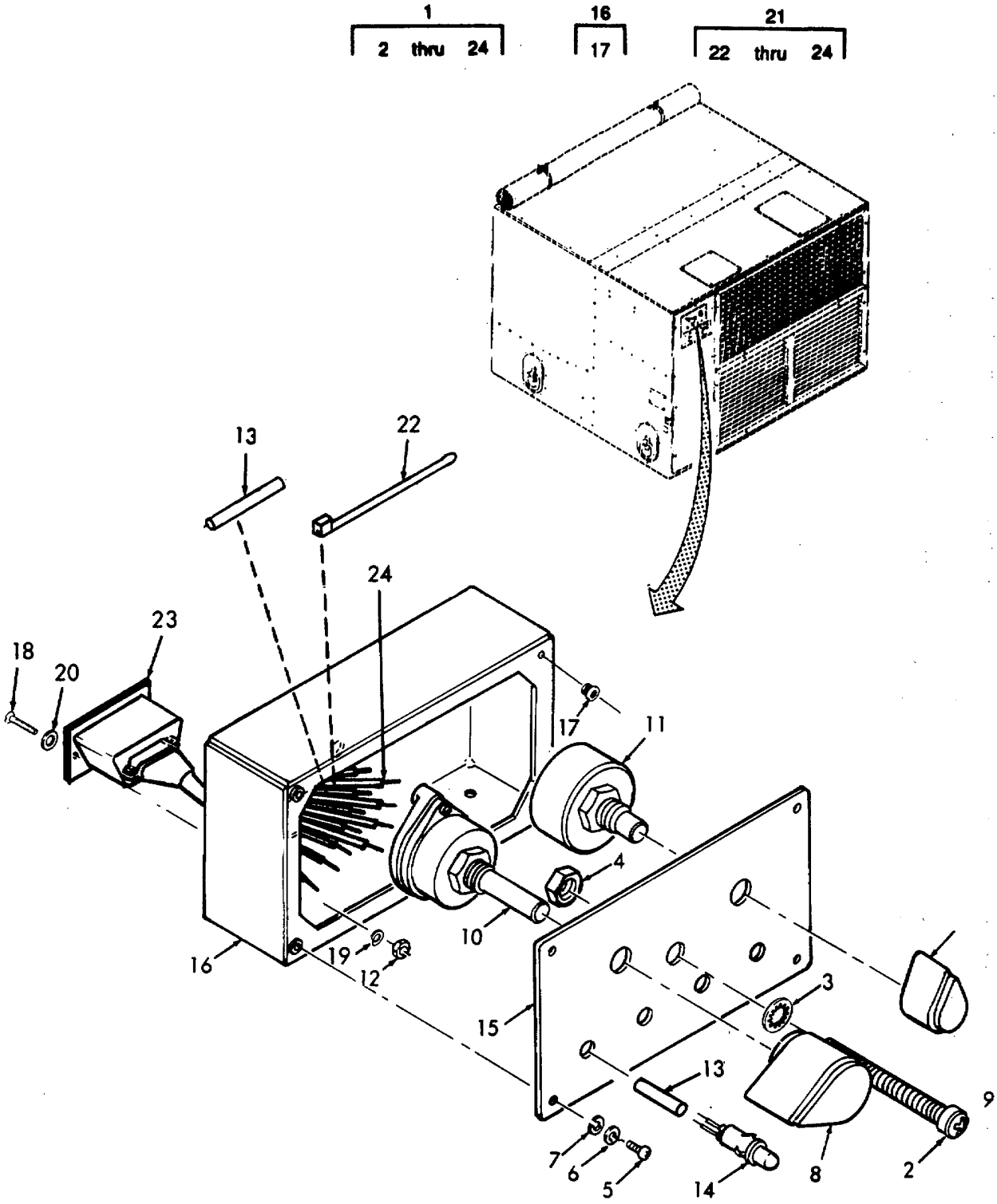

FIGURE 12. Control Panel Assembly.

(1) ITEM NO	(2) SMR CODE	(3) CAGEC	(4) PART NUMBER	(5) DESCRIPTION AND USABLE ON CODES (UOC)	(6) QTY
				GROUP 08 ELECTRICAL SYSTEM	
				Figure 12. CONTROL PANEL ASSEMBLY	
1	PAOOO	97403	13229E4190	Control Panel Assy	1
2	PAOZZ	96906	MS35206-208	Screw	1
3	PAOZZ	96906	MS27183-10	Washer, Flat	1
4	PAOZZ	96906	MS51922-1	Nut	1
5	PAOZZ	96906	MS35206-215	Screw	4
6	PAOZZ	96906	MS35338-40	Washer, Lock	4
7	PAOZZ	96906	MS27183-4	Washer, Flat	4
8	PAOZZ	96906	MS91520-2U2B	Knob	1
				Control, Plastic, 1/4 in. Round Shaft	
9	PAOZZ	96906	MS91520-0U2B	Knob	1
				Control, Plastic, 1/4 in. Round Shaft	
10	PAOZZ	97403	13229E4187	Switch, Rotary	1
				1.00 in. Dia, 12 Position	
11	PAOZZ	97403	13229E4185	Potentiometer	1
				Single Turn, 5000 Ohm, 2.75 Watts	
12	PAOZZ	96906	MS35649-222	Nut	2
13	MOOZZ	97403	13229E4190/16	Insulation Sleeving	16
				Make From Insulation Sleeving, P/N M23053/5-104-9	
				125 ID MIN, Cut to Length	
14	PAOZZ	97403	13229E4186	Diode, Light Emit	4
15	XAOZZ	97403	13229E4192	Panel, Control	1
16	XBOOO	97403	13229E4191	Box, Control	1
17	PAOZZ	81349	M45938/1-5	Nut, Self Clinching	4
				112-40 UNC-2B	
18	PAOZZ	96906	MS35206-204	Screw	2
19	PAOZZ	96906	MS27183-2	Washer, Flat	2
20	PAOZZ	96906	MS35338-39	Washer, Lock	2
21	PAOOO	97403	13229E4274	Wiring Harness	1
22	PAOZZ	96906	MS3367-5-9	Strap	5
23	PAOZZ	81349	M24308/4-303	Connector	1
24	MOOZZ	97403	13229E4274/2	Wire, Electrical	12
				Make From Wire, P/N M50861/1-20-9, Cut To Length	
				END OF FIGURE	

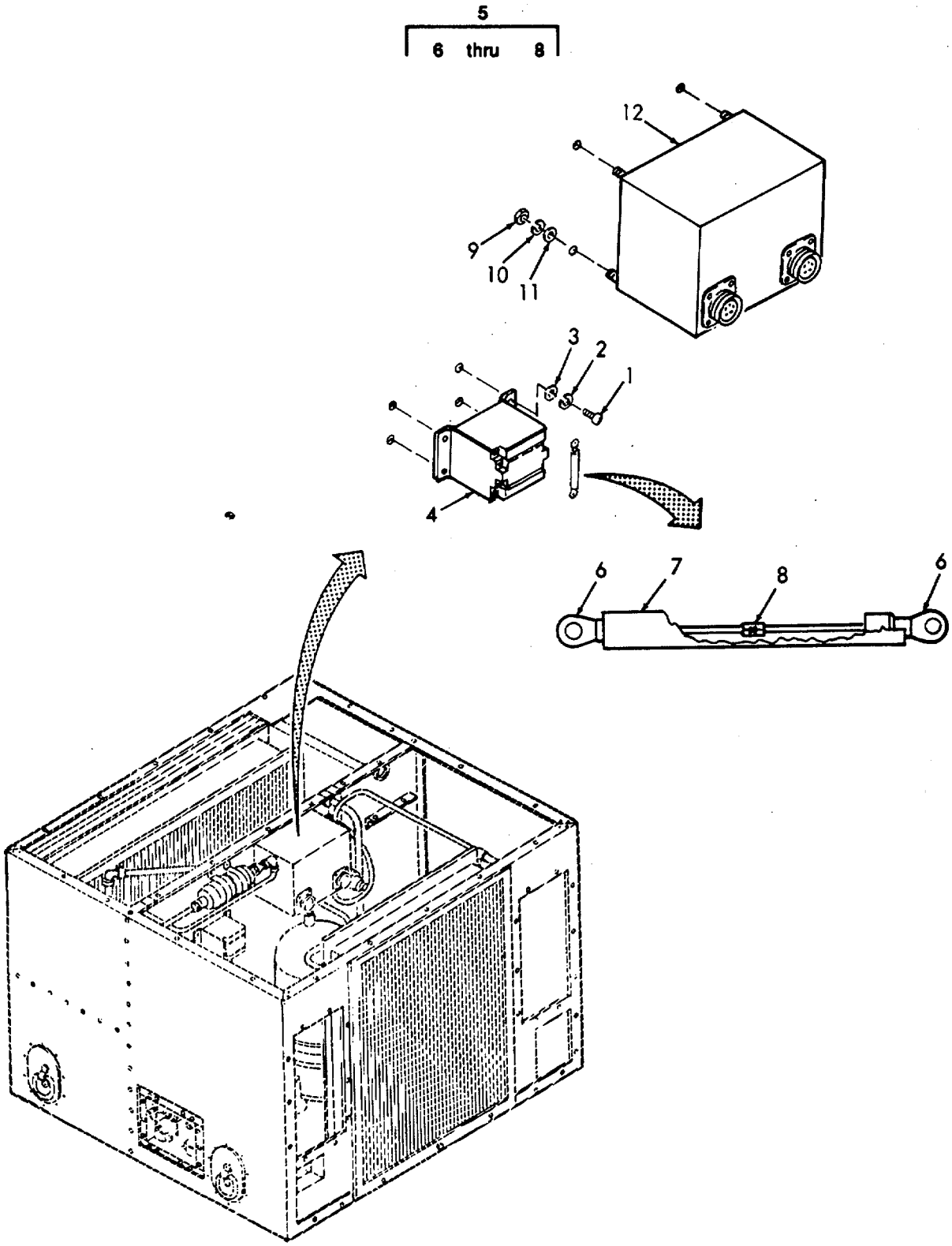

FIGURE 13. Relay and EMI Filter.

(1) ITEM NO	(2) SMR CODE	(3) CAGEC	(4) PART NUMBER	(5) DESCRIPTION AND USABLE ON CODES (UOC)	(6) QTY
				GROUP 08 ELECTRICAL SYSTEM	
				Figure 13. RELAY AND EMI FILTER	
1	PAOZZ	96906	MS35206-348	Screw.	4
2	PAOZZ	96906	MS35338-42	Washer, Lock	4
3	PAOZZ	96906	MS27183-41	Washer, Flat	4
4	PAOZZ	96906	MS24193-D1	Relay	1
5	PAOOO	97403	13229E0897	Diode, W/Terminals	1
6	PAOZZ	96906	MS25036-149	Terminal, Lug	2
7	MOOZZ	97403	13229E4287/3	Insulation Sleeving Make From Insulation Sleeving P/N M23053/5-107-9 .375 ID Min.	1
8	PAOZZ	97403	13219E0897	Diode	1
9	PAOZZ	96906	MS35650-302	Nut	4
10	PAOZZ	96906	MS35338-43	Washer, Lock	4
11	PAOZZ	96906	MS27183-42	Washer, Flat	4
12	PAOZZ	97403	13229E6669	Filter, EMI	1
				END OF FIGURE	

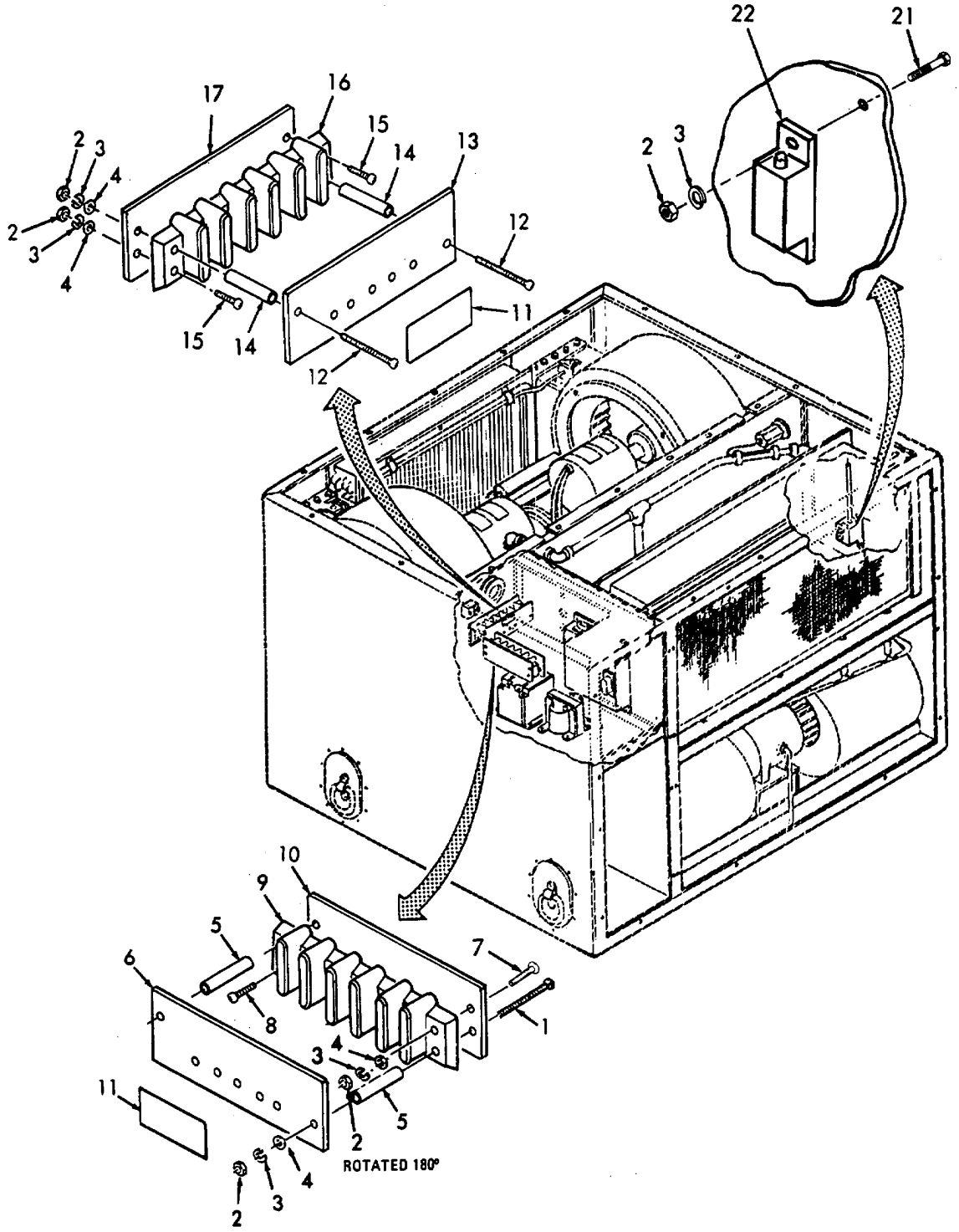

FIGURE 14. Terminal Boards and Coil Frost Switch. (Sheet 1 of 2)

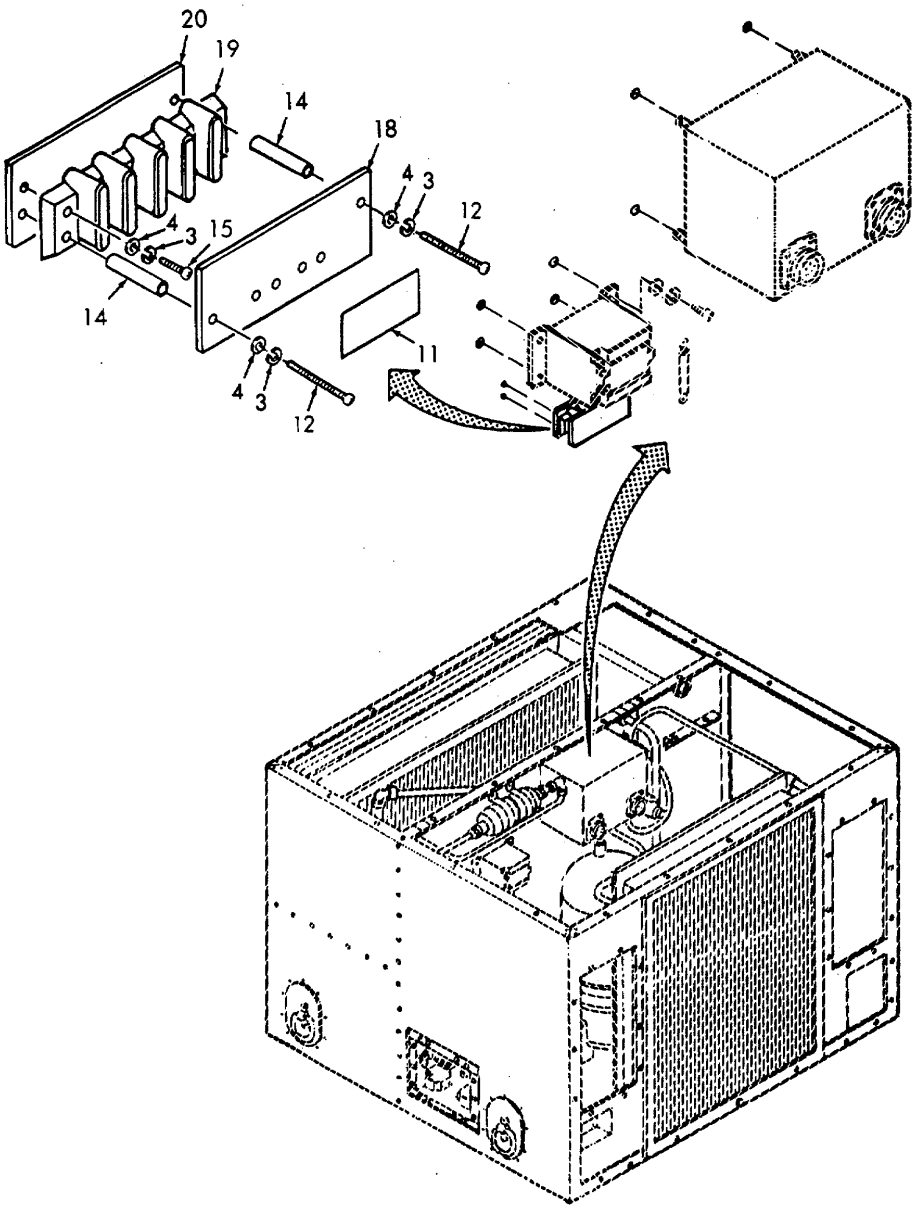

FIGURE 14. Terminal Boards and Coil Frost Switch. (Sheet 2 of 2)

(1) ITEM NO	(2) SMR CODE	(3) CAGEC	(4) PART NUMBER	(5) DESCRIPTION AND USABLE ON CODES (UOC)	(6) QTY
				GROUP 08 ELECTRICAL SYSTEM	
				Figure 14. TERMINAL BOARDS AND COIL FROST SWITCH	
1	PAOZZ	96906	MS24693-S60	Screw	2
2	PAOZZ	96906	MS35649-282	Nut	10
3	PAOZZ	96906	MS35338-42	Washer, Lock	14
4	PAOZZ	96906	MS27183-41	Washer, Flat	12
5	XBOZZ	97403	13216E6159-6	Post, Spacer	2
6	XBOZZ	97403	13229E6705	Cover, Terminal Bd	1
7	PAOZZ	96906	MS24693-S54	Screw	1
8	PAOZZ	96906	MS24693-S56	Screw	1
9	PAOZZ	97403	13229E6702	Terminal Board	1
10	XBOZZ	97403	13229E6713-1	Marker Strip	1
11	XBOZZ	97403	13229E4231-1	Label, Caution	3
12	PAOZZ	96906	MS35206-251	Screw	4
13	XBOZZ	97403	13229E4217	Cover, Terminal Bd	1
14	XBOZZ	97403	13216E6159-1	Post, Spacer	4
15	PAOZZ	96906	MS35206-348	Screw	4
16	PAOZZ	97403	13229E4209	Terminal Board	1
17	XBOZZ	97403	13229E6713-2	Marker Strip	1
18	XBOZZ	97403	13229E6711	Cover, Terminal Bd	1
19	PAOZZ	97403	13211E6897	Terminal Board	1
20	XBOZZ	97403	13229E6713-3	Marker Strip	1
21	PAOZZ	96906	MS24693-S50	Screw	2
22	PAOZZ	97403	13229E4213	Switch, Coil Frost	1
				END OF FIGURE	

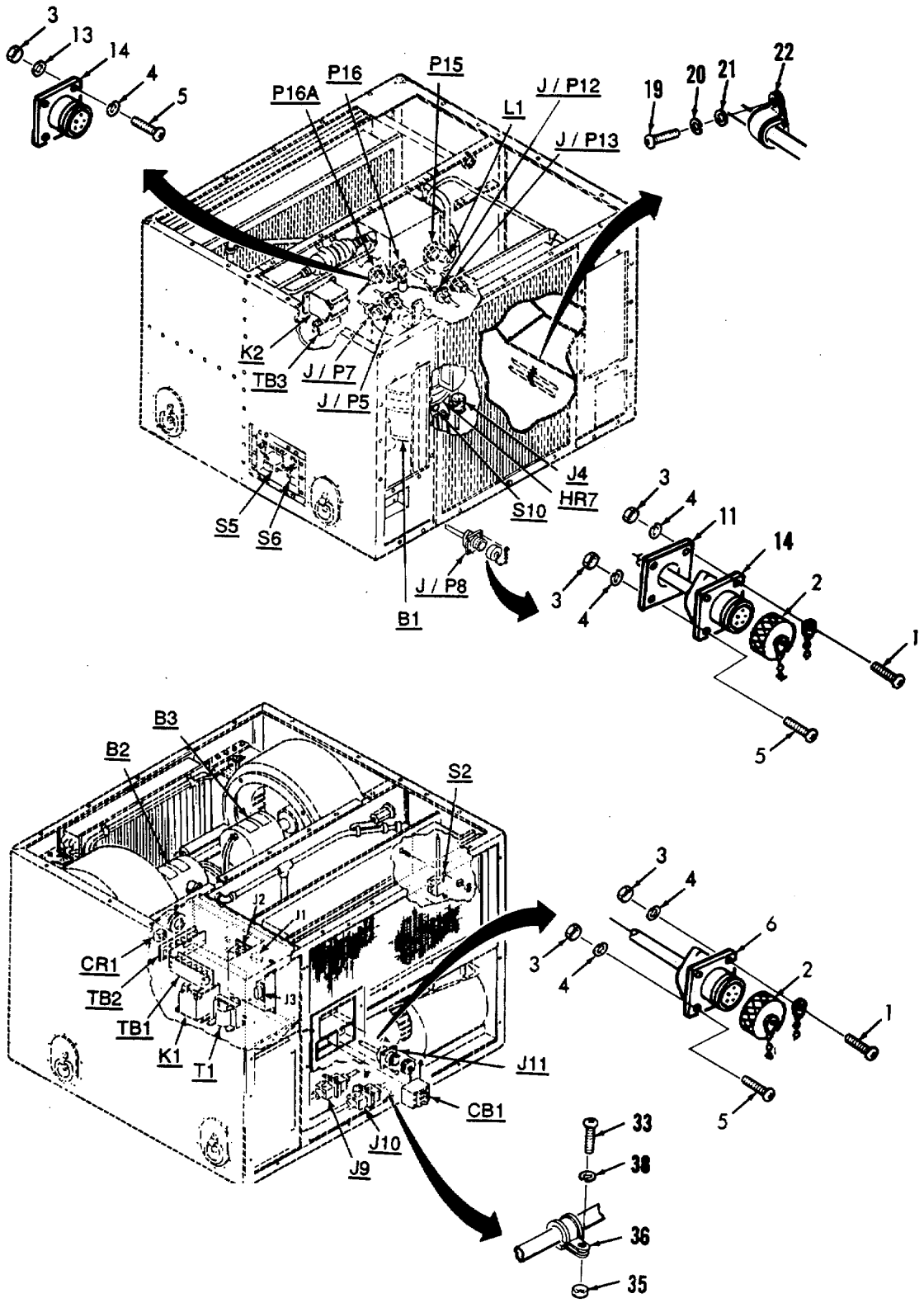

FIGURE 15. Wiring Harnesses. (Sheet 1 of 9)

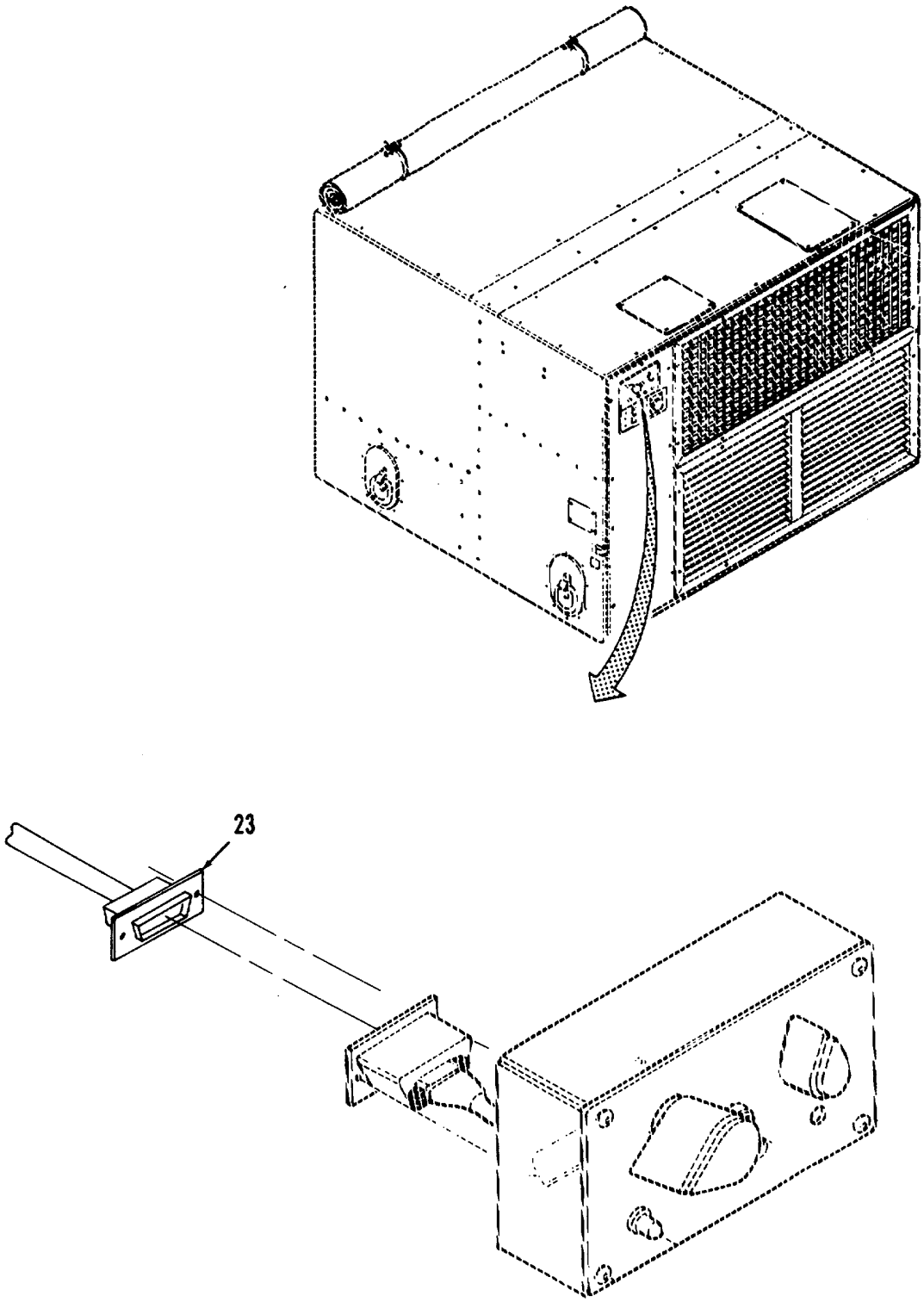

FIGURE 15. Wiring Harnesses. (Sheet 2 of 9)

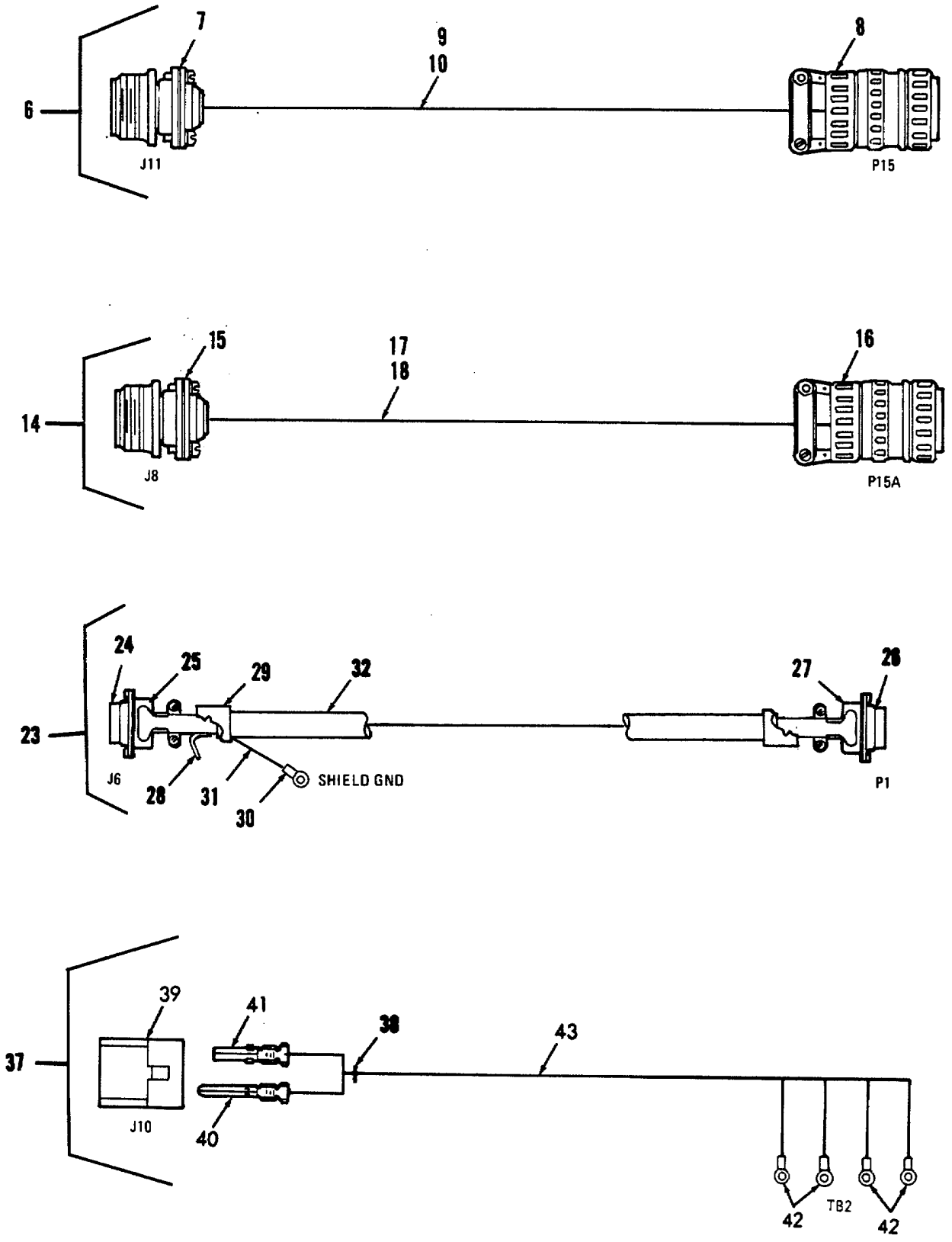

FIGURE 15. Wiring Harnesses. (Sheet 3 of 9)

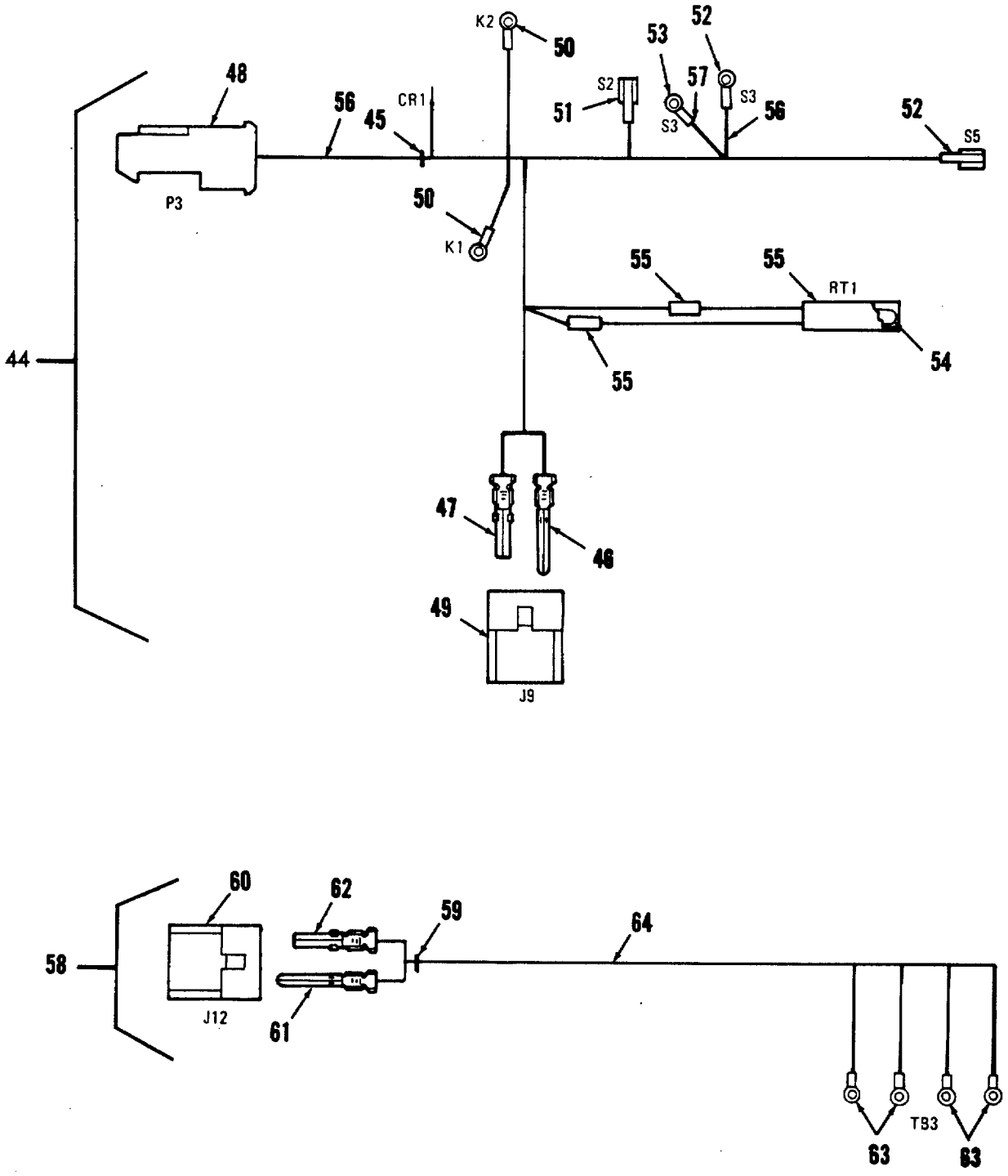

FIGURE 15. Wiring Harnesses. (Sheet 4 of 9)

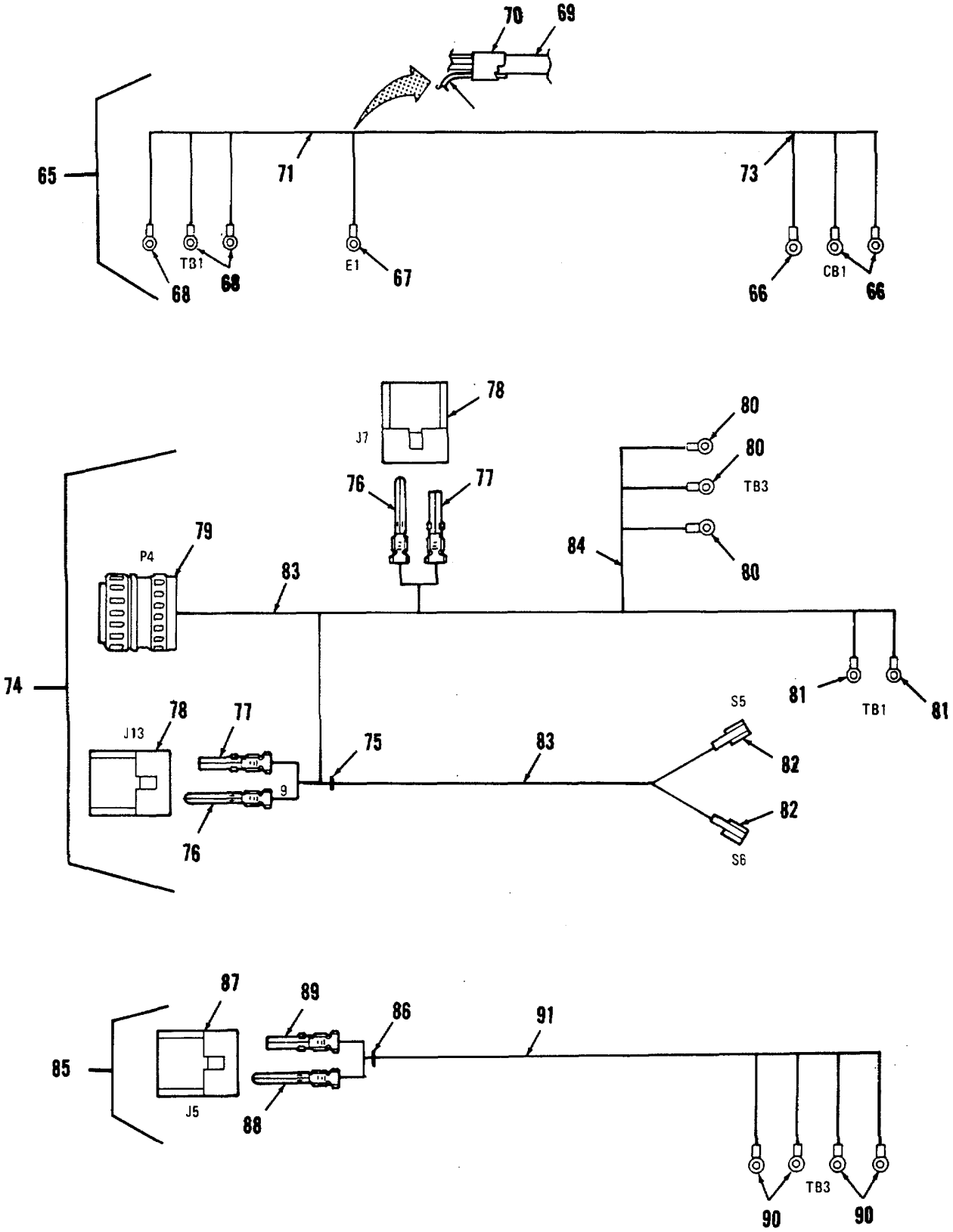

FIGURE 15. Wiring Harnesses. (Sheet 5 of 9)

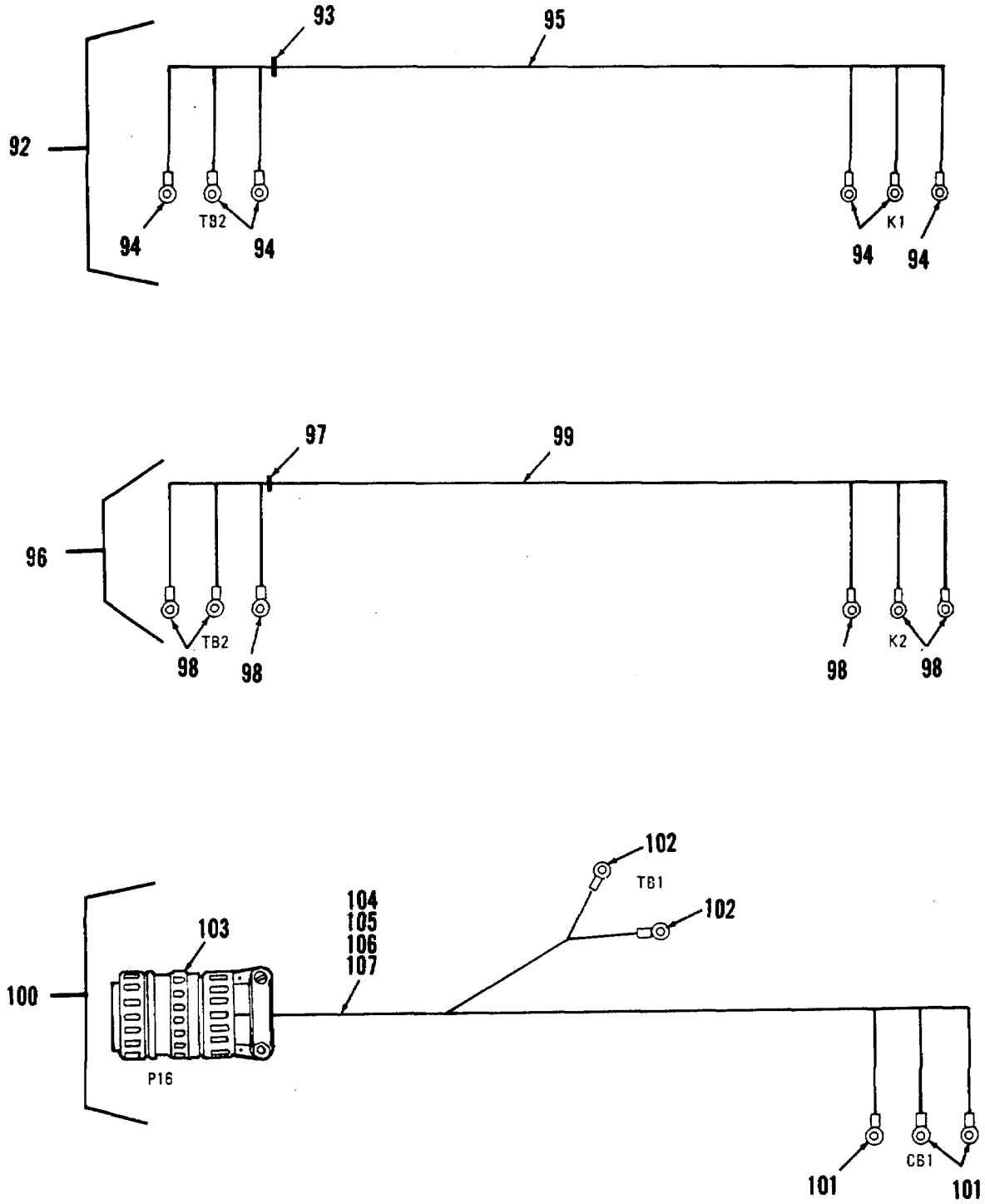

FIGURE 15. Wiring Harnesses. (Sheet 6 of 9)

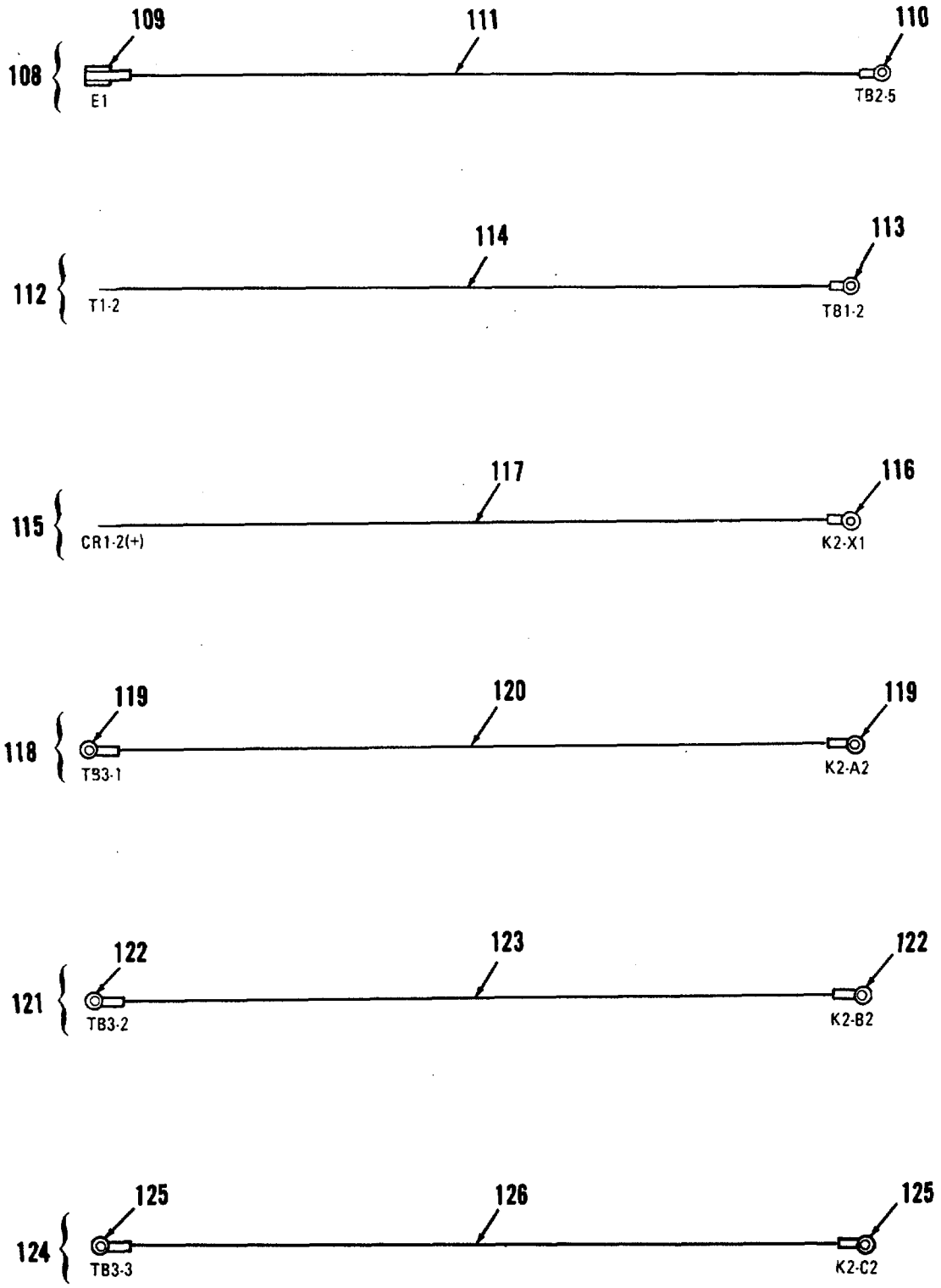

FIGURE 15. Wiring Harnesses. (Sheet 7 of 9)

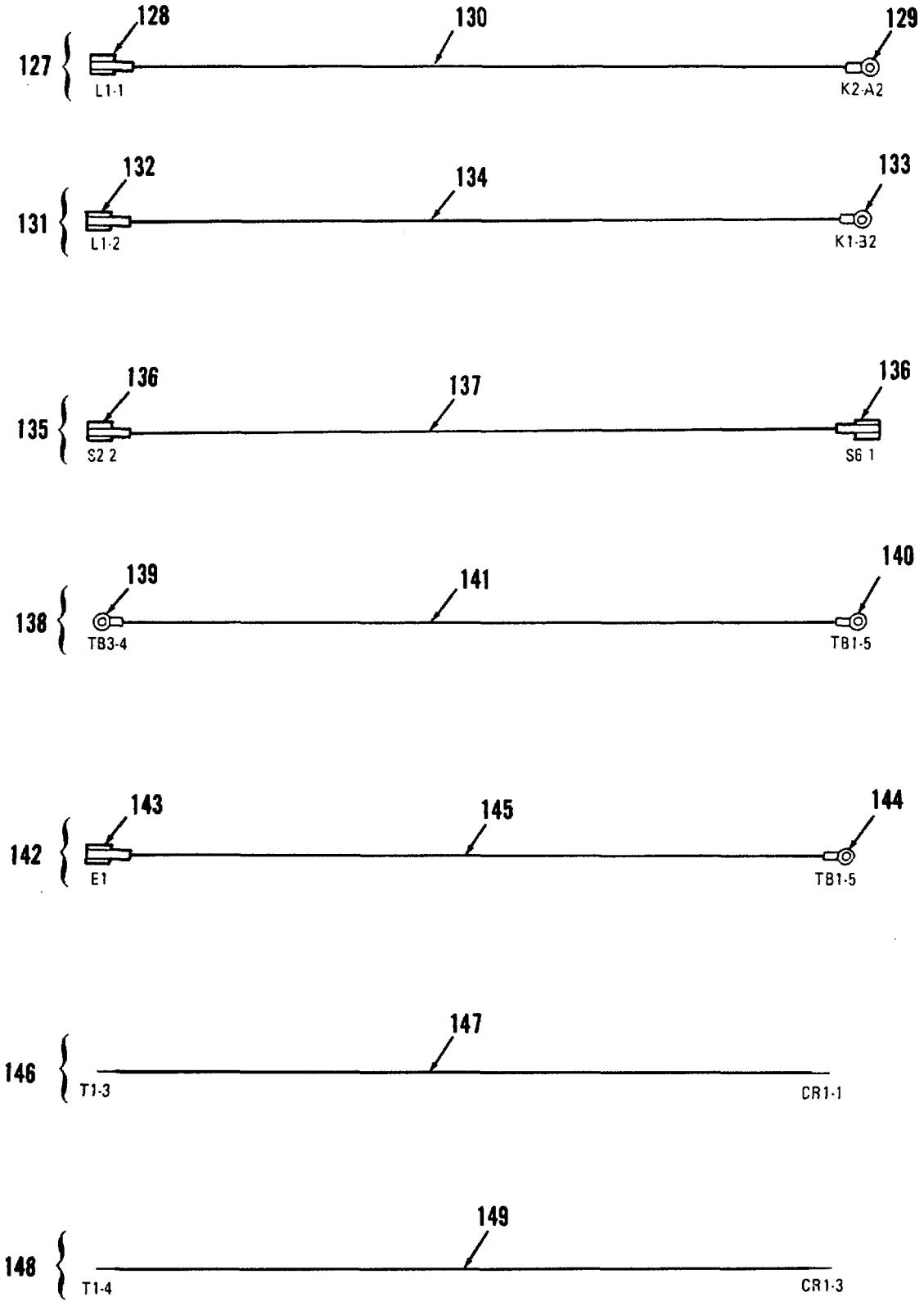

FIGURE 15. Wiring Harnesses. (Sheet 8 of 9)

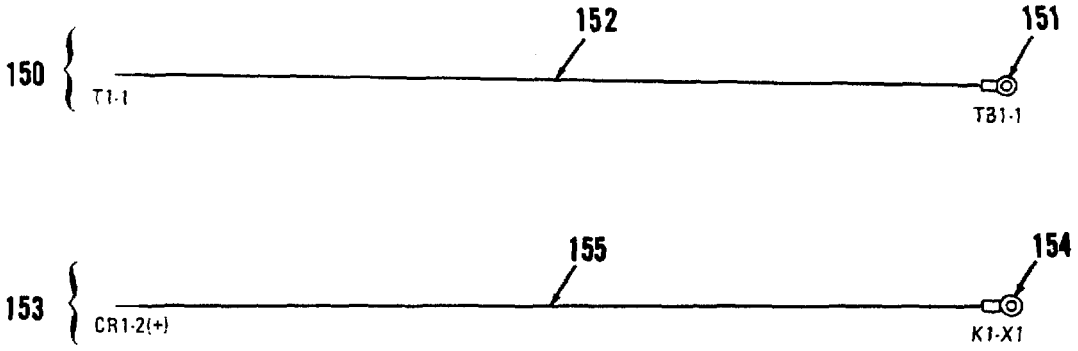

FIGURE 15. Wiring Harnesses. (Sheet 9 of 9)

(1) ITEM NO	(2) SMR CODE	(3) CAGEC	(4) PART NUMBER	(5) DESCRIPTION AND USABLE ON CODES (UOC)	(6) QTY
				GROUP 08 ELECTRICAL SYSTEM	
				Figure 15 WIRING HARNESSES	
1	PAOZZ	96906	MS35206-218	Screw	2
2	PAOZZ	96906	MS25043-24DA	Cover	2
				Includes Attaching Chain	
3	PAOZZ	96906	MS35649-242	Nut	12
4	PAOZZ	96906	MS35338-40	Washer, Lock	12
5	PAOZZ	96906	MS35206-217	Screw	10
6	PBOOO	97403	13229E6706	Wiring Harness	1
				J11 to P15	
7	PAOZZ	97403	13229E6716-1	Receptacle	1
8	PAOZZ	97403	13229E6718-2	Plug, Straight	1
9	MOOZZ	97403	13229E6706/3	Braid, Wire, Tube	1
				Make From Braid, QQ-B-575, QQB575R32T0781, Cut to Length	
10	MOOZZ	97403	13229E6706/2	Wire, Electrical	1
				Make From Wire P/N M5086/2-8-9, Cut to length	
11	PAOZZ	96906	MS51007-9	Gasket	1
12	PAOZZ	96906	MS27183-4	Washer, Flat	4
13	PAOZZ	96906	MS3105-24	Connector	1
14	PBOOO	97403	13229E6707	Wiring Harness	1
				J8 to P15A	
15	PAOZZ	97403	13229E6716-1	Receptacle	1
16	PAOZZ	97403	13229E6718-2	Plug, Straight	1
17	MOOZZ	97403	13229E6707/3	Braid, Wire, Tube	1
				Make From Braid, QQ-B-575, QQB575R32T0781, Cut to Length	
18	MOOZZ	97403	13229E6707/2	Wire, Electrical	1
				Make From Wire P/N M5086/2-8-9, Cut to Length	
19	PAOZZ	96906	MS35207-265	Screw	2
20	PAOZZ	96906	MS35338-43	Washer, Lock	2
21	PAOZZ	96906	MS27183-42	Washer, Flat	2
22	PAOZZ	96906	MS21919WDG10	Clamp	2
23	PBOOO	97403	13229E4207-2	Wiring Harness J6 to P1	1
24	PAOOO	81349	M24308/2-2	Connector	1
25	PAOZZ	81349	M24308/21-2	Cable Clamp, Junct	1
26	PAOOO	81349	M24308/4-2	Connector	1
27	PAOZZ	81349	M24308/21-2	Cable, Clamp, Junct	1
28	PAOOO	97403	13229E4237-2	Strain Relief	1
29	MOOZZ	97403	13229E4207/5	Insulation Sleeving	2
				Make From Insulation Sleeving P/N M3053/5-108-9 .500 ID Min., Cut to Length	
30	PAOZZ	96906	MS25036-148	Terminal, Lug	1

(1) ITEM NO	(2) SMR CODE	(3) CAGEC	(4) PART NUMBER	(5) DESCRIPTION AND USABLE ON CODES (UOC)	(6) QTY
31	MOOZZ	97403	13229E4207/6	Wire, Electrical	1
				Make From Wire P/N M5086/1-20-9, Cut to Length	
32	PAOZZ	97403	13229E4286	Cable, Shielded	1
33	PAOZZ	96906	MS35207-264	Screw	2
34	PAOZZ	96906	MS35338-43	Washer, Lock	2
35	PAOZZ	96906	MS35650-302	Nut	2
36	PAOZZ	96906	MS21919WDG4	Clamp.....	4
37	PBOZZ	97403	13229E6676	Wiring Harness.....	1
				J10 to TB2	
38	PAOZZ	96906	MS3367-5-9	Strap.....	5
39	PAOZZ	97403	13229E4181-2	Connector, Pin Hsg.....	1
40	PAOZZ	97403	13229E4272	Pin, Connector.....	1
41	PAOZZ	97403	13229E4273	Socket, Connector	1
42	PAOZZ	96906	MS25036-108	Terminal, Lug	4
43	MOOZZ	97403	13229E6676/4	Wire, Electrical	1
				Make From Wire P/N M5086/1-16-9, Cut to Length	
44	PBOZZ	97403	13229E6673	Wiring Harness, P3.....	1
45	PAOZZ	96906	MS3367-5-9	Strap.....	5
46	PAOZZ	97403	13229E4272	Pin, Connector.....	1
47	PAOZZ	97403	13229E4273	Socket, Connector	1
48	PAOZZ	97403	13229E6683	Receptacle	1
49	PAOZZ	97403	13229E4181-1	Connector, Pin Hsg.....	1
50	PAOZZ	96906	MS25036-149	Terminal, Lug	2
51	PAOZZ	97403	13229E6191-1	Terminal, Lug	2
52	PAOZZ	96906	MS25036-153	Terminal, Lug	1
53	PAOZZ	96906	MS25036-103	Terminal, Lug	1
54	PAOZZ	97403	13229E4176	Thermistor	1
55	MOOZZ	97403	13229E6673/7	Insulation Sleeving	1
				Make From Insulation Sleeving P/N M23053/5-103-9	
				.062 ID Min., Cut to Length	
56	MOOZZ	97403	13229E6673/11	Wire, Electrical	1
				Make From Wire P/N M5086/1-18-9, Cut to Length	
57	MOOZZ	97403	13229E6673/12	Wire, Electrical	1
				Make From Wire P/N M5086/1-16-9, Cut to Length	
58	PBOOO	97403	13229E6678	Wiring Harness.....	1
				J12 to TB3	
59	PAOZZ	96906	MS3367-5-9	Strap.....	5
60	PAOZZ	97403	13229E4181-2	Connector, Pin Hsg.....	1
61	PAOZZ	97403	13229E4272	Pin, Connector.....	1
62	PAOZZ	97403	13229E4273	Socket, Connector	1
63	PAOZZ	96906	MS25036-108	Terminal, Lug	4
64	MOOZZ	97403	13229E6678/4	Wire, Electrical	1
				Make From Wire P/N M5086/1-16-9, Cut to Length	
65	PBOOO	97403	13229E6703	Wiring Harness.....	1
				CB1 to TB1	

(1) ITEM NO	(2) SMR CODE	(3) CAGEC	(4) PART NUMBER	(5) DESCRIPTION AND USABLE ON CODES (UOC)	(6) QTY
66	PAOZZ	96906	MS25036-115	Terminal, Lug	3
67	PAOZZ	96906	MS25036-153	Terminal, Lug	1
68	PAOZZ	96906	MS25036-116	Terminal, Lug	3
69	MOOZZ	97403	13229E6703/2	Braid, Wire, Tube	1
				Make From Braid, QQ-B-575, QQB575R30T0562, Cut to Length	
70	MOOZZ	97403	13229E6703/7	Insulation Sleeving	1
				Make From Insulation Sleeving P/N M23053/5-109-9 .562 ID Min., Cut to Length	
71	MOOZZ	97403	13229E6703/1	Wire, Electrical Wire	1
				Make From Wire P/N M5086/2-8-9, Cut to Length	
72	MOOZZ	97403	13229E6703/6	Wire, Electrical	1
				Make From Wire P/N M5086/1-16-9, Cut to Length	
73	MOOZZ	97403	13229E6703/10	Insulation Sleeving	1
				Make From Insulation Sleeving P/N M23053/5-109-9 .562 ID Min., Cut to Length	
74	PBOOO	97403	13229E6675	Wiring Harness	1
				Compressor	
75	PAOZZ	96906	MS3367-5-9	Strap	5
76	PAOZZ	97403	13229E4272	Pin, Connector	1
77	PAOZZ	97403	13229E4273	Socket, Connector	1
78	PAOZZ	97403	13229E4181-1	Connector, Pin Hsg.	1
79	PAOZZ	96906	MS3106R24-11S	Connector, Plug	1
80	PAOZZ	96906	MS25036-112	Terminal, Lug	3
81	PAOZZ	96906	MS25036-154	Terminal, Lug	2
82	PAOZZ	97403	13216E6191-2	Terminal, Lug	2
83	MOOZZ	97403	13229E6675/8	Wire, Electrical	5
				Make From Wire P/N M5086/1-16-9, Cut to Length	
84	MOOZZ	97403	13229E6675/9	Wire, Electrical	3
				Make From Wire P/N M5086/1-10-9, Cut to Length	
85	PBOOO	97403	13229E6677	Wiring Harness	1
				J5 to TB3	
86	PAOZZ	96906	MS3367-5-9	Strap	5
87	PAOZZ	97403	13229E4181-2	Connector, Pin Hsg	1
88	PAOZZ	97403	13229E4272	Pin, Connector.3	
89	PAOZZ	97403	13229E4273	Socket, Connector	1
90	PAOZZ	96906	MS25036-108	Terminal, Lug	4
91	MOOZZ	7403	13229E6677/4	Wire, Electrical	4
				Make From Wire P/N M5086/1-16-9, Cut to Length	
92	PBOOO	97403	13229E6674	Wiring Harness	1
				K1 to TB2	
93	PAOZZ	96906	MS3367-5-9	Strap	5
94	PAOZZ	96906	MS25036-112	Terminal, Lug	6
95	MOOZZ	97403	13229E6674/1	Wire, Electrical	3
				Make From Wire P/N M5086/1-16-9, Cut to Length	

(1) ITEM NO	(2) SMR CODE	(3) CAGEC	(4) PART NUMBER	(5) DESCRIPTION AND USABLE ON CODES (UOC)	(6) QTY
96	PBOOO	97403	13229E6672	Wiring Harness	1
97	PAOZZ	96906	MS3367-5-9	Strap	5
98	PAOZZ	96906	MS25036-112	Terminal, Lug	6
99	MOOZZ	97403	13229E6672/1	Wire, Electrical Make From Wire P/N M5086/1-10-9, Cut to Length	3
100	PBOOO	97403	13229E6704	Wiring Harness P16 to TB1	1
101	PAOZZ	96906	MS25036-115	Terminal, Lug	3
102	PAOZZ	96906	MS25036-116	Terminal, Lug	2
103	PAOZZ	97403	13229E6718-1	Plug, Straight	1
104	MOOZZ	97403	13229E6704/3	Braid, Wire, Tube Make From Braid, QQ-B-575, QQB575R320781, Cut to Length	1
105	MOOZZ	97403	13229E6704/8	Insulation Sleeving Make From Insulation Sleeving P/N M23058/5-109-9 .562 ID Min., Cut to Length	1
106	MOOZZ	97403	13229E6704/9	Insulation Sleeving... Make From Insulation Sleeving P/N M23058/5-109-9 .562 ID Min., Cut to Length	1
107	MOOZZ	97403	13229E6704/2	Wire, Electrical Make From Wire P/N M5086/2-8-9, Cut to Length	5
108	AOOQC	97403	13229E6679-1	Lead, Electrical	1
109	PAOZZ	96906	MS25036-153	Terminal, Lug	1
110	PAOZZ	96906	MS25036-108	Terminal, Lug	1
111	MOOZZ	97403	13229E6679-1/4	Wire, Electrical Make From Wire P/N M5086/1-16-9, Cut to Length	1
112	AOOOC	97403	13229E6679-10	Lead, Electrical	1
113	PAOZZ	96906	MS25036-154	Terminal, Lug	1
114	MOOZZ	97403	13229E6679-10/4	Wire, Electrical Make From Wire P/N M5086/1-16-9, Cut to Length	1
115	AOOOC	97403	13229E6679-12	Lead, Electrical	1
116	PAOZZ	96906	MS25036-153	Terminal, Lug	1
117	MOOZZ	97403	13229E6679-12/4	Wire, Electrical Make From Wire P/N M5086/1-16-9, Cut to Length	1
118	AOOOC	97403	13229E6679-13	Lead, Electrical	1
119	PAOZZ	96906	MS25036-112	Terminal, Lug	2
120	MOOZZ	97403	13229E6679-13/6	Wire, Electrical Make From Wire P/N M5086/1-10-9, Cut to Length	1
121	AOOOC	97403	13229E6679-14	Lead, Electrical	1
122	PAOZZ	96906	MS25036-112	Terminal, Lug	2
123	MOOZZ	97403	13229E6679-14/6	Wire, Electrical Make From Wire P/N M5086/1-10-9, Cut to Length	1
124	AOOOC	97403	13229E6679-15	Lead, Electrical	1
125	PAOZZ	96906	MS25036-112	Terminal, Lug	2

(1) ITEM NO	(2) SMR CODE	(3) CAGEC	(4) PART NUMBER	(5) DESCRIPTION AND USABLE ON CODES (UOC)	(6) QTY
126	MOOZZ	97403	13229E6679-15/6	Wire, Electrical	1
				Make From Wire P/N M5086/1-10-9, Cut to Length	
127	AOOOO	97403	13229E6679-2	Lead, Electrical	1
128	PAOZZ	97403	13216E6191-2	Terminal, Lug	1
129	PAOZZ	96906	MS25036-108	Terminal, Lug	1
130	MOOZZ	97403	13229E6679-2/4	Wire, Electrica	1
				Make From Wire P/N M5086/1-16-9, Cut to Length	
131	AOOOO	97403	13229E6679-3	Lead, Electrical	1
132	PAOZZ	97403	13216E6191-2	Terminal, Lug	1
133	PAOZZ	96906	MS25036-108	Terminal, Lug	1
134	MOOZZ	97403	13229E6679-3/4	Wire, Electrical	1
				Make From Wire P/N M5086/1-16-9, Cut to Length	
135	AOOOO	97403	13229E6679-4	Lead, Electrical	1
136	PAOZZ	97403	13216E6191-2	Terminal, Lug	2
137	MOOZZ	97403	13229E6679-4/4	Wire, Electrical	1
				Make From Wire P/N M5086/1-16-9, Cut to Length	
138	AOOOO	97403	13229E6679-5	Lead, Electrical	1
139	PAOZZ	96906	MS25036-108	Terminal, Lug	1
140	PAOZZ	96906	MS25036-154	Terminal, Lug	1
141	MOOZZ	97403	13229E6679-5/4	Wire, Electrical	1
				Make From Wire P/N M5086/1-16-9, Cut to Length	
142	AOOOO	97403	13229E6679-6	Lead, Electrical	1
143	PAOZZ	96906	MS25036-153	Terminal, Lug	1
144	PAOZZ	96906	MS25036-154	Terminal, Lug	1
145	MOOZZ	97403	13229E6679-6/4	Wire, Electrical	1
				Make From Wire P/N M5086/1-16-9, Cut to Length	
146	AOOOO	97403	13229E6679-7	Lead, Electrical	1
147	MOOZZ	97403	13229E6679-7/4	Wire, Electrical	1
				Make From Wire P/N M5086/1-16-9, Cut to Length	
148	AOOOO	97403	13229E6679-8	Lead, Electrical	1
149	MOOZZ	97403	13229E6679-8/4	Wire, Electrical	1
				Make From Wire P/N M5086/1-16-9, Cut to Length	
150	AOOOO	97403	13229E6679-9	Lead, Electrical	1
151	PAOZZ	96906	MS25036-154	Terminal, Lug	1
152	MOOZZ	97403	13229E6679-9/4	Wire, Electrical	1
				Make From Wire P/N M5086/1-16-9, Cut to Length	
153	AOOOO	97403	13229E6679-11	Lead, Electrical	1
154	PAOZZ	96906	MS25036-153	Terminal, Lug	1
155	MOOZZ	97403	13229E6679-11/4	Wire, Electrical	1
				Make From Wire P/N M5086/1-16-9, Cut to Length	
				END OF FIGURE	

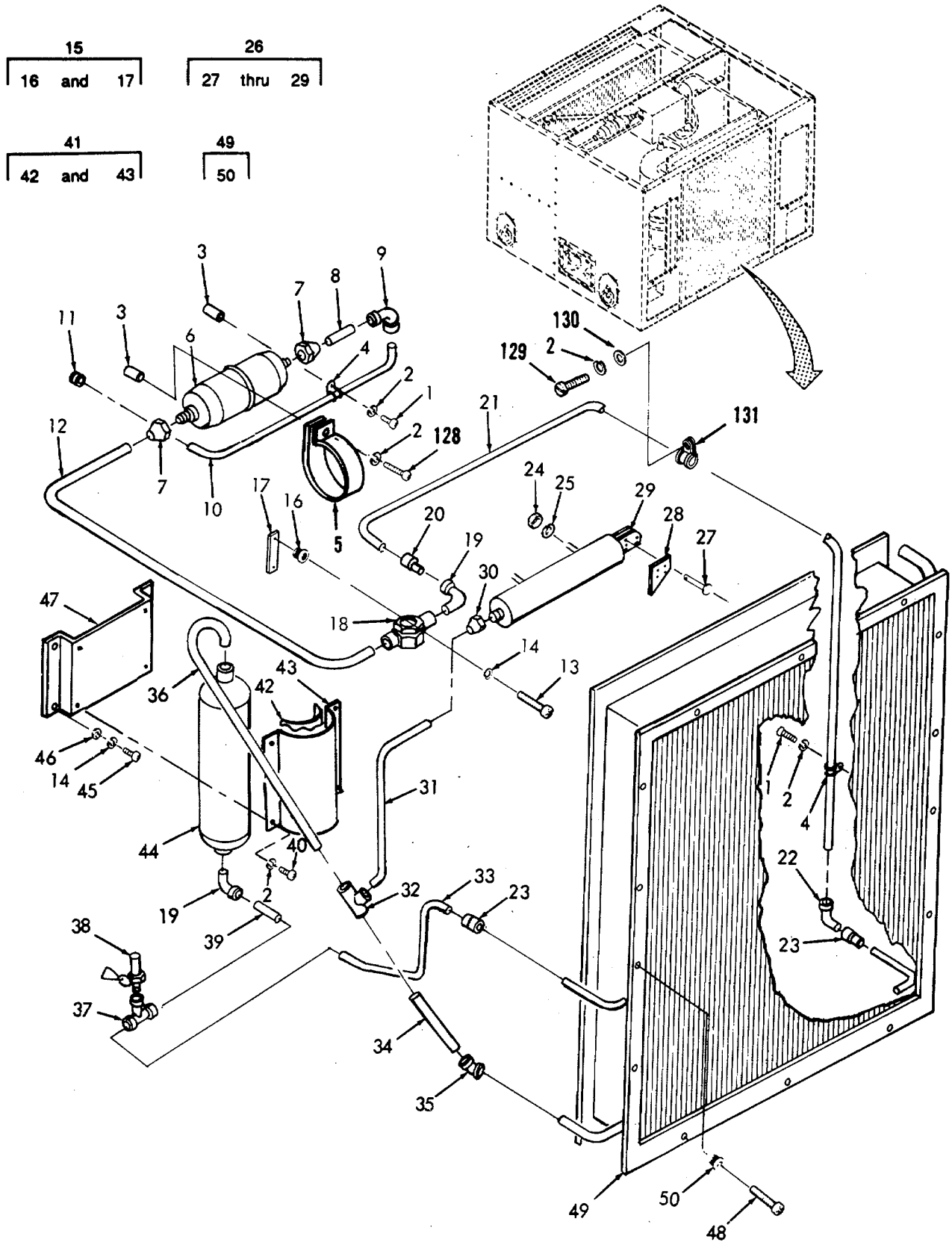

FIGURE 16. Refrigeration System. (Sheet 1 of 5)

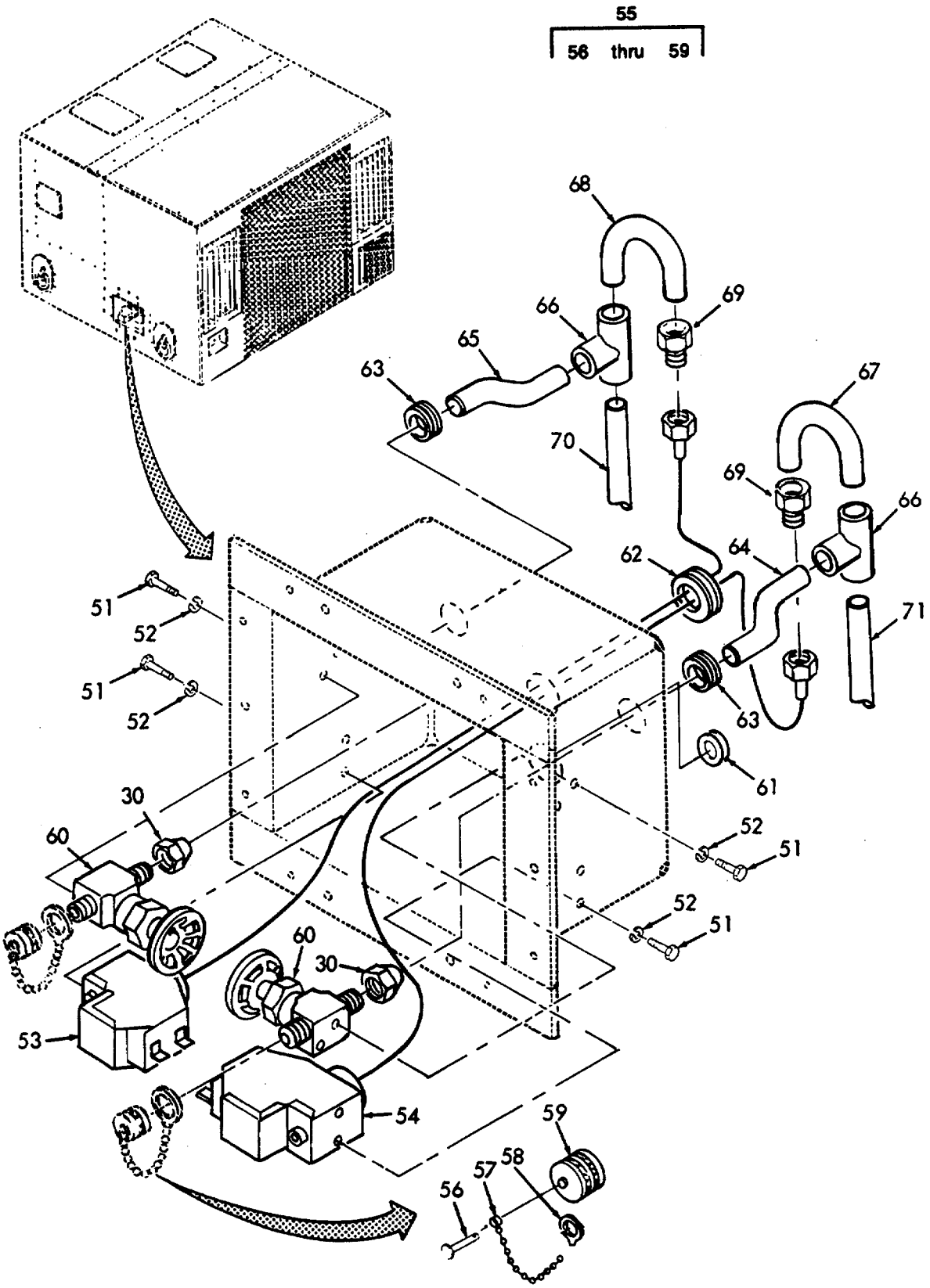

FIGURE 16. Refrigeration System. (Sheet 2 of 5)

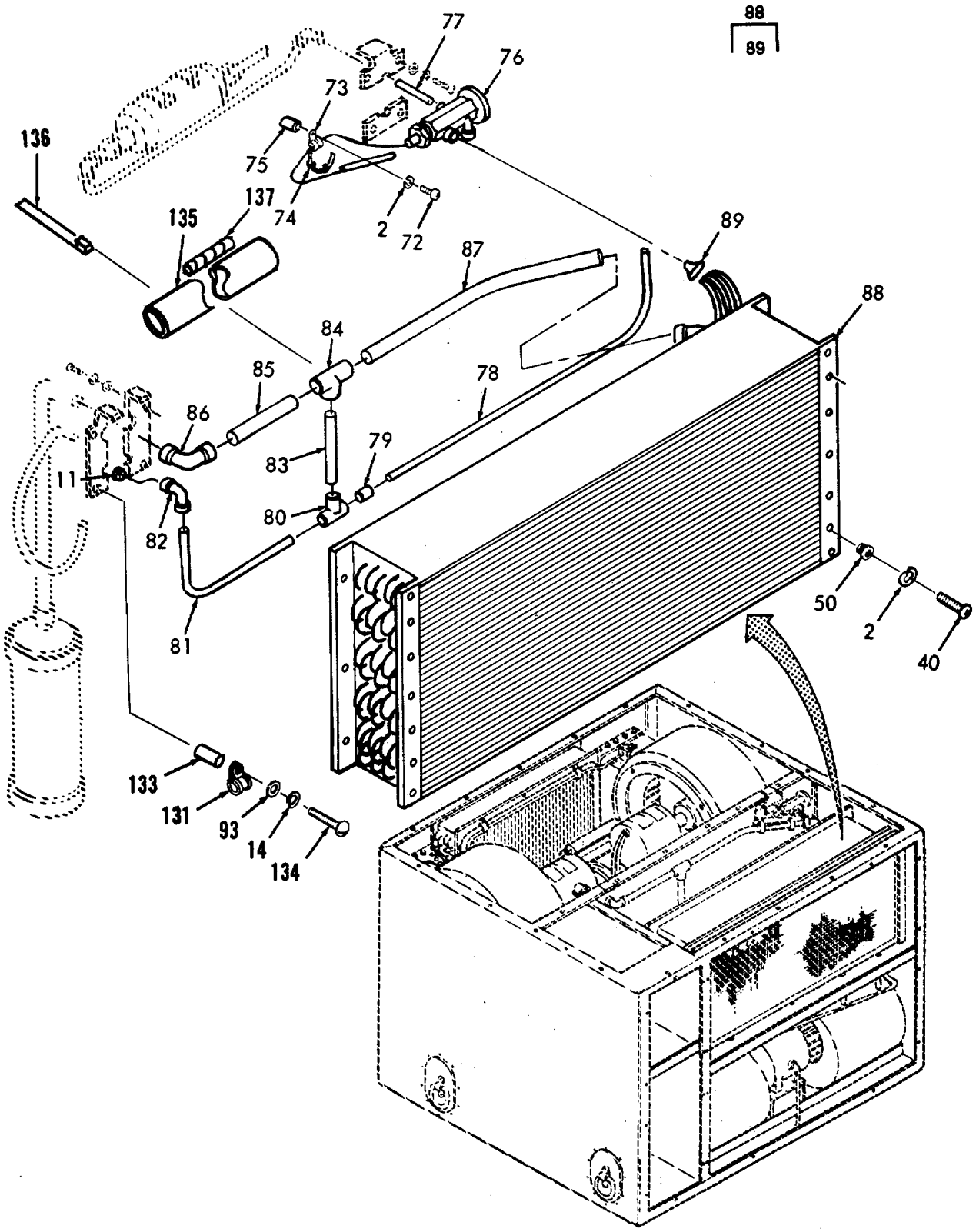

FIGURE 16. Refrigeration System. (Sheet 3 of 5)

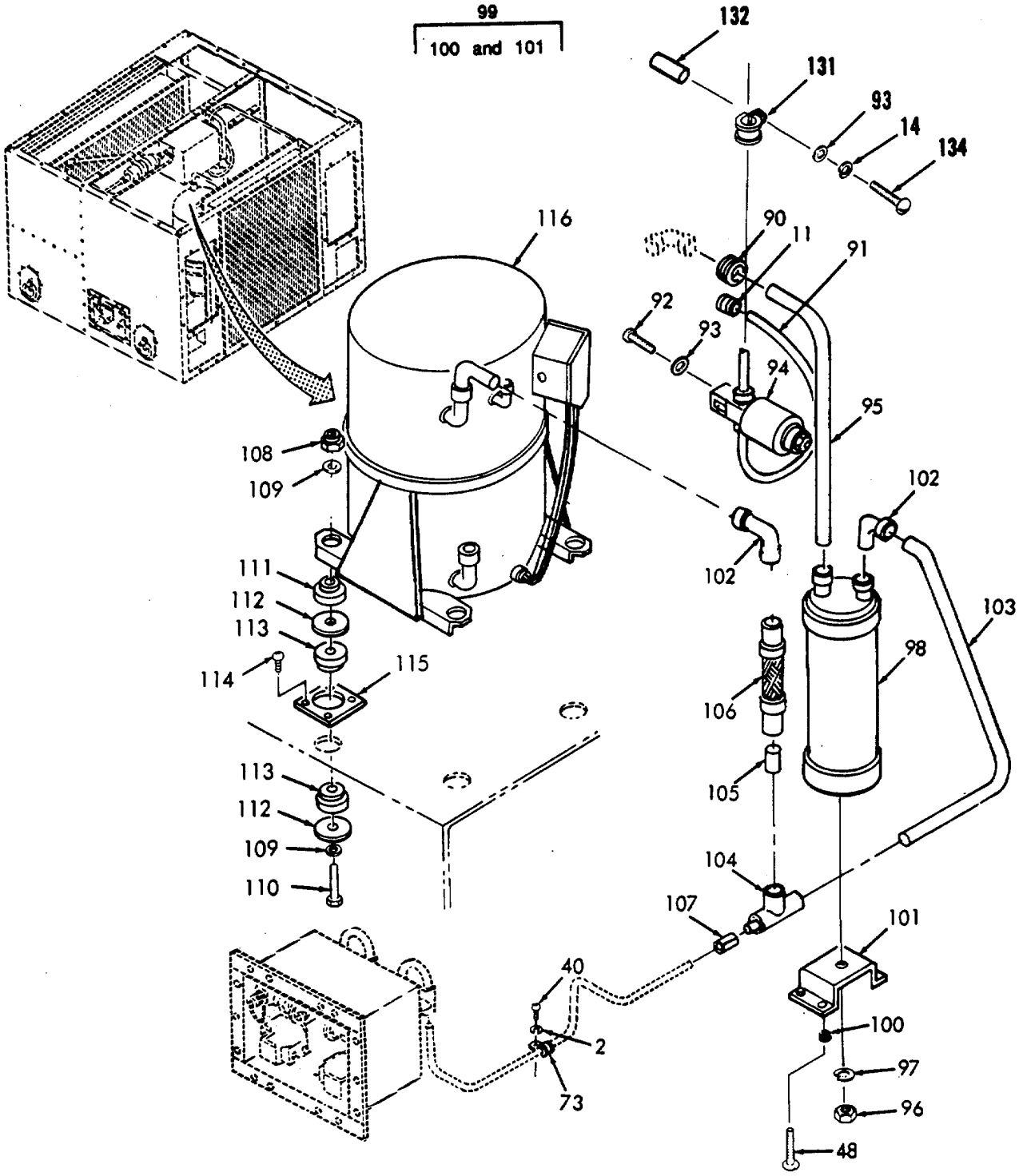

FIGURE 16. Refrigeration System. (Sheet 4 of 5)

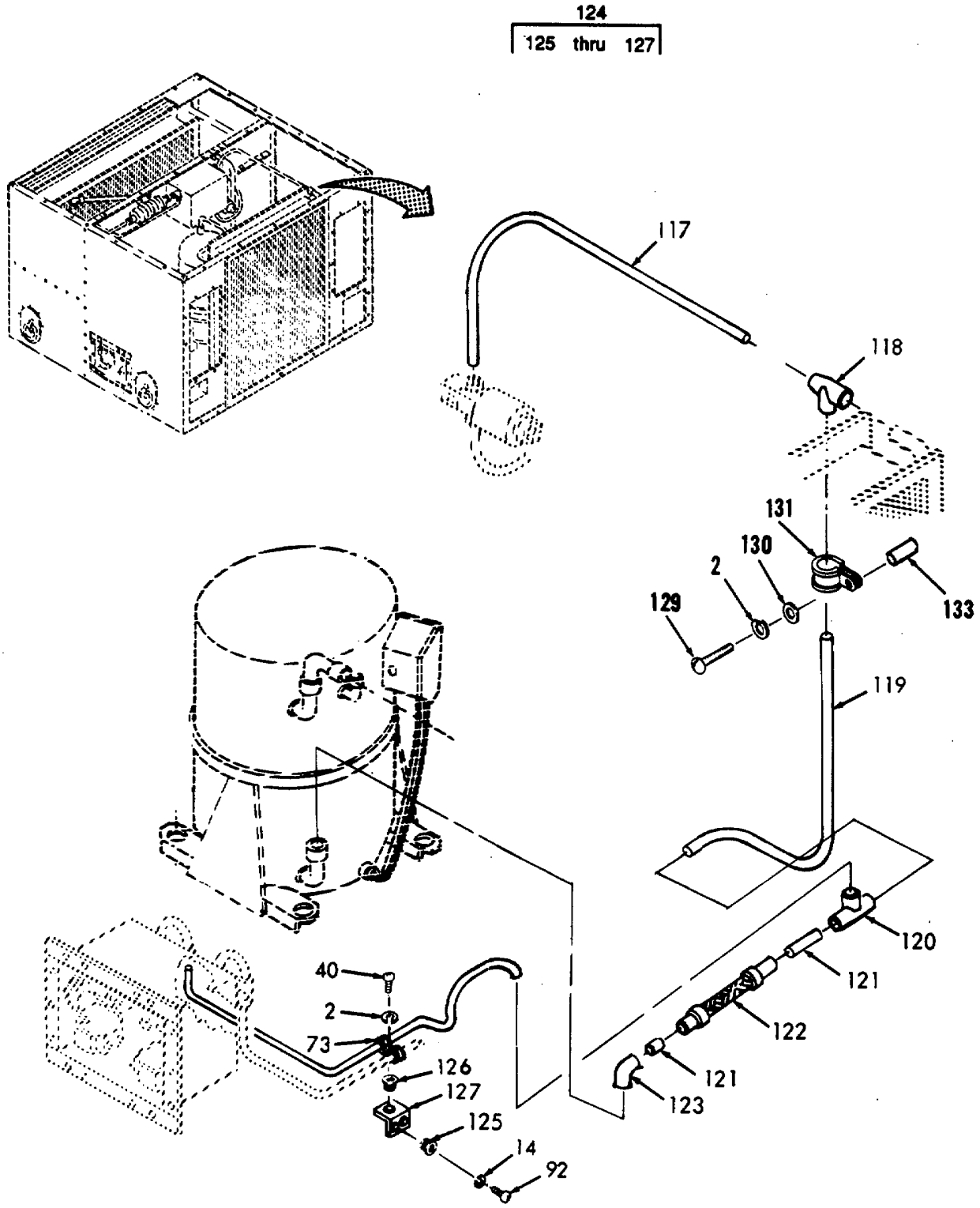

FIGURE 16. Refrigeration System. (Sheet 5 of 5)

(1) ITEM NO	(2) SMR CODE	(3) CAGEC	(4) PART NUMBER	(5) DESCRIPTION AND USABLE ON CODES (UOC)	(6) QTY
				GROUP 09 REFRIGERATION SYSTEM	
				Figure 16 REFRIGERATION SYSTEM	
1	PAFZZ	96906	MS35207-266	Screw	3
2	PAFZZ	96906	MS35338-43	Washer, Lock	14
3	XBFZZ	97403	13216E6159-5	Post, Spacer	3
4	PAFZZ	96906	MS21919WDG6	Clamp	3
5	PAFZZ	96906	MS21919WDG40	Clamp	2
6	PAFZZ	97403	13214E4209	Dehydrator, Desic	1
7	PAFZZ	96906	MS35872-4	Flare Nut	2
8	MFFZZ	97403	13229E6700/215	SMLS Copper Tube	1
				Make From Copper Tube P/N ASTM-B280 .500, 1/2 OD, Cut to Length and Bend as Needed	
9	PAFZZ	96906	MS35922-43	Elbow	1
10	MFFZZ	97403	13229E6700/216	SMLS Copper Tube	1
				Make From Copper Tube P/N ASTM-B280 .375, 3/8 OD, Cut to Length and Bend as Needed	
11	PAFZZ	96906	MS35489-40	Grommet	3
12	MFFZZ	97403	13229E6700/158	SMLS Copper Tube	1
				Make From Copper Tube P/N ASTM-B280 .500, 1/2 OD, Cut to Length and Bend as Needed	
13	PAFZZ	96906	MS35206-254	Screw	2
14	PAFZZ	96906	MS35338-42	Washer, Lock	9
15	XBFFF	97403	13216E6156	Plate, Mounting	1
16	PAFZZ	96906	MS27130-S15K	Nut, Blind Rivet	2
17	XAFZZ	97403	13216E6156/1	Sheet	1
18	PAFZZ	97403	13216E6155-2	Indicator, Sight	1
19	PAFZZ	41947	W2817	Elbow, Copper	2
20	PAFZZ	97403	13211E3799-3	Bushing, Flush	2
21	MFFZZ	97403	13229E6700/151	SMLS Copper Tube	1
				Make From Copper Tube P/N ASTM-B280 .375, 3/8 OD, Cut to Length and Bend as Needed	
22	PAFZZ	96906	MS35928-3	Elbow	1
23	PAFZZ	97403	13229E6708-4	Coupling, Reducing	2
24	PAFZZ	96906	MS35649-2252	Nut	2
25	PAFZZ	96906	MS35338-44	Washer, Lock	2
26	PBFFF	97403	13216E6330	Cylinder Assy, Act	1
27	PAFZZ	96906	MS20470AD4-6	Rivet, Solid	3
28	XAFZZ	97403	13216E6330/2	Plate	2
29	PAFZZ	97403	13220E2356	Cylinder, Actuating	1
30	PAFZZ	96906	MS35872-2	Flare Nut	3

(1) ITEM NO	(2) SMR CODE	(3) CAGEC	(4) PART NUMBER	(5) DESCRIPTION AND USABLE ON CODES (UOC)	(6) QTY
31	MFFZZ	97403	13229E6700/195	SMLS Copper Tube ..... Make From Copper Tube P/N ASTM-B280 .250, 1/4 OD, Cut to Length and Bend as Needed	1
32	PAFZZ	97403	13211E4043-12	Tee	1
33	MFFZZ	97403	13229E6700/196	SMLS Copper Tube ..... Make From Copper Tube P/N ASTM-B280 .500, 1/2 OD, Cut to Length and Bend as Needed	1
34	MFFZZ	97403	13229E6700/200	SMLS Copper Tube ..... Make From Copper Tube P/N ASTM-B280 .500, 1/2 OD, Cut to Length and Bend as Needed	1
35	PAFZZ	96906	MS35917-4U	Elbow	1
36	MFFZZ	97403	13229E6700/198	SMLS Copper ..... Make From Copper Tube P/N ASTM-B280 .375, 3/8 OD, Cut to Length and Bend as Needed	1
37	PAFZZ	97403	13214E3411-3	Tee, Pipe to Tube	1
38	PAFZZ	97403	13211E8369	Valve, Press. Relief	1
39	MFFZZ	97403	13229E6700/206	SMLS Copper Tube ..... Make From Copper Tube P/N ASTM-B280 .375, 3/8 OD, Cut to Length and Bend as Needed	1
40	PAFZZ	96906	MS35207-265	Screw	10
41	XBFFF	97403	13216E6343	Clamp, Receiver	1
42	MFFZZ	97403	13216E6343/2	Rubber, Cellular ..... Make From Gasket, P/N MIL-R-6130, Type II, Grade A, Cond. Soft, .06 thk.	2
43	XBFZZ	97403	13216E6343/1	Strip	1
44	PAFZZ	97403	13216E6355	Receiver	1
45	PAFZZ	96906	MS35206-246	Screw	4
46	PAFZZ	96906	MS27183-41	Washer, Flat	4
47	XBFZZ	97403	13229E6715	Bracket, Receiver	1
48	PAFZZ	96906	MS24693-S273	Screw	9
49	XBFFF	97403	13225E9503	Coil, Condenser	1
50	PAFZZ	96906	MS27130-S25K	Nut, Blind Rivet	23
51	PAFZZ	96906	MS35206-226	Screw	4
52	PAFZZ	96906	MS35338-41	Washer, Lock	4
53	PAFZZ	97403	13216E6215-3	Switch, Pressure	1
54	PAFZZ	97403	13216E6215-1	Switch, Pressure	1
55	PAFFF	97403	13219E9540	Cap and Chain	2
56	PAFZZ	97403	13219E9540/3	Rivet	1
57	XAFZZ	97403	13219E9540/2	Keeper Chain	1
58	XAFZZ	97403	13219E9540/1	Keeper Ring	1
59	XAFZZ	97403	13219E9540/4	Cap	1
60	PAFZZ	97403	13219E9499-1	Valve, Service	2
61	PAFZZ	97403	13216E6109	Grommet, Rubber.	1
62	PAFZZ	96906	MS35489-122	Grommet	1
63	PAFZZ	96906	MS35489-36	Grommet	2

(1) ITEM NO	(2) SMR CODE	(3) CAGEC	(4) PART NUMBER	(5) DESCRIPTION AND USABLE ON CODES (UOC)	(6) QTY
64	MFFZZ	97403	13229E6700/159	SMLS Copper Tube ..... Make From Copper Tube P/N ASTM-B280 .250, 1/4 OD, Cut to Length and Bend as Needed	1
65	MFFZZ	97403	13229E6700/160	SMLS Copper Tube ..... Make From Copper Tube P/N ASTM-B280 .250, 1/4 OD, Cut to Length and Bend as Needed	1
66	PAFZZ	96906	MS35929-2	Tee	2
67	MFFZZ	97403	13229E6700/202	SMLS Copper Tube ..... Make From Copper Tube P/N ASTM-B280 .250, 1/4 OD, Cut to Length and Bend as Needed	1
68	MFFZZ	97403	13229E6700/207	SMLS Copper Tube ..... Make From Copper Tube P/N ASTM-B280 .250, 1/4 OD, Cut to Length and Bend as Needed	1
69	PAFZZ	96906	MS35919-22	Adapter	2
70	MFFZZ	97403	13229E6700/152	SMLS Copper Tube ..... Make From Copper Tube P/N ASTM-B280 .250, 1/4 OD, Cut to Length and Bend as Needed	1
71	MFFZZ	97403	13229E6700/153	SMLS Copper Tube ..... Make From Copper Tube P/N ASTM-B280 .250, 1/4 OD, Cut to Length and Bend as Needed	1
72	PAFZZ	96906	MS35207-270	Screw	1
73	PAFZZ	96906	MS21919WDG4	Clamp	3
74	PAFZZ	96906	MS3367-4-9	Strap	5
75	XBFZZ	97403	13216E6159-7	Post, Spacer	1
76	PAFZZ	97403	13216E6160-3	Valve, Expansion	1
77	MFFZZ	97403	13229E6700/189	SMLS Copper Tube ..... Make From Copper Tube P/N ASTM-B280 .375, 3/8 OD, Cut to Length and Bend as Needed	1
78	MFFZZ	97403	13229E6700/165	SMLS Copper Tube ..... Make From Copper Tube P/N ASTM-B280 .250, 1/4 OD, Cut to Length and Bend as Needed	1
79	PAFZZ	97403	13211E3799-1	Bushing, Flush	1
80	PAFZZ	97403	13211E4043-19	Tee	1
81	MFFZZ	97403	13229E6700/184	SMLS Copper Tube ..... Make From Copper Tube P/N ASTM-B280 .375, 3/8 OD, Cut to Length and Bend as Needed	1
82	PAFZZ	96906	MS35917-3	Elbow	1
83	MFFZZ	97403	13229E6700/183	SMLS Copper Tube ..... Make From Copper Tube P/N ASTM-B280 .500, 1/2 OD, Cut to Length and Bend as Needed	1
84	PAFZZ	97403	13211E4043-43	Tee	1
85	MFFZZ	97403	13229E6700/171	SMLS Copper Tube ..... Make From Copper Tube P/N ASTM-B280 .875, 7/8 OD, Cut to Length and Bend as Needed	1

(1) ITEM NO	(2) SMR CODE	(3) CAGEC	(4) PART NUMBER	(5) DESCRIPTION AND USABLE ON CODES (UOC)	(6) QTY
86	PAFZZ	96906	MS35917-7	Elbow	1
87	MFFZZ	97403	13229E6700/167	SMLS Copper Tube Make From Copper Tube P/N ASTM-B280 .875, 7/8 OD, Cut to Length and Bend as Needed	1
88	XBFFF	97403	13216E6283	Coil, Evaporator	1
89	XBFZZ	97403	13216E6345-1	Restrictor	1
90	PAFZZ	96906	MS35489-51	Grommet	1
91	MFFZZ	97403	13229E6700/141	SMLS Copper Tube Make From Copper Tube P/N ASTM-B280 .375, 3/8 OD, Cut to Length and Bend as Needed	1
92	PAFZZ	96906	MS35206-244	Screw	3
93	PAFZZ	96906	MS27183-7	Washer, Flat	2
94	PAFZZ	97403	13229E4215	Valve, Solenoid	1
95	MFFZZ	97403	13229E6700/140	SMLS Copper Tube Make From Copper Tube P/N ASTM-B280 .875, 7/8 OD, Cut to Length and Bend as Needed	
96	PAFZZ	96906	MS51967-8	Nut	1
97	PAFZZ	96906	MS35338-46	Washer, Lock	1
98	XBFZZ	97403	13218E7546	Accumulator	1
99	XBFFF	97403	13225E9556	Support, Accumulator	1
100	PAFZZ	88044	NAS1330H3K 166	Nut, Blind Rivet	4
101	XAFZZ	97403	13225E9556/1	Sheet	1
102	PAFZZ	96906	MS35928-7	Elbow	2
103	MFFZZ	97403	13229E6700/144	SMLS Copper Tube Make From Copper Tube P/N ASTM-B280 .875, 7/8 OD, Cut to Length and Bend as Needed	1
104	PAFZZ	97403	13211E4043-51	Tee	1
105	MFFZZ	97403	13229E6700/224	SMLS Copper Tube Make From Copper Tube P/N ASTM-B280 .875, 7/8 OD, Cut to Length and Bend as Needed	1
106	PBFZZ	97403	13216E6167-13	Hose Assembly, Metal 7/8 OD, Cut to Length and Bend as Needed	1
107	PAFZZ	97403	13211E3799-2	Bushing, Flush	1
108	PAFZZ	96906	MS21045-6	Nut	4
109	PAFZZ	96906	MS27183-14	Washer, Flat	8
110	PAFZZ	96906	MS16998-78	Screw	4
111	PAFZZ	97403	13221E9314	Bushing, Comp. Mtg	4
112	PAFZZ	97403	13211E8165-3	Washer	12
113	PAFZZ	97403	13229E5341	Washer, Resilient	8
114	PAFZZ	96906	MS35206-246	Screw	4
115	XBFZZ	97403	13229E5340	Plate, Comp. Mtg	4

(1) ITEM NO	(2) SMR CODE	(3) CAGEC	(4) PART NUMBER	(5) DESCRIPTION AND USABLE ON CODES (UOC)	(6) QTY
116	PAFFF	67302	0601-001	Compressor	1
				See FIG. 17 For ASSEMBLY BREAKDOWN.	
117	MFFZZ	97403	13229E6700/146	SMLS Copper Tube	1
				Make From Copper Tube P/N ASTM-B280 .375, 3/8 OD, Cut to Length and Bend as Needed	
118	PAFZZ	97403	13211E4043	Tee	1
119	MFFZZ	97403	13229E6700/145	SMLS Copper Tube	1
				Make From Copper Tube P/N ASTM-B280 .500, 1/2 OD, Cut to Length and Bend as Needed	
120	PAFZZ	97403	13211E4043-16	Tee	1
121	MFFZZ	97403	13229E6700/228	SMLS Copper Tube	2
				Make From Copper Tube P/N ASTM-B280 .500, 1/2 OD, Cut to Length and Bend as Needed	
122	PBFZZ	97403	13216E6167-1	Hose Assembly, Metal	2
123	MFFZZ	97403	13229E6700/149	SMLS Copper Tube	1
				Make From Copper Tube P/N ASTM-B280 .500, 1/2 OD, Cut to Length and Bend as Needed	
124	XBFFF	97403	13229E5339	Bracket, Tube	1
125	PAFZZ	88044	NAS1330H08K 161L	Nut, Blind Rivet	2
126	PAFZZ	88044	NAS1329H3K130L	Nut, Blind Rivet	1
127	XAFZZ	97403	13229E5339/1	Sheet	1
128	PAFZZ	96906	MS35206-268	Screw	3
129	PAFZZ	96906	MS35206-264	Screw	1
130	PAFZZ	96906	MS27183-42	Washer, Flat	2
131	PAFZZ	96906	MS21919WDG8	Clamp	4
132	XBFZZ	97403	13216E6159-10	Post, Spacer	1
133	XBFZZ	97403	13216E6159-11	Post, Spacer	2
134	PAFZZ	96906	MS35206-250	Screw	2
135	PAOZZ	81349	MIL-P-15280 Form T	Plastic Material	1
				Unicellular, Tube, 1.50 ID x .50 wall	
136	PAOZZ	81349	MIL-S-23190/3-1	Strap, Tie Down	5
				Adjustable, Corrosion Resistant, Steel, Type VI	
137	PAOZZ	81349	MIL-T-47014 2 INCH WIDE	Tape, Reflective	V

END OF FIGURE

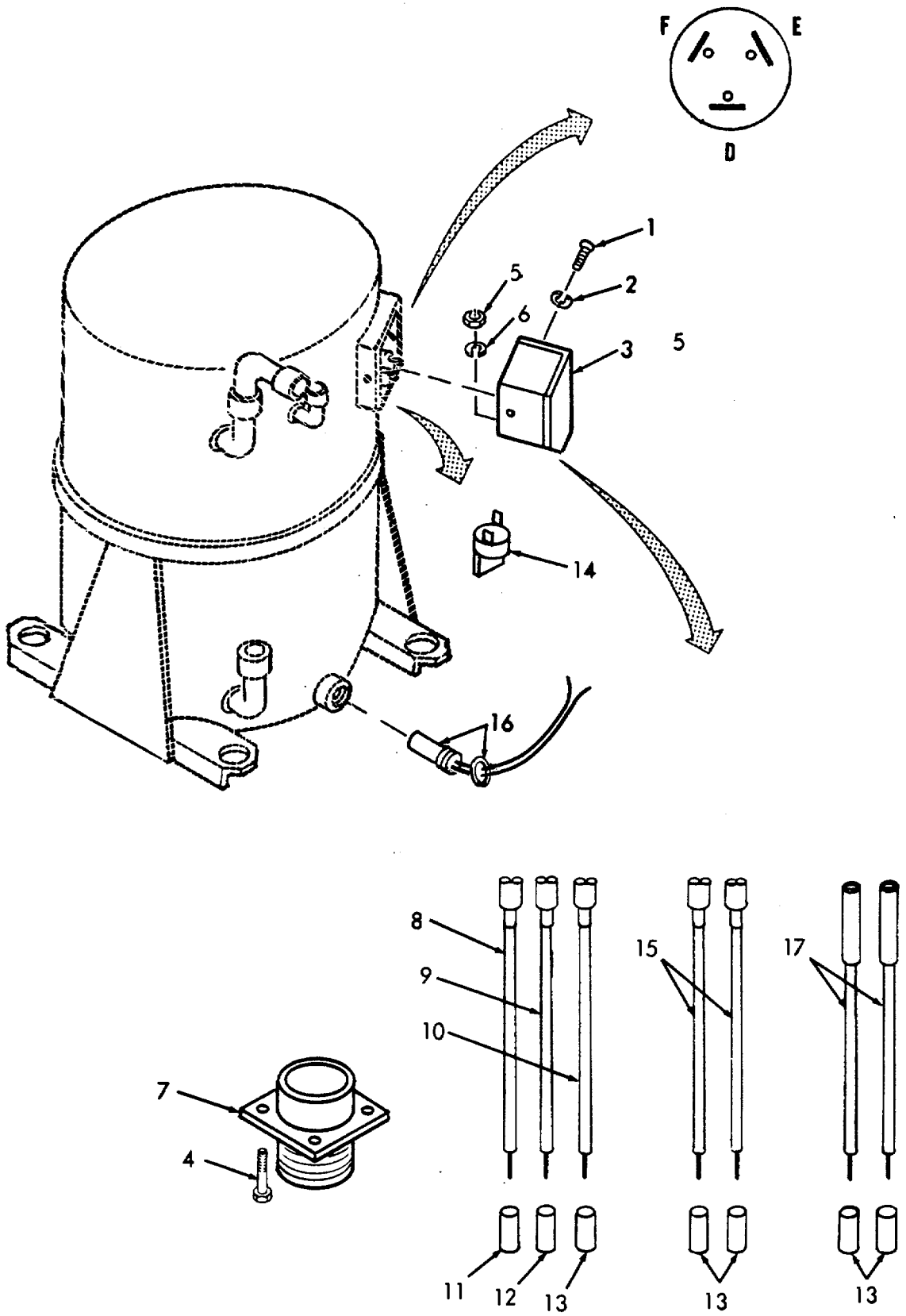

FIGURE 17. Compressor.

(1) ITEM NO	(2) SMR CODE	(3) CAGEC	(4) PART NUMBER	(5) DESCRIPTION AND USABLE ON CODES (UOC)	(6) QTY
				GROUP 09 REFRIGERATION SYSTEM	
				Figure 17 COMPRESSOR	
1	PAFZZ	96906	MS35207-261	Screw	2
2	PAFZZ	96906	MS35338-43	Washer, Lock	2
3	PAFZZ	67302	SK786-100	Junction Box	1
4	PAFZZ	96906	MS35206-230	Screw	4
5	PAFZZ	96906	MS35649-62	Nut, Hex	4
6	PAFZZ	96906	MS35338-41	Washer, Lock	4
7	PAFZZ	96906	MS3102R24-11P	Connector	1
8	PAFZZ	67302	WIR-ST2	Lead, Start	1
9	PAFZZ	67302	WIR-RT3	Lead, Run	1
10	PAFZZ	67302	WIR-CT1	Lead, Common	1
11	MFFZZ	67302	786221	Sleeve Make From Insulation Sleeving, P/N M23053/5-107-9 Cut To Length	2
12	MFFZZ	67302	786222	Sleeve Make From Insulation Sleeving, P/N M23053/5-107-9 Cut To Length	2
13	MFFZZ	67302	786223	Sleeve Make From Insulation Sleeving, P/N M23053/5-107-9 Cut To Length	6
14	PAFZZ	82415	053CCA1255A	Thermostat	1
15	PAFZZ	67302	786-CRK3/11	Wire, Lead	2
16	PAFZZ	14569	018-0031-01	Heater, Crankcase	1
17	PAFZZ	67302	3001-010	Leads, Heater	2
				END OF FIGURE	

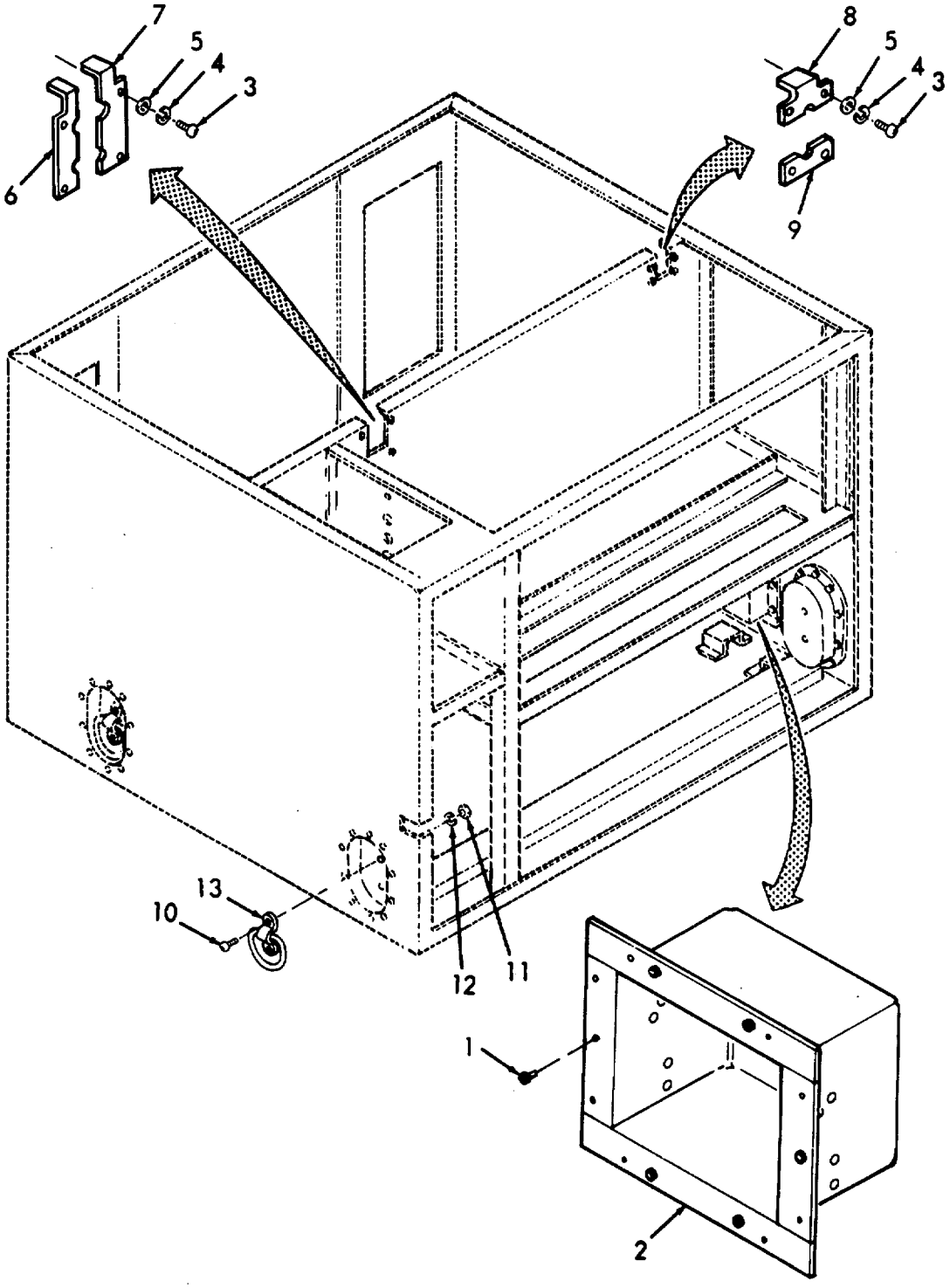

FIGURE 18. Housing. (Sheet 1 of 2)

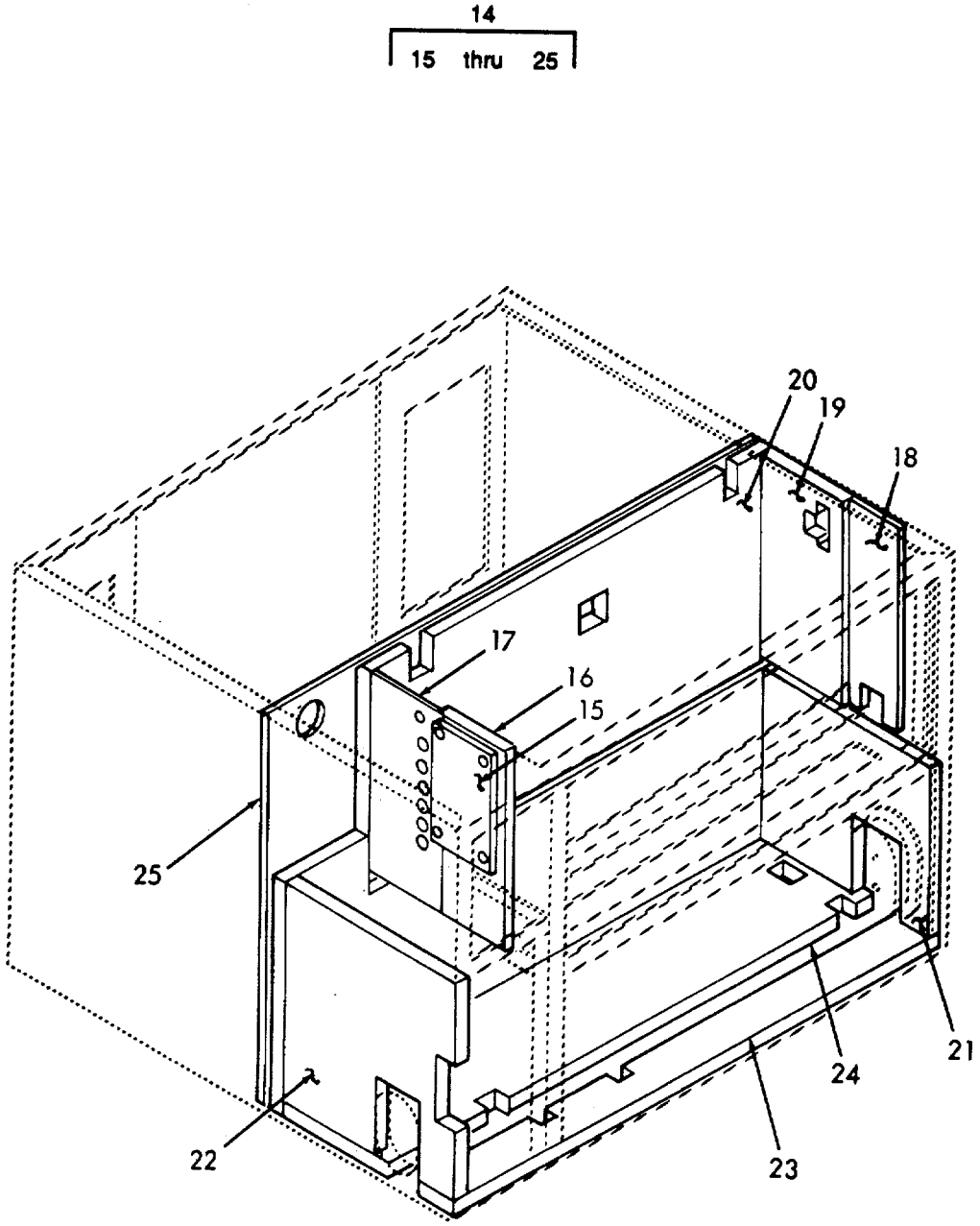

FIGURE 18. Housing. (Sheet 2 of 2)

(1) ITEM NO	(2) SMR CODE	(3) CAGEC	(4) PART NUMBER	(5) DESCRIPTION AND USABLE ON CODES (UOC)	(6) QTY
				GROUP 10 HOUSING	
				FIG. 18 HOUSING	
1	PAHZZ	96906	MS24693-S50	Screw	6
2	XBHZZ	97403	13229E5333	Box, Service	1
3	PAHZZ	96906	MS35206-246	Screw	7
4	PAHZZ	96906	MS35338-42	Washer, Lock	7
5	PAHZZ	96906	MS27183-7	Washer, Flat	7
6	XBHZZ	97403	13229E6667	Plate, Block Off Left	1
7	XBHZZ	97403	13229E6666	Plate, Block Off Right	1
8	XBHZZ	97403	13222E5991	Plate, Block Off Top	1
9	XBHZZ	97403	13222E5992	Plate, Block Off Bottom	1
10	PAHZZ	96906	MS90726-32	Screw	8
11	PAHZZ	96906	MS35650-3312	Nut	8
12	PAHZZ	96906	MS35338-45	Washer, Lock	8
13	PAHZZ	97403	13216E6360	Ring and Clip	4
14	XBHHH	97403	13229E6701	Housing	1
15	MHHZZ	97403	13229E6701/74	Rubber, Cellular Make From Gasket, P/N MIL-R-6130, Type II, Grade A, Cond. Soft, .25 thk., Cut to Fit	1
16	MHHZZ	97403	13229E6701/77	Flexible Poly. Foam Make From Foam, Open Cell, P/N AMS 3570, 2.5LB/CU.FT.,1.0 thk, Cut to Fit	1
17	MHHZZ	97403	13229E6701/78	Flexibe Poly. Foam Make From Foam, Open Cell, P/N AMS 3570, 2.5LB/CU.FT.,1.0 thk, Cut to Fit	1
18	MHHZZ	97403	13229E6701/79	Flexible Poly. Foam Make From Foam, Open Cell, P/N AMS 3570, 2.5LB/CU.FT.,1.0 thk, Cut to Fit	1
19	MHHZZ	97403	13229E6701/80	Flexible Poly. Foam Make From Foam, Open Cell, P/N AMS 3570, 2.5LB/CU.FT.,1.0 thk, Cut to Fit	1
20	MHHZZ	97403	13229E6701/81	Plastic Foam Make From Foam, Unicellular P/N , MIL-P-15280, Form S, .5 thk., Cut to Fit	1
21	MHHZZ	97403	13229E6701/82	Flexible Poly. Foam Make From Foam, Open Cell, P/N AMS 3570, 2.5LB/CU.FT.,1.0 thk, Cut to Fit	1

(1) ITEM NO	(2) SMR CODE	(3) CAGEC	(4) PART NUMBER	(5) DESCRIPTION AND USABLE ON CODES (UOC)	(6) QTY
22	MHHZZ	97403	13229E6701/83	Plastic Foam..... Make From Foam, Unicellular P/N, MIL-P-15280, Form S, .5 thk., Cut to Fit	1
23	MHHZZ	97403	13229E6701/84	Flexible Poly. Foam..... Make From Foam, Open Cell, PIN AMS 3570, 2.5LB/CU.FT.,1.0 thk, Cut to Fit	1
24	MHHZZ	97403	13229E6701/85	Flexible Poly. Foam..... Make From Foam, Open Cell, P/N AMS 3570, 2.5LB/CU.FT.,1.0 thk, Cut to Fit	1
25	MHHZZ	97403	13229E6701/86	Flexible Poly. Foam..... Make From Foam, Open Cell, P/N AMS 3570, 2.5LB/CU.FT.,1.0 thk, Cut to Fit	1
				END OF FIGURE	

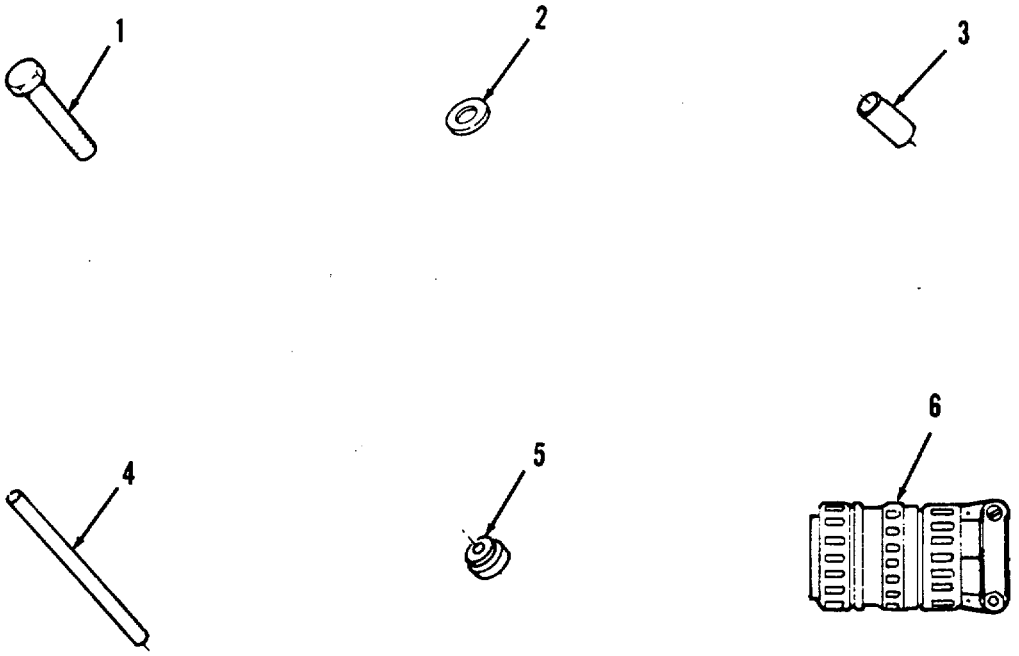

Items 1 through 6 are packaged separately and stored within the unit for shipping. These items are provided to assist in the various possible installation configurations.

FIGURE 19. Loose/Accessory Items.

(1) ITEM NO	(2) SMR CODE	(3) CAGEC	(4) PART NUMBER	(5) DESCRIPTION AND USABLE ON CODES (UOC)	(6) QTY
				GROUP 11 LOOSE/ACCESSORY ITEMS	
				FIG. 19 LOOSE/ACCESSORY ITEMS	
1	PAOZZ	96906	MS90726-65	Screw	6
2	PAOZZ	97403	13216E6138-2	Washer	6
3	PAOZZ	97403	13216E6152	Spacer	6
4	PAOZZ	97403	13216E6153	Tube, Elastomeric	6
5	PAOZZ	97403	13216E6137	Mount, Resilient	12
6	PAOZZ	97403	13229E6718-2	Plug, Straight	1
				END OF FIGURE	

(1) ITEM NO	(2) SMR CODE	(3) CAGEC	(4) PART NUMBER	(5) DESCRIPTION AND USABLE ON CODES (UOC)	(6) QTY
				GROUP 12 BULK MATERIALS	
1	PAOZZ	81349	QQB575R30T0375	Braid, Wire, Tube	V
2	PAOZZ	81349	QQB575R30T0562	Braid, Wire, Tube	V
3	PAOZZ	81349	QQB575R32T0781	Braid, Wire, Tube	V
4	PAOZZ	81346	AMS3570 2.5 Ib/cu.ft.	Foam, Flexible Poly..... .25 thk.	V
5	PAOZZ	81346	AMS3570 2.5 Ib/cu.ft.	Foam, Flexible Poly..... 1.00 thk.	V
6	PAFZZ	81349	MIL-R-6130 Type II, Grade A	Gasket..... Cond. Soft, .031 thk.	V
7	PAFZZ	81349	MIL-R-6130 Type II, Grade A	Gasket..... Cond. Soft, .125 thk.	V
8	PAFZZ	81349	MIL-R-6130 Type II, Grade A	Gasket..... Cond. Soft, .250 thk.	V
9	PAFZZ	81349	MIL-R-6130 Type II, Grade A	Gasket..... Cond. Soft, .060 thk.	V
10	PAOZZ	81346	AMS3570 2 Ib/cu.ft.	Gasket, Flex. , Poly ..... 1/2 thk. x 3/4 Wide	V
11	PAOZZ	81346	AMS3570 2 Ib/cu.ft.	Gasket, Flex. , Poly ..... 1/8 thk. x 3/4 Wide	V
12	PAOZZ	81349	MIL-1-14511	Insulation..... .25 thk	V
13	PAOZZ	81349	M23053/5-103-9	Insulation Sleeving ..... .062 ID Min.	V
14	PAOZZ	81349	M23053/5-107-9	Insulation Sleeving ..... .375 ID Min.	V
15	PAOZZ	81349	M23053/5-108-9	Insulation Sleeving ..... .500 ID Min.	V
16	PAOZZ	81349	M23053/5-109-9	Insulation Sleeving ..... .562 ID Min.	V
17	PAOZZ	81349	M23053/5-104-9	Insulation Sleeving ..... .125 ID Min.	V
18	PAFZZ	81346	ASTM-B280	SMLS Copper Tube ..... .250 OD	V
19	PAFZZ	81346	ASTM-B280	SMLS Copper Tube ..... .375 OD	V
20	PAFZZ	81346	ASTM-B280	SMLS Copper Tube ..... .500 OD	V
21	PAFZZ	81346	ASTM-B280	SMLS Copper Tube ..... .875 OD	V

(1) ITEM NO	(2) SMR CODE	(3) CAGEC	(4) PART NUMBER	(5) DESCRIPTION AND USABLE ON CODES (UOC)	(6) QTY
22	PAOZZ	81349	ZZ-T-831 Type VI, Class 6	Tubing, Plastic..... .625 In. ID	V
23	PAOZZ	81349	M508611-10-9	Wire, Electrical	V
24	PAOZZ	81349	M5086/1-16-9	Wire, Electrical	V
25	PAOZZ	81349	M5086/1-18-9	Wire, Electrical	V
26	PAOZZ	81349	M508611-20-9	Wire, Electrical	V
27	PAOZZ	81349	M5086/2-8-9	Wire, Electrical	V
28	PAOZZ	81346	AMS3570 2.5 Ib/cu.ft.	Foam, Flexible Poly..... .1 25 thk.	V
29	PAOZZ	81346	AMS3570 2.5 Ib/cu.ft.	Foam, Flexible Poly..... .500 thk.	V
30	PAHZZ	81349	MIL-P-15280 Form S	Plastic Foam..... .500 thk.	V
				END OF FIGURE	

SECTION III. Special Tools.

None

CROSS-REFERENCE INDEXES
NATIONAL STOCK NUMBER INDEX

STOCK NUMBER	FIG.	ITEM	STOCK NUMBER	FIG.	ITEM
	1	5		3	3
	1	7		3	5
	1	8		3	7
	1	9		3	8
	1	15		3	10
	1	16		3	11
	1	17		3	12
	2	3		3	13
	2	4		3	14
	2	6		3	15
	2	7		3	19
	2	8		4	3
	2	9		4	5
	2	10		4	7
	2	11		4	8
	2	14		4	10
	2	15		4	11
	2	16		4	12
	2	20		4	13
	2	22		4	14
	2	23		4	15
	2	24		4	19
	2	31		5	5
	2	33		5	10
	2	34		5	12
	2	35		5	20
	2	36		5	22
	2	37		5	24
	2	38		5	25
	2	39		6	2
	2	40		6	3
	2	41		6	4
	2	42		6	5
	2	43		6	6
	2	44		6	7
	2	46		6	8
	2	47		6	9
	2	48		6	11
	2	52		6	12
	2	53		6	14
	2	54		7	6

CROSS-REFERENCE INDEXES
NATIONAL STOCK NUMBER INDEX

STOCK NUMBER	FIG.	ITEM	STOCK NUMBER	FIG.	ITEM
	7	7		9	2
	7	10		9	6
	7	11		9	7
	7	12		9	8
	7	16		9	9
	7	19		10	3
	7	20		10	9
	7	21		10	11
	7	24		10	12
	7	25		10	16
	7	28		10	17
	7	30		10	18
	7	33		10	19
	7	34		10	20
	7	35		10	21
	7	37		10	23
	7	38		10	27
	8	3		10	29
	8	5		10	31
	8	6		10	32
	8	7		11	8
	8	12		11	17
	8	13		11	18
	8	14		11	23
	8	15		11	25
	8	19		11	26
	8	21		11	27
	8	22		11	28
	8	26		11	29
	8	28		12	8
	8	32		12	9
	8	33		12	11
	8	35		12	13
	8	37		12	15
	8	38		12	16
	8	39		12	20
	8	41		12	21
	8	43		12	24
	8	46		12	25
	8	47		13	5
	8	49		13	7

CROSS-REFERENCE INDEXES
NATIONAL STOCK NUMBER INDEX

STOCK NUMBER	FIG.	ITEM	STOCK NUMBER	FIG.	ITEM
	13	12		15	56
	14	5		15	57
	14	6		15	58
	14	9		15	60
	14	10		15	61
	14	11		15	64
	14	13		15	65
	14	14		15	69
	14	16		15	70
	14	17		15	71
	14	18		15	72
	14	19		15	73
	14	20		15	74
	14	22		15	76
	15	6		15	82
	15	7		15	83
	15	8		15	84
	15	9		15	85
	15	10		15	87
	15	14		15	88
	15	16		15	91
	15	17		15	92
	15	18		15	95
	15	23		15	96
	15	24		15	99
	15	26		15	100
	15	27		15	104
	15	28		15	105
	15	29		15	106
	15	31		15	107
	15	32		15	108
	15	37		15	111
	15	39		15	112
	15	40		15	114
	15	43		15	115
	15	44		15	117
	15	46		15	118
	15	48		15	120
	15	49		15	121
	15	54		15	123
	15	55		15	124

CROSS-REFERENCE INDEXES
NATIONAL STOCK NUMBER INDEX

STOCK NUMBER	FIG.	ITEM	STOCK NUMBER	FIG.	ITEM
	15	126		16	49
	15	127		16	56
	15	128		16	57
	15	130		16	58
	15	131		16	59
	15	132		16	64
	15	134		16	65
	15	135		16	67
	15	137		16	68
	15	138		16	70
	15	141		16	71
	15	142		16	75
	15	145		16	77
	15	146		16	78
	15	147		16	80
	15	148		16	81
	15	149		16	83
	15	150		16	85
	15	152		16	87
	15	153		16	89
	15	155		16	91
	16	3		16	95
	16	8		16	99
	16	10		16	100
	16	12		16	101
	16	15		16	103
	16	17		16	105
	16	18		16	106
	16	21		16	107
	16	23		16	111
	16	28		16	113
	16	31		16	115
	16	33		16	116
	16	34		16	117
	16	36		16	119
	16	39		16	121
	16	41		16	122
	16	42		16	123
	16	43		16	124
	16	44		16	125
	16	47		16	126

CROSS-REFERENCE INDEXES
NATIONAL STOCK NUMBER INDEX

STOCK NUMBER	FIG.	ITEM	STOCK NUMBER	FIG.	ITEM
	16	127	3040004792744	16	29
	16	132	3040011123003	9	11
	16	136	3040011769613	10	25
	16	137	3040011795791	9	10
	17	3	3110010286816	3	18
	17	8	3110010286816	4	18
	17	9	3110010286817	3	17
	17	10	3110010286817	4	17
	17	11	4130001156866	1	4
	17	12	4130001491477	16	98
	17	13	4130004792740	16	88
	17	14	4130004792750	2	17
	17	15	4130011239112	2	51
	17	16	4130335741916	16	6
	17	17	4710001694787	BULK	18
	18	2	4710001694787	BULK	19
	18	6	4710001694787	BULK	20
	18	7	4710001694787	BULK	21
	18	8	4720008493205	BULK	22
	18	9	4720010382334	19	4
	18	14	4730000140561	6	15
	18	15	4730000579118	16	104
	18	16	4730001438933	16	37
	18	17	4730001892737	16	30
	18	18	4730001892741	16	7
	18	19	4730002546447	16	86
	18	20	4730002546462	16	35
	18	21	4730002572163	16	66
	18	22	4730004691984	16	9
	18	23	4730005964062	16	84
	18	24	4730005964062	16	118
	18	25	4730008133192	16	19
	19	6	4730008155672	16	120
	BULK	4	4730008219184	16	32
	BULK	5	4730008221274	16	79
	BULK	10	4730008221275	16	20
	BULK	11	4730008370685	16	82
	BULK	28	4730009083194	6	13
	BULK	29	4730009083195	6	1
	BULK	30	4730009407940	16	22
3040004792744	16	26	4730010374919	16	69

CROSS-REFERENCE INDEXES
NATIONAL STOCK NUMBER INDEX

STOCK NUMBER	FIG.	ITEM	STOCK NUMBER	FIG.	ITEM
4730010923835	16	55	5305009846195	11	5
4730013286117	16	102	5305009846196	8	8
4730013965037	6	10	5305009846198	16	134
4810013874612	16	94	5305009846199	14	12
4820000738405	16	38	5305009846202	16	13
4820009362201	16	76	5305009846211	16	129
4820010156690	16	60	5305009846215	16	128
5130000453296	2	50	5305009846221	11	15
5130007653197	5	18	5305009846225	5	13
5305000512355	14	1	5305009881723	11	9
5305000516521	10	4	5305009881725	11	30
5305000633503	14	21	5305009886381	12	2
5305000633503	18	1	5305009896265	5	7
5305000633507	2	32	5305009896640	14	8
5305002693241	19	1	5305009897435	2	13
5305005767266	10	1	5305009897435	5	6
5305008087832	10	7	5305009897435	7	1
5305008892997	12	5	5305009897435	9	12
5305008892999	15	5	5305009897435	15	33
5305008893000	17	4	5305009906444	17	1
5305009577086	16	48	5305009931848	2	49
5305009577817	3	9	5305009931848	5	1
5305009577817	4	9	5305009931848	7	4
5305009577821	14	7	5305009931848	8	29
5305009586373	1	13	5305009931848	8	44
5305009836730	15	1	5305009931848	10	13
5305009837452	16	110	5305009931848	15	19
5305009844983	16	51	5305009931848	16	40
5305009844988	11	1	5305009931851	5	9
5305009846192	7	8	5305009953440	16	72
5305009846192	16	92	5305009953444	1	1
5305009846193	5	16	5305009953444	2	18
5305009846193	10	8	5305009953444	8	45
5305009846193	11	13	5305009953444	16	1
5305009846194	2	1	5305010054394	7	18
5305009846194	11	21	5305010054394	8	36
5305009846194	16	45	5305010192391	12	18
5305009846194	16	114	5305010192391	13	1
5305009846194	18	3	5305010192391	14	15
5305009846195	8	34	5305339846194	9	4
5305009846195	9	1	5306002259086	7	22

CROSS-REFERENCE INDEXES
NATIONAL STOCK NUMBER INDEX

STOCK NUMBER	FIG.	ITEM	STOCK NUMBER	FIG.	ITEM
5306002259087	18	10	5310001380104	7	14
5306002259090	8	1	5310001380104	8	17
5310000134530	17	5	5310001380104	8	24
5310000145850	1	3	5310001620413	7	29
5310000145850	5	3	5310001620413	8	2
5310000145850	7	2	5310004041433	3	2
5310000145850	8	31	5310004041433	4	2
5310000145850	10	15	5310005432410	12	6
5310000145850	13	11	5310005432410	15	4
5310000145850	15	21	5310005435060	12	19
5310000145850	16	130	5310005669504	19	2
5310000276138	12	17	5310005825965	11	10
5310000453296	1	2	5310005825965	11	11
5310000453296	2	19	5310005825965	16	25
5310000453296	5	2	5310007225658	16	97
5310000453296	7	5	5310007278353	11	16
5310000453296	8	40	5310007320558	16	96
5310000453296	10	14	5310007653197	7	9
5310000453296	13	10	5310007653197	11	7
5310000453296	15	20	5310007653197	13	3
5310000453296	15	34	5310007653197	14	4
5310000453296	16	2	5310007653197	16	46
5310000453296	17	2	5310008094058	7	27
5310000453299	2	2	5310008094058	12	3
5310000453299	5	17	5310008098544	8	9
5310000453299	9	5	5310008098544	16	93
5310000453299	10	6	5310008098544	18	5
5310000453299	11	6	5310008775797	2	12
5310000453299	13	2	5310008775797	7	3
5310000453299	14	3	5310008775797	8	30
5310000453299	16	14	5310008775797	9	13
5310000453299	18	4	5310008775797	10	22
5310000454007	5	14	5310009349738	12	12
5310000454007	11	2	5310009349739	15	3
5310000454007	16	52	5310009349747	10	5
5310000454007	17	6	5310009349751	13	9
5310000544892	18	11	5310009349751	15	35
5310000806004	16	109	5310009349757	14	2
5310000814219	7	23	5310009501310	15	12
5310000821404	11	3	5310009585321	2	45
5310000881251	12	4	5310009585321	10	24

CROSS-REFERENCE INDEXES
NATIONAL STOCK NUMBER INDEX

STOCK NUMBER	FIG.	ITEM	STOCK NUMBER	FIG.	ITEM
5310009585321	10	30	5325001850004	16	11
5310009597600	7	26	5325002764931	1	12
5310009801310	12	7	5325002764946	1	11
5310009824908	16	108	5325002764953	1	10
5310009826580	3	6	5325008549379	16	62
5310009826580	4	6	5325010054098	16	61
5310009931548	11	24	5325010284864	8	4
5310009971888	16	24	5325010333443	11	20
5310010364687	16	16	5325011960272	8	11
5310010422791	10	10	5325011997889	8	10
5310010558419	8	20	5325013738776	11	22
5310010558419	16	50	5330000637889	15	11
5310011469773	8	42	5340002915323	15	36
5310011753692	5	11	5340002915323	16	73
5310012053455	10	2	5340005316857	16	5
5310013237090	8	27	5340005588826	3	16
5310013387338	18	12	5340005588826	4	16
5310013957648	16	112	5340005846556	15	22
5315008151405	3	1	5340005980146	16	4
5315008151405	4	1	5340007225878	16	131
5315008794829	10	26	5340009268544	9	3
5315009655879	8	48	5340010425759	19	5
5315013887450	10	28	5340012581273	16.	133
5320001176826	2	29	5340012664447	5	4
5320001176826	7	15	5340013296169	1	14
5320001176828	7	31	5365010446408	19	3
5320001176828	8	18	5365011107314	18	13
5320001176828	8	25	5640001987255	BULK	12
5320001176828	16	27	5640002374818	16	135
5320001176949	7	17	5910013880088	11	19
5320001176951	7	32	5925012405207	11	4
5320002438356	3	4	5930000930805	12	10
5320002438356	4	4	5930001908729	16	53
5320007540822	2	21	5930001908730	16	54
5320008744477	7	13	5930003576090	5	15
5320008744477	7	36	5930008787588	15	79
5320008744477	8	16	5935003979128	15	25
5320008744477	8	23	5935008473568	17	7
5320008828385	2	5	5935009788981	15	13
5325001716387	16	90	5935010531955	15	78
5325001749312	16	63	5935010947407	12	23

CROSS-REFERENCE INDEXES
NATIONAL STOCK NUMBER INDEX

STOCK NUMBER	FIG.	ITEM	STOCK NUMBER	FIG.	ITEM
5935011758417	15	2	5961009576865	5	23
5935013897905	15	103	5961009576865	13	8
5935014070331	15	15	5970000033311	5	8
5940001139828	15	30	5970000823948	BULK	15
5940001141305	15	68	5970001113208	15	93
5940001141305	15	102	5970001113208	15	97
5940001434771	15	53	5970008121360	BULK	16
5940001434774	15	51	5970013900991	BULK	13
5940001434774	15	52	5970013900996	BULK	17
5940001434774	15	67	5970013900997	BULK	14
5940001434774	15	109	5975001113208	9	14
5940001434774	15	116	5975001113208	12	22
5940001434774	15	143	5975001113208	15	38
5940001434774	15	154	5975001113208	15	45
5940001434780	15	42	5975001113208	15	59
5940001434780	15	63	5975001113208	15	75
5940001434780	15	90	5975001113208	15	86
5940001434780	15	110	5975007275153	16	74
5940001434780	15	129	5980013897084	12	14
5940001434780	15	133	5999010398438	15	41
5940001434780	15	139	5999010398438	15	47
5940001434794	15	80	5999010398438	15	62
5940001434794	15	94	5999010398438	15	77
5940001434794	15	98	5999010398438	15	89
5940001434794	15	119	6110013569854	11	12
5940001434794	15	122	6145000039527	BULK	23
5940001434794	15	125	6145001949840	BULK	1
5940001435284	15	66	6145001949840	BULK	2
5940001435284	15	101	6145001949840	BULK	3
5940002300515	15	81	6145002840657	BULK	27
5940002300515	15	113	6145005786072	BULK	24
5940002300515	15	140	6145005787518	BULK	25
5940002300515	15	144	6145005787519	BULK	26
5940002300515	15	151	6695013929859	12	1
5940009260085	15	136	8305010034461	1	6
5940010102898	5	21	9320000347442	BULK	6
5940010102898	13	6	9320000347442	BULK	7
5940010102898	15	50	9320000347442	BULK	8
5945005496348	5	19	9320000347442	BULK	9
5945008262218	13	4	9905001836658	2	28
5950013857856	11	14	9905001836659	2	27

CROSS-REFERENCE INDEXES
NATIONAL STOCK NUMBER INDEX

STOCK NUMBER	FIG.	ITEM	STOCK NUMBER	FIG.	ITEM
9905013480499	2	30			
9905013480500	2	26			
9905013480501	2	25			

CROSS-REFERENCE INDEXES

PART NUMBER INDEX

CAGEC	PART NUMBER	STOCK NUMBER	FIG.	ITEM
81346	AMS3570, 2.5LB/CU.FT		BULK	4
81346	AMS3570, 2.5LB/CU.FT		BULK	5
81346	AMS3570, 2.5LB/CU.FT		BULK	28
81346	AMS3570, 2.5LB/CU.FT		BULK	29
81346	AMS3570, 2LB/CU.FT		BULK	10
81346	AMS3570, 2LB/CU.FT		BULK	11
81352	AN960-10L		10	27
81346	ASTM-B280, .250 OD	4710001694787	BULK	18
81346	ASTM-B280, .375 OD	4710001694787	BULK	19
81346	ASTM-B280, .500 OD	4710001694787	BULK	20
81346	ASTM-B280, .875 OD	4710001694787	BULK	21
80204	B1821BH025F100N		7	25
81349	M23053/5-103-9	5970013900991	BULK	13
81349	M23053/5-104-9	5970013900996	BULK	17
81349	M23053/5-107-9	5970013900997	BULK	14
81349	M23053/5-108-9	5970000823948	BULK	15
81349	M23053/5-109-9	5970008121360	BULK	16
81349	M24308/2-2		15	24
81349	M24308/21-2	5935003979128	15	25
81349	M24308/21-2		15	27
81349	M24308/4-2		15	26
81349	M24308/4-303	5935010947407	12	23
81349	M39014/5-2661		11	18
81349	M45938/1-5	5310000276138	12	17
81349	M5086/1-10-9	6145000039527	BULK	23
81349	M5086/1-16-9	6145005786072	BULK	24
81349	M5086/1-18-9	6145005787518	BULK	25
81349	M5086/1-20-9	6145005787519	BULK	26
81349	M5086/2-8-9	6145002840657	BULK	27
81349	M55629/5-425	5925012405207	11	4
81349	MIL-I-14511, .25THK	5640001987255	BULK	12
81349	MIL-P-15280, FORM S		BULK	30
81349	MIL-P-15280, FORM T	5640002374818	16	135
81349	MIL-R-6130, TYII, GRA	9320000347442	BULK	6
81349	MIL-R-6130, TYII, GRA	9320000347442	BULK	7
81349	MIL-R-6130, TYII, GRA	9320000347442	BULK	8
81349	MIL-R-6130, TYII, GRA	9320000347442	BULK	9
81349	MIL-S-23190/3-1		16	136
81349	MIL-T-47014, 2INCH WI		16	137
81349	MIL-W-27265	8305010034461	1	6

CROSS-REFERENCE INDEXES

PART NUMBER INDEX

CAGEC	PART NUMBER	STOCK NUMBER	FIG.	ITEM
96906	MS16998-78	5305009837452	16	110
96906	MS17188-1	5310004041433	3	2
96906	MS17188-1	5310004041433	4	2
96906	MS18065-14	5305010054394	7	18
96906	MS18065-14	5305010054394	8	36
96906	MS20426AD4-4	5320001176949	7	17
96906	MS20426AD4-6	5320001176951	7	32
96906	MS20470AD2-4	5320002438356	3	4
96906	MS20470AD2-4	5320002438356	4	4
96906	MS20470AD4-4	5320001176826	2	29
96906	MS20470AD4-4	5320001176826	7	15
96906	MS20470AD4-5	5320007540822	2	21
96906	MS20470AD4-6	5320001176828	7	31
96906	MS20470AD4-6	5320001176828	8	18
96906	MS20470AD4-6	5320001176828	8	25
96906	MS20470AD4-6	5320001176828	16	27
96906	MS21044N3	5310008775797	2	12
96906	MS21044N3	5310008775797	7	3
96906	MS21044N3	5310008775797	8	30
96906	MS21044N3	5310008775797	9	13
96906	MS21044N3	5310008775797	10	22
96906	MS21045-6	5310009824908	16	108
96906	MS21209C0620	5340005588826	3	16
96906	MS21209C0620	5340005588826	4	16
96906	MS21919WDG10	5340005846556	15	22
96906	MS21919WDG4	5340002915323	15	36
96906	MS21919WDG4	5340002915323	16	73
96906	MS21919WDG40	5340005316857	16	5
96906	MS21919WDG6	5340005980146	16	4
96906	MS21919WDG8	5340007225878	16	131
96906	MS24192-D1	5945005496348	5	19
96906	MS24193-D1	5945008262218	13	4
96906	MS24665-151	5315008151405	3	1
96906	MS24665-151	5315008151405	4	1
96906	MS24693-S25	5305000516521	10	4
96906	MS24693-S26	5305009577817	3	9
96906	MS24693-S26	5305009577817	4	9
96906	MS24693-S273	5305009577086	16	48
96906	MS24693-S274	5305000633507	2	32
96906	MS24693-S275	5315009655879	8	48
96906	MS24693-S29	5305008087832	10	7

CROSS-REFERENCE INDEXES

PART NUMBER INDEX

CAGEC	PART NUMBER	STOCK NUMBER	FIG.	ITEM
96906	MS24693-S50	5305000633503	14	21
96906	MS24693-S50	5305000633503	18	1
96906	MS24693-S51	5305009586373	1	13
96906	MS24693-S54	5305009577821	14	7
96906	MS24693-S56	5305009896640	14	8
96906	MS24693-S60	5305000512355	14	1
96906	MS25036-103	5940001434771	15	53
96906	MS25036-108	5940001434780	15	42
96906	MS25036-108	5940001434780	15	63
96906	MS25036-108	5940001434780	15	90
96906	MS25036-108	5940001434780	15	110
96906	MS25036-108	5940001434780	15	129
96906	MS25036-108	5940001434780	15	133
96906	MS25036-108	5940001434780	15	139
96906	MS25036-112	5940001434794	15	80
96906	MS25036-112	5940001434794	15	94
96906	MS25036-112	5940001434794	15	98
96906	MS25036-112	5940001434794	15	119
96906	MS25036-112	5940001434794	15	122
96906	MS25036-112	5940001434794	15	125
96906	MS25036-115	5940001435284	15	66
96906	MS25036-115	5940001435284	15	101
96906	MS25036-116	5940001141305	15	68
96906	MS25036-116	5940001141305	15	102
96906	MS25036-148	5940001139828	15	30
96906	MS25036-149	5940010102898	5	21
96906	MS25036-149	5940010102898	13	6
96906	MS25036-149	5940010102898	15	50
96906	MS25036-153	5940001434774	15	52
96906	MS25036-153	5940001434774	15	67
96906	MS25036-153	5940001434774	15	109
96906	MS25036-153	5940001434774	15	116
96906	MS25036-153	5940001434774	15	143
96906	MS25036-153	5940001434774	15	154
96906	MS25036-154	5940002300515	15	81
96906	MS25036-154	5940002300515	15	113
96906	MS25036-154	5940002300515	15	140
96906	MS25036-154	5940002300515	15	144
96906	MS25036-154	5940002300515	15	151
96906	MS25043-24DA	5935011758417	15	2
96906	MS27130-S133K	5310009931548	11	24

CROSS-REFERENCE INDEXES

PART NUMBER INDEX

CAGEC	PART NUMBER	STOCK NUMBER	FIG.	ITEM
96906	MS27130-S13K	5310013237090	8	27
96906	MS27130-S15K	5310010364687	16	16
96906	MS27130-S25K	5310010558419	8	20
96906	MS27130-S25K	5310010558419	16	50
96906	MS27130-S26K	5310009585321	2	45
96906	MS27130-S26K	5310009585321	10	24
96906	MS27130-S26K	5310009585321	10	30
96906	MS27130-S7K	5310010422791	10	10
96906	MS27130-S94K	5310011469773	8	42
96906	MS27130-S9K	5310011753692	5	11
96906	MS27183-1	5310009826580	3	6
96906	MS27183-1	5310009826580	4	6
96906	MS27183-10	5310008094058	7	27
96906	MS27183-10	5310008094058	12	3
96906	MS27183-12	5310000814219	7	23
96906	MS27183-14	5310000806004	16	109
96906	MS27183-2		12	19
96906	MS27183-4	5310009801310	12	7
96906	MS27183-4	5310009501310	15	12
96906	MS27183-41	5130007653197	5	18
96906	MS27183-41	5310007653197	7	9
96906	MS27183-41	5310007653197	11	7
96906	MS27183-41	5310007653197	13	3
96906	MS27183-41	5310007653197	14	4
96906	MS27183-41	5310007653197	16	46
96906	MS27183-42	5310000145850	1	3
96906	MS27183-42	5310000145850	5	3
96906	MS27183-42	5310000145850	7	2
96906	MS27183-42	5310000145850	8	31
96906	MS27183-42	5310000145850	10	15
96906	MS27183-42	5310000145850	13	11
96906	MS27183-42	5310000145850	15	21
96906	MS27183-42	5310000145850	16	130
96906	MS27183-43	5310007278353	11	16
96906	MS27183-6	5310000821404	11	3
96906	MS27183-7	5310008098544	8	9
96906	MS27183-7	5310008098544	16	93
96906	MS27183-7	5310008098544	18	5
96906	MS27183-9	5310005825965	11	11
96906	MS27980-18N	5325002764931	1	12
96906	MS27980-1N	5325002764953	1	10

CROSS-REFERENCE INDEXES

PART NUMBER INDEX

CAGEC	PART NUMBER	STOCK NUMBER	FIG.	ITEM
96906	MS27980-6N	5325002764946	1	11
96906	MS3102R24-11P	5935008473568	17	7
96906	MS3105-24	5935009788981	15	13
96906	MS3106R24-11S	5930008787588	15	79
96906	MS3367-4-9	5975007275153	16	74
96906	MS3367-5-9	5975001113208	9	14
96906	MS3367-5-9	5975001113208	12	22
96906	MS3367-5-9	5975001113208	15	38
96906	MS3367-5-9	5975001113208	15	45
96906	MS3367-5-9	5975001113208	15	59
96906	MS3367-5-9	5975001113208	15	75
96906	MS3367-5-9	5975001113208	15	86
96906	MS3367-5-9	5970001113208	15	93
96906	MS3367-5-9	5970001113208	15	97
96906	MS35206-204	5305010192391	12	18
96906	MS35206-208	5305009886381	12	2
96906	MS35206-215	5305008892997	12	5
96906	MS35206-217	5305008892999	15	5
96906	MS35206-218	5305009836730	15	1
96906	MS35206-226	5305009844983	16	51
96906	MS35206-228	5305009844988	11	1
96906	MS35206-230	5305008893000	17	4
96906	MS35206-234	5305009846221	11	15
96906	MS35206-238	5305009846225	5	13
96906	MS35206-244	5305009846192	7	8
96906	MS35206-244	5305009846192	16	92
96906	MS35206-245	5305009846193	5	16
96906	MS35206-245	5305009846193	10	8
96906	MS35206-245	5305009846193	11	13
96906	MS35206-246	5305009846194	2	1
96906	MS35206-246	5305339846194	9	4
96906	MS35206-246	5305009846194	11	21
96906	MS35206-246	5305009846194	16	45
96906	MS35206-246	5305009846194	16	114
96906	MS35206-246	5305009846194	18	3
96906	MS35206-247	5305009846195	8	34
96906	MS35206-247	5305009846195	9	1
96906	MS35206-247	5305009846195	11	5
96906	MS35206-248	5305009846196	8	8
96906	MS35206-250	5305009846198	16	134
96906	MS35206-251	5305009846199	14	12

CROSS-REFERENCE INDEXES

PART NUMBER INDEX

CAGEC	PART NUMBER	STOCK NUMBER	FIG.	ITEM
96906	MS35206-254	5305009846202	16	13
96906	MS35206-264	5305009846211	16	129
96906	MS35206-268	5305009846215	16	128
96906	MS35206-279	5305009881723	11	9
96906	MS35206-281	5305009881725	11	30
96906	MS35206-348	5305010192391	13	1
96906	MS35206-348	5305010192391	14	15
96906	MS35207-261	5305009906444	17	1
96906	MS35207-262	5305009896265	5	7
96906	MS35207-264	5305009897435	2	13
96906	MS35207-264	5305009897435	5	6
96906	MS35207-264	5305009897435	7	1
96906	MS35207-264	5305009897435	9	12
96906	MS35207-264	5305009897435	15	33
96906	MS35207-265	5305009931848	2	49
96906	MS35207-265	5305009931848	5	1
96906	MS35207-265	5305009931848	7	4
96906	MS35207-265	5305009931848	8	29
96906	MS35207-265	5305009931848	8	44
96906	MS35207-265	5305009931848	10	13
96906	MS35207-265	5305009931848	15	19
96906	MS35207-265	5305009931848	16	40
96906	MS35207-266	5305009953444	1	1
96906	MS35207-266	5305009953444	2	18
96906	MS35207-266	5305009953444	8	45
96906	MS35207-266	5305009953444	16	1
96906	MS35207-267	5305009931851	5	9
96906	MS35207-270	5305009953440	16	72
96906	MS35338-39	5310005435060	12	20
96906	MS35338-40	5310005432410	12	6
96906	MS35338-40	5310005432410	15	4
96906	MS35338-41	5310000454007	5	14
96906	MS35338-41	5310000454007	11	2
96906	MS35338-41	5310000454007	16	52
96906	MS35338-41	5310000454007	17	6
96906	MS35338-42	5310000453299	2	2
96906	MS35338-42	5310000453299	5	17
96906	MS35338-42	5310000453299	9	5
96906	MS35338-42	5310000453299	10	6
96906	MS35338-42	5310000453299	11	6
96906	MS35338-42	5310000453299	13	2

CROSS-REFERENCE INDEXES

PART NUMBER INDEX

CAGEC	PART NUMBER	STOCK NUMBER	FIG.	ITEM
96906	MS35338-42	5310000453299	14	3
96906	MS35338-42	5310000453299	16	14
96906	MS35338-42	5310000453299	18	4
96906	MS35338-43	5310000453296	1	2
96906	MS35338-43	5310000453296	2	19
96906	MS35338-43	5130000453296	2	50
96906	MS35338-43	5310000453296	5	2
96906	MS35338-43	5310000453296	7	5
96906	MS35338-43	5310000453296	8	40
96906	MS35338-43	5310000453296	10	14
96906	MS35338-43	5310000453296	13	10
96906	MS35338-43	5310000453296	15	20
96906	MS35338-43	5310000453296	15	34
96906	MS35338-43	5310000453296	16	2
96906	MS35338-43	5310000453296	17	2
96906	MS35338-44	5310005825965	11	10
96906	MS35338-44	5310005825965	16	25
96906	MS35338-45	5310013387338	18	12
96906	MS35338-46	5310007225658	16	97
96906	MS35489-101	5325010284864	8	4
96906	MS35489-122	5325008549379	16	62
96906	MS35489-156	5325013738776	11	22
96906	MS35489-33	5325011960272	8	11
96906	MS35489-36	5325001749312	16	63
96906	MS35489-4	5325011997889	8	10
96906	MS35489-40	5325001850004	16	11
96906	MS35489-430		5	24
96906	MS35489-51	5325001716387	16	90
96906	MS35489-54S	5325010333443	11	20
96906	MS35649-222	5310009349738	12	12
96906	MS35649-2252	5310009971888	16	24
96906	MS35649-242	5310009349739	15	3
96906	MS35649-262	5310009349747	10	5
96906	MS35649-282	5310009349757	14	2
96906	MS35649-62	5310000134530	17	5
96906	MS35650-302	5310009349751	13	9
96906	MS35650-302	5310009349751	15	35
96906	MS35650-3312	5310000544892	18	11
96906	MS35842-10	4730009083195	6	1
96906	MS35842-11	4730009083194	6	13
96906	MS35872-2	4730001892737	16	30

CROSS-REFERENCE INDEXES

PART NUMBER INDEX

CAGEC	PART NUMBER	STOCK NUMBER	FIG.	ITEM
96906	MS35872-4	4730001892741	16	7
96906	MS35917-3	4730008370685	16	82
96906	MS35917-4U	4730002546462	16	35
96906	MS35917-7	4730002546447	16	86
96906	MS35919-22	4730010374919	16	69
96906	MS35922-43	4730004691984	16	9
96906	MS35928-3	4730009407940	16	2
96906	MS35928-7	4730013286117	16	102
96906	MS35929-2	4730002572163	16	66
96906	MS51007-9	5330000637889	15	11
96906	MS51021-22	5305005767266	10	1
96906	MS51922-1	5310000881251	12	4
96906	MS51922-5	5310009597600	7	26
96906	MS51967-8	5310007320558	16	96
96906	MS90726-31	5306002259086	7	22
96906	MS90726-32	5306002259087	18	10
96906	MS90726-35	5306002259090	8	1
96906	MS90726-65	5305002693241	19	1
96906	MS91520-0U2B		12	9
96906	MS91520-2U2B		12	8
96906	MS9245-23	5315008794829	10	26
88044	NAS1329H3K130L		16	126
88044	NAS1330H03K166L		8	47
88044	NAS1330H08K106L		9	7
88044	NAS1330H08K161L		8	33
88044	NAS1330H08K161L		16	125
88044	NAS1330H3K166		16	100
88044	NAS77-A7-25		10	11
81349	NL422B03-008	5970000033311	5	8
81349	QQB575R30T0375	6145001949840	BULK	1
81349	QQB575R30T0562	6145001949840	BULK	2
81349	QQB575R32T0781	6145001949840	BULK	3
67302	SK786-100		17	3
41947	W2817	4730008133192	16	19
67302	WIR-CT1		17	10
67302	WIR-RT3		17	9
67302	WIR-ST2		17	8
81348	WW-P-471, TY III, STY A	4730000140561	6	15
81349	ZZ-T-831, TYVI, CL6	4720008493205	BULK	22
14569	018-0031-01		17	16
82415	053CCA1255A		17	14

CROSS-REFERENCE INDEXES

PART NUMBER INDEX

CAGEC	PART NUMBER	STOCK NUMBER	FIG.	ITEM
67302	0601-001		16	116
97403	13211E3799-1	4730008221274	16	79
97403	13211E3799-2		16	107
97403	13211E3799-3	4730008221275	16	20
97403	13211E4043	4730005964062	16	118
97403	13211E4043-12	4730008219184	16	32
97403	13211E4043-16	4730008155672	16	120
97403	13211E4043-19		16	80
97403	13211E4043-43	4730005964062	16	84
97403	13211E4043-51	4730000579118	16	104
97403	13211E6897		14	19
97403	13211E8165-3	5310013957648	16	112
97403	13211E8369	4820000738405	16	38
97403	13214E3411-3	4730001438933	16	37
97403	13214E3789-11	5320008828385	2	5
97403	13214E3791-2	5320008744477	7	13
97403	13214E3791-2	5320008744477	7	36
97403	13214E3791-2	5320008744477	8	16
97403	13214E3791-2	5320008744477	8	23
97403	13214E4209	4130335741916	16	6
97403	13216E4538-2	5310001380104	7	14
97403	13216E4538-2	5310001380104	8	17
97403	13216E4538-2	5310001380104	8	24
97403	13216E6080-5		2	4
97403	13216E6080-5/2		2	6
97403	13216E6080-5/3		2	7
97403	13216E6080-5/5		2	8
97403	13216E6080-5/6		2	9
97403	13216E6088-3	4130004792750	2	17
97403	13216E6103-1	3110010286817	3	17
97403	13216E6103-1	3110010286817	4	17
97403	13216E6103-2	3110010286816	3	18
97403	13216E6103-2	3110010286816	4	18
97403	13216E6107	5340009268544	9	3
97403	13216E6109	5325010054098	16	61
97403	13216E6112		3	7
97403	13216E6112		4	7
97403	13216E6137	5340010425759	19	5
97403	13216E6138-2	5310005669504	19	2
97403	13216E6152	5365010446408	19	3
97403	13216E6153	4720010382334	19	4

CROSS-REFERENCE INDEXES

PART NUMBER INDEX

CAGEC	PART NUMBER	STOCK NUMBER	FIG.	ITEM
97403	13216E6155-2		16	18
97403	13216E6156		16	15
97403	13216E6156/1		16	17
97403	13216E6159-1		14	14
97403	13216E6159-00		16	132
97403	13216E6159-11	5340012581273	16	133
97403	13216E6159-5		16	3
97403	13216E6159-6		14	5
97403	13216E6159-7		5	25
97403	13216E6159-7		16	75
97403	13216E6160-3	4820009362201	16	76
97403	13216E6167-1		16	122
97403	13216E6167-13		16	106
97403	13216E6179	9905001836658	2	28
97403	13216E6180	9905001836659	2	27
97403	13216E6191-2		15	82
97403	13216E6191-2		15	128
97403	13216E6191-2		15	132
97403	13216E6191-2	5940009260085	15	136
97403	13216E6215-1	5930001908730	16	54
97403	13216E6215-3	5930001908729	16	53
97403	13216E6224	5930003576090	5	15
97403	13216E6282		2	39
97403	13216E6282/1		2	40
97403	13216E6282/3		2	41
97403	13216E6282/4		2	42
97403	13216E6282/5		2	43
97403	13216E6283	4130004792740	16	88
97403	13216E6292-3		2	11
97403	13216E6314		2	33
97403	13216E6314/1		2	34
97403	13216E6314/2		2	35
97403	13216E6314/3		2	36
97403	13216E6314/4		2	37
97403	13216E6314/5		2	38
97403	13216E6316		2	16
97403	13216E6318		2	3
97403	13216E6319		10	32
97403	13216E6321		10	23
97403	13216E6322		13	29
97403	13216E6322/1		10	31

CROSS-REFERENCE INDEXES

PART NUMBER INDEX

CAGEC	PART NUMBER	STOCK NUMBER	FIG.	ITEM
97403	13216E6323		10	16
97403	13216E6323/1		10	21
97403	13216E6323/2		10	17
97403	13216E6323/3		10	18
97403	13216E6323/4		10	19
97403	13216E6323/5		10	20
97403	13216E6324-1	5315013887450	10	28
97403	13216E6325-1		10	9
97403	13216E6325-1/1		10	12
97403	13216E6326	5310012053455	10	2
97403	13216E6327-1		10	3
97403	13216E6328-1	3040011769613	10	25
97403	13216E6328-2	3040011795791	9	10
97403	13216E6328-3	3040011123003	9	11
97403	13216E6330	3040004792744	16	26
97403	13216E6330/2		16	28
97403	13216E6337	5340013296169	1	14
97403	13216E6337/1		1	15
97403	13216E6337/2		1	16
97403	13216E6337/3		1	17
97403	13216E6343		16	41
97403	13216E6343/1		16	43
97403	13216E6343/2		16	42
97403	13216E6345-1		16	89
97403	13216E6355		16	44
97403	13216E6358		2	31
97403	13216E6360	5365011107314	18	13
97403	13216E6361	4130001156866	1	4
97403	13216E6361/1		1	5
97403	13216E6361/3		1	7
97403	13216E6361/4		1	8
97403	13216E6361/5		1	9
97403	13218E6957	9905013480501	2	25
97403	13218E6958	9905013480500	2	26
97403	13218E7546	4130001491477	16	98
97403	13218E7548	9905013480499	2	30
97403	13219E0897	5961009576865	5	23
97403	13219E0897	5961009576865	13	8
97403	13219E1030		2	53
97403	13219E1031		2	52
97403	13219E1032	4130011239112	2	51

CROSS-REFERENCE INDEXES

PART NUMBER INDEX

CAGEC	PART NUMBER	STOCK NUMBER	FIG.	ITEM
97403	13219E9499-1	4820010156690	16	60
97403	13219E9540	4730010923835	16	55
97403	13219E9540/1		16	58
97403	13219E9540/2		16	57
97403	13219E9540/3		16	56
97403	13219E9540/4		16	59
97403	13220E2356	3040004792744	16	29
97403	13221E9314		16	111
97403	13221E9322-1	5310001620413	7	29
97403	13221E9322-1	5310001620413	8	2
97403	13222E5991		18	8
97403	13222E5992		18	9
97403	13225E9503		16	49
97403	13225E9508		9	9
97403	13225E9509		9	2
97403	13225E9514		2	20
97403	13225E9516		8	15
97403	13225E9516/4		8	21
97403	13225E9516/8		8	19
97403	13225E9517		8	22
97403	13225E9517/2		8	26
97403	13225E9517/9		8	28
97403	13225E9518		3	3
97403	13225E9519		4	3
97403	13225E9520		2	14
97403	13225E9521		2	15
97403	13225E9522		3	19
97403	13225E9522		4	19
97403	13225E9523		3	14
97403	13225E9523		4	14
97403	13225E9523/1		3	15
97403	13225E9523/1		4	15
97403	13225E9524-1		3	13
97403	13225E9524-2		4	13
97403	13225E9525-1		4	10
97403	13225E9525-1/1		4	11
97403	13225E9525-1/2		4	12
97403	13225E9525-2		3	10
97403	13225E9525-2/1		3	11
97403	13225E9525-2/2		3	12
97403	13225E9526-2		8	3

CROSS-REFERENCE INDEXES

PART NUMBER INDEX

CAGEC	PART NUMBER	STOCK NUMBER	FIG.	ITEM
97403	13225E9528		3	5
97403	13225E9528		4	5
97403	13225E9529		3	8
97403	13225E9529		4	8
97403	13225E9540		7	35
97403	13225E9540/1		7	37
97403	13225E9540/2		7	38
97403	13225E9541		7	30
97403	13225E9541/1		7	34
97403	13225E9541/2		7	33
97403	13225E9542		7	6
97403	13225E9543		7	12
97403	13225E9543/6		7	16
97403	13225E9544		8	32
97403	13225E9548		8	46
97403	13225E9549		8	49
97403	13225E9552-3		8	37
97403	13225E9552-4		7	19
97403	13225E9553		8	6
97403	13225E9554		8	7
97403	13225E9555		8	12
97403	13225E9556		16	99
97403	13225E9556/1		16	101
97403	13225E9560		9	6
97403	13225E9560/1		9	8
97403	13226E5917	5340012664447	5	4
97403	13227E8321		11	17
97403	13228E4258-5		5	5
97403	13229E0897		13	5
97403	13229E4176		15	54
97403	13229E4181-1		15	49
97403	13229E4181-1	5935010531955	15	78
97403	13229E4181-2		15	39
97403	13229E4181-2		15	60
97403	13229E4181-2		15	87
97403	13229E4185		12	11
97403	13229E4186	5980013897084	12	14
97403	13229E4187	5930000930805	12	10
97403	13229E4190	6695013929859	12	1
97403	13229E4190/16		12	13
97403	13229E4191		12	16

CROSS-REFERENCE INDEXES

PART NUMBER INDEX

CAGEC	PART NUMBER	STOCK NUMBER	FIG.	ITEM
97403	13229E4192		12	15
97403	13229E4207-2		15	23
97403	13229E420715		15	29
97403	13229E4207/6		15	31
97403	13229E4209		14	16
97403	13229E4213		14	22
97403	13229E4214	5950013857856	11	14
97403	13229E4215	4810013874612	16	94
97403	13229E4217		14	13
97403	13229E4231-1		14	11
97403	13229E4237-2		15	28
97403	13229E4264	5910013880088	11	19
97403	13229E4272		15	40
97403	13229E4272		15	46
97403	13229E4272		15	61
97403	13229E4272		15	76
97403	13229E4272		15	88
97403	13229E4273	5999010398438	15	41
97403	13229E4273	5999010398438	15	47
97403	13229E4273	5999010398438	15	62
97403	13229E4273	5999010398438	15	77
97403	13229E4273	5999010398438	15	89
97403	13229E4274		12	21
97403	13229E4274/2		12	24
97403	13229E4276		8	5
97403	13229E4286		15	32
97403	13229E4287		5	20
97403	13229E4287/3		5	22
97403	13229E4287/3		13	7
97403	13229E5333		18	2
97403	13229E5334		6	8
97403	13229E5335-6	4730013965037	6	14
97403	13229E5336-11		6	3
97403	13229E5336-11		6	9
97403	13229E5337		8	41
97403	13229E5337/1		8	43
97403	13229E5338-1		8	13
97403	13229E5338-2		8	14
97403	13229E5339		16	124
97403	13229E5339/1		16	127
97403	13229E5340		16	115

SECTION IV

CROSS-REFERENCE INDEXES
PART NUMBER INDEX

CAGEC	PART NUMBER	STOCK NUMBER	FIG.	ITEM
97403	13229E5341		16	113
97403	13229E6191-1	5940001434774	15	51
97403	13229E6660-2		11	8
97403	13229E6666		18	7
97403	13229E6667		18	6
97403	13229E6668		5	10
97403	13229E6668/1		5	12
97403	13229E6669		13	12
97403	13229E6671		7	24
97403	13229E6672		15	96
97403	13229E6672/1		15	99
97403	13229E6673		15	44
97403	13229E6673/11		15	56
97403	13229E6673/12		15	57
97403	13229E6673/7		15	55
97403	13229E6674		15	92
97403	13229E6674/1		15	95
97403	13229E6675		15	74
97403	13229E6675/8		15	83
97403	13229E6675/9		15	84
97403	13229E6676		15	37
97403	13229E6676/4		15	43
97403	13229E6677		15	85
97403	13229E6677/4		15	91
97403	13229E6678		15	58
97403	13229E6678/4		15	64
97403	13229E6679-1		15	108
97403	13229E6679-1/4		15	111
97403	13229E6679-10		15	112
97403	13229E6679-10/4		15	114
97403	13229E6679-11		15	153
97403	13229E6679-11/4		15	155
97403	13229E6679-12		15	115
97403	13229E6679-12/4		15	117
97403	13229E6679-13		15	118
97403	13229E6679-13/6		15	120
97403	13229E6679-14		15	121
97403	13229E6679-1416		15	123
97403	13229E6679-15		15	124
97403	13229E6679-15/6		15	126
97403	13229E6679-2		15	127
97403	13229E6679-2/4		15	130

CROSS-REFERENCE INDEXES

PART NUMBER INDEX

CAGEC	PARTNUMBER	STOCKNUMBER	FIG.	ITEM
97403	13229E6679-3		15	131
97403	13229E6679-3/4		15	134
97403	13229E6679-4		15	135
97403	13229E6679-4/4		15	137
97403	13229E6679-5		15	138
97403	13229E6679-5/4		15	141
97403	13229E6679-6		15	142
97403	13229E6679-6/4		15	145
97403	13229E6679-7		15	146
97403	13229E6679-7/4		15	147
97403	13229E6679-8		15	148
97403	13229E6679-8/4		15	149
97403	13229E6679-9		15	150
97403	13229E6679-9/4		15	152
97403	13229E6683		15	48
97403	13229E6693		11	23
97403	13229E6693/1		11	29
97403	13229E6693/4		11	26
97403	13229E6693/5		11	25
97403	13229E6693/6		11	27
97403	13229E6693/7		11	28
97403	13229E6695		2	44
97403	13229E6695/1		2	48
97403	13229E6695/3		2	46
97403	13229E6695/4		2	47
97403	13229E6696		2	10
97403	13229E6697		2	23
97403	13229E6699		2	22
97403	13229E6700/140		16	95
97403	13229E6700/141		16	91
97403	13229E6700/144		16	103
97403	13229E6700/145		16	119
97403	13229E6700/146		16	117
97403	13229E6700/149		16	123
97403	13229E6700/151		16	21
97403	13229E6700/152		16	70
97403	13229E6700/153		16	71
97403	13229E6700/158		16	12
97403	13229E6700/159		16	64
97403	13229E6700/160		16	65
97403	13229E6700/165		16	78

CROSS-REFERENCE INDEXES

PART NUMBER INDEX

CAGEC	PARTNUMBER	STOCKNUMBER	FIG.	ITEM
97403	13229E6700/167		16	87
97403	13229E6700/171		16	85
97403	13229E6700/183		16	'83
97403	13229E6700/184		16	81
97403	13229E6700/189		16	77
97403	13229E6700/195		16	31
97403	13229E6700/196		16	33
97403	13229E6700/198		16	36
97403	13229E6700/200		16	34
97403	13229E6700/202		16	67
97403	13229E6700/206		16	39
97403	13229E6700/207		16	68
97403	13229E6700/215		16	8
97403	13229E6700/216		16	10
97403	13229E6700/224		16	105
97403	13229E6700/228		16	121
97403	13229E6700/273		6	2
97403	13229E6700/275		6	4
97403	13229E6700/276		6	5
97403	13229E6700/277		6	6
97403	13229E6700/278		6	7
97403	13229E6700/280		6	11
97403	13229E6700/282		6	12
97403	13229E6700/292		6	14
97403	13229E6701		18	14
97403	13229E6701/74		18	15
97403	13229E6701/77		18	16
97403	13229E6701/78		18	17
97403	13229E6701/79		18	18
97403	13229E6701/80		18	19
97403	13229E6701/81		18	20
97403	13229E6701/82		18	21
97403	13229E6701/83		18	22
97403	13229E6701/84		18	23
97403	13229E6701/85		18	24
97403	13229E6701/86		18	25
97403	13229E6702		14	9
97403	13229E6703		15	65
97403	13229E6703/1		15	71
97403	13229E6703/10		15	73
97403	13229E6703/2		15	69

CROSS-REFERENCE INDEXES

PART NUMBER INDEX

CAGEC	PARTNUMBER	STOCKNUMBER	FIG.	ITEM
97403	13229E6703/6		15	72
97403	13229E6703/7		15	70
97403	13229E6704		15	100
97403	13229E6704/2		15	107
97403	13229E6704/3		15	104
97403	13229E6704/8		15	105
97403	13229E6704/9		15	106
97403	13229E6705		14	6
97403	13229E6706		15	6
97403	13229E6706/2		15	10
97403	13229E6706/3		15	9
97403	13229E6707		15	14
97403	13229E6707/2		15	18
97403	13229E6707/3		15	17
97403	13229E6708-4		16	23
97403	13229E6711		14	18
97403	13229E6713-1		14	10
97403	13229E6713-2		14	17
97403	13229E6713-3		14	20
97403	13229E6715		16	47
97403	13229E6716-1		15	7
97403	13229E6716-1	5935014070331	15	15
97403	13229E6718-1	5935013897905	15	103
97403	13229E6718-2		15	8
97403	13229E6718-2		15	16
97403	13229E6718-2		19	6
97403	13229E7867		7	7
97403	13230E5863		7	28
97403	13230E5864		2	54
97403	13230E6354		7	20
97403	13230E6355		7	21
97403	13230E6356		8	38
97403	13230E6357		8	39
97403	13230E6358		8	35
97403	13230E6359		7	11
97403	13230E6360		7	10
DELETED				
67302	14050	61100013569854	11	12
67302	1801-002		2	24
67302	3001-010		17	17
67302	786-CRK3/11		17	15

CROSS-REFERENCE INDEXES

PART NUMBER INDEX

CAGEC	PART NUMBER	STOCK NUMBER	FIG.	ITEM
67302	786221		17	11
67302	786222		17	12
67302	786223		17	13

CROSS-REFERENCE INDEXES

FIGURE AND ITEM NUMBER INDEX

FIG.	ITEM	STOCK NUMBER	CAGEC	PART NUMBER
1	1	5305009953444	96906	MS35207-266
1	2	5310000453296	96906	MS35338-43
1	3	5310000145850	96906	MS27183-42
1	4	4130001156866	97403	13216E6361
1	5		97403	13216E6361/1
1	6	8305010034461	81349	MIL-W-27265
1	7		97403	13216E6361/3
1	8		97403	13216E6361/4
1	9		97403	13216E6361/5
1	10	5325002764953	96906	MS27980-1N
1	11	5325002764946	96906	MS27980-6N
1	12	5325002764931	96906	MS27980-18N
1	13	5305009586373	96906	MS24693-S51
1	14	5340013296169	97403	13216E6337
1	15		97403	13216E6337/1
1	16		97403	13216E6337/2
1	17		97403	13216E6337/3
2	1	5305009846194	96906	MS35206-246
2	2	5310000453299	96906	MS35338-42
2	3		97403	13216E6318
2	4		97403	13216E6080-5
2	5	5320008828385	97403	13214E3789-11
2	6		97403	13216E6080-5/2
2	7		97403	13216E6080-5/3
2	8		97403	13216E6080-5/5
2	9		97403	13216E6080-5/6
2	10		97403	13229E6696
2	11		97403	13216E6292-3
2	12	5310008775797	96906	MS21044N3
2	13	5305009897435	96906	MS35207-264
2	14		97403	13225E9520
2	15		97403	13225E9521
2	16		97403	13216E6316
2	17	4130004792750	97403	13216E6088-3
2	18	5305009953444	96906	MS35207-266
2	19	5310000453296	96906	MS35338-43
2	20		97403	13225E9514
2	21	5320007540822	96906	MS20470AD4-5
2	22		97403	13229E6699
2	23		97403	13229E6697
2	24		67302	1801-002

CROSS-REFERENCE INDEXES

FIGURE AND ITEM NUMBER INDEX

FIG.	ITEM	STOCK NUMBER	CAGEC	PART NUMBER
2	25	9905013480501	97403	13218E6957
2	26	9905013480500	97403	13218E6958
2	27	9905001836659	97403	13216E6180
2	28	9905001836658	97403	13216E6179
2	29	5320001176826	96906	MS20470AD4-4
2	30	9905013480499	97403	13218E7548
2	31		97403	13216E6358
2	32	5305000633507	96906	MS24693-S274
2	33		97403	13216E6314
2	34		97403	13216E6314/1
2	35		97403	13216E6314/2
2	36		97403	13216E6314/3
2	37		97403	13216E6314/4
2	38		97403	13216E6314/5
2	39		97403	13216E6282
2	40		97403	13216E6282/1
2	41		97403	13216E6282/3
2	42		97403	13216E6282/4
2	43		97403	13216E6282/5
2	44		97403	13229E6695
2	45	5310009585321	96906	MS27130-S26K
2	46		97403	13229E6695/3
2	47		97403	13229E6695/4
2	48		97403	13229E6695/1
2	49	5305009931848	96906	MS35207-265
2	50	5130000453296	96906	MS35338-43
2	51	4130011239112	97403	13219E1032
2	52		97403	13219E1031
2	53		97403	13219E1030
2	54		97403	13230E5864
3	1	5315008151405	96906	MS24665-151
3	2	5310004041433	96906	MS17188-1
3	3		97403	13225E9518
3	4	5320002438356	96906	MS20470AD2-4
3	5		97403	13225E9528
3	6	5310009826580	96906	MS27183-1
3	7		97403	13216E6112
3	8		97403	13225E9529
3	9	5305009577817	96906	MS24693-S26
3	10		97403	13225E9525-2
3	11		97403	13225E9525-2/1

CROSS-REFERENCE INDEXES

FIGURE AND ITEM NUMBER INDEX

FIG.	ITEM	STOCK NUMBER	CAGEC	PART NUMBER
3	12		97403	13225E9525-2/2
3	13		97403	13225E9524-1
3	14		97403	13225E9523
3	15		97403	13225E9523/1
3	16	5340005588826	96906	MS21209C0620
3	17	3110010286817	97403	13216E6103-1
3	18	3110010286816	97403	13216E6103-2
3	19		97403	13225E9522
4	1	5315008151405	96906	MS24665-151
4	2	5310004041433	96906	MS17188-1
4	3		97403	13225E9519
4	4	5320002438356	96906	MS20470AD2-4
4	5		97403	13225E9528
4	6	5310009826580	96906	MS27183-1
4	7		97403	13216E6112
4	8		97403	13225E9529
4	9	5305009577817	96906	MS24693-S26
4	10		97403	13225E9525-1
4	11		97403	13225E9525-/1
4	12		97403	13225E9525-1/2
4	13		97403	13225E9524-2
4	14		97403	13225E9523
4	15		97403	13225E9523/1
4	16	5340005588826	96906	MS21209C0620
4	17	3110010286817	97403	13216E6103-1
4	18	3110010286816	97403	13216E6103-2
4	19		97403	13225E9522
5	1	5305009931848	96906	MS35207-265
5	2	5310000453296	96906	MS35338-43
5	3	5310000145850	96906	MS27183-42
5	4	5340012664447	97403	13226E5917
5	5		97403	13228E4258-5
5	6	5305009897435	96906	MS35207-264
5	7	5305009896265	96906	MS35207-262
5	8	5970000033311	81349	NL422B03-008
5	9	5305009931851	96906	MS35207-267
5	10		97403	13229E6668
5	11	5310011753692	96906	MS27130-S9K
5	12		97403	13229E6668/1
5	13	5305009846225	96906	MS35206-238
5	14	5310000454007	96906	MS35338-41

CROSS-REFERENCE INDEXES

FIGURE AND ITEM NUMBER INDEX

FIG.	ITEM	STOCK NUMBER	CAGEC	PART NUMBER
5	15	5930003576090	97403	13216E6224
5	16	5305009846193	96906	MS35206-245
5	17	5310000453299	96906	MS35338-42
5	18	5130007653197	96906	MS27183-41
5	19	5945005496348	96906	MS24192-D1
5	20		97403	13229E4287
5	21	5940010102898	96906	MS25036-149
5	22		97403	13229E4287/3
5	23	5961009576865	97403	13219E0897
5	24		96906	MS35489-430
5	25		97403	13216E6159-7
6	1	4730009083195	96906	MS35842-10
6	2		97403	13229E6700/273
6	3		97403	13229E5336-11
6	4		97403	13229E6700/275
6	5		97403	13229E6700/276
6	6		97403	13229E6700/277
6	7		97403	13229E6700/278
6	8		97403	13229E5334
6	9		97403	13229E5336-11
6	10	4730013965037	97403	13229E5335-6
6	11		97403	13229E6700/280
6	12		97403	13229E6700/282
6	13	4730009083194	96906	MS35842-11
6	14		97403	13229E6700/292
6	15	4730000140561	81348	WW-P-471, TY III, STY
7	1	5305009897435	96906	MS35207-264
7	2	5310000145850	96906	MS27183-42
7	3	5310008775797	96906	MS21044N3
7	4	5305009931848	96906	MS35207-265
7	5	5310000453296	96906	MS35338-43
7	6		97403	13225E9542
7	7		97403	13229E7867
7	8	5305009846192	96906	MS35206-244
7	9	5310007653197	96906	MS27183-41
7	10		97403	13230E6360
7	11		97403	13230E6359
7	12		97403	13225E9543
7	13	5320008744477	97403	13214E3791-2
7	14	5310001380104	97403	13216E4538-2

CROSS-REFERENCE INDEXES

FIGURE AND ITEM NUMBER INDEX

FIG.	ITEM	STOCK NUMBER	CAGEC	PART NUMBER
7	15	5320001176826	96906	MS20470AD4-4
7	16		97403	13225E9543/6
7	17	5320001176949	96906	MS20426AD4-4
7	18	5305010054394	96906	MS18065-14
7	19		97403	13225E9552-4
7	20		97403	13230E6354
7	21		97403	13230E6355
7	22	5306002259086	96906	MS90726-31
7	23	5310000814219	96906	MS27183-12
7	24		97403	13229E6671
7	25		80204	B1821BH025F100N
7	26	5310009597600	96906	MS51922-5
7	27	5310008094058	96906	MS27183-10
7	28		97403	13230E5863
7	29	5310001620413	97403	13221E9322-1
7	30		97403	13225E9541
7	31	5320001176828	96906	MS20470AD4-6
7	32	5320001176951	96906	MS20426AD4-6
7	33		97403	13225E9541/2
7	34		97403	13225E9541/1
7	35		97403	13225E9540
7	36	5320008744477	97403	13214E3791-2
7	37		97403	13225E9540/1
7	38		97403	13225E9540/2
8	1	5306002259090	96906	MS90726-35
8	2	5310001620413	97403	13221E9322-1
8	3		97403	13225E9526-2
8	4	5325010284864	96906	MS35489-101
8	5		97403	13229E4276
8	6		97403	13225E9553
8	7		97403	13225E9554
8	8	5305009846196	96906	MS35206-248
8	9	5310008098544	96906	MS27183-7
8	10	5325011997889	96906	MS35489-4
8	11	5325011960272	96906	MS35489-33
8	12		97403	13225E9555
8	13		97403	13229E5338-1
8	14		97403	13229E5338-2
8	15		97403	13225E9516
8	16	5320008744477	97403	13214E3791-2
8	17	5310001380104	97403	13216E4538-2

CROSS-REFERENCE INDEXES

FIGURE AND ITEM NUMBER INDEX

FIG.	ITEM	STOCK NUMBER	CAGEC	PART NUMBER
8	18	5320001176828	96906	MS20470AD4-6
8	19		97403	13225E9516/8
8	20	5310010558419	96906	MS27130-S25K
8	21		97403	13225E9516/4
8	22		97403	13225E9517
8	23	5320008744477	97403	13214E3791-2
8	24	5310001380104	97403	13216E4538-2
8	25	5320001176828	96906	MS20470AD4-6
8	26		97403	13225E9517/2
8	27	5310013237090	96906	MS27130-S13K
8	28		97403	13225E9517/9
8	29	5305009931848	96906	MS35207-265
8	30	5310008775797	96906	MS21044N3
8	31	5310000145850	96906	MS27183-42
8	32		88044	NAS1330H08K161L
8	34	5305009846195	96906	MS35206-247
8	35		97403	13230E6358
8	36	5305010054394	96906	MS18065-14
8	37		97403	13225E9552-3
8	38		97403	13230E6356
8	39		97403	13230E6357
8	40	5310000453296	96906	MS35338-43
8	41		97403	13229E5337
8	42	5310011469773	96906	MS27130-S94K
8	43		97403	13229E5337/1
8	44	5305009931848	96906	MS35207-265
8	45	5305009953444	96906	MS35207-266
8	46		97403	13225E9548
8	47		88044	NAS1330H03K166L
8	48	5315009655879	96906	MS24693-S275
8	49		97403	13225E9549
9	1	5305009846195	96906	MS35206-247
9	2		97403	13225E9509
9	3	5340009268544	97403	13216E6107
9	4	5305339846194	96906	MS35206-246
9	5	5310000453299	96906	MS35338-42
9	6		97403	13225E9560
9	7		88044	NAS1330H08K106L
9	8		97403	13225E9560/1
9	9		97403	13225E9508

CROSS-REFERENCE INDEXES

FIGURE AND ITEM NUMBER INDEX

FIG.	ITEM	STOCKNUMBER	CAGEC	PARTNUMBER
9	10	3040011795791	97403	13216E6328-2
9	11	3040011123003	97403	13216E6328-3
9	12	5305009897435	96906	MS35207-264
9	13	5310008775797	96906	MS21044N3
9	14	5975001113208	96906	MS3367-5-9
10	1	5305005767266	96906	MS51021-22
10	2	5310012053455	97403	13216E6326
10	3		97403	13216E6327-1
10	4	5305000516521	96906	MS24693-S25
10	5	5310009349747	96906	MS35649-262
10	6	5310000453299	96906	MS35338-42
10	7	5305008087832	96906	MS24693-S29
10	8	5305009846193	96906	MS35206-245
10	9		97403	13216E6325-1
10	10	5310010422791	96906	MS27130-S7K
10	11		88044	NAS77-A7-25
10	12		97403	13216E6325-1/1
10	13	5305009931848	96906	MS35207-265
10	14	5310000453296	96906	MS35338-43
10	15	5310000145850	96906	MS27183-42
10	16		97403	13216E6323
10	17		97403	13216E6323/2
10	18		97403	13216E6323/3
10	19		97403	13216E6323/4
10	20		97403	13216E6323/5
10	21		97403	13216E6323/1
10	22	5310008775797	96906	MS21044N3
10	23		97403	13216E6321
10	24	5310009585321	96906	MS27130-S26K
10	25	3040011769613	97403	13216E6328-1
10	26	5315008794829	96906	MS9245-23
10	27		81352	AN960-10L
10	28	5315013887450	97403	13216E6324-1
10	29		97403	13216E6322
10	30	5310009585321	96906	MS27130-S26K
10	31		97403	13216E6322/1
10	32		97403	13216E6319
11	1	5305009844988	96906	MS35206-228
11	2	5310000454007	96906	MS35338-41
11	3	5310000821404	96906	MS27183-6
11	4	5925012405207	81349	M55629/5-425

CROSS-REFERENCE INDEXES
FIGURE AND ITEM NUMBER INDEX

FIG.	ITEM	STOCK NUMBER	CAGEC	PART NUMBER
11	5	5305009846195	96906	MS35206-247
11	6	53 10000453299	96906	MS35338-42
11	7	53 10007653 197	96906	MS271 83-41
11	8		97403	13229E6660-2
11	9	5305009881723	96906	MS35206-279
11	10	53 10005825965	96906	MS35338-44
11	11	5310005825965	96906	MS271 83-9
11	12	6110013569854	67302	14050
11	13	5305009846193	96906	MS35206-245
11	14	5950013857856	97403	13229E4214
11	15	5305009846221	96906	MS35206-234
11	16	53 10007278353	96906	MS271 83-43
11	17		97403	13227E8321
11	18		81349	M39014/5-2661
11	19	5910013880088	97403	13229E4264
11	20	5325010333443	96906	MS35489-54S
11	21	5305009846194	96906	MS35206-246
11	22	5325013738776	96906	MS35489-156
11	23		97403	13229E6693
11	24	5310009931548	96906	MS27130-S133K
11	25		97403	13229E6693/5
11	26		97403	13229E6693/4
11	27		97403	13229E6693/6
11	28		97403	13229E6693/7
11	29		97403	13229E6693/1
11	30	5305009881725	96906	MS35206-281
12	1	6695013929859	97403	13229E4190
12	2	5305009886381	96906	MS35206-208
12	3	53 10008094058	96906	MS271 83-I 0
12	4	5310000881251	96906	MS51 922-I
12	5	5305008892997	96906	MS35206-215
12	6	5310005432410	96906	MS35338-40
12	7	5310009801310	96906	MS271 83-4
12	8		96906	MS91 520-2U2B
12	9		96906	MS91 520-0U2B
12	10	5930000930805	97403	13229E4187
12	11		97403	13229E4185
12	12	53 10009349738	96906	MS35649-222
12	13		97403	13229E4190/16
12	14	5980013897084	97403	13229E4186
12	15		97403	13229E4192

CROSS-REFERENCE INDEXES

FIGURE AND ITEM NUMBER INDEX

FIG.	ITEM	STOCK NUMBER	CAGEC	PART NUMBER
12	16		97403	13229E4191
12	17	5310000276138	81349	M45938/1-5
12	18	5305010192391	96906	MS35206-204
12	19	5310005435060	96906	MS35338-39
12	20		96906	MS27183-2
12	21		97403	13229E4274
12	22	5975001113208	96906	MS3367-5-9
12	23	5935010947407	81349	M24308/4-303
12	24		97403	13229E4274/2
13	1	5305010192391	96906	MS35206-348
13	2	5310000453299	96906	MS35338-42
13	3	5310007653197	96906	MS27183-41
13	4	5945008262218	96906	MS24193-D1
13	5		97403	13229E0897
13	6	5940010102898	96906	MS25036-149
13	7		97403	13229E4287/3
13	8	5961009576865	97403	13219E0897
13	9	5310009349751	96906	MS35650-302
13	10	5310000453296	96906	MS35338-43
13	11	5310000145850	96906	MS27183-42
13	12		97403	13229E6669
14	1	5305000512355	96906	MS24693-S60
14	2	5310009349757	96906	MS35649-282
14	3	5310000453299	96906	MS35338-42
14	4	5310007653197	96906	MS27183-41
14	5		97403	13216E6159-6
14	6		97403	13229E6705
14	7	5305009577821	96906	MS24693-S54
14	8	5305009896640	96906	MS24693-S56
14	9		97403	13229E6702
14	10		97403	13229E6713-1
14	11		97403	13229E4231 -1
14	12	5305009846199	96906	MS35206-251
14	13		97403	13229E4217
14	14		97403	13216E6159-1
14	15	5305010192391	96906	MS35206-348
14	16		97403	13229E4209
14	17		97403	13229E6713-2
14	18		97403	13229E6711
14	19		97403	13211E6897

CROSS-REFERENCE INDEXES

FIGURE AND ITEM NUMBER INDEX

FIG.	ITEM	STOCK NUMBER	CAGEC	PART NUMBER
14	20		97403	13229E6713-3
14	21	5305000633503	96906	MS24693-S50
14	22		97403	13229E4213
15	1	5305009836730	96906	MS35206-218
15	2	5935011758417	96906	MS25043-24DA
15	3	5310009349739	96906	MS35649-242
15	4	5310005432410	96906	MS35338-40
15	5	5305008892999	96906	MS35206-217
15	6		97403	13229E6706
15	7		97403	13229E6716-1
15	8		97403	13229E6718-2
15	9		97403	13229E6706/3
15	10		97403	13229E6706/2
15	11	5330000637889	96906	MS51007-9
15	12	5310009501310	96906	MS27183-4
15	13	5935009788981	96906	MS3105-24
15	14		97403	13229E6707
15	15	5935014070331	97403	13229E6716-1
15	16		97403	13229E6718-2
15	17		97403	13229E6707/3
15	18		97403	13229E6707/2
15	19	5305009931848	96906	MS35207-265
15	20	5310000453296	96906	MS35338-43
15	21	5310000145850	96906	MS27183-42
15	22	5340005846556	96906	MS21919WDG10
15	23		97403	13229E4207-2
15	24		81349	M24308/2-2
15	25	5935003979128	81349	M24308/21-2
15	26		81349	M24308/4-2
15	27		81349	M24308/21-2
15	28		97403	13229E4237-2
15	29		97403	13229E4207/5
15	30	5940001139828	96906	MS25036-148
15	31		97403	13229E4207/6
15	32		97403	13229E4286
15	33	5305009897435	96906	MS35207-264
15	34	5310000453296	96906	MS35338-43
15	35	5310009349751	96906	MS35650-302
15	36	5340002915323	96906	MS21919WDG4
15	37		97403	13229E6676
15	38	5975001113208	96906	MS3367-5-9

CROSS-REFERENCE INDEXES

FIGURE AND ITEM NUMBER INDEX

FIG.	ITEM	STOCK NUMBER	CAGEC	PART NUMBER
15	39		97403	13229E4181-2
15	40		97403	13229E4272
15	41	5999010398438	97403	13229E4273
15	42	5940001434780	96906	MS25036-108
15	43		97403	13229E6676/4
15	44		97403	13229E6673
15	45	5975001113208	96906	MS3367-5-9
15	46		97403	13229E4272
15	47	5999010398438	97403	13229E4273
15	48		97403	13229E6683
15	49		97403	13229E4181-1
15	50	5940010102898	96906	MS25036-149
15	51	5940001434774	97403	13229E6191-1
15	52	5940001434774	96906	MS25036-153
15	53	5940001434771	96906	MS25036-103
15	54		97403	13229E4176
15	55		97403	13229E6673/7
15	56		97403	13229E6673/11
15	57		97403	13229E6673/12
15	58		97403	13229E6678
15	59	5975001113208	96906	MS3367-5-9
15	60		97403	13229E4181-2
15	61		97403	13229E4272
15	62	5999010398438	97403	13229E4273
15	63	5940001434780	96906	MS25036-108
15	64		97403	13229E6678/4
15	65		97403	13229E6703
15	66	5940001435284	96906	MS25036-115
15	67	5940001434774	96906	MS25036-153
15	68	5940001141305	96906	MS25036-116
15	69		97403	13229E6703/2
15	70		97403	13229E6703/7
15	71		97403	13229E6703/1
15	72		97403	13229E6703/6
15	73		97403	13229E6703/10
15	74		97403	13229E6675
15	75	5975001113208	96906	MS3367-5-9
15	76		97403	13229E4272
15	77	5999010398438	97403	13229E4273
15	78	5935010531955	97403	13229E4181-1
15	79	5930008787588	96906	MS3106R24-11S

CROSS-REFERENCE INDEXES

FIGURE AND ITEM NUMBER INDEX

FIG.	ITEM	STOCK NUMBER	CAGEC	PART NUMBER
15	80	5940001434794	96906	MS25036-112
15	81	5940002300515	96906	MS25036-154
15	82		97403	13216E6191-2
15	83		97403	13229E6675/8
15	84		97403	13229E6675/9
15	85		97403	13229E6677
15	86	5975001113208	96906	MS3367-5-9
15	87		97403	13229E4181-2
15	88		97403	13229E4272
15	89	5999010398438	97403	13229E4273
15	90	5940001434780	96906	MS25036-108
15	91		97403	13229E6677/4
15	92		97403	13229E6674
15	93	5970001113208	96906	MS3367-5-9
15	94	5940001434794	96906	MS25036-112
15	95		97403	13229E6674/1
15	96		97403	13229E6672
15	97	5970001113208	96906	MS3367-5-9
15	98	5940001434794	96906	MS25036-112
15	99		97403	13229E6672/1
15	100		97403	13229E6704
15	101	5940001435284	96906	MS25036-115
15	102	5940001141305	96906	MS25036-116
15	103	5935013897905	97403	13229E6718-1
15	104		97403	13229E6704/3
15	105		97403	13229E6704/8
15	106		97403	13229E6704/9
15	107		97403	13229E6704/2
15	108		97403	13229E6679-1
15	109	5940001434774	96906	MS25036-153
15	110	5940001434780	96906	MS25036-108
15	111		97403	13229E6679-1/4
15	112		97403	13229E6679-10
15	113	5940002300515	96906	MS25036-154
15	114		97403	13229E6679-10/4
15	115		97403	13229E6679-12
15	116	5940001434774	96906	MS25036-153
15	117		97403	13229E6679-12/4
15	118		97403	13229E6679-13
15	119	5940001434794	96906	MS25036-112
15	120		97403	13229E6679-13/6

CROSS-REFERENCE INDEXES

FIGURE AND ITEM NUMBER INDEX

FIG.	ITEM	STOCK NUMBER	CAGEC	PART NUMBER
15	121		97403	13229E6679-14
15	122	5940001434794	96906	MS250360112
15	123		97403	13229E6679-14/6
15	124		97403	13229E6679-15
15	125	5940001434794	96906	MS25036-112
15	126		97403	13229E6679-15/6
15	127		97403	13229E6679-2
15	128		97403	13216E6191-2
15	129	5940001434780	96906	MS25036-108
15	130		97403	13229E6679-2/4
15	131		97403	13229E6679-3
15	132		97403	13216E6191-2
15	133	5940001434780	96906	MS25036-108
15	134		97403	13229E6679-3/4
15	135		97403	13229E6679-4
15	136	5940009260085	97403	13216E6191-2
15	137		97403	13229E6679-4/4
15	138		97403	13229E6679-5
15	139	5940001434780	96906	MS25036-108
15	140	5940002300515	96906	MS25036-154
15	141		97403	13229E6679-5/4
15	142		97403	13229E6679-6
15	143	5940001434774	96906	MS25036-153
15	144	5940002300515	96906	MS25036-154
15	145		97403	13229E6679-6/4
15	146		97403	13229E6679-7
15	147		97403	13229E6679-7/4
15	148		97403	13229E6679-8
15	149		97403	13229E6679-8/4
15	150		97403	13229E6679-9
15	151	5940002300515	96906	MS25036-154
15	152		97403	13229E6679-9/4
15	153		97403	13229E6679-11
15	154	5940001434774	96906	MS25036-153
15	155		97403	13229E6679-11/4
16	1	5305009953444	96906	MS35207-266
16	2	5310000453296	96906	MS35338-43
16	3		97403	13216E6159-5
16	4	5340005980146	96906	MS21919WDG6
16	5	5340005316857	96906	MS21919WDG40
16	6	4130335741916	97403	13214E4209

CROSS-REFERENCE INDEXES

FIGURE AND ITEM NUMBER INDEX

FIG.	ITEM	STOCK NUMBER	CAGEC	PART NUMBER
16	7	4730001892741	96906	MS35872-4
16	8		97403	13229E6700/215
16	9	4730004691984	96906	MS35922-43
16	10		97403	13229E6700/216
16	11	5325001850004	96906	MS35489-40
16	12		97403	13229E6700/158
16	13	5305009846202	96906	MS35206-254
16	14	5310000453299	96906	MS35338-42
16	15		97403	13216E6156
16	16	5310010364687	96906	MS27130-S15K
16	17		97403	13216E6156/1
16	18		97403	13216E6155-2
16	19	4730008133192	41947	W2817
16	20	4730008221275	97403	13211E3799-3
16	21		97403	13229E6700/151
16	22	4730009407940	96906	MS35928-3
16	23		97403	13229E6708-4
16	24	5310009971888	96906	MS35649-2252
16	25	5310005825965	96906	MS35338-44
16	26	3040004792744	97403	13216E6330
16	27	5320001176828	96906	MS20470AD4-6
16	28		97403	13216E6330/2
16	29	3040004792744	97403	13220E2356
16	30	4730001892737	96906	MS35872-2
16	31		97403	13229E6700/195
16	32	4730008219184	97403	13211E4043-12
16	33		97403	13229E6700/196
16	34		97403	13229E6700/200
16	35	4730002546462	96906	MS35917-4U
16	36		97403	13229E6700/198
16	37	4730001438933	97403	13214E3411-3
16	38	4820000738405	97403	13211E8369
16	39		97403	13229E6700/206
16	40	5305009931848	96906	MS35207-265
16	41		97403	13216E6343
16	42		97403	13216E6343/2
16	43		97403	13216E6343/1
16	44		97403	13216E6355
16	45	5305009846194	96906	MS35206-246
16	46	5310007653197	96906	MS27183-41
16	47		97403	13229E6715

CROSS-REFERENCE INDEXES

FIGURE AND ITEM NUMBER INDEX

FIG.	ITEM	STOCK NUMBER	CAGEC	PART NUMBER
16	48	5305009577086	96906	MS24693-S273
16	49		97403	13225E9503
16	50	5310010558419	96906	MS27130-S25K
16	51	5305009844983	96906	MS35206-226
16	52	5310000454007	96906	MS35338-41
16	53	5930001908729	97403	13216E6215-3
16	54	5930001908730	97403	13216E6215-1
16	55	4730010923835	97403	13219E9540
16	56		97403	13219E9540/3
16	57		97403	13219E9540/2
16	58		97403	13219E9540/1
16	59		97403	13219E9540/4
16	60	4820010156690	97403	13219E9499-1
16	61	5325010054098	97403	13216E6109
16	62	5325008549379	96906	MS35489-122
16	63	5325001749312	96906	MS35489-36
16	64		97403	13229E6700/159
16	65		97403	13229E6700/160
16	66	4730002572163	96906	MS35929-2
16	67		97403	13229E6700/202
16	68		97403	13229E6700/207
16	69	4730010374919	96906	MS35919-22
16	70		97403	13229E6700/152
16	71		97403	13229E6700/153
16	72	5305009953440	96906	MS35207-270
16	73	5340002915323	96906	MS21919WDG4
16	74	5975007275153	96906	MS3367-4-9
16	75		97403	13216E6159-7
16	76	4820009362201	97403	13216E6160-3
16	77		97403	13229E6700/189
16	78		97403	13229E6700/165
16	79	4730008221274	97403	13211E3799-1
16	80		97403	13211E4043-19
16	81		97403	13229E6700/184
16	82	4730008370685	96906	MS35917-3
16	83		97403	13229E6700/183
16	84	4730005964062	97403	13211E4043-43
16	85		97403	13229E6700/171
16	86	4730002546447	96906	MS35917-7
16	87		97403	13229E6700/167
16	88	4130004792740	97403	13216E6283

CROSS-REFERENCE INDEXES

FIGURE AND ITEM NUMBER INDEX

FIG.	ITEM	STOCK NUMBER	CAGEC	PART NUMBER
16	89		97403	13216E6345-1
16	90	5325001716387	96906	MS35489-51
16	91		97403	13229E6700/141
16	92	5305009846192	96906	MS35206-244
16	93	5310008098544	96906	MS27183-7
16	94	4810013874612	97403	13229E4215
16	95		97403	13229E6700/140
16	96	5310007320558	96906	MS51967-8
16	97	5310007225658	96906	MS35338-46
16	98	4130001491477	97403	13218E7546
16	99		97403	13225E9556
16	100		88044	NAS1330H3K166
16	101		97403	13225E9556/1
16	102	4730013286117	96906	MS35928-7
16	103		97403	13229E6700/144
16	104	4730000579118	97403	13211E4043-51
16	105		97403	13229E6700/224
16	106		97403	13216E6167-13
16	107		97403	13211E3799-2
16	108	5310009824908	96906	MS21045-6
16	109	5310000806004	96906	MS27183-14
16	110	5305009837452	96906	MS16998-78
16	111		97403	13221E9314
16	112	5310013957648	97403	13211E8165-3
16	113		97403	13229E5341
16	114	5305009846194	96906	MS35206-246
16	115		97403	13229E5340
16	116		67302	0601-001
16	117		97403	13229E6700/146
16	118	4730005964062	97403	13211E4043
16	119		97403	13229E6700/145
16	120	4730008155672	97403	13211E4043-16
16	121		97403	13229E6700/228
16	122		97403	13216E6167-1
16	123		97403	13229E6700/149
16	124		97403	13229E5339
16	125		88044	NAS133OH08K161L
16	126		88044	NAS1329H3K130L
16	127		97403	13229E5339/1
16	128	5305009846215	96906	MS35206-268
16	129	5305009846211	96906	MS35206-264

CROSS-REFERENCE INDEXES

FIGURE AND ITEM NUMBER INDEX

FIG.	ITEM	STOCK NUMBER	CAGEC	PART NUMBER
16	130	5310000145850	96906	MS27183-42
16	131	5340007225878	96906	MS21919WDG8
16	132		97403	13216E6159-10
16	133	5340012581273	97403	13216E6159-11
16	134	5305009846198	96906	MS35206-250
16	135	5640002374818	81349	MIL-P-15280,FORMT
16	136		81349	MIL-S-23190/3-1
16	137		81349	MIL-T-47014,2 INCH WIDE
17	1	5305009906444	96906	MS35207-261
17	2	5310000453296	96906	MS35338-43
17	3		67302	SK786-100
17	4	5305008893000	96906	MS35206-230
17	5	5310000134530	96906	MS35649-62
17	6	5310000454007	96906	MS35338-41
17	7	5935008473568	96906	MS3102R24-11P
17	8		67302	WIR-ST2
17	9		67302	WIR-RT3
17	10		67302	WIR-CT1
17	11		67302	786221
17	12		67302	786222
17	13		67302	786223
17	14		82415	053CCA1255A
17	15		67302	786-CRK3/11
17	16		14569	018-0031-01
17	17		67302	3001-010
18	1	5305000633503	96906	MS24693-S50
18	2		97403	13229E5333
18	3	5305009846194	96906	MS35206-246
18	4	5310000453299	96906	MS35338-42
18	5	5310008098544	96906	MS27183-7
18	6		97403	13229E6667
18	7		97403	13229E6666
18	8		97403	13222E5991
18	9		97403	13222E5992
18	10	5306002259087	96906	MS90726-32
18	11	5310000544892	96906	MS35650-3312
18	12	5310013387338	96906	MS35338-45
18	13	5365011107314	97403	13216E6360
18	14		97403	13229E6701
18	15		97403	13229E6701/74
18	16		97403	13229E6701 /77

CROSS-REFERENCE INDEXES

FIGURE AND ITEM NUMBER INDEX

FIG.	ITEM	STOCK NUMBER	CAGEC	PART NUMBER
18	17		97403	13229E6701/78
18	18		97403	13229E6701/79
18	19		97403	13229E6701/80
18	20		97403	13229E6701/81
18	21		97403	13229E6701/82
18	22		97403	13229E6701/83
18	23		97403	13229E6701/84
18	24		97403	13229E6701/85
18	25		97403	13229E6701/86
19	1	5305002693241	96906	MS90726-65
19	2	5310005669504	97403	13216E6138-2
19	3	5365010446408	97403	13216E6152
19	4	4720010382334	97403	13216E6153
19	5	5340010425759	97403	13216E6137
19	6		97403	13229E6718-2
BULK	1	6145001949840	81349	QQB575R30T0375
BULK	2	6145001949840	81349	QQB575R30T0562
BULK	3	6145001949840	81349	QQB575R32T0781
BULK	4		81346	AMS3570,2.5LB/CU.FT
BULK	5		81346	AMS3570,2.5LB/CU.FT
BULK	6	9320000347442	81349	MIL-R-6130,TYII,GRA
BULK	7	9320000347442	81349	MIL-R-6130,TYII,GRA
BULK	8	9320000347442	81349	MIL-R-6130,TYII,GRA
BULK	9	9320000347442	81349	MIL-R-6130,TYII,GRA
BULK	10		81346	AMS3570,2LB/CU.FT
BULK	11		81346	AMS3570,2LB/CU.FT
BULK	12	5640001987255	81349	MIL-1-14511,.25THK
BULK	13	5970013900991	81349	M23053/5-103-9
BULK	14	5970013900997	81349	M23053/5-107-9
BULK	15	5970000823948	81349	M23053/5-108-9
BULK	16	5970008121360	81349	M23053/5-109-9
BULK	17	5970013900996	81349	M23053/5-104-9
BULK	18	4710001694787	81346	ASTM-B280,.250 OD
BULK	19	4710001694787	81346	ASTM-B280,.375 OD
BULK	20	4710001694787	81346	ASTM-B280,.500 OD
BULK	21	4710001694787	81346	ASTM-B280,.875 OD
BULK	22	4720008493205	81349	ZZ-T-831 ,TYVI,CL6
BULK	23	6145000039527	81349	M5086/1-10-9
BULK	24	6145005786072	81349	M5086/1-16-9
BULK	25	6145005787518	81349	M5086/1-18-9
BULK	26	6145005787519	81349	M5086/1-20-9

CROSS-REFERENCE INDEXES

FIGURE AND ITEM NUMBER INDEX

FIG.	ITEM	STOCK NUMBER	CAGEC	PART NUMBER
BULK	27	6145002840657	81349	M5086/2-8-9
BULK	28		81346	AMS3570,2.5LB/CU.FT
BULK	29		81346	AMS3570,2.5LB/CU.FT
BULK	30		81346	MIL-P-15280,FORMS

By Order of the Secretary of the Army:

DENNIS J. REIMER
General, United States Army
Chief of Staff

Official

YVONNE M. HARRISON
Administrative Assistant to the Secretary of The Army
00914

DISTRIBUTION:
To be distributed in accordance with DA Form 1 2-25-E, block no. 6300, requirements for TM 9-41 20-404-24P.

☆U. S. GOVERNMENT PRINTING OFFICE: 1995-655-121/20344

These are the instructions for sending an electronic **2028**

The following format must be used if submitting an electronic 2028. The subject line must be exactly the same and all fields must be included; however only the following fields are mandatory: 1, 3, 4, 5, 6, 7, 8, 9, 10, 13, 15, 16, 17, and27.

From: " Whomever" <whomever@avma27.army.mil>
To: mpmt%avma28@st-louis-emh7.army.mil

Subject: DA Form 2028

1. From: Joe Smith
2. *Unit:* home
3. ***Address:4300*** Park
4. ***City:*** Hometown
5. St: MO
6. ***Zip: 77777***
7. ***Date Sent:*** 19-OCT-93
8. ***Pub no: 55-2840-229-23***
9. ***Pub Title:*** TM
10. ***Publication Date:*** 04-JUL-85
11. *Change Number: 7*
12. *Submitter Rank:* MSG
13. ***Submitter FName:*** Joe
14. *Submitter MName:* T
15. ***Submitter LName:*** Smith
16. ***Submitter Phone:*** 123-l 23-l 234
17. ***Problem:*** 1
18. *Page: 2*
19. *Paragraph: 3*
20. *Line: 4*
21. NSN: 5
22. *Reference: 6*
23. *Figure: 7*
24. *Table: 8*
25. ***Item:*** 9
26. *Total:* 123
27. ***Text:***

This is the text for the problem below line 27.

☆ U.S. GOVERNMENT PRINTING OFFICE: 1996 - 755-025/40310

RECOMMENDED CHANGES TO EQUIPMENT TECHNICAL PUBLICATIONS

THEN...JOT DOWN THE DOPE ABOUT IT ON THIS FORM. CAREFULLY TEAR IT OUT, FOLD IT AND DROP IT IN THE MAIL.

SOMETHING WRONG WITH PUBLICATION

FROM: (PRINT YOUR UNIT'S COMPLETE ADDRESS)

DATE SENT

PUBLICATION NUMBER	PUBLICATION DATE	PUBLICATION TITLE

BE EXACT PIN-POINT WHERE IT IS

PAGE NO.	PARA-GRAPH	FIGURE NO.	TABLE NO.

IN THIS SPACE, TELL WHAT IS WRONG AND WHAT SHOULD BE DONE ABOUT IT.

PRINTED NAME, GRADE OR TITLE AND TELEPHONE NUMBER	SIGN HERE

TEAR ALONG PERFORATED LINE

DA FORM 1 JUL 79 2028-2

PREVIOUS EDITIONS ARE OBSOLETE.

P.S.--IF YOUR OUTFIT WANTS TO KNOW ABOUT YOUR RECOMMENDATION MAKE A CARBON COPY OF THIS AND GIVE IT TO YOUR HEADQUARTERS.

The Metric System and Equivalents

Linear Measure

1 centimeter = 10 millimeters = .39 inch
1 decimeter = 10 centimeters = 3.94 inches
1 meter = 10 decimeters = 39.37 inches
1 dekameter = 10 meters = 32.8 feet
1 hectometer = 10 dekameters = 328.08 feet
1 kilometer = 10 hectometers = 3,280.8 feet

Weights

1 centigram = 10 milligrams = .15 grain
1 decigram = 10 centigrams = 1.54 grains
1 gram = 10 decigram = .035 ounce
1 dekagram = 10 grams = .35 ounce
1 hectogram = 10 dekagrams = 3.52 ounces
1 kilogram = 10 hectograms = 2.2 pounds
1 quintal = 100 kilograms = 220.46 pounds
1 metric ton = 10 quintals = 1.1 short tons

Liquid Measure

1 centiliter = 10 milliters = .34 fl. ounce
1 deciliter = 10 centiliters = 3.38 fl. ounces
1 liter = 10 deciliters = 33.81 fl. ounces
1 dekaliter = 10 liters = 2.64 gallons
1 hectoliter = 10 dekaliters = 26.42 gallons
1 kiloliter = 10 hectoliters = 264.18 gallons

Square Measure

1 sq. centimeter = 100 sq. millimeters = .155 sq. inch
1 sq. decimeter = 100 sq. centimeters = 15.5 sq. inches
1 sq. meter (centare) = 100 sq. decimeters = 10.76 sq. feet
1 sq. dekameter (are) = 100 sq. meters = 1,076.4 sq. feet
1 sq. hectometer (hectare) = 100 sq. dekameters = 2.47 acres
1 sq. kilometer = 100 sq. hectometers = .386 sq. mile

Cubic Measure

1 cu. centimeter = 1000 cu. millimeters = .06 cu. inch
1 cu. decimeter = 1000 cu. centimeters = 61.02 cu. inches
1 cu. meter = 1000 cu. decimeters = 35.31 cu. feet

Approximate Conversion Factors

To change	*To*	*Multiply by*	*To change*	*To*	*Multiply by*
inches	centimeters	2.540	ounce-inches	newton-meters	.007062
feet	meters	.305	centimeters	inches	.394
yards	meters	.914	meters	feet	3.280
miles	kilometers	1.609	meters	yards	1.094
square inches	square centimeters	6.451	kilometers	miles	.621
square feet	square meters	.093	square centimeters	square inches	.155
square yards	square meters	.836	square meters	square feet	10.764
square miles	square kilometers	2.590	square meters	square yards	1.196
acres	square hectometers	.405	square kilometers	square miles	.386
cubic feet	cubic meters	.028	square hectometers	acres	2.471
cubic yards	cubic meters	.765	cubic meters	cubic feet	35.315
fluid ounces	milliliters	29,573	cubic meters	cubic yards	1.308
pints	liters	.473	milliliters	fluid ounces	.034
quarts	liters	.946	liters	pints	2.113
gallons	liters	3.785	liters	quarts	1.057
ounces	grams	28.349	liters	gallons	.264
pounds	kilograms	.454	grams	ounces	.035
short tons	metric tons	.907	kilograms	pounds	2.205
pound-feet	newton-meters	1.356	metric tons	short tons	1.102
pound-inches	newton-meters	.11296			

Temperature (Exact)

°F	Fahrenheit temperature	5/9 (after subtracting 32)	Celsius temperature	°C

PIN: 074181-001