TECHNICAL MANUAL

AVIATION UNIT AND AVIATION INTERMEDIATE MAINTENANCE MANUAL

ENGINE, GAS TURBINE MODEL T55-L-714 NSN 2840-01-353-7635

DISTRIBUTION STATEMENT A: Approved for public release; distribution is unlimited.

HEADQUARTERS, DEPARTMENT OF THE ARMY
1 DECEMBER 1994

WARNING AND FIRST AID DATA

Warnings, cautions and notes emphasize important and critical instructions. They are defined as follows:

WARNING

An operating procedure or practice which, if not correctly followed, will result in personnel injury or loss of life.

CAUTION

An operating procedure or practice which, if not strictly observed, will result in damage or destruction of equipment.

NOTE

An operating procedure or condition which it is essential to highlight.

Personnel performing instructions involving operations, procedures, materials, and practices which are included or implied in this technical manual shall observe the following instructions. Disregard of these warnings and precautionary information can cause serious injury or death. Refer to FM 21-11 for first aid data to treat injuries resulting from working on the engine.

WARNING

Fuels

- Turbine fuels are very flammable. They may cause drying and irritation of skin or eyes.
- Handle only in well-ventilated areas away from heat and open flame.
- Ensure that all Government regulations for fuel handling are complied with.
- Drain and store in approved metal safety containers.
- Avoid prolonged or repeated contact with skin and do not take internally.
- Wash contacted area of skin thoroughly after handling. If irritation of skin results, get medical attention. Get medical attention for eyes.

WARNING

Lubricating Oils

- Lubricating oils cause paralysis if swallowed. Prolonged contact with them may irritate the skin.
- Handle only in well-ventilated areas away from heat and flame.
- Drain and store in approved metal safety containers.
- Avoid prolonged or repeated contact with skin and do not take internally.
- Wash contacted areas of skin thoroughly after handling. If irritation of skin results, get medical attention. Get medical attention for eyes.

WARNING

Dangerous Voltages

- The ignition exciter stores very high and possibly fatal voltage. Use extreme care when working around spark and ignition exciters.
- Serious injury could result if exciter or igniters are improperly discharged or accidentally grounded.
- Do not probe inside of output receptacles, ignition leads, or spark igniters with finger or metal objects.
- Discharge exciter only with insulated screwdriver. In case of shock or injury, get medical attention.

WARNING

Discharging Ignition Exciter

- When discharging ignition exciter, remove one lead at a time and discharge receptacle that lead was removed from. Failure to do so may result in serious shock when you are removing second lead.

- In case of serious shock, get medical attention.

WARNING

Compressed Air

- When using compressed air for cleaning, use approved protective equipment for eyes and face.
- Do not use more than 30 psig air pressure.
- Do not direct air toward yourself or another person. Failure to comply could result in injury to eyes or skin.
- In case of injury, get medical attention.

WARNING

Corrosion Preventive Compounds

- These materials are flammable and toxic.
- Use only in well-ventilated area away from heat, sparks and open flames.
- If swallowed, do not induce vomiting. Get medical attention.
- In case of contact immediately flush skin and eyes with water for 15 minutes. Get medical attention for eyes.

WARNING

Cleaning Solvents

- These materials are flammable and toxic. They can irritate skin and cause burns.
- Use only in well-ventilated area, away from heat, sparks and open flame.
- In case of contact, immediately flush skin and eyes with water for at least 15 minutes. Get medical attention for eyes.

WARNING

Handling of Heated Parts

- Wear gloves when handling heated parts for assembly and disassembly. Failure to comply may cause severe burns.
- Get medical attention for burns.

WARNING

Handling of Parts Treated with Dry Ice

- Dry ice is very cold. It can cause severe burns.
- Wear approved protective equipment and handle only in well-ventilated areas. Get medical attention for burns.

WARNING

Handling of Spring Loaded Parts

- Be careful when removing and installing retaining ring to spring loaded parts.
- Spring tension could cause parts to spring up and cause injury.
- If injury occurs, get medical attention.

WARNING

Magnesium/Thorium Components

- Selected lightweight housings are made from a magnesium/nickel alloy containing radioactive thorium.
- Particles of this material, resulting from blending or polishing are hazardous to your health if ingested or otherwise introduced into your body.
- Do not eat, drink, or smoke in any area where these particles might be present.
- Wash your hands thoroughly after working with this material.
- If exposure or injury occurs, no matter how slight, get medical attention.

WARNING

Nitric Acid

- Both nitric acid and its vapors are a personnel hazard.
- Avoid contact with skin, eyes or clothing. Avoid inhalation of vapors.
- In case of contact, immediately flush skin and eyes with water for at least 15 minutes. Get medical attention.

WARNING

Handling Engine Shipping Container

- Be careful when working with engine shipping container. Make sure both sections of container are grounded.
- Make sure container is opened in well-ventilated area. Failure to do so could result in explosion.
- Shipping container is pressurized. Make certain that all air pressure has been released before removing valve stem or loosening nuts. If nuts are removed before pressure is released, internal pressure could blow cover off and cause serious injury.
- If injury occurs, get medical attention.

WARNING

Handling of Skimming Maintenance Kit

- Contact with skimming maintenance kit rotating parts could cause injury. Exposure to maintenance kit noise may cause ringing in ears, and temporary or permanent hearing loss.
- Keep hands and clothing away from rotating parts and wear approved hearing protection.
- If injury occurs, or ringing in ears or loss of hearing persists, get medical attention.

WARNING

Sodium Dichromate

- Sodium dichromate is highly toxic, do not take internally.
- Use only with adequate ventilation. Avoid prolonged or repeated contact with skin.
- Wear approved gloves and goggles, or face shield and apron, and wash hands thoroughly after handling.
- Wear respirator if sodium dichromate is in powdered form.
- In case of contact, immediately flush skin and eyes with water for at least 15 minutes. Get medical attention.

WARNING

Welding Operations

- Welding operations are hazardous. Harmful light rays may injure eyes and burn skin. Poisonous fumes may cause illness. Burns and fires may result from hot sparks.
- Wear approved protective clothing and equipment.
- Perform welding operations in well-ventilated areas away from flammable liquids and gases.
- If fire occurs, call for assistance and use proper extinguishing procedures.
- If injury or illness occurs, get medical attention.

WARNING

Use of Engine Maintenance Sling

- Inspect sling prior to use for signs of abuse or wear. Failure to comply may cause injury to personnel and/or damage to engine.
- When using sling, make sure hoist lifting capacity is 1200 pounds.
- In case of injury get medical attention.

WARNING

POWER GRINDING

- Power grinding is hazardous to personnel. Sparks and metal chips may injure eyes.
- Wear approved goggles.
- If injury occurs, get medical attention.

WARNING

HANDLING TORQUE MULTIMPLIER

- Make sure handle is fully seated and ratchet selector on torque pack is properly set before applying torque. Rotating ratchet selector with a load on the torque pack may damage unit and injure personnel.
- Do not change ratchet selector when torque load is on torque pack.
- If injury occurs, get medical attention.

WARNING

DANGEROUS CHEMICALS

Acetone (Item E1, Appendix C) is extremely flammable and toxic to eyes, skin and respiratory tract. Wear protective gloves and goggles/face shield. Avoid repeated or prolonged contact. Use only in well–ventilated areas (or use approved respirator as determined by local safety/industrial hygiene personnel). Keep away from open flames, sparks, hot surfaces or other sources of ignition.

Positron (Item E77, Appendix C) is combustible and toxic to eyes, skin and respiratory tract. Wear protective gloves and goggles/face shield. Avoid repeated or prolonged contact. use only in well–ventilated areas. use approved organic vapor respirator, with dust and mist filter, if exposed to vapor mist. keep away from open flames, sparks, or other sources of ignition.

Electron (Item E76, Appendix C) is combustible and toxic to eyes, skin and respiratory tract. wear protective gloves and goggles/face shield. Avoid repeated or prolonged contact. use only in well–ventilated areas. Use approved organic vapor respirator, with dust and mist filter, if exposed to vapor mist. Keep away from open flames, sparks, or other sources of ignition.

Isopropyl Alcohol (Item E78, Appendix C) is flammable and toxic to eyes, skin and repiratory tract. wear protective gloves and goggles/face shield. Avoid repeated or prolonged contact. Use only in well–ventilated areas (or use approved respirator as determined by local safety/industrial hygiene personnel). keep away from open flames, sparks, hot surfaces or other sources of ignition.

DS–108 (Item E75, Appendix C) is combustible and toxic to eyes, skin and respiratory tract. wear protective gloves and goggles/face shield. Avoid repeated or prolonged contact. use only in well–ventilated areas. Use approved organic vpor respirator, with dust and mist filter, if exposed to vapor mist. Keep away from open flames, sparks, or other sources of ignition.

CHANGE

NO. 2

HEADQUARTERS
DEPARTMENT OF THE ARMY
WASHINGTON, D.C.12 May 2005

AVIATION UNIT AND AVIATION INTERMEDIATE
MAINTENANCE MANUAL

ENGINE, GAS TURBINE, MODEL T55-L-714
NSN 2840-01-353-7635

DISTRIBUTION STATEMENT A: Approved for public release; distribution is unlimited.

TM 1-2840-252-23-1, dated 1 December 1994, is changed as follows:

1. Remove and insert pages as indicated below. New or changed text material is indicated by a vertical bar in the margin. An illustration change is indicated by a miniature pointing hand.

Remove pages	Insert pages
A/(B Blank)	A/(B Blank)
i through iv	i through iv
1-381and1-382	1-381and1-382
1-493 and 1-494	1-493 and 1-494
2-197 and 2-198	2-197 and 2-198
----------	2-280.1/(2-280.2 blank)

2. Retain this sheet in front of manual for reference purposes.

By Order of the Secretary of the Army:

PETER J. SCHOOMAKER
General, United States Army
Chief of Staff

Official:

SANDRA R. RILEY
Administrative Assistant to the
Secretary of the Army
0507405

DISTRUBUTION:
To be distributed in accordance with Initial Distribution Number (IDN) 3134466 requirements for TM 1-2840-252-23-1

CHANGE

NO. 1

HEADQUARTERS
DEPARTMENT OF THE ARMY
WASHINGTON, D.C., 30 August 2002

Aviation Unit and Aviation Intermediate

Maintenance Manual

ENGINE, GAS TURBINE, MODEL T55–L–714

(NSN 2840–01–353–7635)

DISTRIBUTION STATEMENT A: Approved for public release; distribution is unlimited

ENVIRONMENTAL/HAZARDOUS MATERIAL INFORMATION

Basic document dated 01 December 1994, has been reviewed for the presence of Class I ozone depleting chemicals. All references to Class I ozone depleting chemicals have been removed from this document by substitution with chemicals that do not cause atmospheric ozone depletion.

TM 1–2840–252–23–1, 1 December 1994, is changed as follows:

1. Remove and insert pages as indicated below. New or changed text material is indicated by a vertical bar in the margin. An illustration change is indicated by a miniature pointing hand.

Remove pages	Insert pages
W-7/W-8 blank	W-7/W-8 blank
- - - - - - -	A/B blank)
i and ii	i and ii
1–281 and 1–282	1–281 and 1–282
1–347 and 1–348	1–347 through 1-348.3/1–348.4 blank
1–489 and 1–490	1–489 and 1–490
2–41 and 2–42	2–41 and 2–42
2–191 and 2–192	2–191 and 2–192

2. Retain this sheet in front of manual for reference purposes.

By Order of the Secretary of the Army:

Official:

ERIC K. SHINSEKI
General, United States Army
Chief of Staff

JOEL B. HUDSON
Administrative Assistant to the
Secretary of the Army
0218202

DISTRIBUTION:

To be distributed in accordance with Initial Distribution Number (IDN) 313466, requirements for TM 1-2840-252-23-1.

INSERT LATEST CHANGED PAGES. DESTROY SUPERSEDED PAGES.

LIST OF EFFECTIVE PAGES

NOTE

ON A CHANGED PAGE, THE PORTION OF THE TEXT AFFECTED BY THE LATEST CHANGE IS INDICATED BY A VERTICAL LINE OR OTHER CHANGE SYMBOL IN THE OUTER MARGIN OF THE PAGE. CHANGES TO ILLUSTRATIONS ARE INDICATED BY MINIATURE POINTING HANDS. CHANGES TO WIRING DIAGRAMS ARE INDICATED BY SHADED AREAS.

Dates of issue for original and changed pages are:

Original..... 0..... 1 December 1994 Change……2 ..... 12 May 2005
Change..... 1.....30 August 2002

Total number of pages in this publication is 20 consisting of the following:

Page No.	*Change No.
Cover	2
Blank	2
W-1 through W-7	0
W-8 blank	1
A	2
B Blank	0
i through iv	2
v through xii	0
1-1 through 1-347	0
1-348 through 1-348.3	1
1-348.4 Blank	1
1-349 through 1-381	0
1-382	2
1-383 through 1-492	0
1-493	2
1-494 through 1-593	0
1-594 Blank	0
2-1 through 2-197	0
2-198	2
2-199 through 2-280	0
2-280.1	2
2-280.2 Blank	2
2-281 through 2-322	0

*Zero in this column indicates an original pages.

Technical Manual

No. 1-2840-252-23

HEADQUARTERS
DEPARTMENT OF THE ARMY
Washington, D.C., 1 December 1994

AVIATION UNIT AND AVIATION INTERMEDIATE MAINTENANCE MANUAL

ENGINE, GAS TURBINE, MODEL T55-L-714
NSN 2840-01-353-7635

REPORTING ERRORS AND RECOMMENDING IMPROVEMENTS

You can improve this manual. If you find any mistakes or if you know of a way to improve these procedures, please let us know. Mail your letter or DA Form 2028 (Recommended Changes to Publications and Blank Forms) located in the back of this manual, directly to: Commander, U.S. Army Aviation and Missile Command, ATTN: AMSAM-MMC-MA-NP, Redstone Arsenal, AL 35898-5000. A reply will be furnished to you. You may also provide DA Form 2028 information to AMCOM via e-mail, fax, or the World Wide Web. Our fax number is: DSN 788-6546 or commercial 256-842-6546. Our e-mail address is: 2028@redstone.army.mil. Instructions for sending an electronic 2028 may be found at the back of this manual immediately preceding the hard copy 2028. For the World Wide Web use: https://amcom2028.redstone.army.mil

DISTRIBUTION STATEMENT A: Approved for public release; distribution is unlimited

NOTE

This manual is printed in three columes as follows:
TM 1-2840-252-23-1, consisting of Table of Contents, Chapter 1, Chapter 2, pages 2-1 through 2-322
TM 1-2840-252-23-2, consisting of Table of Contents, Chapter 2, pages 2-323 through 2-425/(2-426 blank), Chapter 3, Chapter 4, Chapter 5, Chapter 6, pages 6-1 through 6-182.
TM 1-2840-252-23-3, consisting of Table of Contents, Chapter 6, pages 6-183 through 6-265/(6-266 blank), Chapter 7, Chapter 8, and Chapter 9 Appendix A through Appendix G, and an Alphabetical Index. The Appendix and Index are applicable to Volume 1 through 3.

TABLE OF CONTENTS

		Page
	HOW TO USE THIS MANUAL	vii
CHAPTER 1	INTRODUCTION AND ENGINE – GENERAL	
Section I	General Information and Data	1-1
Section II	Equipment Description and Data	1-3
Section III	Principles of Operation	1-13
Section IV	Repair Parts, Special Tools, TMDE, and Support Equipment	1-47
Section V	Service Upon Receipt	1-49
Section VI	Hoisting	1-111
Section VII	Troubleshooting	1-121
Section VIII	Servicing	1-297
Section IX	Preventive Maintenance Checks and Services	1-317
Section X	Maintenance Procedures	1-487
Section XI	Preparation for Storage or Shipment	1-509

TABLE OF CONTENTS (Continued)

Section XII	Standard Torque Limits	1-567
Section XIII	Standard Practices and Procedures	1-571
CHAPTER 2	COMPRESSOR SECTION-MAINTENANCE INSTRUCTIONS	2-1
Section I	Interstage Air-Bleed Actuator	2-5
Section II	Compressor Bleed Band	2-37
Section III	Anti-Icing Air Gallery Cover	2-47
Section IV	Compressor Housing	2-63
Section V	Stator Vane Assemblies	2-181
Section VI	Compressor Rotor Blades	2-235
Section VII	Air Diffuser Assembly	2-321
Section VIII	Output Shaft Seal and Housing Assembly	2-325
Section IX	Inlet Housing Cover Assembly	2-345
Section X	Air Inlet Housing Assembly	2-355
Section XI	T1 Temperature Sensor	2-359
Section XII	Air lines	2-367
CHAPTER 3	COMBUSTION SECTION-MAINTENANCE INSTRUCTIONS	3-1
Section I	Fuel Drain Valve	3-3
Section II	Combustion Section and Power Turbine	3-9
Section III	Combustion Section	3-117
Section IV	Combustion Chamber Vane Assembly	3-135
Section V	Combustion Chamber Liner	3-145
Section VI	Combustion Chamber Housing	3-171
CHAPTER 4	TURBINESECTION-MAINTENANCE INSTRUCTIONS	4-1
Section I	Thermocouple Jumper Lead	4-5
Section II	Left – and Right- Hand Bus Bar Assemblies	4-25
Section III	Fireshield Assembly	4-55
Section IV	Fireshield Section	4-65
Section V	Thermocouple Harness Assemblies	4-81
Section VI	Third Turbine Nozzle and Support	4-107
Section VII	Fourth Stage Power Turbine Rotor	4-131
Section VIII	No. 4 and 5 Bearing Package	4-165
Section IX	Fourth Stage Power Turbine Nozzle	4-247
Section X	Third Stage Power Turbine Rotor	4-279
Section XI	Second Turbine Disc Assembly	4-289
Section XII	Second Turbine Nozzle, Spacer, Case, and Bumper	4-313
Section XIII	First Turbine Disc Assembly	4-361
Section XIV	First Turbine Rotor Case	4-389

TABLE OF CONTENTS (Continued)

Section XV	Field Replacement First and Second Turbine disc Assembly	4-407
Section XVI	Tailpipe Assembly	4-415
CHAPTER 5	ACCESSORY GEAR SECTION-MAINTENANCE INSTRUCTIONS	5-1
Section I	Accessory Gearbox Assembly	5-3
Section II	PT Speed Pickup	5-41
Section III	PT Speed Pick-up Drive Assembly	5-49
Section IV	Starter Drive Assembly	5-57
Section V	Overspeed Drive and Outlet Cover Assembly	5-75
CHAPTER 6	FUEL SYSTEM-MAINTENANCE INSTRUCTIONS	6-1
Section I	Hydromechanical Assembly (HMA)	6-5
Section II	Hydromechanical Assembly (HMA) – Preparation for Storage or Shipment	6-27
Section III	Fuel Boost Pump Assembly	6-35
Section IV	Fuel Boost Pump Assembly- Preparation for Storage or Shipment	6-47
Section V	Left- and Right- Hand Fuel Manifold Assemblies	6-49
Section VI	Primer Tube Assembly	6-89
Section VII	Start Fuel Nozzles	6-97
Section VIII	Main Fuel Filter and Bracket	6-103
Section IX	In-Line Fuel Filter Assembly	6-121
Section X	Pressurizing Valve	6-135
Section XI	Flow Divider and Bracket	6-143
Section XII	Fuel Check Valve	6-153
Section XIII	Overspeed Solenoid Valve	6-159
Section XIV	Starting Fuel Solenoid Valve	6-167
Section XV	Fuel Lines	6-177
CHAPTER 7	ELECTRICAL AND IGNITION SYSTEMS-MAINTENANCE INSTRUCTIONS	7-I
Section I	Ignition Coil and Cable Assembly	7-3
Section II	Sparks Igniters	7-59
Section III	Ignition Exciter	7-71
Section IV	Primary Electrical Harness Assembly	7-81
Section V	Reversionary Electrical Harness Assembly	7-109
Section VI	Accessory Electrical Harness Assembly	7-137

TABLE OF CONTENTS CONTENTS (Continued)

Chapter 8	LUBRICATION SYSTEM-MAINTENANCE INSTRUCTIONS	8-1
Section I	Main Oil Pump, Speed Pickup Drive Assembly, Scavenge Oil Screen, And Related Parts	8-7
Section II	Gas Producer Speed Pickup	8-27
Section III	Oil Cooler Assembly	8-35
Section IV	Flow Programming Valve	8-53
Section V	Oil Temperature Transmitter	8-63
Section VI	Oil Filter Assembly and Oil Filter Strain	8-69
Section VII	Oil Filter Cover Assembly and Oil Filter Element	8-83
Section VIII	Dual Chip Detector	8-91
Section IX	Oil Lines	8-107
Section X	Starter Gearbox Filter	8-237
Section XI	No. 2 Bearing Pressure Oil Connector	8-243
Section XII	No. 2 Bearing Pressure Oil Strainer	8-249
Section XIII	No 4 and 5 Bearing Filter	8-255
Section XIV	Oil Drain Cock	8-267
Section XV	Chip Detector	8-273
Section XVI	Oil Level Detector	8-283
Section XVII	Oil Level Float Assembly	8-309
CHAPTER 9	TORQUEMETER SYSTEM-MAINTENANCE INSTRUCTIONS	9-1
Section 1	Torquemeter Sensor	9-3
APPENDIX A	REFERENCES	A-1
APPENDIX B	MAINTENANCE ALLOCATION CHART	B-1
APPENDIX C	EXPENDABLE SUPPLIES AND MATERIALS LIST	C-1
APPENDIX D	WIRING DIAGRAMS	D-1
APPENDIX E	ILLUSTRATED LIST OF MANUFACTURED ITEMS	E-1
APPENDIX F	ABBREVIATIONS	F-1
APPENDIX G	DECU FAULT ISOLATION	G-1
	GLOSSARY	GLOSSARY-1
	SUBJECT INDEX	INDEX-1

HOW TO USE THIS MANUAL

OVERVIEW

This information gives a general description of the entire manual and how to use it along with the repair parts and special tools list (TM 1-2840-252-23P). If you cannot find information, you cannot do the job. Learning how to use this manual can help. Check how the manual is put together and how its system works.

1. DESCRIPTION OF MANUAL

This manual has nine chapters and seven appendixes. Each chapter is divided into sections. Each section in Chapter 1 is divided into paragraphs or tasks. Each section in Chapters 2 thru 9 is divided into tasks. The tasks tell you what you need and how to do any job. The paragraphs have specific information you will need to know. The appendixes have general information you will need to know. They list references, expendable supplies and materials etc.

A. Chapters. Chapters divide the manual into usable engine maintenance groups. They align with standard groupings shown in the MAC chart. Refer to Appendix B.

B. Sections. Sections divide the chapters into smaller groups. They have information about the components of parts for which the chapter is titled. They align with components shown in the MAC chart. Refer to Appendix B.

C. Paragraphs/Tasks. Paragraphs make up some of the sections in Chapter 1. They contain specific information about the engine. Tasks make up some of the sections in Chapter 1 and the sections in Chapters 2 thru 9. It is the tasks that have the information you need to do any job. The upper heading after the task number is the task name. It tells the job to be done in the task. The task heading at the top of each page specifies the task to be performed and the lowest maintenance level authorized to perform that task. Tasks to be accomplished by the Aviation Intermediate Maintenance level only will be reflected by the term (AVIM) at the end of the task heading. If the term (AVIM) is not at the end of the task heading, then either the Aviation Unit or Aviation Intermediate Maintenance (AVUM) or (AVIM) level can accomplish that task. All paragraphs and tasks are numbered. This helps you find what you need when you need it, USE THE INDEX TO FIND THE PARAGRAPH OR TASK YOU NEED. DO NOT USE PAGE NUMBERS. Paragraphs and tasks are numbered as follows:

(1) Two-element numbers are used as shown in the examples:

CHAPTER 1

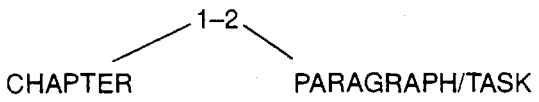

CHAPTERS 2 THRU 9

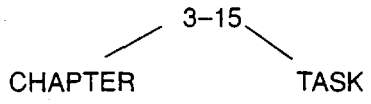

(2) The first number is the number of the chapter. The second number is the paragraph or task in that chapter. The two elements are separated by a dash.

HOW TO USE THIS MANUAL (Continued)

D. Page Numbers. Pages are numbered by order of chapters, from front to back of manual. They bare used as follows:

(1) Two-element numbers are used as shown in the example:

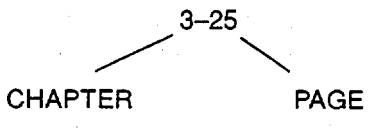

(2) The first number is the number of the chapter. The second number is the page in that chapter.

E. Initial Setup Tables. An initial setup table is the first part of every task in the manual. It lists information you will need to know before you can do the job. How to prepare the work area, what tools will be needed, and other critical information are listed when they apply. The following headings are used when they apply.

(1) Applicable Configuration. If the task does not apply to all engine configurations, different configurations covered by the same procedure will be brought to your attention.

(2) Tools. Tools, tool kits, or shop sets needed to do the task are listed here. If tools from your repairman's tool kit are needed, the kit is listed. Individual tools from your shop set are listed, as needed, by name, type, and size. Tools you need that are not in the kit or set, are listed by name, type, and size. Special tools and test and support equipment are listed by a T-number. Find these items in Table 1-1.

(3) Materials. This heading lists all expendable items and support materials (things you normally use up doing a job). These are things like solvent, rags, grease, safety wire, etc. They are listed by an E-number; example: Grease (E27). Find these items in Appendix C.

(4) Parts. This heading lists all mandatory replacement parts (parts you must replace if you expose or remove them during the task). These are things like gaskets, packings, cotter pins, lockwashers, etc. They are listed by RPSTL nomenclature.

(5) Personnel Required. This heading lists the people needed to do the job. The Maintenance Allocation Chart (MAC) (Ref. Appendix B) assigns maintenance functions to the authorized maintenance level without regard to the MOS skill level. When more than one of any MOS is needed, the number needed is shown in parentheses. The text will tell you when the additional MOS is needed.

(6) References. This heading lists related tasks and TM's you will need to do the job. The task steps tell you when these tasks and TM's are needed.

(7) Equipment Condition. This heading lists all the things to be done before you start the job. To help, the number of the task that tells you how to do them is given when applicable.

NOTE

All tasks covered in this manual are off helicopter tasks with the exception of the troubleshooting procedures that are primarily performed on helicopter in Chapter 1, Section VII. If a task is an off engine task, it will be brought to your attention under "Equipment Condition," Example: "Off Engine Task."

(8) General Safety Instructions. Safety precautions that must be observed when you are doing the job are described under this heading. Warnings also include basic first aid instructions.

F. Locator- Illustrations. When needed (for removal, installation and other procedures) a locator illustration is included on or facing initial setup pages. They show you the area of the engine to be worked on. Parts involved in the task are called out.

G. Illustration Arrows. You will find five types of arrows used. They are as shown below:

Locator arrow used to show parts that cannot be easily seen or to indicate area of engine being worked on.

Index arrow used to identify parts on artwork.

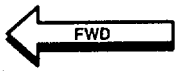

Direction arrow used to indicate position; i.e., fwd, aft.

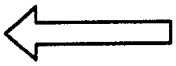

Movement arrow used to indicate direction of movement.

Movement arrow used to indicate direction of rotation.

H. Procedures. Step by step procedures tell you how to do the job. They are arranged in logical sequence to help you get the job done efficiently.

HOW TO USE THIS MANUAL (Continued)

I. Use of Clock Positions. Many procedures contain references to or views of clock positions. Comparing engine to face of clock is an easy way to locate specific engine areas. To help find clock positions on the engine, remember the following:

(1) Clock position is always determined from rear of engine.

(2) Once a clock position is determined from rear of engine, visualize that clock position along entire length of engine.

(3) Hoist adapter (1) and starter drive assembly (2) are mounted at the 12-o'clock position.

(4) Two fuel drain valves (3) are mounted at the 6-o'clock position.

(5) Some procedures show engine mounted vertical in maintenance stand. This does not change the method for finding clock positions on the engine.

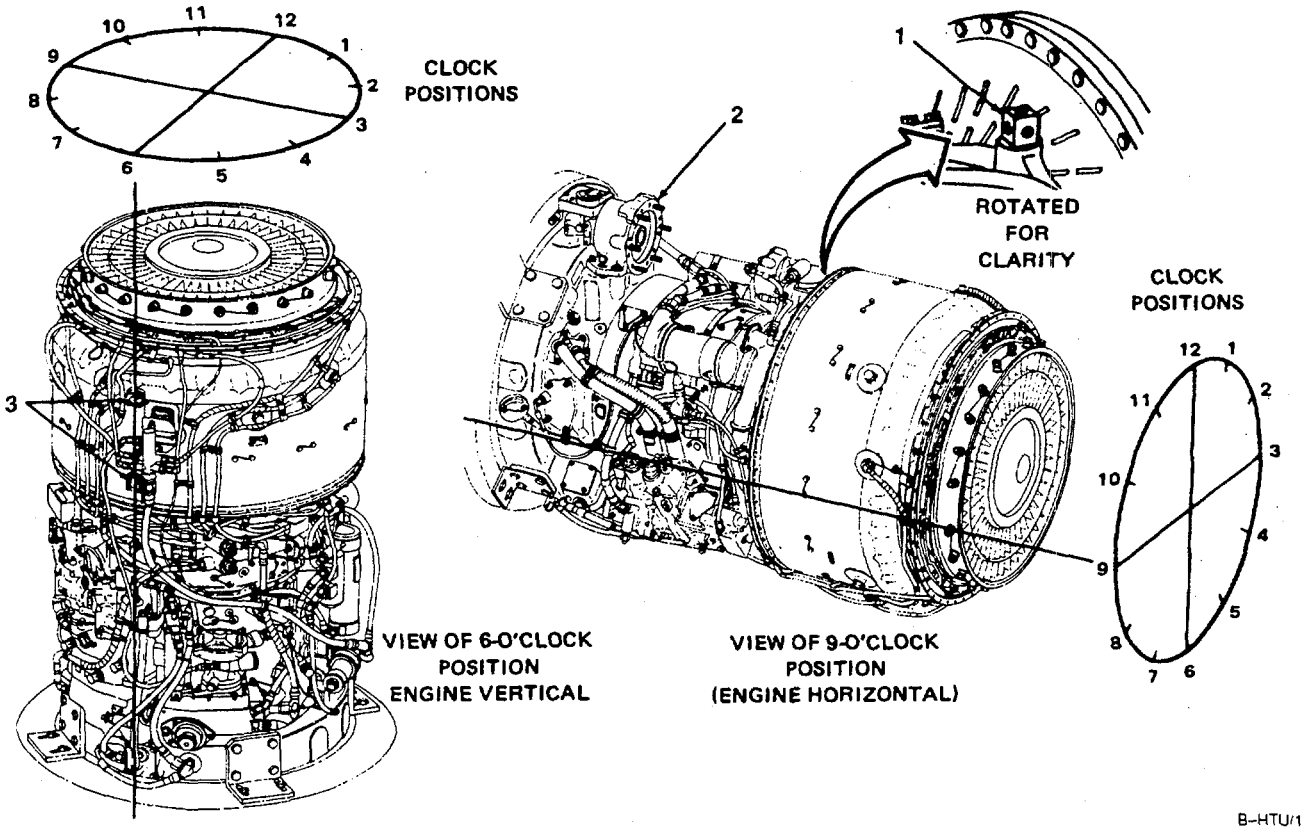

HOW TO USE THIS MANUAL (Continued)

J. Appendix A- References. This appendix lists all referenced publications needed to perform the maintenance procedures in this manual.

K. Appendix B - Maintenance Allocation Chart (MAC). This appendix consists of four sections as follows:

Section I - Introduction. This section is a summary of what is in the MAC.

Section II - This section is the MAC. The MAC assigns maintenance functions in accordance with the Three Levels of Maintenance concept for Army Aviation. The MAC has six columns, containing the following information:

Columns 1 and 2 - Functional Groups. These columns identify maintenance significant components, assemblies, subassemblies, and modules.

Column 3 - Maintenance Function. This column lists the maintenance functions to be performed on the items listed in column 2.

Column 4 - Maintenance Categories. The maintenance categories (levels) AVUM, AVIM, and DEPOT are listed with individual columns. These columns identify the maintenance level at which each maintenance function is to be performed.

Column 5 - Tools and Equipment. This column lists the reference code identifying the tool or test equipment required, as listed in Section III.

Column 6 - Remarks. Remarks identified by an alphabetical code, where applicable, are listed in Section IV and identified in column 6.

Section III - Tool and Test Equipment Requirements. This section consists of five columns, containing the following information:

Tool or Test Equipment Reference Code. This column lists the reference code listed in Column 5 - Tools and Equipment in the MAC.

Maintenance Category. This column lists the maintenance category (level) authorized to use the tool or test equipment.

Nomenclature. This column lists the nomenclature of the tools and test equipment.

National/NATO Stock Number. This column lists the stock number applicable to each tool or test equipment.

Tool Number. The tool number is listed to aid in identifying the tool or test equipment.

Section IV - Remarks. This section has two columns, containing the following information:

Reference Code. This column contains alphabetical codes or numbers in parentheses corresponding to the codes appearing in the applicable columns in the MAC.

Remarks/Notes. This column contains the actual notes cross-referenced by the reference codes to the MAC.

HOW TO USE THIS MANUAL (Continued)

L. Appendix C - Expendable Supplies and Materials List. This appendix lists all expendable supplies and materials called out in the manual. The following columns are provided.

(1) Item Number. This is the E-number assigned to the expendable item. It is referred to in the detail procedures. Example: "Use cleaning solution (E12)."

(2) National Stock Number. This is the national stock number assigned to the item. Use it to request or requisition the item.

(3) Description. This column lists the Federal name and, if required, a description to identity the item. The last line for each item shows the part number followed by the Contractor and Government Entity Code (CAGEC) in parentheses, if applicable.

M. Appendix D - Wiring Diagrams. This appendix contains the engine wiring diagram. Use this appendix to help you understand the description of the engine electrical system.

N. Appendix E - Illustrated List of Manufactured Items. This appendix lists and illustrates any parts or tools you may have to make to do a job,

O. Appendix F - Abbreviations. This appendix lists abbreviations you will find in the manual.

P. Appendix G - DECU Fault Isolation. This appendix contains procedures to troubleshoot malfunctions.

Q. Glossary. Definitions of terms you find in the manual are listed here to help you.

R. Index. This appears at the end of the manual. It lists all subjects in the manual by alphabetical order. Items are listed as follows:

(1) Each paragraph/task number is listed with the subject it applies to:

Example:

	Para./ Task	Page
Fuel Boost Pump Assembly		
Remove	6-8	6-35
Clean	6-9	6-37
Inspect	6-10	6-38
Repair	6-11	6-39
Install	6-12	6-42

HOW TO USE THIS MANUAL (Continued)

(2) Some tasks are listed by the job to be done. The subjects or components are listed under them.

Example:

	Para./ Task	Page
Remove		
Accessory Gearbox Assembly	5-1	5-3
Anti-Icing Air Gallery Cover	2-15	2-47

Check over the index and see how it can work for you. It can make finding information easy.

S. Part Numbers. Part numbers are not listed in this manual except where absolutely needed for clarity. You can find the part number you need in the Repair Parts and Special Tools List (RPSTL) (TM 1-2840-252-23P).

2. HOW TO FIND WHAT YOU NEED

A. General Information (Troubleshooting).

(1) Look at the "INDEX," Find "Symptom Index." The "INDEX" gives the paragraph number for the symptom index. Go to the Symptom Index.

(2) Find your symptom in the "Symptom Index." Next to the symptom is the page number of the troubleshooting procedure that will help you solve your problem. Turn to the troubleshooting procedure page.

(3) Follow the troubleshooting procedure until you find the problem. The troubleshooting procedure gives you the task number of the maintenance procedure needed to fix the engine. Turn to that task.

(4) Follow the maintenance procedure and complete all work. Check again and make sure you are right. When the job is done, recheck that the trouble has been corrected.

B. Part Numbers. To find a part number go to the RPSTL (TM 1-2840-252-23P). Find the "How To Locate Repair Parts" paragraph in the introduction. It will tell you how to find your part number.

C. Tasks. To find any task, use the "INDEX," Find the subject you want. The "INDEX" gives you the task number you want.

HOW TO USE THIS MANUAL (Continued)

3. HOW TO PREPARE FOR A TASK

Read the initial setup page carefully before starting. It tells you what you will need and what you have to know to start the job. DO NOT START A JOB UNTIL:

- You know what is needed.
- You have the things you need.
- You understand what to do.

A. If a tool has a T-number in front of it, go to the Special Tools and Test and Support Equipment List in Table 1-1. Read down the far left-hand column to your T-number. This is the tool you need for your task.

B. If an expendable material has an E-number in front of it, go to the Expendable Supplies and Materials List in Appendix C. Read down the Item Number column to your E-number. This is the expendable you need for your task.

C. If parts are listed, they can be drawn from supply. Before you start the job, check and make sure you can get the needed parts. Part numbers are listed in TM 1-2840-252-23P.

D. Check for personnel required.

E. If preliminary procedures are listed under "Equipment Conditions," BE SURE THE LISTED JOBS ARE DONE; then do this job.

4. HOW TO DO THE JOB

Before starting, read the entire task. Familiarize yourself with the entire procedure before you begin the task. As you read, remember the following:

A. PAY SPECIAL ATTENTION TO THE FOLLOWING: **WARNING** **CAUTION** **NOTE**

B. When values are <u>underlined</u> or followed by the word **INSPECT,** an inspector must OK the completed step.

C. Major steps and key words are printed in **bold type** for experienced repairers.

D. A GLOSSARY is provided. It lists the special words and terms used in this manual and gives their meaning. Use it. It may help you understand the instructions.

E. A list of ABBREVIATIONS is provided in Appendix F. It lists, in alphabetical order, all abbreviations used in the manual.

F. If detailed instructions are not given for a standard procedure, such as how to use a torque wrench or how to blend repair, refer to STANDARD PRACTICES AND PROCEDURES in Chapter 1, Section XIII.

CHAPTER 1

INTRODUCTION AND ENGINE GENERAL

CHAPTER OVERVIEW

This chapter contains standard data and information about forms, records, reports, and general procedures. It also contains descriptions and-other data about the engine and its major components. The chapter is divided into the following sections:

SECTION	TITLE	PAGE
I	General Information	1-1
II	Equipment Description and Data	1-3
III	Principles of Operation	1-13
IV.	Repair Parts; Special Tools; Test, Measurement, and Diagnostic Equipment (TMDE); and Support Equipment	1-47
V	Service Upon Receipt	1-49
VI	Hoisting	1-111
VII	Troubleshooting	1-121
VIII	Servicing	1-297
IX	Preventive Maintenance Checks and Services	1-317
X	Maintenance Procedures	1-487
XI	Preparation for Storage and Shipment	1-509
XII	Standard Torque Limits	1-567
XIII	Standard Practices and Procedures	1-571

SECTION I

GENERAL INFORMATION

1-1 SCOPE

Type of Manual:

Aviation Unit and Aviation Intermediate Maintenance Manual

Model Numbers and Equipment Name:

T55-L-714 - Engine, Gas Turbine

Purpose of Equipment:

Powerplant for MH47E Helicopter

1-2 MAINTENANCE FORMS, RECORDS, AND REPORTS

Department of the Army forms and procedures used for equipment maintenance will be those prescribed by DA Pamphlet 738-751, Army Maintenance Management System - Aviation (TAMMS-A).

1-3 DESTRUCTION OF ARMY MATERIEL TO PREVENT ENEMY USE

NOTE

Decision to destroy an engine shall be made by appropriate authority.

Destroy engine to prevent use by enemy when evacuation to safety is not possible. Refer to TM750-244-1-5.

1-4 PREPARATION FOR STORAGE AND SHIPMENT

These requirements, including packaging and storage, are included in Section XI.

1-5 QUALITY ASSURANCE/QUALITY CONTROL (QA/QC)

Refer to TM55-411.

1-6 OFFICIAL NOMENCLATURE, NAMES AND DESIGNATIONS

The following cross reference list contains nomenclature used in the manual which deviates from official nomenclature.

NOMENCLATURE CROSS-REFERENCE LIST

Common Name	Official Nomenclature
Main Oil Pump	Rotary Pump
In-Line Fuel Filter	Pressure Fluid Filter
Differential Pressure Indicator	Deltadyne Indicator
Centrifugal Impeller	Centrifugal Compressor Rotor
Thermocouple Jumper Lead	Electrical Lead
Output Shaft	Spur Gearshaft
Start Fuel Nozzle	Fuel Injection Nozzle
Starter Gearbox Filter	Lube Oil Jet
Air Diffuser Assembly	Turbine Diffuser Case
Fuel Boost Pump	Centrifugal Pump
Main Fuel Filter	Filter and Indicator
Scavenge Oil Screen	Strainer Element

1-7 REPORTING EQUIPMENT IMPROVEMENT RECOMMENDATIONS (EIR)

If your T55-L-714 engine needs improvement, let us know. Send us an EIR. You, the user, are the only one who can tell us what you do not like about your equipment. Let us know why you do not like the design. Put it on an SF 368 (Quality Deficiency Report). Mail it to:

Commander,
U.S. Army Aviation and Troop Command,
ATTN: AMSAT-I-MP,
4300 Goodfellow Blvd.,
St. Louis, MO. 63120-1798.

We will send you a reply.

SECTION II

EQUIPMENT DESCRIPTION AND DATA

1-8 EQUIPMENT CHARACTERISTICS, CAPABILITIES, AND FEATURES

Engine characteristics, capabilities, and features are as follows:

CHARACTERISTICS

- Manufacturer ..... Textron Lycoming Division
  Stratford, Conn.
- Model..... T55-L-714
- Type ..... Free power turbine, two stage
- Dimensions
  - Overall Length..... 46.527 Inches
  - Overall Length - Tailpipe Attached ..... 77.527 Inches
  - Nominal Diameter..... 24.25 Inches
- Weight (Dry) ..... 832 Pounds (Approximate)
- Type Fuel ..... MIL-T-5624 (Grade JP-4 or JP-5)
  or MIL-T-83133 (Grade JP-8)

- Type Oil ..... MIL-L-23699 or MIL-L-7808
- Rotational Directions

  Compressor Rotor ..... Counterclockwise
  First Turbine Rotor Disc ..... Counterclockwise
  Second Turbine Rotor Disc ..... Counterclockwise
  Output Shaft ..... Clockwise
  Power Turbine Shaft ..... Clockwise
  Third Turbine Rotor Disc ..... Clockwise
  Fourth Turbine Rotor Disc ..... Clockwise

CAPABILITIES AND FEATURES

- Combustion Chamber ..... External Annular
- Compressor Ratio (Maximum) ..... 9.32 to 1
- Horsepower
  Contingency ..... 5069 (2 minutes)
  Maximum ..... 4867 (10 minutes)
  Intermediate 4527
  Maximum Continuous 4168

- Maximum Altitude ..... 25,000 Feet
- Power Control ..... FADEC - Full Authority Digital Electronic Fuel Control
- Power Levels N1..... 100%= 18,720 RPM
- Power Levels N2..... 100% = 15,333 RPM

1-9 LOCATION AND DESCRIPTION OF MAJOR COMPONENTS

Get to know your engine. The major components are listed and keyed in the following diagrams.

A. STARTER DRIVE ASSEMBLY. Mounts at the 12-o'clock position on the inlet housing and provides the mounting pad for the starter. Internally connects to a shaft which is connected by gearing to the compressor rotor.

B. MAIN FUEL FILTER. Filters fuel prior to delivery to the engine hydromechanical assembly. Provides a visual indication when it is close to bypassing its element because of clogging.

C. STARTING FUEL SOLENOID VALVE. Controls fuel flow to the starting fuel primer tube and start fuel nozzles. Activated by airframe-mounted switch.

D. PRESSURIZING VALVE AND FLOW DIVIDER. Mounts at the bottom of the combustion section. Divides fuel flow from in-line fuel filter into pressurizing valve and then primary and secondary flows to the main fuel manifolds.

E. FULL AUTHORITY DIGITAL ELECTRONIC CONTROL SYSTEM (FADEC). The engine is controlled by a full authority digital electronic control system. Includes an airframe mounted digital electronic control unit (DECU) and an integrated hydromechanical assembly (HMA) which mounts on the accessory gearbox.

F. WATER WASH CHECK VALVES. The compressor wash mode directs air through two check valves to the air actuator which closes for washing the compressor. A third check valve prevents the pressurized air from bleeding off into the diffuser through the P3 air source.

G. OVERSPEED SOLENOID VALVE. The overspeed system activates the fuel reducing solenoid in the fuel line which reduces fuel flow in the event of a power turbine overspeed.

H. INTERSTAGE AIR-BLEED ACTUATOR. Pneumatic device that mounts on the compressor housing. Connects mechanically to compressor bleed band. Opens and closes bleed band on input signal from hydromechanical assembly.

1. OIL COOLER. Mounts on interstage air-bleed actuator and by bracket to compressor housing. Uses fuel flowing through passages surrounding oil paths to absorb heat from the oil. Connects in fuel system between the hydromechanical assembly and the in-line fuel filter. Connects in oil system between the main oil filter and certain major bearing filters and strainers.

J. OIL FLOW PROGRAMMING VALVE. Located at the oil cooler and used to regulate oil flow in accordance to engine demand. The programing valve adjusts the oil flow and bypasses the excess oil back into the oil reservoir.

K. IGNITION EXCITER. Mounts on brackets secured to compressor housing. Connected electrically to spark igniters by coil and cable assembly. Contains a vibrator transformer which converts low voltage to high voltage.

L. IN-LINE FUEL FILTER. Mounts on bracket on inlet housing. Provides final fuel filtering prior to delivery to the main fuel manifolds. Contains a paper filter element. Provides a visual indication when it is close to bypassing its element because of clogging.

M. TORQUEMETER SYSTEM. Provides a means to monitor engine power output. System consists of output shaft measuring shaft torque and a torque sensor that provides a signal to the airframe mounted signal conditioner.

N. ACCESSORY GEARBOX ASSEMBLY. Mounts on the inlet housing. Contains drive gears and provides mounting pads for the fuel boost pump, main oil pump, redundant Power Turbine (PT) speed pickups, hydromechanical assembly, and power turbine overspeed governor drive. Contains self-sealing chip detector allowing inspection without loss of oil. The power turbine overspeed governor drive is connected through a shaft and gearing to the power output shaft. All other drives are connected through a shaft and gearing to the compressor rotor.

O. FUEL BOOST PUMP. Mounts on the accessory gearbox assembly. Delivers fuel from the airframe fuel supply through the main fuel filter to the hydromechanical assembly. Increases fuel pressure slightly ensuring a positive pressure at the hydromechanical assembly inlet.

P. MAIN OIL PUMP. Mounts on the rear of the accessory gearbox assembly. Contains three elements within a common housing. One element supplies lubricating oil pressure. The second element returns main scavenge oil to the integral oil tank in the inlet housing. The third element returns No. 4 and 5 bearing scavenge oil to the oil tank. Contains an adjustable pressure relief valve to regulate oil pressure. Contains check valve to keep oil from entering engine when it is not running. Also provides external mounting and drive gear for Gas Producer (GP) speed pickup drive assembly.

Q. FUEL DRAIN VALVE ASSEMBLIES. Located at 6-o'clock position on combustion chamber. Spring-loaded open. When engine is running, internal engine pressure keeps valve closed. When engine is stopped, internal pressure is removed and valve opens allowing unburned fuel in the combustion chamber to be drained.

R. AIR INLET HOUSING ASSEMBLY. Located at front of engine. One-piece casting forming an inner and outer housing joined by four hollow struts. Contains engine oil supply tank. Internally provides mounting surfaces for the output shaft support housing, torquemeter head assembly, accessory drive gear assembly (with all gearing to extract power for the accessory gearbox assembly), and the No. 1 and No. 3 bearings and supports. Outer housing has four equally spaced engine mounting pads. Externally provides mounting pads for the starter drive assembly, oil filler assembly, torque sensor, T1 temperature sensor, and oil level indicator.

S. COMPRESSOR HOUSING ASSEMBLY. Consists of two halves that fit around the compressor rotor assembly. Secures in front to inlet housing assembly, and to the air diffuser assembly in the rear. :Stator vanes, secured inside the housing, fit between the compressor rotor assembly stages when housing is in place. The first stage stator vane assembly is backfilled with RTV at time of installation to reduce vibration and to provide improved vibration dampening.

T. COMPRESSOR ROTOR ASSEMBLY. Supported at the inlet housing by the No. 1 main bearing and at the air diffuser assembly by the No. 2 main bearing. Consists of seven compressor stages and a centrifugal impeller tightly fitted on a common shaft.

U. AIR DIFFUSER ASSEMBLY. Mounts on compressor housing rear flange. Supports combustor assembly and non-turning parts of turbine section and provides mounting surface for No. 2 bearing housing. Contains internal vanes to cut down on air swirl and direct compressor air to combustion section. Also contains internal oil tubes for No. 2 bearing lubrication.

V. GAS PRODUCER TURBINE SECTION. Consists of curl assembly, first turbine nozzle assembly, cylinder, first turbine disc assembly, spacer, second turbine nozzle assembly, and second turbine disc assembly. Discs and spacer are coupled together and mounted on rear of compressor rotor shaft. All other parts are supported by the air diffuser assembly.

W. COMBUSTOR ASSEMBLY. Mounts on the air diffuser assembly. Consists of a combustor housing, a vane assembly, and a liner assembly. Liner has holes arranged to control air for cooling and combustion. The housing assembly fits around the liner assembly and the power turbine assembly and provides an area for combustion and expansion of gases.

X. POWER TURBINE ASSEMBLY. Mounts to and fits into the combustor assembly. Power shaft goes forward through the compressor rotor shaft. Supported in front by No. 3 main bearing. Supported in rear by No. 4 and 5 main bearing which are part of the power turbine assembly. Contains two disc assemblies and two nozzle assemblies. First disc assembly (third turbine disc) and power shaft are made as one piece. The second disc assembly (fourth turbine disc) mounts on the shaft so the shaft and disc assemblies rotate as a unit. Also contains thermocouple harness and probes so temperature at power turbine inlet may be monitored. Internally contains oil tubes for the No. 4 and 5 bearing lubrication.

Y. TAILPIPE ASSEMBLY. Mounts on rear of engine, directs exhaust gases overboard and also reduces exhaust gas temperature.

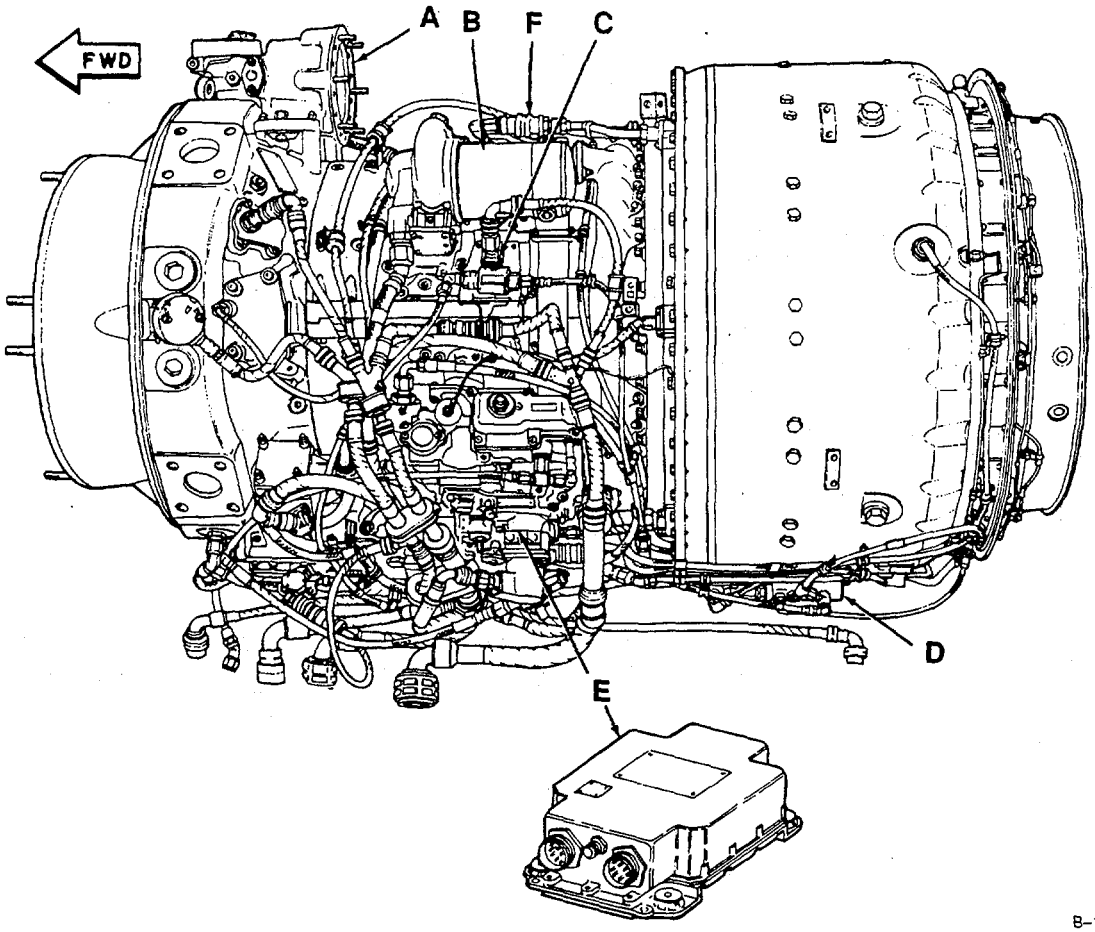

B-1-9/1

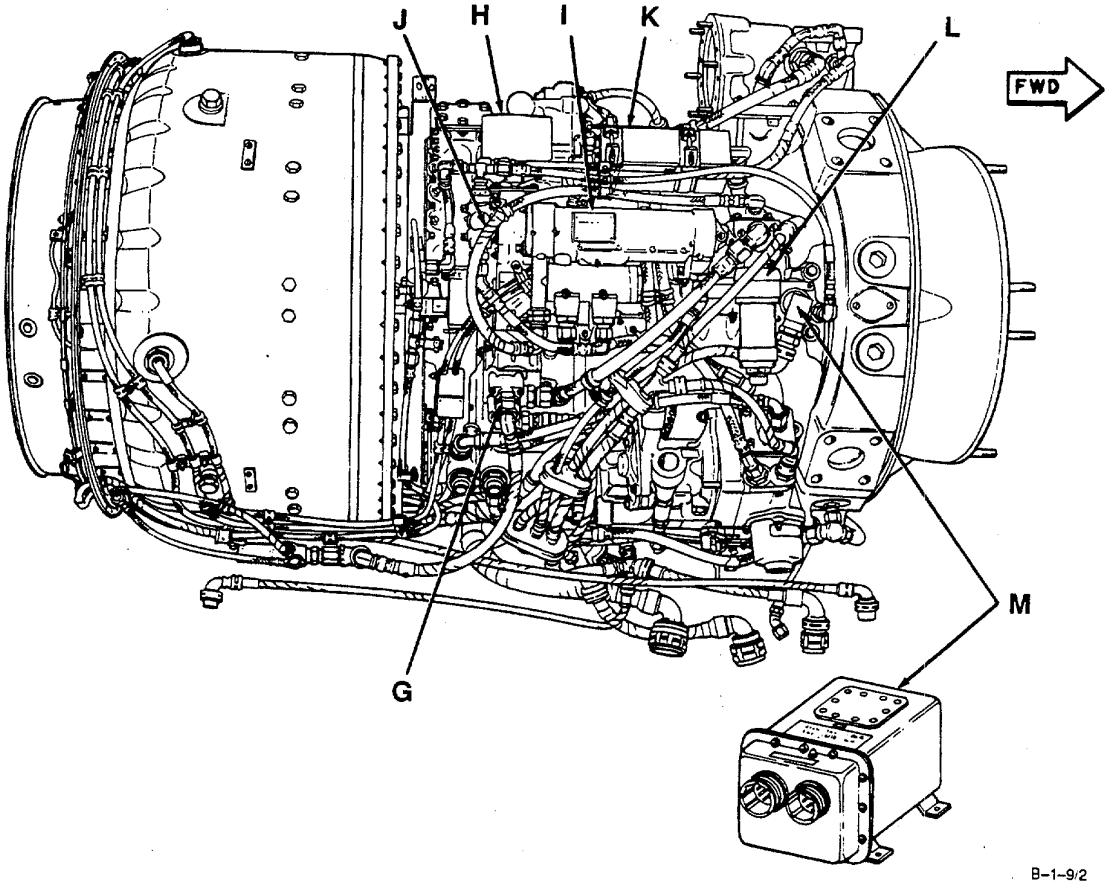

B-1-9/2

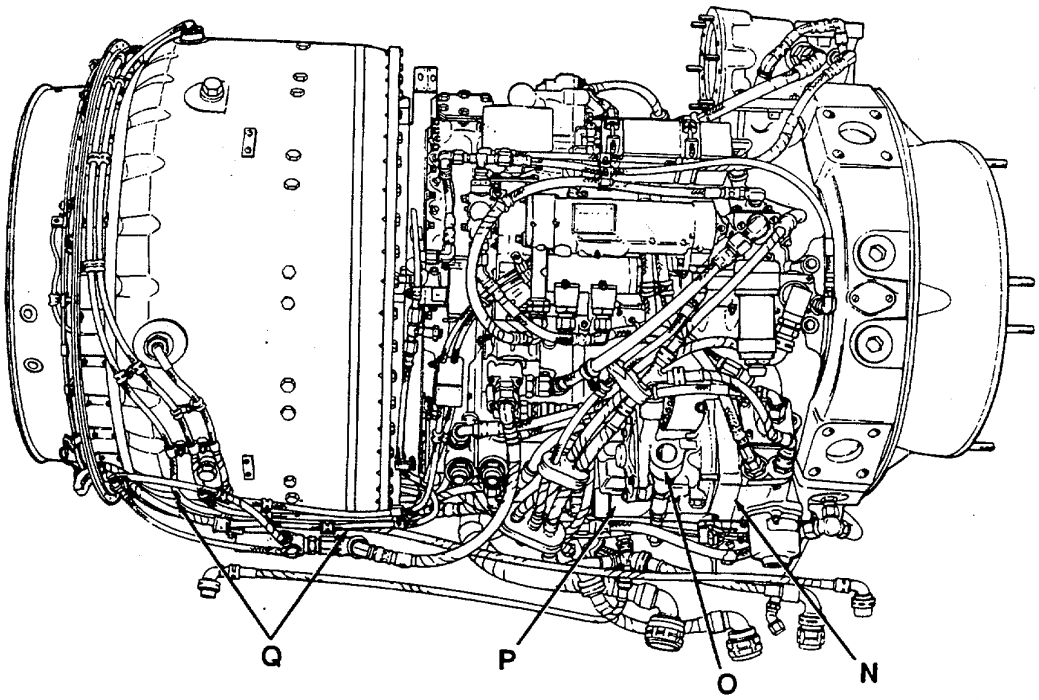

B-1-9/3

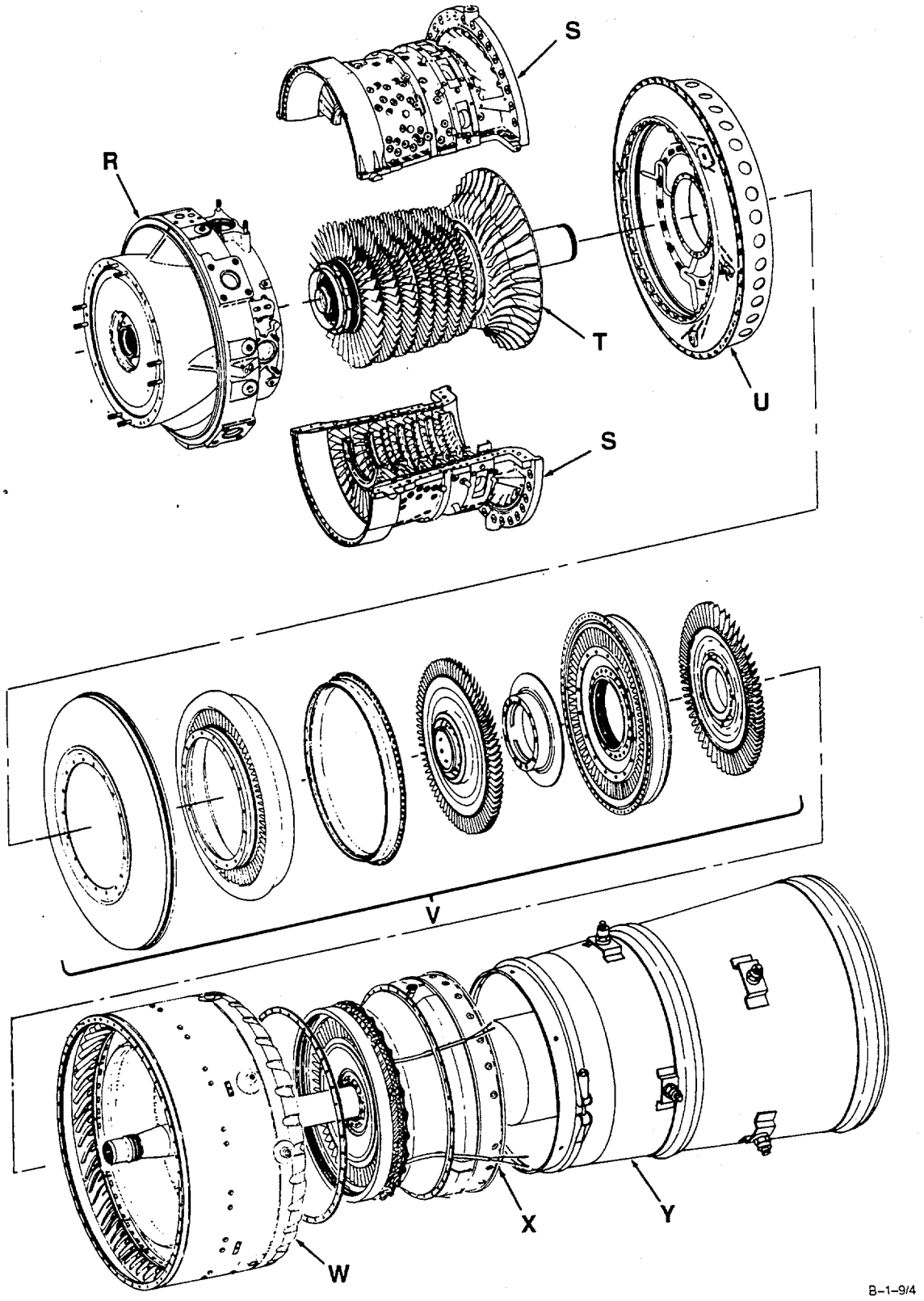
S
R
T
U
S
V
X
Y
W
B-1-9/4

1-10 DIRECTIONAL REFERENCES

The following directional references and terms are used in this manual.

Direction	Description
Forward	End of engine from which power is extracted.
Aft	End of engine from which exhaust gases are expelled.
Right/Left	Determined by observing engine from aft end.
Bottom	Determined by location of accessory gearbox assembly.
Top	Determined by location of starter mounting pad.
O'clock	Position expressed as viewed from aft end of engine.
Direction of Rotation	Determined as viewed from rear of engine. (Clockwise or Counterclockwise).

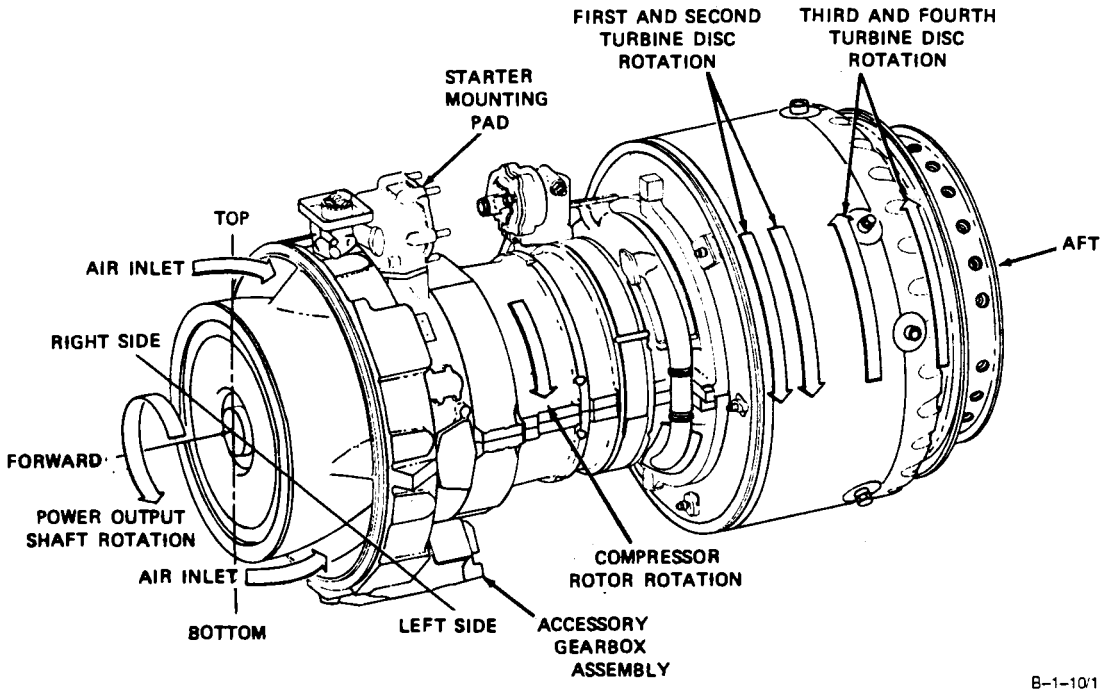

1-11 EQUIPMENT DATA

This paragraph lists equipment data which may help you.

Equipment Data

- Oil System Capacity ..... 3.75 gallons
- Electrical Requirements
  - Ignition Exciter Unit ..... 2.5 amps during starting
  - Starting Solenoid Valve ..... 1.5 amps during starting
  - Chip Detector ..... 0.5 amps continuous
  - Oil Temperature Transmitter ..... 0.25 amps continuous
  - Low Oil Level Switch ..... 0.5 amps continuous
  - Flow Reducing Overspeed Valve ..... 1.5 amps at overspeed
  - DECU - Primary ..... 6.0 amps continuous - primary
  - DECU - Reversionary ..... 3.0 amps continuous - reversionary

1-12 SAFETY, CARE, AND HANDLING

Observe all general precautions and safety regulations. Remember, engine is heavy. Do not try to lift or work underneath engine without observing all regulations cautions, and warnings.

SECTION III

PRINCIPLES OF OPERATION

1-13 ENGINE

A. The T55-L-714 engine is a turboshaft gas turbine engine. The three major sections are the compressor section, the combustor section, and the turbine section. These sections are designed to form a reverse annular flow path for air and hot gases. Externally they provide mounting pads for engine related accessories and components. The compressor rotor is directly connected to the gas producer turbine disc assemblies. The power turbine disc assemblies are directly connected to the integral shaft assembly. The integral shaft assembly, which runs inside of the compressor shaft, is splined to the output shaft. The output shaft is located at the forward end of the engine. Its speed is equal to power turbine speed.

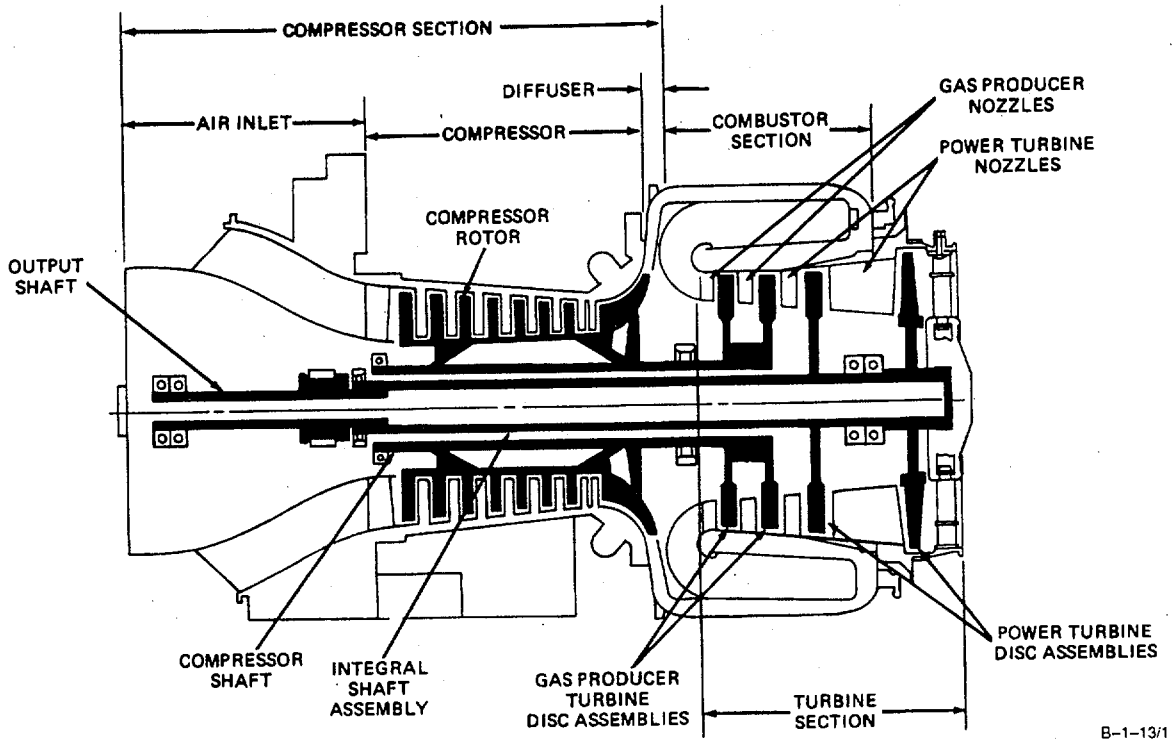

B. As the compressor rotor is turned by the starter system, air enters the inlet housing. This air is directed into the compressor rotor area and is compressed. The compressed air flows through the air diffuser and into the combustion chamber. Some of this air mixes with fuel from two starting fuel nozzles to form a combustible mixture. Four spark igniters provide spark and ignite the mixture. This creates hot expanding gases which are discharged through the turbine section. Some energy from the hot gases drives two gas producer turbine discs which drive the compressor rotor. The remaining energy drives two power turbine discs which drive the output shaft. When the engine reaches a certain speed, the Hydromechanical Assembly (HMA) and flow divider allow metered main fuel to flow to 28 main fuel nozzles. These nozzles allow fuel to flow into the combustion chamber where it is ignited by burning starting fuel.

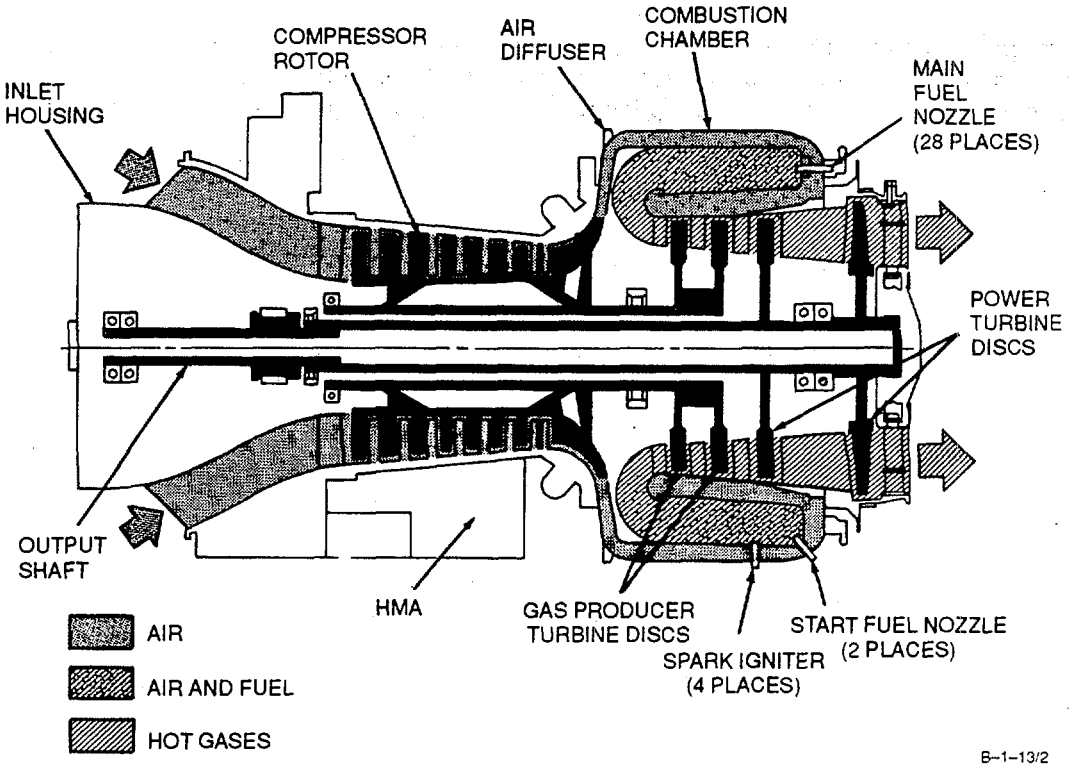

C. The engine control system includes a full authority digital electronic fuel control (FADEC), compressor bleed control, turbine temperature, torque sensing system and overspeed controls, and other control units required for proper and complete automatic control of the engine. Principal elements of the full authority digital electronic control (FADEC) system are:

(1) An airframe mounted digital electronic control unit (DECU) that contains both a primary and back-up reversionary channel in the event the primary control becomes non-operational. The unit also contains a built-in diagnostic fault display window and bi-directional serial data port for extraction of engine history data.

(2) An integrated HMA which mounts on the engine accessory gearbox. The assembly includes a jet-induced high pressure fuel pump, an integral alternator for dedicated electrical power above 60 percent N1 and a separate electromechanical primary fuel metering unit and backup reversionary fuel control.

1-14 COMPRESSOR SECTION

A. Consists of approximately the front two-thirds of engine. Major functions are to provide air inlet, air compression, and air distribution. Also provides air for internal cooling of parts and pressurization of seals. Customer bleed provisions and air-bleed provisions to prevent surge (loss of compressor air flow) are built in.

A. AIR INLET HOUSING ASSEMBLY. Provides air flow path which directs inlet air to the compressor area and provides mounting for T1 (ambient) air temperature sensor. Also provides supply tank for engine oil system.

B. COMPRESSOR HOUSING. Forms the outer wall of the air flow path through the compressor area. Designed to aid air compression by gradual decrease in inside diameter from front to rear. Vent holes used in conjunction with compressor bleed band allows controlling of compressor bleed air. Holes toward rear of housing allow heated air to flow into the air gallery for customer use.

C. STATOR VANES. Attached directly to the inside of the compressor housing. Designed to direct air flow so it hits compressor rotor blades at best angle for most efficient operation.

D. COMPRESSOR ROTOR BLADES. Located around each of seven compressor rotor disc assemblies. Designed to raise the pressure level of air as it passes through each stage of the compressor.

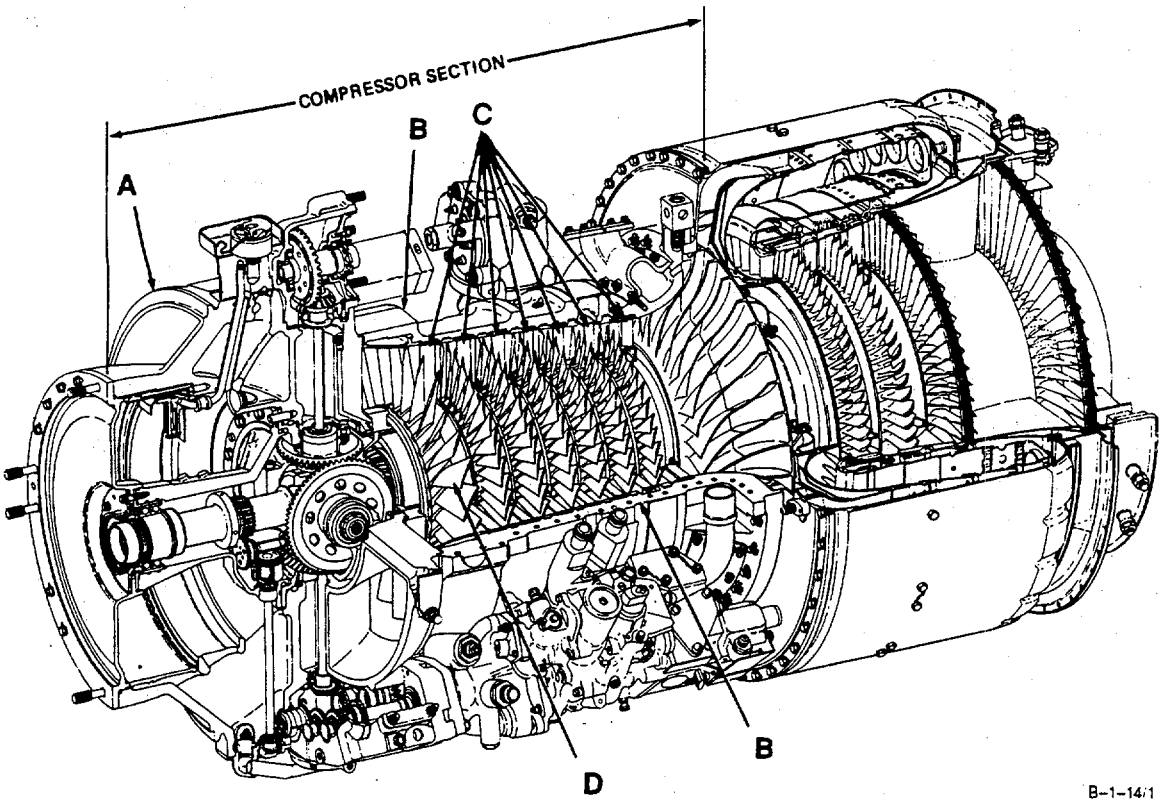

E. CENTRIFUGAL IMPELLER. Physically part of compressor rotor assembly. Designed to further compress and direct air through air diffuser assembly.

F. AIR DIFFUSER. Provides path for compressed air between centrifugal impeller and combustion chamber. Contains straightening vanes inside that remove air swirl created by the centrifugal impeller.

G. INTERSTAGE AIR-BLEED ACTUATOR. Pneumatic device that controls compressor air-bleed by tightening and loosening metal band over vent holes in compressor housing. Receives input signal from hydromechanical assembly.

H. COMPRESSOR BLEED BAND. Metal band located around vent holes toward rear of compressor housing. By tightening and loosening bleed band, a regulated amount of air can be bled from compressor. This allows more rapid acceleration without surge. Controlled by interstage air-bleed actuator.

I. AIR GALLERY COVER . Fits around aft end of compressor housing. Holes in compressor housing allow heated air to flow into air gallery cover. Port is provided in cover for customer use of this air.

J. WATER WASH SYSTEM. A series of check valves and hose assemblies to close bleed band during washing and preservation of internal turbine components.

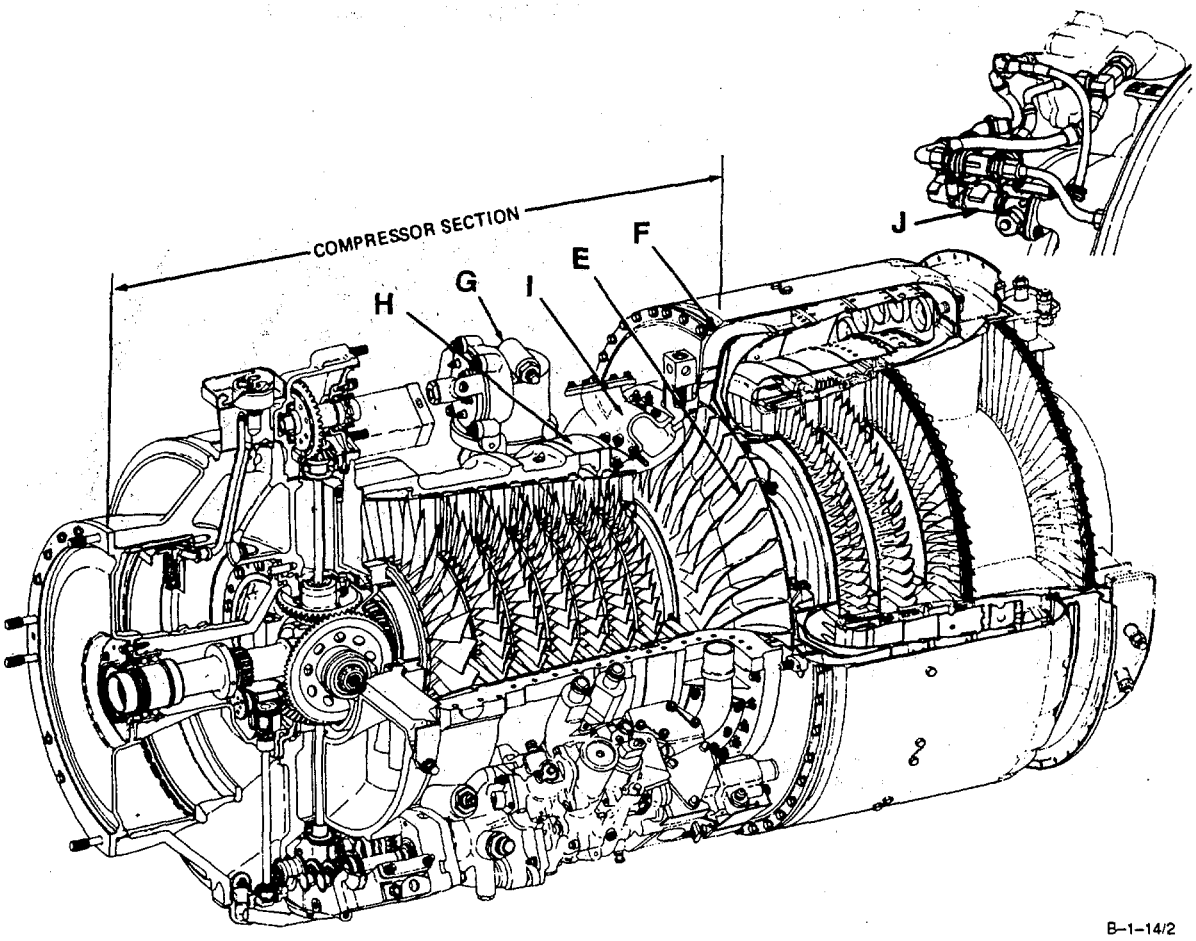

K. OUTPUT SHAFT SUPPORT HOUSING. Supported by inlet housing. Supports No. 6 and 7 bearings at front end of engine.

L. OUTPUT SHAFT SEAL HOUSING. Mounts on inlet housing cover at front of output shaft support housing. Supports output shaft seal.

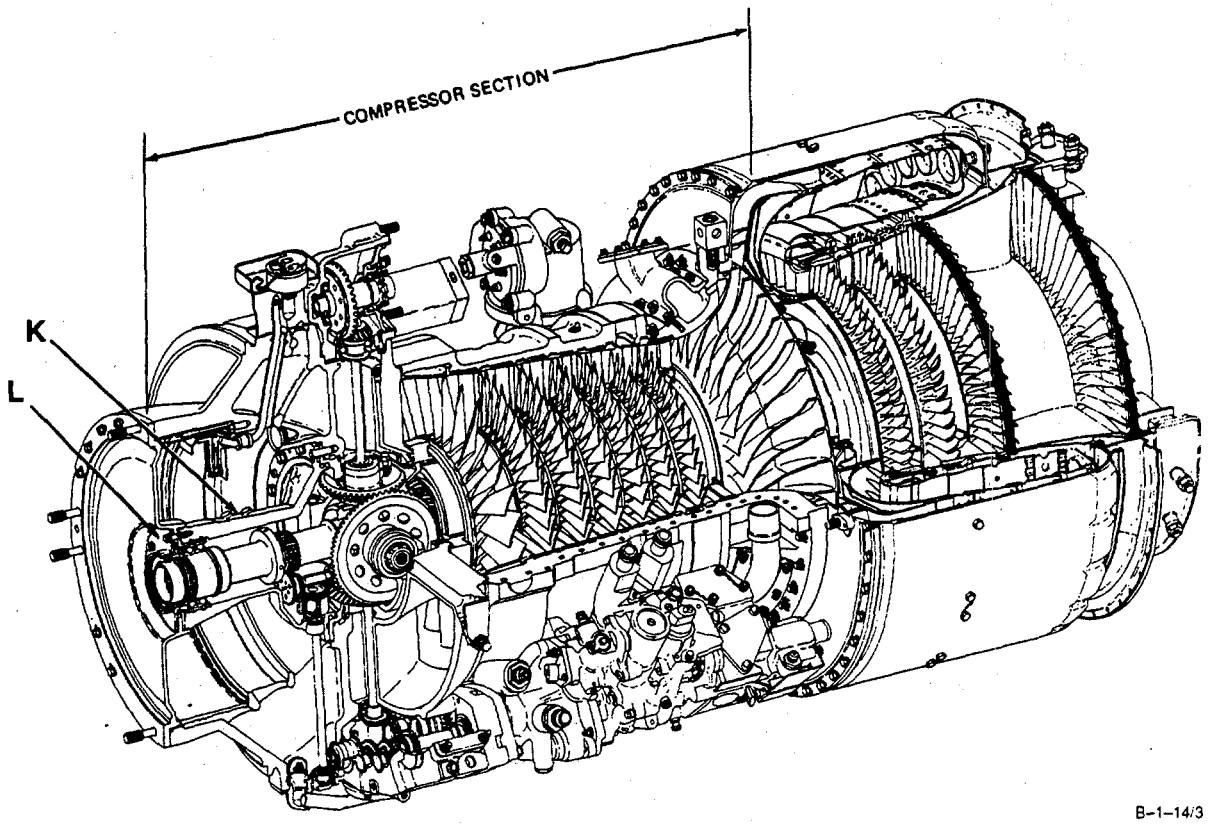

M. NO. 1 BEARING. Supported-in bearing housing which is supported by inlet housing. Supports forward end of compressor rotor assembly.

N. NO. 2 BEARING. Supported in bearing housing which is supported by air diffuser assembly. Supports rear end of compressor rotor assembly.

O. NO. 3 BEARING. Supported by power shaft bearing support which is supported by inlet housing. Sup- ports forward end of integral shaft assembly.

P. NO. 6 AND 7 BEARINGS. Supported by output shaft support housing. Supports forward end of output shaft.

Q. NO. 4 AND 5 BEARINGS. Supported by 4th turbine nozzle assembly. Supports rear end of integral shaft assembly.

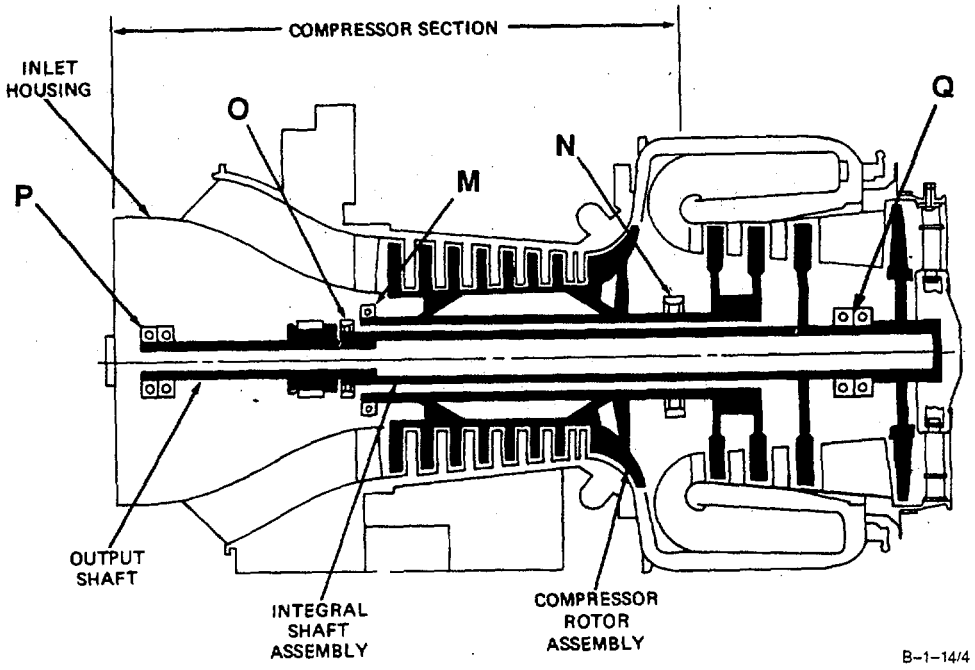

B. Air system consists of various pressurized air taps to energize interstage air bleed actuator, to monitor air diffuser air pressure via DECU and to pressurize No. 6 and 7 bearing air oil seal. Also included is a water wash system consisting of a series of hoses and check valves. Connects to external compressed air source to close bleed band during internal component wash and preservation.

C. AIR SYSTEM SCHEMATIC DIAGRAM.

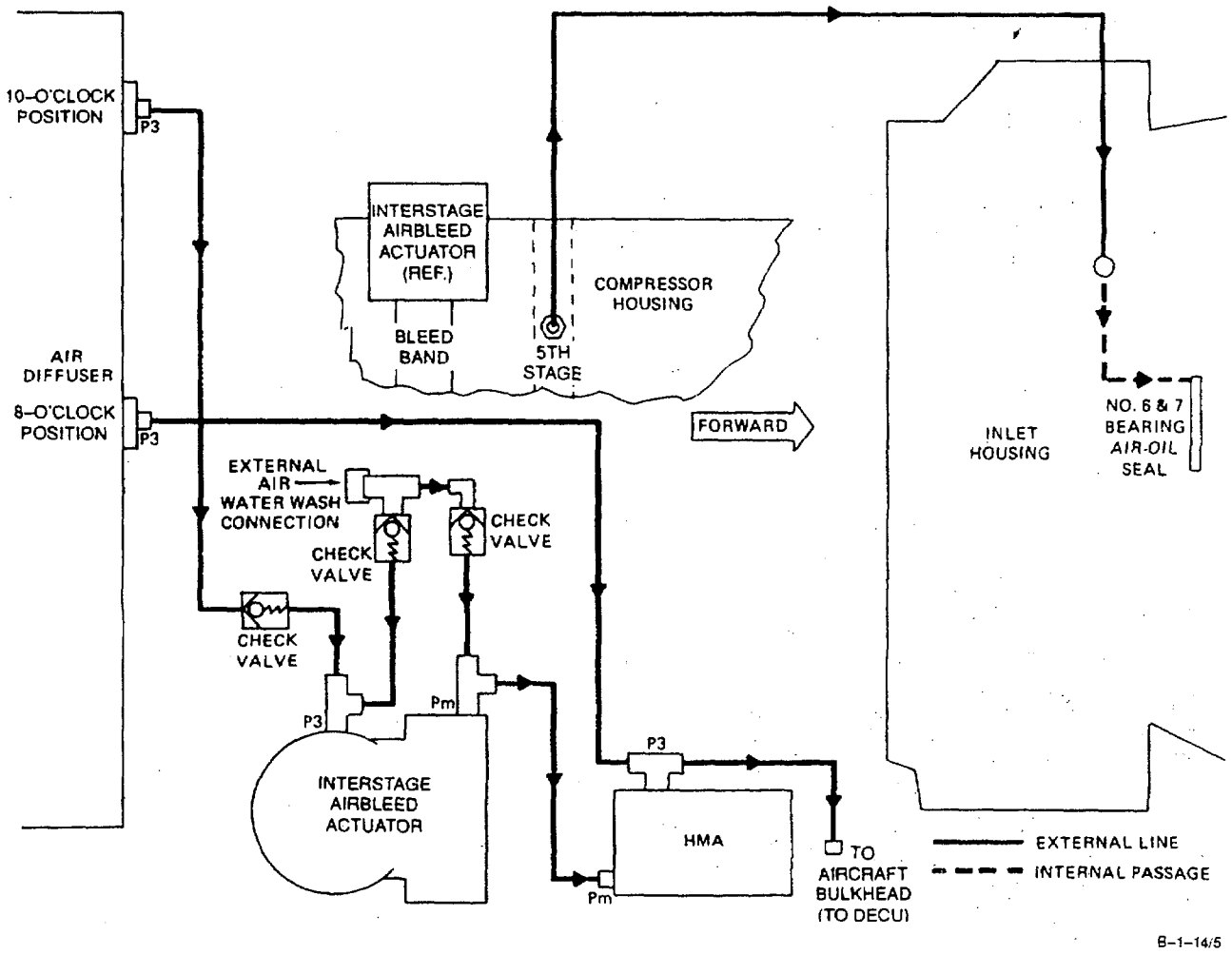

1-15 COMBUSTION SECTION

A. Attaches directly to air diffuser assembly and fits around major portion of turbine section. Provides area for combustion and air expansion. Also has provisions for draining overboard unburned fuel left in combustor housing.

A. COMBUSTION CHAMBER HOUSING. Forms outer wall and is major support for combustion section and power turbine. Provides mounting surfaces for main fuel manifold, fireshield, flow divider, spark igniters, and start fuel nozzles.

B. COMBUSTION CHAMBER LINER. Mounts inside combustion chamber housing. Contains holes to let a controlled amount of air to enter the liner. Fuel is also fed into the liner where combustion takes place.

C. COMBUSTION CHAMBER VANES. Mount in combustion chamber housing. Work in conjunction with straightening vanes in air diffuser to remove air swirl and distribute air properly in combustion section.

D. DRAIN VALVE ASSEMBLY. Two, mounted at bottom of combustion chamber housing. Spring normally holds valve open. With engine running, internal engine pressure pushes valve closed. With engine stopped, valve opens and unburned fuel in combustion chamber housing drains out.

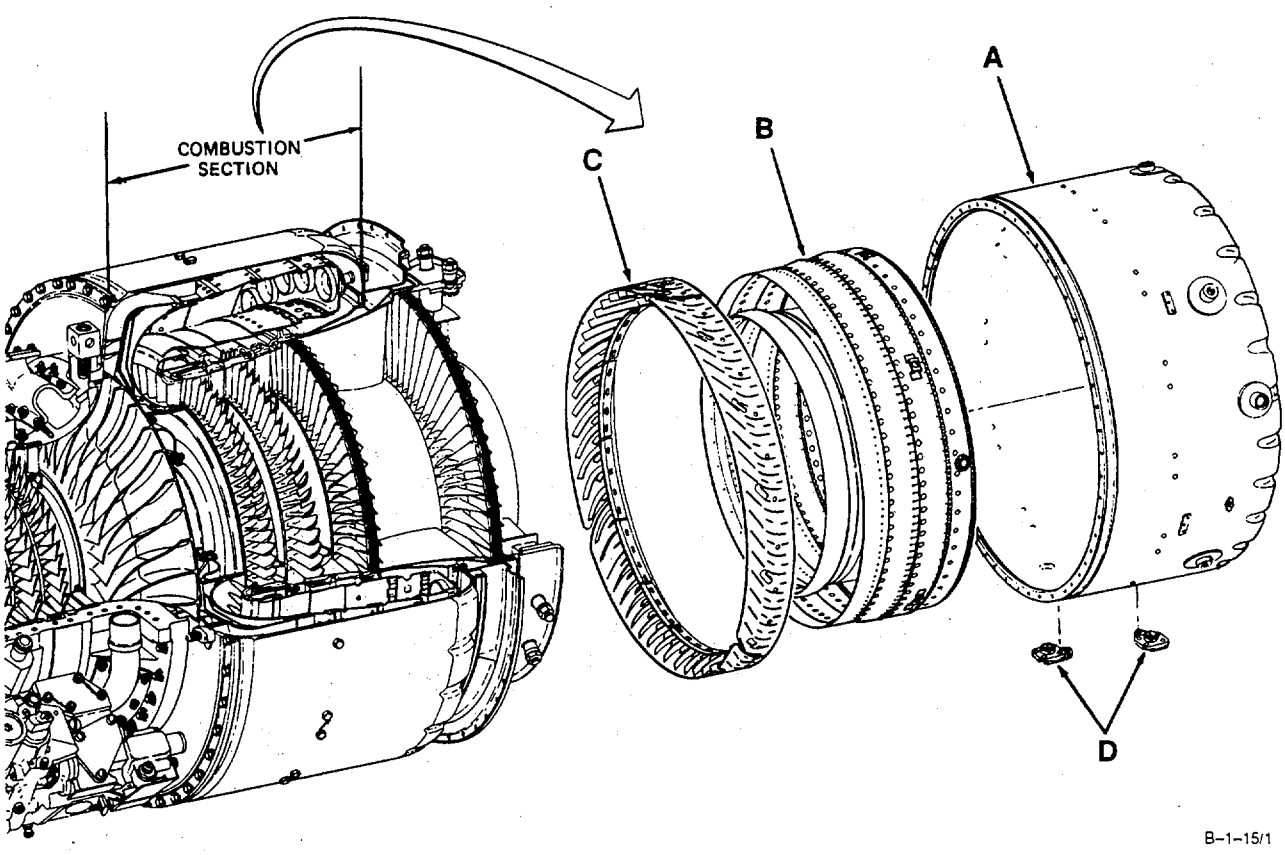

1-16 TURBINE SECTION

A. Directs and uses energy created in combustion section to keep compressor rotor turning and for output power. Includes gas producer and power turbine components. Contains provisions for measuring gas temperature at input to power turbine assembly. Also contains provisions to contain engine parts in case of internal engine failure.

A. CURL ASSEMBLY. Located directly behind air diffuser. Forms outer wall of path for hot gases leaving combustion section. Smoothly changes direction of hot gases and guides them to first gas producer nozzle.

B. FIRST GAS PRODUCER NOZZLE. Located aft of curl assembly and forward of first gas producer disc assembly. Outer portion forms inner wall of path for hot gases leaving combustion section. Nozzle vanes direct hot gases so they hit first gas producer disc blades most efficiently.

C. SECOND GAS PRODUCER NOZZLE. Located between first and second gas producer disc assemblies. Nozzle vanes direct hot gases leaving first gas producer disc assembly so they hit second gas producer disc blades most efficiently.

D. GAS PRODUCER DISC ASSEMBLIES. Coupled directly to compressor rotor assembly. As hot gases hit disc assembly blades, disc assemblies turn causing compressor rotor to turn.

E. POWER TURBINE ASSEMBLY. Contains two disc assemblies, two nozzles, No. 4 and 5 bearing package and a thermocouple system (see G. through L.).

F. TAILPIPE ASSEMBLY. Mounts on rear of engine. Reduces exhaust gas temperature and diverts exhaust gases overboard.

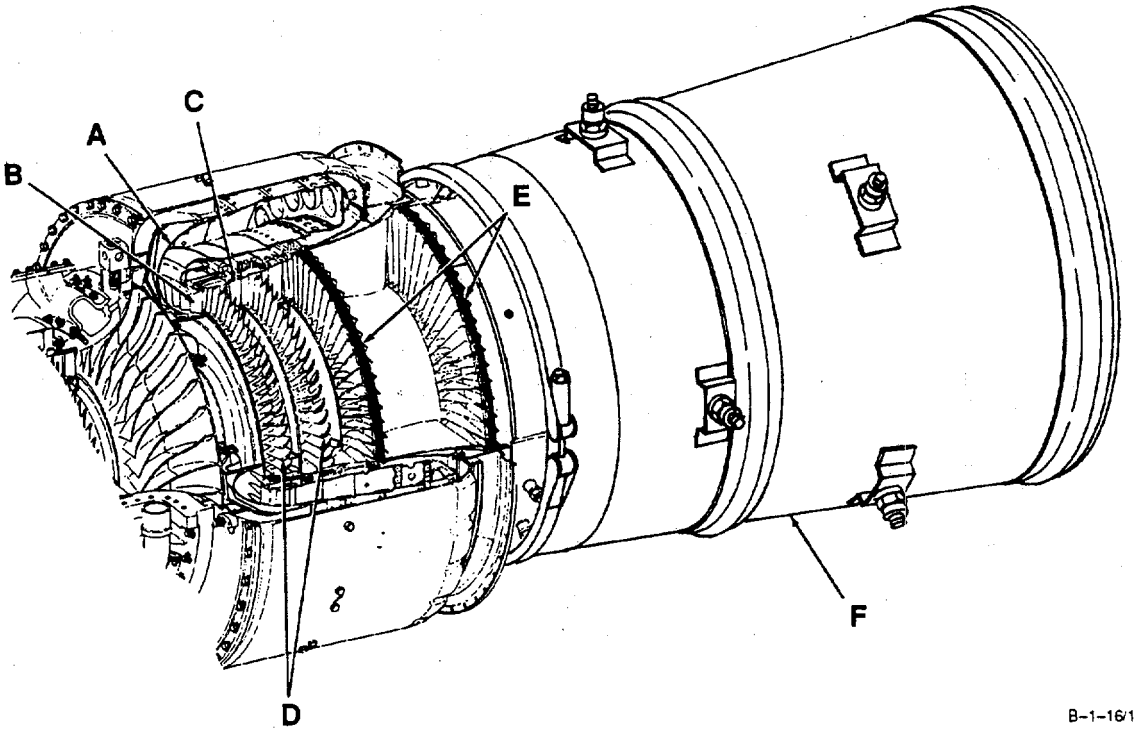

G. THIRD TURBINE NOZZLE AND SUPPORT. Located between second gas producer disc assembly and third turbine disc (part of integral shaft assembly). Provides mounting areas for five thermocouple harness assemblies. Directs hot gases so they hit third turbine blades most efficiently.

H. INTEGRAL SHAFT ASSEMBLY. Power shaft and third turbine disc (first power turbine disc) are welded to form a single unit. Splined to output shaft at front of engine. As hot gases hit blades, integral shaft assembly turns causing output shaft to turn.

I. FOURTH TURBINE NOZZLE. Main support for power turbine assembly. Provides mounting area for tailpipe assembly and No. 4 and 5 bearing package. Fits within and mounts on combustion section. Nozzle vanes direct hot gases leaving integral shaft assembly so they hit fourth turbine disc blades most efficiently.

J. NO. 4 AND 5 BEARING PACKAGE. Contains twin bearings, and mounts in fourth turbine nozzle. Supports rear of integral shaft assembly between third and fourth turbine discs.

K. FOURTH TURBINE DISC ASSEMBLY (SECOND POWER TURBINE DISC). Mounts on rear end of integral shaft assembly. As hot gases leaving fourth turbine nozzle hit fourth turbine disc blades, disc assembly turns. Assists integral shaft assembly to turn output shaft.

L. THERMOCOUPLE HARNESS ASSEMBLIES. Five, with two probes each, positioned around power turbine assembly. Ten probe ends insert into and mount around third turbine nozzle and support. Leads fit through five guide tubes located around fourth turbine nozzle and secure to bus bar assembly. Probes made of materials which when heated react by developing a proportional voltage. The average of these voltages is reflected by cockpit indicator calibrated to read temperature in degrees centigrade.

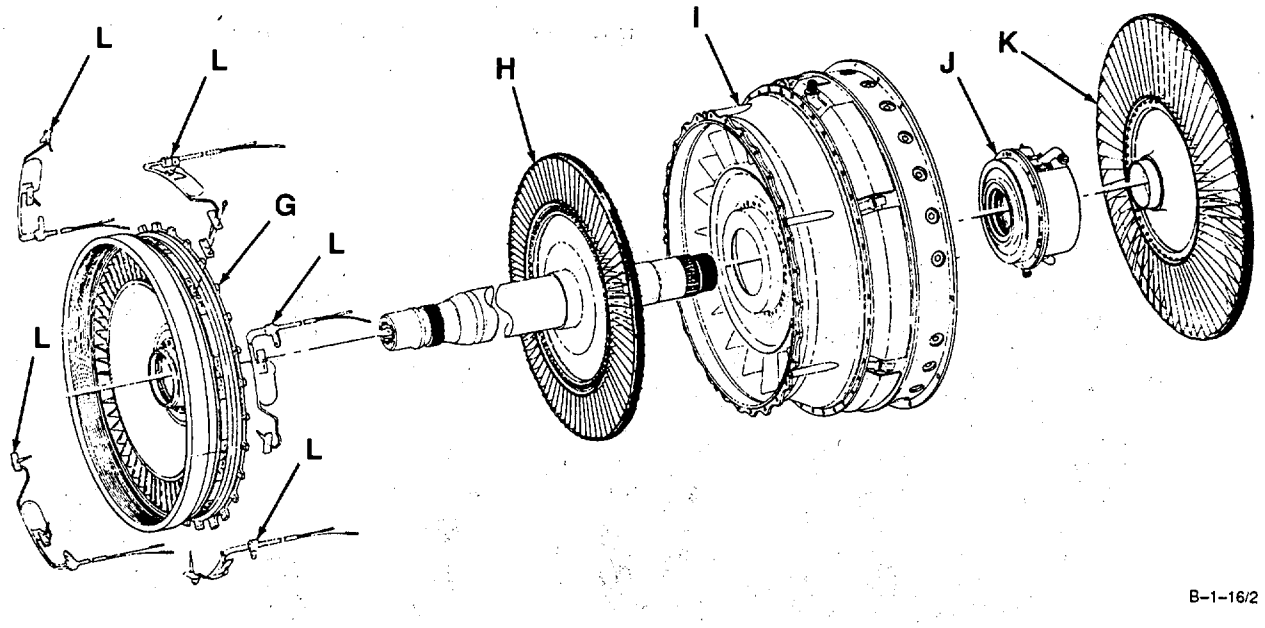

M. LEFT- AND RIGHT-HAND BUS BAR ASSEMBLIES. Mounted on aft side of fireshield assembly at rear of engine. Provides a common junction point for five thermocouple harnesses and thermocouple jumper lead.

N. THERMOCOUPLE JUMPER LEAD. Connects to bus bar assembly and runs forward to main electrical bracket. Provides electrical path from bus bar assemblies to airframe wiring.

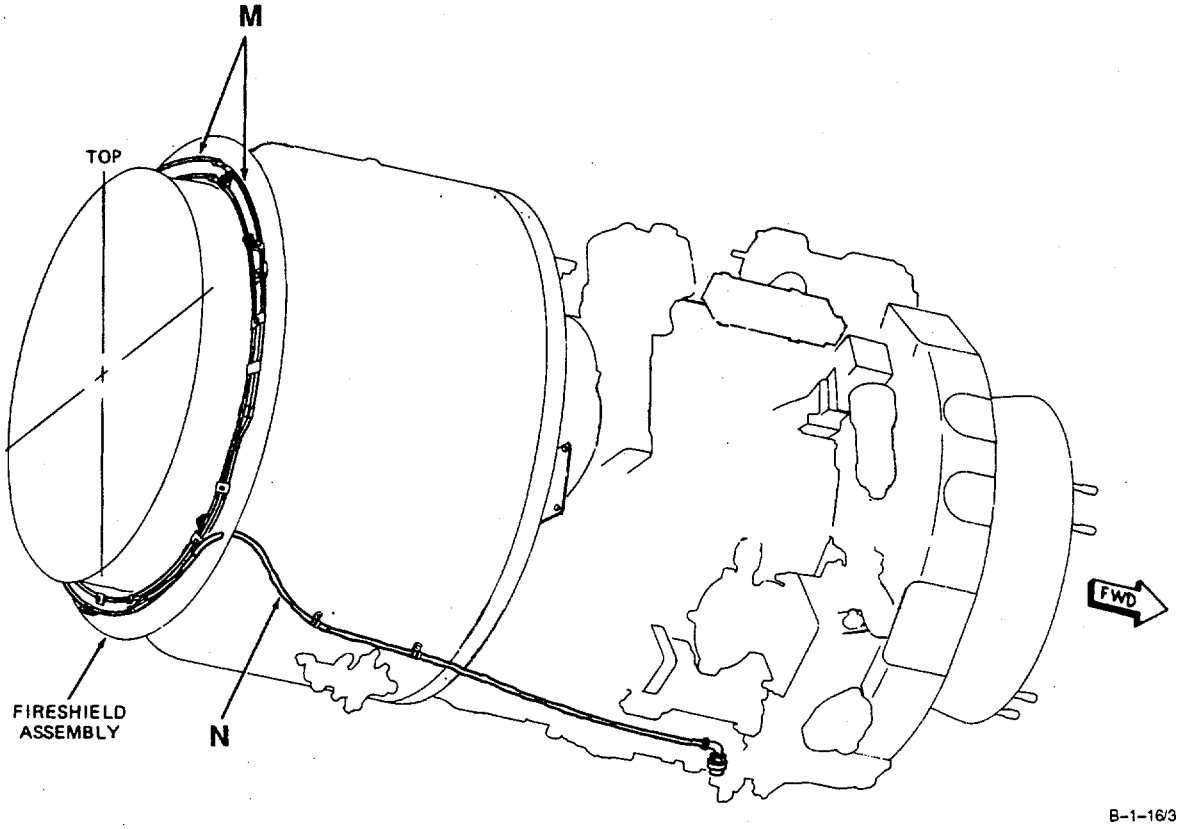

1-17 ACCESSORY GEAR SECTION

A. Provides gear train that connects starter to compressor rotor assembly and compressor rotor assembly to N1 driven accessories (accessories driven by gas producer system). Also provides gear train between output shaft and N2 driven accessories (accessories driven by power turbine system).

A. STARTER DRIVE ASSEMBLY. Mounts at 12-o'clock position on inlet housing. Starter mounts on starter drive assembly.

B. ACCESSORY GEAR ASSEMBLY. Mounts in inlet housing directly between the starter drive assembly and the accessory gearbox assembly.

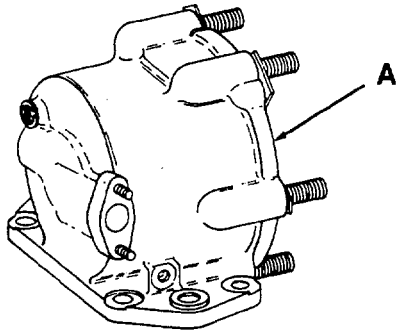

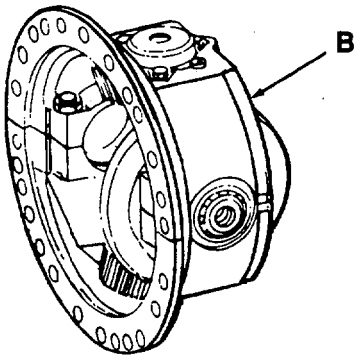

B-1-17/1

C. ACCESSORY GEARBOX ASSEMBLY. Mounts at 6-o'clock position on inlet housing. Contains drive gears and provides mounting pads for fuel boost pump, main oil pump, and hydromechanical assembly.

D. SPEED PICKUP DRIVE ASSEMBLY. Mounts at 5-o'clock position on accessory gearbox assembly. Contains a magnetic inducing wheel to provide a proportional PT (N2) rotational signal to DECU unit via two redundant magnetic speed pickups.

E. SPEED PICKUPS. Mounts in speed pickup drive assembly. Consists of two identical reluctance coil assemblies in a hermetic housing which supplies PT (N2) speed signal via two redundant harness assemblies.

F. OVERSPEED DRIVE AND OUTLET COVER ASSEMBLY. Mounts at 6-o'clock position on inlet housing forward of accessory gearbox assembly.

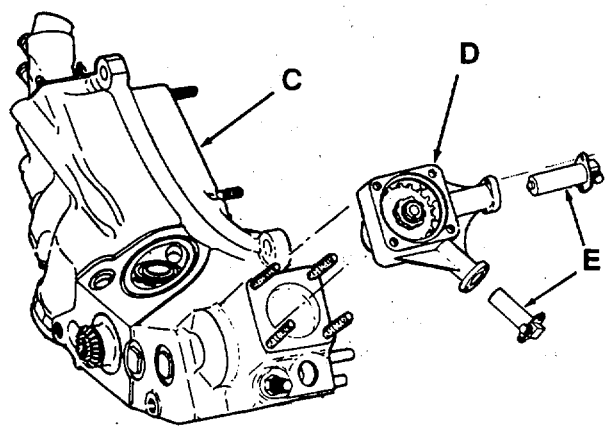

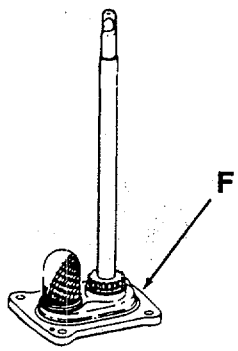

B-1-17.2

B. MAJOR GEARTRAIN SUBSYSTEMS. Gearshaft assembly (1) and gearshaft (2) are located in the **starter drive assembly.** Bevel gearshafts (3 and 4) and bevel gear (5) are located in the **accessory gear assembly.** The fuel boost pump drive gear (6), main oil pump drive spur gear (7), hydromechanical assembly drive spur gear (8), N1 driven bevel gear (9), overspeed governor control drive bevel spur gearshaft (10), spur gear cluster (11), spur gear (12), and N2 driven bevel gear (13) are located in the **accessory gearbox assembly.** The N2 driven bevel gearshaft (14) is part of the **overspeed drive and tank outlet cover assembly.** Overspeed drive bevel gear (15) and spur gear (16) are part of the **output shaft support housing** (not shown). The output shaft (17) is mounted and rotates through the **output shaft support housing.** Bevel gear (18) is part of the **compressor rotor assembly** (19).

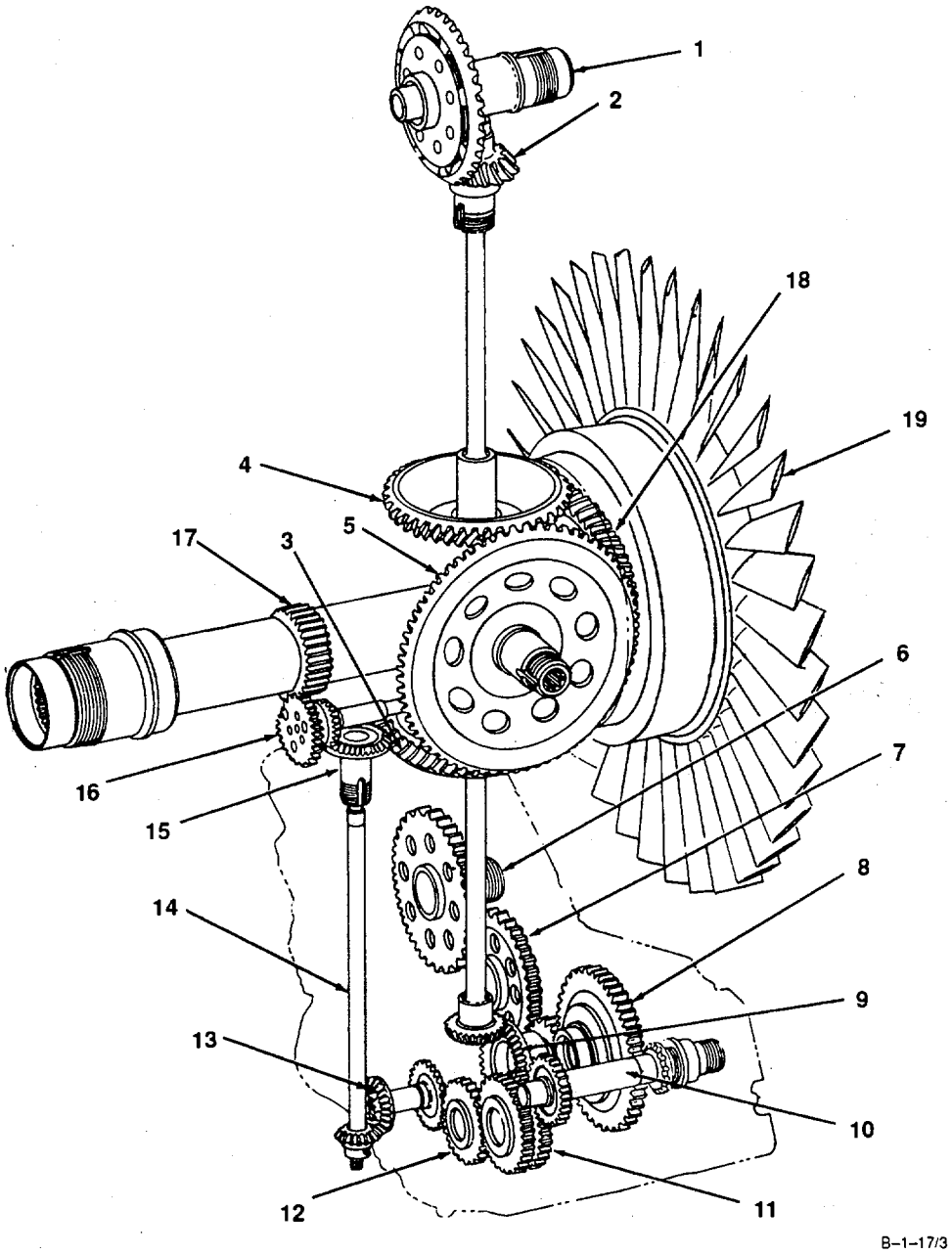

C. DESCRIPTION OF MATING GEARS. Gearshaft assembly (1) meshes with gearshaft (2). Gearshaft (2) connects to gearshaft (3) through spur gearshaft (4). Gearshaft (3) meshes with gear (5). Gear (5) meshes with gear (6) and gearshaft (7). Gearshaft (7) connects to gear (8) through N1 driven spur gearshaft (9). Gear (8) meshes with gears (10 and 11), and gear (10) meshes with gear (12). Splines on output shaft (13) mesh with gear (14) which meshes with gear (15). Gear (15) is connected to gear (16) through gearshaft (17). Gear (16) meshes with gear (18). Gear (18) meshes with gear cluster (19) which meshes with gearshaft (20).

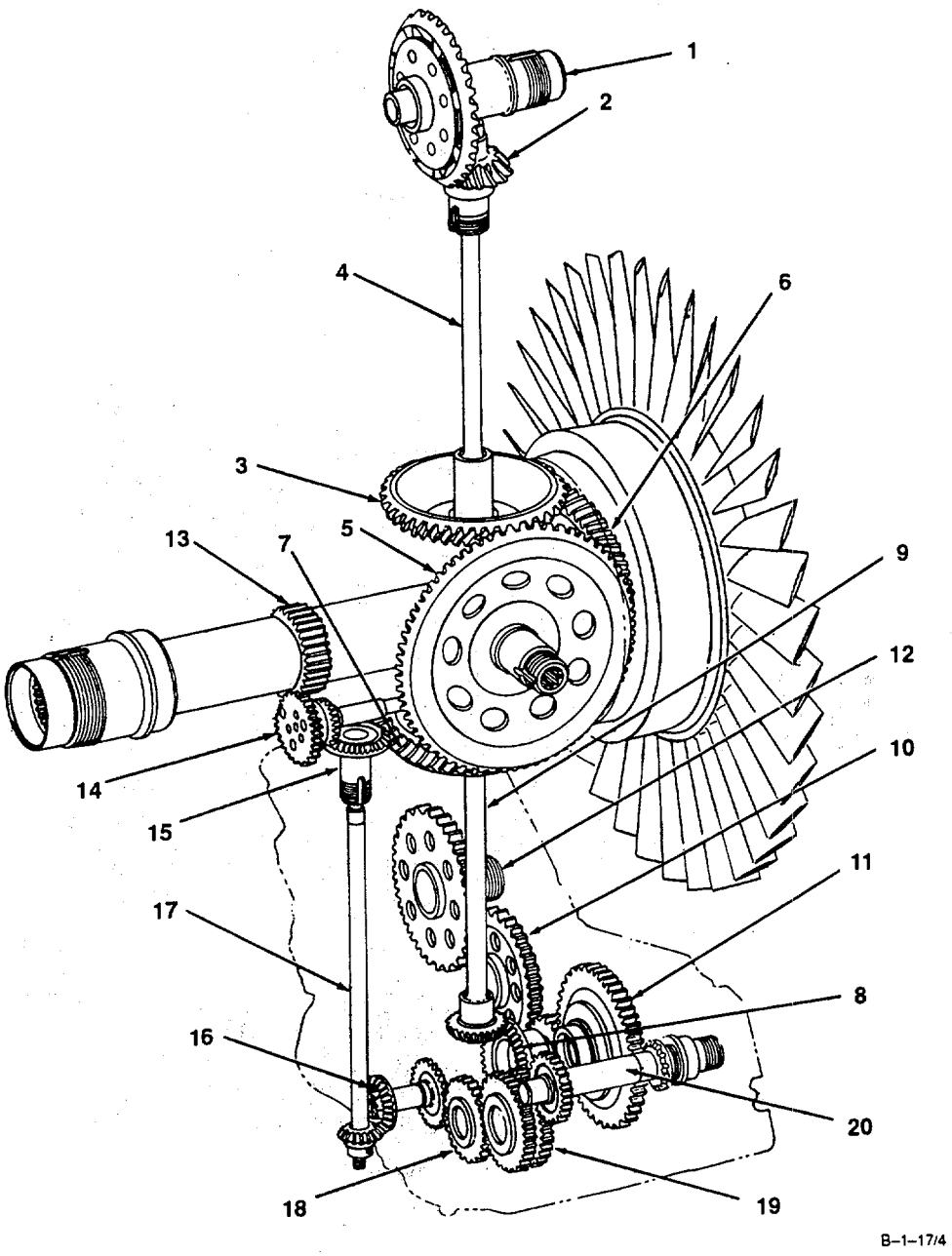

D. STARTER GEAR TRAIN. When starter is engaged, gearshaft assembly (1) and gearshaft (2) turn causing gearshaft (3) to turn. Gearshaft (3) turns gear (4). Gear (4) turns gear (5) and gearshaft (6). Gearshaft (6) through gearshaft (7) turns gear (8). Gear (8) turns gears (9 and 10). Gear (9) turns gear (11). As output shaft (12) is turned by power turbine assembly (not shown), gears (13 and 14) turn. Gear (14) turns gearshaft (15) which turns gear (16). Gear (16) turns gear (17). Gear (17) turns gear cluster (18) which turns gearshaft (19). Gear (19) drives PT speed drive assembly.

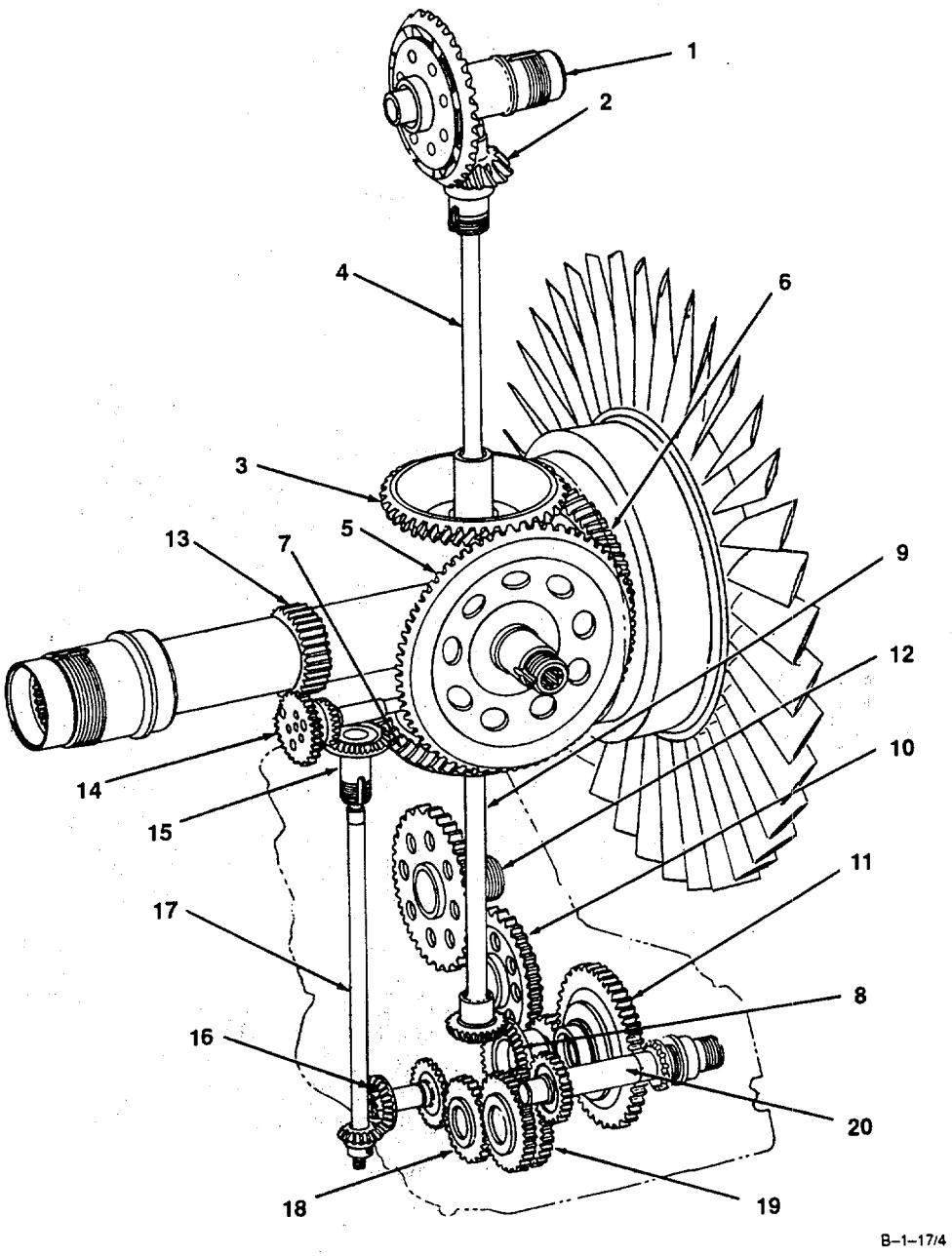

E. N1 GEAR TRAIN. When starter is disengaged, compressor rotor assembly (1) becomes N1 driving unit. Compressor rotor assembly (1) turns and gear (2) turns gear (3). Gear (3) turns gearshafts (4 and 5). Gearshaft (4) through gearshaft (6) turns gear (7). Gear (7) turns gears (8 and 9). Gear (8) turns gear (10). The remainder of the accessory gear section continues to operate as when starter was engaged.

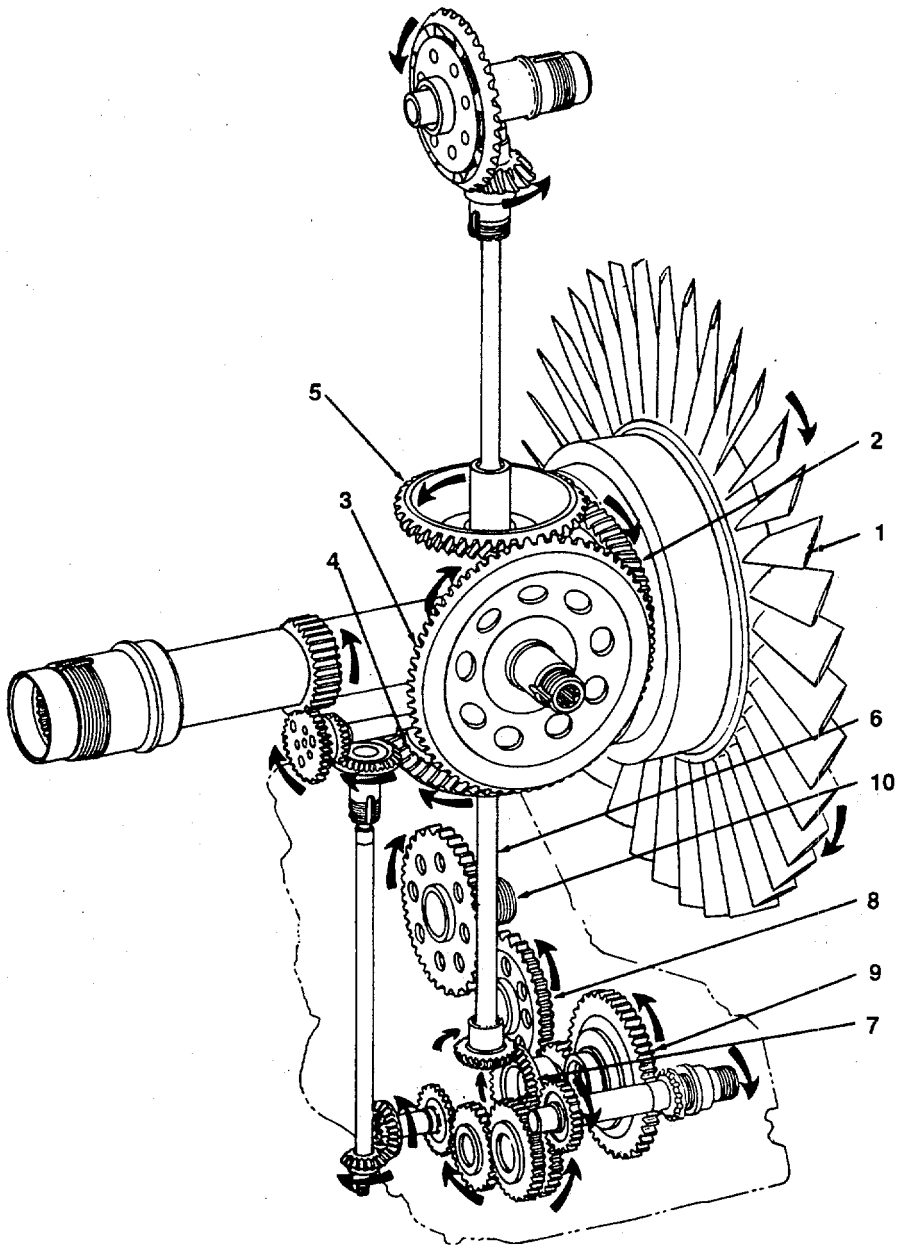

B–1–17/6

F. ACCESSORY GEARBOX ASSEMBLY MOUNTING PADS AND FITTINGS.

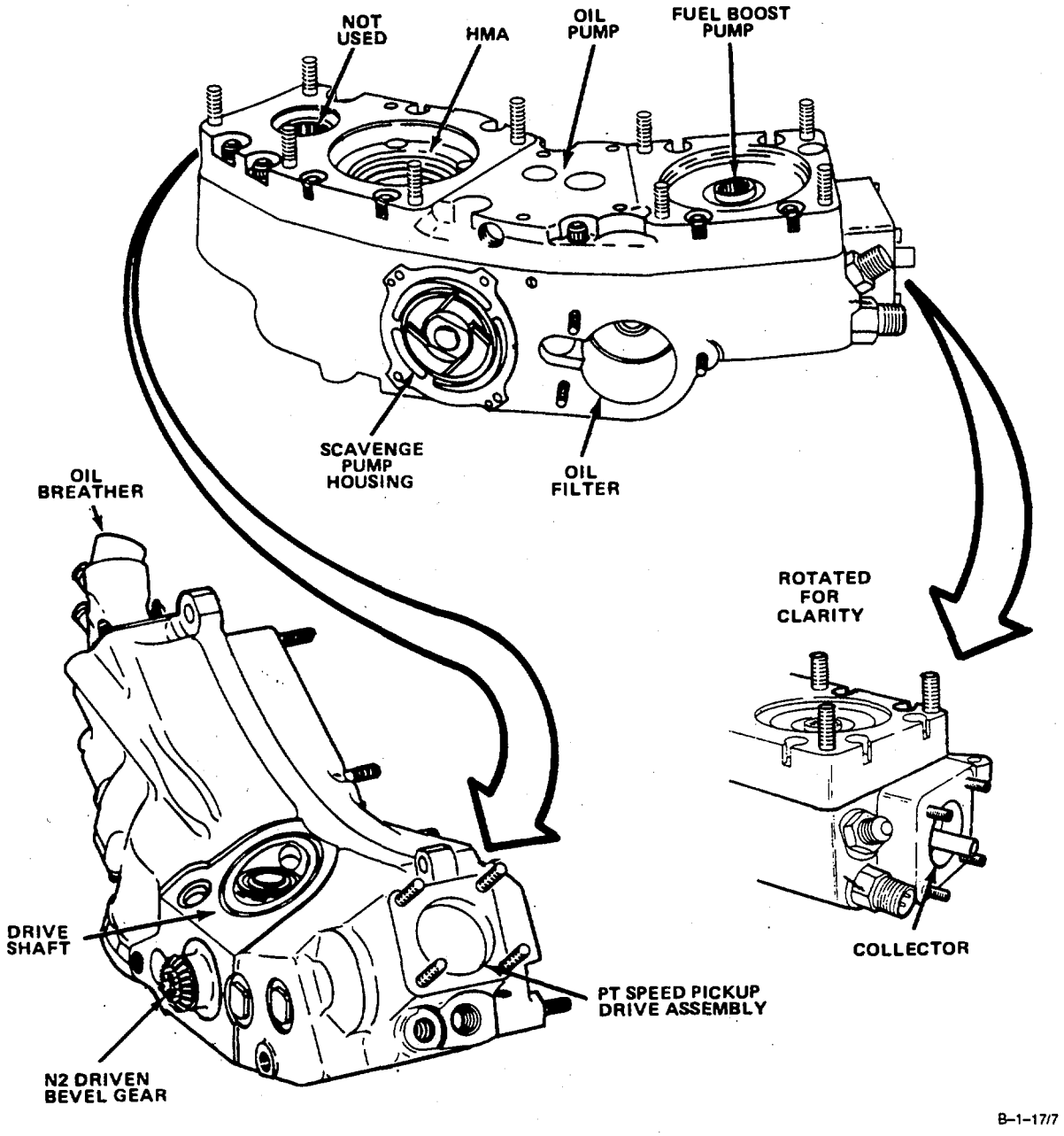

1-18 FUEL SYSTEM

A. Controls and distributes fuel for engine operation. Components are listed and keyed in following diagrams.

A. FULL AUTHORITY DIGITAL ELECTRONIC CONTROL SYSTEM (FADEC). Includes an airframe mounted digital control unit (DECU) and an integrated hydromechanical assembly (HMA) shown which mounts on the accessory gearbox. The assembly includes a jet-induced high pressure fuel pump, an integral alternator for dedicated electrical power above 60 percent N1 and a separate electromechanical primary fuel metering unit and backup reversionary fuel control.
B. FUEL BOOST PUMP. Contains single centrifugal impeller. Provides fuel pressure rise of 10 to 20 psi dictated by speed and flow conditions. Mounts on and is driven by accessory gearbox assembly.

C. MAIN FUEL MANIFOLD. Consists of two halves each having 14 main fuel nozzles. Mounts on rear surface of combustor section. Nozzles insert through holes in combustor section and into combustion area.

D. MAIN FUEL FILTER. Mounts on bracket on left side of compressor housing. Contains replaceable filter element. Also contains popout indicator button. Button pops out if filter element is close to being bypassed because of clogging.

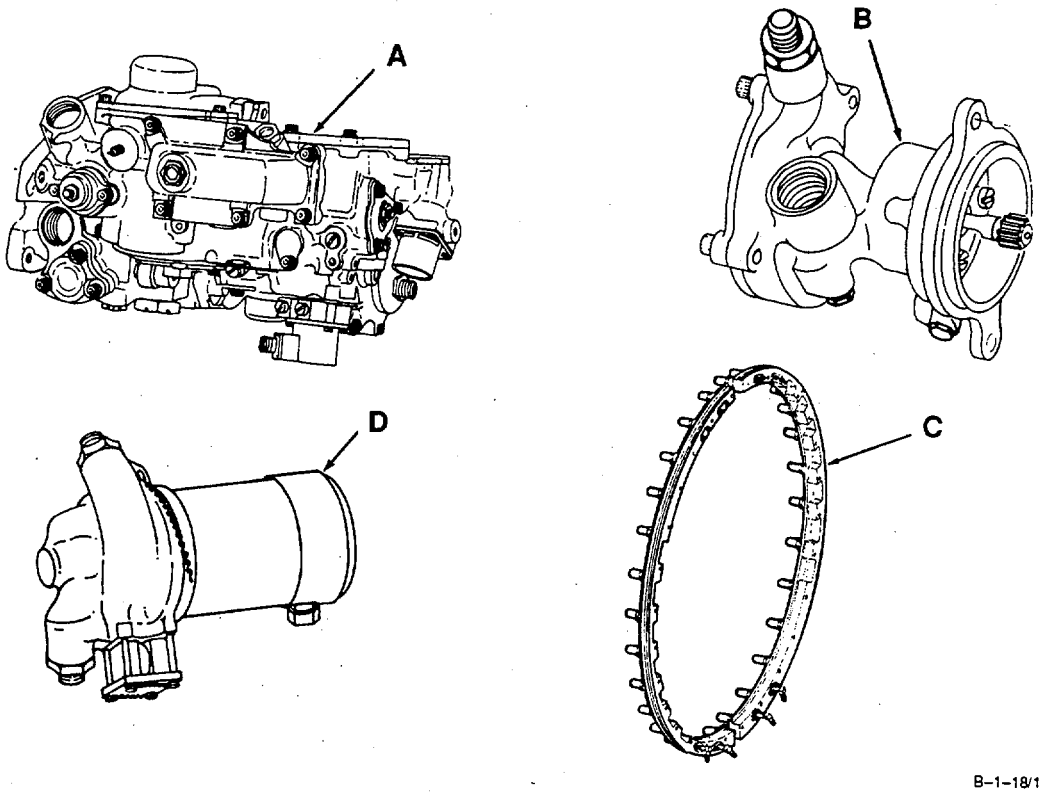

E. IN-LINE FUEL FILTER. Mounts on bracket on right side of compressor housing. Contains replaceable filter element. Also contains a popout indicator button. Button will pop out if filter element is close to being bypassed because of clogging.

F. FLOW DIVIDER. Mounts at 6-o'clock position on combustor section. Contains one common input and five separate outputs. Input line contains a pressurizing valve. One output port is a fuel return. Fuel return line contains a check valve. The other four output ports consist of two primary and two secondary ports. De- signed so primary and secondary ports allow fuel to flow at different predetermined input pressures.

G. STARTING FUEL SOLENOID VALVE. Mounts on bracket on left side of compressor housing. Normally closed and will not let fuel flow through it. Designed to open on electrical signal allowing fuel to flow through it.

H. START FUEL NOZZLES. Mount at 6- and 9-o'clock position near aft end of combustor section. Provide means of feeding starting fuel into combustion chamber where it is ignited by sparks from spark igniters.

I. OVERSPEED SOLENOID VALVE. Mounts on bracket shared with air bleed actuator on right side of compressor housing. Designed to close on electrical signal.

J. PRESSURIZING VALVE. Mounts on inlet fitting of fuel flow divider. Prevents fuel flow to fuel flow divider at pressures below predetermined level. Bypasses residual fuel pressure through fuel return line on shutdown.

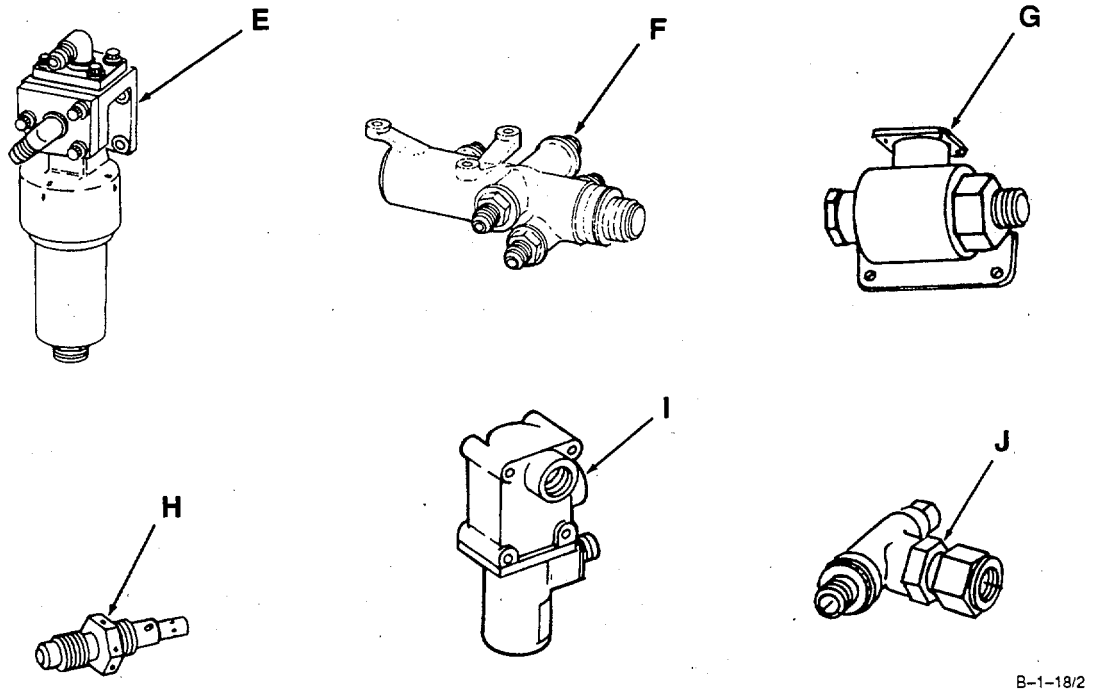

B. Fuel flow between components is provided by rigid tube assemblies or flexible lines as applicable. Designed and routed so no stress is placed on components.

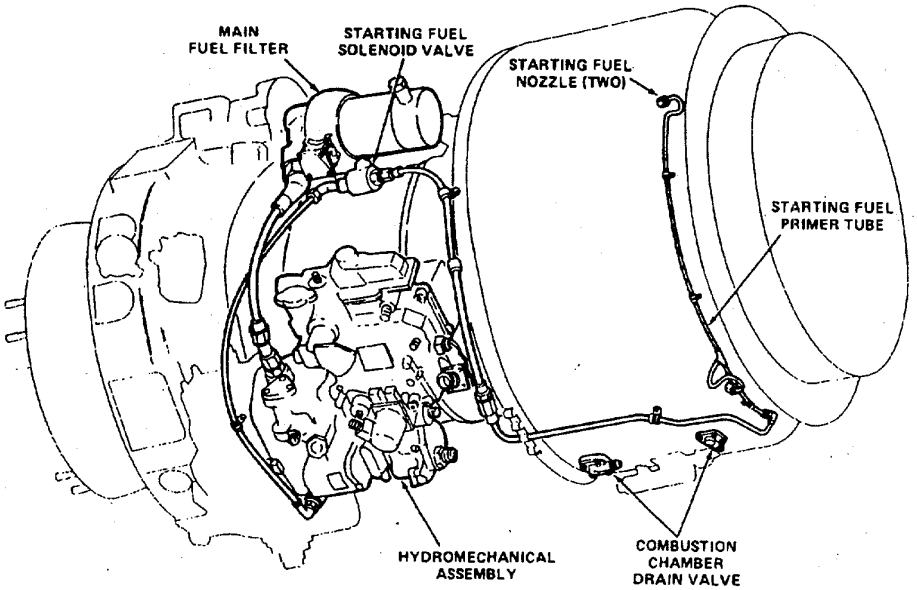

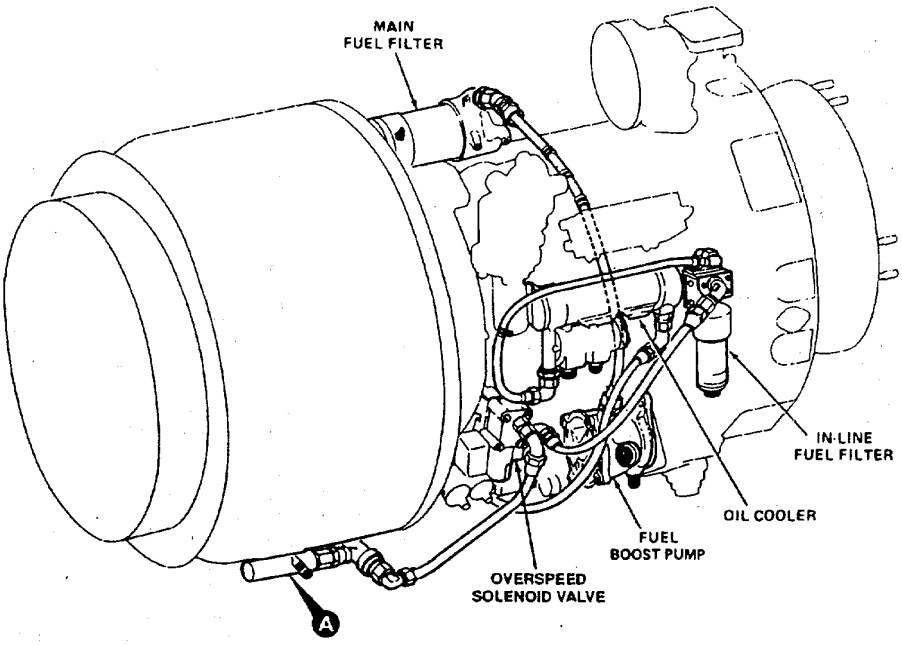

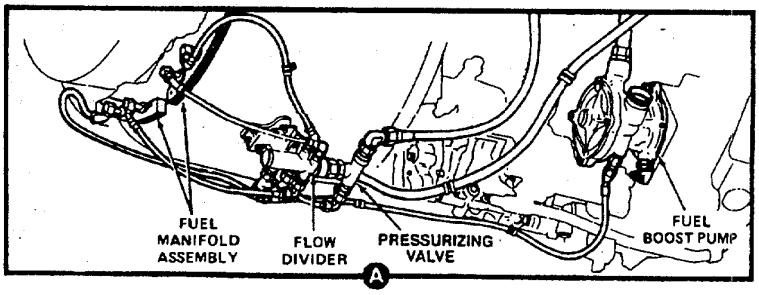

B-1-18/3

C. Fuel flow through engine fuel system is as follows:

(1) Fuel from airframe fuel supply system enters engine through fuel boost pump.

(2) Fuel flows through main fuel filter and into fuel control.

(3) Two flow paths leave fuel control; starting fuel system and main fuel system.

(4) Starting fuel flows to starting fuel solenoid valve. When energized (open), fuel flows to starting fuel primer tube which carries fuel to two start fuel nozzles.

(5) Main fuel flows through the oil cooler assembly, the in-line fuel filter main fuel solenoid valve and a pressurizing valve to the flow divider.

(6) Flow divider splits fuel flow to provide two separate flows (primary and secondary) to each fuel manifold half. Fuel flows through manifold halves to 28 nozzles and into the combustor.

(7) Return line from flow divider to fuel boost pump allows fuel remaining in flow divider to seep back to fuel boost pump. Check valve prevents fuel flow from boost pump to flow divider.

D. FUEL SYSTEM SCHEMATIC DIAGRAM.

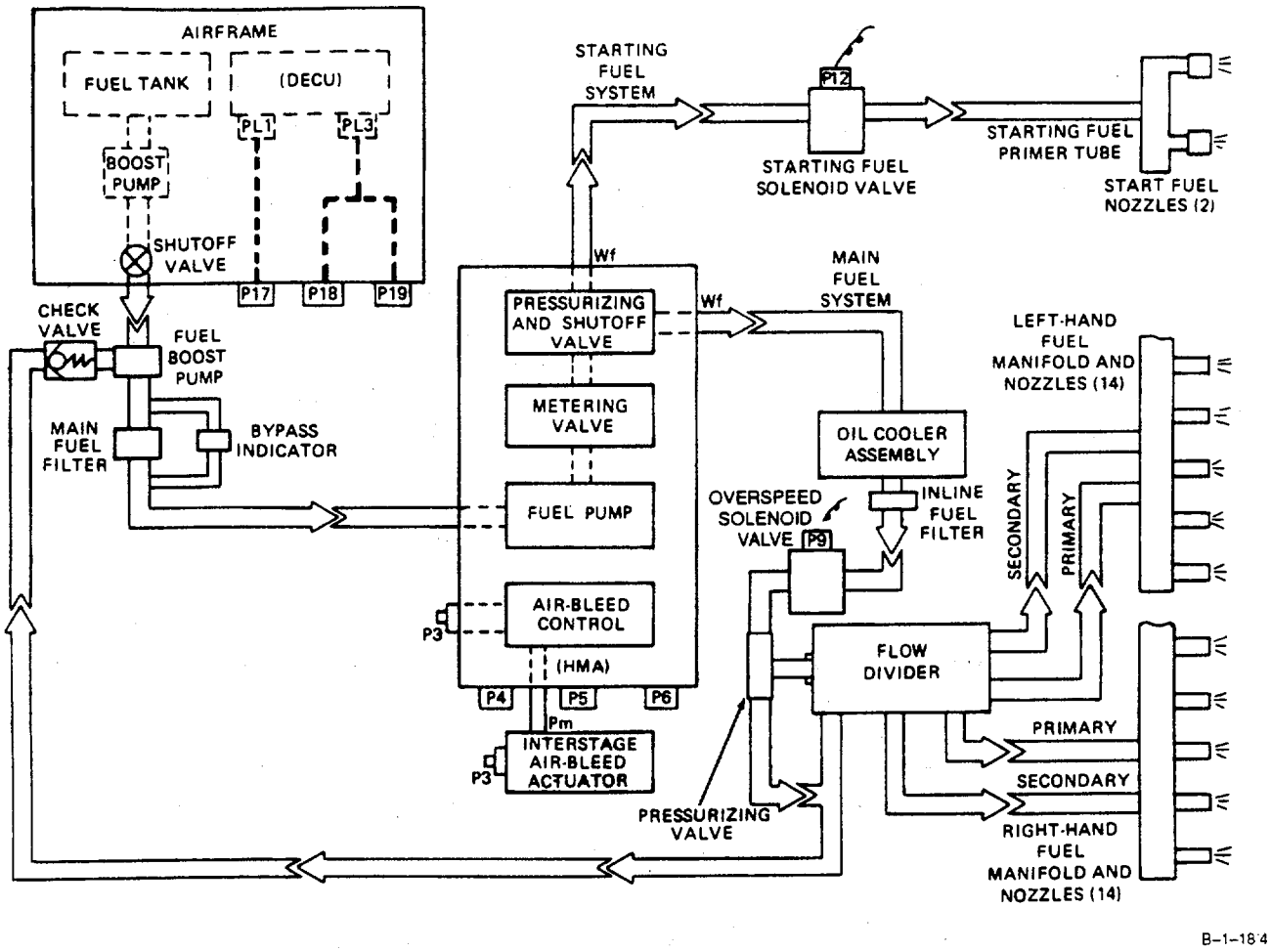

1-19 ELECTRICAL AND IGNITION SYSTEM

A. Provides circuitry for ignition, starting, and all electrical accessories. (Ref. Appendix D.) Components are listed in the following diagram.

A. DIGITAL ELECTRONIC CONTROL UNIT (DECU). Airframe mounted digital electronic control unit that contains both a primary and backup reversionary channel in the event the primary control becomes non-operational.

B. PRIMARY HARNESS ASSEMBLY. Provides circuitry for HMA, PT (N2A) speed pickup, start fuel valve and torque sensor.

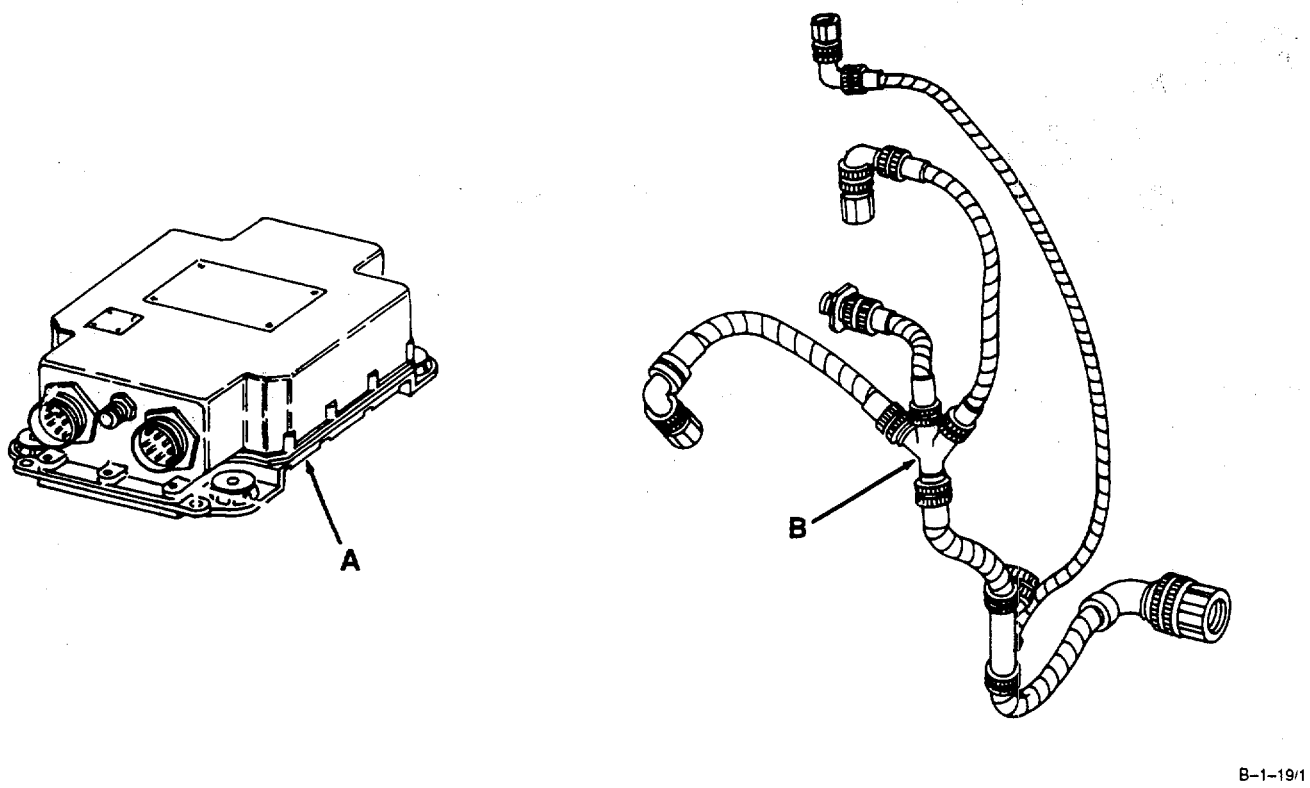

C. REVERSIONARY HARNESS ASSEMBLY. Provides circuitry for (T1) temperature sensor, overspeed valve, PT (N2B) speed pickup, HMA and backup for primary harness circuitry.

D. ACCESSORY HARNESS ASSEMBLY. Provides circuitry for oil pressure, oil temperature and oil level indicators, AGB chip detector, oxygen generator, ignition exciter, and GP (N1) speed pickup.

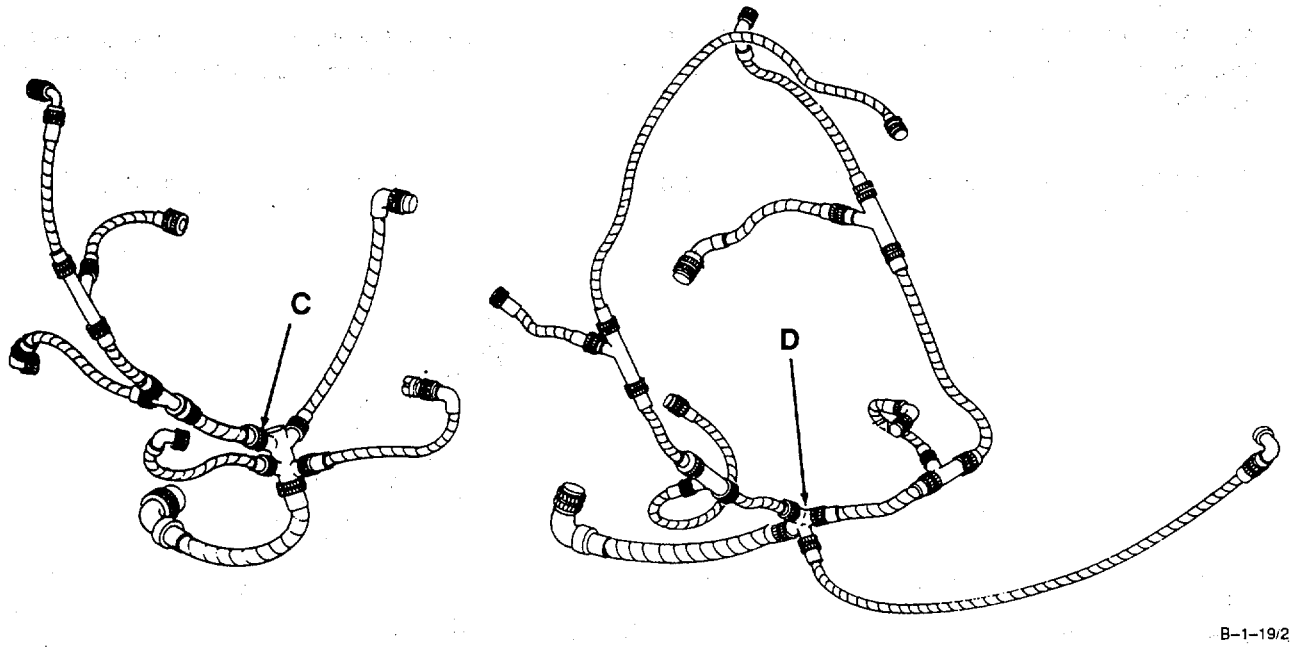

E. IGNITION EXCITER. Mounts on brackets on right side of compressor housing. Provides high voltage pulses required for ignition. Converts 24 volt input at 2.5 amperes current to 2500 volts.

F. COIL AND CABLE ASSEMBLY. Provides high voltage ignition wiring. Consists of shielded cabling and transformer. Splits high voltages from ignition exciter and distributes them equally to four spark igniters.

G. SPARK IGNITERS. Mount at approximately 12-, 3-, 6-, and 9-o'clock positions near aft end of combustor section. Provides spark discharge needed for ignition in combustion area.

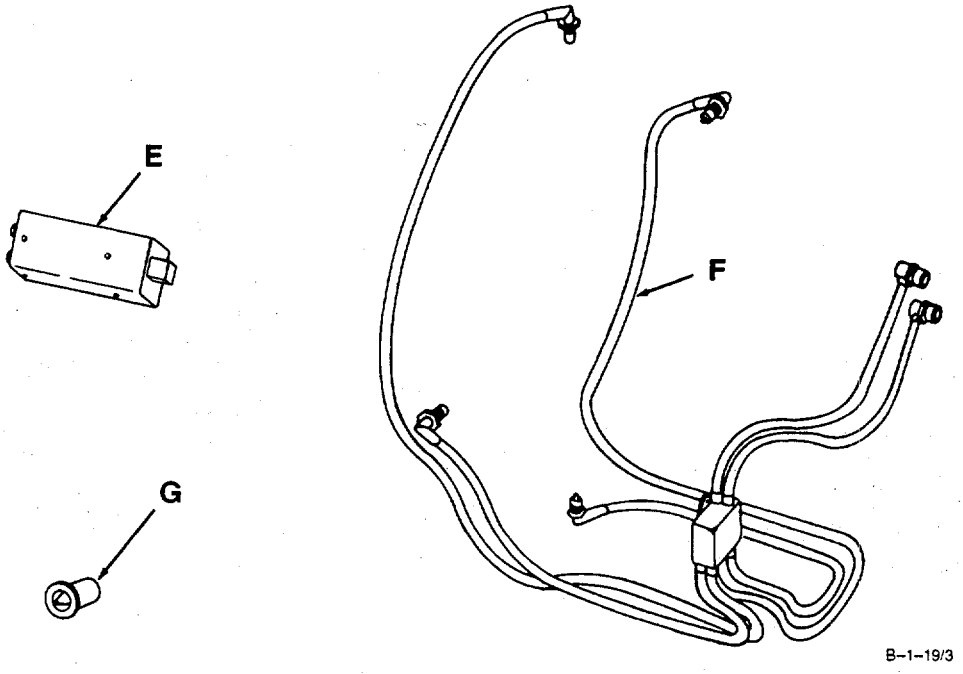

B. Coil and cable assembly connects to four spark igniters and two connectors on ignition exciter . Electrical cables consist of primary, reversionary and accessory harnesses . Connectors are provided for airframe mounted digital electronic control unit (DECU) and tachometer generator . Cable assemblies are designed and routed to prevent stress on components and cable assemblies and to prevent chafing.

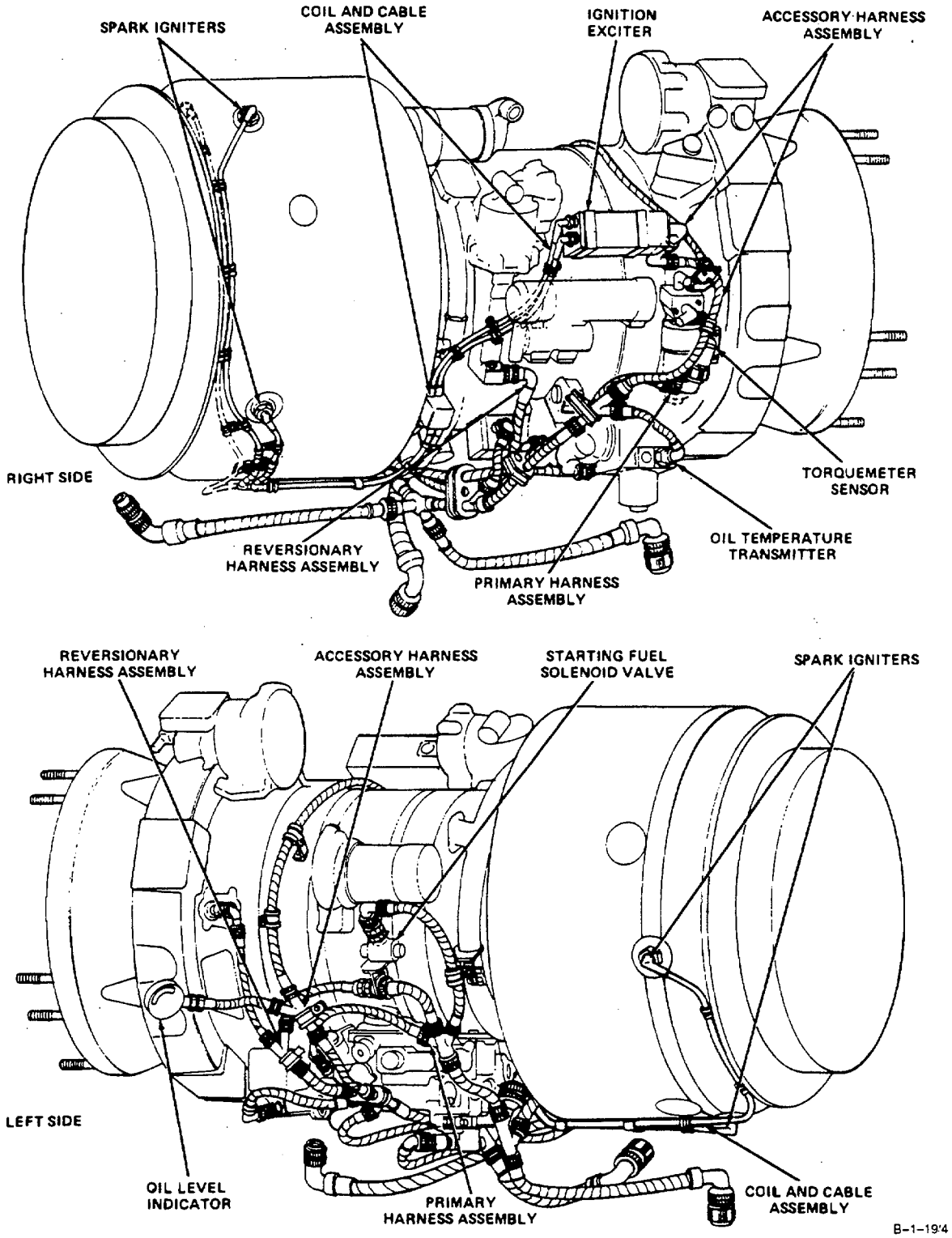

1-20 LUBRICATION SYSTEM

A. Self-contained system provides lubrication of all engine bearings and gears . Included are provisions to al- low monitoring of oil temperature, oil level, and metal contamination . Main components are listed and keyed in following diagrams.

A. MAIN OIL PUMP . Contains three gear-type elements on one common splined shaft . One element sup- plies oil pressure . The other two return scavenge oil to the integral oil tank . Provides 50 to 90 psig oil pressure during normal engine operating conditions . Mounts on and is driven by accessory gearbox assembly.

B. SPEED PICKUP DRIVE ASSEMBLY . Mounts on MAIN OIL PUMP . Housing contains a magnetic inducing wheel which rotates in proportion to GP (N1) speed, and a magnetic pickup.

C. GAS PRODUCER PICKUP ASSEMBLY . Mounts in SPEED PICKUP DRIVE ASSEMBLY . Consists of a reluctance coil assembly in a hermetic housing which supplies GP (N1) speed signal via ACCESSORY HARNESS to cockpit MFD.

D. OIL COOLER ASSEMBLY . Provides a means of lowering oil temperature . Contains many small diame- ter aluminum tubes (fuel flow paths) running lengthwise through one large oil flow path . As hot oil passes over low- temperature fuel tubes, some heat is transferred to fuel . Results in higher fuel temperature (de- sired) and lower oil temperature . Mounts on interstage air-bleed actuator and bracket on right side of compressor housing.

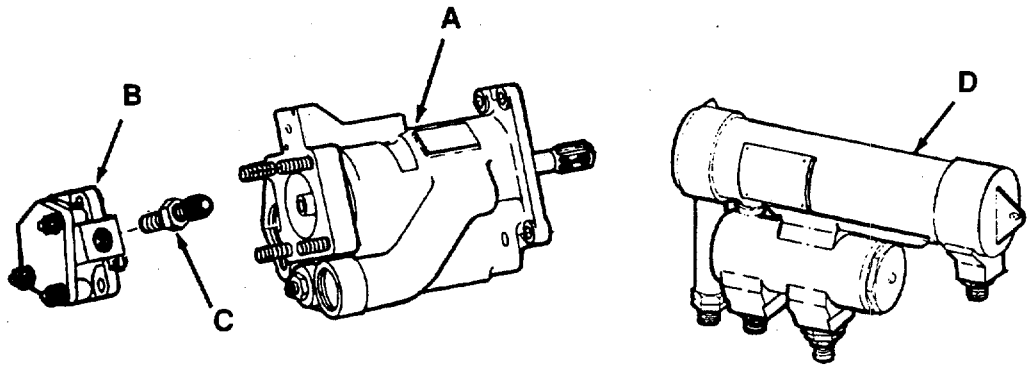

B–1–20/1

E. OIL FLOW PROGRAMMING VALVE . Located at the oil cooler and used to regulate oil flow in accordance with engine demand . The flow programming valve adjusts the oil flow and bypasses the excess oil back to the oil reservoir.

F. OIL TEMPERATURE TRANSMITTER . Provides a means of relaying oil temperature to cockpit indicator . Converts oil temperature to electrical signal . Installs in right side of accessory gearbox.

G. DUAL CHIP DETECTOR . Provides a means to filter and detect metal contamination originating in the No . 2 or No . 4 and 5 bearing areas . Contains two separate plug assemblies each surrounded by a small mesh basket (filter) . Buildup of chips between filter and plug assembly can be detected by a resistance check or by visual inspection.

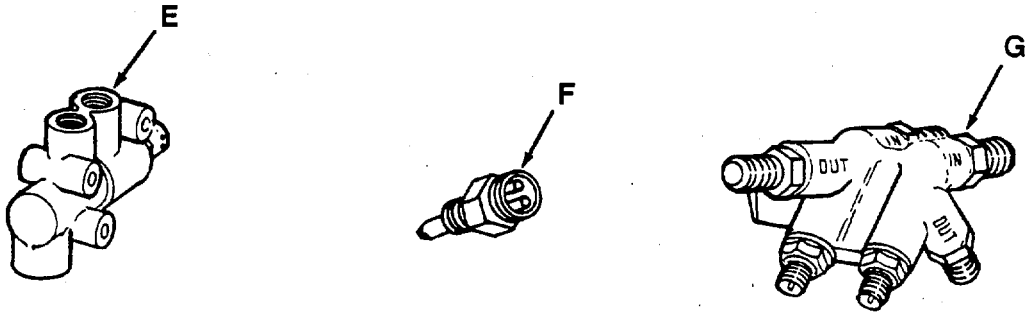

B-1-20 2

H. GEARBOX CHIP DETECTOR . Provides a means to detect metal contamination originating in accessory gearbox assembly . Contains magnetic quick disconnect plug and self-sealing housing . Allows plug to be removed and checked for contamination without loss of engine oil . Located at bottom of accessory gearbox assembly.

I. MAIN OIL FILTER . Consists of cover assembly and replaceable filter element . Cover assembly contains popout indicator button . Button pops out if filter element is close to being bypassed because of clogging . Also contains bypass valve . Valve allows oil to bypass filter element and supply oil to engine if filter does become clogged . Located at bottom of accessory gearbox assembly.

J. OIL LEVEL INDICATING SYSTEM . Consists of float assembly connected directly to an externally mounted indicator . Indicator contains visual pointer and electrical low level switch . Switch provides ability to indicate low oil level on cockpit indicator . Float assembly located inside inlet housing assembly . Indicator mounts on left side of inlet housing at 9-o'clock position.

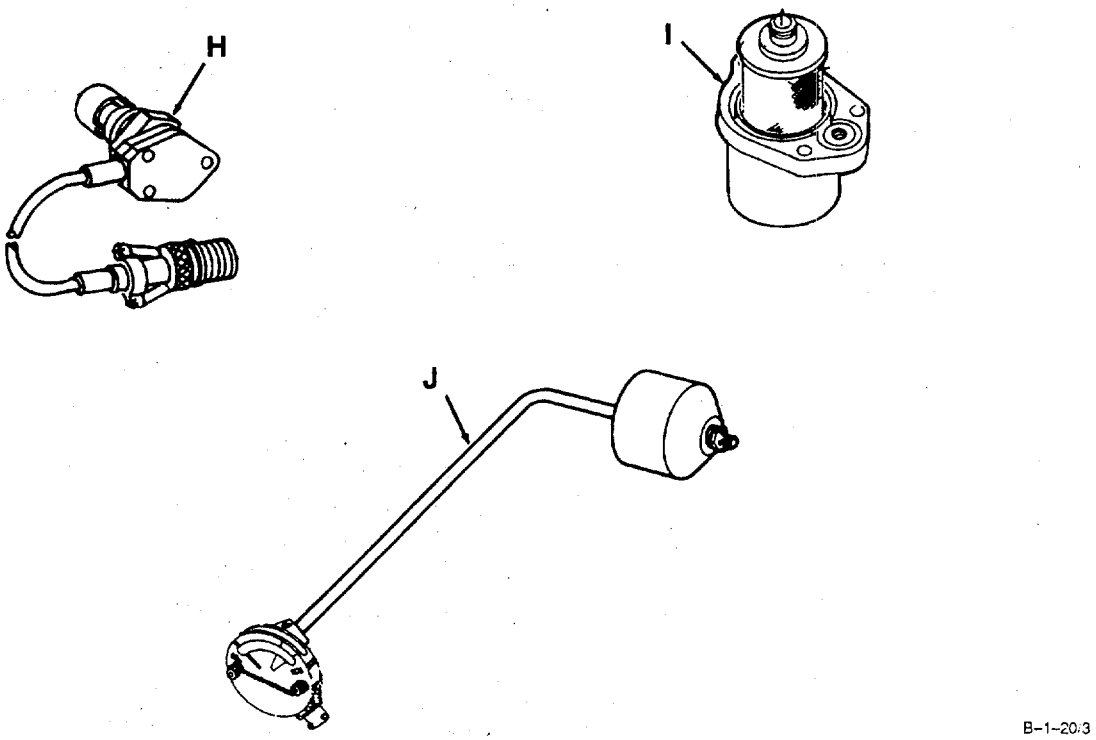

B. Oil flow between components is provided by rigid tube assemblies or flexible lines as applicable Designed and routed so no stress is placed on components.

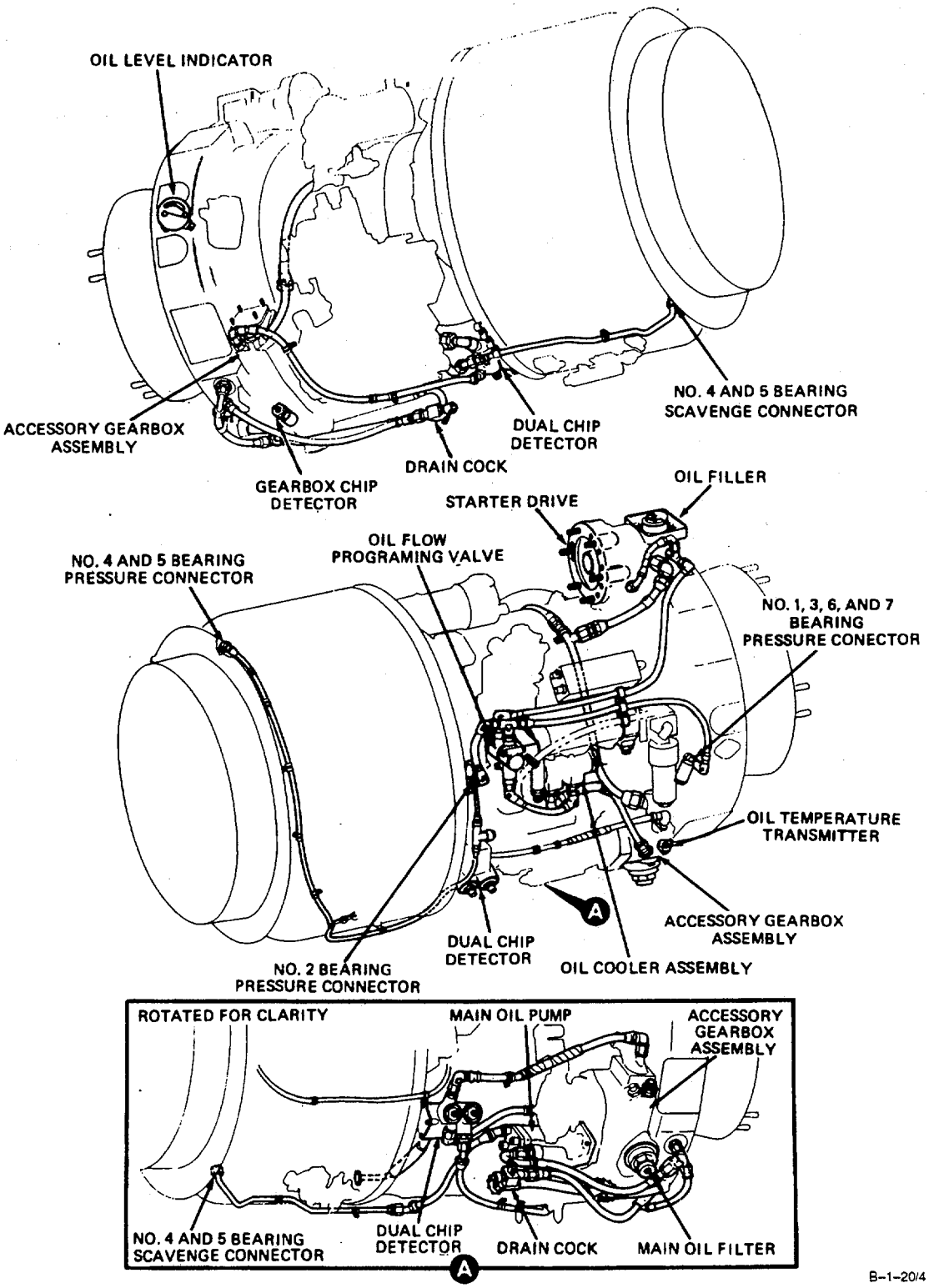

C. During engine operation some air enters the lubrication system . To get rid of this air, a venting system is included as part of the lubrication system . It removes air from accessory gearbox assembly and integral oil tank as follows:

(1) Accessory gearbox assembly air/oil vapor flows through two external vent lines to starter drive assembly.

(2) Integral oil tank air/oil vapor flows through negative gravity valve, at top of oil tank, and internally to starter drive assembly.

(3) Part of gearing in starter drive assembly acts as a centrifuge and separates air from oil . Oil returned to tank through normal return line . Air vented overboard through tank and engine breather . Helps to keep oil loss to a minimum.

D. Oil flow through the engine lubrication system is as follows:

(1) Oil leaves integral oil tank through bottom of inlet housing and flows through an external line to main oil pump.

(2) Oil from pump pressure element flows through a check valve and main oil filter, past temperature transmitter, through oil cooler assembly, and flow programming valve . The main oil pump, filter and cooler assembly each contain bypass valves.

(3) Three flow paths leave flow programming valve . One path flows oil to rear of engine to lubricate No . 2 and No . 4 and 5 bearings . Second flow path directs oil to front of engine to lubricate accessory drive gears and bearings, starter drive gears and bearings, and No . 1, 3, 6 and 7 bearings . Third path is an oil return to oil tank.

(4) Oil flows through a filter to No . 2 bearing, through dual chip detector and to accessory gearbox assembly.

(5) Oil flows through a filter to No . 4 and 5 bearings, through scavenge element in main oil pump, through dual chip detector, and to accessory gearbox assembly.

(6) Oil leaving accessory drive gears and bearings and the No . 1, 3, 6, and 7 bearings flows through internal paths to accessory gearbox assembly.

(7) Oil leaves accessory gearbox assembly through a strainer and main scavenge element in main oil pump and returns to inlet housing.

(8) Oil flow in inlet housing is through two passages that surround the integral oil tank . As passages are located in inner diameter of inlet housing next to inlet air passage, heat transfer takes place . Inlet air is heated (desired) and oil temperature lowered . Oil flow then reenters oil tank.

(9) Oil entering starter drive gears and bearings is filtered and flows directly to integral oil tank filler tube and into tank.

(10) Oil is removed from integral oil tank by opening drain cock.

E. LUBRICATION SYSTEM SCHEMATIC DIAGRAM.

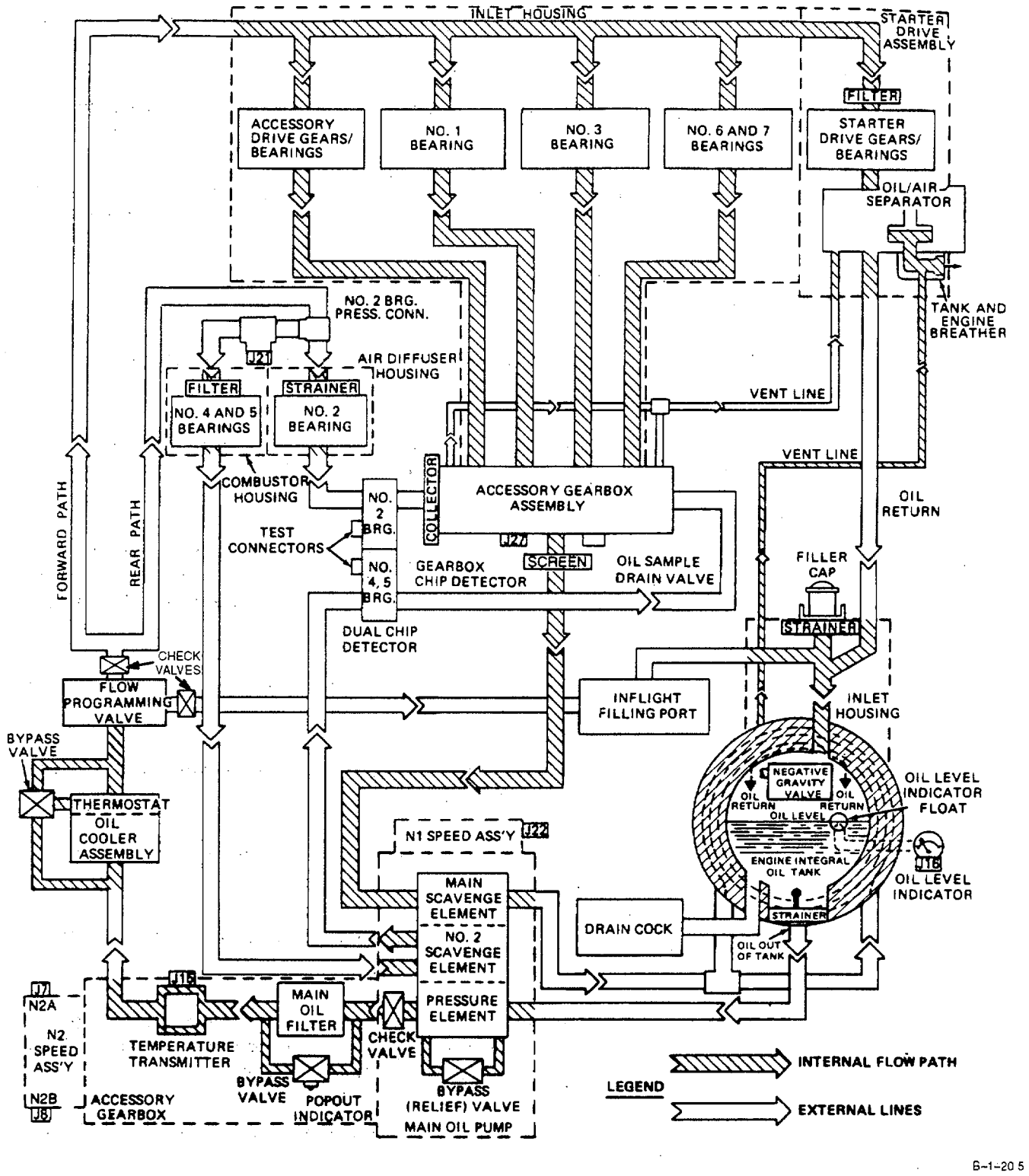

1-21 TORQUEMETER SYSTEM

A. Provides means to monitor engine power output . The engine provides a signal for operation of a torque indicator throughout the operating envelope of the engine . The signal is linear as a function of torque . The torquemeter system includes the following components:

A. OUTPUT SHAFT . Located at front of engine within inlet housing assembly . Main torque system component; also major engine component . Splines directly to power shaft, and provides internal splines for helicopter drive shaft . The engine power shaft with torque and reference shaftgears, measure shaft torque via a phase displacement technique.

B. TORQUE SENSOR . Externally mounted at 3-o'clock position on inlet housing assembly . The monopole sensor senses the phase of the torque shaft and provides this signal to the signal conditioner for processing.

C. SIGNAL CONDITIONER (AIRFRAME MOUNTED) . Mounted on aircraft bulkhead . The signal conditioner provides signals proportional to engine torque to the FADEC, cockpit circuits and test equipment as well as a power turbine speed signal for the airframe use.

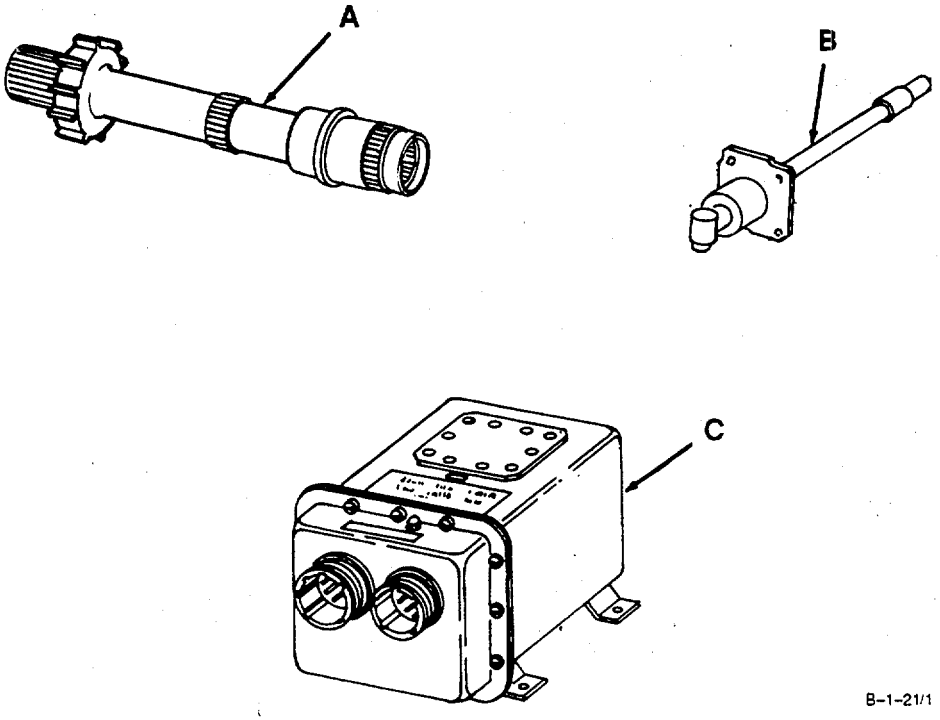

SECTION IV
REPAIR PARTS; SPECIAL TOOLS; TEST, MEASUREMENT, AND DIAGNOSTIC EQUIPMENT (TMDE); AND SUPPORT EQUIPMENT

1-22 COMMON TOOLS AND EQUIPMENT

For authorized common tools and equipment, refer to the Modified Table of Organization and Equipment (MTOE) applicable to your unit.

1-23 SPECIAL TOOLS, TMDE, AND SUPPORT EQUIPMENT

Special tools, TMDE, and support equipment are listed in the repair parts and special tools list (TM1-2840-252-23P), the maintenance allocation chart (Appendix B), and Table 1-1 . Tools to be fabricated are listed and shown in the illustrated list of manufactured items (Appendix E).

Table 1-1 . Special Tools, TMDE, and Support Equipment

TOOL OR TEST EQUIPMENT REFERENCE T CODE	MAINTE-NANCE CATEGORY	NOMENCLATURE	NATIONAL/NATO STOCK NUMBER	TOOL NUMBER
T1	AVIM	Puller, Mechanical	5120-00-012-8865	LTCT1009-01
T2	AVIM	Kit, Application (RTV)		LTCT11527-01
T3	AVIM	Fixture, Holding Gear	4920-00-012-9091	LTCT1184
T4	AVUM	Puller, Mechanical	5120-00-509-2965	LTCT1218
T5	AVUM	Installation Tool	4920-00-475-2552	LTCT1228
T6	AVIM	Gage, Backlash	5220-00-015-6982	LTCT1229
T7	AVUM	Installation Tool	4920-00-509-8087	LTCT1230
T8	AVIM	Plate, Wrenching Pin	4920-00-509-8060	LTCT1252
T9	AVUM	Light, Test, Oil Level	4920-00-940-2910	LTCT1259
T10	AVUM	Fixture, Holding Gear	4920-00-872-7858	LTCT1260
T11	AVUM	Cover, Protective Engine	4920-00-916-2448	LTCT1278
T12	AVIM	Alignment Pin	5120-00-178-0974	LTCT13038
T13	AVIM	Fixture, Torque	4920-00-866-0863	LTCT13344
T14	AVIM	Clinching Tool	5120-00-481-3117	LTCT13411-01
T15	AVIM	Fixture, Pressure Check	4920-00-866-0849	LTCT13442
T16	AVIM	Tester, Seal Leakage	4920-00-444-2362	LTCT13606-01
T17	AVIM	Fixture, Torque	4920-00-834-2178	LTCT13771
T18	AVIM	Puller, Mechanical	5120-00-110-4235	LTCT1 379-01
T19	AVIM	Fixture, Torque	4920-00-372-4596	LTCT13857-01
T20	AVUM	Tool Set, Seal Removal	4920-00-866-0858	LTCT13868
T21	AVIM	Heater, Induction	4920-00-372-4595	LTCT13873-01
T22	AVIM	Installing Tool, Bearing	5120-00-370-3939	LTCT13874-01
T23	AVIM	Puller, Mechanical	5120-00-370-3934	LTCT13877-01
T24	AVUM	Wrench, Open-End	5120-00-834-2141	LTCT13911-01
T25	AVIM	Torque Adapter, Wrench	5120-00-972-8191	LTCT1409
T26	AVUM	Handling Tool	5120-00-959-7633	LTCT1428-01
T27	AVUM	Handling Tool	5120-00-959-7636	LTCT1431-01

Table 1-1 . Special Tools, TMDE, and Support Equipment (Continued)

TOOL OR TEST EQUIPMENT REFERENCE T CODE	MAINTE-NANCE CATEGORY	NOMENCLATURE	NATIONAL/NATO STOCK NUMBER	TOOL NUMBER
T28	AVIM	Fixture, Power Turbine	4920-00-834-2182	LTCT14360-01
T29	AVIM	Control Unit	6110-00-631-7196	LTCT14547-01
T30	AVIM	Fixture, Holding	4920-01-115-6995	LTCT14616-01
T31	AVIM	Puller, Wheel, Hydraulic	5130-01-115-6996	LTCT14672-01
T32	AVUM	Sling, Aircraft Maintenance	1730-01-007-6990	LTCT14700-40
T33	AVIM	Bar, Locating	5120-00-671-2129	LTCT153
T34	AVUM	Drift Assembly	4920-00-891-4653	LTCT1643
T35	AVUM	Tool Installing	4920-00-898-7925	LTCT1644
T36	AVUM	Punch, Drive Pin	5120-00-951-8622	LTCT1960
T37	AVUM	(EHRT), Engine History Re-cording Terminal		LTCT29014-01
T38	AVIM	Alignment, Pin	5120-00-898-0697	LTCT387-01
T39	AVIM	Cover, Aircraft, Group		LTCT3936
T40	AVIM	Support, Dial Indicator	4920-00-110-9986	LTCT6098
T41	AVIM	Puller, Mechanical	5120-00-109-4674	LTCT6173
T42	AVIM	Cover, Aircraft Group	1730-00-134-0979	LTCT6271
T43	AVIM	Fixture, Assembling (Bore Heater)	4920-00-134-0162	LTCT6354
T44	AVIM	Kit, Maintenance (Skimming)	4920-00-134-0163	LTCT6629-03
T45	AVIM	Fixture, Holding Tube	4920-01-137-3557	LTCT7202-01
T46	AVUM	Kit, Masking (RTV)		LTCT7612-01
T47	AVUM	Kit, Blade Installation	5180-00-125-4106	LTCT7660-01
T48	AVIM	Puller, GP Spacer		LTCT7923-01
T49	AVIM	Coupling Half, Clamp	5340-00-156-1191	LTCT9917
T50	AVIM	Multiplier, Torque	5120-00-482-2543	PD2501-SD

1-24 REPAIR PARTS

Repair parts are listed and illustrated in the Repair Parts and Special Tools List (RPSTL) (TM1-2840-252-23P) covering Aviation Unit and Aviation Intermediate Maintenance for this equipment.

SECTION V
SERVICE UPON RECEIPT

This section contains general procedures for proper handling of engine upon receipt at any facility . It has instructions for checking pressurized shipping containers immediately upon receipt and every 90 days (or more frequently) . It also has instructions for removing engine from shipping container, making engine ready for use after storage, and installing and removing engine on maintenance stand . It is divided into the following tasks:

LIST OF TASKS

NUMBER	TASK	PAGE
1-25	Inspect Pressurized Shipping and Storage Container	1-50
1-26	Remove Engine From Shipping and Storage Container	1-65
1-27	Remove Tailpipe Kit, DECU Kit, and Signal Conditioning Unit from Shipping Container	1-88
1-28	Activate Engine After Storage	1-94
1-29	Install Engine On Maintenance Stand	1-103
1-30	Remove Engine From Maintenance Stand	1-108

1-25 INSPECT PRESSURIZED SHIPPING AND STORAGE CONTAINER 1-25

INITIAL SETUP

Applicable Configurations:

Tools:
- Powerplant Mechanic's Tool Kit, NSN 5180-00-323-4944
- Technical Inspection Tool Kit, NSN 5180-00-323-5114
- Dry Compressed Air Source
- Pressure Gage, 0-30 PSI
- Half Round File
- Wire Brush

Materials:
- Bonding Seal (E10)
- Desiccant Bags (E18)
- Glycerol (E25)
- Lint-Free Cloth (E30)
- Liquid Soap (E31)

Parts:
- Humidity Indicator Card
- Gasket
- Valve Stem
- Packings
- Valve

Personnel Required:
- Aircraft Powerplant Repairer
- Aircraft Powerplant Inspector

References:
- TB 55-8100-200-25
- DA PAM 738-751
- Task 1-26
- Task 1-102
- Task 1-103
- Task 1-104

General Safety instructions:

WARNING

Before starting this procedure, make sure both sections of container are grounded . Make sure container is opened in well-ventilated areas . Failure to do so could result in explosion.

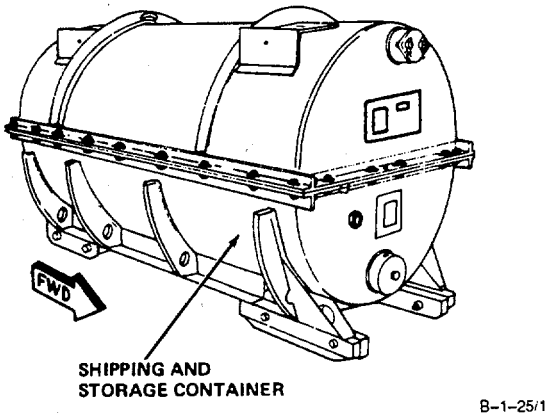

GO TO NEXT PAGE

NOTE

This procedure shall be performed immediately upon receipt of engine and at least every 90 days thereafter.

1. **Check colors of humidity indicator (1) . Indica-**tor (1) should show acceptable color condition. The 40 and 50 percent segments shall be blue.

NOTE

If humidity indicator shows unacceptable color condition, omit steps 2 thru 34 . If color condition is acceptable, do steps 2 thru 34.

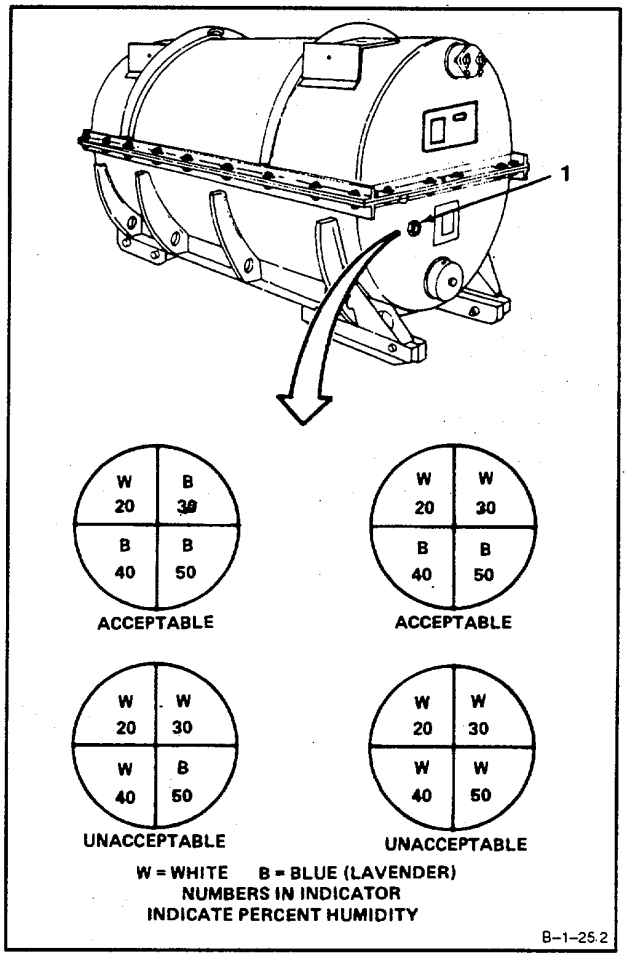

GO TO NEXT PAGE

2. Remove bolt (2) and cover (3).

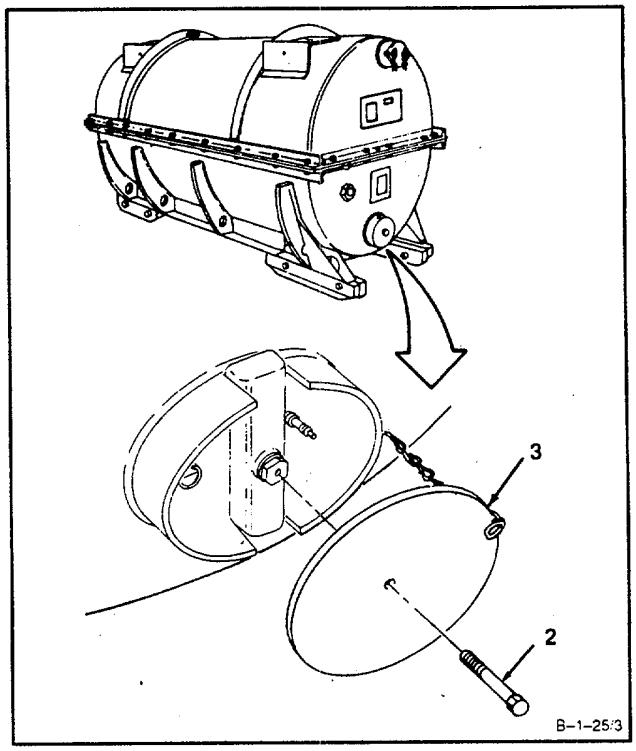

3. Remove valve cap (4).

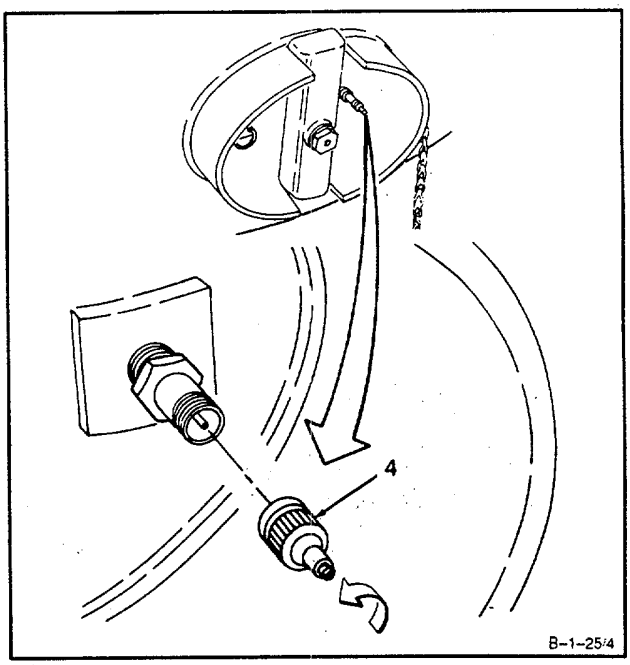

GO TO NEXT PAGE

4. Check air pressure with pressure gage at valve (5) . Pressure shall not be less than 5 psig.

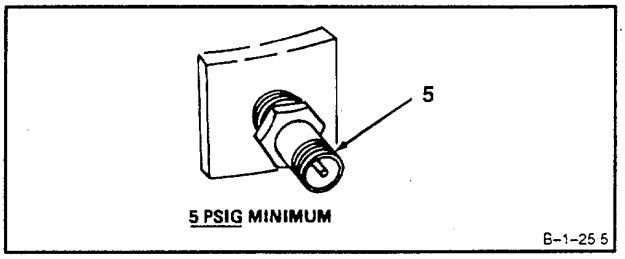

5. If pressure is between 1 and 5 psig, proceed as follows:

   a. Apply 5 psig air pressure to valve (5) . Use clean, dry, compressed air.

   b. Do steps 7, 8, 9, 10, 11, 12, 13, and 14.

6. If air pressure is below 1 psig, go to step 35.

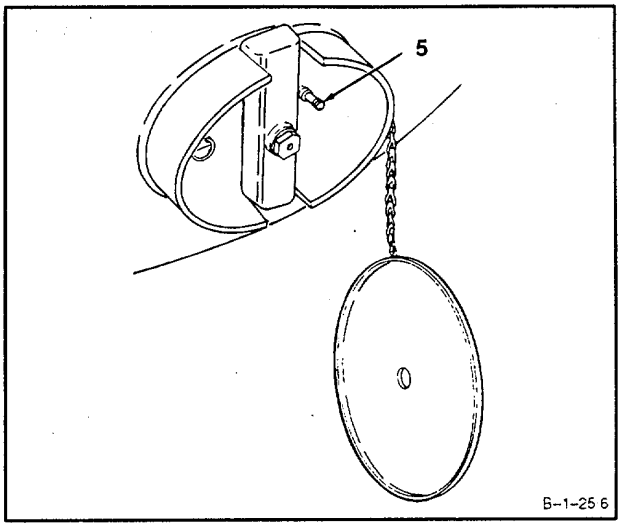

NOTE

In following step, presence of air bubbles indicates a leak.

7. **Inspect for leaks** by applying liquid soap (E31) to valve (5) and valve stem (6).

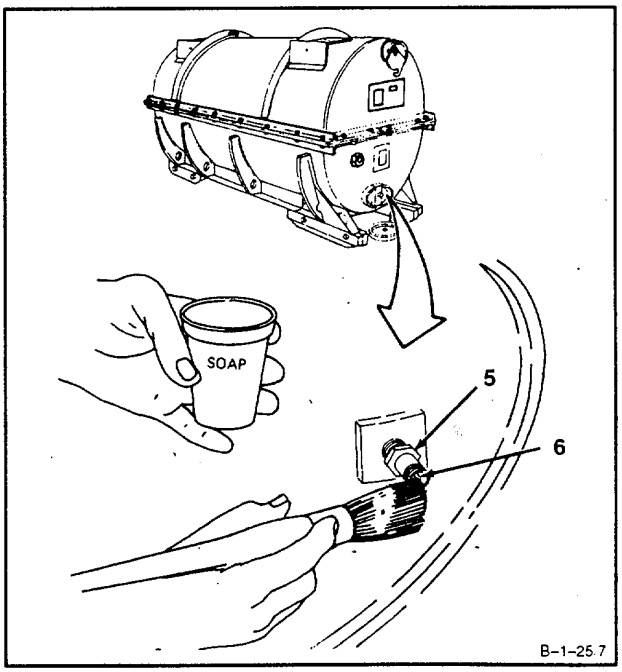

GO TO NEXT PAGE

8. If leak exists at valve stem (6), replace valve stem (6) as follows:

WARNING

Shipping container is pressurized. Use care during removal of valve stem. Injury to personnel can result. If injury occurs, get medical attention.

a. Remove valve stem (6) from valve (5) . Use slotted end of valve cap (4).
b. Install serviceable valve stem (6) in valve (5). Use slotted end of valve cap (4).

9. If leaks exist at valve (5), replace valve (5) as follows:

a. Remove valve (5).
b. Install serviceable valve (5).

10. **Apply <u>5 psig</u> air pressure to valve (5) .** Use clean, dry compressed air.
11. Recheck valve and valve stem for leaks (Ref. steps 7, 8, and 9).

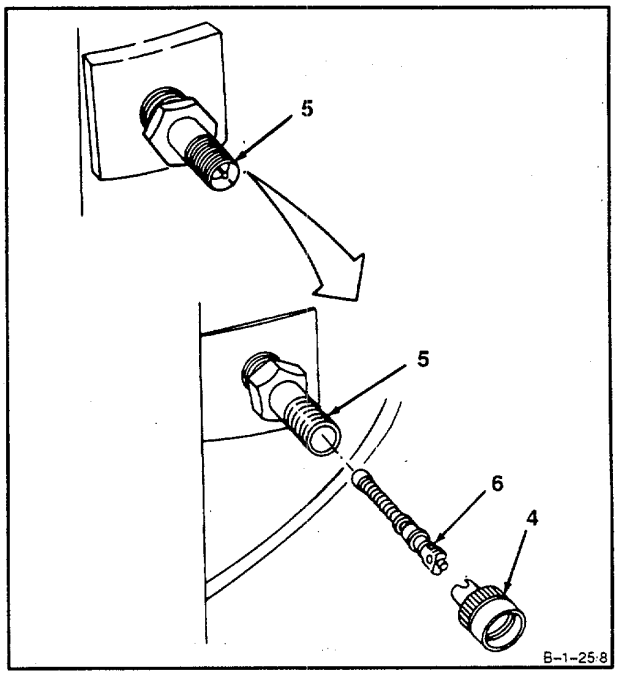

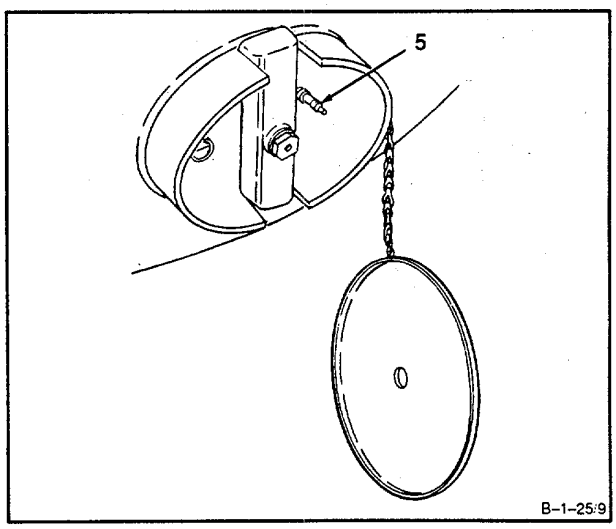

GO TO NEXT PAGE

12. Install valve cap (4) on valve (5).

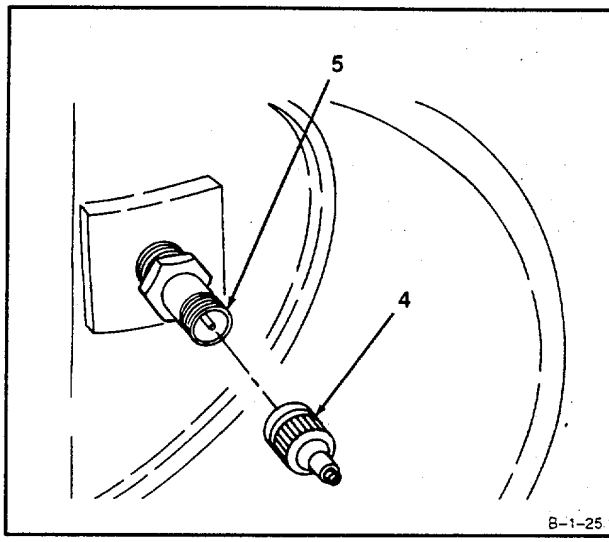

NOTE

In following step, presence of air bubbles indicates a leak.

13. **Check for leaks** by applying liquid soap (E31) to shipping container mating flanges (7 and 8).

14. **If no leaks exist at flanges (7 and 8), omit steps 15, thru 35** . If leaks exist at flanges (7 and 8), do steps 15 thru 35.

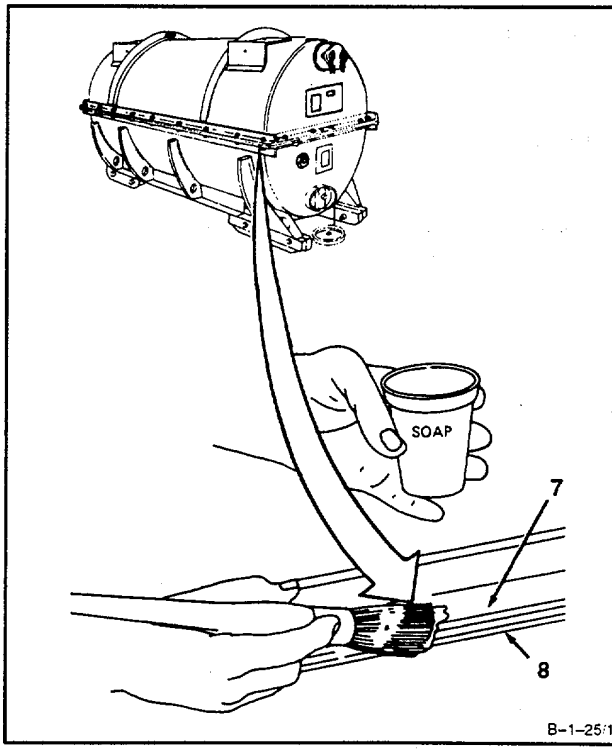

GO TO NEXT PAGE

15. **Remove shipping and storage container cover assembly (9)** . (Ref . Task 1-26, steps 7 thru 11.).

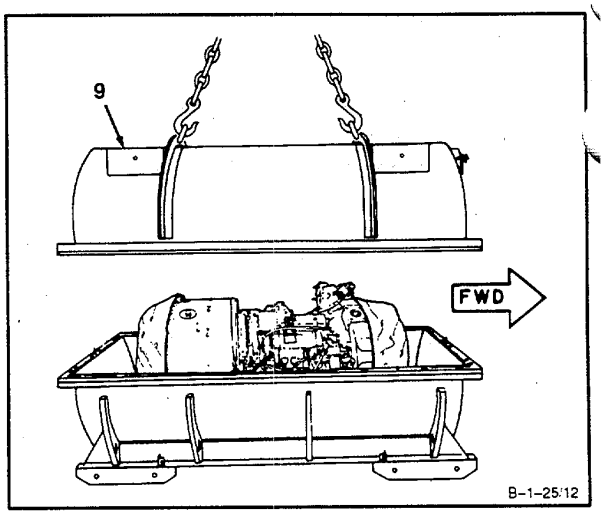

16. **Remove sealing gasket (10).**

17. **Inspect sealing gasket (10)** . There shall be no material missing, breakage, or foreign material stuck to gasket.

18. **Inspect flange surface (11) for rust or foreign material . If rust or foreign material is found clean flange surface (11) as follows:**

    a. Clean flange surface (11) on all four sides of base assembly (12) . Use wire brush.
    b. If rough projections exist, smooth projections out . Use half round file.

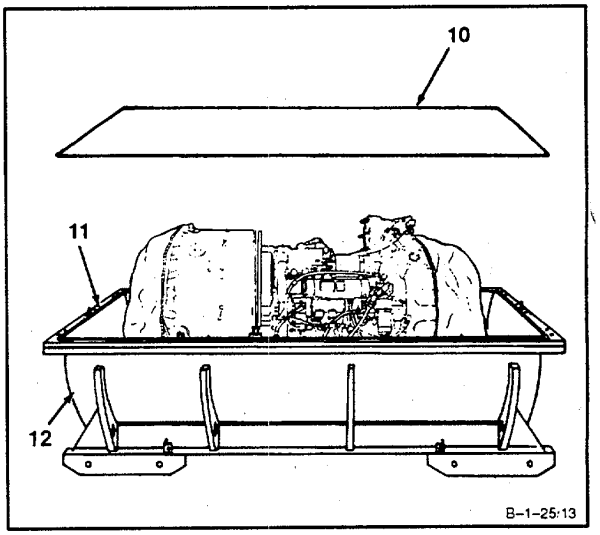

19. **Clean flange surface (13)** on all four sides of cover assembly (14) . Use wire brush . If rough projections exist, smooth projections out using half round file.

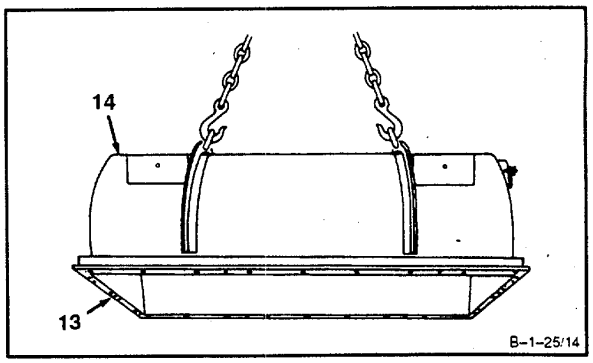

GO TO NEXT PAGE

20. Wipe sealing gasket (10) clean using lint-free cloth (E30).
21. Apply light coat of glycerol (E25) on sealing gasket (10) . **Install sealing gasket** (10) in groove (15) of base assembly (12).

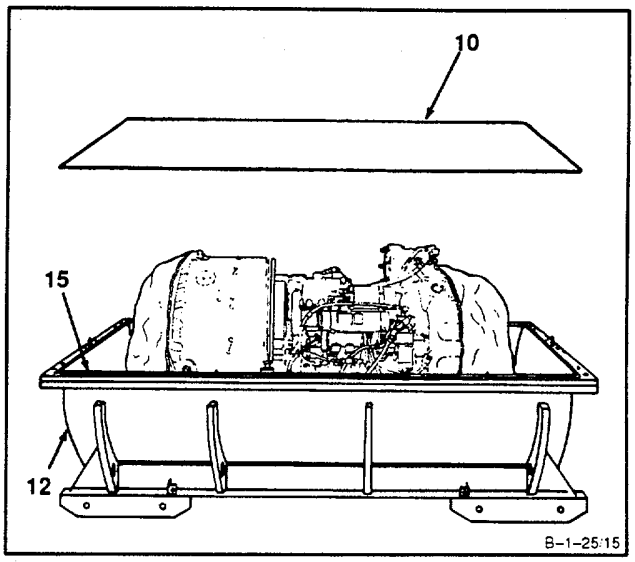

NOTE

Step 22 shall be performed immediately before cover assembly is lowered onto base assembly.

22. **Install five bags of desiccant** (16) (E18) in desiccant basket (17) .

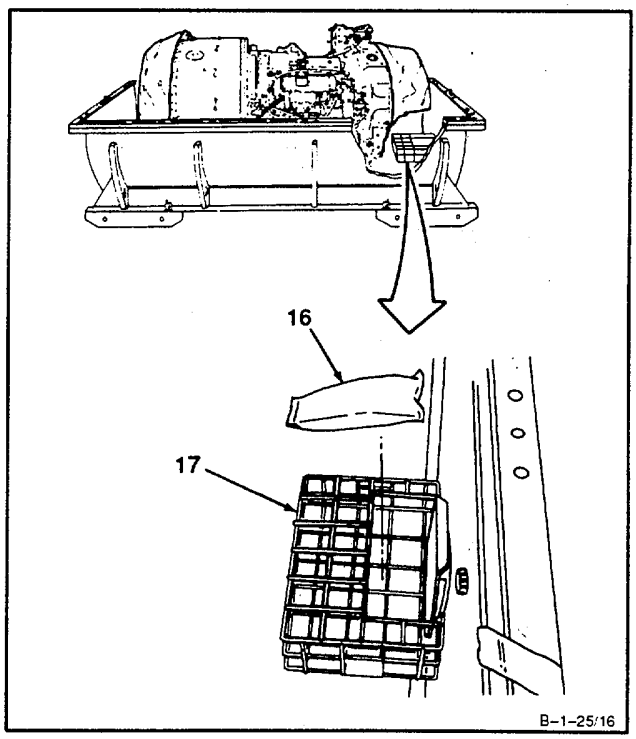

GO TO NEXT PAGE

23. Install **cover assembly** (14) on base assembly (12) (Ref.Task 1-26, steps 33 thru 50).

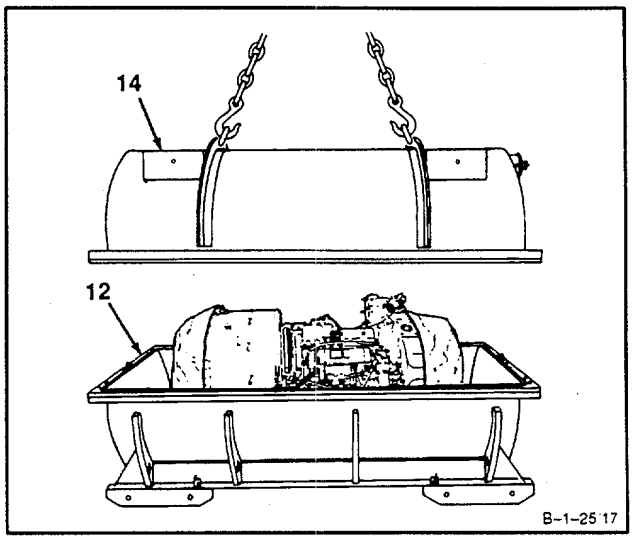

24. Remove humidity indicator (19) and packing (20).

25. Remove bushing (21) and humidity indicator card (22).

26. **Install new humidity indicator card** (22) and bushing (21) in housing (23).

27. Install packing (20) and humidity indicator (19) in base assembly (12).

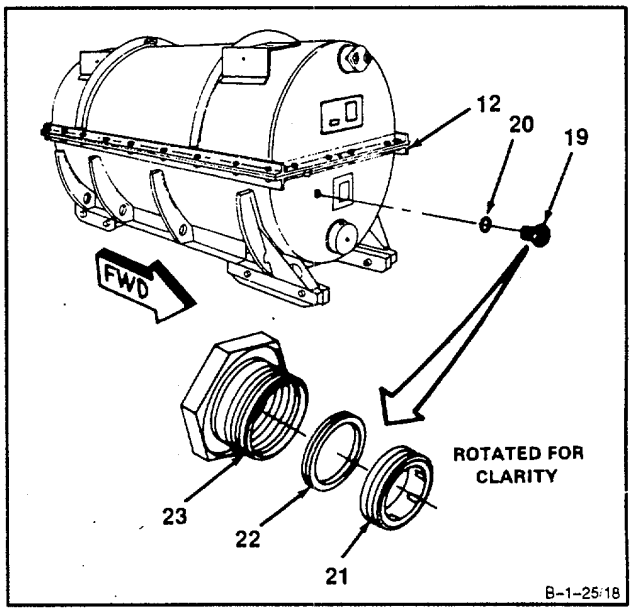

GO TO NEXT PAGE

28. Remove two bonding seals (24), and **loosen wing nuts (25).**

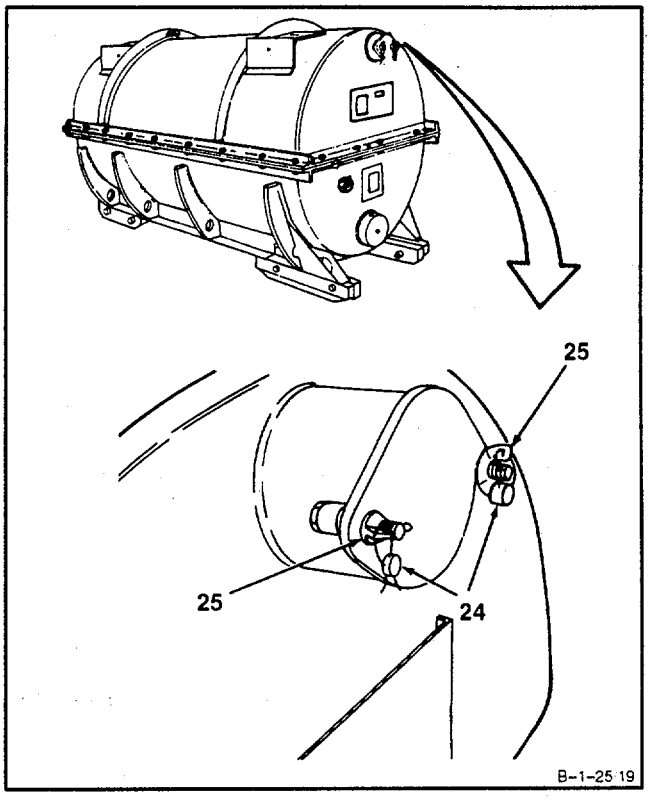

29. **Open cover assembly (26).**

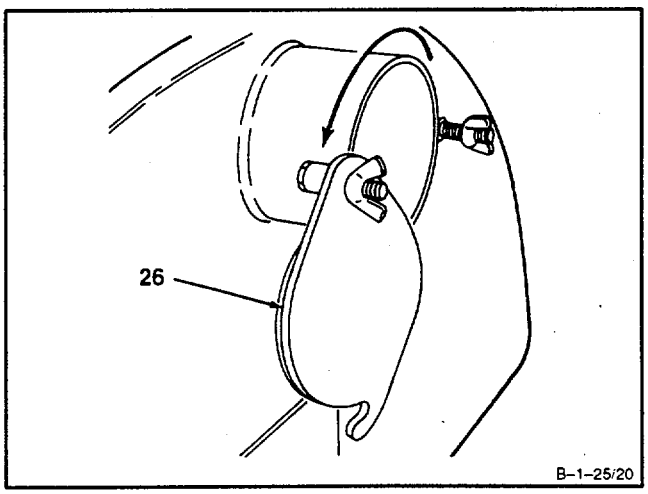

GO TO NEXT PAGE

30. **Remove historical records** (27) from record receptacle (28). Record date of repressurization and name of activity on historical record (27) (Ref. DA Pamphlet 738-751.)

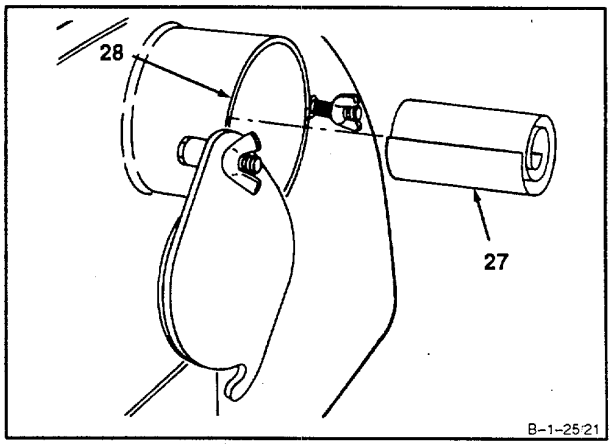

31. **Install complete historical records** (27) in record receptacle (28). Close cover (26) and tighten two wing nuts (25).

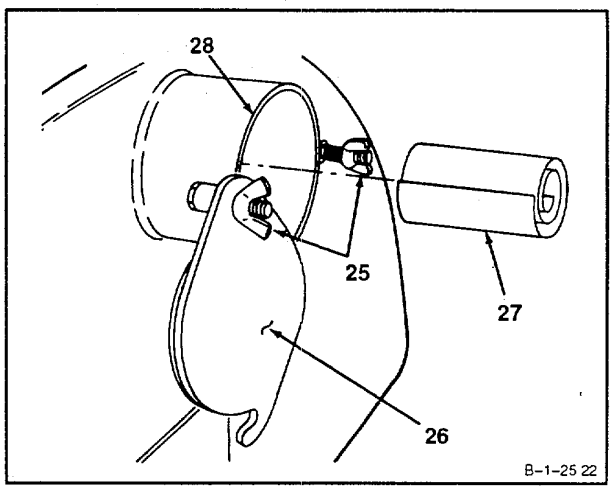

32. **Install two bonding seals (E10) (24) through wing nuts (25) and bolts (30).**

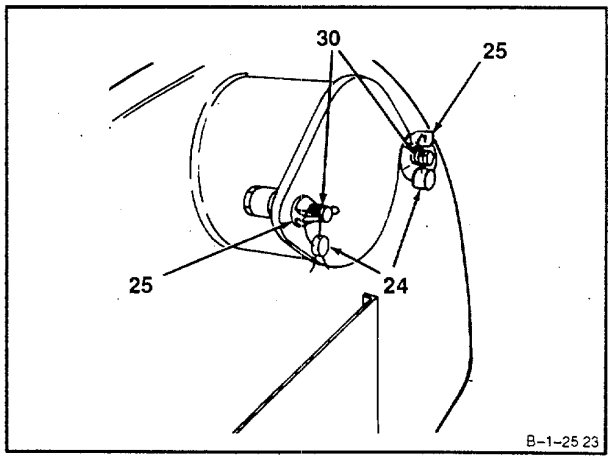

GO TO NEXT PAGE

33. **Install bonding seal (E10) (29)** through hole (31) on forward end of shipping container.

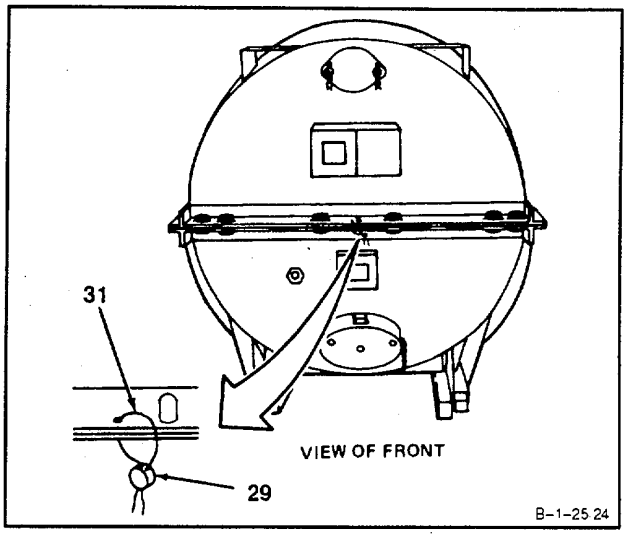

34. **Install bonding seal (E10) (29)** through hole (32) on aft end of shipping container.

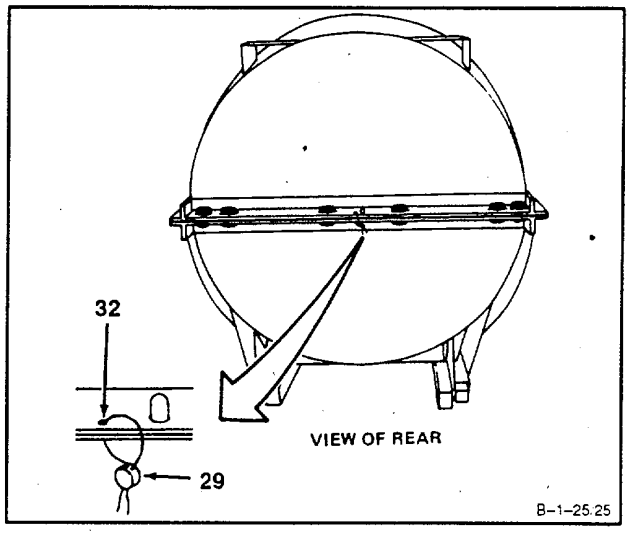

GO TO NEXT PAGE

35. **Check humidity Indicator (1). If 40 and 50 percent segments are not blue proceed as follows**:

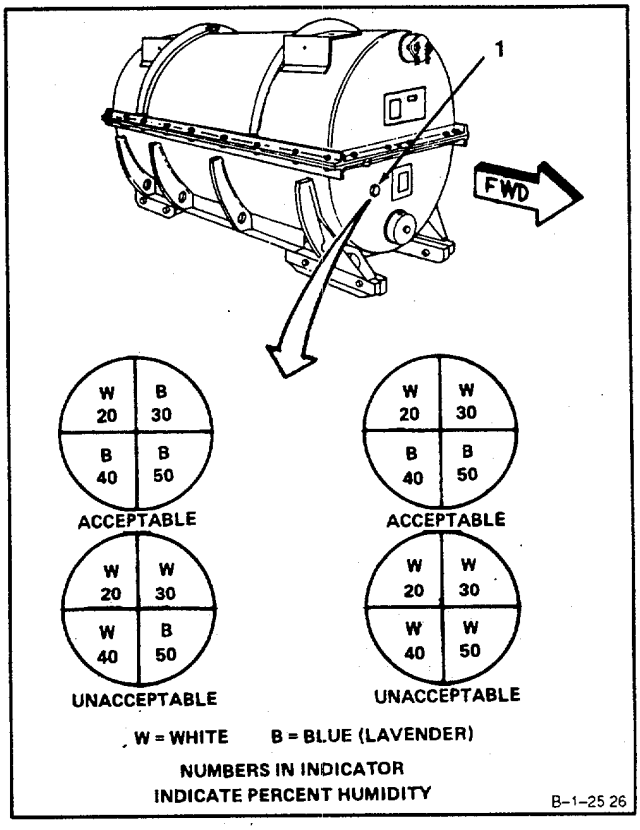

a. **Remove engine (33) from shipping container (34)** (Ref. Task 1-26, steps 4 thru 31).

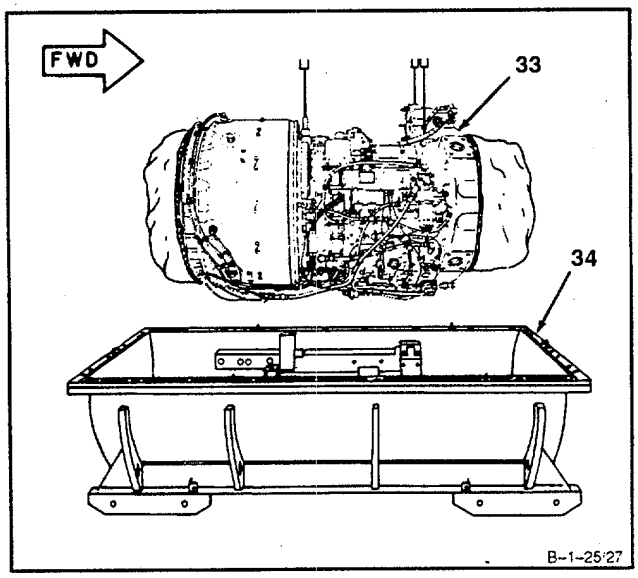

GO TO NEXT PAGE

b. Remove two plastic covers (35).

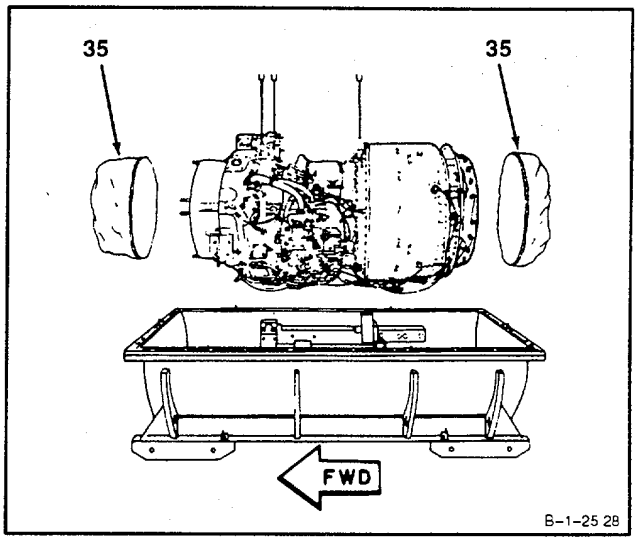

c. **Inspect inlet (36), compressor housing (37), visible compressor rotor blades (38), and fourth turbine rotor blades (39)**. There shall be no corrosion. If corrosion exists, re- pair or replace any item that your maintenance level allows. Otherwise replace engine.

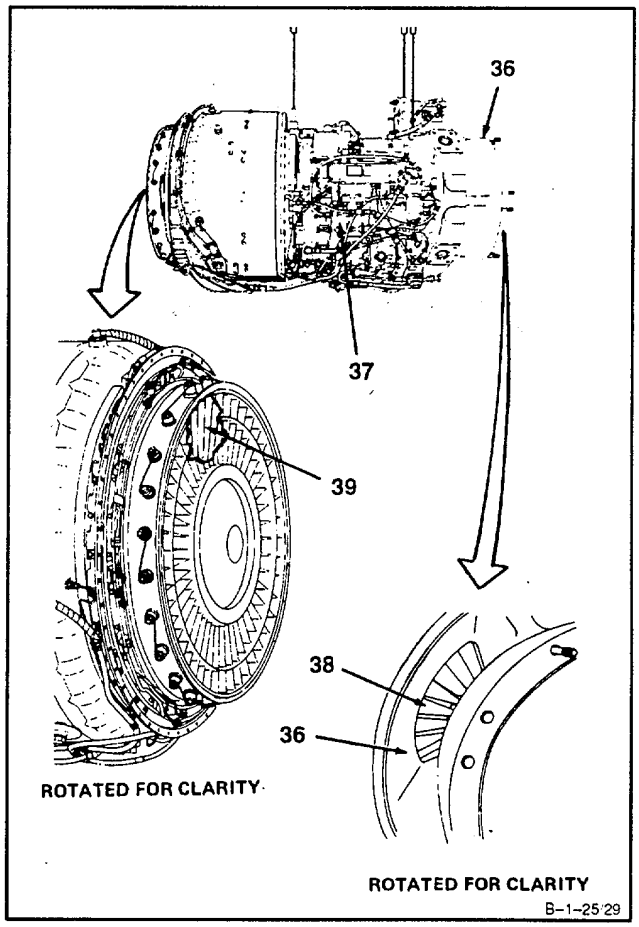

GO TO NEXT PAGE

d. **Preserve and prepare engine (33) for shipment or storage** (Ref . Task 1-102).

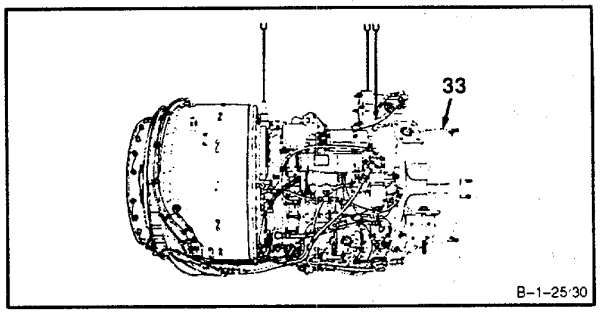

e. **Prepare and inspect shipping and storage container (34)** (Ref. Task 1-103).

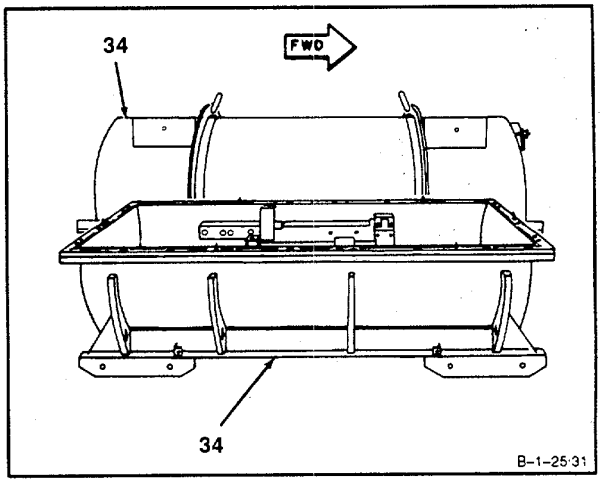

f. **Install engine (33) into shipping and storage container (34)** (Ref. Task 1-104).

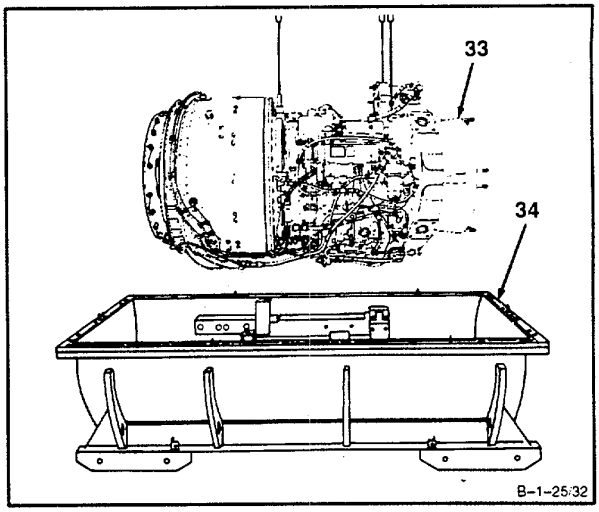

FOLLOW-ON MAINTENANCE:
None

END OF TASK

INITIAL SETUP

Applicable Configurations;

All

Tools:

Powerplant Mechanic's Tool Kit, NSN 5180-00-323-4944
Technical Inspection Tool Kit, NSN 5180-00.-323-5114
Chain with Hooks (Appendix E)
Torque Wrench, 100-750 Inch-Pounds
Dry Compressed Air Source
Vacuum Cleaner
Pressure Gage, 0-30 PSI
Wire Brush
Half Round File
Hoist

Materials:

Desiccant Bag (E18)
Glycerol (E25)WARNING
Lint-Free Cloth (E30)
Liquid Soap (E31)
Liquid Soap (E31)
Tar (E61)
Wiping Rag (E64)

Personnel Required:

Aircraft Powerplant Repairer (2)
Aircraft Powerplant Inspector

References:

TM 55-1520-47E-23
TM 55-4920-328-13
Task 1-25
Task 1-29
Task 1-31
Task 1-77

General Safety Instructions:

WARNING

Before starting this procedure, make sure both sections of container are grounded. Make sure container is opened in well-ventilated areas. Failure to do so could result in explosion.

WARNING

Shipping container is pressurized. Use care during removal of valve stem. Injury to personnel can result. If injury occurs, get medical attention.

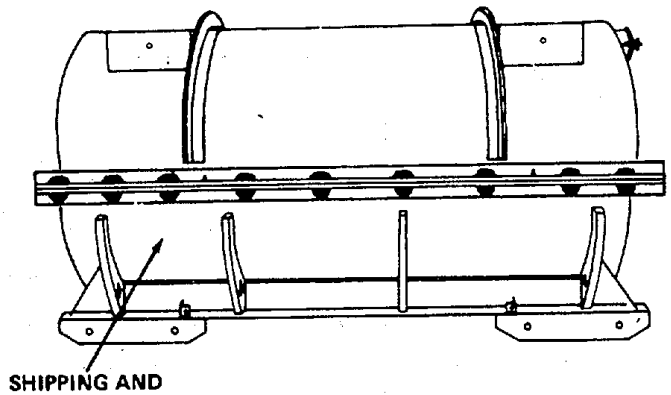

B-1-26/1

GO TO NEXT PAGE

1. Remove two bonding seals (1), and **loosen wing nuts (2).**

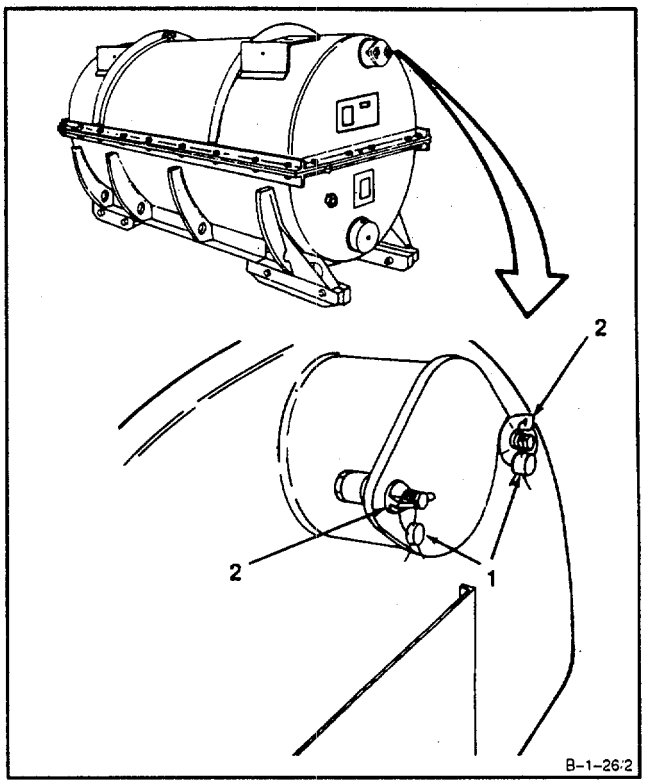

2. **Rotate cover assembly (3).**

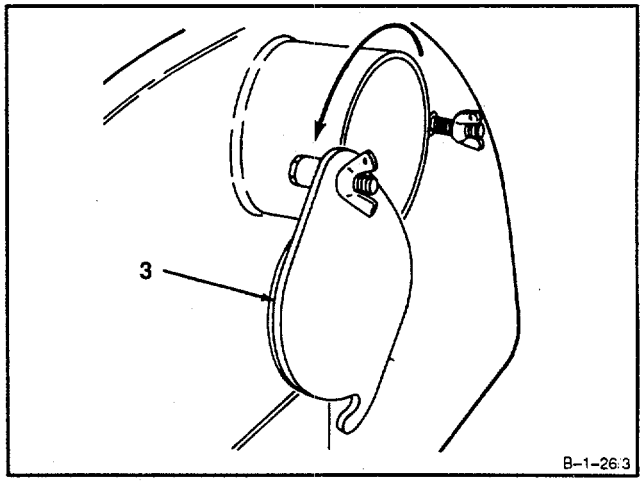

GO TO NEXT PAGE

3. **Remove historical records (4).**

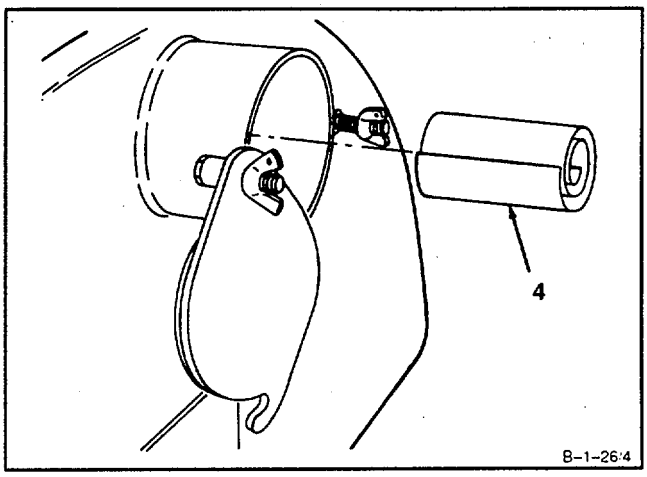

4. **Remove** bolt (5) and **cover (6).**

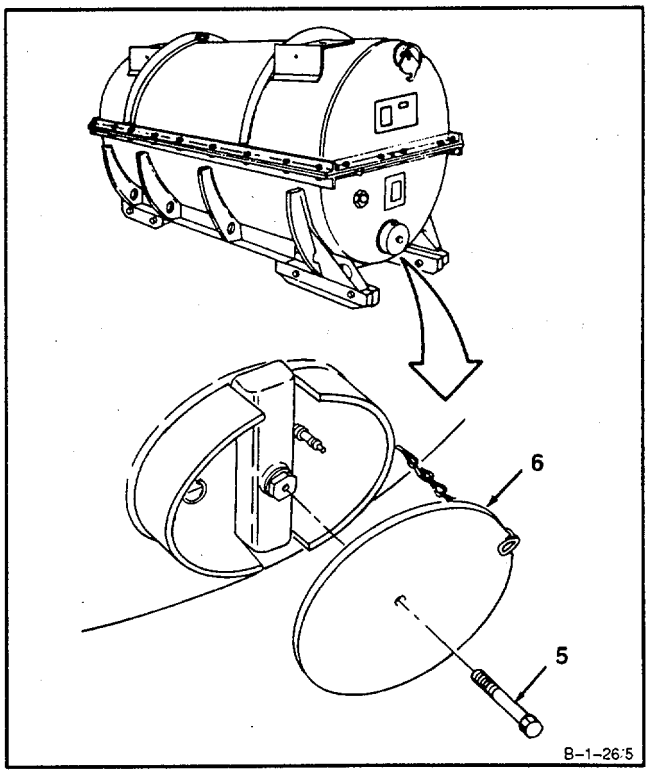

GO TO NEXT PAGE

5. **Remove valve cap (7).**

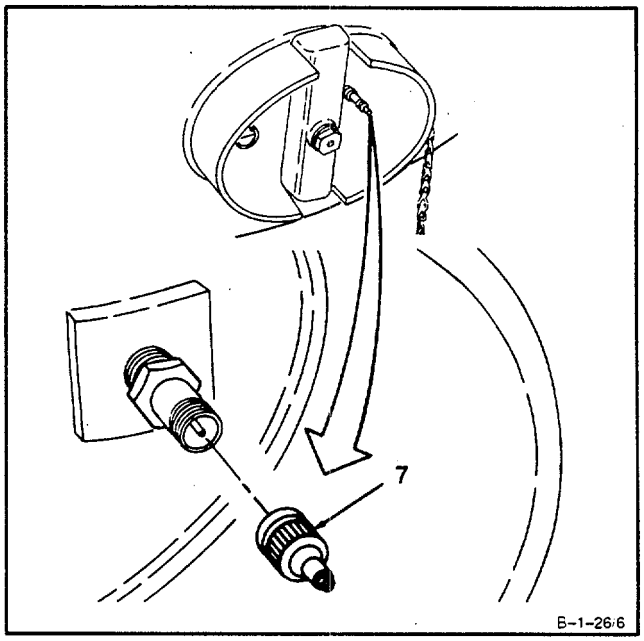

NOTE

In following step 6, if air pressure is less than 1 psig, container and engine should be inspected (Ref. Task 1-25).

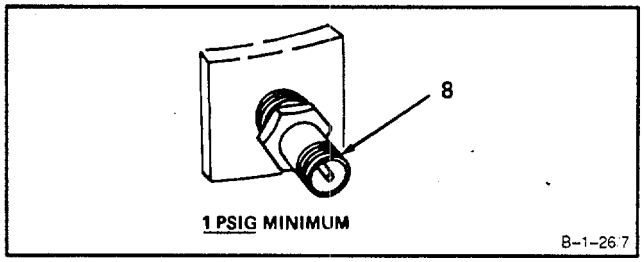

6. **Check air pressure** with pressure gage at valve (8). Pressure shall not be less than 1 psig.

WARNING

Shipping container Is pressurized. Use care during removal of valve stem. Injury to personnel can result. If injury occurs, get medical attention.

7. **Remove valve stem** (9). Use slotted end of valve cap (7).

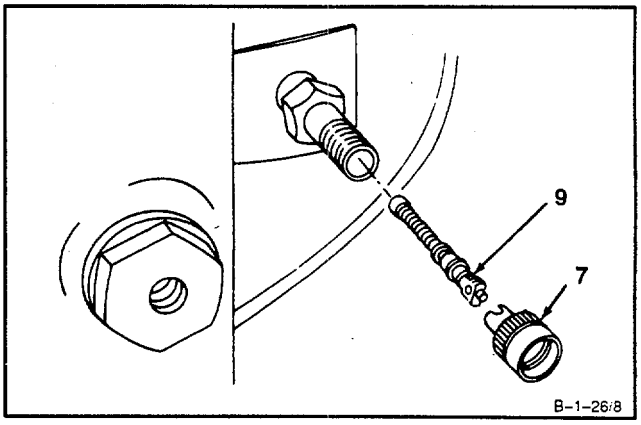

GO TO NEXT PAGE

8. Remove bonding seals (10 and 11).

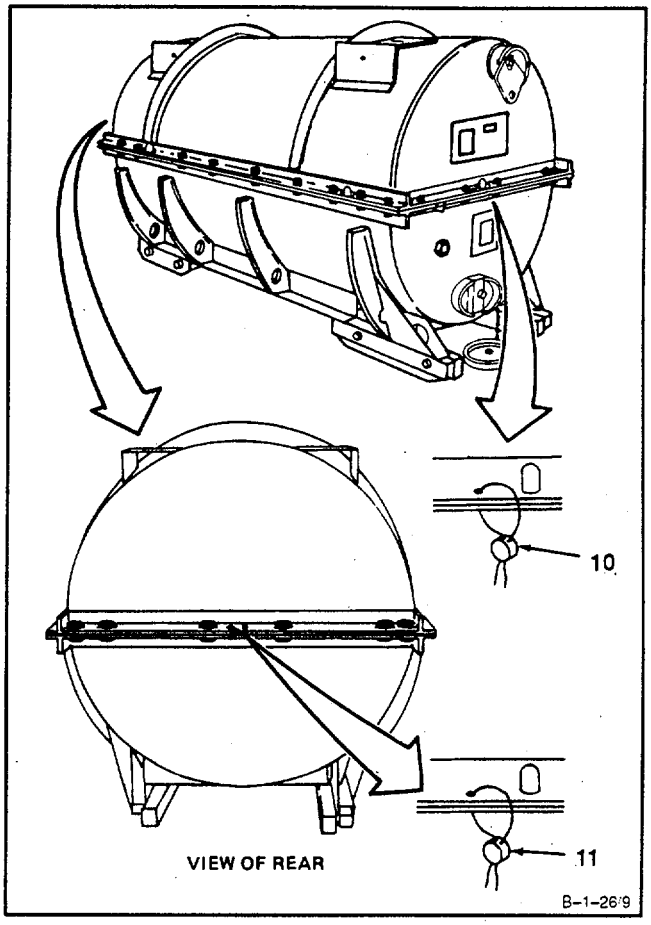

WARNING

Make certain that all air pressure has been released before loosening nuts. If nuts are removed before pressure is re- leased, Internal pressure could blow cover off and cause serious Injury. If injury occurs, get medical attention.

9. Remove 30 nuts (12) and bolts (13).

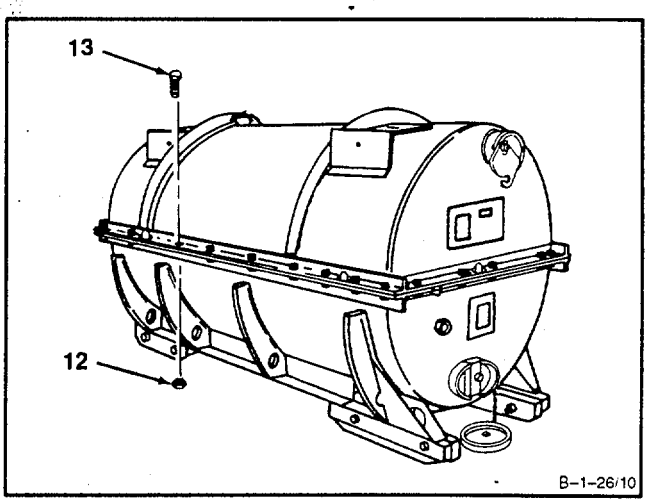

GO TO NEXT PAGE

10. Install hoist and chain with hooks (Appendix E) (14) to cover assembly (15).

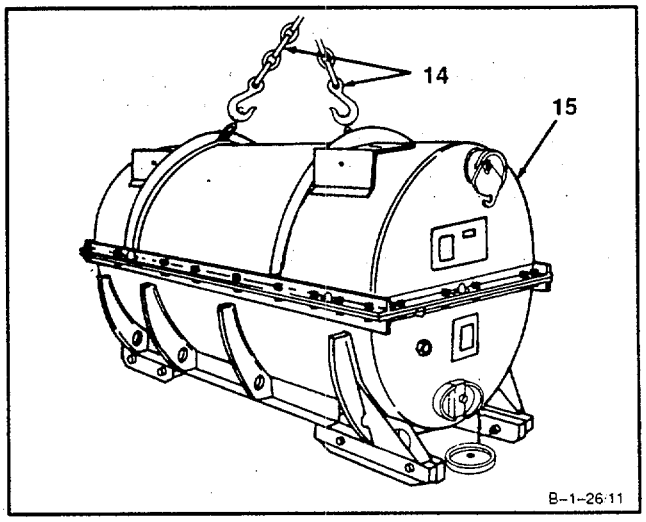

11. Using helper, **remove cover assembly (15)** from base assembly (16). Use hoist and chain with hooks (Appendix E) (14).

12. Set cover assembly (15) down and remove chain with hooks (Appendix E) (14).

13. **Install engine maintenance sling** (Ref. Task 1-31).

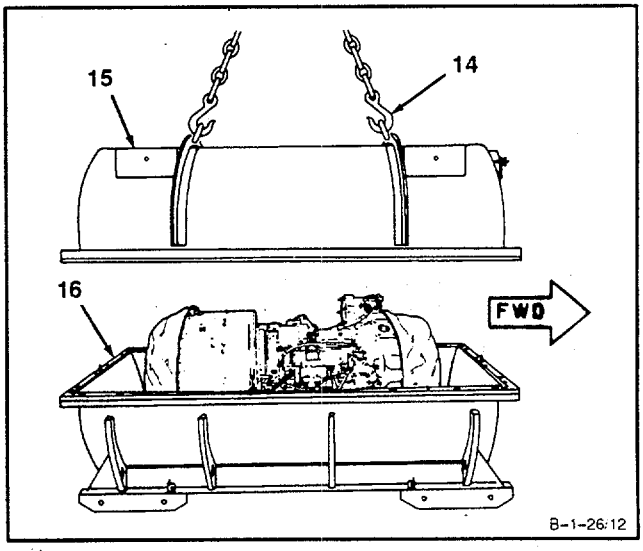

GO TO NEXT PAGE

NOTE

Procedures for removing bolts that secure left- and right-hand mounting brackets to shipping container are the same. Procedures for removing left-hand mounting bracket bolts are given.

14. Remove two nuts (17) and washers (18).

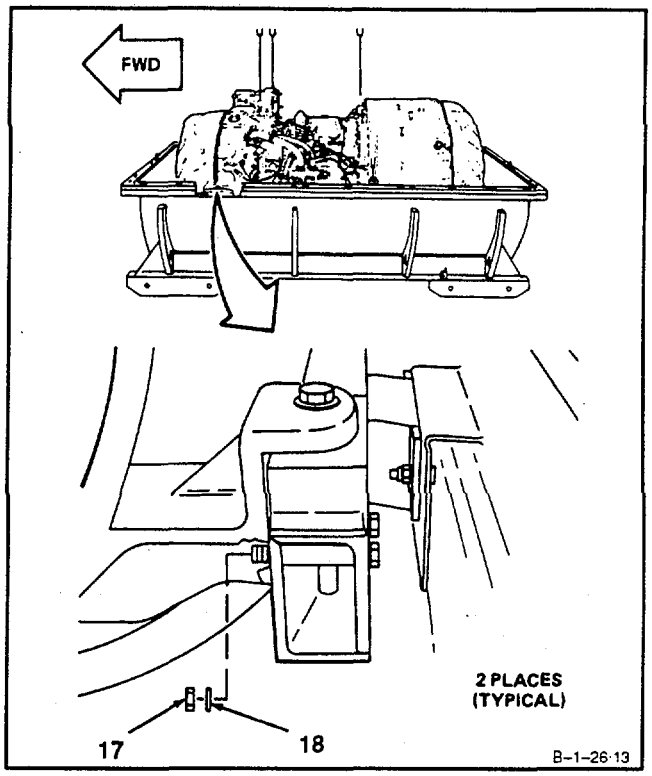

15. Pull two bolts (19) with washers (20) from frame (21) until bolt (19) heads rest on inside of base assembly (16).

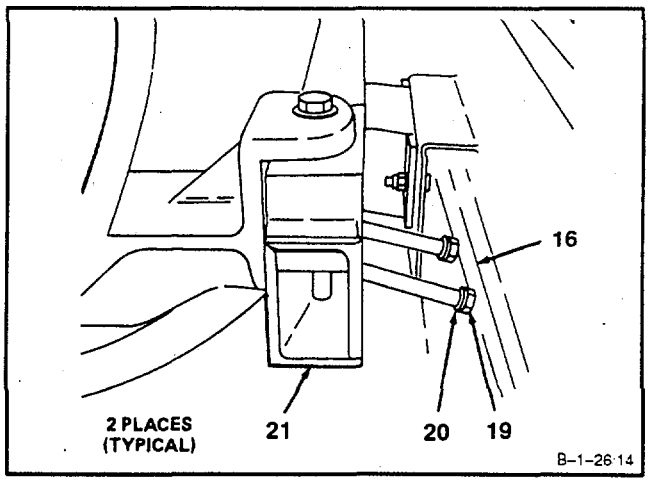

GO TO NEXT PAGE

16. Remove nut (22), two washers (23), and bolt (24).

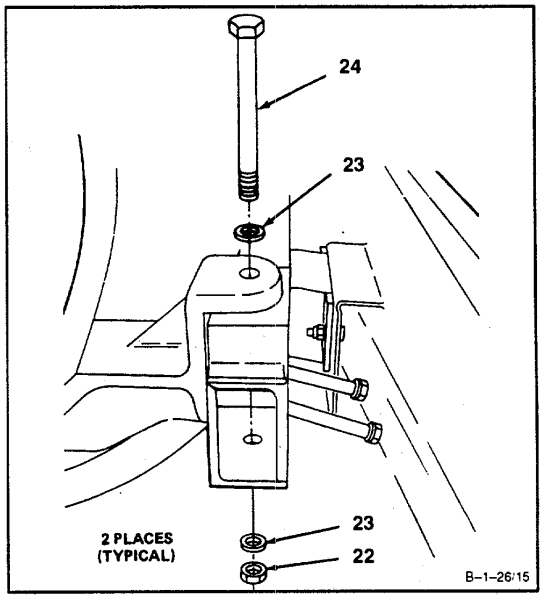

NOTE

Procedures for removing left- and right hand bolts that secure clamp to shipping container are the same. Procedure for removing left-hand bolt is given.

17. Remove bolt (25), nut (26), and washer (27).

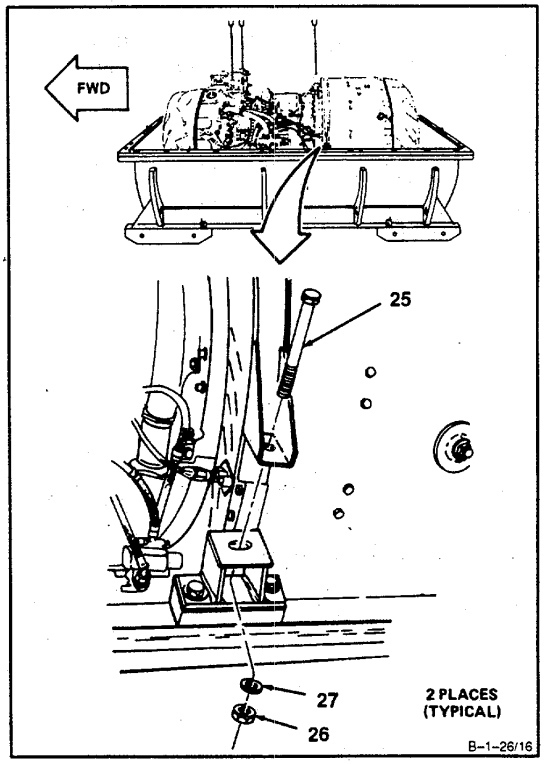

GO TO NEXT PAGE

18. Remove clamp (28).

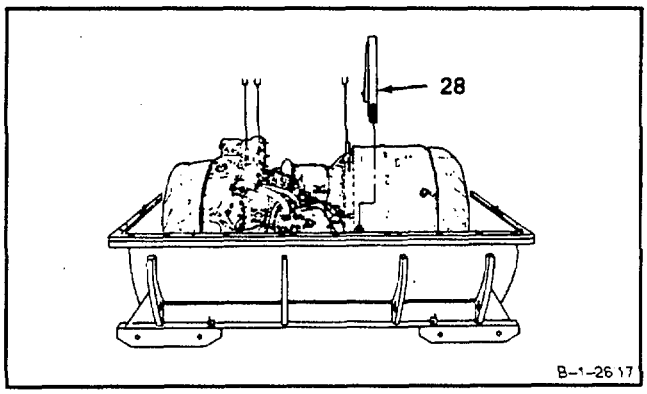

CAUTION

If engine is dropped during handling, inspect engine (Ref. Task 1-77).

19. Using helper, lift engine (29) away from base assembly (16).

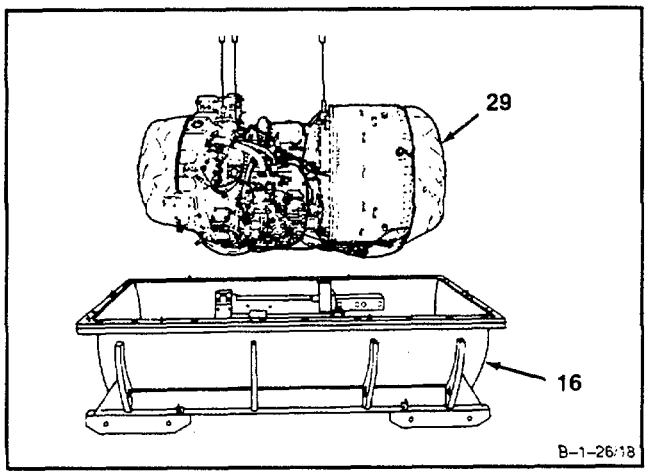

GO TO NEXT PAGE

NOTE

Procedures for removing left- and right-hand shipping container bracket from engine are the same. Procedure for removing left-hand shipping container bracket is given.

20. Remove four bolts (30), washers (31), and bracket (32).

21. Remove two plastic covers (33). **Install engine in engine "L " stand** (Ref. TM 1-1520-252-23, TM 55-4920-328-13, or Task 1-29).

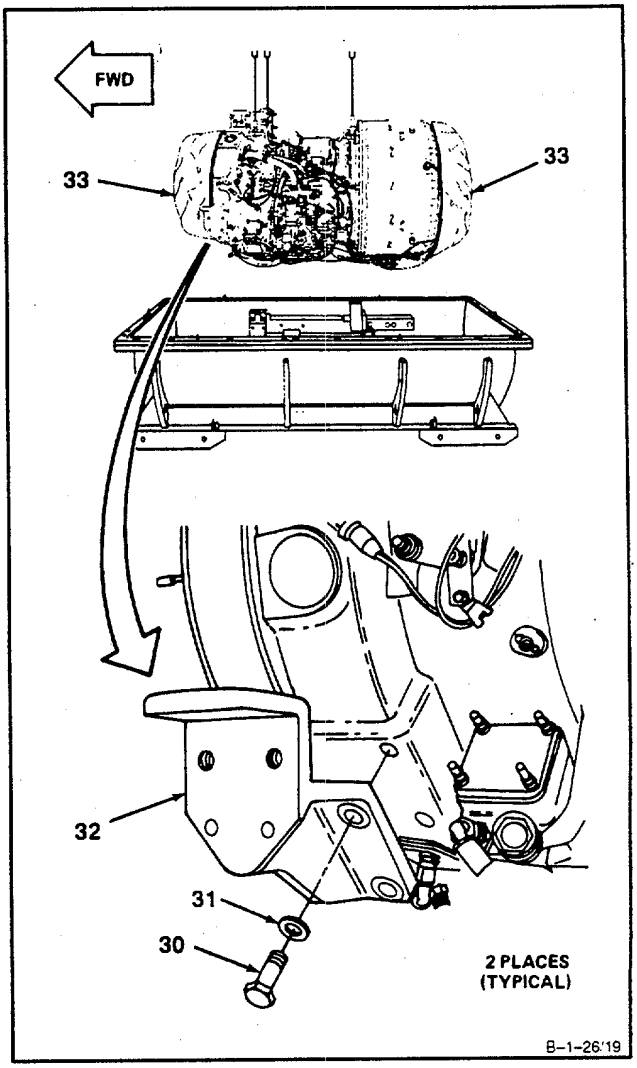

GO TO NEXT PAGE

22. **Remove five desiccant bags (E18) (34).**

23. **Remove dirt and other debris** from inside of base assembly (16). Use vacuum cleaner.

24. **Place brackets**, **clamp, bolts, washers and nuts,** removed in previous steps 14, 15, 16, 17, 18, and 20 **in bottom of shipping container.**

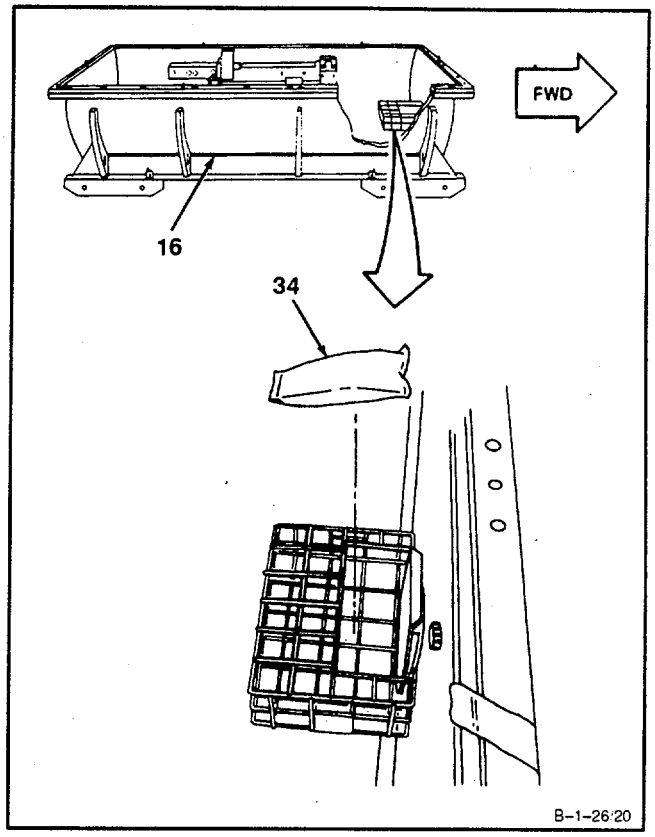

25. **Remove sealing gasket (35).**

26. **Inspect sealing gasket (35).** There shall be no material missing, breakage or foreign material stuck to gasket.

27. **Inspect gasket mating surface for rust or foreign material. If rust or foreign material is found clean flange surface (36) as follows:**

    a. Clean surface (36) on all four sides of base assembly (16). Use wire brush.

    b. If rough projections exist, smooth projections out. Use half round file.

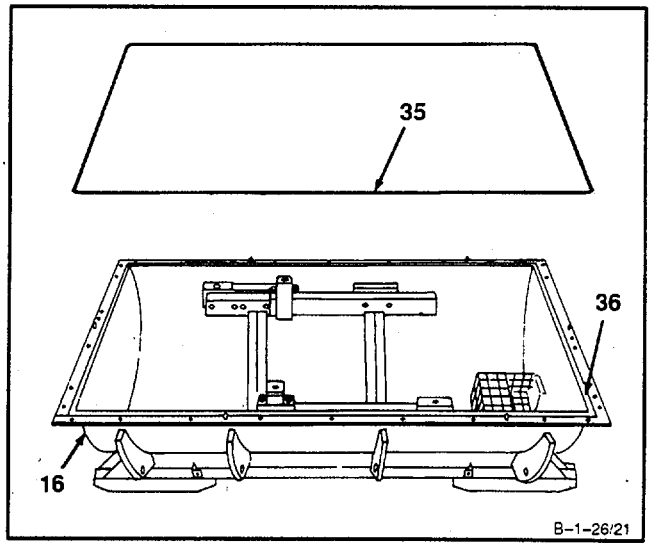

GO TO NEXT PAGE

28. Install hoist and chain with hooks (Appendix E) (14) to cover assembly (15). Raise cover assembly (15).

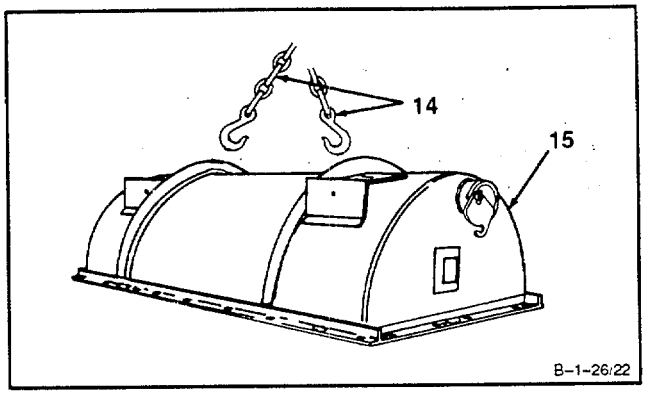

29. **Clean flange surface (37)** on all four sides of cover assembly (15). Use wire brush. If rough projections exist, smooth projections out using half round file.

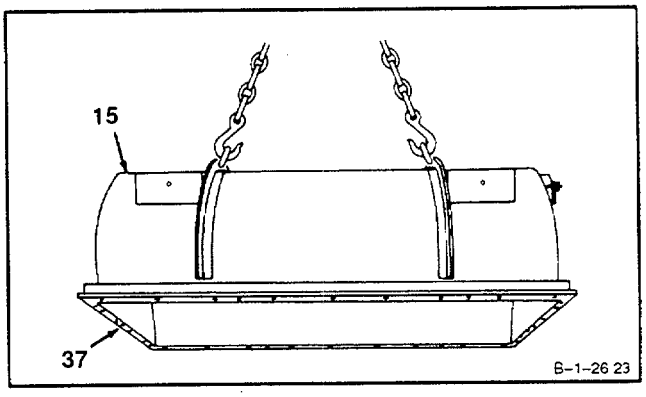

30. Wipe sealing gasket (35) clean using lint-tree cloth (E30).

31. Apply light coat of glycerol (E25) on sealing gasket (35). **Install sealing gasket (35)** in groove (38) of base assembly (16).

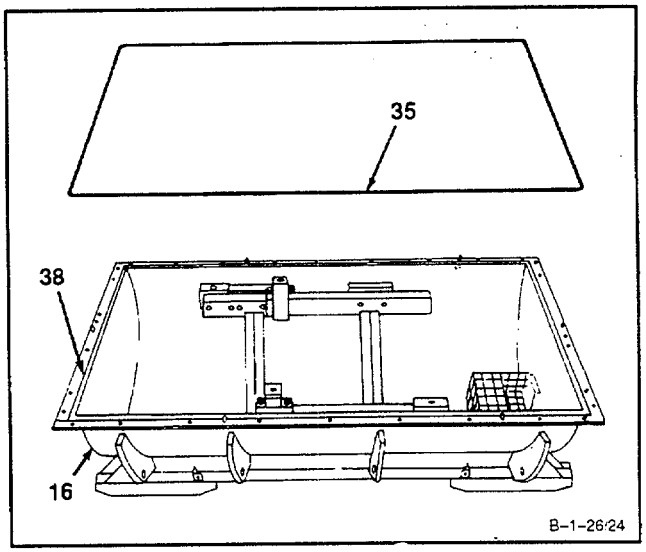

GO TO NEXT PAGE

NOTE

Step 32 shall be performed before cover assembly is lowered onto base assembly.

32. **Install five bags of desiccant (E18) (34)** in desiccant basket (39).

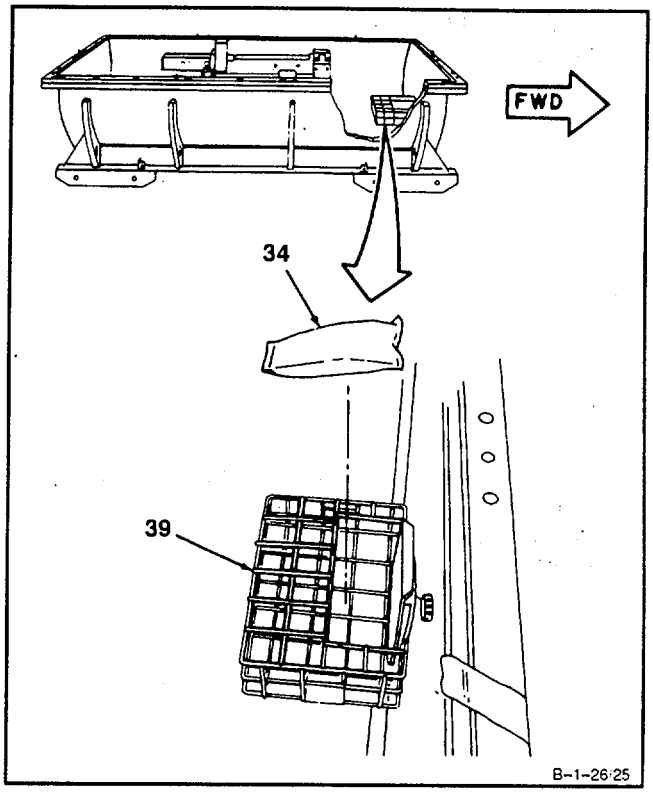

33. Using helper, position cover assembly (15) over base assembly (16). Use hoist and chain with hooks (Appendix E) (14).

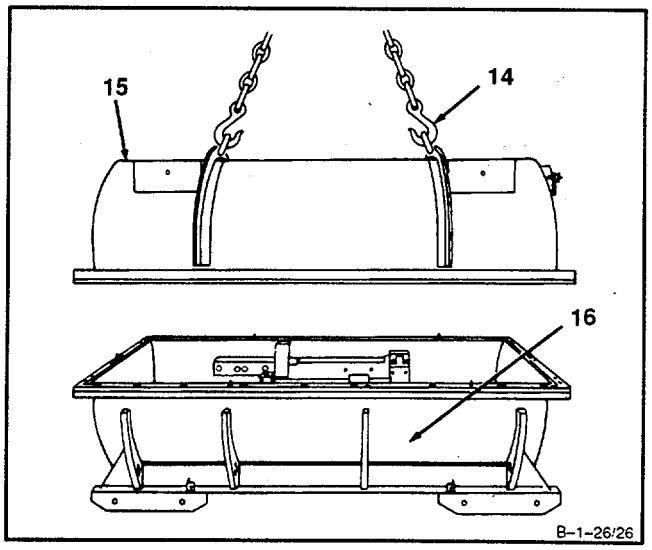

GO TO NEXT PAGE

34. Have helper align six holes (40) in cover with six locating pins (41) on base. Lower and **install cover assembly (15)** on base assembly (16).

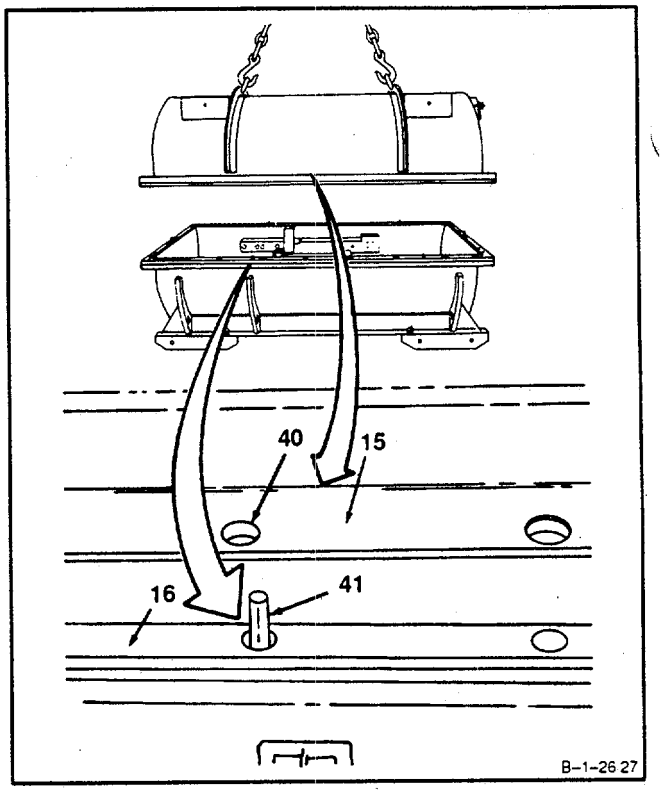

35. **Check alignment of six locating pins (41)**. Release tension in chain with hooks (Appendix E) (14). Remove chain with hooks.

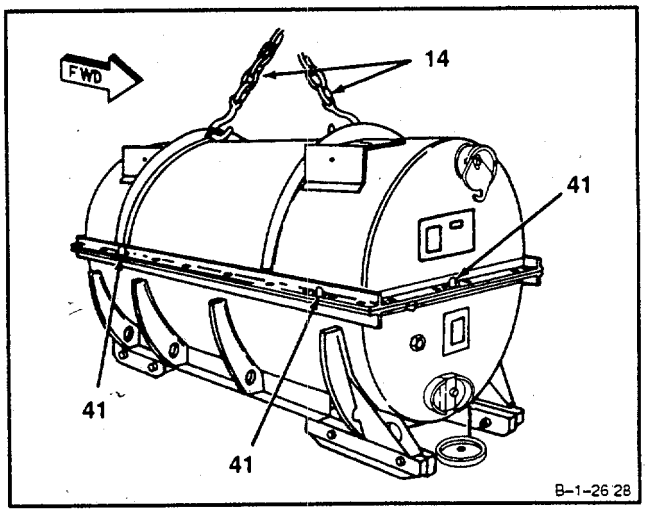

GO TO NEXT PAGE

36. Install 30 bolts (13) and nuts (12) in holes (42, 43, and 44). Finger-tighten nuts.

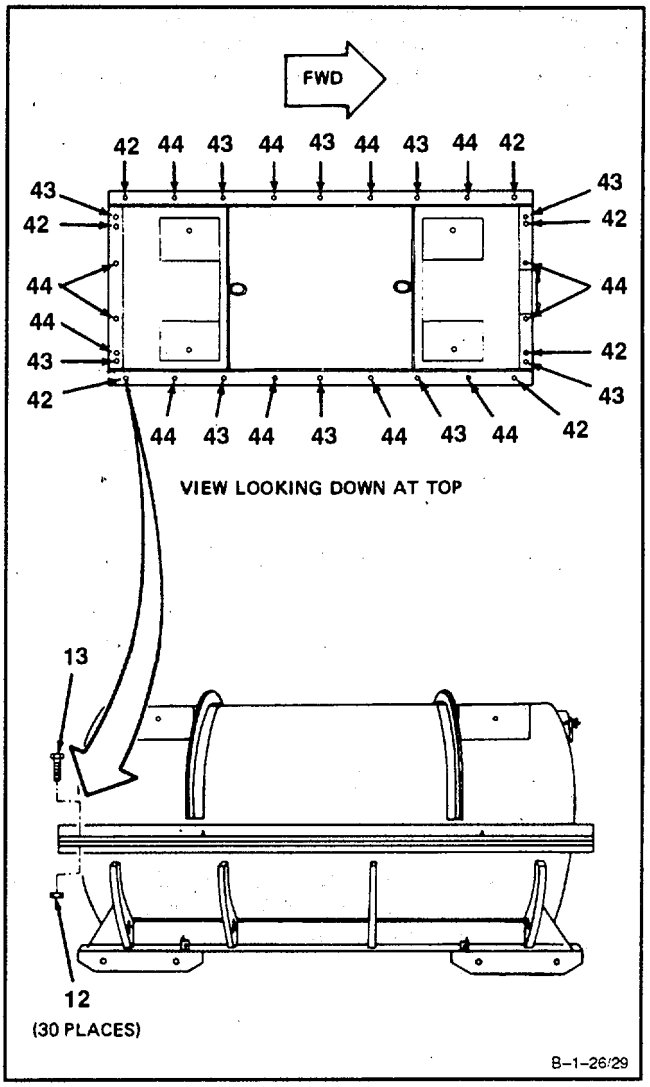

GO TO NEXT PAGE

37. Torque 30 nuts (12) at bolt holes (42, 43, and 44), in that order, to 275 inch-pounds.

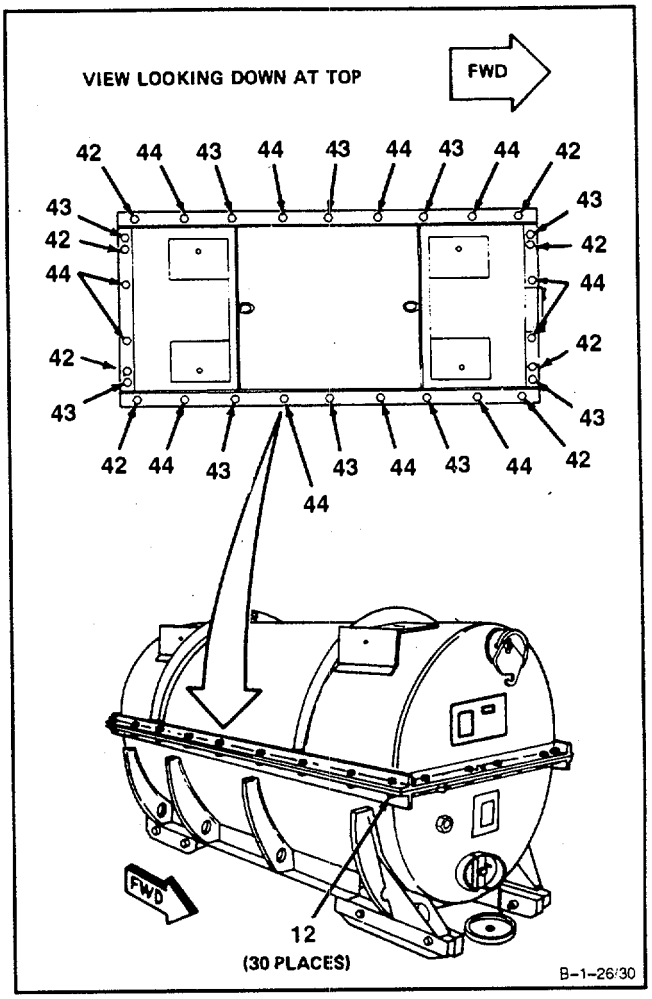

GO TO NEXT PAGE

38. Install valve stem (9) in valve (8).

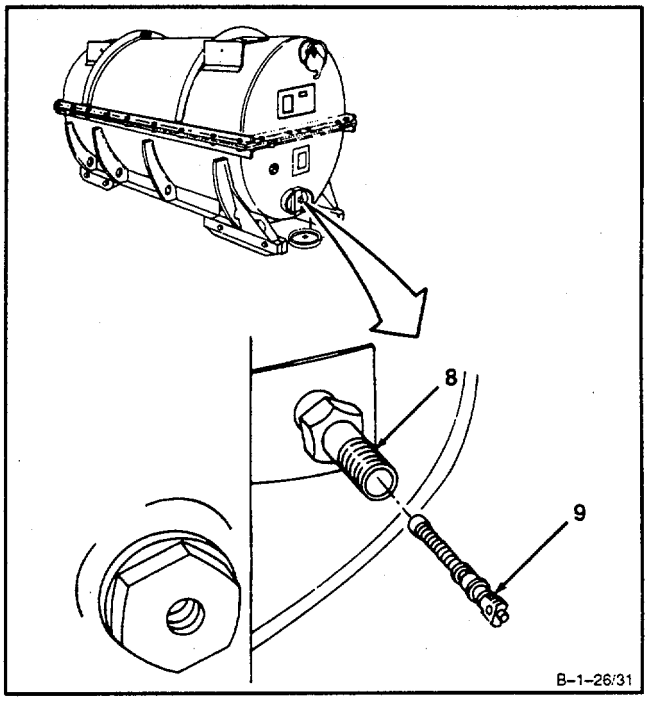

39. Install slotted end of valve cap (7) in valve (8).

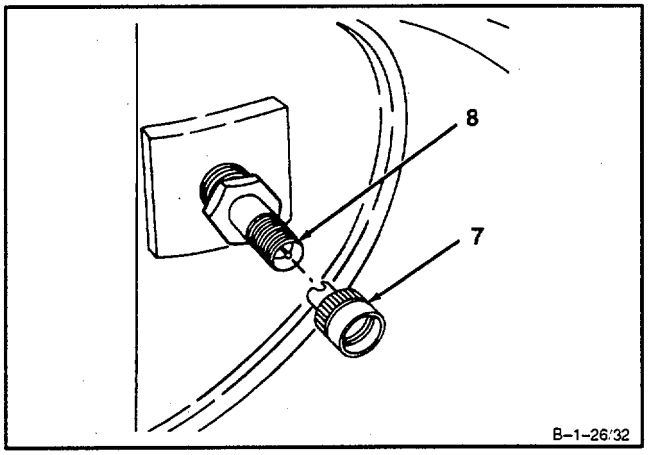

GO TO NEXT PAGE

40. Engage valve stem located inside valve (8) with valve cap (7). Turn valve cap (7) until valve stem is tight.

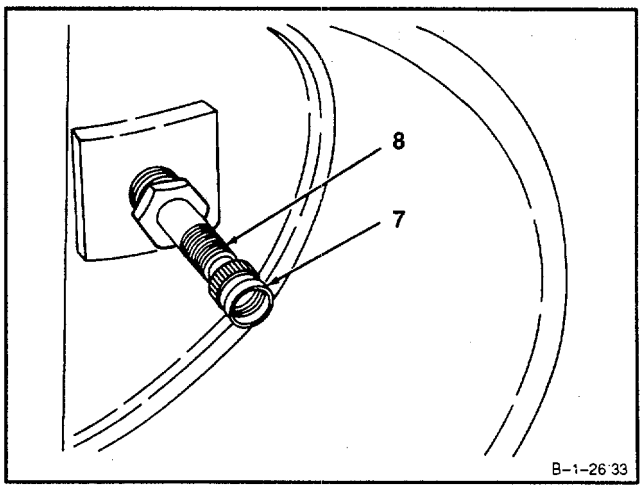

41. Remove valve cap (7).

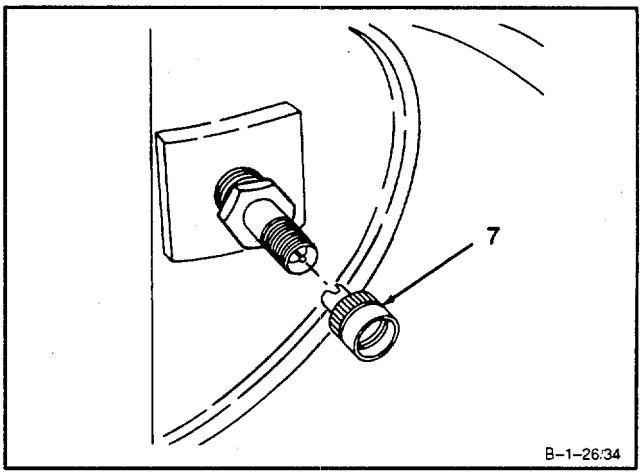

42. **Apply 5psig air pressure to valve (8).** Use clean, dry, compressed air.

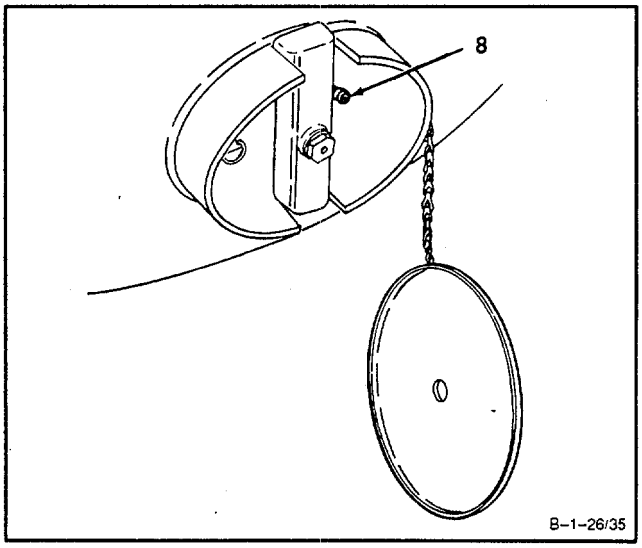

GO TO NEXT PAGE

43. **Inspect for leaks** by applying liquid soap (E31) to valve (8) and valve stem (9).

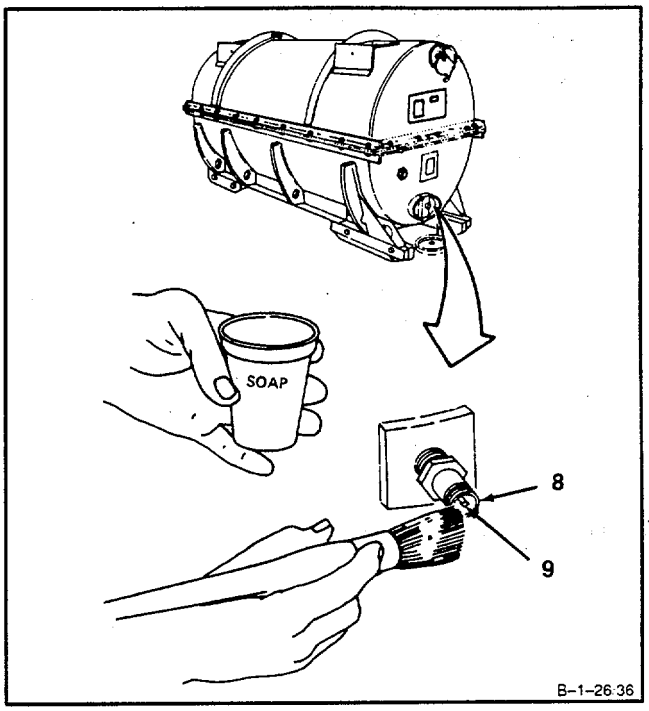

GO TO NEXT PAGE

44. If leak exists at valve stem (9), replace valve stem (9) as follows:

WARNING

Use care during removal of valve stem. Injury to personnel can result. If Injury occurs, get medical attention.

a. Remove valve stem (9) from valve (8). Use slotted end of valve cap (7).

b. Install serviceable valve stem (9) in valve (8). Use slotted end of valve cap (7).

45. If leaks exist at valve (8) tighten valve (8). If valve still leaks, replace valve (8) as follows:

WARNING

Use care during removal of valve. Injury to personnel can result. If injury occurs, get medical attention.

a. Remove valve (8).

b. Install serviceable valve (8).

NOTE

Following step only applies if valve stem or valve were replaced. If valve or valve stem were not replaced, omit step 46.

46. **Apply 5 psig air pressure to valve** (8). Use clean, dry, compressed air.

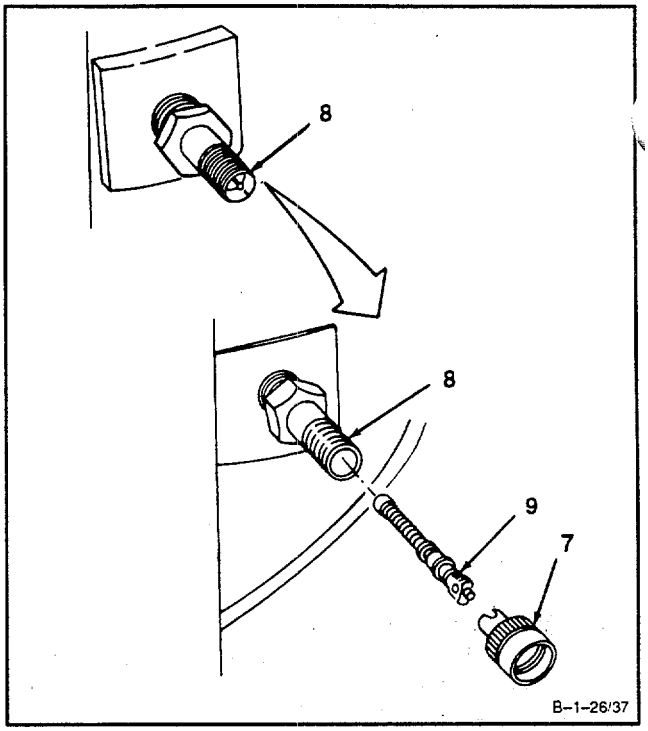

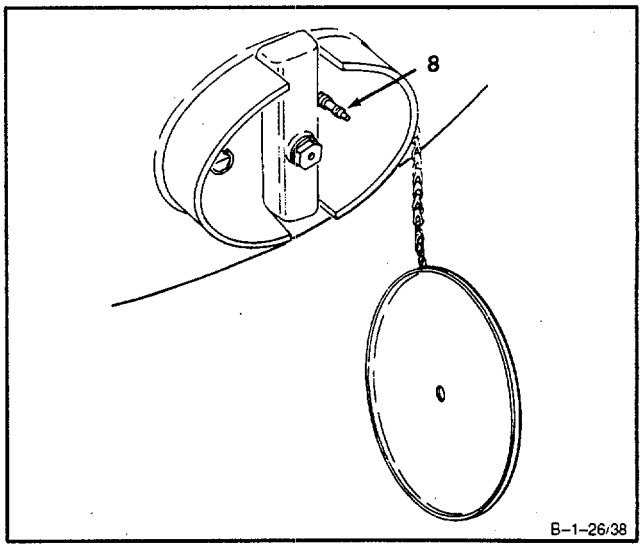

GO TO NEXT PAGE

47. Install valve cap (7) on valve (8).

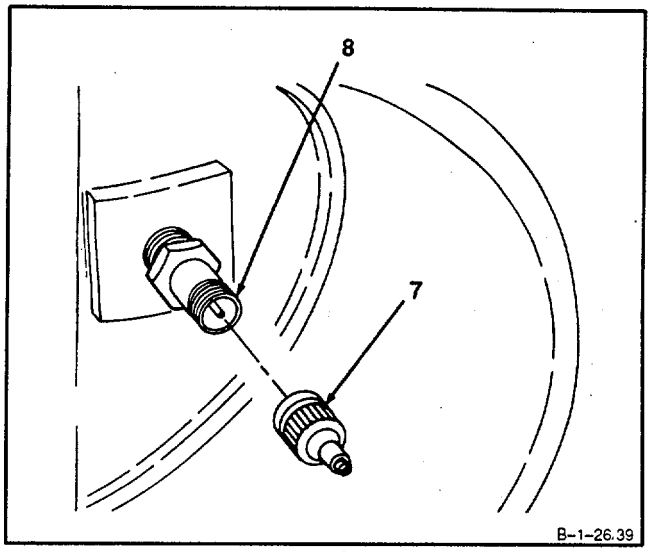

48. **Check for leaks** by applying liquid soap (E31) to shipping container mating flanges (36 and 37). There shall be no leaks. **If leak exists, inspect pressurized shipping and storage container** (Ref. Task 1-25).

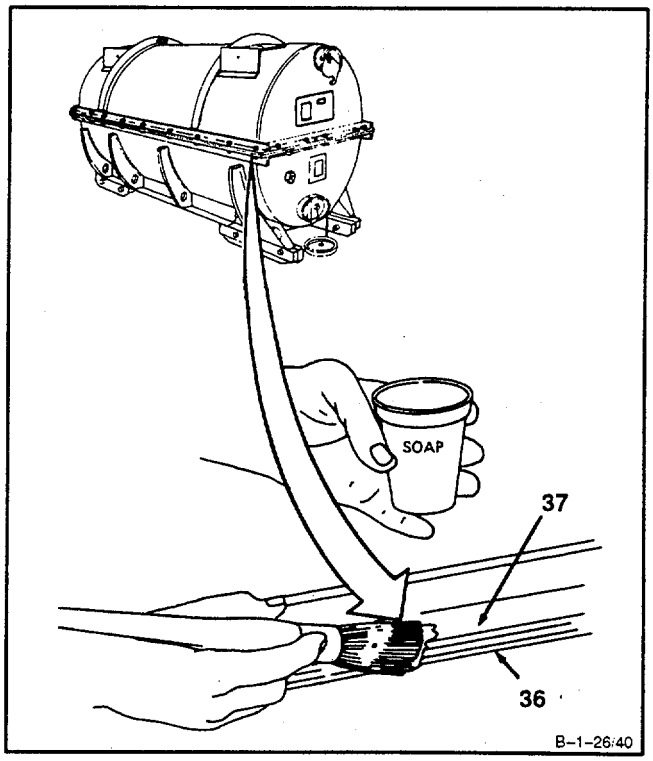

GO TO NEXT PAGE

NOTE

In following step 49, tar is applied to prevent corrosion.

49. **Apply tar (E61) to 30 bolts (13) and nuts (12).**

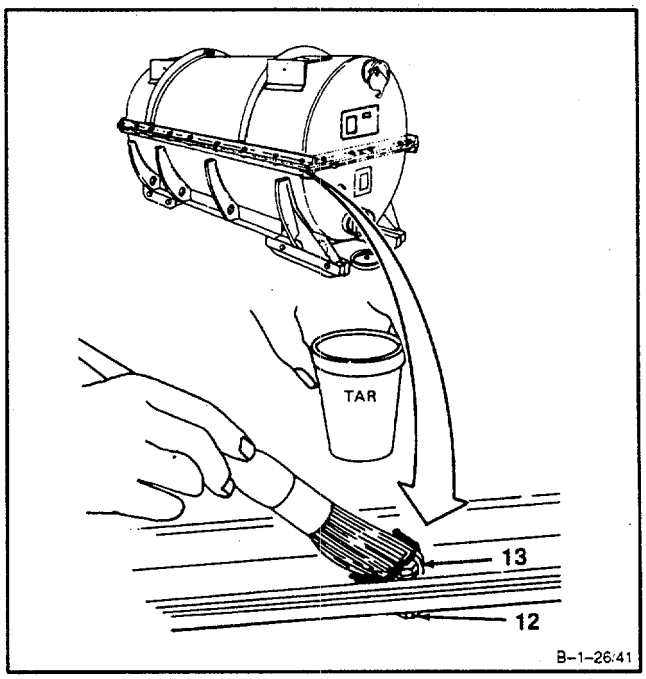

50. **Install cover (6)** and bolt (5).

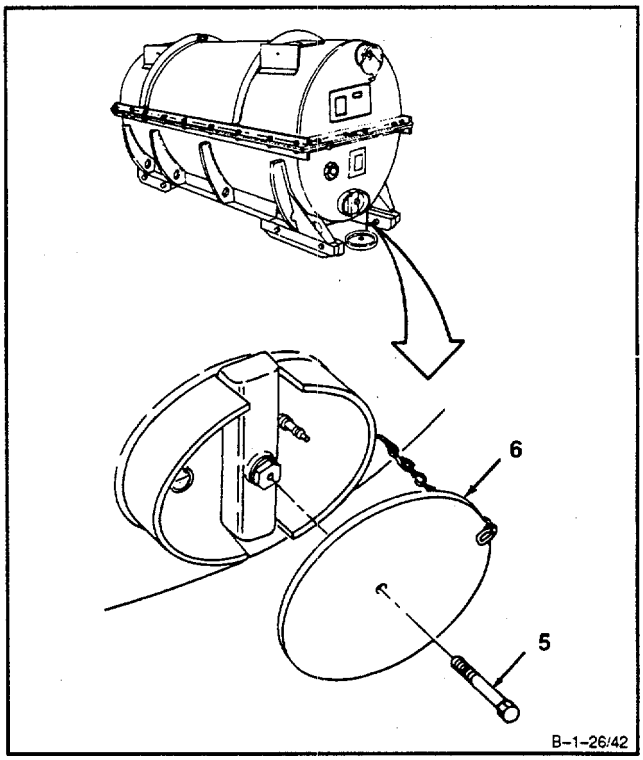

GO TO NEXT PAGE

51. **Close cover** (3) and tighten two wing nuts (2).

52. Mark top of container "EMPTY." Use 6-inch letters.

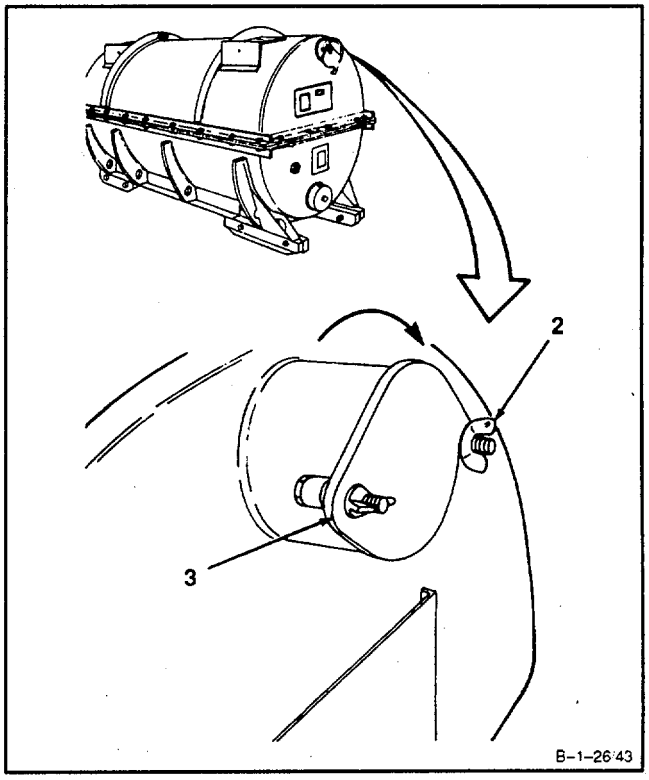

INSPECT

FOLLOW-ON MAINTENANCE:
None

END OF TASK

1-27 REMOVE TAILPIPE KIT, DECU KIT AND SIGNAL CONDITIONING UNIT FROM SHIPPING CONTAINER

INITIAL SETUP

Applicable Configurations:
All

Tools:
Powerplant Mechanic's Tool Kit,
NSN 5180-00-323-4944
Technical Inspection Tool Kit,
NSN 5180-00-323-5114

Materials:
None

Personnel Required:
Aircraft Powerplant Repairer (2)
Aircraft Powerplant Inspector

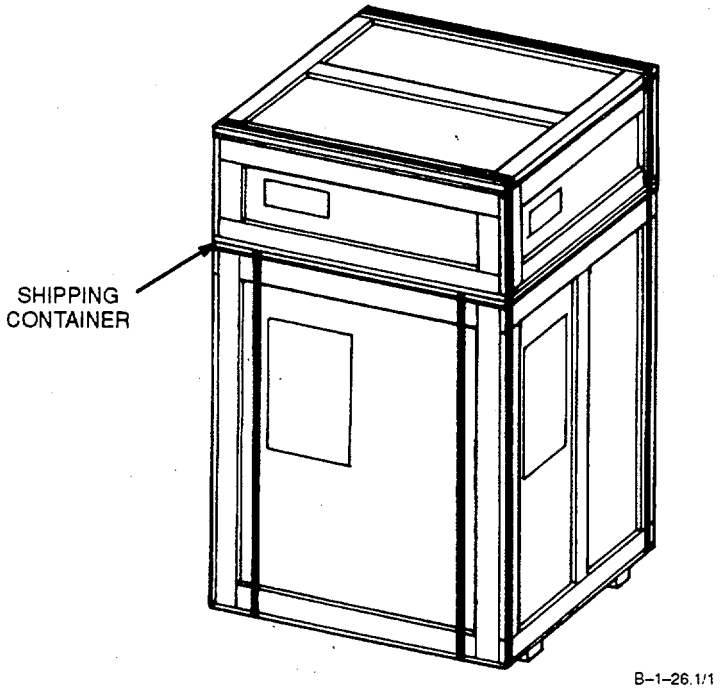

GO NEXT PAGE

CAUTION

Prior to opening boxes, inspect for obvious or possible hidden damage. Report any damage to freight carrier using appropriate damage claim forms.

1. Cut two metal straps (1) and **separate top box (2)** containing DECU kit and signal conditioning unit **from top of box (3)** containing tailpipe kit.

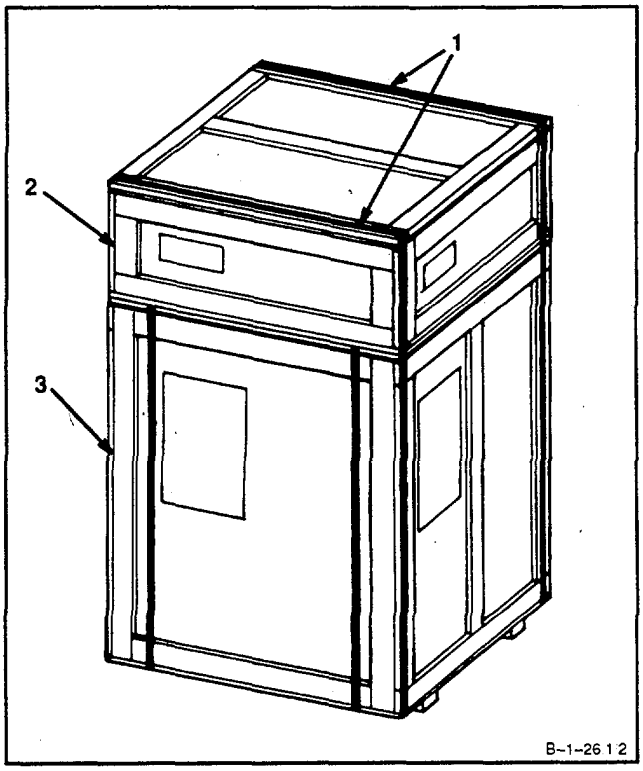

GO TO NEXT PAGE

2. Use screwdriver (4) to **remove** cover (5) from box (2) and remove **boxes (6 and 7).**

NOTE

Both corrugated boxes are opened in the same way. The box containing the DECU kit is shown in steps 3. thru 6. The box containing the signal conditioner does not contain loose hardware.

3. Remove tape (8) from box (6) securing lids (9 and 10). Swing **open lids (9 and 10).**

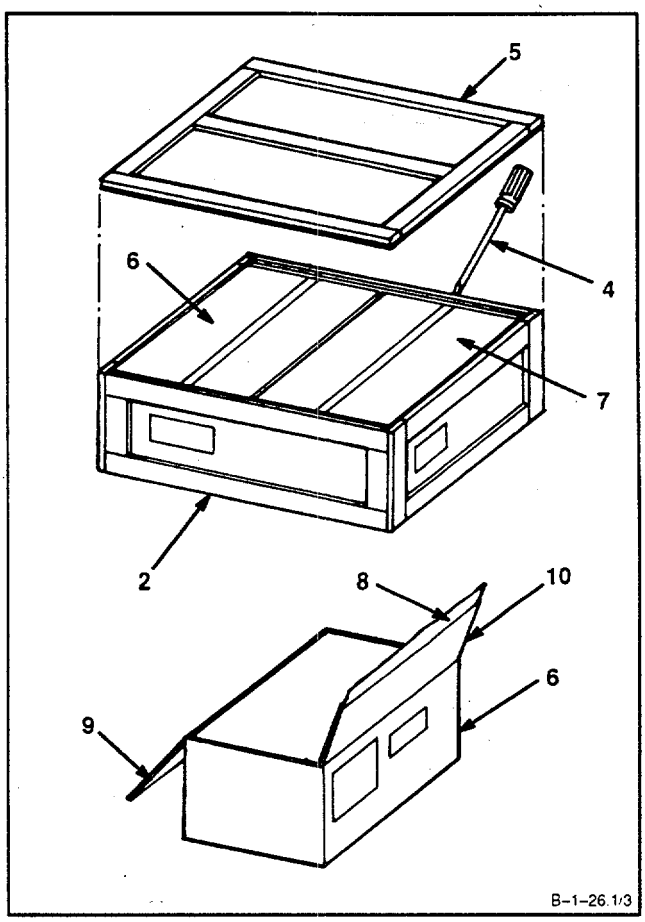

4. Remove top cushioning pad (11).

5. **Remove** DECU kit (12) packed in **barrier bag (13)** from bottom cushioning pad (14).

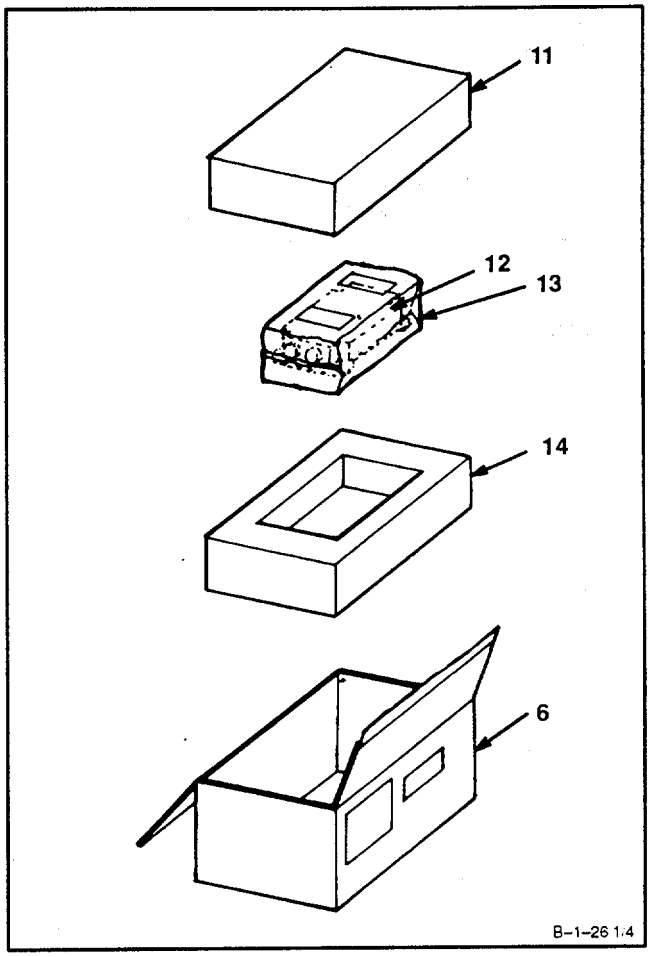

GO TO NEXT PAGE

6. Open barrier bag (13) and **remove DECU unit (15) and three bags of hardware (16, 17, and 18).**

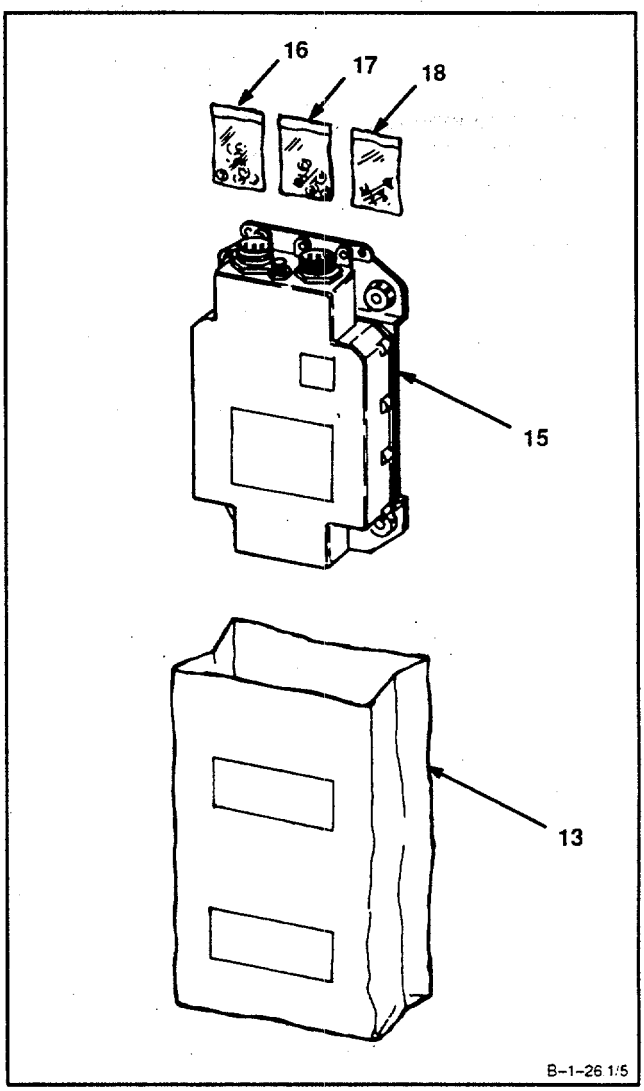

GO TO NEXT PAGE

7. Cut two steel straps (19). Use screwdriver (4) to remove nailed cover (20) from tailpipe shipping box (3). **Remove two bags of loose hardware (21 and 22)** from shipping support (23). Remove shipping support (23). Using helper, **remove tail-cone** (24) wrapped in stretch wrap (25). Remove stretch wrap (25).

8. **Inspect engine components** for damage.

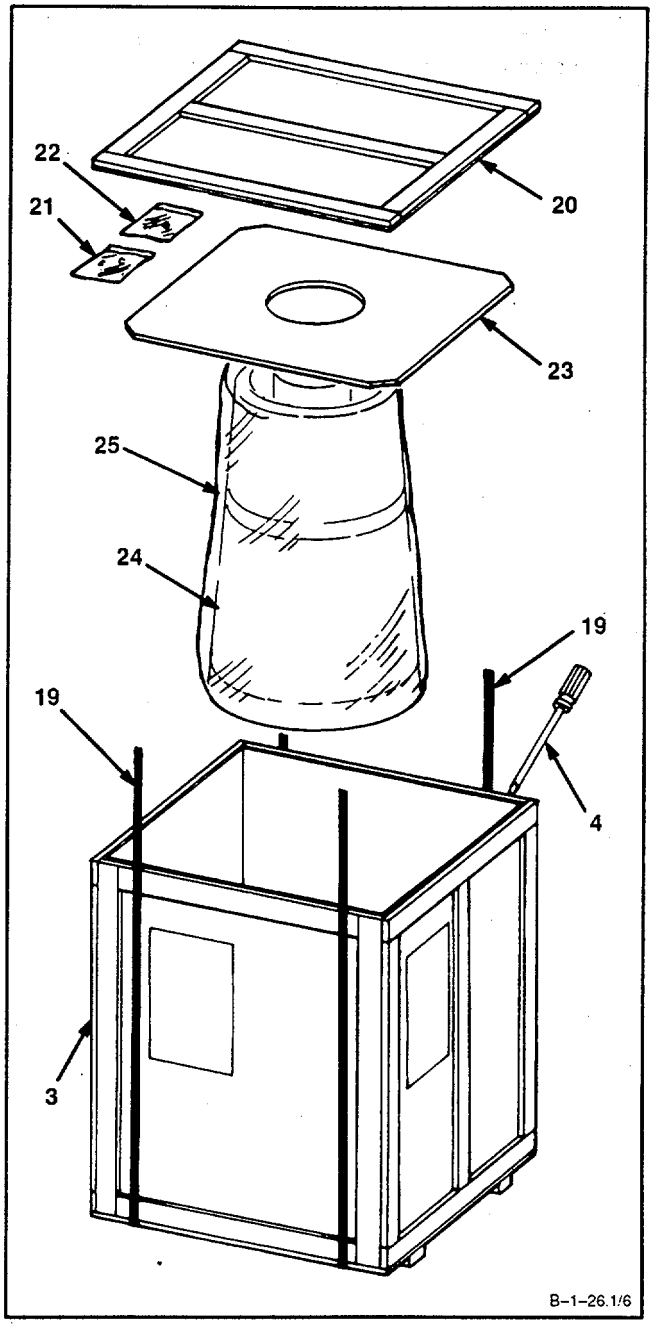

INSPECT

FOLLOW-ON MAINTENANCE:
None

END OF TASK

INITIAL SETUP

Applicable Configurations:

All

Tools:

Powerplant Mechanic's Tool Kit, NSN 5180-00-323-4944
Technical Inspection Tool Kit, NSN 5180-00-323-5114
Drain Hose, (Appendix E)
Container, 2 Quart
Container, 2 Gallon
Wire Brush
Multimeter

Materials:

Dry Cleaning Solvent (E19)
Gloves (E23)
Lubricating Oil (E36)
Lubricating Oil (E37)

Personnel Required:

Aircraft Powerplant Repairer
Aircraft Powerplant Inspector
Aircraft Powerplant Supervisor

References:

TM 1-1520-252-MTF
TM 1-1520-252-23
TM 55-4920-328-13
Task 1-26
Task 1-68
Task 1-93
Task 7-6
Task 7-10
Task 8-39
Task 8-40
Task 8-41
Task 8-42
Task 8-46
Task 8-109
Task 8-110
Task 8-111
Task 8-101
Task 8-102

General Safety Instructions:

WARNING

Dry cleaning solvent (E19) is flammable and toxic. It can irritate skin and cause burns. Use only in well-ventilated area, away from heat and open flame. In case of contact, immediately flush skin or eyes with water for at least 15 minutes. Get medical attention for eyes.

WARNING

Turbine fuels are very flammable. They may cause drying and irritation of skin or eyes. Handle only in well-ventilated areas away from heat and open flame. Drain and store in approved metal safety containers. Avoid prolonged or repeated contact with skin and do not take internally. Wash contacted area of skin thoroughly after handling. If irritation of skin results, get medical attention. Get medical attention for eyes.

WARNING

Lubricating oils cause paralysis if swallowed. Prolonged contact with them may irritate the skin. Handle only in well-ventilated areas away from heat and flame. Drain and store in approved metal safety containers. Avoid prolonged or repeated contact with skin and do not take internally. Wash contacted area of skin thoroughly after handling. If irritation of skin results, get medical attention. Get medical attention for eyes.

GO TO NEXT PAGE

NOTE

A new, overhauled, or long-term storage engine is preserved and stored in a shipping and storage container.

1. **Remove engine from Shipping and storage container (** Ref. Task 1-26) .

2. If not previously removed, remove inlet cover (1) and exhaust cover (2) from engine (3).

NOTE

For priming of hydromechanical assembly go to steps 22. thru 29..

3. **Remove spark igniters** (Ref. Task 7-6) .

WARNING

Dry cleaning solvent (E19) is flammable and toxic. It can irritate skin and cause burns. Use only in well-ventilated area, away from heat and open flame. In case of contact, immediately flush skin or eyes with water for at least 15 minutes. Get medical attention for eyes.

4. Wear gloves (E23). **Clean spark igniters** (4) using dry cleaning solvent (E19) and brush.

5. **Inspect spark igniters** (4).

   a. There shall be no cracks or gouges in shank (5).

   b. There shall be no chips or cracks in ceramic surface (6).

   c. Pin (7) shall not be bent or broken.

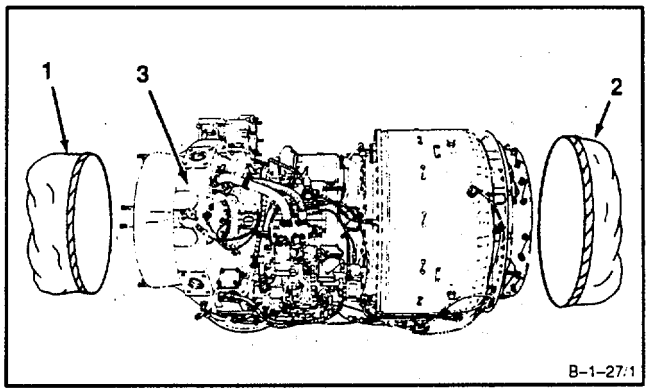

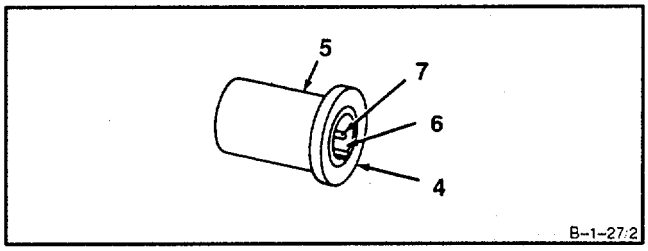

GO TO NEXT PAGE

6. Check exposed openings (8) for foreign material.

7. **Install serviceable spark igniters** (Ref. Task 7-10). ,

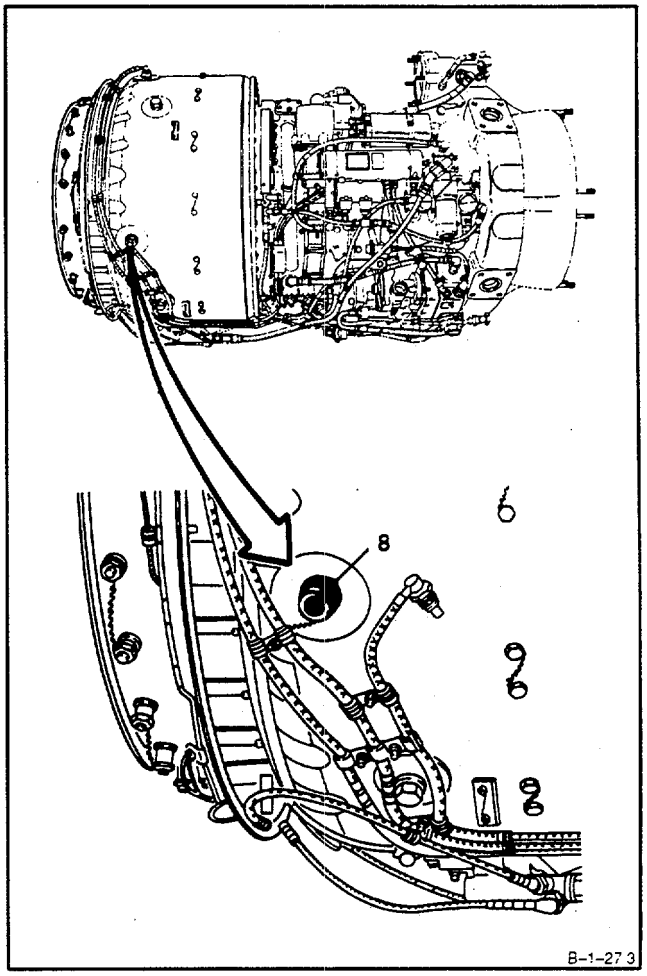

GO TO NEXT PAGE

NOTE

In following step 8., if continuity exists do steps 9. thru 13.. If no continuity exists, omit steps 9. thru 13..

Continuity exists if meter indicates less than 10.000 ohms.

8. Using multimeter, **check for continuity at gear-box chip detector (9).**

a. Disconnect electrical connector (10) from chip detector (9).

b. Set multimeter to R X 1000 scale.

c. Touch red probe (11) to pin A (12).

d. Touch black probe (13) to pin B (14).

e. Meter shall indicate 10,000 ohms minimum.

f. Install electrical connector (10) on chip detector (9).

9. **Remove chip detector** (Ref. Task 8-109).

10. **Clean chip detector** (Ref. Task 8-110).

11. **Inspect chip detector** (Ref. Task 8-111).

12. **Test chip detector** (Ref. Task 8-112).

13. **Install chip detector** (Ref. Task8-113).

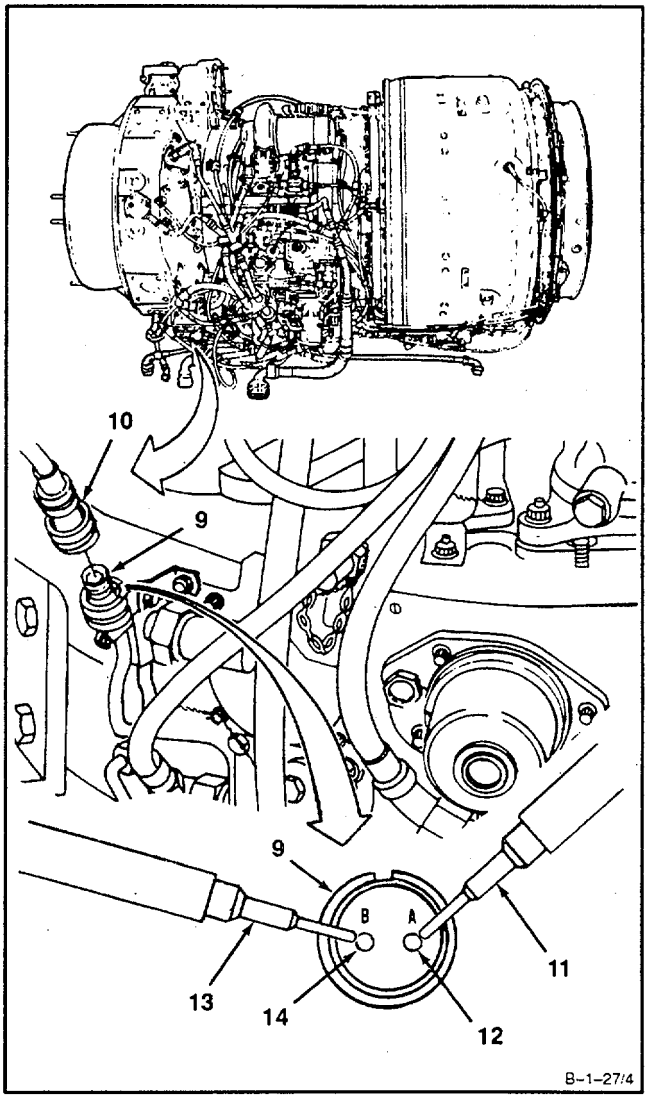

GO TO NEXT PAGE

NOTE

In following step 14., if continuity exists do steps 15. thru 21.. If no continuity exists, omit steps 15. thru 21.

Continuity exists if meter indicates less than 10,000 ohms.

14. Using multimeter, **check for continuity at dual chip detector (15).**

NOTE

The following steps apply to both magnetic chip detectors.

a. Set multimeter to R X 1000 scale.

b. Touch red probe (16) to center pin (17).

c. Touch black probe (18) to threads (19).

d. Meter shall indicate 10,000 ohms minimum.

15. **Remove dual chip detector** (Ref. Task 8-39).

16. **Disassemble dual chip detector** (Ref. Task 8-40).

17. **Clean dual chip detector** (Ref. Task 8-41).

18. **Inspect dual chip detector** (Ref. Task 8-42).

19. **Assemble dual chip detector** (Ref. Task 8-44).

20. **Test dual chip detector** (Ref. Task 8-45).

21. **Install dual chip detector** (Ref. Task 8-46).

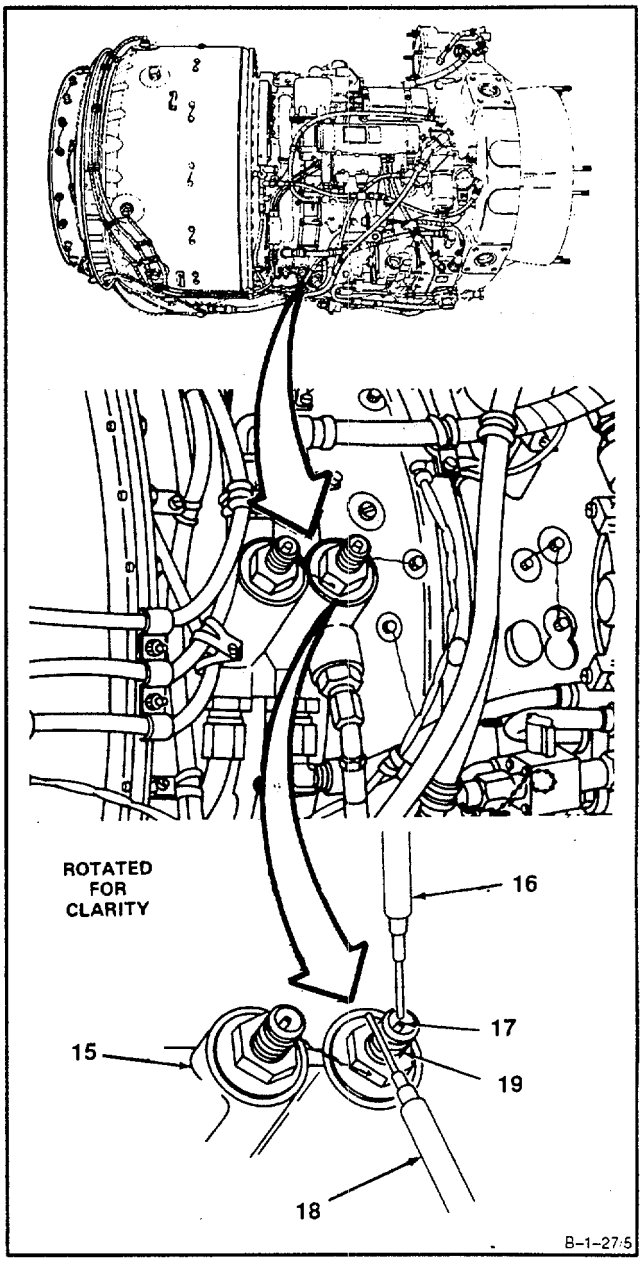

GO TO NEXT PAGE

NOTE

In following steps 22. thru 29., the hydro-mechanical assembly is primed.

22. **Install engine in airframe** (Ref. TM 1-1520-252-23).

23. **Service engine oil system** (Ref. Task 1-68) with lubricating oil (E36 or E37).

WARNING

Lubricating oils cause paralysis if swallowed. Prolonged contact with them may irritate the skin. Handle only in well-ventilated areas away from heat and flame. Drain and store in approved metal safety containers. Avoid prolonged or repeated contact with skin and do not take internally. Wash contacted area of skin thoroughly after handling. if irritation of skin results, get medical attention. Get medical attention for eyes.

24. Disconnect tube assembly (20) from tube assembly (21) of oil cooler assembly (22).

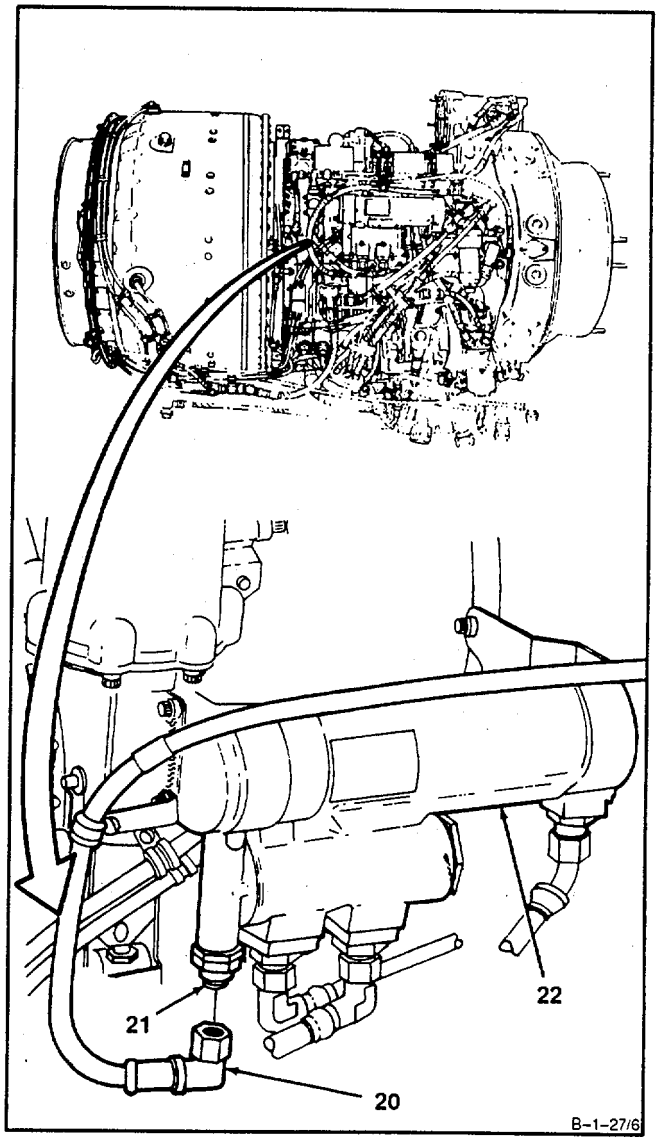

GO TO NEXT PAGE

25. Connect drain hose (Appendix E) (23) to tube assembly (21) of oil cooler assembly (22).

26. Insert drain hose (Appendix E) (23) into suitable approved metal container (two gallon).

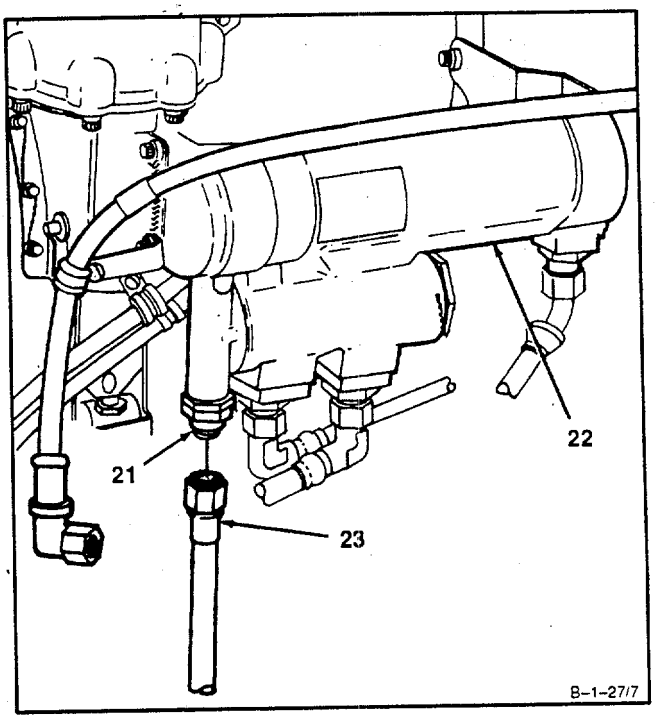

WARNING

Turbine fuels are very flammable. They may cause drying and irritation of skin or eyes. Handle only in well-ventilated areas away from heat and open flame. Drain and store in approved metal safety containers. Avoid prolonged or repeated contact with skin and do not take internally. Wash contacted area of skin thoroughly after handling. If irritation of skin results, get medical attention. Get medical attention for eyes.

27. Motor (Purge Crank) engine to maximum cranking speed (Ref. TM 1-1520-252-10). Actuate starting fuel solenoid. Move engine control lever (N1) from ground idle position to maximum position until solid stream of fuel (without air bubbles) is seen). At least one gallon must flow into container.

GO TO NEXT PAGE

1-28 ACTIVATE ENGINE AFTER STORAGE (Continued) 1-28

28. Disconnect and remove drain hose (Appendix E) (23) from tube assembly (21) of oil cooler assembly (22) .

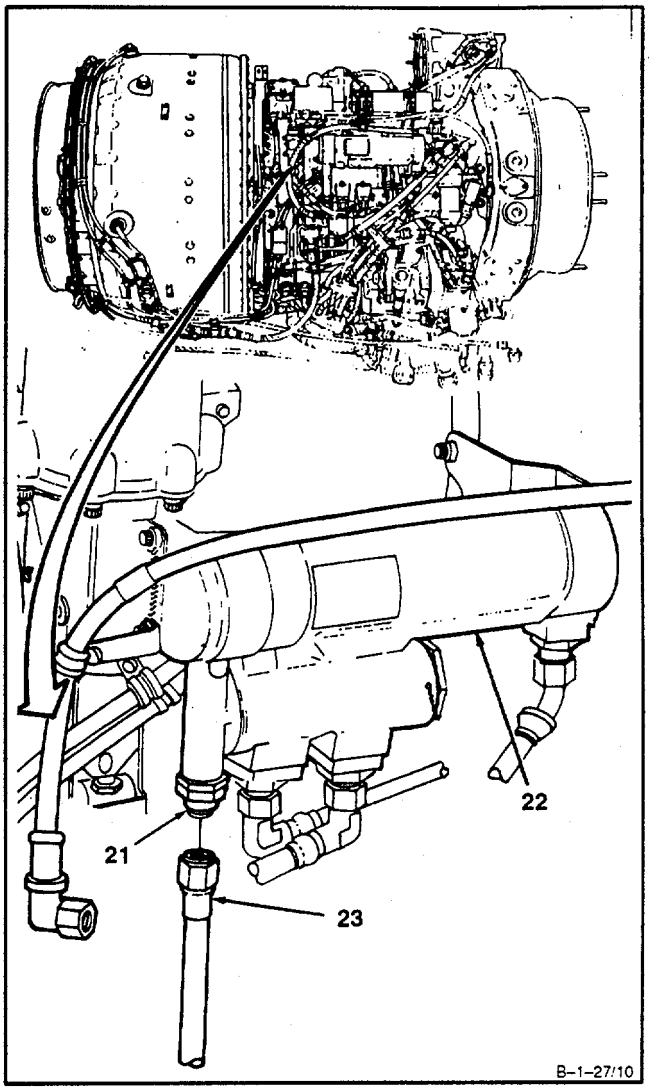

GO TO NEXT PAGE

29. **Connect fuel hose assembly (20)** to tube assembly (21) of oil cooler assembly (22).

30. **Visually inspect engine for leakage on initial run.**

31. **Start and run engine for five minutes at approximately 75 percent N1 speed** (Ref. TM 1-1520-252-10).

32. **Shut down engine** (Ref. TM 1-1520-252-10).

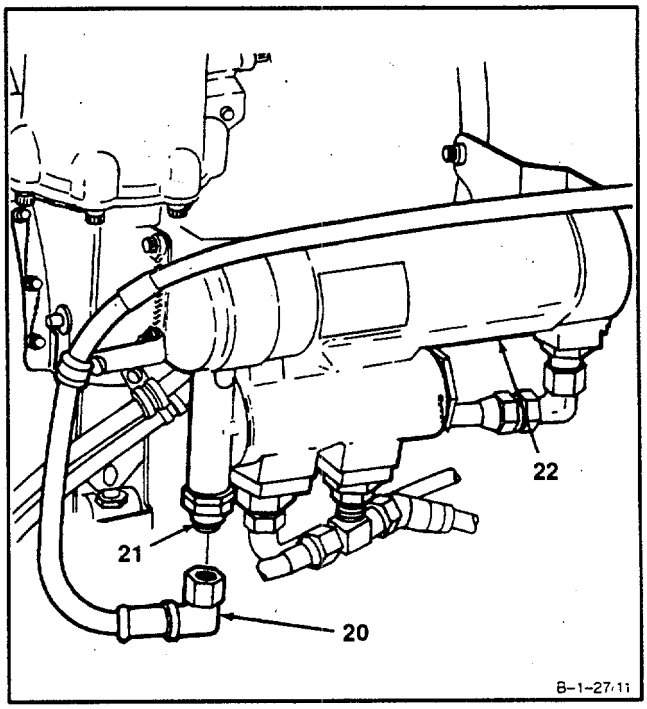

33. Visually inspect oil filter cover assembly for bypass indication.

    a. If red indicator button (27) has popped out, inspect contaminated oil system (Ref. Task 1-80).

    b. If red indicator button (27) has not popped out, service engine oil system (Ref. Task 1-68).

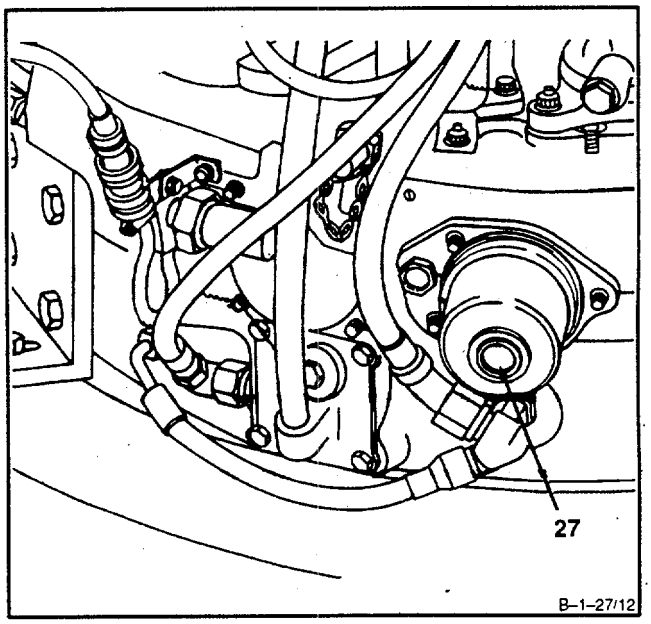

FOLLOW-ON MAINTENANCE:
Perform Flight Test (Ref. TM 1-1520252-MTF).

END OF TASK

1-29 INSTALL ENGINE ON MAINTENANCE STAND 1-29

INITIAL SETUP

Applicable Configurations:
All

Tools:
Powerplant Mechanic's Tool Kit, NSN 5180-00-323-4944
Technical Inspection Tool Kit, NSN 5180-00-323-5114
Engine Protective Cover (T11)
Engine "L" Stand

Materials:
None

Personnel Required:
Aircraft Powerplant Repairer
Aircraft Powerplant Inspector

References:
Task 1-32

Equipment Condition:
Engine Maintenance Sling Installed (Task 1-31)

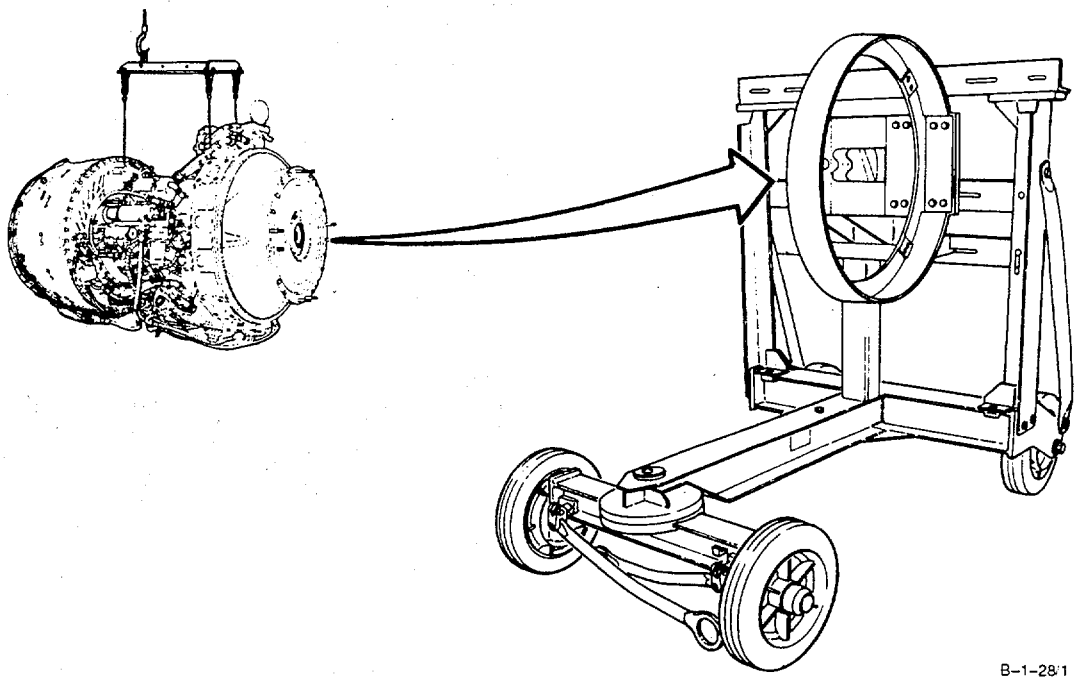

GO TO NEXT PAGE

1-29 INSTALL ENGINE ON MAINTE NANCE STAND (Continued) 1-29

1. **Lift engine (1)** to comfortable working position.

NOTE

Step 2 applies to four brackets to be installed at the 1-, 4-, 7-, and 10-o'clock positions. Instructions for bracket at 1 o'clock position are given.

2. **Install bracket** (2) and four bolts (3) on inlet housing (4).

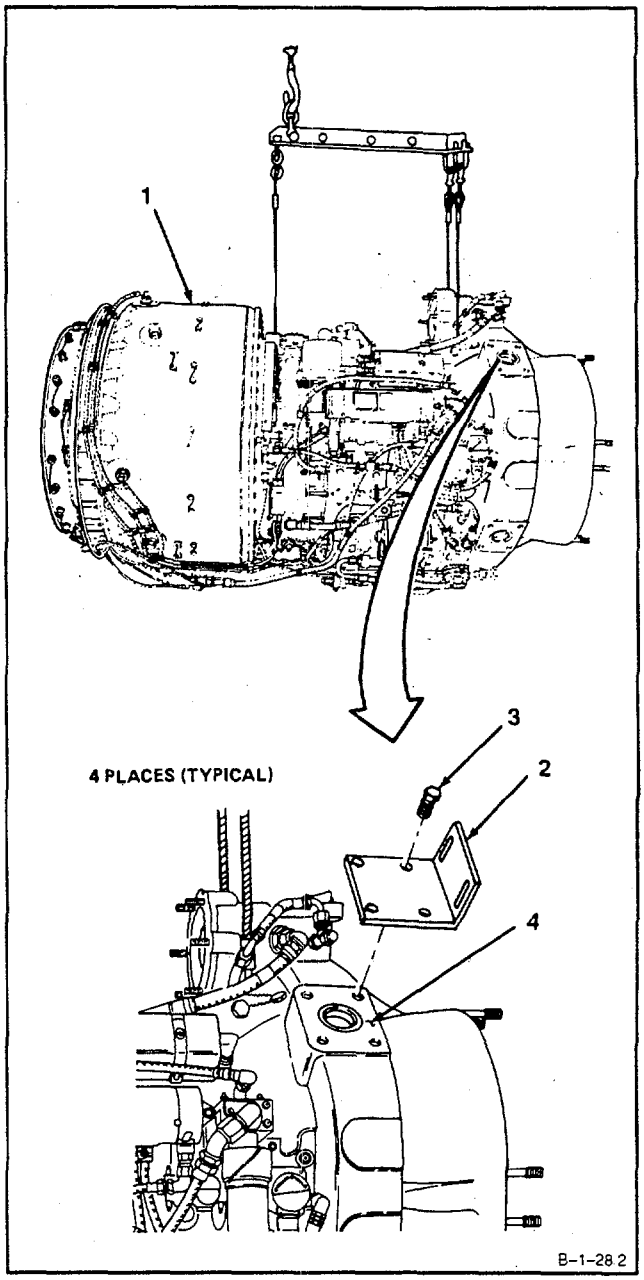

GO TO NEXT PAGE

1-29 INSTALL ENGINE ON MAINTENANCE STAND (Continued) 1-29

3. Position engine "L" stand (5) in a clear working area.

4. Guide engine (1) into engine "L" stand (5). **Align brackets** (2) with bolt holes (6) in base adapter (7).

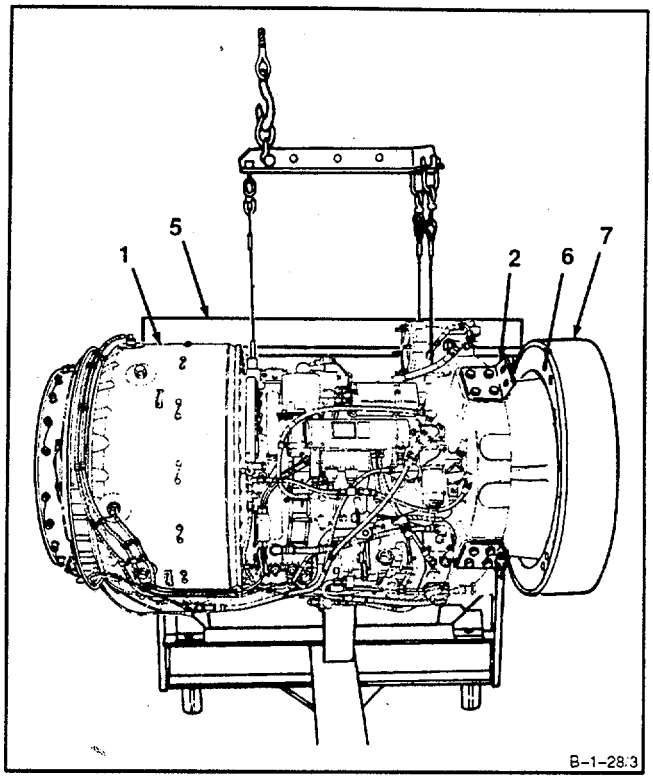

GO TO NEXT PAGE

5. **Install eight bolts (8).**

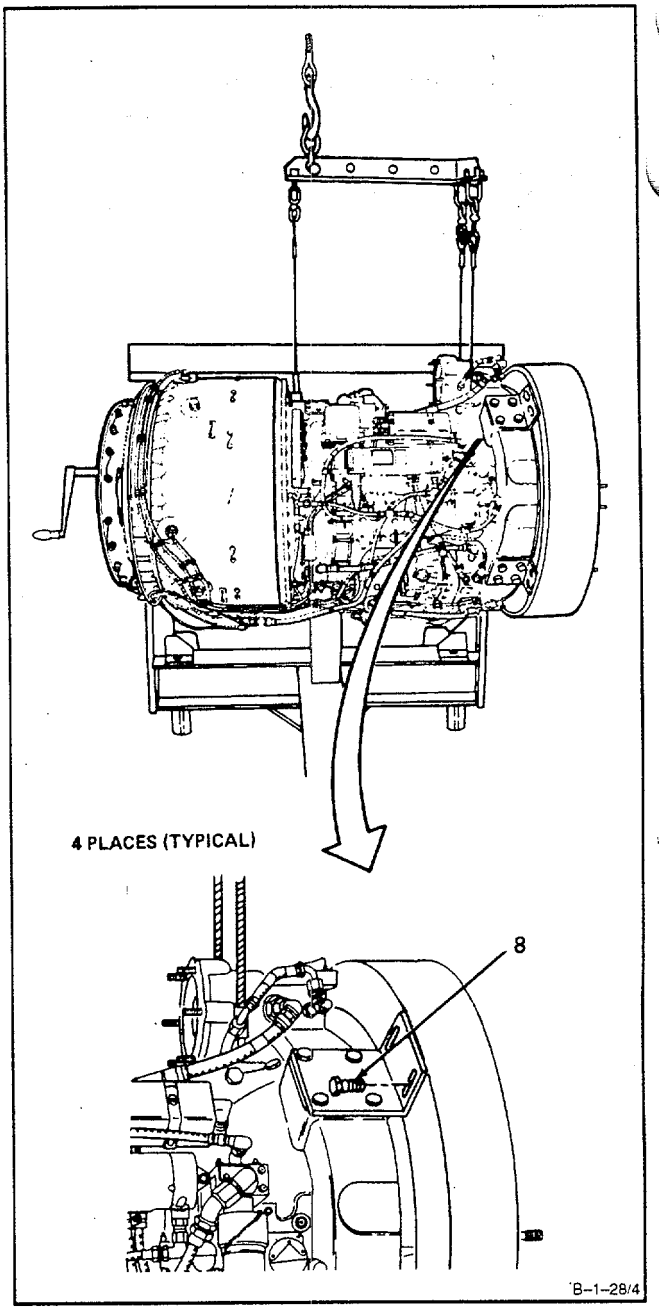

GO TO NEXT PAGE

6. **Install engine protective cover (T11)** (9) on inlet housing (4) as follows:

   a. Place engine protective cover (T11) (9) on inlet housing (4) covering intake ports (10).

   b. Adjust clip (11) by turning counterclockwise or clockwise as required. Secure clip (11) and latch (12).

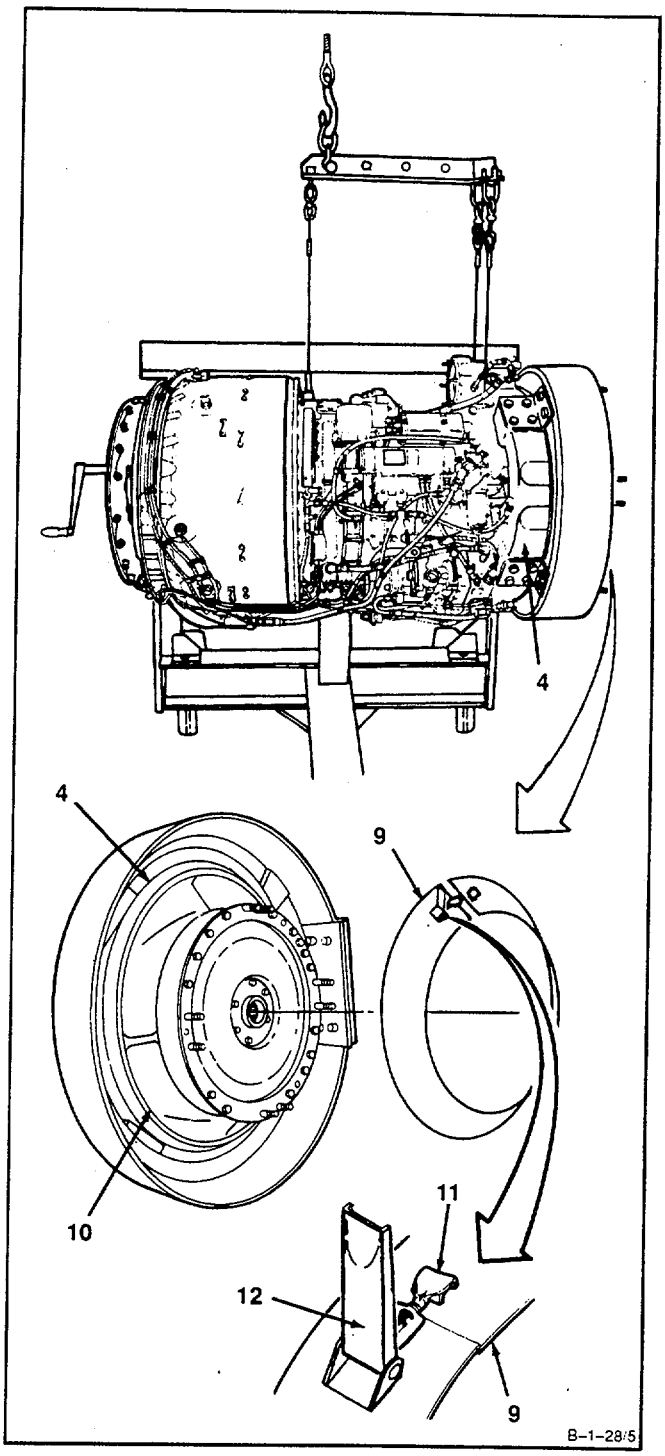

FOLLOW-ON MAINTENANCE:
Remove Engine Maintenance Sling (Ref. Task 1-32)

END OF TASK

1-30 REMOVE ENGINE FROM MAINTENANCE STAND 1-30

INITIAL SETUP

Applicable Configurations:
All

Tools:
Powerplant Mechanic's Tool Kit,
NSN 5180-00-323-4944

Materials:
None

Personnel Required:
Aircraft Powerplant Repairer

Equipment Condition:
Engine Maintenance Sling Installed (Task 1-31)

1. Lift latch (1) in upward position, releasing clip (2), and **remove engine protective cover (T11) (3).**

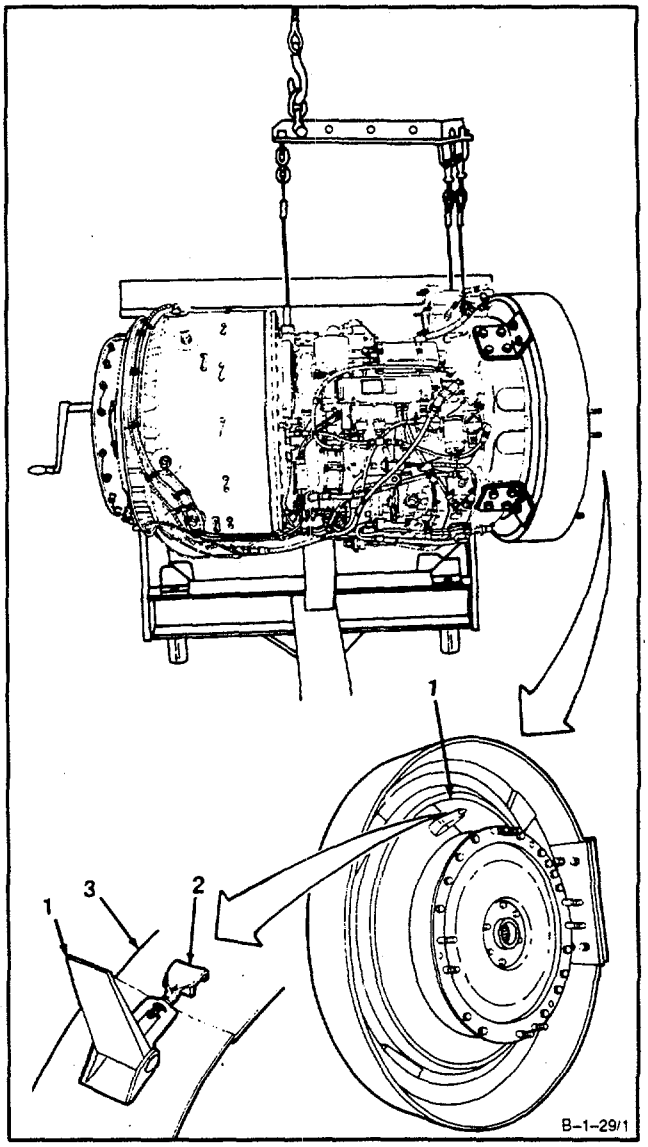

GO TO NEXT PAGE

1-30 REMOVE ENGINE FROM MAINTENANCE STAND (Continued) 1-30

CAUTION

Ensure engine maintenance sling cables are straight and vertical to pre- vent swinging. Possible engine damage could occur.

2. **Remove eight bolts (4).** This will release engine(5) from base adapter (6).

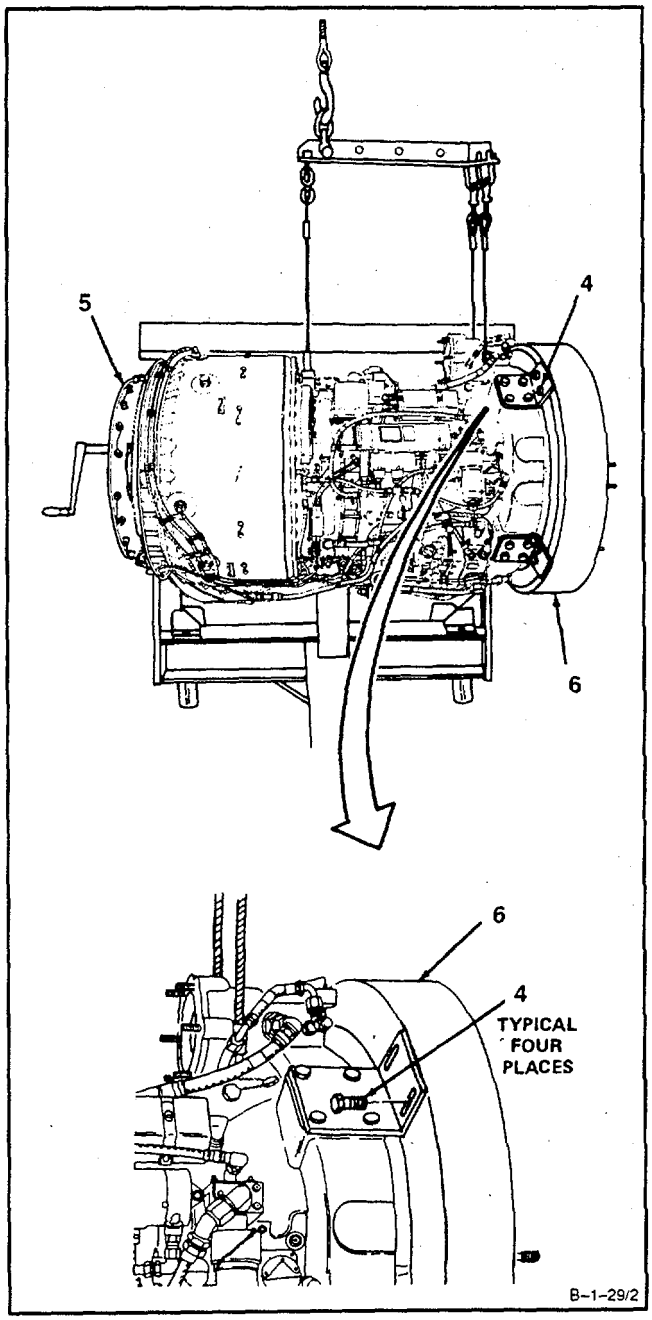

GO TO NEXT PAGE

3. Move hoist (7) and engine (5) away from base adapter (6).

4. **Remove sixteen bolts (8) and four brackets (9)** from inlet housing (10).

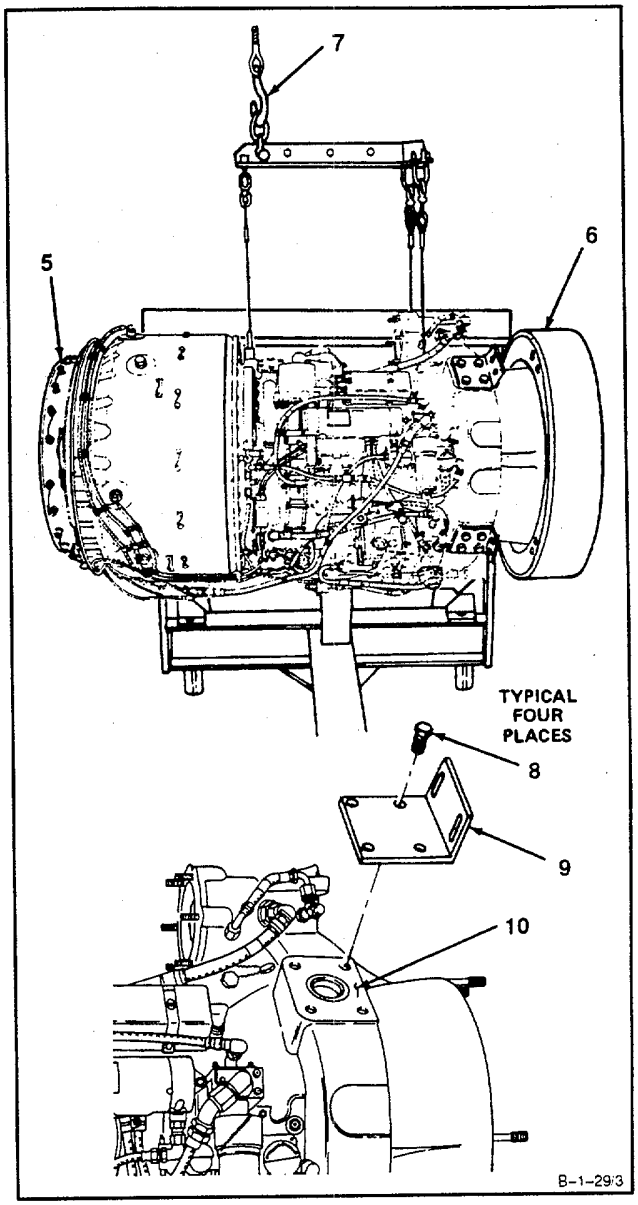

FOLLOW-ON MAINTENANCE:
None

END OF TASK

SECTION VI

HOISTING

This section contains general procedures needed when engine has to be lifted. It has instructions for installing and removing engine maintenance sling. It is divided into the following tasks:

LIST OF TASKS

NUMBER	TASK	PAGE
1-31	Install Engine Maintenance Sling	1-112
1-32	Remove Engine Maintenance Sling	1-117

1-31 INSTALL ENGINE MAINTENANCE SLING 1-31

INITIAL SETUP

Applicable Configurations:

All

Tools:

Powerplant Mechanic's Tool Kit
NSN 5180-00-323-4944
Aircraft Maintenance Sling (T32)
Hoist

Materials:

None

Personnel Required:

Aircraft Powerplant Repairer

General Safety Instructions:

WARNING

Inspect sling prior to use for signs of abuse or wear. Failure to comply may cause injury to personnel and/or damage to engine. When using sling, make sure hoist lifting capacity is 1200 pounds. In case of injury get medical attention.

1. **Ensure lifting link (1) is installed in last hole (2)** of sling (T32) (3).

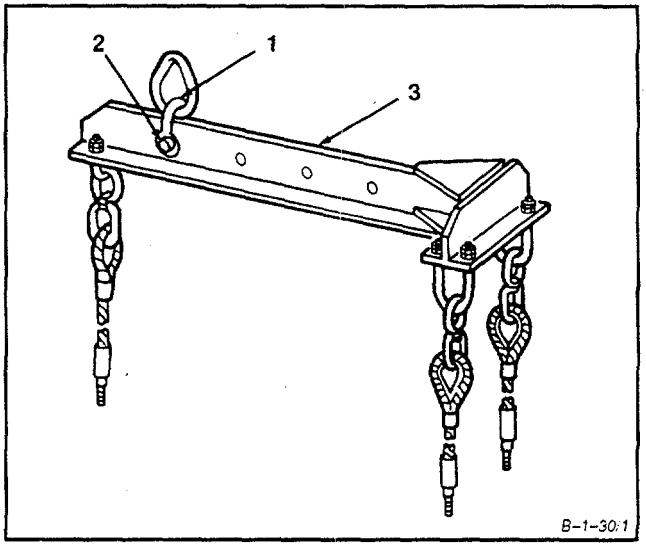

GO TO NEXT PAGE

1-31 INSTALL ENGINE MAINTENANCE SLING (Continued) 1-31

WARNING

Ensure that hoist lifting capacity is 1200 pounds.

2. **Attach sling (T32) (3)** to a hoist (4) with a lifting capacity of 1200 pounds and position above engine.

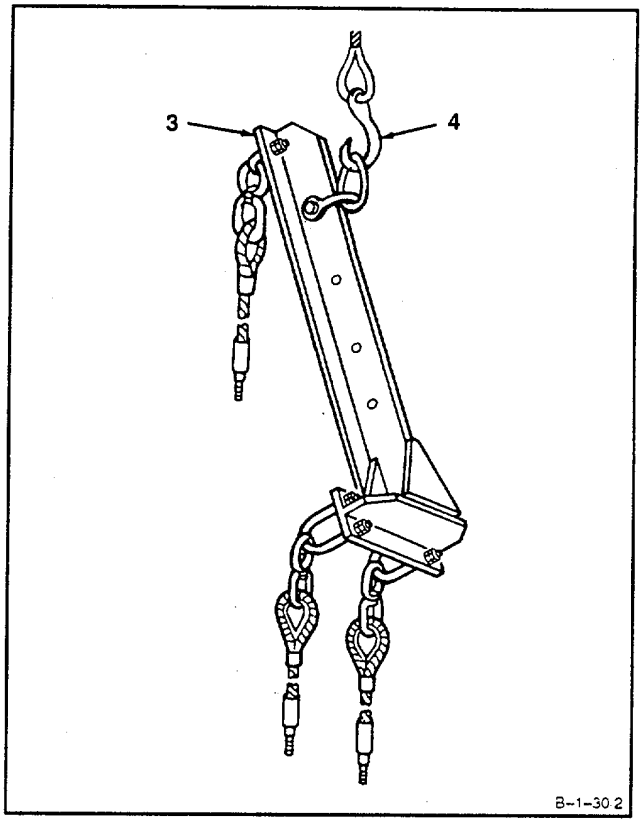

GO TO NEXT PAGE

1-31 INSTALL ENGINE MAINTENANCE SLING (Continued) 1-31

3. Secure rear leg (5) of sling (T32) (3) to hoist adapter (6) mounted on compressor housing (7).

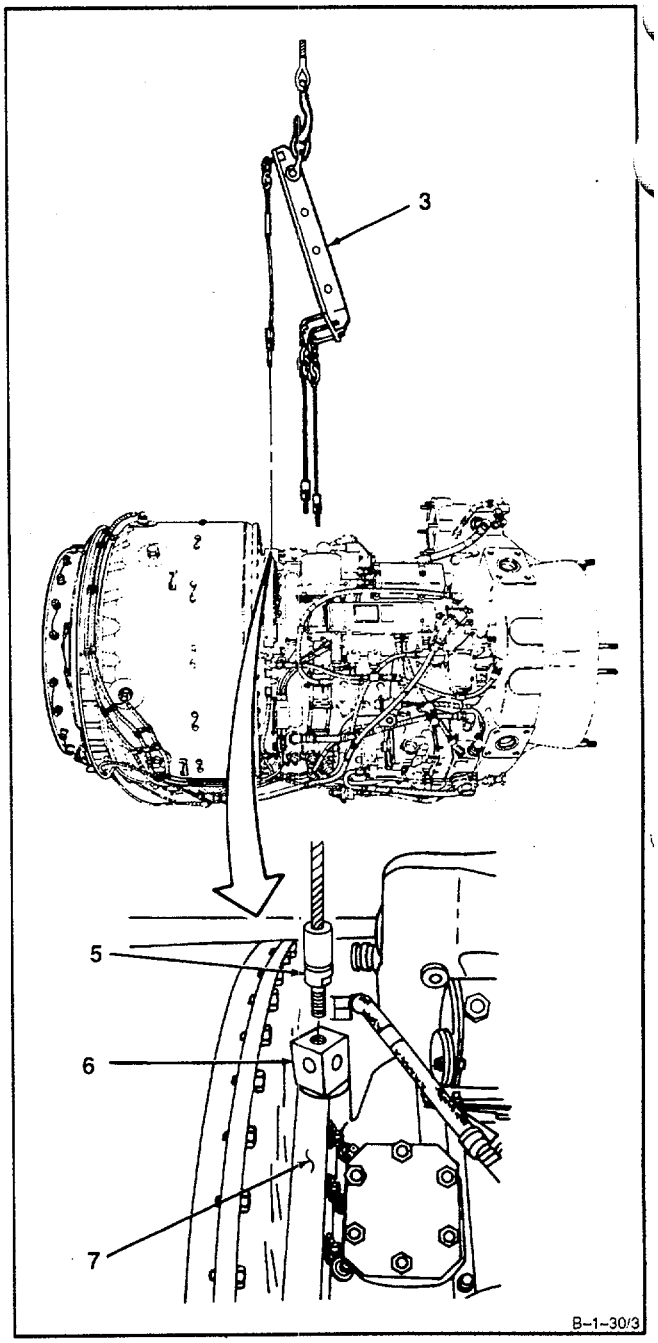

GO TO NEXT PAGE

1-31 INSTALL ENGINE MAINTENANCE SLING (Continued) 1-31

4. Secure sling (T32) (3) to left and right side of starter drive housing mounting flange (8).

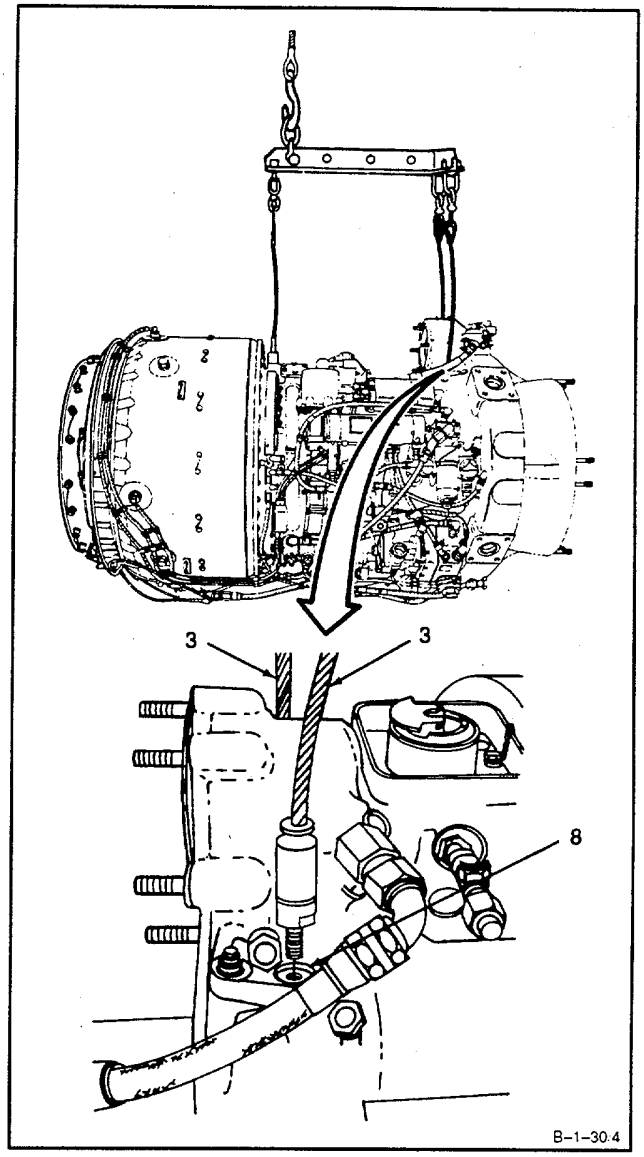

GO TO NEXT PAGE

5. **Adjust hoist (4) to lift engine (9).**

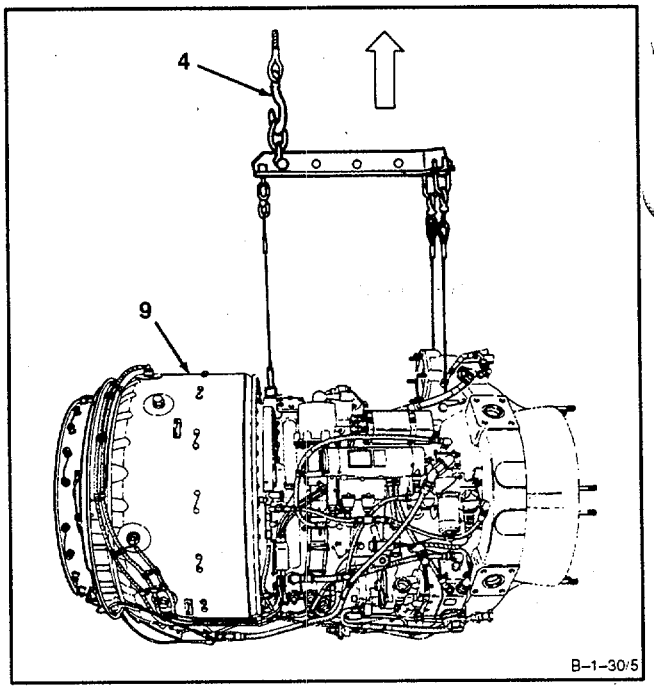

FOLLOW-ON MAINTENANCE:
None

END OF TASK

1-32 REMOVE ENGINE MAINTENANCE SLING 1-32

INITIAL SETUP

Applicable Configurations:

All

Tools:

Powerplant Mechanic's Tool Kit,
NSN 5180-00-323-4944

Materials:

None

Personnel Required:

Aircraft Powerplant Repairer

1. **Lower hoist (1)** to allow slack in sling cables (2 and 3).

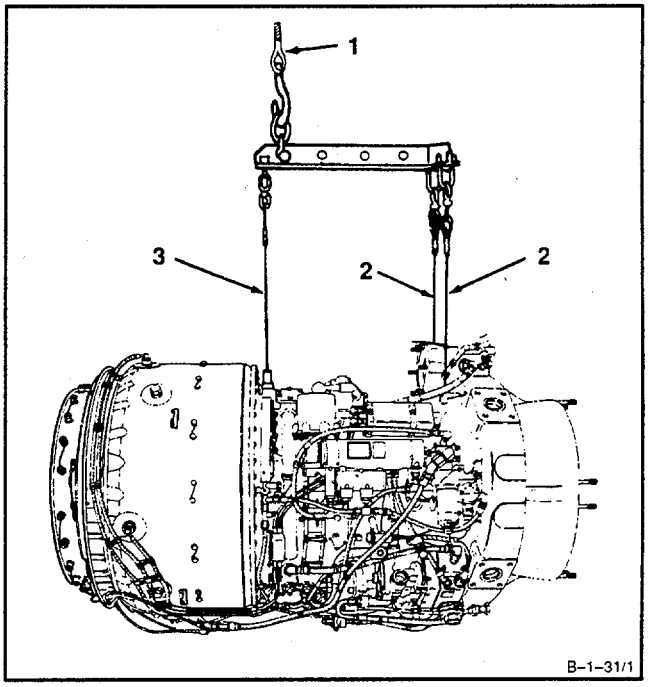

GO TO NEXT PAGE

1-32 REMOVE ENGINE MAINTENANCE SLING (Continued) 1-32

2. **Remove cables (2)** from starter housing holes (4) on left and right side of engine (5).

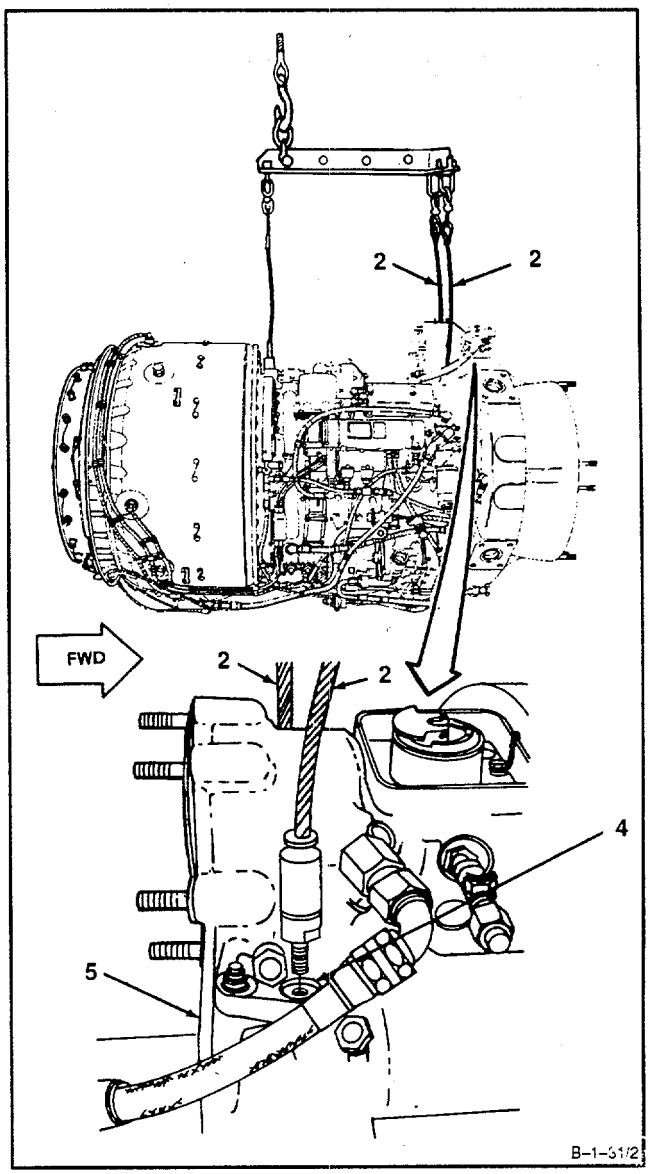

GO TO NEXT PAGE

3. **Remove cable** (3) from hoist adapter (6).

4. **Remove engine maintenance sling** (7) (T32) from hoist (1).

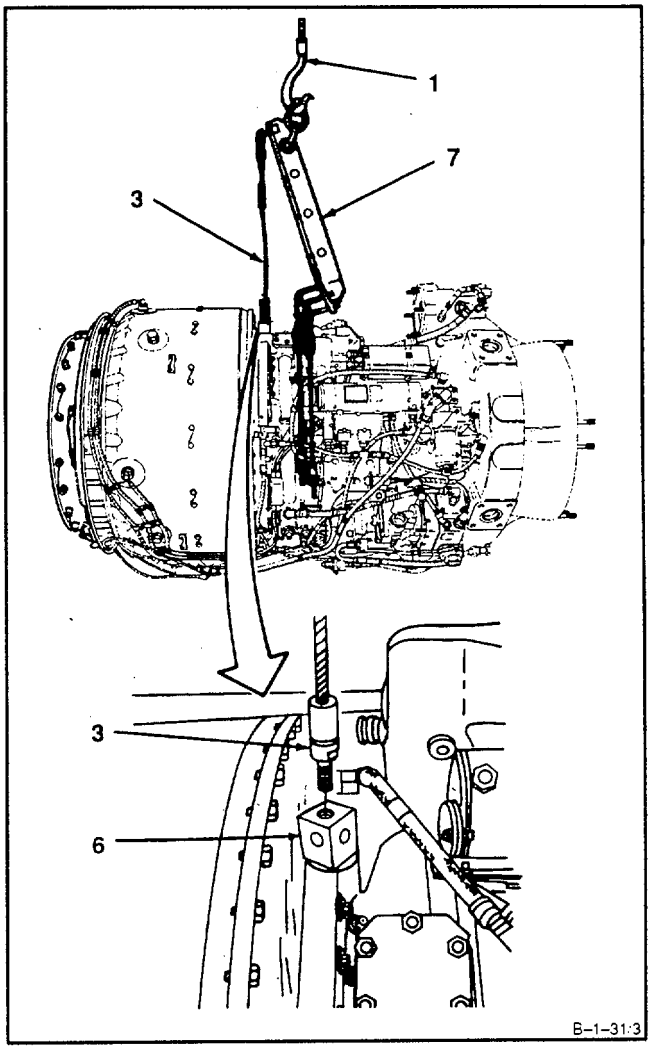

FOLLOW-ON MAINTENANCE:
None

END OF TASK

SECTION VII

TROUBLESHOOTING

1-33 SYMPTOM INDEX

The following is a list of symptoms that may arise in the T55-L-714 gas turbine engine. Task and page numbers where corrective procedures can be found are included.

SYMPTOM	TASK	PAGE
Starter Drive Does Not Turn Engine or Engine Cranking Speed is Too Slow	1-35	1-126
Engine Does Not Start-Ignition Not Firing	1-36	1-129
No Lightoff or Lean Hung Start-Visual Check	1-37	1-132
No Lightoff or Lean Hung Start-Primary Mode	1-38	1-134
No Lightoff or Lean Hung Start-Reversionary Mode	1-39	1-146
Hot Hung or Torching Start-Primary Mode	1-40	1-148
Hot Hung or Torching Start -Reversionary Mode	1-41	1-161
Ground Idle Speed is Incorrect-Primary Mode	1-42	1-164
Ground Idle Speed is Incorrect-Reversionary Mode	1-43	1-177
Power Limited-Primary Mode	1-44	1-190
Power Limited-Reversionary Mode	1-45	1-202
Compressor Surges	1-46	1-214
Compressor Bleed Band Operation Abnormal-Primary Mode	1-47	1-217
Compressor Bleed Band Operation Abnormal-Reversionary Mode	1-48	1-221
Erratic or Oscillating N1 Speed While Engine is Governing on N1-Primary Mode	1-49	1-224
Erratic or Oscillating N1 Speed While Engine is Governing on N1-Reversionary Mode	1-50	1-240
Erratic or Oscillating N2, PTIT, Torque or N1 While Governing on N2	1-51	1-255

1-33 SYMPTOM INDEX (Continued) 1-33

SYMPTOM	TASK	PAGE
Flameout	1-52	1-257
Oil Pressure Indicating Low or High - Visual Check	1-53	1-268
Oil Pressure Indicating Low or High	1-54	1-270
Oil Pressure Fluctuation (Total Needle Oscillation of More Than 10 PSI) - Visual Check	1-55	1-273
Oil Pressure Fluctuation (Total Needle Oscillation of More Than 10 PSI)	1-56	1-274
High Oil Temperature Indication - Visual Check	1-57	1-276
High Oil Temperature Indication	1-58	1-277
Static Oil Leakage at Combustion Chamber Drain Valve or Bleed Band Caused By Internal Oil Seepage - Visual Check	1-59	1-279
Static Oil Leakage at Combustion Chamber Drain Valve or Bleed Band Caused By Internal Oil Seepage	1-60	1-280
Excessive Chips Found on Oil Filter Element and/or Chip Detectors	1-61	1-281
High or Erratic PTIT	1-62	1-282
High Oil Consumption (More Than 2-Quarts Per Hour)	1-63	1-285
N2 Overspeed with No Load Loss	1-64	1-286
N2 Overspeed System Test Failure	1-65	1-289
Abnormal Engine Coastdown Noise or Time (Less Than 25 Seconds)	1-66	1-293
Post Shutdown Rumble or Relight	1-67	1-295

1-34 TROUBLESHOOTING PROCEDURES

Engine trouble can either be hidden or obvious. If hidden troubles are not detected, damage may occur to the engine. Therefore, it is important to have a thorough knowledge of normal engine operation.

It is essential to have information on previous trouble and work performed on the engine. Certain engine operation and history parameters can be obtained from the DECU and can be downloaded and printed out via the engine history recording terminal (EHRT) (T37). Check each possible source of trouble until the trouble has been isolated by a process of elimination. Systematic checking is essential for thorough troubleshooting. It saves time and promotes accuracy. If the symptom also lists a visual check task, always perform the visual check first. In all troubleshooting tasks, if engine trouble cannot be corrected by the end of the task, the engine is to be replaced.

Tasks 1-34 thru 1-67 contain troubleshooting procedures to be used for isolating and correcting engine troubles. These procedures may also be used as a guideline for solving problems reported with the engine installed in the airframe. The symptom is the task title and appears at the top of the task. A logic tree flow chart is used in conjunction with locator illustrations to assist troubleshooting. To use the flow chart, start at the top left-hand box. Follow the arrows, answer all questions, and proceed through the flow chart as indicated until engine trouble has been corrected. Use locator illustrations as needed.

These troubleshooting procedures involve interface with non-engine components. Elimination of these components as possible sources of trouble assumes characteristics of these components which are equivalent to airframe installation. Some variation in characteristics of these components may occur dependent on design of test cell facility relative to the aircraft.

When troubleshooting procedures involve test cell operations, these operations will be accomplished by Contractor Logistic Support personnel.

LIST OF TASKS

NUMBER	TITLE
1-35	Starter Drive Does Not Turn Engine or Engine Cranking Speed is Too Slow
1-36	Engine Does Not Start-Ignition Not Firing
1-37	No Lightoff or Lean Hung Start - Visual Check
1-38	No Lightoff or Lean Hung Start - Primary Mode
1-39	No Lightoff or Lean Hung Start - Reversionary Mode
1-40	Hot Hung or Torching Start - Primary Mode
1-41	Hot Hung or Torching Start - Reversionary Mode
1-42	Ground Idle Speed is Incorrect - Primary Mode
1-43	Ground Idle Speed is Incorrect - Reversionary Mode
1-44	Power Limited - Primary Mode

LIST OF TASKS (Continued)

NUMBER	TITLE
1-45	Power Limited - Reversionary Mode
1-46	Compressor Surges
1-47	Compressor Bleed Band Operation Abnormal - Primary Mode
1-48	Compressor Bleed Band Operation Abnormal - Reversionary Mode
1-49	' Erratic or Oscillating N1 Speed While Engine is Governing on N1 - Primary Mode
1-50	Erratic or Oscillating N1 Speed While Engine is Governing on N1 - Reversionary Mode
1-51	Erratic or Oscillating N2, PTIT, Torque or N1 While Governing on N2
1-52	Flameout
1-53	Oil Pressure Indicating Low or High - Visual Check
1-54	Oil Pressure Indicating Low or High
1-55	Oil Pressure Fluctuation (Total Needle Oscillation of More Than 10 PSI) - Visual Check
1-56	Oil Pressure Fluctuation (Total Needle Oscillation of More Than 10 PSI)
1-57	High Oil Temperature Indication - Visual Check
1-58	High Oil Temperature Indication
1-59	Static Oil Leakage at Combustion Chamber Drain Valve or Bleed Band Caused By Internal Oil Seepage - Visual Check
1-60	Static Oil Leakage at Combustion Chamber Drain Valve or Bleed Band Caused By Internal Oil Seepage
1-61	Excessive Chips Found on Oil Filter Element and/or Chip Detectors
1-62	High or Erratic PTIT

LIST OF TASKS (Continued)

NUMBER	TITLE
1-63	High Oil Consumption (More Than 2-Quarts Per Hour)
1-64	N2 Overspeed with No Load Loss
1-65	N2 Overspeed System Test Failure
1-66	Abnormal Engine Coastdown Noise or Time (Less Than 25 Seconds)
1-67	Post Shutdown Rumble or Relight

1-35 STARTER DRIVE DOES NOT TURN ENGINE OR ENGINE CRANKING SPEED IS TOO SLOW 1-35

INITIAL SETUP

Applicable Configurations:
All

Tools:
Powerplant Mechanic's Tool Kit,
NSN 5180-00-323-4944
Portable Duct Type Heater,
NSN 45200-00-915-7789

Materials
None

Personnel Required:
Aircraft Powerplant Repairer

Equipment Condition:

References:
TM 1-1520-252-23

Task 1-86	Task 5-19	Task 6-8
Task 1-87	Task 5-20	Task 6-12
Task 2-20	Task 5-21	Task 6-13
Task 2-23	Task 5-22	Task 8-1
Task 2-35	Task 6-1	Task 8-6
Task 5-18	Task 6-6	

NOTE: ENGINE CRANKING SPEED IS THE COMPRESSOR SPEED WHICH CAN BE ACHIEVED BY MOTORING THE ENGINE WITH THE STARTER WITHOUT COMBUSTION. MOTORING CAN BE ACCOMPLISHED BY ACTIVATING STARTER WITH ECL IN STOP POSITION. CRANKING SPEED SHOULD EXCEED 18% N_1.

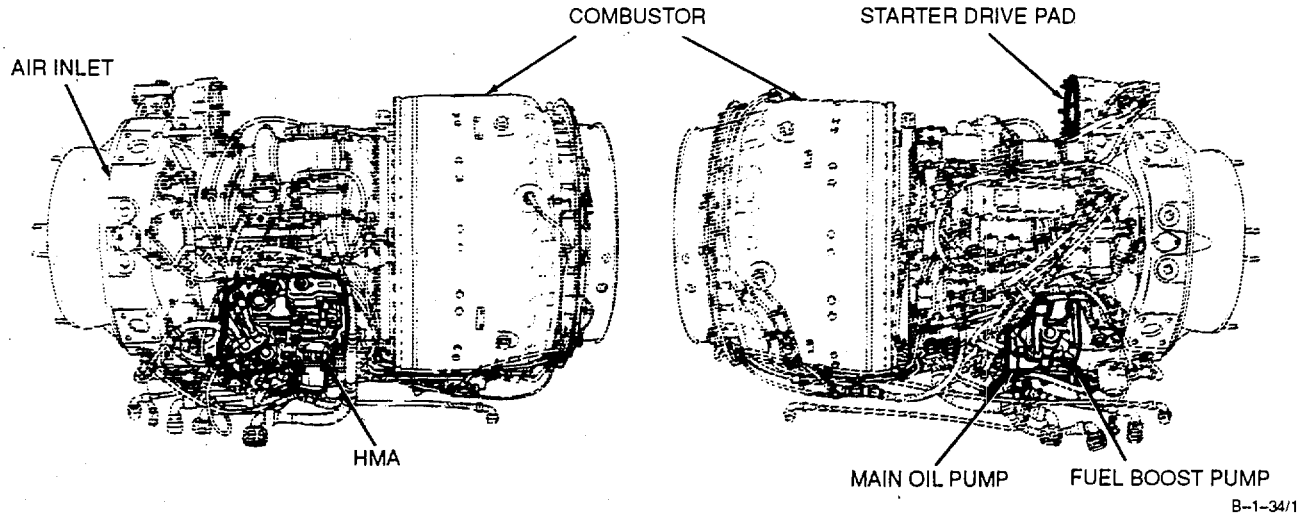

GO TO NEXT PAGE

1-35 STARTER DRIVE DOES NOT TURN ENGINE OR ENGINE CRANKING SPEED IS TOO SLOW (Continued) 1-35

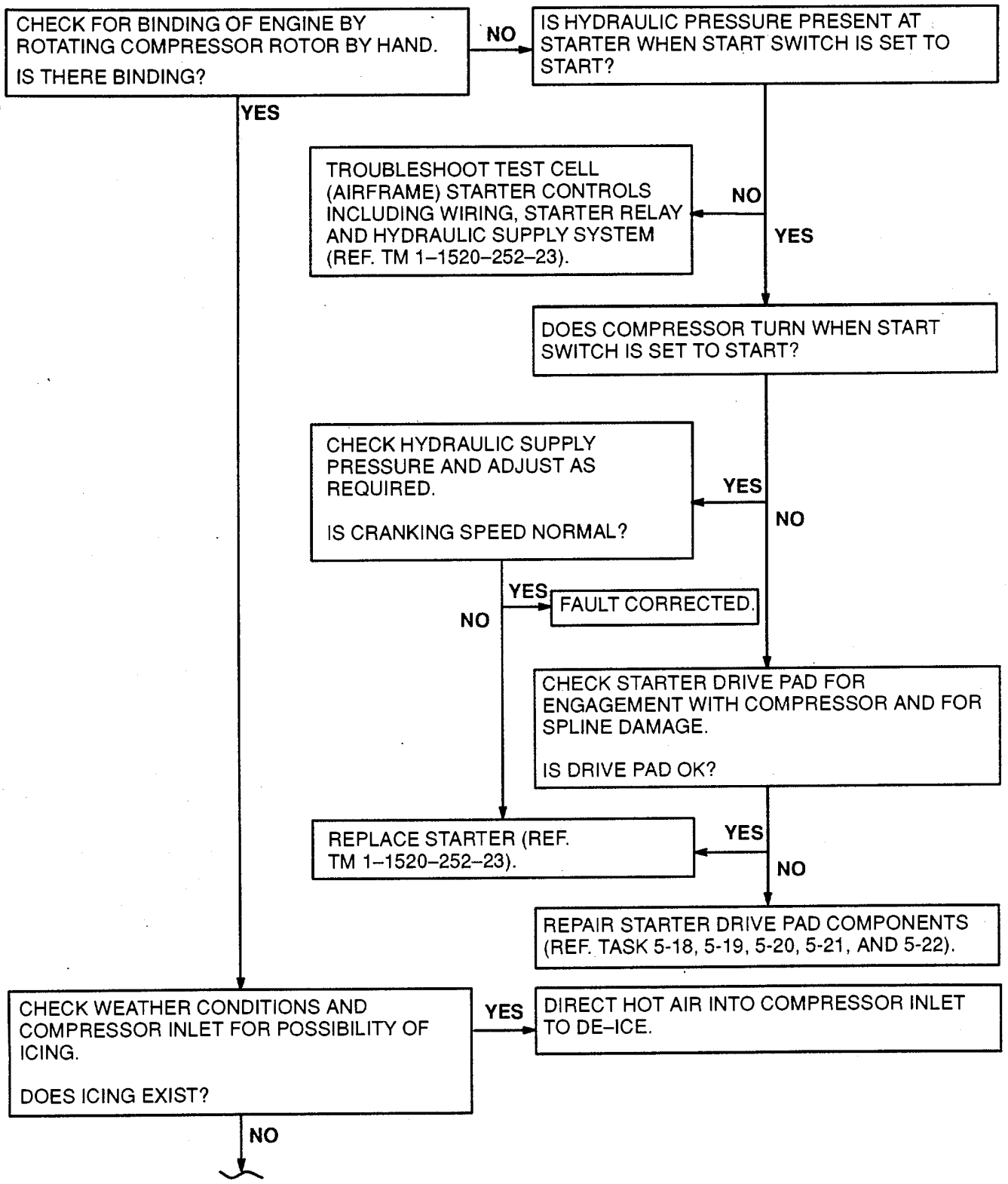

GO TO NEXT PAGE

1-35 STARTER DRIVE DOES NOT TURN ENGINE OR ENGINE CRANKING SPEED IS TOO SLOW (Continued) 1-35

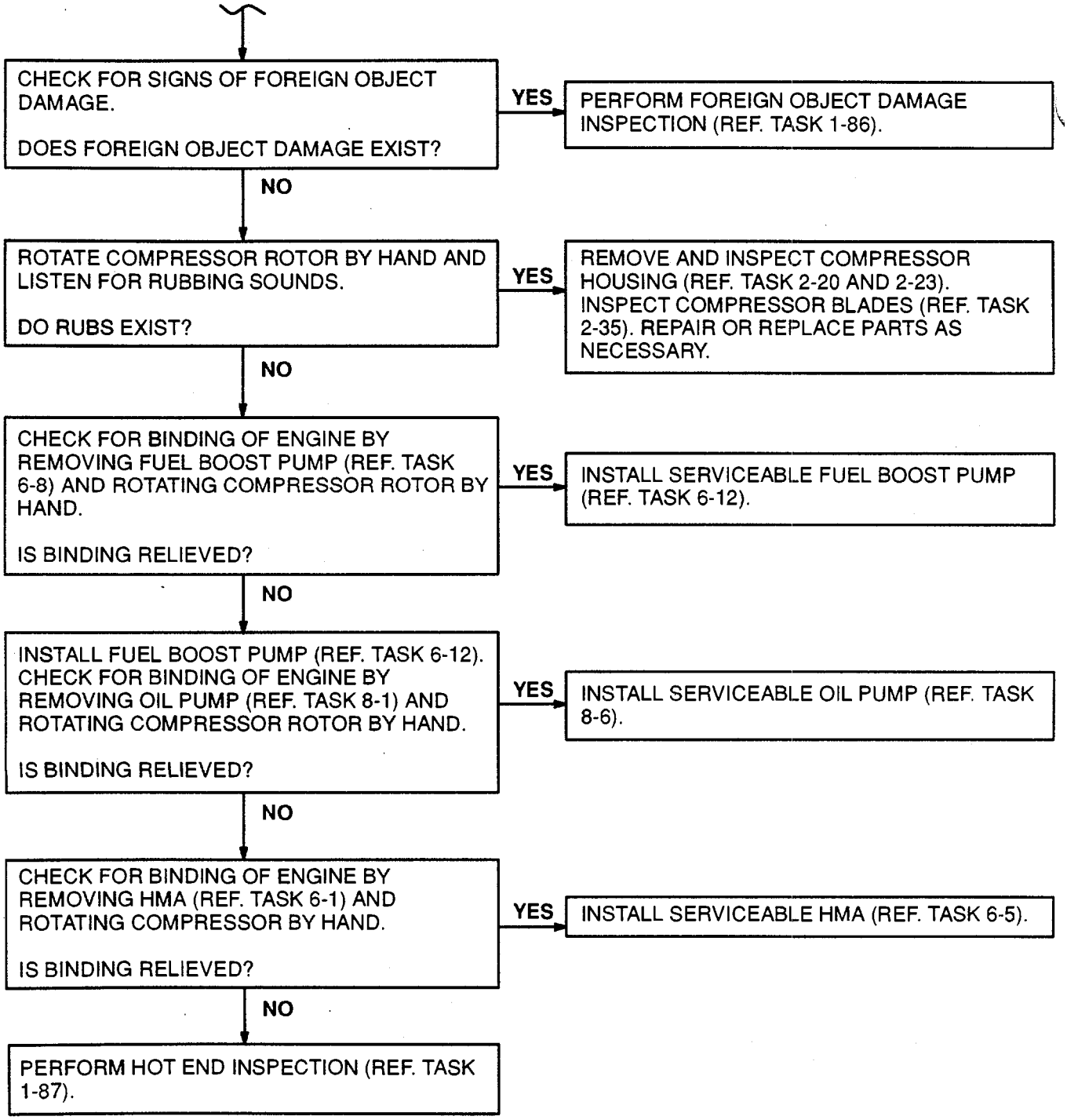

FOLLOW-ON MAINTENANCE:
None

END OF TASK

1-36 ENGINE DOES NOT - IGNITION NOT FIRING 1-36

INITIAL SETUP

Applicable Configurations:

All

Tools

Powerplant Mechanic's Tool Kit,
Powerplant Mechanic's Tool Kit,

Materials:

Tape (E59)

Personnel Required:

Aircraft Powerplant Repairer
Aircraft Powerplant Repairer

References:

TM 1-1520-252-10

Task 7-1	Task 7-10	Task 7-28
Task 7-6	Task 7-11	Task 7-29
Task 7-30	Task 7-32	Appendix G
Task 7-31	Task 7-33	

General Safety Instructions:

WARNING

The ignition exciter stores very high and possibly fatal voltage. Use extreme care when working around ignition exciter. Serious injury could result if exciter is accidentally grounded. Do not probe inside of output receptacles with fingers or metal object. Discharge exciter only with insulated screwdriver. In case of shock or injury, get medical attention.

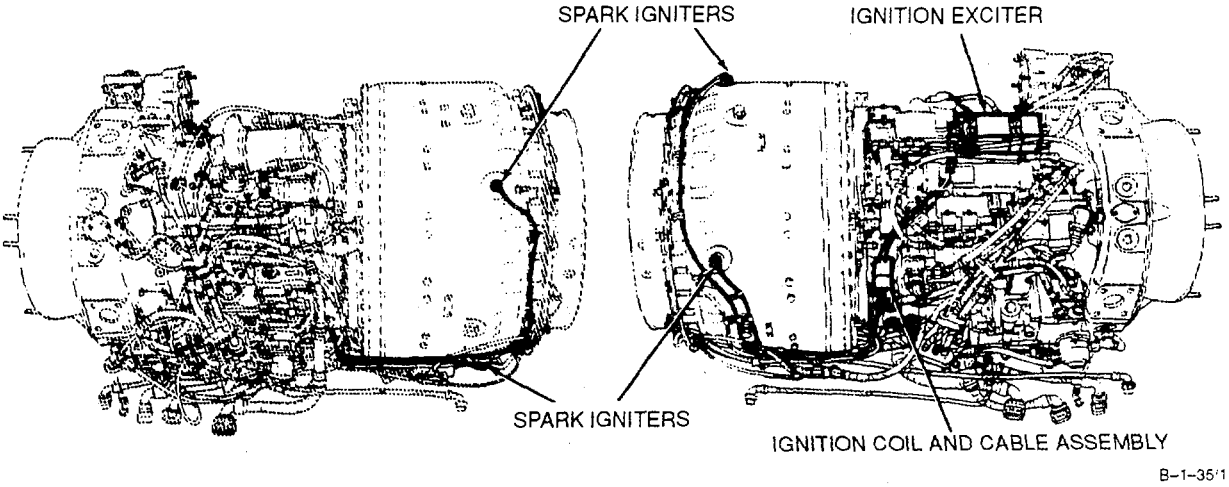

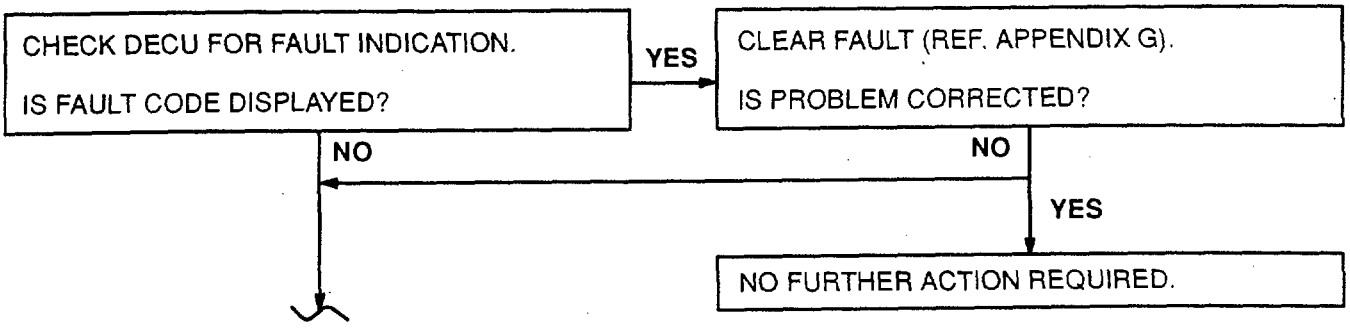

GO TO NEXT PAGE

1-36 ENGINE DOES NOT - IGNITION NOT FIRING 1-36

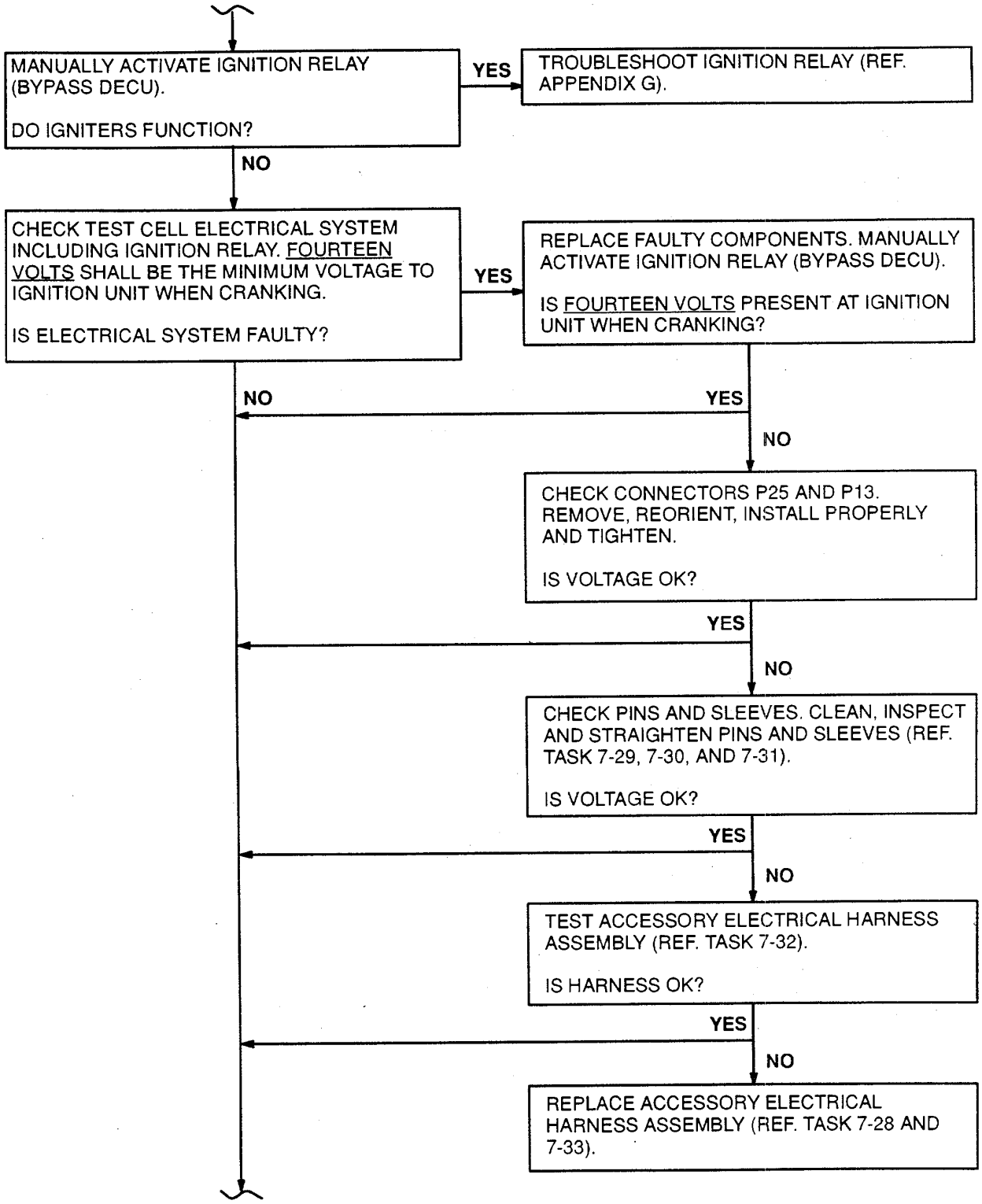

GO TO NEXT PAGE

1-36 ENGINE DOES NOT - IGNITION NOT FIRING 1-36

WARNING

IN THE FOLLOWING STEPS ENSURE FUEL BOOST PUMP SWITCHES ARE TURNED OFF TO PREVENT POSSIBILITY OF ACCIDENTAL FIRE. INJURY TO PERSONNEL CAN RESULT. IF INJURY OCCURS, GET MEDICAL ATTENTION.

REMOVE LEADS AND SPARK IGNITERS (REF. TASK 7-6) FROM COMBUSTOR HOUSING. TAPE END OF LEADS TO COMBUSTOR HOUSING. HAVE HELPER ACTIVATE IGNITION SYSTEM (REF. BH55-1520-47E-10). CHECK FOR SPARK AT SPARK IGNITERS.

IS THERE SPARK AT ALL IGNITERS?

YES → INSTALL SPARK IGNITERS AND LEADS (REF. TASK 7-10). FAULT WAS NOT IN ELECTRICAL SYSTEM. TRY RE-STARTING ENGINE (REF. BH55-1520-47E-10). OBSERVE FOR NEW SYMPTOM (REF. APPENDIX G, AUTO START SEQUENCE NOT COMPLETE).

NO ↓

REPLACE FAULTY SPARK IGNITERS (REF. TASKS 7-6 AND 7-10). HAVE HELPER ACTIVATE IGNITION SYSTEM (REF. BH55-1520-47E-10). CHECK FOR SPARK AT SPARK IGNITERS.

IS THERE SPARK AT ALL IGNITERS?

YES → FAULT CORRECTED. INSTALL SPARK IGNITERS (REF. TASK 7-10).

NO ↓

HAVE HELPER ACTIVATE IGNITION SYSTEM (REF. BH55-1520-47E-10). CHECK FOR SPARK AT SPARK IGNITERS.

IS THERE SPARK AT ONLY 1 TO 3 SPARK IGNITERS?

YES → REPLACE IGNITION COIL AND CABLE ASSEMBLY (REF. TASK 7-1 AND 7-5). INSTALL SPARK IGNITERS (REF. TASK 7-10).

NO ↓

REPLACE IGNITION EXCITER (REF. TASK 7-11 AND 7-15) AND INSTALL SPARK IGNITERS (REF. TASK 7-10).

FOLLOW-ON MAINTENANCE:
None

END OF TASK

1-37 NO LIGHTOFF OR LEAN HUNG START - VISUAL CHECK 1-37

INITIAL SETUP

Applicable Configurations:
All

Tools:
Powerplant Mechanic's Tool Kit,
NSN 5180-00-323-4944

Materials
None

Personnel Required:
Aircraft Powerplant Repairer

References:

Task 1-79
Task 1-95
Task 1-96

TASK	RESULT
	CAUTION **In the following two steps if differential pressure indicator button becomes extended more than once within each.period of engine operation inspect contaminated fuel system (Ref. Task 1-79).**
1. Check inline fuel filter differential pressure indicator button.	If differential pressure indicator button is extended, service filter and reset button (Ref. Task 1-96).
2. Check main fuel filter differential pressure indicator button.	If differential pressure indicator button is extended, service filter and reset button (Ref. Task 1-95).

GO TO NEXT PAGE

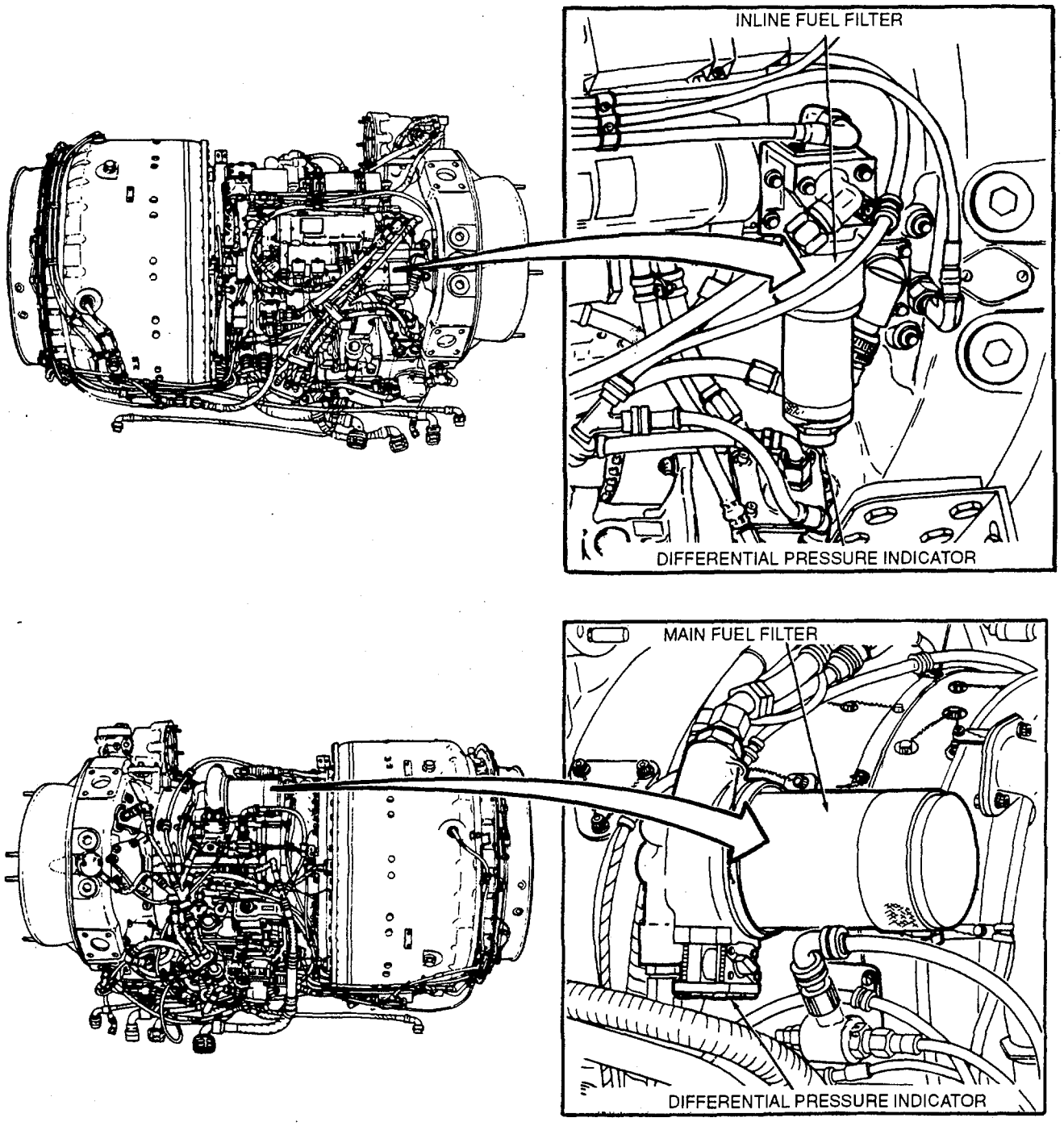

B-1-36/1

FOLLOW-ON MAINTENANCE:
None

END OF TASK

1-38 NO LIGHTOFF OR LEAN HUNG START - PRIMARY MODE 1-38

INITIAL SETUP

Applicable Configurations:

All

Tools

Powerplant Mechanic's Tool Kit,
NSN 5180-00-323-4944
Utility Pail

Materials:

None

Personnel Required:

Aircraft Powerplant Repairer
Aircraft Powerplant Repairer

References:

BH55-1520-47E-T
TM 1-1520-252-10
TM 55-4920-328-13

Task 7-1	Task 7-10	Task 7-28
Task 7-6	Task 7-11	Task 7-29
Task 1-35	Task 2-64	Task 6-17
Task 1-36	Task 2-71	Task 6-19
Task 1-79	Task 2-72	Task 6-20
Task 1-87	Task 4-10	Task 6-23
Task 1-95	Task 4-11	Task 6-24
Task 1-96	Task 4-20	Task 6-26
Task 1-99	Task 4-24	Task 6-27
Task 2-27	Task 4-25	Task 6-28
Task 2-31	Task 6-1	Task 6-34
Task 2-32	Task 6-5	Task 6-35
Task 2-33	Task 6-8	Task 6-40
Task 2-37	Task 6-12	Task 6-41
Task 2-63	Task 6-15	Task 6-44
Task 6-45	Task 6-72	Task 7-10
Task 6-48	Task 6-73	Task 7-16
Task 6-49	Task 6-76	Task 7-17
Task 6-51	Task 6-77	Task 7-18
Task 6-52	Task 6-78	Task 7-20
Task 6-56	Task 6-79	Task 8-14
Task 6-57	Task 6-80	APPENDIX G
Task 6-61	Task 6-81	
Task 6-63	Task 6-82	
Task 6-64	Task 6-83	
Task 6-65	Task 6-84	
Task 6-66	Task 6-85	
Task 6-67	Task 6-90	
Task 6-68	Task 6-91	
Task 6-69	Task 7-6	

General Safety Instructions:

WARNING

Turbine fuels are very flammable. They may cause drying and irritation of skin or eyes. Handle only in well-ventilated areas away from heat and open flame. Drain and store in approved metal safety containers. Avoid prolonged or repeated contact with skin and do not take internally. Wash contacted area of skin thoroughly after handling. If irritation of skin results, get medical attention. Get medical attention for eyes.

NOTE: LEAN HUNG START IS DISTINGUISHED FROM HOT HUNG START BY LOW (<600°C) T_{45} TEMPERATURE DURING START. IF HUNG START OCCURS WITH T_{45} TEMPERATURE BELOW 600°C, FOLLOW TROUBLESHOOTING PROCEDURE FOR HOT HUNG START.

NOTE: UNSUCCESSFUL STARTS MAY OCCUR ON FIRST START ATTEMPT AFTER SERVICING FUEL SYSTEM COMPONENTS DUE TO LINE FILL PROBLEMS. TROUBLESHOOTING PROCEDURES SHOULD ELIMINATE THIS PROBLEM BY CONFIRMING THAT UNSUCCESSFUL STARTS RECUR UPON SUBSEQUENT START ATTEMPTS.

GO TO NEXT PAGE

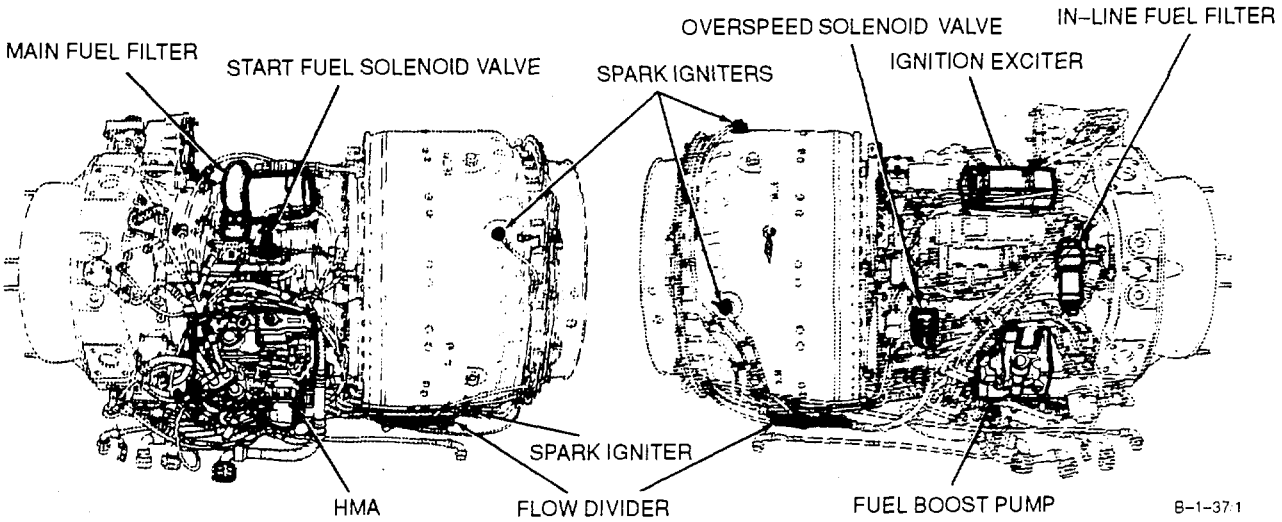

GO TO NEXT PAGE

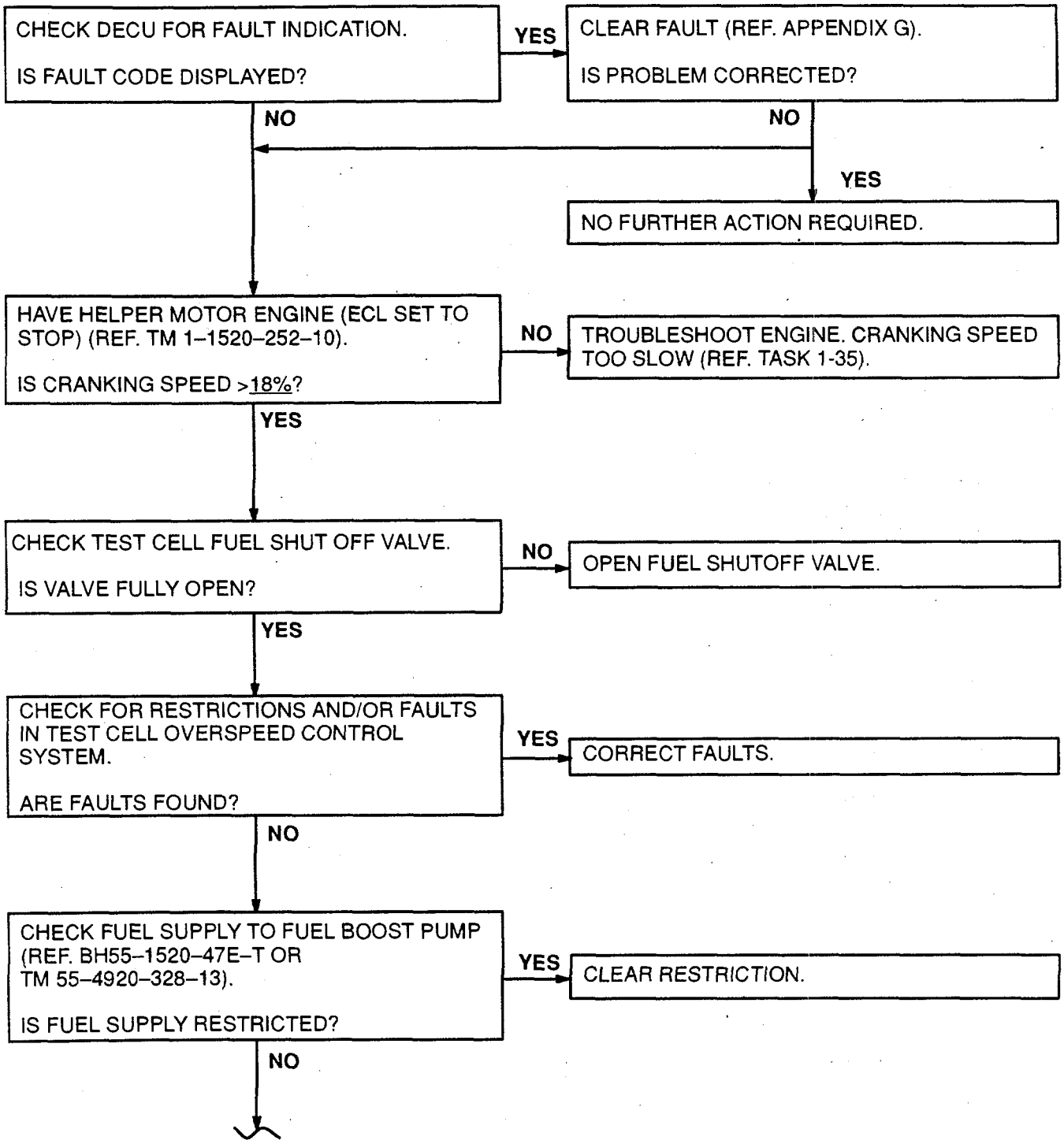

GO TO NEXT PAGE

CHECK HOSE ASSEMBLY (AIR DIFFUSER ASSEMBLY TO HMA).

IS HOSE ASSEMBLY LOOSE, LEAKING OR CLOGGED?

YES → TIGHTEN OR REPLACE HOSE ASSEMBLY (REF. TASK 2-63 AND 2-64).

NO ↓

CHECK HOSE ASSEMBLY (HMA TO AIRCRAFT BULKHEAD).

IS HOSE ASSEMBLY LOOSE, LEAKING OR CLOGGED?

YES → TIGHTEN OR REPLACE HOSE ASSEMBLY (REF. TASK 2-71 AND 2-72).

NO ↓

CHECK TEST CELL HOSE ASSEMBLY (ENGINE HOSE ASSEMBLY TO TEST CELL DECU).

IS HOSE ASSEMBLY LOOSE, LEAKING OR CLOGGED?

YES → TIGHTEN OR REPLACE HOSE ASSEMBLY (REF. TEST CELL FACILITIES MAINTENANCE).

NO ↓

WARNING

IN THE FOLLOWING STEPS ENSURE FUEL BOOST PUMP SWITCHES ARE TURNED OFF TO PREVENT POSSIBILITY OF ACCIDENTAL FIRE THAT CAN CAUSE INJURY TO PERSONNEL. IF INJURY OCCURS, GET MEDICAL ATTENTION.

REMOVE LEADS AND SPARK IGNITERS (REF. TASK 7-6) FROM COMBUSTOR HOUSING. TAPE END OF LEADS TO COMBUSTOR HOUSING. HAVE HELPER ACTIVATE IGNITION SYSTEM (REF. BH55–1520–47E-10). CHECK FOR SPARK AT SPARK IGNITERS.

IS THERE SPARK AT ALL IGNITERS?

NO → TROUBLESHOOT ENGINE DOES NOT START. IGNITION NOT FIRING (REF. TASK 1-36).

YES ↓

GO TO NEXT PAGE

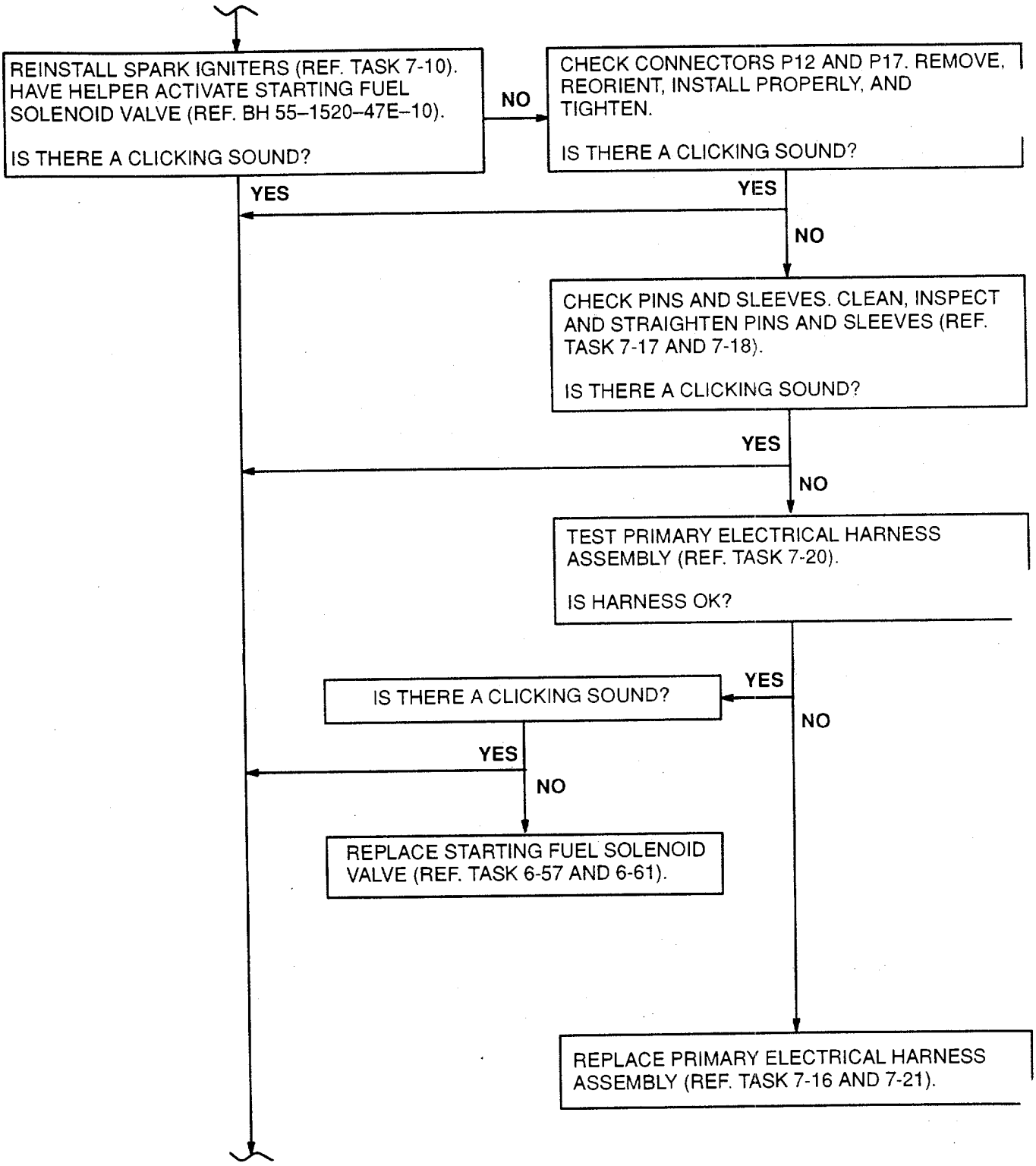

GO TO NEXT PAGE

WARNING

DISCONNECT DC POWER SOURCE TO IGNITION EXCITER OR OPEN CIRCUIT BREAKER TO PREVENT POSSIBILITY OF FIRE THAT CAN CAUSE INJURY TO PERSONNEL. IF INJURY OCCURS, GET MEDICAL ATTENTION.

DISCONNECT HOSE ASSEMBLY (STARTING FUEL SOLENOID VALVE TO TUBE ASSEMBLY) FROM TUBE ASSEMBLY. PLACE END OF HOSE INTO UTILITY PAIL. HAVE HELPER MOTOR ENGINE (ECL SET TO GND) (REF. TM 1–1520–252–10).

IS FUEL BEING PUMPED INTO PAIL?

NO → REPLACE STARTING FUEL SOLENOID VALVE (REF. TASK 6-57 AND 6-61).

YES ↓

RECONNECT HOSE ASSEMBLY TO TUBE ASSEMBLY. HAVE HELPER ACTIVATE STARTING FUEL SOLENOID VALVE. (REF. BH 55–1520–47E–10).

IS FUEL BEING PUMPED INTO PAIL?

NO → REPLACE STARTING FUEL SOLENOID VALVE (REF. TASK 6-57 AND 6-61).

YES ↓

REMOVE AND INSPECT START FUEL NOZZLES (REF. TASK 6-24 AND 6-26).

ARE NOZZLES CLOGGED OR DAMAGED?

YES → INSTALL SERVICEABLE START FUEL NOZZLES (REF. TASK 6-27).

NO ↓

APPLY COMPRESSED AIR AT 60 PSI. TO TUBE ASSEMBLY (HOSE ASSEMBLY TO PRIMER TUBE).

IS TUBE ASSEMBLY OR PRIMER TUBE CLOGGED OR RESTRICTED?

YES → REPLACE TUBE ASSEMBLY OR PRIMER TUBE (REF. TASK 6-90 AND 6-91 OR 6-20 AND 6-23).

NO ↓

GO TO NEXT PAGE

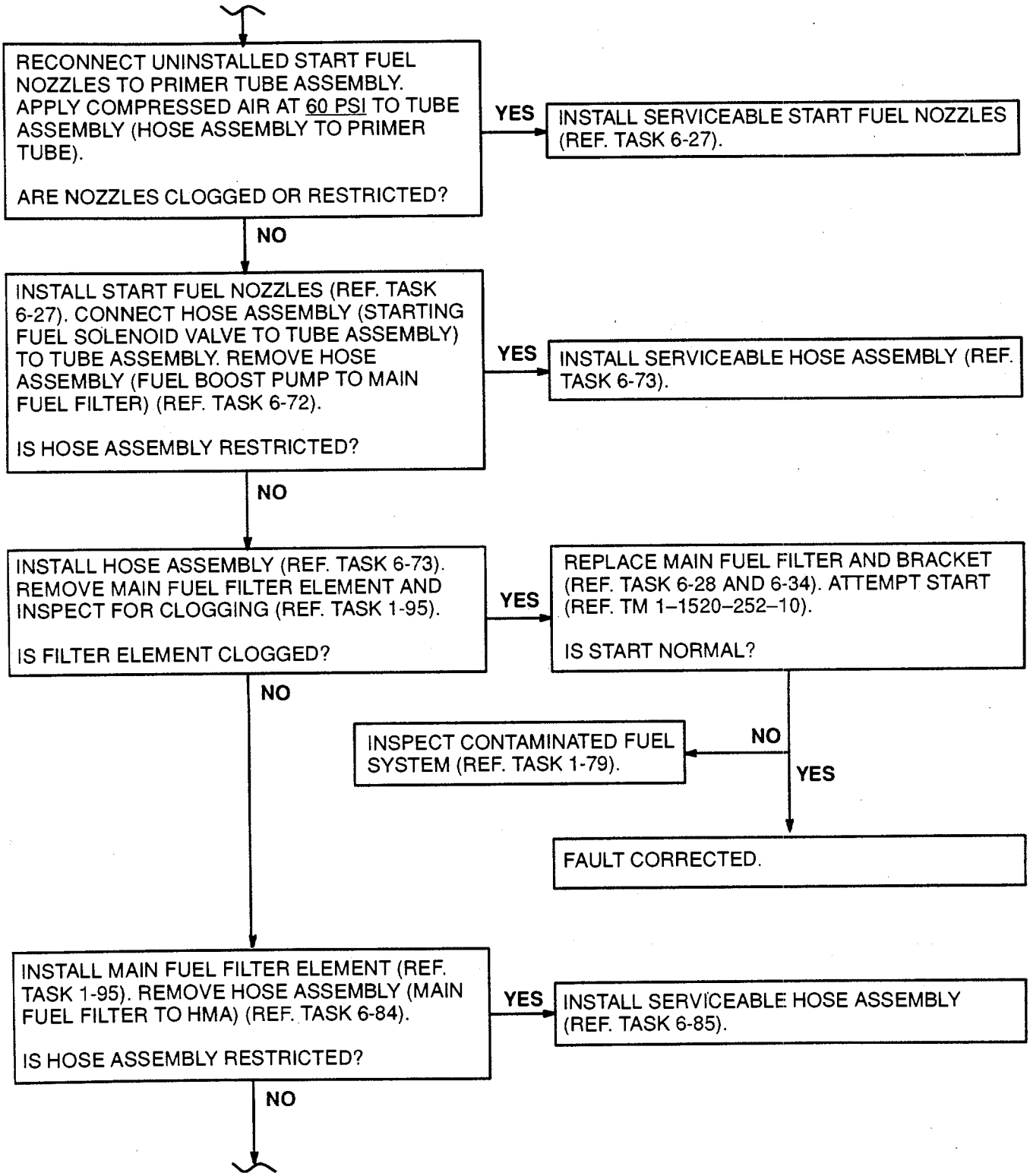

GO TO NEXT PAGE

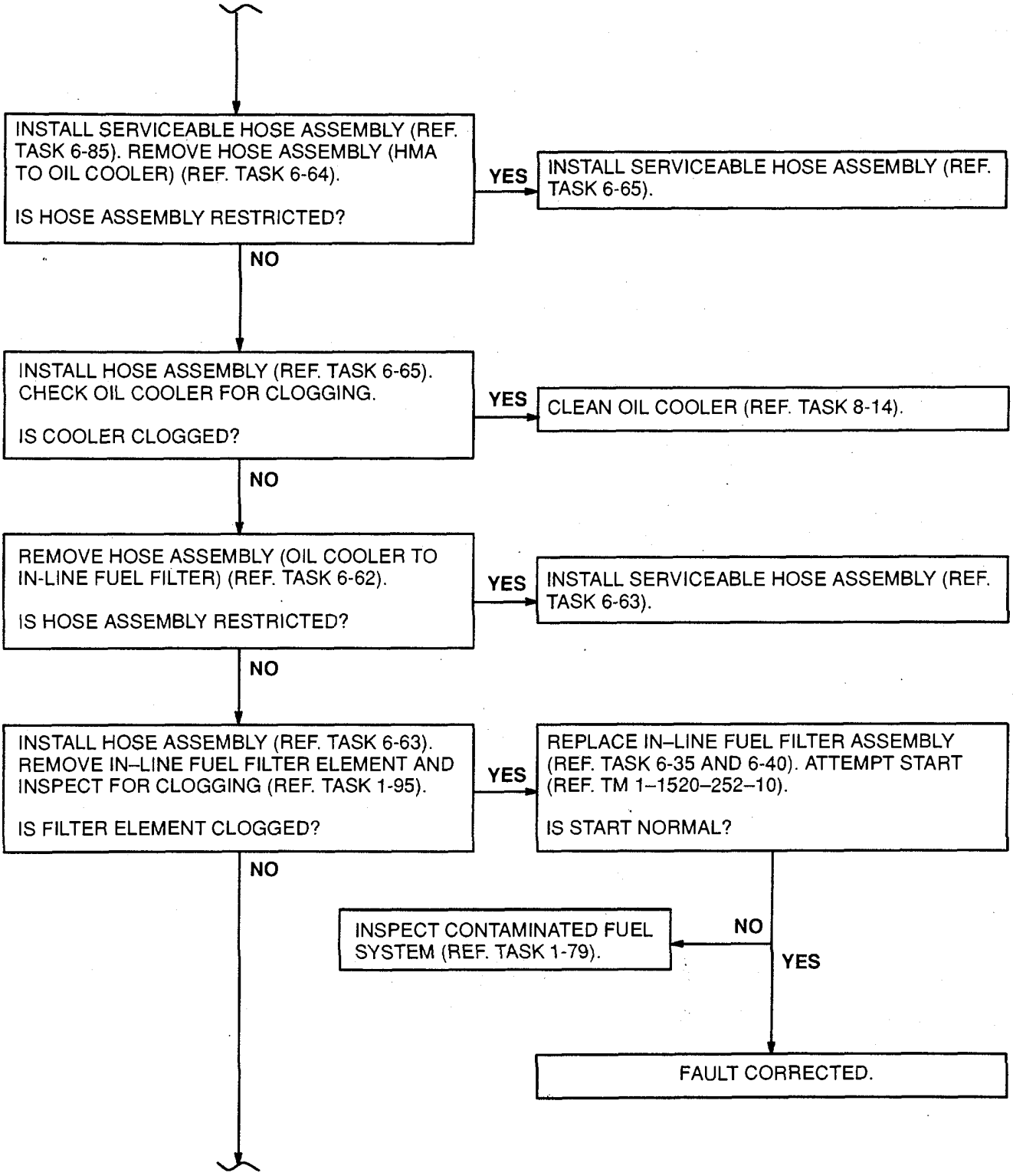

GO TO NEXT PAGE

INSTALL IN–LINE FUEL FILTER ELEMENT (REF. TASK 1-96). REMOVE HOSE ASSEMBLY (IN–LINE FUEL FILTER TO OVERSPEED SOLENOID VALVE) (REF. TASK 6-66).

IS HOSE ASSEMBLY RESTRICTED?

YES → INSTALL SERVICEABLE HOSE ASSEMBLY (REF. TASK 6-67).

NO ↓

INSTALL HOSE ASSEMBLY (REF. TASK 6-67). REMOVE HOSE ASSEMBLY (OVERSPEED SOLENOID VALVE TO FLOW DIVIDER) (REF. TASK 6-68).

IS HOSE ASSEMBLY RESTRICTED?

YES → INSTALL SERVICEABLE HOSE ASSEMBLY (REF. TASK 6-69).

NO ↓

WARNING

DISCONNECT DC POWER SOURCE TO IGNITION EXCITER OR OPEN CIRCUIT BREAKER TO PREVENT POSSIBILITY OF FIRE THAT CAN CAUSE INJURY TO PERSONNEL. IF INJURY OCCURS, GET MEDICAL ATTENTION.

INSTALL HOSE ASSEMBLY (REF. TASK 6-69). DISCONNECT MAIN FUEL HOSE AT INLET OF HMA. PLACE END OF HOSE INTO UTILITY PAIL. HAVE HELPER MOTOR ENGINE (ECL SET TO GND) (REF. BH55-1520-47E-10).

IS FUEL BEING PUMPED INTO PAIL?

NO → CONNECT MAIN FUEL HOSE AT INLET OF HMA. REPLACE FUEL BOOST PUMP (REF. TASK 6-8 AND 6-12).

YES ↓

GO TO NEXT PAGE

1-38 NO LIGHTOFF OR LEAN HUNG START- PRIMARY MODE (Continued) 1-38

CONNECT HOSE ASSEMBLY TO HMA. REMOVE AND INSPECT HOSE ASSEMBLIES (FUEL FLOW DIVIDER LEFT AND RIGHT SIDE PRIMARY AND SECONDARY) (REF. TASK 6-76, 6-78, 6-80, AND 6-82).

ARE HOSE ASSEMBLIES RESTRICTED OR CLOGGED?

YES → INSTALL SERVICEABLE HOSE ASSEMBLIES AS REQUIRED.

NO ↓

INSTALL HOSE ASSEMBLIES (REF. TASK 6-77, 6-79, 6-81, AND 6-83). REMOVE AND INSPECT FUEL CHECK VALVE (REF. TASK 6-49). APPLY COMPRESSED AIR AT 10 PSI IN DIRECTION OF ARROW.

IS VALVE RESTRICTED OR CLOGGED?

YES → INSTALL SERVICEABLE FUEL CHECK VALVE (REF. TASK 6-51).

NO ↓

APPLY COMPRESSED AIR AT 150 PSI. IN OPPOSITE DIRECTION OF ARROW.

IS VALVE LEAKING?

YES → INSTALL SERVICEABLE FUEL CHECK VALVE (REF. TASK 6-51).

NO ↓

WARNING

DISCONNECT DC POWER SOURCE TO IGNITION EXCITER OR OPEN CIRCUIT BREAKER TO PREVENT POSSIBILITY OF FIRE THAT CAN CAUSE INJURY TO PERSONNEL. IF INJURY OCCURS, GET MEDICAL ATTENTION.

INSTALL FUEL CHECK VALVE (REF. TASK 6-51). DISCONNECT HOSE ASSEMBLY (HMA TO OIL COOLER) FROM OIL COOLER. PLACE END OF HOSE INTO UTILITY PAIL. HAVE HELPER MOTOR ENGINE (ECL SET TO GND) (REF. BH55-1520-47E-10).

IS FUEL BEING PUMPED INTO PAIL?

NO → REPLACE HMA (REF. TASK 6-1 AND 6-5).

YES ↓

GO TO NEXT PAGE

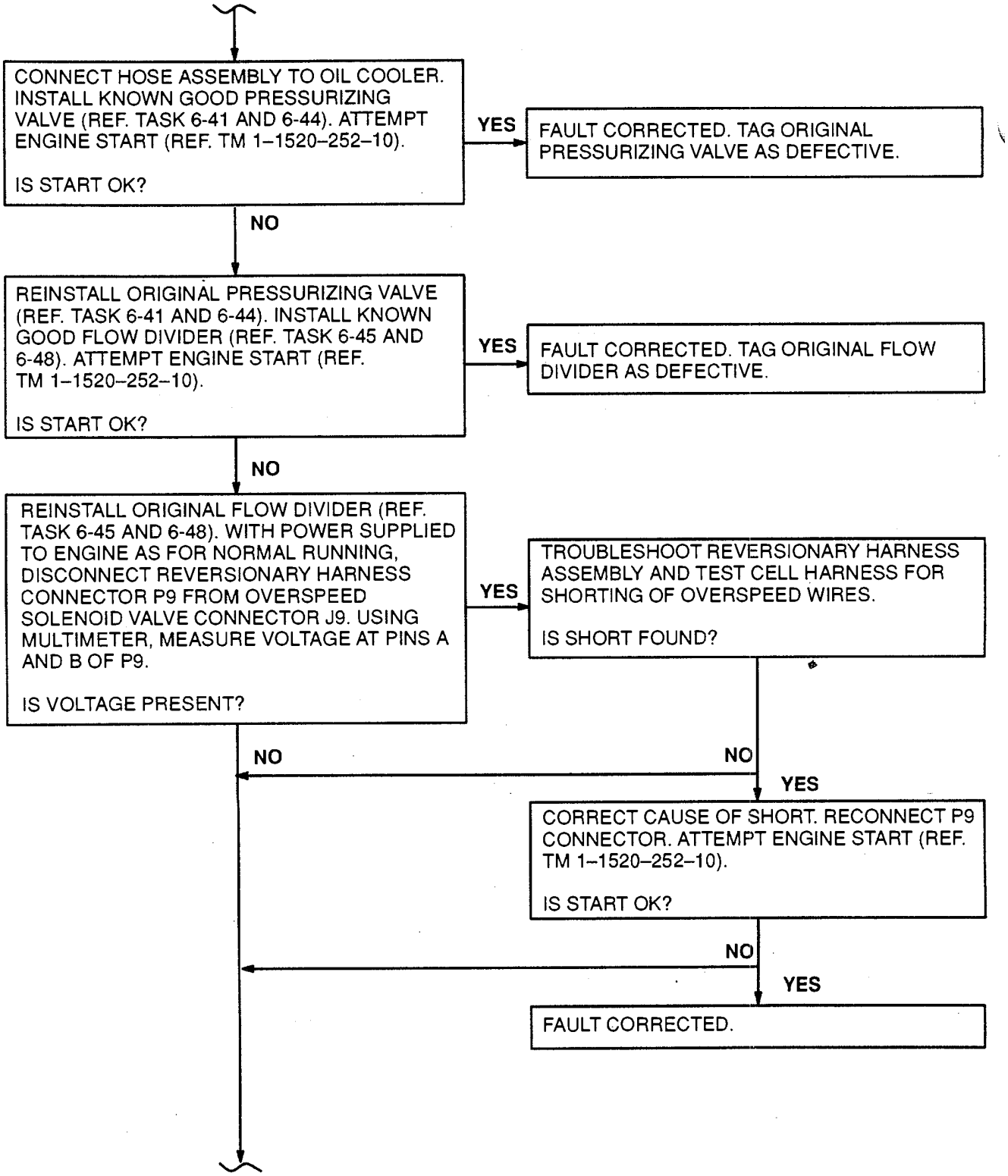
CONNECT HOSE ASSEMBLY TO OIL COOLER. INSTALL KNOWN GOOD PRESSURIZING VALVE (REF. TASK 6-41 AND 6-44). ATTEMPT ENGINE START (REF. TM 1–1520–252–10).
IS START OK?
YES
FAULT CORRECTED. TAG ORIGINAL PRESSURIZING VALVE AS DEFECTIVE.
NO
REINSTALL ORIGINAL PRESSURIZING VALVE (REF. TASK 6-41 AND 6-44). INSTALL KNOWN GOOD FLOW DIVIDER (REF. TASK 6-45 AND 6-48). ATTEMPT ENGINE START (REF. TM 1–1520–252–10).
IS START OK?
YES
FAULT CORRECTED. TAG ORIGINAL FLOW DIVIDER AS DEFECTIVE.
NO
REINSTALL ORIGINAL FLOW DIVIDER (REF. TASK 6-45 AND 6-48). WITH POWER SUPPLIED TO ENGINE AS FOR NORMAL RUNNING, DISCONNECT REVERSIONARY HARNESS CONNECTOR P9 FROM OVERSPEED SOLENOID VALVE CONNECTOR J9. USING MULTIMETER, MEASURE VOLTAGE AT PINS A AND B OF P9.
IS VOLTAGE PRESENT?
YES
TROUBLESHOOT REVERSIONARY HARNESS ASSEMBLY AND TEST CELL HARNESS FOR SHORTING OF OVERSPEED WIRES.
IS SHORT FOUND?
NO
NO
YES
CORRECT CAUSE OF SHORT. RECONNECT P9 CONNECTOR. ATTEMPT ENGINE START (REF. TM 1–1520–252–10).
IS START OK?
NO
YES
FAULT CORRECTED.

1-38 NO LIGHTOFF OR LEAN HUNG START- PRIMARY MODE (Continued) 1-38

RECONNECT P9 CONNECTOR. INSTALL KNOWN GOOD OVERSPEED SOLENOID VALVE (REF. TASK 6-52 AND 6-56). ATTEMPT ENGINE START (REF. TM 1–1520–252–10).

IS START OK?

YES → FAULT CORRECTED. TAG ORIGINAL OVER–SPEED SOLENOID VALVE AS DEFECTIVE.

NO ↓

REINSTALL ORIGINAL OVERSPEED SOLENOID VALVE (REF. TASK 6-52 AND 6-56). INSTALL KNOWN GOOD HMA (REF. TASK 6-1 AND 6-5). ATTEMPT ENGINE START (REF. TM 1–1520–252–10).

IS START OK?

YES → FAULT CORRECTED. TAG ORIGINAL HMA AS DEFECTIVE.

NO ↓

REINSTALL ORIGINAL HMA (REF. TASK 6-1 AND 6-5). REMOVE FUEL MANIFOLD ASSEMBLIES (REF. TASK 6-15). INSPECT FUEL MANIFOLD SPRAY NOZZLES (REF. TASK 6-17).

ARE NOZZLES CLOGGED OR DAMAGED?

YES → INSTALL SERVICEABLE FUEL MANIFOLD ASSEMBLIES (REF. TASK 6-19).

NO ↓

INSTALL FUEL MANIFOLD ASSEMBLIES (REF. TASK 6-19). PERFORM ENGINE HOT END INSPECTION (REF. TASK 1-87). REPLACE PARTS AS NEEDED.

FOLLOW-ON MAINTENANCE:
None

END OF TASK

1-39 NO LIGHTOFF OR LEAN HUNG START - REVERSIONARY MODE 1-39

INITIAL SETUP

Applicable Configurations:

All

Tools:

Powerplant Mechanic's Tool Kit, NSN 5180-00-323-4944

Utility Pail

Materials:

None

Personnel Required:

Aircraft Powerplant Repairer

Aircraft Powerplant Repairer

References:

Task 1-38 Task 6-5

Task 6-1 Appendix G

General Safety Instructions:

WARNING

Turbine fuels are very flammable. They may cause drying and irritation of skin or eyes. Handle only in well-ventilated areas away from heat and open flame. Drain and store in approved metal safety containers. Avoid prolonged or repeated contact with skin and do not take internally. Wash contacted area of skin thoroughly after handling. If irritation of skin results, get medical attention. Get medical attention for eyes.

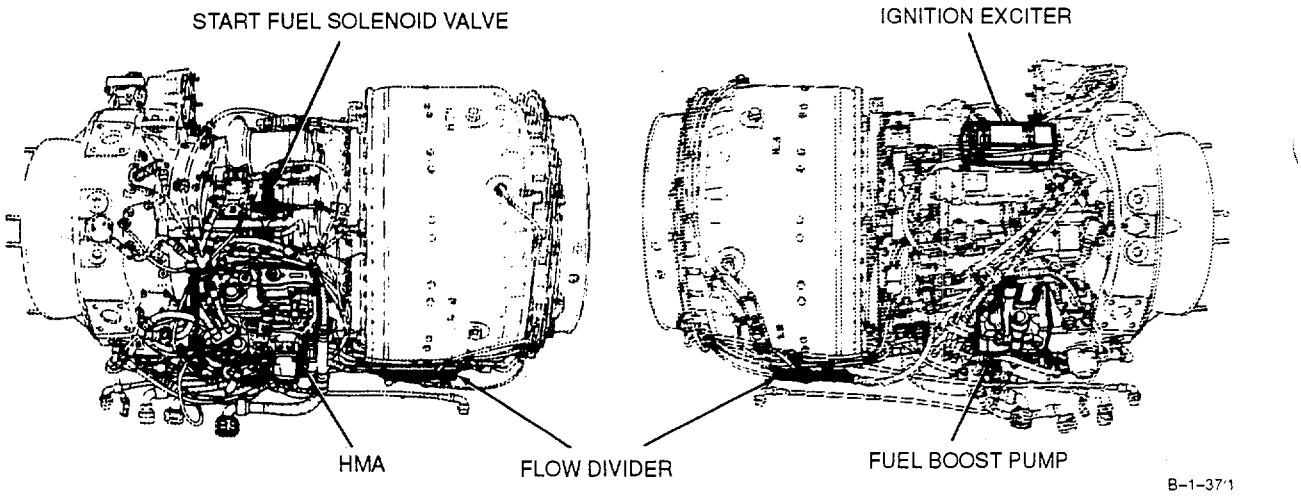

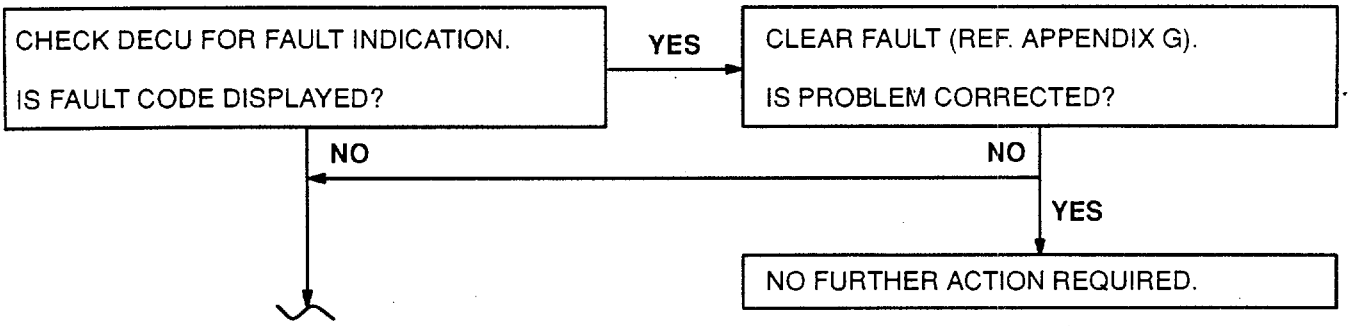

GO TO NEXT PAGE

1-39 NO LIGHTOFF OR LEAN HUNG START'- REVERSIONARY MODE (Continued) 1-39

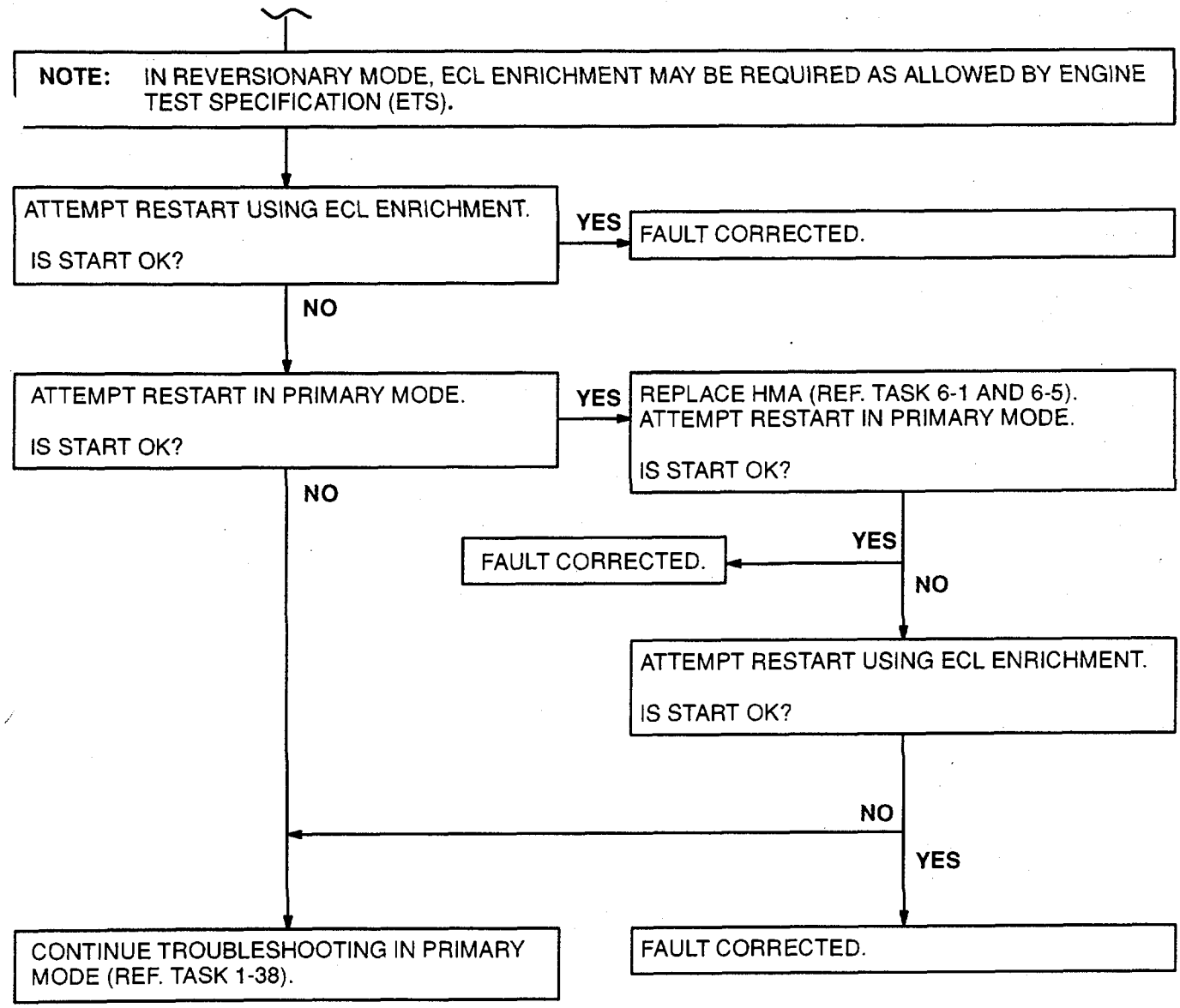

FOLLOW-ON MAINTENANCE:
None

END OF TASK

1-40 HOT HUNG OR TORCHING STARTS- PRIMARY MODE 1-40

INITIAL SETUP

Applicable Configurations:

All

Tools:

Powerplant Mechanic's Tool Kit,
NSN 5180-00-323-4944
Utility Pail

Materials:

Tape (E59)

Personnel Required:

Aircraft Powerplant Repairer
Aircraft Powerplant Repairer

References:

BH55-1520-47E-T		Task 6-19	Task 6-69
TM 1-1520-252-10		Task 6-23	Task 6-73
TM 55-4920-328-13		Task 6-24	Task 6-76
Task 1-35	Task 2-33	Task 6-26	Task 6-77
Task 1-36	Task 2-37	Task 6-27	Task 6-78
Task 1-79	Task 2-57	Task 6-28	Task 6-79
Task 1-84	Task 2-58	Task 6-34	Task 6-80
Task 1-87	Task 2-59	Task 6-35	Task 6-81
Task 1-95	Task 2-60	Task 6-40	Task 6-82
Task 1-96	Task 2-63	Task 6-41	Task 6-83
Task 1-99	Task 2-64	Task 6-44	Task 6-84
Task 1-100	Task 2-68	Task 6-45	Task 6-85
Task 2-1	Task 2-71	Task 6-48	Task 6-90
Task 2-2	Task 2-72	Task 6-49	Task 6-91
Task 2-3	Task 3-1	Task 6-51	Task 7-6
Task 2-4	Task 3-3	Task 6-52	Task 7-10
Task 2-5	Task 3-4	Task 6-56	Task 7-16
Task 2-6	Task 6-1	Task 6-57	Task 7-17
Task 2-7	Task 6-5	Task 6-61	Task 7-18
Task 2-8	Task 6-8	Task 6-63	Task 7-20
Task 2-9	Task 6-12	Task 6-64	Task 7-21
Task 2-31	Task 6-15	Task 6-65	Task 8-14
Task 2-32	Task-6-17	Task 6-66	APPENDIX G

General Safety Instructions:

WARNING

Turbine fuels are very flammable. They may cause drying and irritation of skin or eyes. Handle only in well-ventilated areas away from heat and open flame. Drain and store in approved metal safety containers. Avoid prolonged or repeated contact with skin and do not take internally. Wash contacted area of skin thoroughly after handling. If irritation of skin results, get medical attention. Get medical attention for eyes.

WARNING

The ignition exciter stores very high and possibly fatal voltage. Use extreme care when working around ignition exciter. Serious injury could result if exciter is accidentally grounded. Do not probe inside of output receptacles with fingers or metal object. Discharge exciter only with insulated screwdriver. In case of shock or injury, get medical attention.

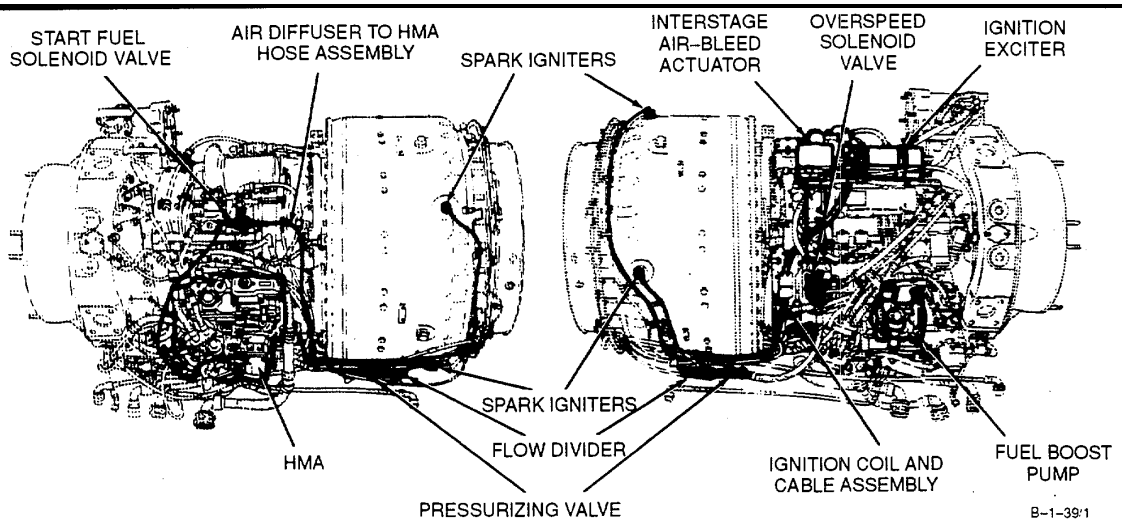

GO TO NEXT PAGE

1-40 HOT HUNG OR TORCHING STARTS - PRIMARY MODE (Continued) 1-40

NOTE: A HOT HUNG START MAY HAVE EXTERNAL OR PROCEDURAL CAUSES. THESE INCLUDE: ATTEMPTING START WITH HIGH INITIAL PTIT (NEGLECTING TO MOTOR ENGINE IF PTIT EXCEEDS 200° C), INLET DISTORTION, AND INITIAL FILLING OF FUEL LINES. IF THESE CAUSES ARE SUSPECTED, ATTEMPT RESTART WITH ADHERENCE TO STANDARD PRACTICES AND PROCEDURES.

NOTE: HOT HUNG STARTS ARE MORE LIKELY TO OCCUR WITH RESTARTS RATHER THAN ON COLD OR INITIAL ENGINE START. ALSO, HOT HUNG STARTS MAY OCCUR ON FIRST START AFTER SERVICING FUEL SYSTEM COMPONENTS DUE TO FUEL FILL PROBLEMS. TROUBLE- SHOOTING PROCEDURES SHOULD ELIMINATE THIS PROBLEM BY CONFIRMING THAT UNSUCCESSFUL STARTS RECUR UPON SUBSEQUENT START ATTEMPTS.

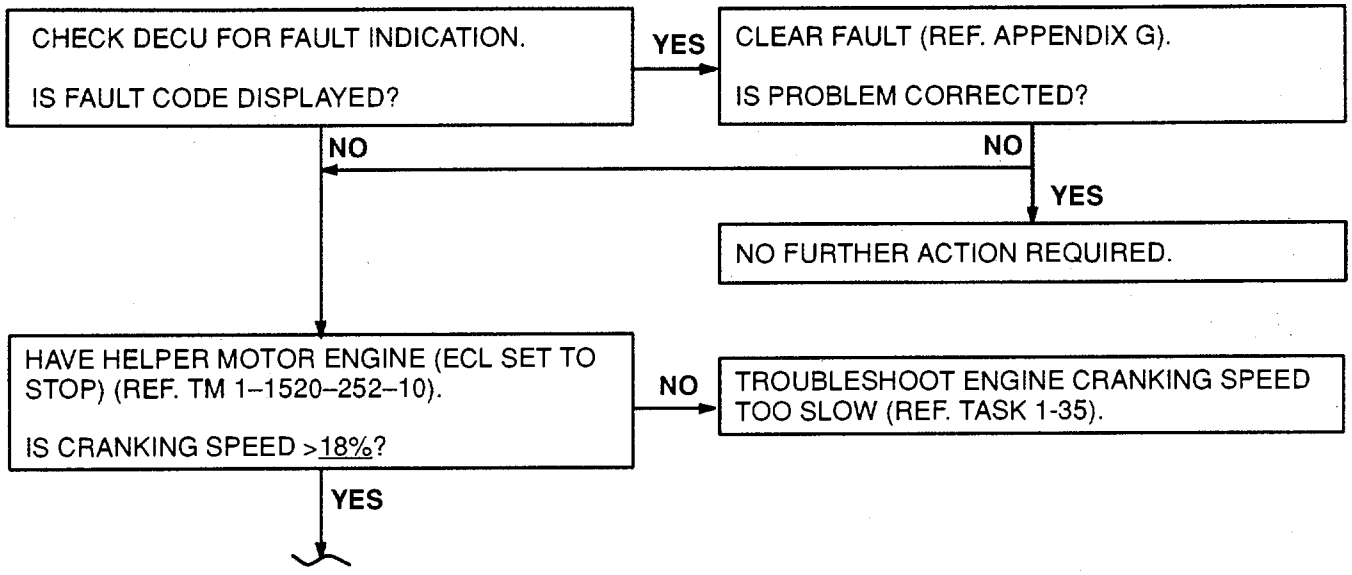

TASK	RESULT
	CAUTION **In the following two steps, if differential pressure indicator button becomes extended more than once within each period of engine operation Inspect contaminated fuel system (Ref. Task 1-79).**
1. Check inline fuel filter differential pressure indicator button.	If differential pressure indicator button is extended service filter and reset button (Ref. Task 1-96).
2. Check main fuel filter differential pressure indicator button.	If differential pressure indicator button is extended service filter and reset button (Ref. Task 1-95).

GO TO NEXT PAGE

1-40 HOT HUNG OR TORCHING STARTS - PRIMARY MODE (Continued) 1-40

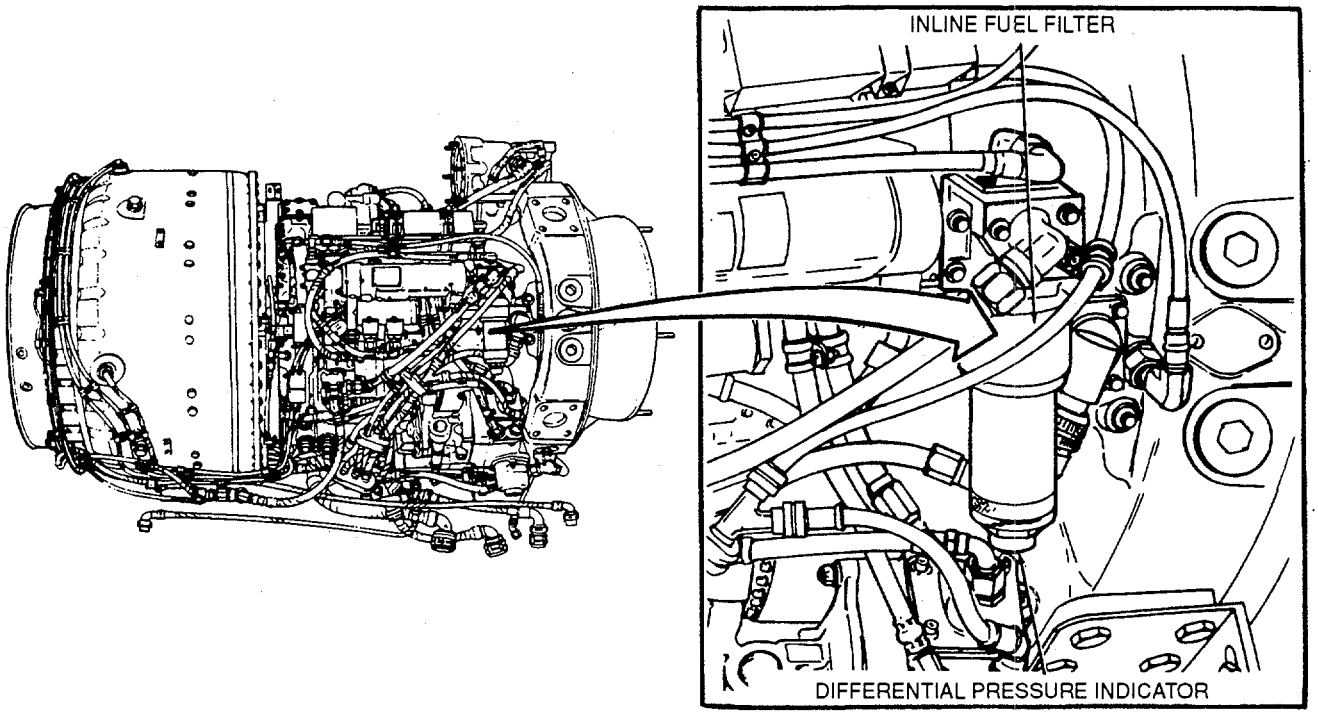

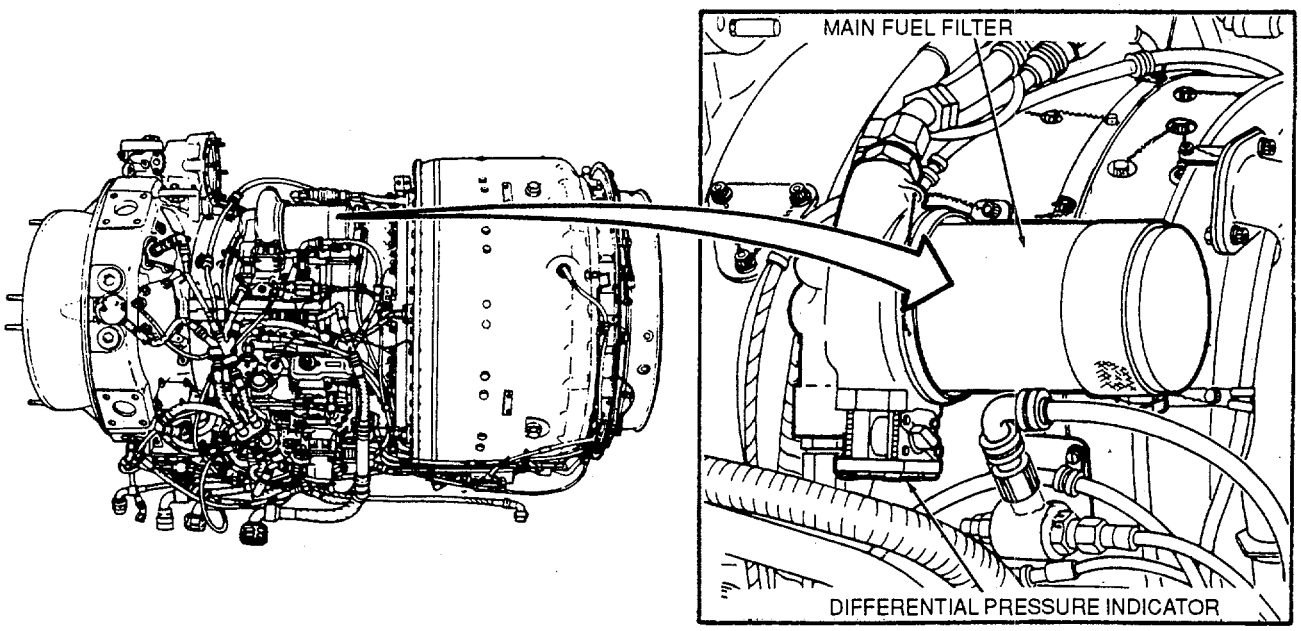

B-1-36/1

GO TO NEXT PAGE

1-40 HOT HUNG OR TORCHING STARTS - PRIMARY MODE (Continued) 1-40

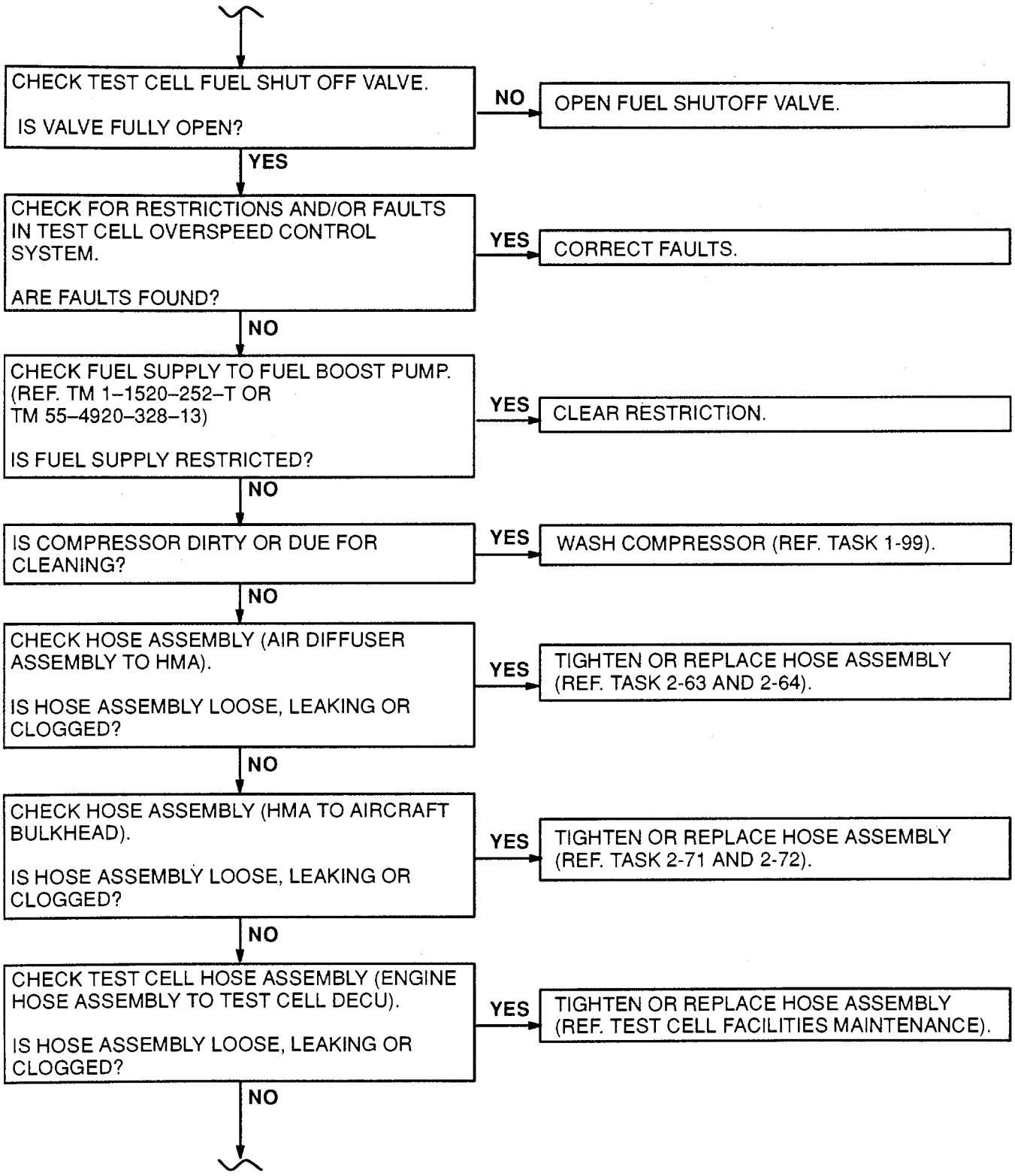

GO TO NEXT PAGE

1-40 HOT HUNG OR TORCHING STARTS - PRIMARY MODE (Continued) 1-40

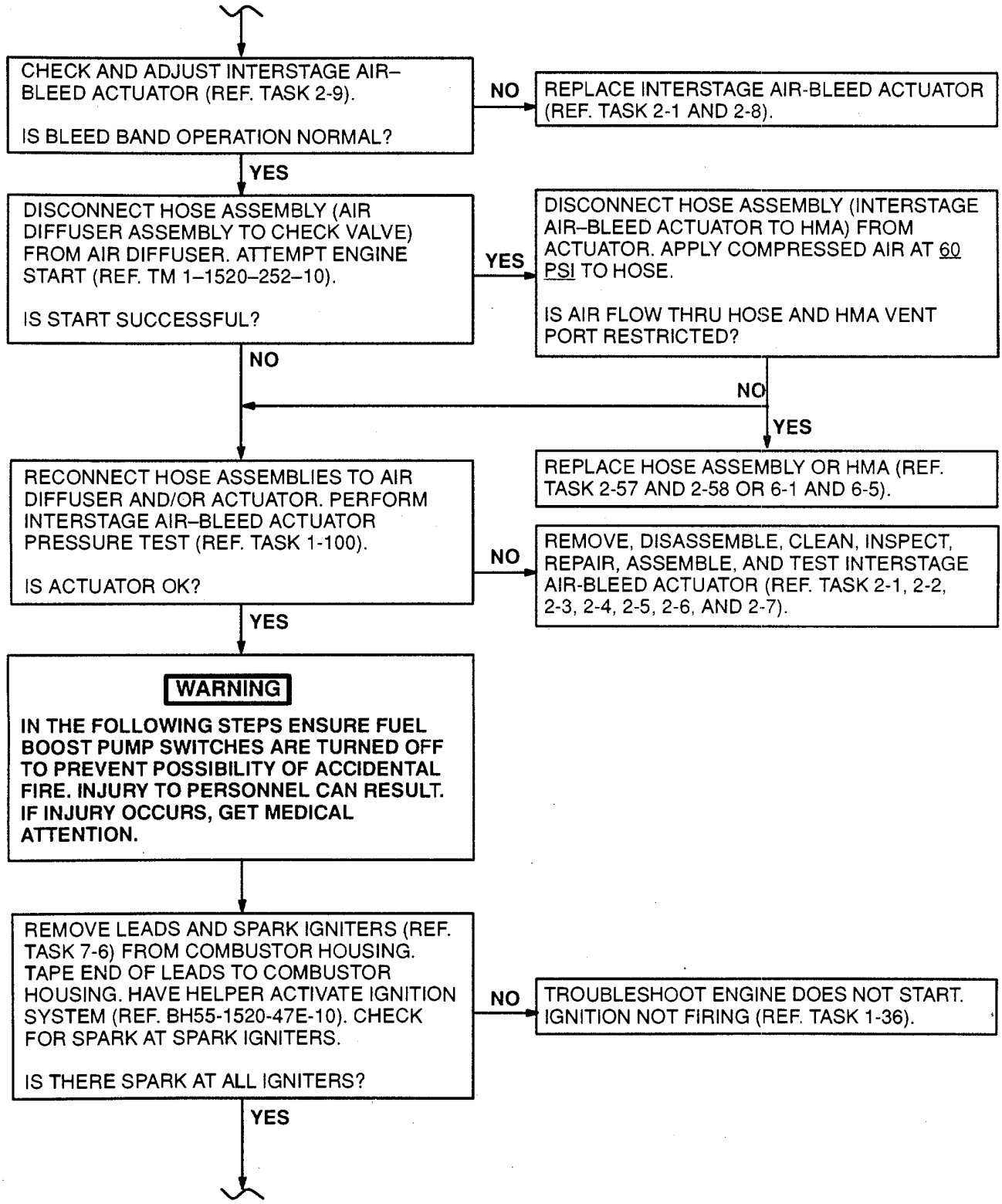

GO TO NEXT PAGE

1-40 HOT HUNG OR TORCHING STARTS - PRIMARY MODE (Continued) 1-40

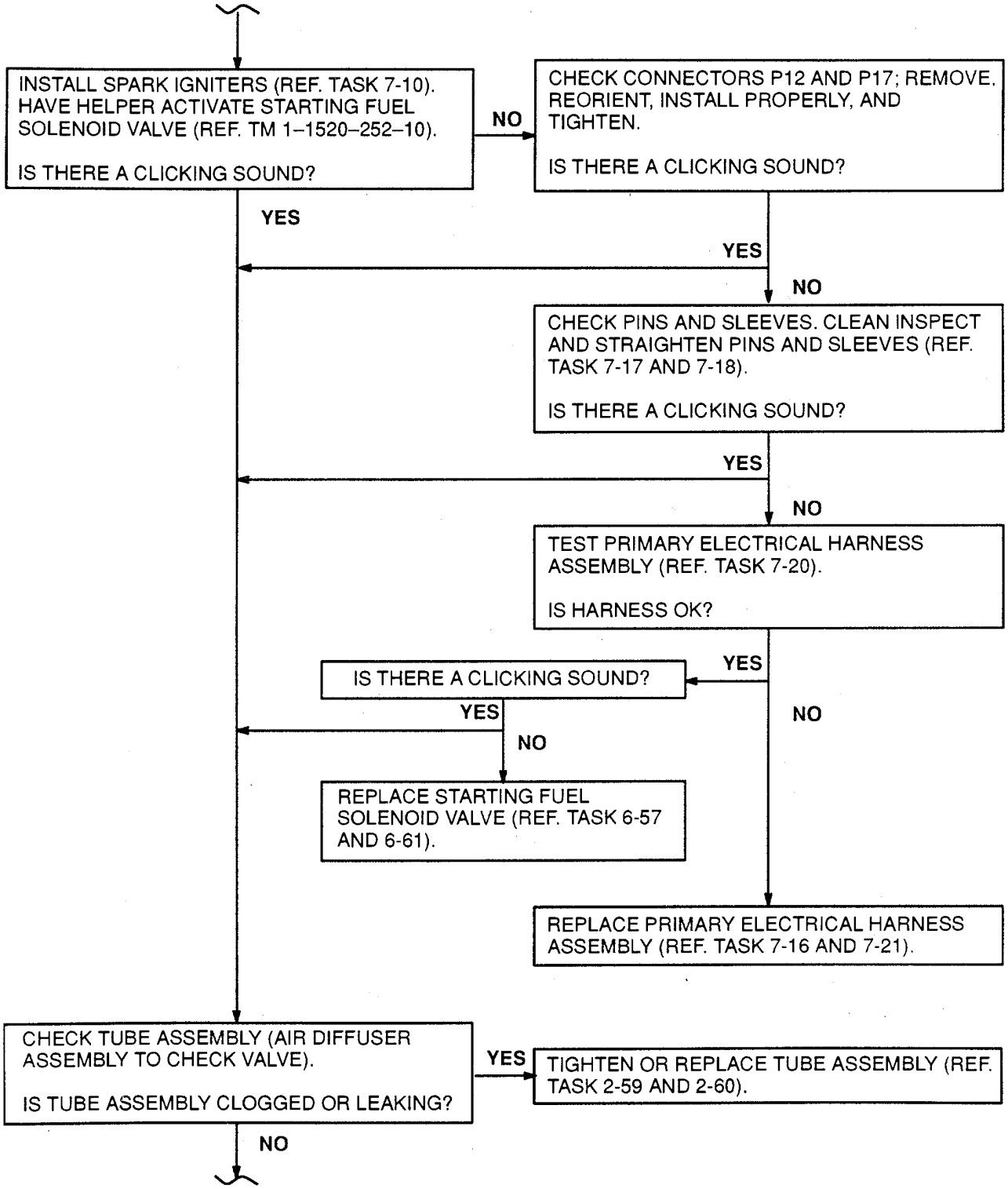

GO TO NEXT PAGE

1-40 HOT HUNG OR TORCHING STARTS - PRIMARY MODE (Continued) 1-40

WARNING

DISCONNECT DC POWER SOURCE TO IGNITION EXCITER OR OPEN CIRCUIT BREAKER TO PREVENT POSSIBILITY OF FIRE THAT CAN CAUSE INJURY TO PERSONNEL. IF INJURY OCCURS, GET MEDICAL ATTENTION.

DISCONNECT HOSE ASSEMBLY (STARTING FUEL SOLENOID VALVE TO TUBE ASSEMBLY) FROM TUBE ASSEMBLY. PLACE END OF HOSE INTO UTILITY PAIL. HAVE HELPER MOTOR ENGINE (ECL SET TO GND) (REF. TM 1–1520–252–10).

IS FUEL BEING PUMPED INTO PAIL?

YES → REPLACE STARTING FUEL SOLENOID VALVE (REF. TASK 6-57 AND 6-61).

NO ↓

CONNECT HOSE ASSEMBLY TO TUBE ASSEMBLY. HAVE HELPER ACTIVATE STARTING FUEL SOLENOID VALVE (REF. TM 1–1520–252–10).

IS FUEL BEING PUMPED INTO PAIL?

NO → REPLACE STARTING FUEL SOLENOID VALVE (REF. TASK 6-57 AND 6-61).

YES ↓

REMOVE AND INSPECT START FUEL NOZZLES (REF. TASK 6-24 AND 6-26).

ARE NOZZLES CLOGGED OR DAMAGED?

YES → INSTALL SERVICEABLE START FUEL NOZZLES (REF. TASK 6-27).

NO ↓

APPLY COMPRESSED AIR AT 60 PSI. TO TUBE ASSEMBLY (HOSE ASSEMBLY TO PRIMER TUBE).

IS TUBE ASSEMBLY OR PRIMER TUBE CLOGGED OR RESTRICTED?

YES → REPLACE TUBE ASSEMBLY OR PRIMER TUBE (REF. TASK 6-90 AND 6-91 OR 6-20 AND 6-23).

NO ↓

GO TO NEXT PAGE

1-40 HOT HUNG OR TORCHING STARTS - PRIMARY MODE (Continued) 1-40

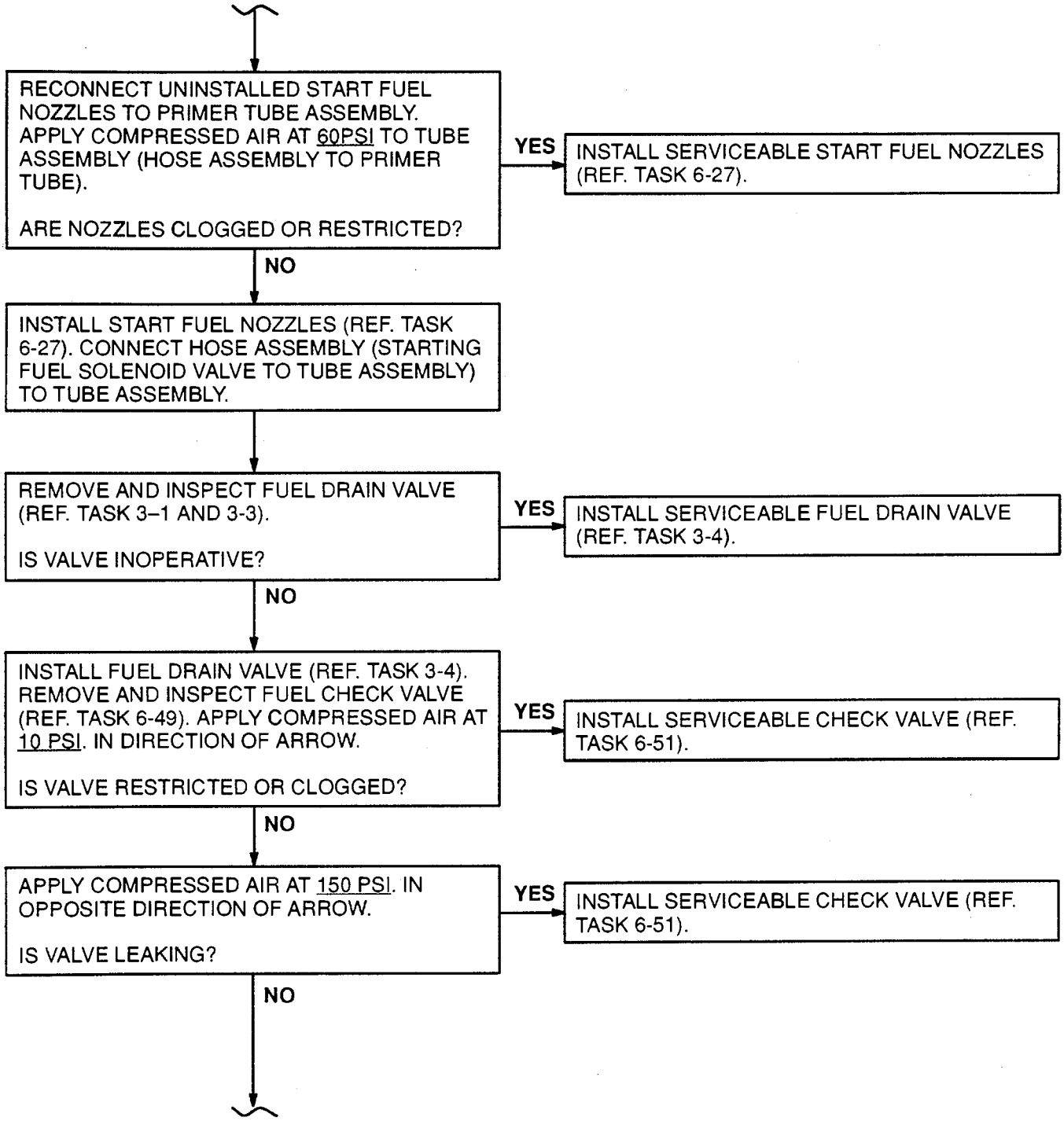

GO TO NEXT PAGE

1-40 HOT HUNG OR TORCHING STARTS - PRIMARY MODE (Continued) 1-40

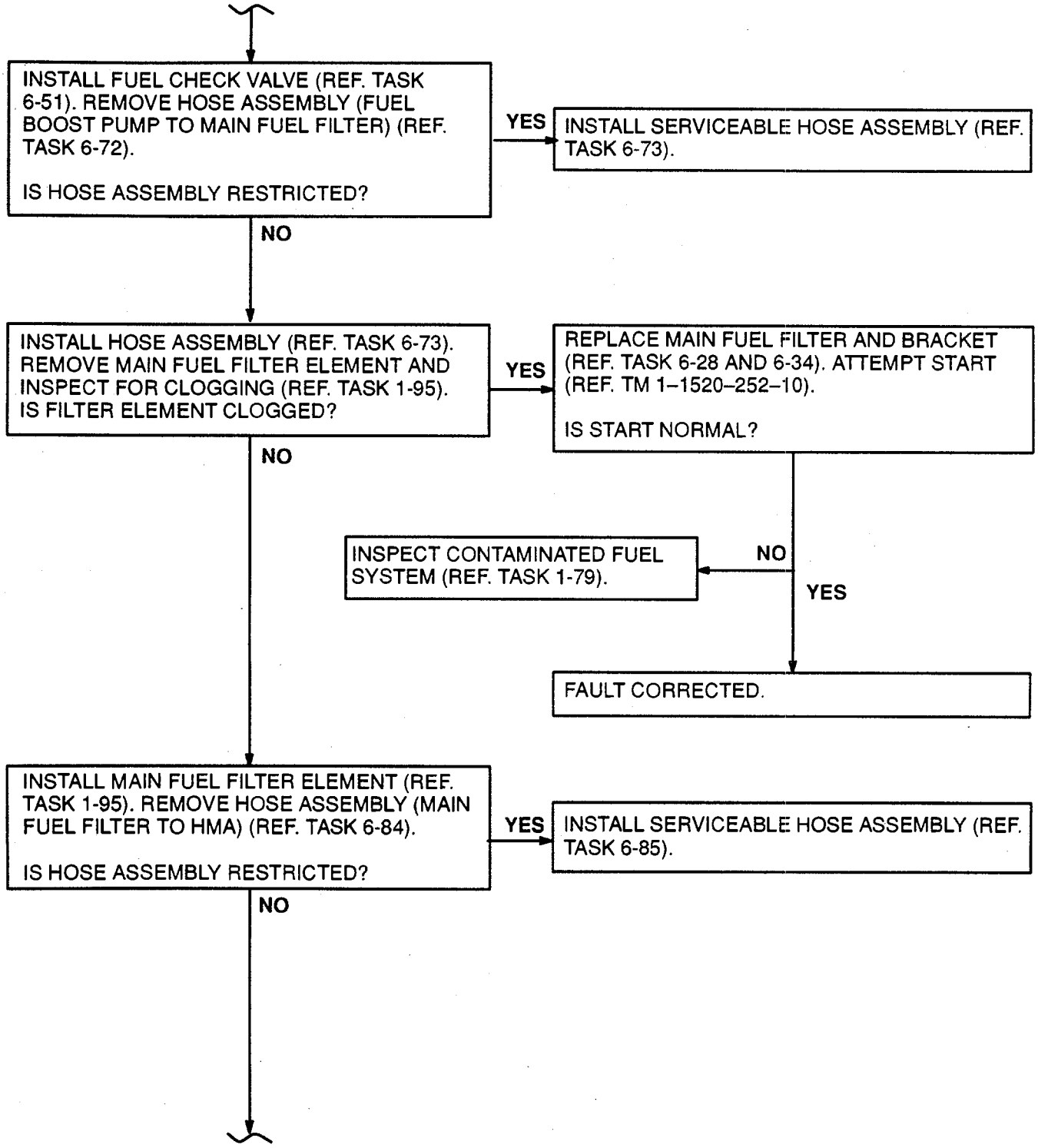

GO TO NEXT PAGE

1-40 HOT HUNG OR TORCHING STARTS - PRIMARY MODE (Continued) 1-40

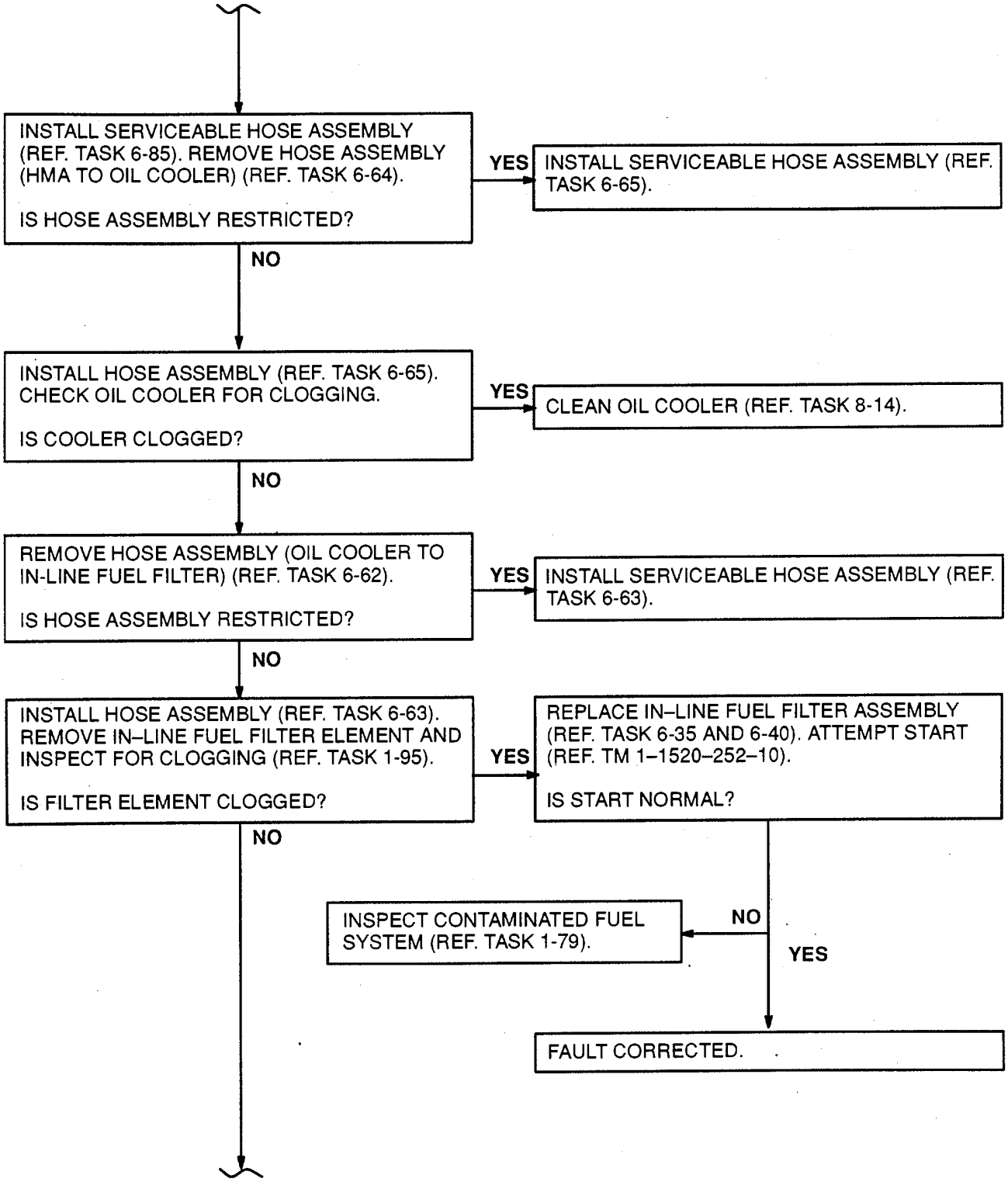

GO TO NEXT PAGE

1-40 HOT HUNG OR TORCHING STARTS - PRIMARY M ODE (Continued) 1-40

INSTALL IN–LINE FUEL FILTER ELEMENT (REF. TASK 1-95). REMOVE HOSE ASSEMBLY (IN–LINE FUEL FILTER TO OVERSPEED SOLENOID VALVE) (REF. TASK 6-66).

IS HOSE ASSEMBLY RESTRICTED?

YES → INSTALL SERVICEABLE HOSE ASSEMBLY (REF. TASK 6-67).

NO ↓

INSTALL HOSE ASSEMBLY (REF. TASK 6-67). REMOVE HOSE ASSEMBLY (OVERSPEED SOLENOID VALVE TO FLOW DIVIDER) (REF. TASK 6-68).

IS HOSE ASSEMBLY RESTRICTED?

YES → INSTALL SERVICEABLE HOSE ASSEMBLY (REF. TASK 6-69).

NO ↓

WARNING

DISCONNECT DC POWER SOURCE TO IGNITION EXCITER OR OPEN CIRCUIT BREAKER TO PREVENT POSSIBILITY OF FIRE THAT CAN CAUSE INJURY TO PERSONNEL. IF INJURY OCCURS, GET MEDICAL ATTENTION.

↓

INSTALL HOSE ASSEMBLY (REF. TASK 6-69). DISCONNECT MAIN FUEL HOSE AT INLET OF HMA. PLACE END OF HOSE INTO UTILITY PAIL. HAVE HELPER MOTOR ENGINE (ECL SET TO GND) (REF. BH55-1520-47E-10).

IS FUEL BEING PUMPED INTO PAIL?

NO → CONNECT MAIN FUEL HOSE AT INLET OF HMA. REPLACE FUEL BOOST PUMP (REF. TASK 6-8 AND 6-12).

YES ↓

GO TO NEXT PAGE

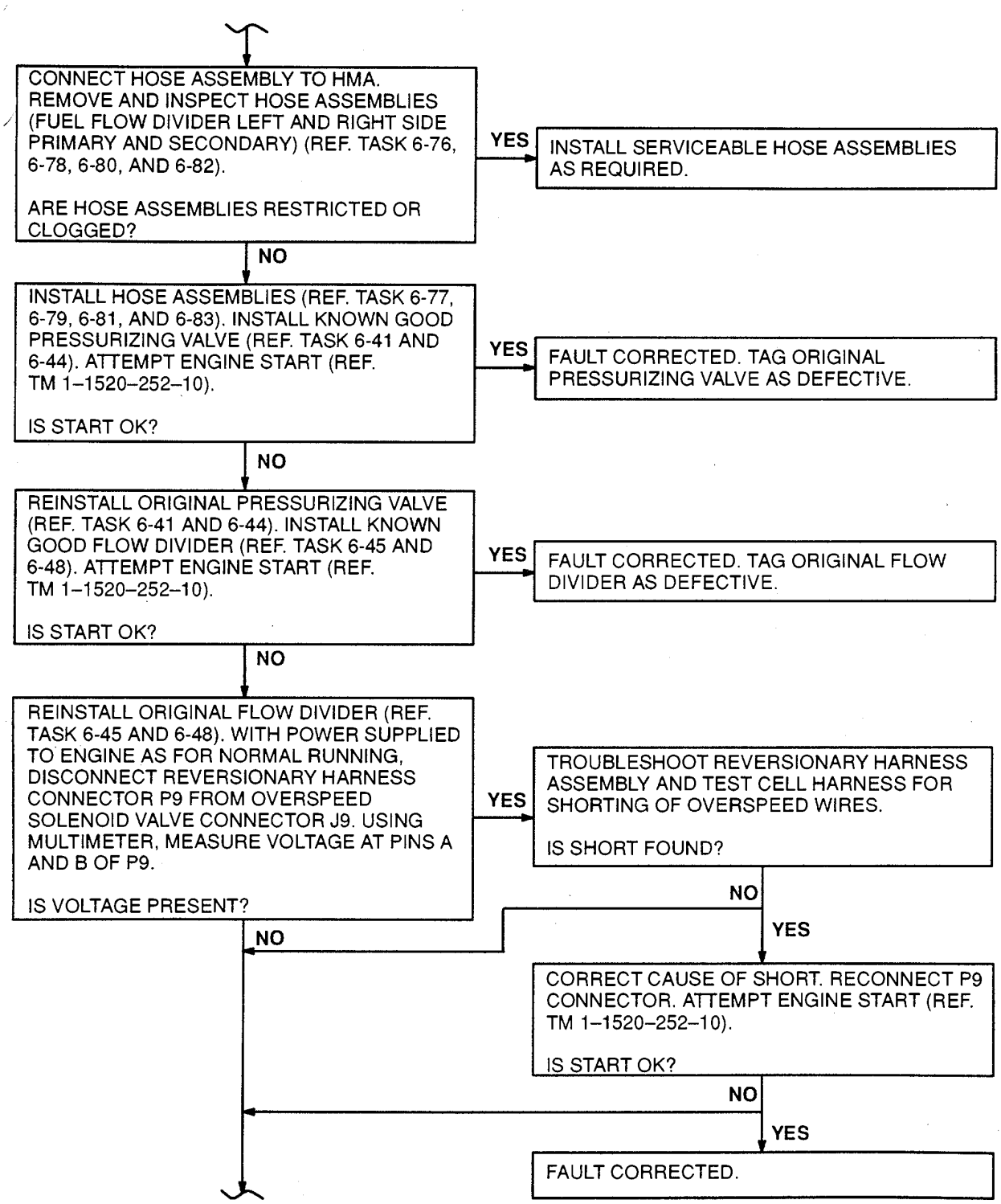

GO TO NEXT PAGE

RECONNECT P9 CONNECTOR. INSTALL KNOWN GOOD OVERSPEED SOLENOID VALVE (REF. TASK 6-52 AND 6-56). ATTEMPT ENGINE START (REF. TM 1–1520–252–10).

IS START OK?

YES → FAULT CORRECTED. TAG ORIGINAL OVERSPEED SOLENOID VALVE AS DEFECTIVE.

NO ↓

REINSTALL ORIGINAL OVERSPEED SOLENOID VALVE (REF. TASK 6-52 AND 6-56). INSTALL KNOWN GOOD HMA (REF. TASK 6-1 AND 6-5). ATTEMPT ENGINE START (REF. TM 1–1520–252–10).

IS START OK?

YES → FAULT CORRECTED. TAG ORIGINAL HMA AS DEFECTIVE.

NO ↓

REINSTALL ORIGINAL HMA (REF. TASK 6-1 AND 6-5). REMOVE FUEL MANIFOLD ASSEMBLIES (REF. TASK 6-15). INSPECT FUEL MANIFOLD SPRAY NOZZLES (REF. TASK 6-18).

ARE NOZZLES CLOGGED OR DAMAGED?

YES → INSTALL SERVICEABLE FUEL MANIFOLD ASSEMBLIES (REF. TASK 6-19).

NO ↓

INSTALL FUEL MANIFOLD ASSEMBLIES (REF. TASK 6-19). PERFORM COMPRESSOR INSPECTION (REF. TASK 1-84).

IS COMPRESSOR SERVICEABLE?

NO → REPLACE UNSERVICEABLE STATOR VANES OR COMPRESSOR BLADES AS REQUIRED (REF. TASK 2-27, 2-31, 2-32, 2-33, AND 2-37).

YES ↓

PERFORM ENGINE HOT END INSPECTION (REF. TASK 1-87). REPLACE PARTS AS NEEDED.

FOLLOW–ON MAINTENANCE:

None

END OF TASK

INITIAL SETUP

Applicable Configurations:
All

Tools:
Powerplant Mechanic's Tool Kit,
NSN 5180-00-323-4944
Utility Pail

Materials:
Tape (E59)

Personnel Required:
Aircraft Powerplant Repairer
Aircraft Powerplant Repairer

References:
Task 1-40
Task 6-1
Task 6-5
APPENDIX G

General Safety Instructions:

WARNING

Turbine fuels are very flammable. They may cause drying and irritation of skin or eyes. Handle only in well-ventilated areas away from heat and open flame. Drain and store in approved metal safety containers. Avoid prolonged or repeated contact with skin and do not take internally. Wash contacted area of skin thoroughly after handling. If irritation of skin results, get medical attention. Get medical attention for eyes.

WARNING

The ignition exciter stores very high and possibly fatal voltage. Use extreme care when working around ignition exciter. Serious injury could result if exciter is accidentally grounded. Do not probe inside of output receptacles with fingers or metal object. Discharge exciter only with insulated screwdriver. In case of shock or injury, get medical attention.

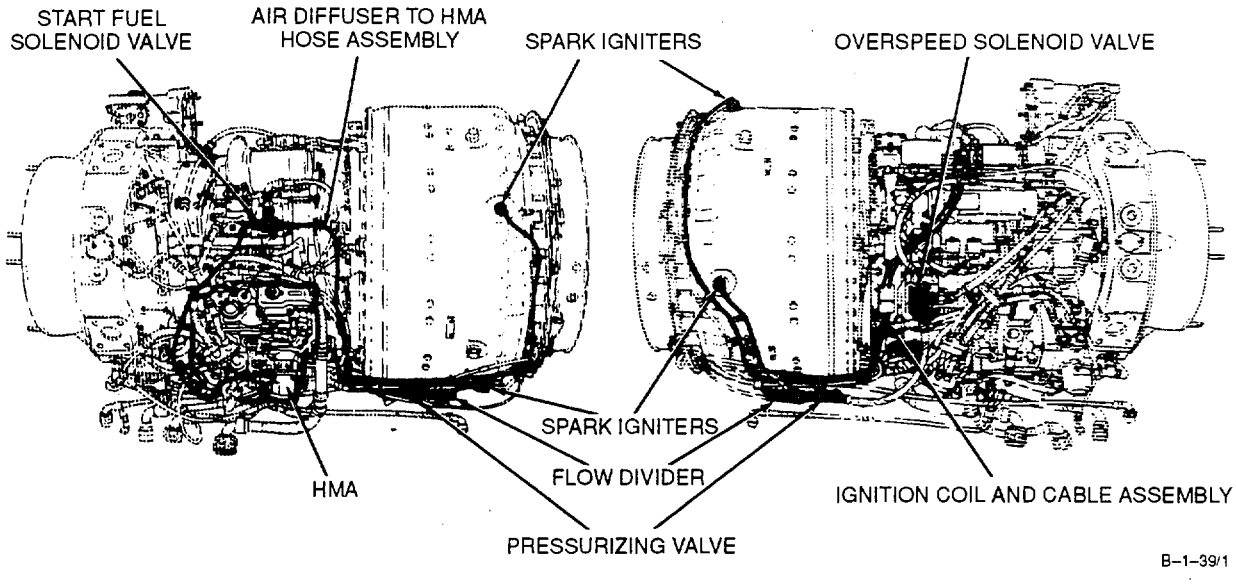

GO TO NEXT PAGE

1-41 HOT HUNG OR TORCHING START - REVERSIONARY MODE MODE (Continued) 1-41

NOTE: A HOT HUNG START MAY HAVE EXTERNAL OR PROCEDURAL CAUSES. THESE INCLUDE: ATTEMPTING START WITH HIGH INITIAL PTIT (NEGLECTING TO MOTOR ENGINE IF PTIT EXCEEDS 200^0 C), INLET DISTORTION, AND INITIAL FILLING OF FUEL LINES. IF THESE CAUSES ARE SUSPECTED, ATTEMPT RESTART WITH ADHERANCE TO STANDARD PRACTICES AND PROCEDURES.

NOTE: HOT HUNG STARTS ARE MORE LIKELY TO OCCUR WITH RESTARTS RATHER THAN ON COLD OR INITIAL ENGINE START. TROUBLESHOOTING PROCEDURES SHOULD ENSURE PROBLEM DOES NOT RECUR ON RESTART ATTEMPT.

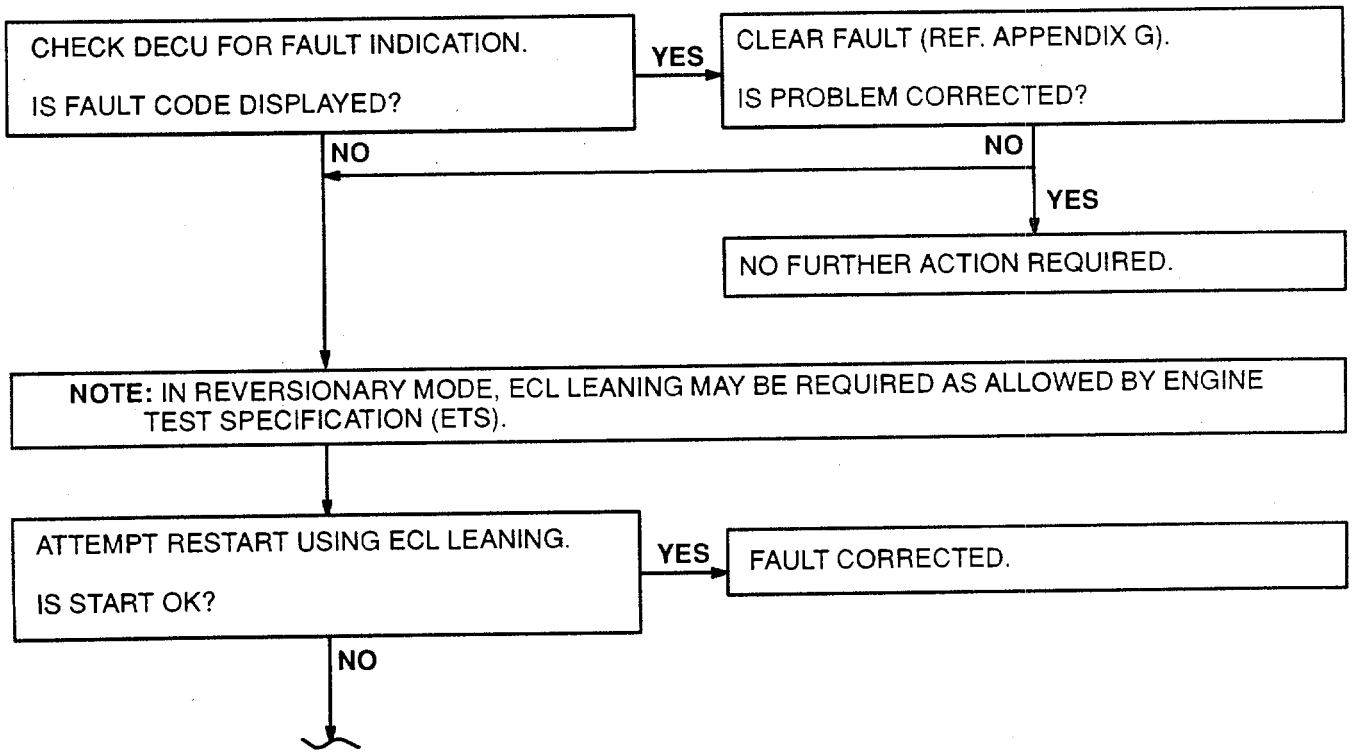

GO TO NEXT PAGE

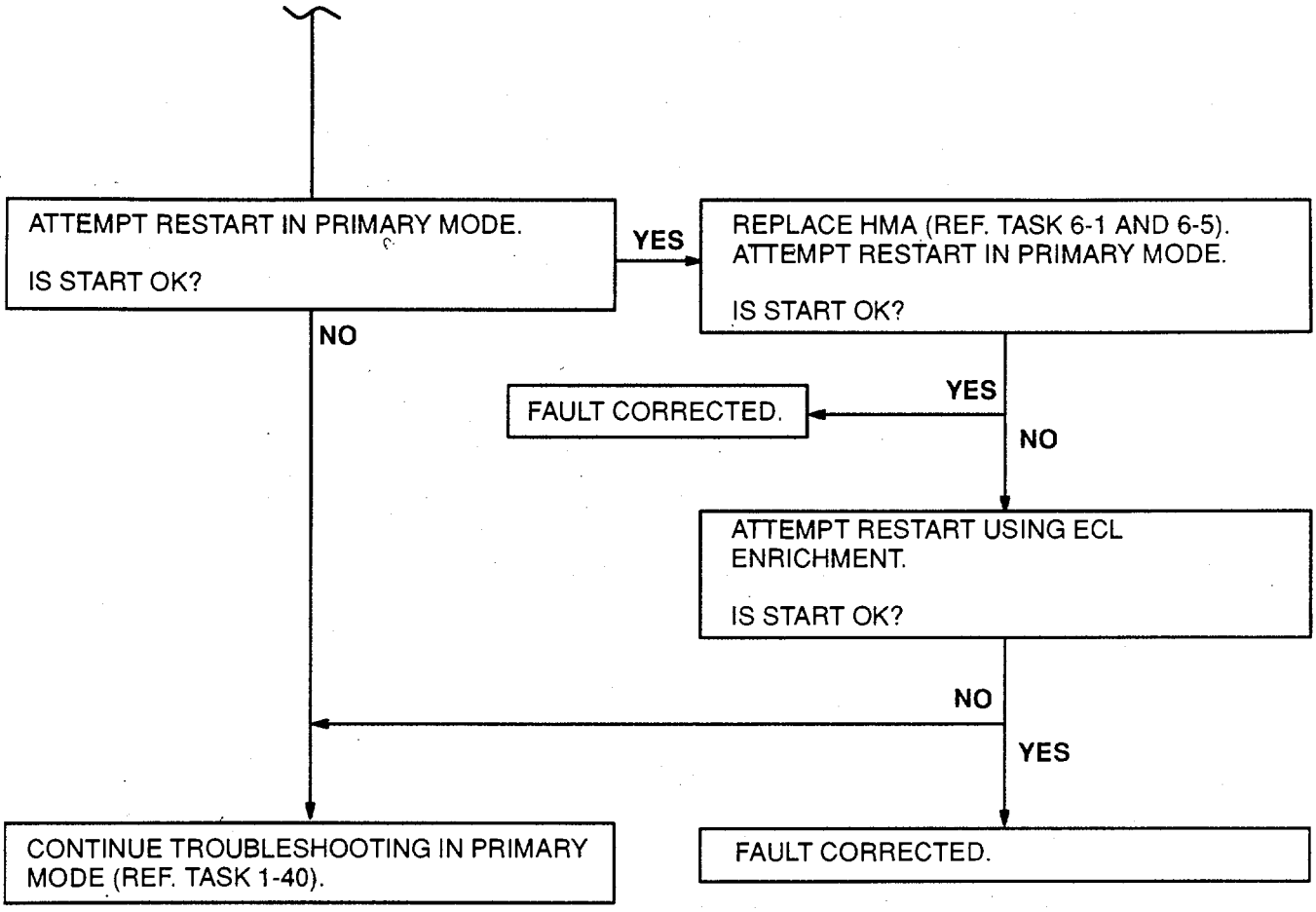

FOLLOW-ON MAINTENANCE:
None

END OF TASK

1-42 GROUND IDLE SPEED IS INCORRECT- PRIMARY MODE 1-42

INITIAL SETUP

Applicable Configurations:
All

Tools:
Powerplant Mechanic's Tool Kit,
NSN 5180-00-323-4944

Materials:
None

Personnel Required:
Aircraft Powerplant Repairer
Aircraft Powerplant Repairer

References:
BH55-1520-47E-T
TM 1-1520-252-10
TM 55-4920-328-13
Task 1-79 Task 1-87 Task 1-95
Task 1-96
Task 1-99
Task 1-100
Task 2-1
Task 2-2
Task 2-3
Task 2-4
Task 2-5
Task 2-6
Task 2-7
Task 2-8
Task 2-9
Task 2-52
Task 2-56
Task 2-57
Task 2-58
Task 2-63
Task 2-64
Task 2-68
Task 2-71
Task 2-72
Task 6-1
Task 6-5
Task 6-8
Task 6-12
Task 6-15
Task 6-19
Task 6-28
Task 6-34
Task 6-41
Task 6-44
Task 6-45
Task 6-48
Task 6-52
Task 6-56
Task 6-57
Task 6-61
Task 6-62
Task 6-63
Task 6-64
Task 6-65
Task 6-66
Task 6-67
Task 6-68
Task 6-69
Task 6-76
Task 6-77
Task 6-79
Task 6-80
Task 6-81
Task 6-82
Task 6-83
APPENDIX G

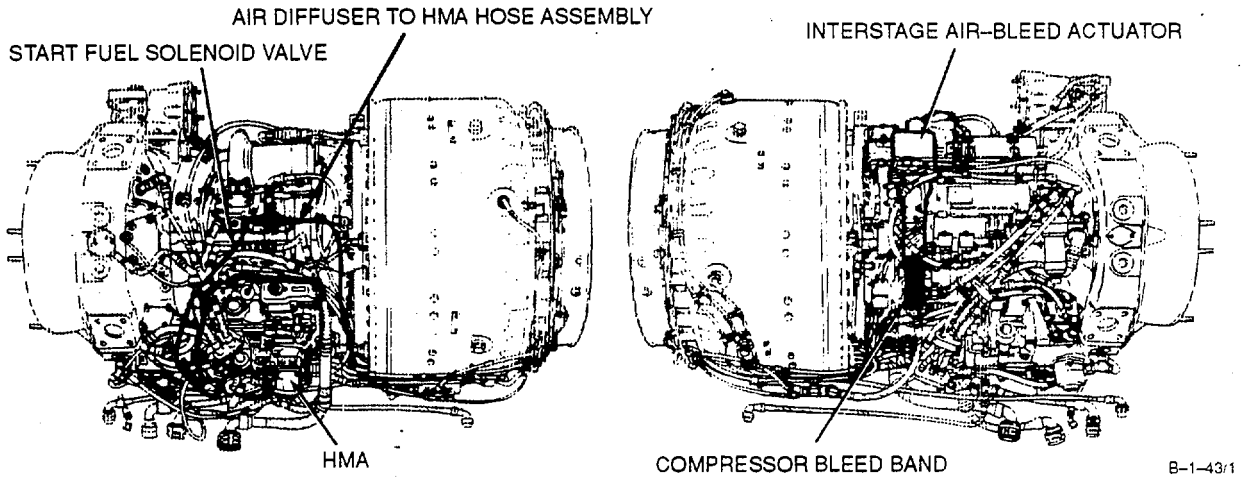

NOTE: THE PRIMARY CONTROL MODE MAINTAINS A REFERRED GROUND IDLE $_{N1}$ SPEED (i.e. CORRECTED FOR AMBIENT TEMPERATURE).
REFERRED GROUND IDLE N_1 SPEED SHOULD BE 55 +/- 0.5%.
WHEN CALCULATING MECHANICAL N_1 SPEED FOR PARTICULAR AMBIENT CONDITIONS, ENSURE AMBIENT TEMPERATURE USED IS EQUAL TO TEMPERATURE REPORTED BY T_1 TEMPERATURE SENSOR.

GO TO NEXT PAGE

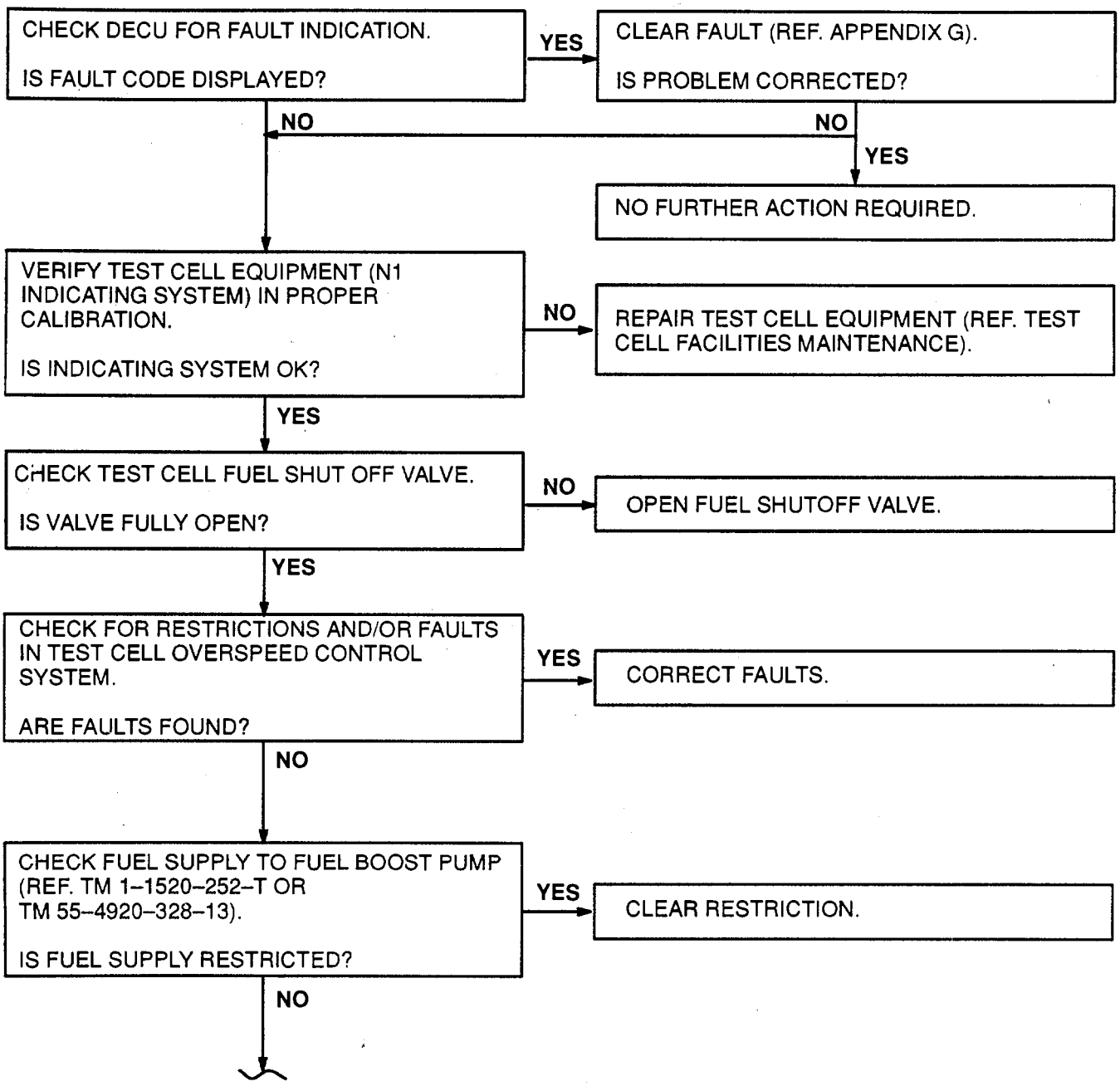

GO TO NEXT PAGE

TASK	RESULT
	CAUTION **IN THE FOLLOWING TWO STEPS, IF DIFFERENTIAL PRESSURE INDICATOR BUTTON BECOMES EXTENDED MORE THAN ONCE WITHIN EACH PERIOD OF ENGINE OPERATION, INSPECT CONTAMINATED FUEL SYSTEM (REF. TASK 1-79).**
1. Check inline fuel filter differential pressure indicator button.	If differential pressure indicator button is extended, service filter and reset button (Ref. Task 1-96).
2. Check main fuel filter differential pressure indicator button.	If differential pressure indicator button is extended, service filter and reset button (Ref. Task 1-95).

GO TO NEXT PAGE

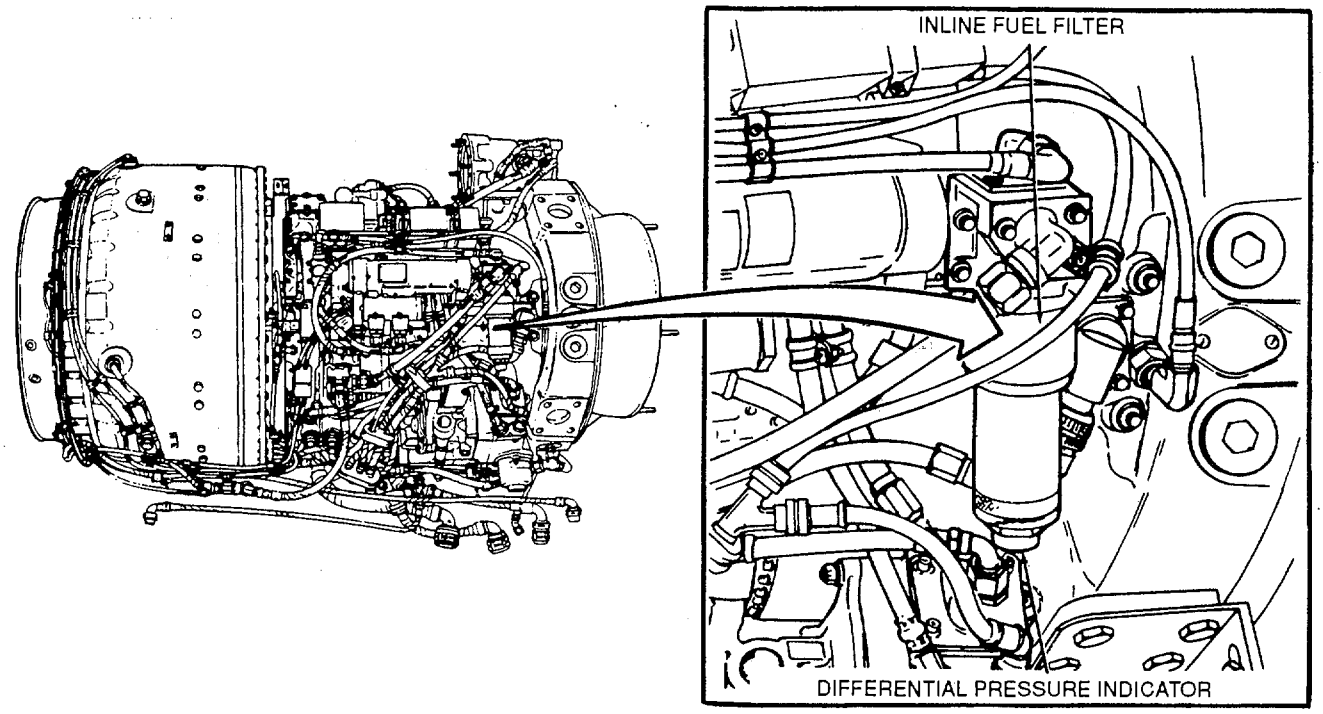

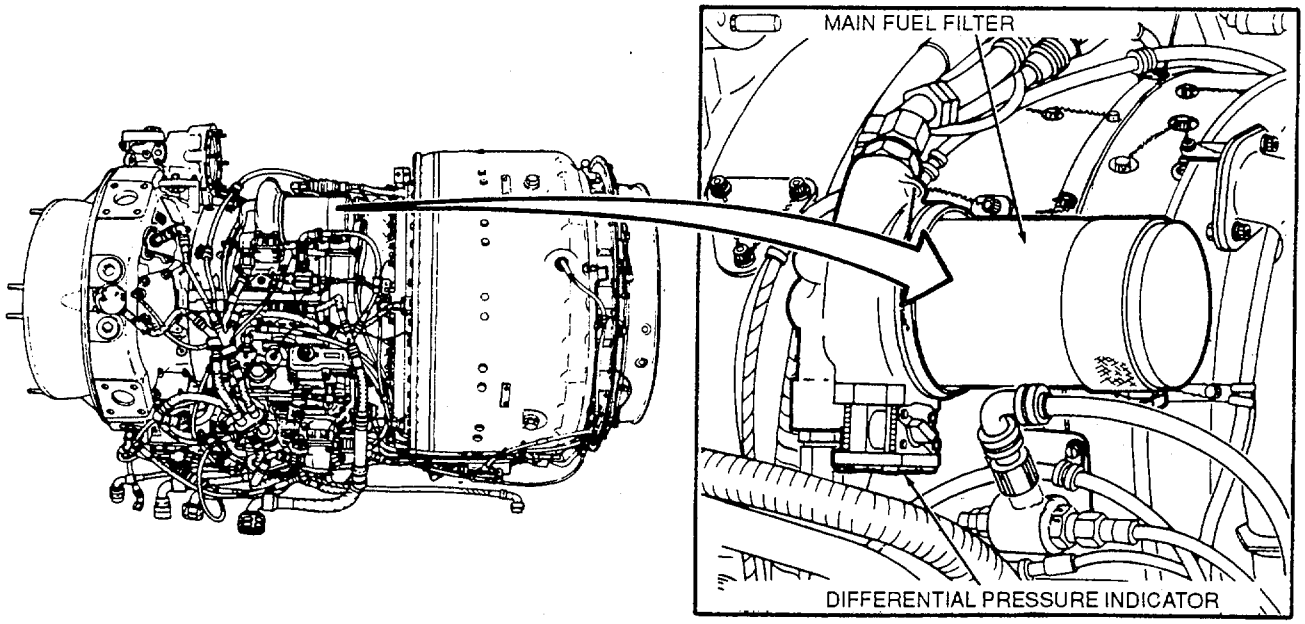

B-1-36/1

GO TO NEXT PAGE

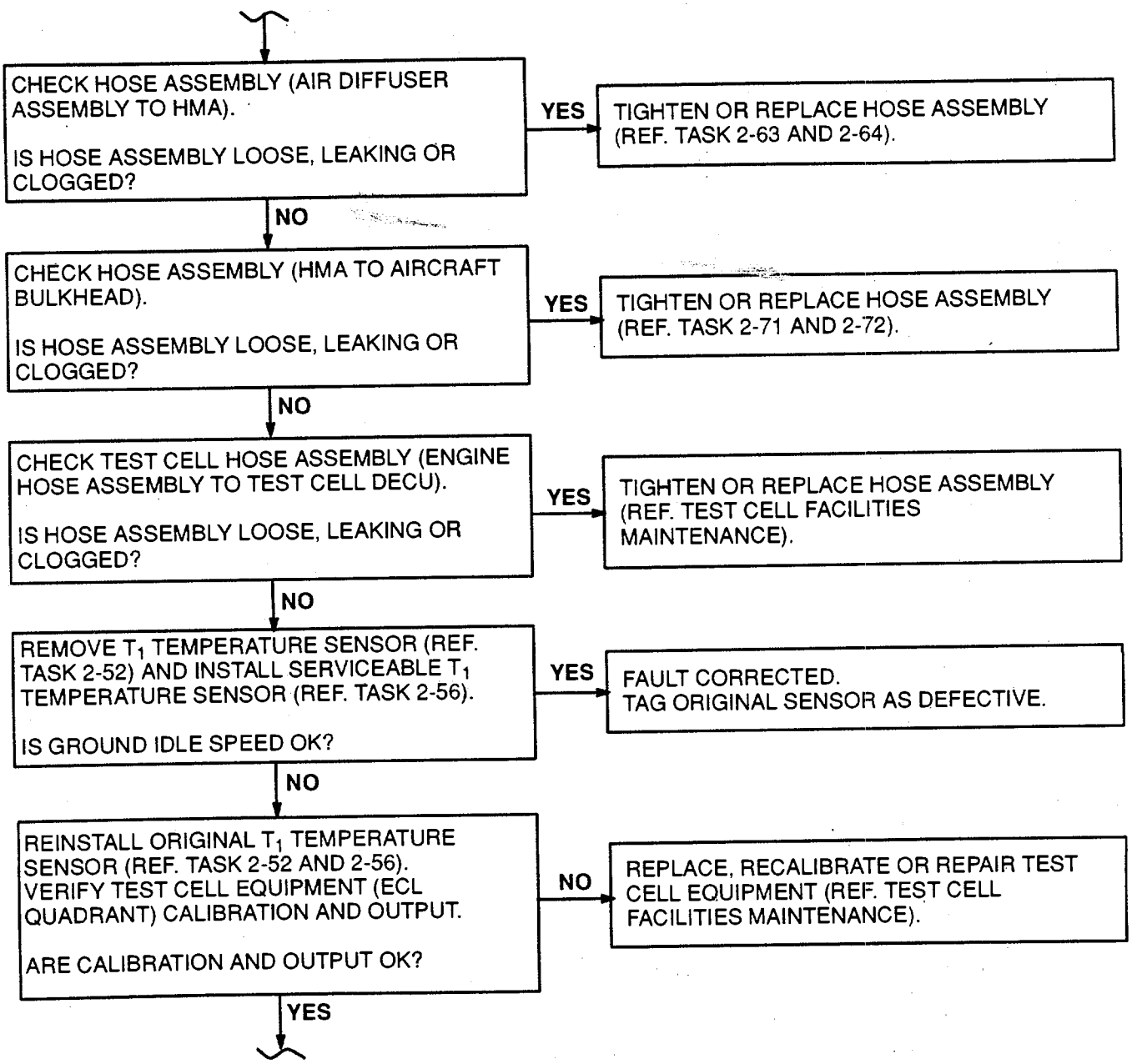

GO TO NEXT PAGE

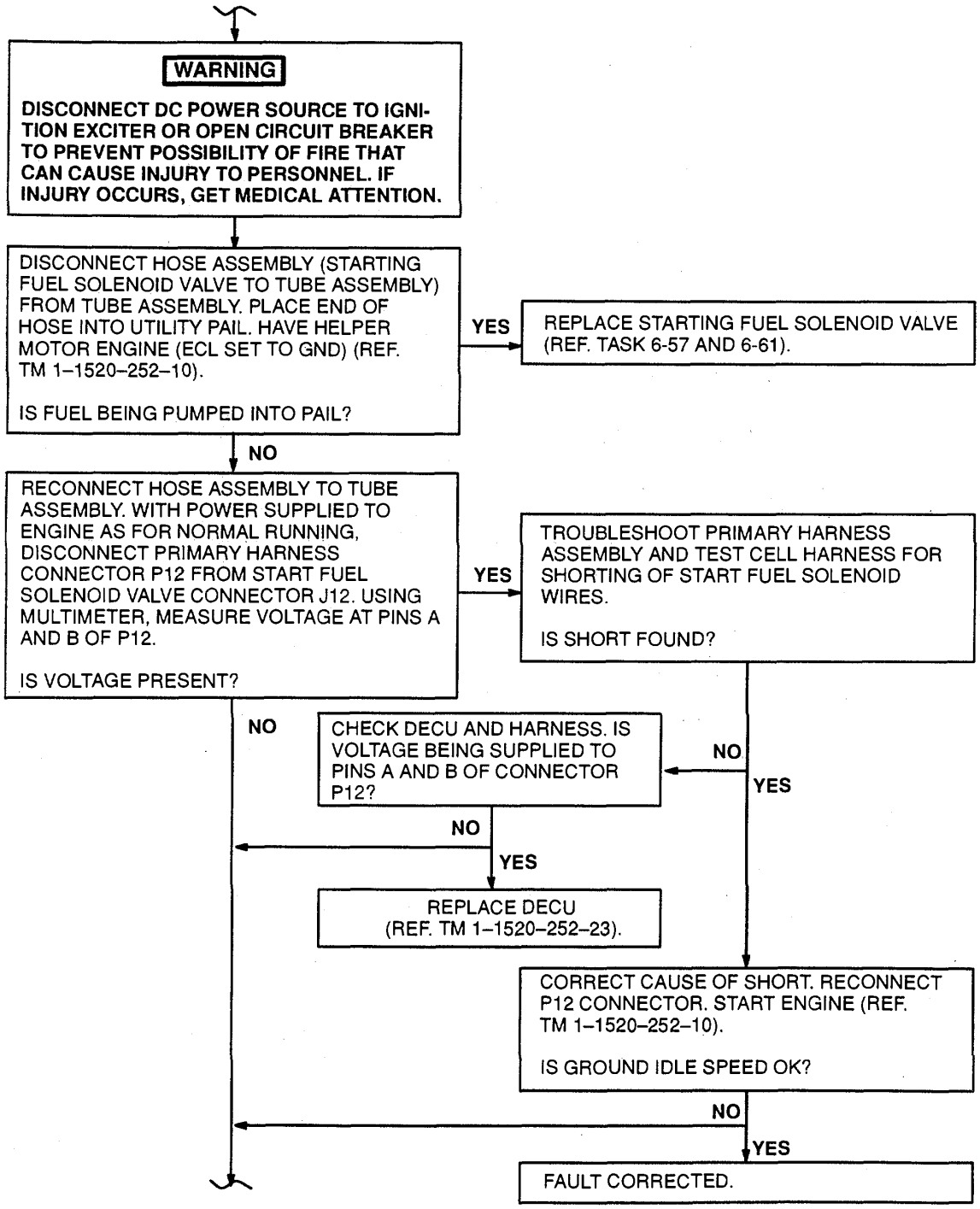

GO TO NEXT PAGE

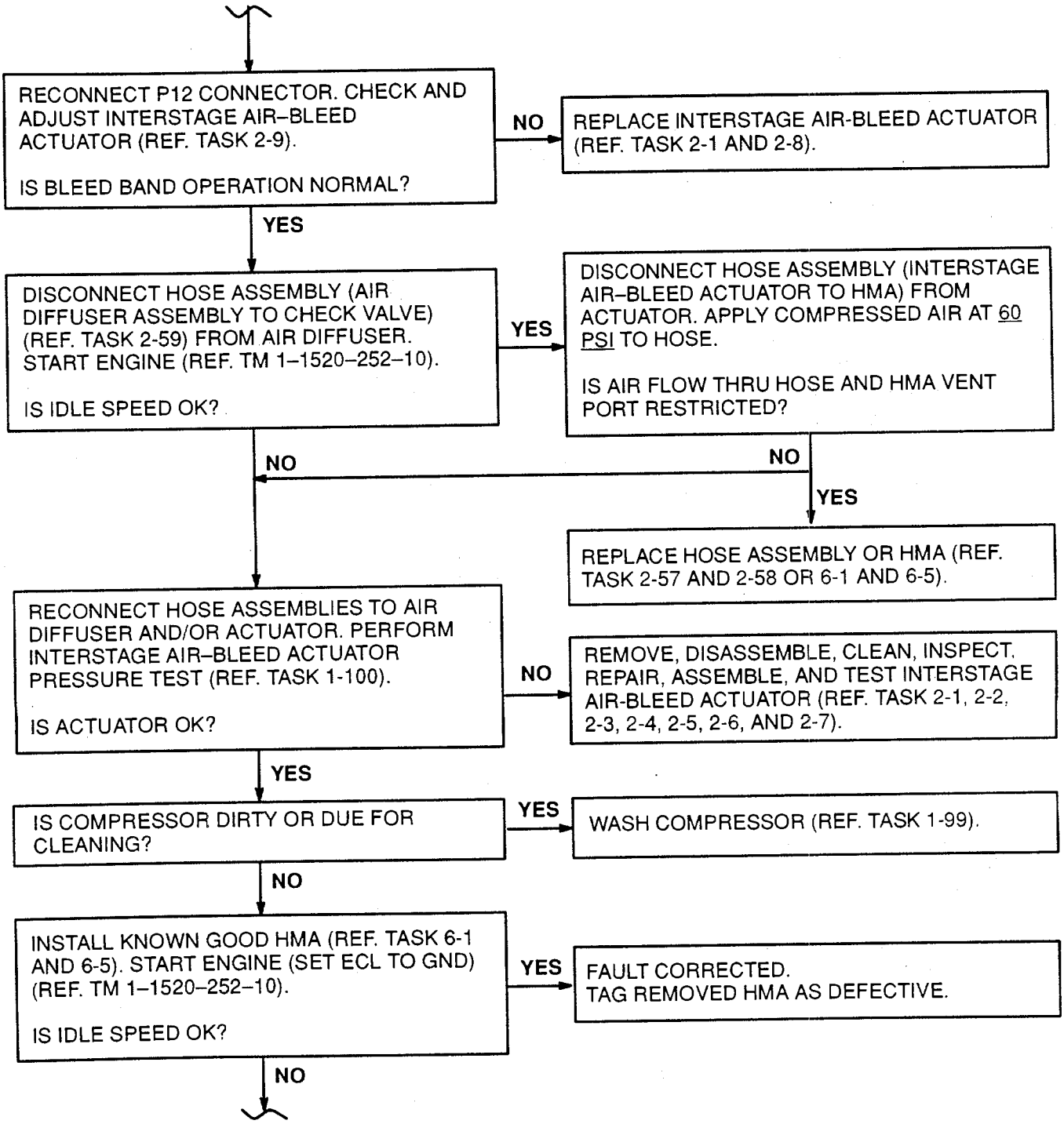

GO TO NEXT PAGE

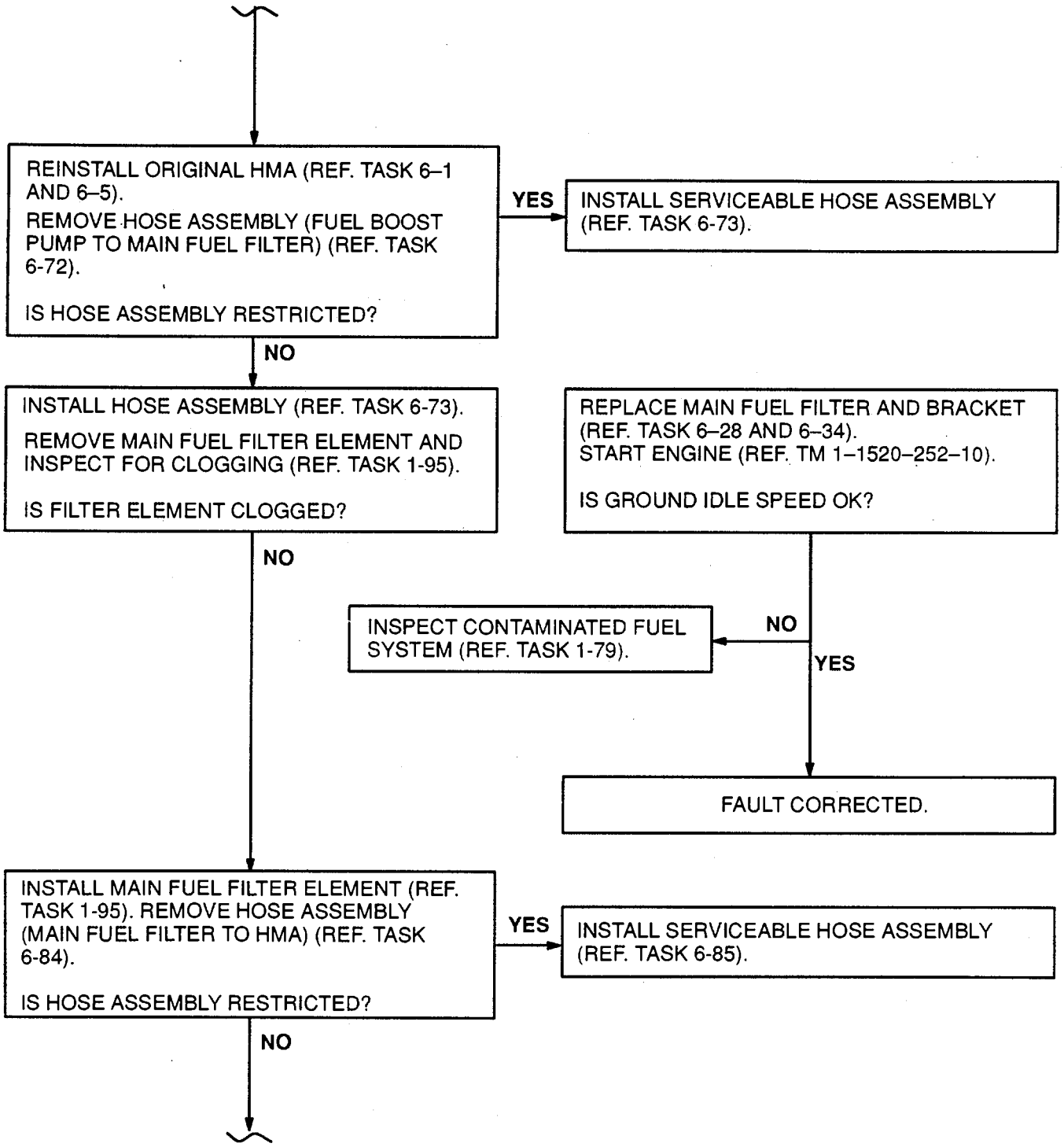

GO TO NEXT PAGE

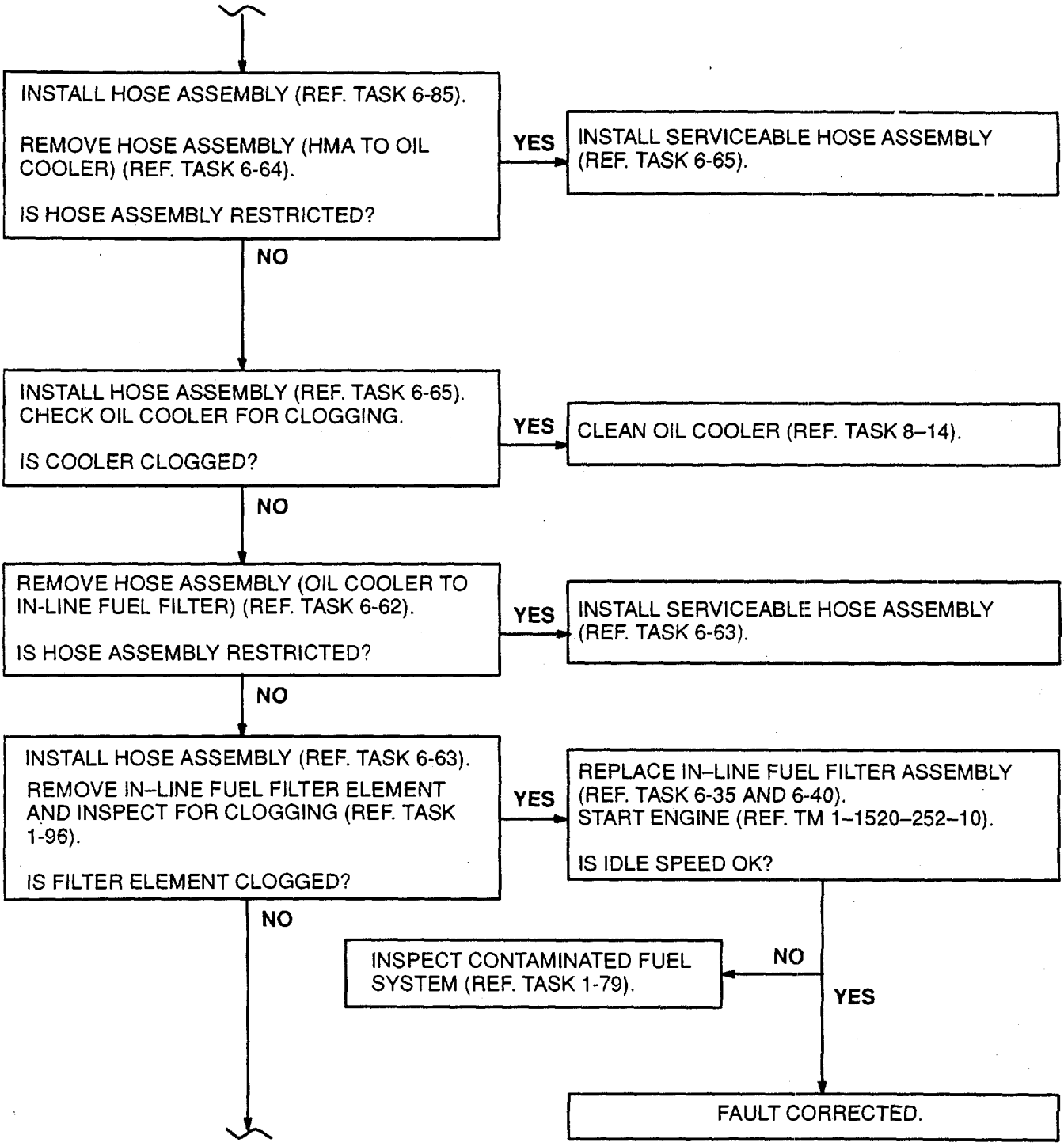

GO TO NEXT PAGE

INSTALL IN–LINE FUEL FILTER ELEMENT (REF. TASK 1-96).
REMOVE HOSE ASSEMBLY (IN–LINE FUEL FILTER TO OVERSPEED SOLENOID VALVE) (REF. TASK 6-66).

IS HOSE ASSEMBLY RESTRICTED?

YES → INSTALL SERVICEABLE HOSE ASSEMBLY (REF. TASK 6-67).

NO ↓

INSTALL HOSE ASSEMBLY (REF. TASK 6-67).
REMOVE HOSE ASSEMBLY (OVERSPEED SOLENOID VALVE TO PRESSURIZING VALVE) (REF. TASK 6-68).

IS HOSE ASSEMBLY RESTRICTED?

YES → INSTALL SERVICEABLE HOSE ASSEMBLY (REF. TASK 6-69).

NO ↓

WARNING

DISCONNECT DC POWER SOURCE TO IGNITION EXCITER OR OPEN CIRCUIT BREAKER TO PREVENT POSSIBILITY OF FIRE THAT CAN CAUSE INJURY TO PERSONNEL. IF INJURY OCCURS, GET MEDICAL ATTENTION.

INSTALL HOSE ASSEMBLY (REF. TASK 6-69).
DISCONNECT MAIN FUEL HOSE AT INLET OF HMA. PLACE END OF HOSE INTO UTILITY PAIL.
HAVE HELPER MOTOR ENGINE (ECL SET TO GND) (REF. TM 1-1520-252-10).

IS FUEL BEING PUMPED INTO PAIL?

NO → CONNECT MAIN FUEL HOSE AT INLET OF HMA. REPLACE FUEL BOOST PUMP ASSEMBLY (REF. TASK 6-8 AND 6-12).

YES ↓

GO TO NEXT PAGE

CONNECT MAIN FUEL HOSE AT INLET OF HMA. REMOVE AND INSPECT HOSE ASSEMBLIES (FUEL FLOW DIVIDER LEFT AND RIGHT SIDE PRIMARY AND SECONDARY) (REF. TASK 6-76, 6-78, 6-80, AND 6-82).

ARE HOSE ASSEMBLIES RESTRICTED OR CLOGGED?

YES → INSTALL SERVICEABLE HOSE ASSEMBLIES AS REQUIRED (REF. TASK 6-77, 6-79, 6-81, AND 6-83).

NO ↓

INSTALL HOSE ASSEMBLIES (REF. TASK 6-77, 6-79, 6-81, AND 6-83).

REMOVE AND INSPECT FUEL CHECK VALVE (REF. TASK 6-49). APPLY COMPRESSED AIR AT 10PSI. IN DIRECTION OF ARROW.

IS VALVE RESTRICTED OR CLOGGED?

YES → INSTALL SERVICEABLE CHECK VALVE (REF. TASK 6-51).

NO ↓

INSTALL FUEL CHECK VALVE (REF. TASK 6-51).
APPLY COMPRESSED AIR AT 150PSI. IN OPPOSITE DIRECTION OF ARROW.

IS VALVE LEAKING?

YES → INSTALL SERVICEABLE CHECK VALVE (REF. TASK 6-51).

NO ↓

WARNING

DISCONNECT DC POWER SOURCE TO IGNITION EXCITER OR OPEN CIRCUIT BREAKER TO PREVENT POSSIBILITY OF FIRE THAT CAN CAUSE INJURY TO PERSONNEL. IF INJURY OCCURS, GET MEDICAL ATTENTION.

INSTALL FUEL CHECK VALVE (REF. TASK 6-51).

DISCONNECT HOSE ASSEMBLY (HMA TO OIL COOLER) (REF. TASK 6-64). FROM OIL COOLER. PLACE END OF HOSE INTO UTILITY PAIL. HAVE HELPER MOTOR ENGINE (ECL SET TO GND) (REF. BH55-1520-47E-10).

IS FUEL BEING PUMPED INTO PAIL?

NO → REPLACE HMA (REF. TASK 6-1 AND 6-5).

YES ↓

GO TO NEXT PAGE

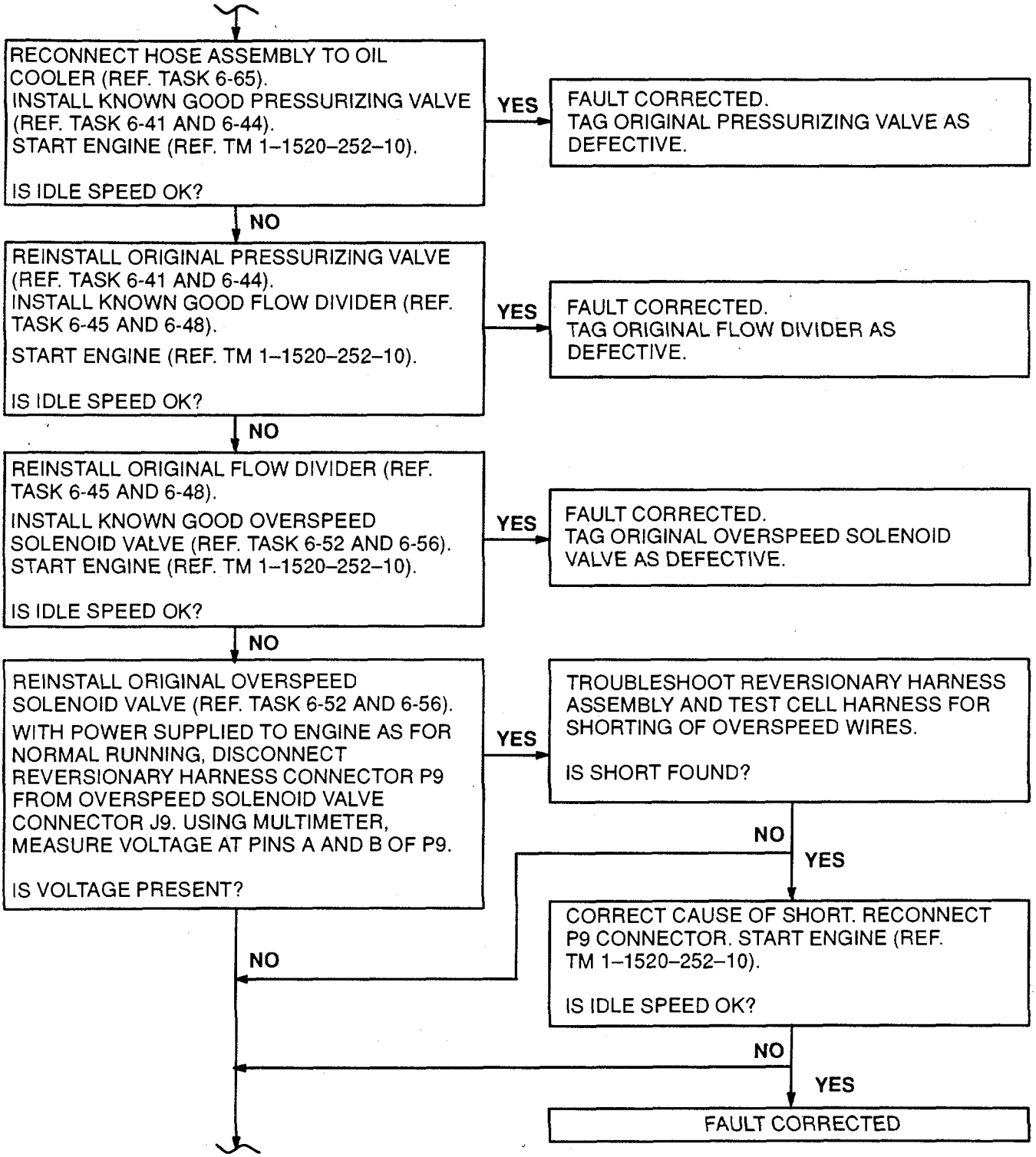
RECONNECT HOSE ASSEMBLY TO OIL COOLER (REF. TASK 6-65).
INSTALL KNOWN GOOD PRESSURIZING VALVE (REF. TASK 6-41 AND 6-44).
START ENGINE (REF. TM 1–1520–252–10).
IS IDLE SPEED OK?
YES
FAULT CORRECTED.
TAG ORIGINAL PRESSURIZING VALVE AS DEFECTIVE.
NO
REINSTALL ORIGINAL PRESSURIZING VALVE (REF. TASK 6-41 AND 6-44).
INSTALL KNOWN GOOD FLOW DIVIDER (REF. TASK 6-45 AND 6-48).
START ENGINE (REF. TM 1–1520–252–10).
IS IDLE SPEED OK?
YES
FAULT CORRECTED.
TAG ORIGINAL FLOW DIVIDER AS DEFECTIVE.
NO
REINSTALL ORIGINAL FLOW DIVIDER (REF. TASK 6-45 AND 6-48).
INSTALL KNOWN GOOD OVERSPEED SOLENOID VALVE (REF. TASK 6-52 AND 6-56).
START ENGINE (REF. TM 1–1520–252–10).
IS IDLE SPEED OK?
YES
FAULT CORRECTED.
TAG ORIGINAL OVERSPEED SOLENOID VALVE AS DEFECTIVE.
NO
REINSTALL ORIGINAL OVERSPEED SOLENOID VALVE (REF. TASK 6-52 AND 6-56).
WITH POWER SUPPLIED TO ENGINE AS FOR NORMAL RUNNING, DISCONNECT REVERSIONARY HARNESS CONNECTOR P9 FROM OVERSPEED SOLENOID VALVE CONNECTOR J9. USING MULTIMETER, MEASURE VOLTAGE AT PINS A AND B OF P9.
IS VOLTAGE PRESENT?
YES
TROUBLESHOOT REVERSIONARY HARNESS ASSEMBLY AND TEST CELL HARNESS FOR SHORTING OF OVERSPEED WIRES.
IS SHORT FOUND?
NO
YES
CORRECT CAUSE OF SHORT. RECONNECT P9 CONNECTOR. START ENGINE (REF. TM 1–1520–252–10).
IS IDLE SPEED OK?
NO
YES
FAULT CORRECTED
NO

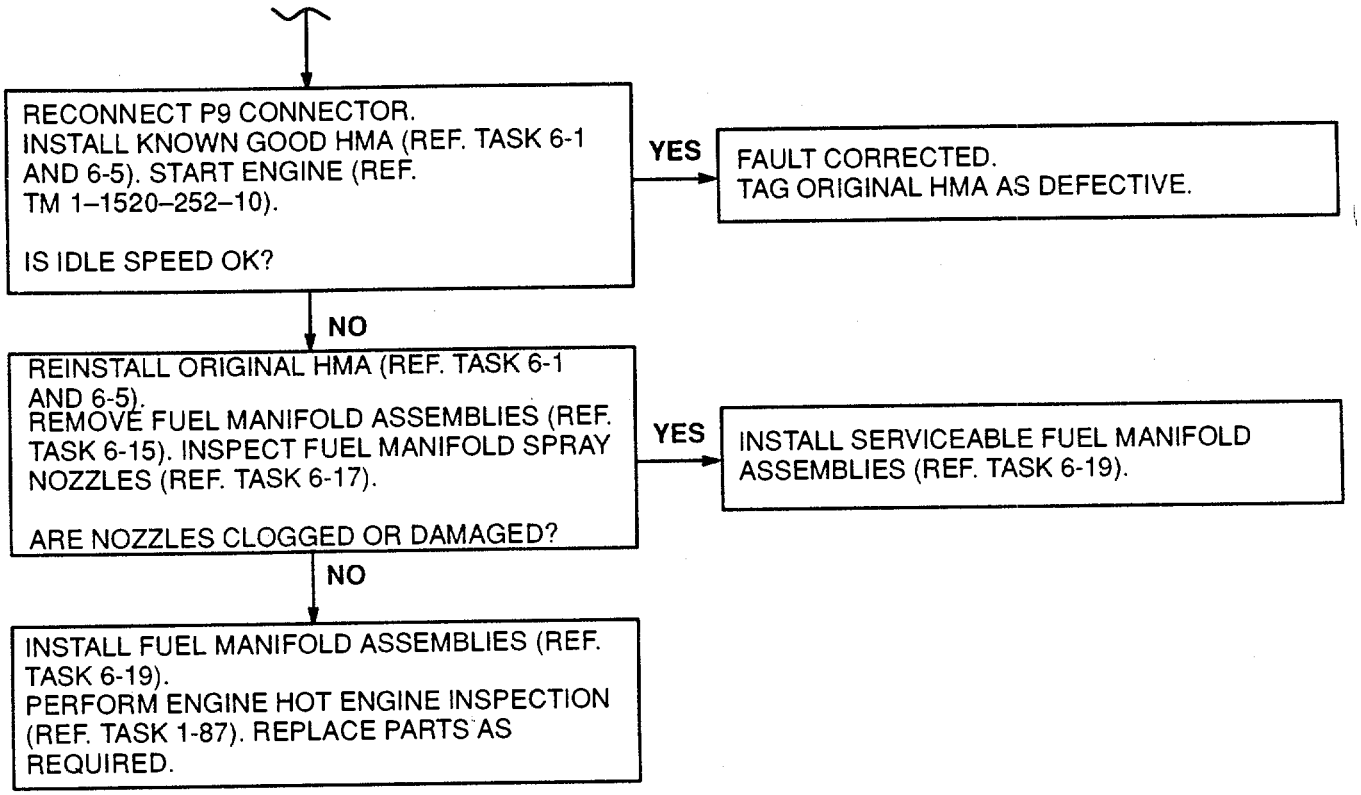

FOLLOW-ON MAINTENANCE:

None

END OF TASK

1-43 GROUND IDLE SPEED IS INCORRECT - REVERSIONARY MODE 1-43

INITIAL SETUP
Applicable Configurations:
All
Tools:
Powerplant Mechanic's Tool Kit,
NSN 5180-00-323-4944
Materials:
None
Personnel Required:
Aircraft Powerplant Repairer
Aircraft Powerplant Repairer
References:
TM 1-1520-252-T
TM 1-1520-252-10
TM 55-4920-328-13
Task 1-79 Task 2-9 Task 6-19

Task 1-87	Task 2-57	Task 6-28
Task 1-95	Task 2-58	Task 6-34
Task 1-96	Task 2-63	Task 6-41
Task 1-100	Task 2-64	Task 6-44
Task 2-1	Task 2-68	Task 6-45
Task 2-2	Task 2-71	Task 6-48
Task 2-3	Task 2-72	Task 6-52
Task 2-4	Task 6-1	Task 6-56
Task 2-5	Task 6-5	Task 6-57
Task 2-6	Task 6-8	Task 6-61
Task 2-7	Task 6-12	Task 6-62
Task 2-8	Task 6-15	Task 6-63
Task 6-64	Task 6-69	Task 6-80
Task 6-65	Task 6-76	Task 6-81
Task 6-66	Task 6-77	Task 6-82
Task 6-67	Task 6-78	Task 6-83
Task 6-68	Task 6-79	APPENDIX G

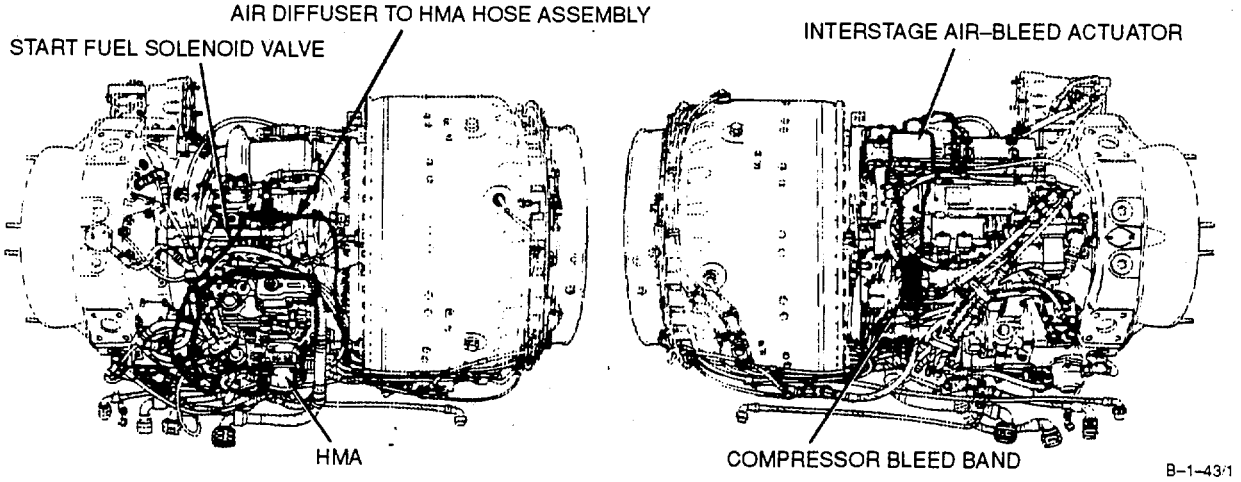

NOTE : IN REVERSIONARY MODE THE CONTROL SYSTEM MAINTAINS MECHANICAL GROUND IDLE N_1 SPEED, NOT REFERRED (I.E. CORRECTED FOR AMBIENT) AS IN PRIMARY MODE.
REVERSIONARY GROUND IDLE N_1 SPEED IS NOT AFFECTED BY T1 TEMPERATURE SENSOR .

NOTE : REVERSIONARY GROUND IDLE N1 SPEED CONTROL IS NOT AS PRECISE AS PRIMARY SPEED CONTROL. VARIANCE OF THE SPEED SETTING MAY OCCUR AND IS ACCEPTABLE AS LONG AS GROUND IDLE N_1 SPEED REMAINS WITHIN THE RANGE OF 50-60%

GO TO NEXT PAGE

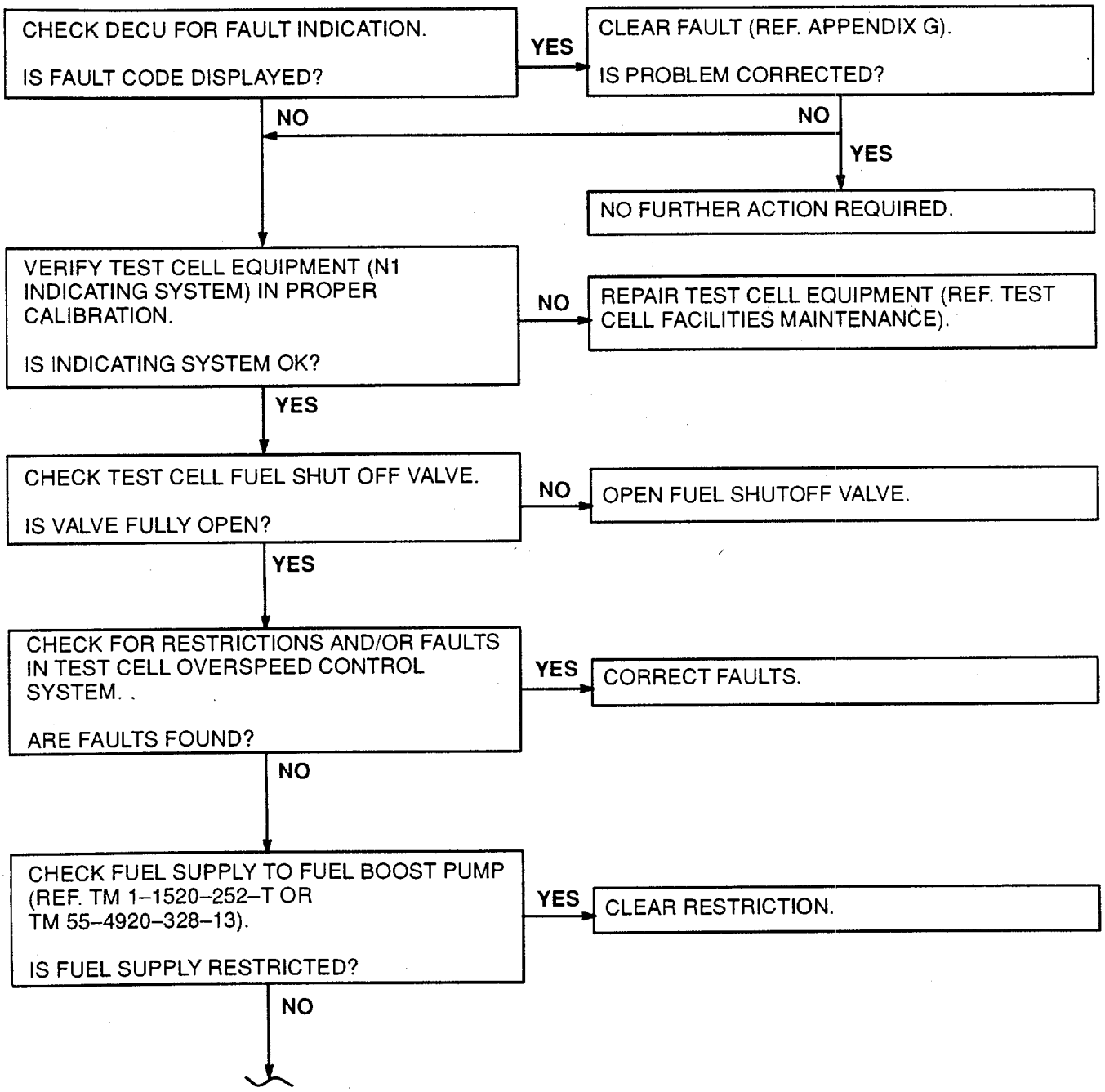

GO TO NEXT PAGE

1-43 GROUND IDLE SPEED IS INCORRECT-REVERSIONARY MODE (Continued) 1-43

TASK	RESULT
	CAUTION **IN THE FOLLOWING TWO STEPS IF DIFFERENTIAL PRESSURE INDICATOR BUTTON BECOMES EXTENDED MORE THAN ONCE WITHIN EACH PERIOD OF ENGINE OPERATION, INSPECT CONTAMINATED FUEL SYSTEM (REF. TASK 1-79).**
1. Check inline fuel filter differential pressure indicator button.	If differential pressure indicator button is extended service filter and reset button (Ref. Task 1-96),
2.	
2. Check main fuel filter differential pressure indicator button.	If differential pressure indicator button is extended, service filter and reset button (Ref. Task 1-95).

GO TO NEXT PAGE

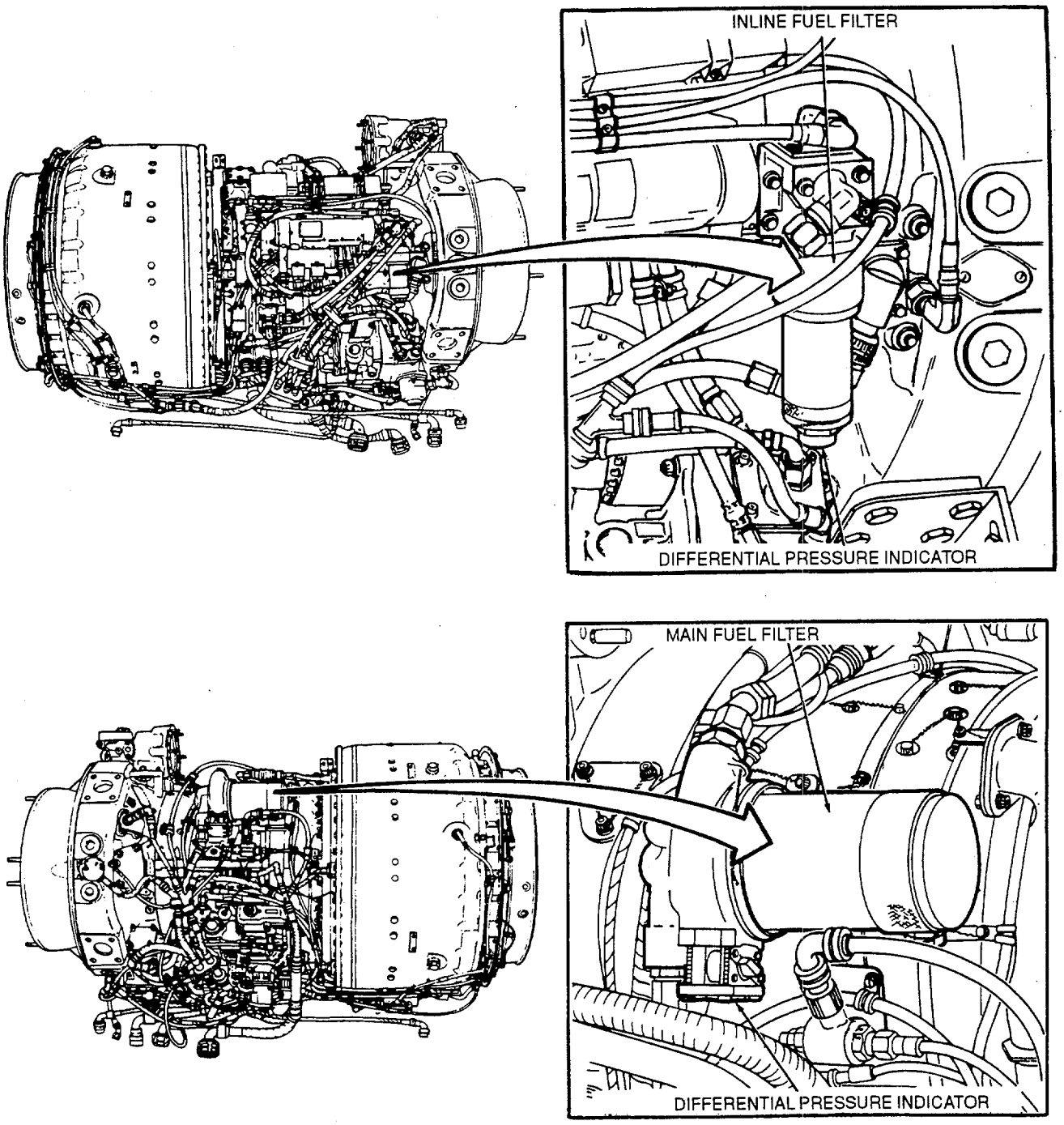

GO TO NEXT PAGE

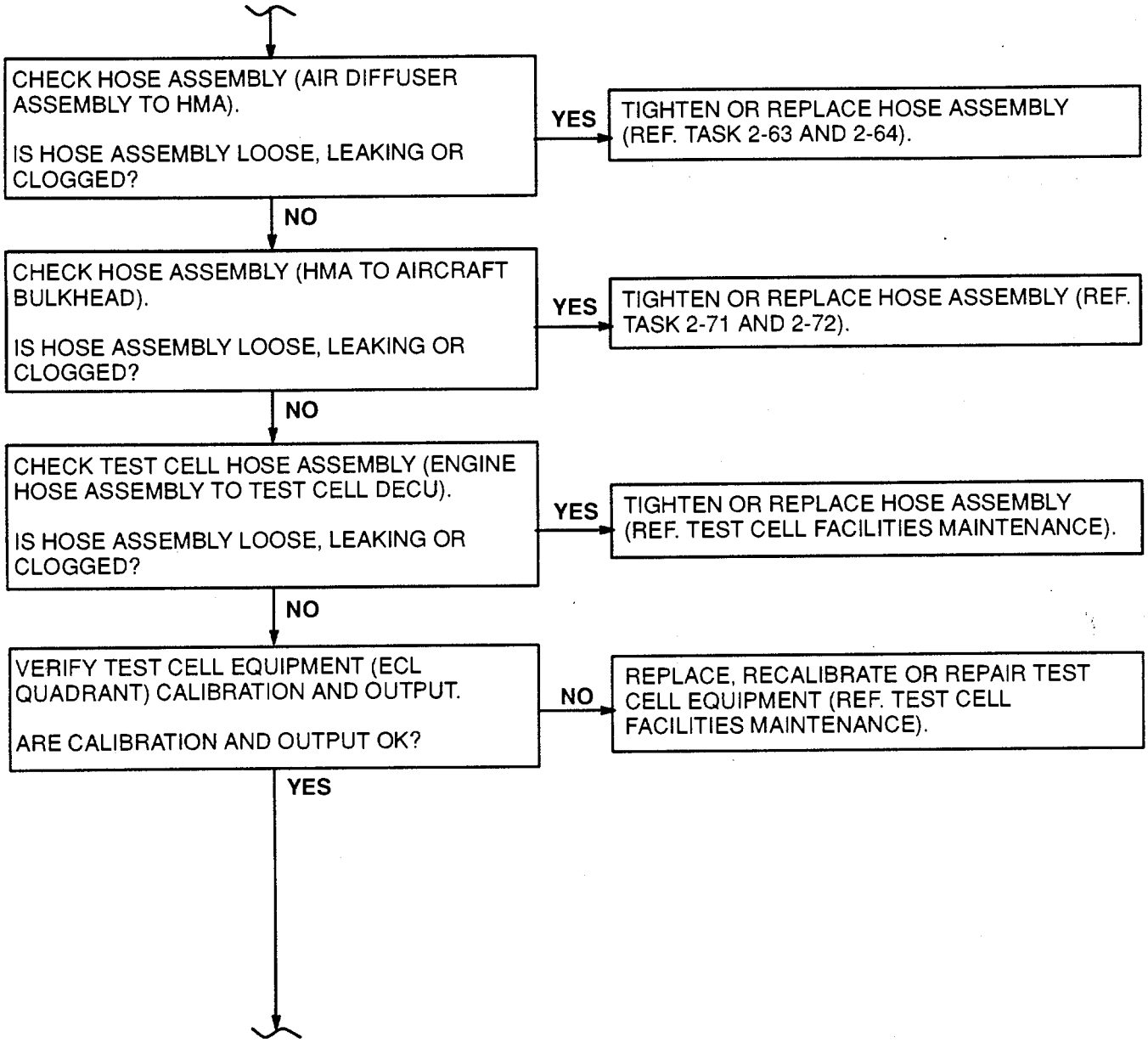

GO TO NEXT PAGE

WARNING

DISCONNECT DC POWER SOURCE TO IGNITION EXCITER OR OPEN CIRCUIT BREAKER TO PREVENT POSSIBILITY OF FIRE THAT CAN CAUSE INJURY TO PERSONNEL. IF INJURY OCCURS, GET MEDICAL ATTENTION.

DISCONNECT HOSE ASSEMBLY (STARTING FUEL SOLENOID VALVE TO TUBE ASSEMBLY). FROM TUBE ASSEMBLY. PLACE END OF HOSE INTO UTILITY PAIL. HAVE HELPER MOTOR ENGINE (ECL SET TO GND) (REF. TM 1–1520–252–10).

IS FUEL BEING PUMPED INTO PAIL?

YES → REPLACE STARTING FUEL SOLENOID VALVE (REF. TASK 6-57 AND 6-61).

NO ↓

RECONNECT HOSE ASSEMBLY TO TUBE ASSEMBLY. WITH POWER SUPPLIED TO ENGINE AS FOR NORMAL RUNNING, DISCONNECT PRIMARY HARNESS CONNECTOR P12 FROM START FUEL SOLENOID VALVE CONNECTOR J12. USING MULTIMETER, MEASURE VOLTAGE AT PINS A AND B OF P12.

IS VOLTAGE PRESENT?

YES → TROUBLESHOOT PRIMARY HARNESS ASSEMBLY AND TEST CELL HARNESS FOR SHORTING OF START FUEL SOLENOID WIRES.

IS SHORT FOUND?

NO → CHECK DECU AND HARNESS.

IS VOLTAGE BEING SUPPLIED TO PINS A AND B OF CONNECTOR P12?

NO → REPLACE DECU (REF. TM 1–1520–252–23).

YES → CORRECT CAUSE OF SHORT. RECONNECT P12 CONNECTOR. START ENGINE (REF. TM 1–1520–252–10).

IS GROUND IDLE SPEED OK?

NO → REPLACE DECU (REF. TM 1–1520–252–23).

YES → FAULT CORRECTED

YES ↓

CHECK DECU AND HARNESS.

IS VOLTAGE BEING SUPPLIED TO PINS A AND B OF CONNECTOR P12?

NO → REPLACE DECU (REF. TM 1–1520–252–23).

YES → CORRECT CAUSE OF SHORT. RECONNECT P12 CONNECTOR. START ENGINE (REF. TM 1–1520–252–10).

IS GROUND IDLE SPEED OK?

NO → REPLACE DECU (REF. TM 1–1520–252–23).

YES → FAULT CORRECTED

GO TO NEXT PAGE

RECONNECT P12 CONNECTOR. CHECK AND ADJUST INTERSTAGE AIR–BLEED ACTUATOR (REF. TASK 2-9).

IS BLEED BAND OPERATION NORMAL?

NO → REPLACE INTERSTAGE AIR-BLEED ACTUATOR (REF. TASK 2-1 AND 2-8).

YES ↓

DISCONNECT TUBE ASSEMBLY (AIR DIFFUSER ASSEMBLY TO CHECK VALVE) (REF TASK 2-59) FROM AIR DIFFUSER. START ENGINE (REF. TM 1–1520–252–10).

IS IDLE SPEED OK ?

YES → DISCONNECT HOSE ASSEMBLY (INTERSTAGE AIR–BLEED ACTUATOR TO HMA) FROM ACTUATOR (REF. TASK 2-57). APPLY COMPRESSED AIR AT 60 PSI TO HOSE.

IS AIR FLOW THRU HOSE AND HMA VENT PORT RESTRICTED?

NO → NO ↓

YES → REPLACE HOSE ASSEMBLY OR HMA (REF. TASK 2-57 AND 2-58 OR 6-1 AND 6-5).

RECONNECT HOSE ASSEMBLIES TO AIR DIFFUSER AND/OR ACTUATOR. PERFORM INTERSTAGE AIR–BLEED ACTUATOR PRESSURE TEST (REF. TASK 1-100).

IS ACTUATOR OK?

NO → REMOVE, DISASSEMBLE, CLEAN, INSPECT, REPAIR, ASSEMBLE, AND TEST INTERSTAGE AIR-BLEED ACTUATOR (REF. TASK 2-1, 2-2, 2-3, 2-4, 2-5, 2-6, AND 2-7).

YES ↓

IS COMPRESSOR DIRTY OR DUE FOR CLEANING?

YES → WASH COMPRESSOR (REF. TASK 1-99).

NO ↓

INSTALL KNOWN GOOD HMA (REF. TASK 6–1 AND 6-5). START ENGINE (SET ECL TO GND) (REF. TM 1–1520–252–10).

IS IDLE SPEED OK?

YES → FAULT CORRECTED. TAG REMOVED HMA AS DEFECTIVE.

NO ↓

GO TO NEXT PAGE

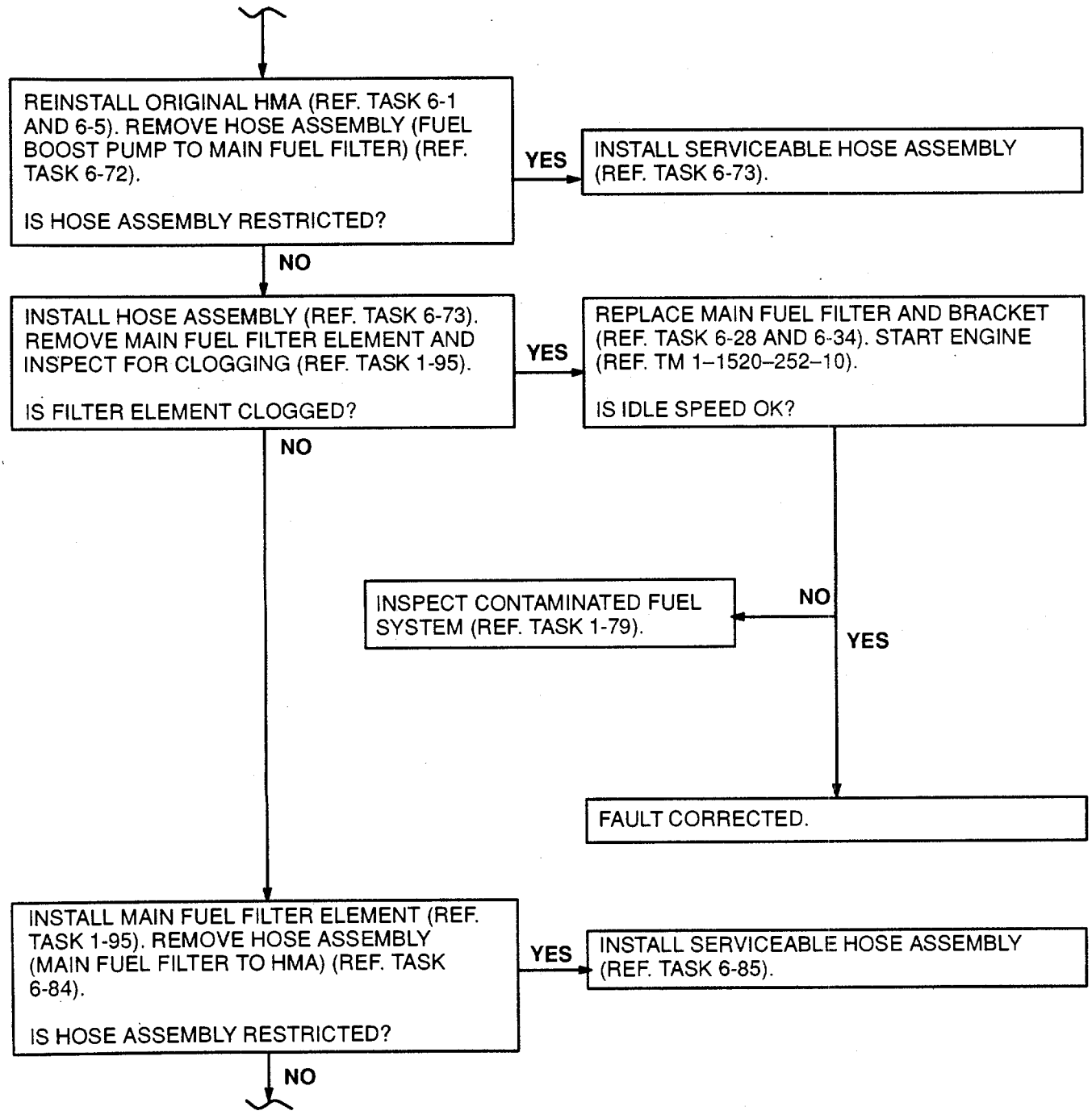

GO TO NEXT PAGE

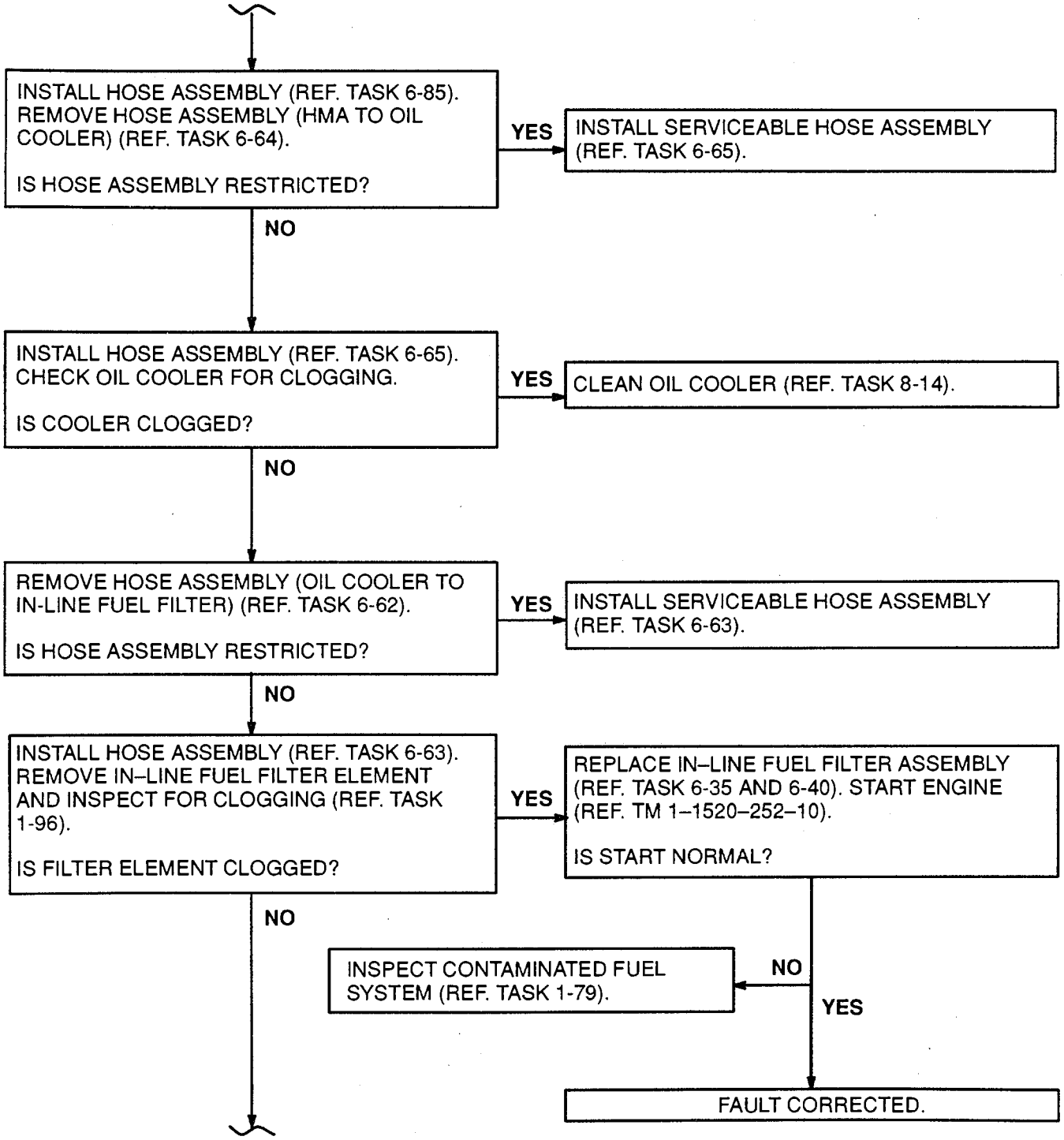

GO TO NEXT PAGE

INSTALL IN–LINE FUEL FILTER ELEMENT (REF. TASK 1-96). REMOVE HOSE ASSEMBLY (IN–LINE FUEL FILTER TO OVERSPEED SOLENOID VALVE) (REF. TASK 6-66).

IS HOSE ASSEMBLY RESTRICTED?

YES → INSTALL SERVICEABLE HOSE ASSEMBLY (REF. TASK 6-67).

NO ↓

INSTALL HOSE ASSEMBLY (REF. TASK 6-67). REMOVE HOSE ASSEMBLY (OVERSPEED SOLENOID VALVE TO PRESSURIZING VALVE) (REF. TASK 6-68).

IS HOSE ASSEMBLY RESTRICTED?

YES → INSTALL SERVICEABLE HOSE ASSEMBLY (REF. TASK 6-69).

NO ↓

WARNING

DISCONNECT DC POWER SOURCE TO IGNITION EXCITER OR OPEN CIRCUIT BREAKER TO PREVENT POSSIBILITY OF FIRE THAT CAN CAUSE INJURY TO PERSONNEL. IF INJURY OCCURS, GET MEDICAL ATTENTION.

INSTALL HOSE ASSEMBLY (REF. TASK 6-69). DISCONNECT MAIN FUEL HOSE AT INLET OF HMA. PLACE END OF HOSE INTO UTILITY PAIL. HAVE HELPER MOTOR ENGINE (ECL SET TO GND) (REF. TM 1–1520–252–10).

IS FUEL BEING PUMPED INTO PAIL?

NO → CONNECT MAIN FUEL HOSE AT INLET OF HMA. REPLACE FUEL BOOST PUMP (REF. TASK 6-8 AND 6-12).

YES ↓

GO TO NEXT PAGE

CONNECT MAIN FUEL HOSE AT INLET OF HMA. REMOVE AND INSPECT HOSE ASSEMBLIES (FUEL FLOW DIVIDER LEFT AND RIGHT SIDE PRIMARY AND SECONDARY) (REF. TASK 6-76, 6-78, 6-80, AND 6-82).

ARE HOSE ASSEMBLIES RESTRICTED OR CLOGGED?

YES → INSTALL SERVICEABLE HOSE ASSEMBLIES AS REQUIRED.

NO ↓

INSTALL HOSE ASSEMBLIES (REF. TASK 6-77, 6-79, 6-81, AND 6-83). REMOVE AND INSPECT FUEL CHECK VALVE (REF. TASK 6–49). APPLY COMPRESSED AIR AT 10 PSI. IN DIRECTION OF ARROW.

IS VALVE RESTRICTED OR CLOGGED?

YES → INSTALL SERVICEABLE CHECK VALVE (REF. TASK 6-51).

NO ↓

APPLY COMPRESSED AIR AT 150 PSI. IN OPPOSITE DIRECTION OF ARROW.

IS VALVE LEAKING?

YES → INSTALL SERVICEABLE CHECK VALVE (REF. TASK 6-51).

NO ↓

WARNING

DISCONNECT DC POWER SOURCE TO IGNITION EXCITER OR OPEN CIRCUIT BREAKER TO PREVENT POSSIBILITY OF FIRE THAT CAN CAUSE INJURY TO PERSONNEL. IF INJURY OCCURS, GET MEDICAL ATTENTION.

INSTALL FUEL CHECK VALVE (REF. TASK 6-51). DISCONNECT HOSE ASSEMBLY (HMA TO OIL COOLER) (REF. TASK 6-64) FROM OIL COOLER. PLACE END OF HOSE INTO UTILITY PAIL. HAVE HELPER MOTOR ENGINE (ECL SET TO GND) (REF. TM 1–1520–252–10).

IS FUEL BEING PUMPED INTO PAIL?

NO → REPLACE HMA (REF. TASK 6-1 AND 6-5).

YES ↓

GO TO NEXT PAGE

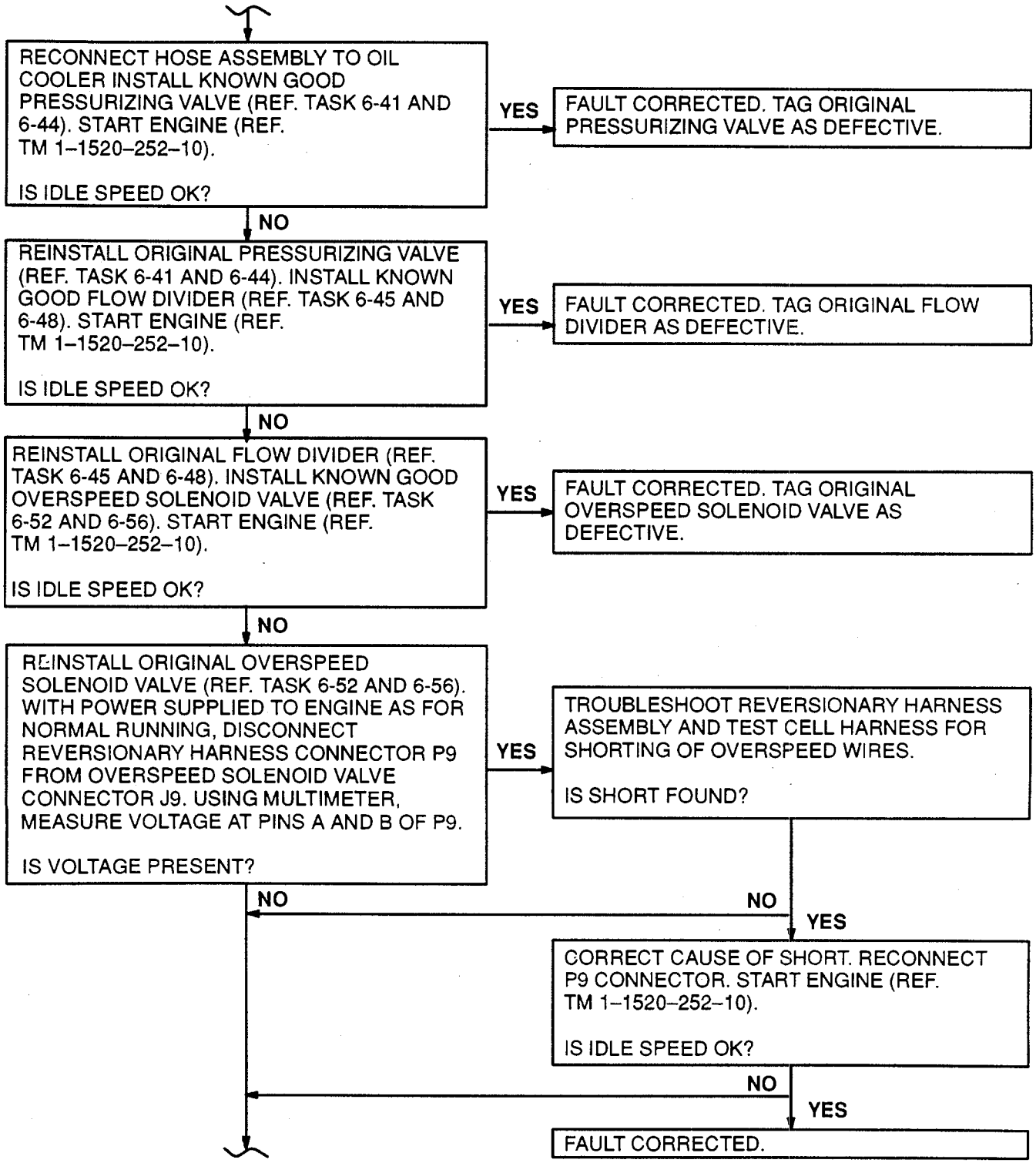

GO TO NEXT PAGE

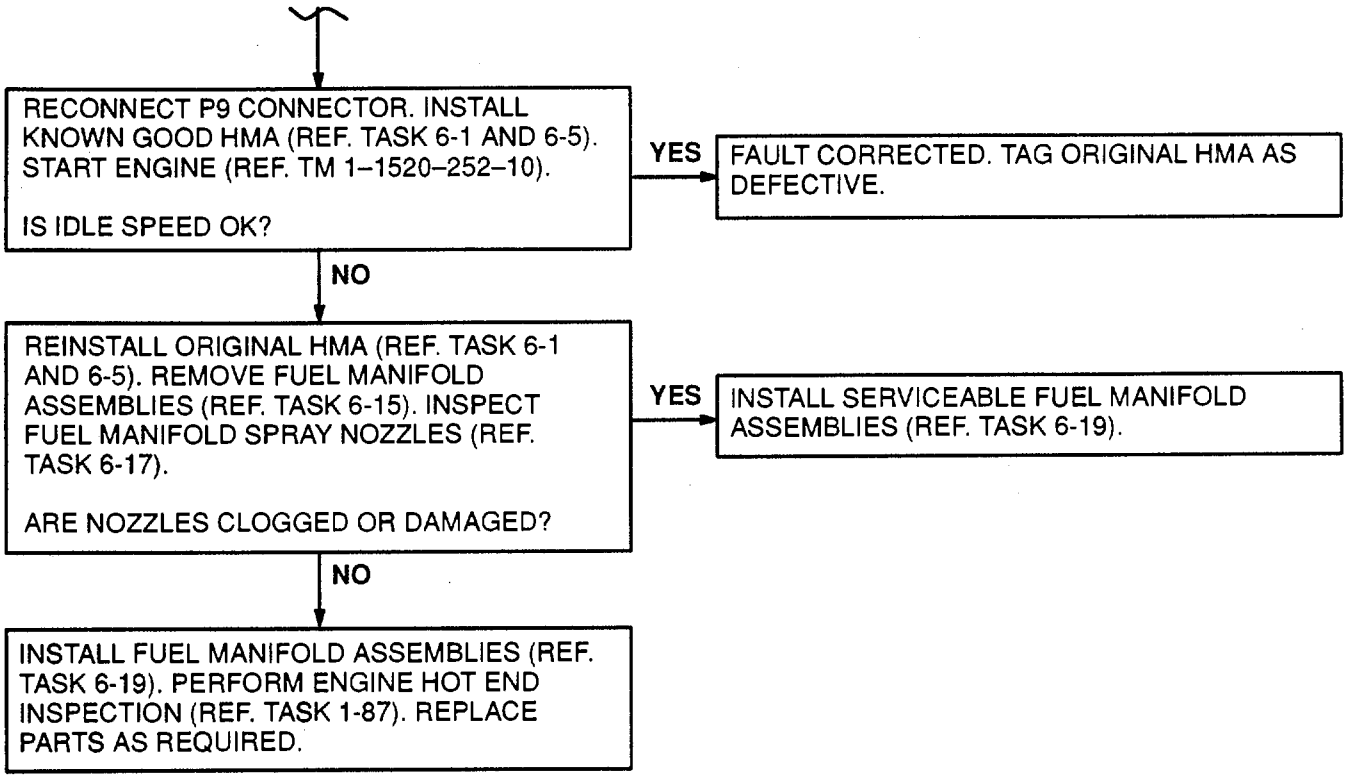

FOLLOW-ON MAINTENANCE:
None

END OF TASK

1-44 POWER LIMITED-PRIMARY MODE 1-44

INITIAL SETUP

Applicable Configurations:

All

Tools

Powerplant Mechanic's Tool Kit,
NSN 5180-00-323-4944

Materials:

None

Personnel Required:

Aircraft Powerplant Repairer

References:

TM 1-1520-252-T
TM 1-1520-252-10
TM 1-1520-252-T
TM 55-4920-328-13

Task 1-47	Task 4-6	Task 6-62
Task 1-79	Task 4-7	Task 6-63
Task 1-84	Task 4-10	Task 6-64
Task 1-87	Task 4-11	Task 6-65
Task 1-95	Task 4-20	Task 6-66
Task 1-96	Task 4-24	Task 6-67
Task 1-99	Task 4-25	Task 6-68
Task 2-9	Task 6-1	Task 6-69
Task 2-27	Task 6-5	Task 6-72
Task 2-31	Task 6-8	Task 6-73
Task 2-32	Task 6-12	Task 6-76
Task 2-33	Task 6-15	Task 6-77
Task 2-37	Task 6-17	Task 6-78
Task 2-52	Task 6-19	Task 6-79
Task 2-56	Task 6-28	Task 6-80
Task 2-63	Task 6-34	Task 6-81
Task 2-64	Task 6-35	Task 6-82
Task 2-71	Task 6-40	Task 6-83
Task 2-72	Task 6-41	Task 6-84
Task 4-1	Task 6-44	Task 6-85
Task 4-2	Task 6-45	Task 8-14
Task 4-3	Task 6-51	APPENDIX G
Task 4-4	Task 6-52	
Task 4-5	Task 6-56	

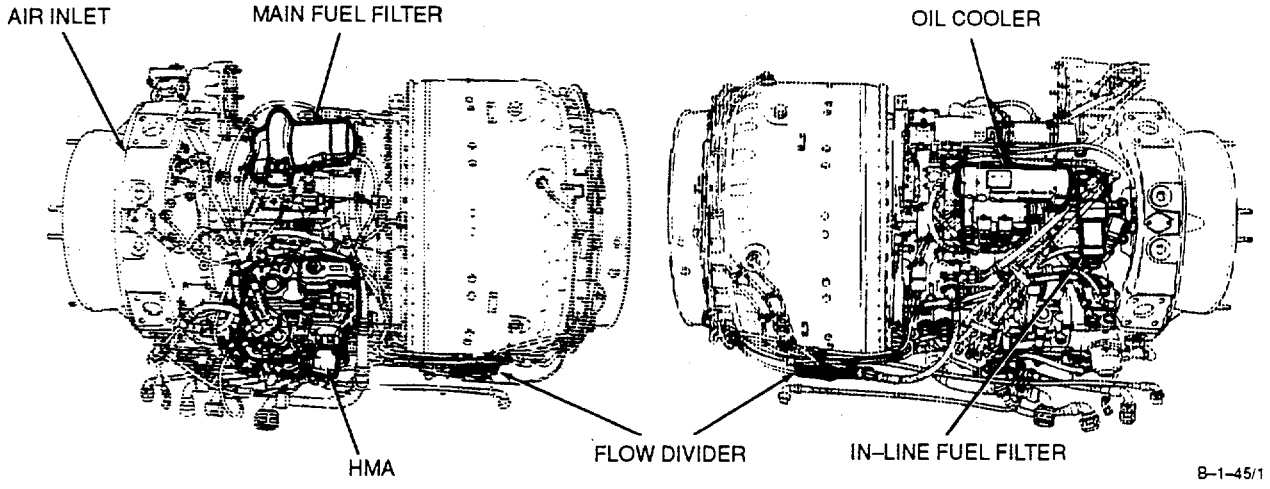

GO TO NEXT PAGE

1-44 POWER LIMITED-PRIMARY MODE (Continued) 1-44

NOTE: VERIFY TEST CELL INSTRUMENTATION AND CONTROL WITHIN PROPER CALIBRATION.

NOTE: ENGINE PRIMARY CONTROL SYSTEM LIMITS POWER BASED ON CONTROL INPUT DEMANDING LOWEST FUEL FLOW. OPERATOR SHOULD VERIFY THAT POWER LIMITING IS NOT CAUSED BY IMPROPER SETTING OF ECL, N_2 SET POT, AND/OR LOAD CONTROL. ALSO, VERIFY ENGINE NOT BEING POWER LIMITED DUE TO REACHING $T_{4.5}$, N_1, OR REFERRED N1 MAXIMUM LIMITS.

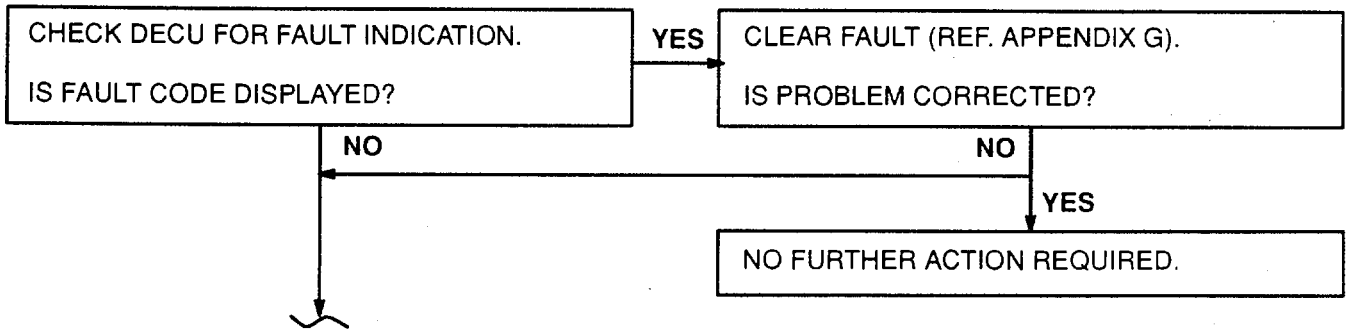

GO TO NEXT PAGE

1-44 POWER LIMITED-PRIMARY MODE (Continued) 1-44

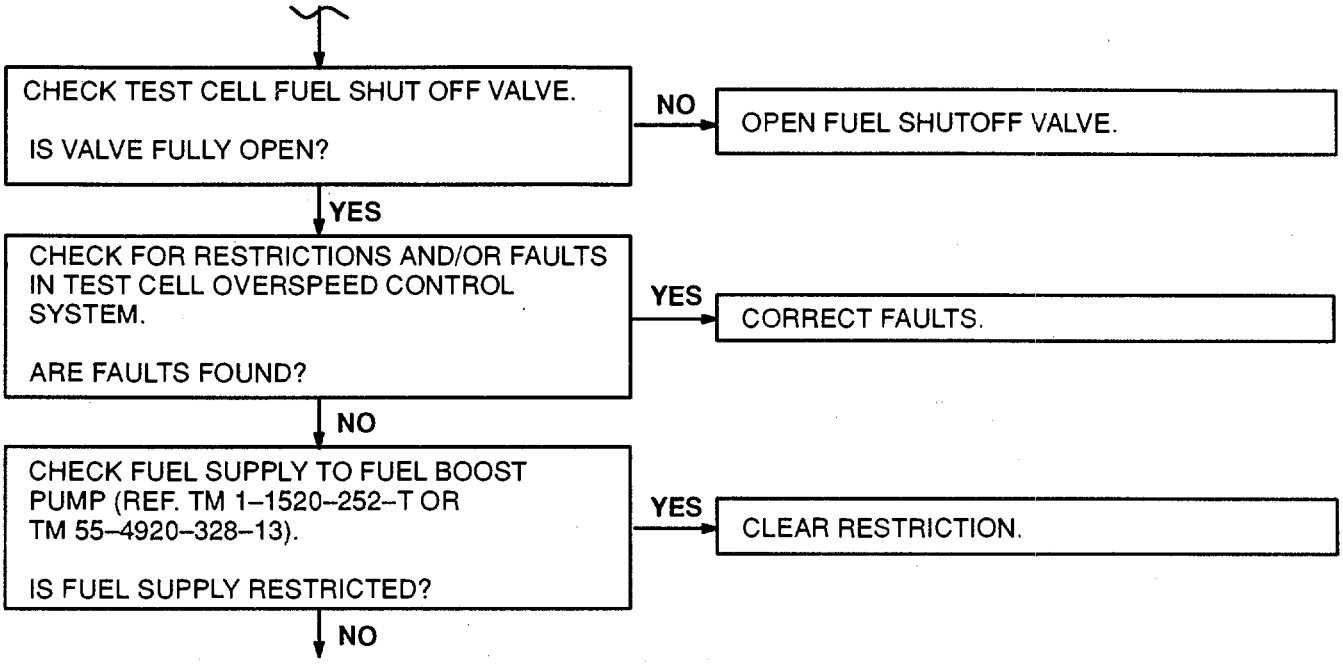

TASK	RESULT
	CAUTION
	IN THE FOLLOWING TWO STEPS IF DIFFERENTIAL PRESSURE INDICATOR BUTTON BECOMES EXTENDED MORE THAN ONCE WITHIN EACH PERIOD OF ENGINE OPERATION, INSPECT CONTAMINATED FUEL SYSTEM (REF. TASK 1-79).
1. Check inline fuel filter differential pressure indicator button.	If differential pressure indicator button is extended service filter and reset button (Ref. Task 1-96),
2.	
2. Check main fuel filter differential pressure indicator button.	If differential pressure indicator button is extended, service filter and reset button (Ref. Task 1-95).

GO TO NEXT PAGE

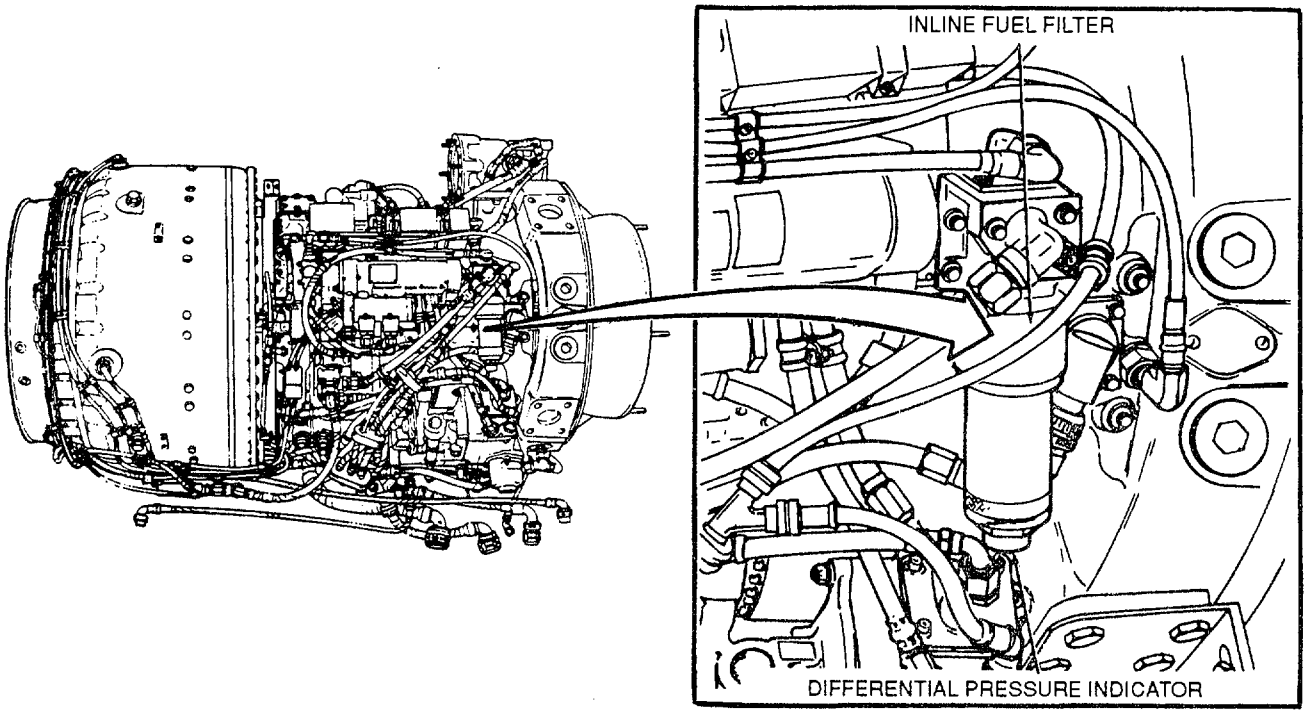

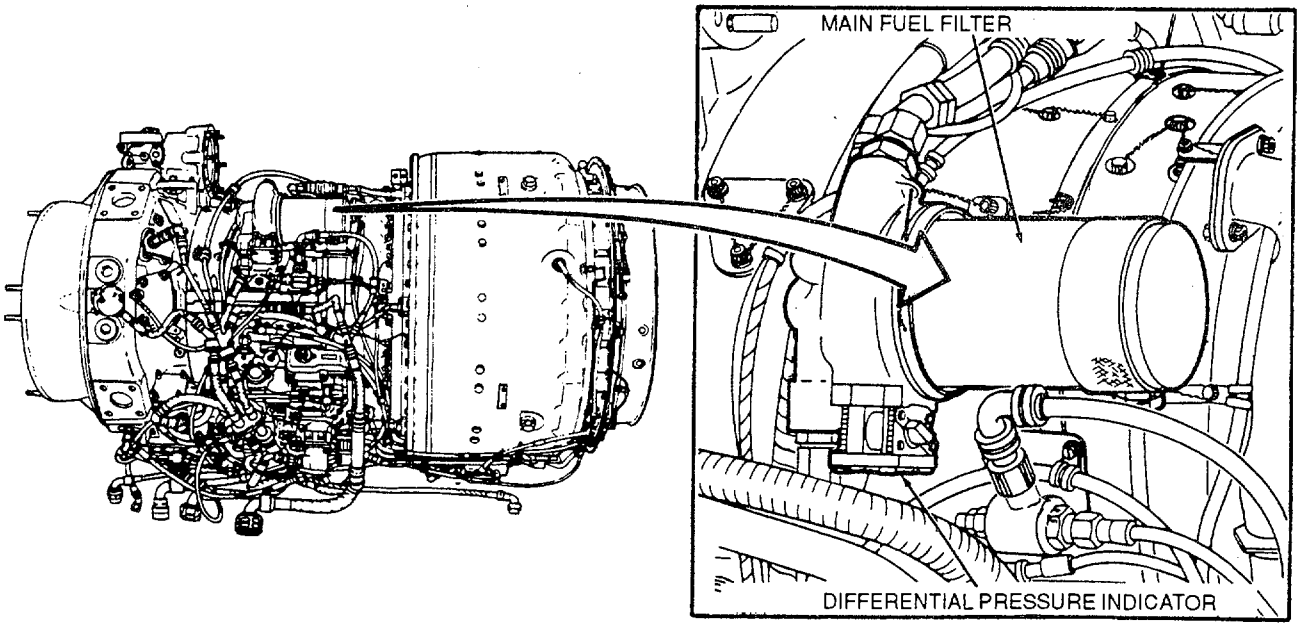

B-1-36/1

GO TO NEXT PAGE

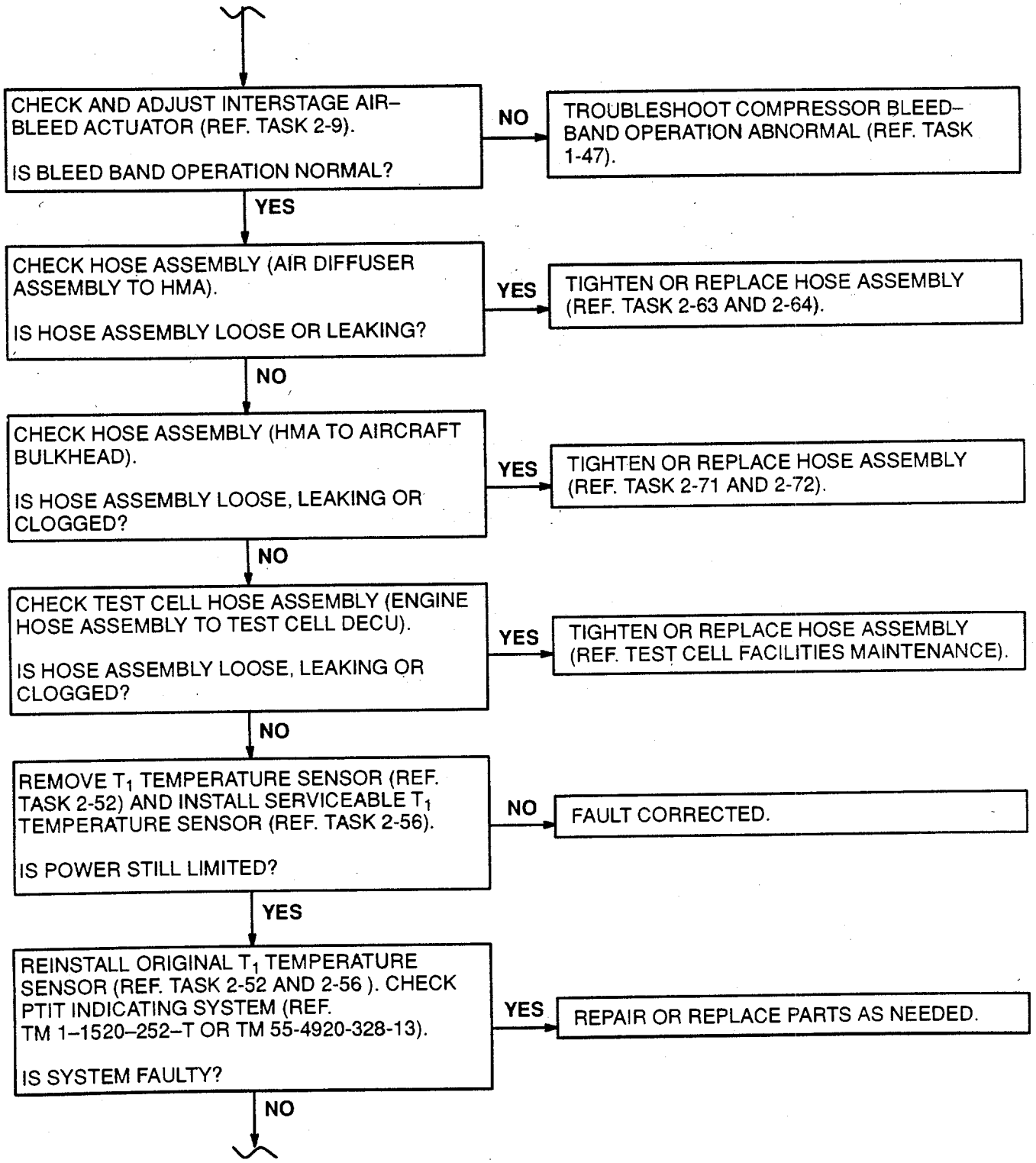

GO TO NEXT PAGE

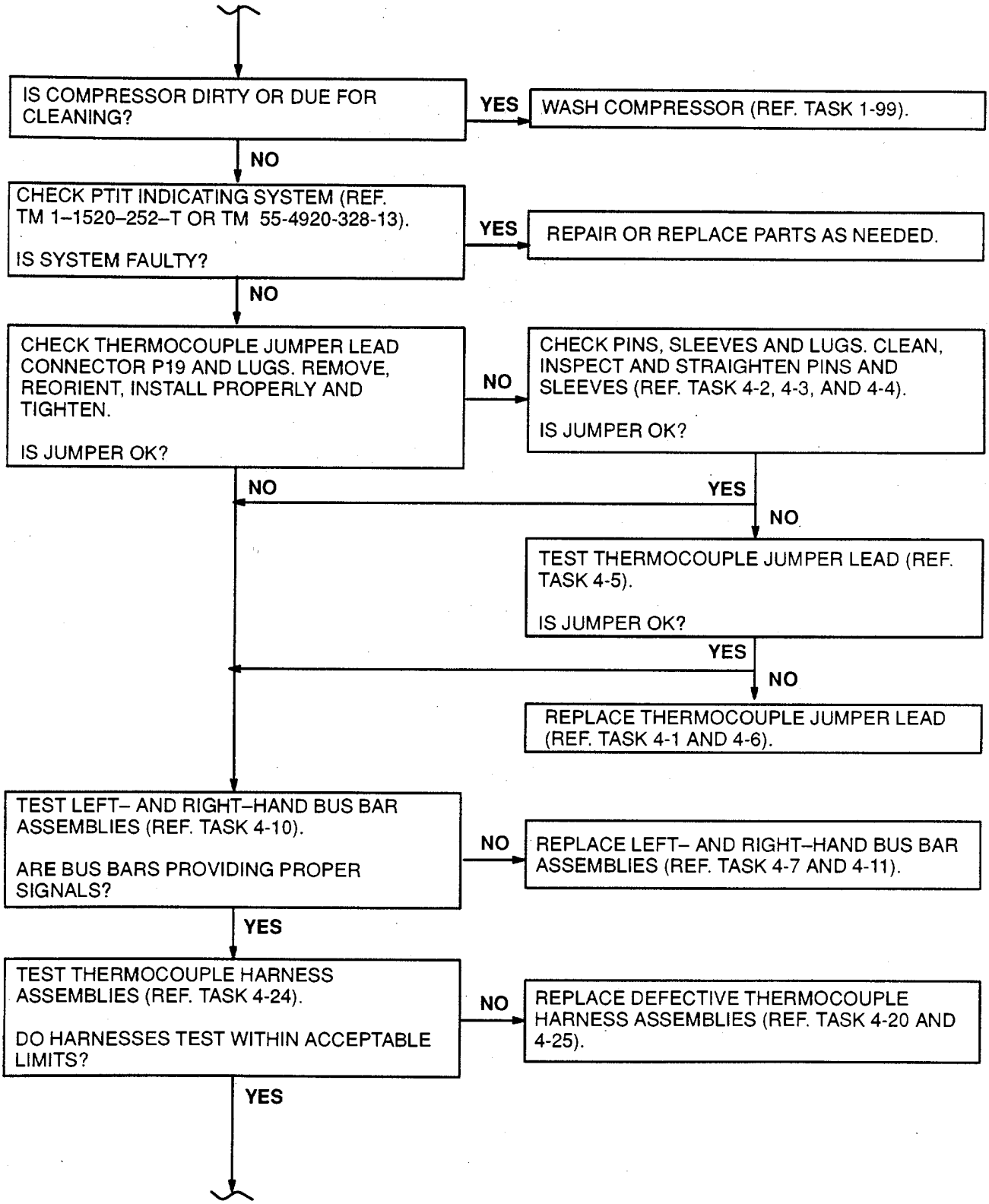

GO TO NEXT PAGE

1-44 POWER LIMITED-PRIMARY MODE (Continued) 1-44

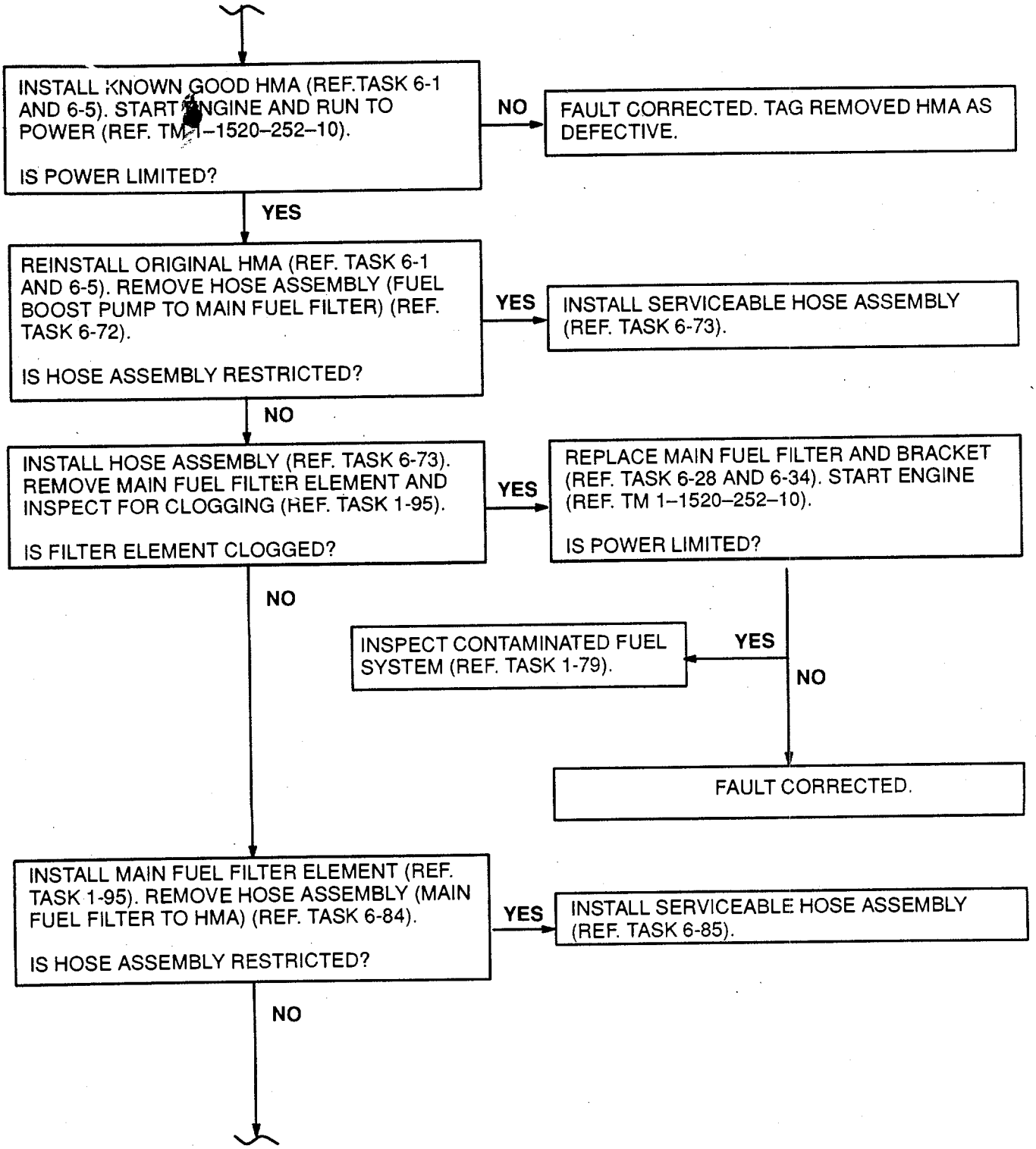

GO TO NEXT PAGE

1-44 POWER LIMITED-PRIMARY MODE (Continued) 1-44

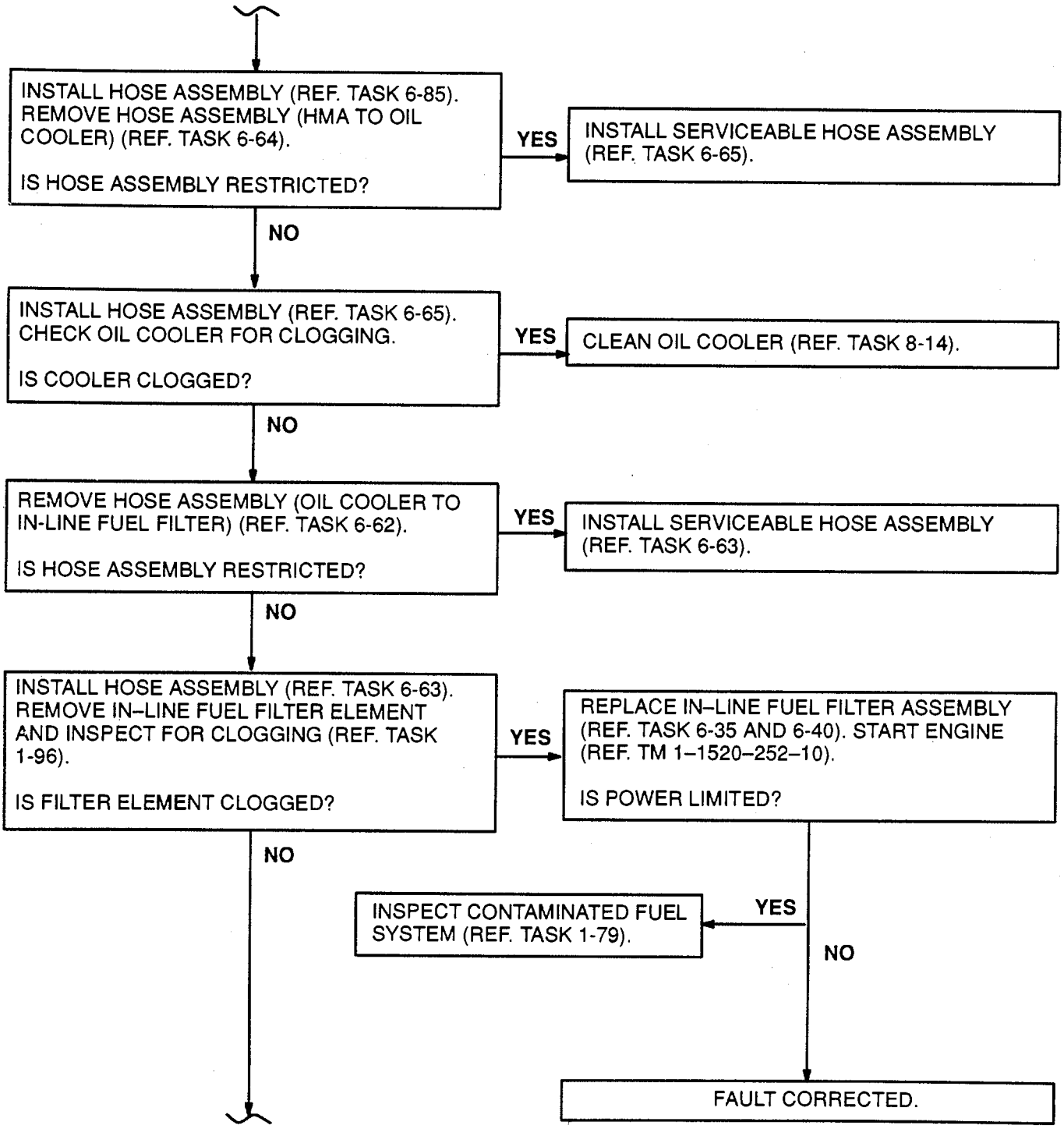

GO TO NEXT PAGE

INSTALL IN–LINE FUEL FILTER ELEMENT (REF. TASK 1-96). REMOVE HOSE ASSEMBLY (IN–LINE FUEL FILTER TO OVERSPEED SOLENOID VALVE) (REF. TASK 6-66).

IS HOSE ASSEMBLY RESTRICTED?

YES → INSTALL SERVICEABLE HOSE ASSEMBLY (REF. TASK 6-67).

NO ↓

INSTALL HOSE ASSEMBLY (REF. TASK 6-67). REMOVE HOSE ASSEMBLY (OVERSPEED SOLENOID VALVE TO PRESSURIZING VALVE) (REF. TASK 6-68).

IS HOSE ASSEMBLY RESTRICTED?

YES → INSTALL SERVICEABLE HOSE ASSEMBLY (REF. TASK 6-69).

NO ↓

WARNING

DISCONNECT DC POWER SOURCE TO IGNITION EXCITER OR OPEN CIRCUIT BREAKER TO PREVENT POSSIBILITY OF FIRE THAT CAN CAUSE INJURY TO PERSONNEL. IF INJURY OCCURS, GET MEDICAL ATTENTION.

↓

INSTALL HOSE ASSEMBLY (REF. TASK 6-69). DISCONNECT MAIN FUEL HOSE AT INLET OF HMA. PLACE END OF HOSE INTO UTILITY PAIL. HAVE HELPER MOTOR ENGINE (ECL SET TO GND) (REF. TM 1–1520–252–10).

IS FUEL BEING PUMPED INTO PAIL?

NO → CONNECT MAIN FUEL HOSE AT INLET OF HMA. REPLACE FUEL BOOST PUMP ASSEMBLY (REF. TASK 6-8 AND 6-12).

YES ↓

GO TO NEXT PAGE

CONNECT MAIN FUEL HOSE AT INLET OF HMA.

REMOVE AND INSPECT HOSE ASSEMBLIES (FLOW DIVIDER LEFT AND RIGHT SIDE PRIMARY AND SECONDARY) (REF. TASK 6-76, 6-78, 6-80, AND 6-82).

ARE HOSE ASSEMBLIES RESTRICTED OR CLOGGED?

YES → INSTALL SERVICEABLE HOSE ASSEMBLIES AS REQUIRED (REF. 6-77, 6-79, 6-81, AND 6-83).

NO ↓

INSTALL HOSE ASSEMBLIES (REF. TASK 6-77, 6-79, 6-81, AND 6-83). REMOVE AND INSPECT FUEL CHECK VALVE (REF. TASK 6-49). APPLY COMPRESSED AIR AT 10PSI. IN DIRECTION OF ARROW.

IS VALVE RESTRICTED OR CLOGGED?

YES → INSTALL SERVICEABLE CHECK VALVE (REF. TASK 6-51).

NO ↓

APPLY COMPRESSED AIR AT 150 PSI. IN OPPOSITE DIRECTION OF ARROW.

IS VALVE LEAKING?

YES → INSTALL SERVICEABLE CHECK VALVE (REF. TASK 6-51).

NO ↓

WARNING

DISCONNECT DC POWER SOURCE TO IGNITION EXCITER OR OPEN CIRCUIT BREAKER TO PREVENT POSSIBILITY OF FIRE THAT CAN CAUSE INJURY TO PERSONNEL. IF INJURY OCCURS, GET MEDICAL ATTENTION.

INSTALL FUEL CHECK VALVE (REF. TASK 6-51). DISCONNECT HOSE ASSEMBLY (HMA TO OIL COOLER) (REF. TASK 6-64) FROM OIL COOLER. PLACE END OF HOSE INTO UTILITY PAIL. HAVE HELPER MOTOR ENGINE (ECL SET TO GND) (REF. TM 1–1520–252–10).

IS FUEL BEING PUMPED INTO PAIL?

NO → RECONNECT HOSE ASSEMBLY TO OIL COOLER (REF. TASK 6-65).
REPLACE HMA (REF. TASK 6-1 AND 6-5).

YES ↓

GO TO NEXT PAGE

RECONNECT HOSE ASSEMBLY TO OIL COOLER (REF. TASK 6-65). INSTALL KNOWN GOOD PRESSURIZING VALVE (REF. TASK 6-41 AND 6-44). START ENGINE (REF. TM 1–1520–252–10).

IS POWER OK?

YES → FAULT CORRECTED. TAG ORIGINAL PRESSURIZING VALVE AS DEFECTIVE.

NO ↓

REINSTALL ORIGINAL PRESSURIZING VALVE (REF. TASK 6-41 AND 6-44). INSTALL KNOWN GOOD FLOW DIVIDER (REF. TASK 6-45 AND 6-48). START ENGINE (REF. TM 1–1520–252–10).

IS POWER OK?

YES → FAULT CORRECTED. TAG ORIGINAL FLOW DIVIDER AS DEFECTIVE.

NO ↓

REINSTALL ORIGINAL FLOW DIVIDER (REF. TASK 6-45 AND 6-48). INSTALL KNOWN GOOD OVERSPEED SOLENOID VALVE (REF. TASK 6-52 AND 6-56). START ENGINE (REF. TM 1–1520–252–10).

IS POWER OK?

YES → FAULT CORRECTED. TAG ORIGINAL OVERSPEED SOLENOID VALVE AS DEFECTIVE.

NO ↓

REINSTALL ORIGINAL OVERSPEED SOLENOID VALVE (REF. TASK 6-52 AND 6-56). WITH POWER SUPPLIED TO ENGINE AS FOR NORMAL RUNNING, DISCONNECT REVERSIONARY HARNESS CONNECTOR P9 FROM OVERSPEED SOLENOID VALVE CONNECTOR J9. USING MULTIMETER, MEASURE VOLTAGE AT PINS A AND B OF P9.

IS VOLTAGE PRESENT?

YES → TROUBLESHOOT REVERSIONARY HARNESS ASSEMBLY AND TEST CELL HARNESS FOR SHORTING OF OVERSPEED WIRES.

IS SHORT FOUND?

NO → NO ↓

YES → CORRECT CAUSE OF SHORT. RECONNECT P9 CONNECTOR. START ENGINE (REF. TM 1–1520–252–10).

IS POWER OK?

NO → NO ↓

YES → FAULT CORRECTED

GO TO NEXT PAGE

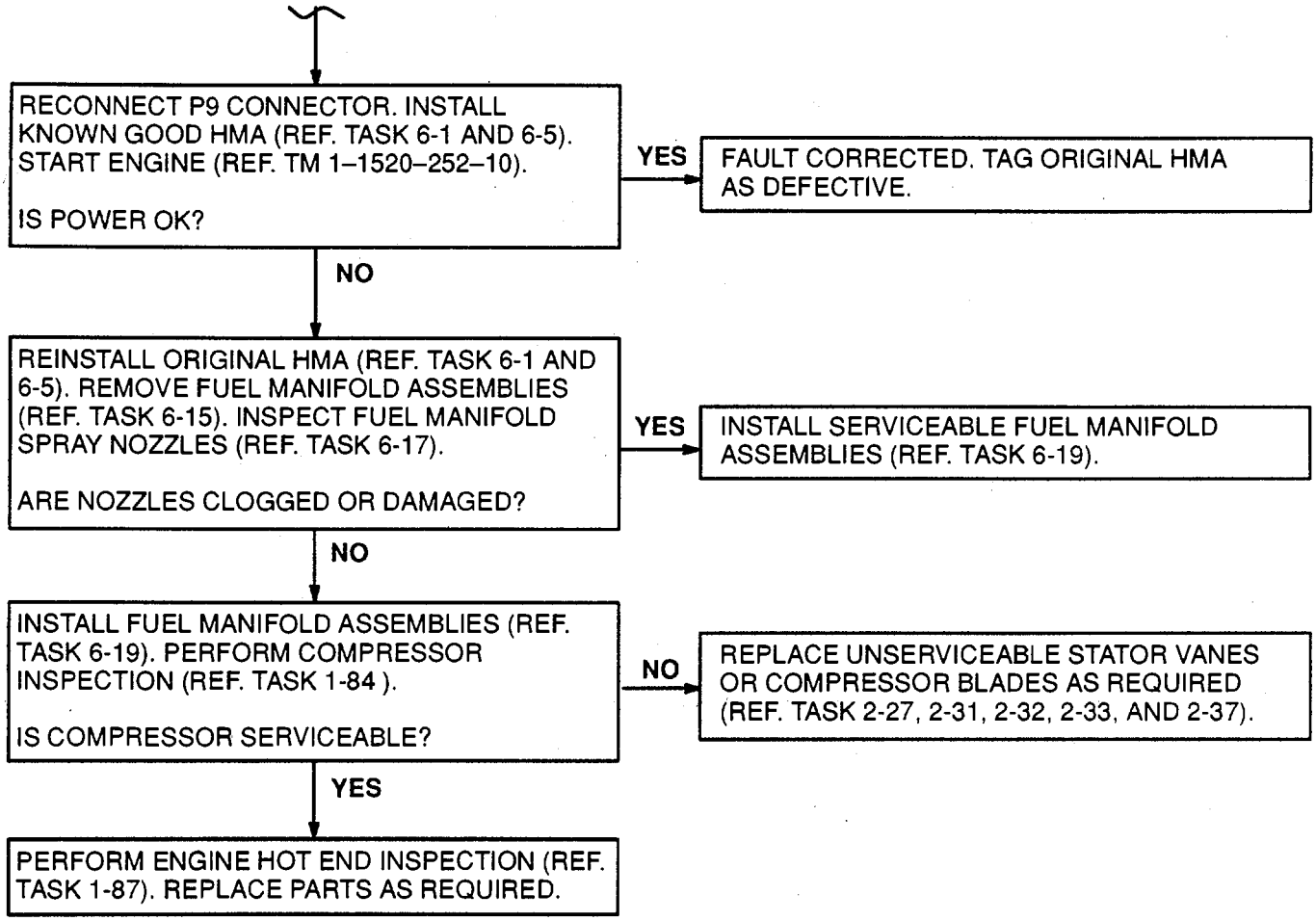

FOLLOW-ON MAINTENANCE:
None

END OF TASK

1-45 POWER LIMITED-REVERSIONARY MODE 1-45

INITIAL SETUP

Applicable Configurations:
All

Tools:
Powerplant Mechanic's Tool Kit,
NSN 5180-00-323-4944

Materials:
None

Personnel Required:
Aircraft Powerplant Repairer

References:

TM 1-1520-252-T
TM 1-1520-252-10
TM 55-1520-249-T
TM 55-4920-328-13

Task 1-47	Task 4-10	Task 6-56
Task 1-79	Task 4-11	Task 6-62
Task 1-84	Task 4-20	Task 6-63
Task 1-95	Task 4-24	Task 6-64
Task 1-96	Task 4-25	Task 6-65
Task1-99	Task 6-1	Task 6-66
Task 2-9	Task 6-5	Task 6-67
Task 2-27	Task 6-8	Task 6-69
Task 2-31	Task 6-12	Task 6-72
Task 2-32	Task 6-15	Task 6-73
Task 2-33	Task 6-17	Task 6-76
Task 2-37	Task 6-19	Task 6-77
Task 2-63	Task 6-28	Task 6-78
Task 2-64	Task 6-34	Task 6-79
Task 2-71	Task 6-35	Task 6-80
Task 2-72	Task 6-40	Task 6-81
Task 4-1	Task 6-41	Task 6-82
Task 4-2	Task 6-44	Task 6-83
Task 4-3	Task 6-45	Task 6-84
Task 4-4	Task 6-48	Task 6-85
Task 4-5	Task 6-49	APPENDIX G
Task 4-6	Task 6-51	
Task 4-7	Task 6-52	

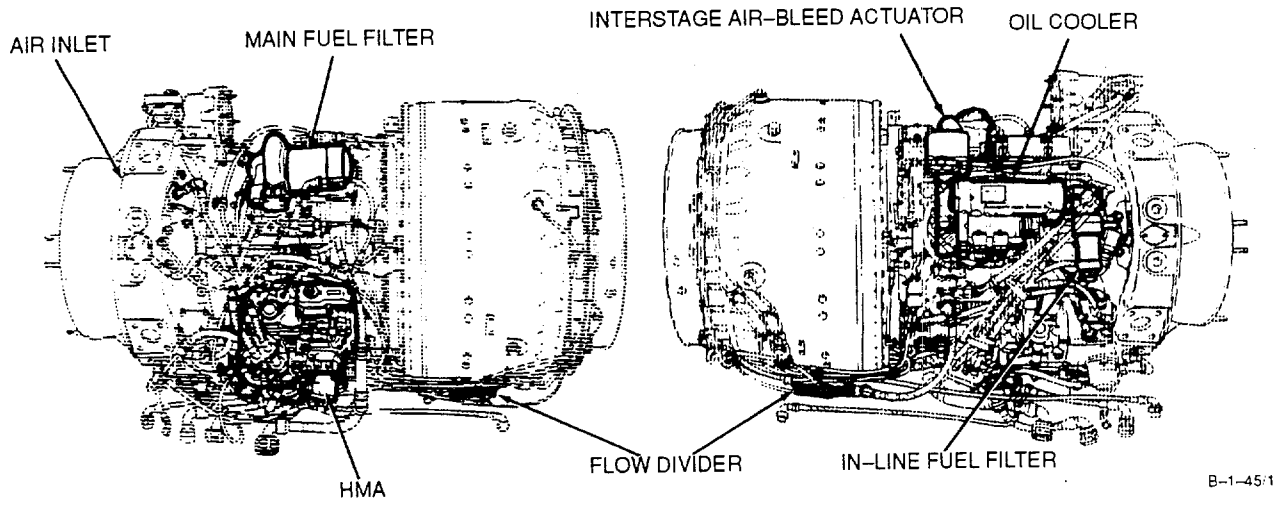

GO TO NEXT PAGE

NOTE: VERIFY TEST CELL EQUIPMENT WITHIN PROPER CALIBRATION.

NOTE: ENGINE REVERSIONARY CONTROL SYSTEM LIMITS POWER BASED ON CONTROL INPUT DEMANDING LOWEST FUEL FLOW.
OPERATOR SHOULD VERIFY THAT POWER LIMITING IS NOT CAUSED BY IMPROPER SETTING OF ECL, COLLECTIVE PITCH, BEEPER AND/OR LOAD CONTROL.
ALSO, VERIFY ENGINE NOT BEING POWER LIMITED DUE TO REACHING $T_{4.5}$ OR N_1 MAXIMUM LIMITS.

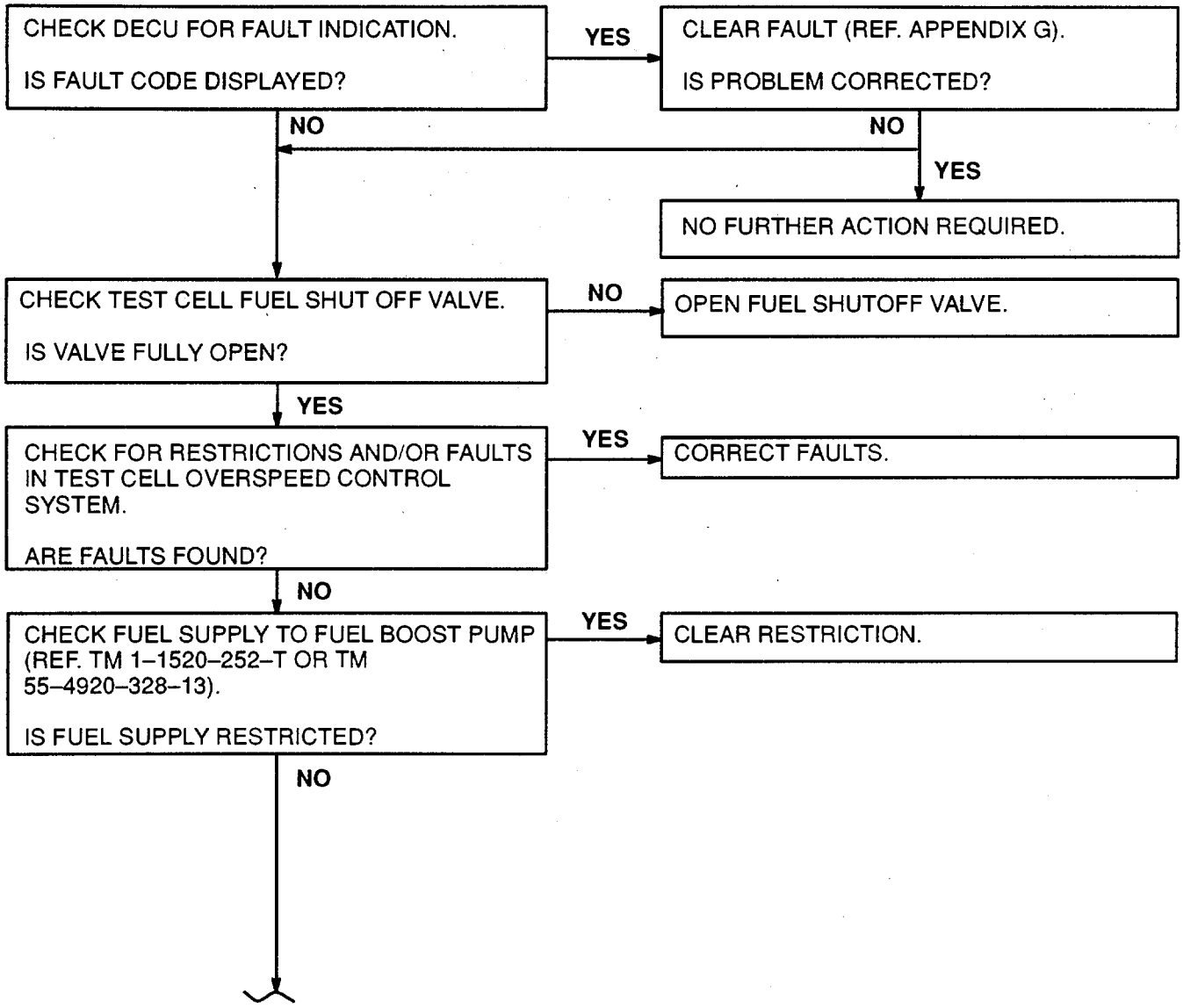

GO TO NEXT PAGE

TASK	RESULT
1. Check inline fuel filter differential pressure indicator button. 2. Check main fuel filter differential pressure indicator button.	**CAUTION** **IN THE FOLLOWING TWO STEPS IF DIFFERENTIAL PRESSURE INDICATOR BUTTON BECOMES EXTENDED MORE THAN ONCE WITHIN EACH PERIOD OF ENGINE OPERATION, INSPECT CONTAMINATED FUEL SYSTEM (REF. TASK 1-79).** If differential pressure indicator button is extended, service filter and reset button (Ref. Task 1-96). If differential pressure indicator button is extended, service filter and reset button (Ref. Task 1-95).

GO TO NEXT PAGE

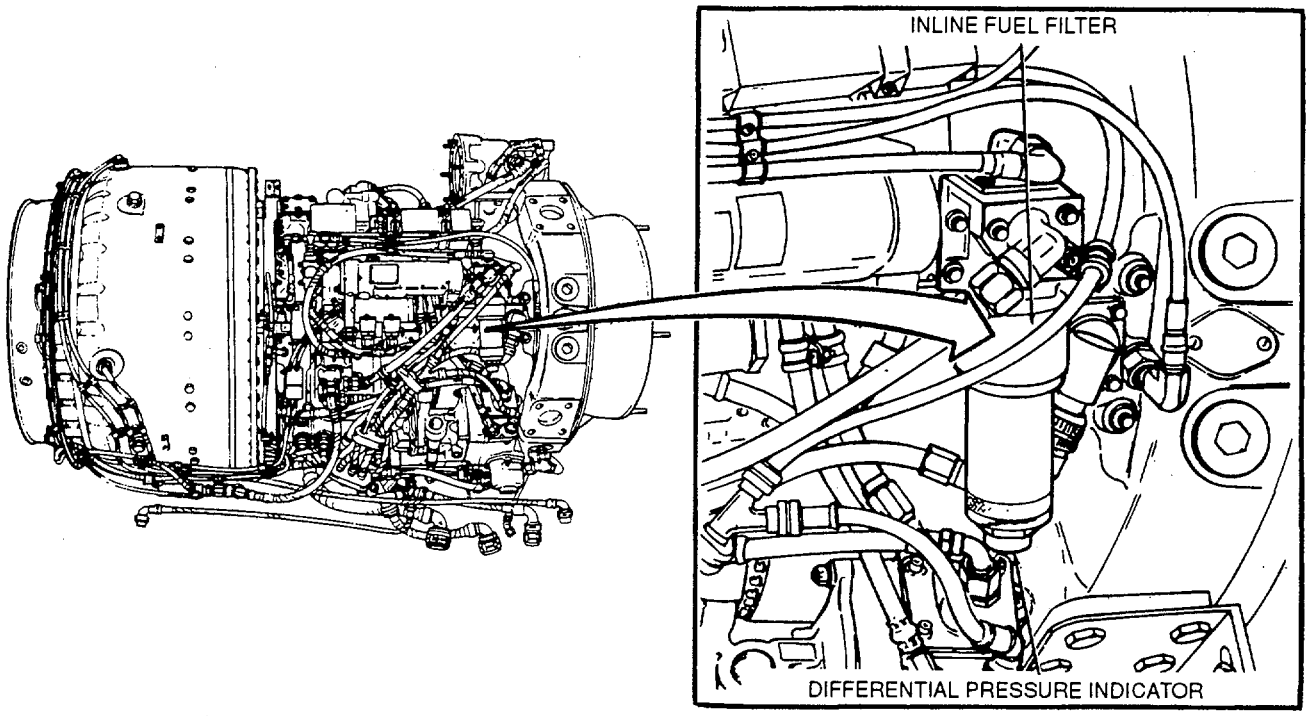

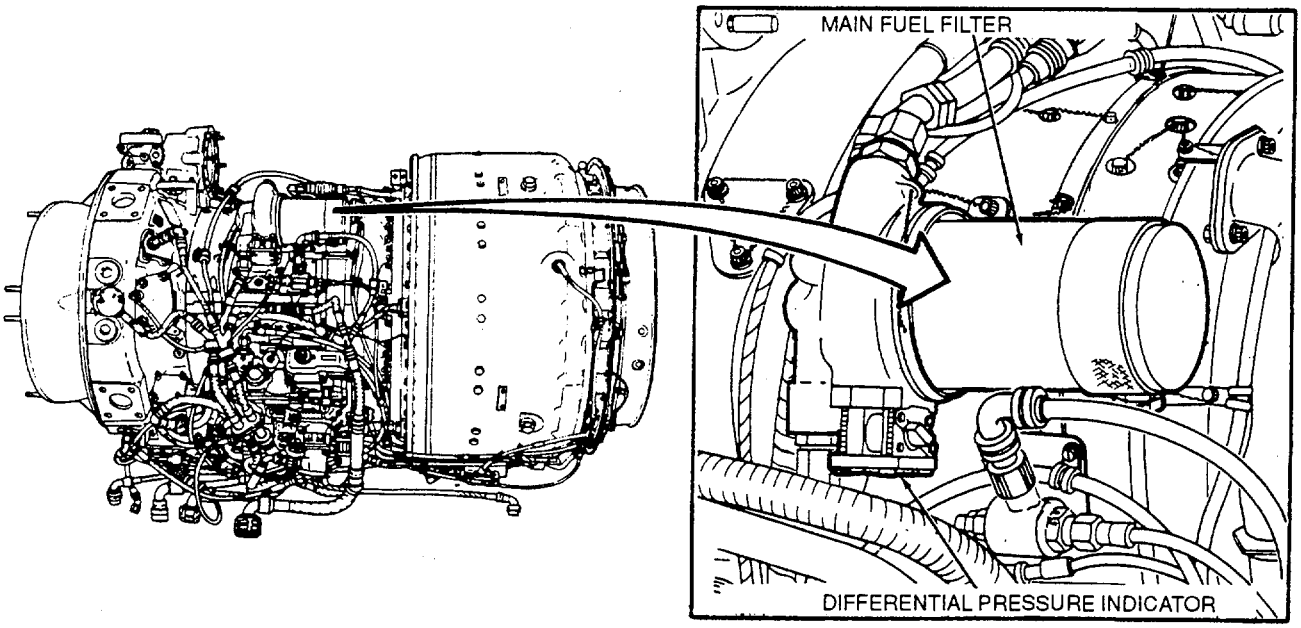

B-1-36/1

GO TO NEXT PAGE

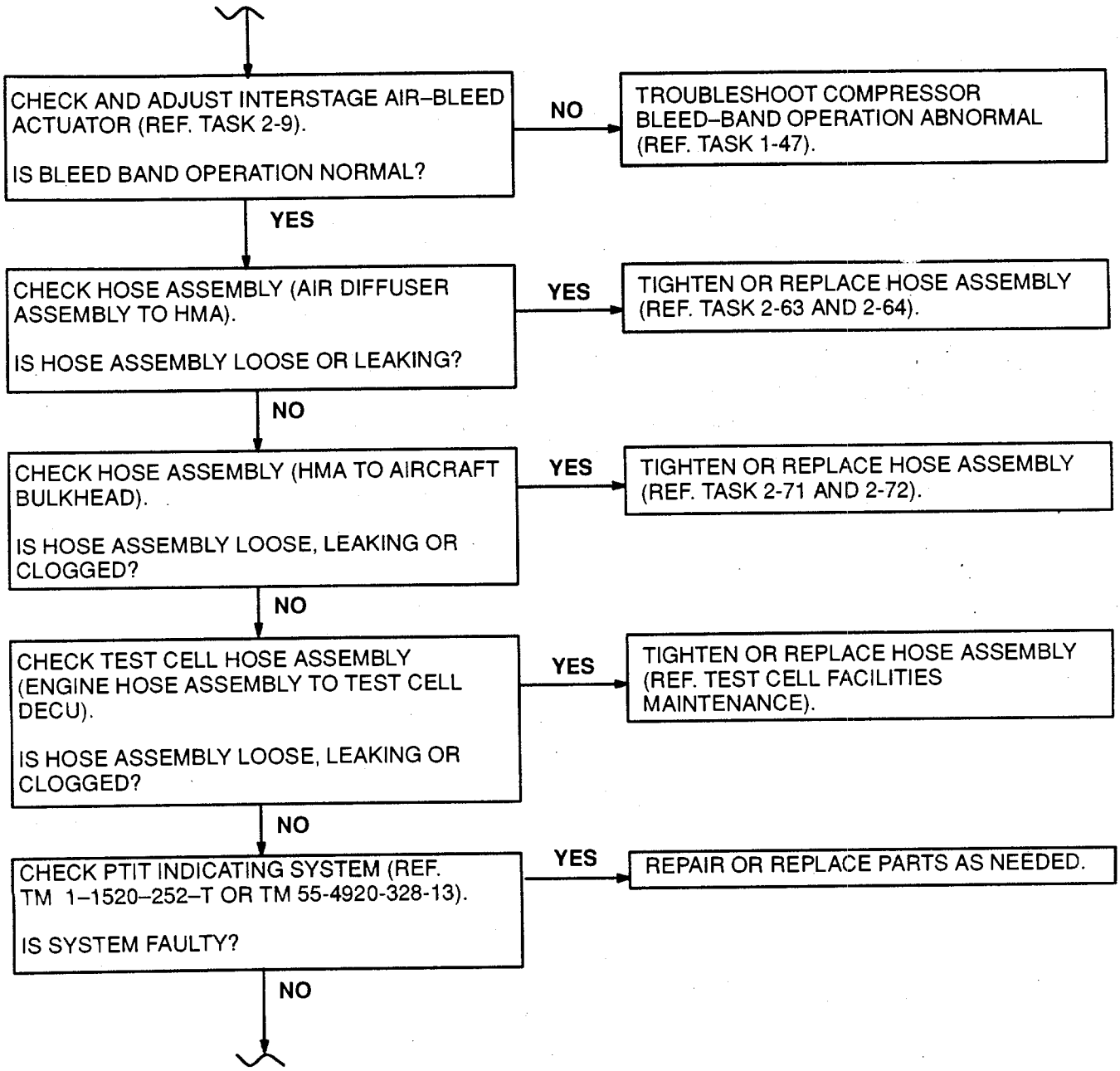

GO TO NEXT PAGE

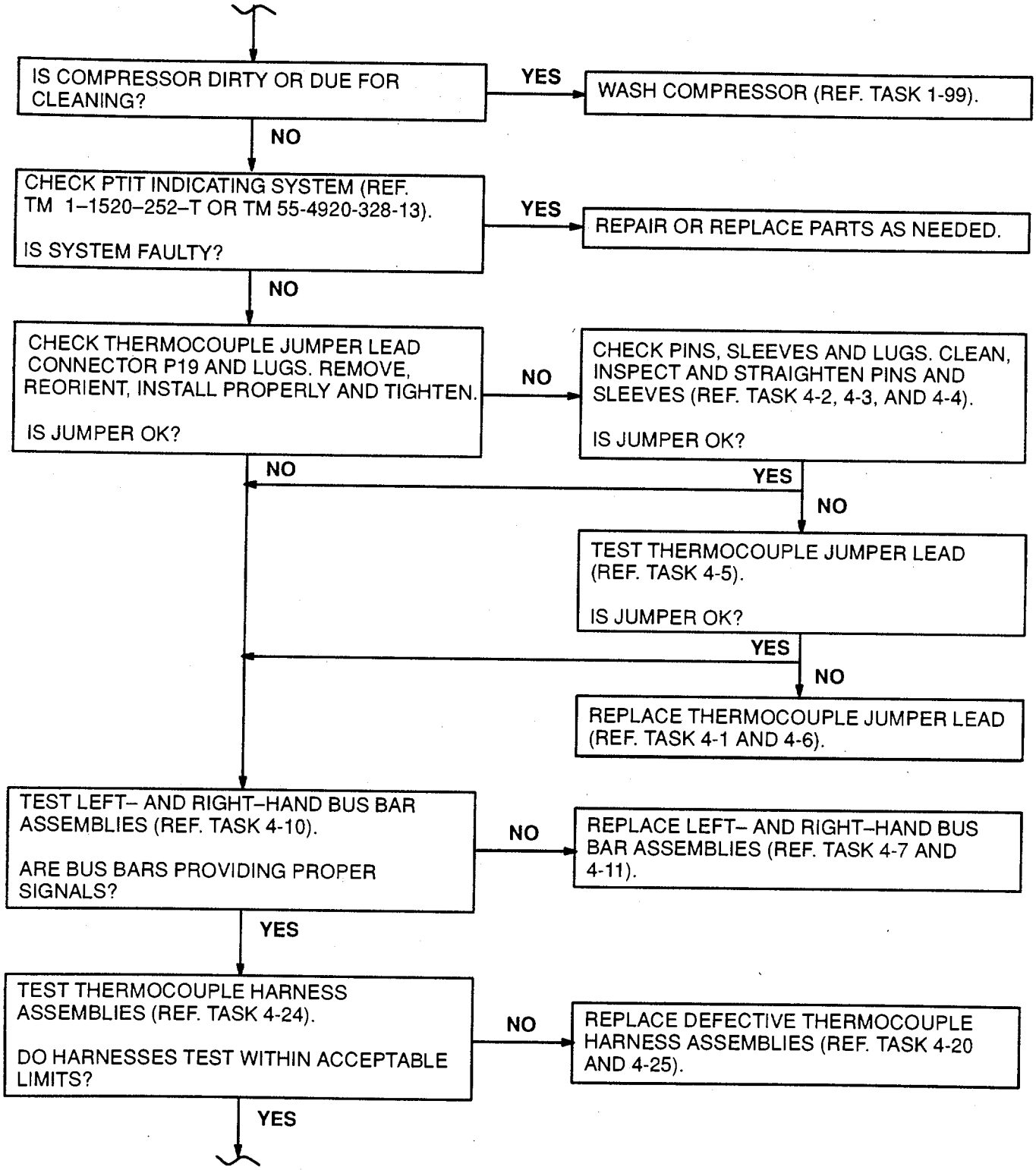

GO TO NEXT PAGE

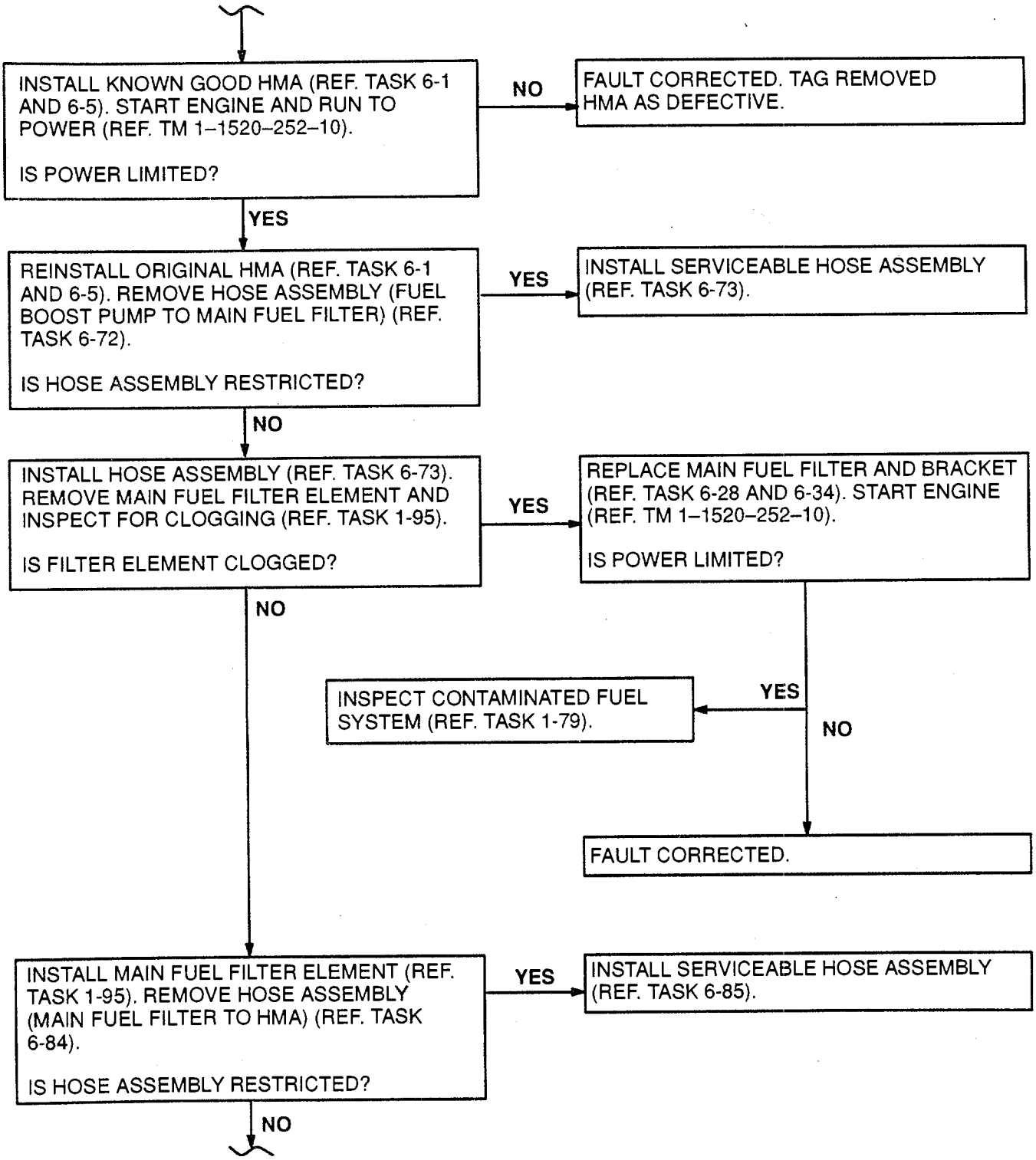

GO TO NEXT PAGE

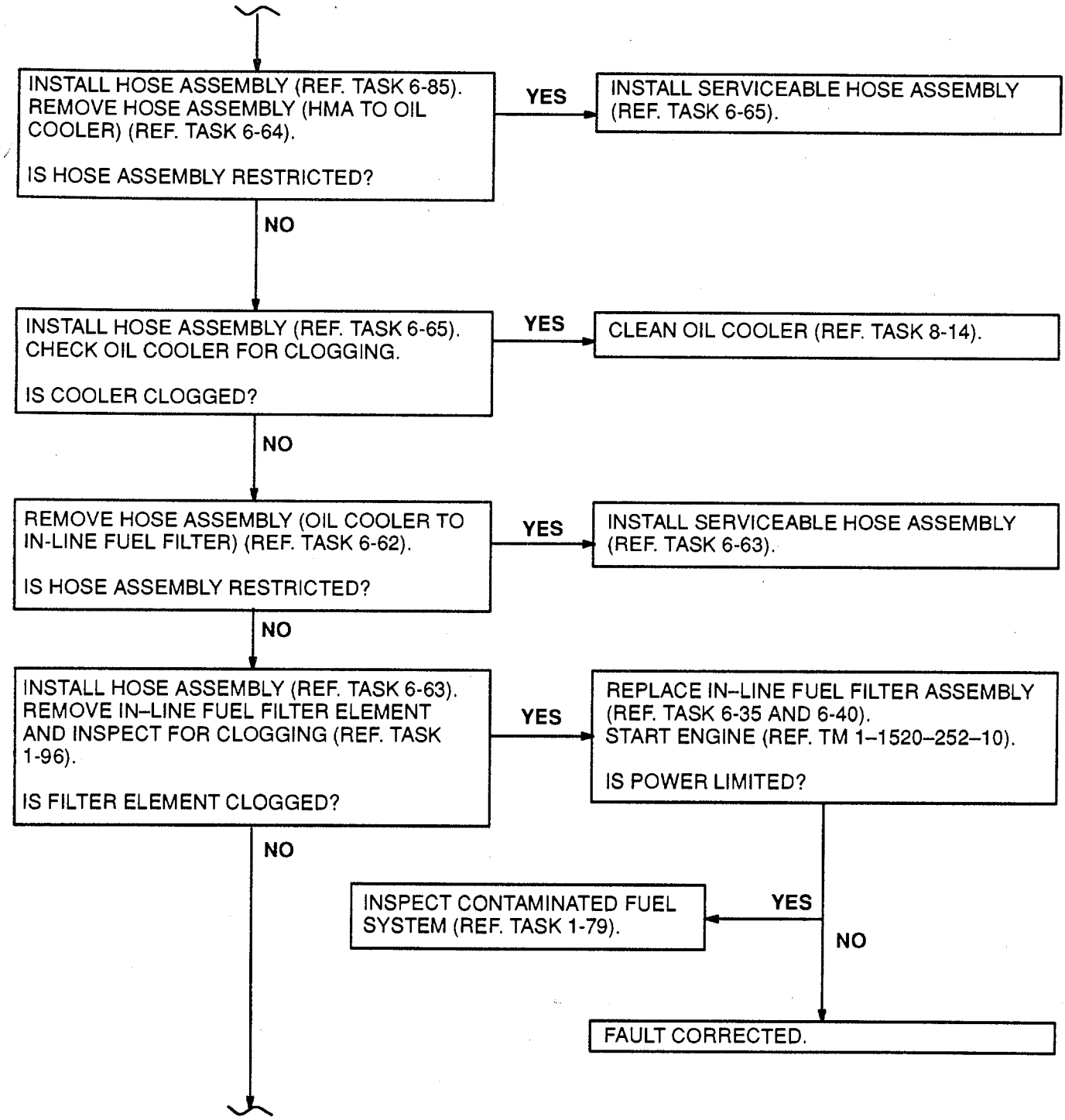

GO TO NEXT PAGE

INSTALL IN–LINE FUEL FILTER ELEMENT (REF. TASK 1-96). REMOVE HOSE ASSEMBLY (IN–LINE FUEL FILTER TO OVERSPEED SOLENOID VALVE) (REF. TASK 6-66).

IS HOSE ASSEMBLY RESTRICTED?

YES → INSTALL SERVICEABLE HOSE ASSEMBLY (REF. TASK 6-67).

NO ↓

INSTALL HOSE ASSEMBLY (REF. TASK 6-67). REMOVE HOSE ASSEMBLY (OVERSPEED SOLENOID VALVE TO PRESSURIZING VALVE) (REF. TASK 6-68).

IS HOSE ASSEMBLY RESTRICTED?

YES → INSTALL SERVICEABLE HOSE ASSEMBLY (REF. TASK 6-69).

NO ↓

WARNING

DISCONNECT DC POWER SOURCE TO IGNITION EXCITER OR OPEN CIRCUIT BREAKER TO PREVENT POSSIBILITY OF FIRE THAT CAN CAUSE INJURY TO PERSONNEL. IF INJURY OCCURS, GET MEDICAL ATTENTION.

INSTALL HOSE ASSEMBLY. (REF. TASK 6-69). DISCONNECT MAIN FUEL HOSE AT INLET OF HMA. PLACE END OF HOSE INTO UTILITY PAIL. HAVE HELPER MOTOR ENGINE (ECL SET TO GND) (REF. TM 1–1520–252–10).

IS FUEL BEING PUMPED INTO PAIL?

NO → CONNECT MAIN FUEL HOSE AT INLET OF HMA. REPLACE FUEL BOOST PUMP (REF. TASK 6-8 AND 6-12).

YES ↓

GO TO NEXT PAGE

CONNECT MAIN FUEL HOSE AT INLET OF HMA.
REMOVE AND INSPECT HOSE ASSEMBLIES (FUEL FLOW DIVIDER LEFT AND RIGHT SIDE PRIMARY AND SECONDARY) (REF. TASK 6-76, 6-78, 6-80, AND 6-82).

ARE HOSE ASSEMBLIES RESTRICTED OR CLOGGED?

YES → INSTALL SERVICEABLE HOSE ASSEMBLIES AS REQUIRED.

NO ↓

INSTALL HOSE ASSEMBLIES (REF. TASK 6-77, 6–79, 6-81, AND 6-83). REMOVE AND INSPECT FUEL CHECK VALVE (REF. TASK 6-49). APPLY COMPRESSED AIR AT 10PSI. IN DIRECTION OF ARROW.

IS VALVE RESTRICTED OR CLOGGED?

YES → INSTALL SERVICEABLE CHECK VALVE (REF. TASK 6-51).

NO ↓

APPLY COMPRESSED AIR AT 150 PSI. IN OPPOSITE DIRECTION OF ARROW.

IS VALVE LEAKING?

YES → INSTALL SERVICEABLE CHECK VALVE (REF. TASK 6-51).

NO ↓

WARNING

DISCONNECT DC POWER SOURCE TO IGNITION EXCITER OR OPEN CIRCUIT BREAKER TO PREVENT POSSIBILITY OF FIRE THAT CAN CAUSE INJURY TO PERSONNEL. IF INJURY OCCURS, GET MEDICAL ATTENTION.

INSTALL FUEL CHECK VALVE (REF. TASK 6-51). DISCONNECT HOSE ASSEMBLY (HMA TO OIL COOLER) FROM OIL COOLER. PLACE END OF HOSE INTO UTILITY PAIL. HAVE HELPER MOTOR ENGINE (ECL SET TO GND) (REF. TM 1–1520–252–10).

IS FUEL BEING PUMPED INTO PAIL?

NO → RECONNECT HOSE ASSEMBLY TO OIL COOLER.
REPLACE HMA (REF. TASK 6-1 AND 6-5).

YES ↓

GO TO NEXT PAGE

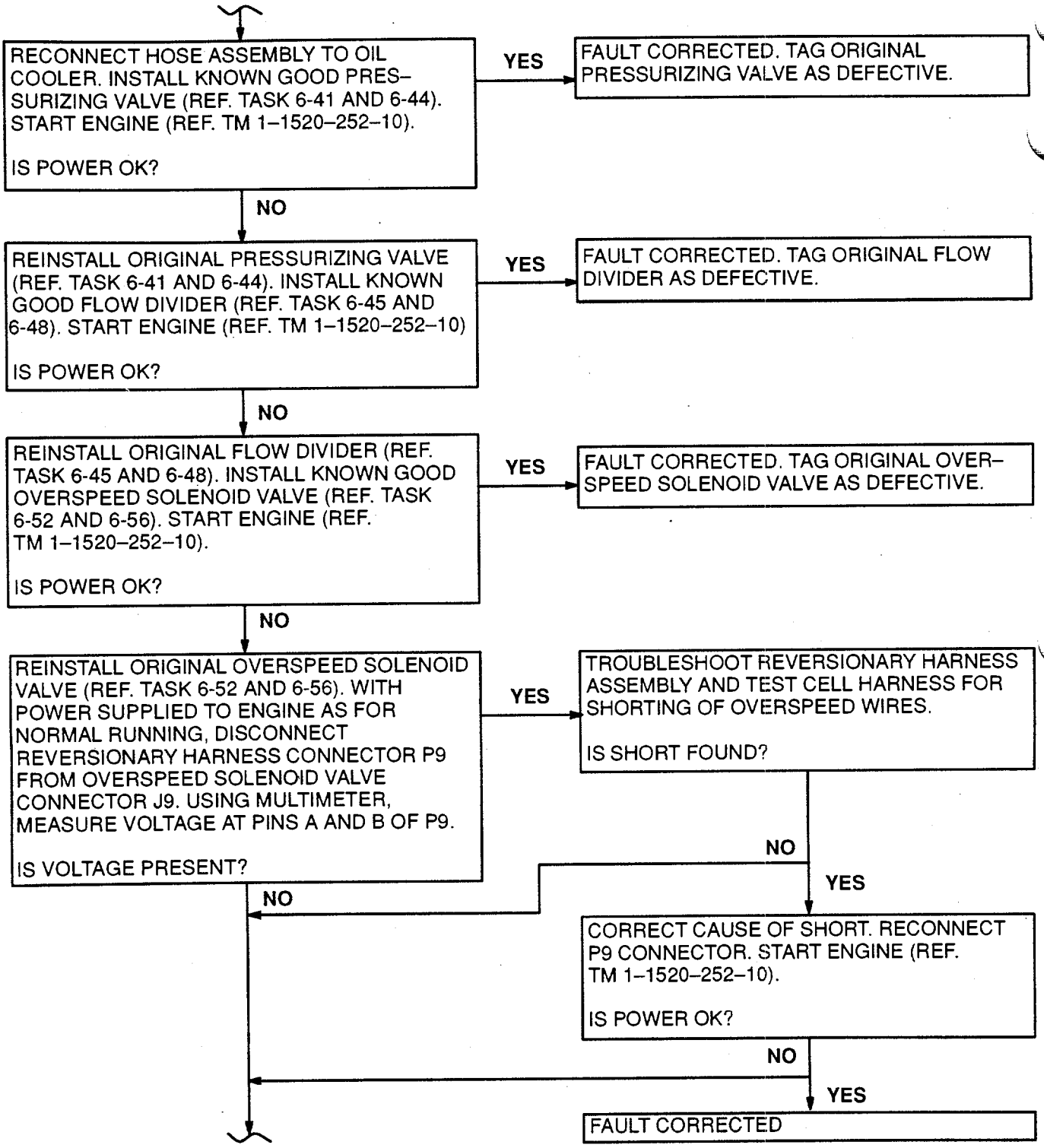

GO TO NEXT PAGE

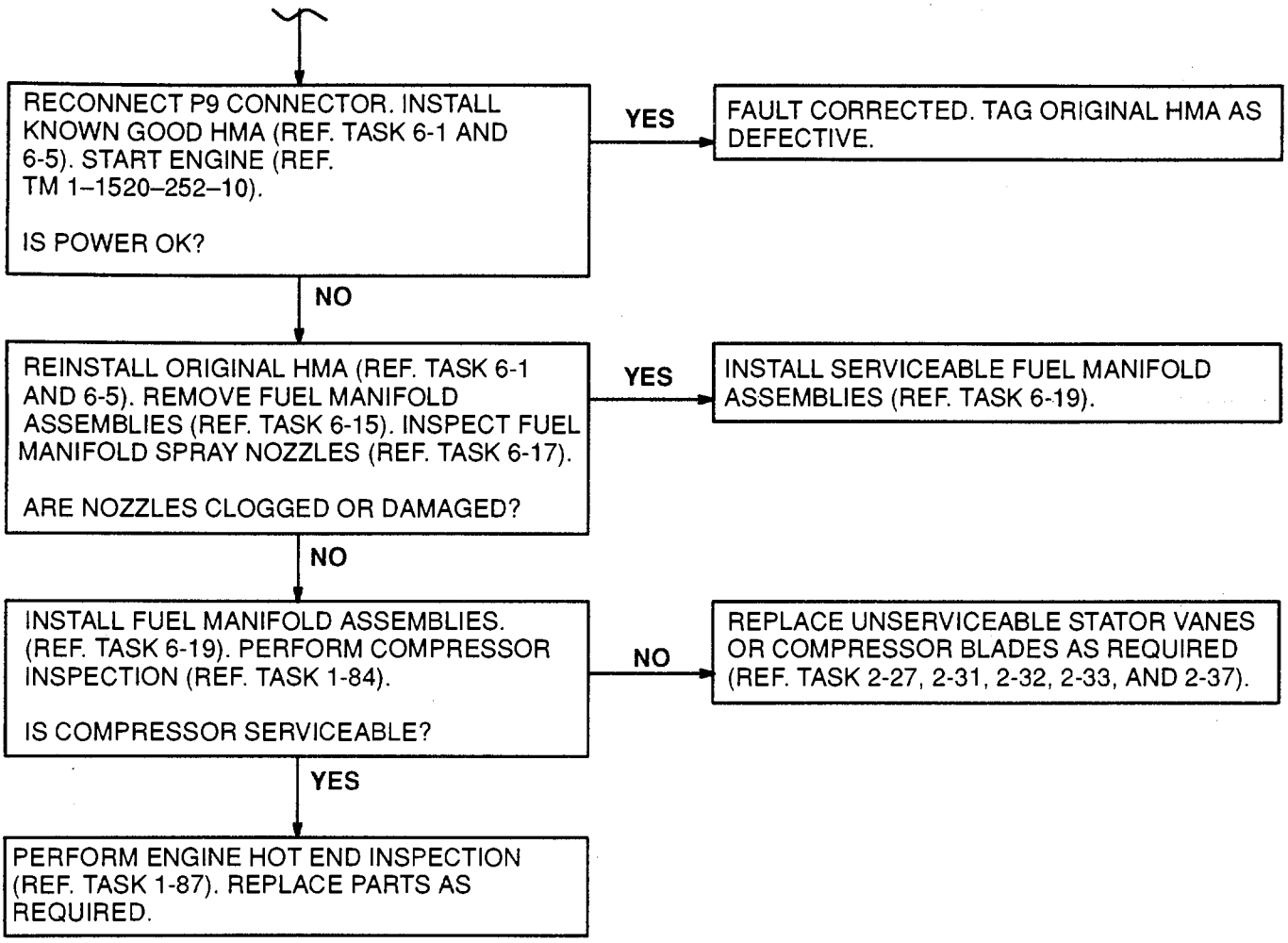

FOLLOW-ON MAINTENANCE:
None

END OF TASK

1-46 COMPRESSOR SURGES

INITIAL SETUP

Applicable Configurations:
All

Tools:
Powerplant Mechanic's Tool Kit,
NSN 5180-00-323-4944

Materials:
None

Personnel Required:
Aircraft Personnel Repairer

References:
TM 1-1520-252-T
TM 1-1520-252-10
TM 55-4920-328-13

Task 1-47	Task 2-4	Task 2-37
Task 1-84	Task 2-5	Task 2-52
Task 1-86	Task 2-6	Task 2-56
Task 1-87	Task 2-7	Task 2-57
Task 1-99	Task 2-9	Task 2-58
Task 1-100	Task 2-27	Task 6-1
Task 2-1	Task 2-31	Task 6-5
Task 2-2	Task 2-32	APPENDIX G
Task 2-3	Task 2-33	

NOTE: T55-L-714 ENGINES EXHIBIT SLIGHT ROUGHNESS OR UNSTABLE OPERATION DURING ENGINE DECELERATION THROUGH 30 PERCENT NORMAL RATED POWER RANGE.
THIS CHARACTERISTIC IS DUE TO MOMENTARY UNSTABLE AIR FLOW WHICH OCCURS DURING DECELERATION, JUST PRIOR TO OPENING OF INTERSTAGE AIR-BLEED SYSTEM.
TROUBLE SHOOTING OF THIS PROBLEM IS NOT REQUIRED.

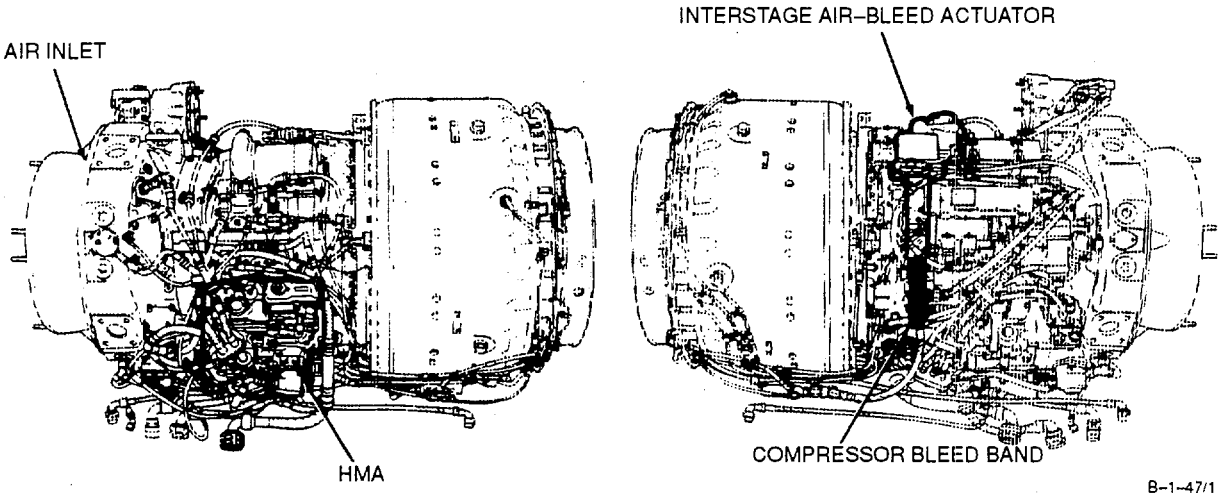

GO TO NEXT PAGE

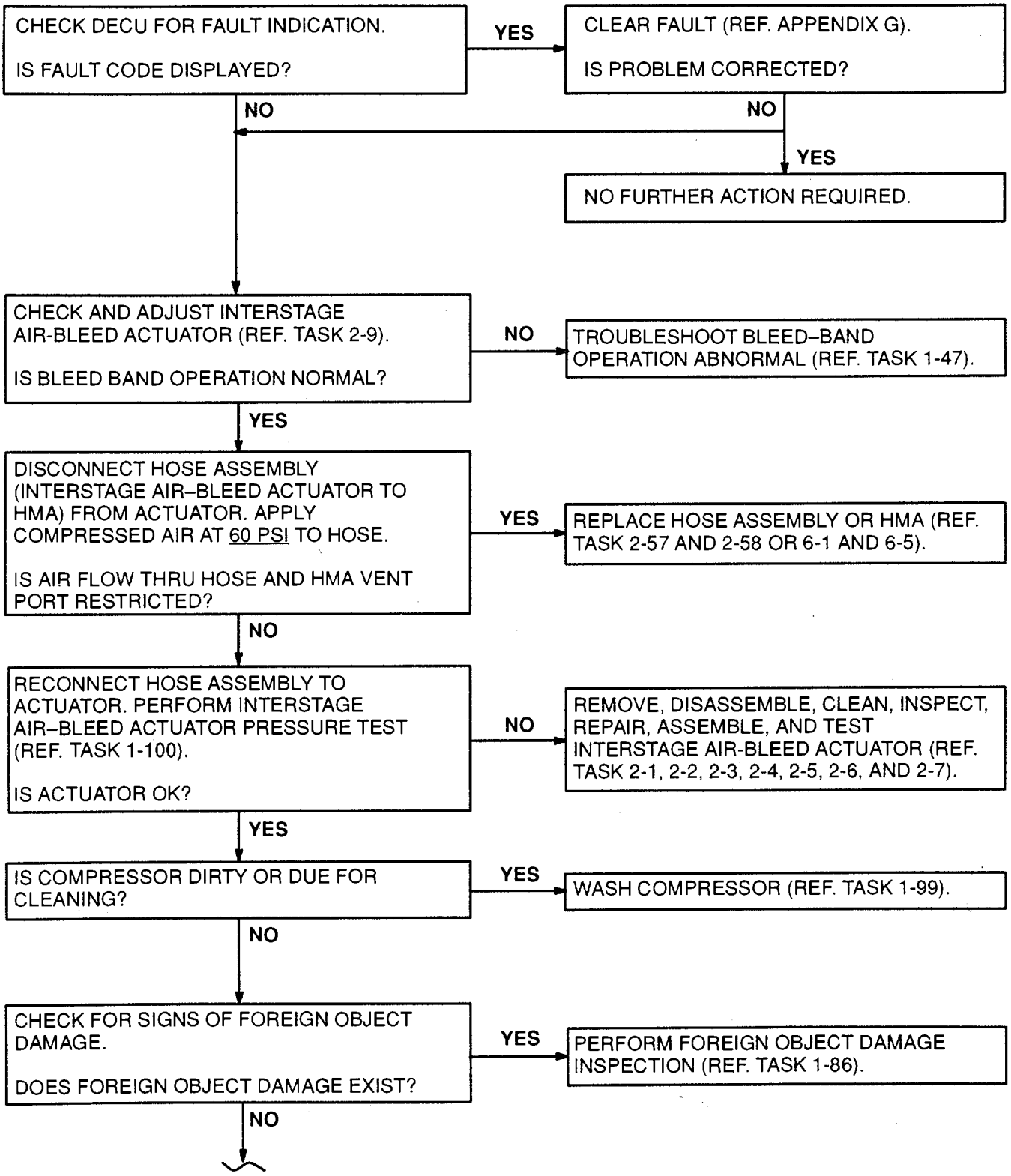

GO TO NEXT PAGE

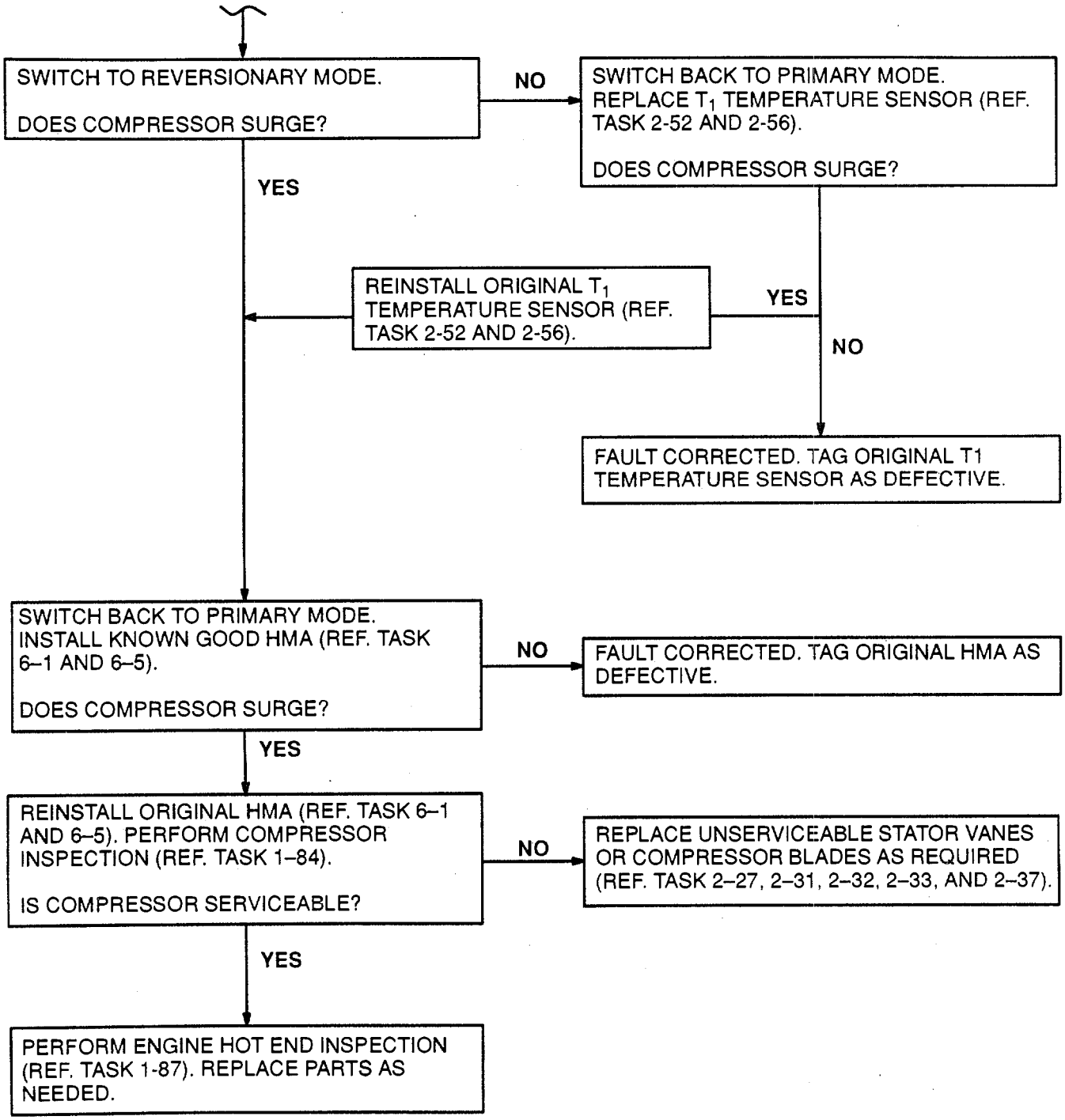

FOLLOW-ON MAINTENANCE:
None

END OF TASK

1-47 COMPRESSOR BLEED BAND OPERATION ABNORMAL - PRIMARY MODE 1-47

INITIAL SETUP

Applicable Configurations:
All

Tools:
Powerplant Mechanic's Tool Kit,
NSN 5180-00-323-4944

Materials:
None

Personnel Required:
Aircraft Powerplant Repairer

References:

Task 1-100	Task 2-56	Task 2-70
Task 2-1	Task 2-57	Task 2-73
Task 2-2	Task 2-58	Task 2-75
Task 2-3	Task 2-59	Task 2-76
Task 2-4	Task 2-60	Task 2-79
Task 2-5	Task 2-65	Task 2-81
Task 2-6	Task 2-66	Task 2-78
Task 2-7	Task 2-67	Task 6-1
Task 2-52	Task 2-68	Task 6-5
Task 2-9	Task 2-69	APPENDIX G

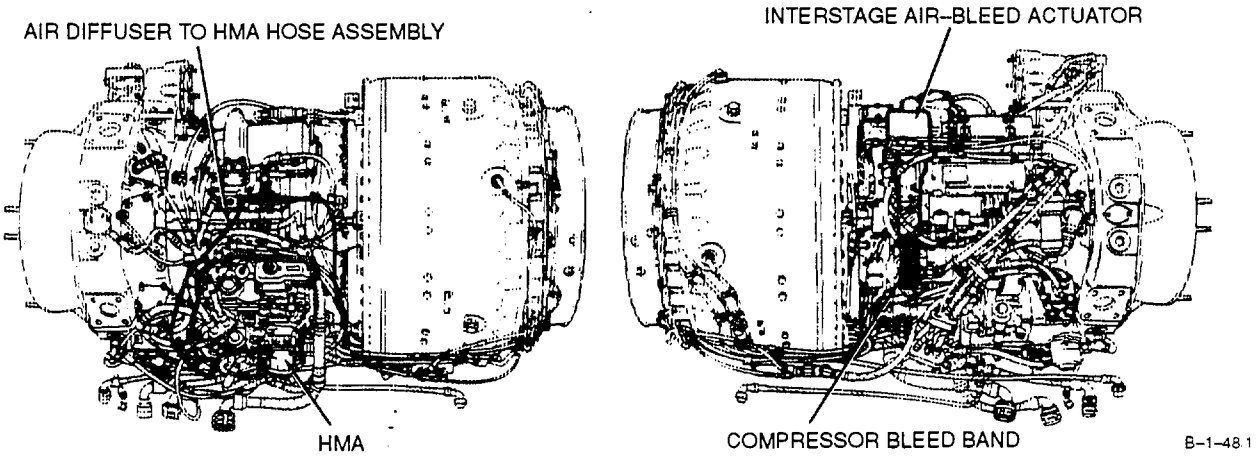

NOTE: PRIMARY CONTROL MODE SETS BLEED-BAND CLOSURE AND OPENING POINTS BASED ON REFERRED N_1 SPEED (i.e. CORRECTED FOR AMBIENT TEMPERATURE).
IN DETERMING WHERE BLEED TRANSITION SHOULD OCCUR, BE SURE TO USE SAME AMIENT TEMPERATURE AS SEEN BY T_1 TEMPERATURE SENSOR.
LARGE VARIABLES T_1 TEMPERATURE MAY OCCURE DUE TO DUMPING OF ENGINE BLEED AIR INTO TEST CELL.
NOTE: BLEED OPENING ABOVE BLEED CLOSURE SPEED IS ORMAL DURING TRANSIENTS. BLEED OPENING ABOVE BLEED CLOSURE SPEED SHOULD NOT OCCUR DURING STABLE STEADY-STATE OPERATION.

GO TO NEXT PAGE

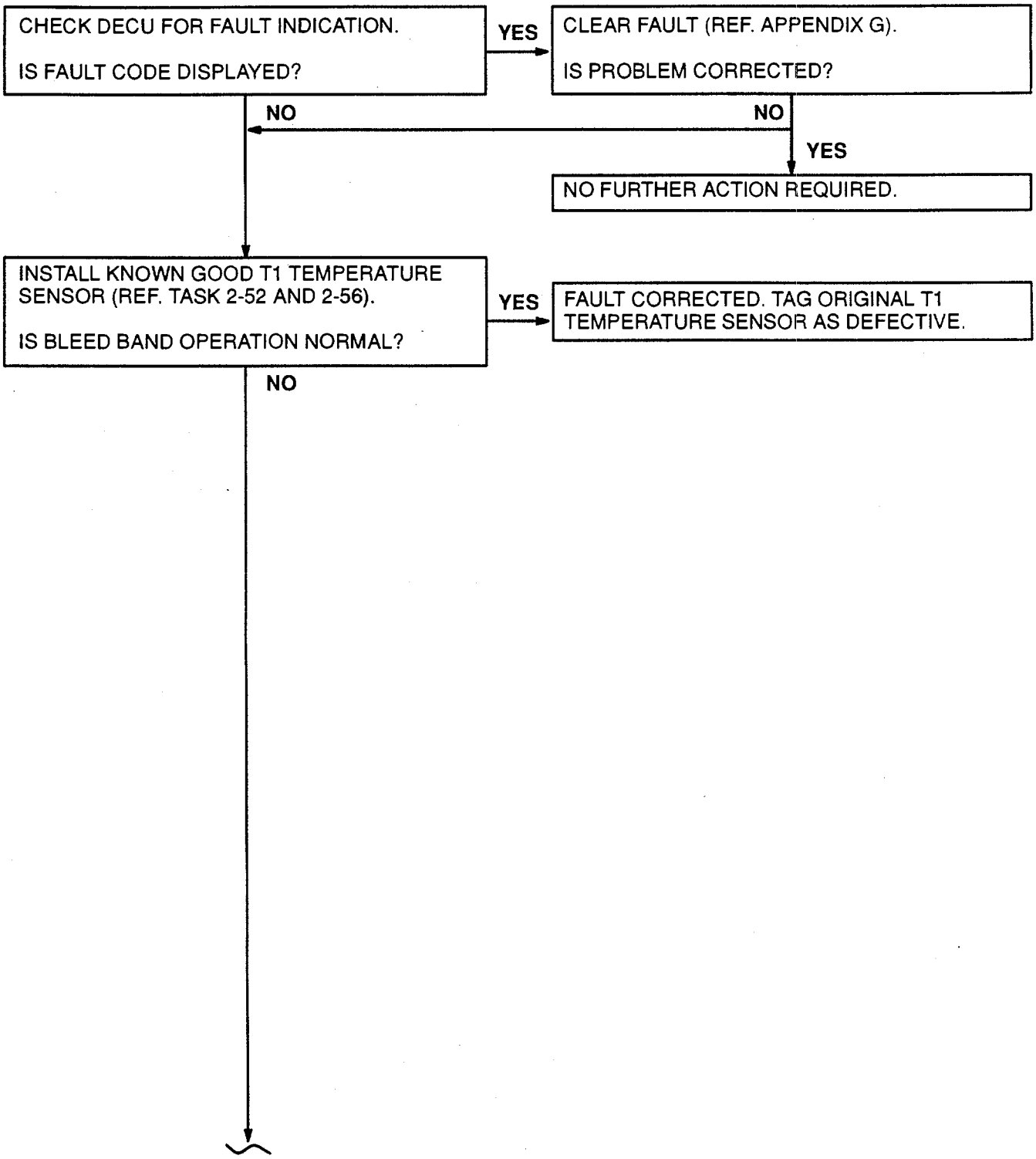

GO TO NEXT PAGE

REINSTALL ORIGINAL T1 TEMPERATURE SENSOR (REF. TASK 2-52 AND 2-56).
CHECK TUBE ASSEMBLY (AIR DIFFUSER ASSEMBLY TO CHECK VALVE).

IS TUBE ASSEMBLY CLOGGED OR LEAKING?

YES → TIGHTEN OR REPLACE TUBE ASSEMBLY (REF. TASK 2-59 AND 2-60).

NO ↓

EXAMINE CHECK VALVE (AIR DIFFUSER TO INTERSTAGE AIR–BLEED ACTUATOR).

IS CHECK VALVE CLOGGED OR LEAKING?

YES → TIGHTEN OR REPLACE CHECK VALVE (REF. TASK 2-73 AND 2-75).

NO ↓

CHECK HOSE ASSEMBLY (CHECK VALVE TO INTERSTAGE AIR–BLEED ACTUATOR P_3 INLET).

IS HOSE ASSEMBLY CLOGGED OR LEAKING?

YES → TIGHTEN OR REPLACE HOSE ASSEMBLY (REF. TASK 2-65 AND 2-66).

NO ↓

CHECK HOSE ASSEMBLY (WATER WASH TEE CHECK VALVE TO INTERSTAGE AIR–BLEED ACTUATOR P_3 INLET).

IS HOSE ASSEMBLY LEAKING?

YES → TIGHTEN OR REPLACE HOSE ASSEMBLY (REF. TASK 2-67 AND 2-68).

NO ↓

EXAMINE CHECK VALVE (WATER WASH TEE TO INTERSTAGE AIR–BLEED ACTUATOR P_3 INLET).

IS CHECK VALVE LEAKING?

YES → TIGHTEN OR REPLACE CHECK VALVE (REF. TASK 2-76 AND 2-78).

NO ↓

CHECK HOSE ASSEMBLY (WATER WASH TEE CHECK VALVE TO INTERSTAGE AIR–BLEED ACTUATOR P_M INLET).

IS HOSE ASSEMBLY LEAKING?

YES → TIGHTEN OR REPLACE HOSE ASSEMBLY (REF. TASK 2-69 AND 2-70).

NO ↓

EXAMINE CHECK VALVE (WATER WASH TEE TO INTERSTAGE AIR–BLEED ACTUATOR P_M INLET).

IS CHECK VALVE LEAKING?

YES → TIGHTEN OR REPLACE CHECK VALVE (REF. TASK 2-79 AND 2-81).

NO ↓

GO TO NEXT PAGE

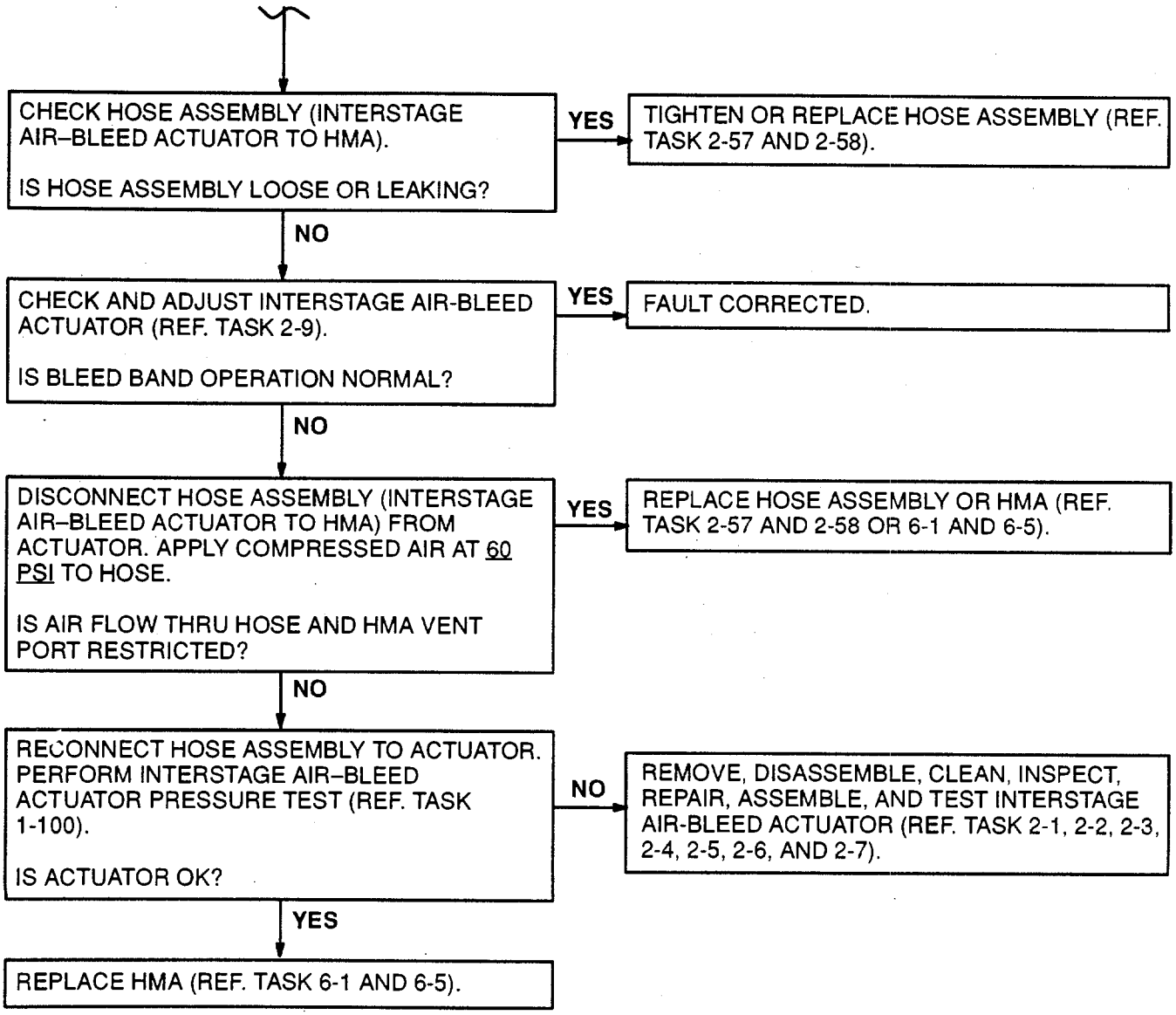

FOLLOW-ON MAINTENANCE:
None

END OF TASK

1-48 COMPRESSOR BLEED BAND OPERATION ABNORMAL-REVERSIONARY MODE 1-48

INITIAL SETUP

Applicable Configurations:
All

Tools:
Powerplant Mechanic's Tool Kit, NSN 5180-00-323-4944

Materials:
None

Personnel Required:
Aircraft Powerplant Repairer

References:

Task 1-100	Task 2-57	Task 2-7
Task 2-1	Task 2-58	Task 2-7
Task 2-2	Task 2-59	Task 2-7
Task 2-3	Task 2-60	Task 2-7
Task 2-4	Task 2-65	Task 2-7
Task 2-5	Task 2-66	Task 2-7
Task 2-6	Task 2-67	Task 2-E
Task 2-7	Task 2-68	Task 6-1
Task 2-9	Task 2-69	Task 6-5

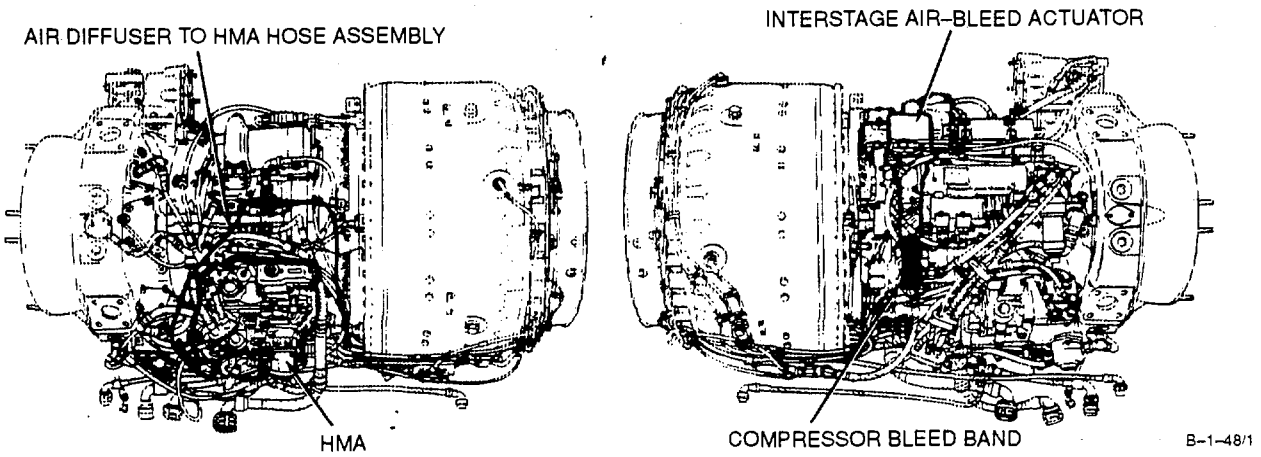

NOTE: IN REVERSIONARY MODE, CONTROL OF BLEED IS LESS PRECISE THAN IN PRIMARY MODE. THIS IS NORMAL AS LONG AS OPENING AND CLOSURE MEET ETS LIMITS FOR REVERSIONARY CONTROL.
OPENING OF THE BLEED-BAND ABOVE BLEED CLOSURE SPEED SHOULD NOT OCCUR DURING TRANSIENT OR STEADY-STATE OPERATION.

GO TO NEXT PAGE

1-48 COMPRESSOR BLEED BAND OPERATION ABNORMAL-REVERSIONARY MODE (Continued) 1-48

CHECK TUBE ASSEMBLY (AIR DIFFUSER ASSEMBLY TO CHECK VALVE).

IS TUBE ASSEMBLY CLOGGED OR LEAKING?

YES → TIGHTEN OR REPLACE TUBE ASSEMBLY (REF. TASK 2-59 AND 2-60).

NO ↓

CHECK CHECK VALVE (AIR DIFFUSER TO INTERSTAGE AIR–BLEED ACTUATOR).

IS CHECK VALVE CLOGGED OR LEAKING?

YES → TIGHTEN OR REPLACE CHECK VALVE (REF. TASK 2-73 AND 2-75).

NO ↓

CHECK HOSE ASSEMBLY (CHECK VALVE TO INTERSTAGE AIR–BLEED ACTUATOR P_3 INLET).

IS HOSE ASSEMBLY CLOGGED OR LEAKING?

YES → TIGHTEN OR REPLACE HOSE ASSEMBLY (REF. TASK 2-65 AND 2-66).

NO ↓

CHECK HOSE ASSEMBLY (WATER WASH TEE CHECK VALVE TO INTERSTAGE AIR–BLEED ACTUATOR P_3 INLET).

IS HOSE ASSEMBLY LEAKING?

YES → TIGHTEN OR REPLACE HOSE ASSEMBLY (REF. TASK 2-67 AND 2-68).

NO ↓

CHECK CHECK VALVE (WATER WASH TEE TO INTERSTAGE AIR–BLEED ACTUATOR P_3 INLET).

IS CHECK VALVE LEAKING?

YES → TIGHTEN OR REPLACE CHECK VALVE (REF. TASK 2-76 AND 2-78).

NO ↓

CHECK HOSE ASSEMBLY (WATER WASH TEE CHECK VALVE TO INTERSTAGE AIR–BLEED ACTUATOR P_M INLET).

IS HOSE ASSEMBLY LEAKING?

YES → TIGHTEN OR REPLACE HOSE ASSEMBLY (REF. TASK 2-69 AND 2-70).

NO ↓

GO TO NEXT PAGE

1-48 COMPRESSOR BLEED BAND OPERATION ABNORMAL-REVERSIONARY MODE (Continued) 1-48

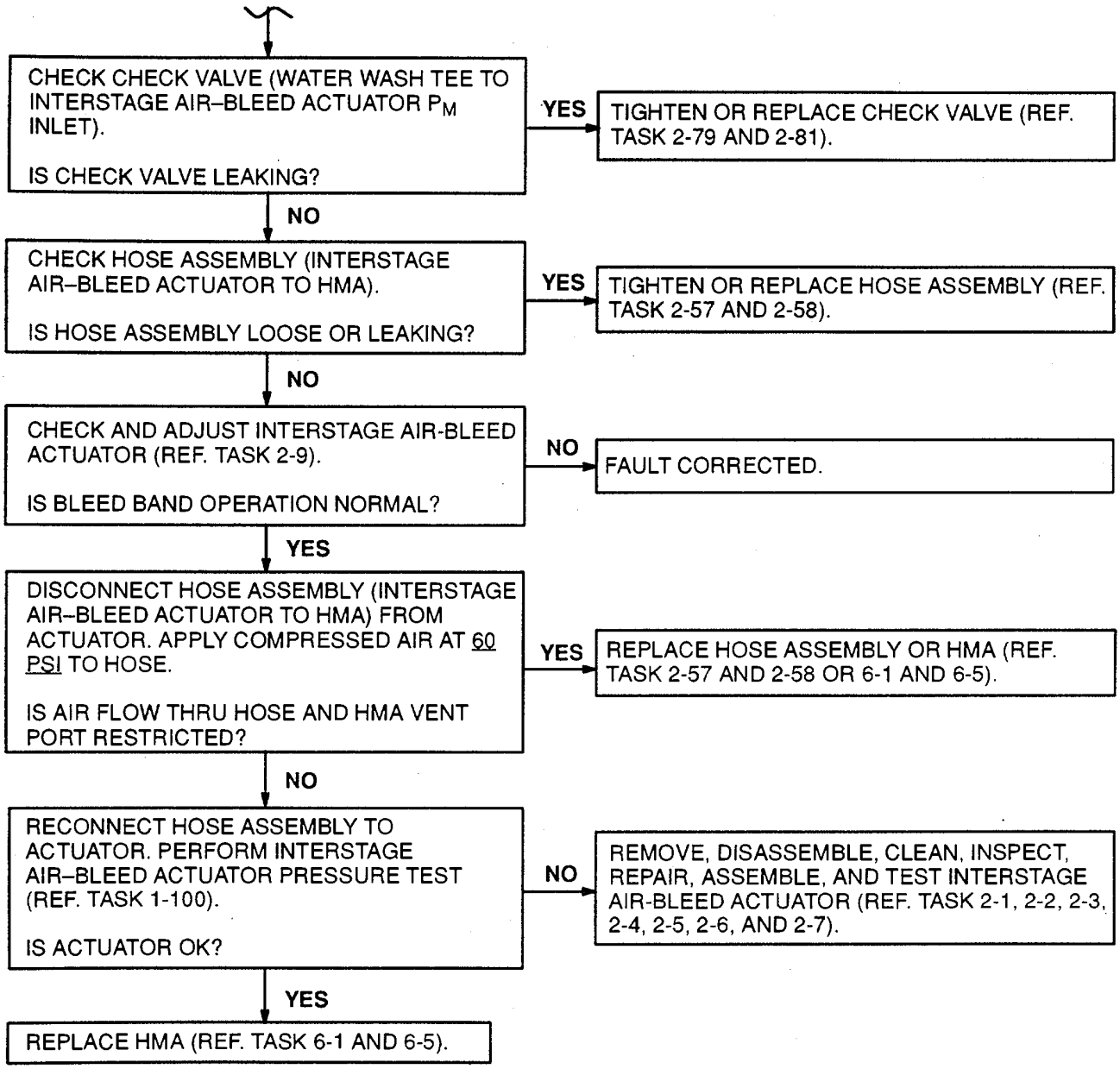

FOLLOW-ON MAINTENANCE:
None

END OF TASK

1-49 ERRATIC OR OSCILLATING N1 SPEED WHILE ENGINE IS GOVERNING ON N1-PRIMARY MODE 1-49

INITIAL SETUP

Applicable Configurations:
All

Tools:
Powerplant Mechanic's Tool Kit, NSN 5180-00-323-4944

Materials:
None

Personnel Required:
Aircraft Powerplant Repairer

References:
TM 1-1520-252-T
TM 1-1520-252-10
TM 55-4920-328-13

Task 1-47	Task 4-6	Task 6-62
Task 1-79	Task 4-7	Task 6-63
Task 1-84	Task 4-10	Task 6-64
Task 1-87	Task 4-11	Task 6-65
Task 1-95	Task 4-20	Task 6-66
Task 1-96	Task 4-24	Task 6-67
Task 1-99	Task 4-25	Task 6-68
Task 2-9	Task 6-1	Task 6-69
Task 2-27	Task 6-5	Task 6-72
Task 2-31	Task 6-8	Task 6-73
Task 2-32	Task 6-12	Task 6-76
Task 2-33	Task 6-15	Task 6-77
Task 2-37	Task 6-17	Task 6-78
Task 2-52	Task 6-19	Task 6-79
Task 2-56	Task 6-28	Task 6-80
Task 2-63	Task 6-34	Task 6-81
Task 2-64	Task 6-35	Task 6-82
Task 2-71	Task 6-40	Task 6-83
Task 2-72	Task 6-41	Task 6-84
Task 4-1	Task 6-44	Task 6-85
Task 4-2	Task 6-45	Task 8-14
Task 4-3	Task 6-51	APPENDIX G
Task 4-4	Task 6-52	
Task 4-5	Task 6-56	

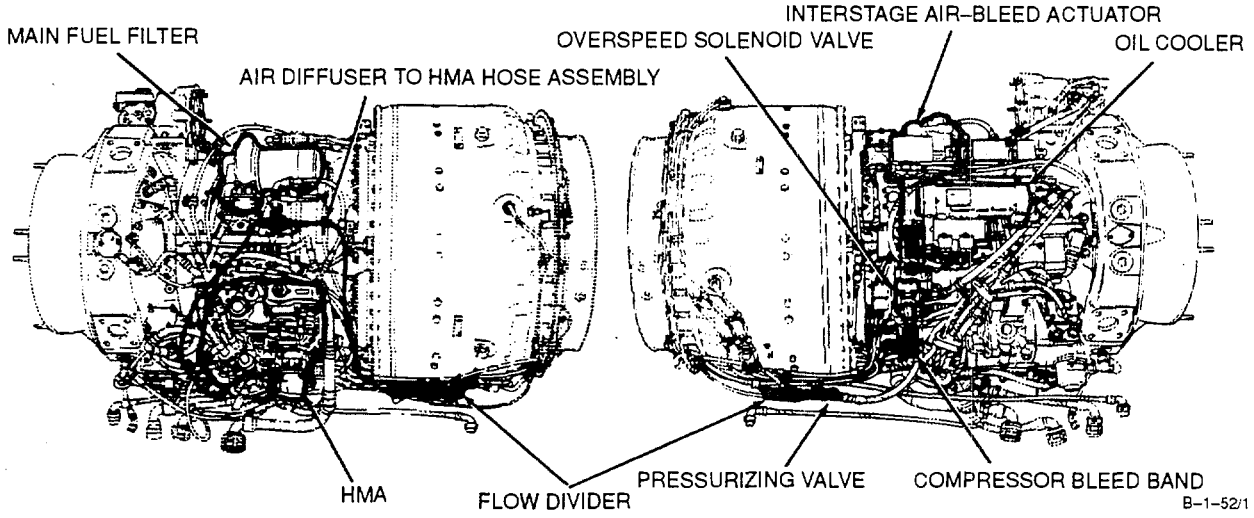

GO TO NEXT PAGE

1-49 ERRATIC OR OSCILLATING N1 SPEED WHILE ENGINE IS GOVERNING ON N1-PRIMARY MODE (Continued) 1-49

NOTE: N_1 OSCILLATION CAN BE CAUSED BY OSCILLATION OR NOISE ON TEST CELL ECL AND COLLECTIVE PITCH SIGNAL INPUTS.
IF N_1 OSCILLATION OCCURS, VERIFY INTEGRITY OF THESE SIGNALS.

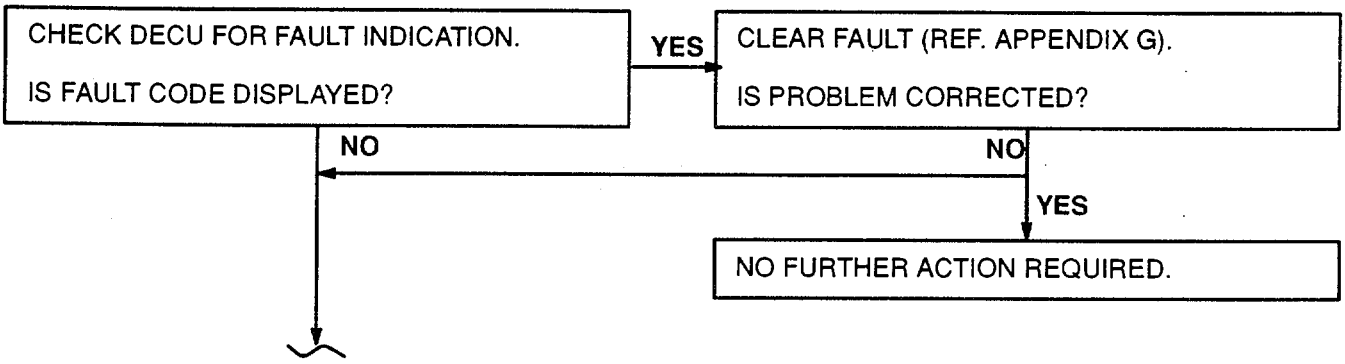

GO TO NEXT PAGE

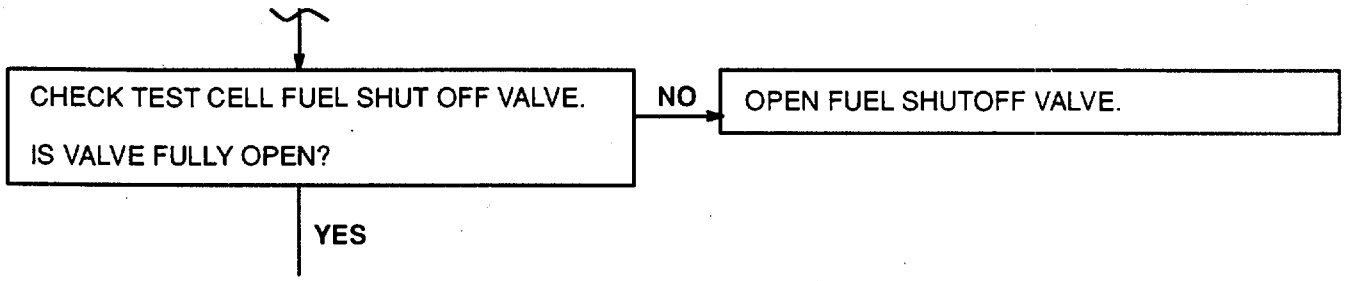

TASK	RESULT
	CAUTION **IN THE FOLLOWING TWO STEPS IF DIFFERENTIAL PRESSURE INDICATOR BUTTON BECOMES EXTENDED MORE THAN ONCE WITHIN EACH PERIOD OF ENGINE OPERATION, INSPECT CONTAMINATED FUEL SYSTEM (REF. TASK 1-79).**
1. Check inline fuel filter differential pressure indicator button.	If differential pressure indicator button is extended service filter and reset button (Ref. Task 1-96),
2. Check main fuel filter differential pressure indicator button.	If differential pressure indicator button is extended, service filter and reset button (Ref. Task 1-95).

GO TO NEXT PAGE

1-49 ERRATIC OR OSCILLATING N1 SPEED WHILE ENGIN E IS GOVERNING ON N1-PRIMARY MODE (Continued) 1-49

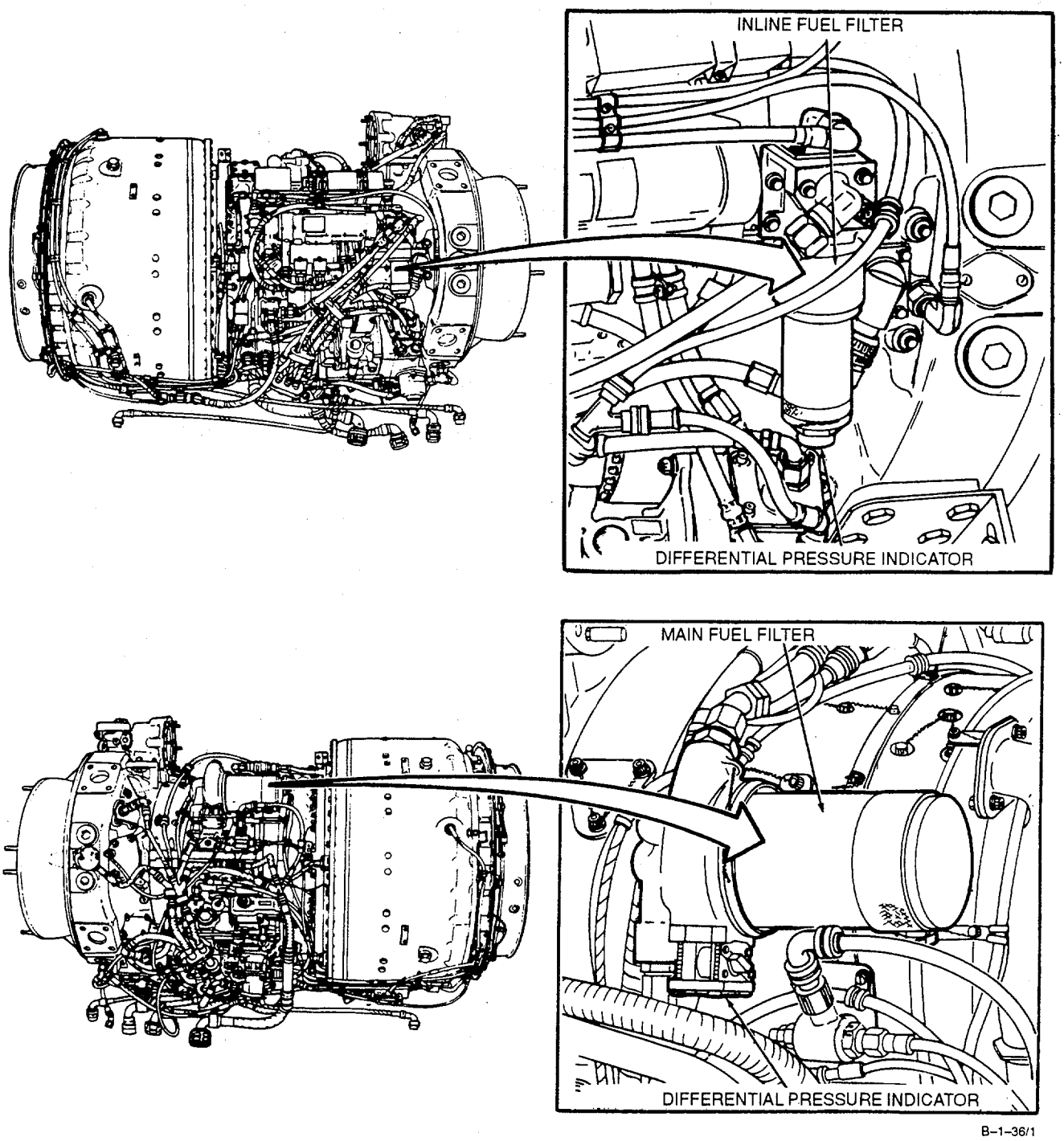

GO TO NEXT PAGE

1-49 ERRATIC OR OSCILLATING N1 SPEED WHILE ENGINE IS GOVERNING ON N1-PRIMARY MODE (Continued) 1-49

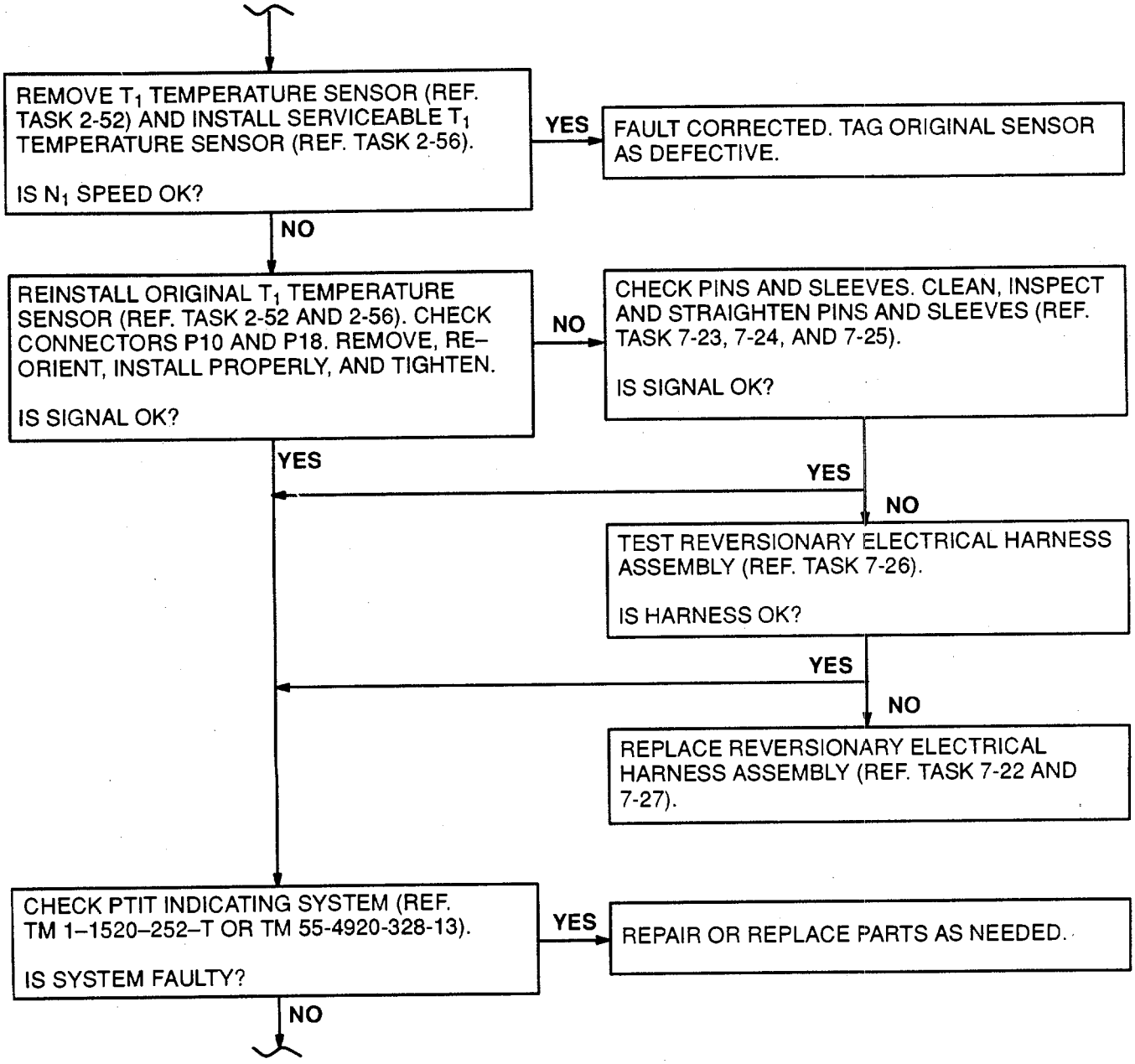

GO TO NEXT PAGE

1-49 ERRATIC OR OSCILLATING N1 SPEED WHILE ENGINE IS GOVERNING ON N1-PRIMARY MODE (Continued) 1-49

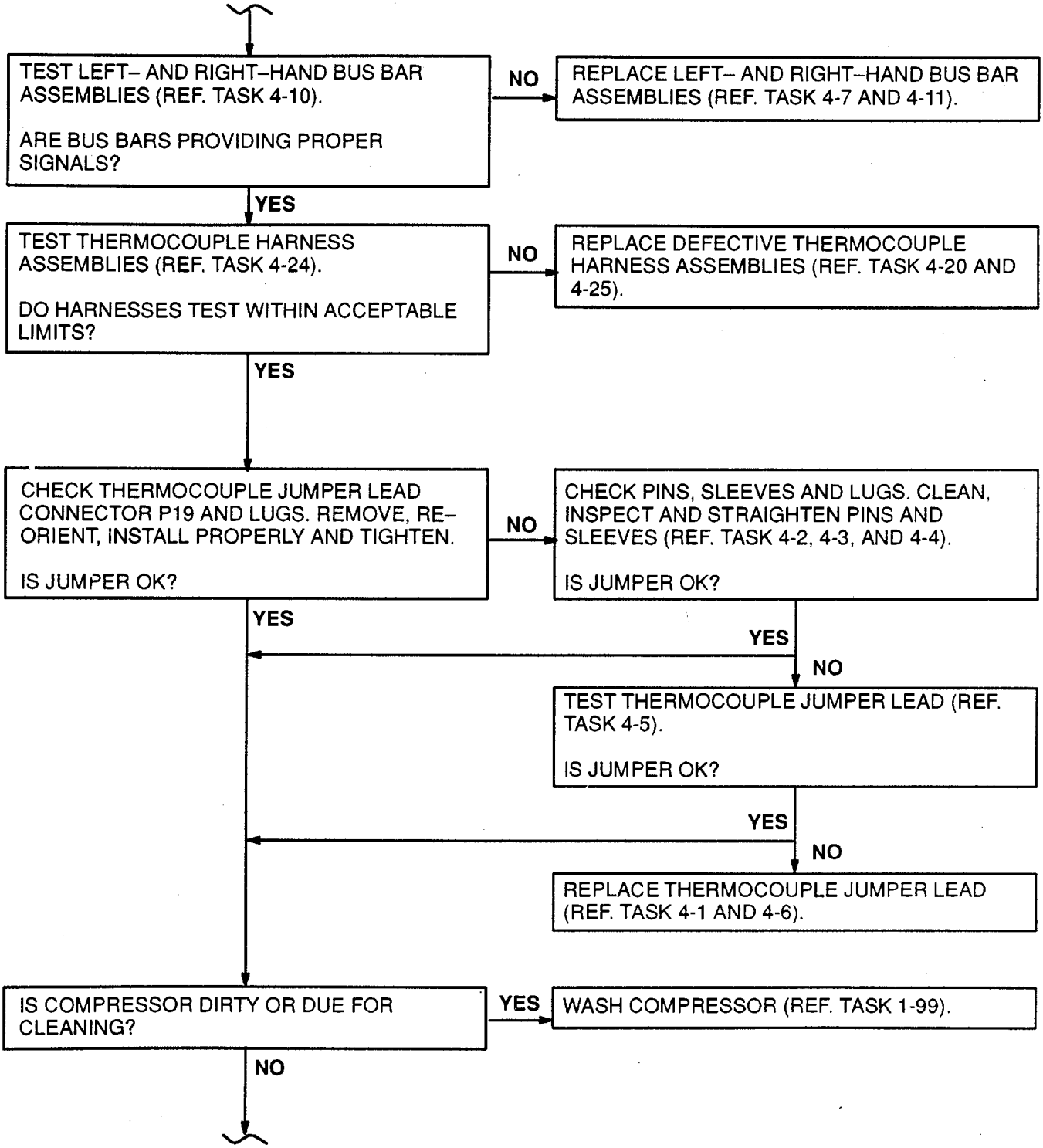

GO TO NEXT PAGE

1-49 ERRATIC OR OSCILLATING N1 SPEED WHILE ENGINE IS GOVERNING ON N1-PRIMARY MODE (Continued) 1-49

CHECK HOSE ASSEMBLY. (AIR DIFFUSER ASSEMBLY TO HMA)

IS HOSE ASSEMBLY LOOSE, LEAKING, OR CLOGGED?

YES → TIGHTEN OR REPLACE HOSE ASSEMBLY (REF. TASK 2-63 AND 2-64).

NO ↓

CHECK HOSE ASSEMBLY (HMA TO AIRCRAFT BULKHEAD).

IS HOSE ASSEMBLY LOOSE, LEAKING OR CLOGGED?

YES → TIGHTEN OR REPLACE HOSE ASSEMBLY (REF. TASK 2-71 AND 2-72).

NO ↓

CHECK TEST CELL HOSE ASSEMBLY (ENGINE HOSE ASSEMBLY TO TEST CELL DECU)

IS HOSE ASSEMBLY LOOSE, LEAKING OR CLOGGED?

YES → TIGHTEN OR REPLACE HOSE ASSEMBLY (REF. TEST CELL FACILITIES MAINTENANCE).

NO ↓

CHECK AND ADJUST INTERSTAGE AIR–BLEED ACTUATOR (REF. TASK 2-9).

IS BLEED BAND OPERATION NORMAL?

NO → TROUBLESHOOT COMPRESSOR BLEED–BAND OPERATION ABNORMAL (REF. TASK 1-47).

YES ↓

DISCONNECT HOSE ASSEMBLY (INTERSTAGE AIR–BLEED ACTUATOR TO HMA) FROM ACTUATOR. APPLY COMPRESSED AIR AT 60 PSI. TO HOSE.

IS AIR FLOW THRU HOSE AND HMA VENT PORT RESTRICTED?

YES → REPLACE HOSE ASSEMBLY OR HMA (REF. TASK 2-57 AND 2-58 OR 6-1 AND 6-5).

NO ↓

RECONNECT HOSE ASSEMBLY TO ACTUATOR. PERFORM INTERSTAGE AIR–BLEED ACTUATOR PRESSURE TEST (REF. TASK 1-100).

IS ACTUATOR OK?

NO → REMOVE, DISASSEMBLE, CLEAN, INSPECT, REPAIR, ASSEMBLE, AND TEST INTERSTAGE AIR-BLEED ACTUATOR (REF. TASK 2-1, 2-2, 2-3, 2-4, 2-5, 2-6, AND 2-7).

YES ↓

GO TO NEXT PAGE

1-49 ERRATIC OR OSCILLATING N1 SPEED WHILE ENGINE IS GOVERNING ON N1-PRIMARY MODE (Continued) 1-49

CHECK TUBE ASSEMBLY (AIR DIFFUSER ASSEMBLY TO CHECK VALVE).

IS TUBE ASSEMBLY CLOGGED OR LEAKING?

YES → TIGHTEN OR REPLACE TUBE ASSEMBLY (REF. TASK 2-59 AND 2-60).

NO ↓

EXAMINE CHECK VALVE (AIR DIFFIUSER TO INTERSTAGE AIR–BLEED ACTUATOR).

IS CHECK VALVE CLOGGED OR LEAKING?

YES → TIGHTEN OR REPLACE CHECK VALVE (REF. TASK 2-73 AND 2-75).

NO ↓

CHECK HOSE ASSEMBLY (CHECK VALVE TO INTERSTAGE AIR–BLEED ACTUATOR P_3 INLET).

IS HOSE ASSEMBLY CLOGGED OR LEAKING?

YES → TIGHTEN OR REPLACE HOSE ASSEMBLY (REF. TASK 2-65 AND 2-66).

NO ↓

CHECK HOSE ASSEMBLY (WATER WASH TEE CHECK VALVE TO INTERSTAGE AIR–BLEED ACTUATOR P_3 INLET).

IS HOSE ASSEMBLY LEAKING?

YES → TIGHTEN OR REPLACE HOSE ASSEMBLY (REF. TASK 2-67 AND 2-68).

NO ↓

EXAMINE CHECK VALVE (WATER WASH TEE TO INTERSTAGE AIR–BLEED ACTUATOR P_3 INLET).

IS CHECK VALVE LEAKING?

YES → TIGHTEN OR REPLACE CHECK VALVE (REF. TASK 2-76 AND 2-78).

NO ↓

CHECK HOSE ASSEMBLY (WATER WASH TEE CHECK VALVE TO INTERSTAGE AIR–BLEED ACTUATOR P_M INLET).

IS HOSE ASSEMBLY LEAKING?

YES → TIGHTEN OR REPLACE HOSE ASSEMBLY (REF. TASK 2-69 AND 2-70).

NO ↓

EXAMINE CHECK VALVE (WATER WASH TEE TO INTERSTAGE AIR–BLEED ACTUATOR P_M INLET).

IS CHECK VALVE LEAKING?

YES → TIGHTEN OR REPLACE CHECK VALVE (REF. TASK 2-79 AND 2-81).

NO ↓

GO TO NEXT PAGE

1-49 ERRATIC OR OSCILLATING N1 SPEED WHILE ENGINE IS GOVERNING ON N1-PRIMARY MODE (Continued) 1-49

CHECK HOSE ASSEMBLY (INTERSTAGE AIR–BLEED ACTUATOR TO HMA).

IS HOSE ASSEMBLY LOOSE OR LEAKING?

YES → TIGHTEN OR REPLACE HOSE ASSEMBLY (REF. TASK 2-57 AND 2-58).

NO ↓

INSTALL KNOWN GOOD HMA (REF. TASK 6-1 AND 6-5). START ENGINE (REF. TM 1–1520–252–10).

IS N1 SPEED ERRATIC OR OSCILLATING?

NO → FAULT CORRECTED. TAG ORIGINAL HMA AS DEFECTIVE.

YES ↓

REINSTALL ORIGINAL HMA (REF. TASK 6-1 AND 6-5).
INSTALL KNOWN GOOD DECU (REF. TM 1–1520–252–23). START ENGINE (REF. TM 1–1520–252–10).

IS N1 SPEED ERRATIC OR OSCILLATING?

NO → FAULT CORRECTED. TAG ORIGINAL DECU AS DEFECTIVE.

YES ↓

REINSTALL ORIGINAL DECU (REF. TM 1–1520–252–23).

WARNING

DISCONNECT DC POWER SOURCE TO IGNITION EXCITER OR OPEN CIRCUIT BREAKER TO PREVENT POSSIBILITY OF FIRE THAT CAN CAUSE INJURY TO PERSONNEL. IF INJURY OCCURS, GET MEDICAL ATTENTION.

DISCONNECT HOSE ASSEMBLY (STARTING FUEL SOLENOID VALVE TO TUBE ASSEMBLY) (REF. TASK 6-88) FROM TUBE ASSEMBLY. PLACE END OF HOSE INTO UTILITY PAIL. HAVE HELPER MOTOR ENGINE (ECL SET TO GND) (REF. TM 1–1520–252–10).

IS FUEL BEING PUMPED INTO PAIL?

YES → REPLACE STARTING FUEL SOLENOID VALVE (REF. TASK 6-57 AND 6-61).

NO ↓

GO TO NEXT PAGE

1-49 ERRATIC OR OSCILLATING N1 SPEED WHILE ENGINE IS GOVERNING ON N1-PRIMARY MODE (Continued) 1-49

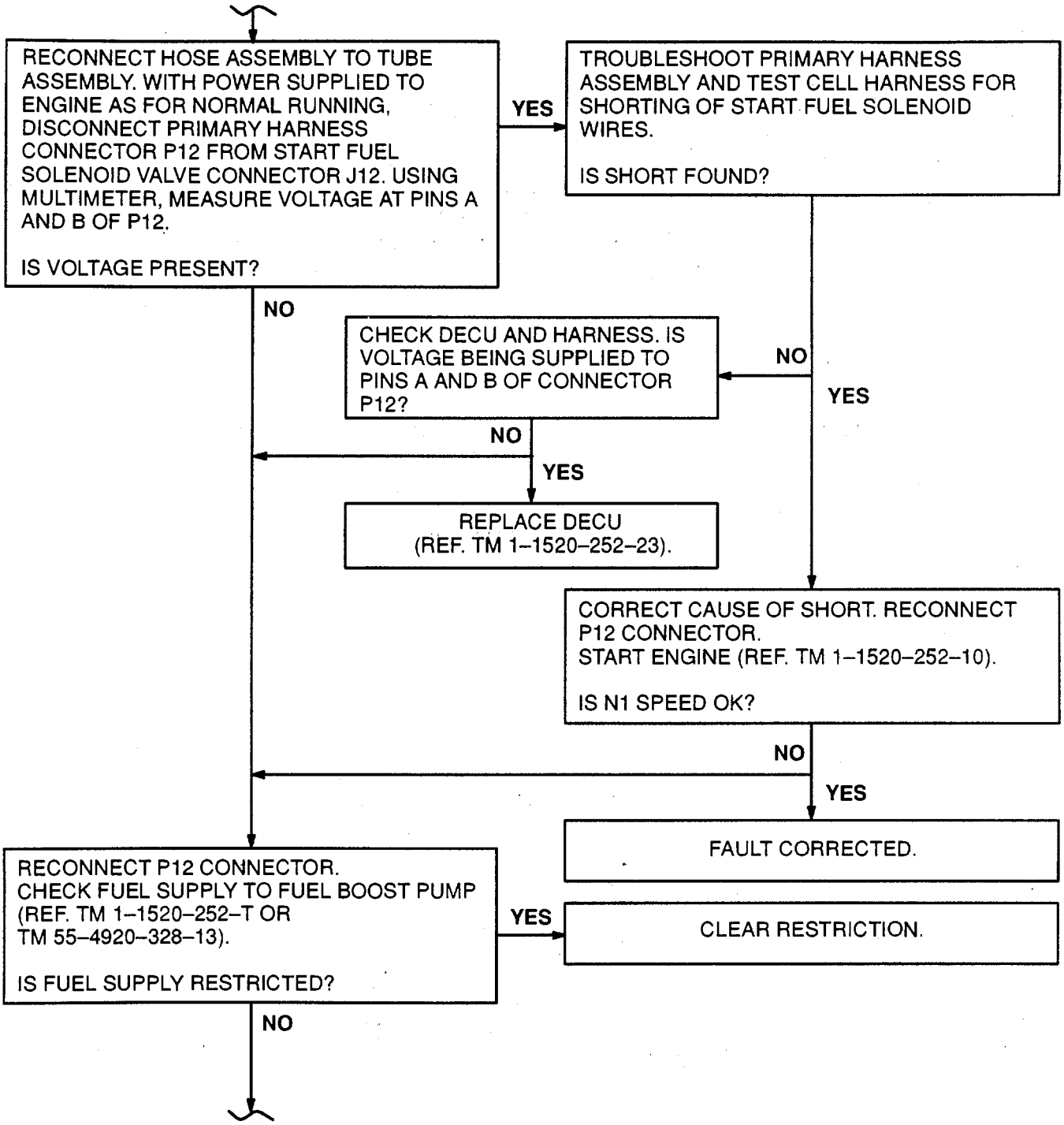

GO TO NEXT PAGE

1-49 ERRATIC OR OSCILLATING N1 SPEED WHILE ENGINE IS GOVERNING ON N1-PRIMARY MODE (Continued) 1-49

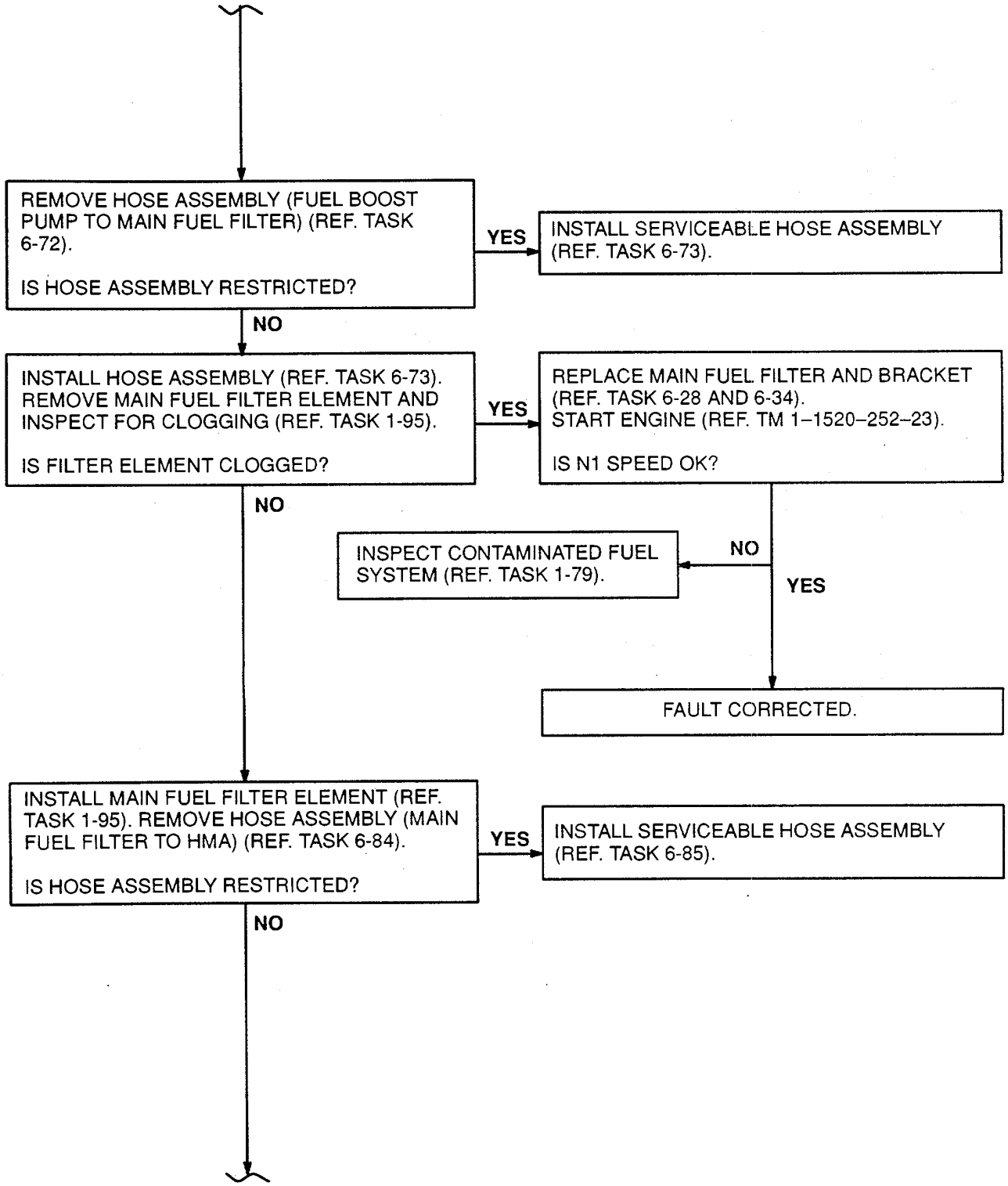

GO TO NEXT PAGE

1-49 ERRATIC OR OSCILLATING N1 SPEED WHILE ENGINE IS GOVERNING ON N1-PRIMARY MODE (Continued) 1-49

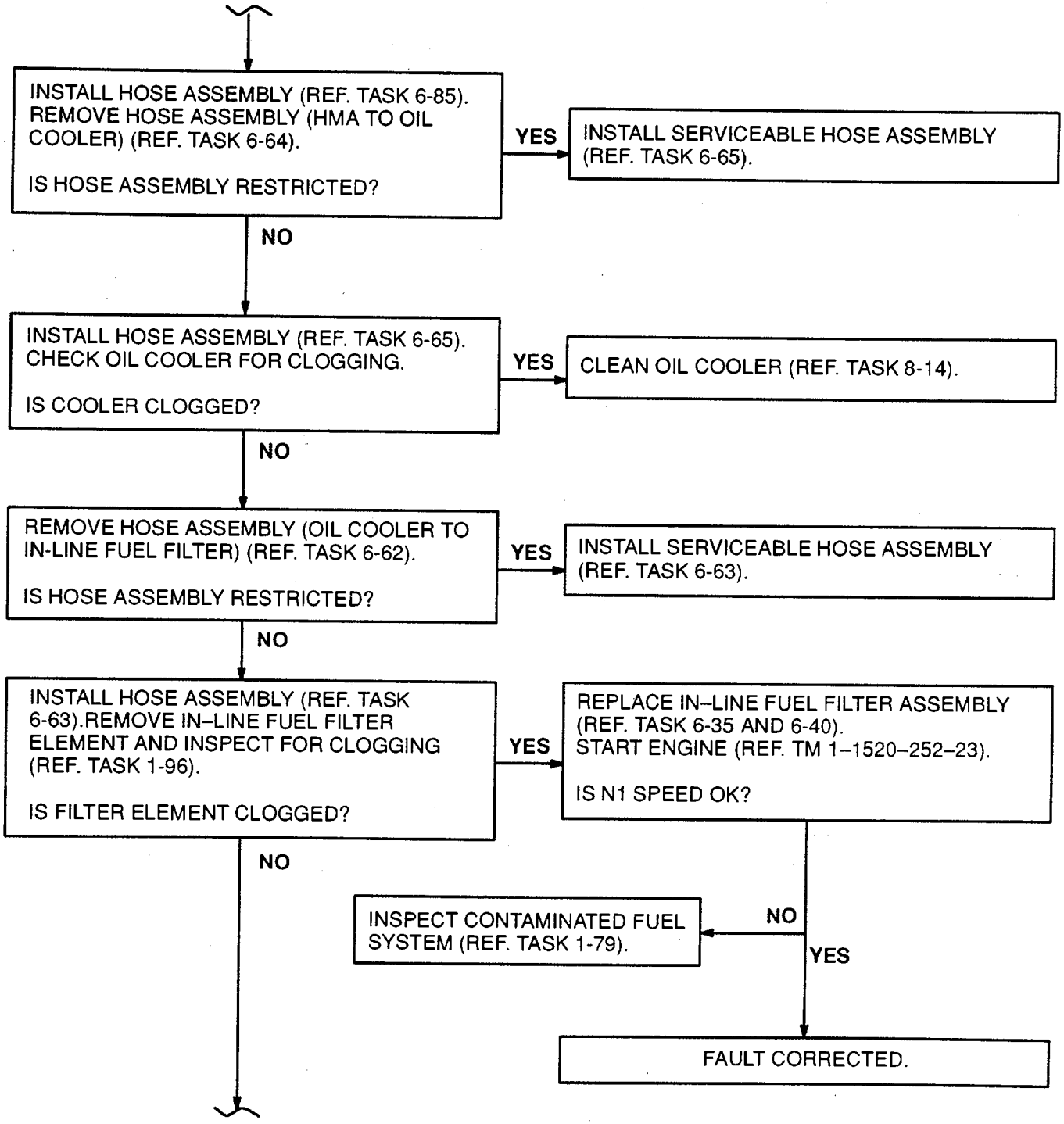

GO TO NEXT PAGE

1-49 ERRATIC OR OSCILLATING N1 SPEED WHILE ENGINE IS GOVERNING ON N1-PRIMARY MODE (Continued) 1-49

INSTALL IN–LINE FUEL FILTER ELEMENT (REF. TASK 1-96).
REMOVE HOSE ASSEMBLY (IN–LINE FUEL FILTER TO OVERSPEED SOLENOID VALVE) (REF. TASK 6-66).

IS HOSE ASSEMBLY RESTRICTED?

YES → INSTALL SERVICEABLE HOSE ASSEMBLY (REF. TASK 6-67).

NO ↓

INSTALL HOSE ASSEMBLY (REF. TASK 6-67).
REMOVE HOSE ASSEMBLY (OVERSPEED SOLENOID VALVE TO PRESSURIZING VALVE) (REF. TASK 6-68).

IS HOSE ASSEMBLY RESTRICTED?

YES → INSTALL SERVICEABLE HOSE ASSEMBLY (REF. TASK 6-69).

NO ↓

WARNING

DISCONNECT DC POWER SOURCE TO IGNITION EXCITER OR OPEN CIRCUIT BREAKER TO PREVENT POSSIBILITY OF FIRE THAT CAN CAUSE INJURY TO PERSONNEL. IF INJURY OCCURS, GET MEDICAL ATTENTION.

INSTALL HOSE ASSEMBLY (REF. TASK 6-69).
DISCONNECT MAIN FUEL HOSE AT INLET OF HMA. PLACE END OF HOSE INTO UTILITY PAIL.
HAVE HELPER MOTOR ENGINE (ECL SET TO GND) (REF. TM 1–1520–252–10).

IS FUEL BEING PUMPED INTO PAIL?

NO → CONNECT MAIN FUEL HOSE AT INLET OF HMA. REPLACE FUEL BOOST PUMP (REF. TASK 6-8 AND 6-12).

YES ↓

GO TO NEXT PAGE

1-49 ERRATIC OR OSCILLATING N1 SPEED WHILE ENGINE IS GOVERNING ON N1-PRIMARY MODE (Continued) 1-49

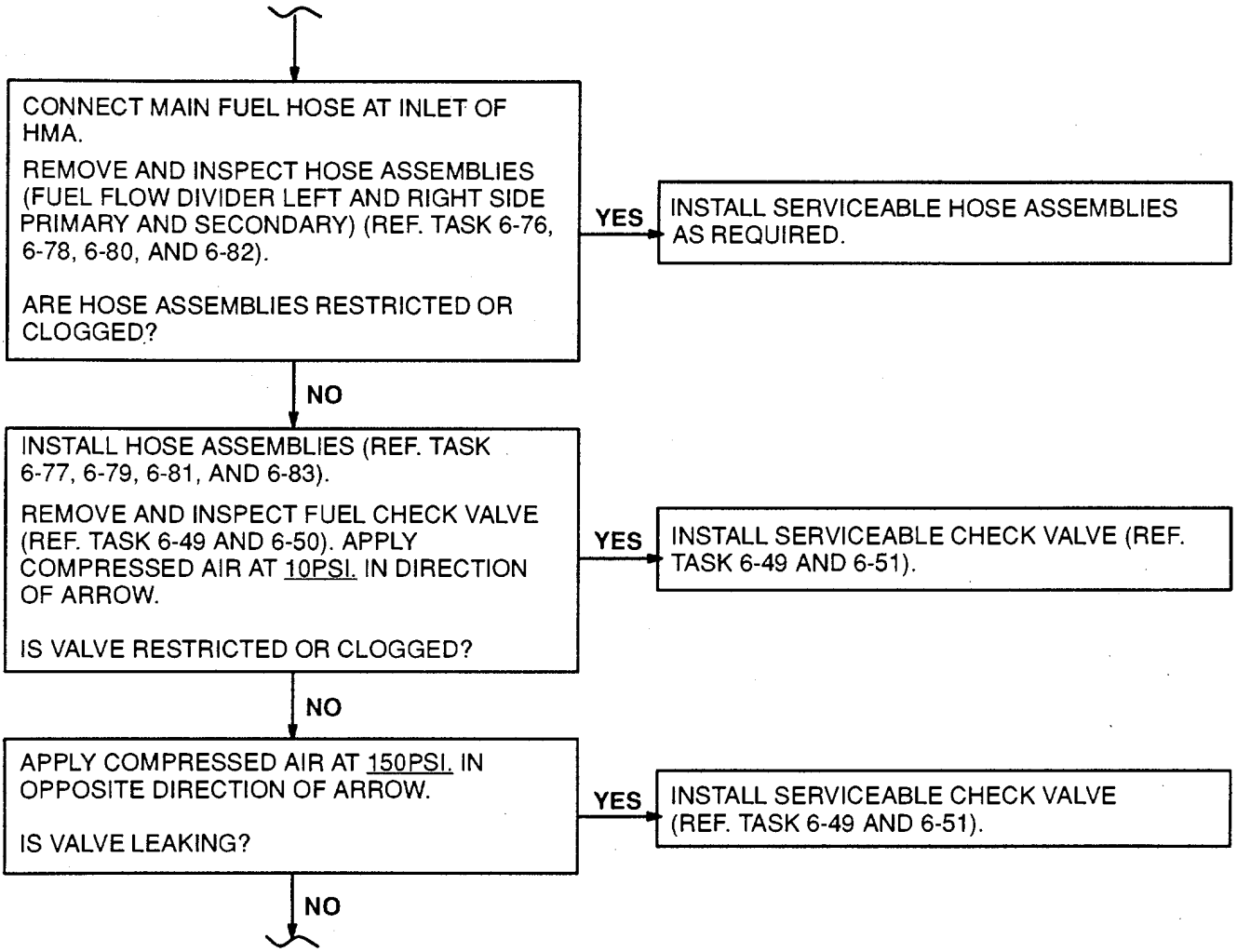

GO TO NEXT PAGE

1-49 ERRATIC OR OSCILLATING N1 SPEED WHILE ENGINE IS GOVERNING ON N1-PRIMARY MODE (Continued) 1-49

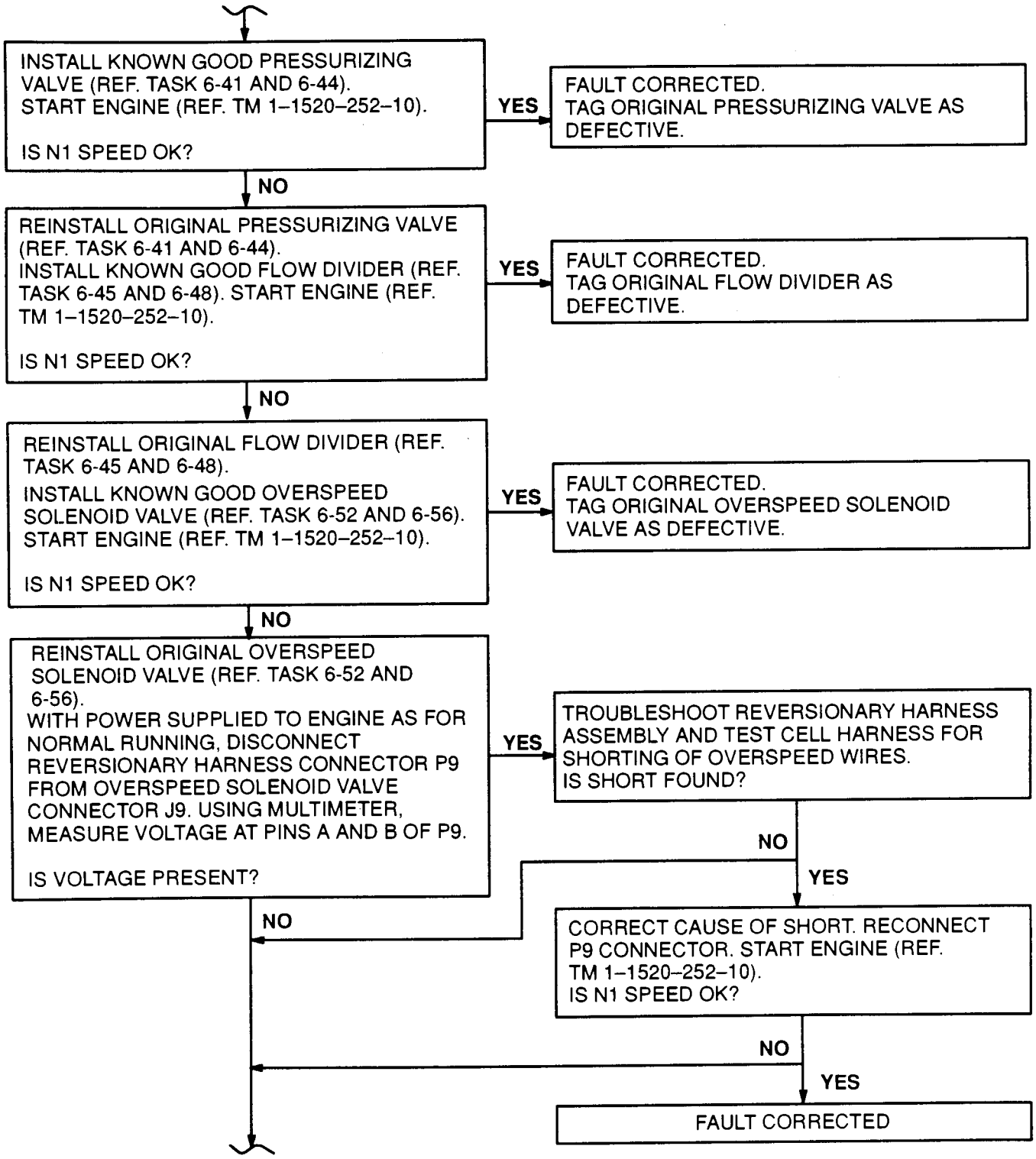

GO TO NEXT PAGE

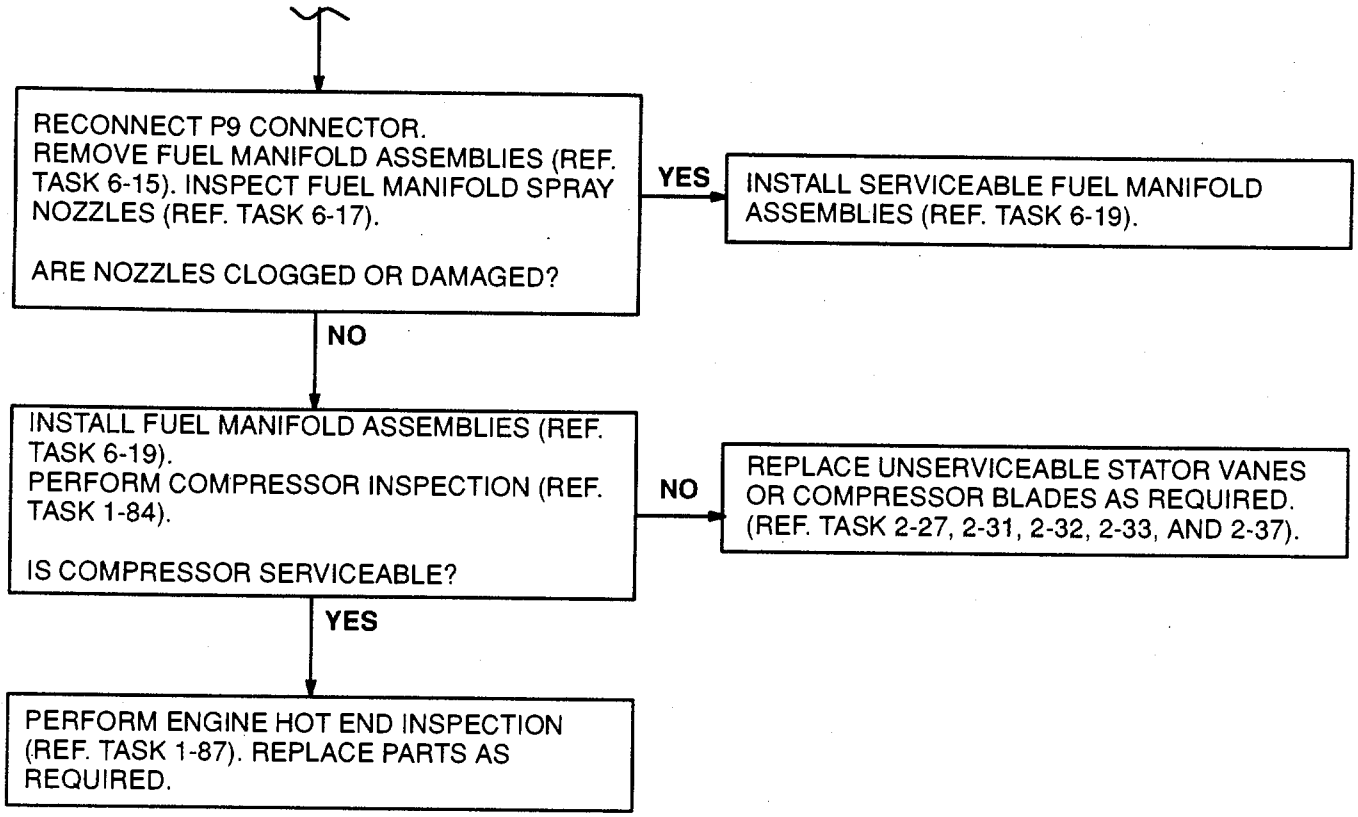

FOLLOW-ON MAINTENANCE
None

END OF TASK

1-49 ERRATIC OR OSCILLATING N1 SPEED WHILE ENGINE IS GOVERNING ON N1 - REVERSIONARY MODE 1-49

INITIAL SETUP
Applicable Configurations:
All
Tools:
Powerplant Mechanic's Tool Kit,
NSN 5180-00-323-4944
Materials:
None
Personnel Required:
Aircraft Powerplant Repairer

References:
TM 1-1520-252-T
TM 1-1520-252-10
TM 55-4920-328-13

Task 1-47	Task 2-72	Task 6-49
Task 1-79	Task 2-73	Task 6-50
Task 1-95	Task 2-74	Task 6-51
Task 1-96	Task 2-76	Task 6-57
Task 1-99	Task 2-78	Task 6-61
Task 1-100	Task 2-79	Task 6-62
Task 2-1	Task 2-81	Task 6-63
Task 2-2	Task 4-1	Task 6-64
Task 2-3	Task 4-2	Task 6-65
Task 2-4	Task 4-3	Task 6-66
Task 2-5	Task 4-4	Task 6-67
Task 2-6	Task 4-5	Task 6-68
Task 2-7	Task 4-6	Task 6-69
Task 2-9	Task 4-7	Task 6-72
Task 2-57	Task 4-10	Task 6-73
Task 2-58	Task 4-11	Task 6-76
Task 2-59	Task 4-20	Task 6-78
Task 2-60	Task 4-24	Task 6-79
Task 2-63	Task 4-25	Task 6-80
Task 2-64	Task 6-1	Task 6-81
Task 2-65	Task 6-5	Task 6-82
Task 2-66	Task 6-8	Task 6-83
Task 2-67	Task 6-12	Task 6-84
Task 2-68	Task 6-28	Task 6-85
Task 2-69	Task 6-34	Task 8-14
Task 2-70	Task 6-35	APPENDIX G
Task 2-71	Task 6-40	

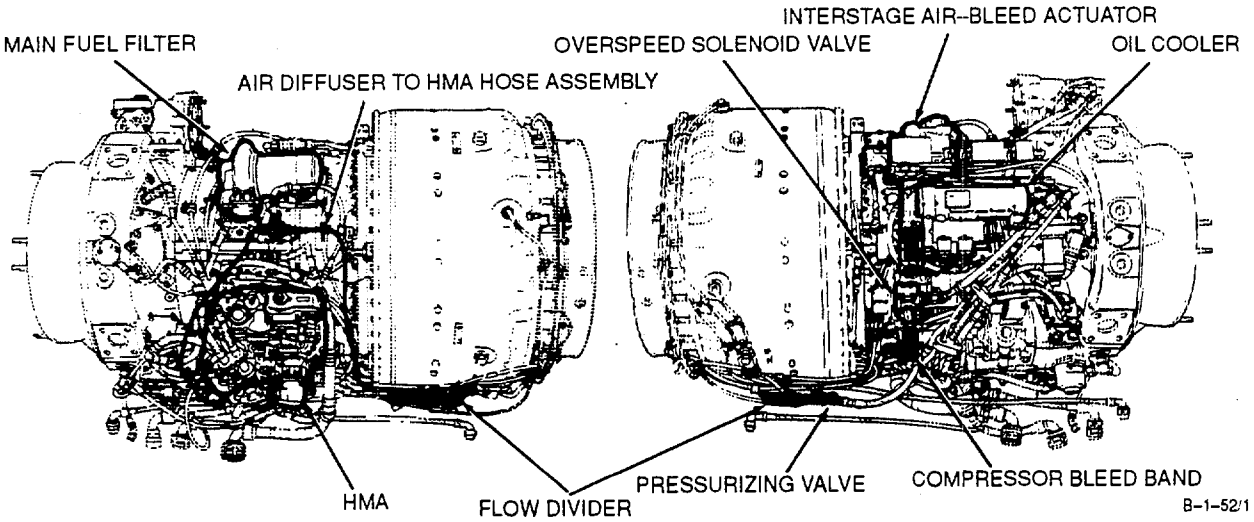

GO TO NEXT PAGE

1-50 ERRATIC OR OSCILLATING N1 SPEED WHILE ENGINE IS GOVERNING ON N1 - REVERSIONARY MODE (Continued) 1-50

NOTE: N_1 OSCILLATION CAN BE CAUSED BY OSCILLATION OR NOISE ON TEST CELL ECL, COLLECTIVE PITCH, OR BEEP SIGNAL.
IF N_1 OSCILLATION OCCURS, VERIFY INTEGRITY OF THESE SIGNALS.

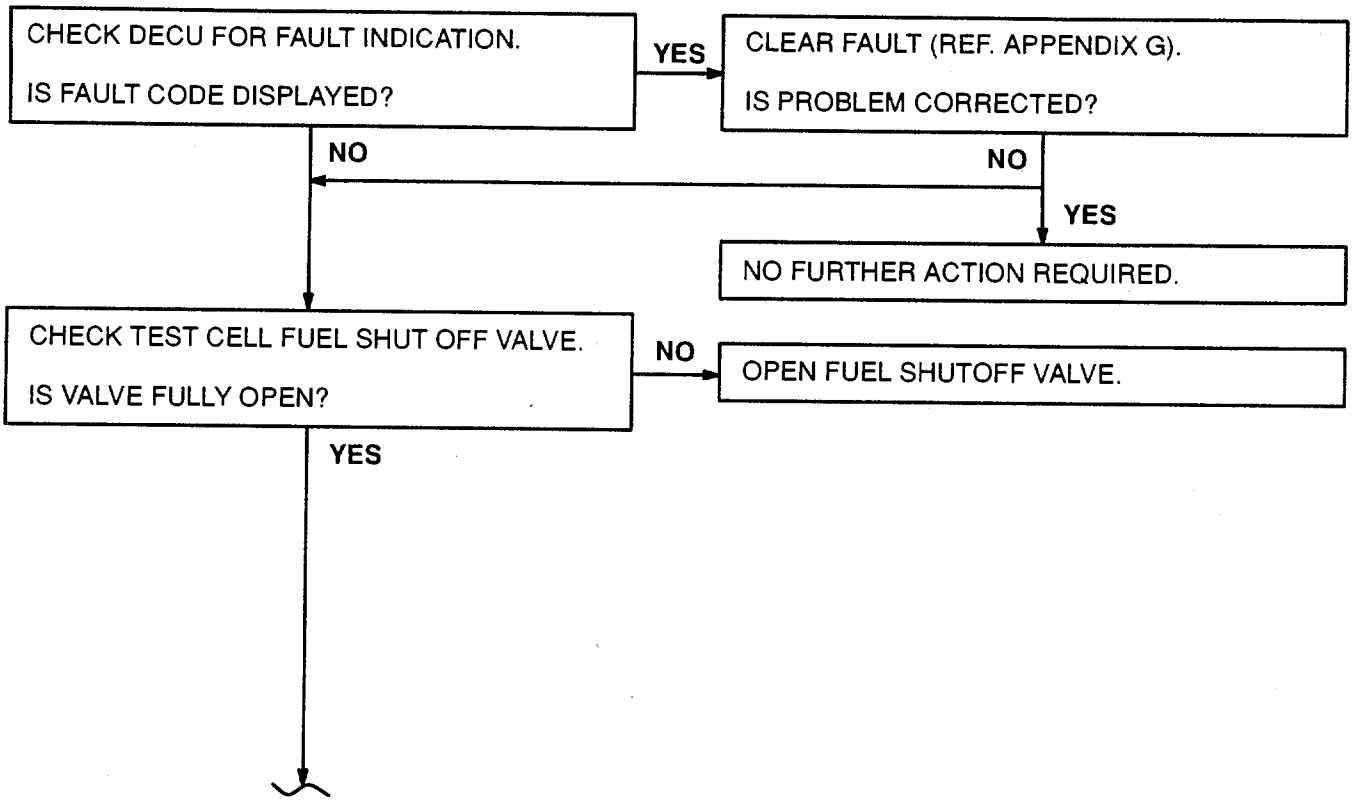

GO TO NEXT PAGE

TASK	RESULT
	CAUTION **IN THE FOLLOWING TWO STEPS, IF DIFFERENTIAL PRESSURE INDICATOR BUTTON BECOMES EXTENDED MORE THAN ONCE WITHIN EACH PERIOD OF ENGINE OPERATION, INSPECT CONTAMINATED FUEL SYSTEM (REF. TASK 1-79).**
1. Check inline fuel filter differential pressure indicator button.	If differential pressure indicator button is extended, service filter and reset button (Ref. Task 1-96).
2. Check main fuel filter differential pressure indicator button.	If differential pressure indicator button is extended, service filter and reset button (Ref. Task 1-95).

GO TO NEXT PAGE

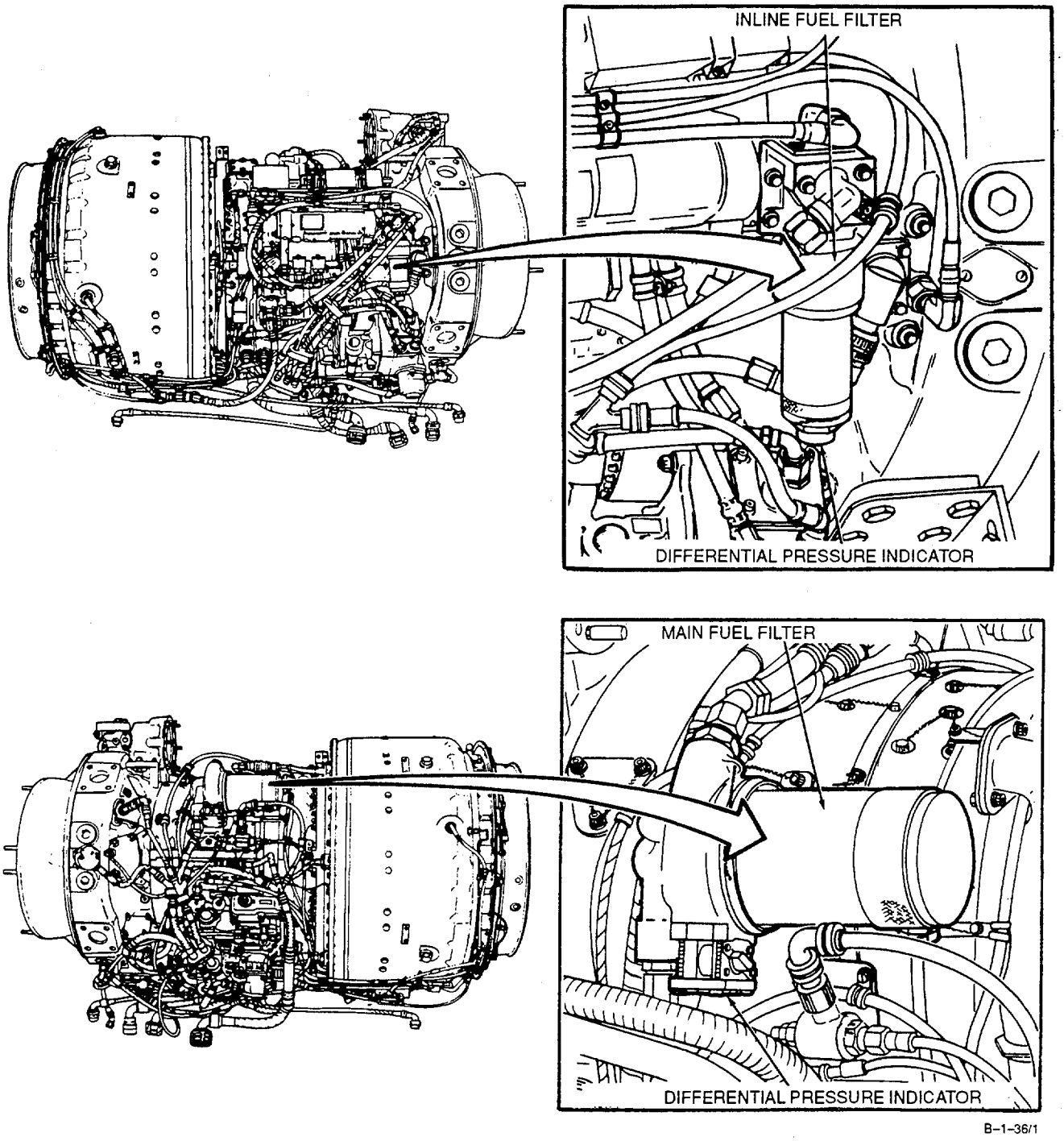

GO TO NEXT PAGE

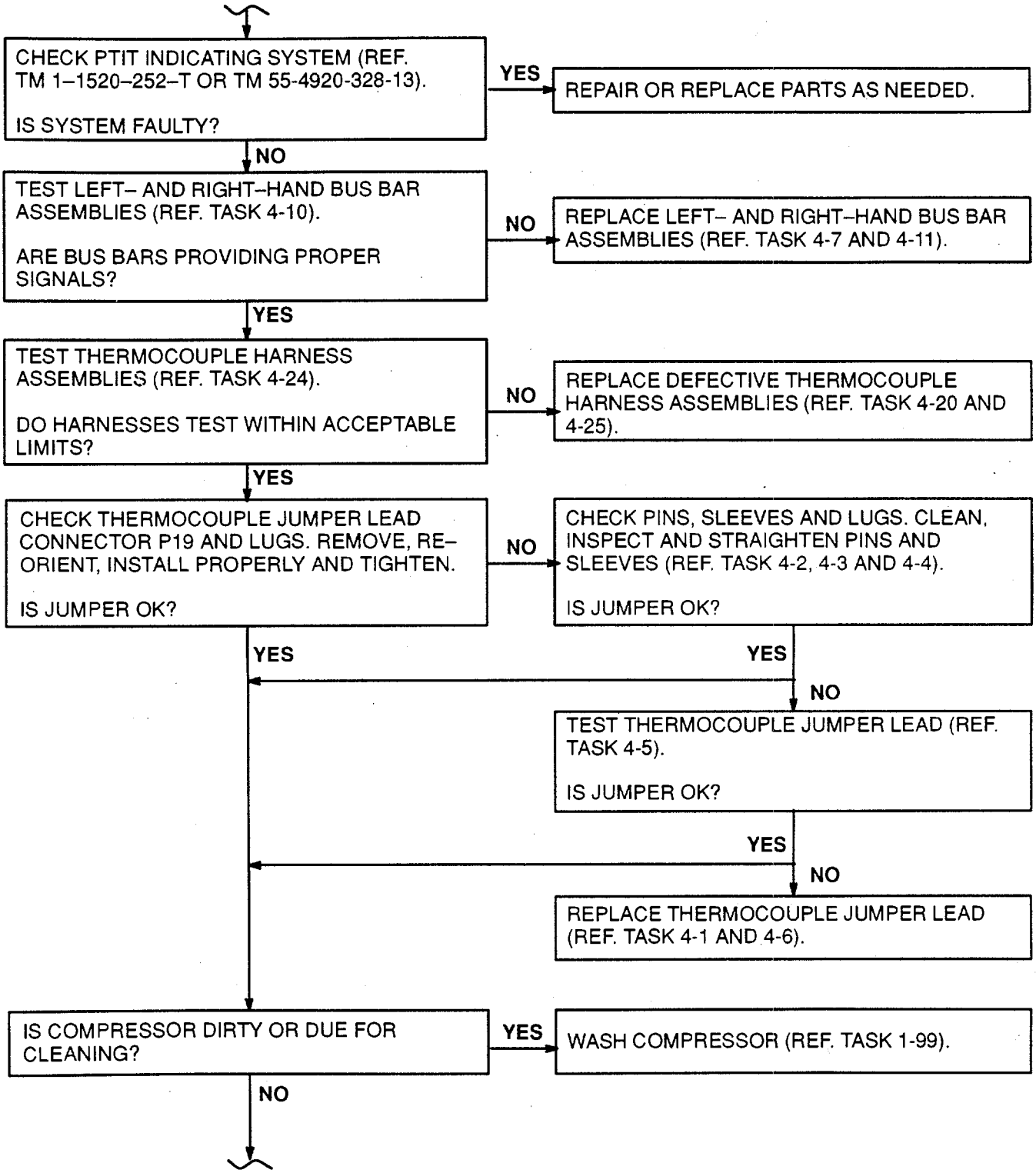

GO TO NEXT PAGE

CHECK HOSE ASSEMBLY (AIR DIFFUSER ASSEMBLY TO HMA).

IS HOSE ASSEMBLY LOOSE, LEAKING, OR CLOGGED?

YES → TIGHTEN OR REPLACE HOSE ASSEMBLY (REF. TASK 2-63 AND 2-64).

NO ↓

CHECK HOSE ASSEMBLY (HMA TO AIRCRAFT BULKHEAD).

IS HOSE ASSEMBLY LOOSE, LEAKING OR CLOGGED?

YES → TIGHTEN OR REPLACE HOSE ASSEMBLY (REF. TASK 2-71 AND 2-72).

NO ↓

CHECK TEST CELL HOSE ASSEMBLY (ENGINE HOSE ASSEMBLY TO TEST CELL DECU).

IS HOSE ASSEMBLY LOOSE, LEAKING OR CLOGGED?

YES → TIGHTEN OR REPLACE HOSE ASSEMBLY (REF. TEST CELL FACILITIES MAINTENANCE).

NO ↓

CHECK AND ADJUST INTERSTAGE AIR–BLEED ACTUATOR (REF. TASK 2-9).

IS BLEED BAND OPERATION NORMAL?

NO → TROUBLESHOOT COMPRESSOR BLEED–BAND OPERATION ABNORMAL (REF. TASK 1-47).

YES ↓

DISCONNECT HOSE ASSEMBLY (INTERSTAGE AIR–BLEED ACTUATOR TO HMA) FROM ACTUATOR. APPLY COMPRESSED AIR AT 60 PSI. TO HOSE.

IS AIR FLOW THRU HOSE AND HMA VENT PORT RESTRICTED?

YES → REPLACE HOSE ASSEMBLY OR HMA (REF. TASK 2-57 AND 2-58 OR 6-1 AND 6-5).

NO ↓

RECONNECT HOSE ASSEMBLY TO ACTUATOR. PERFORM INTERSTAGE AIR–BLEED ACTUATOR PRESSURE TEST (REF. TASK 1-100).

IS ACTUATOR OK?

NO → REMOVE, DISASSEMBLE, CLEAN, INSPECT, REPAIR, ASSEMBLE, AND TEST INTERSTAGE AIR-BLEED ACTUATOR (REF. TASK 2-1, 2-2, 2-3, 2-4, 2-5, 2-6, AND 2-7).

YES ↓

GO TO NEXT PAGE

CHECK TUBE ASSEMBLY (AIR DIFFUSER ASSEMBLY TO CHECK VALVE).

IS TUBE ASSEMBLY CLOGGED OR LEAKING?

YES → TIGHTEN OR REPLACE TUBE ASSEMBLY (REF. TASK 2-59 AND 2-60).

NO ↓

EXAMINE CHECK VALVE (AIR DIFFUSER TO INTERSTAGE AIR–BLEED ACTUATOR).

IS CHECK VALVE CLOGGED OR LEAKING?

YES → TIGHTEN OR REPLACE CHECK VALVE (REF. TASK 2-73 AND 2-74).

NO ↓

CHECK HOSE ASSEMBLY (CHECK VALVE TO INTERSTAGE AIR–BLEED ACTUATOR P_3 INLET).

IS HOSE ASSEMBLY CLOGGED OR LEAKING?

YES → TIGHTEN OR REPLACE HOSE ASSEMBLY (REF. TASK 2-65 AND 2-66).

NO ↓

CHECK HOSE ASSEMBLY (WATER WASH TEE CHECK VALVE TO INTERSTAGE AIR–BLEED ACTUATOR P_3 INLET).

IS HOSE ASSEMBLY LEAKING?

YES → TIGHTEN OR REPLACE HOSE ASSEMBLY (REF. TASK 2-67 AND 2-68).

NO ↓

EXAMINE CHECK VALVE (WATER WASH TEE TO INTERSTAGE AIR–BLEED ACTUATOR P_3 INLET).

IS CHECK VALVE LEAKING?

YES → TIGHTEN OR REPLACE CHECK VALVE (REF. TASK 2-76 AND 2-78).

NO ↓

CHECK HOSE ASSEMBLY (WATER WASH TEE CHECK VALVE TO INTERSTAGE AIR–BLEED ACTUATOR P_M INLET).

IS HOSE ASSEMBLY LEAKING?

YES → TIGHTEN OR REPLACE HOSE ASSEMBLY (REF. TASK 2-69 AND 2-70).

NO ↓

EXAMINE CHECK VALVE (WATER WASH TEE TO INTERSTAGE AIR–BLEED ACTUATOR P_M INLET).

IS CHECK VALVE LEAKING?

YES → TIGHTEN OR REPLACE CHECK VALVE (REF. TASK 2-79 AND 2-81).

NO ↓

GO TO NEXT PAGE

CHECK HOSE ASSEMBLY (INTERSTAGE AIR–BLEED ACTUATOR TO HMA).

IS HOSE ASSEMBLY LOOSE OR LEAKING?

YES → TIGHTEN OR REPLACE HOSE ASSEMBLY. (REF. TASK 2-57 AND 2-58).

NO ↓

INSTALL KNOWN GOOD HMA (REF. TASK 6-1 AND 6-5).START ENGINE (REF. TM 1–1520–252–10).

IS N1 SPEED ERRATIC OR OSCILLATING?

NO → FAULT CORRECTED. TAG ORIGINAL HMA AS DEFECTIVE.

YES ↓

REINSTALL ORIGINAL HMA (REF. TASK 6-1 AND 6-5).
INSTALL KNOWN GOOD DECU (REF. TM 1–1520–252–23). START ENGINE (REF. TM 1–1520–252–10).

IS N1 SPEED ERRATIC OR OSCILLATING?

NO → FAULT CORRECTED. TAG ORIGINAL DECU AS DEFECTIVE.

YES ↓

REINSTALL ORIGINAL DECU (REF. TM 1–1520–252–23).

WARNING

DISCONNECT DC POWER SOURCE TO IGNITION EXCITER OR OPEN CIRCUIT BREAKER TO PREVENT POSSIBILITY OF FIRE THAT CAN CAUSE INJURY TO PERSONNEL. IF INJURY OCCURS, GET MEDICAL ATTENTION.

DISCONNECT HOSE ASSEMBLY (STARTING FUEL SOLENOID VALVE TO TUBE ASSEMBLY) (REF. TASK 6-88) FROM TUBE ASSEMBLY. PLACE END OF HOSE INTO UTILITY PAIL. HAVE HELPER MOTOR ENGINE (ECL SET TO GND) (REF. TM 1–1520–252–10).

IS FUEL BEING PUMPED INTO PAIL?

YES → REPLACE STARTING FUEL SOLENOID VALVE (REF. TASK 6-57 AND 6-61).

NO ↓

GO TO NEXT PAGE

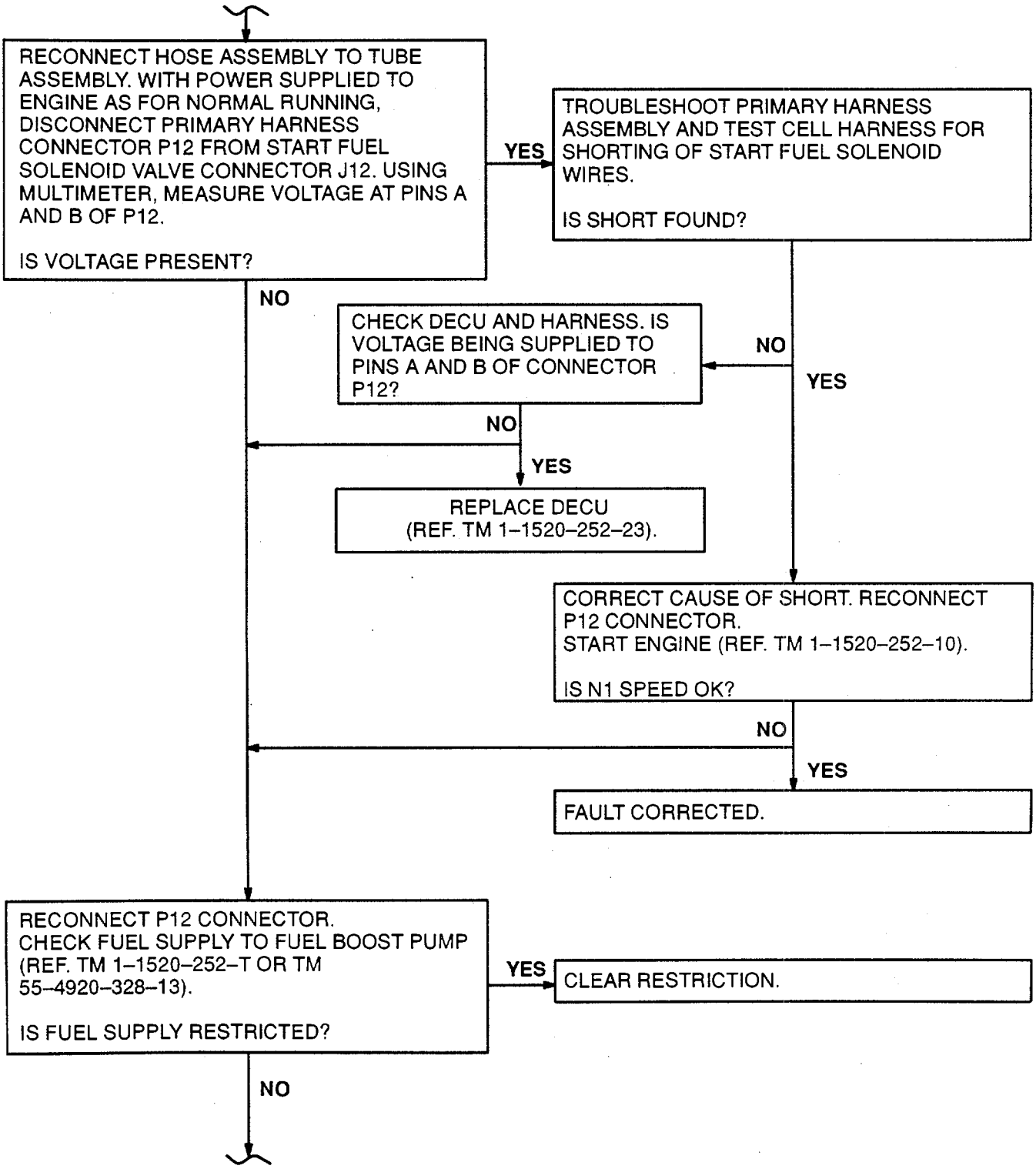

GO TO NEXT PAGE

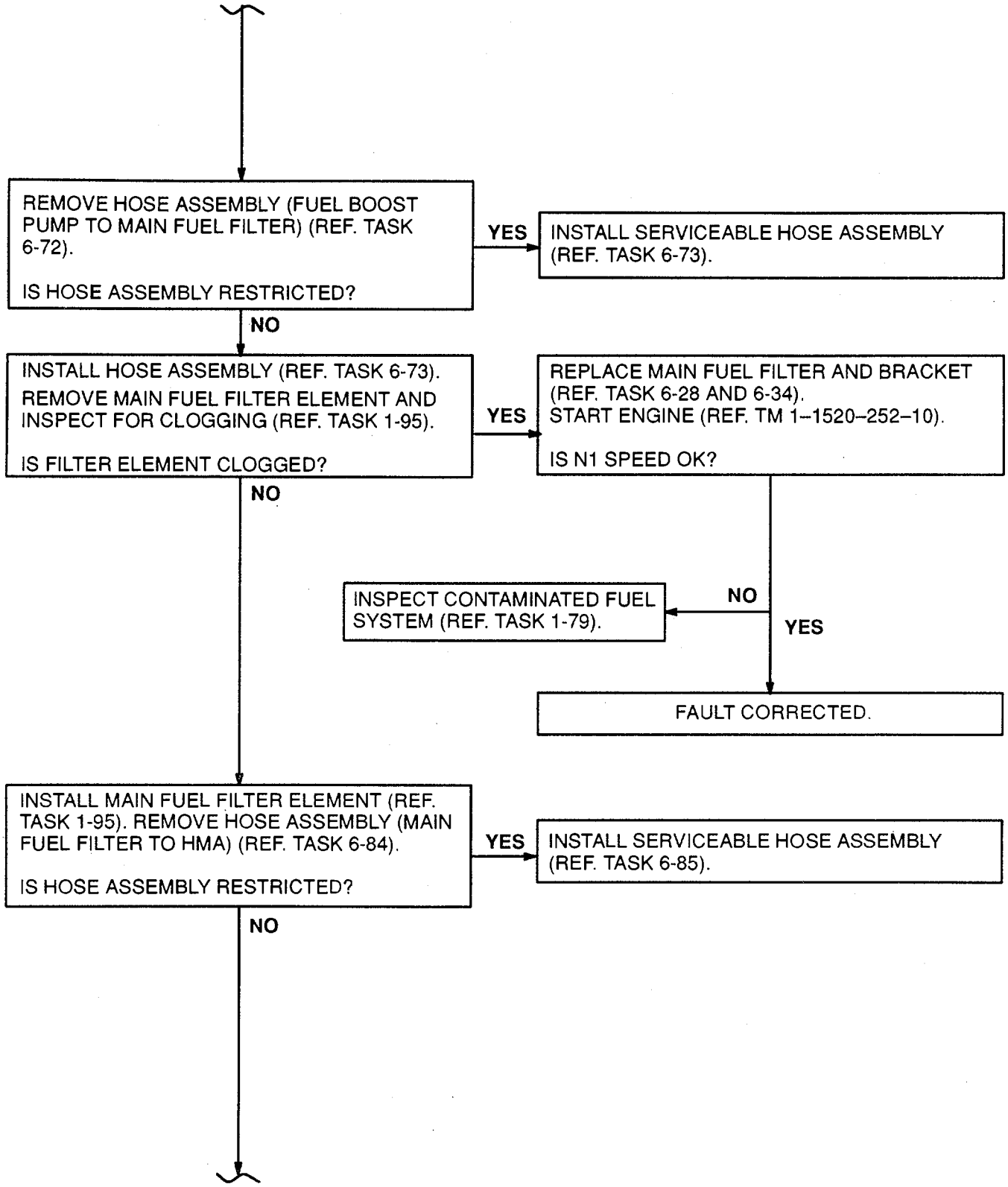

GO TO NEXT PAGE

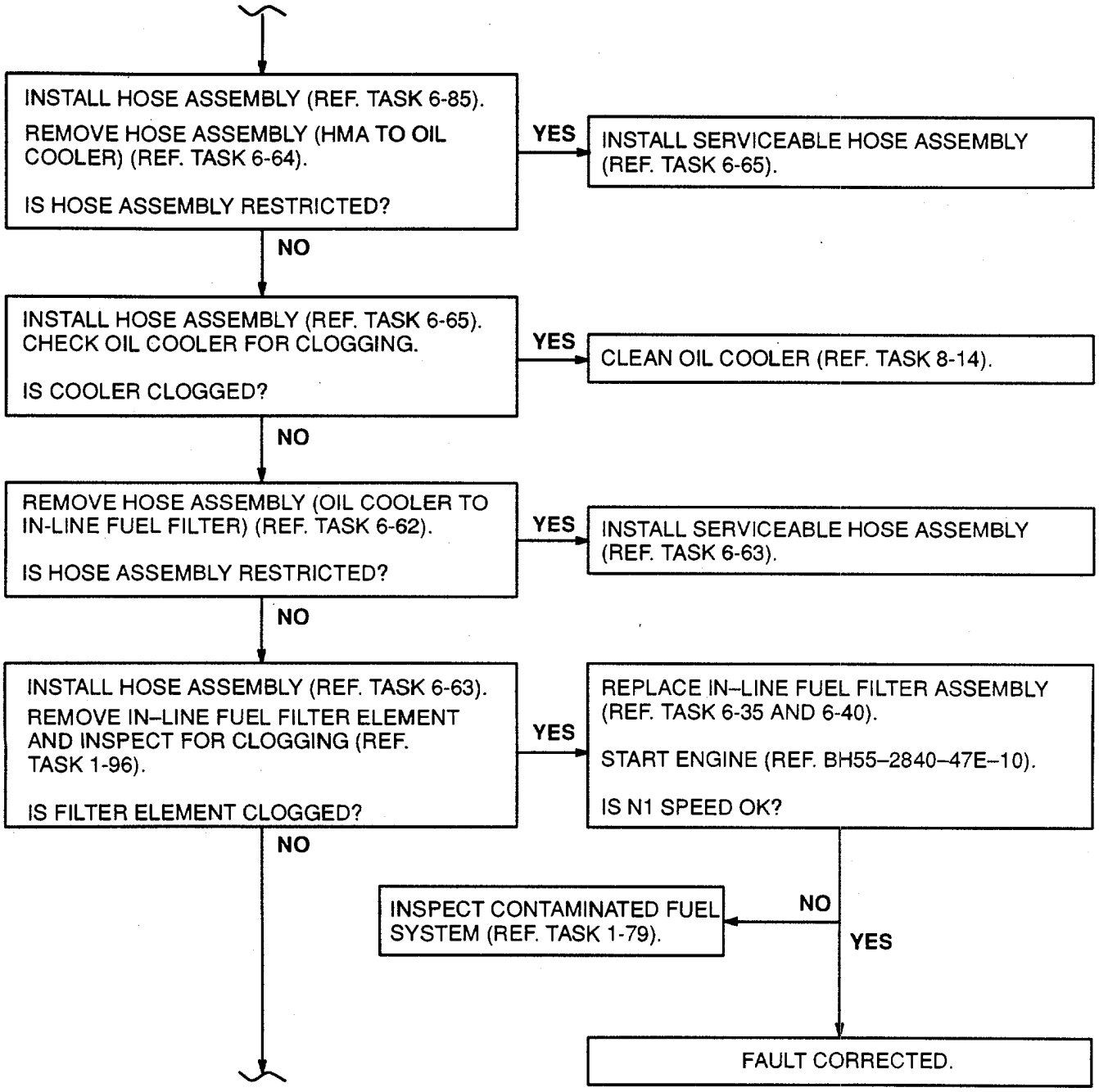

GO TO NEXT PAGE

INSTALL IN–LINE FUEL FILTER ELEMENT (REF. TASK 1-96).
REMOVE HOSE ASSEMBLY (IN–LINE FUEL FILTER TO OVERSPEED SOLENOID VALVE) (REF. TASK 6-66).

IS HOSE ASSEMBLY RESTRICTED?

YES → INSTALL SERVICEABLE HOSE ASSEMBLY (REF. TASK 6-67).

NO ↓

INSTALL HOSE ASSEMBLY (REF. TASK 6-67).
REMOVE HOSE ASSEMBLY (OVERSPEED SOLENOID VALVE TO PRESSURIZING VALVE) (REF. TASK 6-68).

IS HOSE ASSEMBLY RESTRICTED?

YES → INSTALL SERVICEABLE HOSE ASSEMBLY (REF. TASK 6-69).

NO ↓

WARNING

DISCONNECT DC POWER SOURCE TO IGNITION EXCITER OR OPEN CIRCUIT BREAKER TO PREVENT POSSIBILITY OF FIRE THAT CAN CAUSE INJURY TO PERSONNEL. IF INJURY OCCURS, GET MEDICAL ATTENTION.

INSTALL HOSE ASSEMBLY (REF. TASK 6-69).
DISCONNECT MAIN FUEL HOSE AT INLET OF HMA. PLACE END OF HOSE INTO UTILITY PAIL.
HAVE HELPER MOTOR ENGINE (ECL SET TO GND) (REF. TM 1–1520–252-10).

IS FUEL BEING PUMPED INTO PAIL?

NO → CONNECT MAIN FUEL HOSE AT INLET OF HMA. REPLACE FUEL BOOST PUMP ASSEMBLY (REF. TASK 6-8 AND 6-12).

YES ↓

GO TO NEXT PAGE

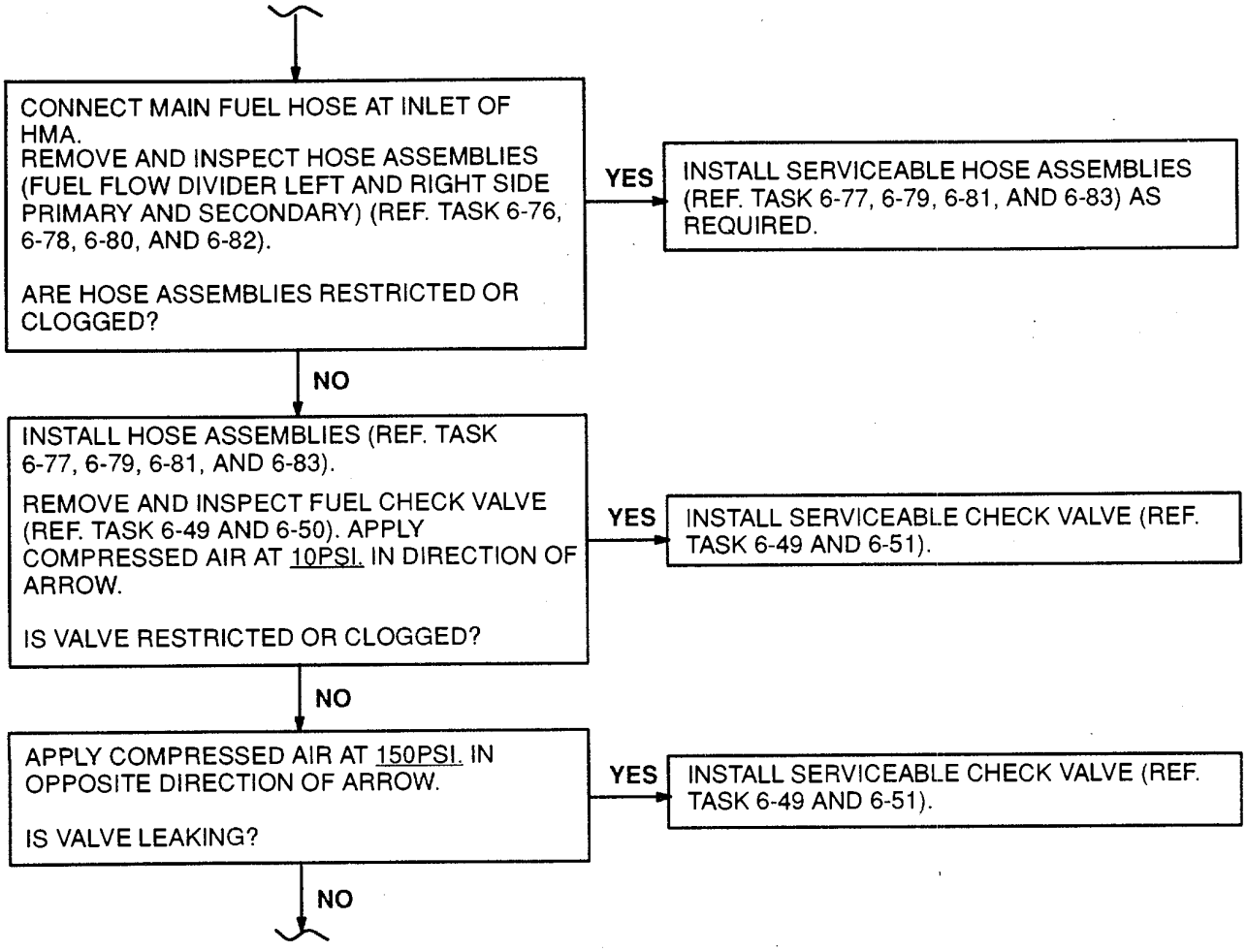

GO TO NEXT PAGE

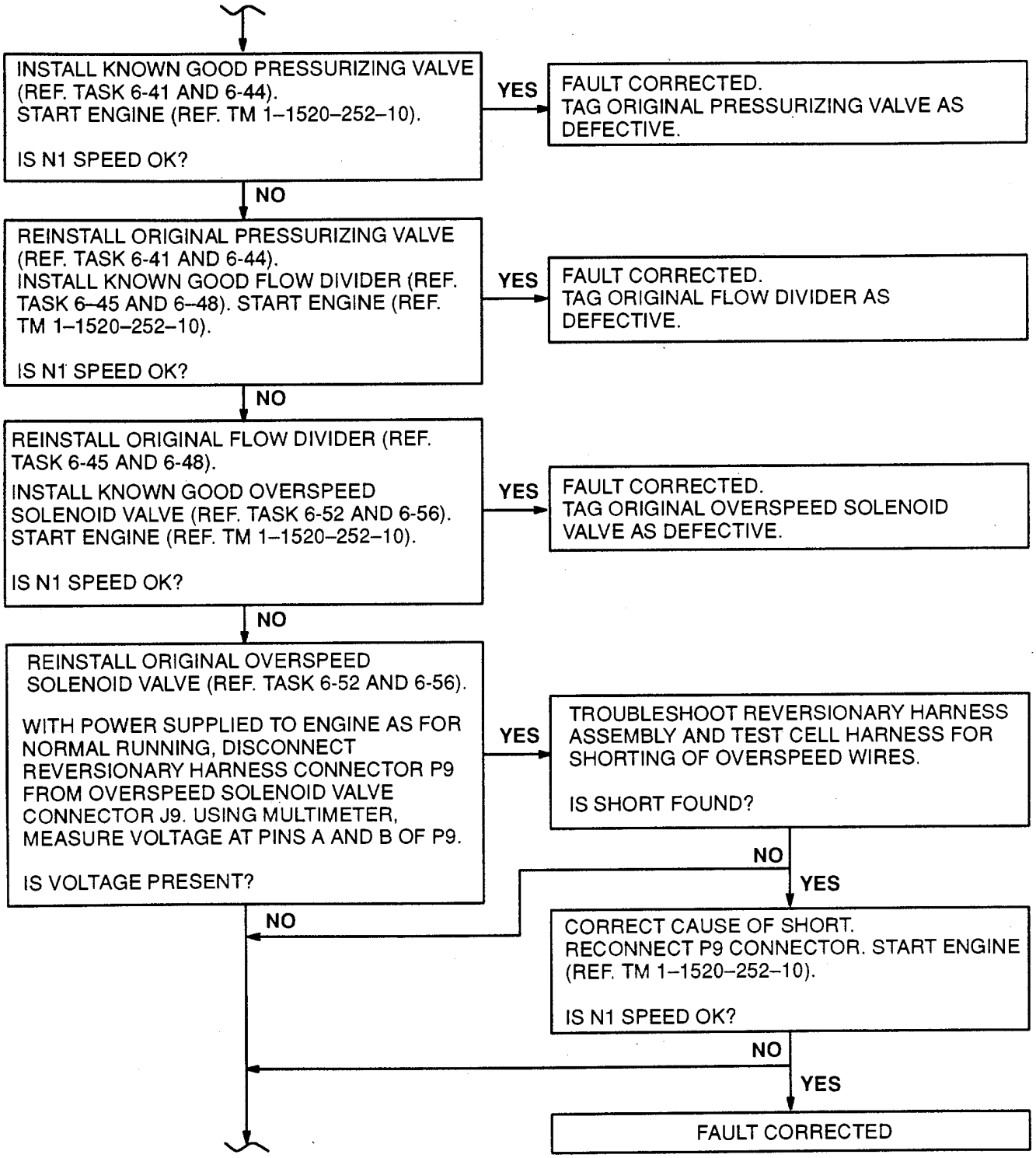

GO TO NEXT PAGE

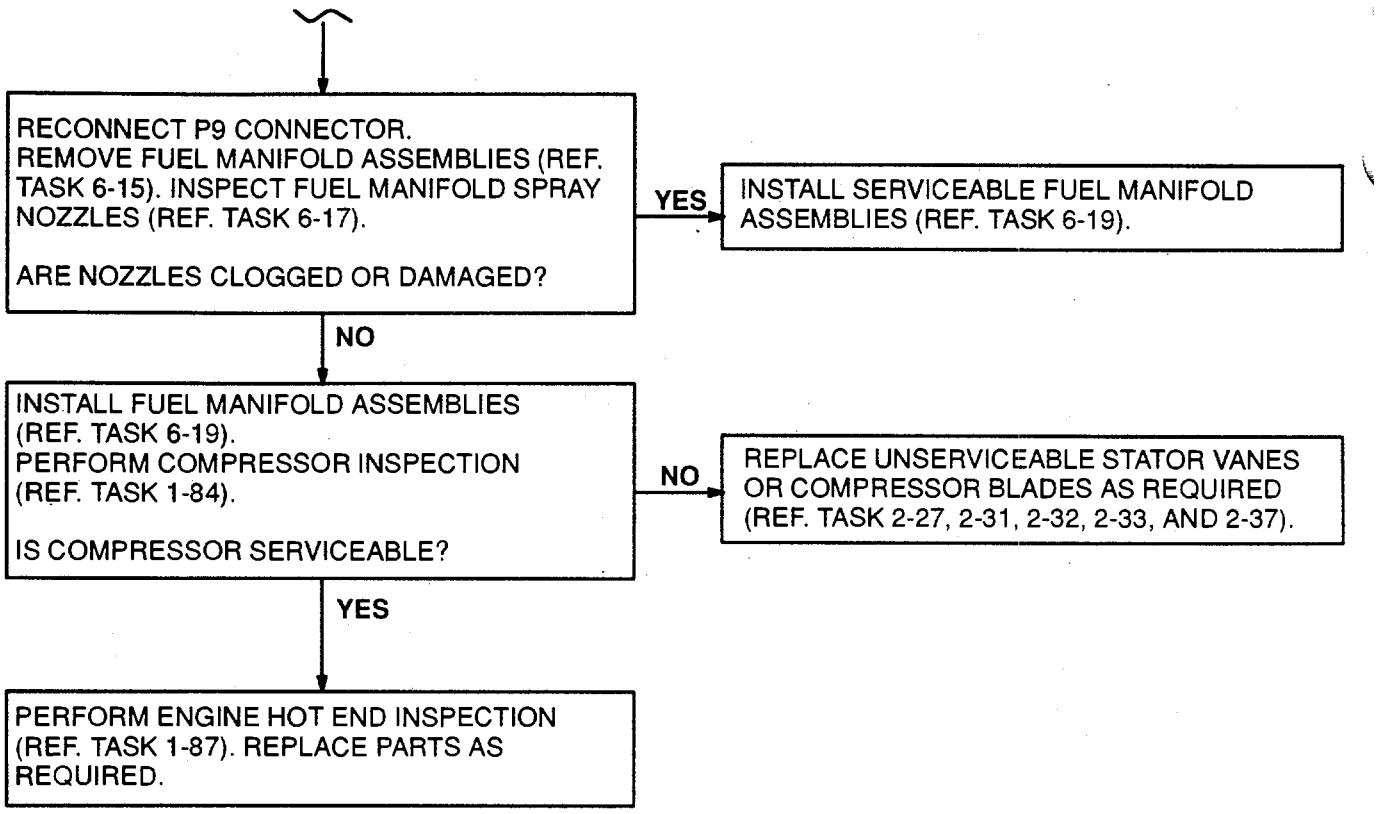

FOLLOW-ON MAINTENANCE:
None

END OF TASK

1-51 ERRATIC OR OSCILLATING PTIT, TORQUE , OR N1 WHILE GOVERNING ON N2

INITIAL SETUP

Applicable Configurations:
All

Tools:
Powerplant Mechanic's Tool Kit,
NSN 5180-00-323-4944

Materials:
None

Personnel Required:
Aircraft Powerplant Repairer

References:
Task 1-50
Appendix G

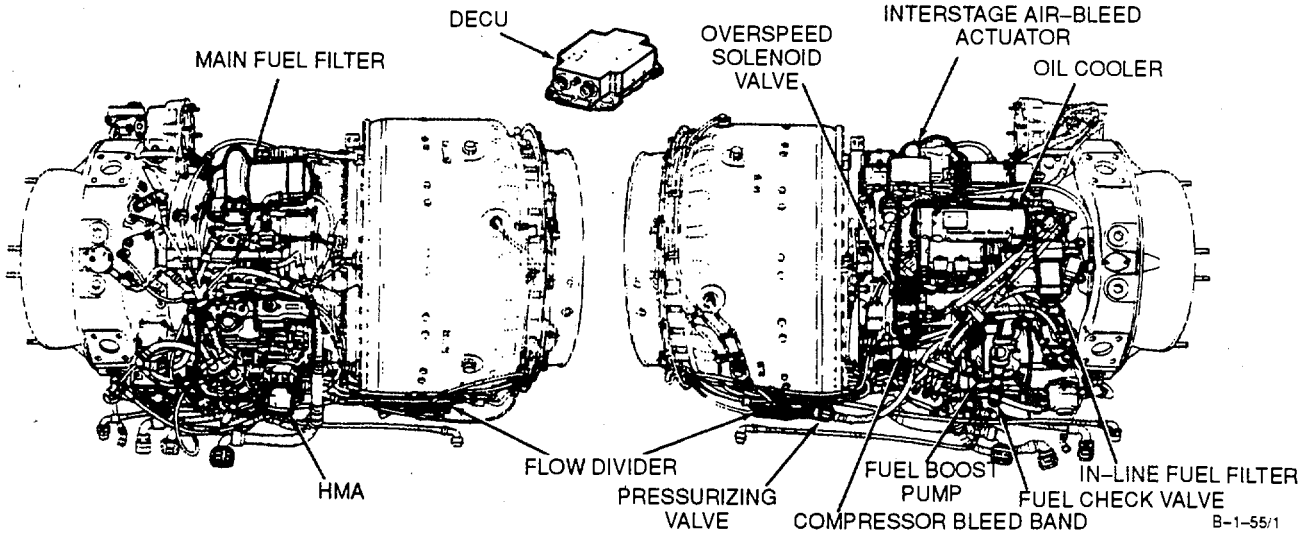

NOTE: TEST CELL POWER ABSORBERS TYPICALLY JAVE LOW INERTIA AND ARE PRONE TO OSCILATION. OSCILLATION LEVELS SHOULD BER COMPARED WITH PREVIOUS OR TYPICAL N2 OSCILLATION LEVELS BEFORE TROUBLESHOOTING IN THE TEST CELL.

GO TO NEXT PAGE

CHECK DECU FOR FAULT INDICATION.

IS FAULT CODE DISPLAYED?

YES → CLEAR FAULT (REF. APPENDIX G).

IS PROBLEM CORRECTED?

NO → NO FURTHER ACTION REQUIRED.

NO → ADJUST OPERATOR'S CONTROLS TO OPERATE ON N_1 GOVERNOR.

ARE OSCILLATIONS STILL PRESENT?

YES → TROUBLESHOOT IN ACCORDANCE WITH TASK 1-50.

NO

NOTE: IN TEST CELL HARNESS, "PL1" CONNECTOR PINS "K" (EN TEST BED) AND " i " (EN TEST BED 0 VOLTS) ARE INTENTIONALLY SHORTED ; THEY ARE NOT SHORTED IN AIRCRAFT HARNESS.
THE PURPOSE OF SHORTING THESE PINS IS TO PROVIDE INDICATION TO THE DECU THAT THE ENGINE IS RUNNING IN TEST CELL.
THE DECU REDUCES N_2 CONTROL GAIN FOR TEST CELL OPERATION TO ALLOW MORE STABLE OPERATION WITH LOW INERTIA POWER ABSORBER LOADS.

CHECK TEST CELL HARNESS "PL1" CONNECTOR FOR CONTINUITY BETWEEN PINS "K" (EN TEST BED) AND " i " (EN TEST BED 0 VOLTS).

IS THERE CONTINUITY?

NO → REPAIR OR REPLACE TEST CELL HARNESS (REF. TEST CELL FACILITIES MAINTENANCE).

YES → INVESTIGATE STABILITY CHARACTERISTICS OF LOAD.

ARE OSCILLATIONS STILL PRESENT?

YES → ADJUST, REPAIR OR REPLACE COMPONENTS AS REQUIRED.

NO → FAULT CORRECTED.

FOLLOW-ON MAINTENANCE
None

END OF TASK

1-52 FLAMEOUT 1-52

INITIAL SETUP

Applicable Configurations:

All

Tools:

Powerplant Mechanic's Tool Kit,
NSN 5180-00-323-4944
Utility Pail

Materials:

None

Personnel Required:

Aircraft Powerplant Repairer
Aircraft Powerplant Repairer

References:

TM 1-1520-252-T
TM 1-1520-252-10
TM 55-4920-328-13

Task 1-47	Task 2-57	Task 6-56
Task 1-79	Task 2-58	Task 6-57
Task 1-84	Task 2-63	Task 6-62
Task 1-86	Task 2-64	Task 6-63
Task 1-87	Task 2-71	Task 6-64
Task 1-95	Task 2-72	Task 6-65
Task 1-96	Task 6-1	Task 6-66
Task 1-99	Task 6-5	Task 6-67
Task 1-100	Task 6-8	Task 6-68
Task 2-1	Task 6-12	Task 6-69
Task 2-2	Task 6-28	Task 6-72
Task 2-3	Task 6-34	Task 6-73
Task 2-4	Task 6-35	Task 6-76
Task 2-5	Task 6-40	Task 6-77
Task 2-6	Task 6-41	Task 6-78
Task 2-7	Task 6-44	Task 6-79
Task 2-9	Task 6-45	Task 6-80
Task 2-27	Task 6-48	Task 6-81
Task 2-31	Task 6-49	Task 6-82
Task 2-32	Task 6-50	Task 6-83
Task 2-33	Task 6-51	Task 8-14
Task 2-37	Task 6-52	APPENDIX

General Safety Instructions:

WARNING

Turbine fuels are very flammable. They may cause drying and irritation of skin or eyes. Handle only in well-ventilated areas away from heat and open flame. Drain and store in approved metal safety containers. Avoid prolonged or repeated contact with skin and do not take internally. Wash contacted area of skin thoroughly after handling. If irritation of skin results, get medical attention. Get medical attention for eyes.

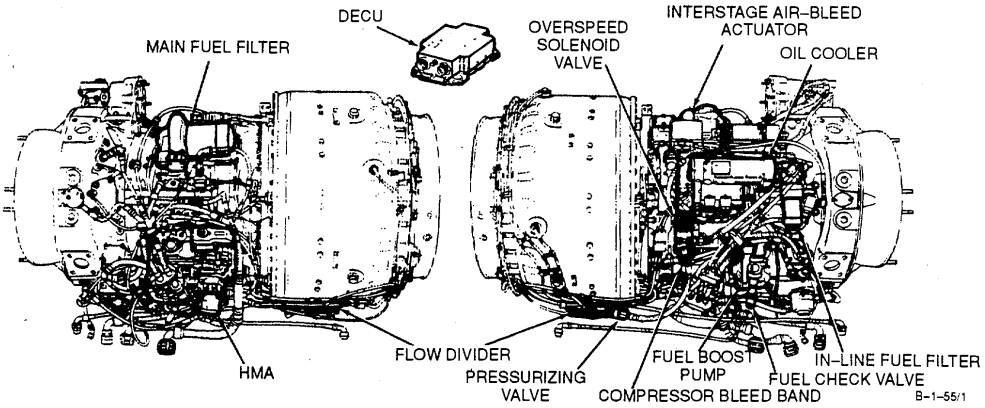

GO TO NEXT PAGE

1-52 FLAMEOUT (Continued) 1-52

NOTE: FLAMEOUT MAY BE AN INTERMITTENT OR NON-REPEATABLE CONDITION. IF FLAMEOUT DOES NOT RECUR AFTER REPLACEMENT OF A PARTICULAR COMPONENT, VERIFY THAT COMPONENT WAS DISCREPANT BY BENCH TEST.

THIS WILL CONFIRM THAT FLAMEOUT WAS NOT OF THE INTERMITTENT OR NON-REPEATABLE TYPE. IF FLAMEOUT IS NOT REPEATABLE, MOST LIKELY CAUSE WAS MOMENTARY FUEL SUPPLY INTERRUPTION OR COMPRESSOR STALL DUE TO INCOMPLETE BLEED OPENING.

NOTE: APPARENT FLAMEOUT MAY OCCUR IF ECL IS INADVERTENTLY MOVED BELOW GND POSITION DURING OPERATION.

VERIFY FLAMEOUT IS NOT CAUSED BY OPERATOR ECL MOVEMENT.

TASK	RESULT
	CAUTION **IN THE FOLLOWING TWO STEPS, IF DIFFERENTIAL PRESSURE INDICATOR BUTTON BECOMES EXTENDED MORE THAN ONCE WITHIN EACH PERIOD OF ENGINE OPERATION, INSPECT CONTAMINATED FUEL SYSTEM (REF. TASK 1-79).**
1. Check inline fuel filter differential pressure indicator button.	If differential pressure indicator button is extended, service filter and reset button (Ref. Task 1-96).
2. Check main fuel filter differential pressure indicator button.	If differential pressure indicator button is extended, service filter and reset button (Ref. Task 1-95).

GO TO NEXT PAGE

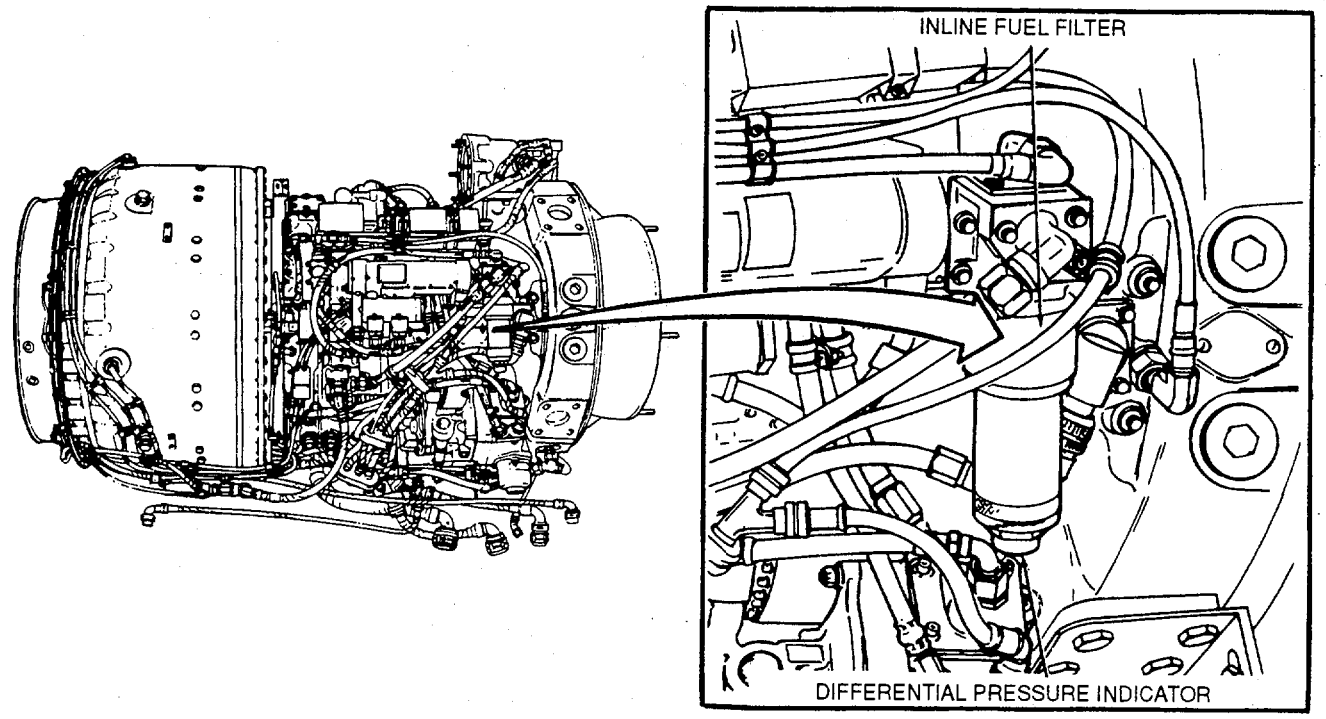

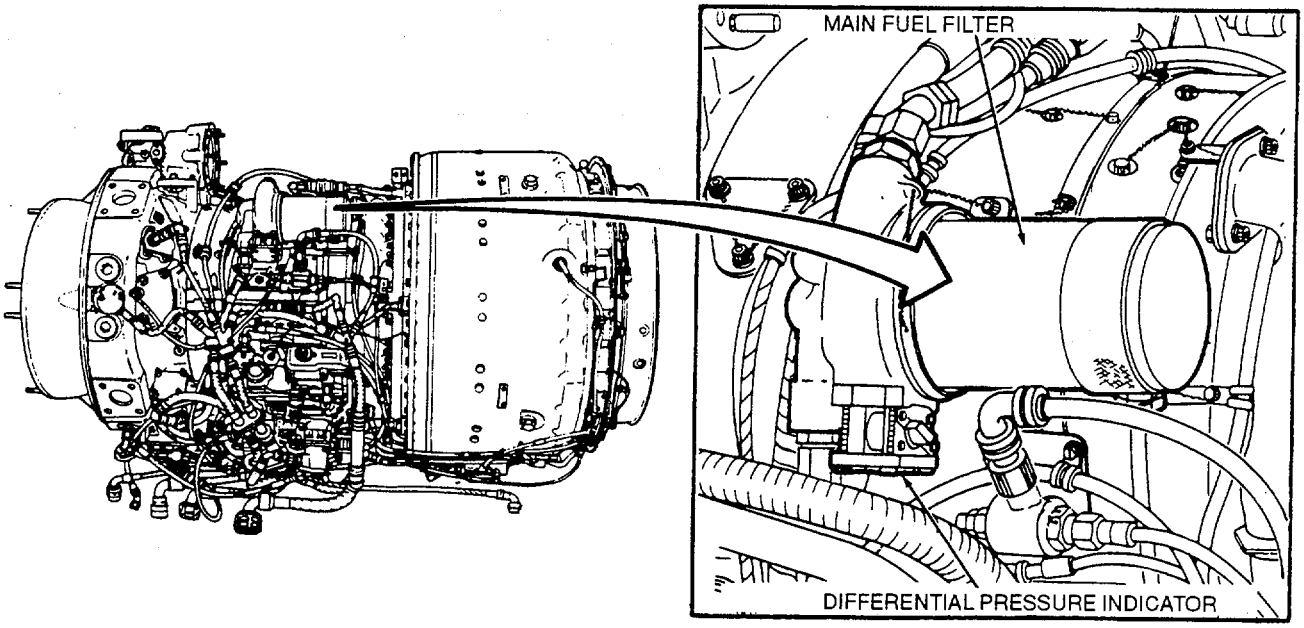

B-1-36/1

GO TO NEXT PAGE

NOTE: N_1A AND N_1B FAULT CODES ARE EXPECTED IF FLAMEOUT OCCURS WITHOUT OPERATOR SHUTDOWN COMMAND (*i.e.* ECL TO STOP).
DISREGARD THESE FAULT CODES DURING TROUBLESHOOTING FOR THIS SYMPTOM.

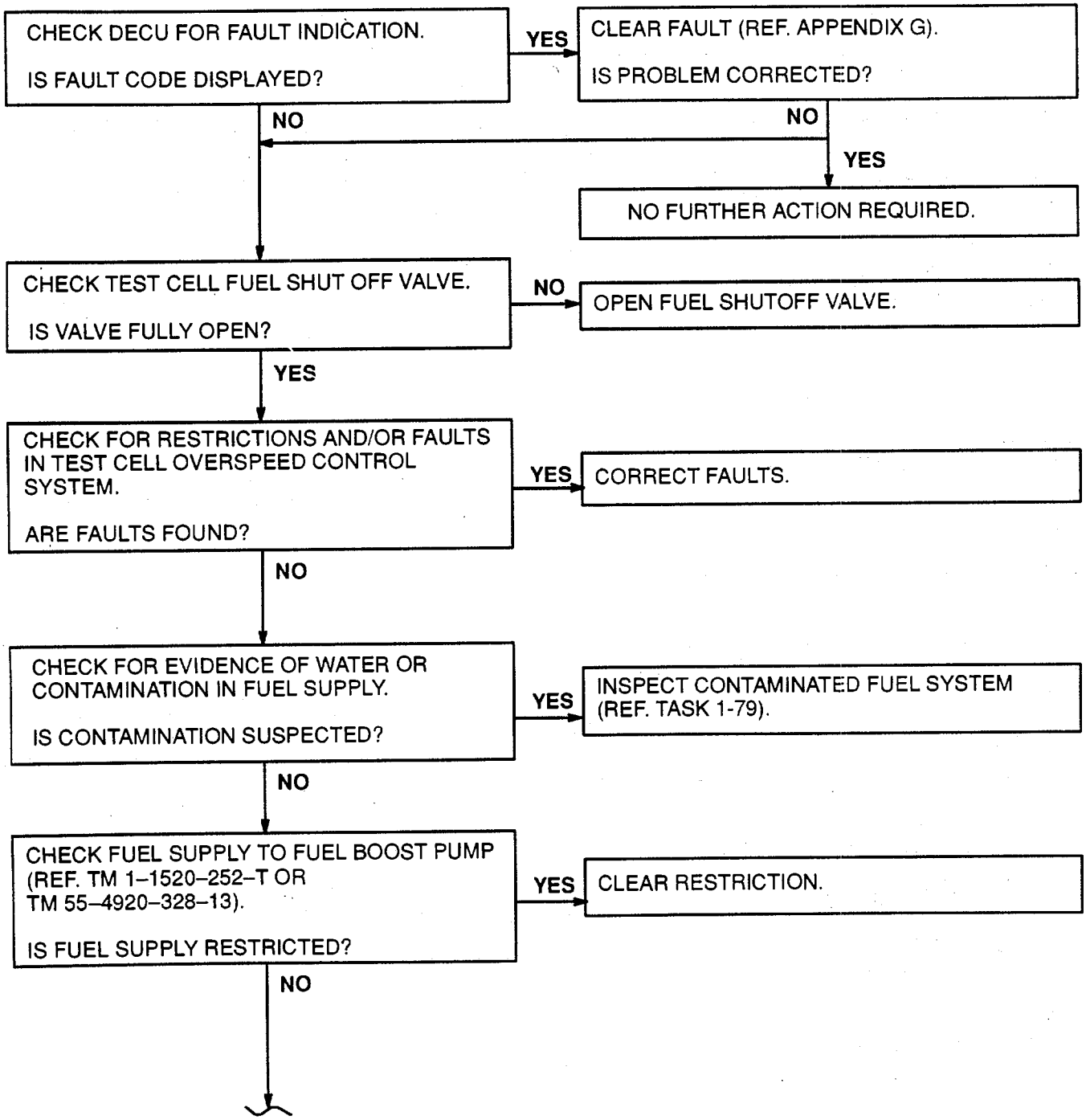

GO TO NEXT PAGE

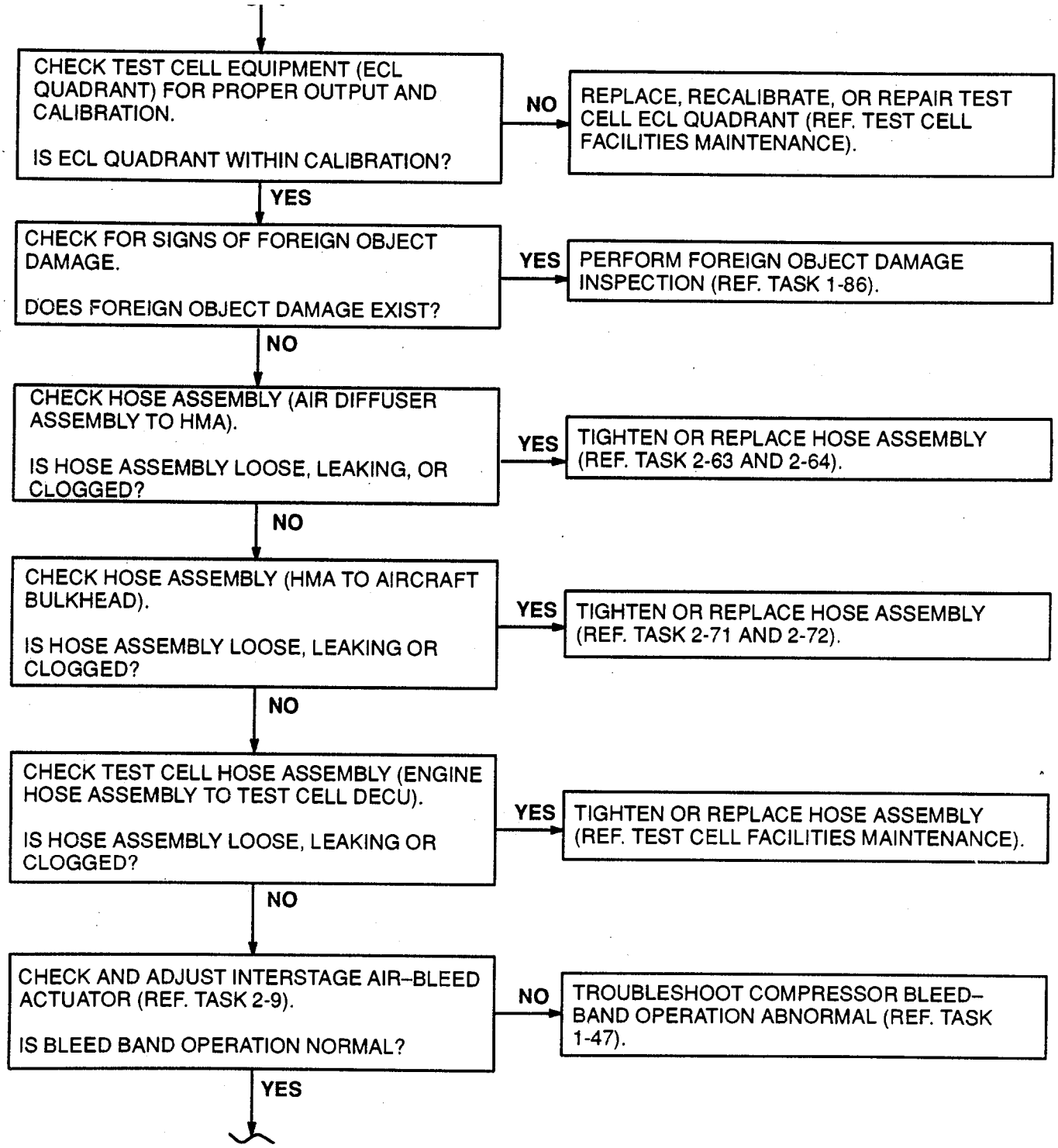

GO TO NEXT PAGE

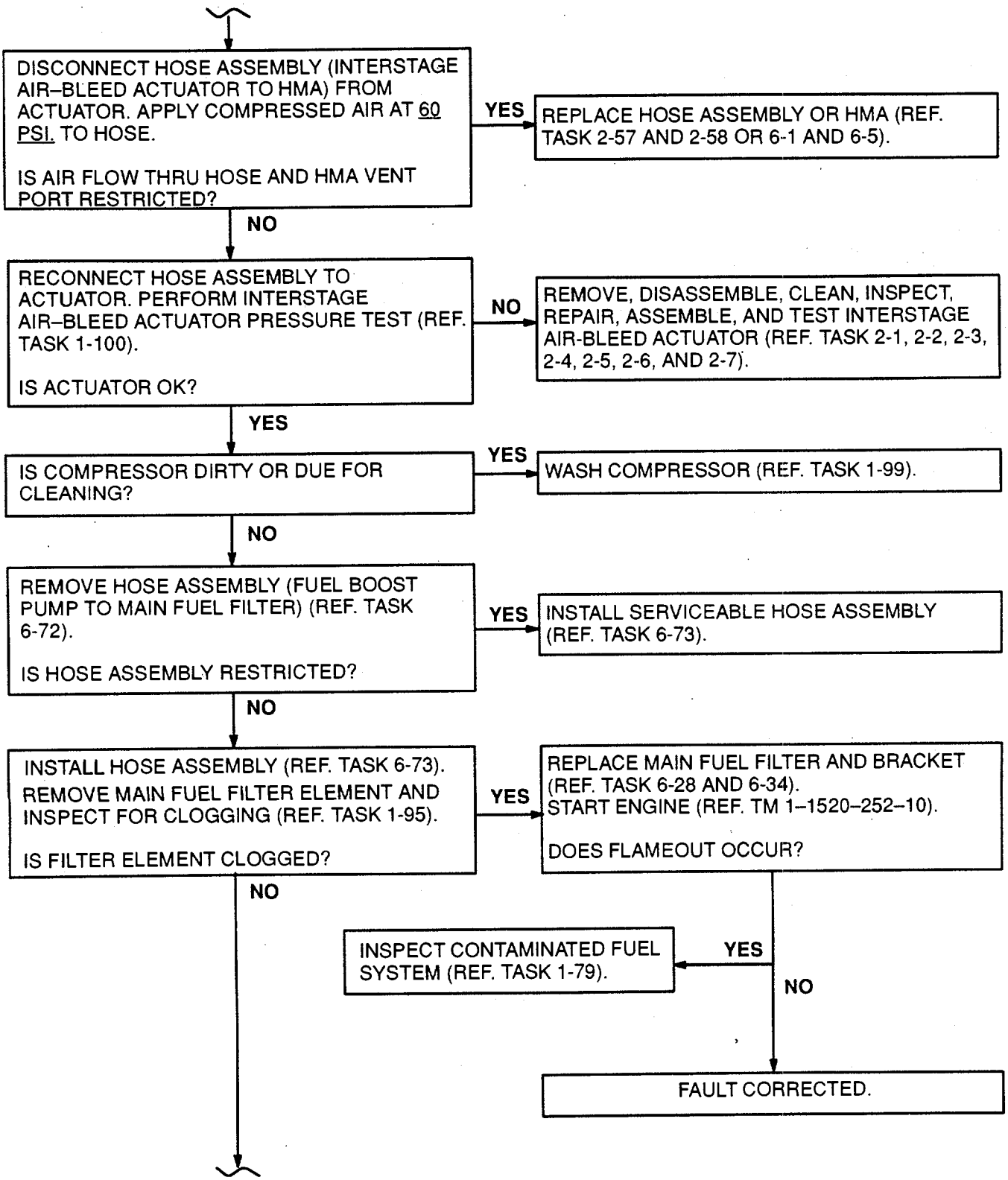

GO TO NEXT PAGE

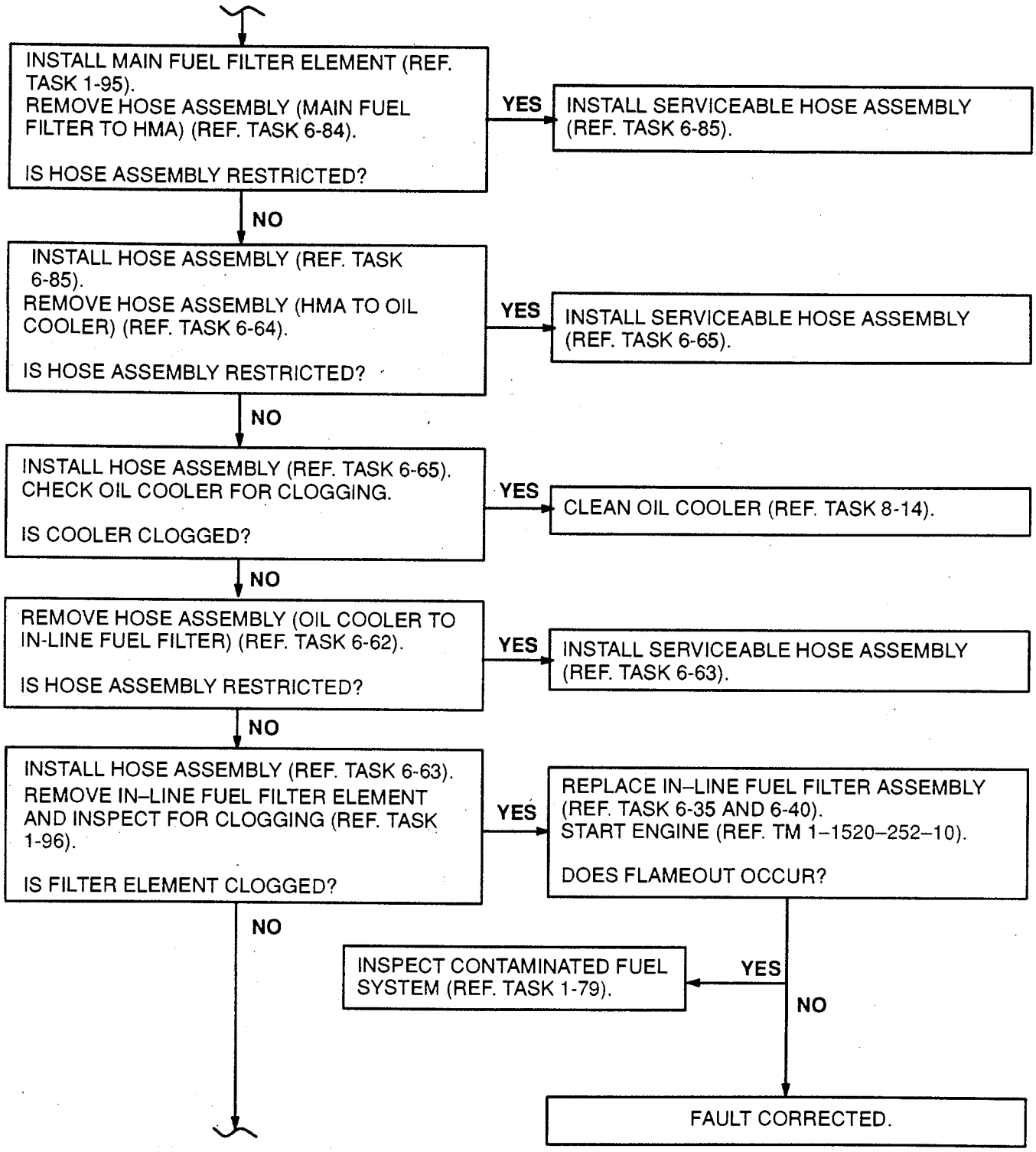

GO TO NEXT PAGE

INSTALL IN–LINE FUEL FILTER ELEMENT (REF. TASK 1-96).
REMOVE HOSE ASSEMBLY (IN–LINE FUEL FILTER TO OVERSPEED SOLENOID VALVE) (REF. TASK 6-66).

IS HOSE ASSEMBLY RESTRICTED?

YES → INSTALL SERVICEABLE HOSE ASSEMBLY (REF. TASK 6-67).

NO ↓

INSTALL HOSE ASSEMBLY (REF. TASK 6-67).
REMOVE HOSE ASSEMBLY (OVERSPEED SOLENOID VALVE TO PRESSURIZING VALVE) (REF. TASK 6-68).

IS HOSE ASSEMBLY RESTRICTED?

YES → INSTALL SERVICEABLE HOSE ASSEMBLY (REF. TASK 6-69).

NO ↓

REMOVE AND INSPECT HOSE ASSEMBLIES (FUEL FLOW DIVIDER LEFT AND RIGHT SIDE PRIMARY AND SECONDARY) (REF. TASK 6-76, 6-78, 6-80, AND 6-82).

ARE HOSE ASSEMBLIES RESTRICTED OR CLOGGED?

YES → INSTALL SERVICEABLE HOSE ASSEMBLIES (REF. 6-77, 6-79, 6-81, AND 6-83) AS REQUIRED.

NO ↓

INSTALL HOSE ASSEMBLIES (REF. TASK 6-77, 6-79, 6-81, AND 6-83).

REMOVE AND INSPECT FUEL CHECK VALVE (REF. TASK 6-49 AND 6-50). APPLY COMPRESSED AIR AT 10PSI. IN DIRECTION OF ARROW.

IS VALVE RESTRICTED OR CLOGGED?

YES → INSTALL SERVICEABLE CHECK VALVE (REF. TASK 6-49 AND 6-51).

NO ↓

APPLY COMPRESSED AIR AT 150PSI. IN OPPOSITE DIRECTION OF ARROW.

IS VALVE LEAKING?

YES → INSTALL SERVICEABLE CHECK VALVE (REF. TASK 6-49 AND 6-51).

NO ↓

GO TO NEXT PAGE

WARNING

DISCONNECT DC POWER SOURCE TO IGNITION EXCITER OR OPEN CIRCUIT BREAKER TO PREVENT POSSIBILITY OF FIRE THAT CAN CAUSE INJURY TO PERSONNEL. IF INJURY OCCURS, GET MEDICAL ATTENTION.

INSTALL HOSE ASSEMBLY (REF. TASK 6-69).
DISCONNECT MAIN FUEL HOSE AT INLET OF HMA. PLACE END OF HOSE INTO UTILITY PAIL.
HAVE HELPER MOTOR ENGINE (ECL SET TO GND) (REF. TM 1–1520–252–10).

IS FUEL BEING PUMPED INTO PAIL?

NO → CONNECT MAIN FUEL HOSE AT INLET OF HMA. REPLACE FUEL BOOST PUMP ASSEMBLY (REF. TASK 6-8 AND 6-12).

YES ↓

CONNECT MAIN FUEL HOSE AT INLET OF HMA.
INSTALL KNOWN GOOD PRESSURIZING VALVE (REF. TASK 6-41 AND 6-44).
START ENGINE (REF. TM 1–1520–252–10).

DOES FLAMEOUT OCCUR?

NO → FAULT CORRECTED.
TAG ORIGINAL PRESSURIZING VALVE AS DEFECTIVE.

YES ↓

REINSTALL ORIGINAL PRESSURIZING VALVE (REF. TASK 6-41 AND 6-44).
INSTALL KNOWN GOOD FLOW DIVIDER (REF. TASK 6-45 AND 6-48). START ENGINE (REF. TM 1–1520–252–10).

DOES FLAMEOUT OCCUR?

NO → FAULT CORRECTED.
TAG ORIGINAL FLOW DIVIDER AS DEFECTIVE.

YES ↓

GO TO NEXT PAGE

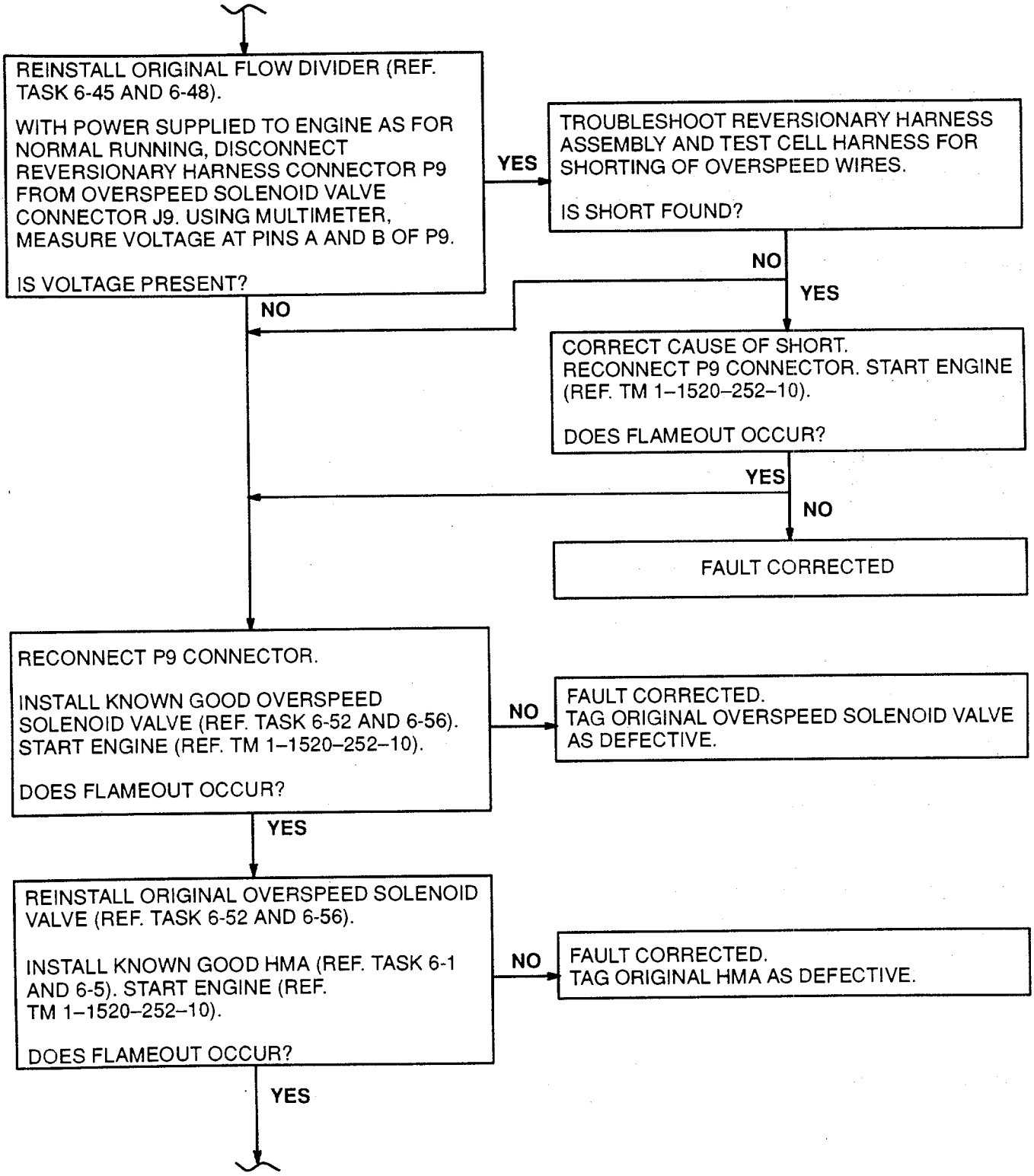

GO TO NEXT PAGE

REINSTALL ORIGINAL HMA (REF. TASK 6-1 AND 6-5).

REMOVE FUEL MANIFOLD ASSEMBLIES (REF. TASK 6-15). INSPECT FUEL MANIFOLD SPRAY NOZZLES (REF. TASK 6-17).

ARE NOZZLES CLOGGED OR DAMAGED?

YES → INSTALL SERVICEABLE FUEL MANIFOLD ASSEMBLIES (REF. TASK 6-19).

NO ↓

INSTALL FUEL MANIFOLD ASSEMBLIES (REF. TASK 6-19).

INSTALL KNOWN GOOD DECU (REF. TM 1–1520–252–23). START ENGINE (REF. TM 1–1520–252–10).

DOES FLAMEOUT OCCUR?

NO → FAULT CORRECTED. TAG ORIGINAL DECU AS DEFECTIVE.

YES ↓

REINSTALL ORIGINAL DECU (REF. TM 1–1520–252–23).

PERFORM COMPRESSOR INSPECTION (REF. TASK 1-84).

IS COMPRESSOR SERVICEABLE?

NO → REPLACE UNSERVICEABLE STATOR VANES OR COMPRESSOR BLADES AS REQUIRED (REF. TASK 2-27, 2-31, 2-32, 2-33, AND 2-37).

YES ↓

PERFORM ENGINE HOT END INSPECTION. (REF. TASK 1-87). REPLACE PARTS AS REQUIRED.

FOLLOW–ON MAINTENANCE:

None

END OF TASK

1-53 OIL PRESSURE INDICATING LOW OR HIGH - VISUAL CHECK 1-53

INITIAL SETUP

Applicable Configurations:
All

Tools:
Powerplant Mechanic's Tool Kit,
NSN 5180-00-323-4944

Materials:
Lubricating Oil (E36 or E37)
Wiping Rag (E64)

Personnel Required:
Aircraft Powerplant Repairer

References:
Task 1-68
Task 1-93

TASK	RESULT
1. Check oil level indicator.	If oil tank level is too low, service engine oil system (Ref. Task 1-68).
2. Check differential pressure indicator button.	If button is extended service oil filter cover assembly and oil filter element (Ref. Task 1-93).

GO TO NEXT PAGE

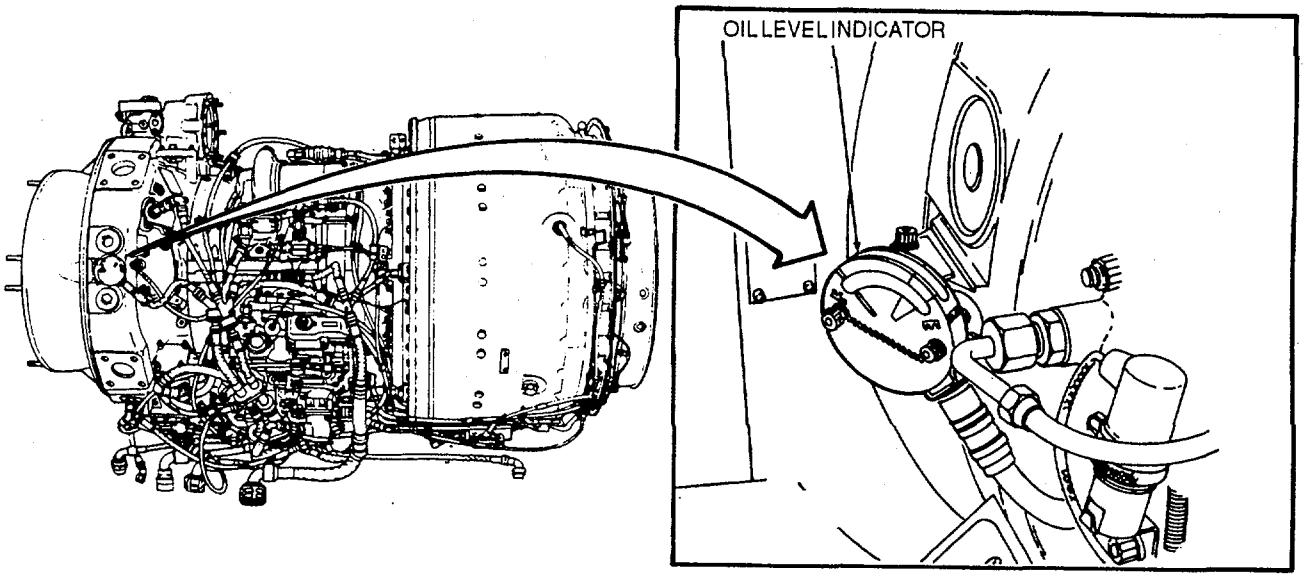

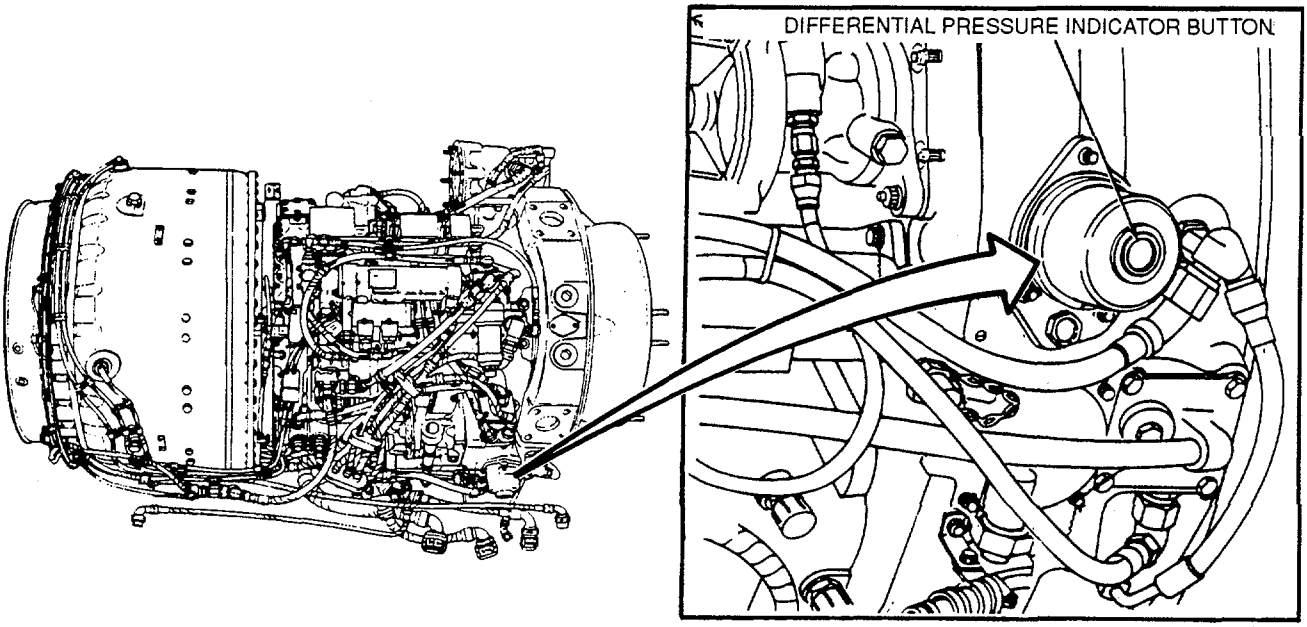

B–1–56/1

FOLLOW–ON MAINTENANCE:

None

END OF TASK

INITIAL SETUP

Applicable Configurations:
All

Tools:
Powerplant Mechanic's Tool Kit, NSN 5180-00-323-4944
Dial Indicating Pressure Gage, 0-200 PSIG

Personnel Required:
Aircraft Powerplant Repairer

Materials:
None

References:
TM 1-1520-252-T
TM 55-4920-328-13
Task 1-80
Task 1-101
Task 8-1
Task 8-6
Task 8-19
Task 8-22
Task 8-55
Task 8-56
Task 8-65
Task 8-66
Task 8-73
Task 8-74
Task 8-91
Task 8-99
Task 8-103

General Safety Instructions:

WARNING

Lubricating oils cause paralysis if swallowed. Prolonged contact with them may Irritate the skin. Handle only in well-ventilated areas away from heat and flame. Drain and store in approved metal safety containers. Avoid prolonged or repeated contact with skin and do not take internally. Wash contacted area of skin thoroughly after handling. If irritation of skin results, get medical attention. (Get medical attention for eyes.

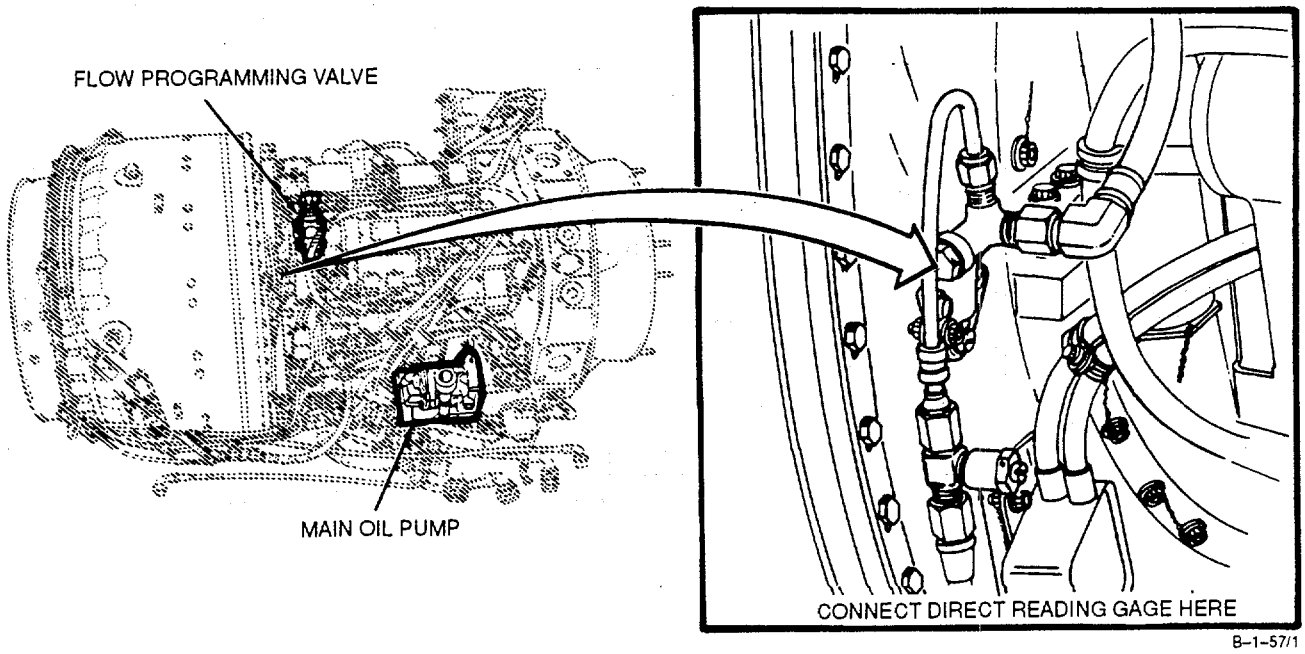

GO TO NEXT PAGE

TEE DIRECT READING GAGE INTO FITTING ON NO. 2 BEARING PRESSURE OIL CONNECTOR.

IS PRESSURE AT GAGE DIFFERENT THAN ON INDICATOR?

YES → REPAIR INDICATING SYSTEM AS NEEDED (REF. TM 1–1520–252–T OR TM 55–4920–328–13).

NO ↓

CHECK TUBE ASSEMBLY (INLET HOUSING TO MAIN OIL PUMP) (REF. TASK 8-65).

IS TUBE ASSEMBLY LOOSE OR LEAKING?

YES → TIGHTEN OR REPLACE TUBE ASSEMBLY (REF. TASK 8-65 AND 8-66) AS NEEDED.

NO ↓

REMOVE DIRECT READING GAGE. INSPECT STARTER GEARBOX FILTER (REF. TASK 8-91).

IS FILTER CLOGGED?

YES → INSPECT CONTAMINATED OIL SYSTEM (REF. TASK 1-80).

NO ↓

INSPECT NO.2 BEARING PRESSURE OIL STRAINER (REF. TASK 8-99).

IS STRAINER CLOGGED?

YES → INSPECT CONTAMINATED OIL SYSTEM (REF. TASK 1-80).

NO ↓

INSPECT NO. 4 AND 5 BEARING OIL FILTER (REF. TASK 8-103).

IS FILTER CLOGGED?

YES → INSPECT CONTAMINATED OIL SYSTEM (REF. TASK 1-80).

NO ↓

CHECK PRESSURE RELIEF VALVE (REF. TASK 1-101).

IS VALVE STUCK OPEN OR CLOSED?

YES → ADJUST OIL PUMP (REF. TASK 1-101).

NO ↓

GO TO NEXT PAGE

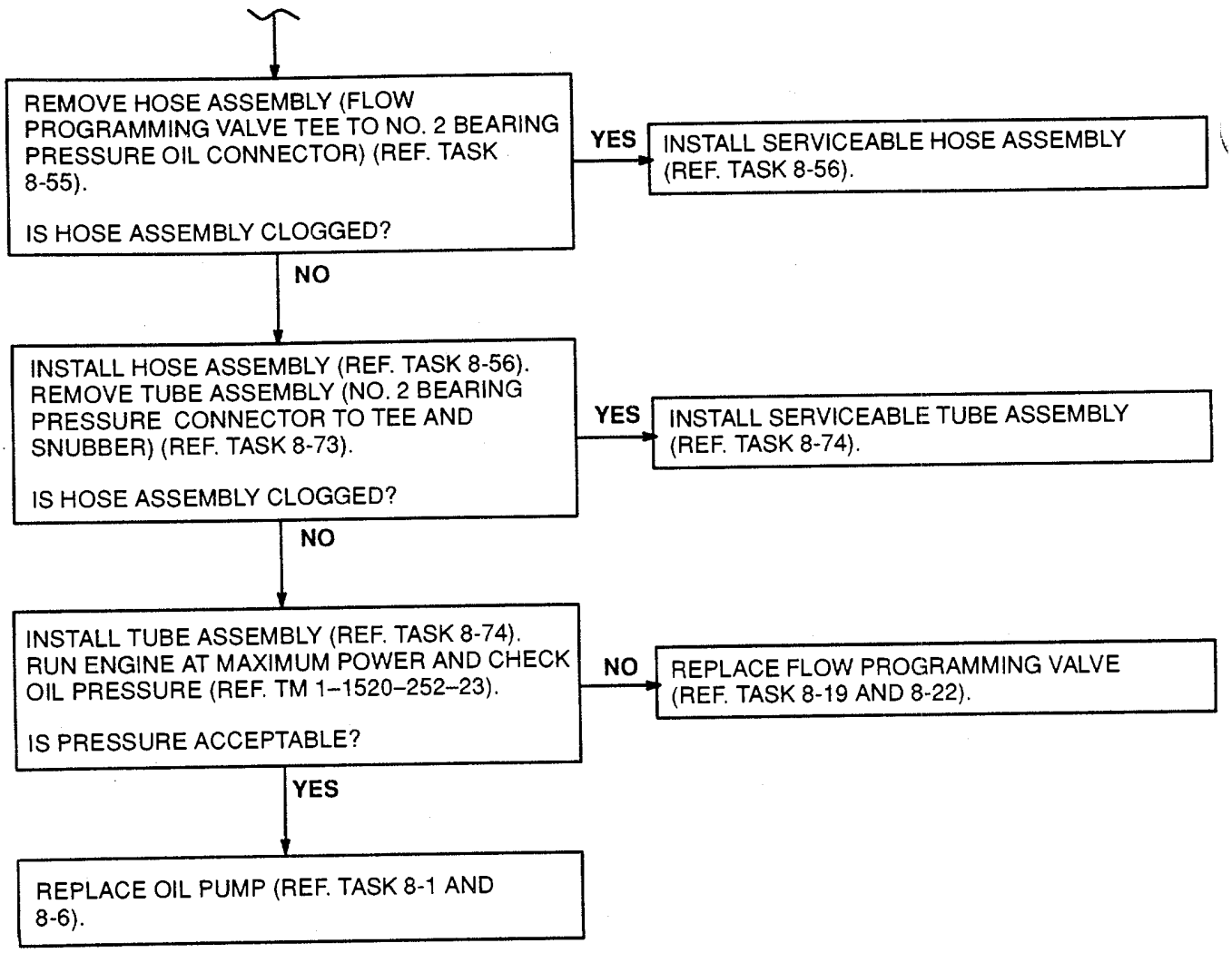

FOLLOW–ON MAINTENANCE:

None

END OF TASK

1-55 OIL PRESSURE FLUCTUATION (TOTAL NEEDLE OSCILLATION OF MORE THAN 10 PSI) - VISUAL CHECK

INITIAL SETUP

Applicable Configurations:
All

Tools:
Powerplant Mechanic's Tool Kit, NSN 5180-00-323-4944

Materials:
None

Personnel Required:
Aircraft Powerplant Repairer

References:
Task 1-68

TASK	RESULT
1. Check oil level indicator.	If oil tank level is too low, service oil system (Ref. Task 1-68).

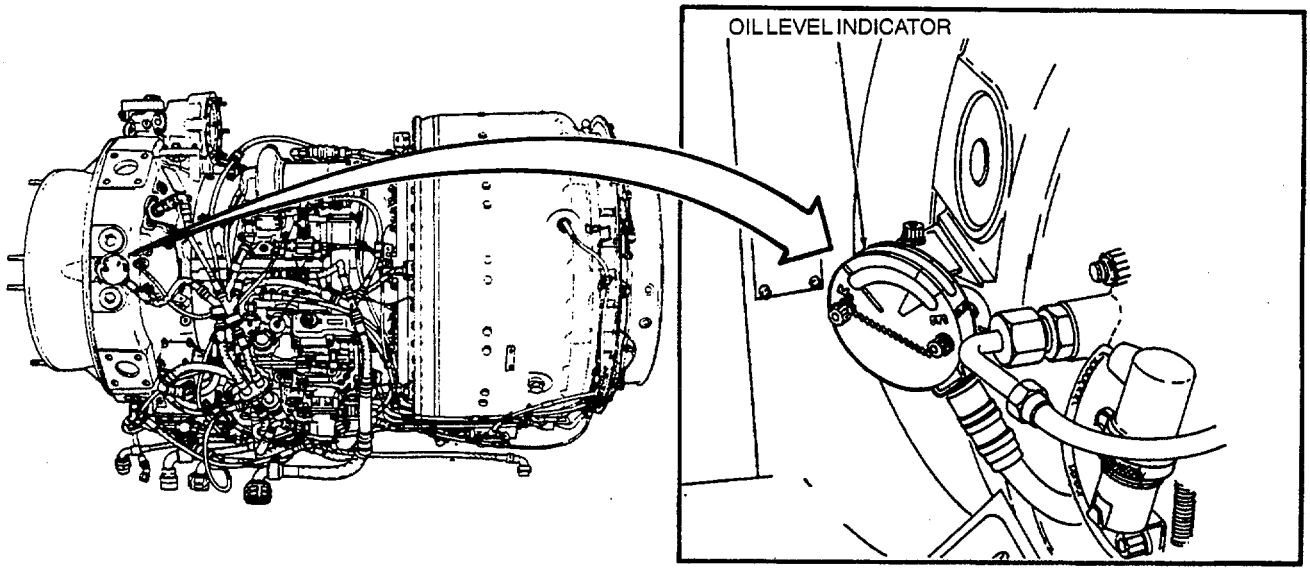

B-1-58/1

FOLLOW-ON MAINTENANCE:
None

END OF TASK

1-56 OIL PRESSURE FLUCTUATION (TOTAL NEEDLE OSCILLATION OF MORE THAN 10 PSI) 1-56

INITIAL SETUP

Applicable Configurations:
All

Tools:
Powerplant Mechanic's Tool Kit, NSN 5180-00-323-4944
Dial Indicating Pressure Gage, 0-200 PSIG

Materials:
Wiping Rag (E64)

Personnel Required:
Aircraft Powerplant Repairer

References:
TM 1-1520-252-T
TM 55-4920-328-13
Task 1-101
Task 8-1
Task 8-65
Task 8-66

General Safety Instructions:

WARNING

Lubricating oils cause paralysis if swallowed. Prolonged contact with them may irritate the skin. Handle only in well-ventilated areas away from heat and flame. Drain and store in approved metal safety containers. Avoid prolonged or repeated contact with skin and do not take Internally. Wash contacted area of skin thoroughly after handling. If irritation of skin results, get medical attention. Get medical attention for eyes.

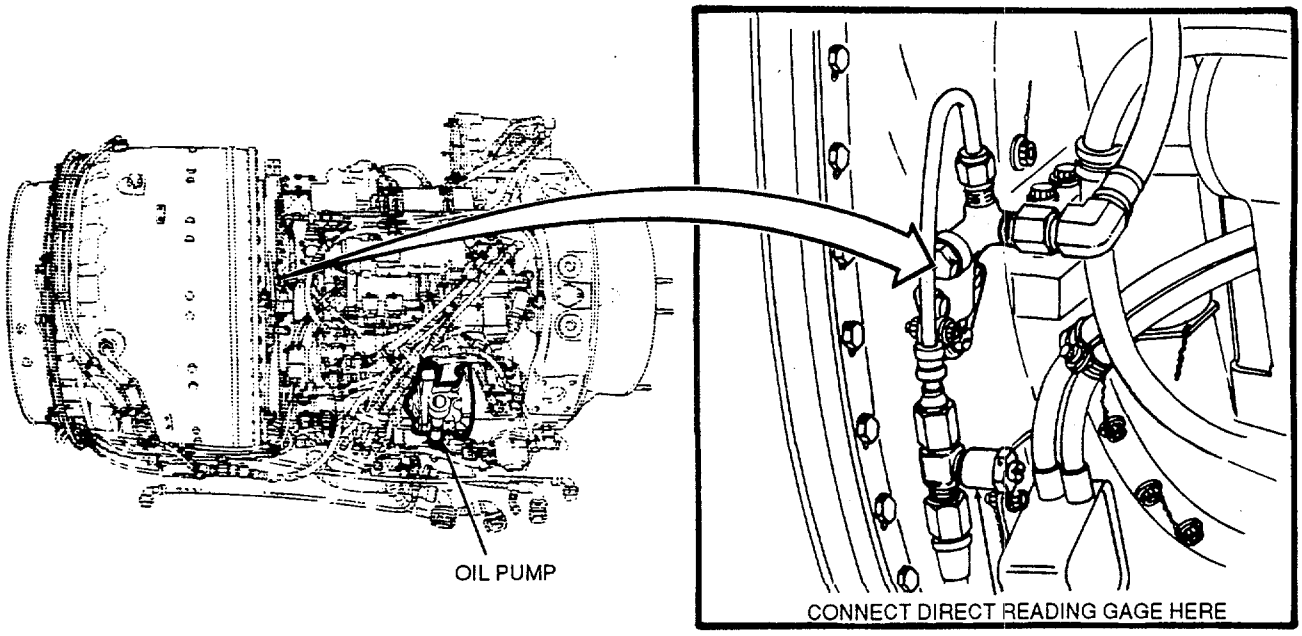

B-1-59/1

GO TO NEXT PAGE

1-56 OIL PRESSURE FLUCTUATION (TOTAL NEEDLE OSCILLATION OF MORE THAN 10 PSI) (Continued)

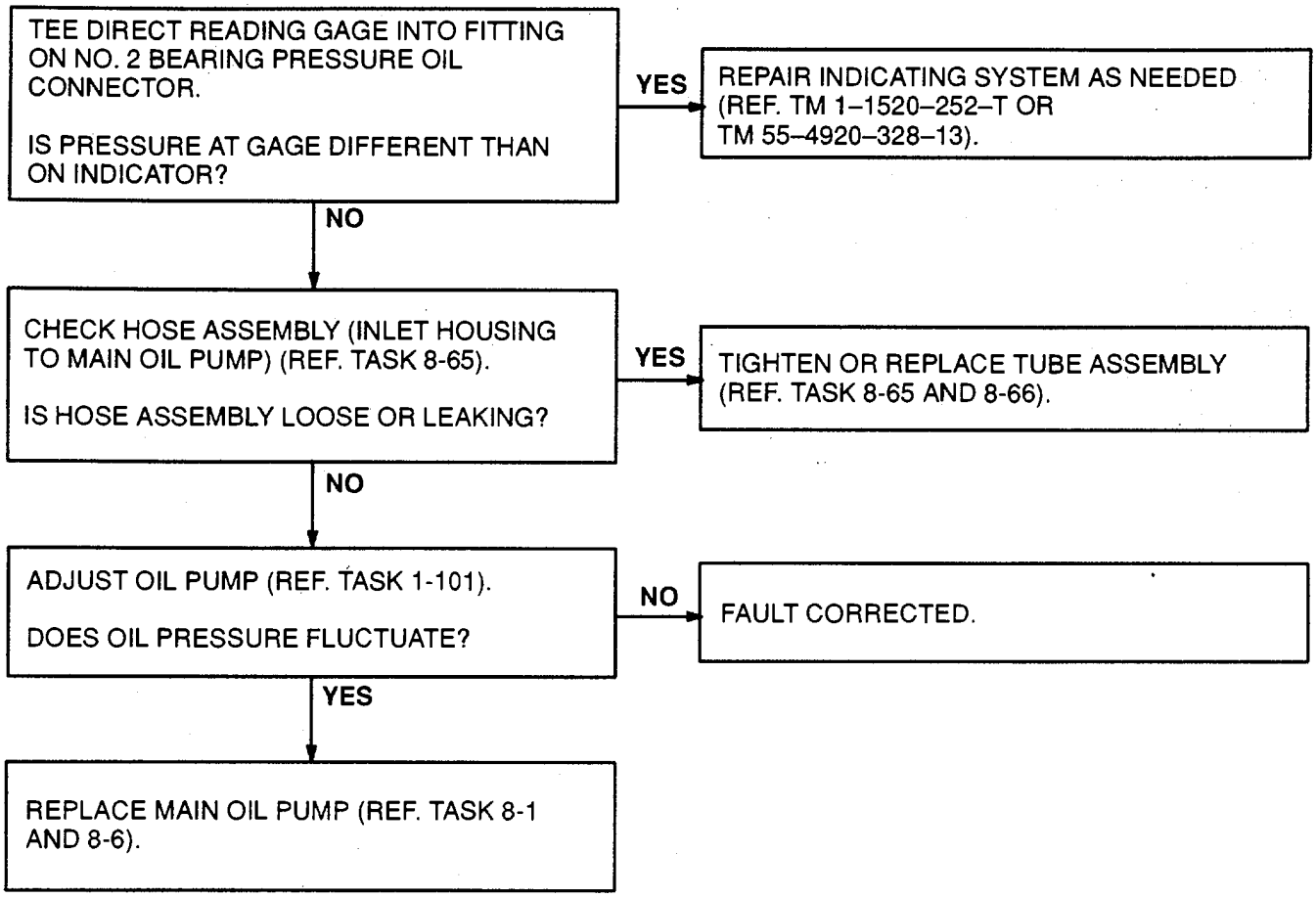

FOLLOW–ON MAINTENANCE:

None

END OF TASK

1-57 HIGH OIL TEMPERATURE INDICATION - VISUAL CHECK 1-57

INITIAL SETUP

Applicable Configurations:
All

Tools:
Powerplant Mechanic's Tool Kit,
NSN 5180-00-323-4944

Materials:
None

Personnel Required:
Aircraft Powerplant Repairer

References:
Task 1-68

TASK	RESULT
1. Check oil level indicator.	If oil tank level is too low, service oil system (Ref. Task 1-68).

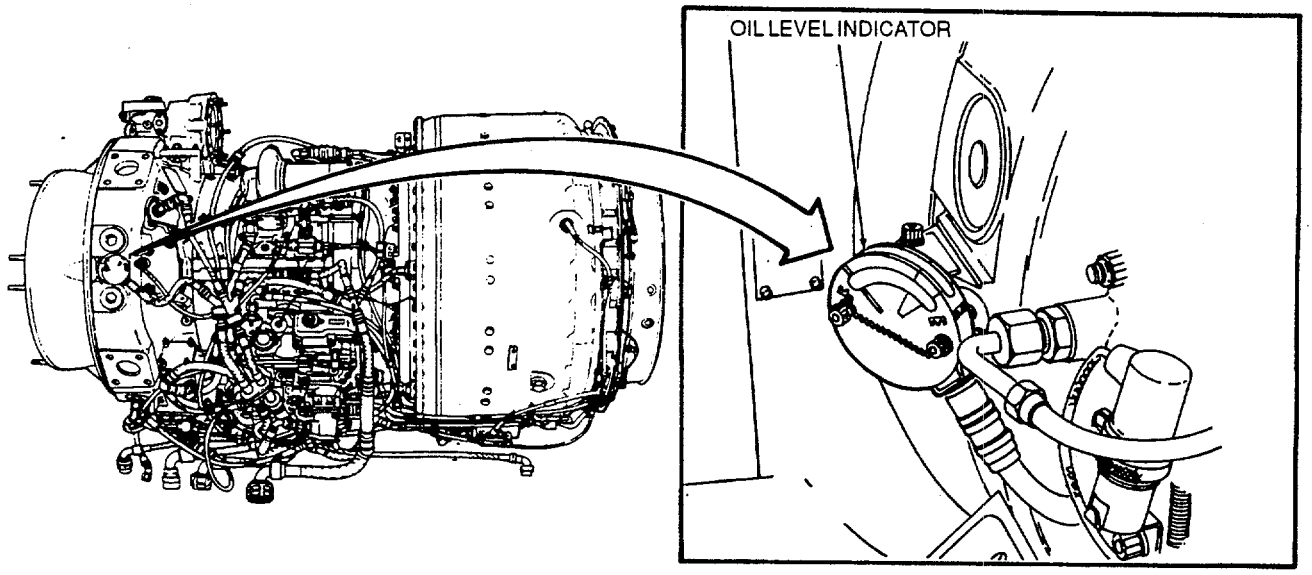

B-1-60.1

FOLLOW-ON MAINTENANCE:
None

END OF TASK

INITIAL SETUP

Applicable Configurations:
All

Tools:
Powerplant Mechanic's Tool Kit, NSN 5180-00-323-4944

Materials:
None

Personnel Required:
Aircraft Powerplant Repairer

References:
TM 1-1520-252-T
TM 55-4920-328-13

Task 1-80	Task 7-32	Task 8-69
Task 1-94	Task 7-33	Task 8-70
Task 7-23	Task 8-12	
Task 7-24	Task 8-18	
Task 7-25	Task 8-23	
Task 7-28	Task 8-26	

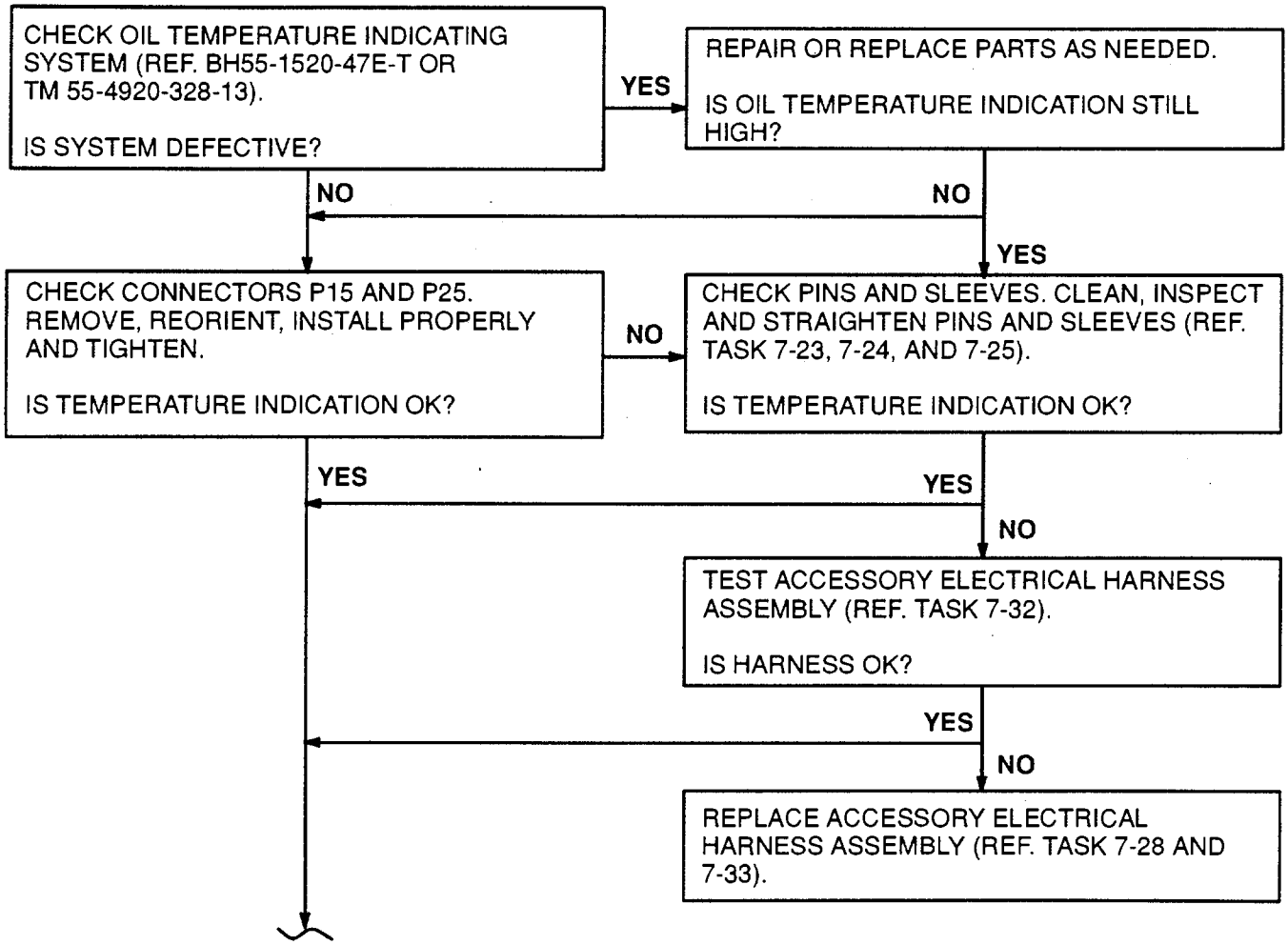

GO TO NEXT PAGE

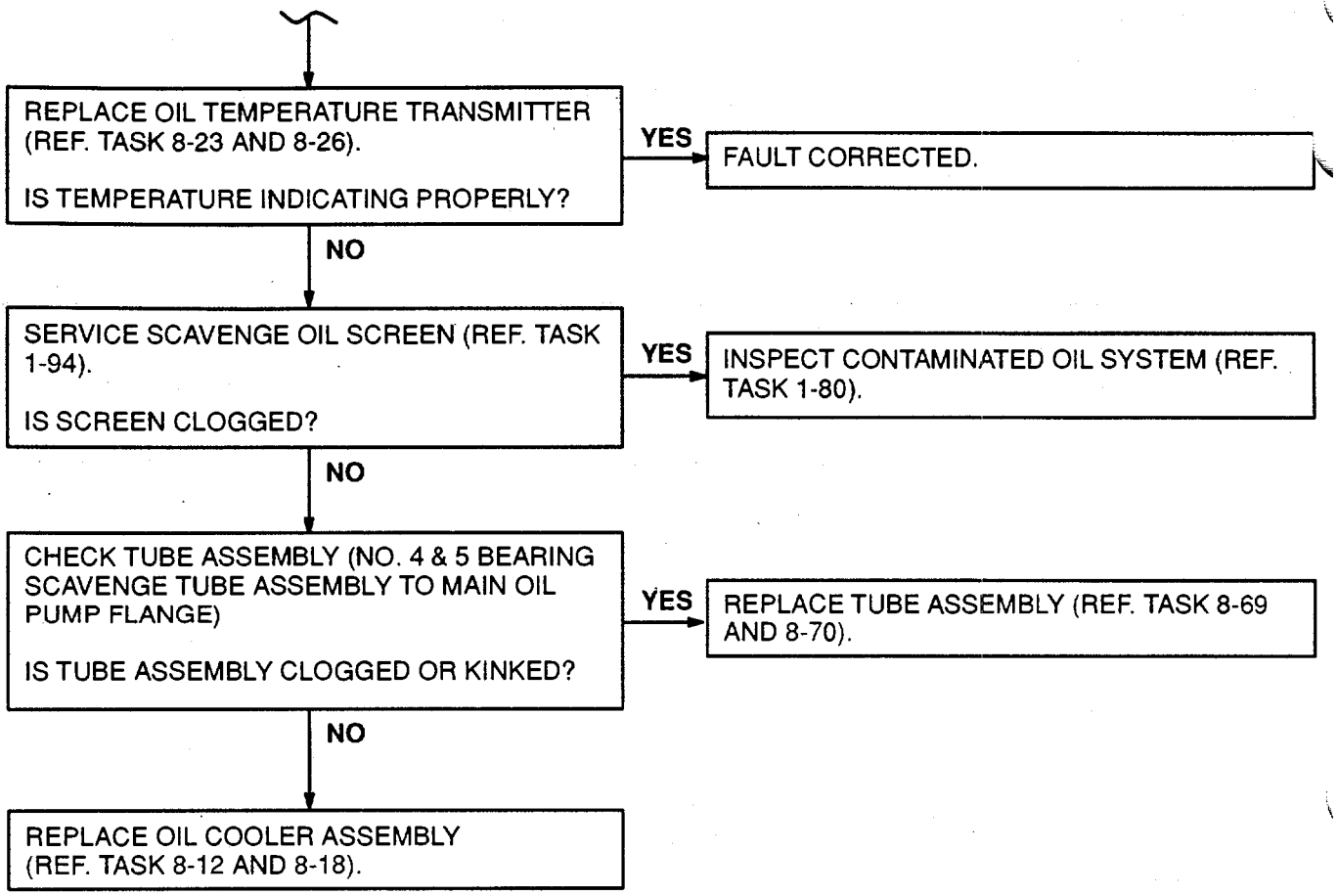

FOLLOW-ON MAINTENANCE:
None

END OF TASK

1-59 STATIC OIL LEAKAGE AT COMBUSTION CHAMBER DRAIN VALVE OR BLEED BAND CAUSED BY INTERNAL OIL SEEPAGE - VISUAL CHECK 1-59

INITIAL SETUP

Applicable Configurations:
All

Tools:
Powerplant Mechanic's Tool Kit, NSN 5180-00-323-4944

Materials:
None

Personnel Required:
Aircraft Powerplant Repairer

References:
Task 1-69

TASK	RESULT
1. Check oil level indicator.	If oil level is too high, correct by draining engine oil system as necessary (Ref. Task 1-69).

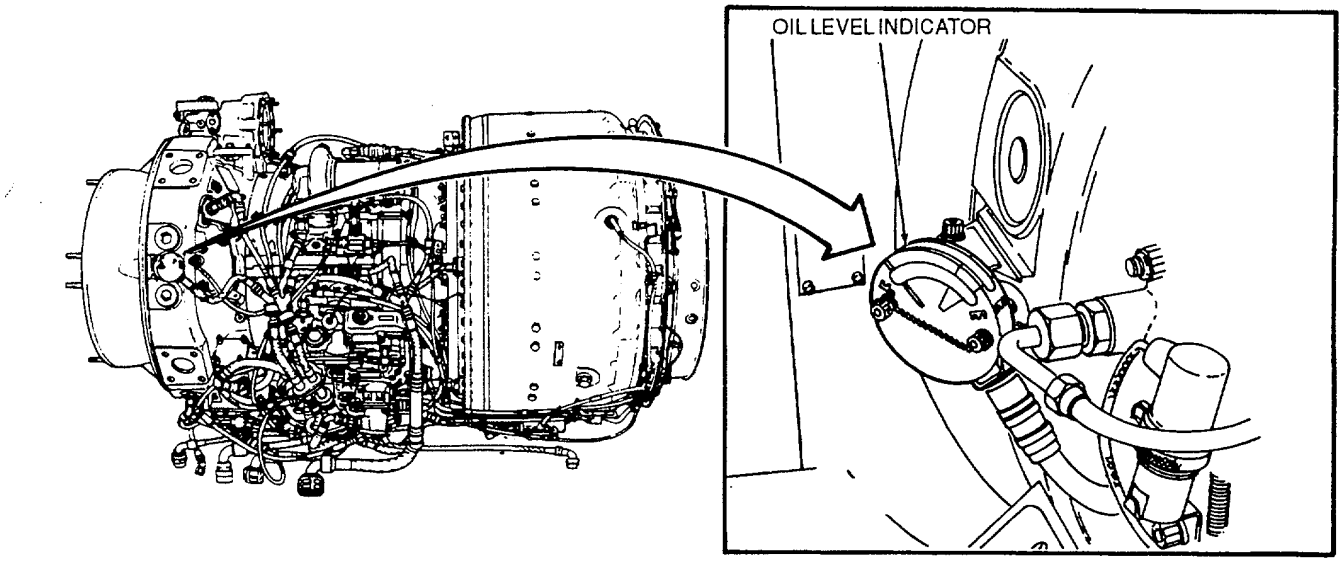

B-1-62/1

FOLLOW-ON MAINTENANCE:
None

END OF TASK

1-60 STATIC OIL LEAKAGE AT COMBUSTION CHAMBER DRAIN VALVE OR BLEED BAND CAUSED BY INTERNAL OIL SEEPAGE 1-60

INITIAL SETUP

Applicable Configurations:
All

Tools:
Powerplant Mechanic's Tool Kit,
NSN 5180-00-323-4944

Materials:
None

Personnel Required:
Aircraft Powerplant Repairer

References:
Task 1-83

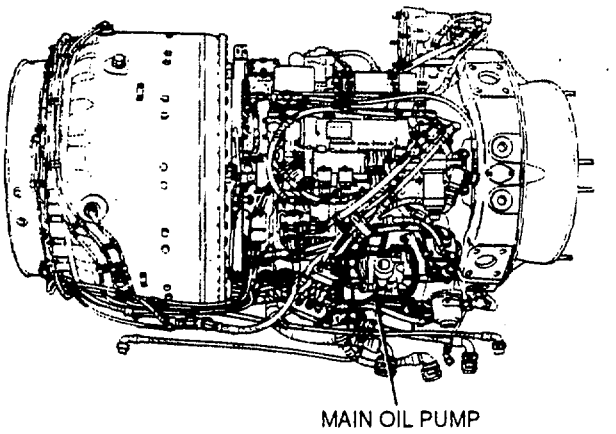

B-1-63/1

PERFORM STATIC OIL LEAKAGE CHECK (REF. TASK 1-83).

FOLLOW-ON MAINTENANCE:
None

END OF TASK

1–61 EXCESSIVE CHIPS FOUND ON OIL FILTER ELEMENT AND/OR CHIP DETECTORS 1–61

INITIAL SETUP
Applicable Configurations:
All
Tools:
Powerplant Mechanics Tool Kit,
NSN 5180–00–323–4944
Materials/Parts:
None

Personnel Required:
Aircraft Powerplant Repairer

References:
Task 1–80
Task 1–91
Task 1–92

NOTE

Observe all engine operating limits during ground runs, and abort if engine operation is abnormal and/or chip detector light comes on.

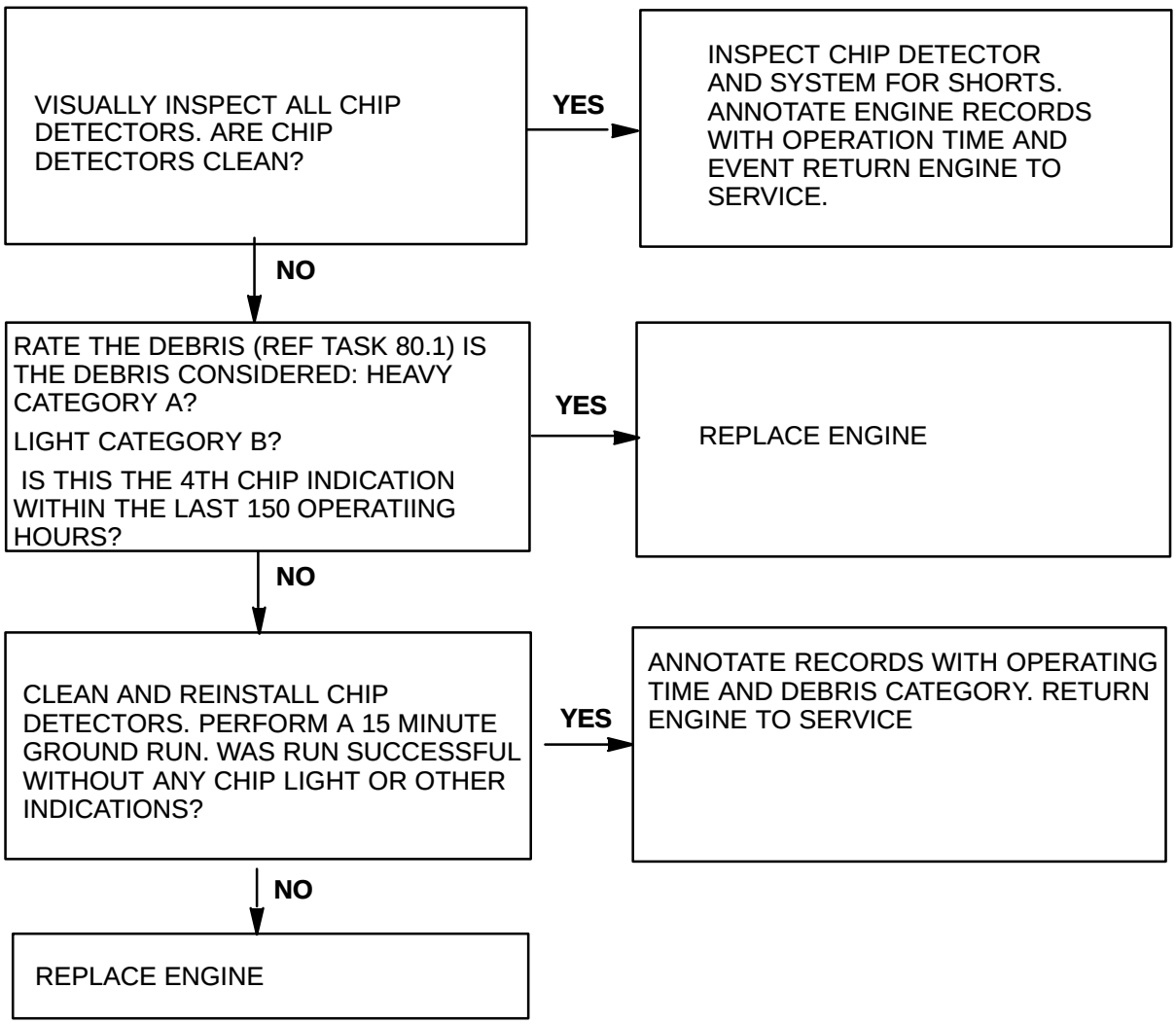

FOLLOW–ON MAINTENCE
None

END OF TASK

1-62 HIGH OR ERRATIC PTIT 1-62

INITIAL SETUP

Applicable Configurations:
All

Tools:
Powerplant Mechanic's Tool Kit, NSN 5180-00-323-4944

Materials:
None

Personnel Required:
Aircraft Powerplant Repairer

References:
TM 1-1520-252-T
TM 55-4920-328-13

Task 1-47	Task 2-33	Task 4-11
Task 1-84	Task 2-37	Task 4-20
Task 1-86	Task 4-1	Task 4-24
Task 1-87	Task 4-2	Task 4-25
Task 1-99	Task 4-3	Task 6-1
Task 2-9	Task 4-4	Task 6-5
Task 2-27	Task 4-5	Task 6-15
Task 2-31	Task 4-6	Task 6-17
Task 2-32	Task 4-7	Task 6-19
	Task 4-10	Appendix G

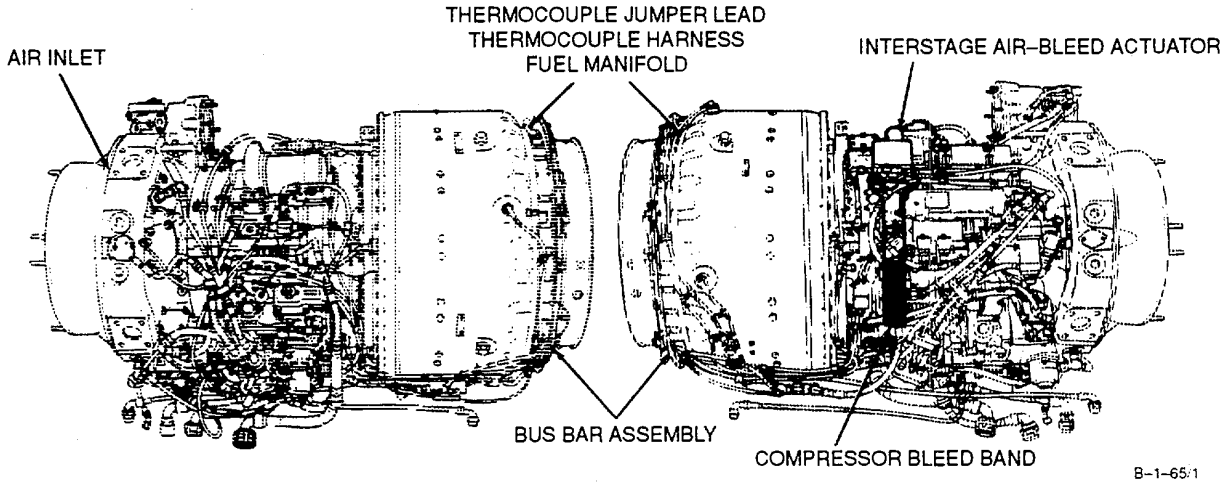

CHECK DECU FOR FAULT INDICATION.
IS FAULT CODE DISPLAYED?

YES → CLEAR FAULT (REF. APPENDIX G).
IS PROBLEM CORRECTED?

NO → IS COMPRESSOR DIRTY OR DUE FOR CLEANING?

YES → NO FURTHER ACTION REQUIRED.

IS COMPRESSOR DIRTY OR DUE FOR CLEANING?

YES → WASH COMPRESSOR (REF. TASK 1-99).

NO → GO TO NEXT PAGE

1-62 HIGH OR ERRATIC PTIT 1-62

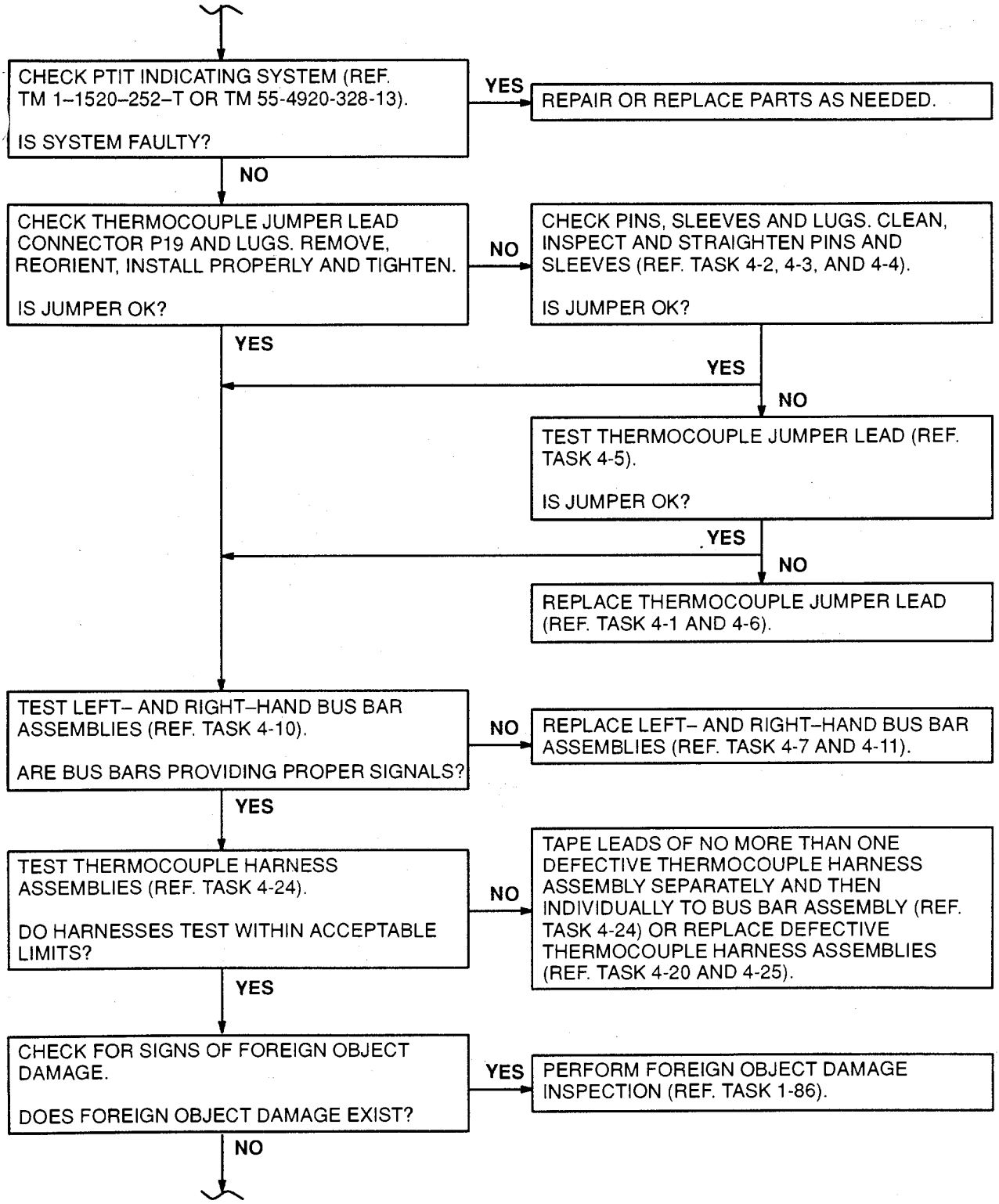

GO TO NEXT PAGE

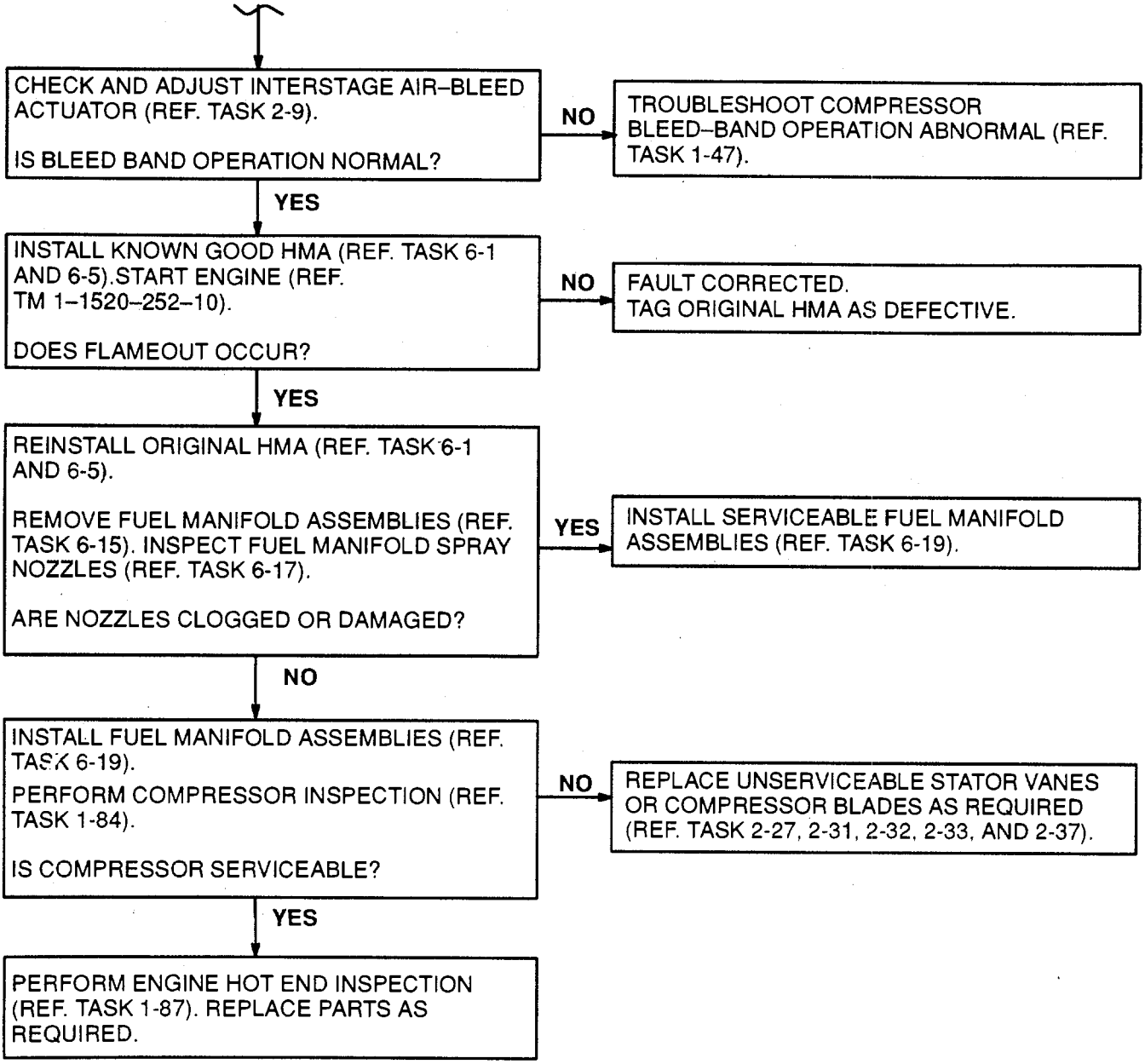

FOLLOW-ON MAINTENANCE:
None

END OF TASK

1-63 HIGH OIL CONSUMPTION (MORE THAN 2 QUARTS PER HOUR) 1-63

INITIAL SETUP

Applicable Configurations:
All
Tools:
Powerplant Mechanic's Tool Kit,
NSN 5180-00-323-4944
Materials:
None

Personnel Required:
Aircraft Powerplant Repairer
References:
TM 1-1520-252-23
Task 1-81
Task 1-82

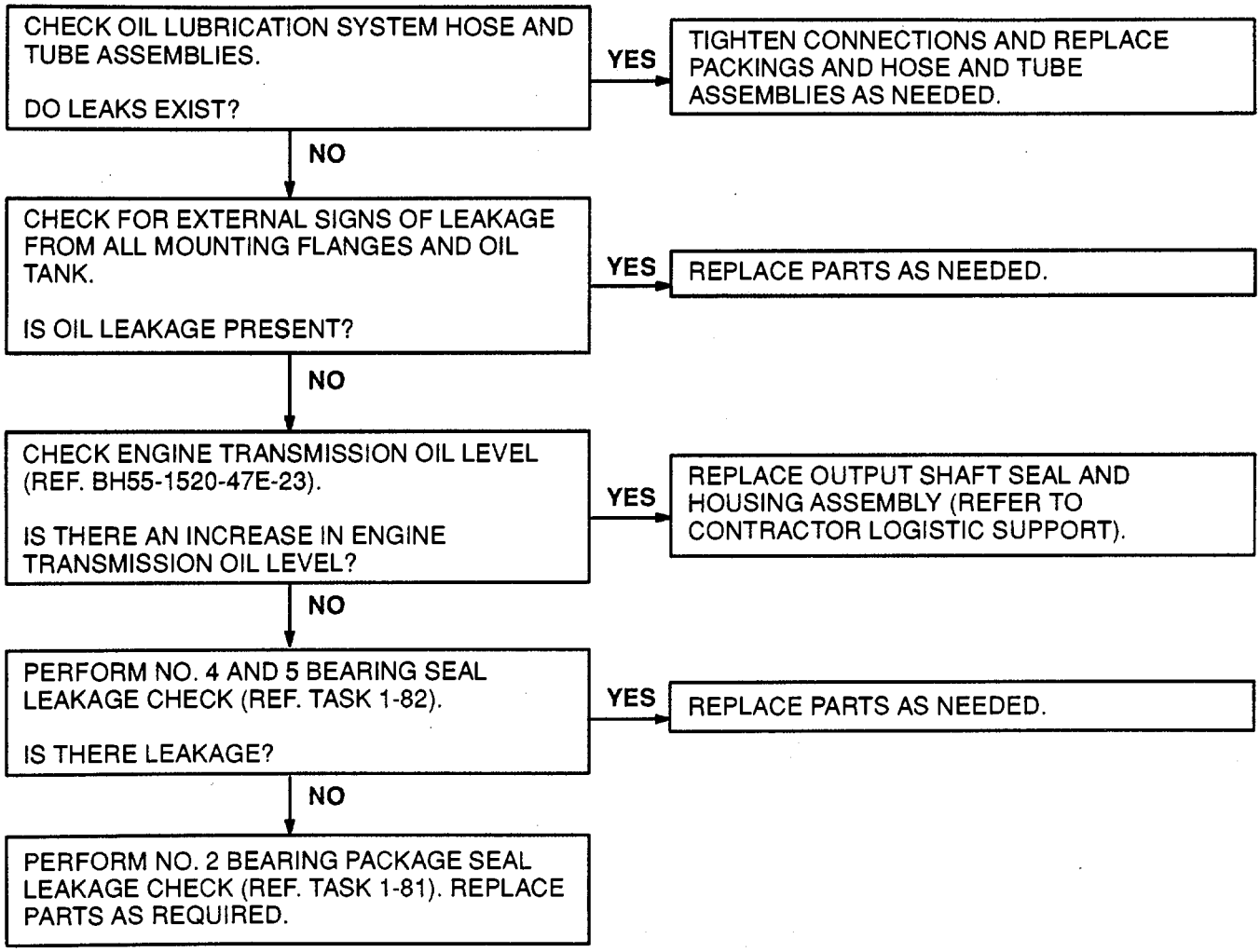

FOLLOW-ON MAINTENANCE:
None

END OF TASK

1-64 N2 OVERSPEED WITH NO LOAD LOSS 1-64

INITIAL SETUP

Applicable Configurations:
All

Tools:
Powerplant Mechanic's Tool Kit,
NSN 5180-00-323-4944

Materials:
None

Personnel Required:
Aircraft Powerplant Repairer

References:
TM 55-1520-249-T
TM 55-4920-328-13
Task 5-8 Task 5-23
Task 5-10 Task 5-26
Task 5-12 Task 5-29
Task 5-13 Task 6-1
Task 5-15 Task 6-5
Task 5-17 Appendix G

Equipment Condition:
Engine Inspected After N2 Overspeed
(Task 1-74)

NOTE: N_2 OVERSPEED MAY OCCUR IF SWITCHOVER TO REVERSIONARY MODE IS MADE WITH C/P LEVER SET TO "HIGH" POSITION.
VERIFY THAT N_2 OVERSPEED NOT CAUSED BY IMPROPER SETTING OF OPERATORS CONTROLS.

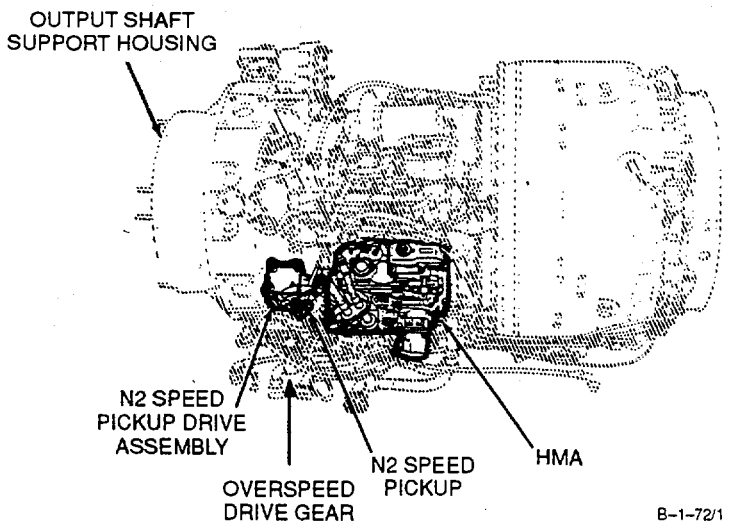

GO TO NEXT PAGE

1-64 N2 OVERSPEED WITH NO LOAD LOSS (Continued) 1-64

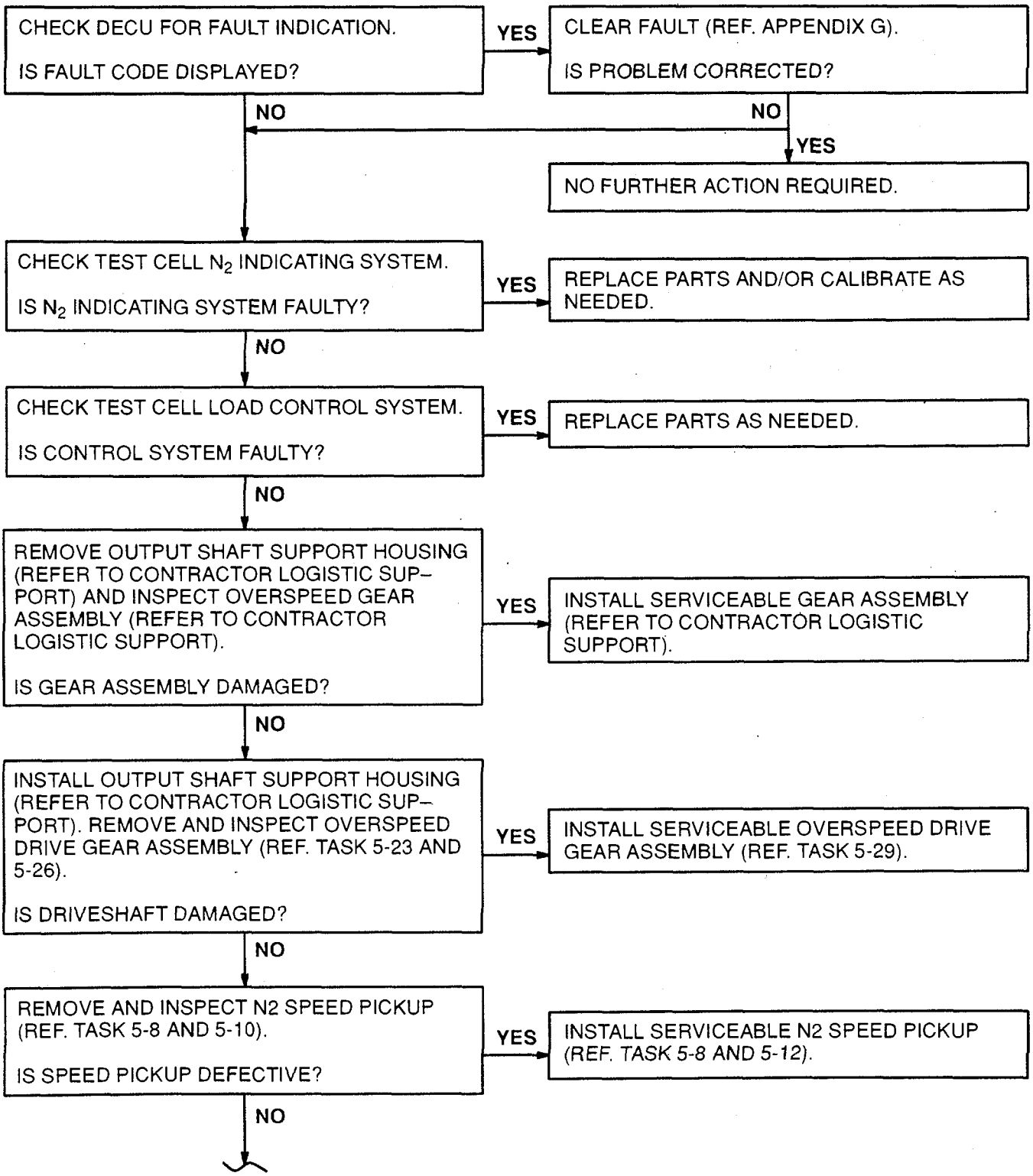

GO TO NEXT PAGE

1-64 N2 OVERSPEED WITH NO LOAD LOSS (Continued) 1-64

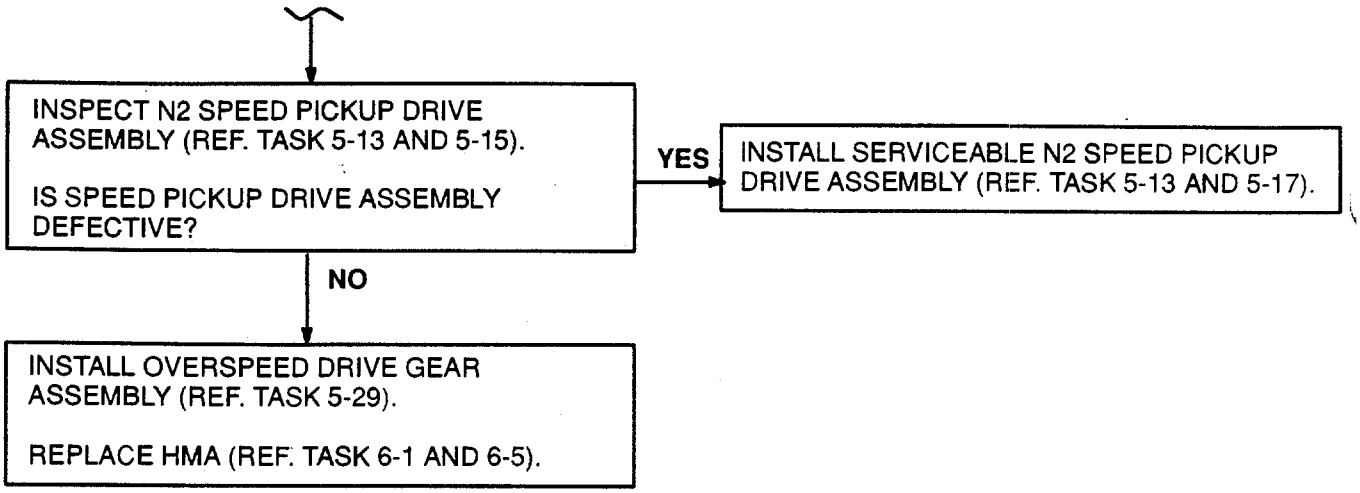

FOLLOW-ON MAINTENANCE:
None

END OF TASK

1-65 N2 OVERSPEED SYSTEM TEST FAILURE 1-65

INITIAL SETUP

Applicable Configurations:
All

Tools:
Powerplant Mechanic's Tool Kit,
NSN 5180-00-323-4944

Materials:
None

Personnel Required:
Aircraft Powerplant Repairer

References:
TM 1-1520-252-10
TM 1-1520-252-23
Task 5-8
Task 5-10
Task 5-13
Task 5-15
Task 5-17
Task 6-52
Task 6-56
Task 6-61
Task 6-61
Task 7-16
Task 7-17
Task 7-18
Task 7-19
Task 7-20
Task 7-21
Task 7-22
Task 7-23
Task 7-24
Task 7-25
Task 7-27
Task 7-29
Task 7-30
Task 7-31
Task 7-32
APPENDIX G

Equipment Condition:
Engine Inspected After N2 Overspeed
(Task 1-74)

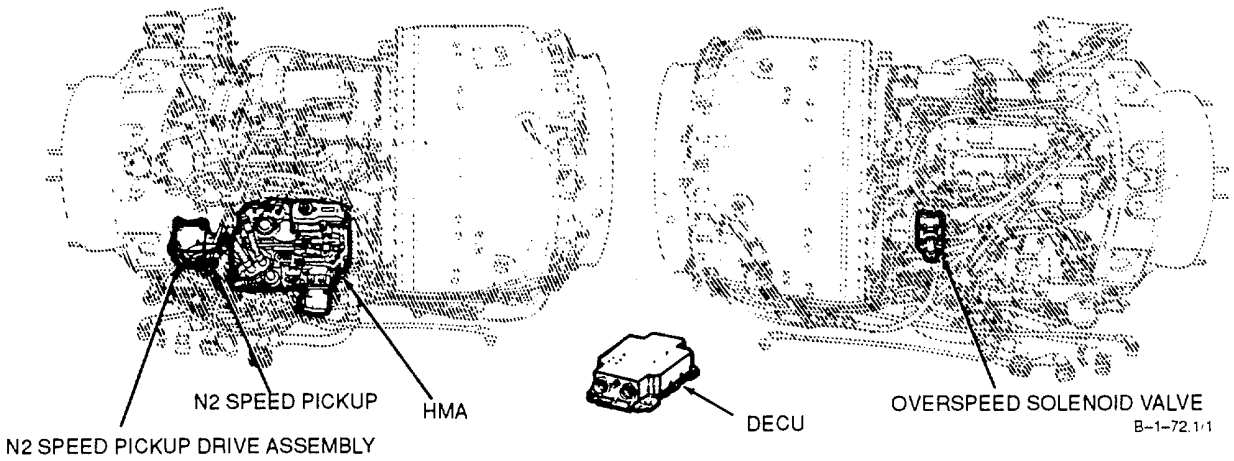

NOTE: IN ORDER FOR THE OVERSPEED SYSTEM TEST TO FUNCTION, N2 SPEED MUST BE HIGHER THAN 74.9 +/-1.0% BUT NOT HIGHER THAN 81.3% OF 15066 RPM.
VERIFY N_2 SPEED WITHIN THIS RANGE AND N_2 READOUT WITHIN CALIBRATION.

NOTE: N2 OVERSPEED SYSTEM TEST WILL NOT FUNCTION IF OTHER ENGINE (IN HELICOPTER INSTALLATION) OVERSPEED SYSTEM IS TRIPPED.
IN TEST CELL CONFIGURATION, OTHER ENGINE OVERSPEED STATUS SIGNAL IS SIMULATED BY GROUNDING SIGNAL LINES.
IN ORDER FOR N_2 OVERSPEED SYSTEM TEST TO FUNCTION PROPERLY IN TEST CELL CONFIGURATION, PIN "y" (O/S STAT [O]) AND PIN "C" (DIGITAL SPARE RET.) ON PL3 CONNECTOR OF DECU HARNESS MUST BE CONNECTED.
VERIFY PROPER HARNESS CONNECTION.

GO TO NEXT PAGE

1-65 N2 OVERSPEED SYSTEM TEST FAILURE (Continued) 1-65

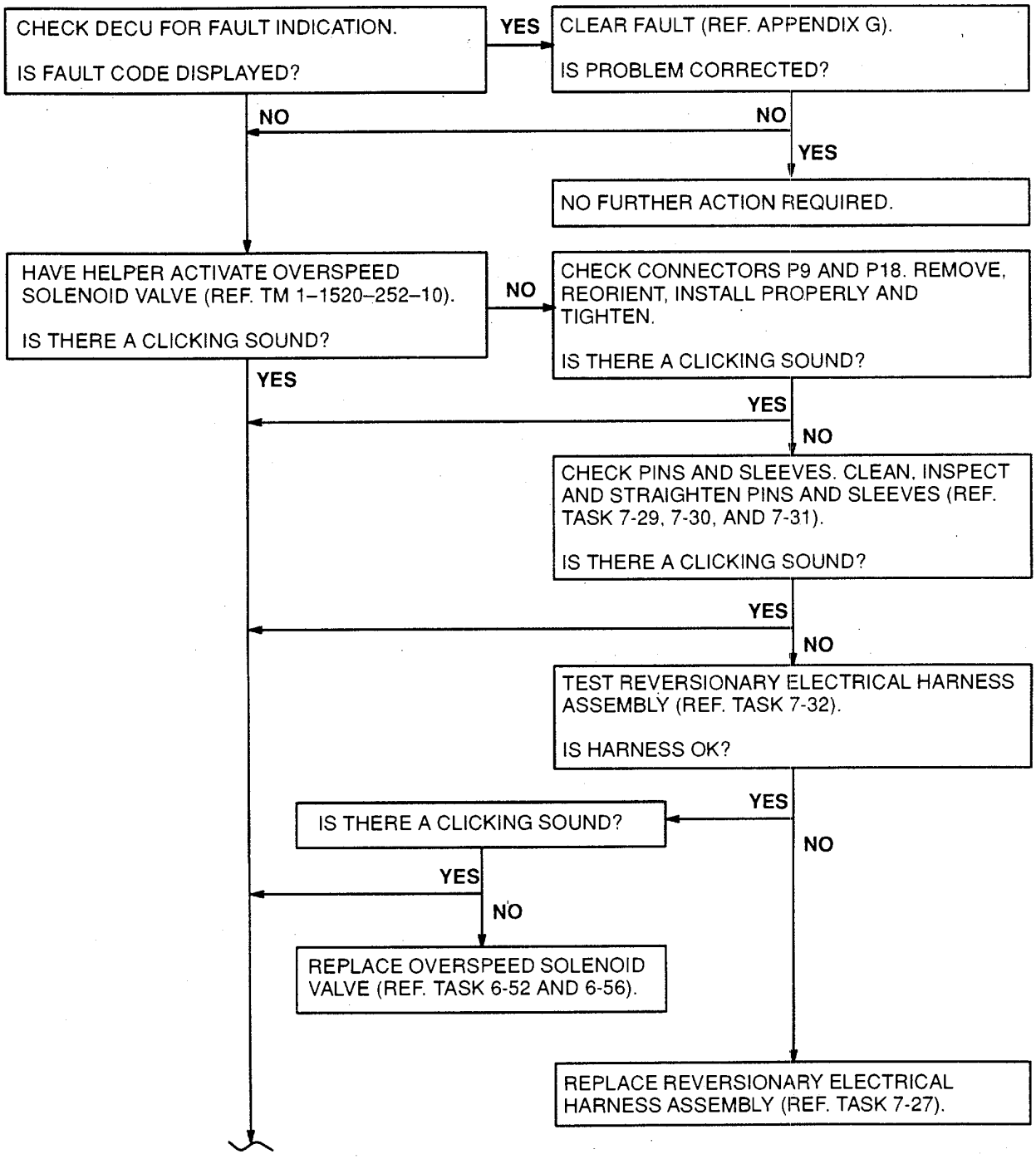

GO TO NEXT PAGE

1-65 N2 OVERSPEED SYSTEM TEST FAILURE (Continued) 1-65

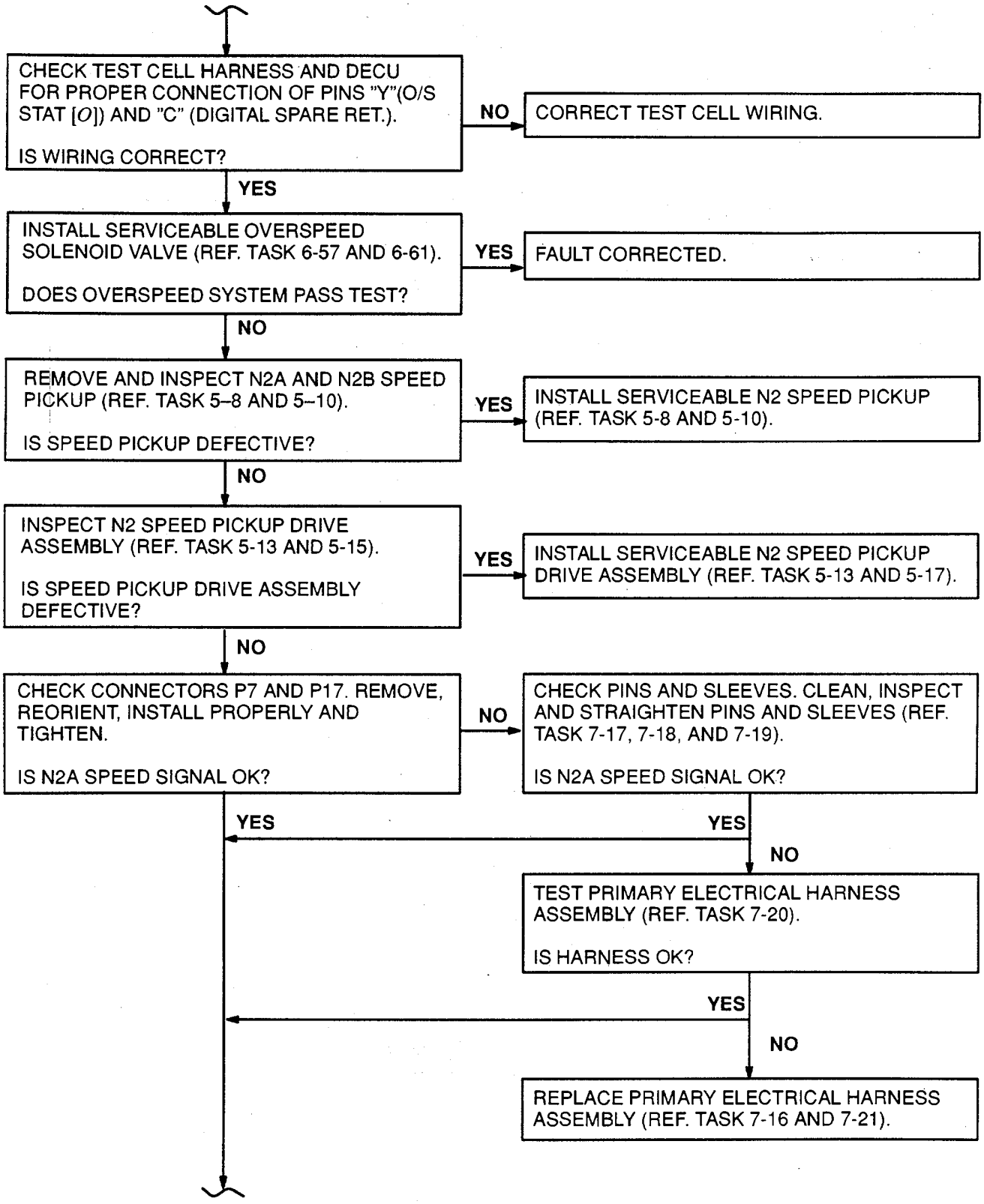

GO TO NEXT PAGE

1-65 N2 OVERSPEED SYSTEM TEST FAILURE (Continued) 1-65

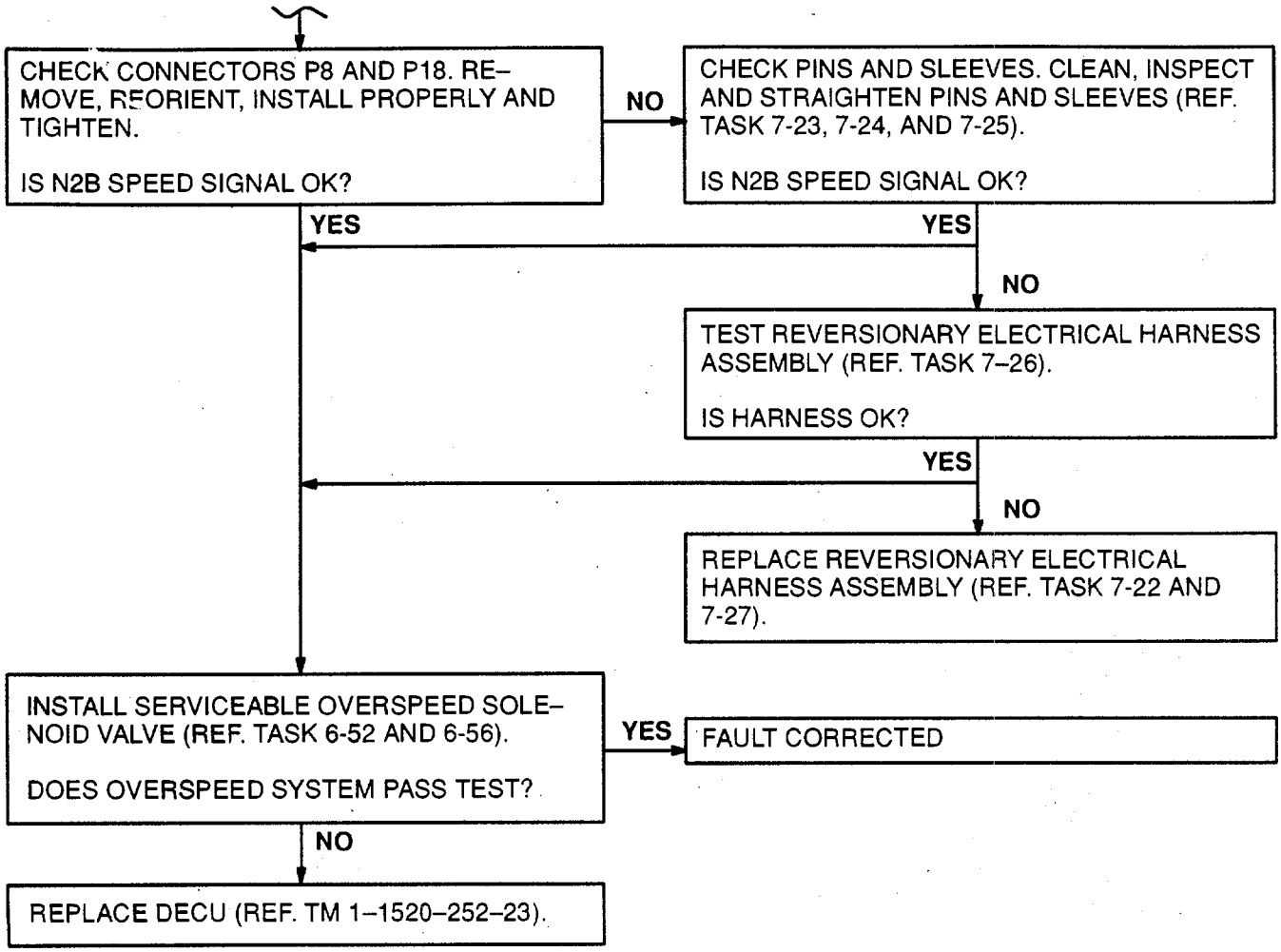

FOLLOW-ON MAINTENANCE:
None

END OF TASK

1-66 ABNORMAL ENGINE COASTDOWN NOISE OR TIME (LESS THAN 25 SECONDS) 1-66

INITIAL SETUP

Applicable Configurations:
All

Tools:
Powerplant Mechanic's Tool Kit,
NSN 5180-00-323-4944

Materials:
None

Personnel Required:
Aircraft Personnel Repairer

References:
Task 1-86 Task 6-5
Task 1-87 Task 6-8
Task 2-20 Task 6-12
Task 2-23 Task 8-1
Task 2-35 Task 8-6
Task 6-1

Equipment Condition:
Engine Coastdown Time Checked (Task 1-75)

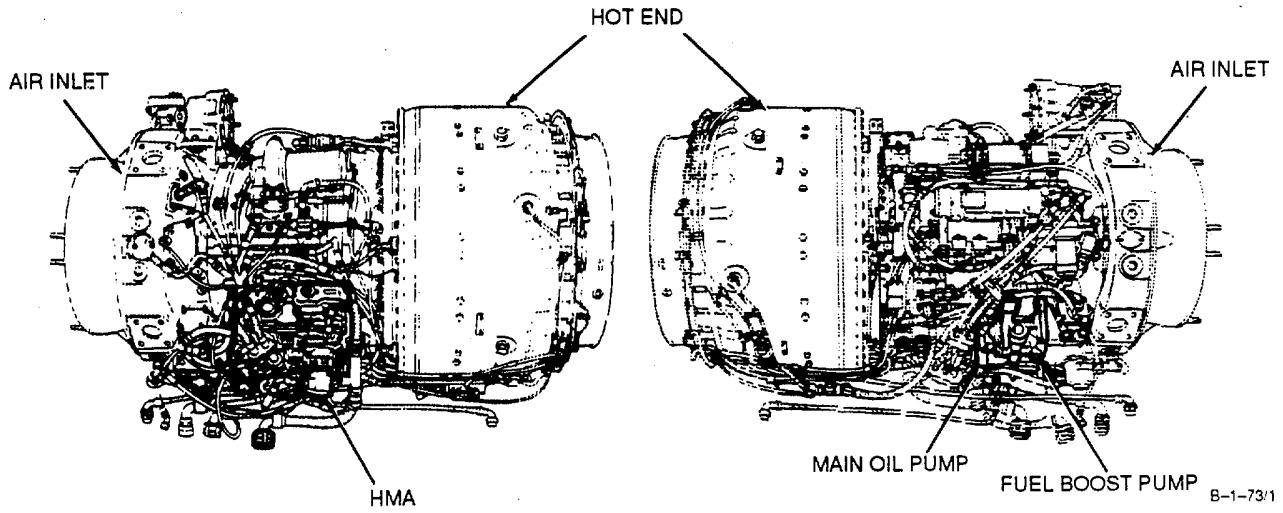

CHECK FOR SIGNS OF FOREIGN OBJECT DAMAGE.

DOES FOREIGN OBJECT DAMAGE EXIST?

YES → PERFORM FOREIGN OBJECT DAMAGE INSPECTION (REF. TASK 1-86).

NO ↓

ROTATE COMPRESSOR ROTOR BY HAND AND LISTEN FOR RUBBING SOUNDS.

DO RUBS EXIST?

YES → REMOVE AND INSPECT COMPRESSOR HOUSING (REF. TASK 2-20 AND 2-23). INSPECT COMPRESSOR BLADES (REF. TASK 2-35). REPAIR OR REPLACE PARTS AS NECESSARY.

NO ↓

GO TO NEXT PAGE

1-66 ABNORMAL ENGINE COASTDOWN NOISE OR TIME (LESS THAN 25 SECONDS) 1-66

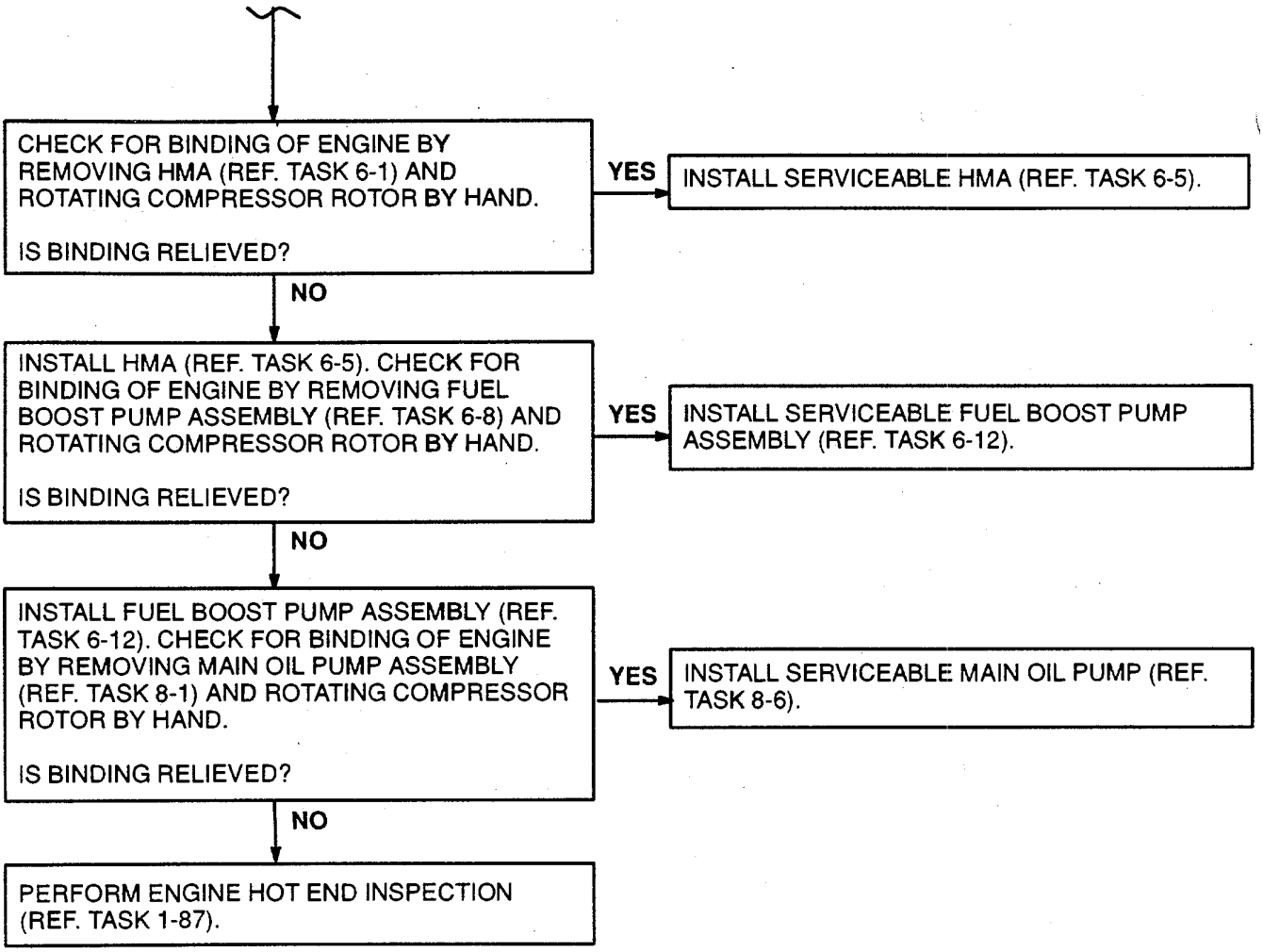

FOLLOW-ON MAINTENANCE:
None

END OF TASK

1-67 POST SHUTDOWN RUMBLE OR RELIGHT 1-67

INITIAL SETUP

Applicable Configurations:
All

Tools:
Powerplant Mechanic's Tool Kit, NSN 5180-00-323-4944

Materials:
None

Personnel Required:
Aircraft Personnel Repairer

References:
Task 1-87 Task 6-49
Task 3-1 Task 6-50
Task 3-4 Task 6-51
Task 6-1 Appendix G
Task 6-5

Equipment Condition:
Engine Coastdown Time Checked (Task 1-75)

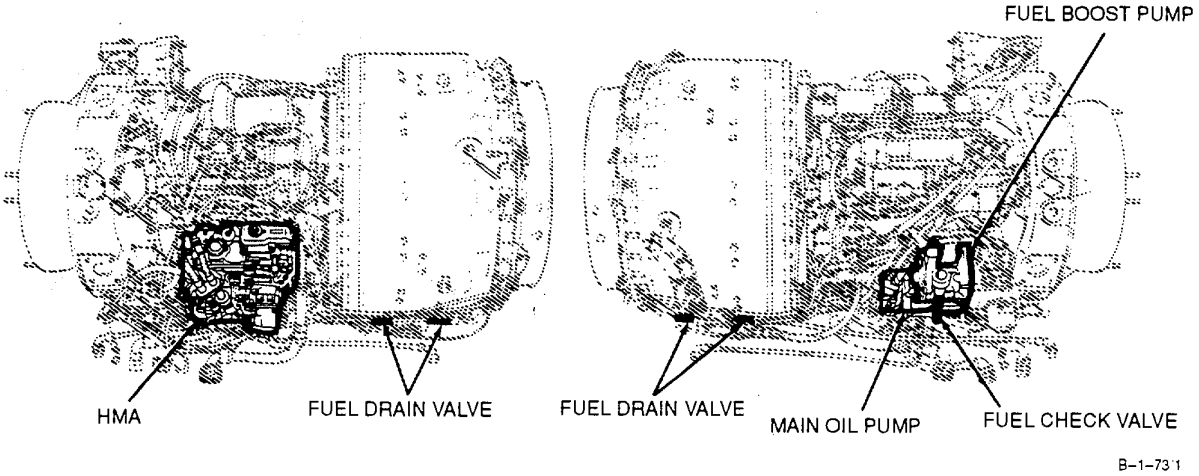

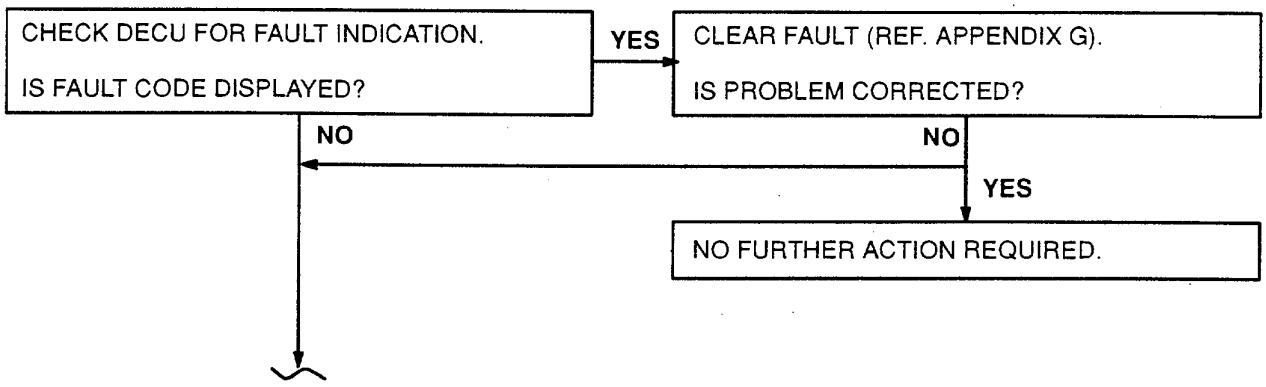

GO TO NEXT PAGE

1-67 POST SHUTDOWN RUMBLE OR RELIGHT (Continued) 1-67

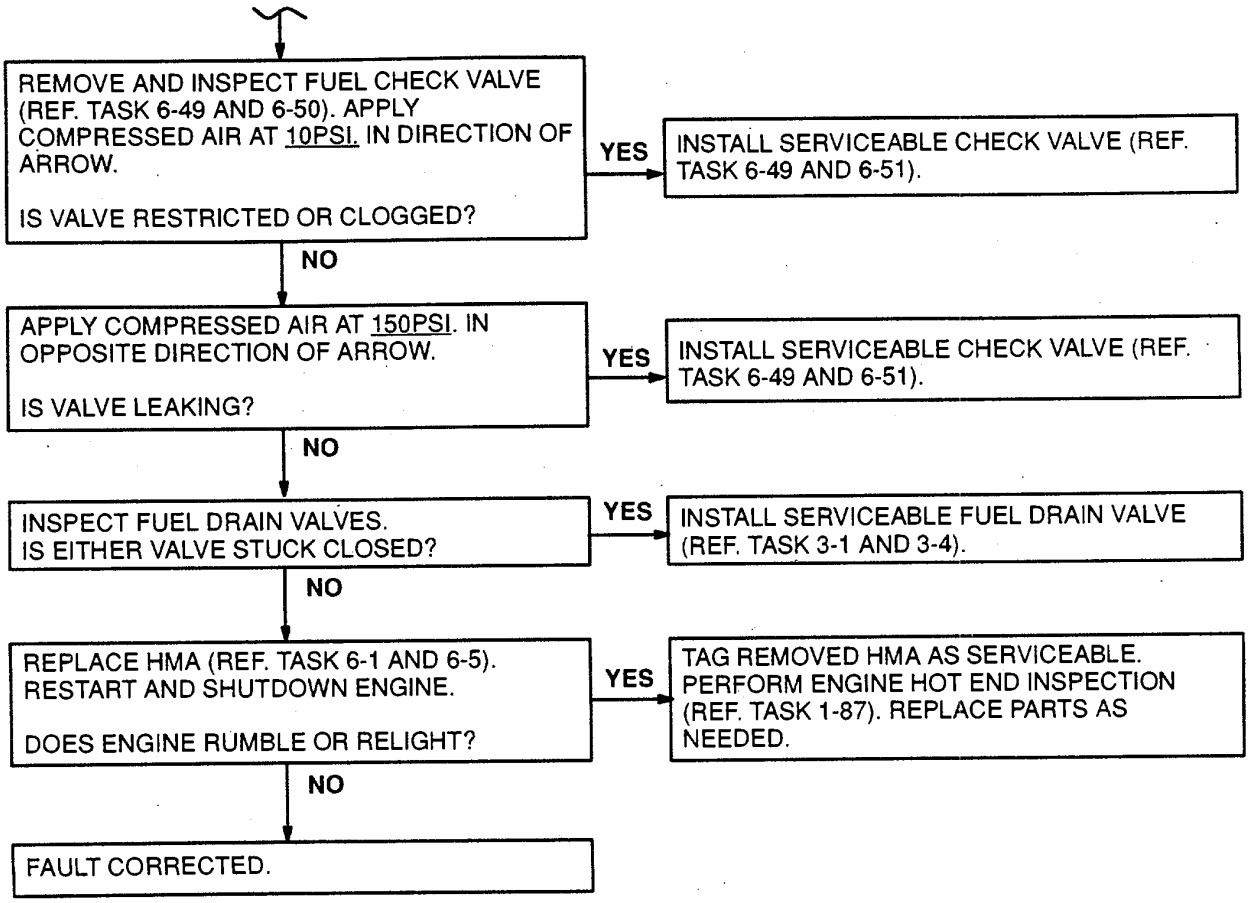

FOLLOW-ON MAINTENANCE:
None

END OF TASK

SECTION VIII

SERVICING

This section contains general procedures for filling oil system to proper level and draining oil system. It also has procedures for changing from lubricating oil (E36) to lubricating oil (E37) or from lubricating oil (E37) to lubricating oil (E36). It is divided into the following tasks:

LIST OF TASKS

NUMBER	TASK	PAGE
1-68	Service Engine Oil System	1-298
1-69	Drain Engine Oil System	1-303
1-70	Change From MIL-L-7808 to MIL-L-23699 Lubricating Oil	1-313
1-71	Change From MIL-L-23699 to MIL-L-7808 Lubricating Oil	1-315

1-68 SERVICE ENGINE OIL SYSTEM 1-68

INITIAL SETUP

Applicable Configurations:

All

Tools:

None

Materials:

Lubricating Oil (E36)
Lubricating Oil (E37)
Wiping Rag (E64)

Personnel Required:

Aircraft Powerplant Repairer

References:

TM 1-1520-252-10
Task 1-70
Task 1-71

General Safety Instructions:

WARNING

Lubricating oils cause paralysis if swallowed. Prolonged contact with them may Irritate the skin. Handle only in well-ventilated areas away from heat and flame. Drain and store in approved metal safety containers. Avoid prolonged or repeated contact with skin and do not take internally. Wash contacted area of skin thoroughly after handling. If irritation of skin results, get medical attention. Get medical attention for eyes.

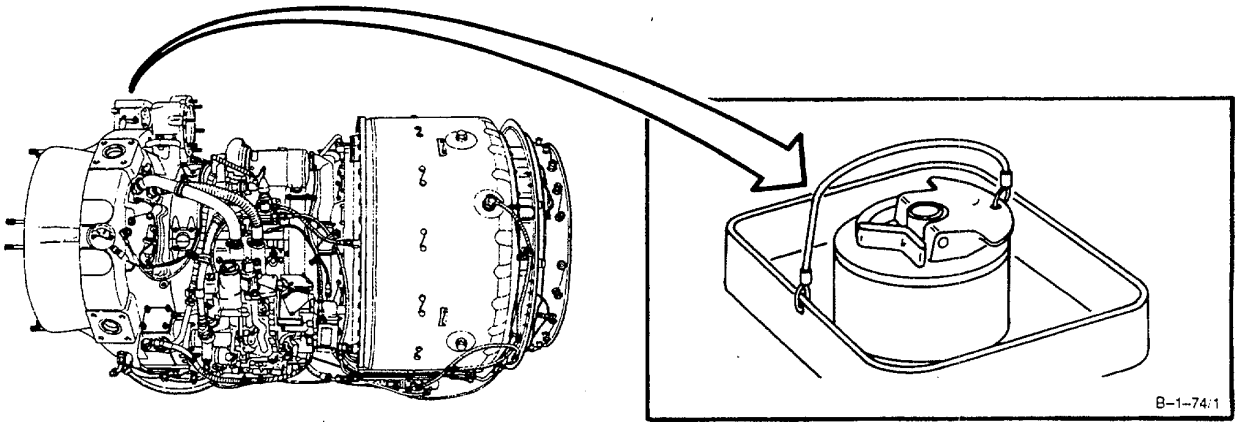

GO TO NEXT PAGE

NOTE

Lubricating oil (E36) is satisfactory for engine starting down to -65° F (-54° C). Lubricating oil (E37) is satisfactory for engine starting down to -40° F (-40° C).

NOTE

If engine has not been operated in the pre- ceding 24 hours, run engine before checking oil level (Ref. TM 1-1520-252-10). Otherwise an inaccurate oil level may be indicated.

1. **Check oil level on oil level indicator (1).** If oil level is full, omit following steps. If oil level is not full, proceed to following steps.

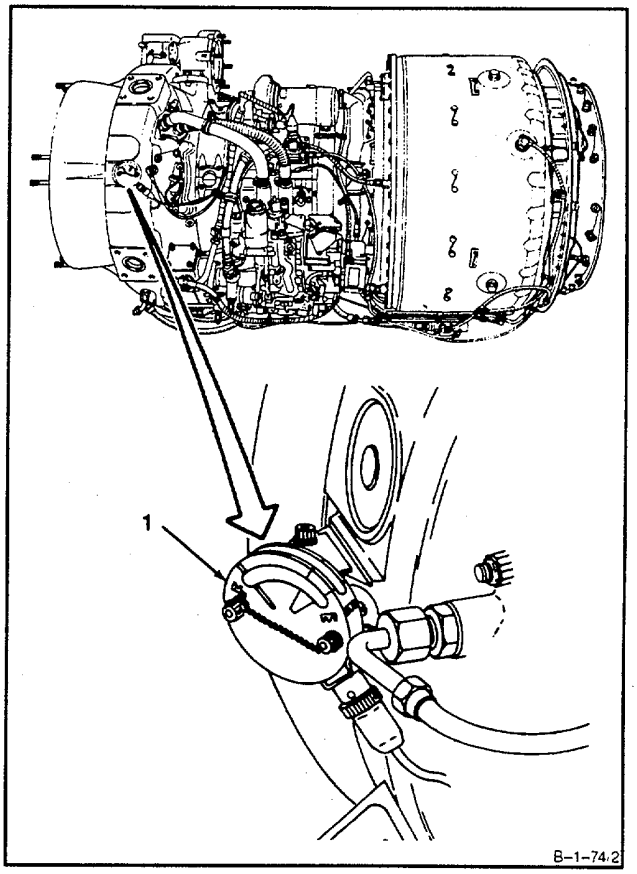

GO TO NEXT PAGE

CAUTION

Intermixing of different types of lubricating oil (E36 or E37) should be avoided. Intermixing of different types of lubricating oil (E36 and E37) is not permitted except In an emergency. If Intermixing of oil types becomes necessary, flush engine oil system within six hours of engine operation (Ref. Task 1-70 or 1-71). Use the desired type of oil (E36 or E37). There is no easily recognized difference in appearance between the two types of oil. Determine which type oil is in engine by checking service records.

CAUTION

To prevent oil contamination, use unopened cans only. Synthetic lubricating oils (E36 and E37) may soften paint or stain clothing. If synthetic oil is spilled on painted surfaces, It should be cleaned off Immediately.

2. Remove cap assembly (2) as follows:

a. Lift handle (3), and turn handle (3) counterclockwise.

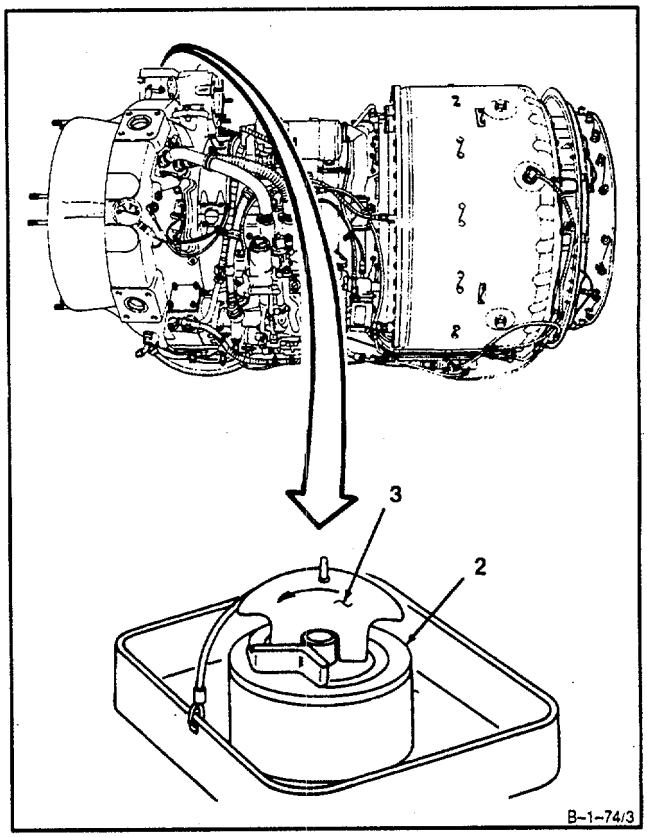

GO TO NEXT PAGE

b. Remove cap assembly (2).

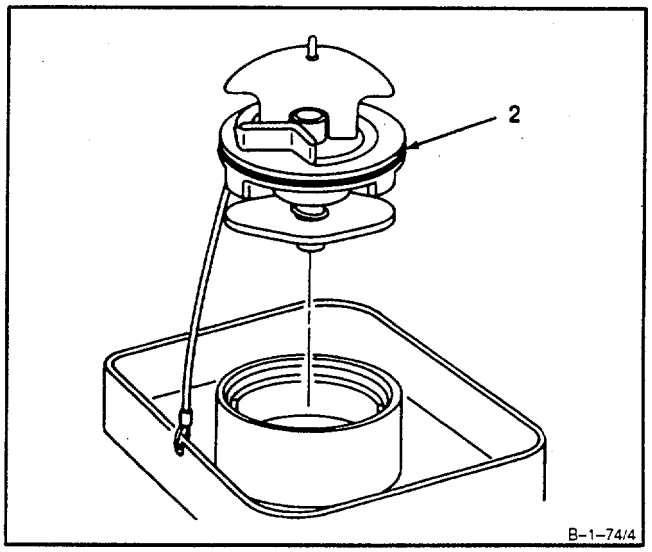

3. Fill engine oil system with lubricating oil (E36 or E37), as applicable, until oil level indicator (1) shows full. Do not overfill.

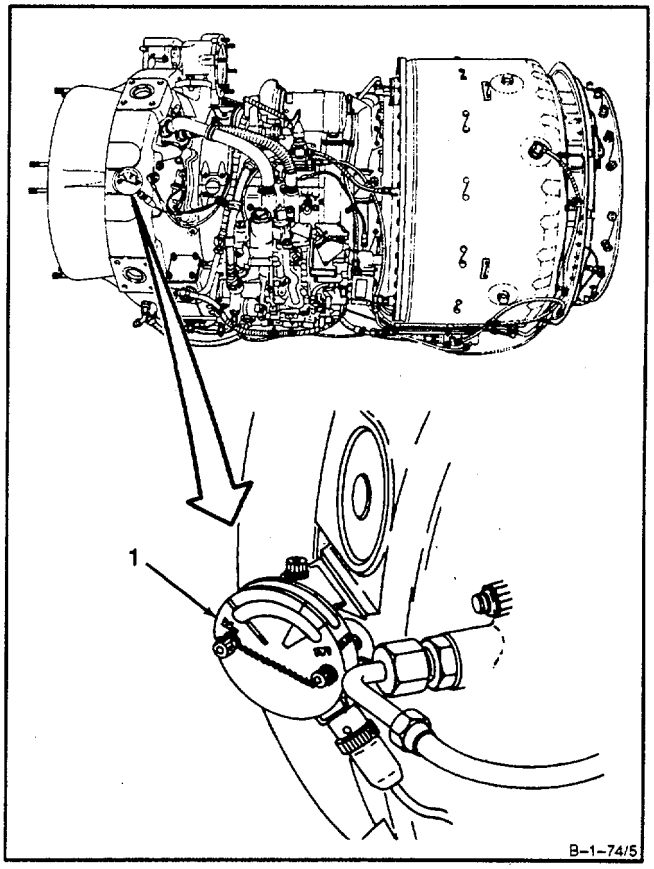

GO TO NEXT PAGE

4. **Install cap assembly** (2) as follows:

a. Align ends of lug (4) with slots (5), and install cap assembly (2) in adapter (6).

b. Turn handle (3) clockwise and press handle (3) down.

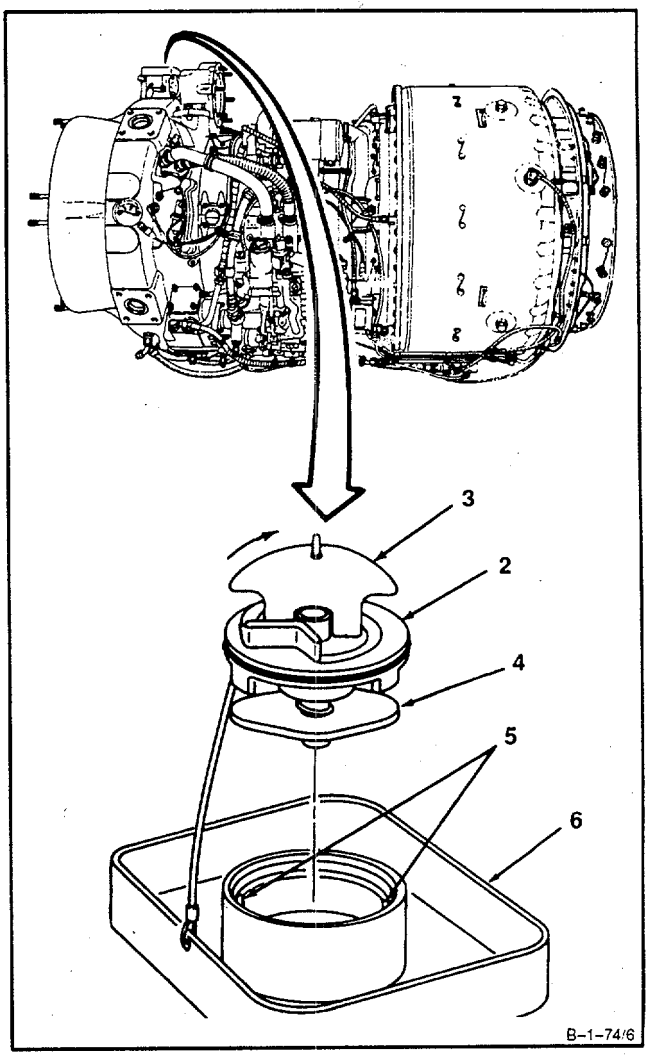

FOLLOW-ON MAINTENANCE:
None

END OF TASK

INITIAL SETUP
Applicable Configurations:
All
Tools:
Powerplant Mechanic's Tool Kit,
NSN 5180-00-323-4944
Technical Inspection Tool Kit,
NSN 5180-00-323-5114
Utility Pail, 14 Quart
Crowfoot Attachment, 7/8-Inch
Torque Wrench, 30-150 Inch-Pounds
Approved Metal Safety Container
Materials:
Lockwire (E33)
Tag (E58)
Wiping Rag (E64)
Parts:
Gasket
Packing
Cable Tie
Personnel Required:
Aircraft Powerplant Repairer
Aircraft Powerplant Inspector

References:
TM 1-2840-252-23P
Task 8-110
Task 8-111
General Safety Instructions:

WARNING

Lubricating oils cause paralysis if swallowed. Prolonged contact with them may irritate the skin. Handle only in well-ventilated areas away from heat and flame. Drain and store in approved metal safety containers. Avoid prolonged or repeated contact with skin and do not take internally. Wash contacted area of skin thoroughly after handling. If irritation of skin results, get medical attention. Get medical attention for eyes.

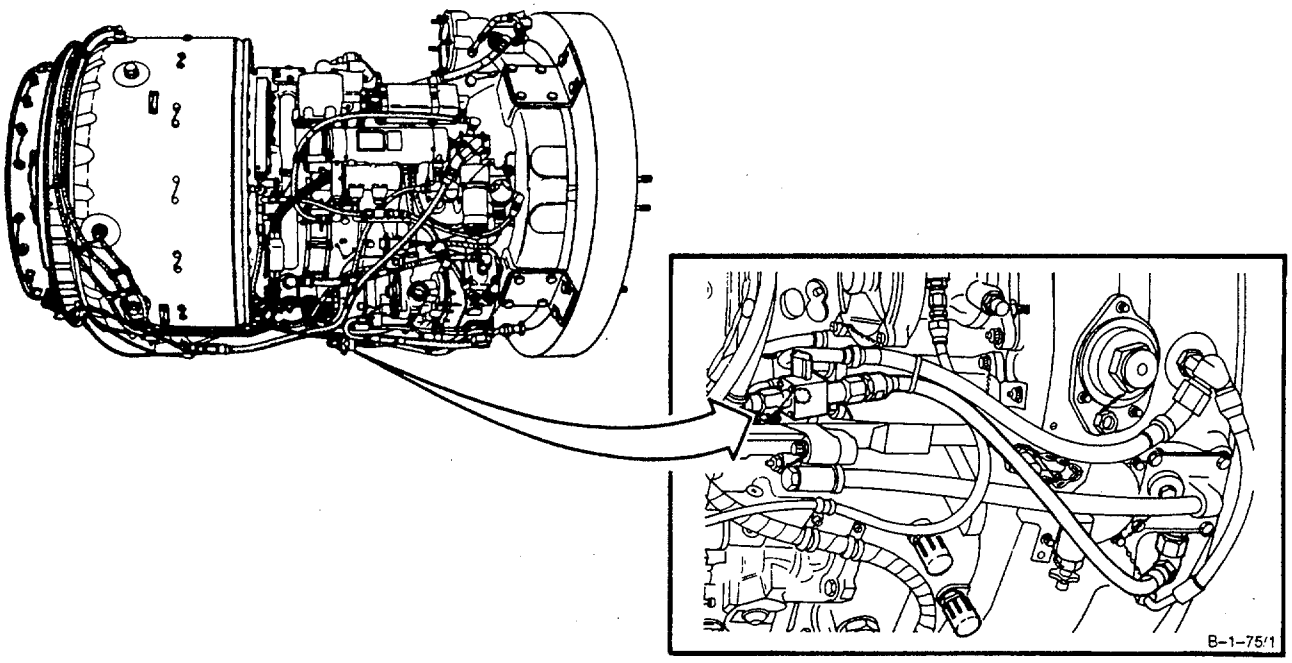

GO TO NEXT PAGE

1-69 DRAIN ENGINE OIL SYSTEM (Continued) 1-69

1. Remove cable tie (1) and lower free end (2) of hose assembly (3).

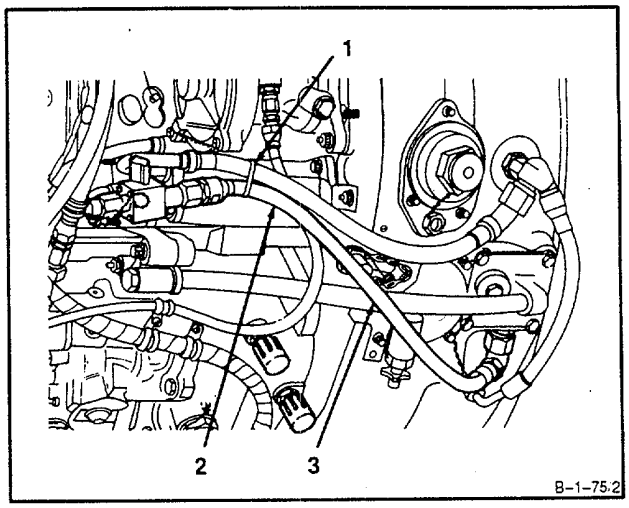

2. Remove cap (4).

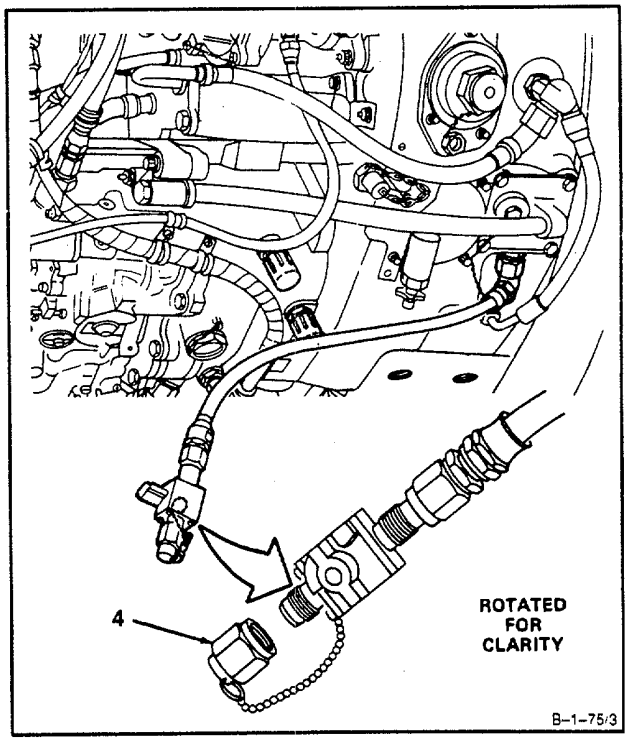

GO TO NEXT PAGE

3. Insert drain cock fitting (5) into suitable approved metal safety container.

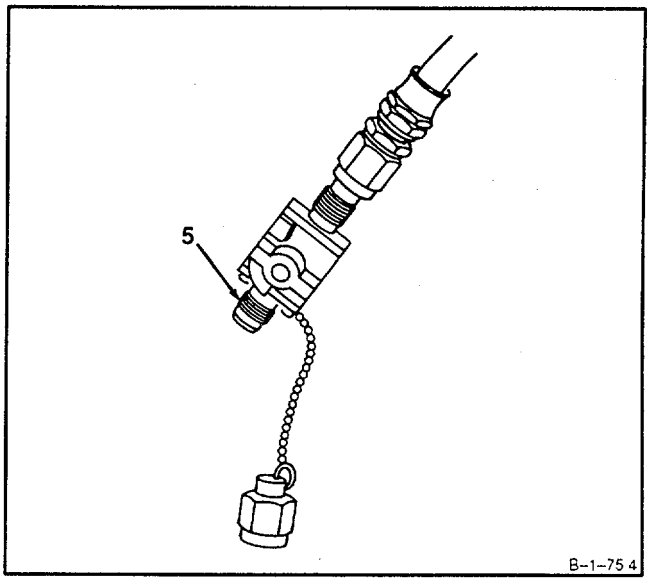

4. Turn **oil drain cock valve** (6) 1/4 turn counter-clockwise to OPEN position.

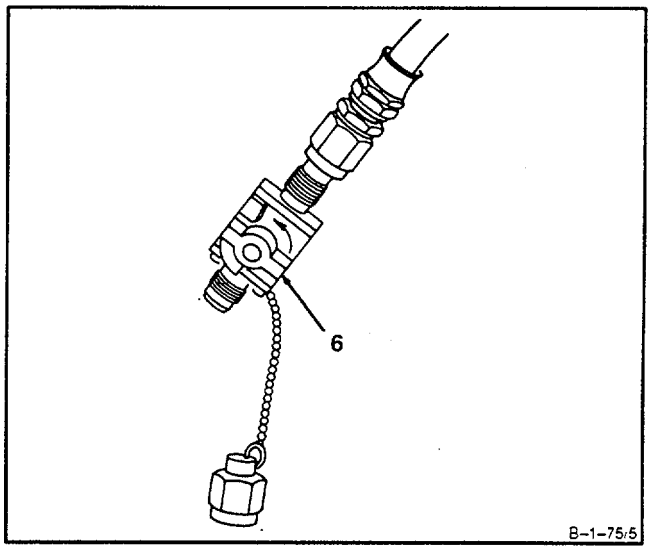

GO TO NEXT PAGE

1-69 DRAIN ENGINE OIL SYSTEM (Continued)

5. Position utility pail under inlet housing oil scavenge tee (7).
6. **Disconnect tube assembly (8)** at inlet housing oil scavenge tee (7) and remove gasket (9).

WARNING
Lubricating oils cause paralysis if swallowed. Prolonged contact with them may irritate the skin. Handle only in well-ventilated areas away from heat and flame. Drain and store in approved metal safety containers. Avoid pro- longed or repeated contact with skin and do not take internally. Wash contacted area of skin thoroughly after handling. If irritation of skin results, get medical attention. Get medical attention for eyes.

7. Allow oil to drain from system.

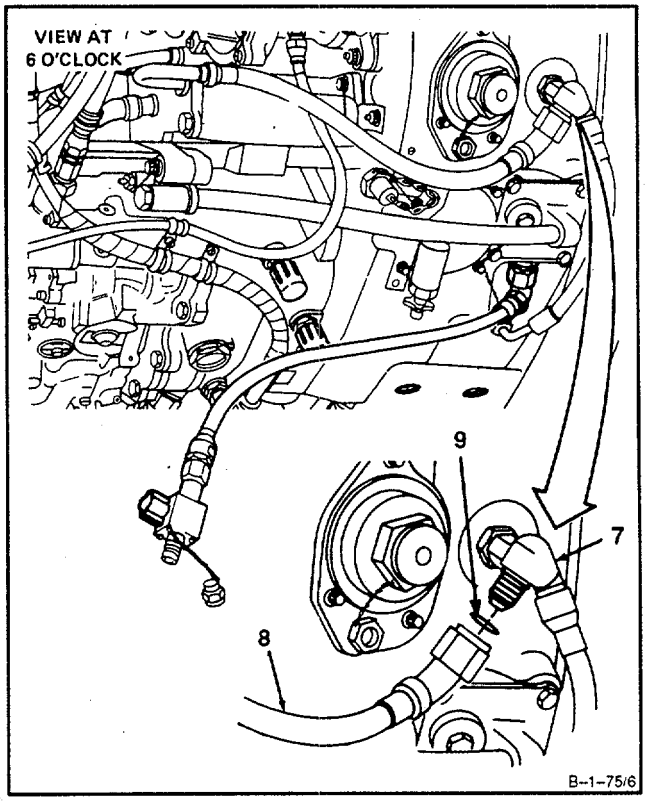

8. **Disconnect electrical connector (10).**

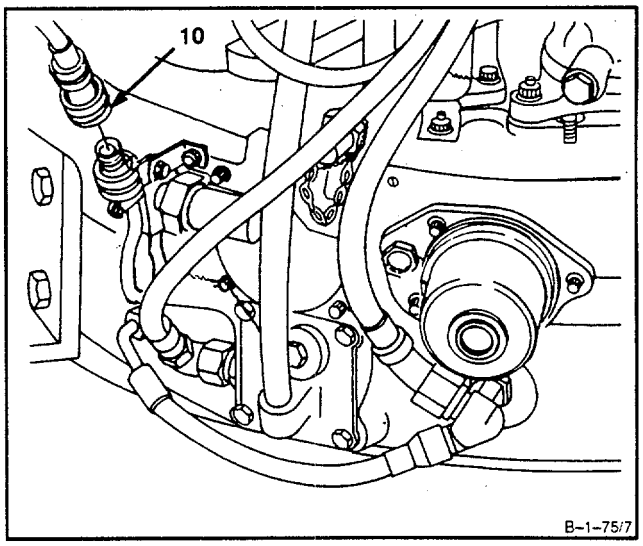

GO TO NEXT PAGE

9. Remove nut (11), **screw** (12) and **clamp (13)** from bracket (14).

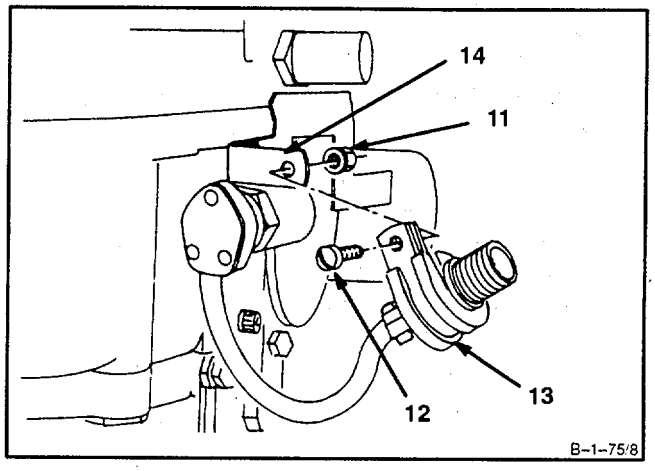

10. **Unlock plug** (15). Push in on plug and turn counterclockwise.

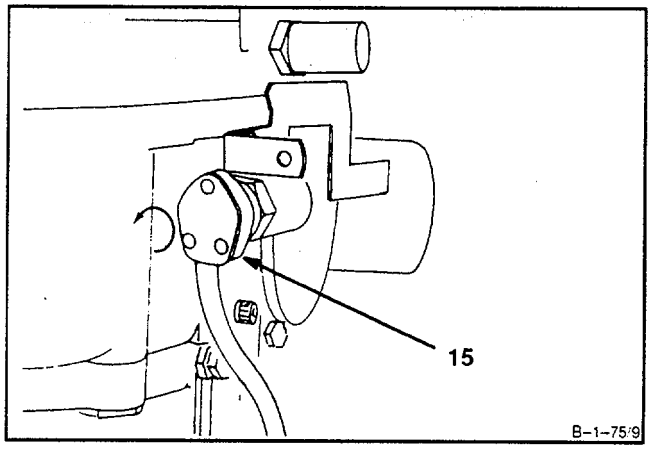

11. Remove plug (15) and packing (16) from housing (17).

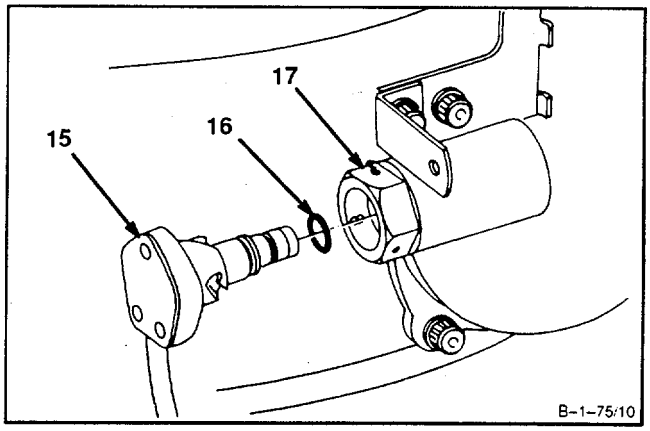

GO TO NEXT PAGE

12. **Remove** lockwire, **chip detector housing (17)** and packing (18).
13. Clean **chip** detector (Task 8-110).

14. **Inspect chip** detector (Task 8-111).

NOTE
If oil contamination is suspect, Inspect Contaminated Oil System (Ref. Task 1-80).

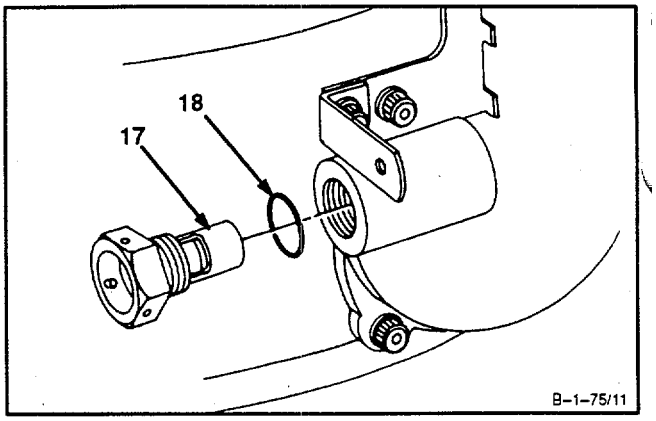

15. **Install packing** (18) in groove (19) on chip detector housing (17).

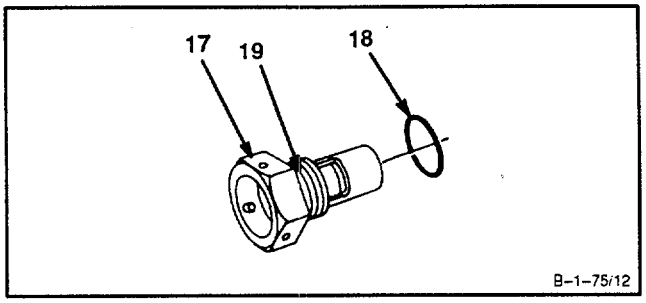

16. **Install chip detector housing** (17) in housing (20). **Torque** to 95 **inch-pounds.** Use crowfoot attachment.

17. Lockwire chip detector housing (17) to bolt (21). Use lockwire (E33).

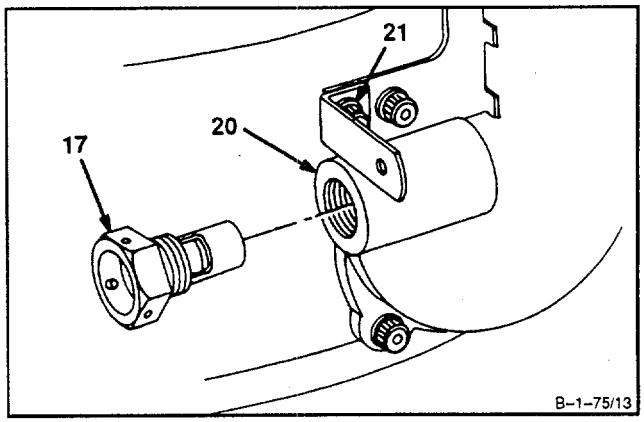

GO TO NEXT PAGE

18. **Install packing** (16) in groove (22) on plug (15).

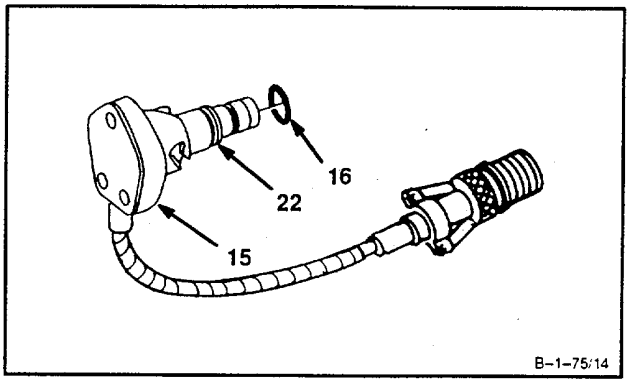

19. **Install plug** (15) in chip detector housing (17).

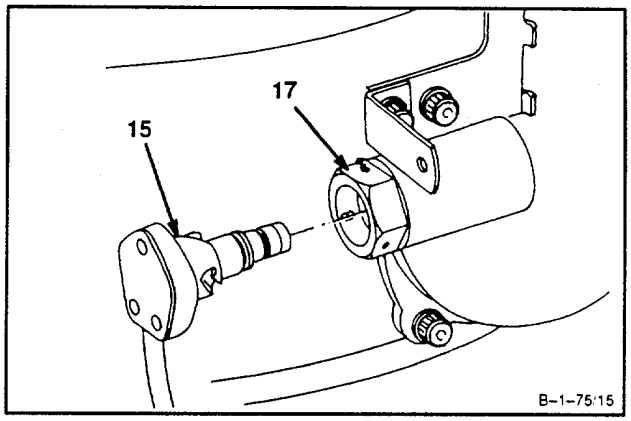

20. Lock plug (15) by pushing in and turning plug clockwise.

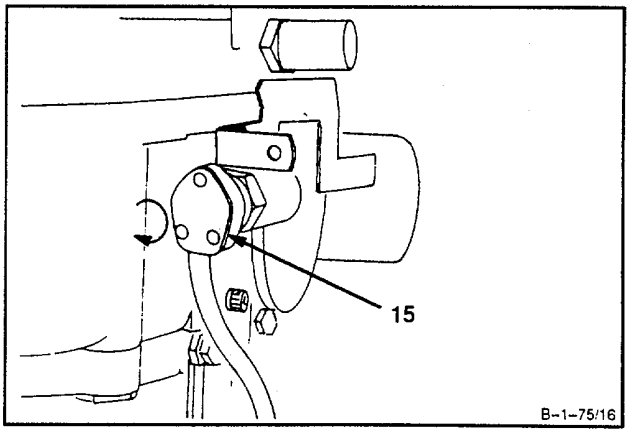

GO TO NEXT PAGE

21. Install screw (12), **clamp (13),** and nut (11) to bracket (14).

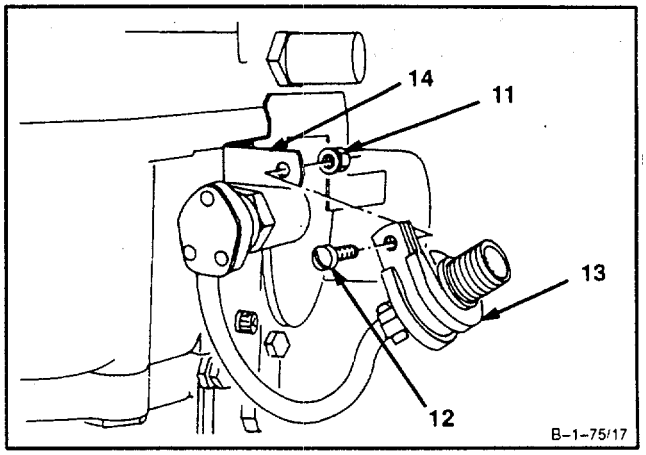

22. Connect electrical connector (10) to chip detector connector (23).

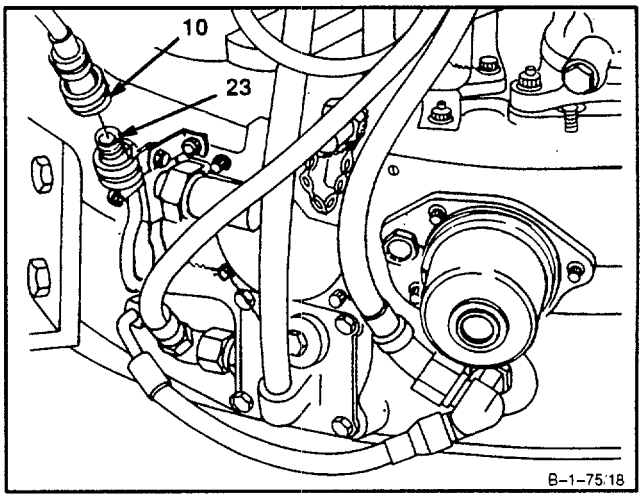

GO TO NEXT PAGE

23. Turn oil drain **cock valve** (6) 1/4 turn clockwise to CLOSED position.

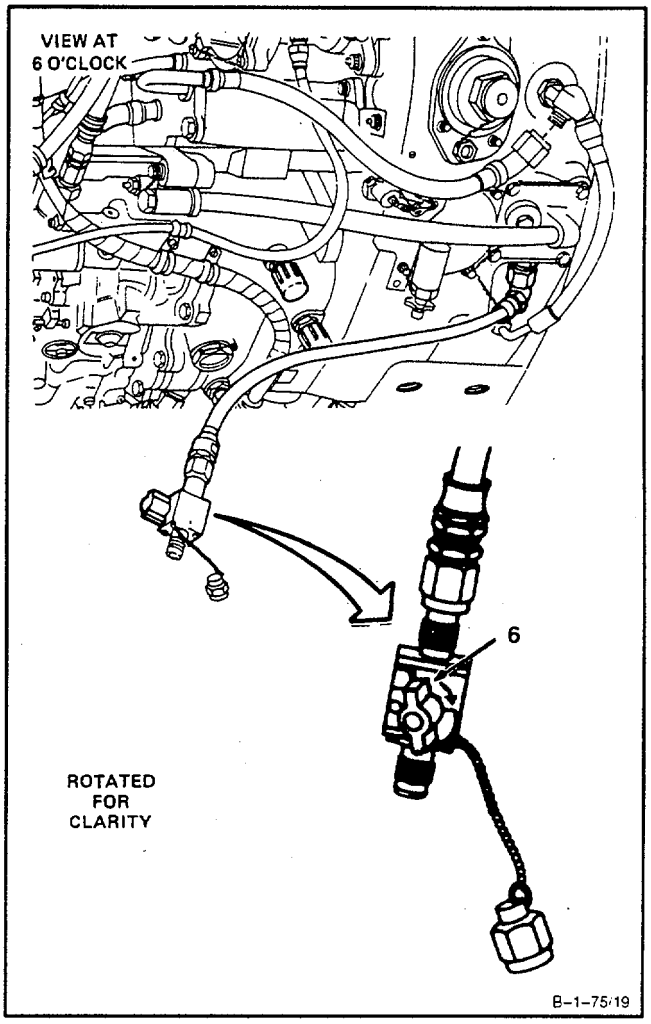

24. Install cap (4) on oil drain cock fitting (5).

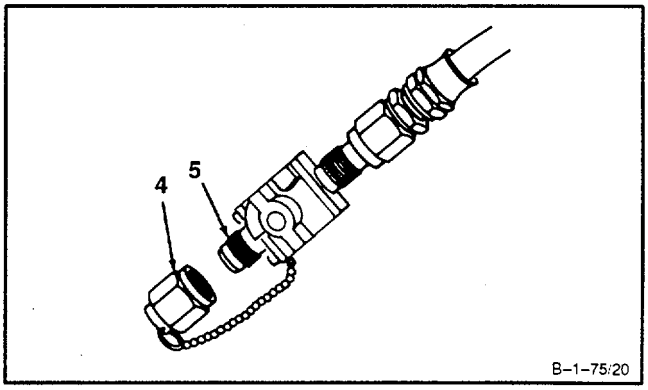

GO TO NEXT PAGE

25. Install gasket (9) on inlet housing oil scavenge tee (7) and **connect tube assembly** (8) to tee (7).

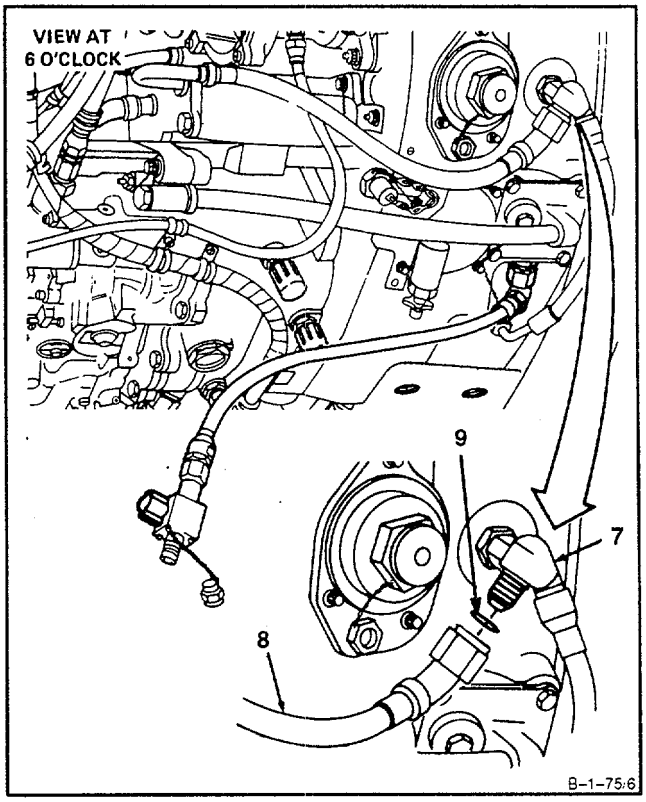

26. Position hose assembly (3) along side of tube assembly (8) and install **cable** tie (1).

27. Tag engine to indicate ENGINE OIL SYSTEM DRAINED. Use tag (E58).

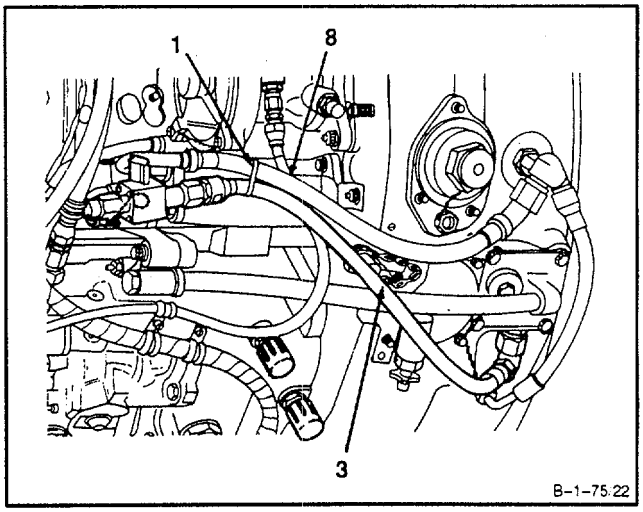

INSPECT

FOLLOW-ON MAINTENANCE:
None

END OF TASK

1-70 CHANGE FROM MIL-L-7808 TO MIL-L-23699 LUBRICATING OIL 1-70

INITIAL SETUP

Applicable Configurations:

All

Tools:

Powerplant Mechanic's Tool Kit, NSN 5180-00-323-4944
Technical Inspection Tool Kit, NSN 5180-00-323-5114

Materials:

Lubricating Oil (E37)
Marking Pencil (E38)
Tag (E58)
Wiping Rag (E64)

Personnel Required:

Aircraft Powerplant Repairer
Aircraft Powerplant Inspector

References:

TM 1-1520-252-10
Task 1-68
Task 1-69
Task 8-3
Task 8-4
Task 8-29
Task 8-30
Task 8-34
Task 8-35
Task 8-36
Task 8-38
Task 8-90
Task 8-91
Task 8-98
Task 8-99
Task 8-102
Task 8-103

General Safety Instructions:

WARNING

Lubricating oils cause paralysis if swallowed. Prolonged contact with them may irritate the skin. Handle only in well-ventilated areas away from heat and flame. Drain and store in approved metal safety containers. Avoid pro- longed or repeated contact with skin and do not take internally. Wash contacted area of skin thoroughly after handling. If irritation of skin results, get medical attention. Get medical attention for eyes.

CAUTION

Intermixing of lubricating oil (E36) with lubricating oil (E37) Is not permitted except in an emergency. If intermixing be- comes necessary, flush and drain en- gine oil system within six hours of en- gine operation. It is important to maintain accurate service records. When oils approved by Textron Lycoming are not available and other oils must be substituted, consult with:

Textron Lycoming
Product Support Department
550 Main Street
Stratford, Connecticut 06497
Attention: Manager, T55
Customer Service

1. **Drain lubricating oil** (E36) from engine oil system (Ref. Task 1-69).
2. Inspect and **clean oil filters and strainers** (Ref. Tasks 8-3, 8-4, 8-29, 8-30, 8-35, 8-36, 8-90, 8-91, 8-98, 8-99, 8-102 and 8-103). **Replace oil filter element** (Ref. Tasks 8-34 and 8-38).

3. **Service engine oil system** with lubricating oil (E37) (Ref. Task 1-68).

GO TO NEXT PAGE

4. **Operate engine** for 30 minutes to 1 hour to heat oil to operating temperature (Ref. TM 1-1520-252-10). This will dislodge carbon and lacquer deposits.

5. **Shut down engine** (Ref. TM 1-1520-252-10).

6. **Inspect and clean main oil filter element** (Ref. Tasks 8-36 and 8-35). If contamination of oil filter element is noted, drain oil from engine (Ref. Task 1-69) and repeat steps 2. thru 6. If little or no contamination of oil filter element is noted, drain oil from engine (Ref. Task 1-69) and proceed with steps 7. and 8.

7. **Service** engine **oil system** with new lubricating oil (E37) (Ref. Task 1-68).

8. 'Using marking pencil (E38), tag **engine** to indicate ENGINE SERVICED WITH MIL-L-23699 OIL. Use tag (E58). **Release engine** for service use and return to normal inspection intervals.

INSPECT

FOLLOW-ON MAINTENANCE:
None

END OF TASK

1-71 CHANGE FROM MIL-L-23699 TO MIL-L-7808 LUBRICATING OIL 1-71

INITIAL SETUP

Applicable Configurations:

All

Tools:

Powerplant Mechanic's Tool Kit, NSN 5180-00-323-4944
Technical Inspection Tool Kit, NSN 5180-00-323-5114

Materials:

Lubricating Oil (E36)
Marking Pencil (E38)
Tag (E58)
Wiping Rag (E64)

Personnel Required:

Aircraft Powerplant Repairer
Aircraft Powerplant Inspector

References:

TM 1-1520-252-10
Task 1-68
Task 1-69
Task 8-3
Task 8-4
Task 8-29
Task 8-30
Task 8-34
Task 8-35
Task 8-36
Task 8-38
Task 8-90
Task 8-91
Task 8-98
Task 8-99
Task 8-102
Task 8-103

General Safety Instructions:

WARNING

Lubricating oils cause paralysis if swallowed. Prolonged contact with them may irritate the skin. Handle only in well-ventilated areas away from heat and flame. Drain and store in approved metal safety containers. Avoid pro- longed or repeated contact with skin and do not take internally. Wash contacted area of skin thoroughly after handling. If irritation of skin results, get medical attention. Get medical attention for eyes.

Intermixing of lubricating oil (E36) with lubricating oil (E37) is not permitted except in an emergency. If intermixing be- comes necessary, flush and drain engine oil system within six hours of engine operation. It is important to maintain accurate service records. When oils approved by Textron Lycoming are not available and other oils must be substituted, consult with:

Textron Lycoming
Product Support Department
550 Main Street
Stratford, Connecticut 06497
Attention: Manager, T55
Customer Service

1. Drain lubricating **oil** (E37) from engine oil system (Ref. Task 1-69).

2. Inspect and clean **oil filters and strainers** (Ref. Tasks 8-3, 8-4, 8-29, 8-30, 8-35, 8-36, 8-90, 8-91, 8-98, 8-99, 8-102, and 8-103). Replace **oil filter element** (Ref. Tasks 8-34 and 8-38).

3. Service engine **oil system** with lubricating oil (E36) (Ref. Task 1-68).

GO TO NEXT PAGE

4. **Operate engine** for 30 minutes to 1 hour to heat oil to operating temperature (Ref. TM 1-1520-252-10). This will dislodge carbon and lacquer deposits.

5. **Shut down** engine (Ref. TM 1-1520-252-10).

6. **Inspect and clean main oil filter** element (Ref. Tasks 8-36 and 8-35). If contamination of oil filter element is noted, drain oil from engine (Ref. Task 1-69) and repeat steps 2. thru 6. If little or no contamination of oil filter element is noted, drain oil from engine (Ref. Task 1-69) and proceed with steps 7. and 8.

7. **Service** engine **oil system** with new lubricating oil (E36) (Ref. Task 1-68).

8. Using marking pencil (E38), tag **engine** to indicate ENGINE SERVICED WITH MIL-L-7808 OIL. Use tag (E58). **Release engine** for service use and return to normal inspection intervals.

INSPECT

FOLLOW-ON MAINTENANCE:
None

END OF TASK

SECTION IX

PREVENTIVE MAINTENANCE CHECKS AND SERVICES

1-72 SPECIAL INSPECTIONS

This section supplements the scheduled inspections as outlined in applicable aircraft inspection checklists. It includes inspection of items which are required to be inspected because of specific conditions or incidents that may happen. These have nothing to do with airframe operating time or inspection intervals. It is divided into the following tasks:

NOTE

Before performing any special inspections, make sure all corrective action has been taken as detailed in applicable troubleshooting tasks for similar or related symptoms. (Ref. Section VII).

EXAMPLE: Chip warning indicator has been displayed: oil system contamination is suspect

Check: SYMPTOM INDEX (Ref. Para. 1-33).
Refer to: Excessive Chips Found on Oil Filter Element and/or Chip Detectors (Ref. Task 1-61).
- Perform all corrective action which includes:
- Inspect Contaminated Oil System (Ref. Task 1-80).

Check: SPECIAL INSPECTIONS (Ref. Para. 1-72).
Refer to: Inspect Contaminated Oil System (Ref. Task 1-80).
- All corrective action has been taken and no further action is required.

LIST OF TASKS

NUMBER	TASK	PAGE
1-73	Inspect Engine After N1 Overspeed (AVIM)	1-319
1-74	Inspect Engine After N2 Overspeed (AVIM)	1-321
1-75	Check Engine Coastdown Time	1-323
1-76	Inspect Engine Subjected to Excessive G-Loads	1-325
1-77	Inspect Dropped Engine	1-327
1-78	Inspect Engine After Power Turbine Overtorque (AVIM)	1-331
1-79	Inspect Contaminated Fuel System	1-333
1-80	Inspect Contaminated Oil System	1-340
1-81	Check for Seal Leakage (No. 2 Bearing Package) (AVIM)	1-348
1-82	Check for Seal Leakage (No. 4 and 5 Bearing) (AVIM)	1-356
1-83	Check for Static Oil Leakage	1-367
1-84	Inspect Engine After Compressor Stall (Surge)	1-374

LIST OF TASKS (Continued)

NUMBER	TASK	PAGE
1-85	Inspect Engine After Check Runs	1-376
1-86	Inspect Engine After Foreign Object Ingestion	1-377
1-87	Inspect Engine Hot End (AVIM)	1-381

1-73 INSPECT ENGINE AFTER N1 OVERSPEED (AVIM) 1-73

INITIAL SETUP

Applicable Configurations:
All

Tools:
Powerplant Mechanic's Tool Kit,
NSN 5180-00-323-4944
Technical Inspection Tool Kit,
NSN 5180-00-323-5114

Materials
None

Personnel Required:
Aircraft Powerplant Repairer (2)
Aircraft Powerplant Inspector

References:
TM 1-1520-252-10

Paragraph 1-33	Task 2-25	Task 8-36
Task 1-80	Task 2-26	Task 8-39
Task 1-87	Task 2-29	Task 8-46
Task 2-20	Task 2-30	Task 8-109
Task 2-21	Task 2-35	Task 8-113
Task 2-23	Task 2-36	
Task 2-24	Task 8-34	

NOTE

An engine overspeed exists under the conditions described in Operating Instructions, TM 1-1520-252-10.

1. If N1 overspeed limits are exceeded, proceed as follows:

   a. **Remove oil filter cover assembly and oil filter element** (Ref. Task 8-34). Check for metal chips or other foreign material.

   b. **Install oil filter cover assembly and oil filter element** (Ref. Task 8-38).

   c. **Remove chip detector** (Ref. Task 8-109), and check for metal chips.

   d. **Install chip detector** (Ref. Task 8-113).

   e. **Remove dual chip detector** (Ref. Task 8-39), and check for metal chips.

   f. **Install dual chip detector** (Ref. Task 8-46).

   g. **If chips are found in oil filter, chip detector, or dual chip detector, inspect contaminated oil system** (Ref. Task 1-80).

   h. **Inspect engine hot end** (Ref. Task 1-87).

GO TO NEXT PAGE

WARNING

Turn compressor rotor very slowly. Do not keep fingers between compressor rotor blades once rotation of rotor is attained. Failure to comply could result in injury. If injury occurs get medical attention.

i. **Check compressor rotor by slowly turning rotor**, through inlet housing and listening for rubbing sounds. If rubbing sounds are heard, proceed as follows:

(1) **Remove compressor housing** (Ref. Task 2-20 or 2-21).

(2) **Inspect compressor housing** (Ref. Task 2-23). If necessary repair compressor housing (Ref. Task 2-24).

(3) **Inspect compressor rotor blades** (Ref. Task 2-35). If necessary, repair compressor rotor blades (Ref. Task 2-36).

(a) **Inspect stator vane assemblies** (Ref. Task 2-29). If necessary, repair stator vane assemblies (Ref. Task 2-30).

(4) **Install compressor housing** (Ref. Task 2-25 or 2-26).

j. **Determine and correct cause of Overspeed** (Ref. Paragraph 1-33).

k. **Perform initial check run** (Ref. TM 1-1520 252-10). If no discrepancies are noted, engine is serviceable.

INSPECT

FOLLOW-ON MAINTENANCE:

None

END OF TASK

1-74 INSPECT ENGINE AFTER N2 OVERSPEED (AVIM) 1-74

INITIAL SETUP

Applicable Configurations:
All

Tools:
Powerplant Mechanic's Tool Kit,
NSN 5180-00-323-4944
Technical Inspection Tool Kit,
NSN 5180-00-323-5114

Materials:
None

Personnel Required:
Aircraft Powerplant Repairer (2)
Aircraft Powerplant Inspector

References:
TM 1-1520-252-10
Paragraph 1-33
Task 1-80
Task 1-87
Task 4-36
Task 8-34
Task 8-38
Task 8-39
Task 8-46
Task 8-109
Task 8-113

NOTE

An engine overspeed exists under the conditions described in Operating Instructions, TM 1-1520-252-10.

1. If N2 overspeed limits are exceeded, proceed as follows:

   a. **Remove oil filter cover assembly and oil filter element** (Ref. Task 8-34). Check for metal chips or other foreign material.

   b. **Install oil filter cover assembly and oil filter element** (Ref. Task 8-38).

   c. **Remove chip detector** (Ref. Task 8-109), and check for metal chips.

   d. **Install chip detector** (Ref. Task 8-113).

   e. **Remove dual chip detector** (Ref. Task 8-39), and check for metal chips.

   f. **Install dual chip detector** (Ref. Task 8-46).

   g. **If chips are found in oil filter, chip detector, or dual chip detector, inspect contaminated oil system** (Ref. Task 1-80).

GO TO NEXT PAGE

h. Inspect fourth stage power turbine as follows:

(1) **Visually inspect fourth stage power turbine rotor for damaged or missing blades.**

(2) **Perform tip clearance check on fourth stage power turbine rotor blades** (Ref. Task 4-36, step 18).

(3) If discrepancies are not noted in preceding steps h (1) and h (2), go to step j.

i. **If discrepancies are noted** in preceding step h, **inspect engine hot end** (Ref. Task 1-87) .

j. **Determine and correct cause of Overspeed** (Ref. Paragraph 1-33).

k. **Perform initial check run** (Ref. TM 1-1520-252-10). If no discrepancies are noted, engine is serviceable.

INSPECT

FOLLOW-ON MAINTENANCE:
None

END OF TASK

1-75 CHECK ENGINE COASTDOWN TIME 1-75

INITIAL SETUP

Applicable Configurations:
All

Tools:
Powerplant Mechanic's Tool Kit,
NSN 5180-00-323-4944
Technical Inspection Tool Kit,
NSN 5180-00-323-5114
Stop Watch

NSN 6645-00-250-4680

Personnel Required:
Aircraft Powerplant Repairer
Aircraft Powerplant Inspector

References:
TM 1-1520-252-10
Paragraph 1-33
Task 1-80
Task 8-34
Task 8-38
Task 8-39
Task 8-46
Task 8-109
Task 8-113

Materials
None

1. **Operate engine** long enough to ensure that all engine parts have reached normal operating temperatures (Ref. TM 1-1520-252-10).

2. **Move ECL** to GRD (Ref. TM 1-1520-252-10). Run engine for a minimum of 2 minutes to stabilize engine rpm and temperature.

NOTE

Coastdown time normally exceeds 25 seconds.

3. **Shut down engine** (Ref. TM 1-1520-252-10), and **check the elapsed time** of coastdown .

4. If coastdown time is less than 25 seconds, proceed as follows:

GO TO NEXT PAGE

a. **Remove chip detector** (Ref. Task 8-109) **and check for metal chips**.

b. **Install chip detector** (Ref. Task 8-113).

c. **Remove dual chip detector** (Ref. Task 8-39) and **check for metal chips.**

d. **Install dual chip detector** (Ref. Task 8-46).

e. **Remove oil filter cover assembly and oil filter element** (Ref. Task 8-34). **Check for metal chips**.

f. **Install oil filter cover assembly and oil filter element** (Ref. Task 8-38).

g. **If metal chips are found in oil filter, chip detector or dual chip detector, inspect contaminated oil system** (Ref. Task 1-80).

h. **Determine and correct cause of abnormal engine coastdown time** (Ref. Paragraph 1-33).

i. **Perform initial check run** (Ref. TM 1-1520-252-10). If no discrepancies are noted, engine is serviceable.

INSPECT

FOLLOW-ON MAINTENANCE:

None

END OF TASK

1-76 INSPECT ENGINE SUBJECTED TO EXCESSIVE G-LOADS 1-76

INITIAL SETUP

Applicable Configurations:

Tools:
Powerplant Mechanic's Tool Kit,
NSN 5180-00-323-4944
Technical Inspection Tool Kit,
NSN 5180-00-323-5114

Personnel Required:
Aircraft Powerplant Repairer
Aircraft Powerplant Inspector

References:
TM 1-1520-252-10
Task 1-80
Task 1-94
Task 8-34
Task 8-38

Materials

None

1. If it is suspected that excessive G-loads have been imposed on engine, proceed as follows:

NOTE

G-load limits are defined in Operating Instructions TM 1-1520-252-10. The following inspections shall be made immediately after the flight during which the excessive G-loads occurred.

a. **Check accessory drive gearbox** (1). There shall be no cracked flanges.

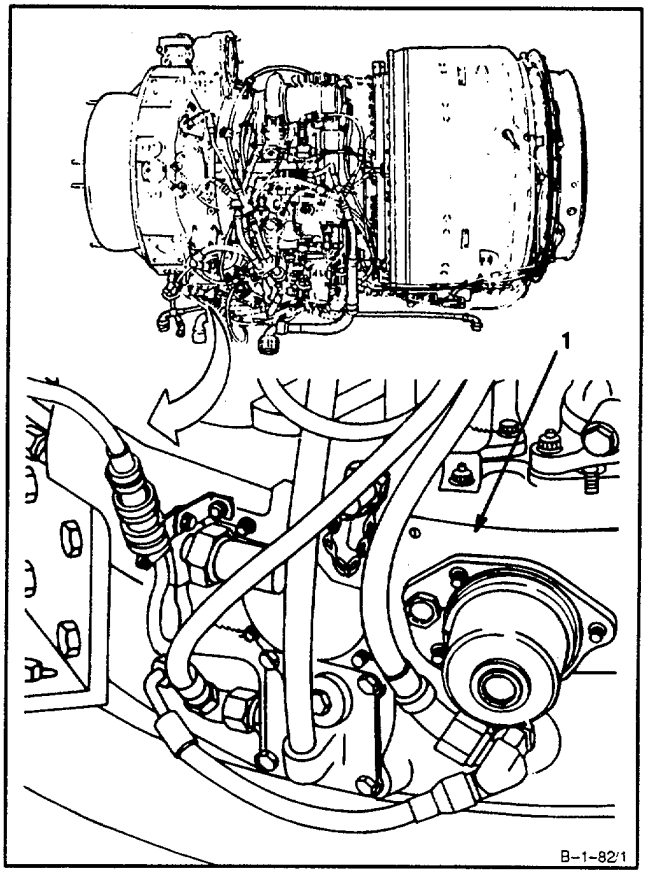

GO TO NEXT PAGE

b. **Check engine mounting pads** (2). There shall be no cracks or damage.

c. **Check air, oil, and fuel hose connections.** There shall be no looseness.

d. **Check all engine mounted accessories.** There shall be no loose bolts, nuts, connections, or cracked flanges.

e. **Check Inlet housing (3), compressor housing (4), and combustor housing (5).** There shall be no cracks or loose bolts.

f. **Remove oil filter cover assembly and oil filter element** (Ref. Task 8-34). Check oil filter element. There shall be no chips, lint or other foreign material.

g. **Install oil filter cover assembly and oil filter element assembly** (Ref. Task 8-38).

h. **Service scavenge oil screen** (Ref. Task 1-94).

i. **Inspect contaminated oil system** (Ref. Task 1-80).

j. **Check power output shaft splines (6) for damaged splines.** There shall be no chips in splines (6).

k. **Check output shaft seal and seal housing (7) for oil leaks.** There shall be no leaks.

2. **If engine is found unsatisfactory**, for further operation, **repair or replace components** as required.

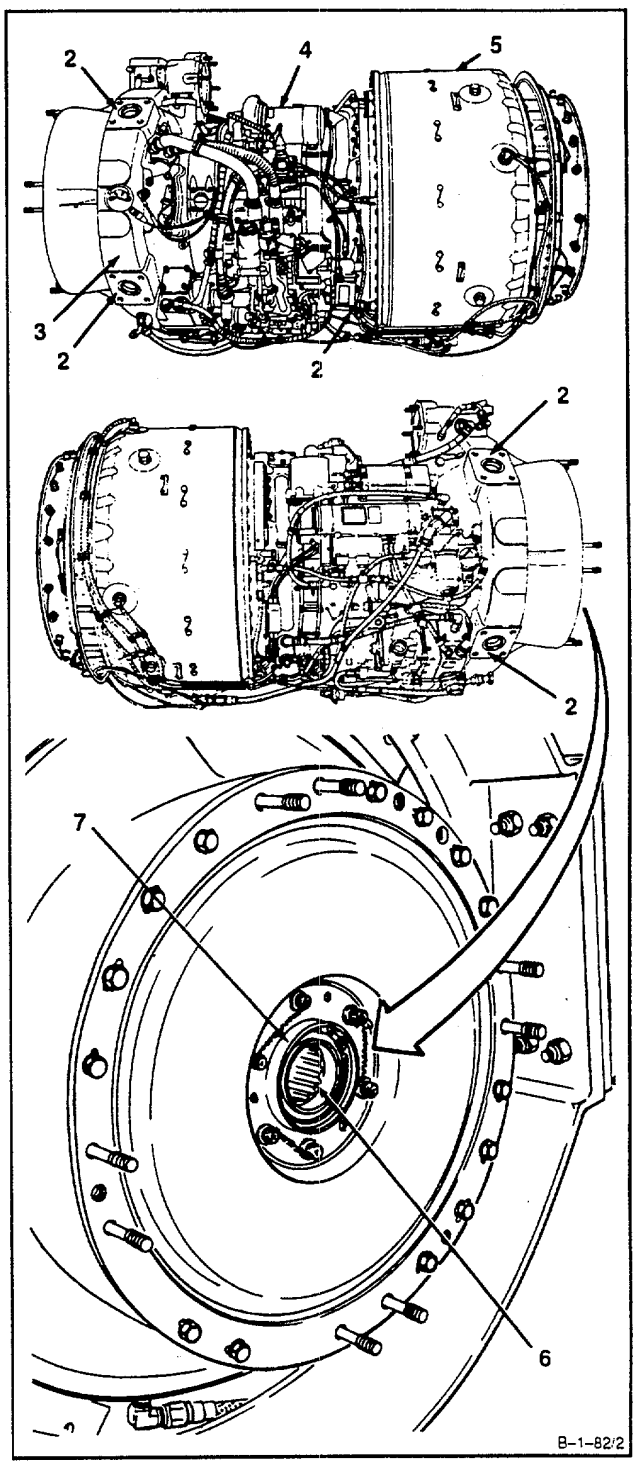

INSPECT

FOLLOW-ON MAINTENANCE:

None

END OF TASK

1-77 INSPECT DROPPED ENGINE 1-77

INITIAL SETUP

Applicable Configurations:
All

Tools:
Powerplant Mechanic's Tool Kit,
NSN 5180-00-323-4944
Technical Inspection Tool Kit,
NSN 5180-00-323-5114

Materials:
None

Personnel Required:
Aircraft Powerplant Repairer
Aircraft Powerplant Inspector

References:

TM 1-1520-252-MTF
Task 1-29
Task 1-31
Task 1-75
Task 1-80
Task 1-89
Task 1-91
Task 1-92
Task 1-93

NOTE

A dropped engine condition exists when an engine has been dropped during handling. This condition may have occurred when engine was inside shipping container or it may have occurred when engine was being handled during routine maintenance.

1. If an engine has been dropped during handling proceed as follows:

   a. **Install engine maintenance sling (1)** (Ref. Task 1-31).

   b. **Inspect five engine mounting pads (2 and 3).** There shall be no cracks.

   c. **Install engine on maintenance stand** (Ref. Task 1-29).

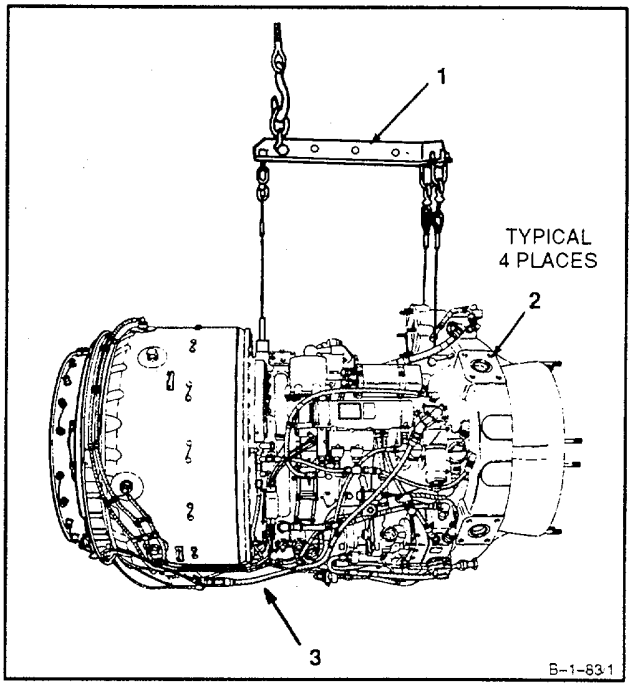

GO TO NEXT PAGE

d. **Inspect all engine accessories** as follows:

(1) There shall be no cracked mounting flanges.

(2) There shall be no loose bolts and nuts.

(3) There shall be no loose connections.

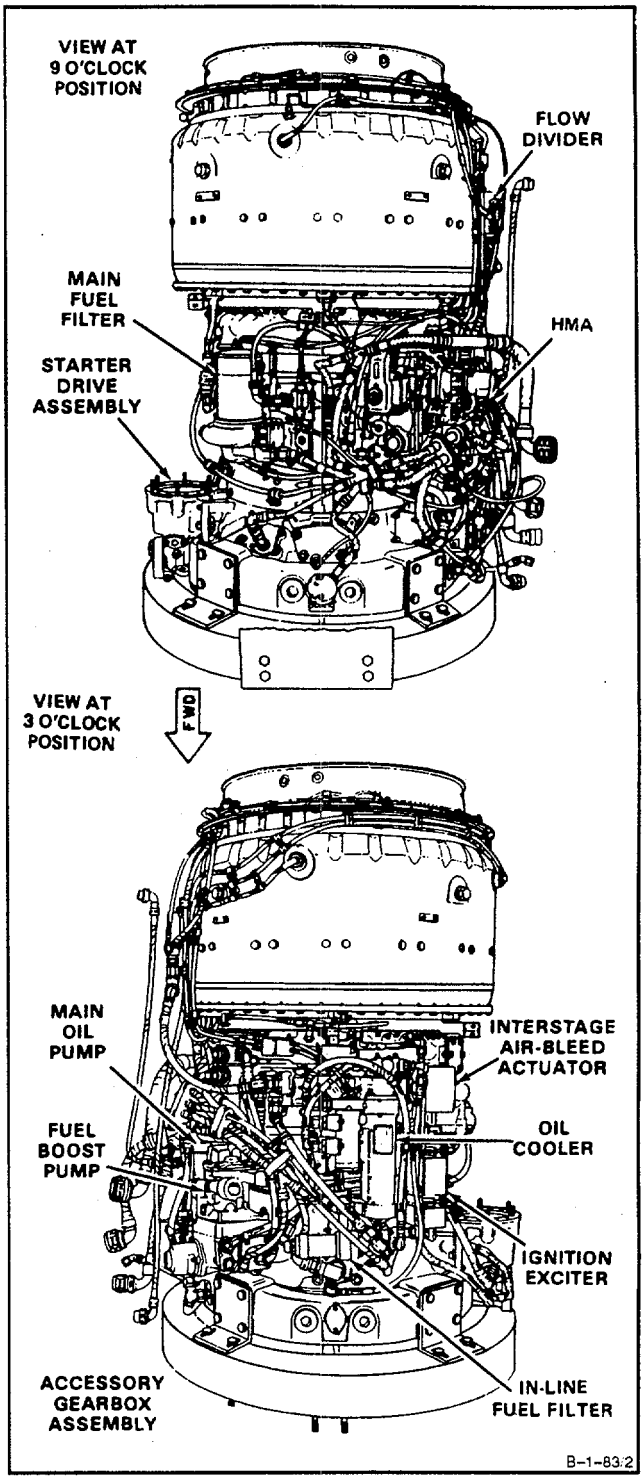

GO TO NEXT PAGE

e. **Inspect all hose and tube assemblies**. There shall be no bends, kinks, or loose connections.

f. **Rotate engine to horizontal position**.

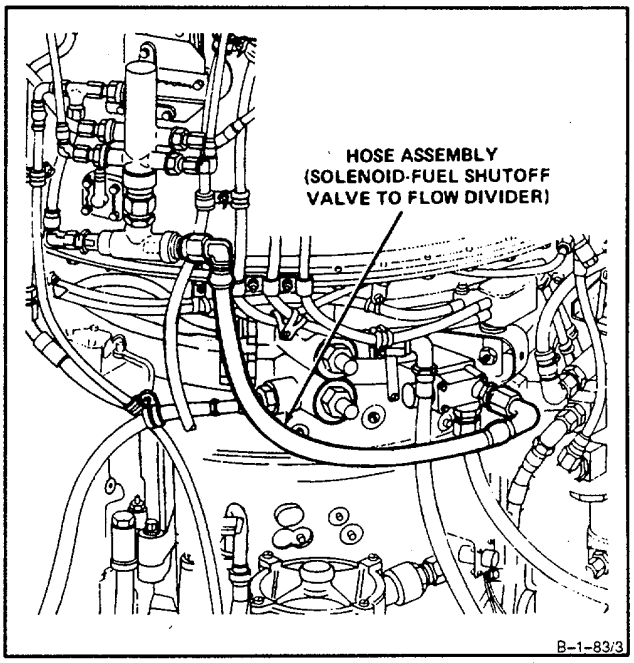

g. **Inspect inlet housing assembly** (3) as follows:

(1) There shall be no cracks.

(2) There shall be no loose bolts.

h. **Rotate engine to vertical position**.

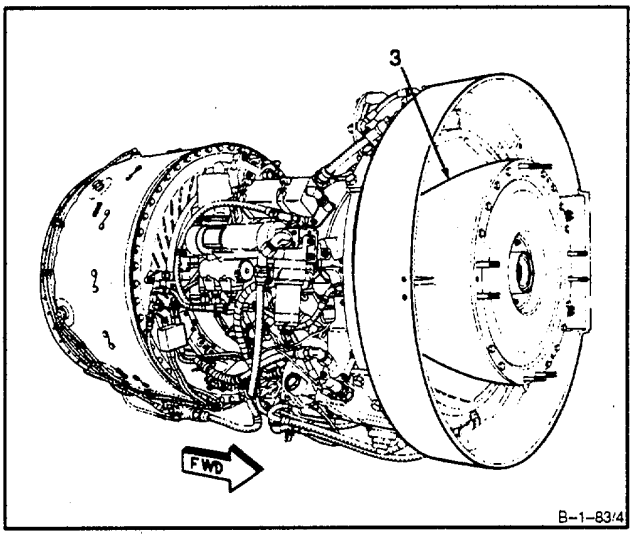

GO TO NEXT PAGE

i. **Inspect combustion chamber housing (4)** as follows:

(1) There shall be no cracks or distortion.

(2) There shall be no loose bolts.

j. **If damage is evident** on items called out in steps b, d, e, g, and i, **replace engine**.

k. **If no damage is apparent, proceed as follows**:

NOTE

Minimum test time is 30 minutes. Vibration levels must be within established limits. If no discrepancies are noted, engine is considered serviceable.

(1) Perform complete engine operational check run. Include vibration and coastdown checks (Ref. Task 1-75 or Ref. TM 1-1520-252-MTF).

(2) Perform the following:

Service starter gearbox filter (Ref. Task 1-89).

Service No. 2 bearing pressure oil filter (Ref. Task 1-91).

Service No. 4 and 5 bearing oil filter (Ref. Task 1-92).

Service oil filter cover assembly and oil filter element (Ref. Task 1-93).

Service chip detector (Ref. Task 1-80, step 26).

Service dual chip detector (Ref. Task 1-80, step 27).

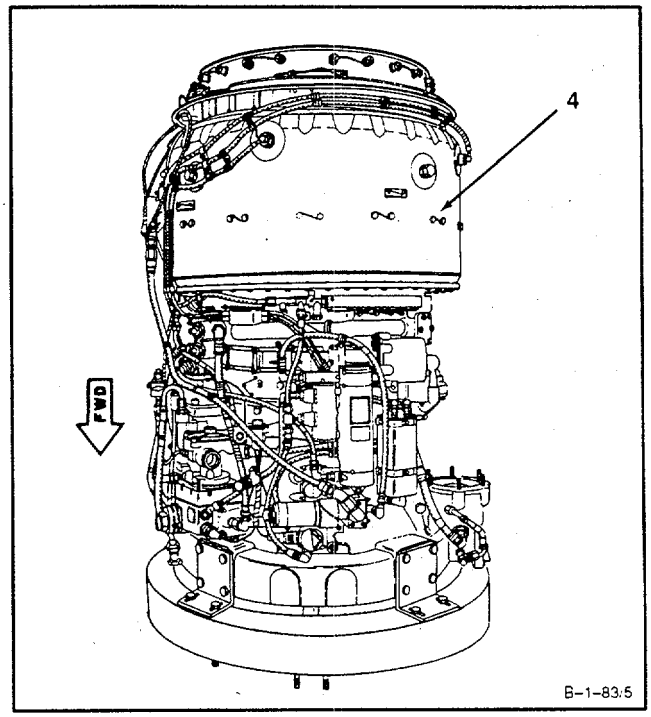

INSPECT

FOLLOW-ON MAINTENANCE:

None

END OF TASK

1-78 INSPECT ENGINE AFTER POWER TURBINE OVERTORQUE (AVIM) 1-78

INITIAL SETUP

Applicable Configurations:
All

Tools:
Powerplant Mechanic's Tool Kit,
NSN 5180-00-323-4944
Technical Inspection Tool Kit,
NSN 5180-00-323-5114

Materials
None

Personnel Required:
Aircraft Powerplant Repairer
Aircraft Powerplant Inspector

References:
TM 1-1520-252-10
Task 1-80
Task 3-5
Task 3-6
Task 3-7
Task 3-8

NOTE

An overtorque condition exists when torque exceeds the limits specified in operating instructions (Ref. TM 1-1520-252-10).

1. When an engine has exceeded the torque limits specified in operating instructions (Ref. TM 1-1520-252-10), proceed as follows:

   a. **Inspect contaminated oil system** (Ref. Task 1-80).

GO TO NEXT PAGE

b. **Remove combustion section and power turbine** (Ref. Task 3-5). Inspect shaft (1) for cracks and evidence of damage In spline area (2). Replace power turbine assembly (Ref. Tasks 3-6 and 3-7) if shaft is damaged. Install combustion section and power turbine (Ref. Task 3-8).

c. **Remove output shaft and inspect for cracks and for evidence of twist** (Ref. Contractor Logistic Support). **Replace output shaft** if damaged.

d. **Perform** initial check run (Ref. TM 1-1520-252-10). If no metal or foreign material is found, release engine for normal operation.

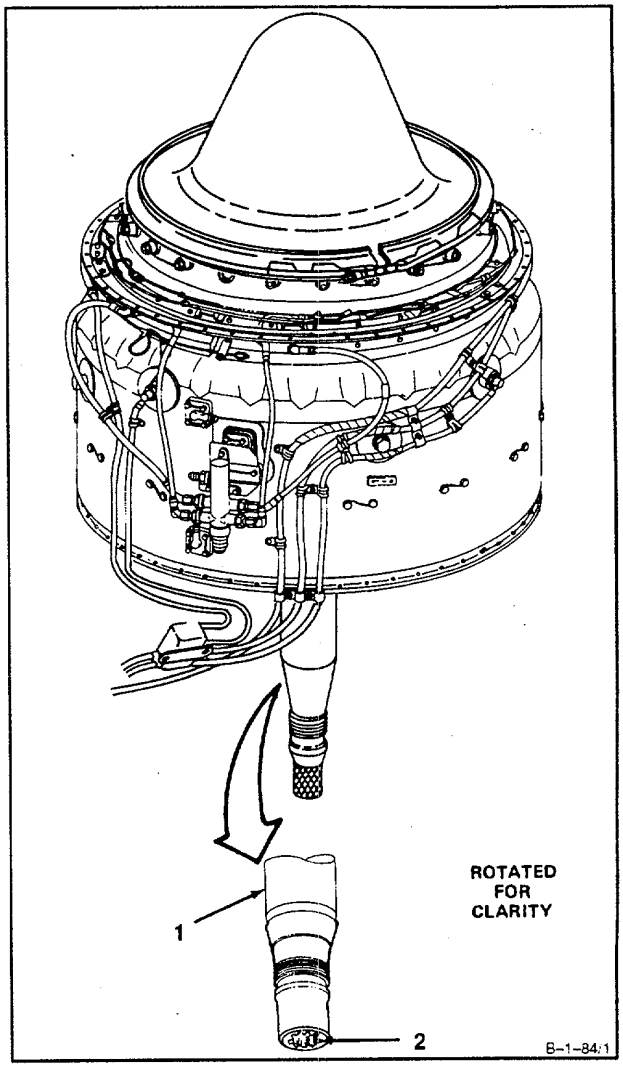

INSPECT

FOLLOW-ON MAINTENANCE:

None

END OF TASK

1-79 INSPECT CONTAMINATED FUEL SYSTEM 1-79

INITIAL SETUP

Applicable Configurations:
All

Tools:
Powerplant Mechanic's Tool Kit,
NSN 5180-00-323-4944
Technical Inspection Tool Kit,
NSN 5180-00-323-5114
Strap Wrench

Materials:
Lockwire (E33)
Wiping Rag (E64)

Parts:
Packings
Filter Elements

Personnel Required:
Aircraft Powerplant Repairer
Aircraft Powerplant Inspector
Aircraft Powerplant Supervisor

References:

TM 1-1520-252-T
TM 1-2840-252-23P
TM 1-1520-252-10
TM 1-1520-252-23

General Safety Instructions:

WARNING

Turbine fuels are very flammable. They may cause drying and irritation of skin or eyes. Handle only in well-ventilated areas away from heat and open flame. Drain and store in approved metal safety containers. Avoid prolonged or repeated contact with skin and do not take internally. Wash contacted area of skin thoroughly after handling. If irritation of skin results, get medical attention. Get medical attention for eyes.

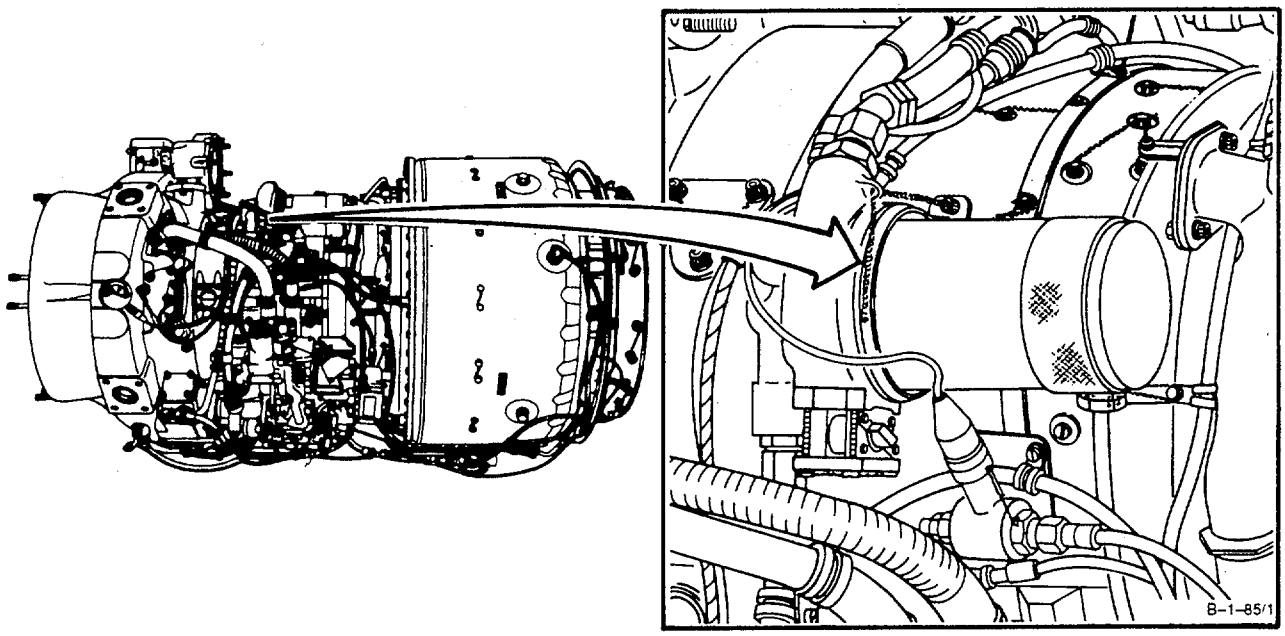

GO TO NEXT PAGE

NOTE

A contaminated fuel system exists when the main fuel filter element or the in-line fuel filter element becomes clogged, causing an increase in differential pressure which actuates the by-pass indicator, and allows contaminated fuel to flow downstream.

1. Inspect contaminated fuel system as follows:

   a. Inspect main fuel filter as follows:

      (1) Place wiping rag (E64) under plug (1).

      (2) Remove lockwire, drain plug (1) and packing (2).

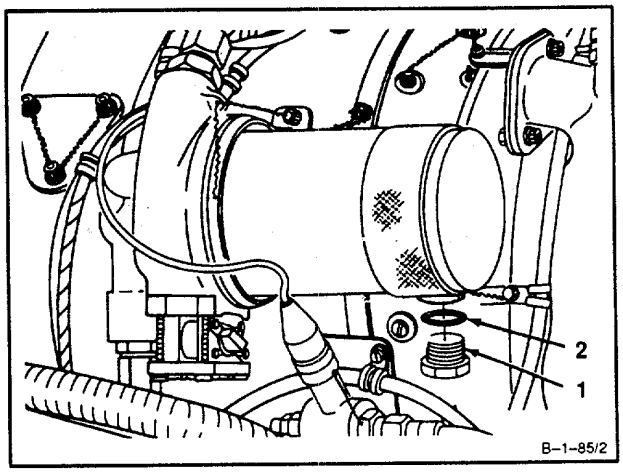

      (3) Remove lockwire, main filter bowl (3), and packings (4 and 5). Use strap wrench.

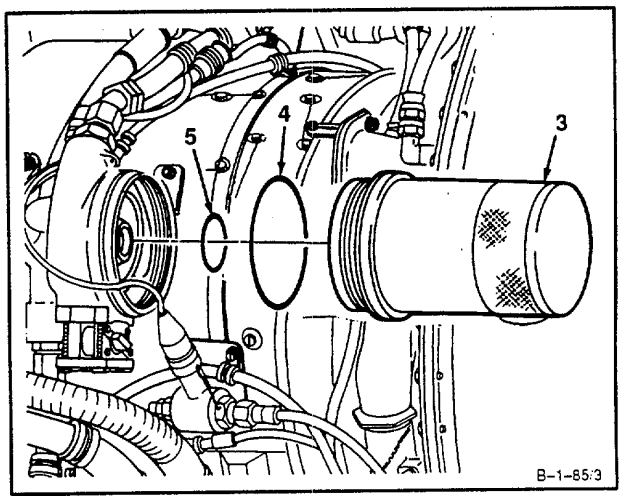

      (4) Remove filter element (6).

      (5) Inspect impending by-pass (differential pressure) indicator and filter element.

NOTE

If impending by-pass (differential pressure) indicator is actuated (popped out), or if filter element is contaminated, do step (6). If impending by-pass (differential pressure) indicator is not actuated (popped out), and if filter element is not contaminated, omit step (6).

      (6) Throw out old (contaminated) filter element, reset pop-out indicator, and install new filter element (6) in main filter bowl (3) .

      (7) Install serviceable filter element (6) in main filter bowl (3) .

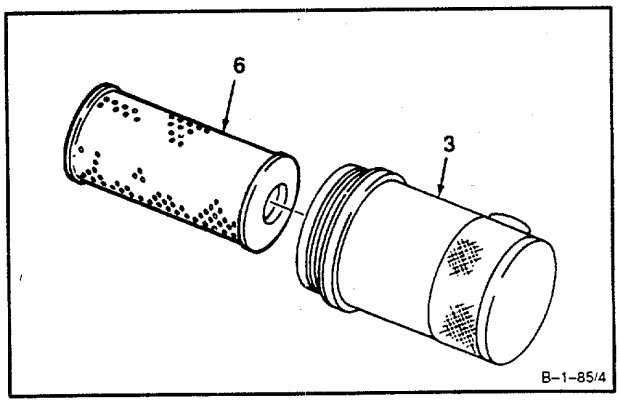

GO TO NEXT PAGE

(8) Install packings (4 and 5) on filter head (7). Install filter bowl (3) on filter head (7). Turn by hand until bottomed, then hand tighten. Lockwire filter bowl (3). Use lockwire (E33).

(9) Install packing (2) on plug (1) and install plug (1) into filter bowl (3). Lockwire plug (1). Use lockwire (E33).

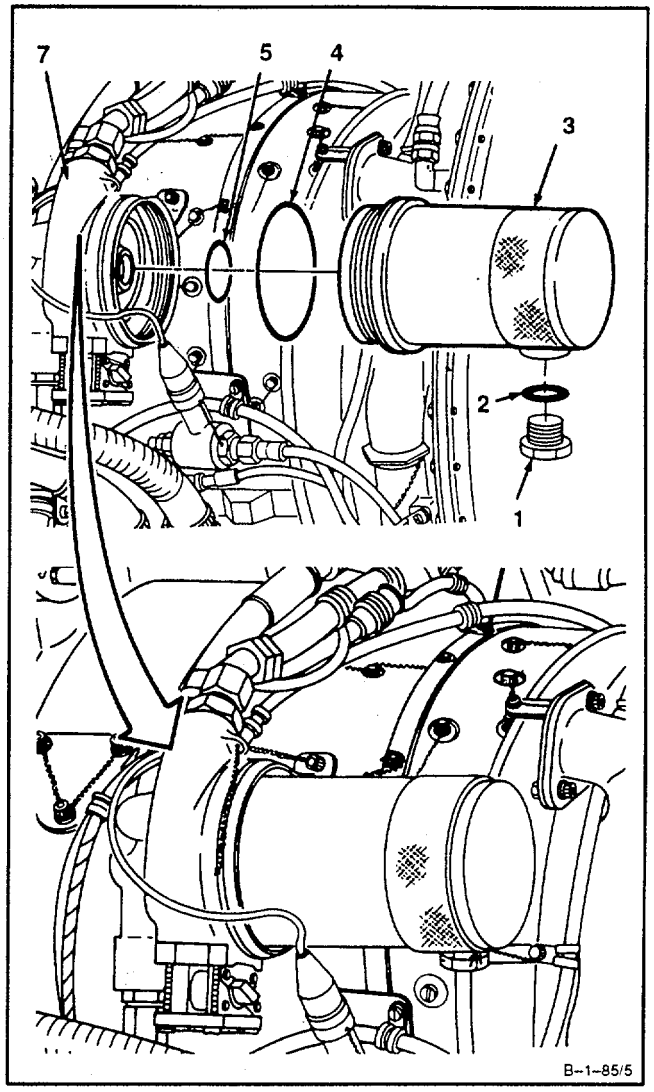

GO TO NEXT PAGE

b. **Inspect in-line fuel filter** as follows:

(1) Remove lockwire and unscrew filter bowl (8). Use strap wrench.

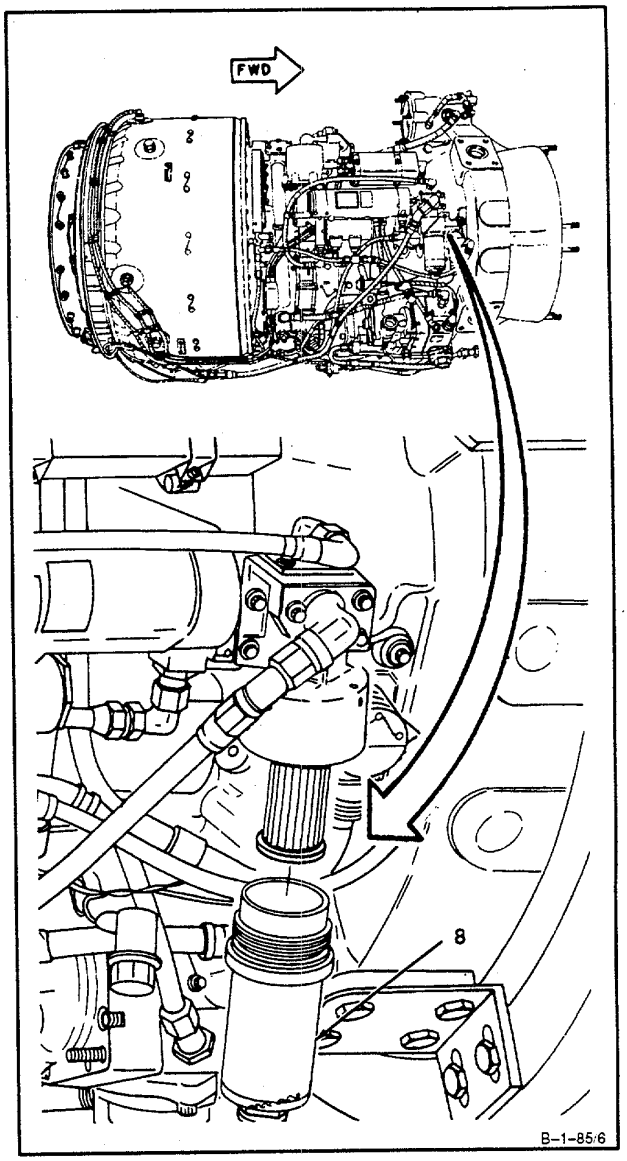

GO TO NEXT PAGE

(2) Remove filter element (9). Remove packings (10 and 11).

(3) Inspect impending by-pass (differential pressure) indicator and filter element.

NOTE

If impending by-pass (differential pressure) indicator is actuated (popped out), or if filter element is contaminated, do steps (4) and (5). If impending by-pass (differential pressure) indicator is not actuated (popped out), and if filter element is not contaminated, omit steps (4) and (5).

(4) Throw out old (contaminated) filter element, reset pop-out indicator, and install packing (10) on new filter element (9).

(5) Install packing (11) and filter element (9) in filter head (7).

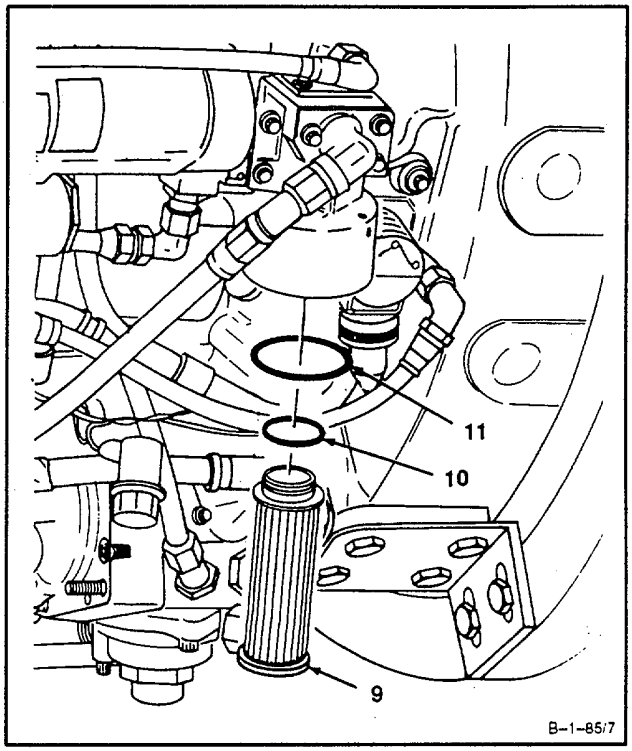

(6) Install packing (10) on serviceable filter element (9).

(7) Install packing (11) and filter element (9) in filter head (7).

GO TO NEXT PAGE

CAUTION

Do not use wrench on indicator to tighten bowl or damage to bowl may occur.

(8) Install filter bowl (8) in filter head (7). Turn by hand until bottomed, then hand tighten. Lock wire filter bowl (8).Use lockwire (E33).

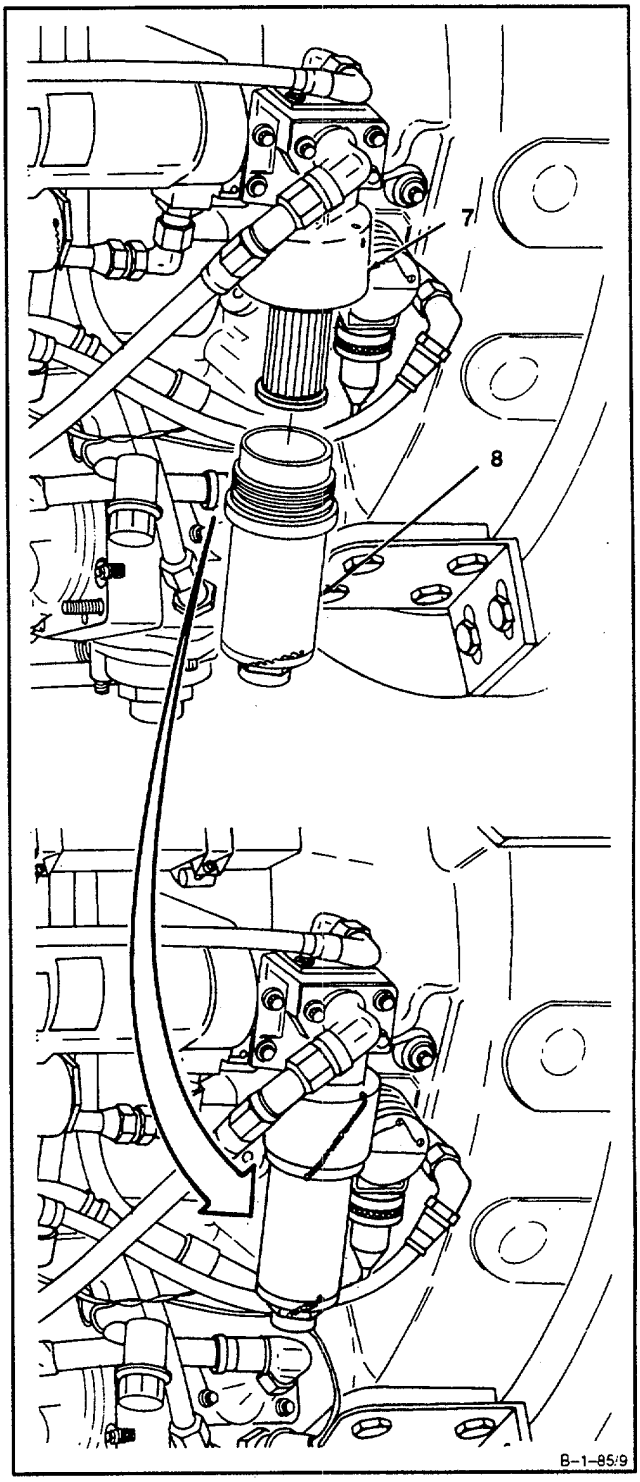

GO TO NEXT PAGE

NOTE

If either impending by-pass (differential pressure) indicator was actuated (popped out), and if both filter elements were contaminated, do steps 2. thru 4. If neither impending by-pass (differential pressure) indicator was actuated (popped out), and if neither filter element was contaminated, omit steps 2. thru 5.

2. **Check fuel tanks and supply lines for contamination** (Ref. TM 1-1520-252-T).

3. **Service fuel tanks with clean fuel** (Ref. TM 1-1520-252-23).

4. **Perform initial check run** (Ref. TM 1-1520-252-10), and repeat steps 1. and 2.

NOTE

If either impending by-pass (differential pressure) indicator was actuated (popped out) again, or if either filter element was still contaminated, do step 5. If neither impending by-pass (differential pressure) indicator was actuated (popped out), and if neither filter element was contaminated, omit step 5..

5. **Repeat step 1., and perform initial check run** (Ref. TM 1-1520-252-10). **If either impending by-pass Indicator actuate again, or if contamination still exists, replace engine.**

INSPECT

FOLLOW-ON MAINTENANCE:

None

END OF TASK

INITIAL SETUP

Applicable Configurations:
All

Tools:
Powerplant Mechanic's Tool Kit, NSN 5180-00-323-4944
Technical Inspection Tool Kit, NSN 5180-00-323-5114
Oil Sample Bottle
Approved Metal Safety Container
Dry Compressed Air Source
Goggles
Utility Pail

Materials:
Dry Cleaning Solvent (E19)
Gloves (E24)
Lint-Free Cloth (E30)
Lockwire (E33)
Wiping Rag (E64)

Parts:
Packings

Personnel Required:
Aircraft Powerplant Repairer
Aircraft Powerplant Inspector

References:
TM 1-2840-252-23P

Task 1-53	Task 1-92
Task 1-68	Task 1-93
Task 1-69	Task 5-25
Task 1-89	Task 5-26
Task 1-91	Task 8-3
Task 8-4	Task 8-90
Task 8-29	Task 8-91
Task 8-30	Task 8-98
Task 8-36	Task 8-99
Task 8-38	Task 8-102
Task 8-103	

General Safety Instructions:

WARNING

Lubricating oils cause paralysis if swallowed. Prolonged contact with them may irritate the skin. Handle only in well-ventilated areas away from heat and flame. Drain and store in approved metal safety containers. Avoid prolonged or repeated contact with skin and do not take internally. Wash contacted area of skin thoroughly after handling. If irritation of skin results, get medical attention. Get medical attention for eyes.

WARNING

Dry cleaning solvent (E19) is flammable and toxic. It can irritate skin and cause burns. Use only in well-ventilated area, away from heat and open flame. In case of contact, immediately flush skin or eyes with water for at least 15 minutes. Get medical attention for eyes.

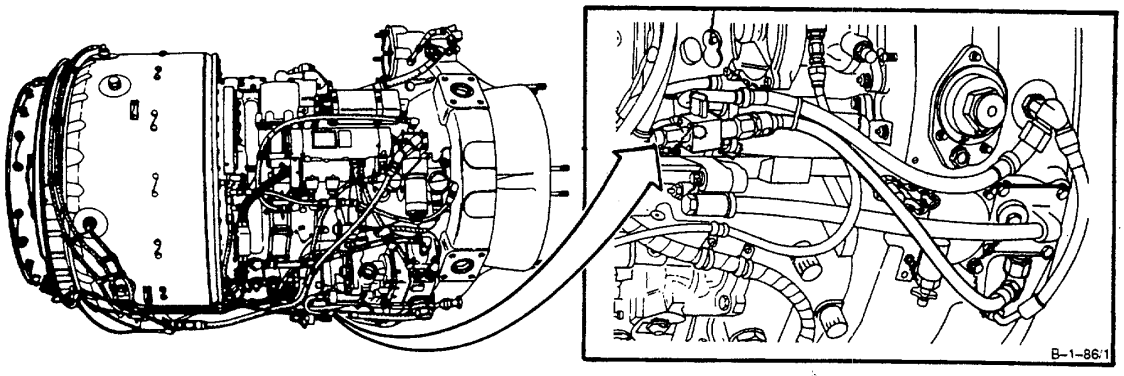

GO TO NEXT PAGE

NOTE

A contaminated oil system exists when the main oil filter element becomes clogged, causing an increase in differential pressure which actuates the by-pass indicator, and allows contaminated oil to flow downstream.

1. **Remove cable tie (1)** and lower free end (2) of hose assembly (3).

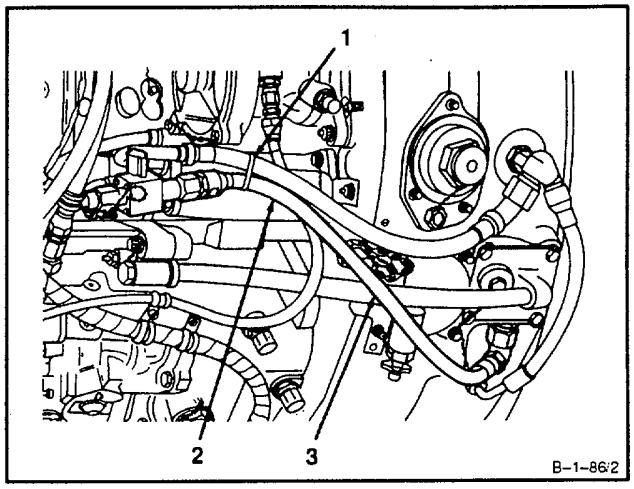

NOTE

For servicing accessory gearbox chip detector, go to step 26.

NOTE

For servicing dual chip detector, go to step 27.

2. Remove cap (4).

NOTE

In following step 3., oil sample shall be taken within 10 minutes of engine shutdown.

3. Turn oil drain cock (5) 1/4 turn counterclockwise to open position. Allow a minimum of 1 quart of oil to drain from hose assembly (3) into utility pail.

4. Fill oil sample bottle and install cap.

5. Turn oil drain cock (5) 1/4 turn clockwise to closed position.

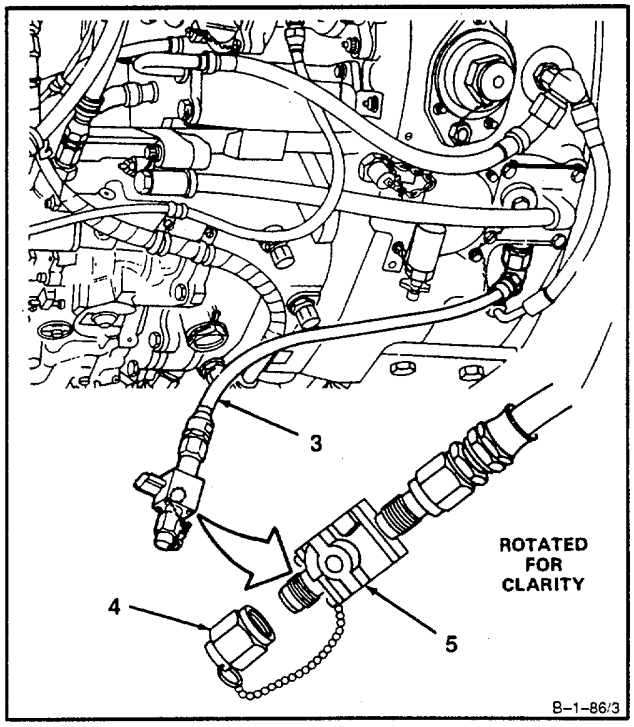

GO TO NEXT PAGE

6. Install cap (4) on oil drain cock fitting (6).

7. **Forward oil sample to oil analysis laboratory.**

NOTE

Wait for lab results before proceeding with following steps. If lab results are acceptable, proceed with following steps.

8. **Drain engine oil system** (Ref. Task 1-69).

9. **Service starter gearbox filter** (Ref. Task 1-89).

10. If not previously done, **service No. 2 bearing pressure oil strainer and No. 4 and 5 bearing oil filter** (Ref. Task 1-91 and Task 1-92).

11. **Inspect main oil filter** impending **by-pass** (differential pressure) **indicator** (Ref. Task 1-53) **and filter element** (Ref. Task 8-36).

NOTE

If impending by-pass (differential pressure) indicator was not actuated (popped out), and if filter element was not contaminated, omit step a..
If impending by-pass (differential pressure) indicator was not actuated (popped out), and if filter element was not contaminated, omit step a..

a. Throw out old (contaminated) filter element, reset pop-out indicator (Ref. Task 1-53), and install two packings on new filter element (Ref. Task 8-38).

b. **Install** two packings on **serviceable filter element** (Ref. Task 8-38).

c. **Install oil filter element Into accessory gearbox assembly** (Ref. Task 8-38).

d. Install packing into oil filter cover assembly packing groove (Ref. Task 8-38).

e. Install oil filter cover assembly, on accessory gearbox assembly (Ref. Task 8-38).

12. If not previously done, **service oil filter cover assembly and oil filter element** (Ref. Task 1-93).

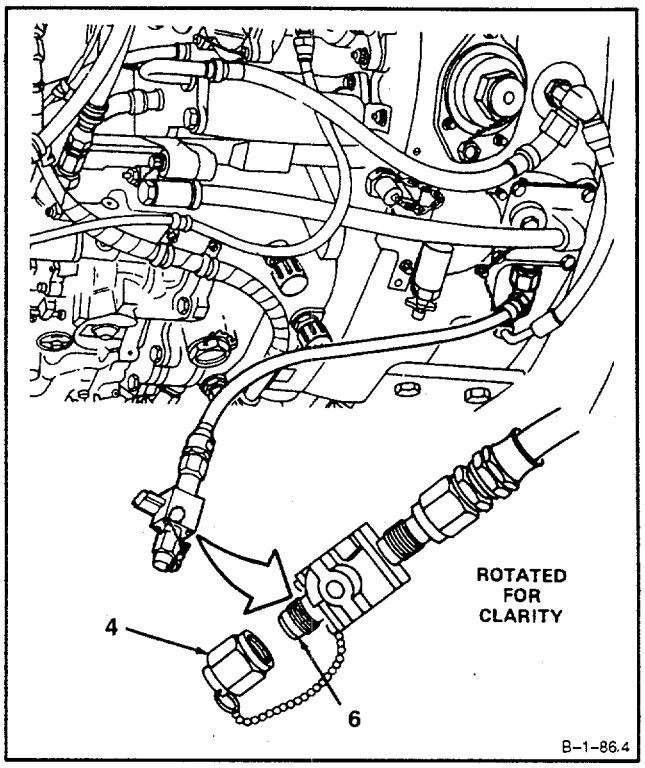

GO TO NEXT PAGE

13. If not previously done, **clean and inspect over-** speed drive and outlet cover assembly (Ref. Task 5-25 and Task 5-26).

14. If not previously done, **clean and inspect main oil pump, speed pickup drive assembly, scavenge oil screen, and related parts** (Ref. Task 8-3 and Task 8-4).

15. If not previously done, **clean and inspect oil filler assembly and oil filler strainer** (Ref. Task 8-29 and Task 8-30).

16. If not previously done, **inspect oil filter cover assembly and oil filter element** (Ref. Task 8-36).

17. If not previously done**, clean and inspect starter gearbox filter** (Ref. Task 8-90 and Task 8-91).

18. If not previously done, **clean and Inspect No. 2 bearing pressure oil strainer** (Ref. Task 8-98 and Task 8-99).

19. If not previously done, **clean and inspect No. 4 and 5 bearing filter** (Ref. Task 8-102 and Task 8-103).

20. **Service chip detector (7)** as follows:

    a. Unlock plug (8) and turn counterclockwise.

    b. Remove plug (8) and packing (9).

    c. Inspect chip detector plug (8) for chips or contamination.

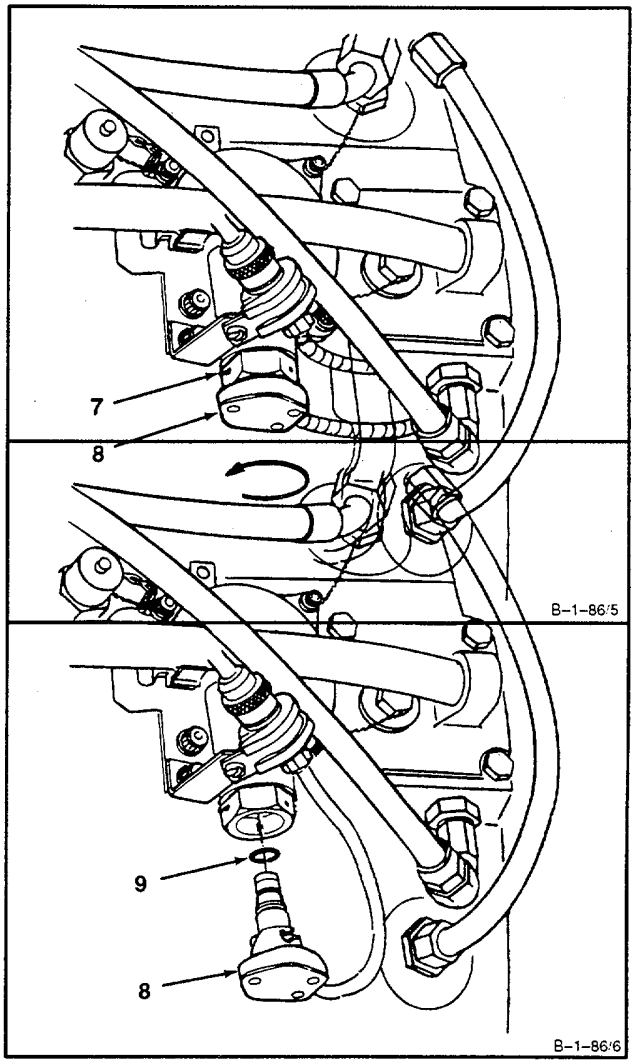

GO TO NEXT PAGE

WARNING

Dry cleaning solvent (E19) is flammable and toxic. It can irritate skin and cause burns. Use only in well-ventilated area, away from heat and open flame. In case of contact, immediately flush skin or eyes with water for at least 15 minutes. Get medical attention for eyes.

d. Clean plug (8) as follows:

(1) Wear gloves (E24). Immerse plug (8) in dry cleaning solvent (E19) and agitate. Use brush on external surfaces.

(2) Use lint-free cloth (E30) to remove solvent.

e. Install packing (9) in groove (10) on plug (8).

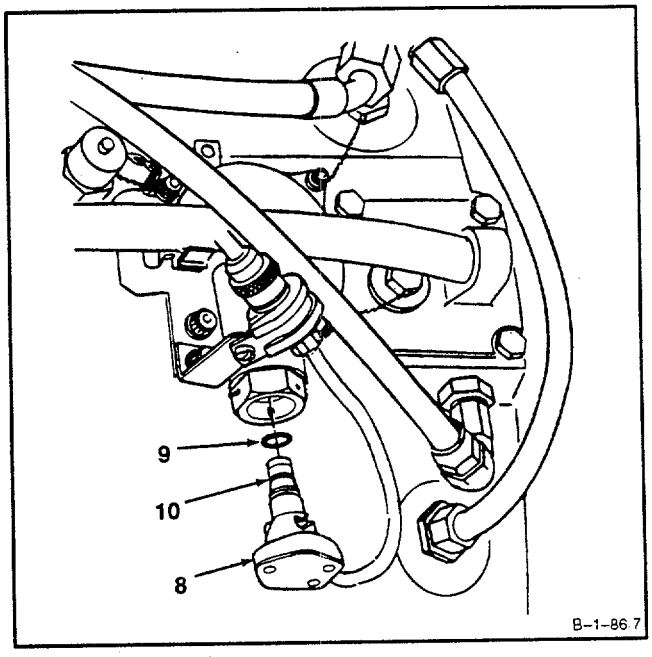

CAUTION

Plug shall be fully seated and firmly locked Into housing. A loose fitting plug will cause oil leakage resulting In engine damage.

f. Install plug (8) in housing (11) by pushing and turning plug 1/8 turn clockwise.

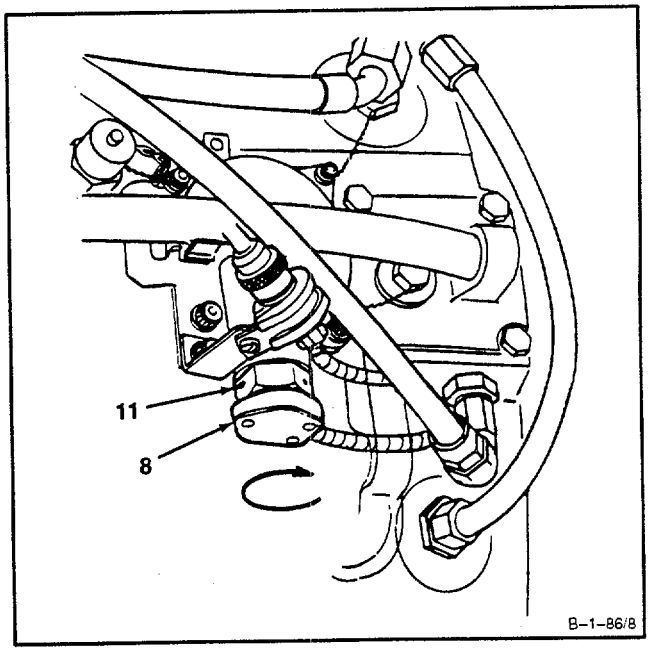

GO TO NEXT PAGE

21. **Service dual chip detector (11)** as follows:

    a. Remove lockwire, two chip detectors (12) and packings (13).

    b. Inspect chip detectors (12) for chips or contamination.

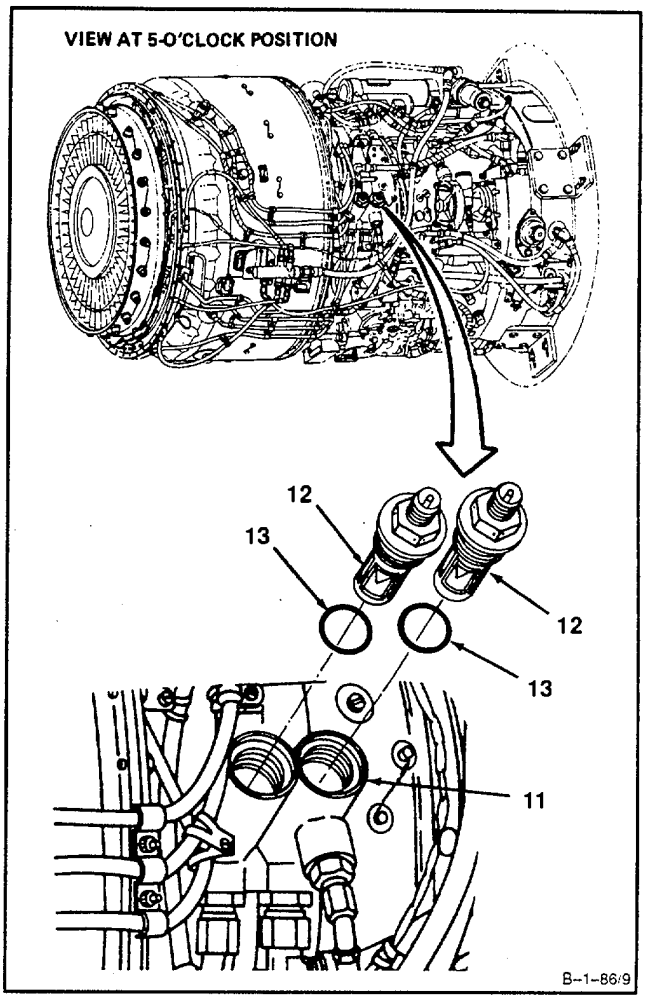

GO TO NEXT PAGE

CAUTION

When removing filter from connector, be careful not to push in or deform screen of filter. Pushed in or deformed screen is cause for rejection.

NOTE

The following step applies to both magnetic chip detectors.

c. Unscrew and remove filter (14) from connector (15).

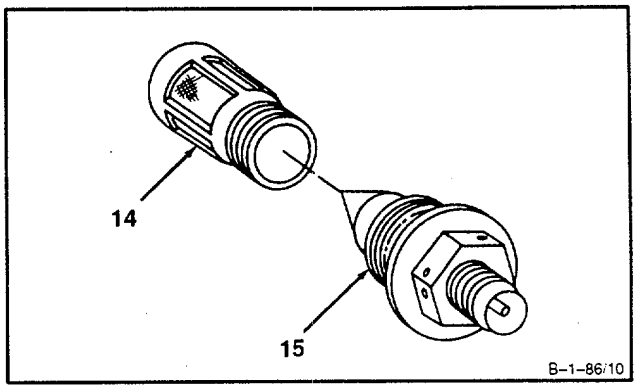

WARNING

Dry cleaning solvent (E19) is flammable and toxic. It can irritate skin and cause burns. Use only In well-ventilated area, away from heat and open flame. In case of contact, immediately flush skin or eyes with water for at least 15 minutes. Get medical attention for eyes.

d. Wear gloves (E24). Clean filter (14). Use dry cleaning solvent (E19) and brush.

WARNING

When using compressed air for cleaning, use approved protective equipment for eyes and face. Do not use more than 30 psig air pressure. Do not direct air toward yourself or another person. Failure to comply could result in injury to eyes or skin. In case of injury, get medical attention.

e. Wear goggles. Dry filter (14) using clean, dry compressed air.

f. Clean connector (15) with lint-free cloth (E30) dampened in dry cleaning solvent (E19).

GO TO NEXT PAGE

CAUTION

When Installing filter on connector, be careful not to push In or deform screen of filter. Pushed In or deformed screen may cause false chip indications.

g. Install filter (14) on connector (15).

h. Install packings (13) in grooves (16) on chip detectors (12).

i. Install chip detectors (12) in housing (17). Lockwire chip detectors. Use lockwire (E33).

22. **Service Engine Oil System** (Ref. Task 1-68).

23. Start and run engine for five minutes (Ref. TM 1-1520-252-10).

24. Shut down engine using normal shutdown procedure (Ref. TM 1-1520-252-10).

NOTE

If, during the following steps, chips are found at the last chance (bearing) filters, replace engine.

25. Inspect chip detector, oil filter, and bearing filters for chips or contamination..

    a. If quantity of chips or degree of contamination is not significantly less, replace defective component or engine.

    b. If quantity of chips or degree of contamination is significantly less, repeat steps 8. thru 25..

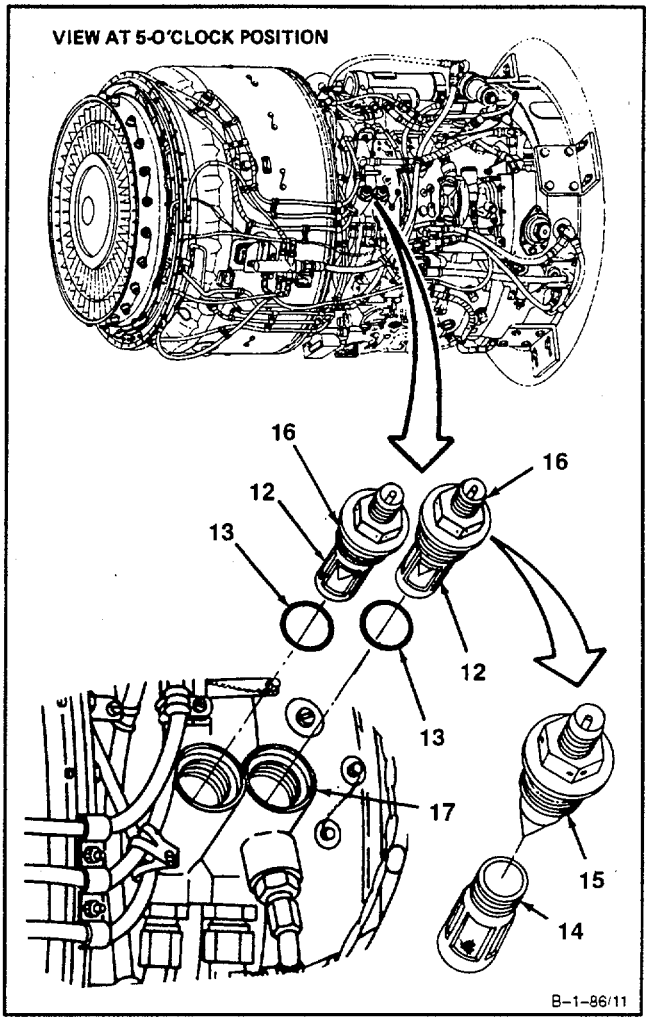

INSPECT

FOLLOW-ON MAINTENANCE:
None

END OF TASK

1–80.1 CHIP DETECTOR CONTAMINATION 1–80.1

INITIAL SETUP
Applicable Configurations:
All
Tools:
Powerplant Mechanics Tool Kit,
NSN 5180–00–323–4944
Materials/Parts:
None

Personnel Required:
Aircraft Powerplant Repairer

References:
Task 1–80
Task 1–91
Task 1–92

CONTAMINATION CATEGORY RATING GUIDE

CATEGORY	DESCRIPTION
A	Single chip larger than 0.120 X 0.120.
B	Chips larger than 0.025 inch. Refer to Chip Detector Chip Chart.
C	Fuzz and/or ships smaller than 0.025 inch. Refer to Chip Detector Chip Chart.

GO TO NEXT PAGE

1–80.1 CHIP DETECTOR CONTAMINATION (Continued) 1–80.1

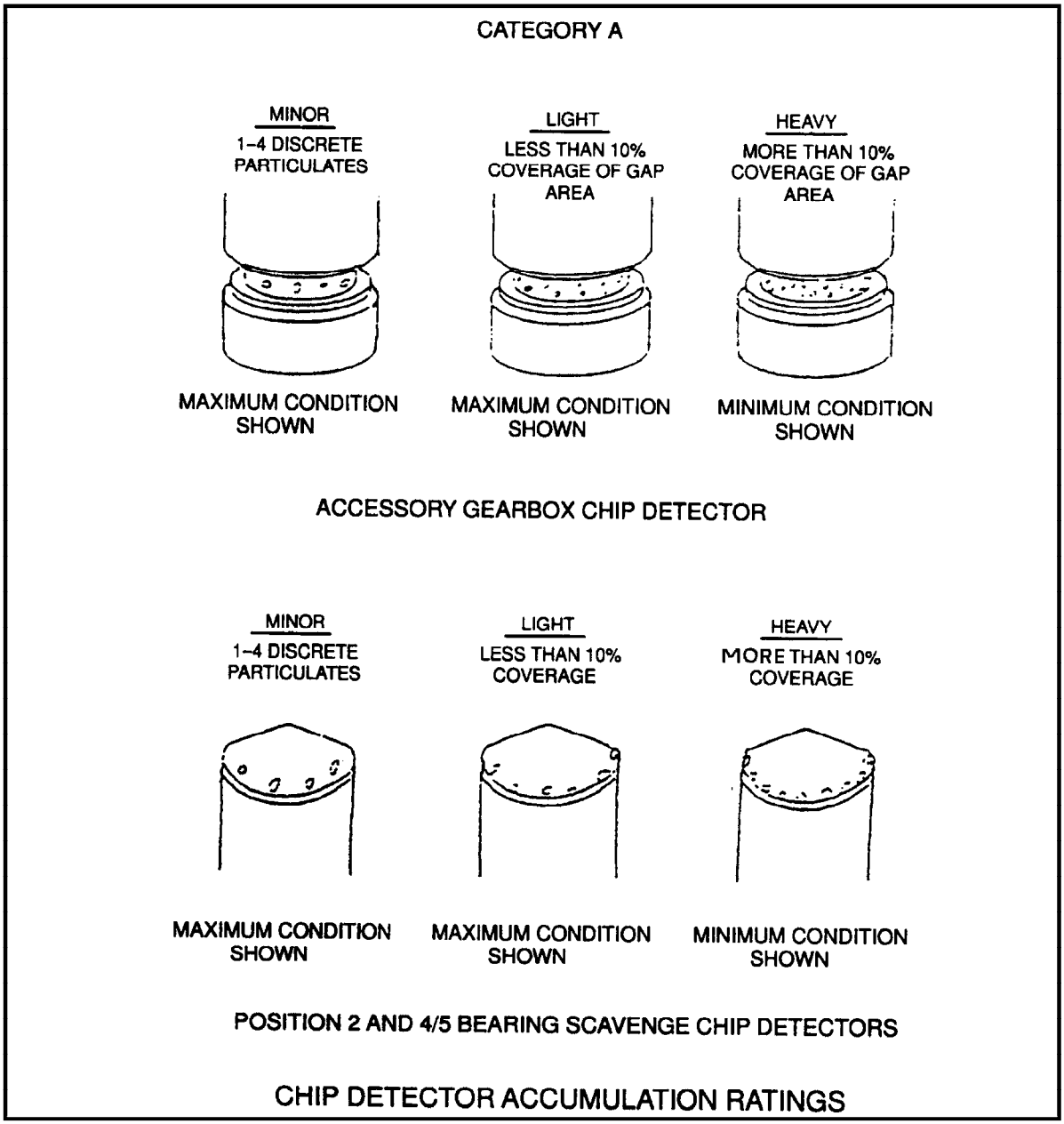

GO TO NEXT PAGE

1–80.1 CHIP DETECTOR CONTAMINATION (Continued) 1–80.1

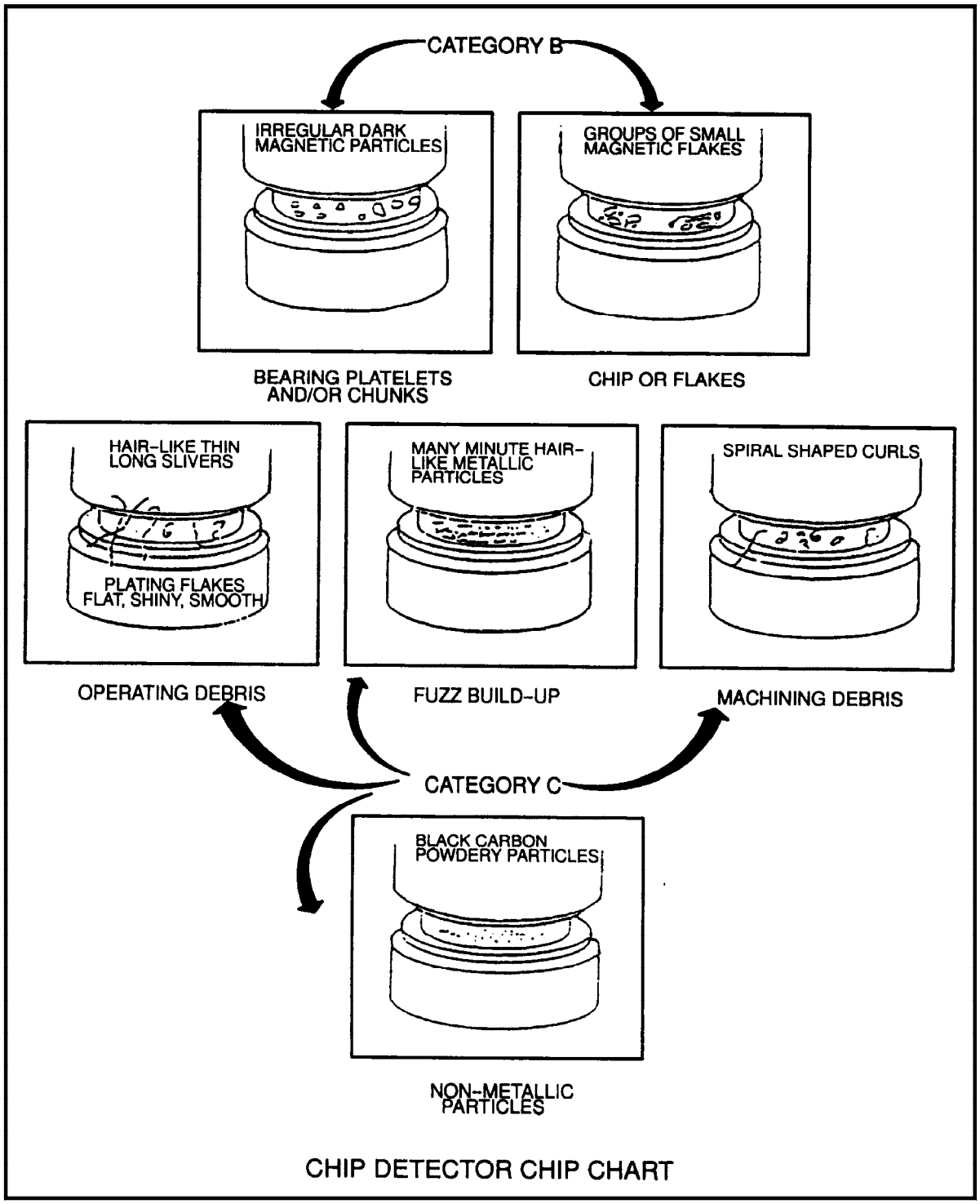

CHIP DETECTOR CHIP CHART

END OF TASK

1–81 CHECK FOR SEAL LEAKAGE (NO.2 BEARING PACKAGE (AVIM) 1–81

INITIAL SETUP

Applicable Configurations:
All

Tools:
Powerplant Mechnic's Tool Kit, NSN 5180–00–323–4944
Technical Inspection Tool Kit. NSN 5180–00–323–5114
Seal Leakage Tester (T16)
Stopwatch

Materials/Parts:
Wiping Rag (E64),
Pressure Cap

Personnel Required:
Aircraft Powerplant Repairer
Aircraft Powerplant Inspector

References:
Task 3–19

WARNING

Lubricating oils cause paralysis if swallowed. Prolonoged contact with them may irritate the skin. Handle only in well–ventilated areas away from heat and flame. Drain and store in approved metal safety containers. Avoid prolonged or repeated contact with skin and do not take internally. Wash contactd area of skin thoroughly after handling. If irritation of skin results, get medical attention. Get medical attention for eyes.

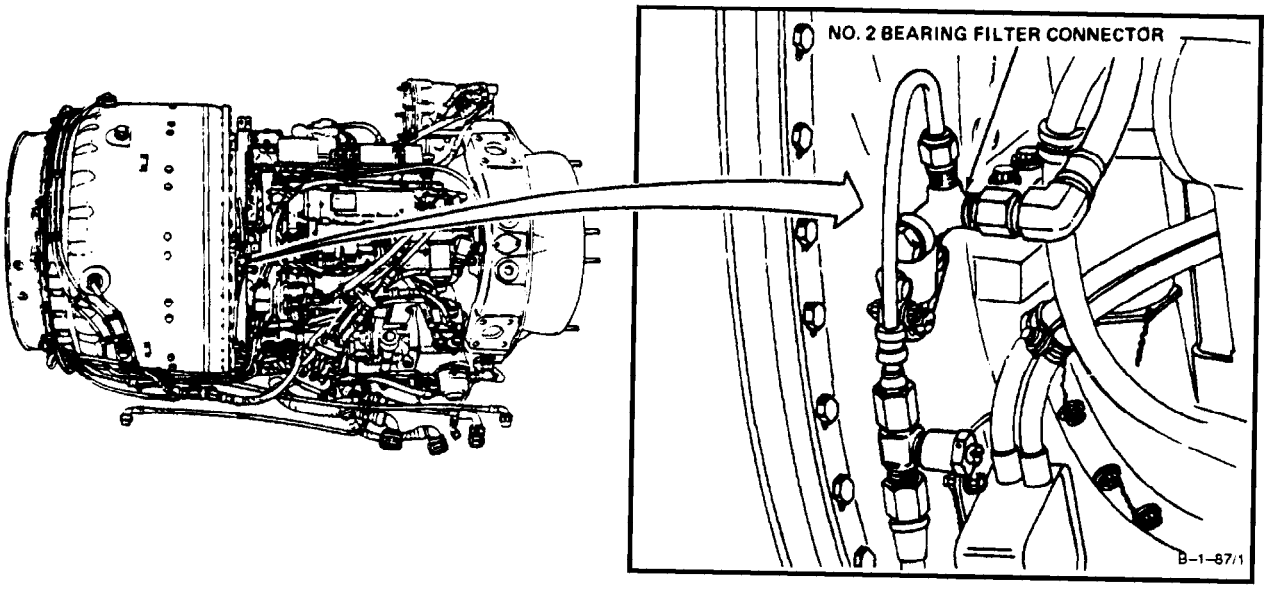

GO TO NEXT PAGE

NOTE

The following procedure may be performed on the aircraft, on modular engine test stand or on the engine "L" stand. Procedure with engine installed on engine "L" stand is shown.

1. **Disconnect hose** (1) from tee and snubber (2).
2. **Disconnect hose** (3) from fitting (4).

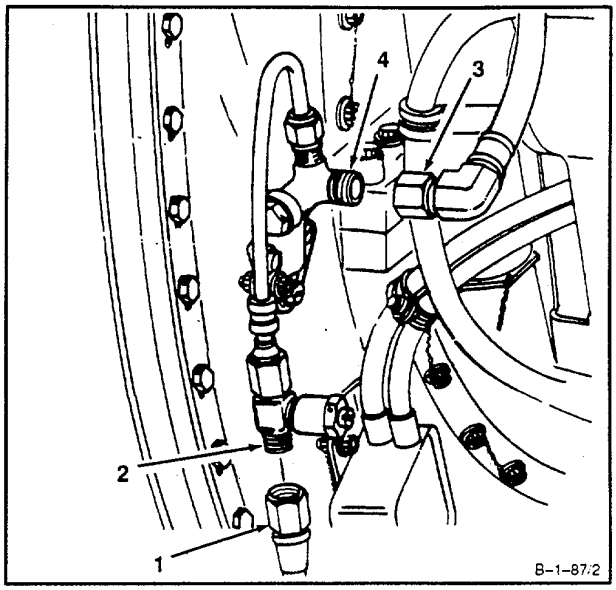

3. **Install cap (5)** on tee and snubber (2).

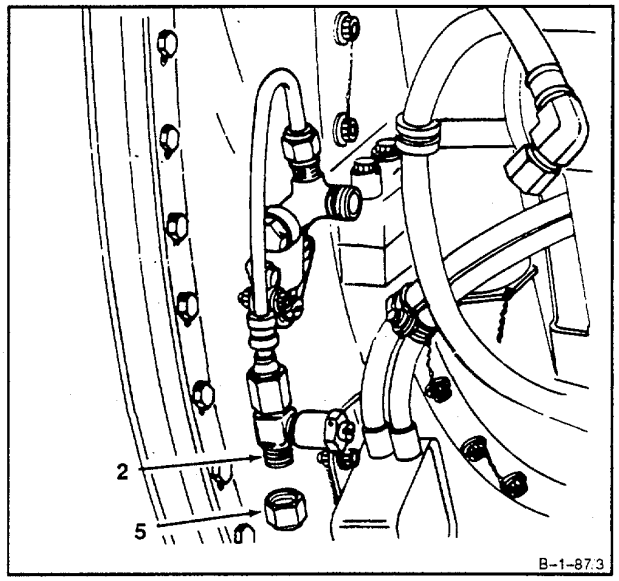

4. **Check seal leakage tester (T16) (6)** as follows:

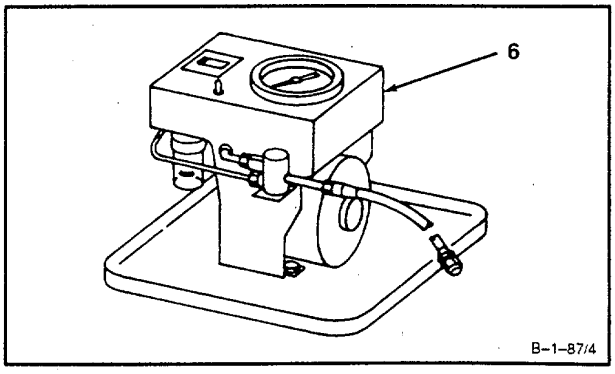

GO TO NEXT PAGE

a. Connect hose (7) of seal leakage tester (T16) (6) to calibration block fitting (8).

b. Turn vacuum pump switch (9) to ON position and run for one minute.

c. Record reading on vacuum gage (10).

d. Turn vacuum pump switch (9) to OFF position. Wait one minute.

e. Turn vacuum pump switch (9) to ON position and run for one minute.

f. Record readings on vacuum gage (10).

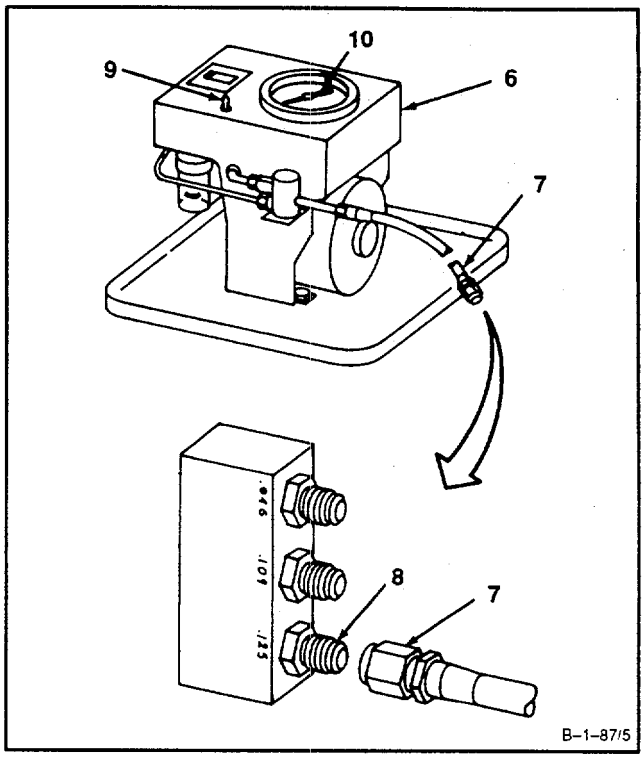

g. Turn vacuum pump switch (9) to OFF position.

h. Compare readings recorded in steps c and f If either reading is below 7 inches Hg, replace seal leakage tester (T16) (6).

i. Disconnect hose (7) from calibration block fitting (8).

j. Connect hose (7) to calibration block fitting (11).

k. Repeat steps b thru g Compare readings recorded in steps c and f If either reading is below 11 inches Hg, replace seal leakage tester (T16) (6).

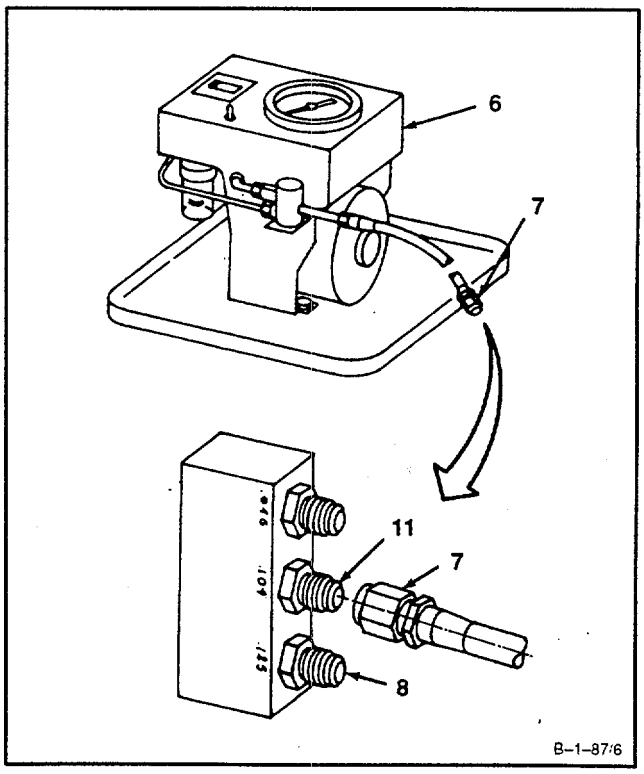

GO TO NEXT PAGE

l. Disconnect hose (7) from calibration block fitting (11).

m. Connect hose (7) to calibration block fitting (12).

n. Repeat steps b thru g. Compare readings recorded in steps c and f. If either reading is below 23 inches Hg, replace seal leakage tester (T16) (6).

o. Disconnect hose (7) from calibration block fitting (12).

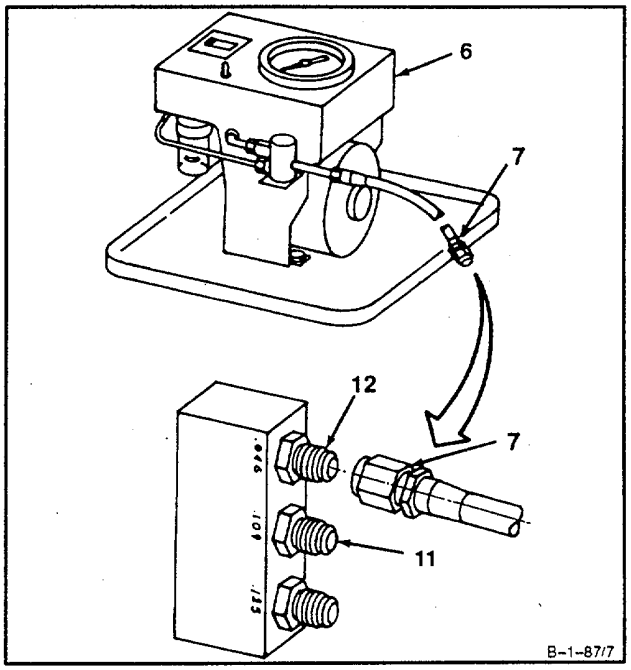

5. **Install seal leakage tester (T16) (6)** hose (7) on fitting (4).

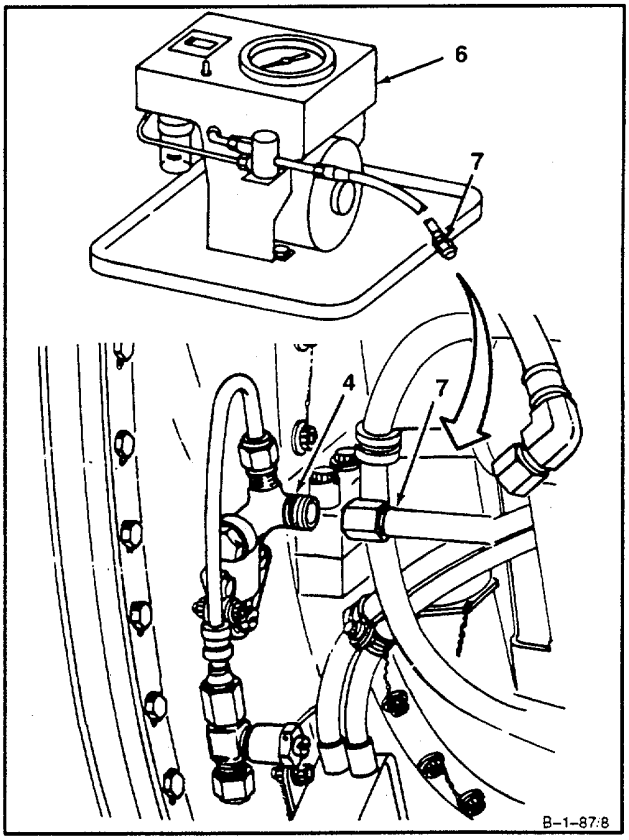

GO TO NEXT PAGE

6. **Disconnect hose (13)** from union (14).

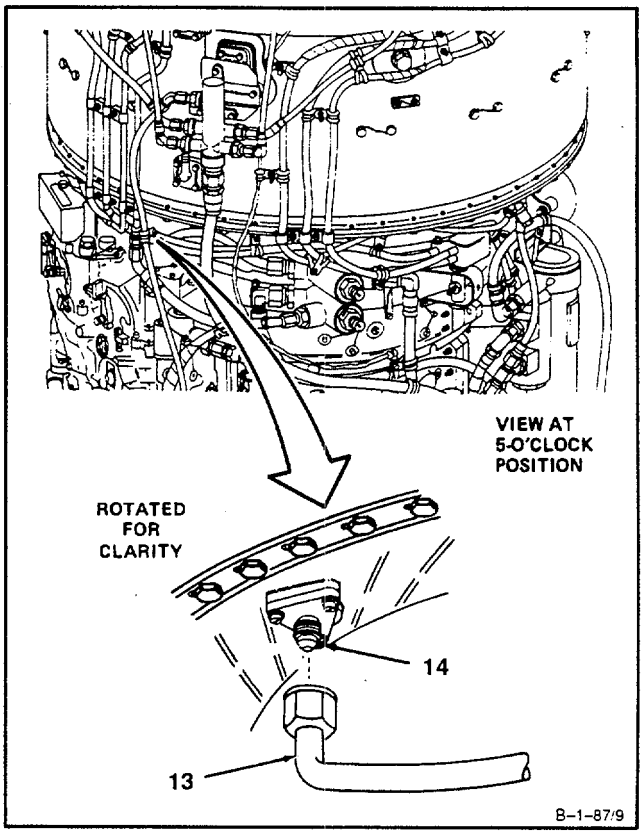

7. **Install cap (15)** on union (14).

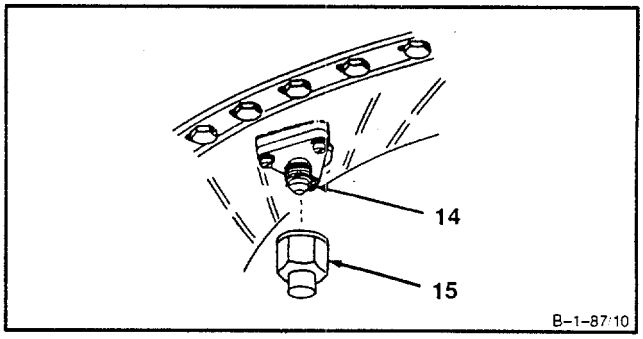

GO TO NEXT PAGE

CAUTION

Oil level In filter bowl when tester is running should not be over one-half full. An overfilled filter bowl will allow oil to get into tester and cause damage.

8. Start seal leakage tester (T16) (6) and let it run for one minute. Do not record reading at this time.

NOTE

If tester is ever shut down to drain oil from bowl, test procedure must be repeated starting from step 8.

9. If filterbowl (16) is ever over half-full when testing, shut down tester and drain oil.

10. **Shut down tester (T16) (6)** and wait one minute.

11. **Start seal leakage tester (T16) (6)** and let it run for one minute. At end of one minute, take readings on vacuum gage (10) while tester is still running. Record readings.

12. **Repeat steps 10 and 11**.

13. **If either recorded gage reading is 18 inches Hg, or higher, the seals are acceptable**. Omit the following steps 14, 15, 16, and 17; proceed with step 18.

14. **If both recorded gage readings are below 18 inches Hg., rotate the compressor one full revolution counterclockwise.**

15. **Perform steps 8 thru 12**. If readings are still be- low 18 inches Hg., proceed as follows:

    a. **Repair air diffuser assembly** (Ref. Task 2-38, steps 1 thru 4).

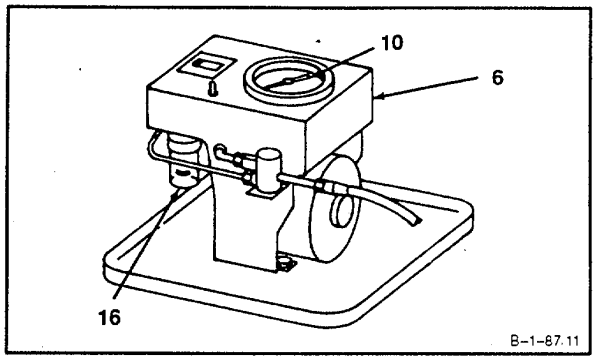

GO TO NEXT PAGE

16. **Repeat steps 8 thru 13**. If gage readings are still below 18 inches Hg., proceed as follows:

    a. **Remove No. 2 Bearing Package** (Ref. Contractor Logistic Support).

    b. **Disassemble No. 2 Bearing Package** (Ref. Contractor Logistic Support).

    c. **Clean No. 2 Bearing Package** (Ref. Contractor Logistic Support).

    d. **Inspect No. 2 Bearing Package** (Ref. Contractor Logistic Support).

    e. **Assemble No. 2 Bearing Package** (Ref. Contractor Logistic Support).

    f. **Install No. 2 Bearing Package** (Ref. Contractor Logistic Support).

17. **Repeat steps 1 thru 13**. If readings are still below 18 inches Hg., replace the engine.

18. **Remove cap (15)** from union (14).

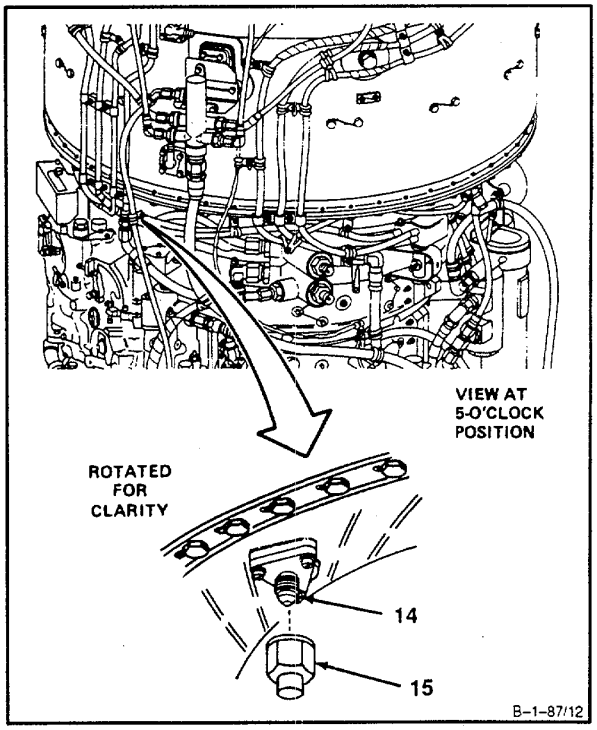

GO TO NEXT PAGE

19. **Connect hose (13)** to union (14).

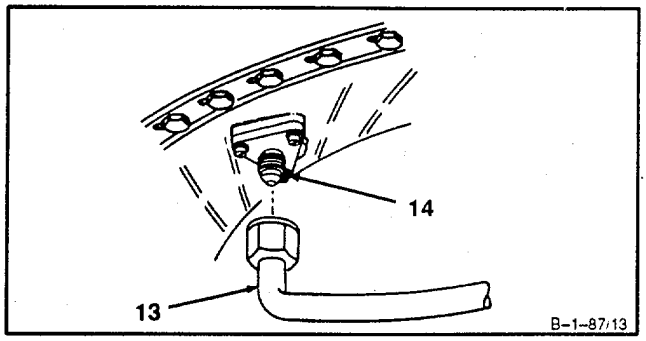

20. **Remove hose (7)** from fitting (4).

21. **Remove cap (5)** from tee and snubber (2).

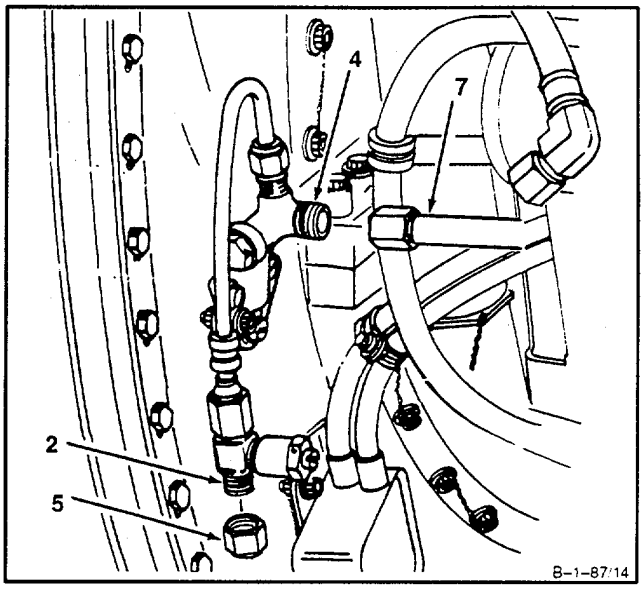

22. **Install hose (3)** to fitting (4)

23. **Install hose (1)** to tee and snubber (2).

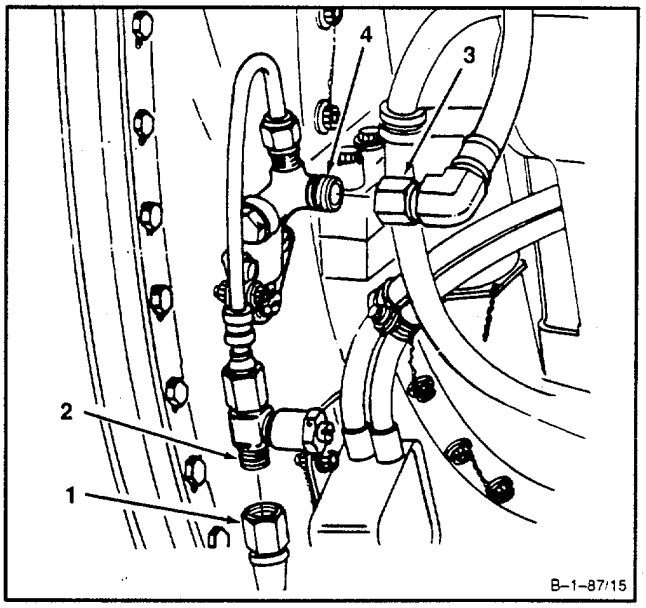

INSPECT

FOLLOW-ON MAINTENANCE:
None

END OF TASK

INITIAL SETUP

Applicable Configurations:
All

Tools:
Powerplant Mechanic's Tool Kit,
NSN 5180-00-323-4944
Technical Inspection Tool Kit,
NSN 5180-00-323-5114
Torque Wrench, 30-150 Inch-Pounds
Stopwatch
Seal Leakage Tester (T16)
Open-End Wrench (T24)

Materials:
Lockwire (E33)
Wiping Rag (E64)
Pressure Cap

Personnel Required:
Aircraft Powerplant Repairer
Aircraft Powerplant Inspector

References:

Task 3-6	Task 4-39	Task 4-43
Task 3-7	Task 4-40	Task 4-44
Task 4-37	Task 4-42	Task 4-45
Task 4-38		

General Safety Instructions:

WARNING

Lubricating oils cause paralysis if swallowed. Prolonged contact with them may irritate the skin. Handle only in well-ventilated areas away from heat and flame. Drain and store In approved metal safety containers. Avoid prolonged or repeated contact with skin and do not take internally. Wash contacted area of skin thoroughly after handling. If Irritation of skin results, get medical attention. Get medical attention for eyes.

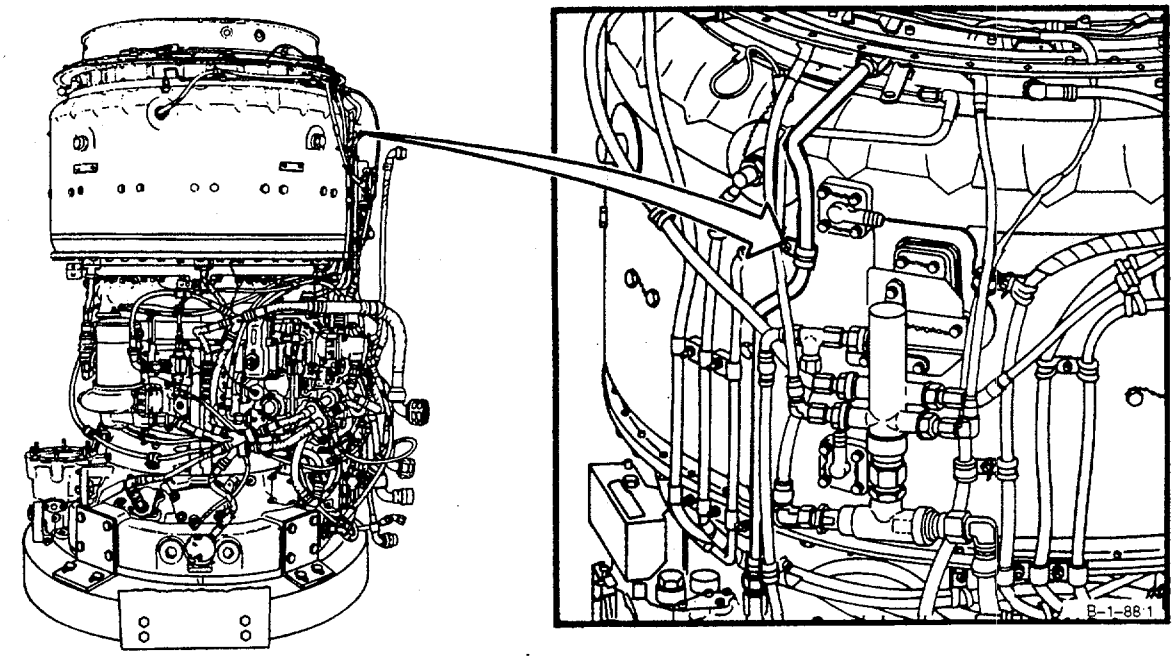

GO TO NEXT PAGE

1. **Remove** lockwire, screw (1), and **clamp (2).**

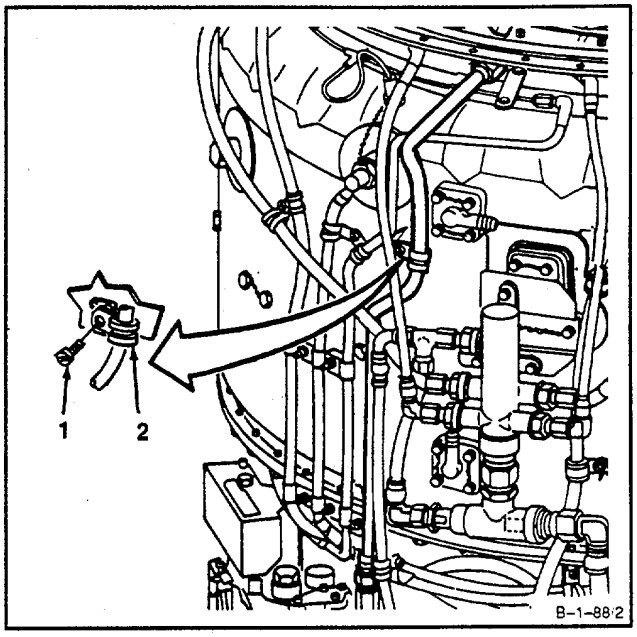

CAUTION

In following step, hold No. 4 and 5 bearing scavenge adapter using open-end wrench (T24). Failure to use wrench may result In damage and mislocation of oil transfer tube resulting In oil leaks.

2. Place open-end wrench (T24) (3) on No. 4 and 5 bearing scavenge adapter (4).

3. **Disconnect tube assembly (5**) from reducer (6).

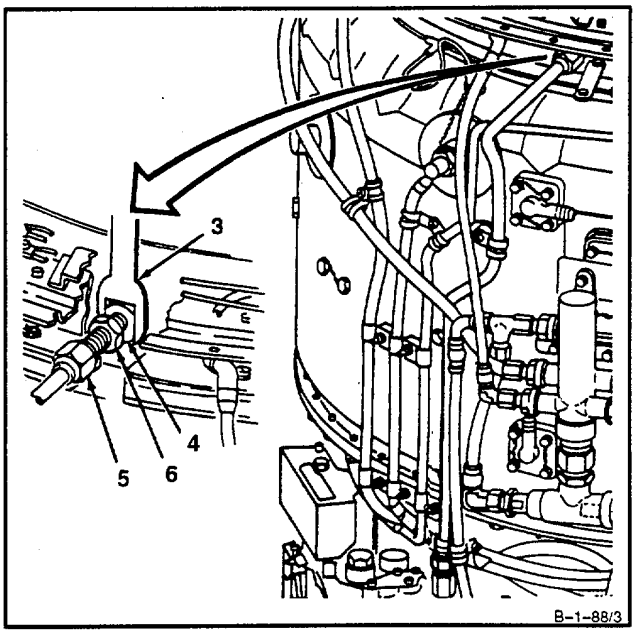

GO TO NEXT PAGE

CAUTION

In following step, hold No. 4 and 5 bearing scavenge adapter using open-end wrench (T24). Failure to use wrench may result In damage and mislocation of oil transfer tube resulting In oil leaks.

4. Place open-end wrench (T24) (3) on No. 4 and 5 bearing scavenge adapter (4).

5. Install pressure cap (7) on reducer (6).

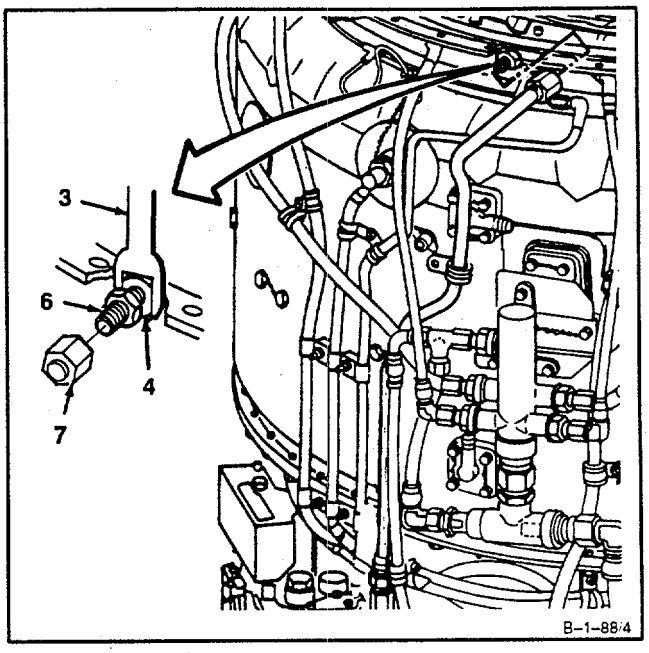

6. Rotate engine 90 degrees to horizontal position.

CAUTION

In following step, hold No. 4 and 5 bearing lube adapter using open-end wrench (T24). Failure to use wrench may result in damage and mislocation of oil transfer tube resulting In oil leaks.

7. Place open-end wrench (T24) (3) on No. 4 and 5 bearing lube adapter (8).

8. Disconnect hose assembly (9) from reducer (10).

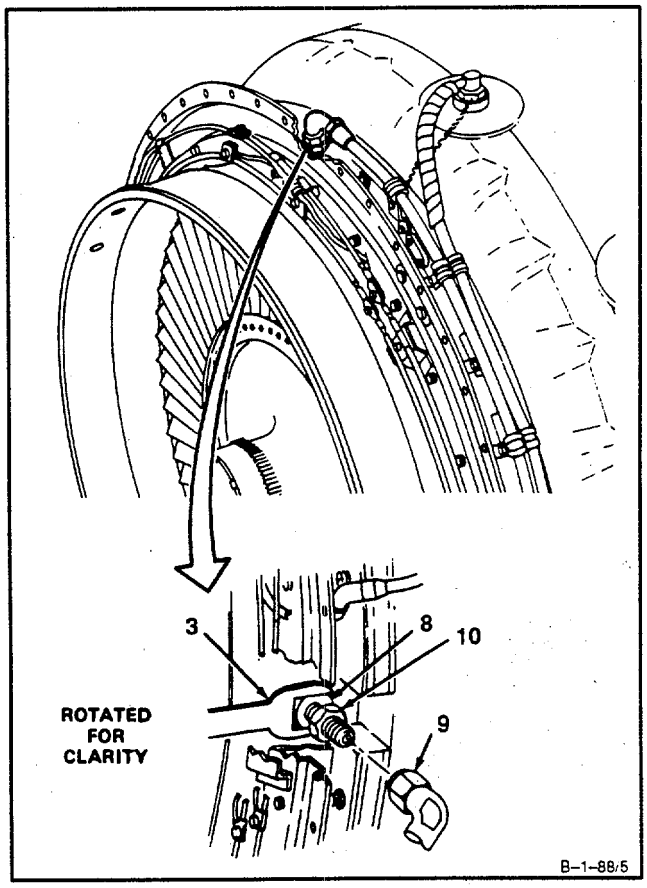

GO TO NEXT PAGE

9. **Check seal leakage tester (T16) (11)** as follows:

   a. Connect hose (12) of seal leakage tester (T16) (11) to calibration block fitting (13).

   b. Turn vacuum pump switch (14) to ON position and run for one minute.

   c. Record reading on vacuum gage (15).

   d. Turn vacuum pump switch (14) to OFF position. Wait one minute.

   e. Turn vacuum pump switch (14) to ON position and run for one minute.

   f. Record reading on vacuum gage (15).

   g. Turn vacuum pump switch (14) to OFF position.

   h. Compare readings recorded in steps c and f. If either reading is below 7 inches Hg., replace seal leakage tester (T16) (11).

   i. Disconnect hose (12) from calibration block fitting (13).

   j. Connect hose (12) to calibration block fitting (16).

   k. Repeat steps b thru g. Compare readings recorded in steps c and f. If either reading is below 11 inches Hg., replace seal leakage tester (T16) (11).

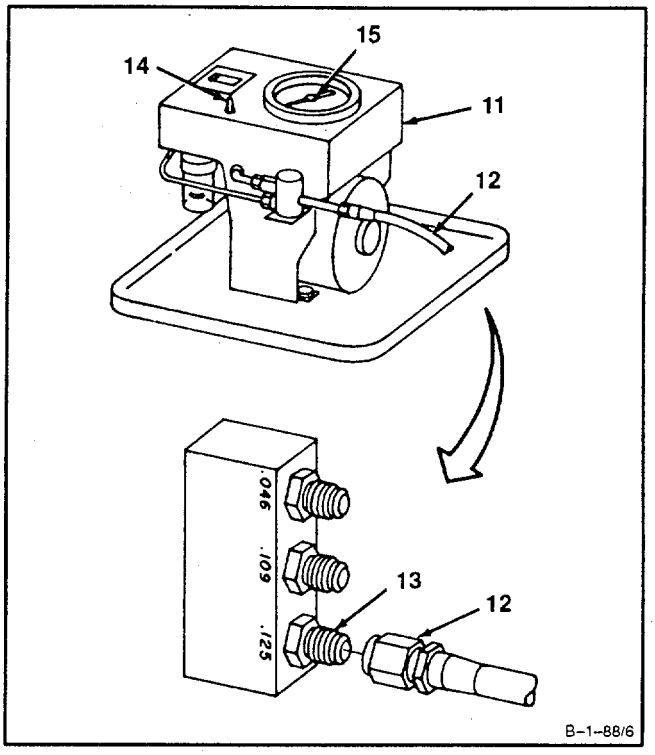

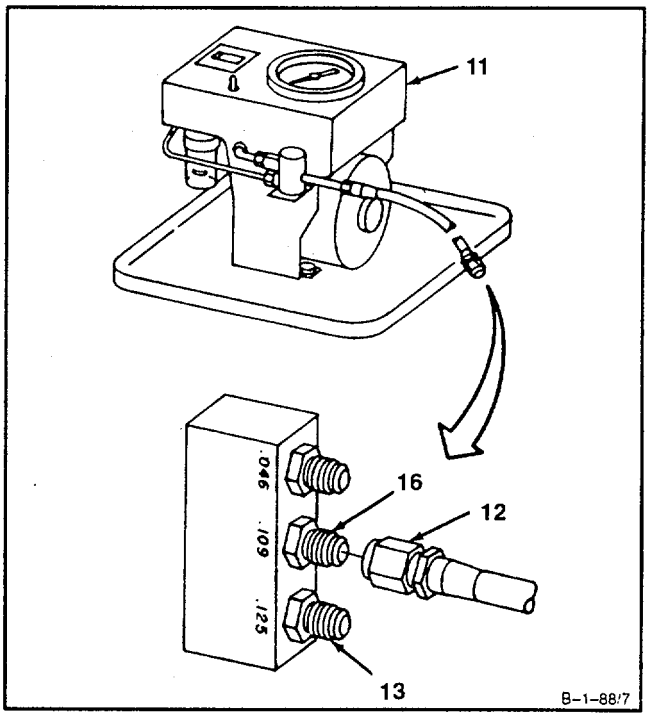

GO TO NEXT PAGE

1-82 CHECK FOR SEAL LEAKAGE (NO. 4 AND 5 BEARING) (AVIM) (Continued) 1-82

l. Disconnect hose (12) from calibration block fitting (16).

m. Connect hose (12) to calibration block fitting (17) .

n. Repeat steps b thru g. Compare readings recorded in steps c and f. If either reading is below 23 inches Hg., replace seal leakage tester (T16) (11).

o. Disconnect hose (12).

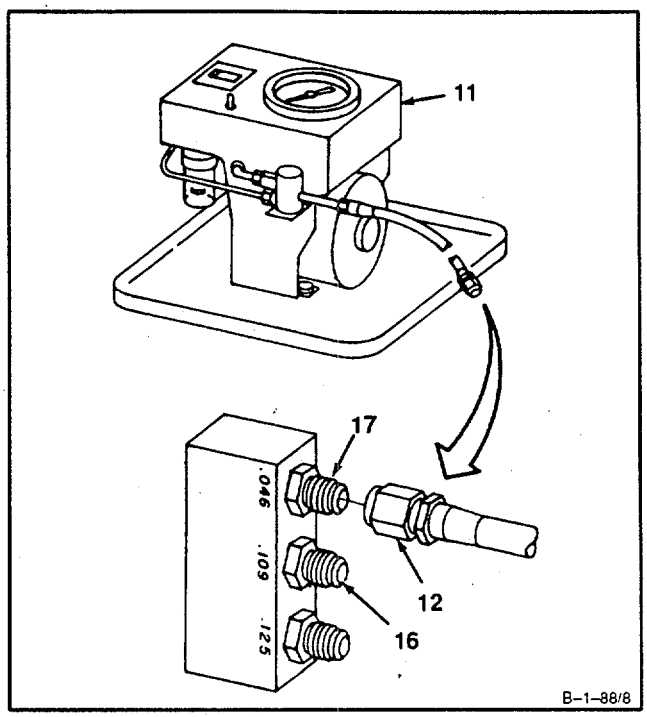

GO TO NEXT PAGE

1-82 CHECK FOR SEAL LEAKAGE (NO. 4 AND 5 BEARING) (AVIM) (Continued) 1-82

CAUTION

In following step, hold No. 4 and 5 bearing lube adapter using open-end wrench (T24). Failure to use wrench may result in damage and mislocation of oil transfer tube resulting in oil leaks.

10. Place open-end wrench (T24) (3) on No. 4 and 5 bearing lube adapter (8).
11. **Install hose** (12) from seal leakage tester (T16) (11) on reducer (10).

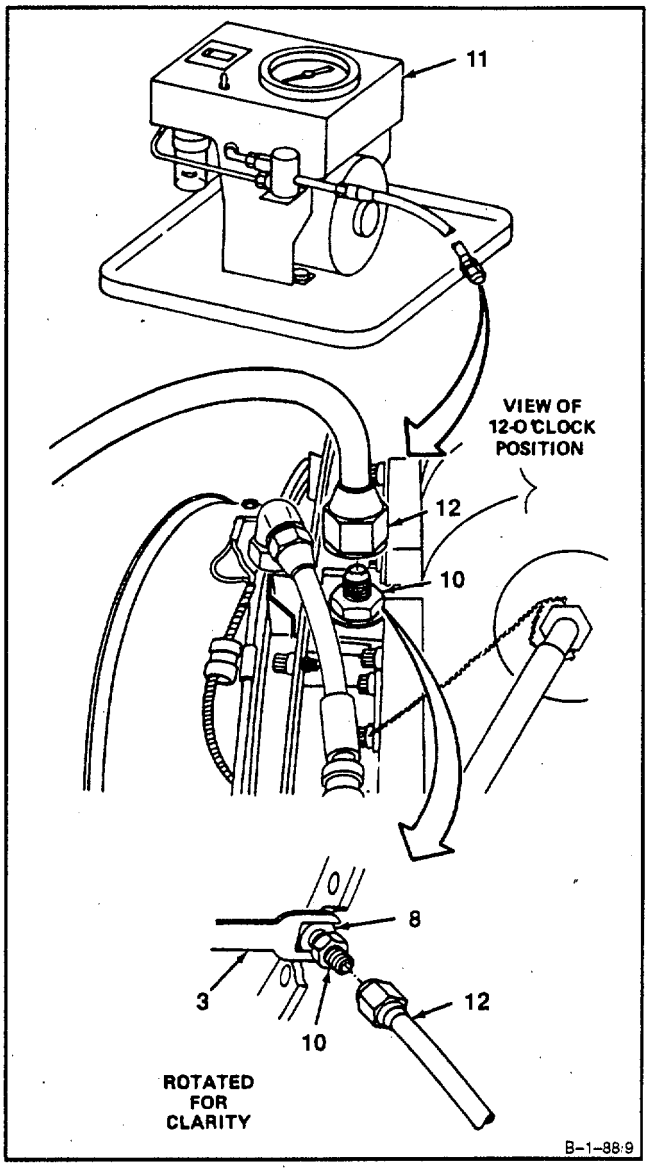

GO TO NEXT PAGE

CAUTION

Oil level In filter bowl when tester is running should not be over one-half full. An overfilled filter bowl will allow oil to get into tester and cause damage.

12. **Start seal leakage tester (T16) (11)** and let it run for one minute. Do not record reading at this time.

NOTE

If tester is ever shut down to drain oil from bowl, test procedure must be repeated starting from step 11.

13. If filter bowl (18) is ever over half-full when testing, shutdown tester and drain oil.

14. **Shut down seal leakage tester** (T16) (11) and wait one minute.

15. **Start seal leakage tester (T16)** (11) and let it run for one minute. At end of one minute, **take reading on vacuum gage** (15) while tester is still running. Record reading.

16. **Repeat steps 14 and 15.**

17. **If either recorded reading is 18 Inches Hg. Or higher, the seals are acceptable.** If seals are acceptable, do steps 19, a thru k and omit steps 19, 1 thru t.

18. **If both recorded readings are below 18 inches Hg. rotate fourth stage power turbine rotor clockwise one full revolution and** repeat steps **14. thru 17.**

19. **If both readings are still below 18 inches Hg., proceed as follows:**

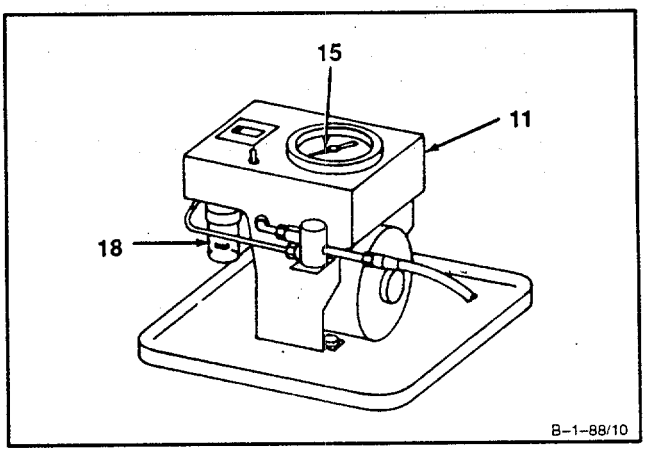

GO TO NEXT PAGE

1-82 CHECK FOR SEAL LEAKAGE (NO. 4 AND 5 BEARING) (AVIM) (Continued) 1-82

CAUTION

In following step, hold No. 4 and 5 bearing following step, hold No. 4 and 5 bearing lube adapter using open-end wrench (T24). Failure to use wrench may result In damage and mislocation of oil transfer tube resulting in oil leaks.

a. Place open-end wrench (T24) (3) on No. 4 and 5 bearing lube adapter (8).

b. **Remove seal leakage tester hose (12)** from reducer (10).

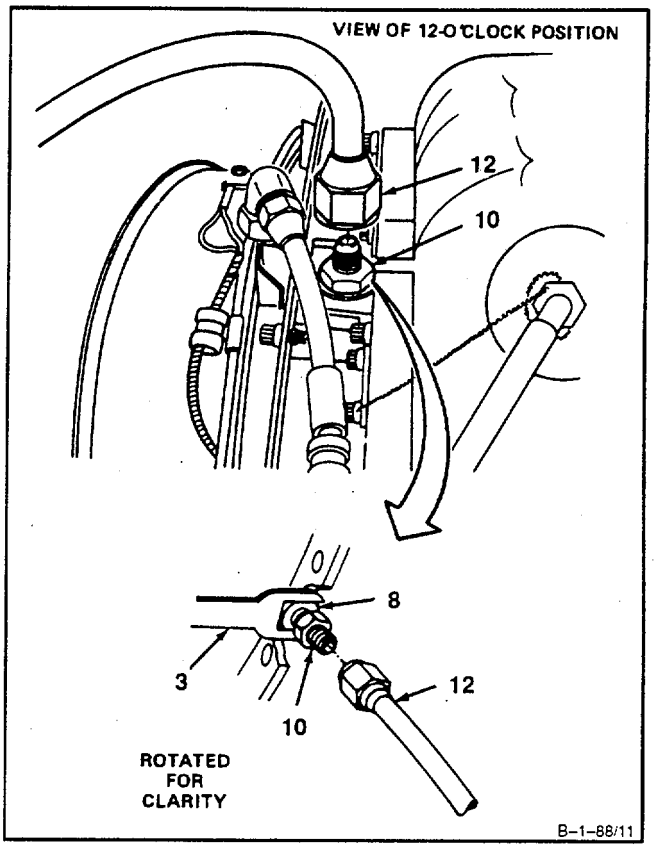

GO TO NEXT PAGE

1-82 CHECK FOR SEAL LEAKAGE (NO. 4 AND 5 BEARING) (AVIM) (Continued) 1-82

CAUTION

In following step, hold No. 4 and 5 bearing lube adapter using open-end wrench (T24). Failure to use wrench may result in damage and mislocation of oil transfer tube resulting in oil leaks.

c. Place open-end wrench (T24) (3) on No. 4 and 5 bearing lube adapter (8).

d. **Connect hose assembly (9)** to reducer (10).

e. **Rotate engine <u>90 degrees</u> to vertical position.**

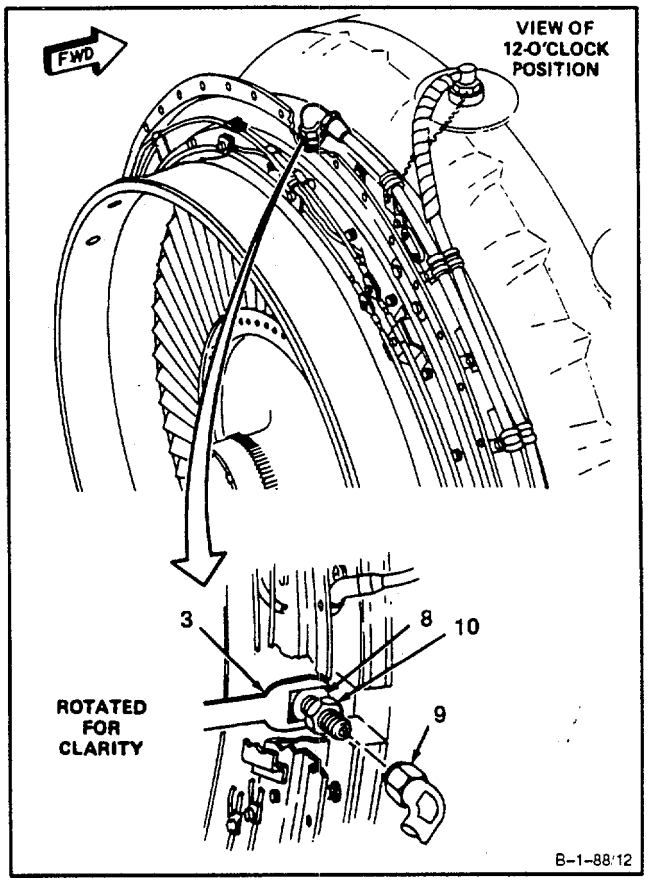

GO TO NEXT PAGE

1-82 CHECK FOR SEAL LEAKAGE (NO. 4 AND 5 BEARING) (AVIM) (Continued) 1-82

CAUTION

In following step, hold No. 4 and 5 bearing scavenge adapter using open-end wrench (T24). Failure to use wrench may result in damage and mislocation of oil transfer tube resulting in oil leaks.

f. Place open-end wrench (T24) (3) on No. 4 and 5 bearing scavenge adapter (4).

g. **Remove pressure cap (7)** from reducer (6).

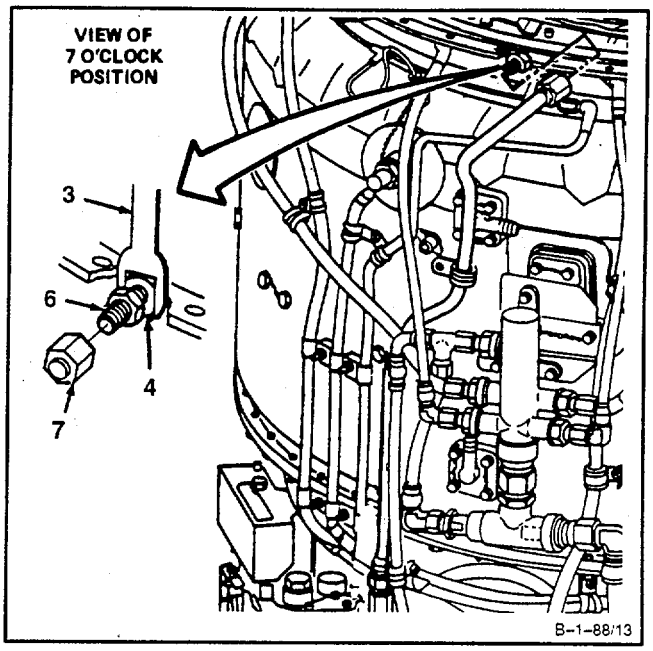

CAUTION

In following step, hold No. 4 and 5 bearing scavenge adapter using open-end wrench (T24). Failure to use wrench may result In damage and mislocation of oil transfer tube resulting in oil leaks.

h. Place open-end wrench (T24) (3) on No. 4 and 5 bearing scavenge adapter (4).

i. **Connect tube assembly (5)** to reducer (6).

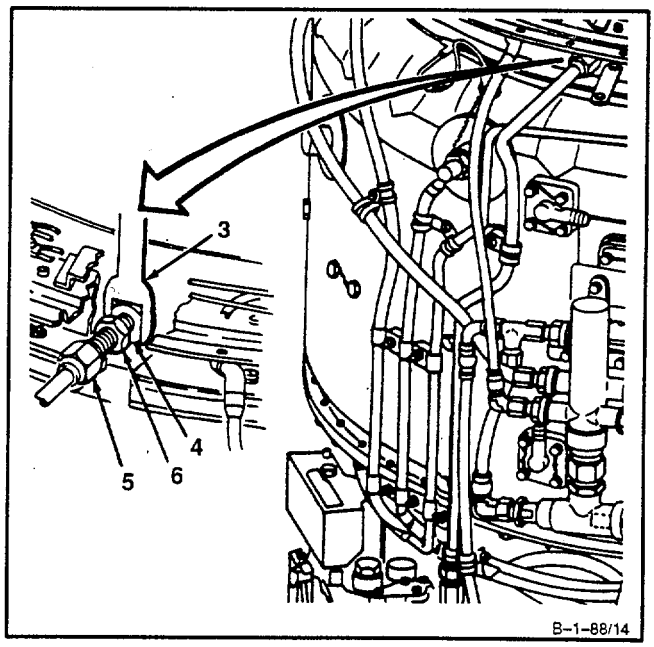

GO TO NEXT PAGE

j. **Install clamp (2)** with screw (1).

k. Lockwire screw (1). Use lockwire (E33).

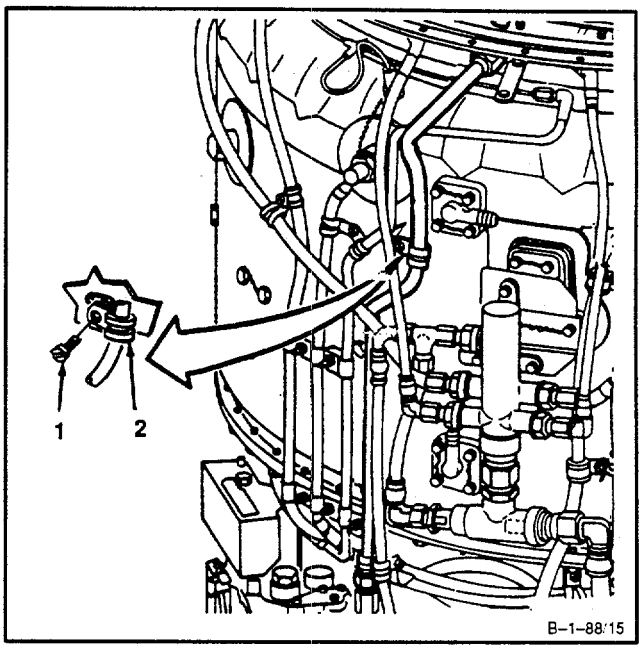

INSPECT

l. **Remove No. 4 and 5 bearing package seals** (Ref. Task 4-37).

m. **Remove No. 4 and 5 bearing oil tubes** (Ref. Task 42).

n. **Clean No. 4 and 5 bearing oil tubes** (Ref. Task 4-43).

o. **Inspect No. 4 and 5 bearing oil tubes** (Ref. Task 4-44).

p. **Install No. 4 and 5 bearing oil tubes** (Ref. Task 4-45).

q. **Clean No. 4 and 5 bearing package** (Ref. Task 4-38).

r. **Inspect No. 4 and 5 bearing package** (Ref. Task 4-39).

s. **Install No. 4 and 5 bearing package seals** (Ref. Task 4-40).

t. **Repeat steps 1 thru 19. If both readings are still below 18 Inches Hg., replace power turbine** (Ref. Tasks 3-6 and 3-7).

FOLLOW-ON MAINTENANCE:

None

END OF TASK

1-83 CHECK FOR STATIC OIL LEAKAGE 1-83

INITIAL SETUP

Applicable Configurations:
All

Tools:
Powerplant Mechanic's Tool Kit,
NSN 5180-00-323-4944
Technical Inspection Tool Kit,
NSN 5180-00-323-5114
Crowfoot Attachment, 7/8-Inch
Torque Wrench, 30-150 Inch-Pounds
Container, 1 Quart
Stopwatch

Materials:
Lockwire (E33)
Wiping Rag (E64)

Parts:
Packing

Personnel Required:
Aircraft Powerplant Repairer
Aircraft Powerplant Inspector

References:
TM 1,-2840-252-23P
Task 8-1
Task 8-6

General Safety Instructions:

WARNING

Lubricating oils cause paralysis if swallowed. Prolonged contact with them may irritate the skin. Handle only in well-ventilated areas away from heat and flame. Drain and store in approved metal safety containers. Avoid prolonged or repeated contact with skin and do not take internally. Wash contacted area of skin thoroughly after handling. If irritation of skin results, get medical attention. Get medical attention for eyes.

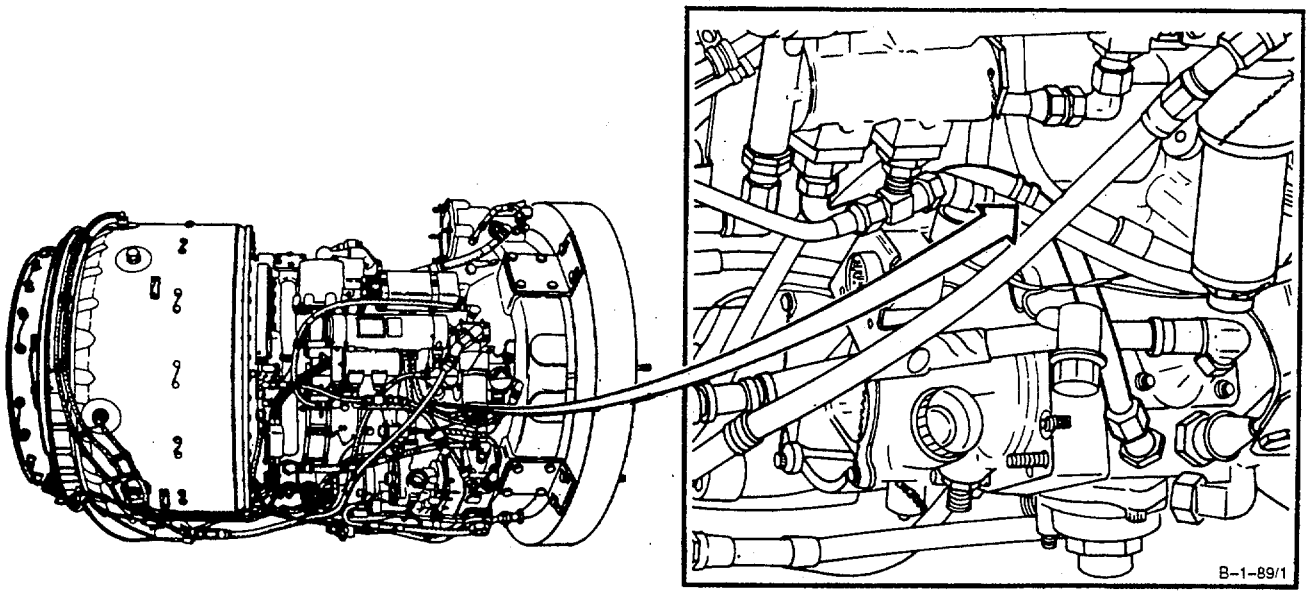

GO TO NEXT PAGE

1-83 CHECK FOR STATIC OIL LEAKAGE (Continued) 1-83

1. Remove nut (1) and screw (2).

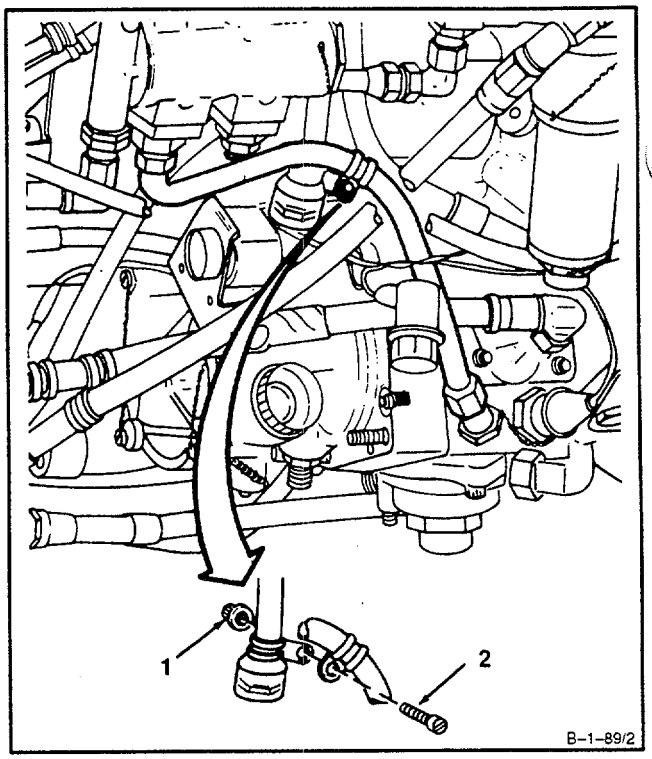

2. **Disconnect hose assembly (3)** from oil cooler union (4).

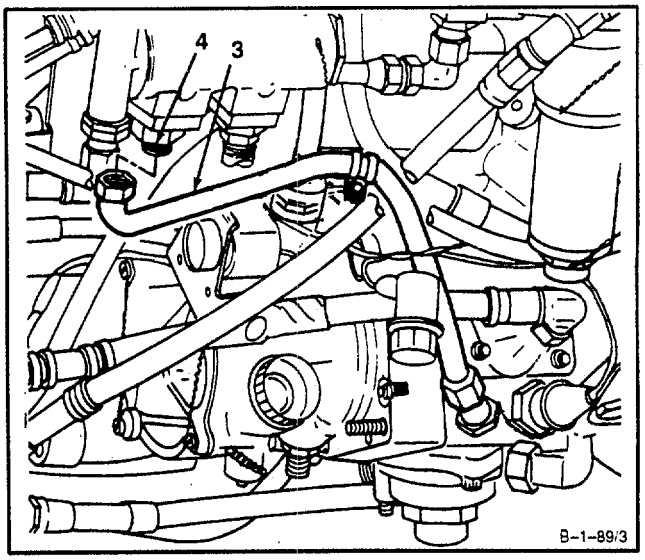

GO TO NEXT PAGE

3. **Let end of hose assembly (3) hang below engine as shown and into container. Allow to drain for <u>one hour.</u> If, after one hour, one drop of oil falls every <u>fifteen seconds</u> or less, replace oil pump check valve** (Refer to Contractor Logistic Support).

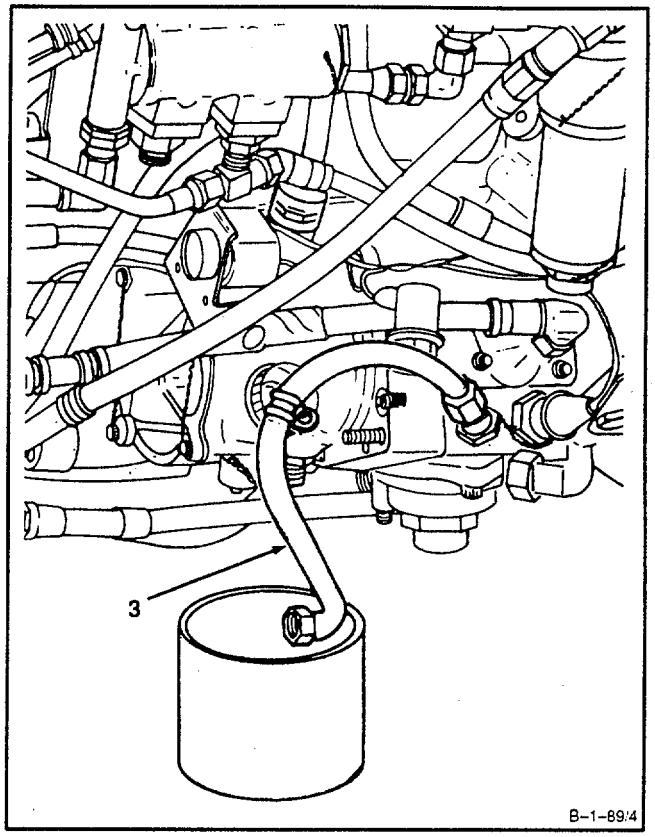

4. **Connect hose assembly (3)** to oil cooler union (4).

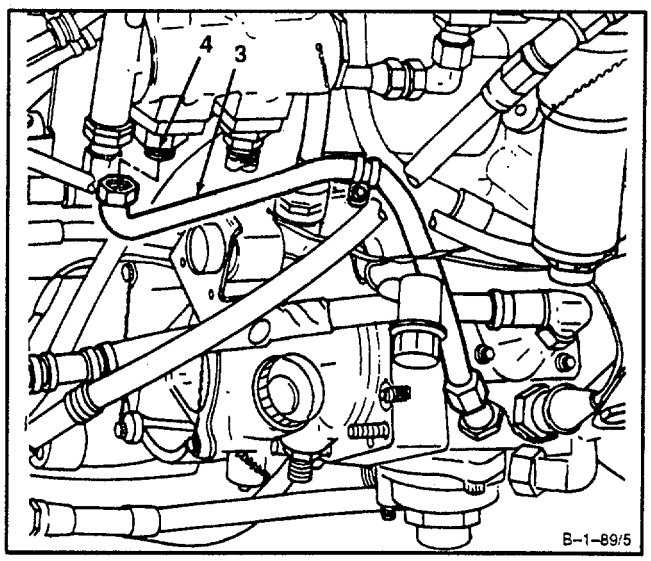

GO TO NEXT PAGE

5. **Install screw (2) and nut (1).**

6. **Unlock plug (5).** Push in on plug and turn counterclockwise.

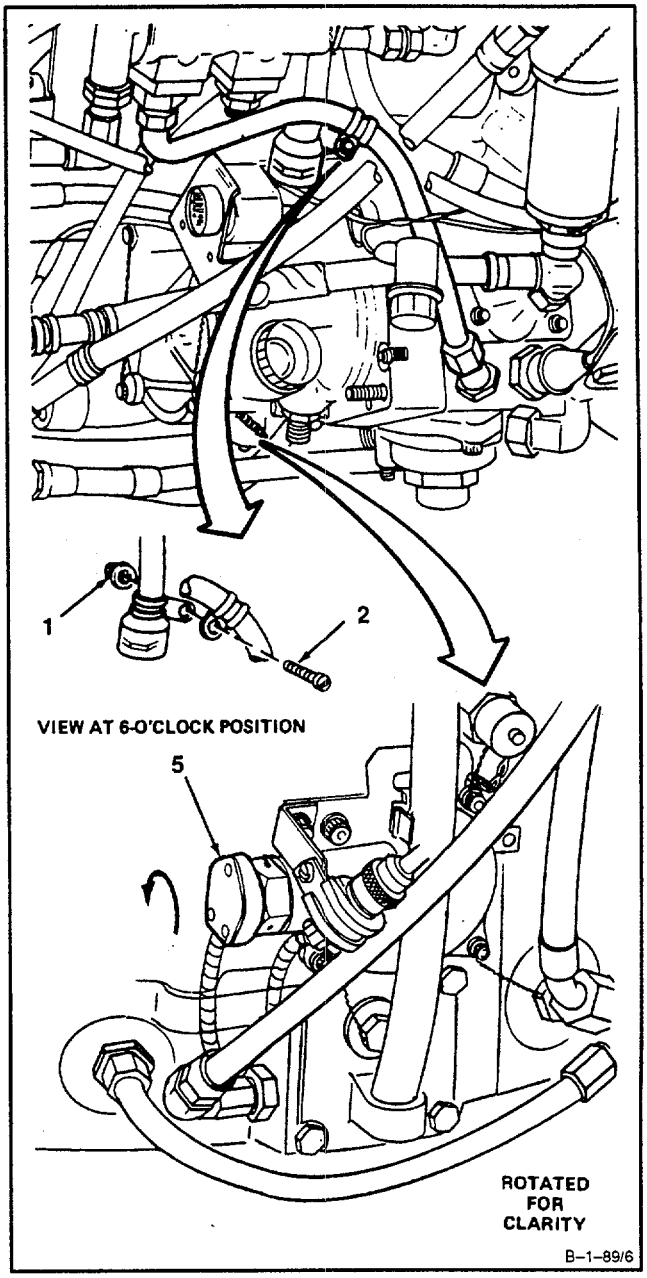

GO TO NEXT PAGE

7. **Remove plug (5)** and packing (6) from housing (7).

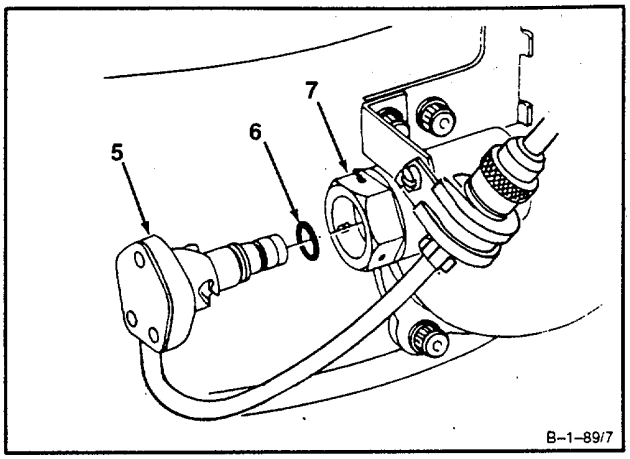

8. **Remove** lockwire, **chip detector housing (7)** and packing (8). **Allow oil to drain into container for <u>one hour.</u>**

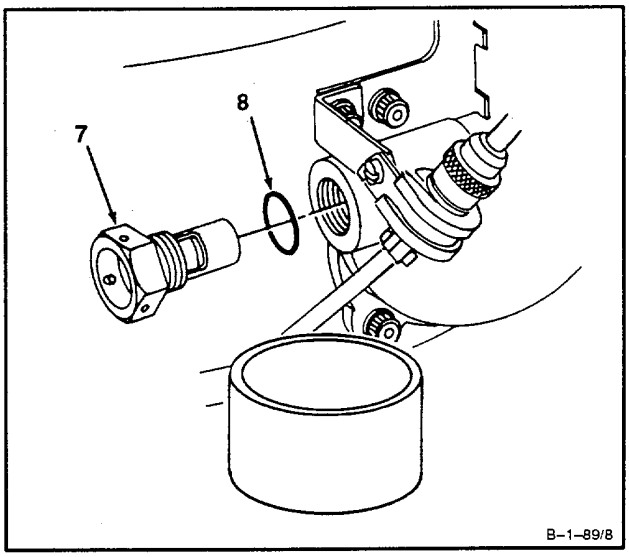

9. After <u>one hour</u>, if there is more than <u>15 seconds</u> between drops complete steps 9 a through 9 e only. If there is less than <u>15 seconds</u> between drops, proceed to step 9f.

   a. Install packing (8) in groove (9) on chip detector housing (7).

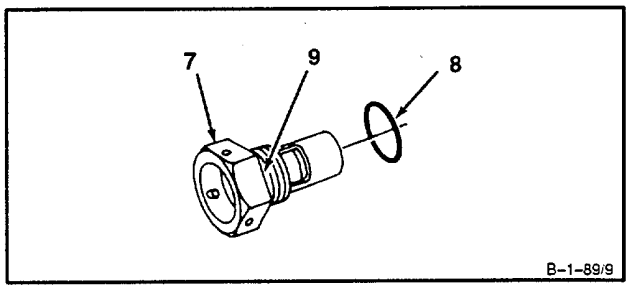

GO TO NEXT PAGE

1-83 CHECK FOR STATIC OIL LEAKAGE (Continued) 1-83

b. **Install chip detector housing (7)** in housing (10). **Torque to 95 Inch pounds.** Use crow-foot attachment. Lockwire chip detector (7) to bolt (11). Use lockwire (E33).

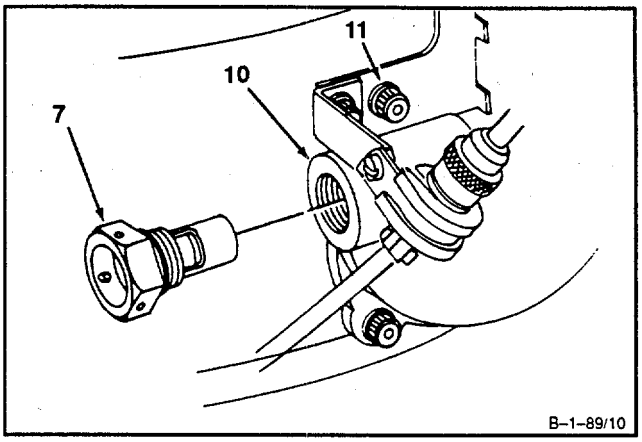

c. **Install packing (6)** in groove (12) on plug (5).

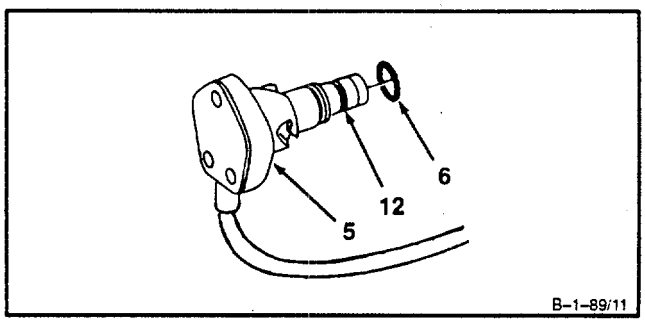

d. **Install plug (5)** in housing (7).

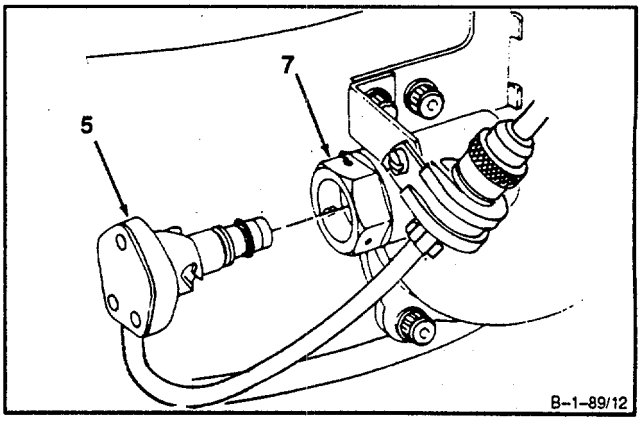

GO TO NEXT PAGE

e. Lock plug (5) by pushing in and turning plug 1/8 turn clockwise.

f. **Replace output shaft support housing seals** (Refer to Contractor Logistic Support).

10. If output shaft support housing is replaced, repeat steps 6, 7, 8 and 9.

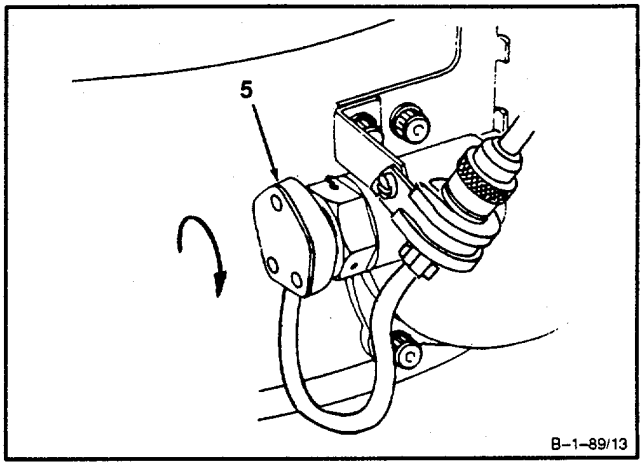

INSPECT

FOLLOW-ON MAINTENANCE:
Service Engine Oil System (Task 1-68).

END OF TASK

1-84 INSPECT ENGINE AFTER COMPRESSION STALL (SURGE) 1-84

INITIAL SETUP

Applicable Configurations:
All

Tools:
Powerplant Mechanic's Tool Kit,
NSN 5180-00-323-4944
Technical Inspection Tool Kit,
NSN 5180-00-323-5114

Materials:
None

Personnel Required:
Aircraft Powerplant Repairer
Aircraft Powerplant Inspector

References:
Task 1-46 Task 2-20
Task 1-86 Task 2-25

NOTE

Compressor stall (surge) is characterized by sharp rumbles or loud sharp reports and severe engine vibration. A rapid rise in measured gas temperature is also noted, depending on how severe the surge is.

1. If it is suspected that compressor surge has occurred, proceed as follows:

   a. **Inspect aircraft and engine records** to determine any history related to the suspected compressor surge condition.

   b. **Discuss suspected compressor surge condition** with pilot concerned or maintenance chief to evaluate surge circumstances.

   c. Check the following items.

      (1) **Inspect inlet housing and compressor** for obstruction or accumulation of dirt, salt, or other foreign matter.

      (2) **Inspect first stage compressor rotor blades** through inlet ducts for evidence of erosion or foreign object damage (Ref. Task 1-86).

      (3) **Determine that improper adjustment or operation of interstage air-bleed actuator and bleed band are not causing surge** (Ref. Task 1-46).

GO TO NEXT PAGE

(4) **Remove upper compressor housing** (Ref. Task 2-20). **Inspect leading edges and tip areas** of compressor rotor blades and vanes for cutback due to erosion.

(5) **Install upper compressor housing** (Ref. Task 2-25).

INSPECT

2. If the preceding checks reveal no defects, or if defects cannot be corrected, **replace engine.**

FOLLOW-ON MAINTENANCE:
None

END OF TASK

1-85 INSPECT ENGINE AFTER CHECK RUNS 1-85

INITIAL SETUP

Applicable Configurations:
All

Tools:
Powerplant Mechanic's Tool Kit,
NSN 5180-00-323-4944
Technical Inspection Tool Kit,
NSN 5180-00-323-5114

Materials:
None

Personnel Required:
Aircraft Powerplant Repairer
Aircraft Powerplant Inspector

References:
TM 1-1520-252-10
Task 8-34
Task 8-38

1. **Inspect engine** after normal, acceleration, and margin check runs (Ref. TM 1-1520-252-10) as follows:

   a. **Inspect** for leaks and security of mounting provisions, hoses, and accessories.

   b. **Remove oil filter cover assembly and oil filter element** (Ref. Task 8-34).

   c. **Inspect for accumulation of foreign material.**

      (1) If foreign material is present, **Install oil filter cover assembly and new oil filter element** (Ref. Task 8-38).

      (2) If no foreign material is present, **install oil filter cover assembly and oil filter element** (Ref. Task 8-38).

INSPECT

FOLLOW-ON MAINTENANCE:
Service Engine Oil System (Task 1-68).

END OF TASK

1-86 INSPECT ENGINE AFTER FOREIG N OBJECT INGESTION 1-86

INITIAL SETUP

Applicable Configurations:
All

Tools:
Powerplant Mechanic's Tool Kit,
NSN 5180-00-323-4944
Technical Inspection Tool Kit,
NSN 5180-00-323-5114
Extension Light
Flat Hand File

Materials:
Gray Enamel (E26)

Personnel *Required:*
Aircraft Powerplant Repairer
Aircraft Powerplant Inspector

References:

Task 1-87	Task 2-29
Task 1-110	Task 2-35
Task 2-20	Task 2-36
Task 2-23	Task 3-5

NOTE

Perform foreign object ingestion (FOD) inspection using a strong light and a mirror to determine extent of foreign object ingestion.

1. **Inspect Inlet housing assembly** (1) as follows:

   a. There shall be no cracks.

   b. Damaged paint (although an indication of FOD) can be repaired by applying gray enamel (E26) (Ref. Task 1-110).

   c. If cracks or paint damage are found, proceed to step 5.

2. **Inspect first stage insert** (2) as follows:

   a. There shall be no cracks.

   b. There shall be no dents.

   c. If cracks or dents are found, proceed to step 5.

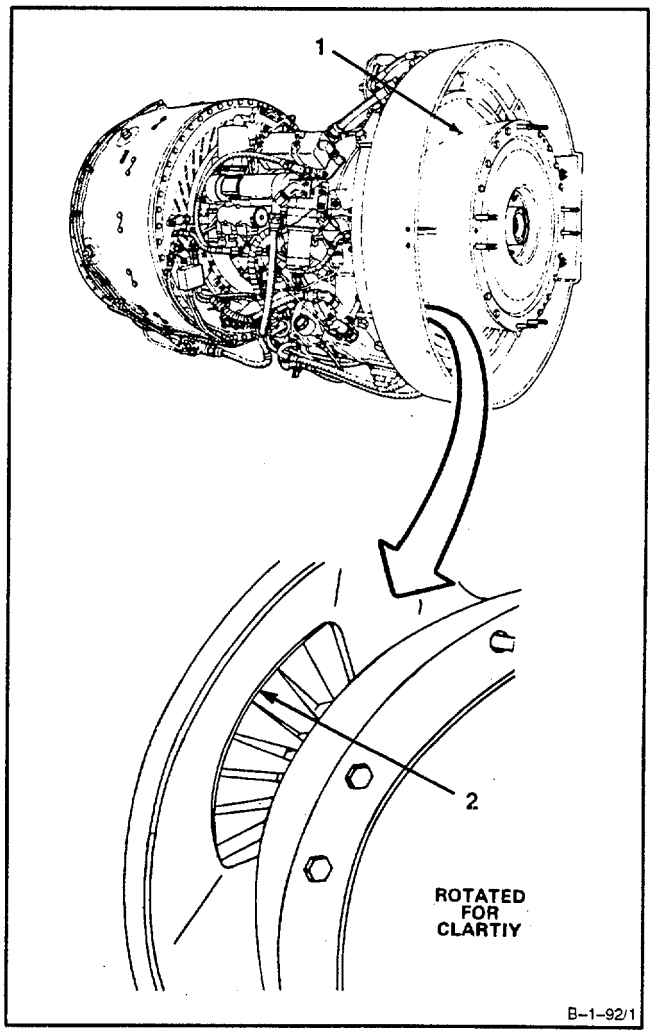

GO TO NEXT PAGE

3. **Inspect first stage compressor rotor blades (3)** as follows:

   a. There shall be no cracks.

   b. There shall be no bends or distortion.

   c. Surface nicks or dents shall not exceed limits shown in Task 2-35. Minor nicks or dents including minor leading or trailing edge damage can be repaired if limits in Task 2-35, Paragraph 1 d, f, h, i, j and k. have not been exceeded and no FOD is detected on first stage vane assembly. If FOD is detected on first stage stator vane, proceed to step 5.

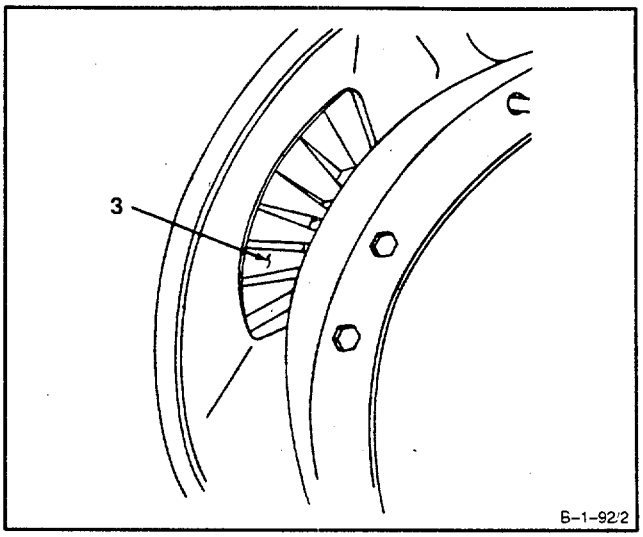

NOTE

Repair of 1st stage compressor blade minor nicks or dents including the leading or trailing edge can be accomplished without removing the compressor housing. Repair will be performed through the inlet housing.

To assist in damage determination criteria, modeling clay or certa wax can be used to mold damage from blade. This is then removed and measured.

Refer to Task 2-36 for repair of compressor rotor blades.

   d. If cracks, bends, distortion, nicks or dents are found, proceed to step 5.

NOTE

This procedure applies to both top and bottom stator vane assemblies.

4. **Inspect stator vane assemblies (4)** as follows:

   a. There shall be no cracks.

   b. There shall be no nicks, burrs, pits, or dents.

   c. If cracks, nicks, burrs, pits, or dents are found, proceed to step 5.

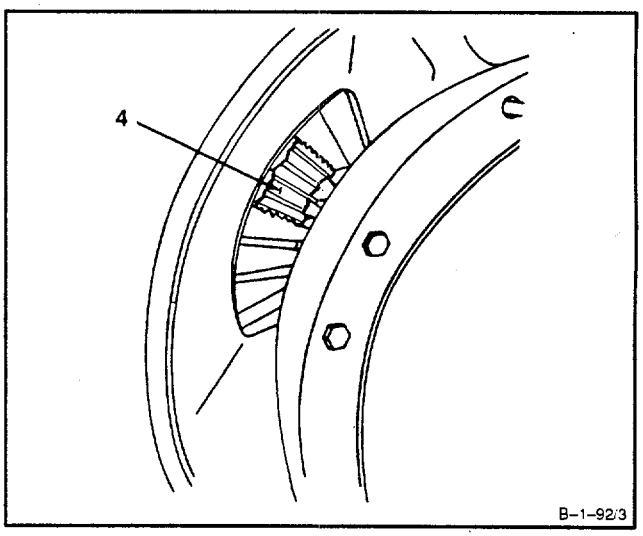

GO TO NEXT PAGE

NOTE

If it is determined that foreign object damage has occurred to inlet housing, first stage insert, compressor blades, or stator vane assemblies, a thorough inspection of compressor blades, stator vane assemblies, centrifugal compressor, and compressor housings must be performed. If foreign object damage is not evident, omit step 5.

5. **Remove upper compressor housing** (Ref. Task 2-20) and proceed as follows:

   a. **Inspect compressor rotor blades** (Ref. Task 2-35).

   b. **Inspect centrifugal impeller** (Ref. Task 2-35).

   c. **Inspect compressor housing** (Ref. Task 2-23).

   d. **Inspect stator vane assemblies** (Ref. Task 2-29).

   e. **Check clearance between compressor housing and first through seventh stage compressor rotor blades as follows:**

      (1) Using thickness gage (5), check right and left sides of compressor housing (6).

      (2) Tip clearance shall not be less than 0.019 inch for all stages.

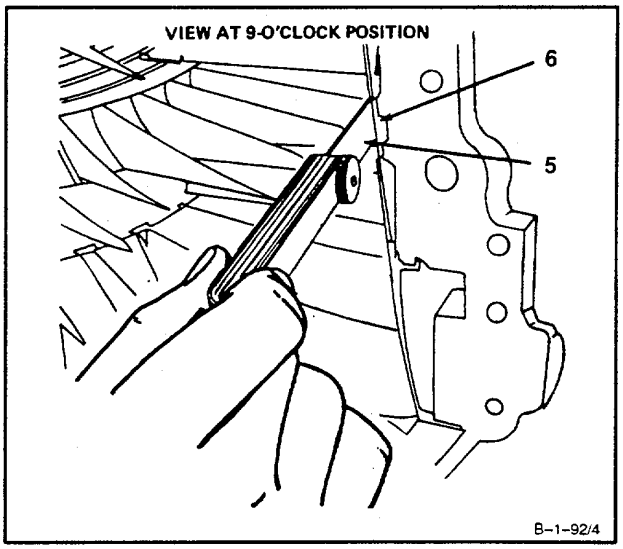

GO TO NEXT PAGE

CAUTION

Do not use power grinder to remove metal from blade. Power grinder could easily damage blade.

(3) If tip clearance is less than 0.019 inch, file tip of blade (7) with file (8) to obtain tip clearance same as two adjacent blades.

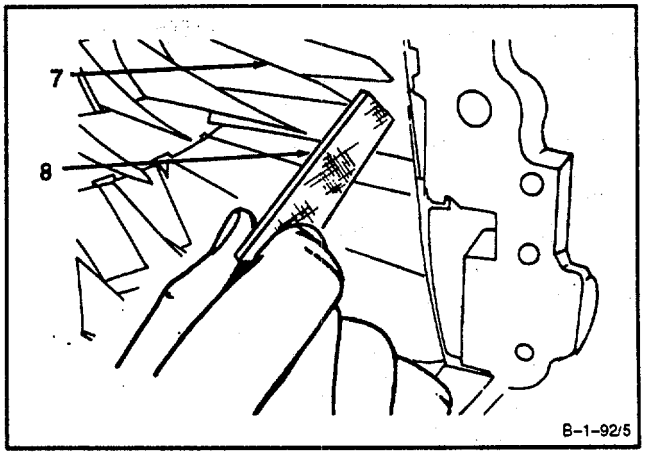

f. If centrifugal impeller is damaged but is within repair limits, remove combustion section and power turbine (Ref. Task 3-5) and inspect engine hot end (Ref. Task 1-87).

g. If any of the above inspections indicate damage beyond repair limits, replace engine.

INSPECT

FOLLOW-ON MAINTENANCE:

Install Upper Compressor Housing (Task 2-25).

END OF TASK

INITIAL SETUP

Applicable Configurations:
All

Tools:
Powerplant Mechanic's Tool Kit, NSN 5180-00-323-4944
Technical Inspection Tool Kit, NSN 5180-00-323-5114
Aircraft Group Cover (T39)
Clamp Coupling Half (T49)
Outside Micrometer Caliper Set
Thickness Gage (Appendix E)

Materials:
Aluminum Oxide Cloth (E4)
Marking Pencil (E38)
Vexar Nylon Webbing (E62)

Equipment Condition:
Off Engine Task
Engine Oil System Drained (Task 1-69)
Combustion Section and Power Turbine Removed (Task 3-5)

Personnel Required:
Aircraft Powerplant Repairer (2)
Aircraft Powerplant Inspector

References:

Taskl-68	Task4-15	Task4-49	Task6-17
Taskl-109	Task4-20	Task4-50	Task6-18
Task3-1	Task4-21	Task4-51	Task6-19
Task3-2	Task4-22	Task4-52	Task6-20
Task3-3	Task4-23	Task4-53	Task6-21
Task3-4	Task4-24	Task4-54	Task6-22
Task3-6	Task4-25	Task4-56	Task6-23
Task3-7	Task4-26	Task4-58	Task6-24
Task3-8	Task4-27	Task4-59	Task6-25
Task3-9	Task4-28	Task4-60	Task6-26
Task3-10	Task4-29	Task4-61	Task6-27
Task3-13	Task4-30	Task4-62	Task6-45
Task3-14	Task4-31	Task4-63	Task6-46
Task3-16	Task4-33	Task4-64	Task6-47
Task3-17	Task4-34	Task4-65	Task6-48
Task3-18	Task4-35	Task4-66	Task7-6
Task3-20	Task4-36	Task4-67	Task7-7
Task4-13	Task4-476	Task4-68	Task7-8
Task4-14	Task4-48	Task6-15	Task7-1 0
Task4-14	Task4-8	Task6-1 6	

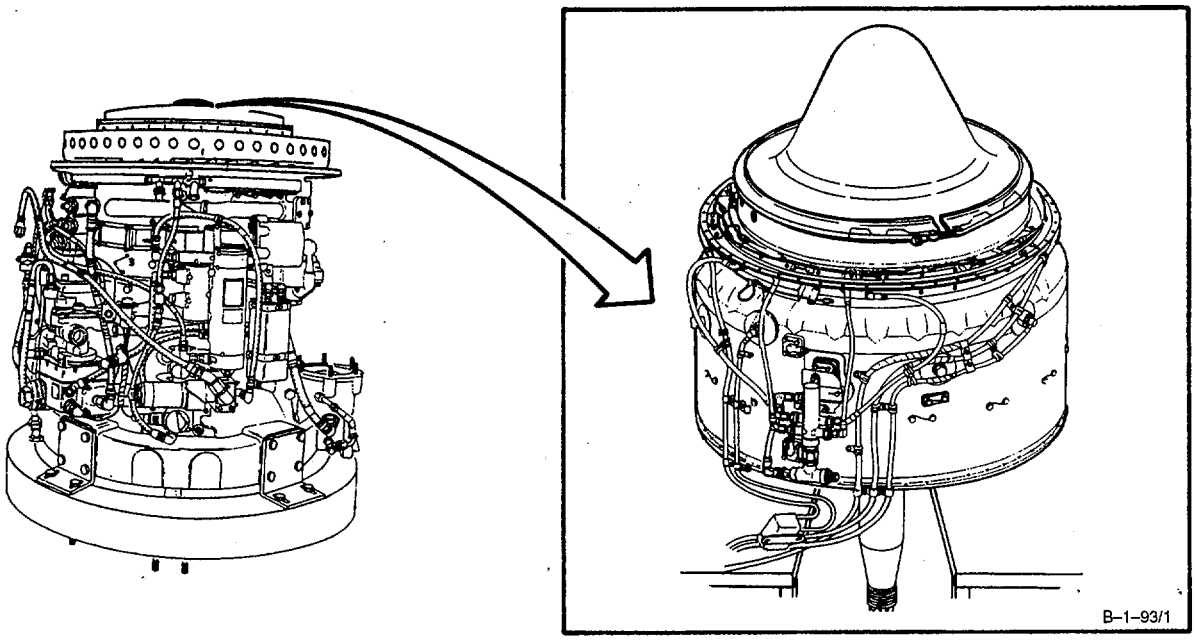

GO TO NEXT PAGE

1-87 INSPECT ENGINE HOT END (AVIM) (Continued) 1-87

1. **Measure second turbine disc assembly (1) tip clearance** at 0, 45, 90, 135, 180, 225, 270 and 315 degree positions as follows:

   a. Insert thickness gage (2) between blade tip (3) and second turbine nozzle inside diameter (4).

   b. **Measure and record minimum tip clearance** while rotating second turbine disc assembly (1) counterclockwise one revolution for each check.

   c. Tip clearance shall be 0.019 inch minimum. Record clearance.

   d. **If tip clearance is less than 0.025 inch repair second turbine nozzle** (Ref. Task 4-61).

2. **Remove and inspect second turbine disc assembly (1)** (Ref. Tasks 4-54 and 4-56).

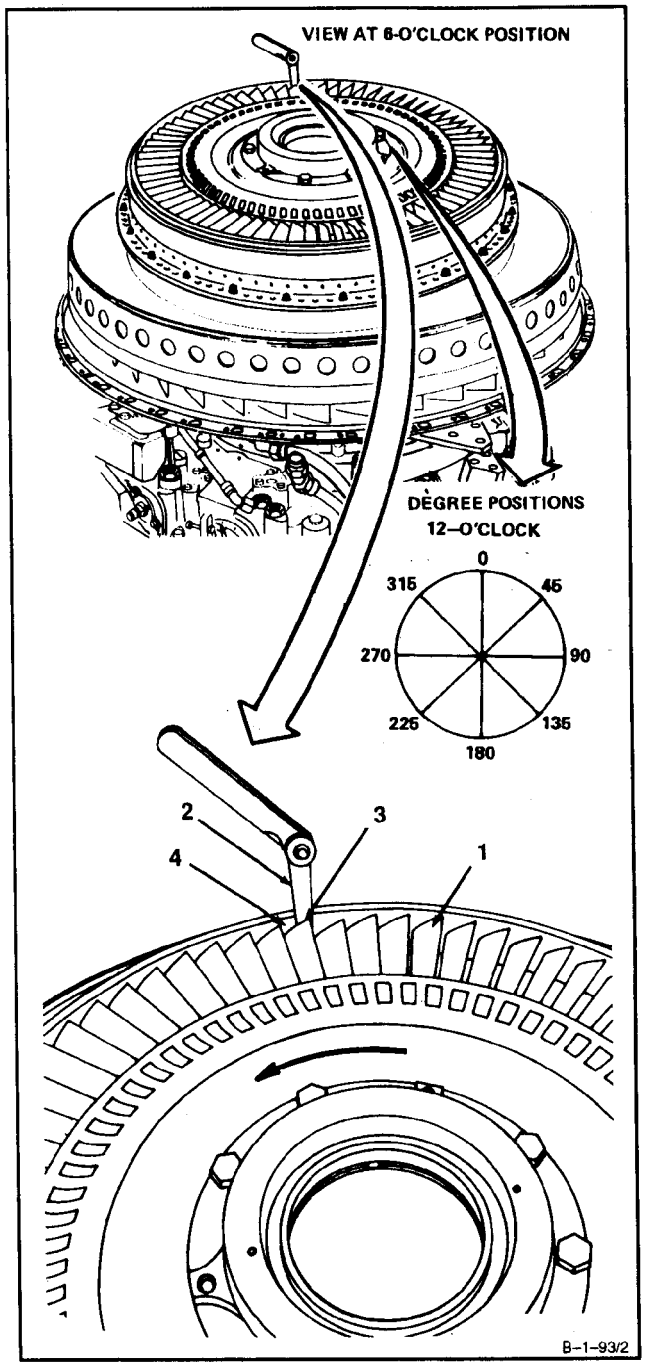

GO TO NEXT PAGE

3. **Inspect aft side of second turbine nozzle (5) as follows**:
   a. **Inspect aft surfaces (6)** for severe damage. There shall be no damage deeper than 1/16 inch.

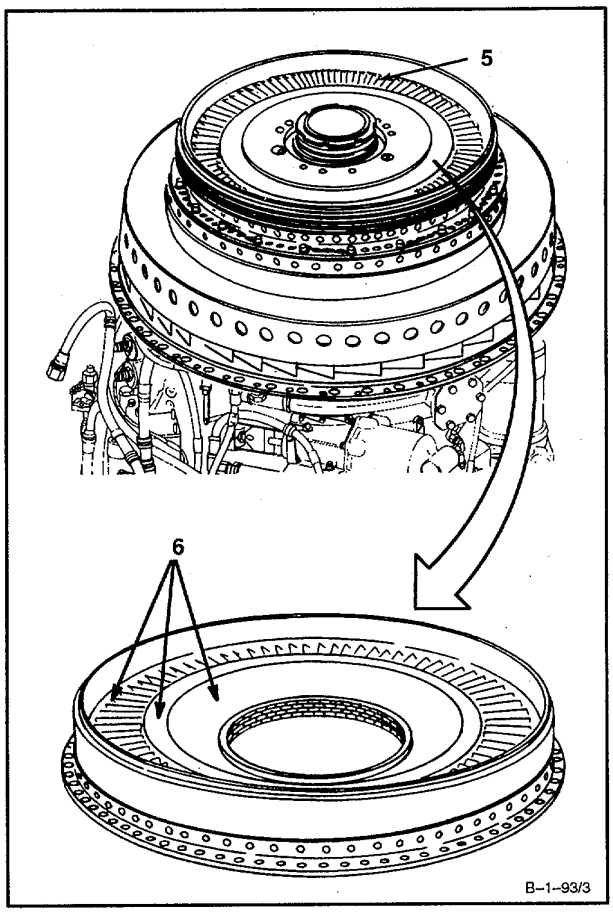

GO TO NEXT PAGE

b. Inspect 77 vanes (7) as follows:

NOTE

The following inspection in steps (1) and (2) applies to all surfaces of the entire vane. Only the aft view is shown.

(1) General inspection.

(a) There shall be no nicks, burrs or scratches (8) deeper than 1/32 inch.

(b) There shall be no buckling.

(c) There shall be no burning or metal loss (9) deeper than 1/64 inch.

(d) There shall be no severe or moderate deterioration of coating due to erosion, corrosion, FOD, or aluminum depletion.

(2) Inspect for cracks.

(a) There shall be no converging cracks (10).

(b) There shall be no cracks (11) with vane core visible.

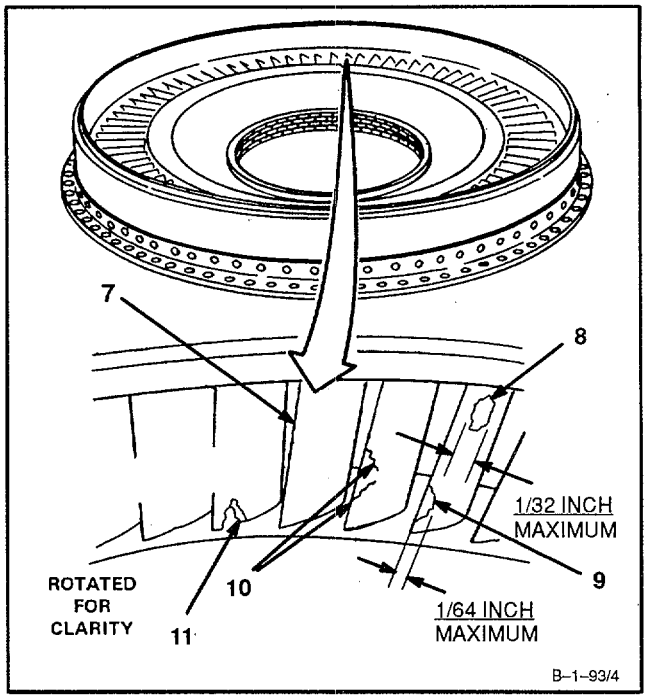

GO TO NEXT PAGE

(c) There shall be no cracks (12) from outer shroud (13) longer than 3/16 inch.

(d) There shall be no cracks (14) from inner shroud (15) longer than 1/2 inch.

(e) There shall be no vane with more than one crack (16) from inner shroud (15) longer than 1/4 inch.

(f) There shall be no more than three vanes (7) with cracks (16) from inner shroud (15) longer than 1/4 inch.

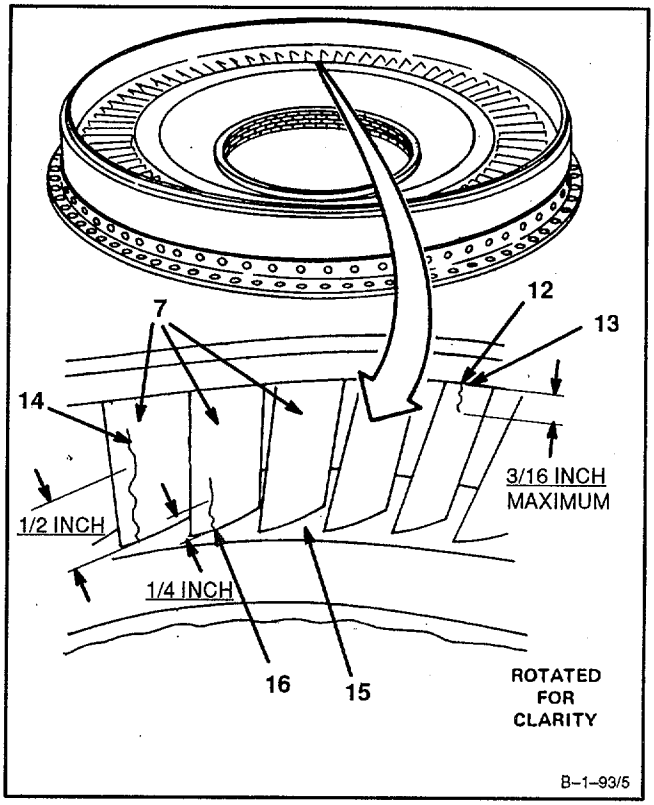

GO TO NEXT PAGE

(3) Inspect for chordal cracks from leading edge.

(a) There shall be no cracks (17) in vane leading edge (18) longer than 3/8 inch.

NOTE

The following crack must not be closer than 3/32 inch radial distance to trailing edge chordal crack shown in step (4) (a).

(b) There shall be no vane with more than one crack (19) longer than 3/32 inch.

(c) There shall be no vane with two cracks (20) closer than 3/32 inch.

(d) There shall be no vane with more than three cracks (20) up to 3/32 inches long.

(e) There shall be no more than two adjacent vanes (7) with cracks (19)longer than 3/32 inch.

(f) There shall be no more than four vanes (7) with cracks (19) longer than 3/32 inch.

(4) Inspect for chordal cracks from trailing edge.

NOTE

The following crack must not be closer than 3/32 inch radial distance to leading edge chordal crack shown in step (3) (b).

(a) There shall be no cracks (21) from trailing edge (22) longer than 3/32 inch.

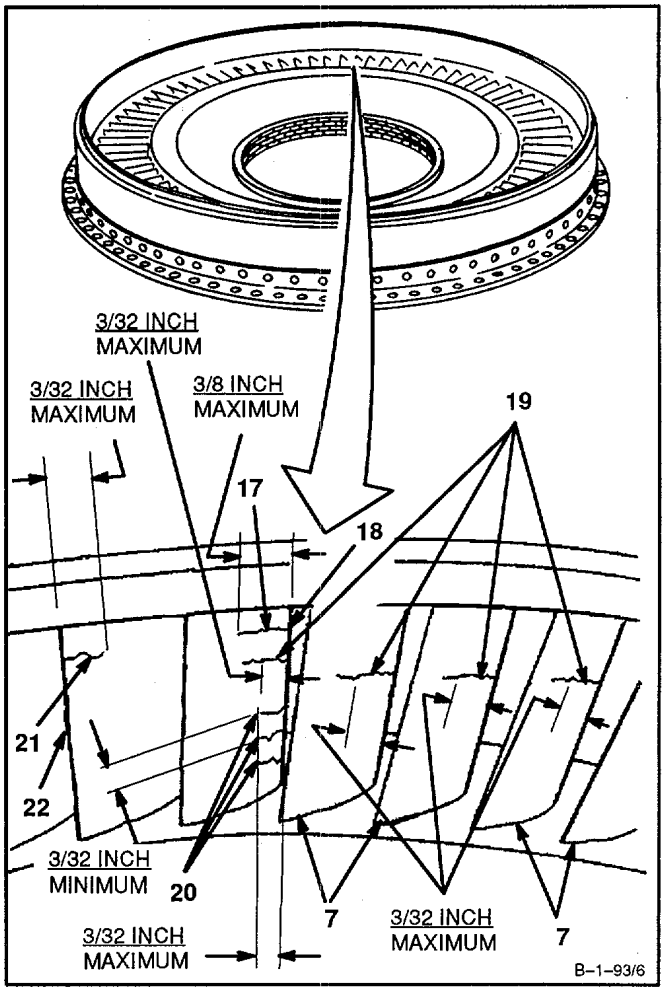

GO TO NEXT PAGE

c. **Inspect inner seal aft support (23)** as follows:

(1) There shall be no cracks or distortion.

d. **Inspect inner seal support ("T"-section) (24)** as follows:

(1) There shall be no converging axial cracks (25).

(2) There shall be no axial cracks (26) which are not tight-lipped.

(3) There shall be no axial cracks (27) longer than 1/8 inch.

e. **Inspect outer shroud (28).**

(1) There shall be no circumferential cracks.

(2) There shall be no axial cracks (29) with a circumferential component at either end longer than 1/8 inch.

(3) There shall be no axial cracks which extend from vane/outer shroud braze joint to aft edge of cylinder (30).

(4) There shall be no more than four axial cracks (31) extending aft from vane/outer shroud braze joint toward aft edge of cylinder (30). These cracks must be tightlipped and must be separated by a minimum of two vanes (7).

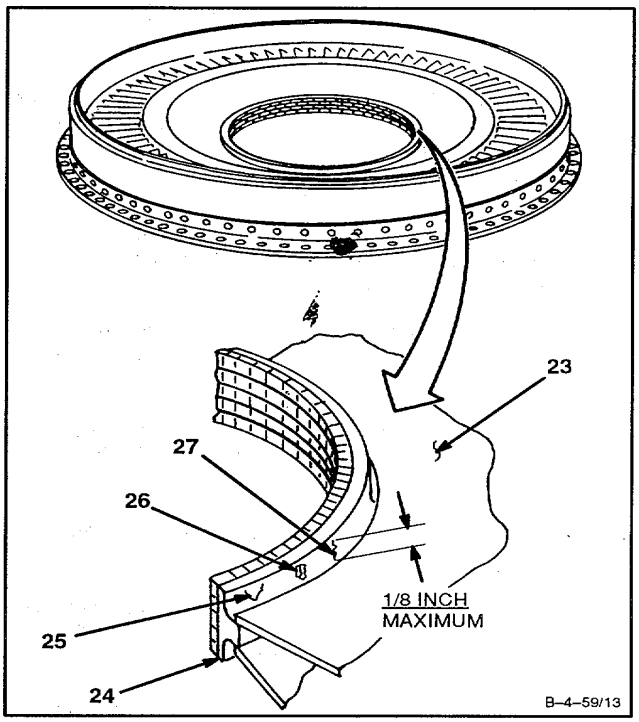

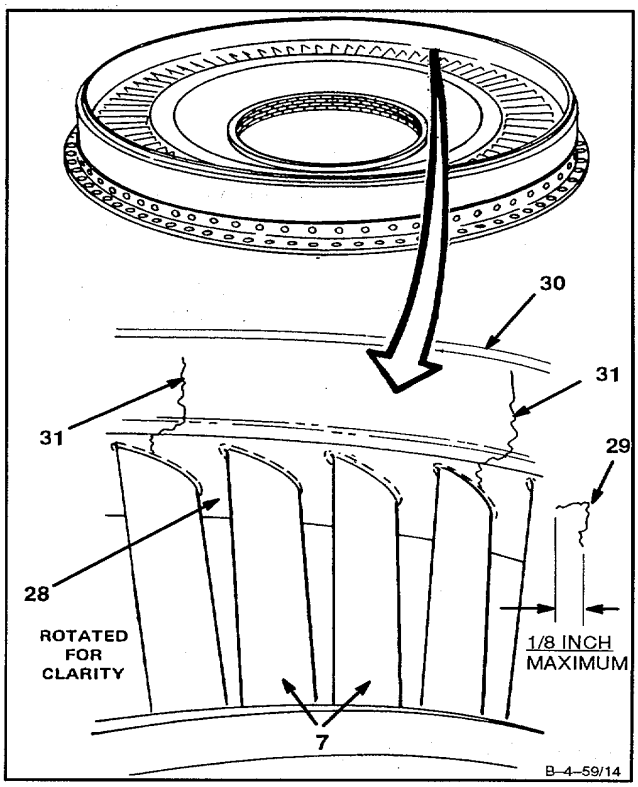

GO TO NEXT PAGE

2 Inspect inner shroud (32) as follows:

(1) There shall be no circumferential cracks.

(2) There shall be no axial cracks (33) with a circumferential component at either end longer than 1/8 inch.

(3) There shall not be more than four axial cracks (34) which extend from vane/inner shroud slot to beyond inner shroud/aft support braze joint (35). These cracks, must be tight-lipped, separated by at least four vanes (7), and not longer than 1 inch.

(4) There shall not be more than eight axial cracks (36) which extend from vane/inner shroud slot to inner shroud/aft support braze joint (35).

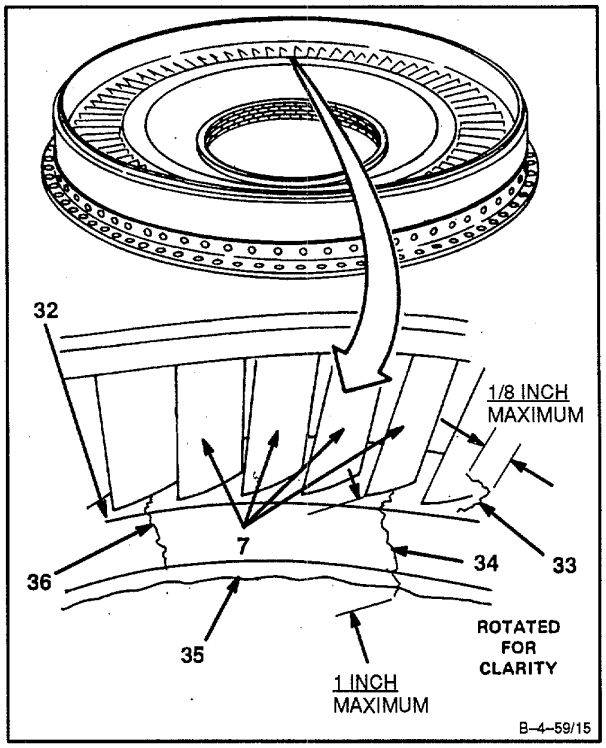

GO TO NEXT PAGE

g. Inspect mounting ring (37). There shall not be more than one radial crack (38) per cooling hole (39).

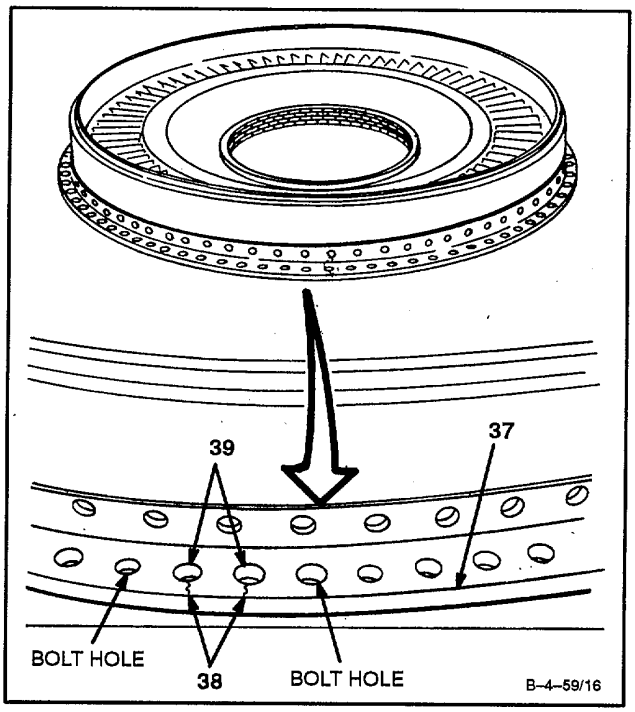

h. Inspect honeycomb seal (40) as follows:

NOTE

In following step, grooves referred to are circumterential cuts in honeycomb seal material made by four knife edges of the second turbine spacer as the turbine rotates.

(1) There shall be no seal material broken away so as to cause a gap (41) across all four grooves (42) and also progressing beyond first or last groove.

(2) A 360 degree gap (43) is acceptable in joint (44).

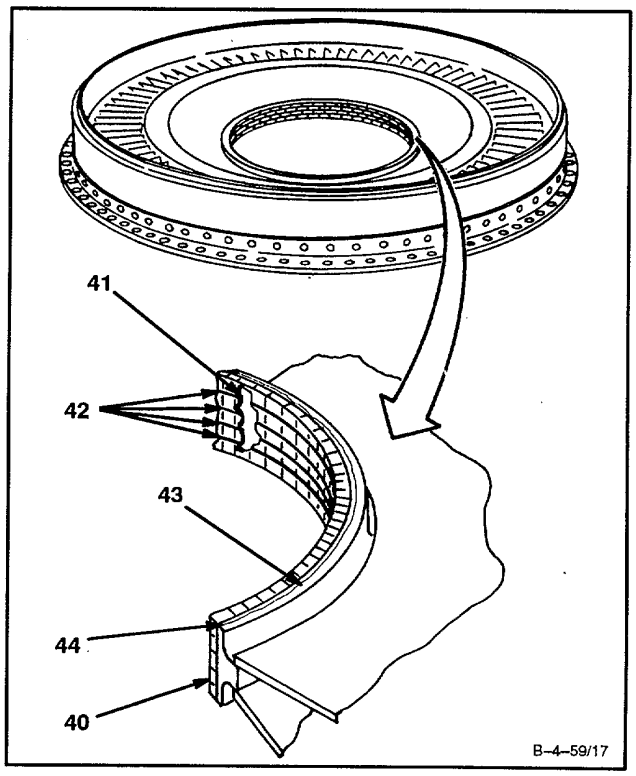

GO TO NEXT PAGE

i. Inspect outer shroud cylinder (45) as follows:

(1) Inspect inside diameter (46). There shall be no grooves (47) deeper than 1/64 inch.

(2) Inspect outside diameter (48) as follows:

(a) There shall be no cracks.

(b) There shall be no grooves (49) caused by fretting of third turbine nozzle support seals and expander springs deeper than 1/64 inch.

CAUTION

Grooving may result in formation of steps which could cause severe difficulty in future removal of combustion section and power turbine. This difficulty could result in damage to engine components.

(c) There shall be no steps (50) caused by grooving.

4. Inspect turbine spacer (51). There shall be no cracks. There shall be no dents deeper than 1/8 inch.

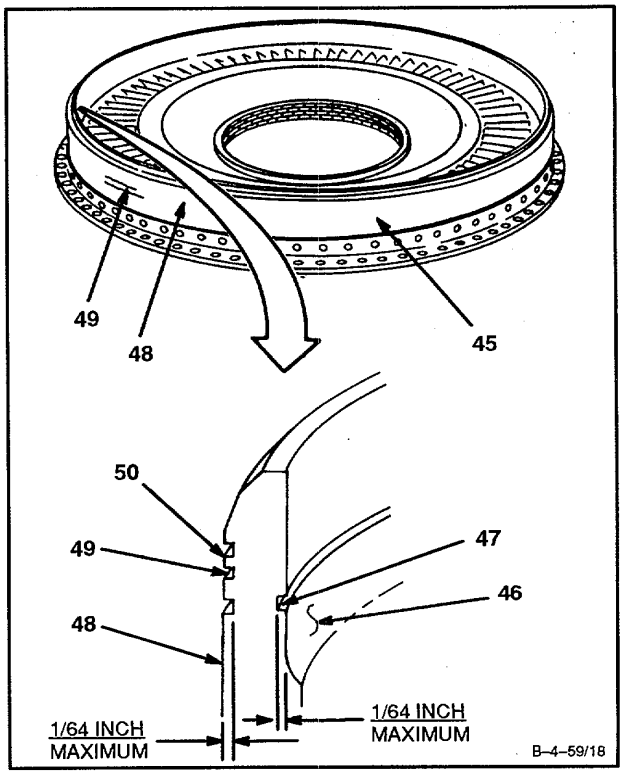

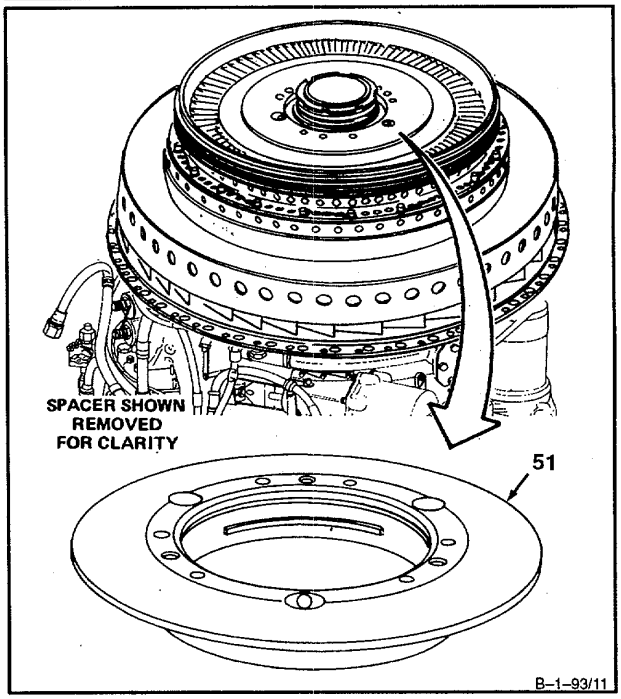

GO TO NEXT PAGE

5. Measure first turbine disc assembly (52) tip clearance at 0, 45, 90, 135, 180, 225, 270, and 315 degree positions as follows:

   a. Insert thickness gage (Appendix E) (53) between second turbine nozzle vanes (7) and between blade tip (54) and turbine rotor case inside diameter (55).

   b. Rotate first turbine disc assembly (52) counterclockwise one revolution for each check.

   c. Tip clearance shall be 0.019 inch minimum.

   d. If tip clearance is less than 0.019 inch repair first turbine rotor case (Ref. Task4-68).

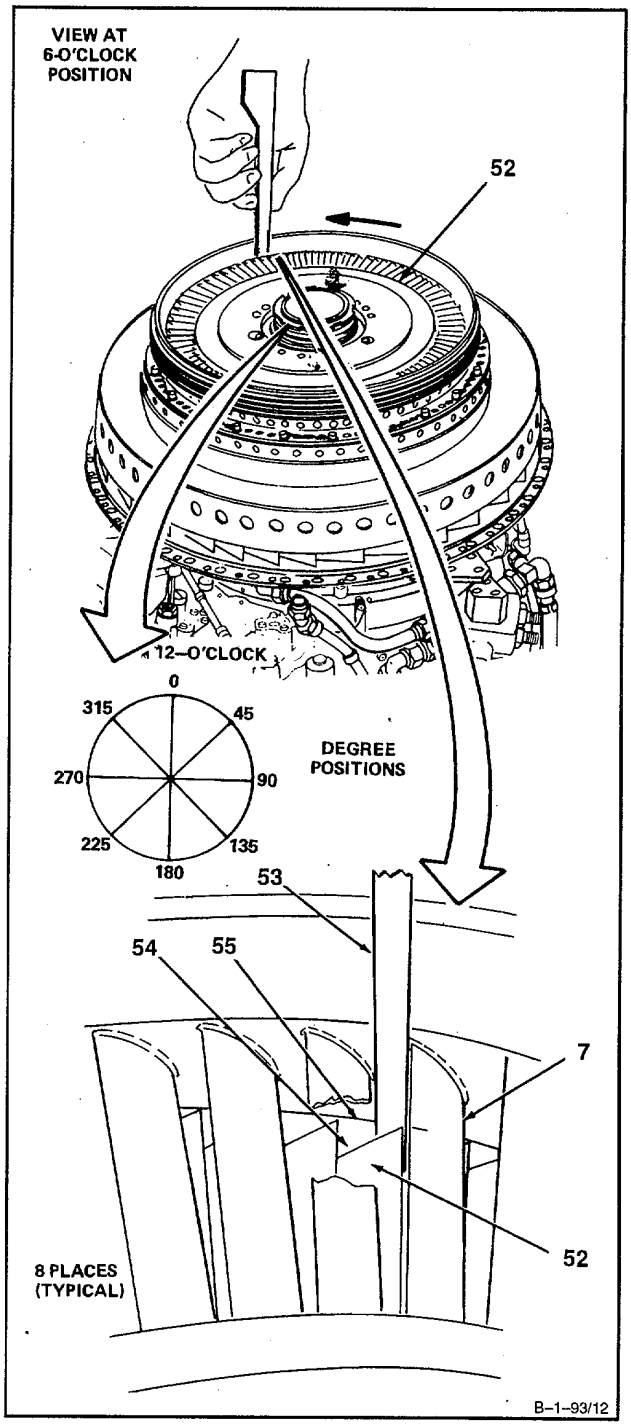

GO TO NEXT PAGE

6. **Inspect aft side (56) of first turbine disc assembly (52)** as follows:

NOTE

Do not remove first turbine disc assembly unless it fails to meet these inspection limits.

a. **Inspect blades (57).**

(1) There shall be no nicks, dents, or scratches deeper than 0.015 inch.

(2) There shall be no bends or distortion.

(3) There shall be no cracks.

(4) There shall be no rubs on blade tips (58) or blade platform (59) deeper than 0.015 inch.

(5) There shall be no loss of material due to burning.

(6) There shall be no material rollover (60) on blade tips (58).

(7) There shall be no bluish-black discoloration in area (61) adjacent to rollover (60).

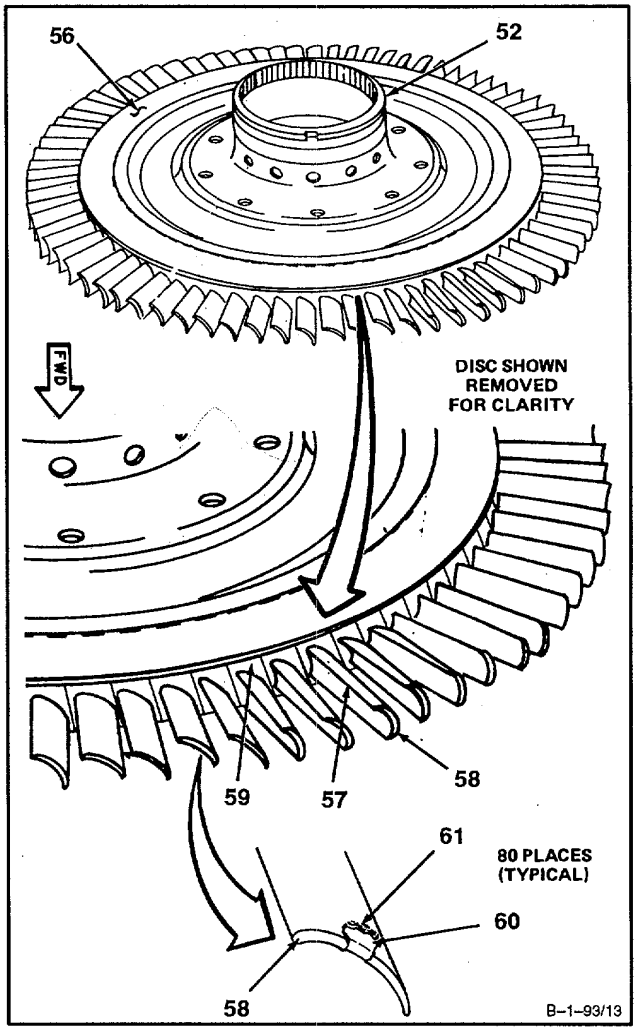

7. Inspect first turbine nozzle (62) as follows:

NOTE

Do not remove first turbine nozzle unless it fails to meet the following inspection limits.

a. Insert mirror (63) inside of diffuser curl (64).

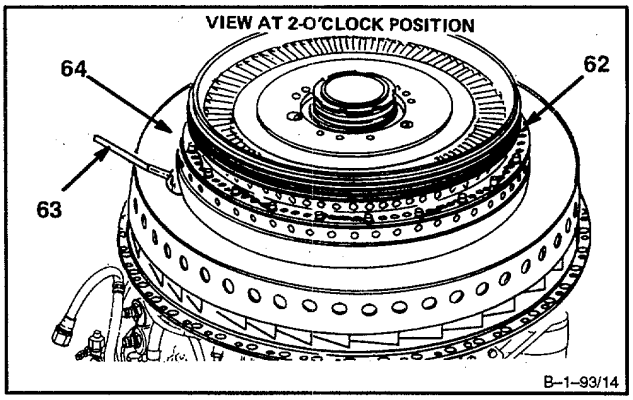

GO TO NEXT PAGE

NOTE

In following steps, nozzle is shown removed and inverted for clarity.

(1) **Using flashlight, inspect forward side (65) of first turbine nozzle (62)** as follows:

(a) **Inspect inner shroud (66).**

1 There shall be no more than five cracks (67) extending from vane leading edge (68) to forward face (69).

2 There shall be no other cracks (70) from vane leading edge (68).

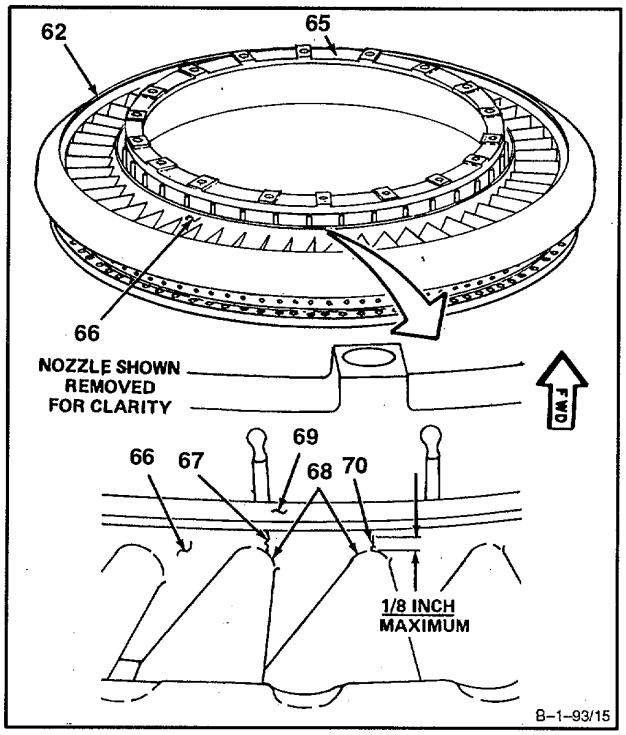

(b) **Inspect 55 vanes (71).**

1 There shall be no burning or loss of material.

2 There shall be no more than three, 3/8 inch maximum length cracks (72) in any vane from inner shroud (66). There shall be no more than 20 vanes with these cracks (72).

3 There shall be no cracks (73) from vane leading edge (68) wider than 1/32 inch.

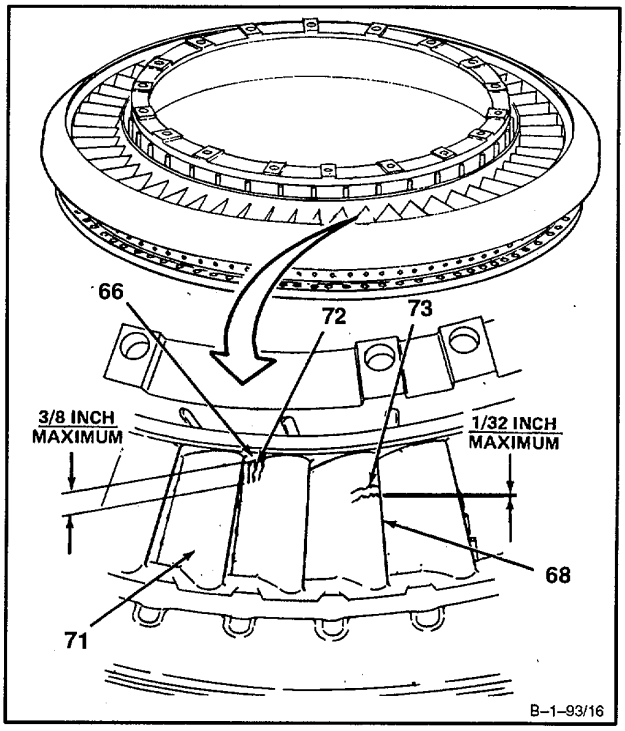

GO TO NEXT PAGE

(c) **Inspect outer shroud (74).**

1 There shall be no circumferential cracks (75).

2 There shall be no cracks (76) between vanes (71).

3 There shall be no cracks (77) from vane leading edge (68) longer than 1/4 inch.

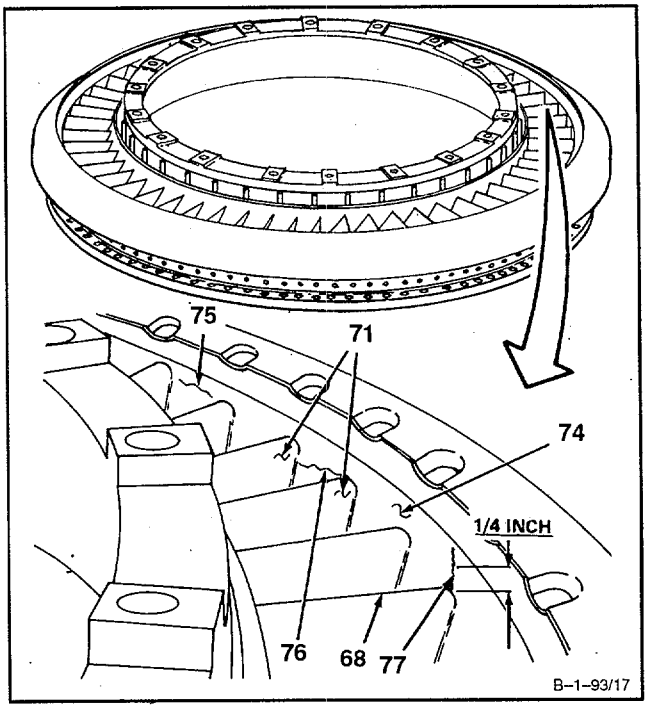

4 There shall be no more than three cracks (78) longer than 3/32 inch.

5 There shall be no more than seven additional cracks (79) from vane leading edge (68).

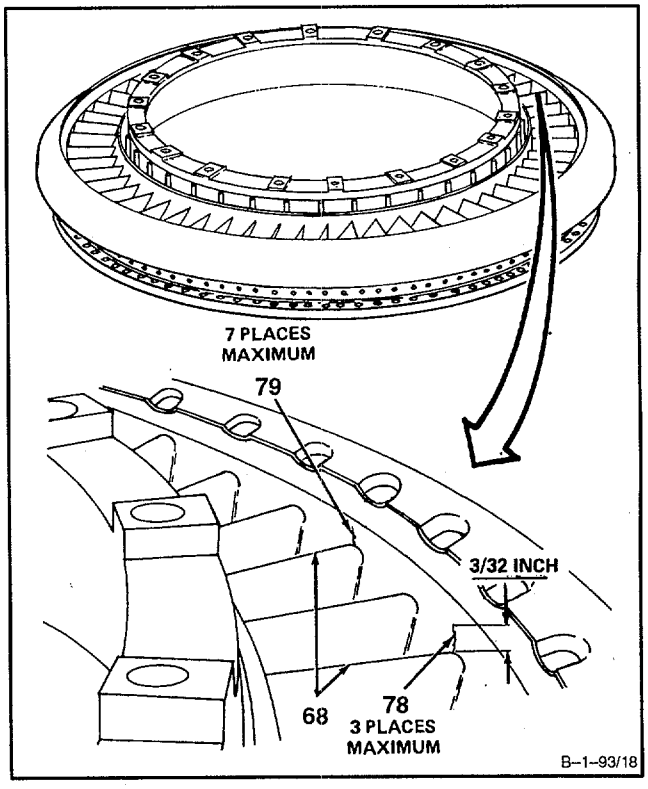

GO TO NEXT PAGE

(2) Inspect forward and aft sides of curl (80) on nozzle (62). Use mirror for forward side. There shall be no cracks.

(3) Inspect all accessible areas of nozzle (62). There shall be no sharp edges around nicks and dents. Nicks and dents without sharp edges are allowed.

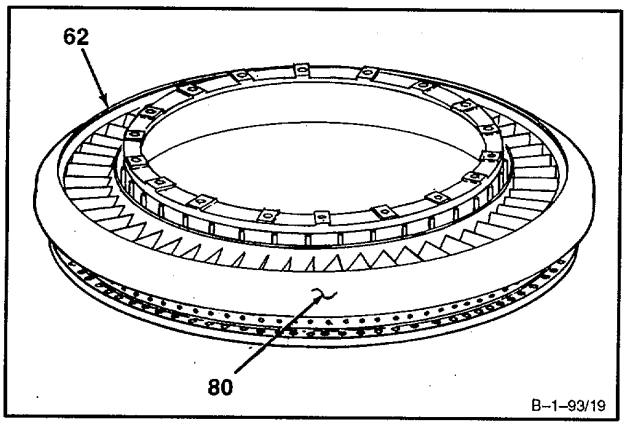

8. **Inspect aft side of diffuser curl (64)** using flashlight and mirror (63) as follows:

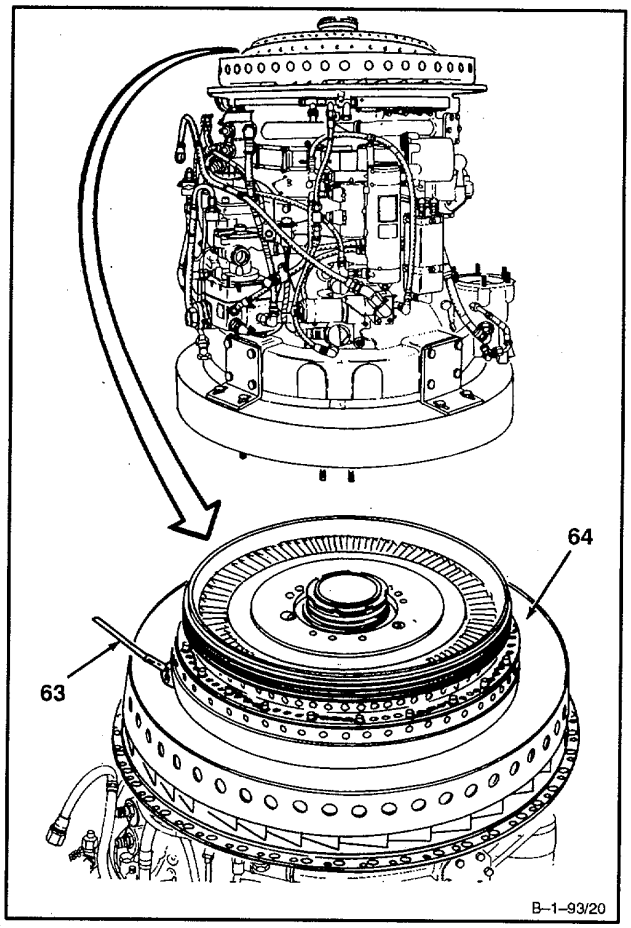

GO TO NEXT PAGE

NOTE

In following steps, curl is shown removed for clarity.

a. There shall be no burn-through.

b. There shall be no foreign object break through damage.

c. The total length of cracks in area next to outer flange seam weld (81) shall not be more than 7 inches.

d. There shall be no more than eight broken spot welds (82). Cracks in spot welds (82) are acceptable.

e. There shall be no foreign metallic material on surface (83) of curl.

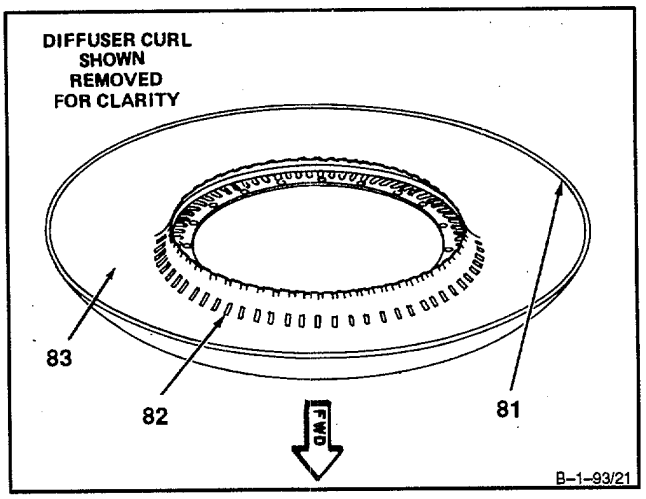

9. If inspection criteria in steps 3. thru 8. are not met, remove, clean, inspect, repair or replace defective parts. Refer to following tasks as needed:

a. Remove, clean, inspect, repair, and Install second turbine nozzle, spacer, case, and bumper (Ref. Tasks 4-58, 4-59, 4-60, 4-61, and 4-62).

b. Remove, clean, inspect, repair, and install first turbine disc assembly (Ref. Tasks 4-63, 4-64, 4-65, 4-66, and 4-67).

c. Remove, clean, inspect, repair, and install first turbine nozzle (Ref. Contractor Logistic Support).

d. Remove, clean, inspect, repair, and install diffuser curl (Ref. Contractor Logistic Support).

GO TO NEXT PAGE

10. **Remove clamp coupling half (T49) (84) and group aircraft cover (T39) (85)** from combustion section and power turbine (86).

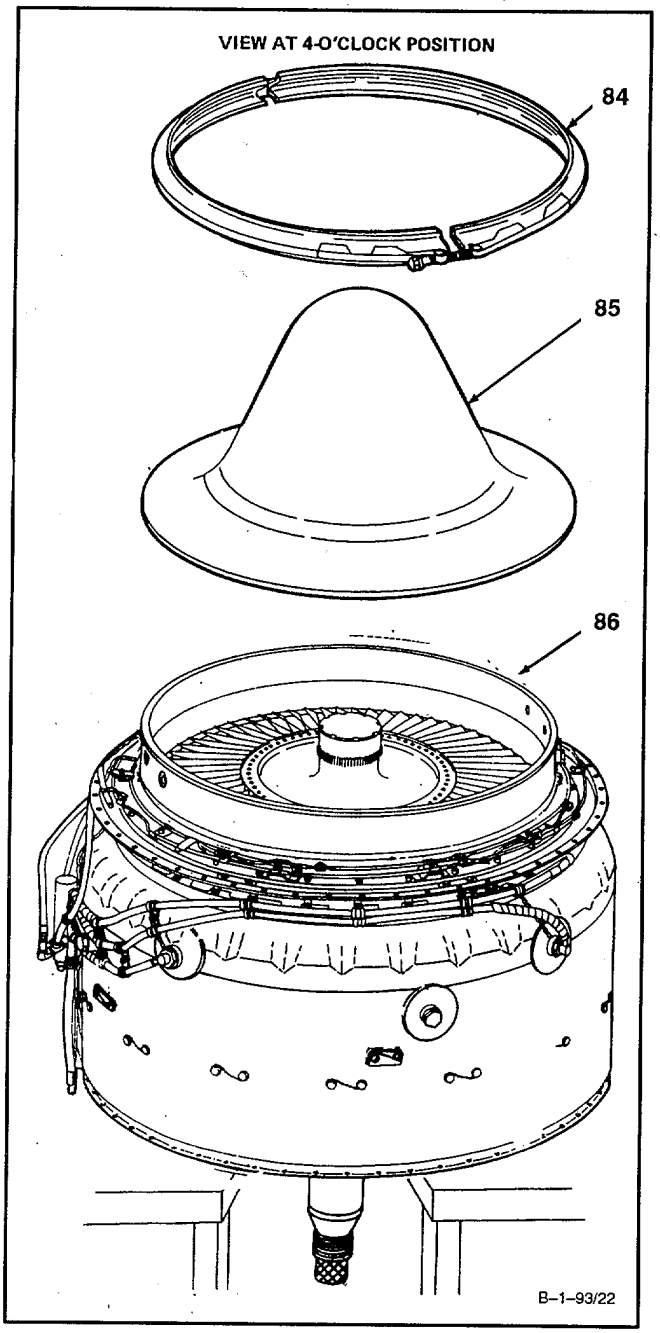

GO TO NEXT PAGE

11. **Inspect fire shield assembly (87).** There shall be no cracks or bends.

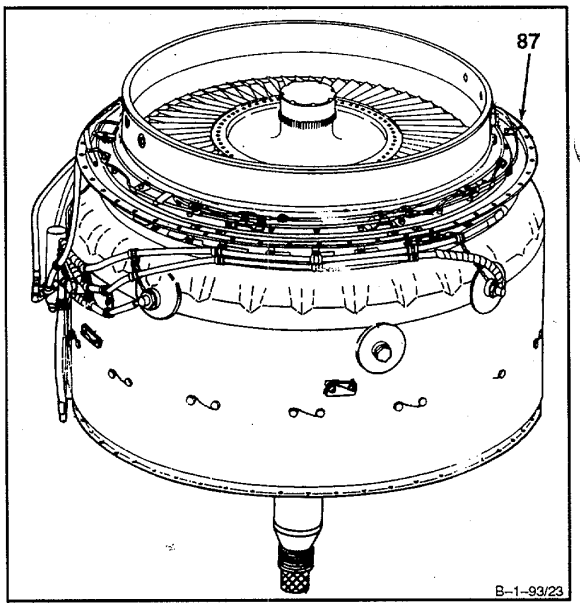

12. **Inspect primer tube assembly (88)** as follows:

    a. There shall be no cracks.

    b. There shall be no chafing wear deeper than 0.002 inch.

13. **Remove start fuel nozzles** (Ref. Task 6-24).

14. **Clean start fuel nozzles** (Ref. Task 6-25).

15. **Inspect start fuel nozzles** (Ref. Task 6-26).

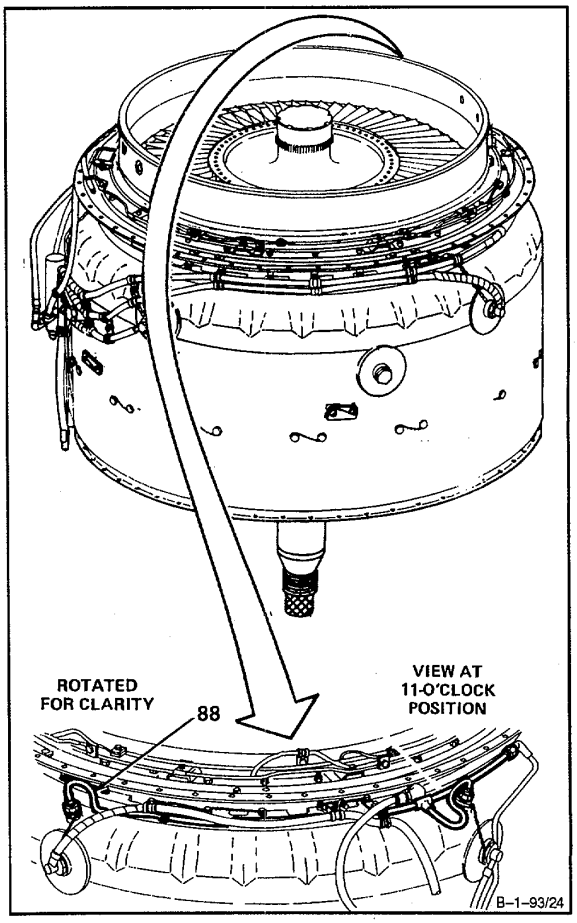

GO TO NEXT PAGE

16. **Inspect left and right-hand fuel manifold assemblies (89).** There shall be no cracks.

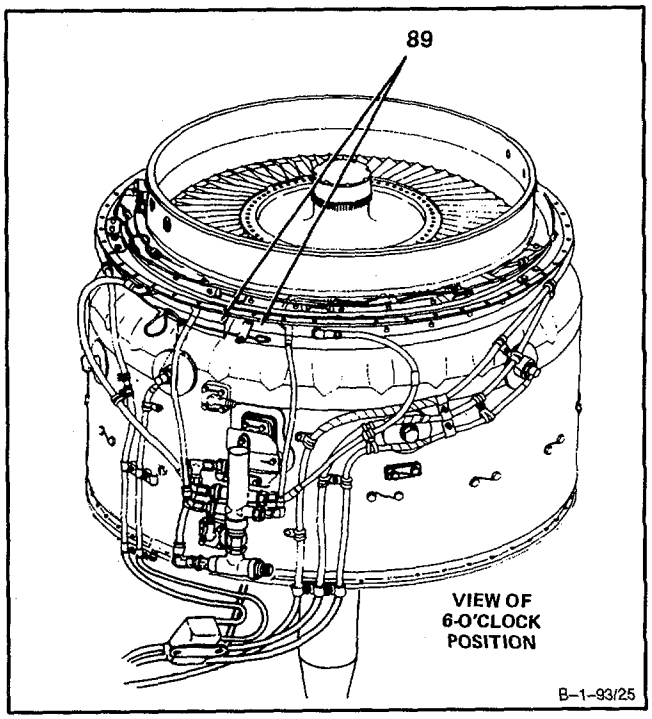

GO TO NEXT PAGE

17. **Inspect flow divider and pressurizing valve (90).**
    There shall be no cracks.
18. **Remove spark igniters** (Ref. Task 7-6).
19. **Clean spark igniters** (Ref. Task 7-7).
20. **Inspect spark igniters** (Ref. Task 7-8).

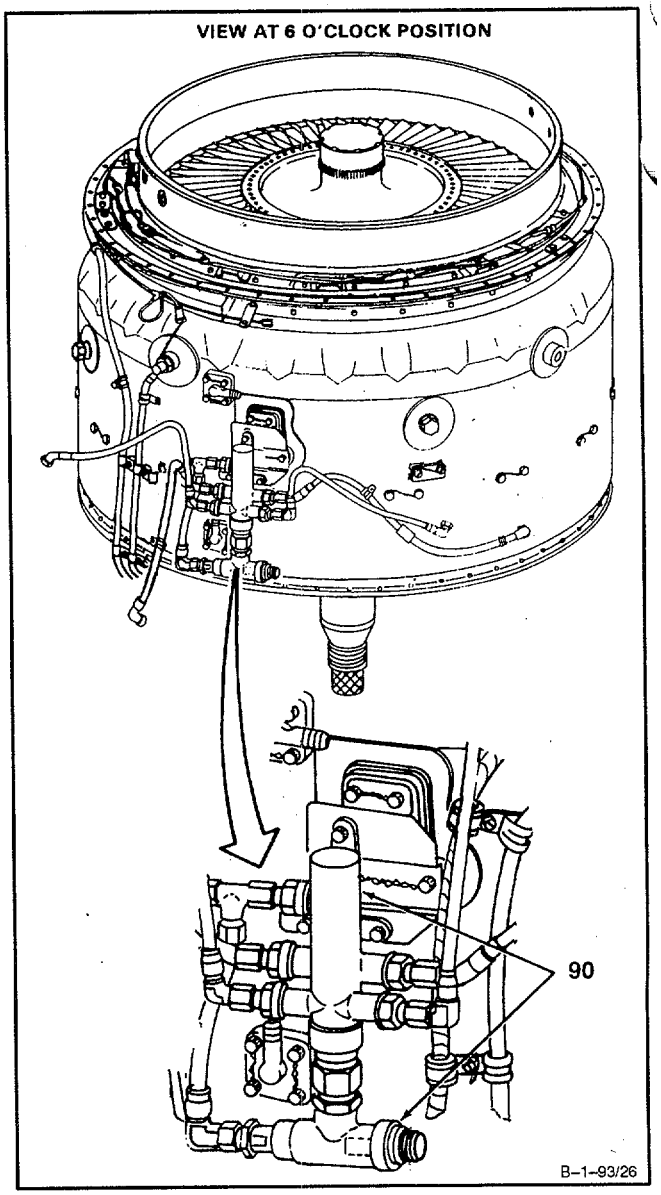

GO TO NEXT PAGE

21. **Inspect thermocouple harness assemblies (91)** as follows:

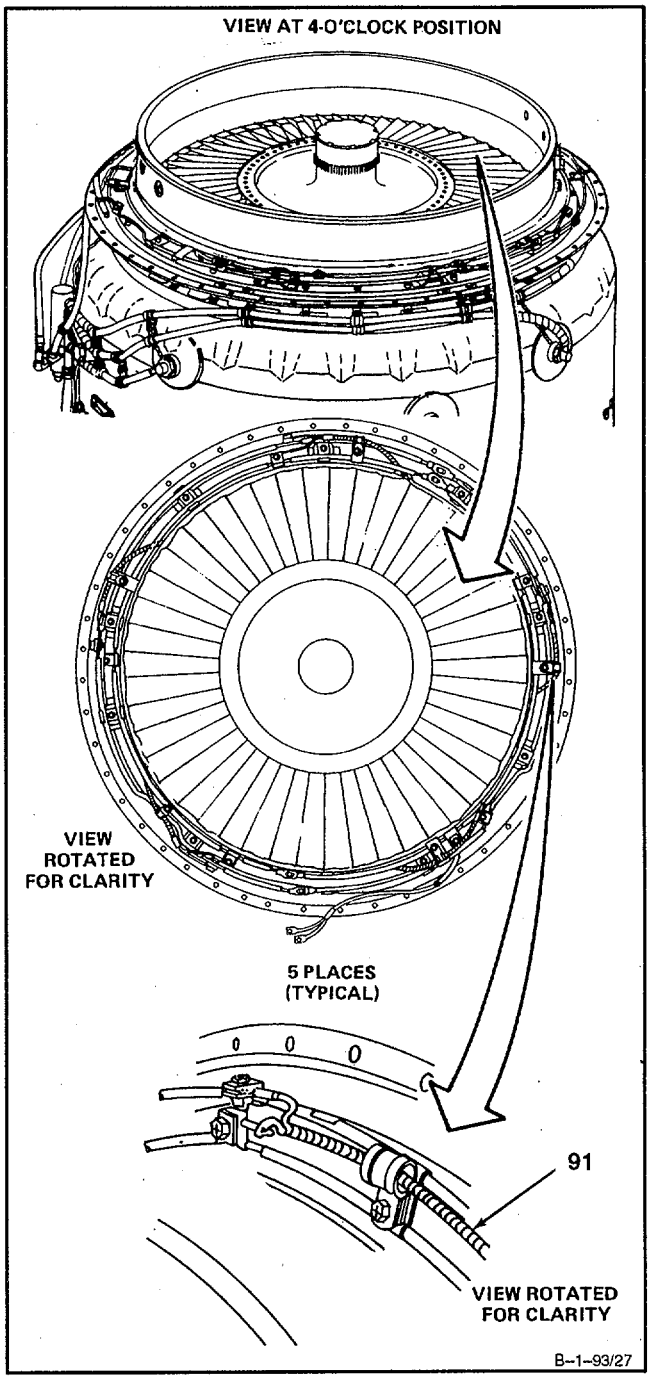

GO TO NEXT PAGE

a. **Inspect pins (92) (10 places).** There shall be no cracks, corrosion, broken, or missing pins.

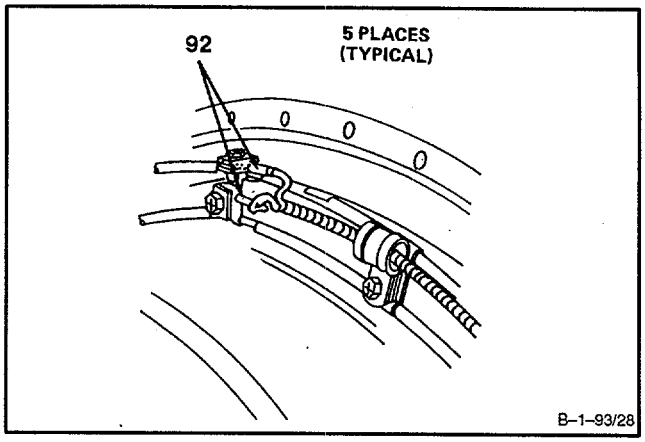

b. **Inspect pin leads (93) (10 places).** There shall be no frayed or broken wires.

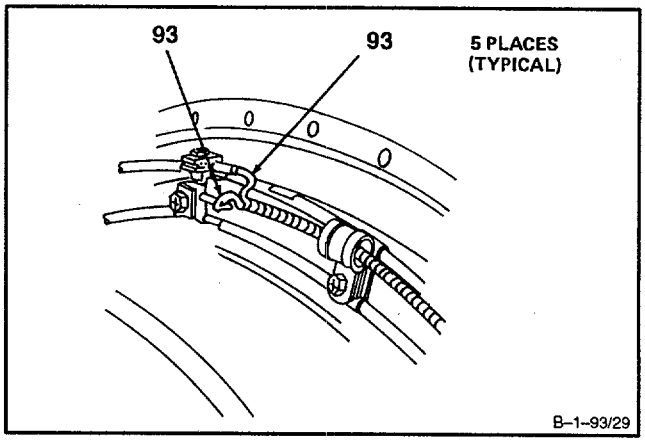

c. **Inspect outer shield** (**94**). There shall be no cracks or gouges.

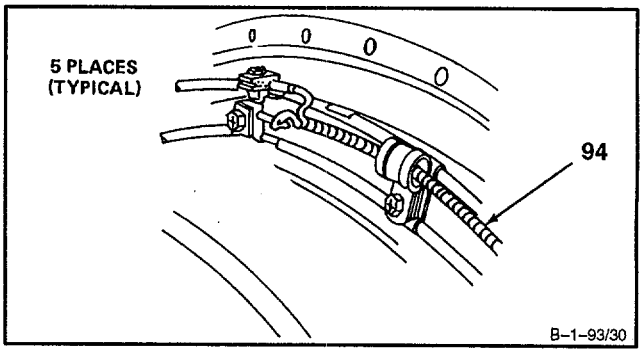

GO TO NEXT PAGE

22. **Inspect combustion chamber housing (95)** as follows:

    a. **Inspect external surfaces (96).** There shall be no cracks.

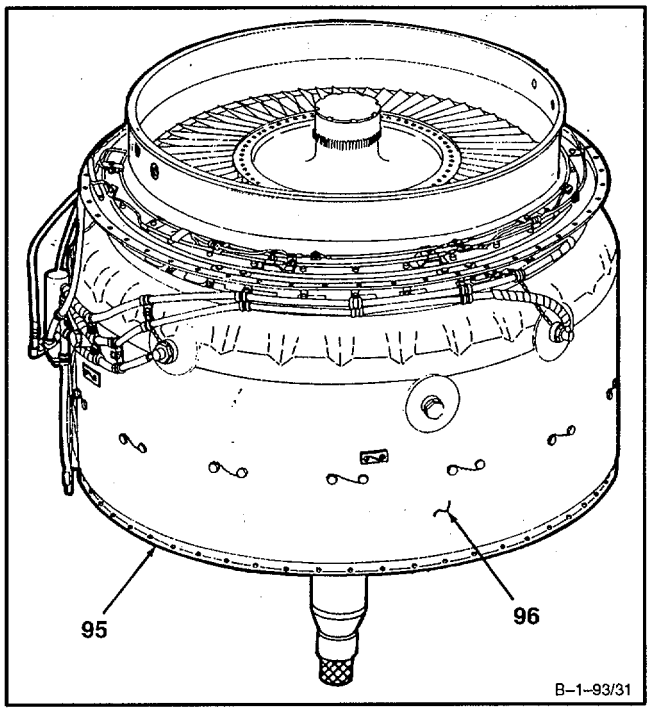

    b. **Inspect two drain valves (97).** They shall be mounted securely. There shall be no cracks.

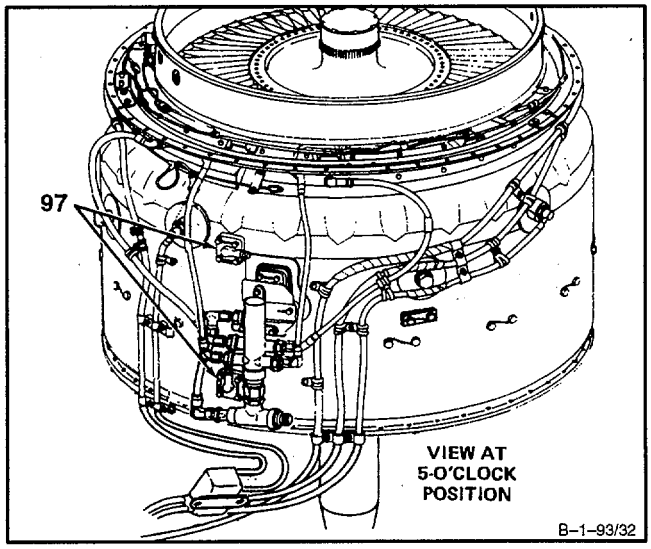

GO TO NEXT PAGE

c. **Inspect two start fuel nozzle bosses (98) and weldment (99).** There shall be no cracks.

d. **Inspect four spark igniter bosses (100) and weldments (101).** There shall be no cracks.

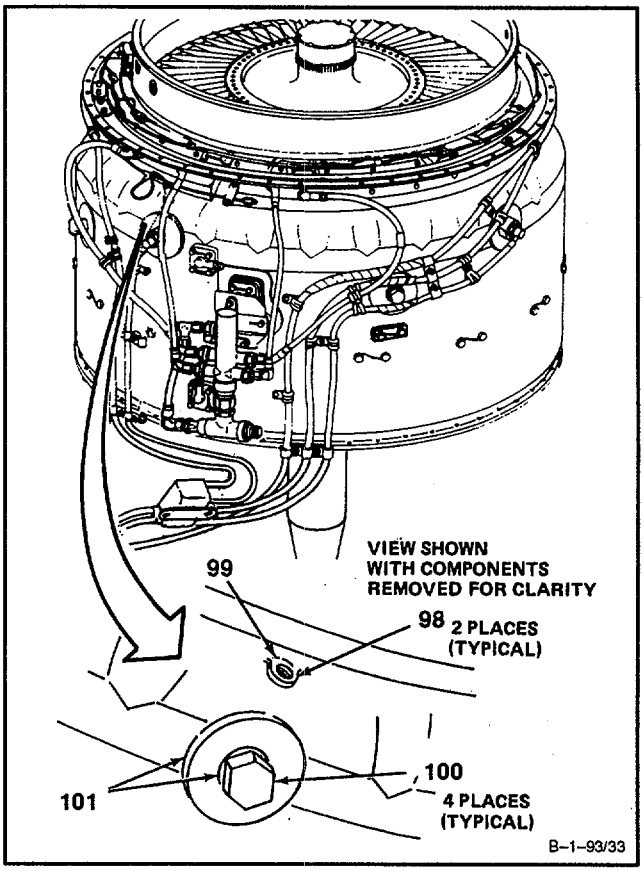

GO TO NEXT PAGE

e. **Inspect four liner mounting bosses (102) and weldments (103).** There shall be no cracks.

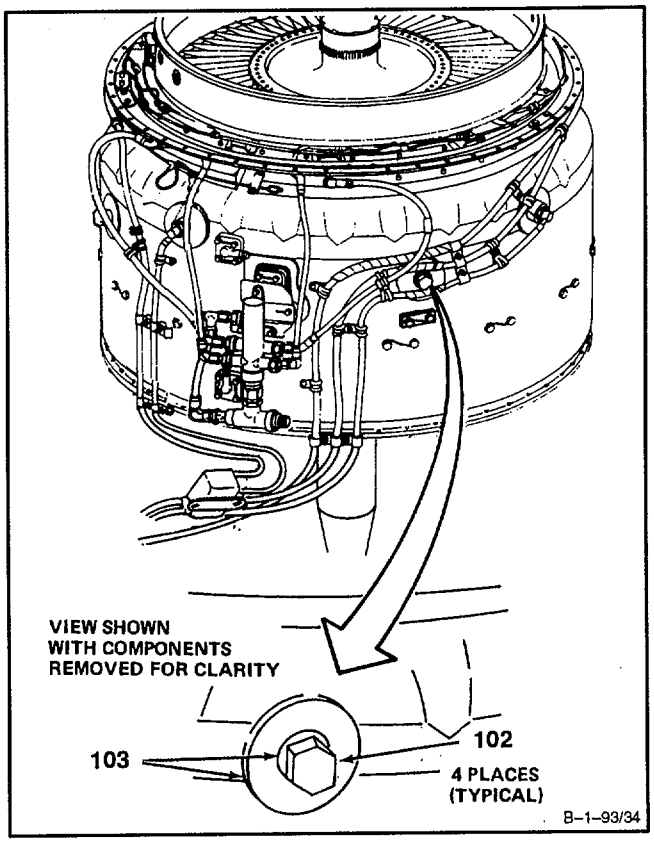

f. **Inspect eight nut plates (104).** They shall not be missing or broken. They shall be mounted securely.

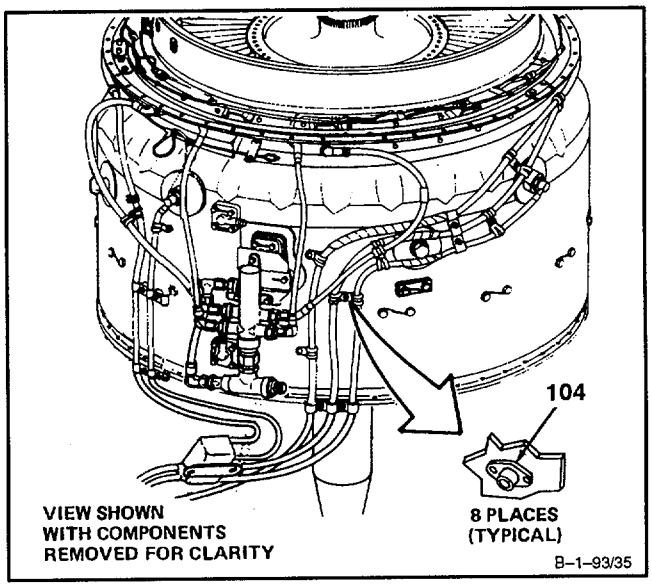

GO TO NEXT PAGE

23. **Install start fuel nozzles** (Ref. Task 6-27).

24. **Install spark igniters** (Ref. Task 7-10).

25. **Measure fourth stage power turbine rotor (105) tip clearance** at 0, 45, 90, 135, 180, 225, 270, and 315 degree positions as follows:

    a. Insert thickness gage (2) between blade tip (106) and fourth turbine nozzle inside diameter.

    b. **Measure and record tip clearance** while rotating fourth turbine disc assembly (105) clockwise one revolution for each check.

    c. Tip clearance shall be 0.020 inch minimum.

    d. If tip clearance is not at least 0.020 inch, proceed as follows:

        (1) Mark area in which clearance is not met. Use marking pencil (E38).

        (2) **Remove fourth stage power turbine rotor** (Ref. Task 4-33).

CAUTION

Do not blend into parent metal. Metal to metal contact could occur.

        (3) Remove material from area marked to allow proper clearance. Use 180 grit aluminum oxide cloth (E4).

        (4) **Install fourth stage power turbine rotor** (Ref. Task 4-36).

        (5) Recheck tip clearance.

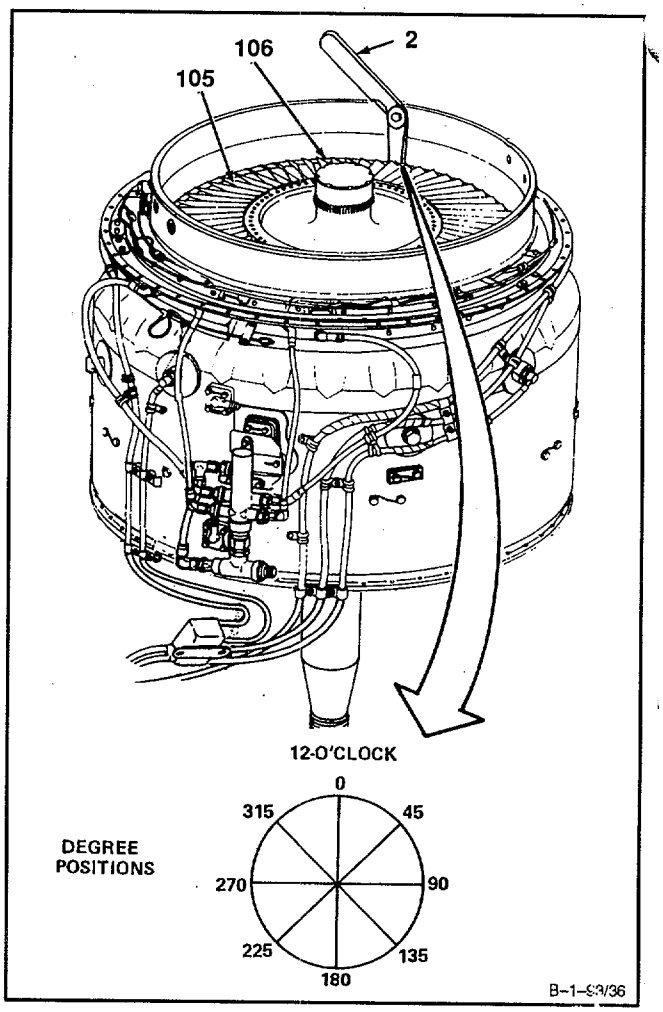

GO TO NEXT PAGE

26. **Inspect fourth stage power turbine rotor (105)** as follows:

    a. **Inspect disc (107).**

        (1) There shall be no cracks.

        (2) There shall be no burns.

        (3) There shall be no pitting, nicks, or rubs deeper than 0.010 inch except for balance grind marks (108).

        (4) There shall be no loose or cracked pins (109).

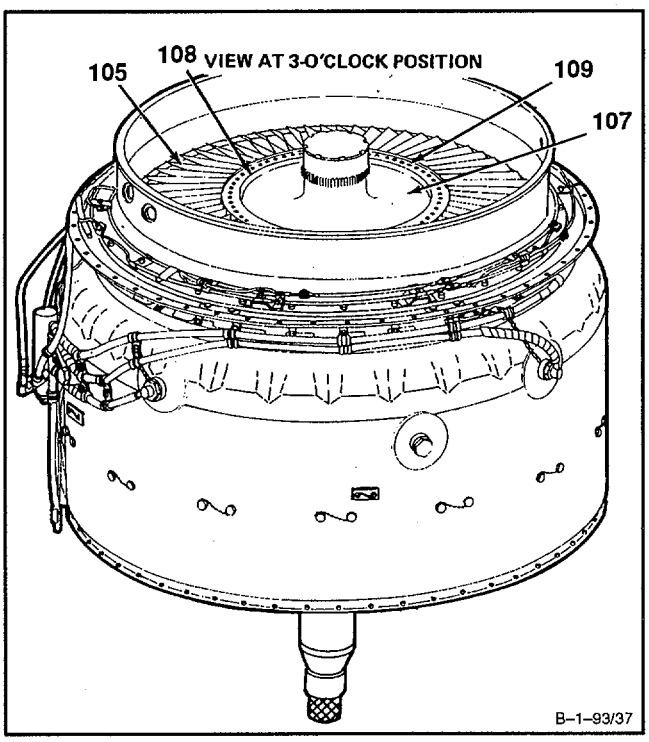

GO TO NEXT PAGE

b. **Inspect aft side (110) of 60 blades (111).** There shall be no more than 12 damaged blades.

(1) There shall be no cracks.

(2) There shall be no burns.

(3) There shall be no bending or distortion.

(4) There shall be no loss of material.

(5) There shall be no pitting deeper than 0.005 inch in non-critical area.

(6) There shall be no pitting, nicks or dents in inner critical area (112) or outer critical area (113).

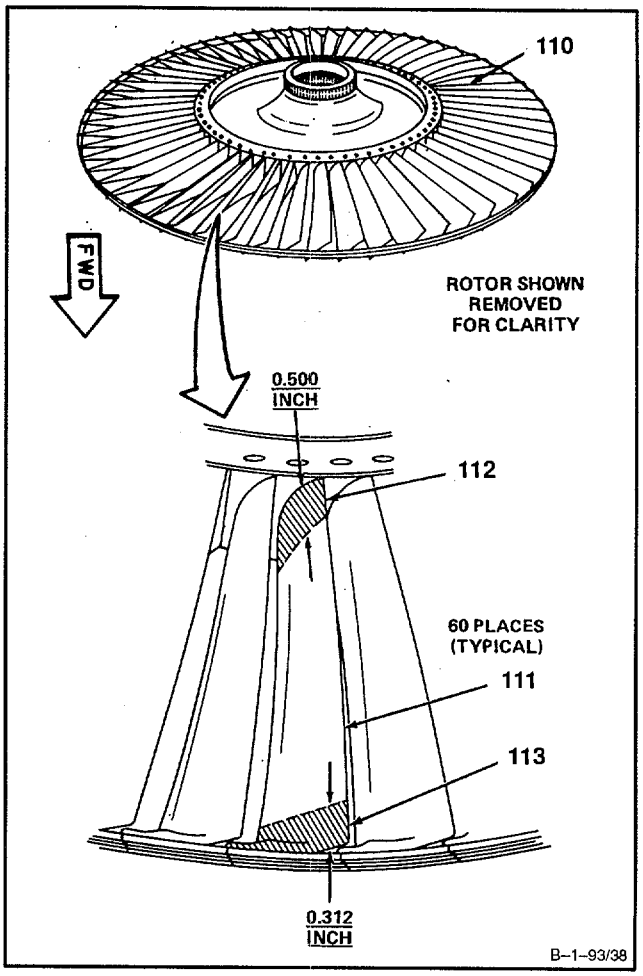

GO TO NEXT PAGE

(7) **Inspect inner half non-critical area (114)** as follows:

(a) There shall be no more than four nicks (115) or dents (116) in surface (117) longer than 0.094 inch or deeper than 0.015 inch.

(b) There shall be no more than two nicks (118) or dents (119) on leading or trailing edges (120) longer than 0.125 inch or deeper than 0.031 inch.

(8) **Inspect outer half non-critical area (121)** as follows:

(a) There shall be no more than four nicks (122) or dents (123) in surface (124) longer than 0.203 inch or deeper than 0.020 inch.

(b) There shall be no more than two nicks (125) or dents (126) on leading or trailing edges (127) longer than 0.219 inch or deeper than 0.078 inch.

(9) **Inspect tip labyrinth (128).** There shall be no nicks deeper than 0.015 inch.

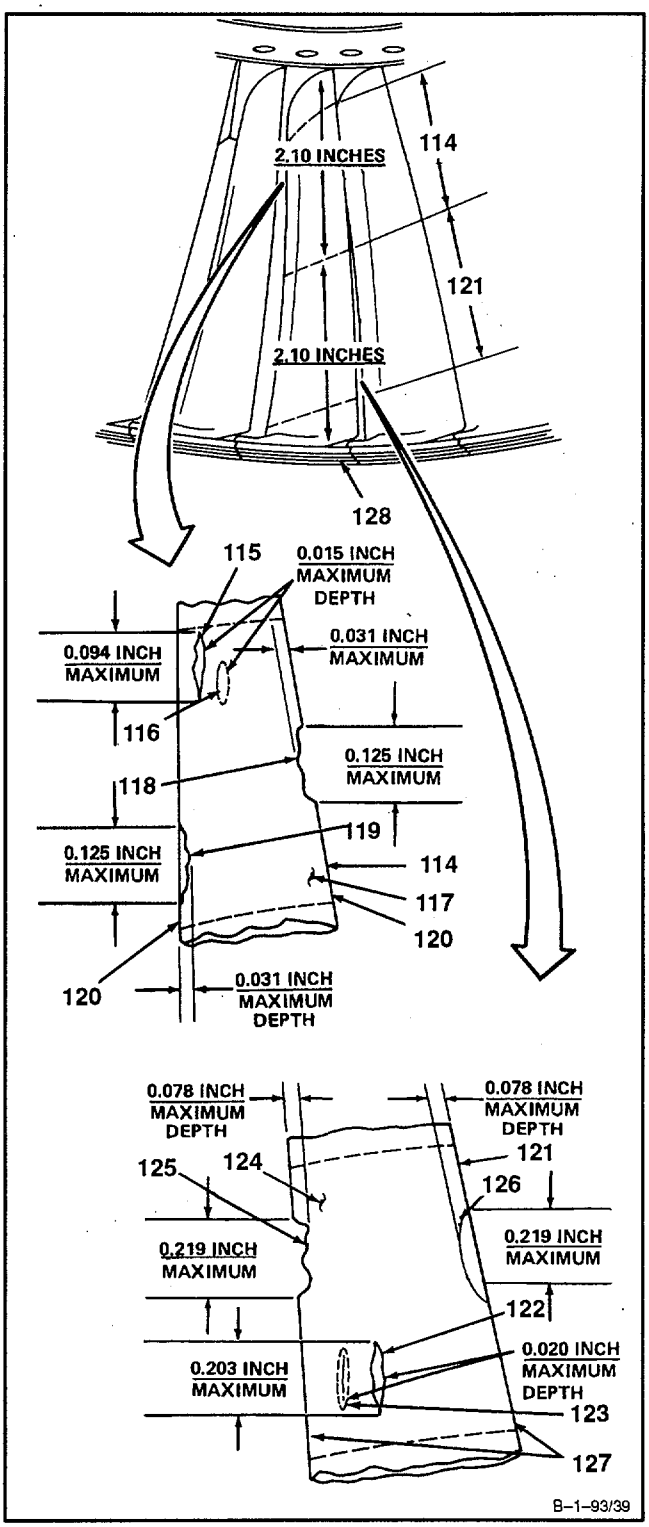

GO TO NEXT PAGE

c. **Measure gap** (129) **between blades** (111). Use thickness gage.

(1) Total gap between all blades shall be no greater than 0.120 inch.

(2) Total gap between all blades in any 90-degree quadrant (130) shall be no greater than 0.030 inch.

(3) There shall be no gap greater than 0.012 inch. There shall be no more than one 0.012 inch gap in any quadrant.

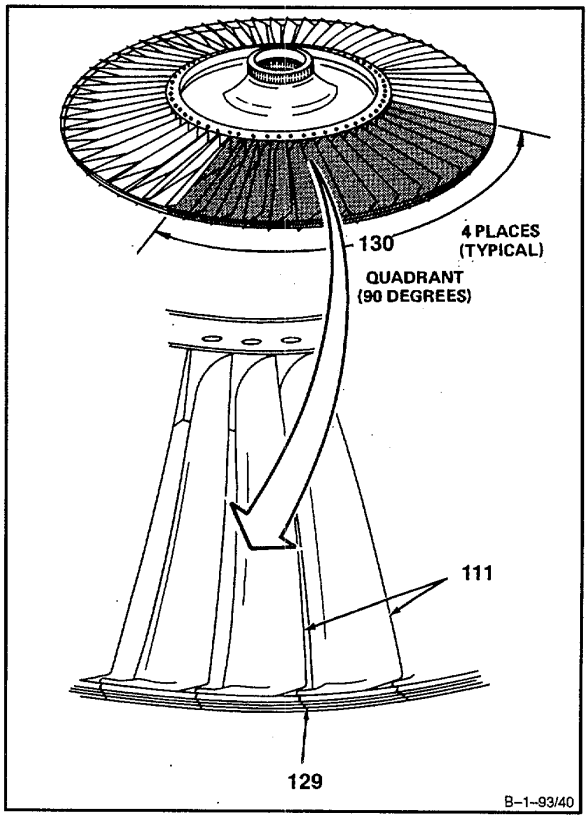

27. **Inspect aft side of fourth stage power turbine nozzle (131)** as follows:

a. **Inspect rear flange area (132).** There shall be no cracks or indications of burning.

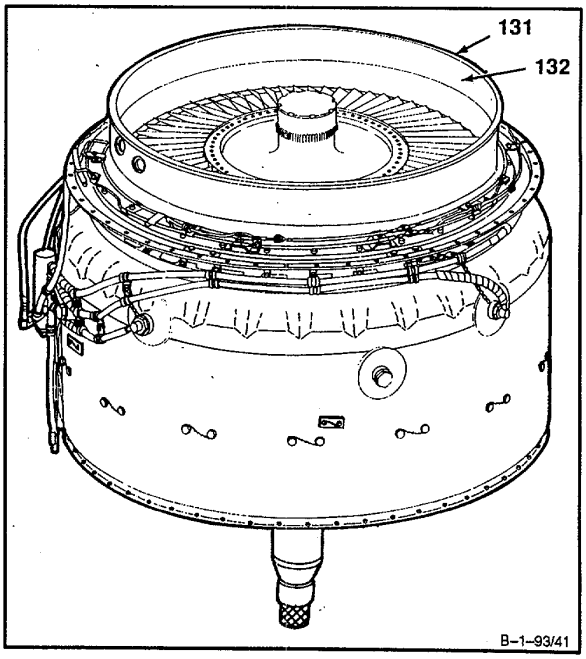

GO TO NEXT PAGE

b. Use flashlight and look between fourth stage turbine rotor blades. **Inspect outer shroud (133).**

(1) There shall be no cracks extending from trailing edge (134) of vane (135) into weldment (136).

(2) There shall be no vane-to-vane cracks.

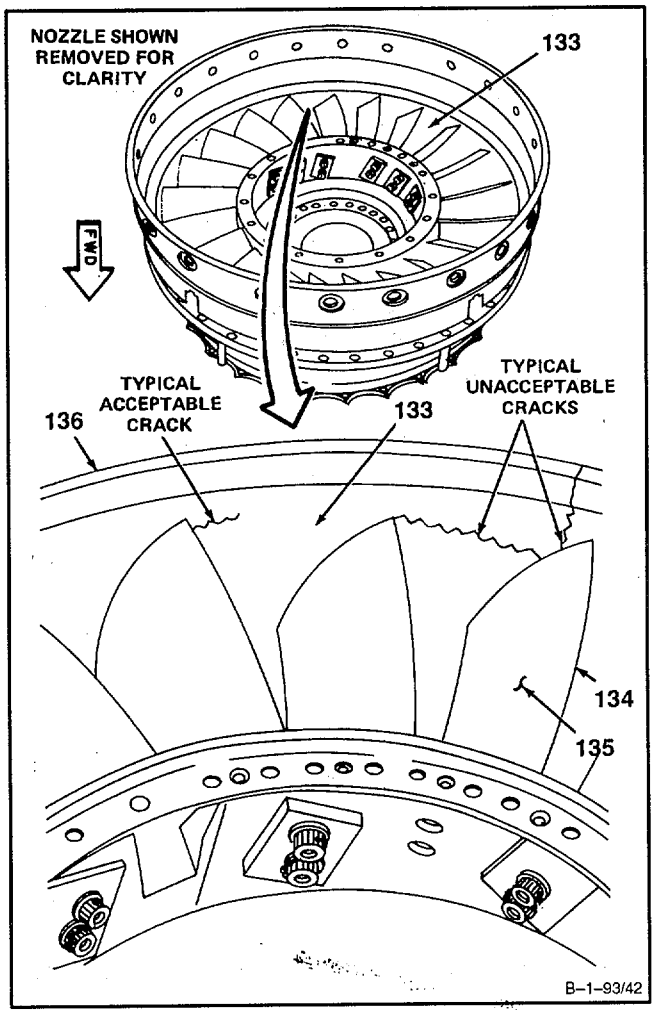

GO TO NEXT PAGE

c. **Inspect Inner shroud** (137). There shall be no vane-to-vane cracks.

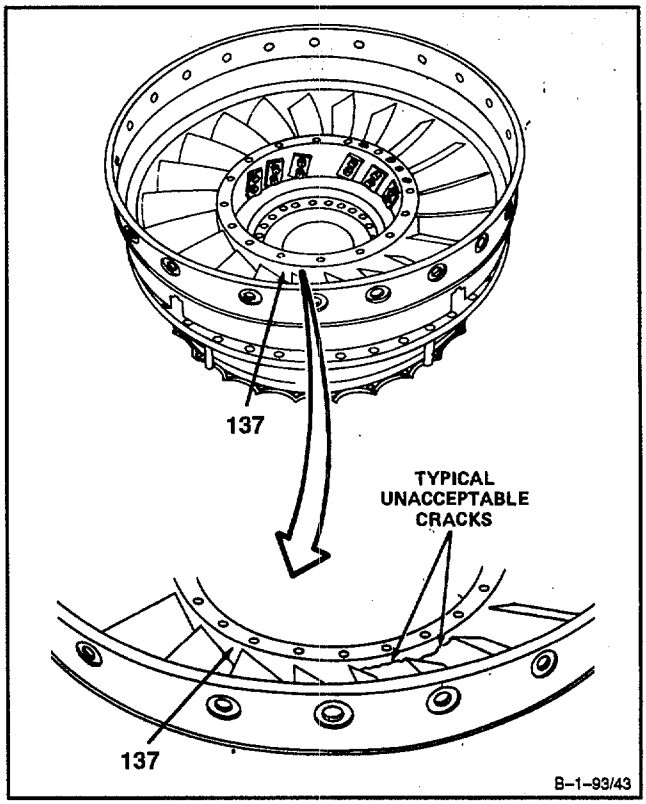

d. **Inspect 21 vanes** (135). There shall be no punctures or cracks.

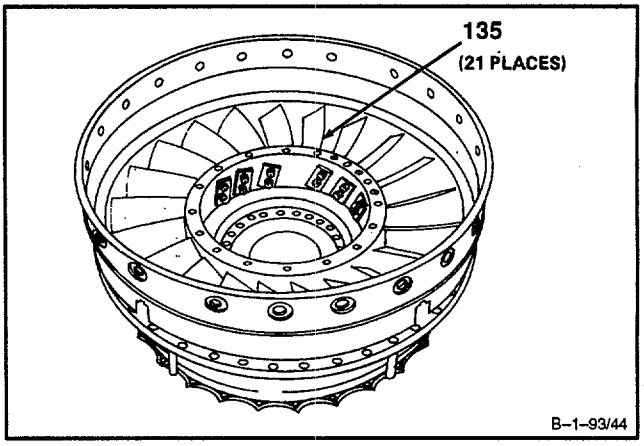

GO TO NEXT PAGE

28. Using helper, turn combustion section and power turbine (86) so that power shaft (138) is pointing up.

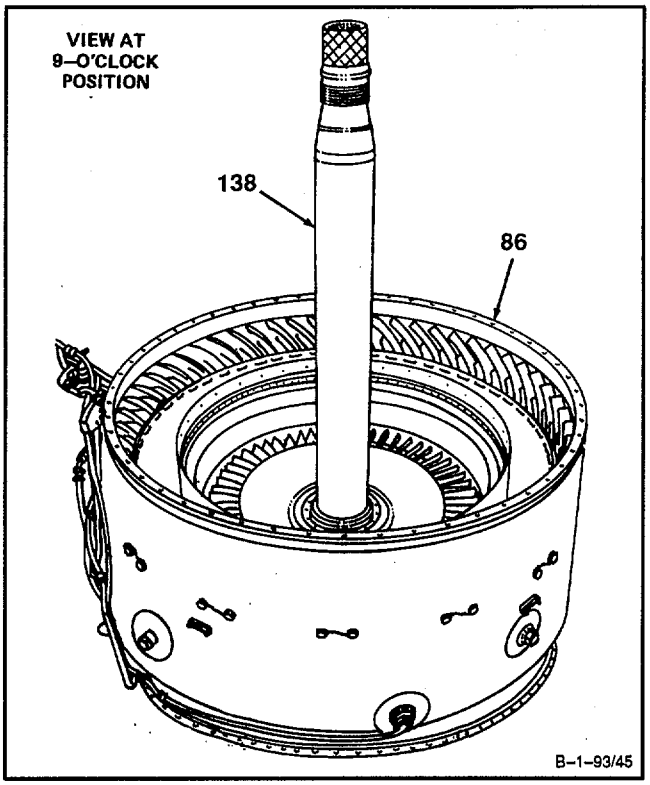

GO TO NEXT PAGE

29. **Inspect five pairs of probes (139) by looking between third stage nozzle vanes (140).** There shall be no missing or broken probes (139). There shall be no cracks or corrosion.

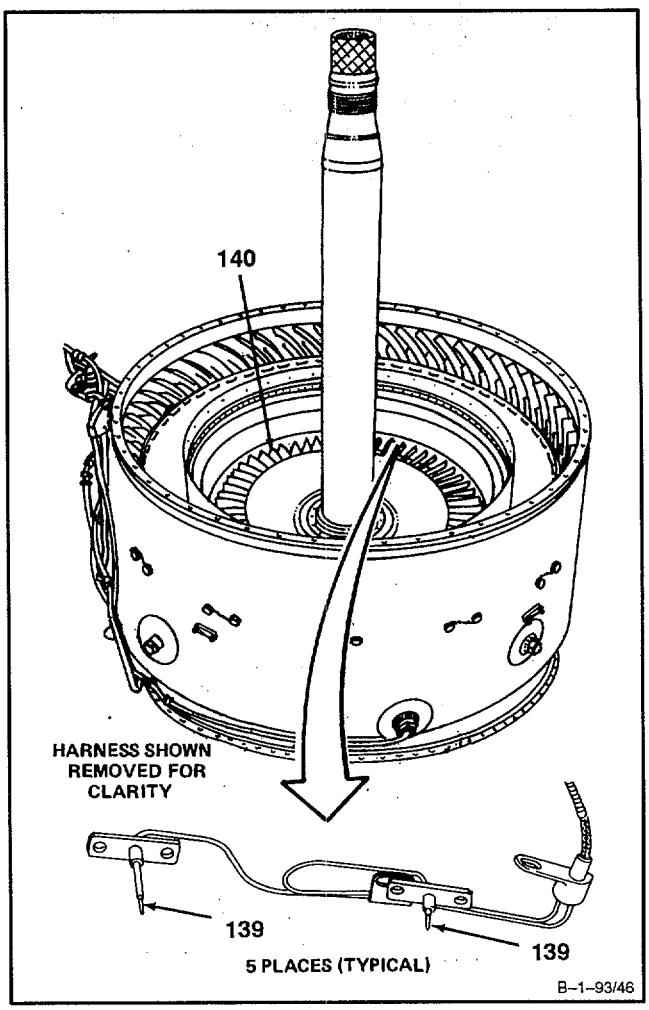

GO TO NEXT PAGE

30. **Inspect forward side of third turbine nozzle (141)** as follows:

    a. **Inspect outer shroud** (142). There shall be no cracks (143) from vane leading edge (144) longer than 1/8-inch.

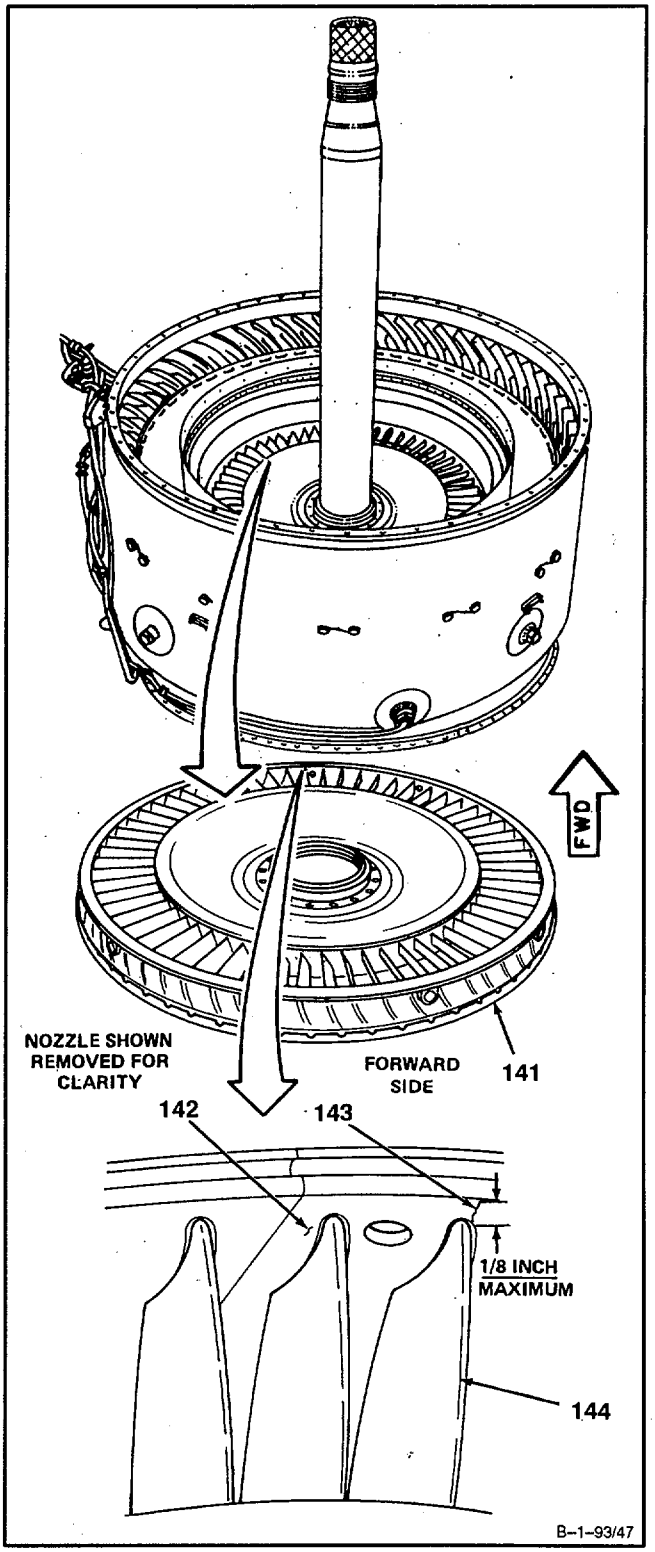

GO TO NEXT PAGE

b. **Inspect 61 vanes (145)** as follows:

(1) There shall be no nicks (146) in leading edge (144) deeper than 1/16-inch.

(2) There shall be no material burned off.

(3) There shall be no converging cracks (147).

(4) There shall be no cracks (148) wider than 1/32-inch.

(5) There shall be no cracks in any area where vane has been bent.

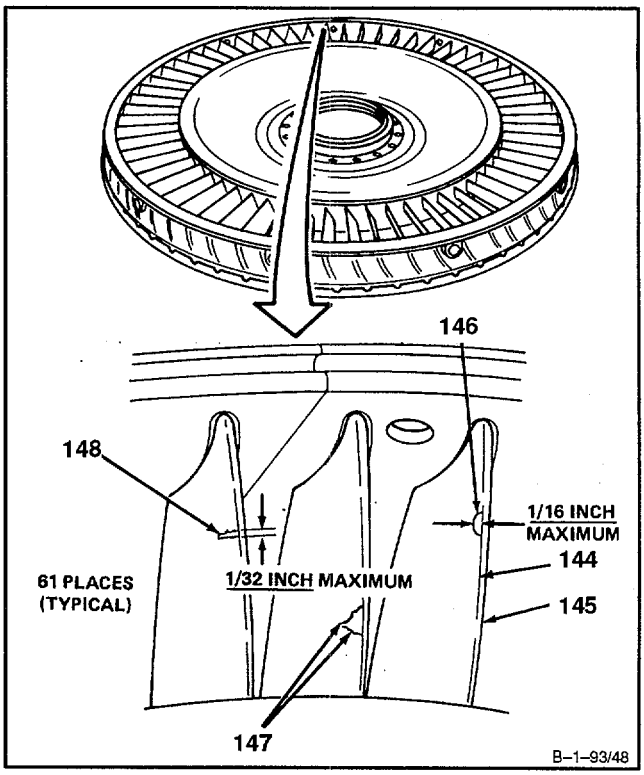

c. **Inspect Inner shroud (149).** There shall be no more than one crack (150) from each vane leading edge (144) to braze line (151).

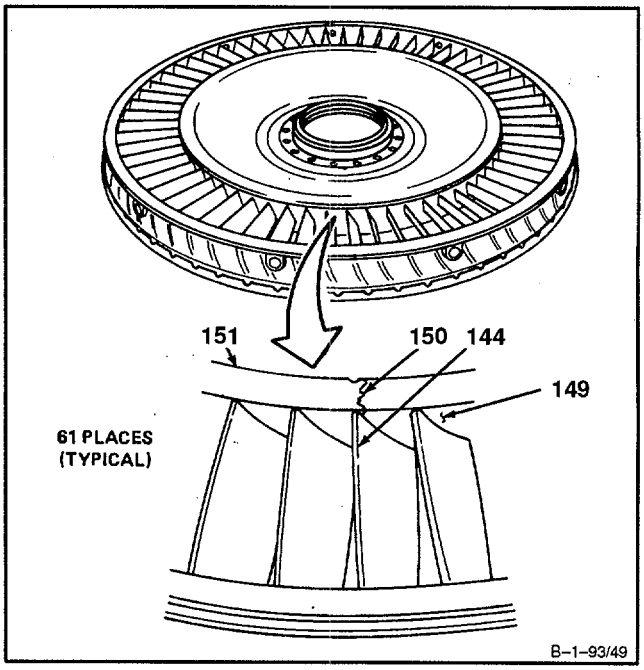

GO TO NEXT PAGE

d. **Inspect forward support (152).** There shall be no cracks.

e. **Inspect 16 rivets (153).** There shall not be more than 40 percent missing material (154).

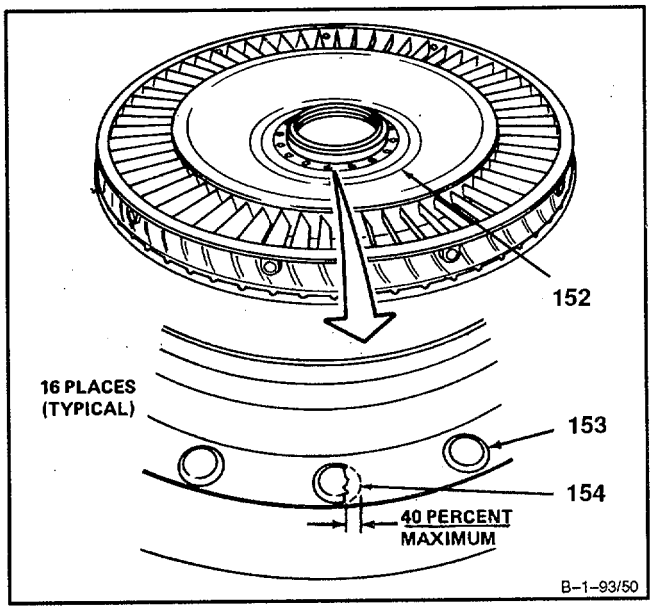

31. **Inspect forward side of Integral shaft assembly** (155) as follows:

a. Use flashlight and look between third stage turbine nozzle vanes. Inspect 64 blades (156).

(1) There shall be no cracks.

(2) There shall be no burns.

(3) There shall be no bending or distortion.

(4) There shall be no loss of material.

(5) There shall be no pitting.

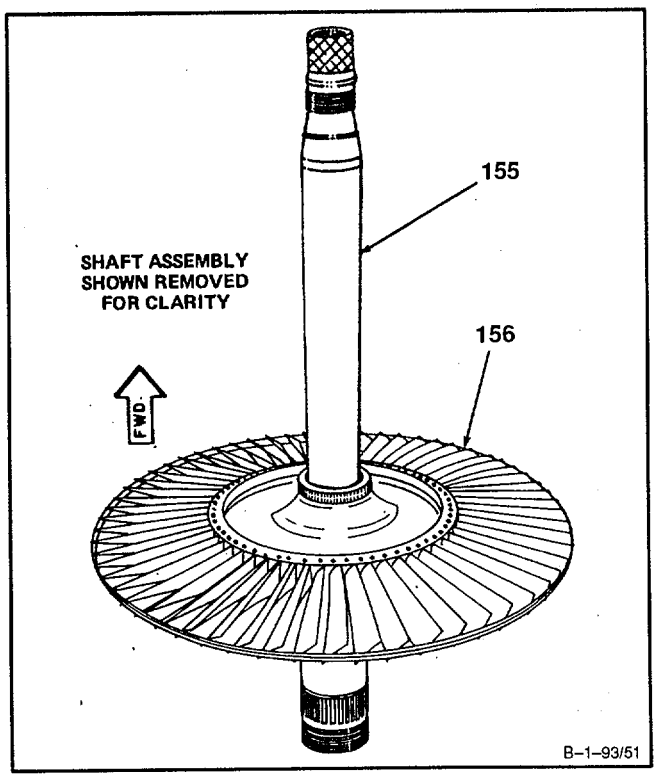

GO TO NEXT PAGE

b. **Remove vexar nylon webbing** (E62) (157) from shaft journal area (158).

c. **Inspect all visible areas of shaft (159).** There shall be no cracks.

d. **Inspect shaft journal area (158).**

(1) There shall be no pitting or nicking.

(2) Measure outside diameter. Use outside micrometer caliper. Outside diameter shall not be less than 2.0425 inches.

e. **Inspect spline (160)** (Ref. Task 1-109). There shall be no wear deeper than 0.005 inch.

f. **Install vexar nylon webbing (E62) (157)** on shaft-journal area (158).

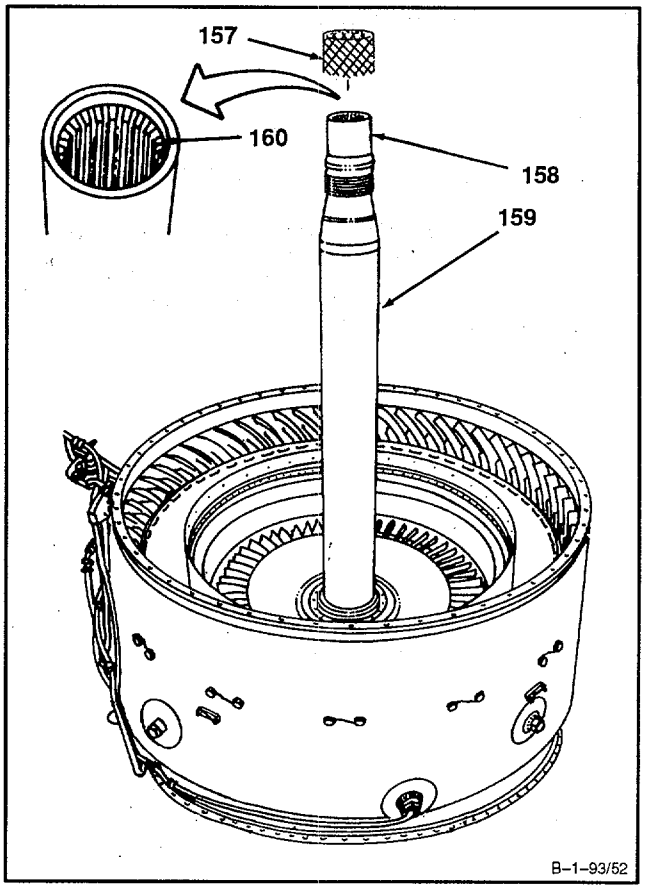

GO TO NEXT PAGE

32. **Inspect liner (161)** as follows:

NOTE
Coke buildup on liner is acceptable.

a. **Inspect outer liners (162)** as follows:

(1) **Inspect inner portion of aft outer liner (163).** There shall be no more than one crack (164) per hole (165) reaching to forward edge 166)

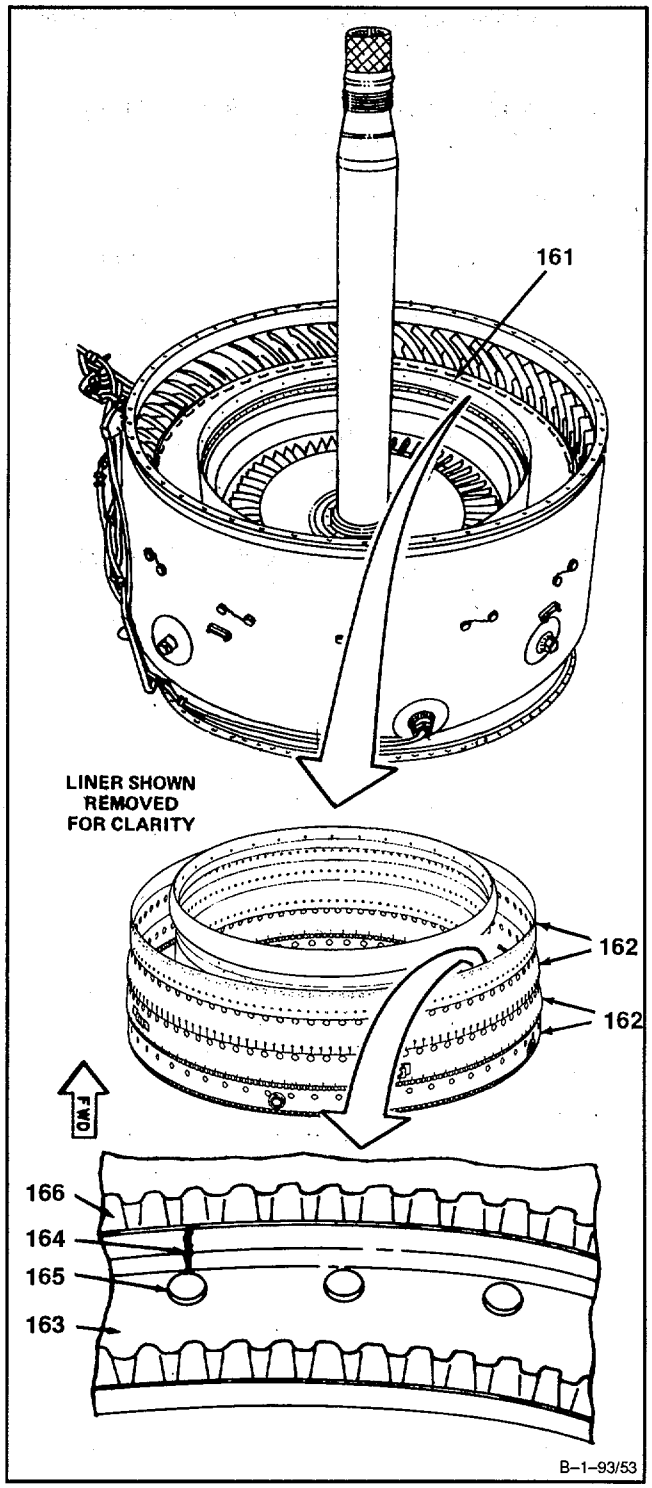

GO TO NEXT PAGE

(2) **Inspect air holes (167).** There shall be no more than one crack (168) per hole. These cracks shall not be more than 1/32-inch wide.

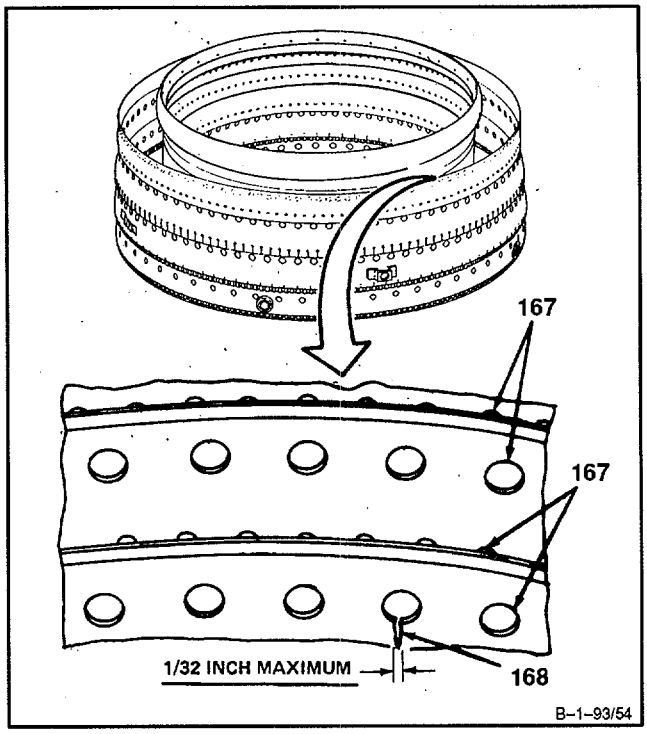

(3) **Inspect for burned areas (169)** on inside of outer liners (170) and (171). There shall be no holes (172).

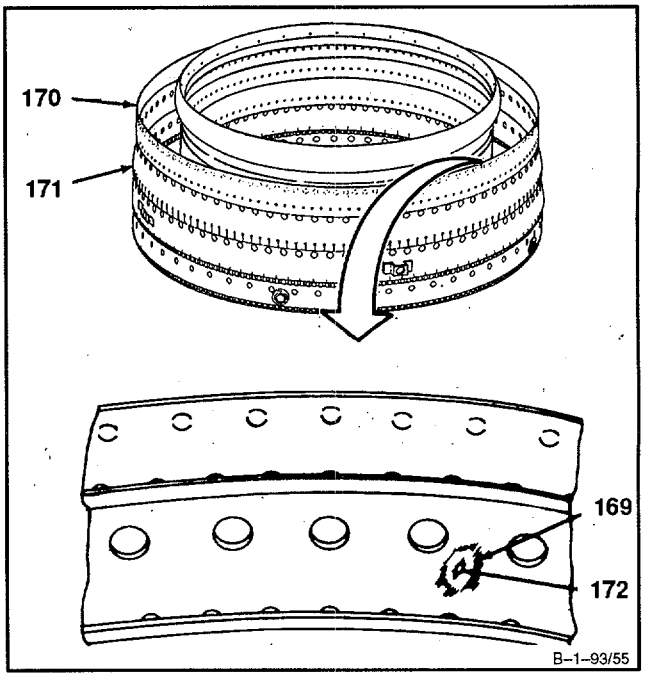

GO TO NEXT PAGE

(4) **Inspect joints (173) on inside of outer liners (170) and (171).** There shall be no separation or broken spot welds (174).

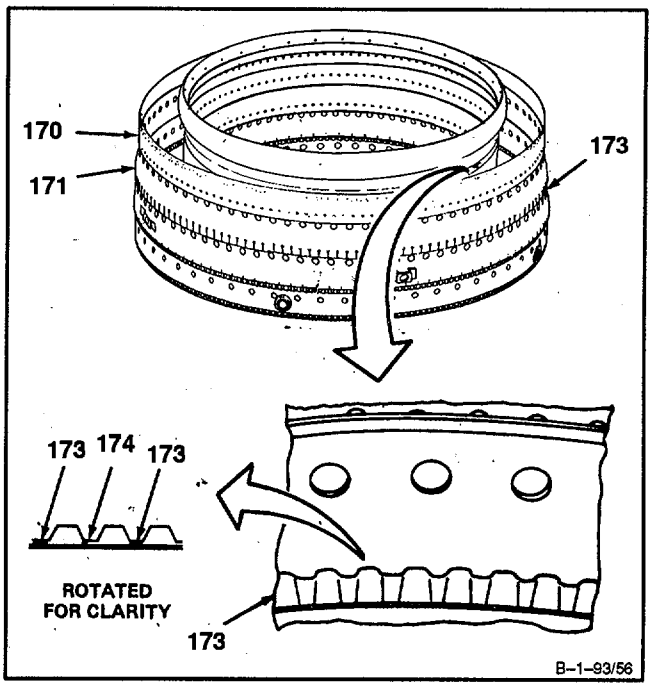

b. **Inspect Inner liners (175) and (176)** as follows:

(1) There shall be no cracks (177) longer than 1-inch. There shall be no cracks less than 5-inches apart on liner (176) or less than 2-inches apart on liner (175).

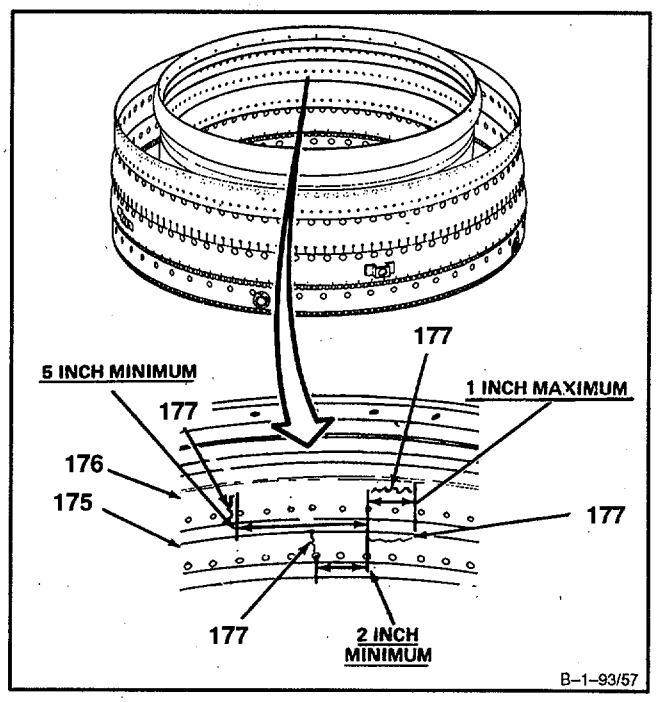

GO TO NEXT PAGE

(2) Inspect for burned areas (178). There shall be no holes (179).

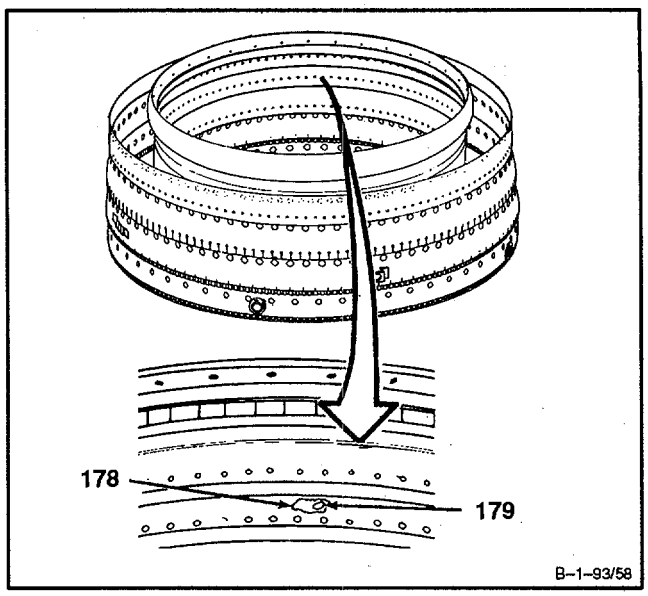

c. **Inspect liner end (180)** as follows:

(1) There shall be no cracks (181) longer than 1-inch or wider than 1/32-inch. The total length of all cracks shall not exceed 10-inches.

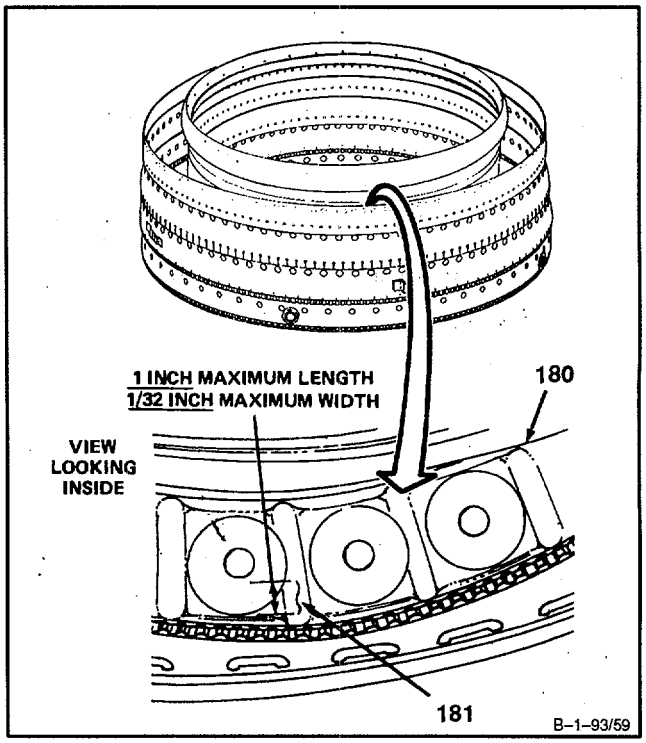

GO TO NEXT PAGE

(2) There shall be no converging cracks (182) which could result in loss of material.

(3) There shall be no holes (183) burned through.

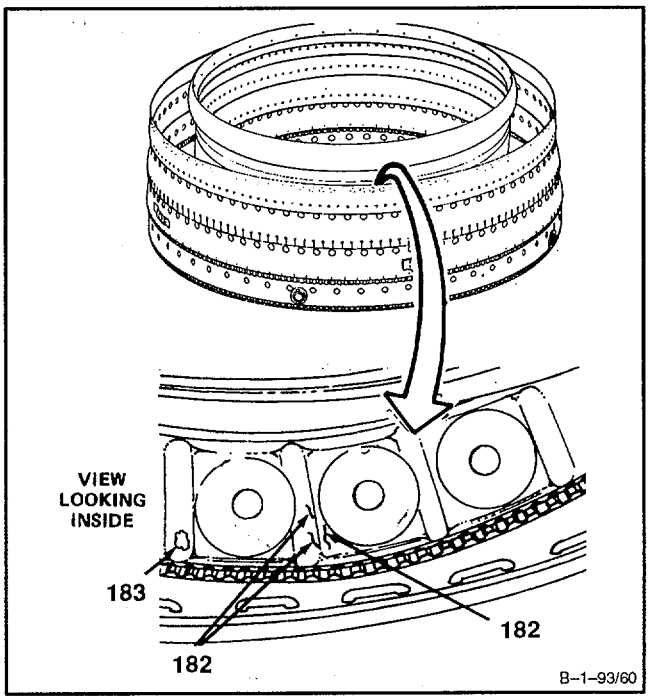

d. Inspect swirler cup outer edges (184) as follows:

(1) There shall be no circular cracks (185).
(2) There shall be no radial cracks (186) longer than 3/16-inch.

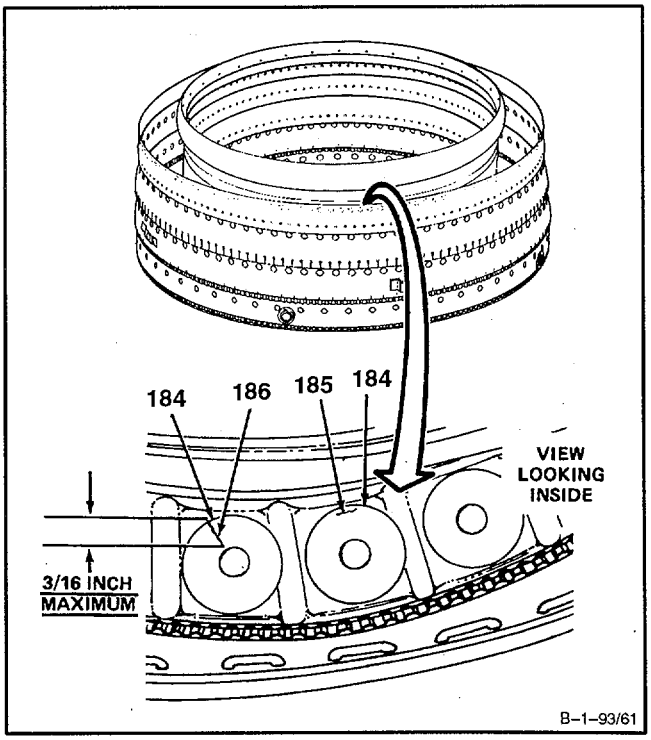

GO TO NEXT PAGE

(3) There shall be no burns (187) deeper than 1/8-inch.

(4) Burned area (187) shall not exceed more than one-quarter of the way around swirler cup (188).

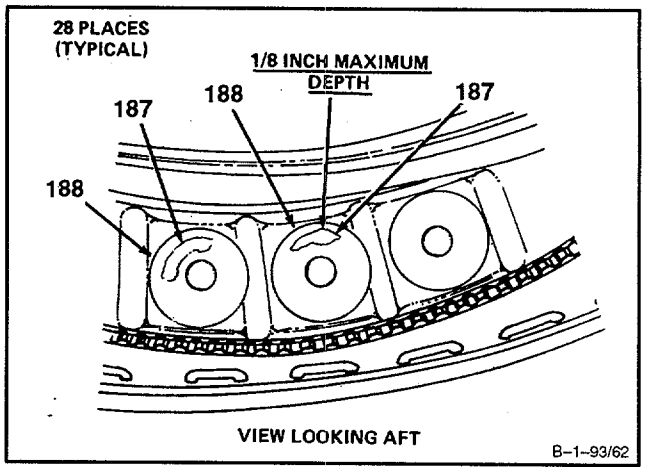

e. Inspect two guides (189). There shallbe no broken, cracked, or missing tabs (190).

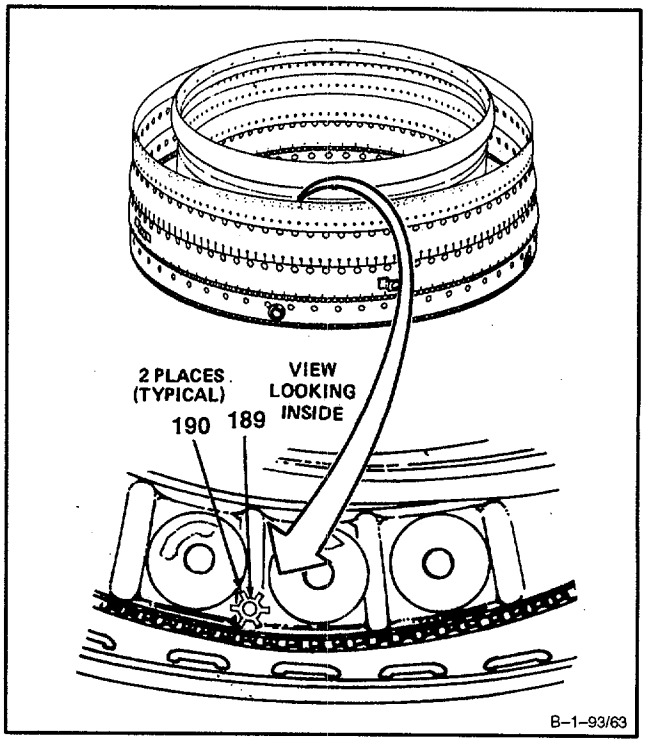

GO TO NEXT PAGE

f. Inspect for loss of thermal barrier top and base coats (191). Loss of thermal barrier top and base coats is acceptable provided all other inspection criteria are met.

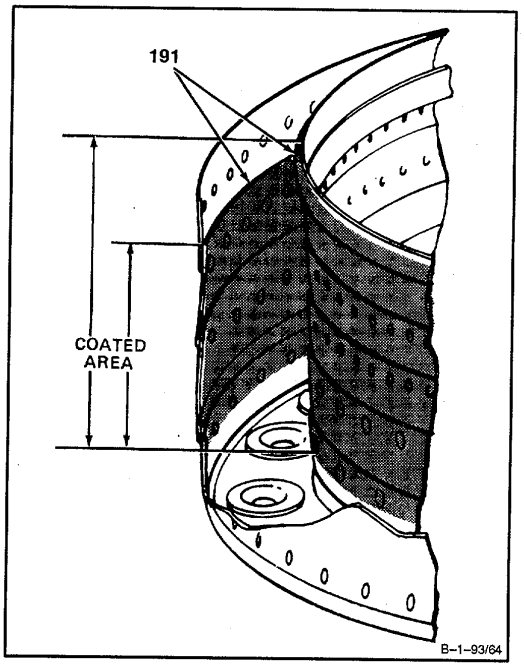

33. **Inspect combustion chamber vane assembly** (192) as follows:

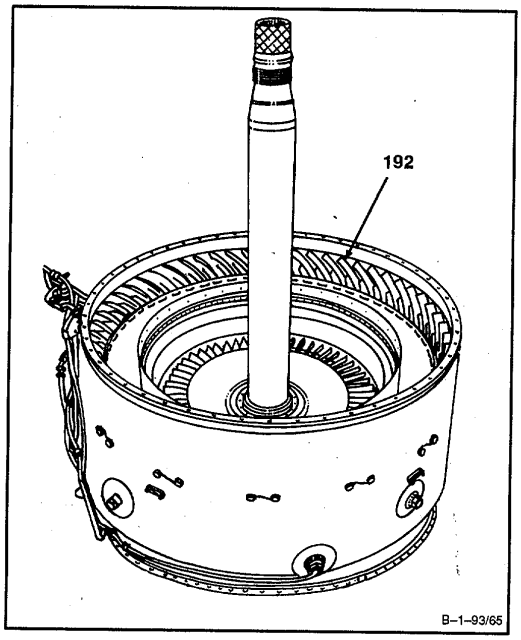

GO TO NEXT PAGE

a. **Inspect four vane segments** (193), (194), (195), and (196) as follows:

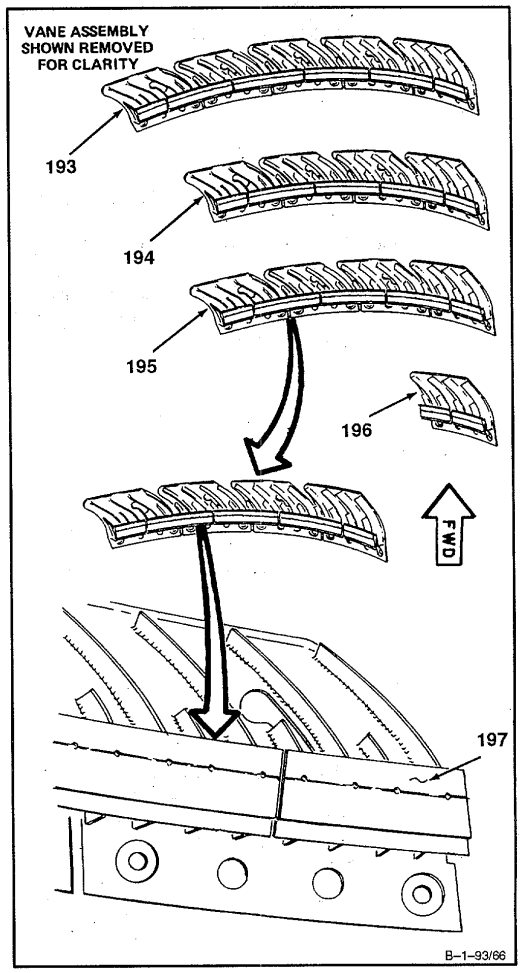

NOTE

The following inspection applies to four vane segments. Only one vane segment is shown.

(1) **Inspect inner shroud** (197) as follows:

(a) The total length of all cracks in the three longer vane assemblies (193), (194), and (195) shall not be greater than 6-inches.

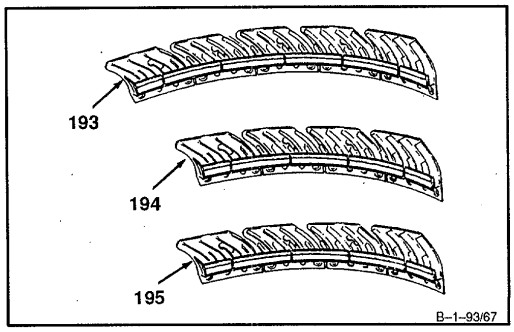

GO TO NEXT PAGE

(b) The total length of all cracks in the shorter vane assembly (196) shall not be greater than 2-inches.

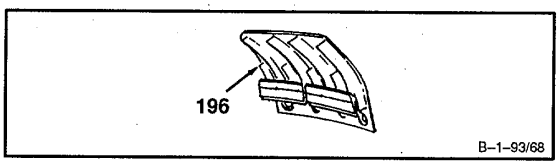

(2) Inspect outer shroud (198) as follows:

(a) There shall be no cracks (199) and (200) which do not have minimum separation (201). Minimum separation (201) shall be equal to the length (202) of shorter crack (199).

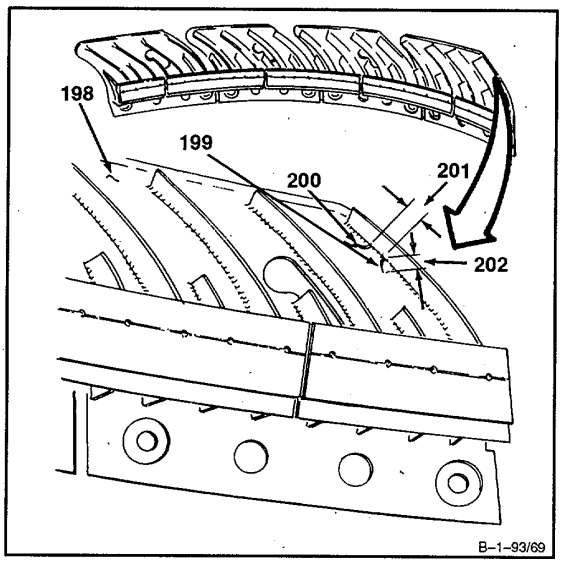

(b) Inspect brazement (203) between short vane (204) and outer shroud (198). There shall be no cracks or lack of braze (205) longer than 1/16-inch.

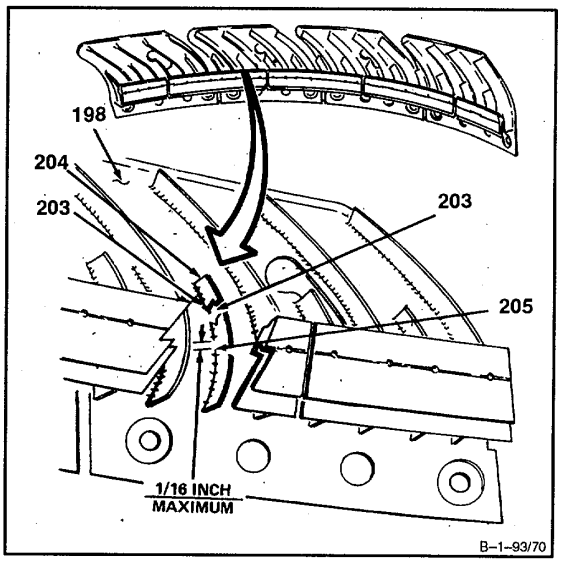

GO TO NEXT PAGE

(c) Inspect brazement (206) between long vane (207) and outer shroud (198). There shall be no cracks or lack of braze (208) longer than 3/8-inch.

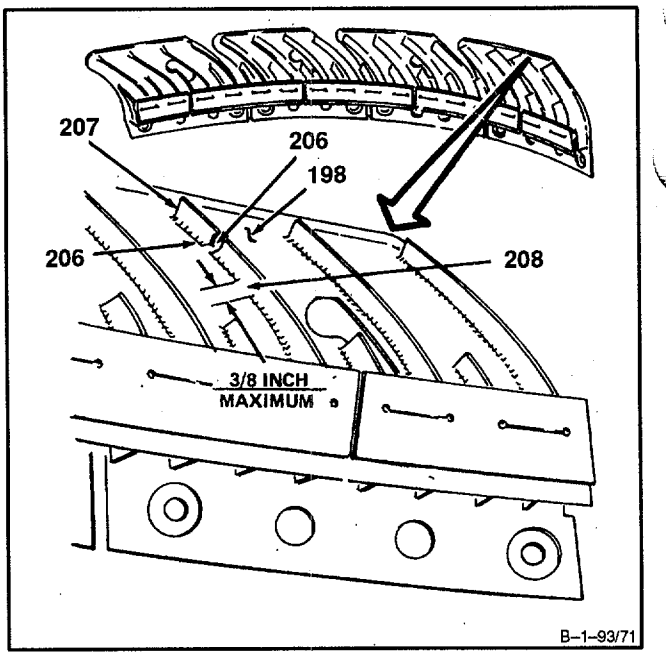

34. If inspection criteria in steps 11. thru 33. are not met, remove, clean, inspect, repair or replace defective parts. Refer to following tasks as needed.

a. Remove, clean, inspect, and install fire-shield assembly (Ref. Tasks 4-12, 4-13, 4-14, and 4-15).

b. Remove, clean, inspect, and install primer tube assembly (Ref. Tasks 6-20, 6-21, 6-22, and 6-23).

c. Remove, clean, Inspect, repair, and Install left- and right-hand fuel manifold assemblies (Ref. Tasks 6-15, 6-16, 6-17, 6-18, and 6-19).

d. Remove, clean, inspect, and install flow divider and bracket (Ref. Tasks 6-45, 6-46, 6-47, and 6-48).

e. Disassemble and assemble combustion section and power turbine (Ref. Tasks 3-6 and 3-7).

f. Remove, clean, Inspect, repair, test, and Install thermocouple harness assemblies (Ref. Tasks 4-20, 4-21, 4-22, 4-23, 4-24, and 4-25).

g. Disassemble and assemble combustion section (Ref. Tasks 3-9 and 3-10).

h. Clean and inspect combustion chamber vane assembly (Ref. Tasks 3-13 and 3-14).

i. Clean, inspect, and repair combustion chamber liner (Ref. Tasks 3-16, 3-17, and 3-18).

j. Clean and Inspect combustion chamber housing (Ref. Tasks 3-19 and 3-20).

k. Remove, clean, Inspect, and Install fuel drain valves (Ref. Tasks 3-1, 3-2, 3-3, and 3-4).

GO TO NEXT PAGE

l. Remove, clean, inspect, and install fourth stage power turbine rotor (Ref. Tasks 4-33, 4-34, 4-35, and 4-36).

m. Remove, clean, inspect, repair and install fourth stage power turbine nozzle (Ref. Tasks 4-46, 4-47, 4-48, 4-49, and 4-50).

n. Remove, disassemble, clean, inspect, repair, assemble, and install third turbine nozzle and support (Ref. Tasks 4-26, 4-27, 4-28, 4-29, 4-30, 4-31, and 4-32).

o. Clean, inspect, and repair third stage power turbine rotor (Ref. Tasks 4-51, 4-52, and 4-53).

35. Using helper, turn combustor section and power turbine (86) so that power shaft (138) is pointing down.

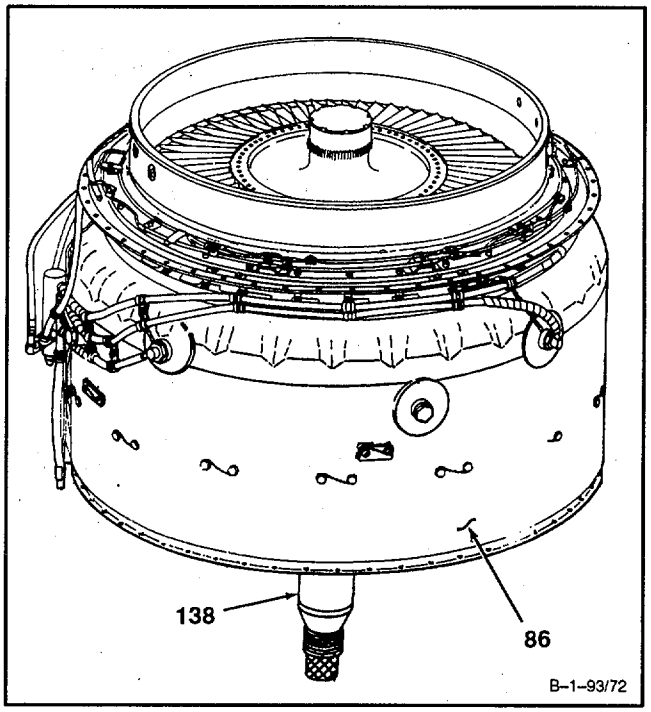

GO TO NEXT PAGE

36. Install group aircraft cover (T39) (85) and clamp coupling half (T49) (84) on combustion section and power turbine (86).

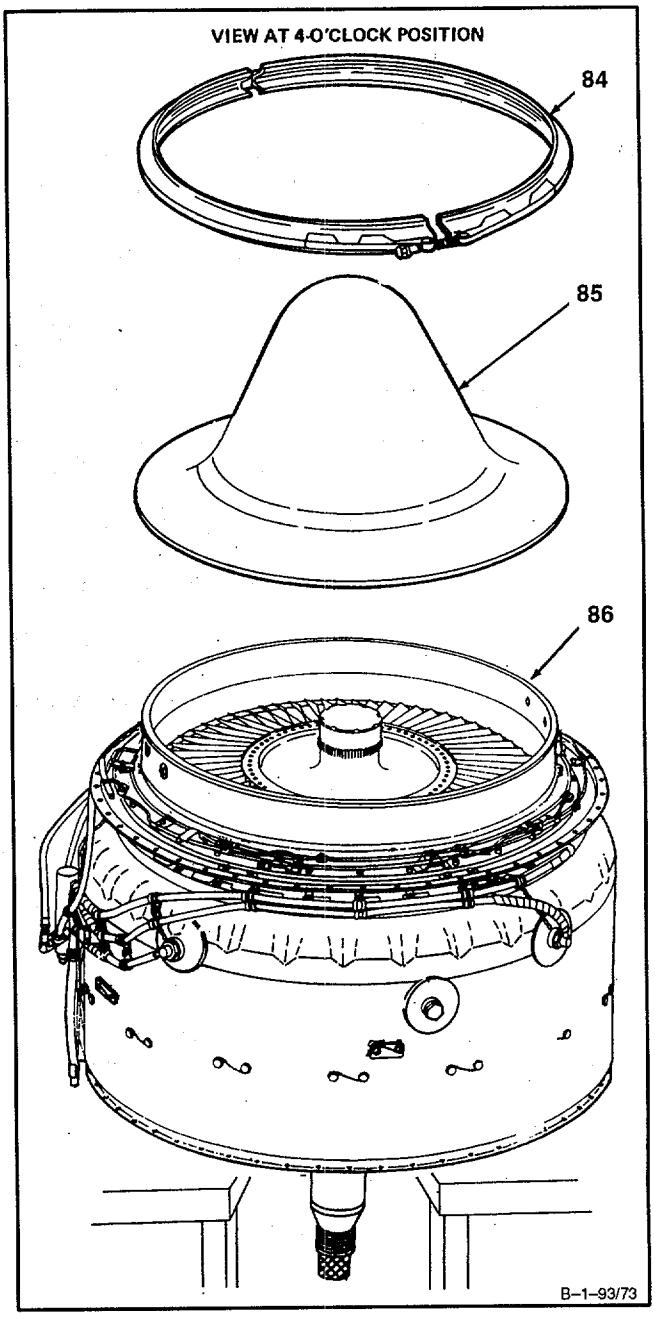

INSPECT

FOLLOW-ON MAINTENANCE:
Install Combustion Section and Power Turbine (Task 3-8).
Service Engine Oil System (Task 1-68).

END OF TASK

11-88 MINOR SERVICING

This section provides instructions for performing maintenance checks and services to keep engine systems serviceable. These checks and services include removal, cleaning, inspection, and installation of items related to, but not necessarily covered in engine accessory maintenance procedures. These checks and services may be part of scheduled or special inspections or they may stand alone. They are divided into the following tasks:

LIST OF TASKS

NUMBER	TASK	PAGE
1-89	Service Starter Gearbox Filter	1-432
1-90	Service Oil Filler Strainer	1-435
1-91	Service No. 2 Bearing Pressure Oil Strainer	1-439
1-92	Service No. 4 and 5 Bearing Oil Filter	1-443
1-93	Service Oil Filter Cover Assembly and Oil Filter Element	1-454
1-94	Service Scavenge Oil Screen	1-459
1-95	Service Main Fuel Filter	1-472
1-96	Service In-Line Fuel Filter Assembly	1-475
1-97	Service Interstage Air-Bleed Actuator Strainer	1-479
1-98	Overhaul and Retirement Schedule	1-485

1-89 SERVICE STARTER GEARBOX FILTER 1-89

INITIAL SETUP

Applicable Configurations:
All

Tools:
Powerplant Mechanic's Tool Kit, NSN 5180-00-323-4944
Technical Inspection Tool Kit, NSN 5180-00-323-5114
Goggles
Compressed Air Source

Materials:
Dry Cleaning Solvent (E19)
Gloves (E24)
Lockwire (E33)
Wiping Rag (E64)

Parts:
Packing

Personnel Required:
Aircraft Powerplant Repairer
Aircraft Powerplant Inspector

References:
TM 1-2840-252-23P

General Safety Instructions:

WARNING

Lubricating oils cause paralysis if swallowed. Prolonged contact with them may irritate the skin. Handle only in well-ventilated areas away from heat and flame. Drain and store in approved metal safety containers. Avoid prolonged or repeated contact with skin and do not take Internally. Wash contacted area of skin thoroughly after handling. If Irritation of skin results, get medical attention. Get medical attention for eyes.

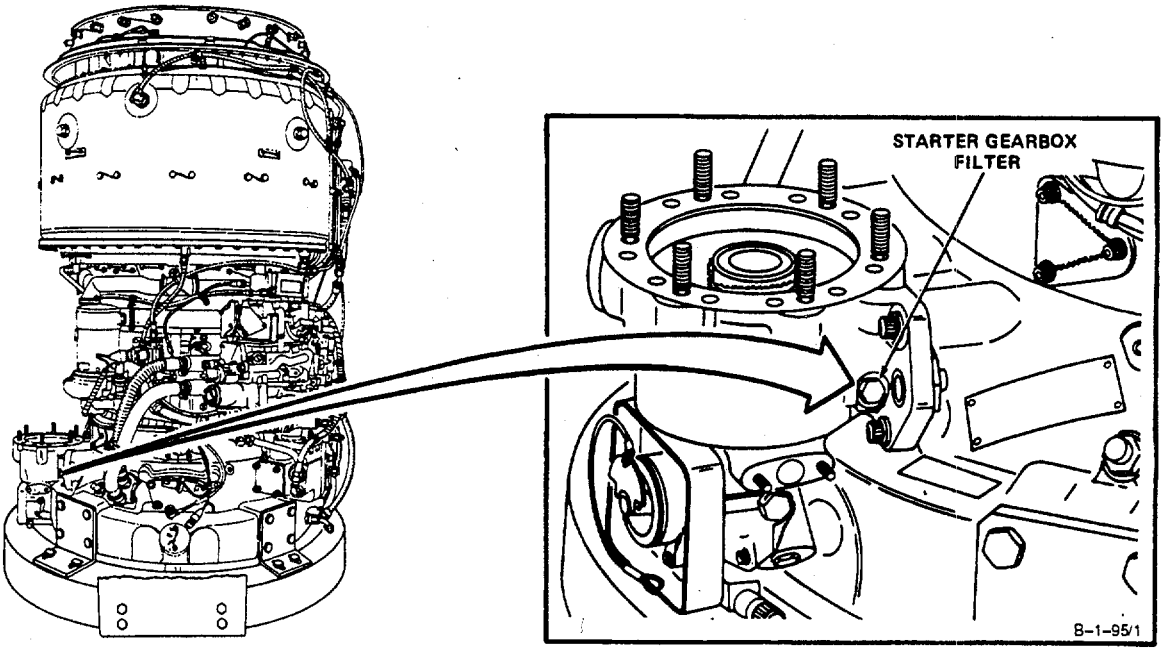

GO TO NEXT PAGE

1. Remove lockwire, starter gearbox filter (1), washer (2) and packing (3).
2. Clean starter gearbox filter (1) as follows:

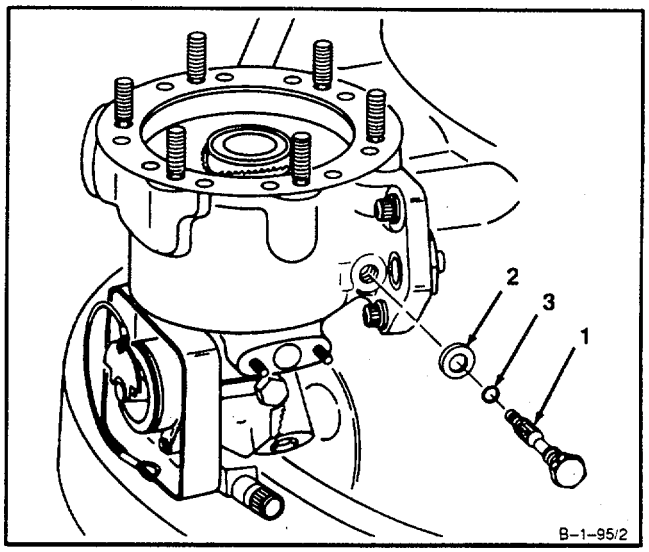

WARNING

Dry cleaning solvent (E19) is flammable and toxic. It can irritate skin and cause burns. Use only In well-ventilated area, away from heat and open flame. In case of contact, Immediately flush skin or eyes with water for at least 15 minutes. Get medical attention for eyes.

a. Wear gloves (E24). Immerse filter in dry cleaning solvent (E19) and agitate. Use brush on threads (4).

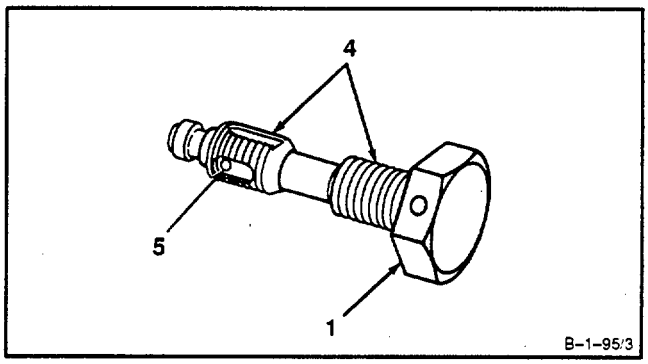

WARNING

When using compressed air for cleaning, use approved protective equipment for eyes and face. Do not use more than 30 psig air pressure. Do not direct air **toward yourself or another person. Failure to comply could result** In **Injury to eyes or skin.** In **case of Injury, get medical attention.**

b. Wear goggles. Blow dry starter gearbox filter(1) and internal passage (5). Use clean, dry compressed air.

3. **Inspect starter gearbox filter** (1) as **follows:**

a. There shall be no cracks.

b. There shall be no clogging of threads (4) or internal passages (5).

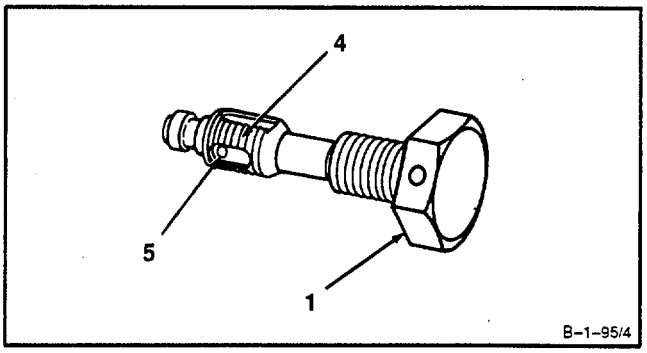

GO TO NEXT PAGE

4. Install new packing (6) in groove (7) on starter gearbox filter (1).

5. Install washer (2) and starter gearbox filter (1) in housing (8). Tighten starter gearbox filter (1) to 22 inch-pounds. Lockwire starter gearbox filter (1). Use lockwire (E33).

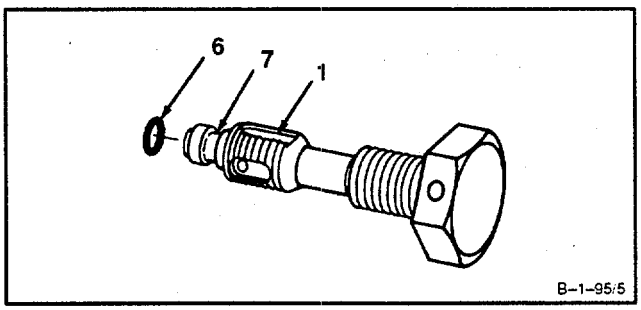

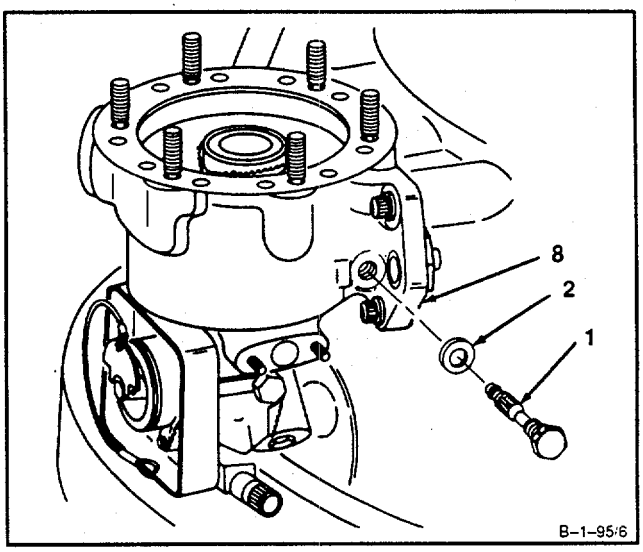

INSPECT

FOLLOW-ON MAINTENANCE:

None

END OF TASK

1-90 SERVICE OIL FILLER STRAINER 1-90

INITIAL SETUP

Applicable Configurations:
All

Tools:
Powerplant Mechanic's Tool Kit, NSN 5180-00-323-4944
Technical Inspection Tool Kit, NSN 5180-00-323-5114
Goggles
Compressed Air Source

Materials:
Dry Cleaning Solvent (E19)
Gloves (E24)
Lockwire (E33)
Wiping Rag (E64)

Parts:
Packing

Personnel Required:
Aircraft Powerplant Repairer
Aircraft Powerplant Inspector

References:
TM 1-2840-252-23P

General Safety Instructions:

WARNING

Lubricating oils cause paralysis if swallowed. Prolonged contact with them may irritate the skin. Handle only in well-ventilated areas away from heat and flame. Drain and store in approved metal safety containers. Avoid prolonged or repeated contact with skin and do not take Internally. Wash contacted area of skin thoroughly after handling. If Irritation of skin results, get medical attention. Get medical attention for eyes.

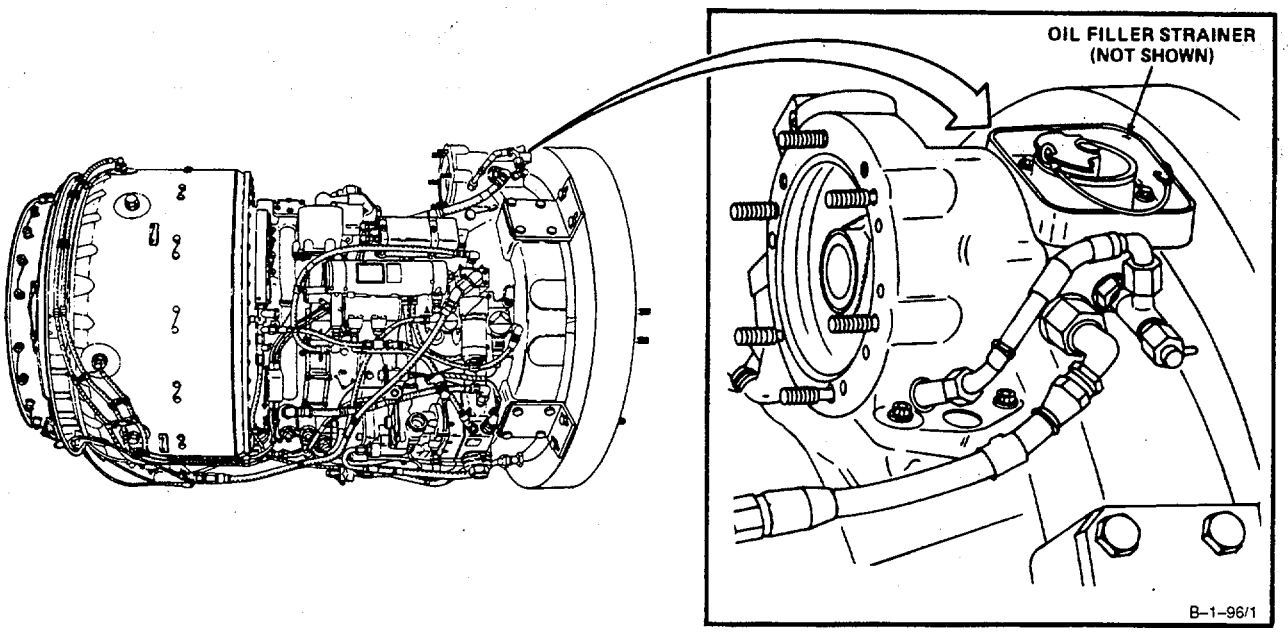

GO TO NEXT PAGE

1. Remove lockwire, three bolts (1), and oil filler assembly (2).

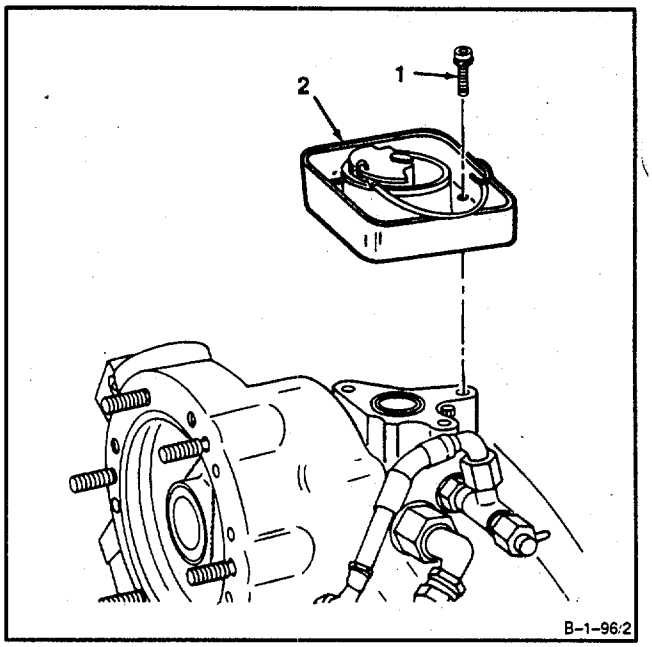

2. Remove oil filler strainer (3) and packing (4).

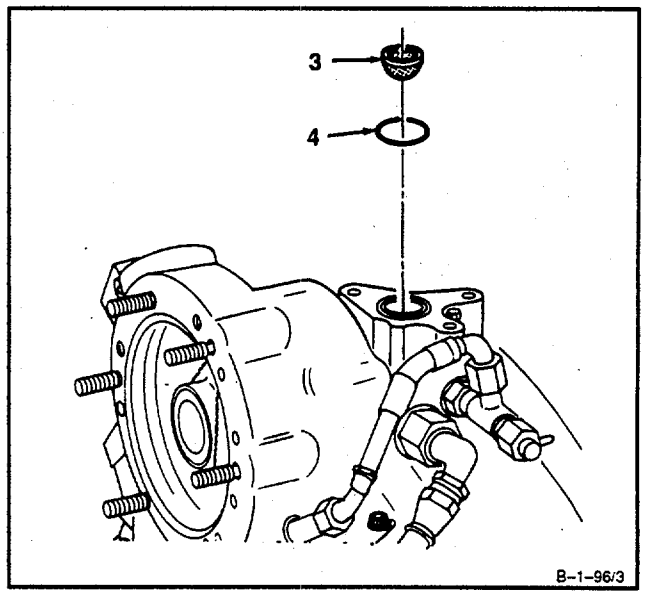

GO TO NEXT PAGE

3. Clean oil filler strainer (3) as follows:

WARNING

Dry cleaning solvent (E19) Is flammable and toxic. It can Irritate skin and cause burns. Use only In well-ventilated area, away from heat and open flame. In case of contact, immediately flush skin or eyes with water for at least 15 minutes. Get medical attention for eyes.

a. Wear gloves (E24). Immerse in dry cleaning solvent (E19) and agitate. Use brush on screen (5).

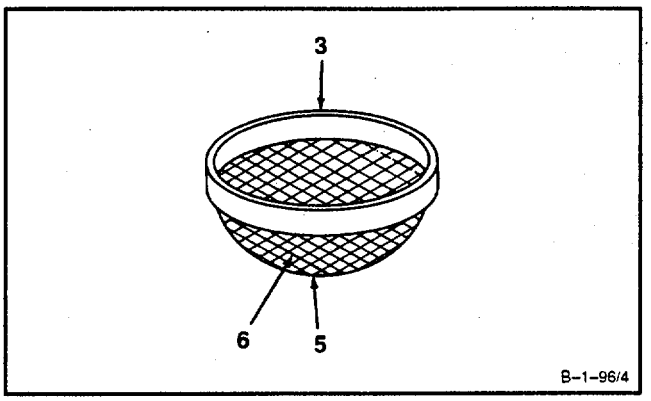

WARNING

When using compressed air for cleaning, use approved protective equipment for eyes and face. Do not use more than 30 psig air pressure. Do not direct air toward yourself or another person. Failure to comply could result In Injury to eyes or skin. In case of Injury, get medical attention.

b. Wear goggles. Blow dry screen (5). Use clean, dry, compressed air.

4. **Inspect oil filler** strainer (3). There shall be no broken wires (6).

5. **Install packing** (4) in groove (7) of housing (8).

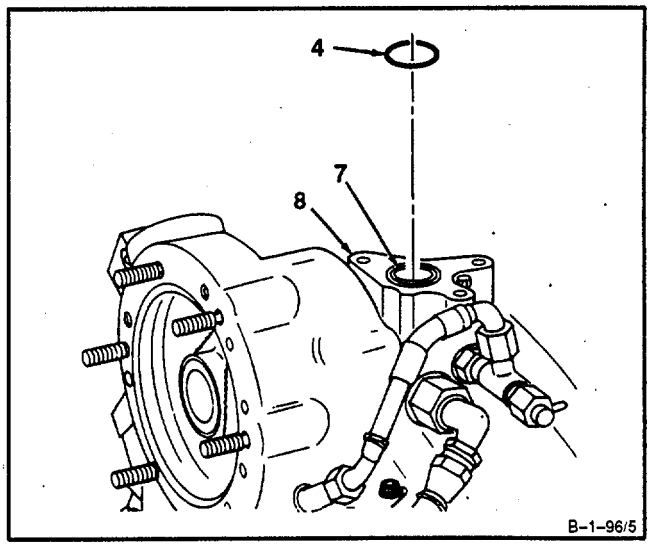

GO TO NEXT PAGE

6. Install oil filler strainer (3) in housing (8).

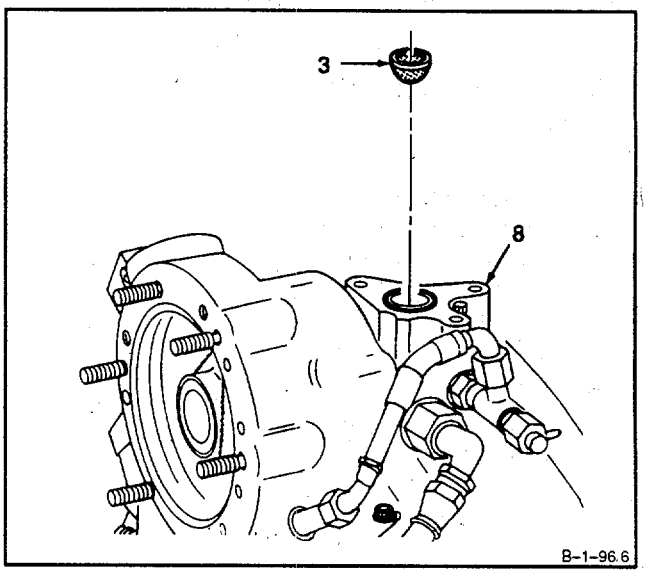

7. Install oil filler assembly (2) and three bolts (1) on housing (8). Lockwire bolts (1). Use lockwire (E33).

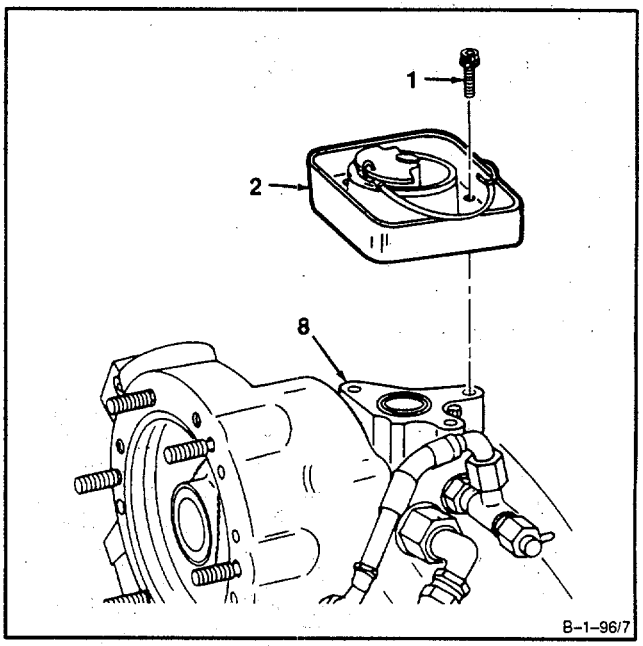

INSPECT

FOLLOW-ON MAINTENANCE:
None

END OF TASK

1-91 SERVICE NO. 2 BEARING PRESSURE OIL STRAINER 1-91

INITIAL SETUP

Applicable Configurations:

All

Tools:

Powerplant Mechanic's Tool Kit, NSN 5180-00-323-4944
Technical Inspection Tool Kit, NSN 5180-00-323-5114
Goggles
Dry Compressed Air Source

Materials

Dry Cleaning Solvent (El 9)
Lockwire (E33)
Wiping Rag (E64)

Parts:

Packing

Personnel Required:

Aircraft Powerplant Repairer
Aircraft Powerplant Inspector

References:

TM 1-2840-252-23P
Task 1-80

General Safety Instructions:

WARNING

Lubricating oils cause paralysis If swal lowed. Prolonged contact with them may irritate the skin. Handle only in well-ventilated areas away from heat and flame. Drain and store in approved metal safety containers. Avoid prolonged or repeated contact with skin and do not take internally. Wash contacted area of skin thoroughly after handling. If irritation of skin results, get medical attention. Get medical attention for eyes.

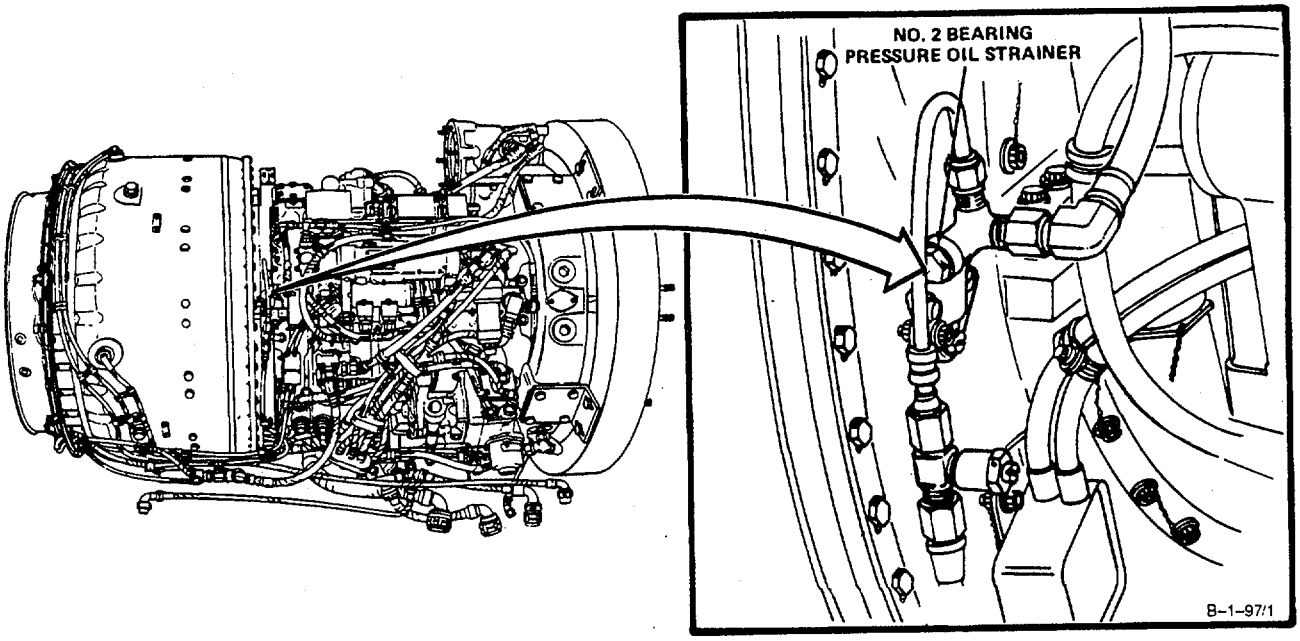

GO TO NEXT PAGE

1. **Disconnect tee and snubber (1)** from No. 2 bearing pressure oil connector (2).
2. **Remove nut (3)** and bolt (4).
3. **Loosen tube assembly (5)** and swing tube assembly to side.

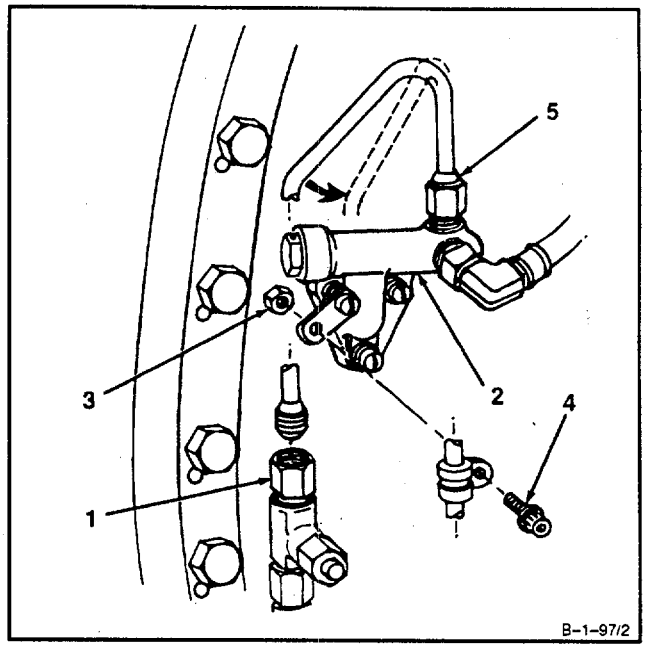

4. **Remove** lockwire, No. 2 **bearing pressure oil strainer (6),** and packing (7) from No. 2 bearing pressure oil connector (2).

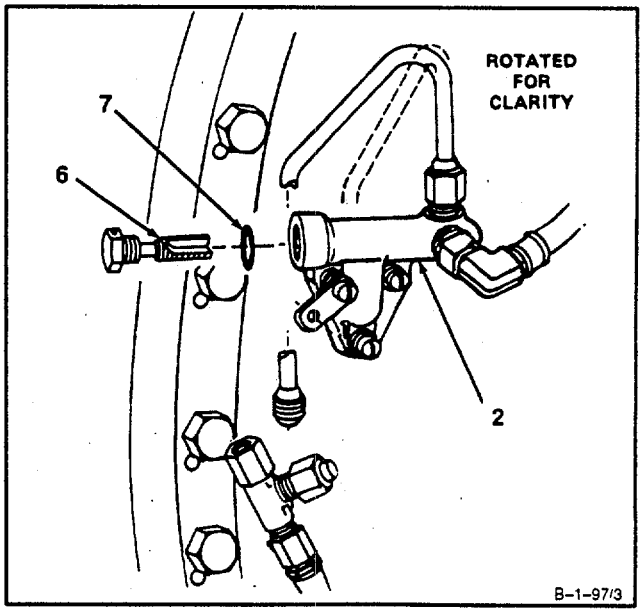

5. **Inspect strainer (6).** There shall be no chips or clogged threads. If chips or clogged threads are found, do step a.. If no chips or clogged threads are found, omit step a..
   a. Inspect Contaminated Oil System (Ref. Task1-80).

GO TO NEXT PAGE

WARNING

Dry cleaning solvent (E19) is flammable and toxic. It can Irritate skin and cause burns. Use only in well-ventilated area, away from heat and open flame. In case of contact, Immediately flush skin or eyes with water for at least 15 minutes. Get medical attention for eyes.

6. Wear gloves (E24). **Clean No. 2 bearing pressure oil strainer (6)** using soft brush and dry cleaning solvent (E19).

WARNING

When using compressed air for cleaning, use approved protective equipment for eyes and face. Do not use more than 30 psig air pressure. Do not direct air toward yourself or another person. Failure to comply could result In Injury to eyes or skin. In case of Injury, get medical attention.

7. Wear goggles. **Blow dry No. 2 bearing pressure oil strainer (6)** using clean, dry, compressed air.

8. **Inspect No. 2 bearing pressure oil strainer (6) for cracks**. There shall be no cracks.

9. **Install** packing (7) and **No. 2 bearing pressure oil strainer (6)** in connector (2). Lockwire No. 2 bearing pressure oil strainer (6). Use lockwire (E33).

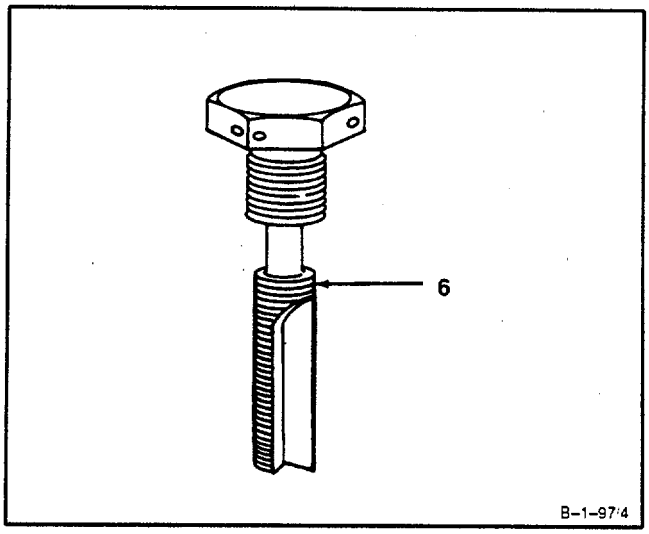

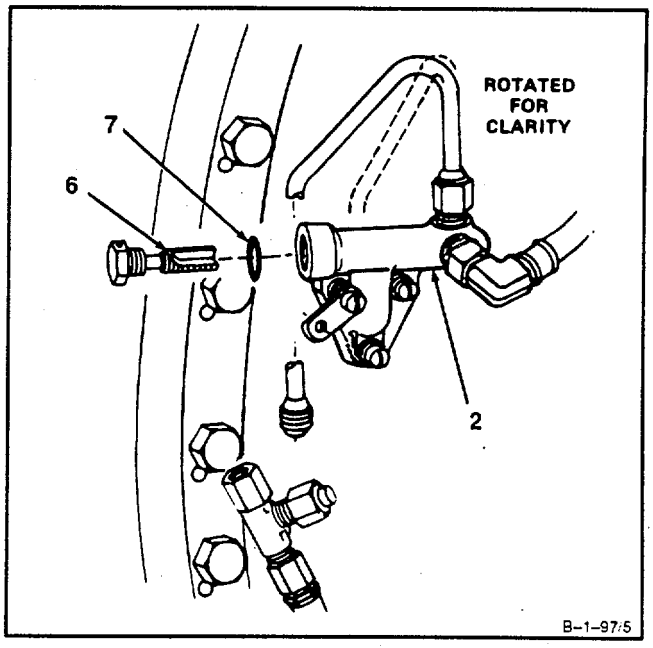

GO TO NEXT PAGE

10. Swing tube assembly (5) to clamp position.

11. **Install bolt (4)** and nut (3).

12. **Connect tube assembly (5) to No. 2 bearing pressure oil connector (2) and tee and snubber (1).**

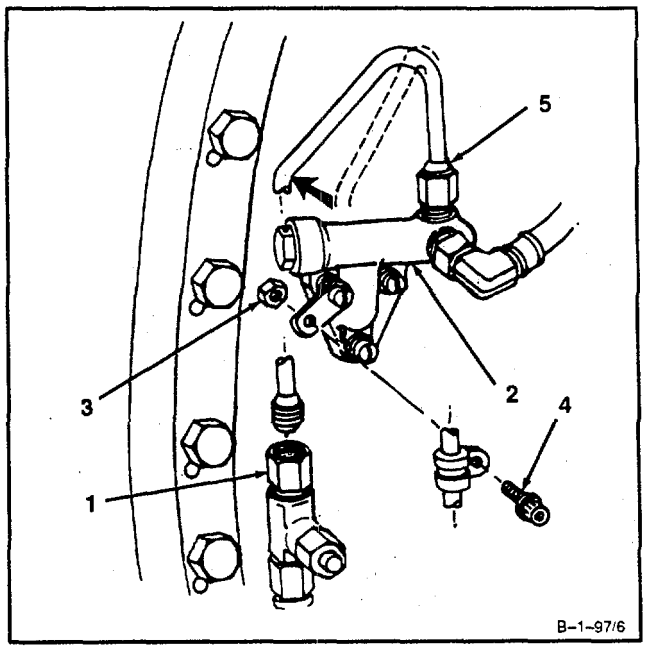

INSPECT

FOLLOW-ON MAINTENANCE:
None

END OF TASK

INITIAL SETUP

Applicable Configurations:
All

Tools:
Powerplant Mechanic's Tool Kit,
NSN 5180-00-323-4944
Technical Inspection Tool Kit,
NSN 5180-00-323-5114
Compressed Air Source
Open-End Wrench (T24)
Goggles
Slave Screw, Part Number NAS1352-01-6,
NSN 5305-00-224-1168
Outside Micrometer Set
Torque Wrench, 30 to 150 Inch-Pounds

Materials:
Dry Cleaning Solvent (El 9)
Gloves (E24)
Lockwire (E33)
Lint-Free Cloth (E30)

Parts:
Shim
Reducer

Personnel Required:
Aircraft Powerplant Repairer
Aircraft Powerplant Inspector

References:
TM 1-2840-252-23P

General Safety Instructions:

WARNING

Lubricating oils cause paralysis if swallowed. Prolonged contact with them may irritate the skin. Handle only in well-ventilated areas away from heat and flame. Drain and store In approved metal safety containers. Avoid prolonged or repeated contact with skin and do not take internally. Wash contacted area of skin thoroughly after handling. If Irritation of skin results, get medical attention. Get medical attention for eyes.

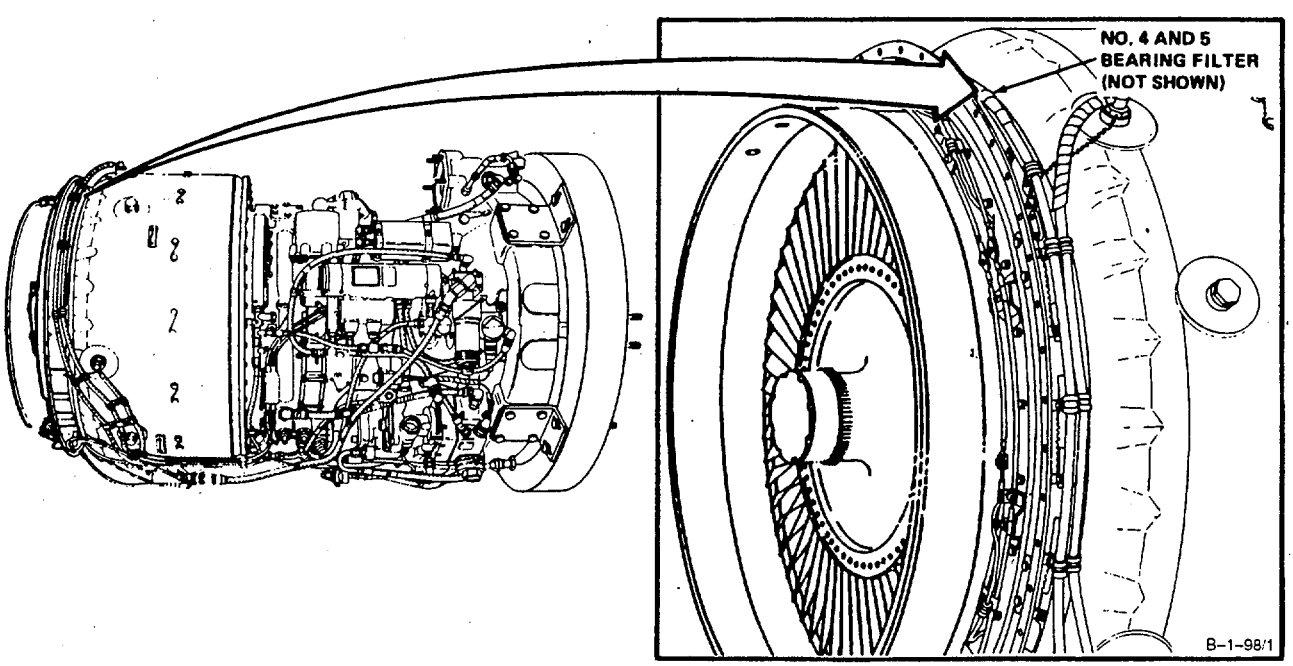

GO TO NEXT PAGE

CAUTION

In following step, hold No. 4 and 5 bearing lube adapter using open-end wrench (T24). Failure to use wrench may result In damage and mislocation of oil transfer tube resulting In oil leaks.

1. Place open-end wrench (T24) (1) on No. 4 and 5 bearing lube adapter (2).

2. **Disconnect hose assembly (3)** from reducer (4).

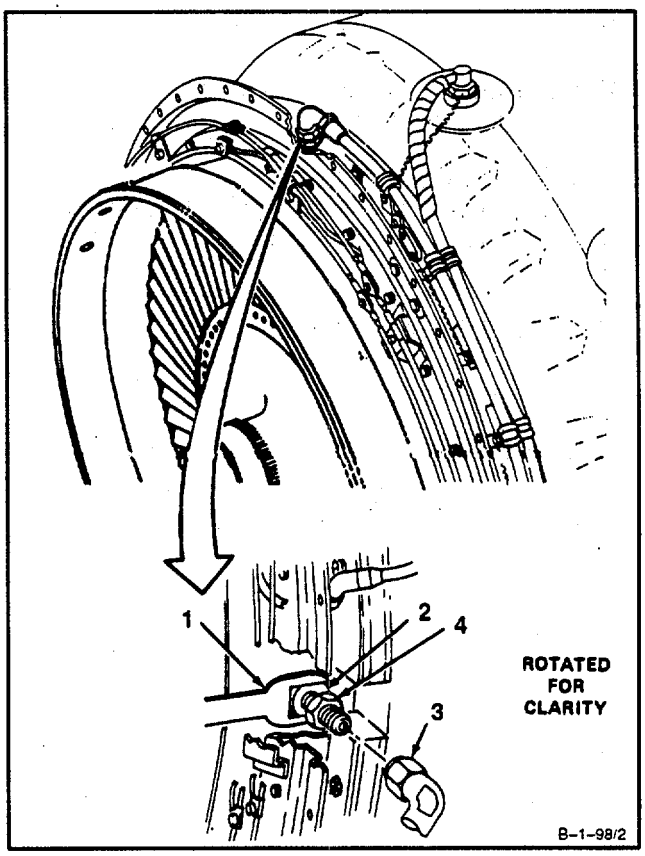

GO TO NEXT PAGE

WARNING

In following step, goggles should be worn when removing spring. Spring may fly apart when removed. Failure to comply may cause serious eye Injury. Get medical attention if Injury to eyes occurs.

3. Wear goggles and remove spring (5).

4. **Remove No. 4 and 5 bearing oil filter (6)** from reducer **(4).** Use slave screw (7).

5. **Inspect filter (6).** There shall be no chips or clogged threads. If chips or clogged threads are found, do step a.. If no chips or clogged threads are found, omit step a..

   a. Inspect Contaminated Oil System (Ref. Task1 -80).

NOTE

If it is not possible to remove filter from reducer, do steps 6. thru 8.. If filter has been removed, omit steps 6. thru 8..

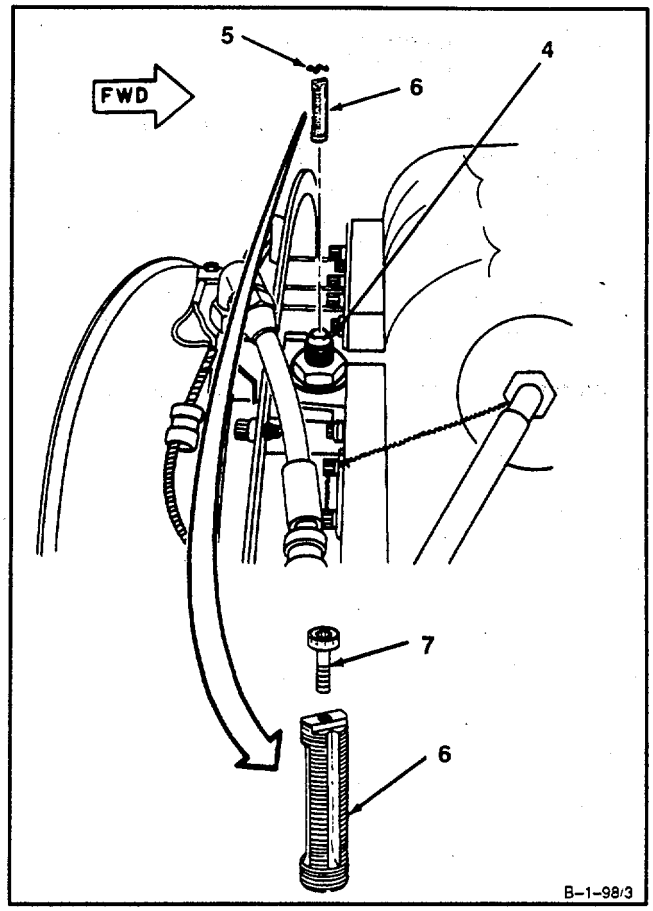

GO TO NEXT PAGE

6. Place open-end wrench (T24) (1) on No. 4 and 5 bearing lube adapter (2).

7. **Remove** lockwire, **reducer** (4), washer (8), and shim (9) from No. 4 and 5 bearing lube adapter (2).

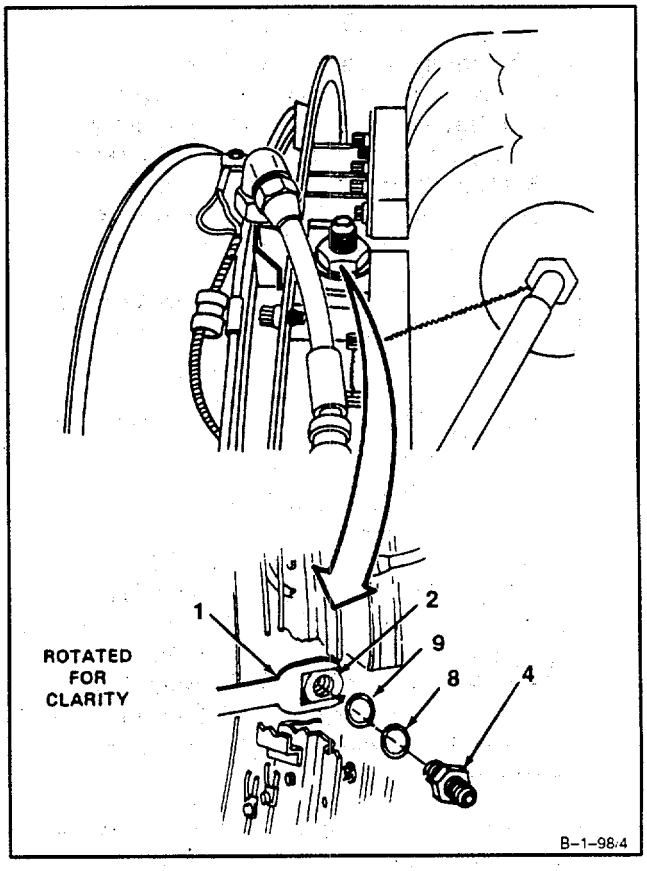

8. **Discard reducer (4) and filter (6)** if filter (6) could not be removed from reducer (4).

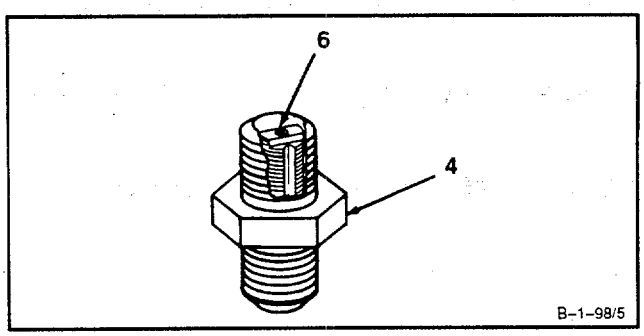

GO TO NEXT PAGE

WARNING

Dry cleaning solvent (E19) is flammable and toxic. It can Irritate skin and cause burns. Use only In well-ventilated area, away from heat and open flame. In case of contact, immediately flush skin or eyes with water for at least 15 minutes. Get medical attention for eyes.

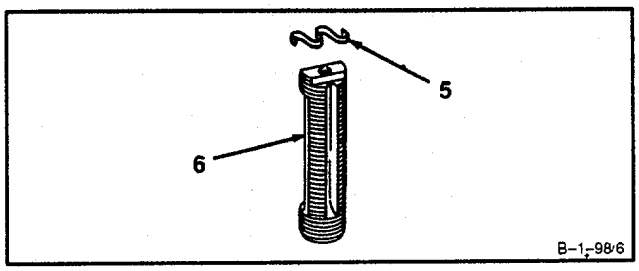

9. Wear gloves (E24**). Clean No. 4 and 5 bearing filter (6).** Use brush and dry cleaning solvent (E19).

10. Clean spring (5). Immerse in dry cleaning solvent (E17) and agitate.

WARNING

When using compressed air for cleaning, use approved protective equipment for eyes and face. Do not use more than 30 psig air pressure. Do not direct air toward yourself or another person. Failure to comply could result In injury to eyes or skin. In case of injury, get medical attention.

11. Wear goggles. **Blow dry No. 4 and 5 bearing filter (6)** using clean, dry, compressed air.

12. Wipe spring (5) dry. Use clean, dry lint-free cloth (E30).

13. **Inspect spring (5).** There shall be no nicks, tears or cracks.

14. **Inspect filter (6).** There shall be no cracks.

GO TO NEXT PAGE

NOTE

If reducer was removed, perform steps 15. and 16.. If reducer was not removed, omit steps 15. and 16.

15. **Determine shim needed under reducer (4)** as follows:

CAUTION

Do not tighten reducer in following step. Tightening of reducer may dam-age Internal oil tube.

a. Thread reducer (4) in No. 4 and 5 bearing lube adapter (2) until it is seated.

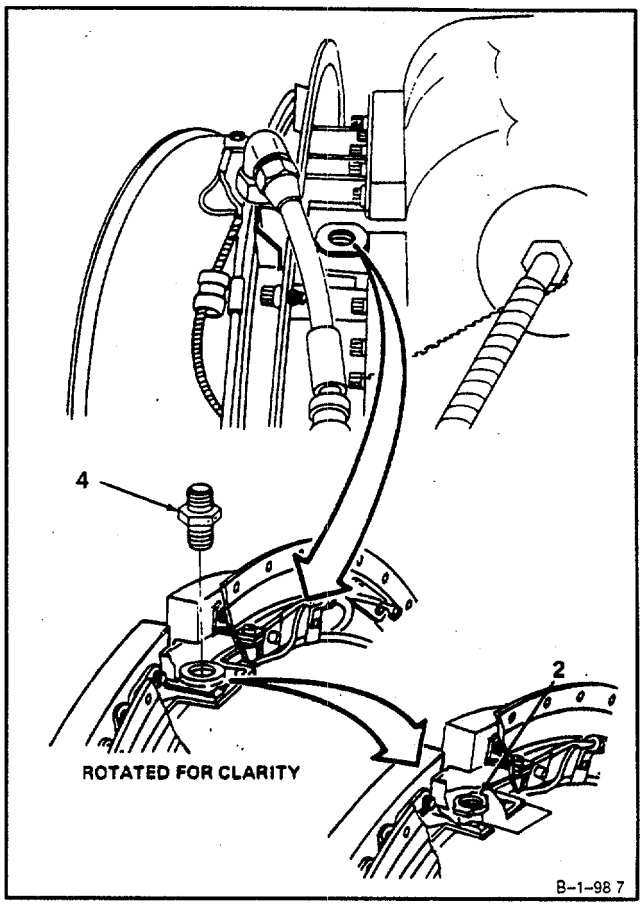

CAUTION

In following step, fireshield must be seated against adapter to obtain correct measurement. Failure to do so will result in Incorrect gap.

b. Seat fireshield section (10) against No. 4 and 5 bearing lube adapter (2) and measure gap between fireshield section (10) and reducer (4).

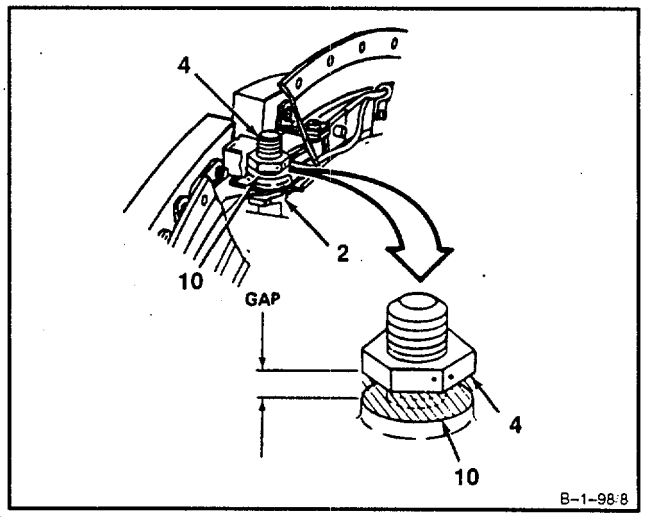

GO TO NEXT PAGE

c. Find gap measured in shim selection table. Read across table to find thickness of shim(s) needed.

SHIM SELECTION TABLE

IF GAP MEASURES	SHIM THICKNESS REQUIRED
INCHES	INCHES
0.060	None
0 061	None
0.062	0.003 to 0.005
0.063	0.003 to 0.005
0.064	0.003 to 0.005
0.065	0.006 to 0.010
0.066	0.006 to 0.010
0.067	0.006 to 0.010
0.068	0.008 to 0.012
0.069	0.008 to 0.012
0.070	0.008 to 0.012
0.071	0.009 to 0.015
0.072	0.011 to 0.017
0 073	0.011 to 0.017
0.074	0.011 to 0.017
0.075	0.012 to 0.020
0.076	0.014 to 0.022
0.077	0.014 to 0.022
0.078	0.016 to 0.024
0.079	0.016 to 0.024
0.080	0.016 to 0.024
0.081	0.016 to 0.024
0.082	0.019 to 0.029
0.083	0.019 to 0.029
0.084	0.019 to 0.029
0.085	0.022 to 0.034
0.086	0.022 to 0.034
0.087	0.022 to 0.034
0.088	0.022 to 0.034
0.089	0.024 to 0.036
0.090	0.024 to 0.036

d. Measure thickness of shims (9) and check against Shim Selection Table. Use outside micrometer caliper.

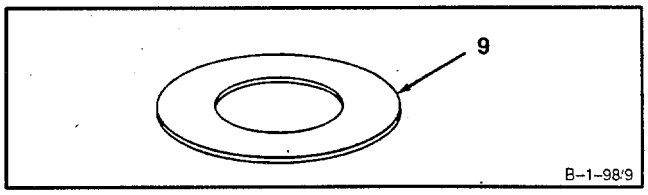

GO TO NEXT PAGE

CAUTION

Concave side of washer must face fireshield section. Failure to comply will place wrong tension on internal oil tube.

CAUTION

Do not tighten reducer in following step. Tightening of reducer may damage internal oil tube.

16. Remove reducer (4**). Loosely Install shim(s) (9), washer** (8), concave side down, **and reducer (4).**

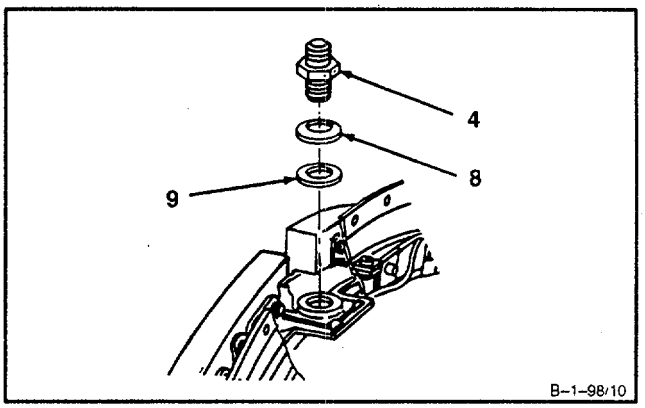

GO TO NEXT PAGE

CAUTION

Adapter must be held firmly when tightening reducer. Failure to comply will cause damage to internal tube assembly.

17. Hold No. 4 and 5 bearing lube adapter (2) with open-end wrench (T24) (1). Torque **reducer (4) to 115 inch-pounds,** and lockwire. Use lockwire (E33).

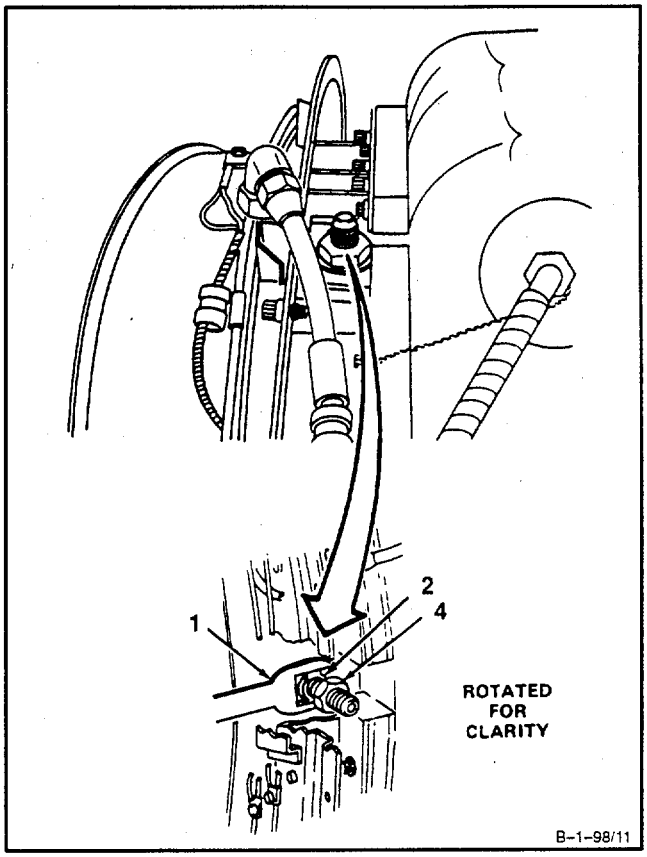

GO TO NEXT PAGE

WARNING

In following step, wear goggles when installing spring. Spring may fly apart when installing. Failure to comply may cause serious eye injury. If eye injury occurs, get medical attention.

CAUTION

In following step, be sure that filter is installed In reducer with small diameter hole facing up. Failure to comply will cause less oil flow to bearings and result In bearing failure.

18. Wear goggles. **Install No. 4 and 5 bearing filter (6)** and spring (5) in reducer (4).

GO TO NEXT PAGE

CAUTION

In following step, hold No. 4 and 5 bearing lube adapter using open-end wrench (T24). Failure to use wrench may result In damage and mislocation of oil transfer tube resulting in oil leaks.

19. Place open-end wrench (T24) (1) on No. 4 and 5 bearing lube adapter (2).

20. **Install hose assembly (3)** on reducer (4).

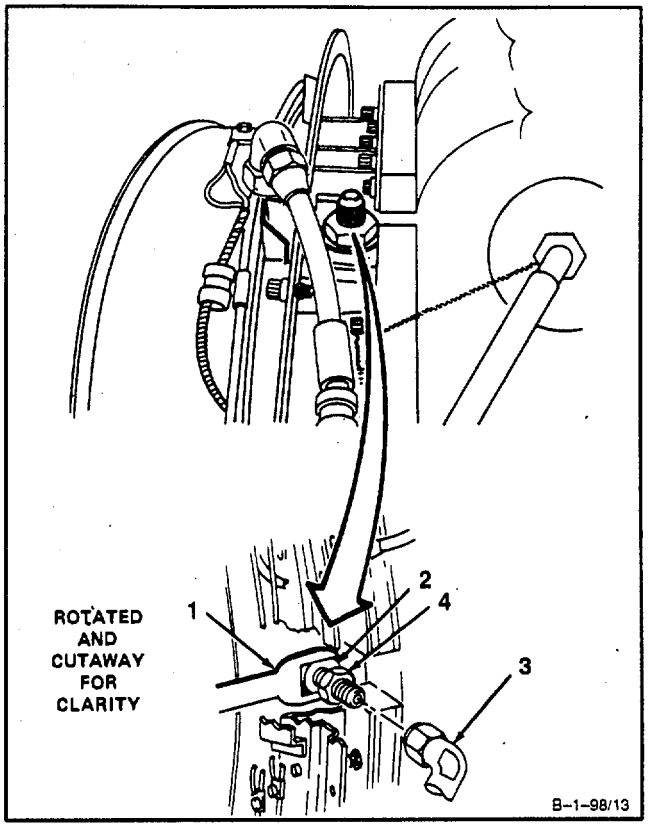

INSPECT

FOLLOW-ON MAINTENANCE:
None

END OF TASK

INITIAL SETUP

Applicable Configurations:
All

Tools:
Powerplant Mechanic's Tool Kit,
NSN 5180-00-323-4944
Technical Inspection Tool Kit,
NSN 5180-00-323-5114
Goggles
Dry Compressed Air Source
Container, Safety, 2 Gallon

Materials:
Dry Cleaning Solvent (E19)
Gloves (E24)
Lint-Free Cloth (E30)
Lockwire (E33)
Wiping Rag (E64)

Parts:
Packing
Filter Element

Personnel Required:
Aircraft Powerplant Repairer
Aircraft Powerplant Inspector

References:
TM 1-2840-252-23P
Task 1-80

General Safety Instructions:

WARNING

Lubricating oils cause paralysis if swallowed. Prolonged contact with them may irritate the skin. Handle only in well-ventilated areas away from heat and flame. Drain and store in approved metal safety containers. Avoid prolonged or repeated contact with skin and do not take internally. Wash contacted area of skin thoroughly after handling. If irritation of skin results, get medical attention. Get medical attention for eyes.

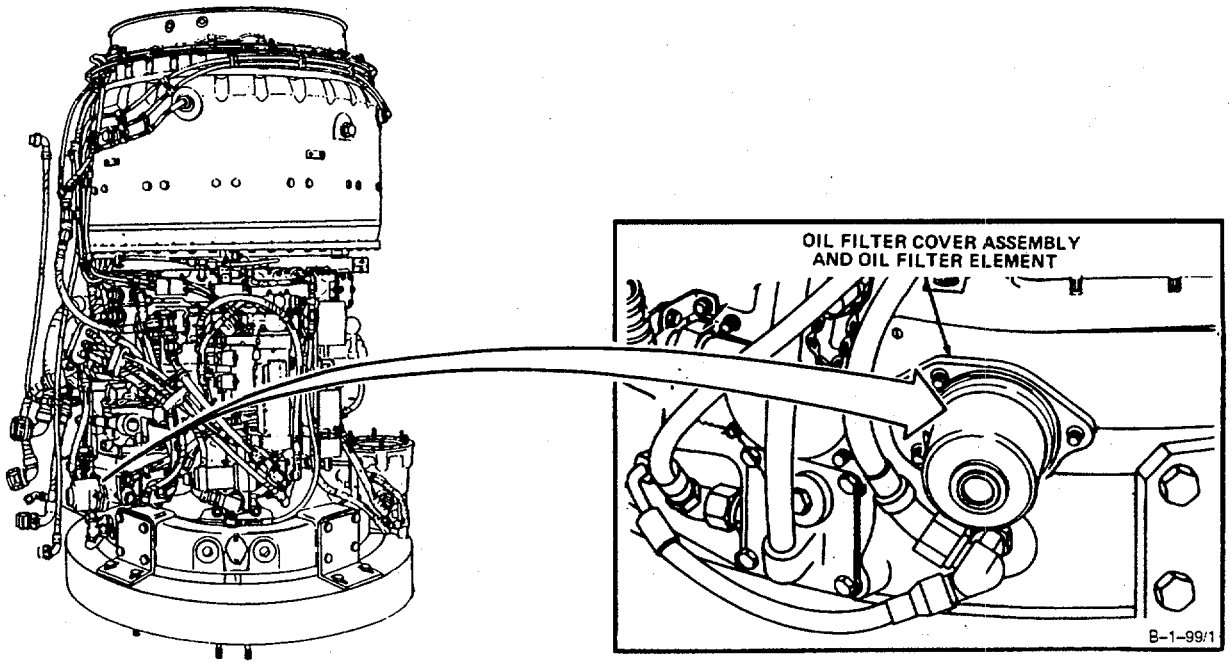

GO TO NEXT PAGE

1. **Disconnect hose assembly (1)** and remove gasket (2) from tee (3). Place wiping rag (E64) under hose assembly (1). Allow oil to drain into suitable safety container.

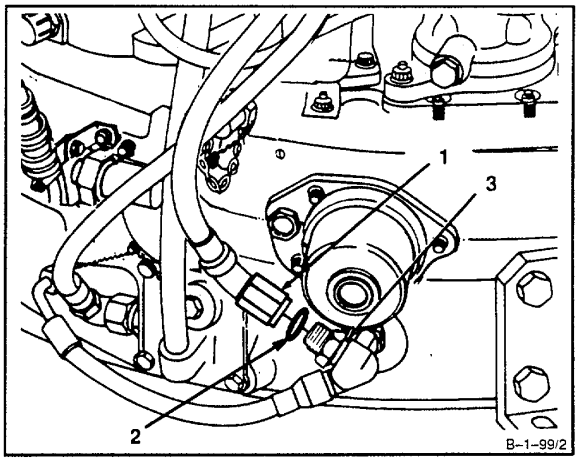

2. Remove three nuts (4) and three washers (5). **Remove** lockwire and **oil filter cover assembly (6).**

3. Remove packing (7) from oil filter cover assembly (6).

4. **Remove oil filter element (8)** from accessory gearbox assembly (9).

5. **Inspect oil filter element (8).** There shall be no contamination. If contamination is found, inspect contaminated oil system (Ref. Task 1-80).

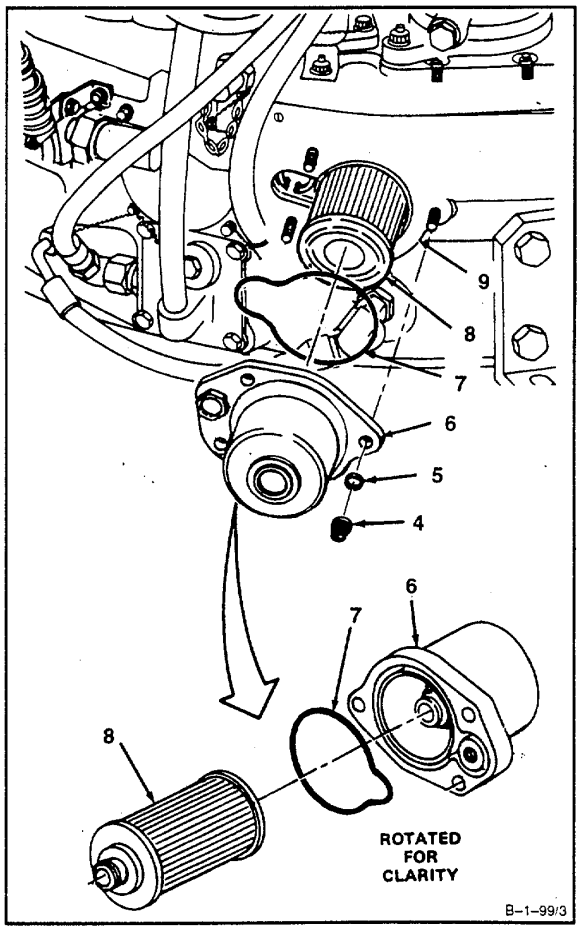

GO TO NEXT PAGE

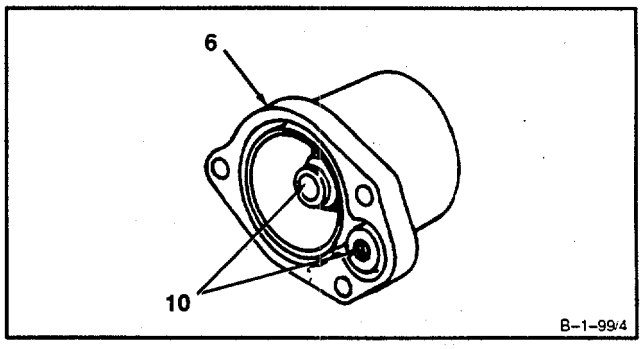

6. **Clean oil filter cover assembly (6)** as follows:

WARNING

Dry cleaning solvent (E19) Is flammable and toxic. It can Irritate skin and cause burns. Use only In well-ventilated area, away from heat and open flame. In case of contact, immediately flush skin or eyes with water for at least 15 minutes. Get medical attention for eyes.

a. Wear gloves (E24). Immerse and agitate oil filter cover assembly (6) in dry cleaning solvent (E19). Use brush on outside surfaces.

b. Wipe outside surfaces dry with clean, dry, lint-free cloth (E30) .

WARNING

When using compressed air for cleaning, use approved protective equipment for eyes and face. Do not use more than 30 psig air pressure. Do not direct air toward yourself or another person. Failure to comply could result in injury to eyes or skin. In case of injury, get medical attention.

c. Wear goggles. **Blow dry Internal passages (10)** using clean, dry, compressed air.

GO TO NEXT PAGE

CAUTION

Ensure two packings are properly positioned In groove on each end of new oil filter element.

7. Install packings (11 and 12) on serviceable oil filter element (8).

8. **Install oil filter element (8)** into accessory gearbox assembly (9).

9. Install packings (7) into oil filter cover assembly packing groove (13).

10. **Install oil filter cover assembly (6),** on accessory gearbox assembly (9). Install three washers (5) and three nuts (4).

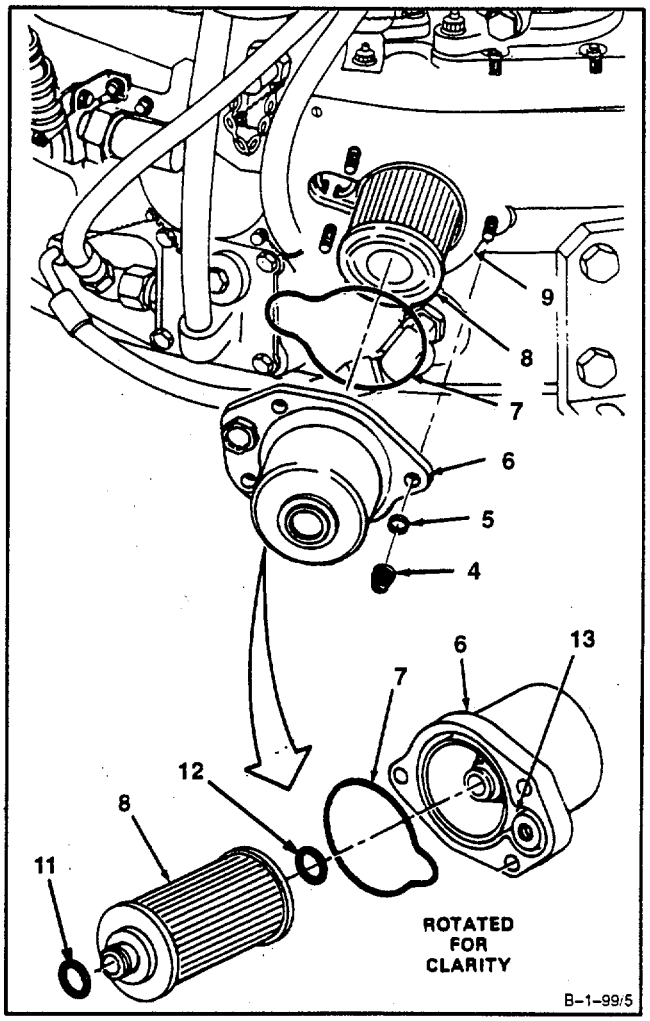

GO TO NEXT PAGE

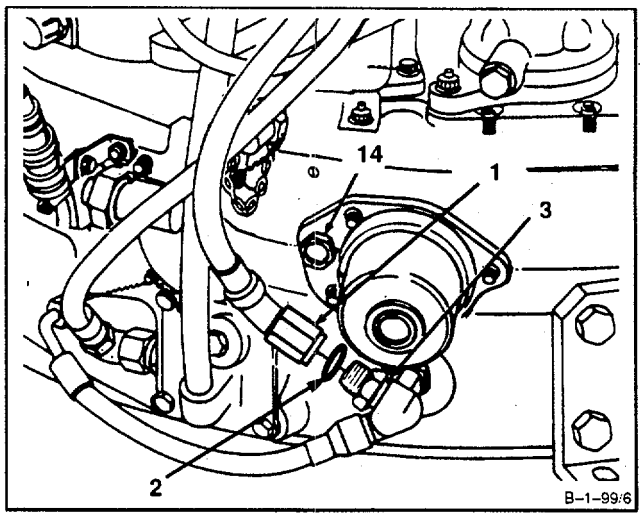

11. Check if plug (14) is tight, and re-lockwire if necessary. Use lockwire (E33).

12. **Install** gasket (2) on tee (3) and connect**hose assembly (1)** to tee (3).

INSPECT

FOLLOW-ON MAINTENANCE:
Service Engine Oil System (Task 1-68).

END OF TASK

INITIAL SETUP

Applicable Configurations:
All

Tools:
Powerplant Mechanic's Tool Kit, NSN 5180-00-323-4944
Technical Inspection Tool Kit, NSN 5180-00-323-5114
Goggles
Compressed Air Source
Container, 1 Quart
Torque Wrench, 30-150 Inch-Pounds

Materials
Dry Cleaning Solvent (El 9)
Gloves (E24)
Lockwire (E33)
Lubricating Oil (E36 or E37)

Parts:
Packings
Tie Straps (3)

Personnel Required:
Aircraft Powerplant Repairer
Aircraft Powerplant Inspector

References:
TM 1-2840-252-23P

Equipment Condition:
Tube Assembly (Inlet Housing to Main Oil Pump) Removed (Task 8-65)

General Safety Instructions:

WARNING

Lubricating oils cause paralysis if swallowed. Prolonged contact with them may irritate the skin. Handle only in well-ventilated areas away from heat and flame. Drain and store in approved metal safety containers. Avoid pro longed or repeated contact with skin and do not take internally. Wash con tacted area of skin thoroughly after handling. If irritation of skin results, get medical attention. Get medical attention for eyes

.

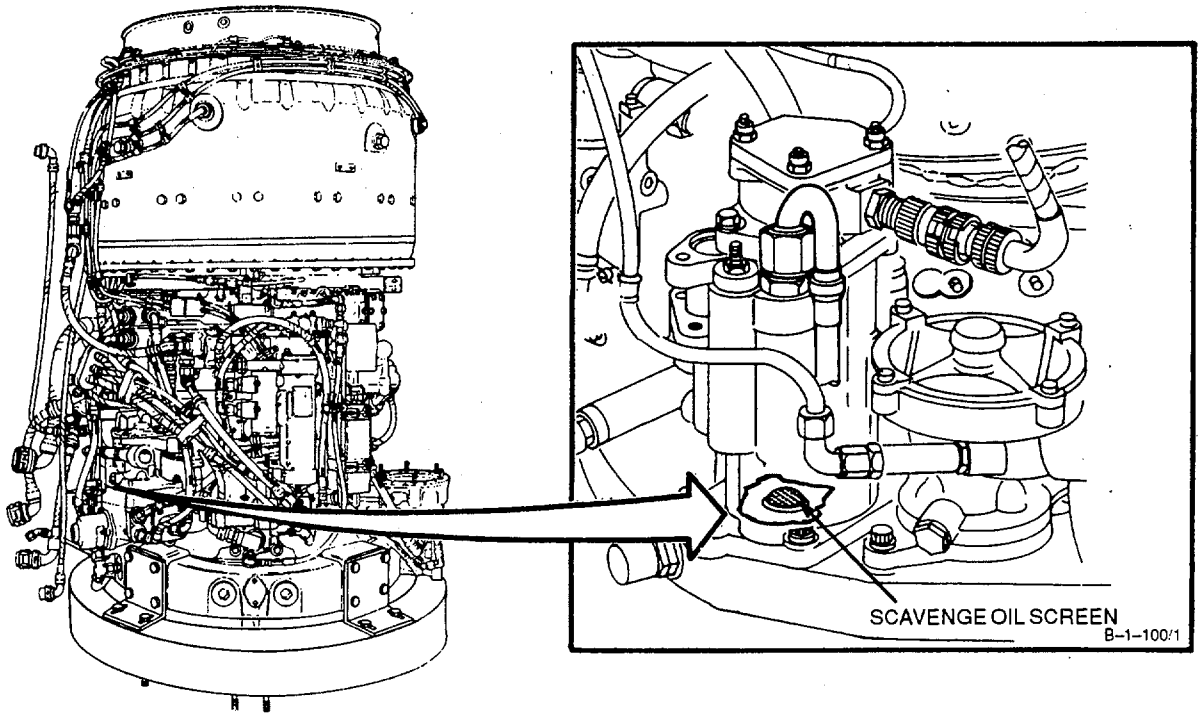

GO TO NEXT PAGE

1. **Disconnect electrical connector (1).**

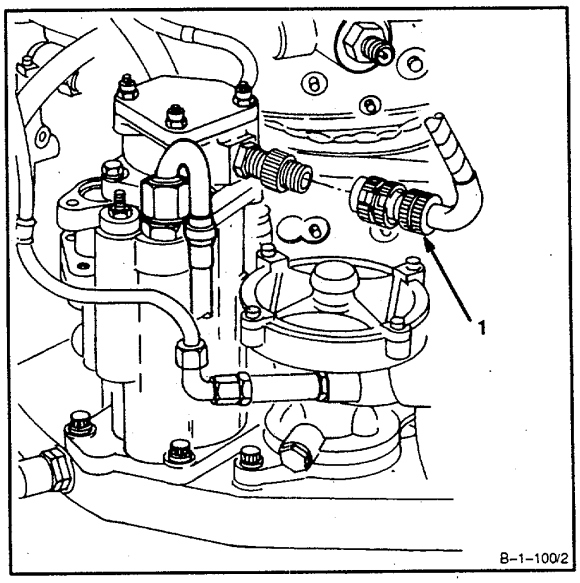

2. Cut three straps (2) and remove three cushions (3). Reposition two **harness assemblies (4)and one fuel hose assembly (5).**

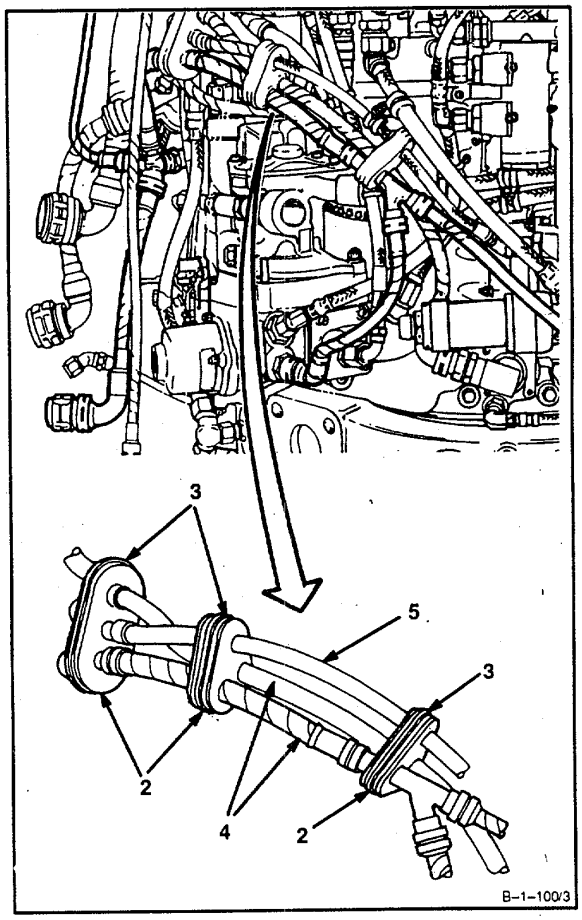

GO TO NEXT PAGE

WARNING

Turbine fuels are very flammable. They may cause drying and irritation of skin or eyes. Handle only in well-ventilated areas away from heat and open flame. Drain and store in approved metal safety containers. Avoid prolonged or repeated contact with skin and do not take internally. Wash contacted area of skin thoroughly after handling. If irritation of skin results, get medical attention. Get medical attention for eyes.

3. Disconnect hose assembly (6).

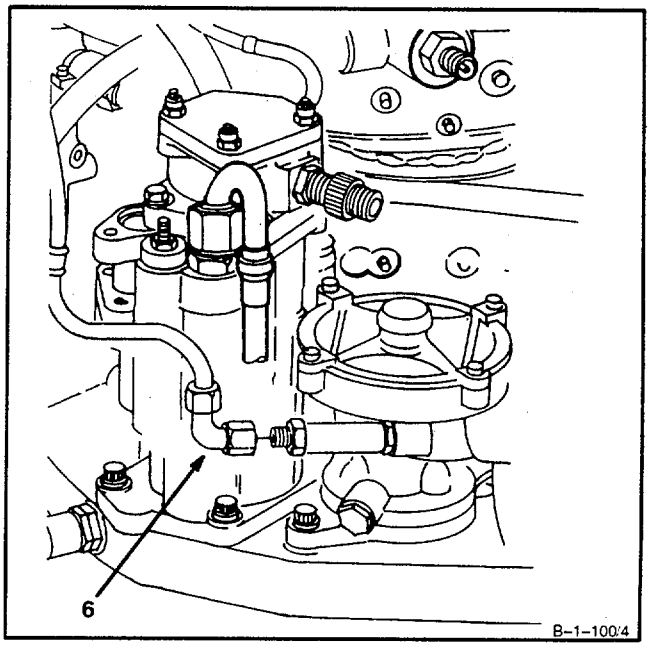

GO TO NEXT PAGE

4. Disconnect tube assembly (7).

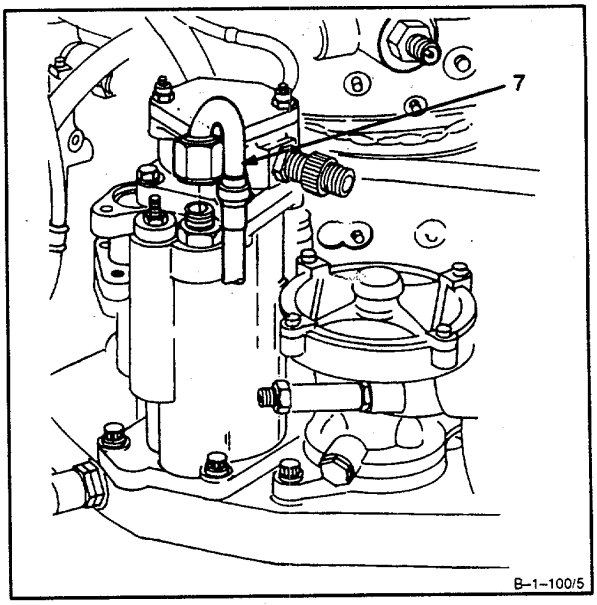

5. Remove lockwire, two bolts (8), end of tube assembly (9), and packing (10).

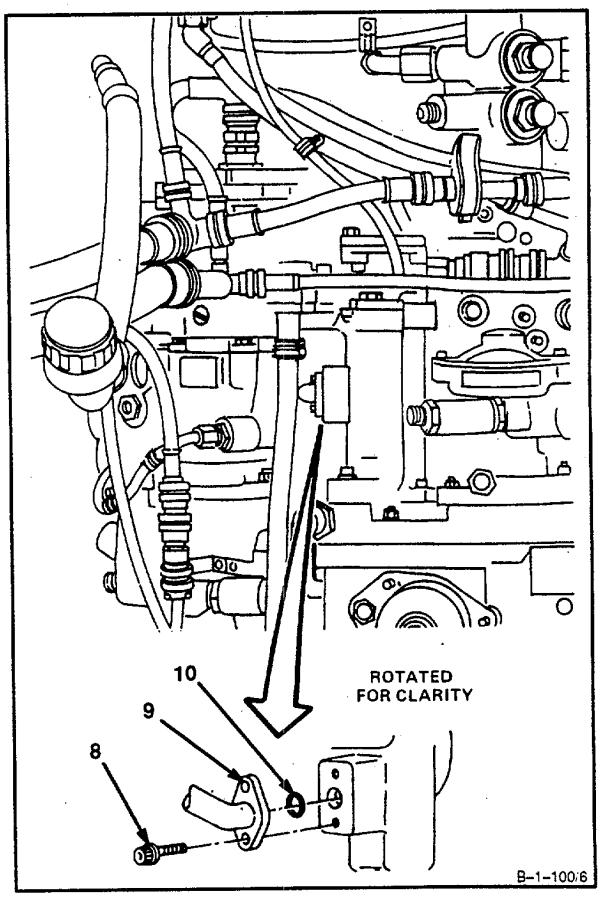

GO TO NEXT PAGE

6. **Disconnect tube assembly (11).**

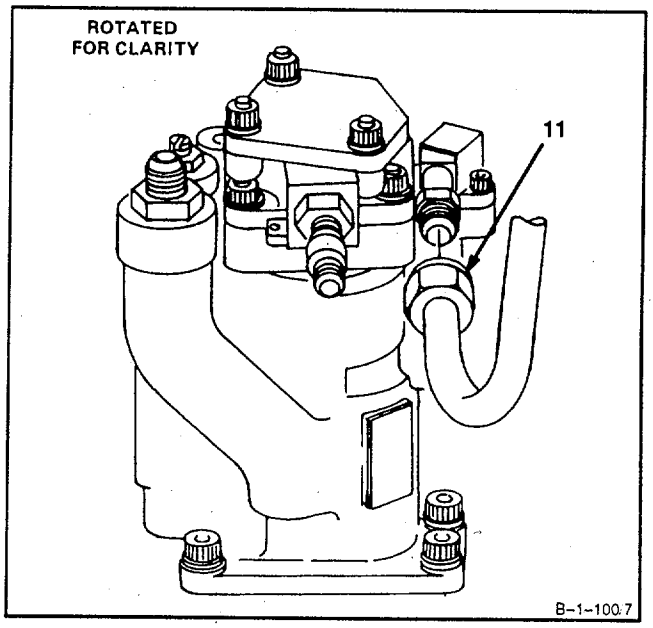

7. Remove lockwire, four bolts (12), washers (13), **main oil** pump (14), and packings (15,16, and 17).

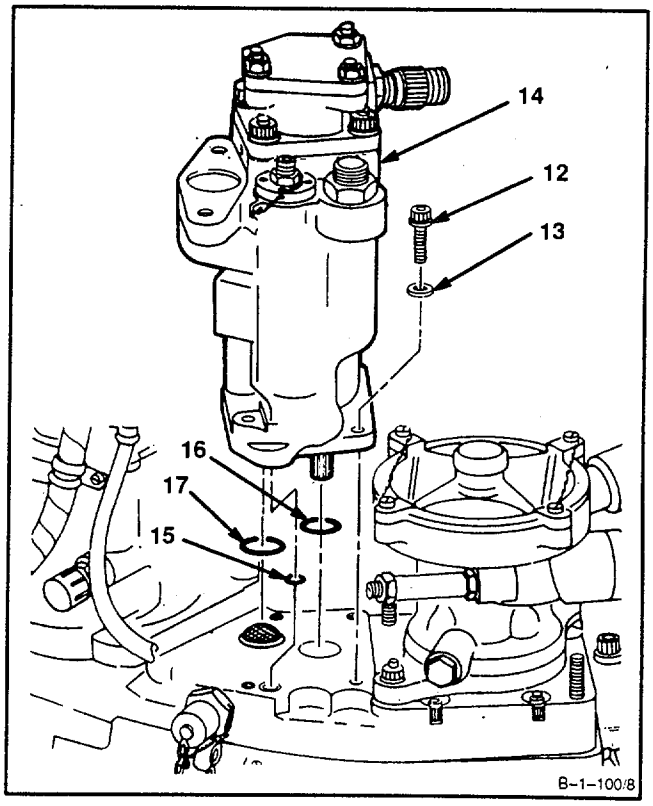

GO TO NEXT PAGE

8. Insert 9 inch length of lockwire (E33) (18) through center of screen (19) near base (20) and form loop by twisting ends.

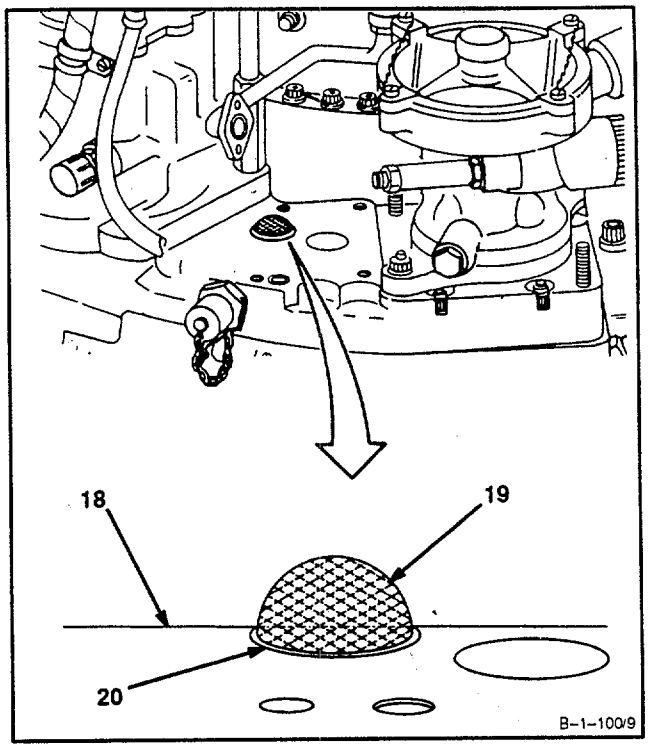

9. Using lockwire (18), remove screen (19). Remove lockwire (18).

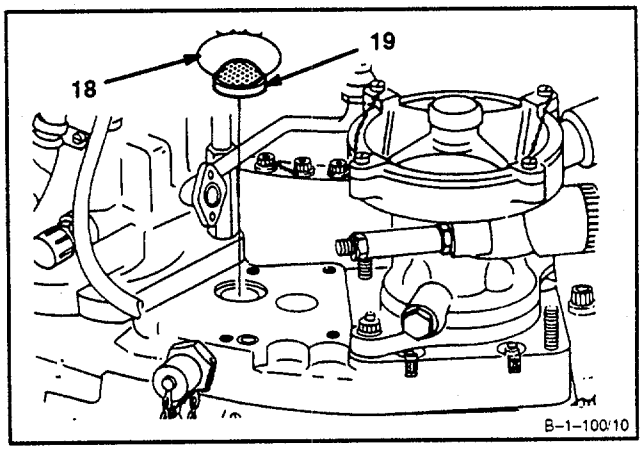

GO TO NEXT PAGE

WARNING

Dry cleaning solvent (E17) is flammable and toxic. It can irritate skin and cause burns. Use only in well-ventilated area, away from heat and open flame. In case of contact, Immediately flush skin or eyes with water for at least 15 minutes. Get medical attention for eyes.

10. Wear gloves (E24). **Clean scavenge oil screen (19).** Use dry cleaning solvent (El 7) and brush.

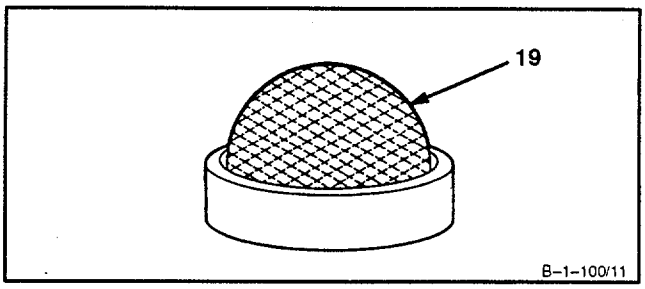

WARNING

When using compressed air for cleaning, use approved protective equipment for eyes and face. Do not use more than 30 psig air pressure. Do not direct air toward yourself or another person. Failure to comply could result In injury to eyes or skin. In case of injury, get medical attention.

11. Wear goggles. **Blow dry scavenge oil screen (19).** Use clean, dry, compressed air.

12. **Inspect scavenge oil screen (19).** There shall be no tears in screen.

INSPECT

13. Install scavenge oil screen (19) in hole (21) in accessory gearbox assembly (22).

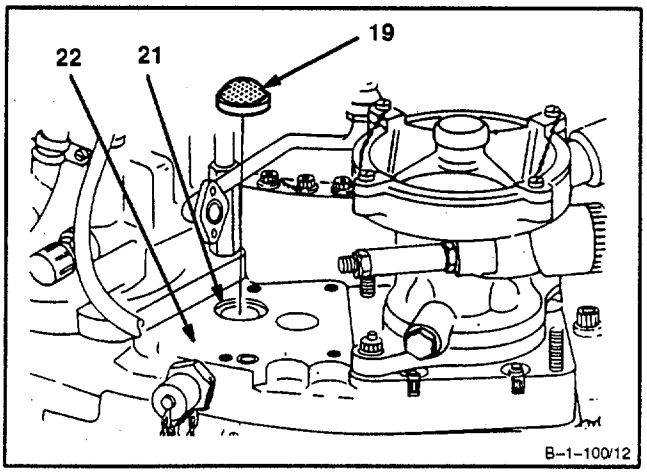

GO TO NEXT PAGE

14. Install three packings (15, 16, and 17) on main oil pump (14).

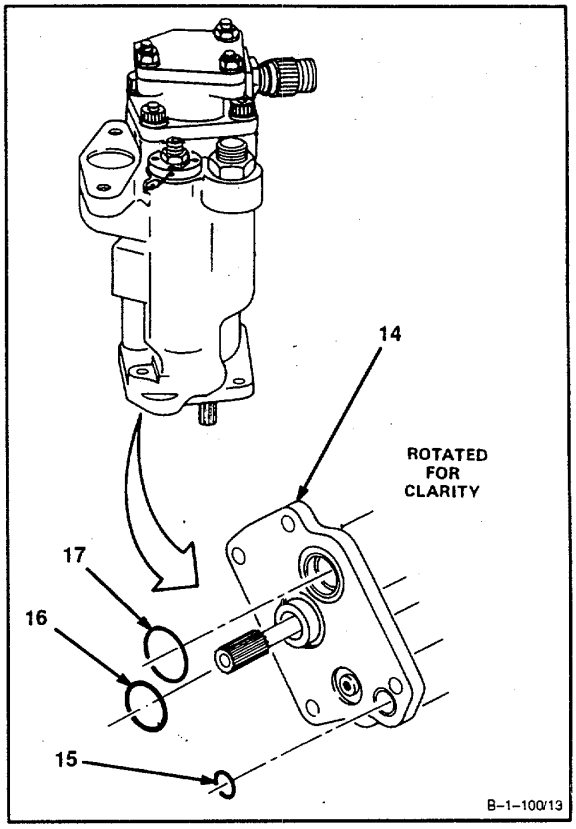

15. Wear gloves (E24). Apply lubricating oil (E36 or E37) to splines (23).

16. Position main oil pump (14) over accessory gearbox assembly (22).

17. If required, rotate main oil pump (14) slightly left or right to align splines (23) with coupling in hole (24).

18. **Install main oil pump (14)** on accessory gearbox assembly (22).

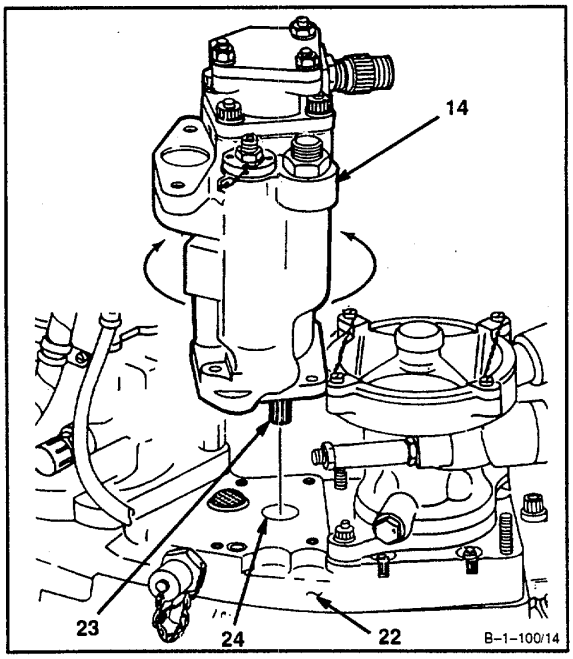

GO TO NEXT PAGE

19. Install bolt (25), bolt (26), two self-locking bolts (27), and four washers (13). Torque bolts (25, 26, and 27) to 70 to 75 inch-pounds. Lockwire bolts (25 and 26). Use lockwire (E33).

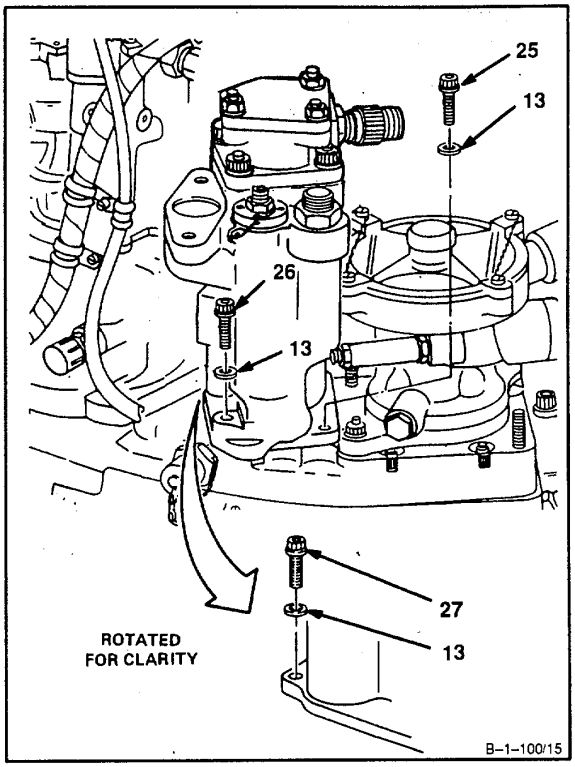

20. Connect tube **assembly** (11) to flange assembly (28).

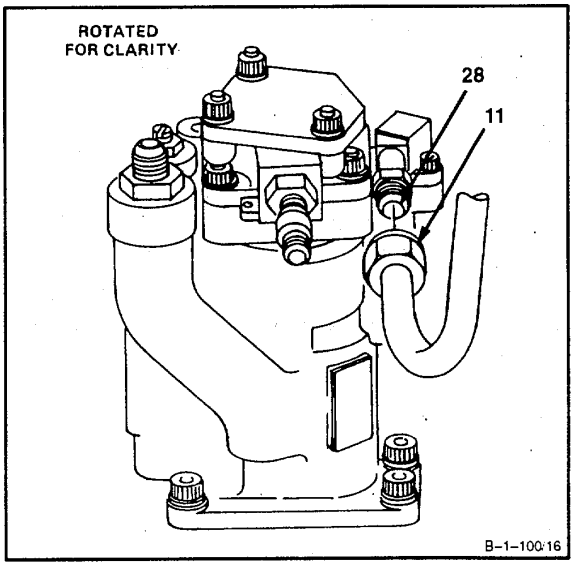

GO TO NEXT PAGE

21. **Install** packing (10), **end of tube assembly (9),** and two bolts (8) on main oil pump (14). Lockwire bolts (8). Use lockwire (E33).

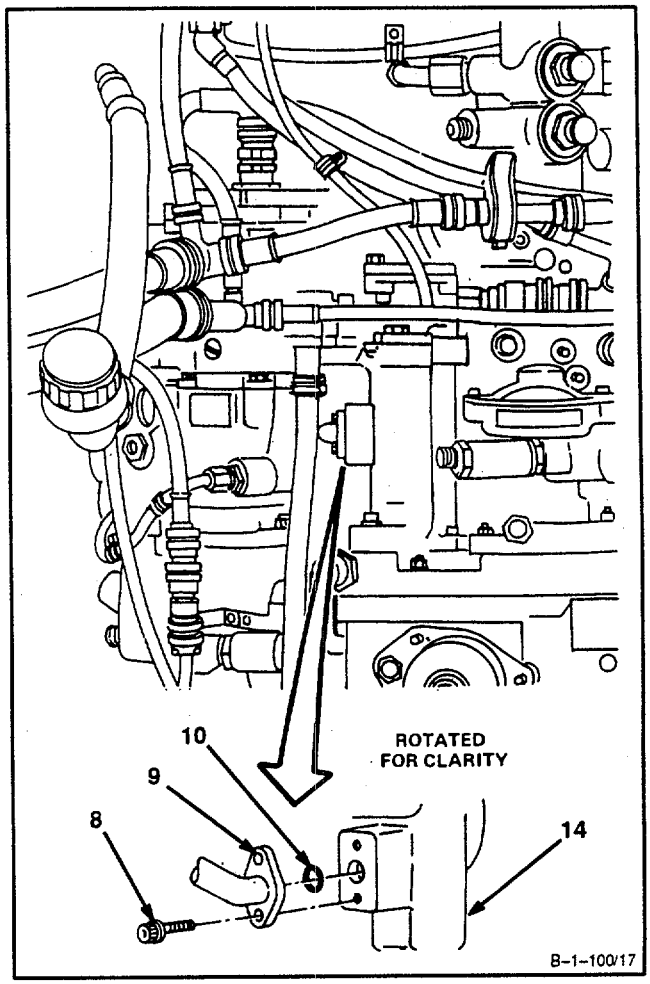

22. **Connect tube assembly** (7) to nipple (29).

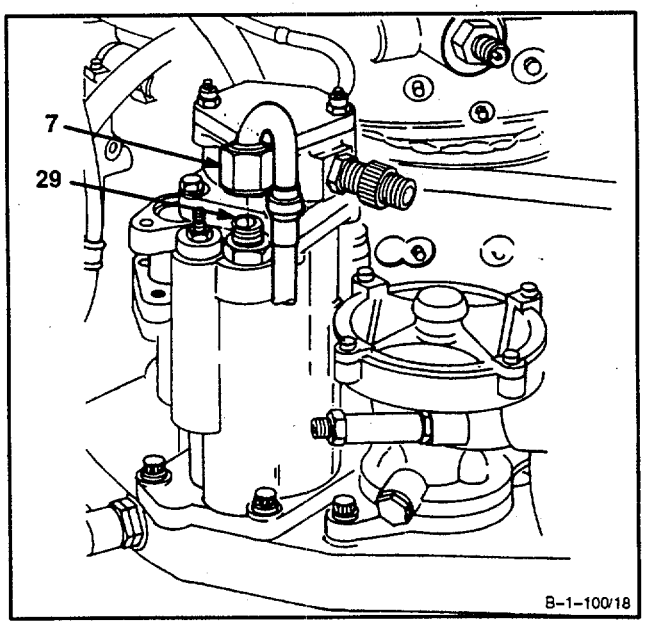

GO TO NEXT PAGE

WARNING

Turbine fuels are very flammable. They may cause drying and Irritation of skin or eyes. Handle only In well-ventilated areas away from heat and open flame. Drain and store In approved metal safety containers. Avoid prolonged or repeated contact with skin and do not take Internally. Wash contacted area of skin thoroughly after handling. If irritation of skin results, get medical attention. Get medical attention for eyes.

23. Connect hose assembly (6) to check valve (30).

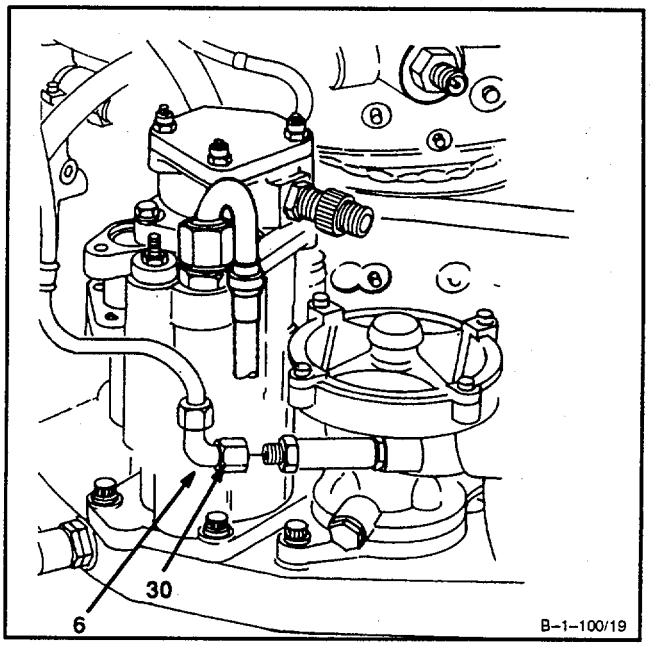

GO TO NEXT PAGE

24. **Install two harness assemblies** (31 and 32) **and** hose assembly (33) into three cushions (34, 35, and 36). Install three straps (2).

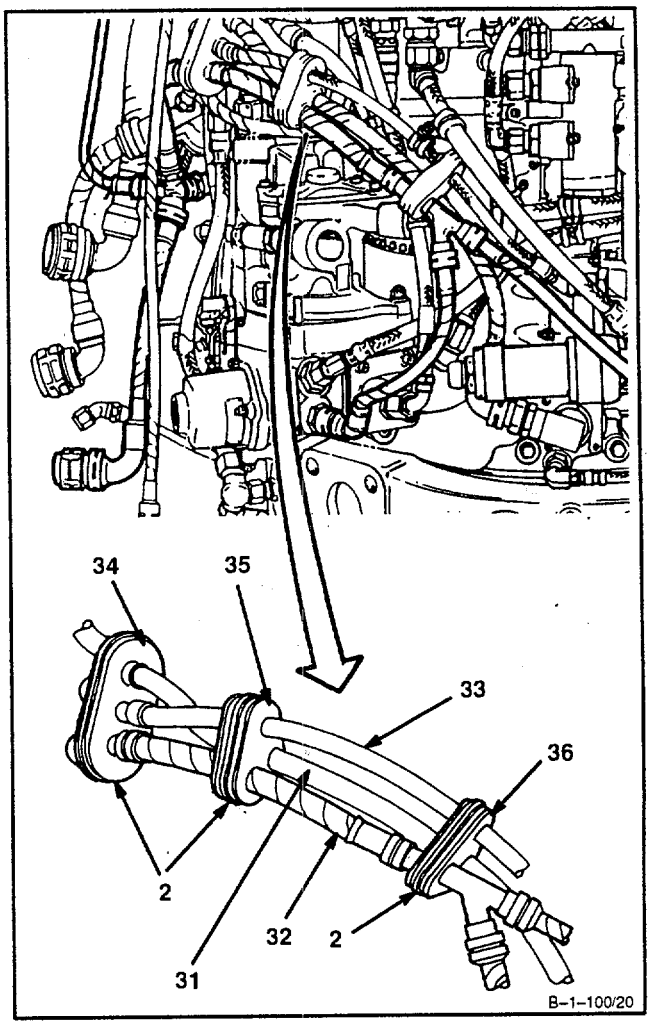

GO TO NEXT PAGE

25. **Connect electrical connector (1)** to pickup assembly (37).

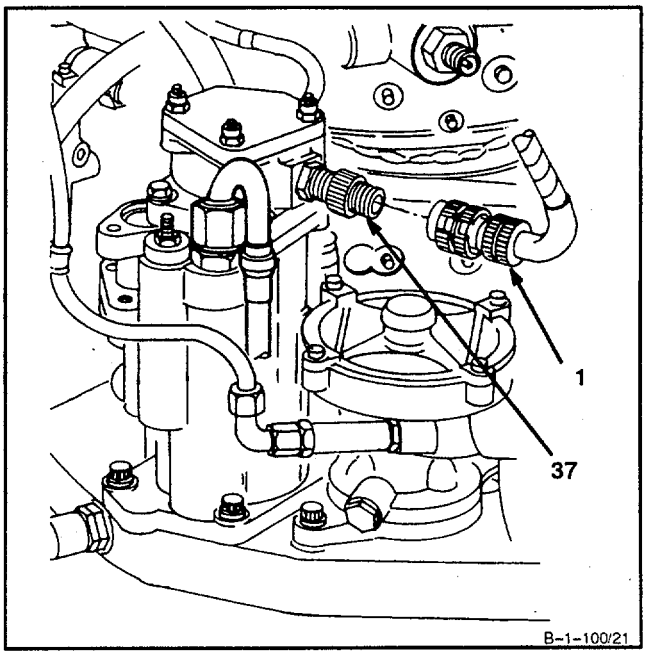

INSPECT

FOLLOW-ON MAINTENANCE:

Install Tube Assembly (Inlet Housing to Main Oil Pump) (Task 8-66).

END OF TASK

1-95 SERVICE MAIN FUEL FILTER 1-95

INITIAL SETUP

Applicable Configurations:
All

Tools:
Powerplant Mechanic's Tool Kit, NSN 5180-00-323-4944
Technical Inspection Tool Kit, NSN 5180-00-323-5114
Strap Wrench
Container, Safety, 2 Gallon

Materials:
Lockwire (E33)
Wiping Rag (E64)

Parts:
Packings
Filter Element

Personnel Required:
Aircraft Powerplant Repairer
Aircraft Powerplant Inspector

References:

TM 1-2840-252-23P

General Safety Instructions:

WARNING

Turbine fuels are very flammable. They may cause drying and irritation of skin or eyes. Handle only in well-ventilated areas away from heat and open flame. Drain and store in approved metal safety containers. Avoid prolonged or repeated contact with skin and do not take Internally. Wash contacted area of skin thoroughly after handling. If irritation of skin results, get medical attention. Get medical attention for eyes.

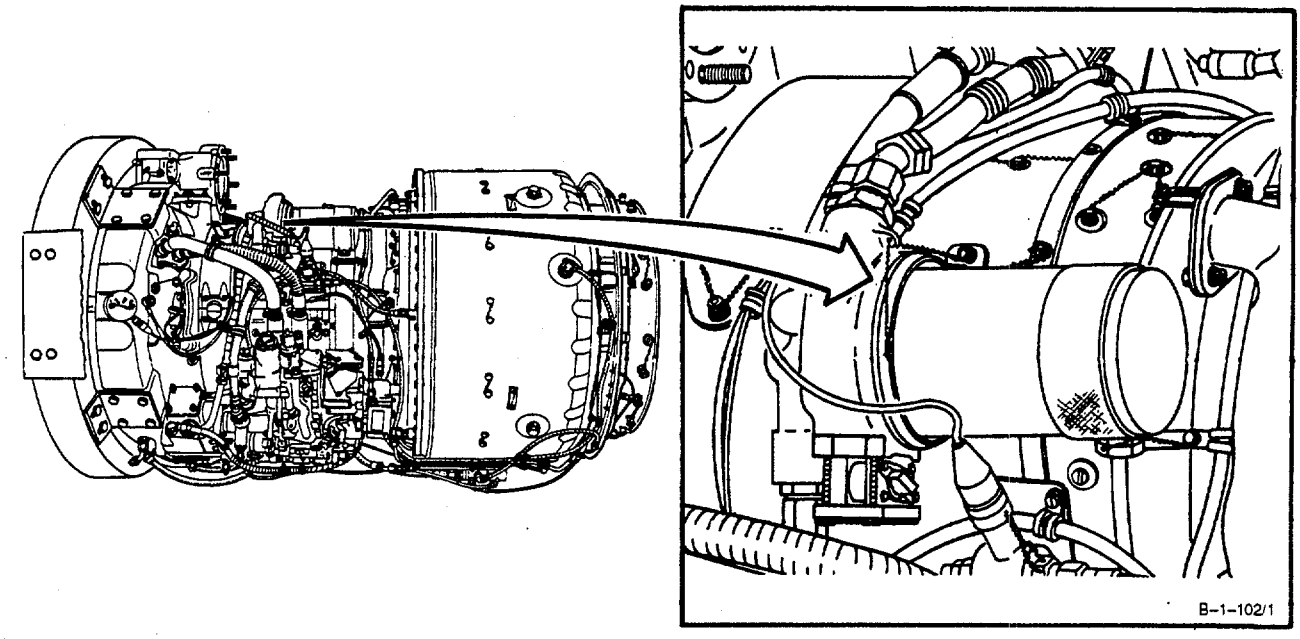

GO TO NEXT PAGE

1. Place wiping rag (E64) under plug (1).

2. Remove lockwire, plug (1) and **packing** (2). Allow fuel to drain into suitable safety container.

3. **Remove** lockwire, **filter bowl (3) and packings (4 and 5)** from filter head (6). Use strap wrench.

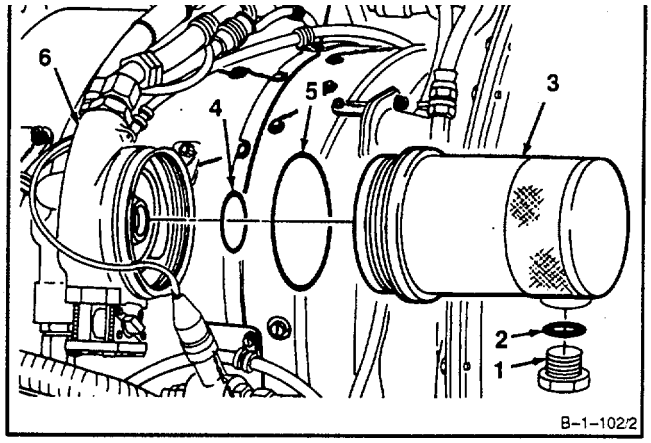

4. Remove filter element (7), plug (8), and packing (9).

NOTE
On new type filter, plug is part of filter.

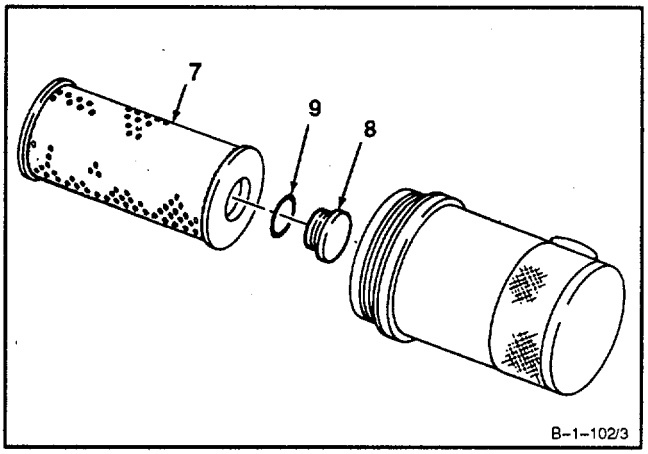

5. Inspect filter element (7). There shall be no contamination. If contamination is found, inspect contaminated fuel system (Ref. Task 1-79).

6. Install **packing** (9) and plug (8) in serviceable filter element (7).

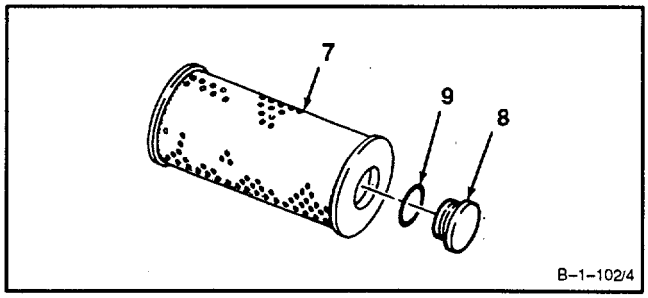

GO TO NEXT PAGE

7. Install serviceable **filter element** (7) in filter bowl (3).

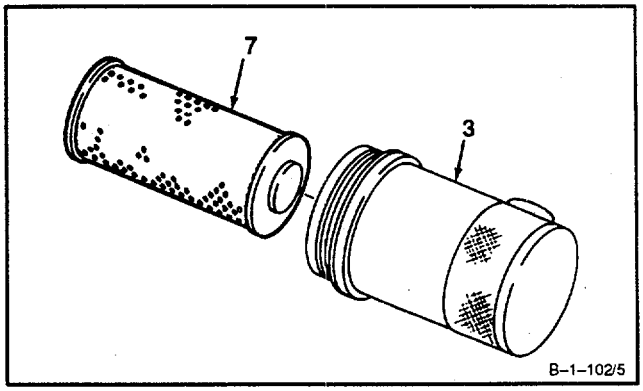

8. **Install packings (4 and** 5) on filter head (6). Install filter bowl (3). Turn by hand until bottomed, then hand-tighten. Lockwire filter bowl (3). Use lockwire (E33).

9. **Install packing** (2) on plug (1) and install plug (1) into filter bowl (3). Lockwire plug (1). Use lockwire (E33).

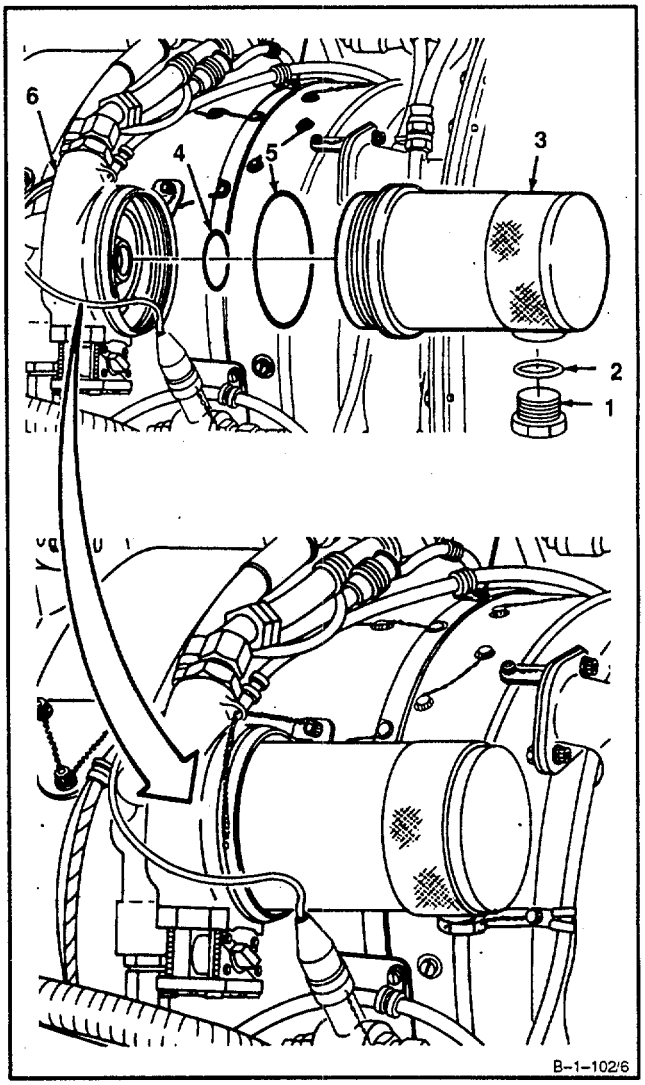

INSPECT

FOLLOW-ON MAINTENANCE:
None

END OF TASK

1-95 SERVICE IN FUEL FILTER 1-95

INITIAL SETUP

Applicable Configurations:
All

Tools:
Powerplant Mechanic's Tool Kit, NSN 5180-00-323-4944
Technical Inspection Tool Kit, NSN 5180-00-323-5114
Strap Wrench
Container, Safety, 2 Gallon

Materials:
Lockwire (E33)
Wiping Rag (E64)

Parts:
Packings
Filter Element

Personnel Required:
Aircraft Powerplant Repairer
Aircraft Powerplant Inspector

References:

TM 1-2840-252-23P

General Safety Instructions:

WARNING

Turbine fuels are very flammable. They may cause drying and irritation of skin or eyes. Handle only in well-ventilated areas away from heat and open flame. Drain and store in approved metal safety containers. Avoid prolonged or repeated contact with skin and do not take Internally. Wash contacted area of skin thoroughly after handling. If irritation of skin results, get medical attention. Get medical attention for eyes.

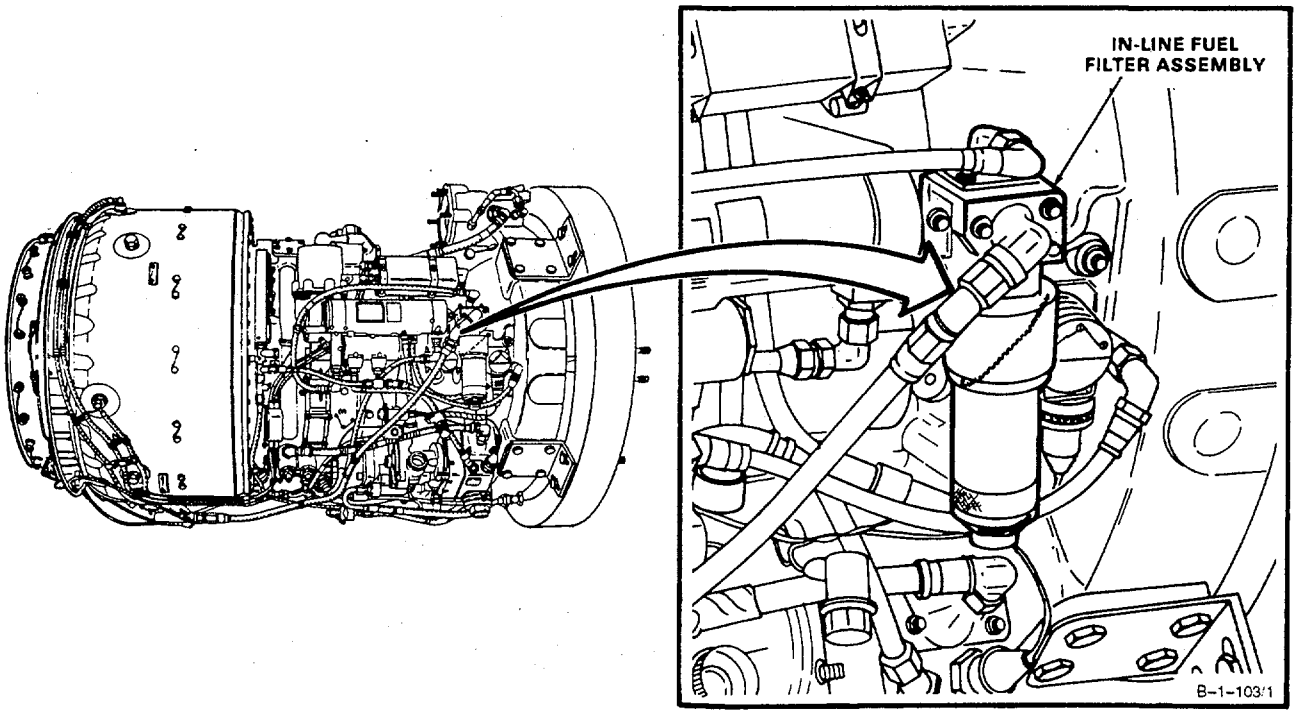

GO TO NEXT PAGE

1-95 SERVICE IN FUEL FILTER 1-95

1. Place wiping rag (E64) under filter bowl (1).

2. Remove lockwire and **unscrew filter bowl** (1). Use strap wrench. Allow fuel to drain into suitable safety container.

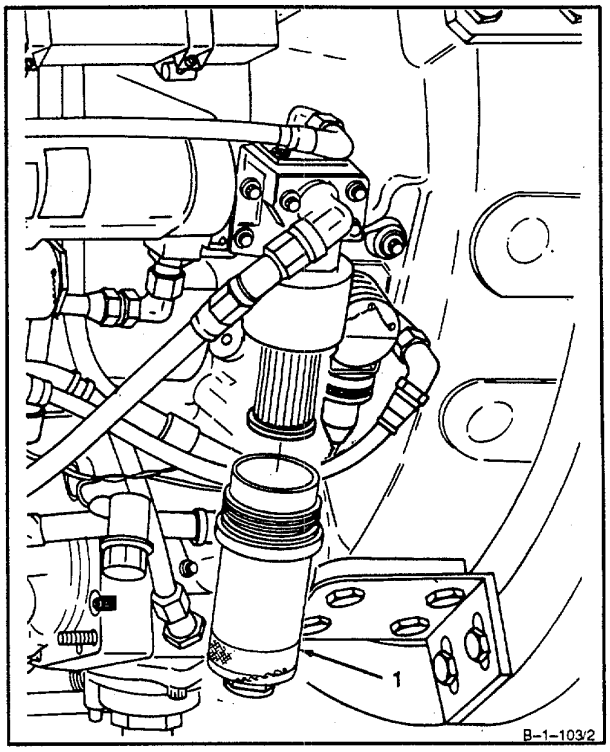

3. **Remove filter element** (2). Remove packings (3) and (4).

4. **Inspect filter element** (2). There shall be no contamination. If contamination is found, inspect contaminated fuel system (Ref. Task 1-79).

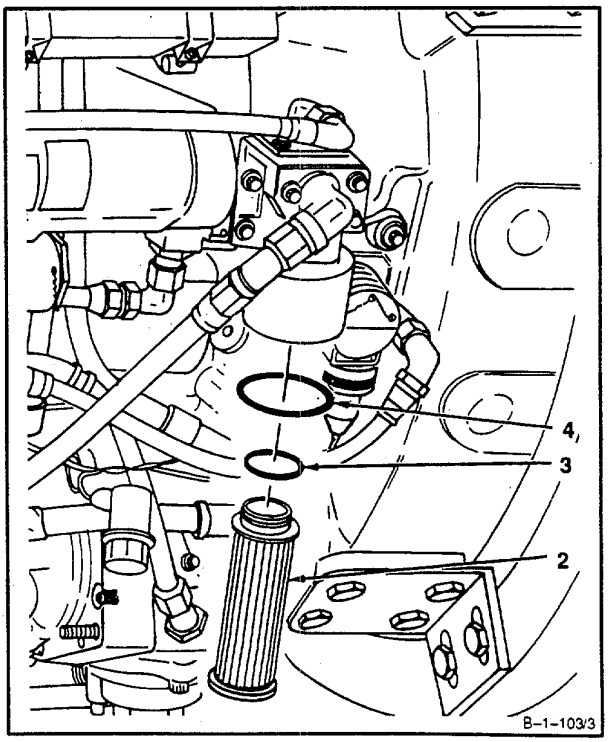

GO TO NEXT PAGE

5. Install packing (3) on serviceable filter element (2).

6. **Install** packing (4) and serviceable **filter element** (2) in filter head (5).

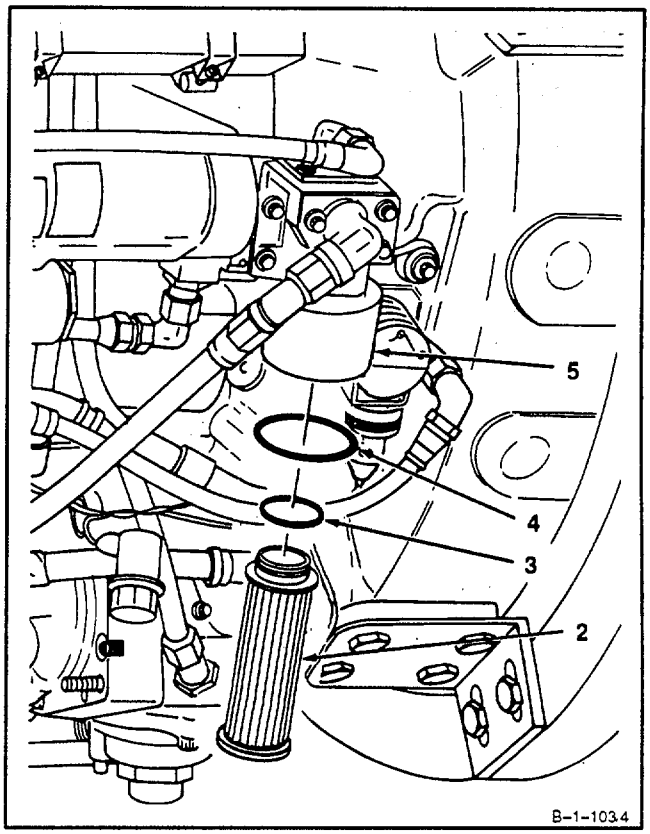

GO TO NEXT PAGE

CAUTION

Do not use wrench on indicator to tighten bowl or damage may occur.

7. Install filter bowl (1) in filter head (5). Turn by hand until bottomed, then hand-tighten.

8. Lockwire filter bowl (1). Use lockwire (E33).

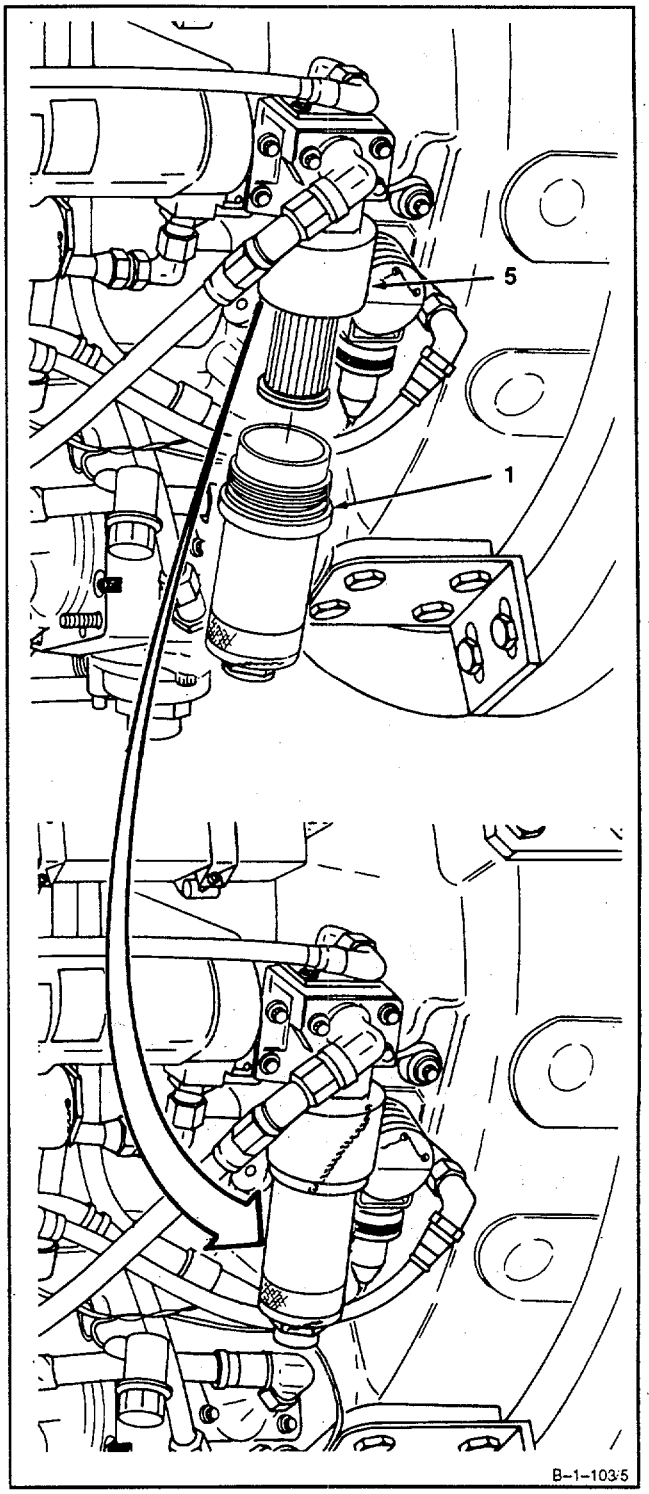

INSPECT

FOLLOW-ON MAINTENANCE:
None

END OF TASK

1-97 SERVICE INTERSTAGE AIR-BLEED ACTUATOR STRAINER 1-97

INITIAL SETUP

Applicable Configurations:

All

Tools:

Powerplant Mechanic's Tool Kit, NSN 5180-00-323-4944
Technical Inspection Tool Kit, NSN 5180-00-323-5114
Deep Style Socket, 1-inch
Goggles
Compressed Air Source

Materials:

Dry Cleaning Solvent (E19)
Gloves (E24)

Parts:

Packing

Personnel Required:

Aircraft Powerplant Repairer
Aircraft Powerplant Inspector

References:

TM 1-2840-252-23P

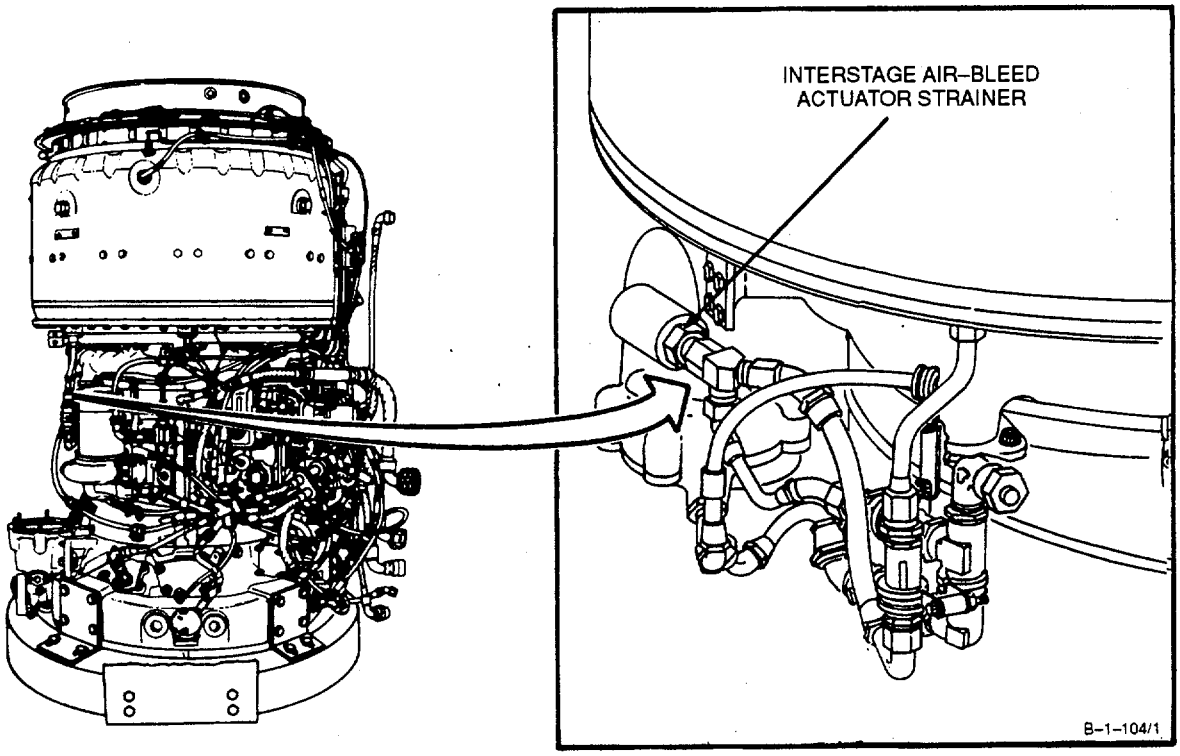

GO TO NEXT PAGE

1. **Disconnect hose assemblies (1 and 2).**

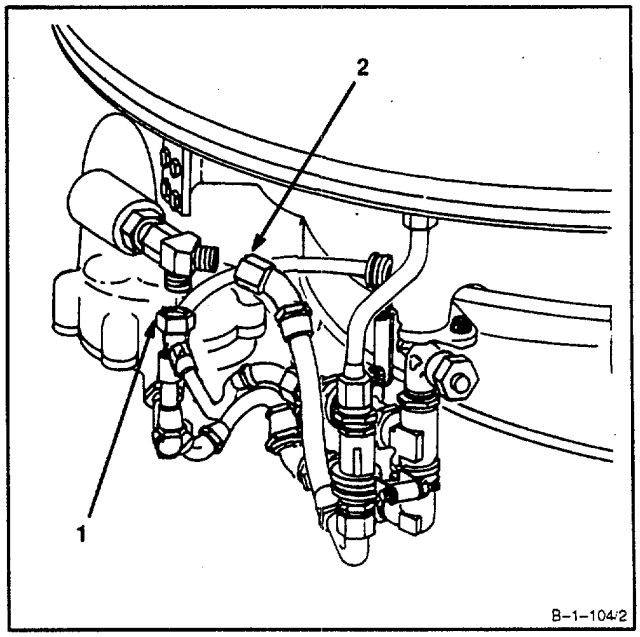

2. **Remove tee (3).**

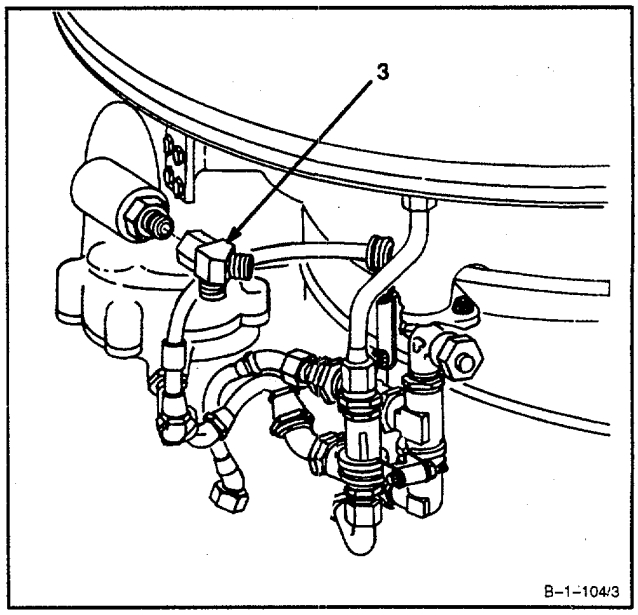

GO TO NEXT PAGE

3. **Remove reducer (4)** using deep style socket. Remove packing (5).

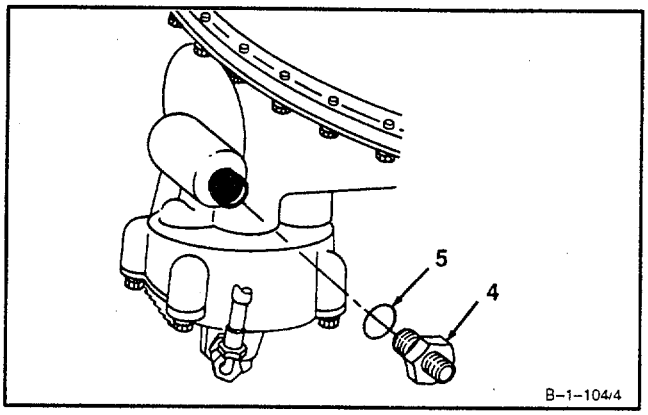

4. **Remove strainer element (6).**

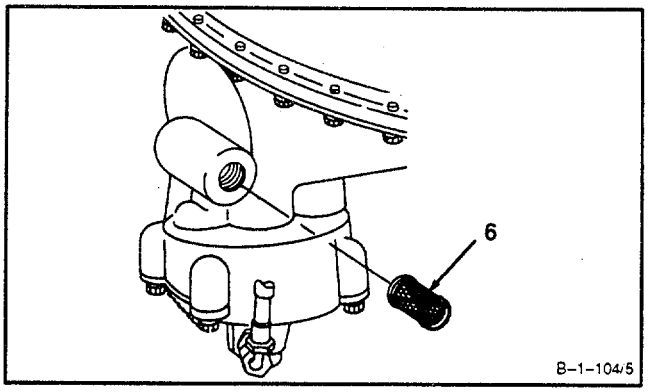

5. **Remove spring (7).**

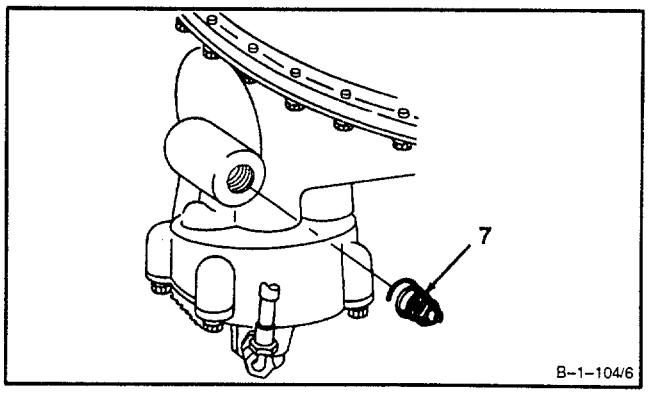

GO TO NEXT PAGE

WARNING

Dry cleaning solvent (E19) is flammable and toxic. It can irritate skin and cause burns. Use only in well-ventilated area, away from heat and open flame. In case of contact, Immediately flush skin or eyes with water for at least 15 minutes. Get medical attention for eyes.

6. Wear gloves (E24). **Clean strainer element (6) and spring** (7). Use dry cleaning solvent (E19).

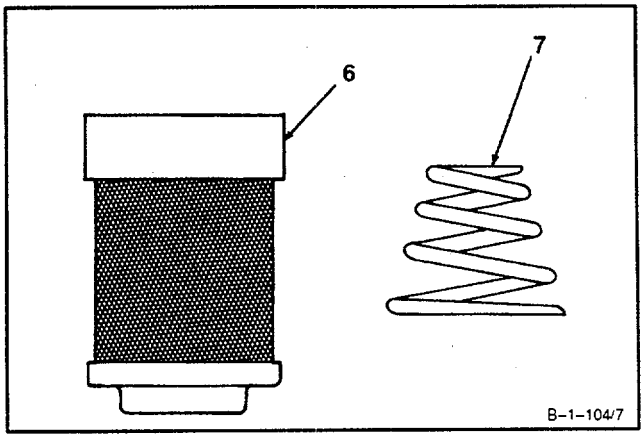

WARNING

When using compressed air for cleaning, use approved protective equipment for eyes and face. Do not use more than 30 psig air pressure. Do not direct air toward yourself or another person. Failure to comply could result in injury to eyes or skin. In case of injury, get medical attention.

7. Wear goggles. **Blow dry strainer element (6)** and spring (7) using clean, dry compressed air.

8. **Inspect strainer element (6).** There shall be no tears, punctures, or broken wires in screen.

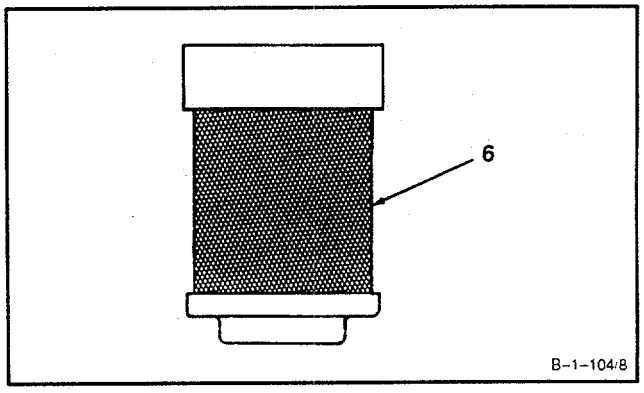

9. **Inspect spring (7).** There shall be no broken coils.

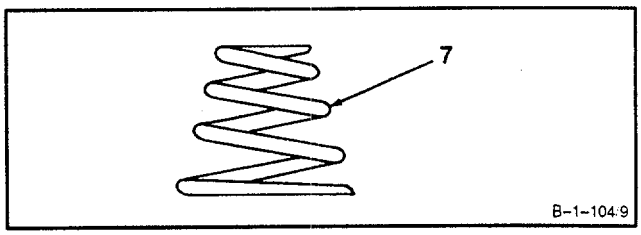

GO TO NEXT PAGE

10. **Install spring (7)** in housing (8), large end in.

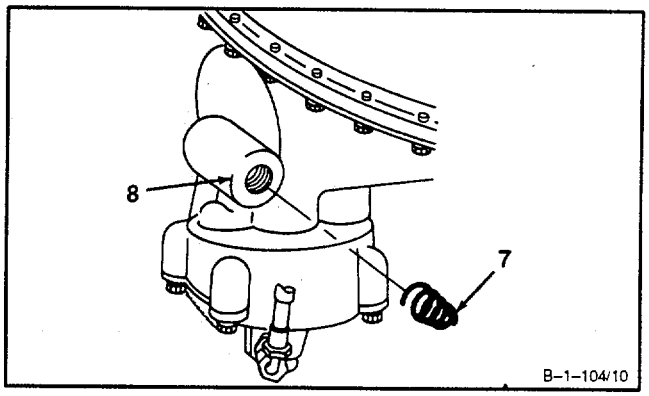

11. **Install strainer element (6)** in housing (8), open end out.

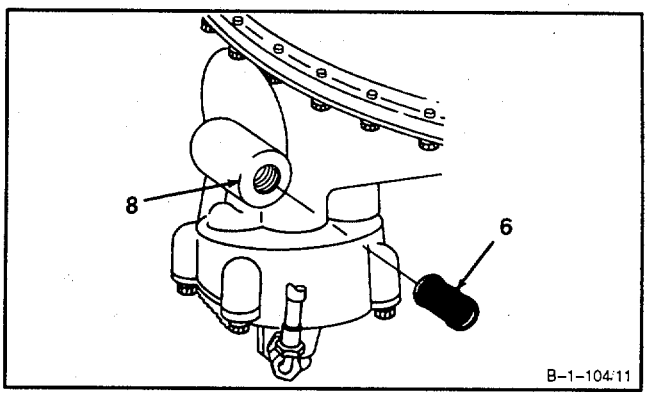

12. **Install** packing (5) and **reducer (4)** in housing (8). Use deep style socket.

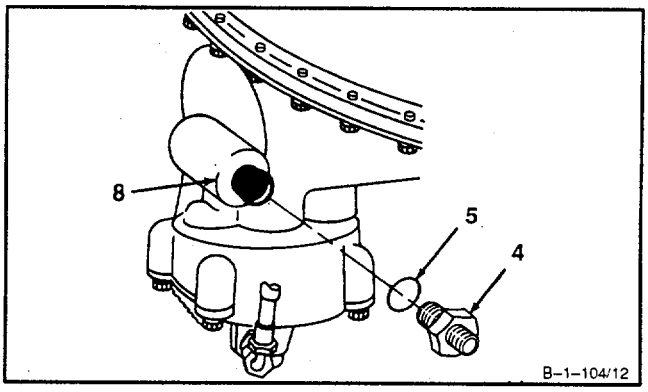

GO TO NEXT PAGE

13. **Install tee (3)** on reducer (4).

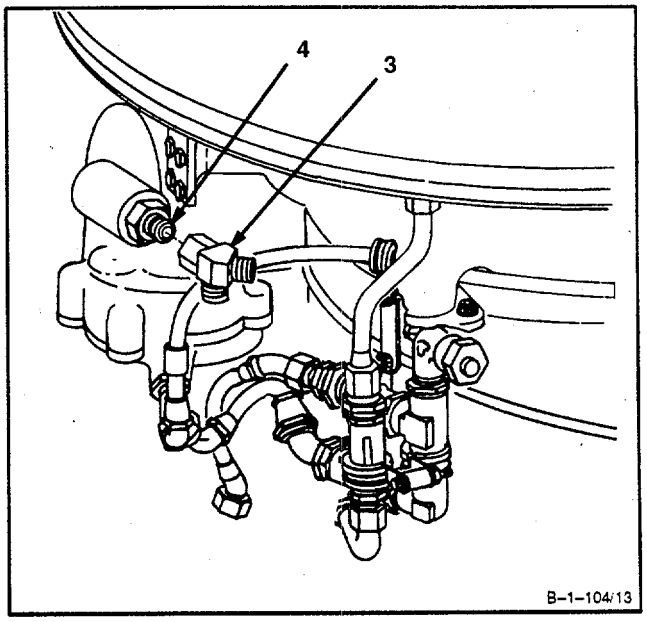

14. **Connect hose assembly (1 and 2)** to tee (3).

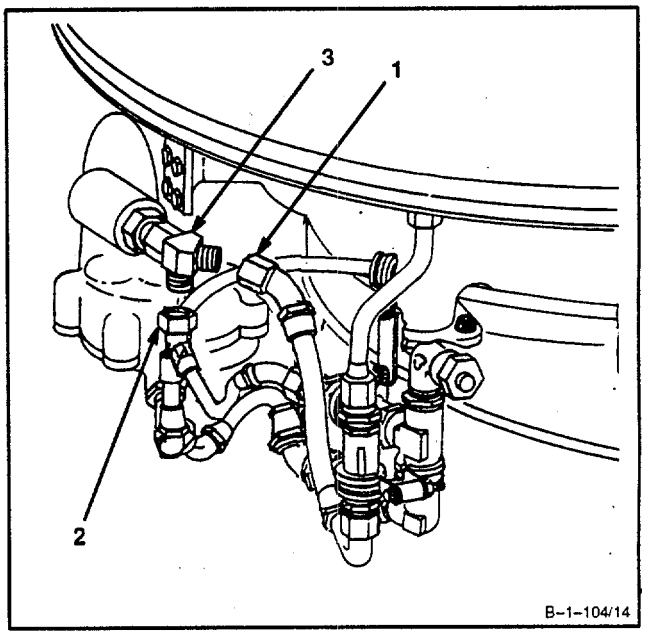

INSPECT

FOLLOW-ON MAINTENANCE
None

END OF TASK

1-98 OVERHAUL AND RETIREMENT SCHEDULE

Table 1-2 provides a list of units of operating equipment that are to be overhauled or retired at the period specified. Removal of equipment for overhaul may be accomplished at the inspection nearest the time when overhaul is due unless otherwise specified in TM 55-1500-328-25. Upon replacement of items listed, all applicable forms, records, and worksheets will be completed and updated as required. Refer to DA PAM 738-751 for applicable forms and records.

Table 1-2. Overhaul and Retirement Schedule

COMPONENTS	PART NUMBER	OVERHAUL INTERVAL (HOURS)	RETIREMENT INTERVAL (HOURS)	REF. PARAGRAPH
T55-L-714 Engine	2-001-020-32	2400		

SECTION X

MAINTENANCE PROCEDURES

This section contains general procedures for maintaining the engine. It has instructions for cleaning, testing, and adjusting the engine. It is divided into the following tasks:

NOTE

When maintenance procedures involve test cell operations, these operations will be accomplished by Contractor Logistic Support personnel.

LIST OF TASKS

NUMBER	TASK	PAGE
1-99	Wash Compressor	1-488
1-100	Pressure Test Interstage Air-Bleed Actuator	1-496
1-101	Adjust Oil Pump	1-499

INITIAL SETUP

Applicable Configurations:
All

Tools:

Powerplant Mechanic's Tool Kit,
NSN 5180-00-323-4944
Technical Inspection Tool Kit,
NSN 5180-00-323-5114
Technical Inspection Tool Kit,
Compressed Air Source
Air Pressure Regulator
Solvent Gun
Utility Pail (2)

Materials:

Anti-Detonating Injection Fluid Mixture (E5)
Cleaning Solution (E12)
Cleaning Solution (E69)
Cleaning Solution (E70)
Cleaning Solution (E71)
Cleaning solution (E72)
Dry Cleaning Solvent (E19)
Lockwire (E33)
Methanol (E40)
Rust Inhibitor and Preservative (E48)
Protective Caps

Personnel Required:
Aircraft Powerplant Repairer
Aircraft Poweplant Inspector
Aircraft Powerplant Supervisor

References:

TM 1-1520-252-10

General Safety Instructions:

WARNING

When using compressed air for cleaning, use approved protective equipment for eyes and face. Do not use more than 30 psig air pressure. Do not direct air toward yourself or another person. Failure to comply could result in injury to eyes or skin. In case of injury, get medical attention.

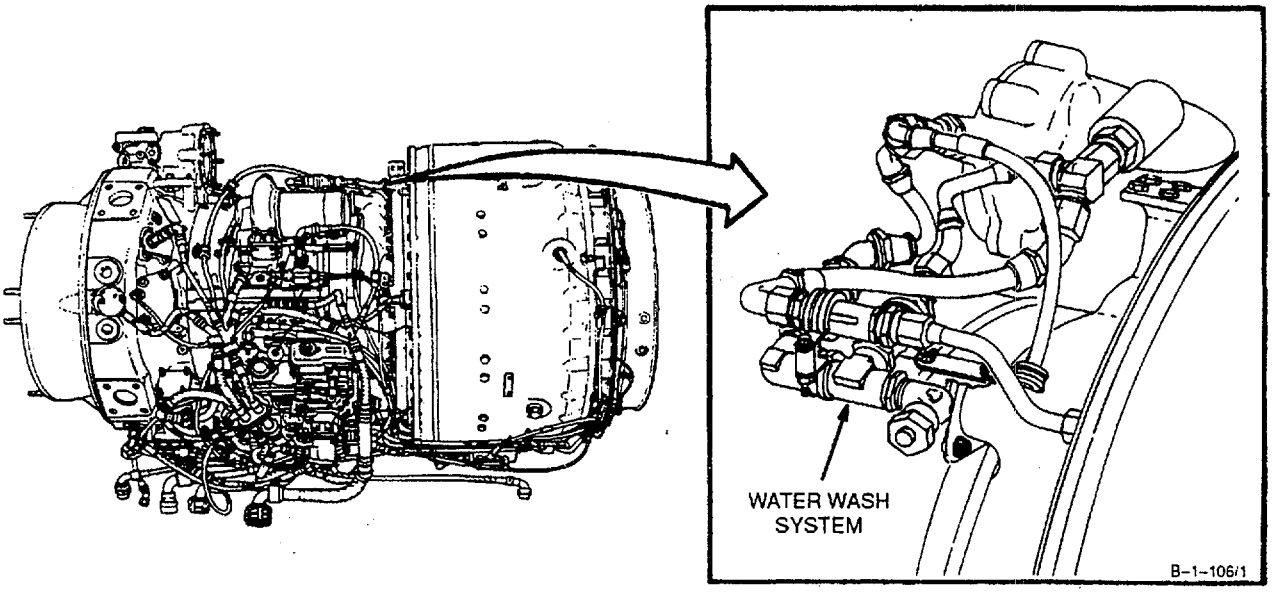

GO TO NEXT PAGE

1–99 WASH COMPRESSOR (Compressor) 1–99

NOTE

Currently B&B 3100 (MIL–C–85704, TYPE I) is the primary cleaner for Army turbine engines and remains an approved cleaner for locales where environmental restrictions preclude its use. Where environmental restrictions preclude its use, MIL–C–85704, TYPE II and TYPE IIA should be used. Continue to use B&B 3100 where not restricted. Approved TYPE II and TYPE IIA cleaners shall be used in accordance with the existing washing procedures, however,they are less effective than TYPE I cleaners, therefore, more frequent engine washes may be required to achieve satsfactory results. TYPE IIA cleaners do not require dilution with water.

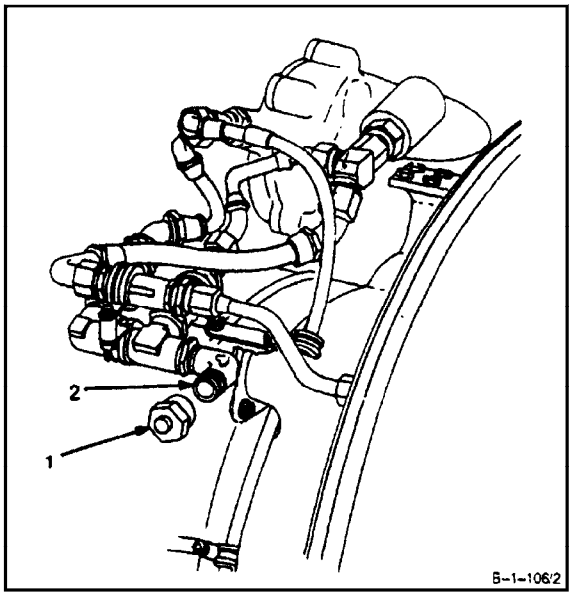

1. **Prepare engine for compresor wash** as follows:
   a. **Remove tube cap** (1) from water wash system elbow (2).
   b. **Connect air pressure hose** (3) with air pressure regulator and source of 60 psig to water wash system elbow (2).

NOTE

In following step c., ensure interstage air–bleed actuator properly closes compressor bleed band.

   c. **Adjust air pressure** on regulator to 60 psig maximum to close compressor bleed band.

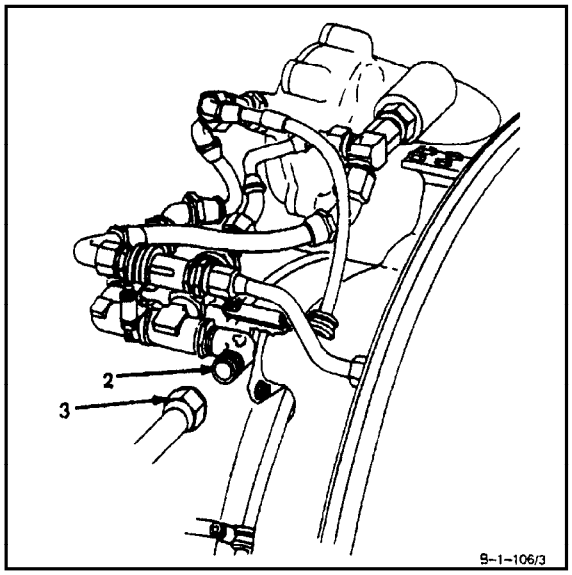

GO TO NEXT PAGE

1–99 WASH COMPRESSOR (Continued) 1–99

2. Wash compressoras follows:

CAUTION

Throughout cleaning operation, ensure combustor drain valve is operativeand fluids are drained from combustor prior to starting engine.

d. Place empty utility pail (4) under combustor drain valves (5), and ensure combustor drain valves are operative.

NOTE

For removal of light oil and dirt, cleaning solution (E12) may be used (go to step b.). For removal of oil, grease or dirt, dry cleaning solvent (E–19) may bu used (go to step c). For removal of dirt and salt deposits, clean fresh water may be used (go to step d).

e. For removal of light oil and dirt, wash comressor using cleaning solution (E 12). Proceed as follows:

WARNIING

Cleaning solution (E 12) is not toxic but fumes may cause irritation. Use only with adequate ventilation. Avoid prolonged or repeated breathing vapors.

(1) Mix a solution of cleaning solution (E 12) with water. Mix four quarts of water to one quart of solution in clean utility pail (6).

CAUTION

Do not exceed starter limitations while motoring engine or damage to starter may occur (Ref. TM 1–1520–252–10).

CAUTION

Do not spray cleaning solution into a hot engine or damage to engine may occur.

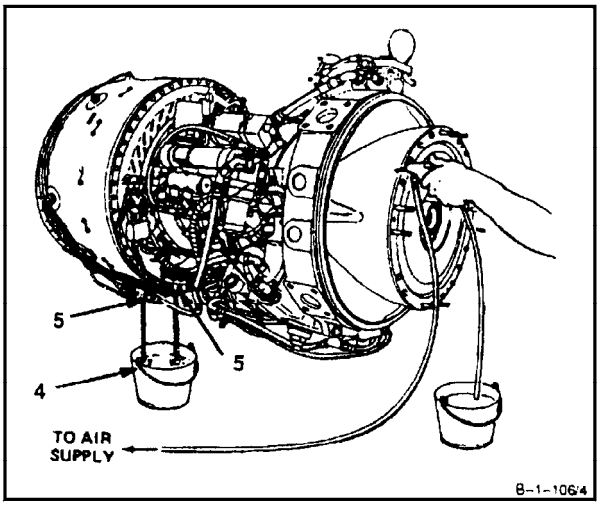

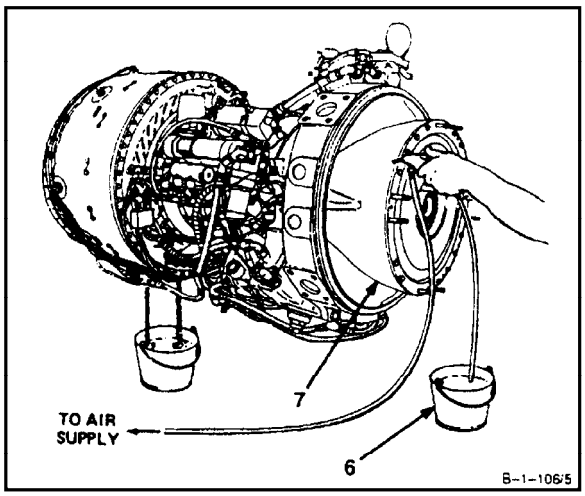

GO TO NEXT PAGE

CAUTION

Ensure end of solvent gun is tight and does not come into contact with compressor rotor blades.

(2) Wear gloves (E24). While engine is cold and with ignition circuit breaker pulled out, have helper motor engine while spraying cleaning solution (E12) evenly through all sections of the inlet housing (7) (Ref. TM 1-1520-252-10).

(3) Stop motoring engine. Let stand for 20 minutes to loosen deposits.

c. For removal of oil, grease, and dirt, wash compressor using dry cleaning solvent (E19). Proceed as follows:

WARNING

Dry cleaning solvent (E19) is flammable and toxic. It can Irritate skin and cause burns. Use only in well-ventilated area, away from heat and open flame. In case of contact, Immediately flush skin or eyes with water for at least 15 minutes. Get medical attention for eyes.

CAUTION

Do not exceed starter limitations while motoring engine or damage to starter may occur (Ref. TM 1-1520-252-10).

CAUTION

Ensure end of solvent gun is tight and does not come into contact with compressor rotor blades.

(1) Wear gloves (E24). While engine is cold and with ignition circuit breaker pulled out, have helper motor engine while spraying dry cleaning solvent (E19) evenly through all sections of the inlet housing (7) (Ref. TM 1-1520-252-10).

(2) Stop motoring engine. Let stand for 20 minutes to loosen deposits.

GO TO NEXT PAGE

d. For removal of dirt and salt, **wash compressor using clean fresh water**. Proceed as follows:

CAUTION

Do not exceed starter limitations while motoring engine or damage to starter may occur (Ref. TM 1-1520-252-10).

NOTE

In following step e., to avoid freezing at ambient temperatures below 35°F, use an- tidetonating injection fluid mixture (E5) or a mixture of 40 percent methanol (E40) and 60 percent water instead of fresh water.

(1) While engine is cold and with ignition circuit breaker pulled out, have helper motor engine while spraying fresh water evenly through all sections of inlet housing (7) at the rate of 2 and 1/2 gallons per minute for approximately 2 minutes.

(2) Stop motoring engine.

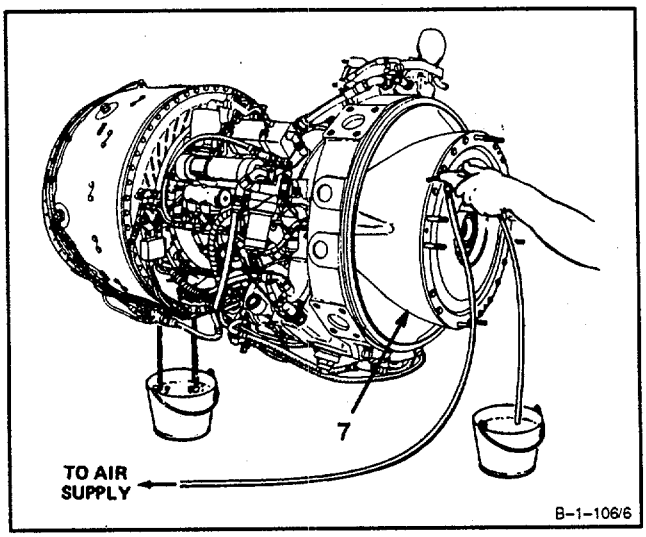

3. Rinse engine as follows:

CAUTION

Do not exceed starter limitations while motoring engine or damage to starter may occur (Ref. TM 1-152-252-10).

NOTE

In following step a., to avoid freezing at ambient temperatures below 35°F, use an- tidetonating injection fluid mixture (E5) or a mixture of 40 percent methanol (E40) and 60 percent water instead of fresh water.

a. While engine is cold and with ignition circuit breaker pulled out, have helper motor engine while spraying fresh water evenly through all sections of inlet housing (7) at the rate of 2 and 1/2 gallons per minute for approximately 2 minutes.

b. Stop motoring engine.

c. Repeat steps 2. and 3. if required.

d. Decrease air pressure to air-bleed actuator to zero.

GO TO NEXT PAGE

1-99. WASH COMPRESSOR (Continued) 1-99

4. **Restore engine to normal status** as follows:

   a. **Disconnect air pressure hose (3)** from water wash system elbow (2).

   b. **Install tube cap (1)** on water wash system elbow (2).

   c. **Push in engine igniter circuit breaker and start engine** (Ref. TM 1-1520-252-10).

   d. **Run at ground idle for a minimum of 2 minutes** to dry engine.

   e. **Shut down engine** (Ref. TM 1-1520-252-10).

   f. Drain any accumulated fluid from P3 drain cartridge of washed engine.

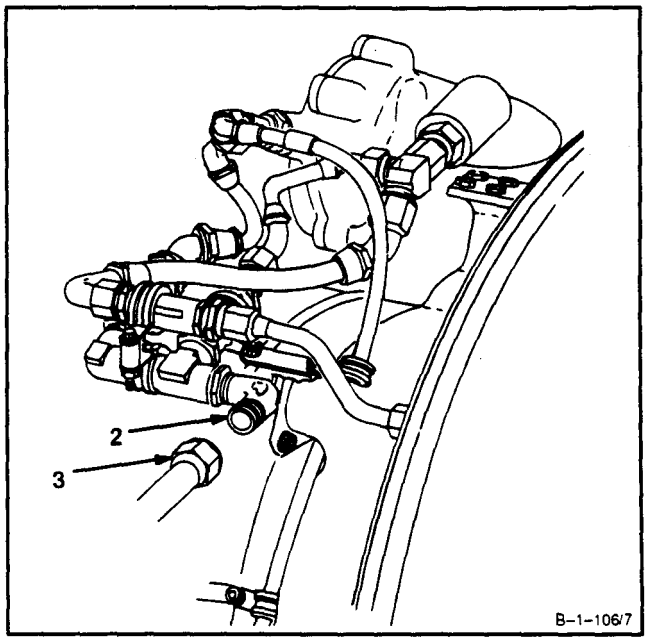

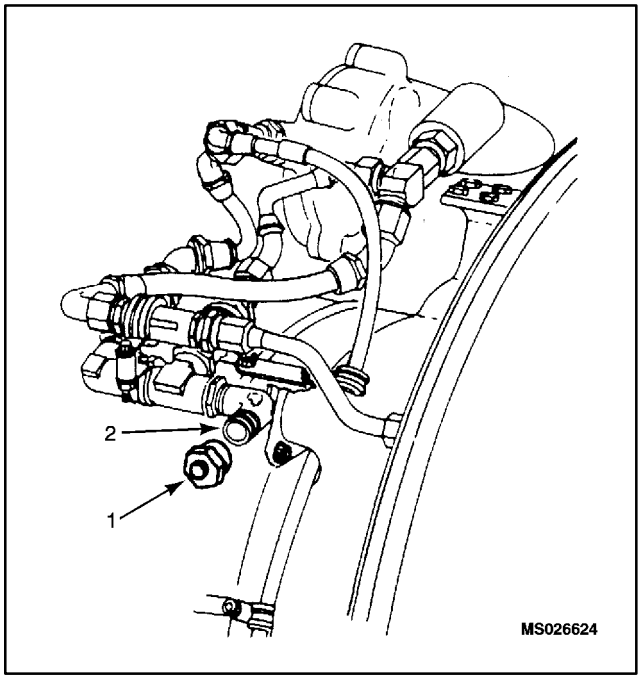

GO TO NEXT PAGE

5. **Preserve compressor** after cleaning as follows:

NOTE

Engine must cool for 45 minutes before preserving compressor.

a. Prepare for compressor preservation (Refer to step1.).

CAUTION

Do not exceed starter limitations while motoring engine or damage to starter may occur (Ref. TM 1-1520-252-10).

b. With engine igniter circuit breaker pulled out; have helper motor engine to 10 percent N1 and allow to coast down.

WARNING

Rust inhibitor and preservative (E48) Is flammable and toxic. Use only in well ventilated area away from heat, sparks and open flames. If swallowed do not induce vomiting. Get medical attention. In case of contact Immediately flush skin and eyes with water for 15 minutes. Get medical attention for eyes.

CAUTION

To prevent corrosion after cleaning, rust inhibitor and preservative must be applied to the compressor.

CAUTION

Do not spray rust inhibitor and preservative into a hot engine or damage to engine may occur.

c. While engine is coasting down, evenly spray 1/2 pint of rust inhibitor and preservative (E48) through all sections of inlet housing (7).

d. Push in engine igniter circuit breaker.

e. Decrease air pressure to air-bleed actuator to zero.

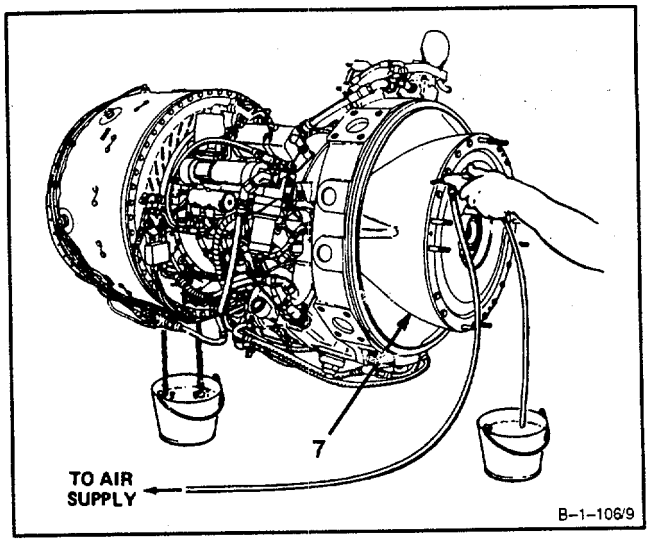

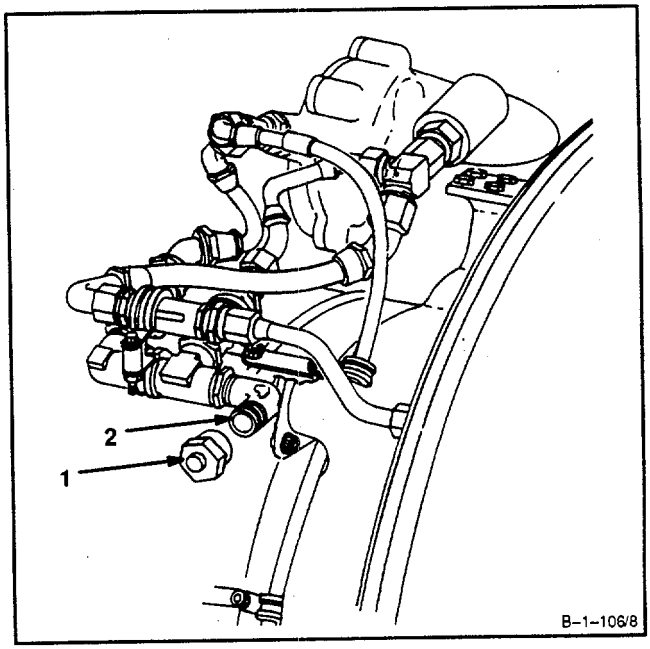

GO TO NEXT PAGE

6. **Disconnect air pressure hose (3)** from water wash system elbow (2).

7. **Install tube cap (1)** on water wash system elbow (2).

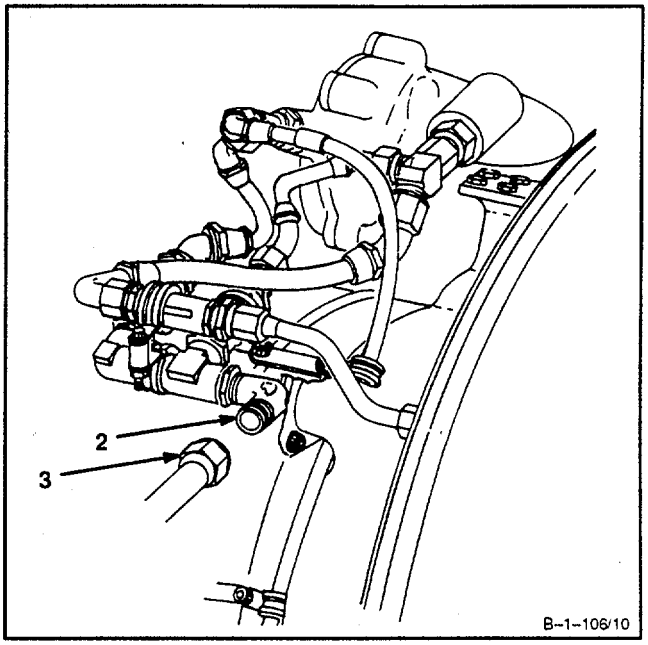

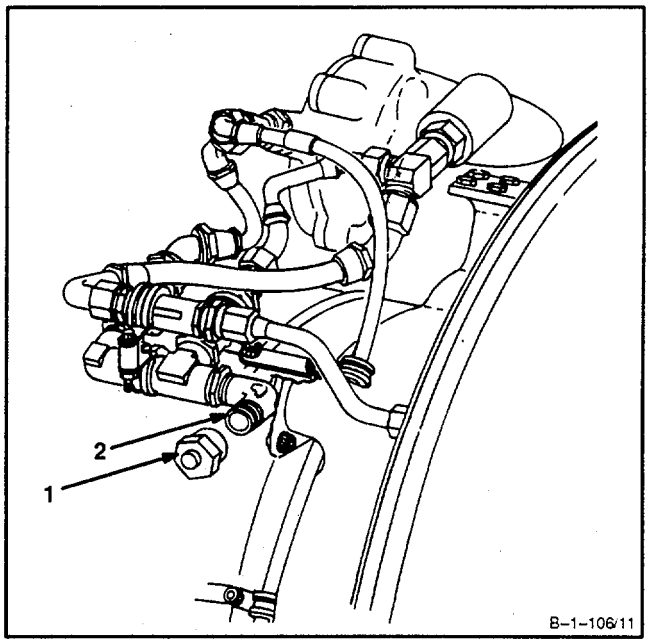

INSPECT

FOLLOW-ON MAINTENANCE:
None

END OF TASK

INITIAL SETUP

Applicable Configurations:
All

Tools:
Powerplant Mechanic's Tool Kit,
NSN 5180-00-323-4944
Compressed Air Source
Dial Indicating Pressure
Gage, 0-100 psig
Pressure Gage Tube Assembly (Appendix E)

Materials:
None

Personnel Required:
Aircraft Powerplant Repairer
Aircraft Powerplant Inspector

Parts:
Tube Caps, MS9314-03 and MS9314-04

General Safety Instructions:

WARNING

Ensure all fittings and hoses are tight before pressurizing. Relieve air pressure before removing fittings and hoses. Failure to comply could result in injury to eyes or skin. In case of injury get medical attention.

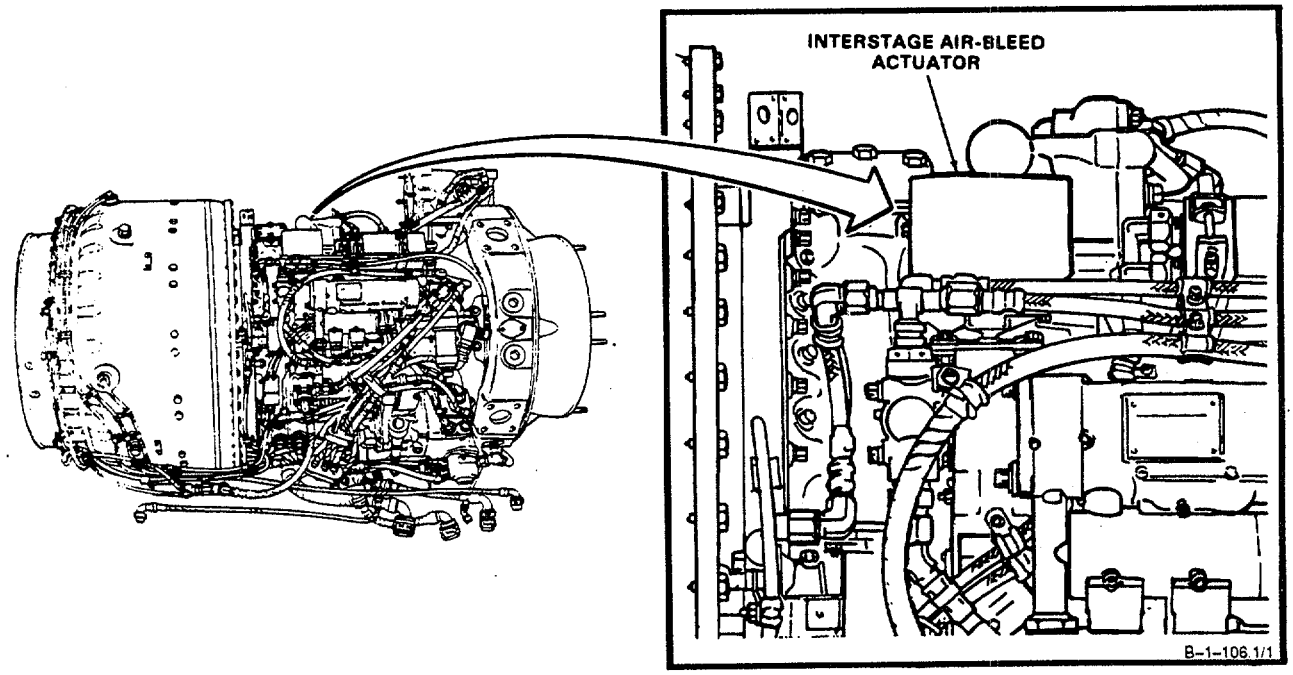

GO TO NEXT PAGE

1. **Check for internal leakage in interstage airbleed actuator (1)** as follows:

   a. Disconnect hose assemblies (2, 3, 4, and 5).

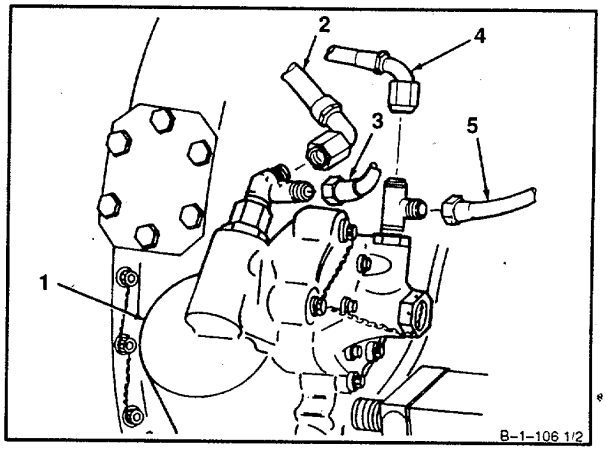

   b. Install cap (6) on P3 port tee (7).

   c. Install cap (8) on PM port tee (9).

   d. Attach pressure gage tube assembly (Appendix E) (10) to direct reading 0-100 psig pressure gage (11).

   e. Connect free end of pressure gage tube assembly (Appendix E) (10) to PM port tee (9).

   f. Connect hose (12) of compressed air source (13) to P3 port tee (7) and ensure valve (14) and regulator (15) are closed.

   g. Open valve (16) of compressed air source (13) and adjust regulator (15) to read 50 psig on gage (17).

   h. Open valve (14) and ensure no air leakage at port tees (7 and 9). Pressure gage (11) shall indicate less than 45 psig.

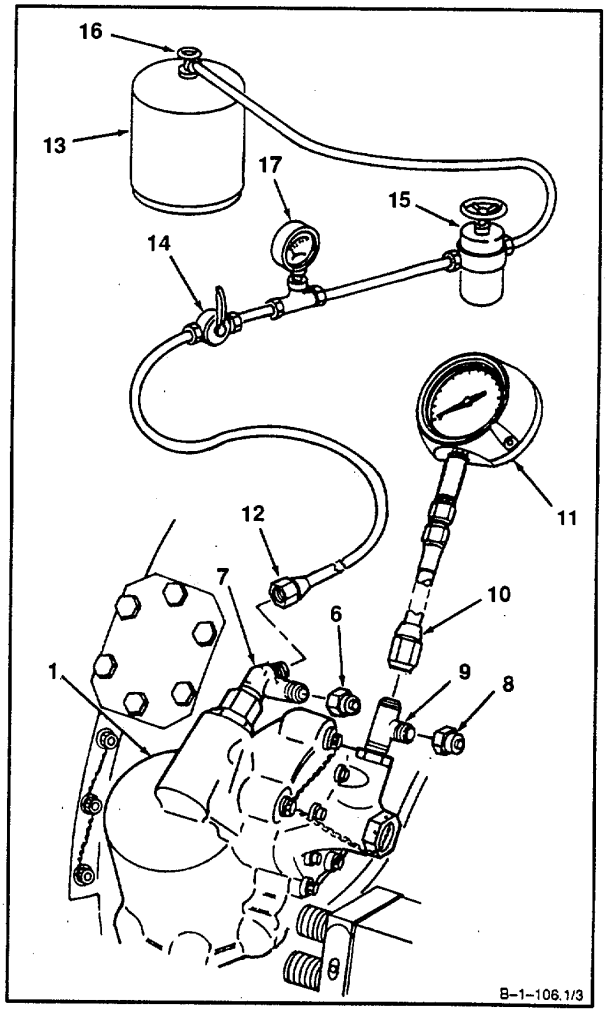

2. **Remove test equipment from interstage air- bleed actuator (1)** as follows:

   a. Shut off compressed air source (13) by closing valve (16).

   b. Loosen cap (6) and alternately press center stem to release air pressure until gage (17) reads 0 psig.

   c. Remove caps (6 and 8).

   d. Remove pressure gage tube assembly (Appendix E) (10) from direct reading 0 to 100 9psi pressure gage (11) and PM port tee (9).

   e. Disconnect hose (12) from P3 port tee (7).

GO TO NEXT PAGE

3. **Connect hose assembly (5)** (water wash tee check valve to interstage air-bleed actuator PM inlet).

4. **Connect hose assembly (4)** (HMA to interstage air-bleed, actuator).

5. **Connect hose assembly (3)** (water wash tee check valve to interstage air-bleed actuator P3 inlet).

6. **Connect hose assembly (2)** (check valve to interstage air-bleed actuator P3 inlet).

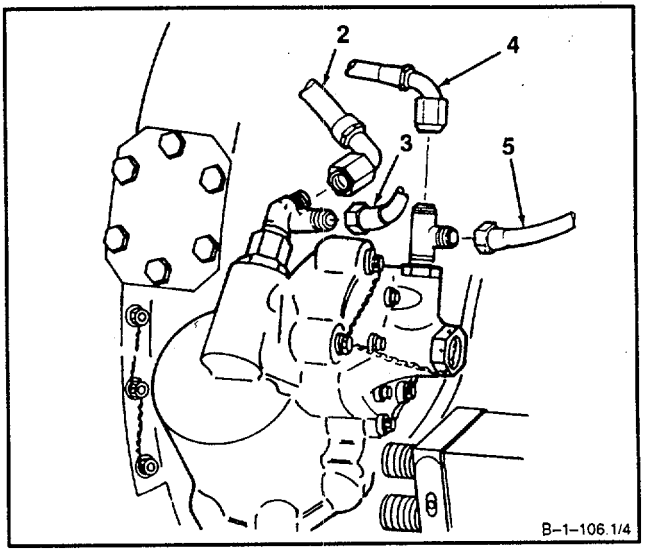

INSPECT

FOLLOW-ON MAINTENANCE:
None

END OF TASK

INITIAL SETUP

Applicable Configurations:
All
Tools:

Powerplant Mechanic's Tool Kit,
NSN 5180-00-323-4944
Technical Inspection Tool Kit,
NSN 5180-00-323-5114
Pressure Gage Tube Assembly (Appendix E) (2)
1 Quart Container
Dial Indicating Pressure
Gage, 0-200 psig (2)
Union (AN 815-4D)
Materials:
Lockwire (E33)
Parts:
Packing
Personnel Required:
Aircraft Powerplant Repairer
Aircraft Powerplant Inspector

References:

TM 1-1520-252-10
TM 1-1520-252-23
TM 1-2840-252-23P
Task 1-80
General Safety Instructions:

WARNING

Lubricating oils cause paralysis if swallowed. Prolonged contact with them may irritate the skin. Handle only in well-ventilated areas away from heat and flame. Drain and store in approved metal safety containers. Avoid prolonged or repeated contact with skin and do not take internally. Wash contacted area of skin thoroughly after handling. If irritation of skin results, get medical attention. Get medical attention for eyes.

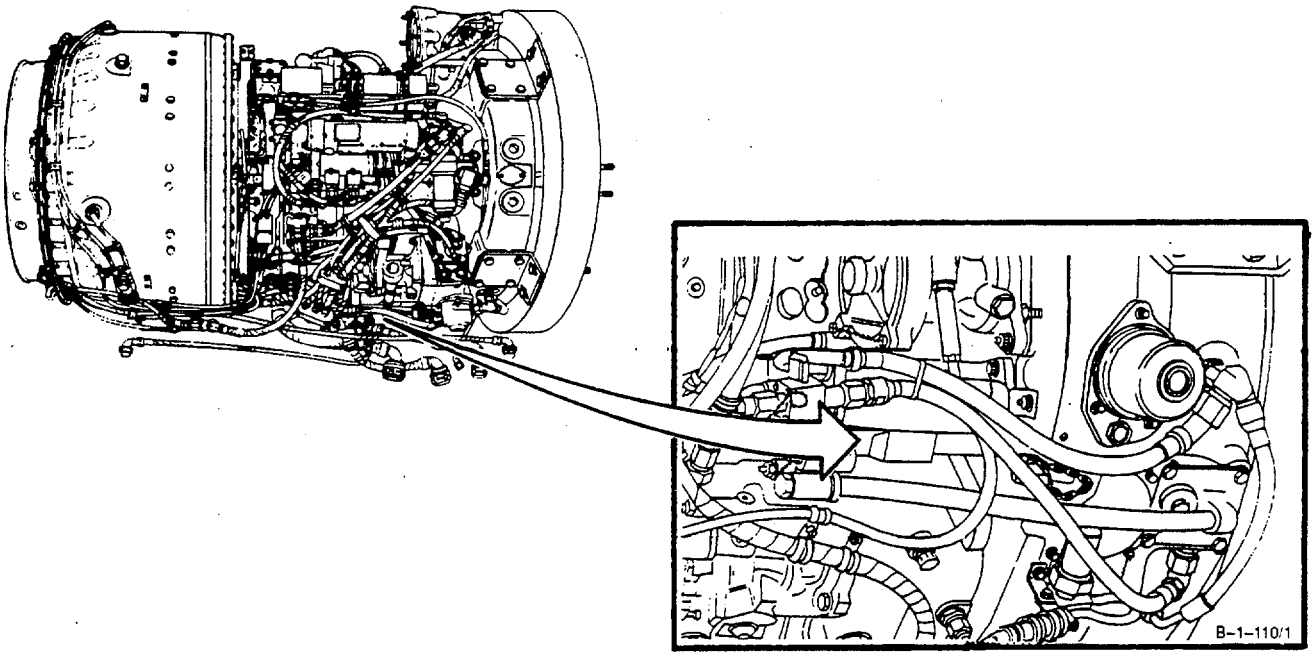

GO TO NEXT PAGE

NOTE

Before making adjustments, perform steps 1.thru 4. . This will determine if adjustments are necessary, or if test cell indicating systems are faulty.

1. **Remove lockwire and cap (1)** from tee and snubber (2) (Ref. TM 1-1520-252-23).

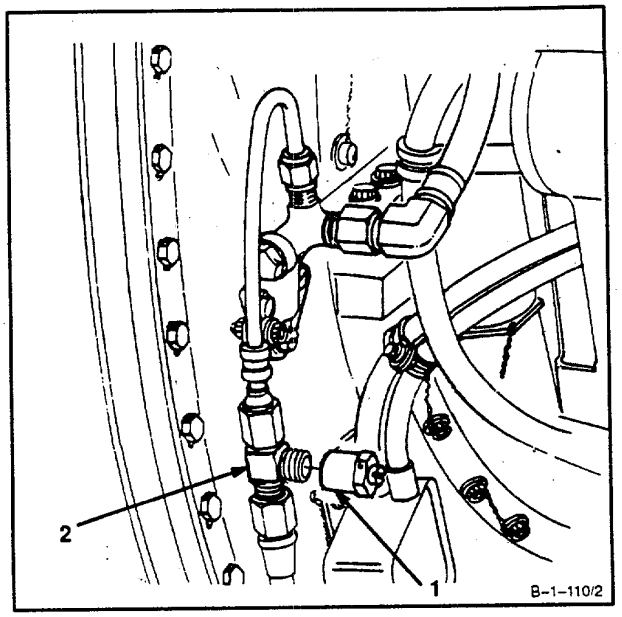

2. **Attach pressure gage tube assembly** (appendix E) (3) to direct reading 0 to 200 psi pressure gage (4).

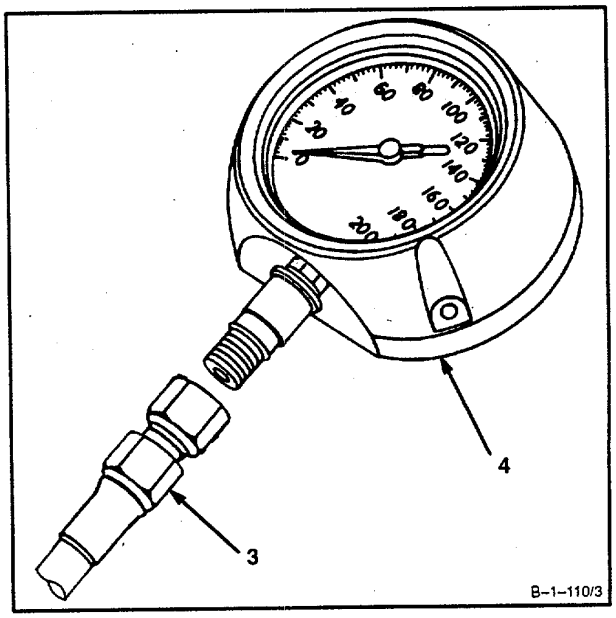

GO TO NEXT PAGE

3. **Connect pressure gage tube assembly (Appendix E) (3)** to tee and snubber (2).

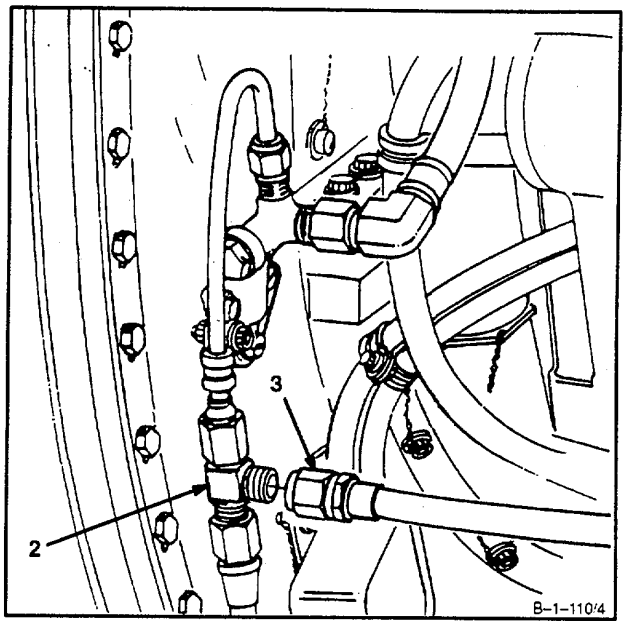

4. **Operate engine until oil pressure has stabilized** (Ref. TM 1-1520-252-10). Oil pressure should be 32 to 90 psig at 80 percent N1 and above, 17 psig minimum at 70 to 80 percent N1 and 5 psig minimum at ground idle.

5. **Stop engine**.

6. **If oil pressure Is not within limits** , check pump output as follows:

   a. **Remove lockwire, main oil filter drain plug** (5) and packing (6).

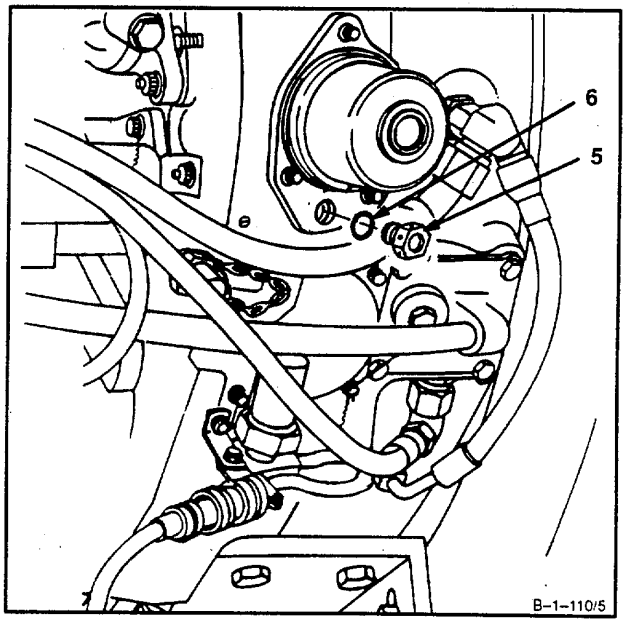

GO TO NEXT PAGE

b. **Attach pressure gage tube assembly (Appendix E) (7)** to 0 to 200 psi direct reading pressure gage (8).

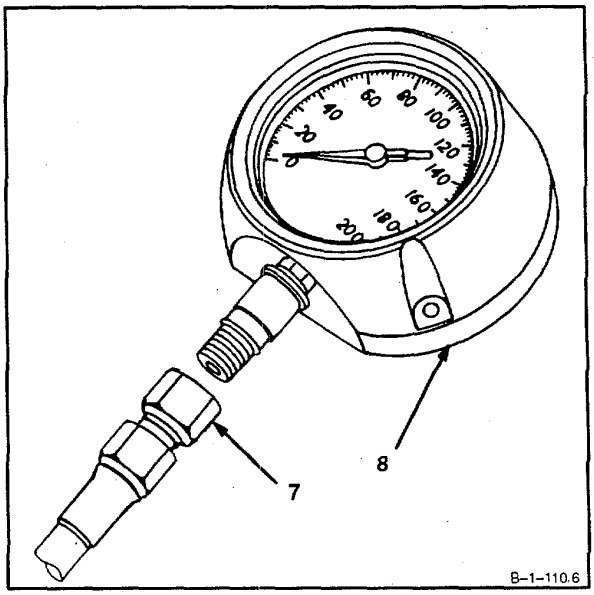

c. **Install** packing (6) and **union (9)** in main oil filter drain hole (10).

d. **Connect pressure gage tube assembly (Appendix E) (7)** to union (9).

e. **Operate engine** (Ref. TM 1-1520-252-10). Engine oil pressure shall be 100 to 130 psig at 95 percent N1 and above. **If oil pressure is not within limits shut engine down.**

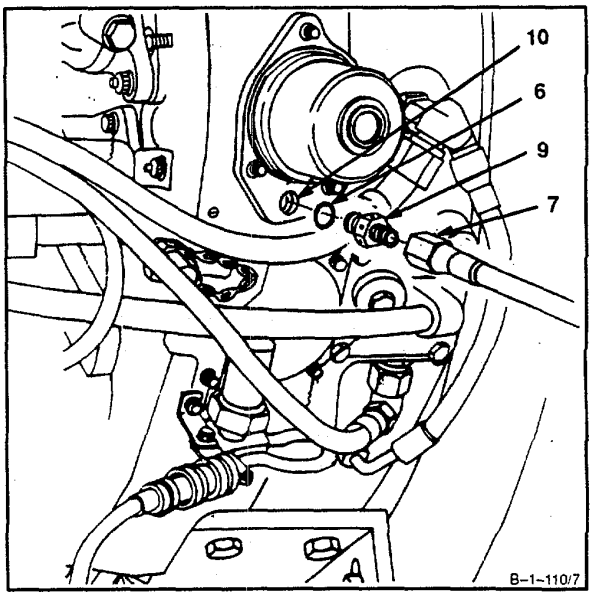

GO TO NEXT PAGE

7. **Adjust oil pump** as follows:

   a. Remove lockwire and **loosen adjusting screw locknut (11).**

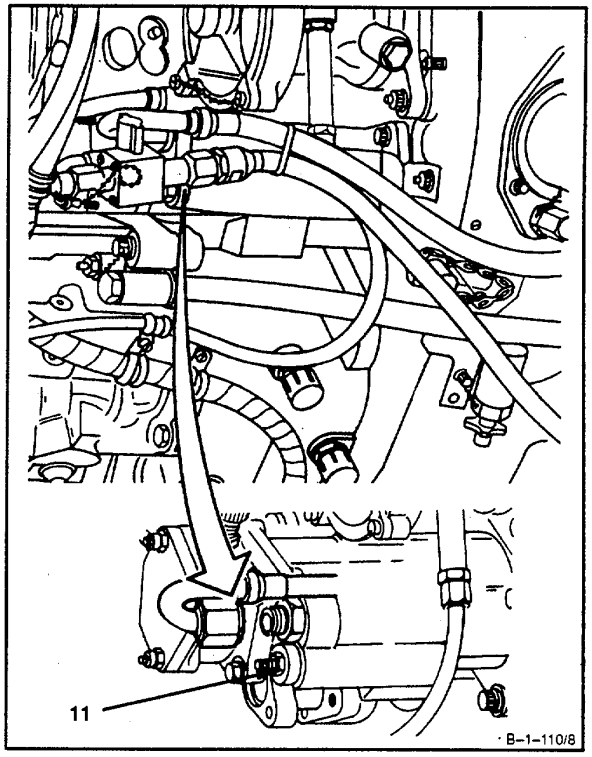

NOTE

One full turn of adjustment screw (12) will change the pressure approximately 10 psig.

   b. **Turn adjustment screw (12) clockwise to increase pressure** if oil pressure is lower than 100 psig.

   c. **Turn adjustment screw (12) counterclockwise to decrease pressure** if oil pressure is higher than 130 psig.

   d. **Tighten locknut (11) and operate engine to check oil pressure.** If adjustment is still necessary, repeat step 7a, 7b, and 7c.

   e. **Check oil pressure at No. 2 bearing connection pressure gage.**

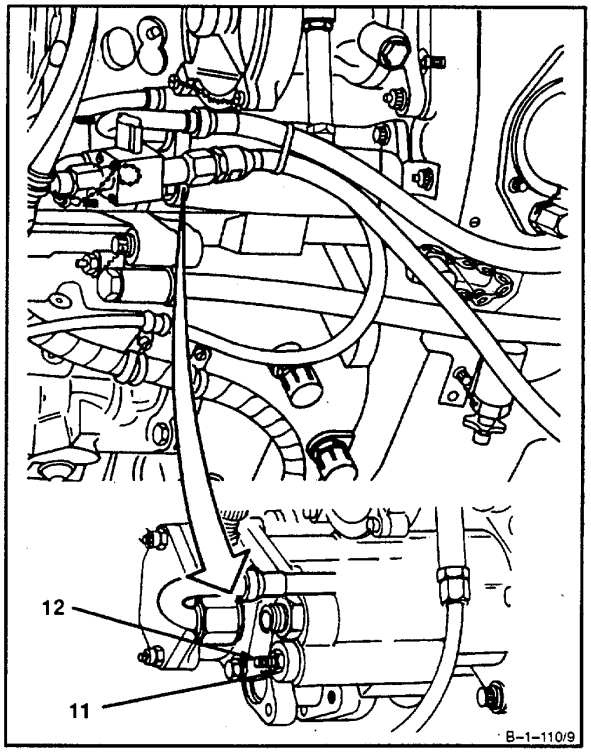

GO TO NEXT PAGE

8. **If oil pump pressure at the filter drain is within limits and pressure at the No. 2 bearing connection is less than the limits outlined In step 4, inspect contaminated oil system** (Ref. Task 1-80).

9. **When the adjustment is properly reached between** 100 to 130 psig, **tighten locknut (11)**. Lockwire locknut (11). Use lockwire (E33).

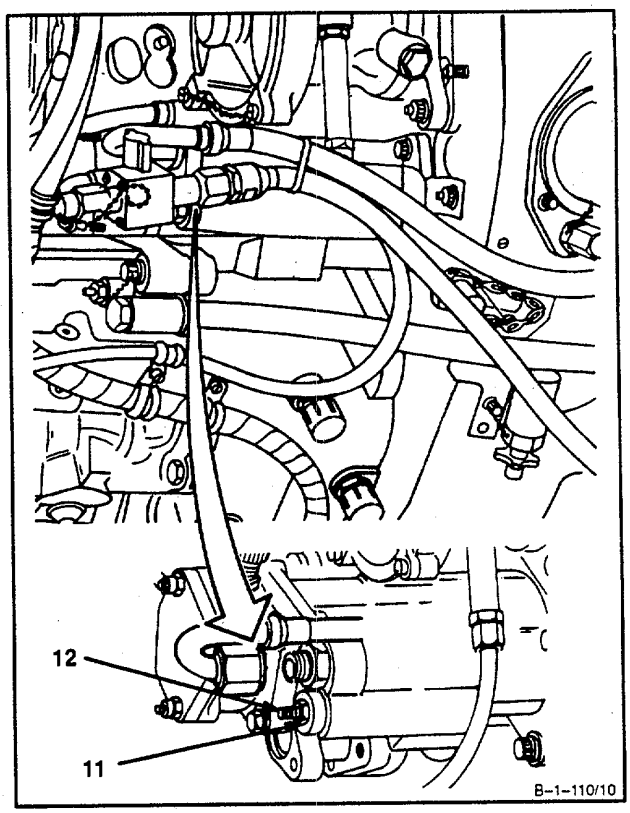

10. **Remove pressure gage tube assembly (Appendix E) (7),** union (9) and packing (6).

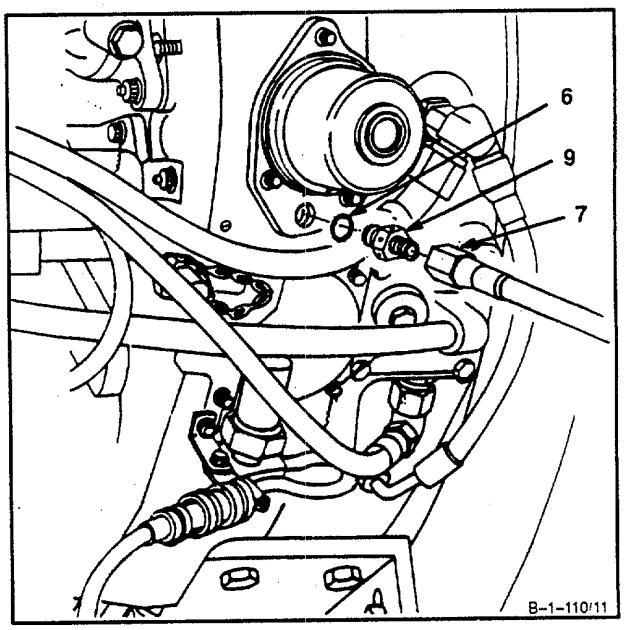

GO TO NEXT PAGE

11. **Install** packing (6) and **main oil filter drain plug (5).** Lockwire plug (5). Use lockwire (E33).

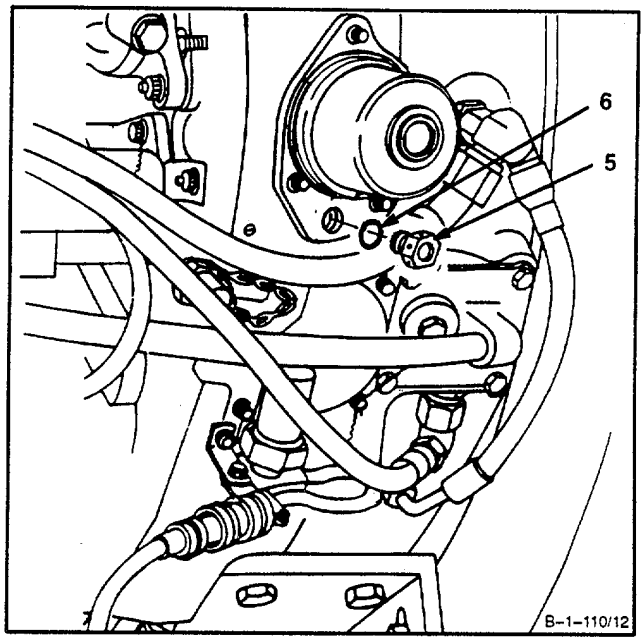

12. **Remove pressure gage tube assembly (Appendix E) (3)** from tee and snubber (2).

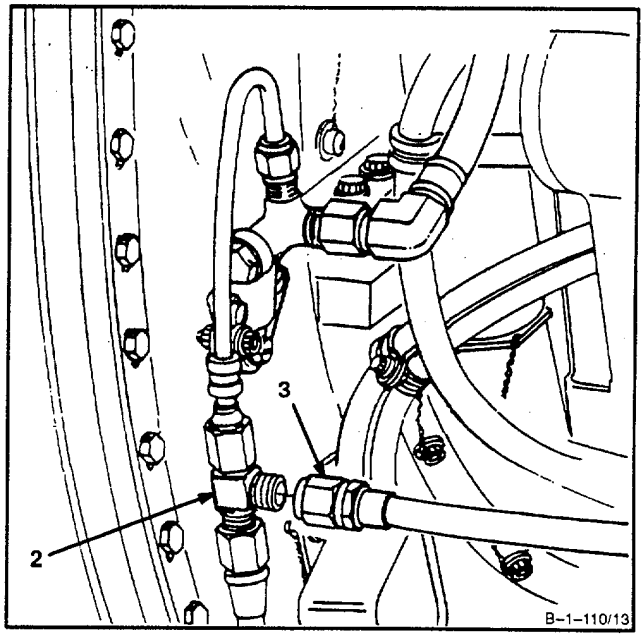

GO TO NEXT PAGE

13. **Install cap (1)** to tee and snubber (2) (Ref. TM 1-1520-252-23).

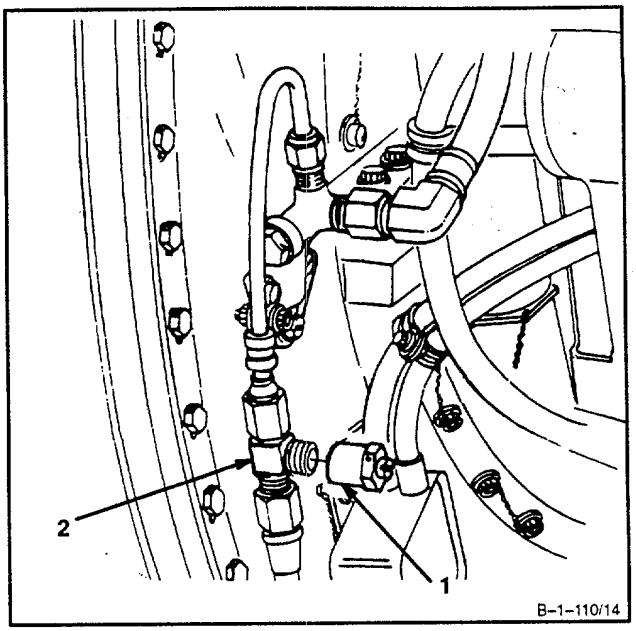

INSPECT

14. **Disconnect pressure gage tube assembly (Appendix E) (3)** from direct reading oil pressure gage (4).

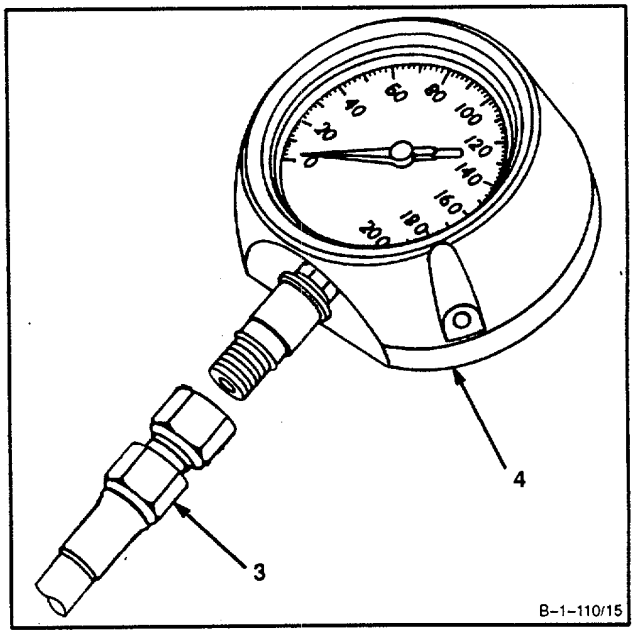

GO TO NEXT PAGE

15. **Disconnect pressure gage tube assembly (Appendix E) (7)** from direct reading oil pressure gage (8).

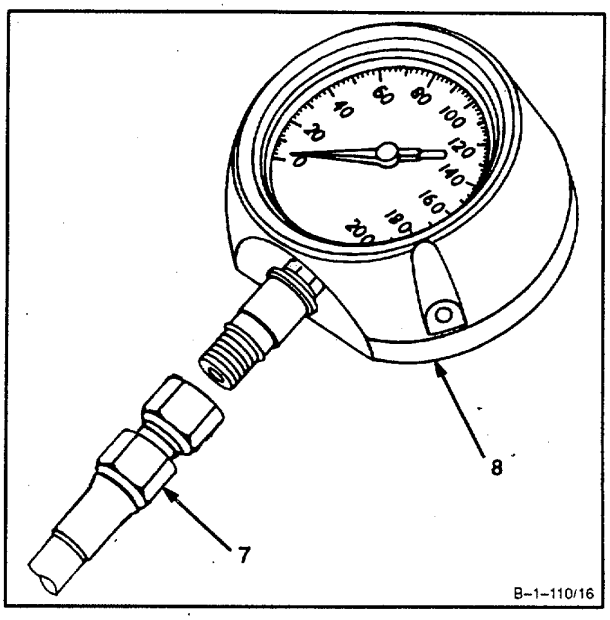

FOLLOW-ON MAINTENANCE:

None

END OF TASK

SECTION XI

PREPARATION FOR STORAGE AND SHIPMENT

This section contains general procedures for proper handling of engine to be shipped or stored. It has instructions for preparing and installing engine in container. It also contains instructions for inspecting, preparing and marking container. Represerving engine stored for six months is also covered. They are divided into the following tasks:

LIST OF TASKS

NUMBER	TASK	PAGE
1-102	Preserve and Prepare Engine for Shipment or Storage	1-510
1-103	Prepare and Inspect Shipping and Storage Container	1-530
1-104	Install Engine Into Shipping and Storage Container	1-537
1-105	Mark Shipping and Storage Container	1-558
1-106	Represerve Engine in Storage Over Six Months	1-563

1-102 PRESERVE AND PREPARE ENGINE FOR SHIPMENT OR STORAGE 1-102

INITIAL SETUP

Applicable Configurations:
All

Tools:
Powerplant Mechanic's Tool Kit,
NSN 5180-00-323-4944
Drain Hose (Appendix E)
Drain Hose (Appendix E)
Drain Hose (Appendix E)
Hose Assembly (Appendix E)
Container, 2 Gallon

Materials:
Barrier Material (E7)
Corrosion Preventive Compound (E15)
Lubricating Oil (E35)
Plastic Cover (E45) (2)
Tape (E46)
Wiping Rag (E64)

Personnel Required:
Aircraft Powerplant Repairer
Aircraft Powerplant Supervisor

References:

TM 1-1520-252-10
TB 55-9150-200-25
Task 1-68
Task 1-69
Task 1-104
Appendix E

General Safety Instructions:

WARNING

Lubricating oils cause paralysis if swallowed. Prolonged contact with them may Irritate the skin. Handle only in well-ventilated areas away from heat and flame. Drain and store in approved metal safety containers. Avoid prolonged or repeated contact with skin and do not take Internally. Wash contacted area of skin thoroughly after handling. If irritation of skin results, get medical attention. Get medical attention for eyes.

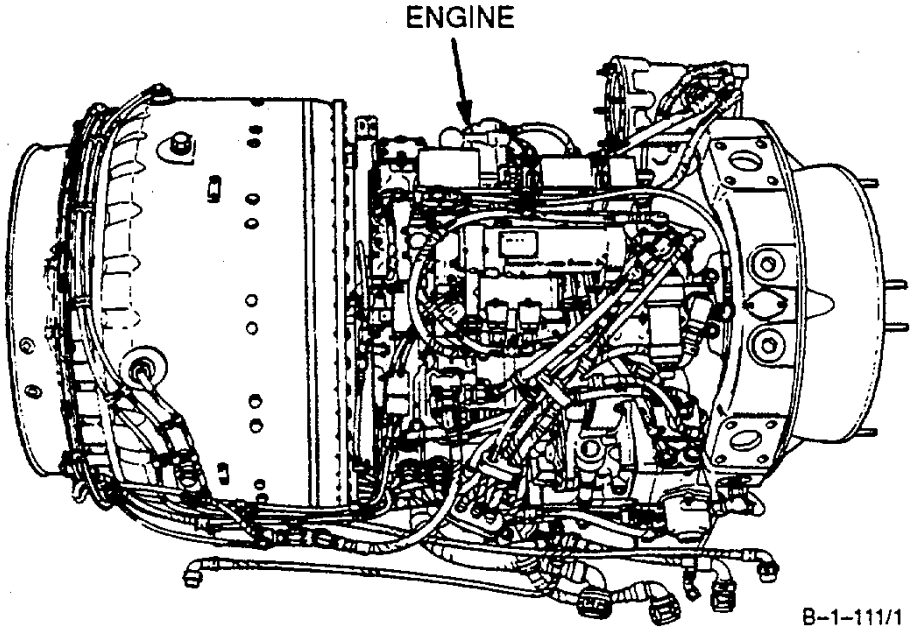

GO TO NEXT PAGE

1. **Preserve engine that can be motored** as follows:

NOTE

Add corrosion preventive concentrate to oil system (Ref. TB 55-9150-200-25). Re- cord data of preservation and maintenance during preservation on historical record, DA form 2408-16.

NOTE

This preservation procedure must be repeated every 45 days if engine is not installed in container.

a. **Service engine oil system to half full** (Ref. Task 1-68 or Task 1-69).

b. **Disconnect main fuel hose (1)** from oil cooler assembly tube assembly fuel outlet port (2).

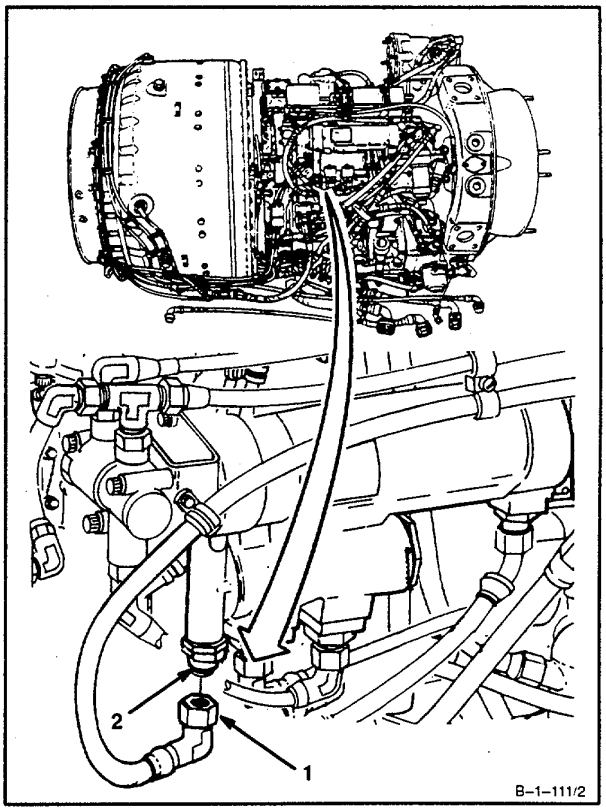

GO TO NEXT PAGE

c. **Attach drain hose (Appendix E) (3) to oil cooler assembly tube assembly fuel outlet port (2**).

d. **Insert free end (4) of drain hose (Appendix E) (3) Into suitable approved metal safety container.**

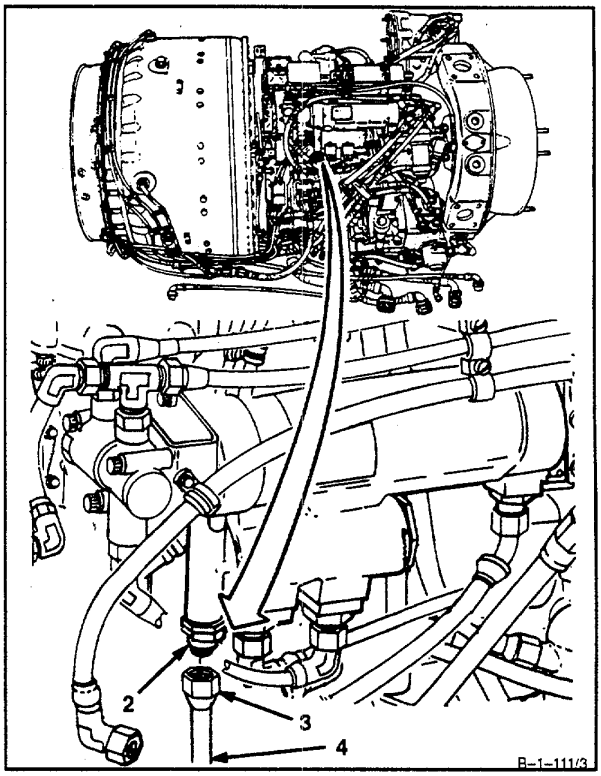

e. **Disconnect starting fuel hose assembly (5)** from starting fuel solenoid valve (6).

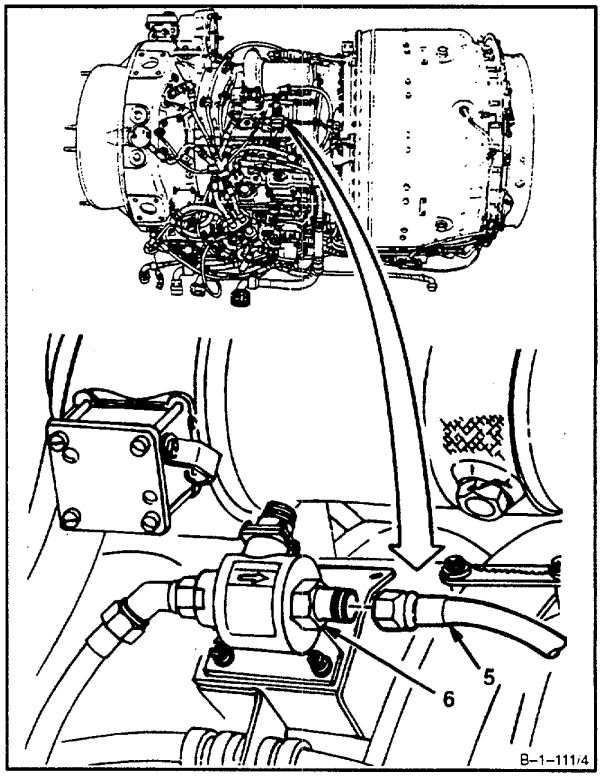

GO TO NEXT PAGE

f. **Attach drain hose (Appendix E) (7) to fuel solenoid valve outlet port (8).**

g. **Insert free end (9) of drain hose (Appendix E) (7) into suitable approved metal safety container.**

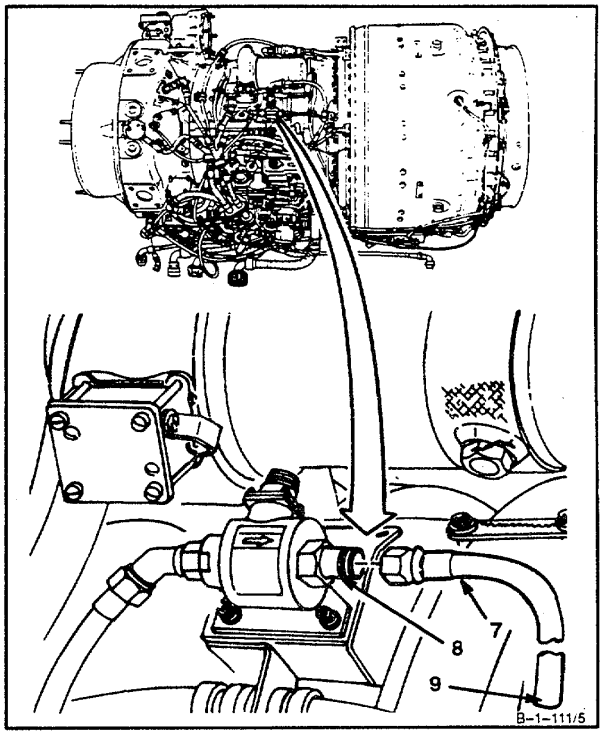

h. **Remove plug (10)** from fuel boost pump inlet port (11) on fuel boost pump (12).

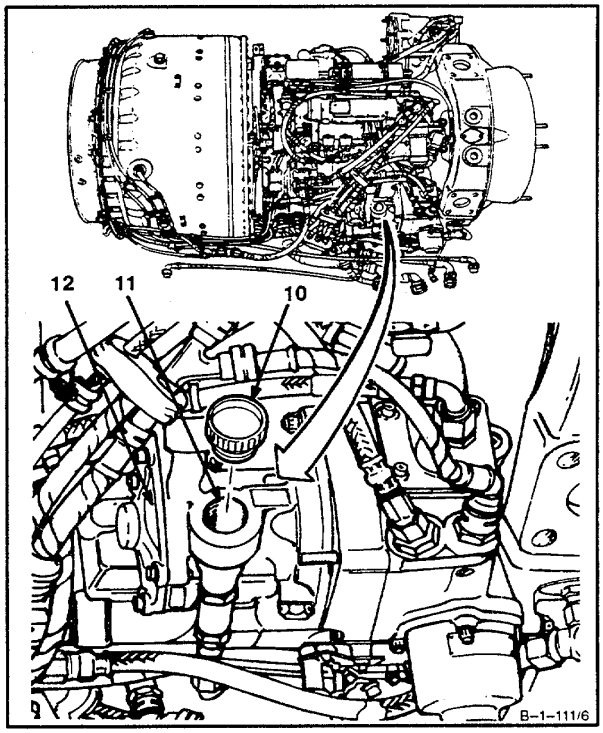

GO TO NEXT PAGE

i. **Attach hose (Appendix E) (13)** from container (14) of lubricating oil (E35) **to fuel boost pump Inlet port (11)** on fuel boost pump (12).

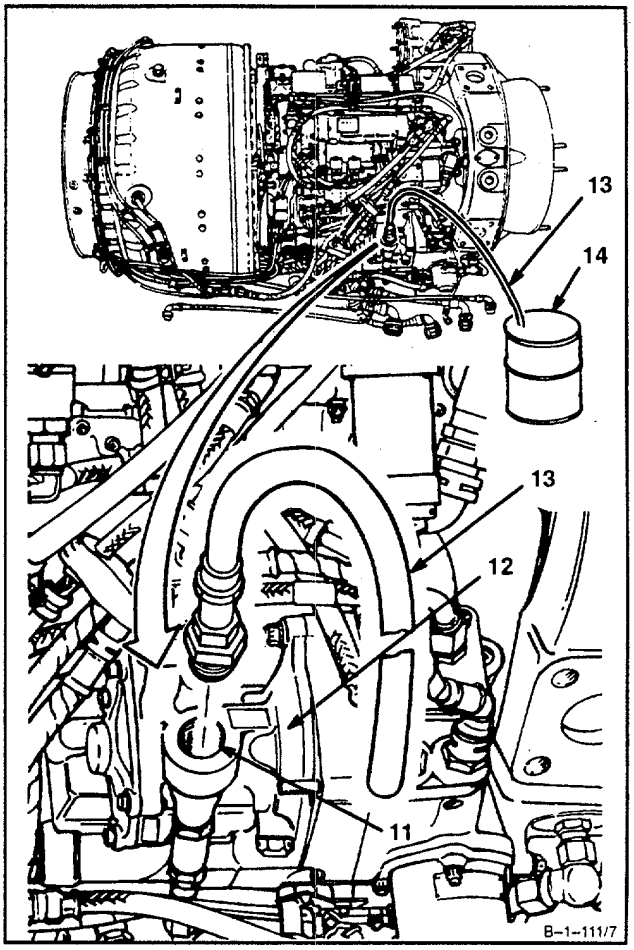

CAUTION

Make sure ignition switch Is In off position. This will prevent accidental engine start.

j. **Set FADEC switch to on and ECL at GRD IDLE and energize starting fuel solenoid valve** (Ref. TM 1-1520-252-10).

k. **Motor engine to at least 12 percent N1 speed** to flush fuel system with lubricating oil (E35). Continue motoring until approximately one gallon of lubricating oil (E35) has passed through system (Ref. TM 1-1520-252-10).

GO TO NEXT PAGE

l. **Move ECL to OFF position and deenergize FADEC and starting fuel solenoid valve** (Ref. TM 1-1520-252-10).

m. **Walt <u>10 minutes</u>** after motoring engine. This will allow time for lubricating oil to drain into container.

n. **Remove drain hose (Appendix E) (7)** from fuel solenoid valve outlet port (8).

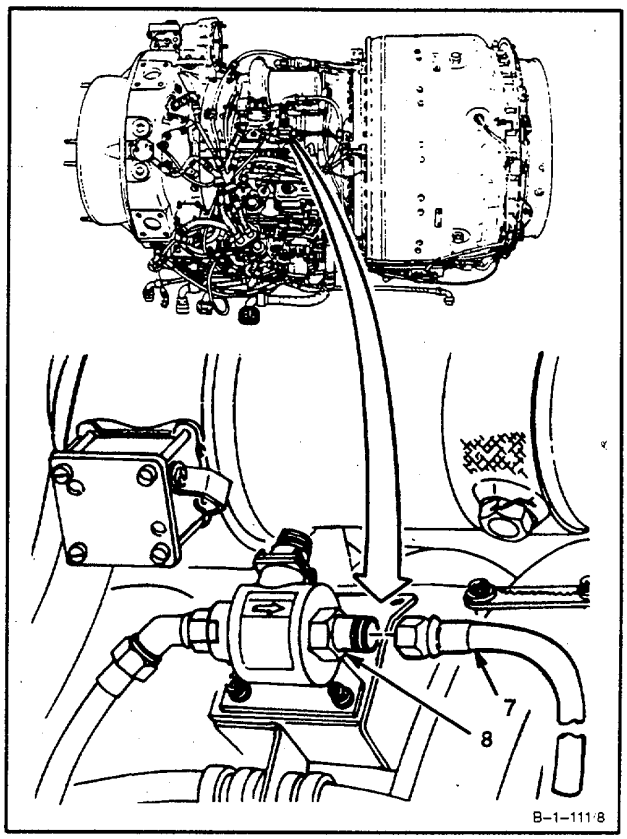

GO TO NEXT PAGE

o. **Remove drain hose (Appendix E) (3)** from oil cooler assembly tube assembly outlet port (2).

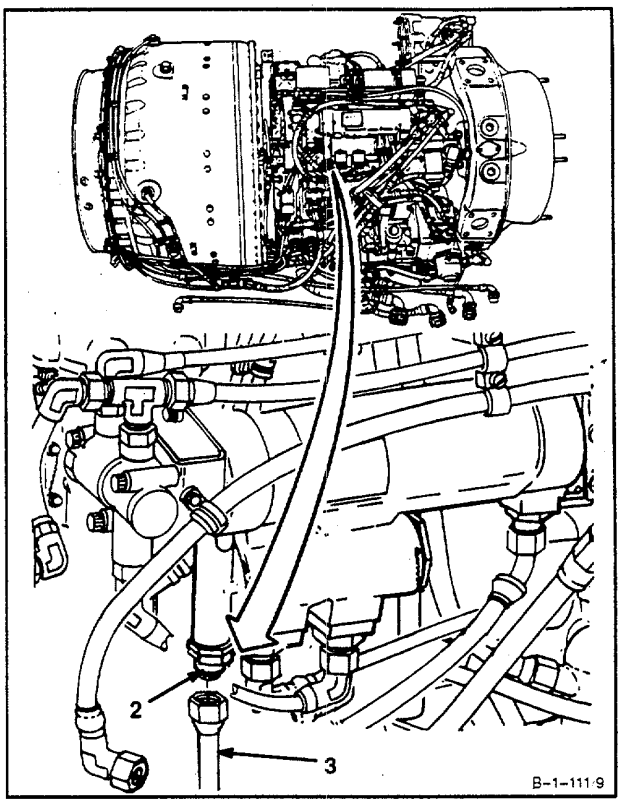

GO TO NEXT PAGE

p. **Remove hose assembly (Appendix E) (13)** from engine fuel boost pump inlet port (11) on fuel boost pump (12).

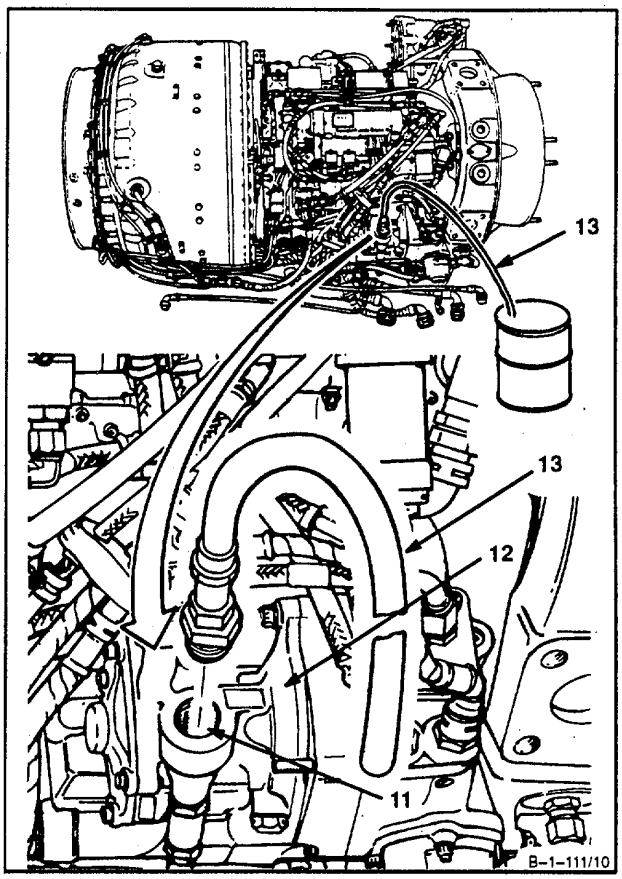

GO TO NEXT PAGE

q. Install plug (10) in fuel boost pump inlet port (11) on fuel boost pump (12).

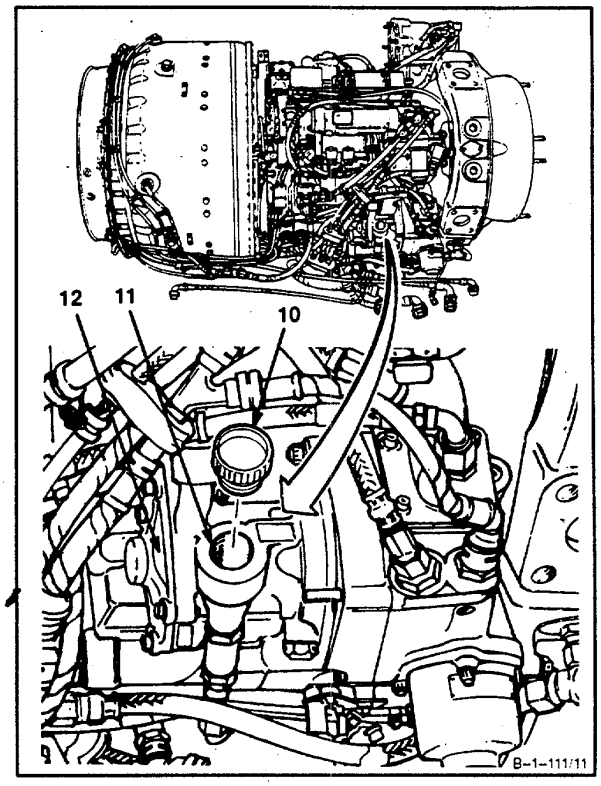

r. **Connect main fuel hose (1)** to oil cooler assembly tube assembly fuel outlet port (2).

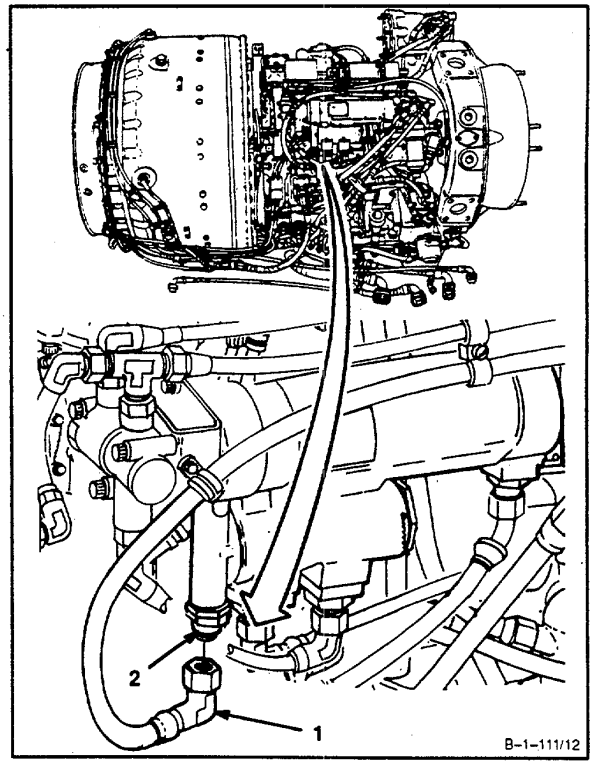

GO TO NEXT PAGE

5. **Connect starting fuel hose assembly (5)** to starting fuel solenoid valve outlet port (8).

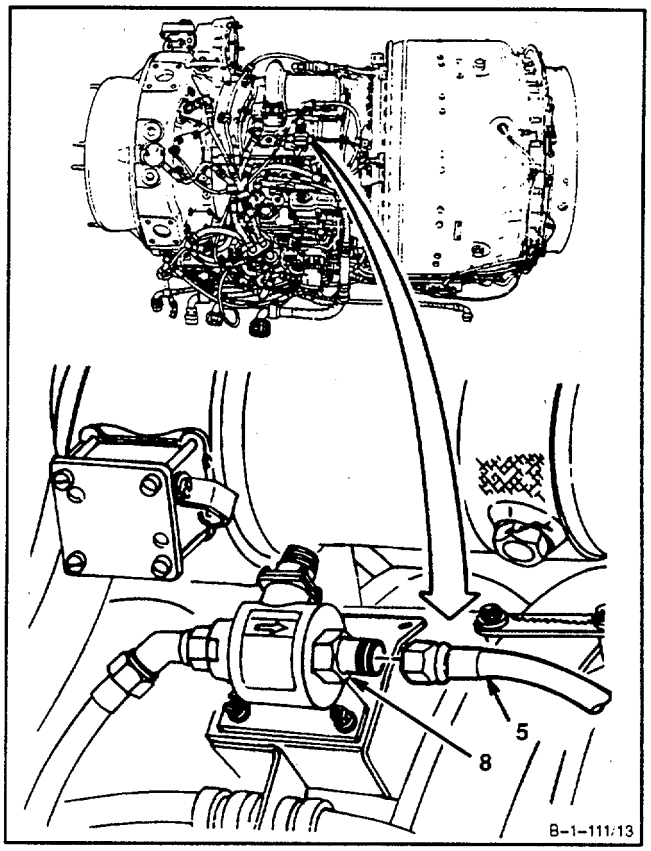

GO TO NEXT PAGE

t. **Disconnect hose assembly** (air diffuser assembly to hydromechanical assembly (HMA)) (15) from diffuser housing port (16).

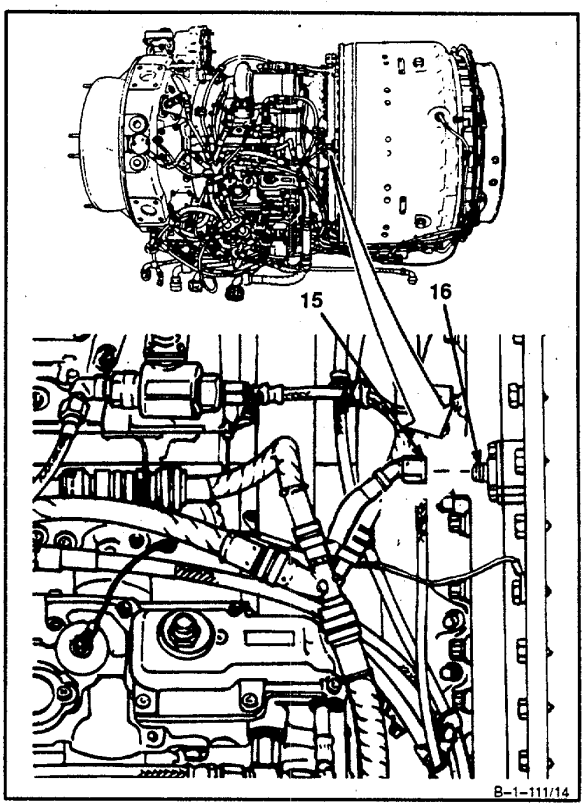

u. **Disconnect hose assembly** (air diffuser assembly to check valve) (17) from diffuser housing port (18).

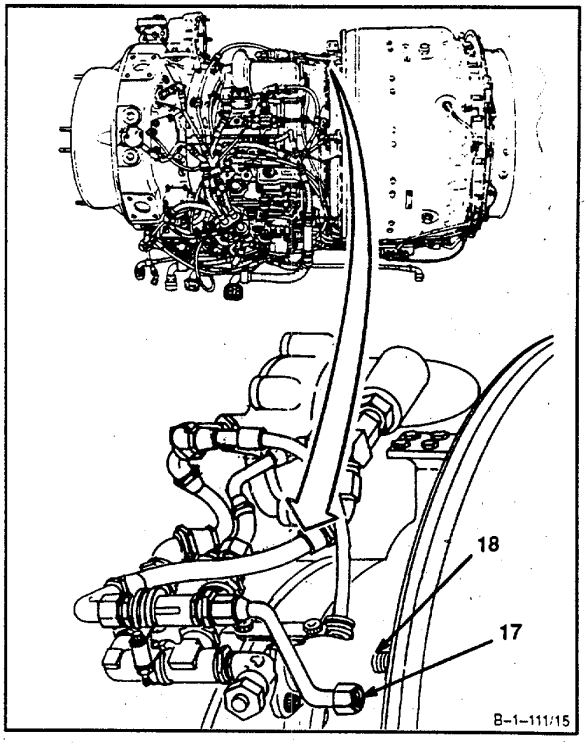

GO TO NEXT PAGE

WARNING

Corrosion preventive compound is flammable and toxic. Use only in well ventilated area away from heat, sparks and open flames. If swallowed do not induce vomiting. Get medical attention. In case of contact immediately flush skin and eyes with water for 15 minutes. Get medical attention for eyes.

v. **Spray compressor blades** as follows:

CAUTION

Wait until engine is cool before proceeding with this step. Failure to do so could result in ignition.

NOTE

Following steps will assure corrosion preventive compound (E15) covers as much of compressor blades as possible.

(1) Using starter, **motor engine to 12 percent N1 rpm. With ECL off, permit engine to coast down** (Ref. TM 1-1520-252-10).

(2) **While engine is coasting down, spray corrosion preventive compound (E15) into inlet housing.** Use a 16-ounce can of corrosion preventive compound (E15) (19) with snorkel tube (20). **Project snorkel tube (20) Into areas between inlet housing struts (21). Direct Jet stream of corrosion preventive compound (E15) (19) onto rotating compressor blades. Move jet stream from base to tip of compressor blades. Apply jet stream for 30 seconds.**

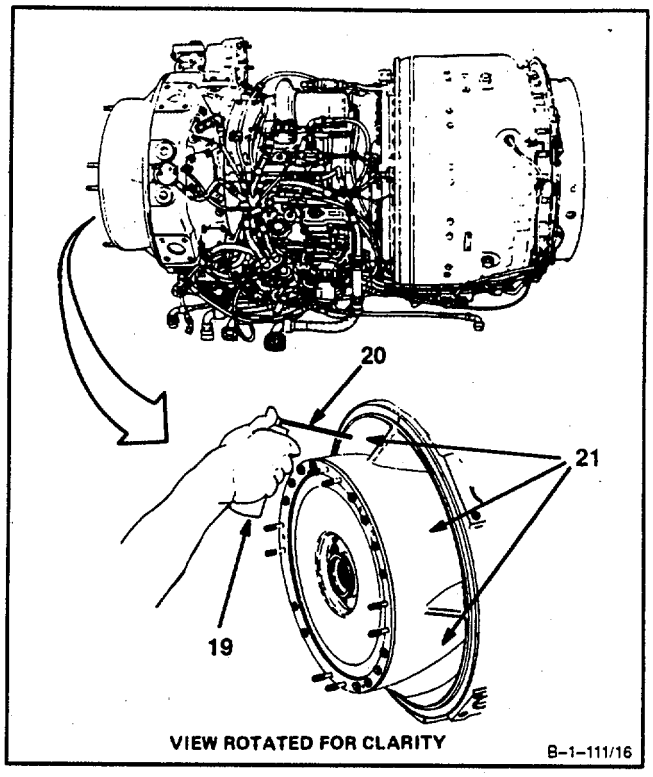

GO TO NEXT PAGE

w. **Connect hose assembly** (15) to air diffuser housing port (16).

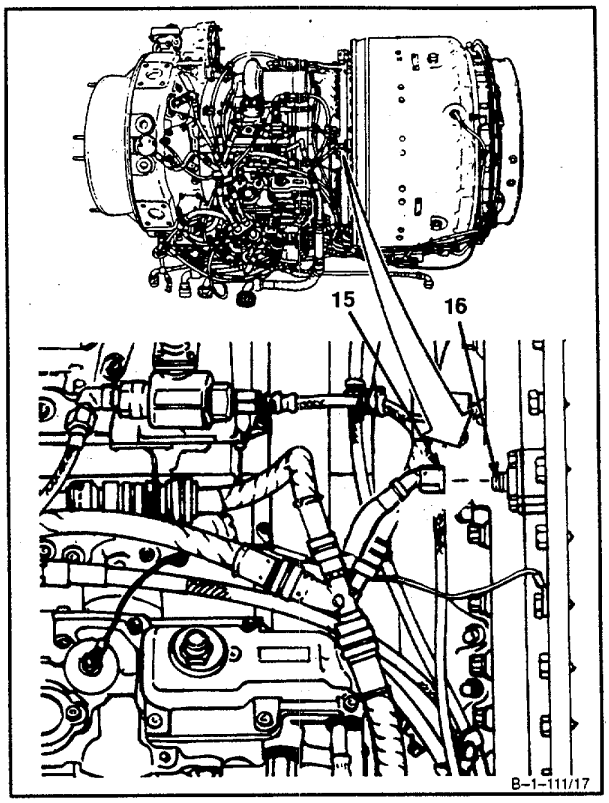

x. **Connect tube assembly** (17) to air diffuser housing port (18).

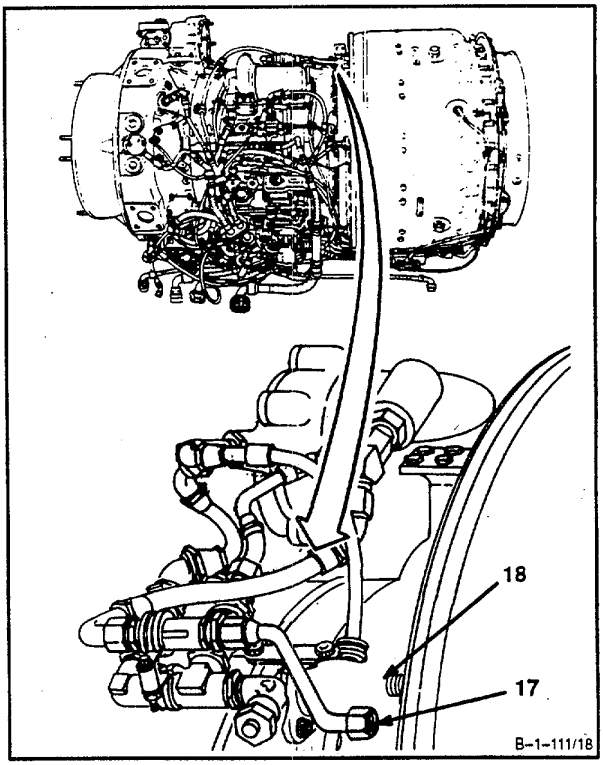

GO TO NEXT PAGE

y. **Install plastic cover (E45) (22)** over inlet end of engine. **Install second plastic cover (E45) (23)** over exhaust end of engine. Secure covers with tape (E46).

NOTE

If engine is to be inactive for more than 180 days, install engine into shipping and storage container (Ref. Task 1-104).

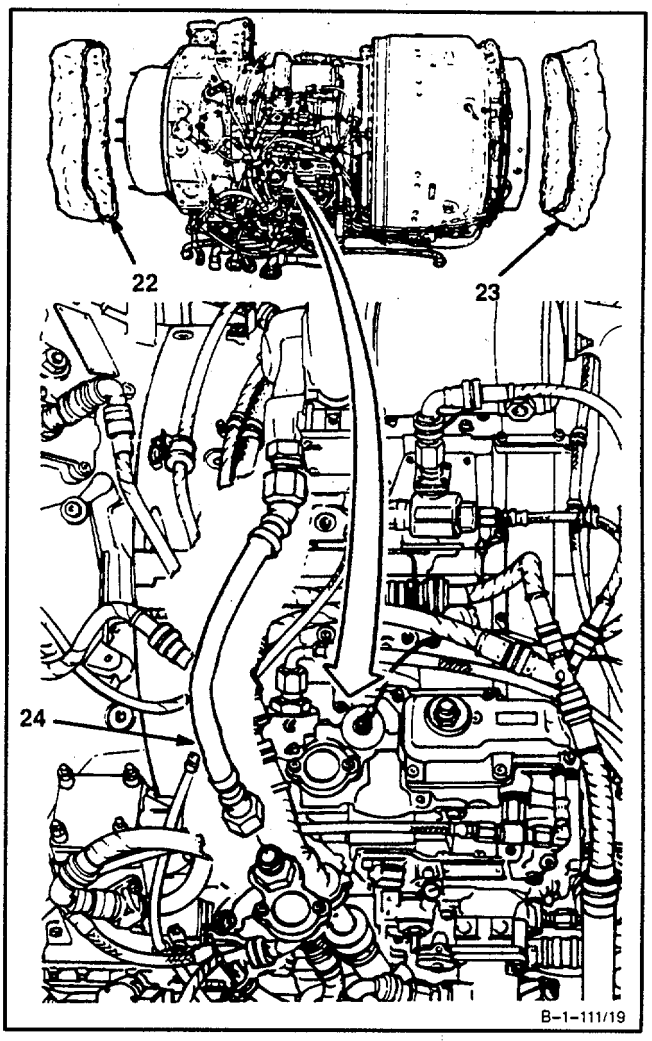

2. **Preserve engine that cannot** be motored as follows:

   a. **Disconnect hose assemblies from** HMA as follows:

      (1) **Disconnect hose assembly** (main fuel filter to HMA) (24).

GO TO NEXT PAGE

(2) **Disconnect hose assembly** (HMA to starting fuel solenoid valve) (25).

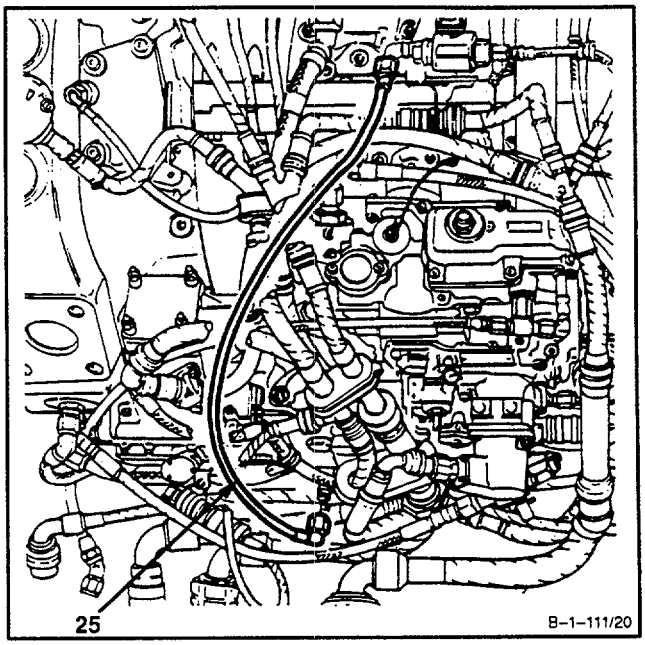

(3) **Disconnect hose assembly** (HMA to oil cooler) (26).

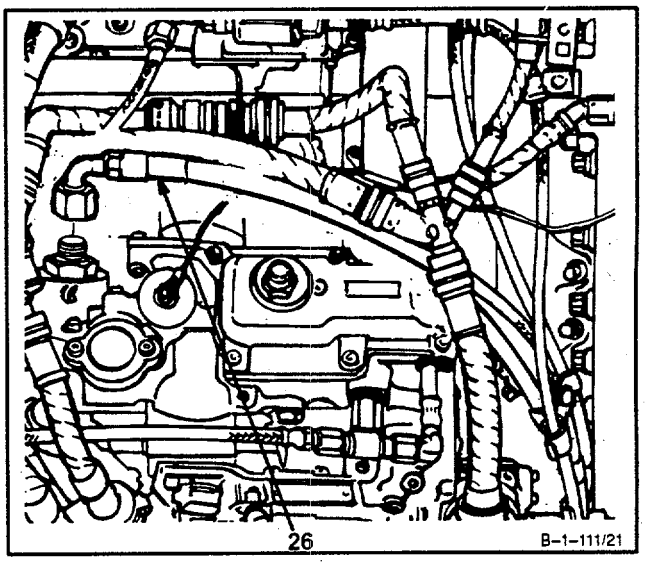

GO TO NEXT PAGE

b. Allow fuel to drain out of all previously disconnected hose assemblies.

c. **Pour lubricating oil** (E35) i**nto fuel inlet port (27)** on HMA (28).

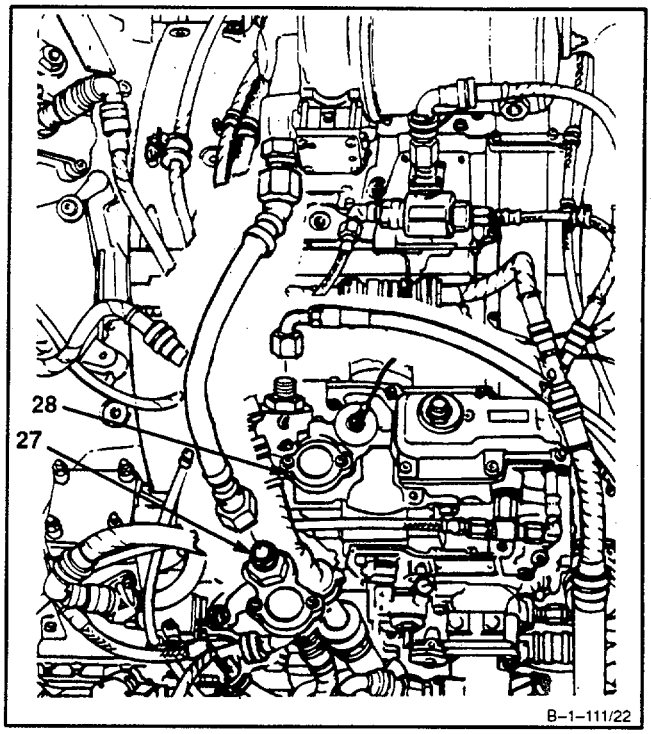

d. **Connect hose assemblies to HMA** as follows:

(1) **Connect hose assembly (24).**

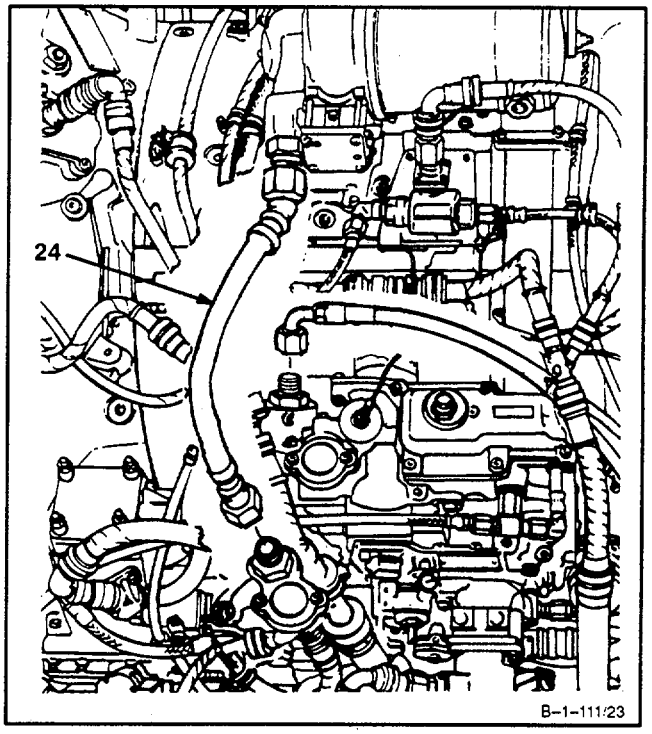

(2) **Connect hose assembly (26).**

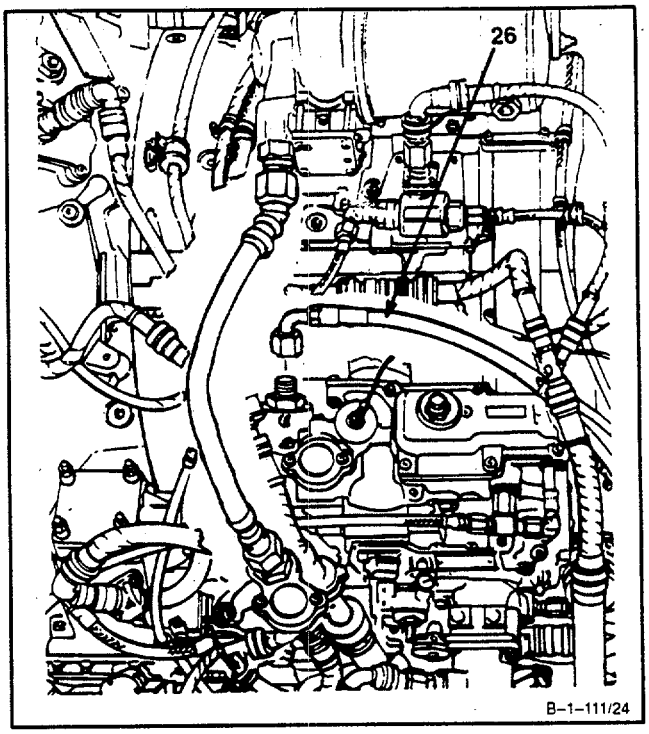

(3) **Connect hose assembly (25).**

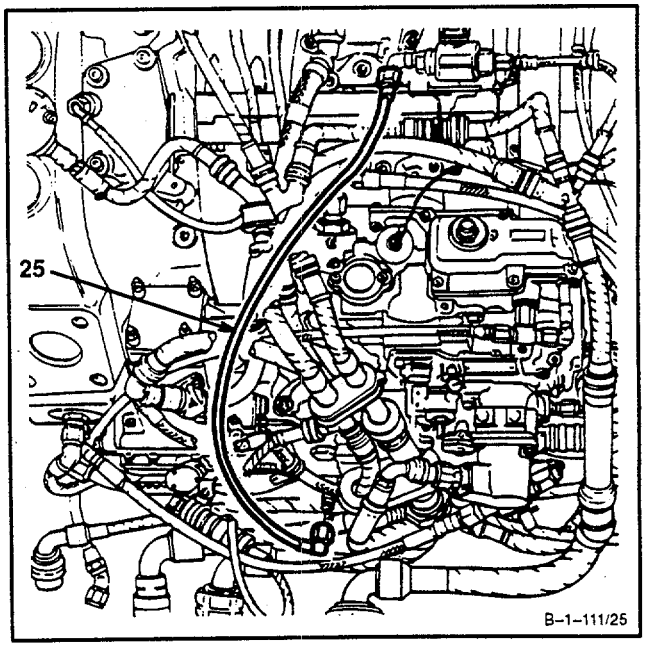

GO TO NEXT PAGE

e. **Remove plug (10)** from fuel boost pump inlet port (11) on fuel boost pump (12).

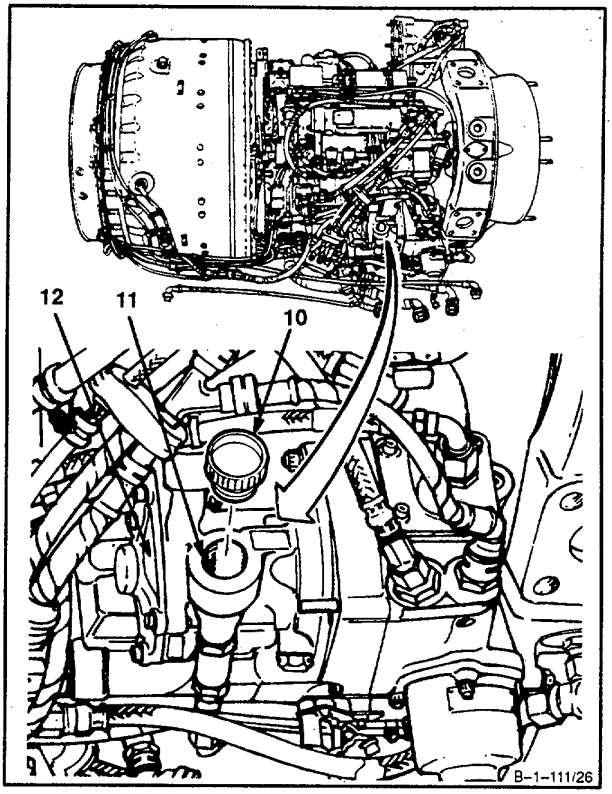

f. **Pour lubricating oil (E35) into fuel system through fuel boost pump inlet port (11)** on fuel boost pump (12).

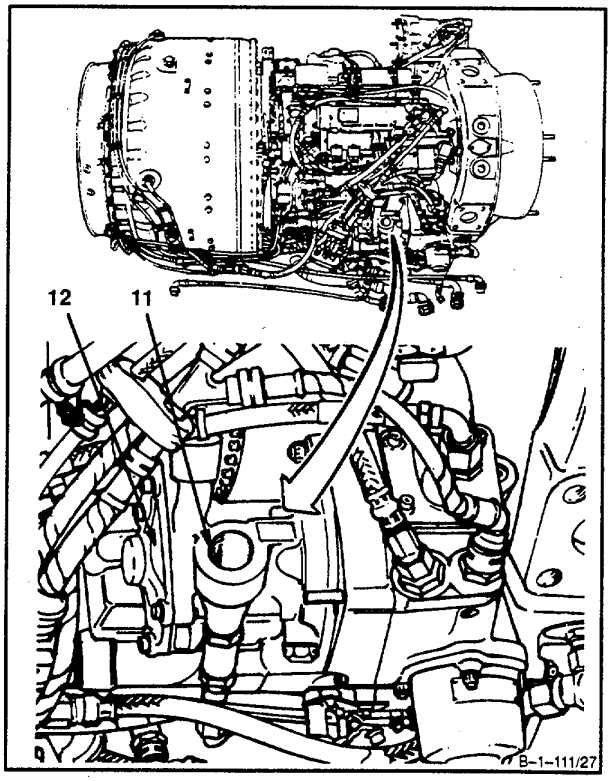

g. **Install plug (10)** in fuel boost pump inlet port (11) on fuel boost pump (12).

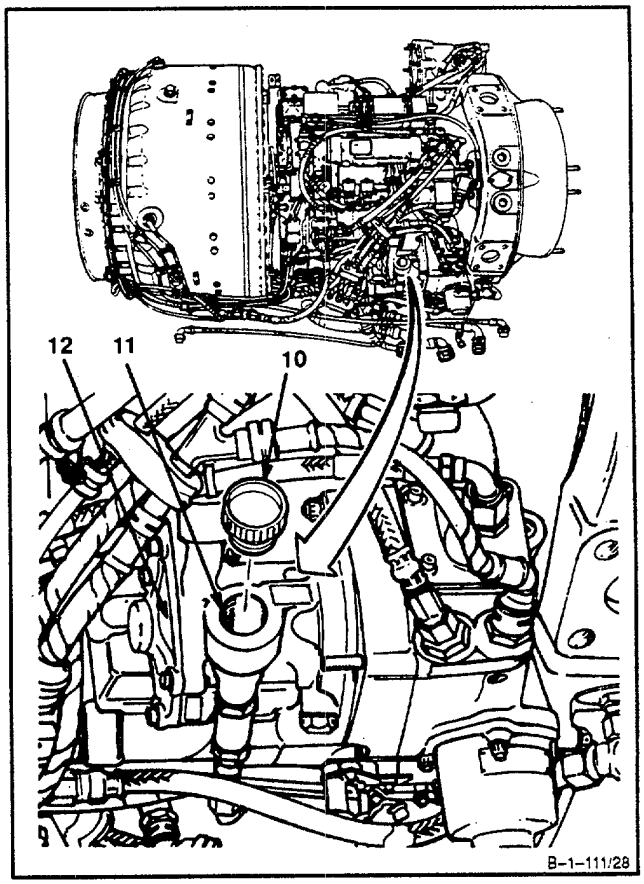

GO TO NEXT PAGE

WARNING

Corrosion preventive compound is flammable and toxic. Use only in well ventilated area away from heat, sparks and open flames. If swallowed do not induce vomiting. Get medical attention. In case of contact immediately flush skin and eyes with water for 15 minutes. Get medical attention for eyes.

h. Hold 16-ounce can of corrosion preventive compound (E15) (19) with snorkel tube (20) so that it projects into areas between inlet housing struts (21).

NOTE

Following step will assure corrosion preventive compound (E15) covers as much of compressor blades as possible.

i. **Direct jet stream of corrosion preventive compound (E15) (19) onto compressor blades.** Move jet stream from base to tip of compressor blades. **Apply jet stream for 30 seconds.**

j. **Install plastic cover** (**E45) (22)** over inlet end of engine. **Install second plastic cover (E45) (23)** over exhaust end of engine. Secure covers with tape (E46).

k. **If engine is to be inactive for more than 180 days, install engine into shipping and storage container** (Ref. Task 1-104).

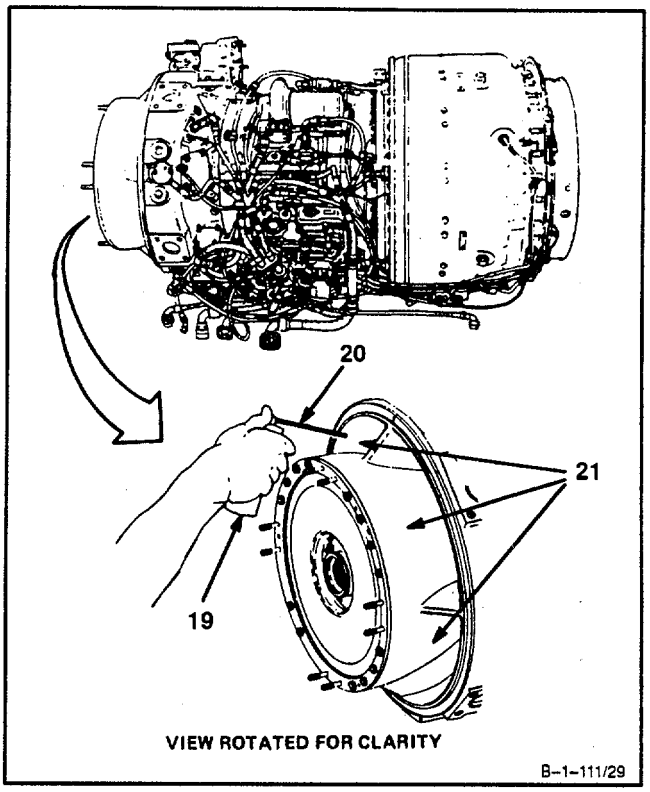

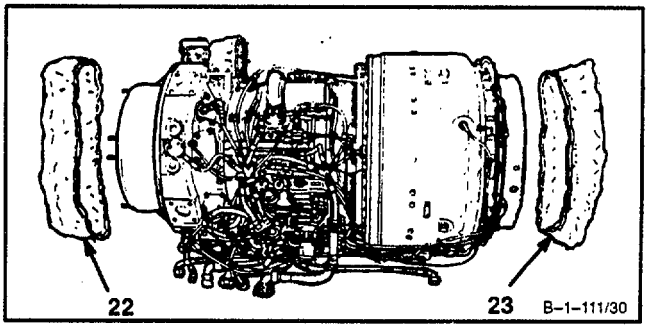

FOLLOW-ON MAINTENANCE:

None

END OF TASK

1-103 PREPARE AND INSPECT SHIPPING AND STORAGE CONTAINER 1-103

INITIAL SETUP

Applicable Configurations:
All

Tools:
Powerplant Mechanic's Tool Kit, NSN 5180-00-323-4944
Technical Inspection Tool Kit, NSN 5180-00-323-5114
Chain with Hooks (Appendix E)
Vacuum Cleaner
Wire Brush
Half-Round File
Hoist

Materials:
Glycerol (E25)
Lint-Free Cloth (E30)

Parts:
Packing
Humidity Indicator Card

Personnel Required:
Aircraft Powerplant Repairer (2)
Aircraft Powerplant Inspector

Equipment Condition:
Engine Removed from Shipping and Storage Container (Task 1-26)
Engine Preserved and Prepared for Shipment or Storage (Task 1-102)

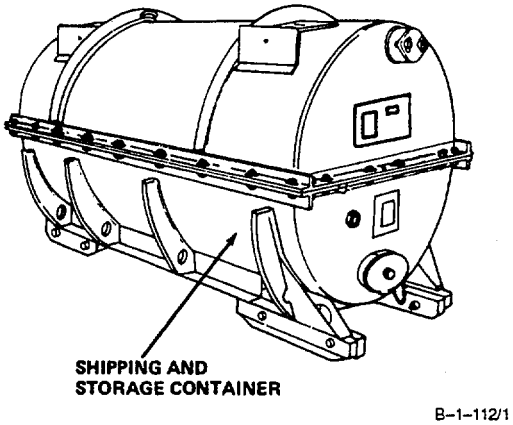

GO TO NEXT PAGE

1. **Remove bolt** (1) and **cover** (2).

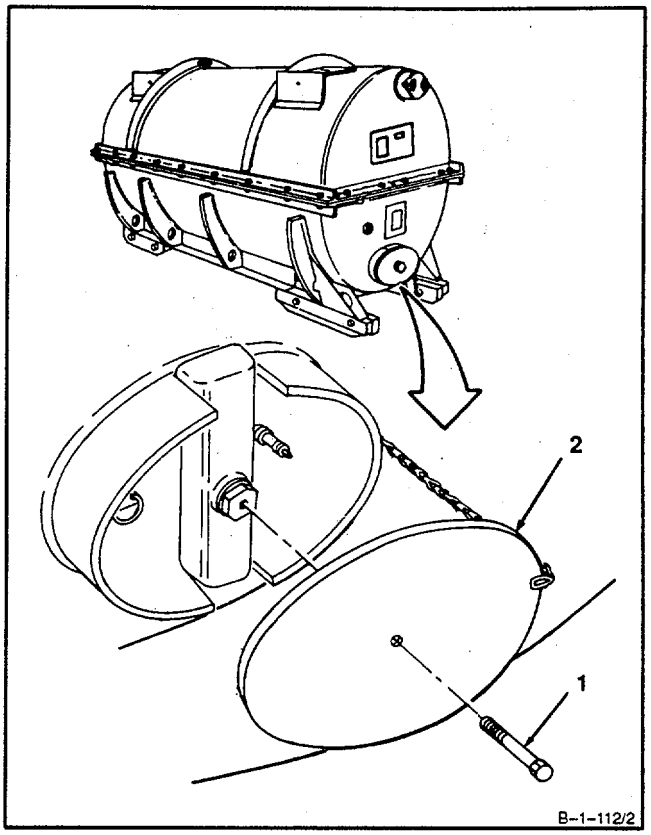

2. **Remove valve cap** (3).

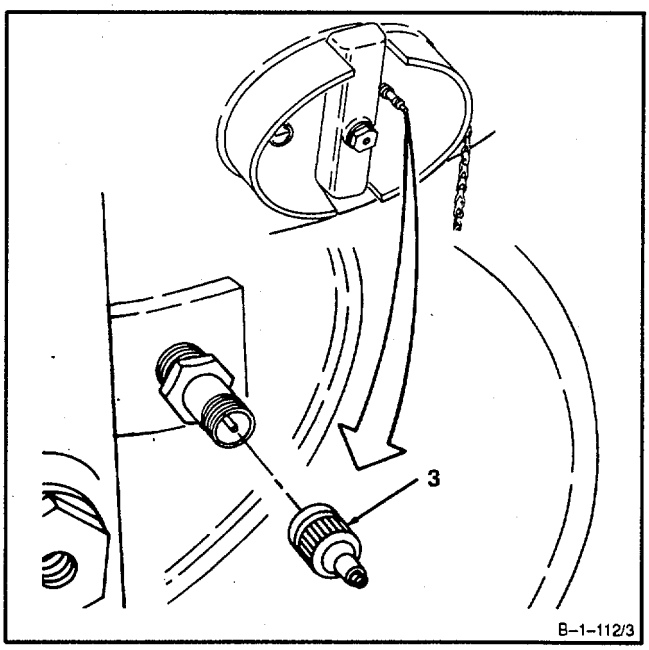

GO TO NEXT PAGE

1-103 PREPARE AND INSPECT SHIPPING AND STORAGE CONTAINER (Continued)

WARNING

Shipping container is pressurized. Use care during removal of valve stem. Injury to personnel can result. If injury occurs, get medical attention.

3. **Remove valve stem (4).** Use slotted end of valve cap (3).

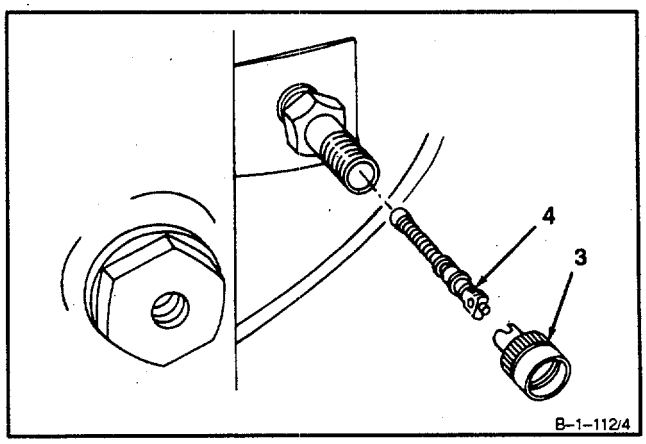

WARNING

Be sure all air pressure has been released from container before loosening nuts. If nuts are loosened before pressure is released, internal pressure could blow cover off and cause serious injury. If injury occurs, get medical attention.

4. **Remove 30** nuts (5) and **bolts (6).**

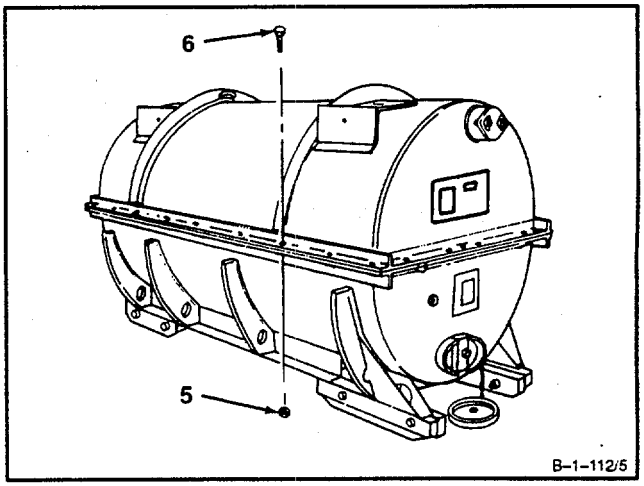

GO TO NEXT PAGE

5. Install hoist and chain with hooks (Appendix E) (8) on cover assembly (7).

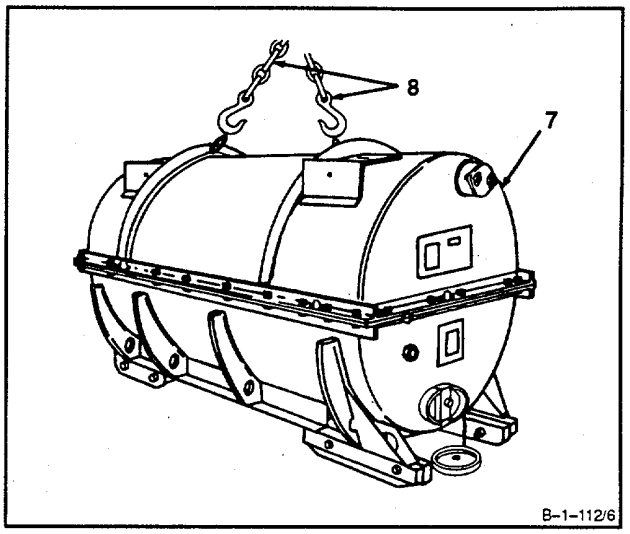

6. Using helper, **remove cover assembly (7)** from base assembly (9). Use hoist and chain with hooks (Appendix E) (8).

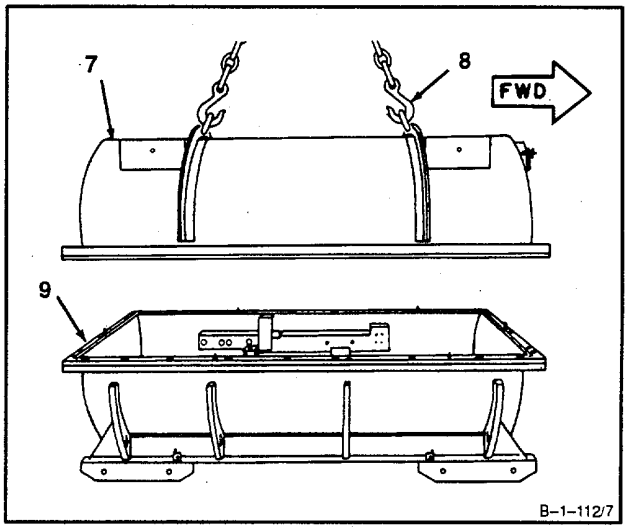

7. Remove two mounting brackets (10), clamp (11), and attaching hardware from bottom of shipping container.

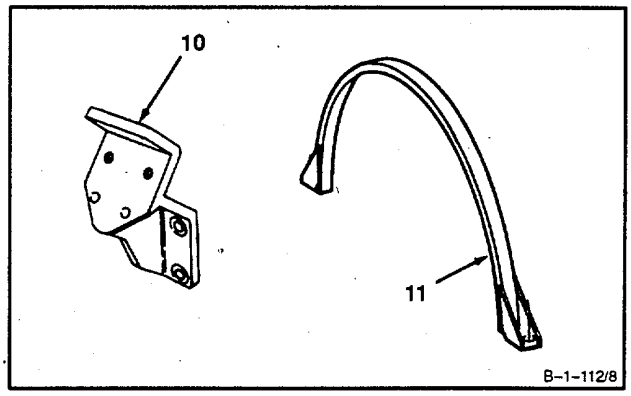

GO TO NEXT PAGE

8. **Remove sealing gasket (12).**

9. **Inspect sealing gasket (12).** There shall be no material missing, breakage or foreign material stuck to gasket.

10. **Inspect flange surface (13) for rust or foreign material. If rust or foreign material is found, clean flange surface (13) as follows:**

    a. Clean flange surface (13) on all four sides of base assembly (9). Use wire brush.

    b. If rough projections exist, smooth projections out. Use half-round file.

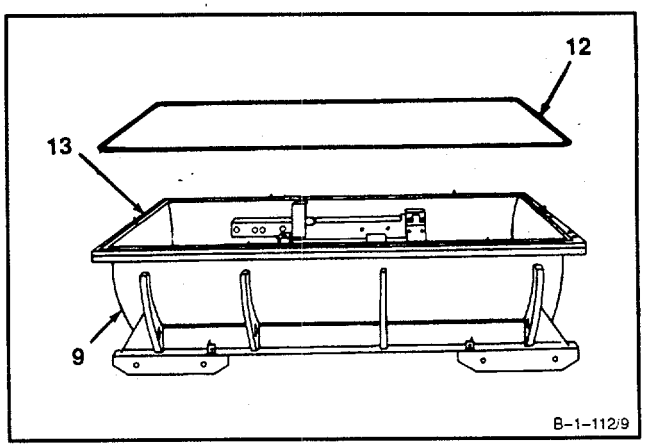

11. **Clean flange surface (14)** on all four sides of cover assembly (7). Use wire brush. If rough projections exist, smooth projections out using half-round file.

12. Lower cover assembly (7) to floor and remove chain with hooks (Appendix E) (8).

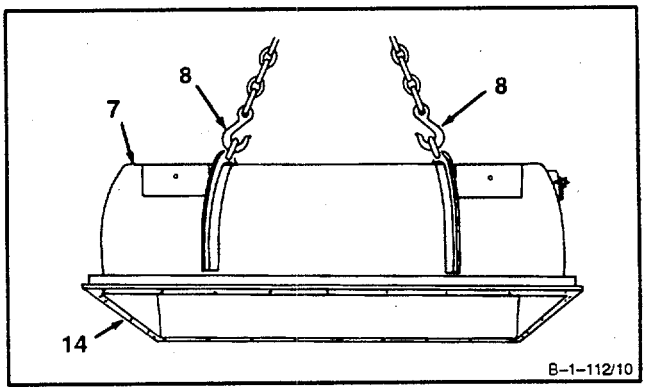

13. **Remove dirt and other debris** from inside of base assembly (9), flange surface (13), and gasket groove (15). Use vacuum cleaner.

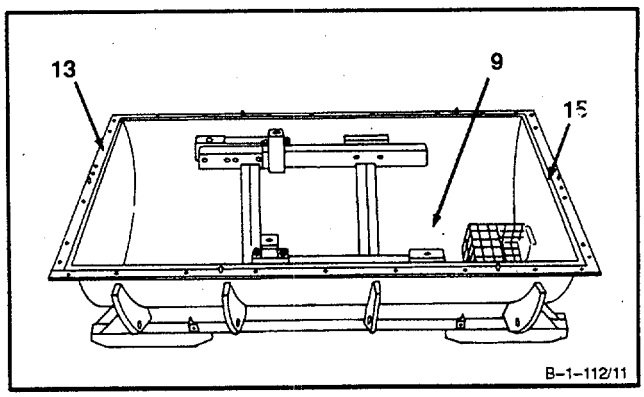

GO TO NEXT PAGE

14. Wipe sealing gasket (12) clean, using lint-free cloth (E30).

15. Apply light coat of glycerol (E25) on sealing gasket (12). **Install sealing gasket (12)** in gasket groove (15).

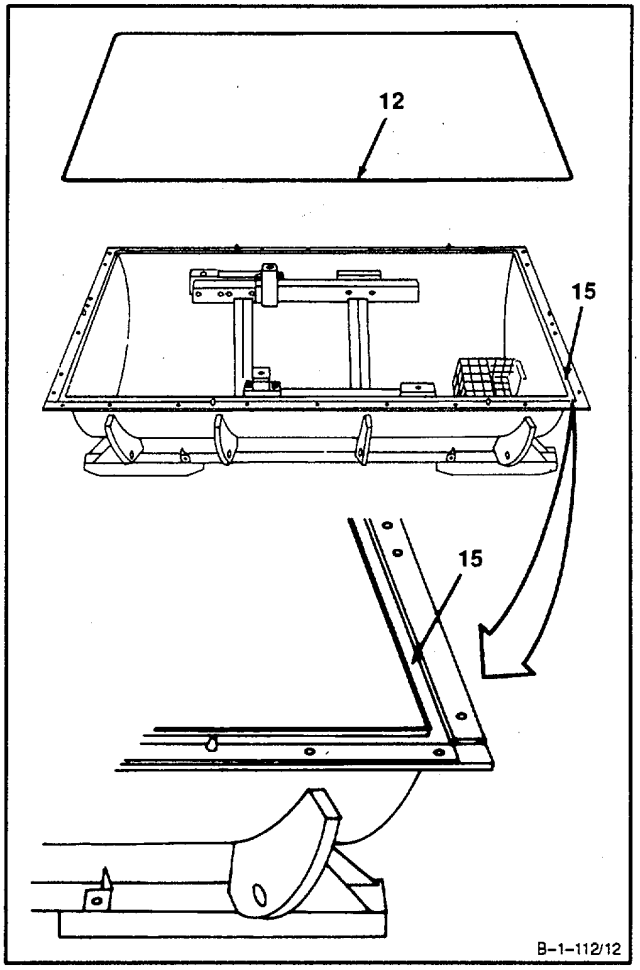

16. **Inspect security of shear mounts (16) and side mounts (17).** There shall be no looseness.

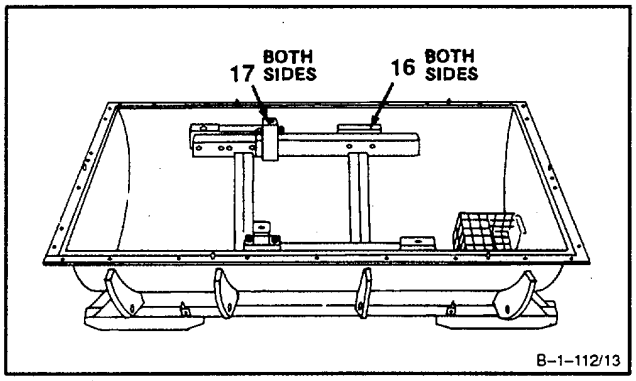

GO TO NEXT PAGE

17. Remove humidity indicator (18) and packing (19).

18. Remove bushing (20) and humidity indicator card (21).

19. **Install new humidity indicator card (21) and bushing (20)** in housing (22).

20. **Install packing (19) and humidity indicator (18)** in base assembly (9).

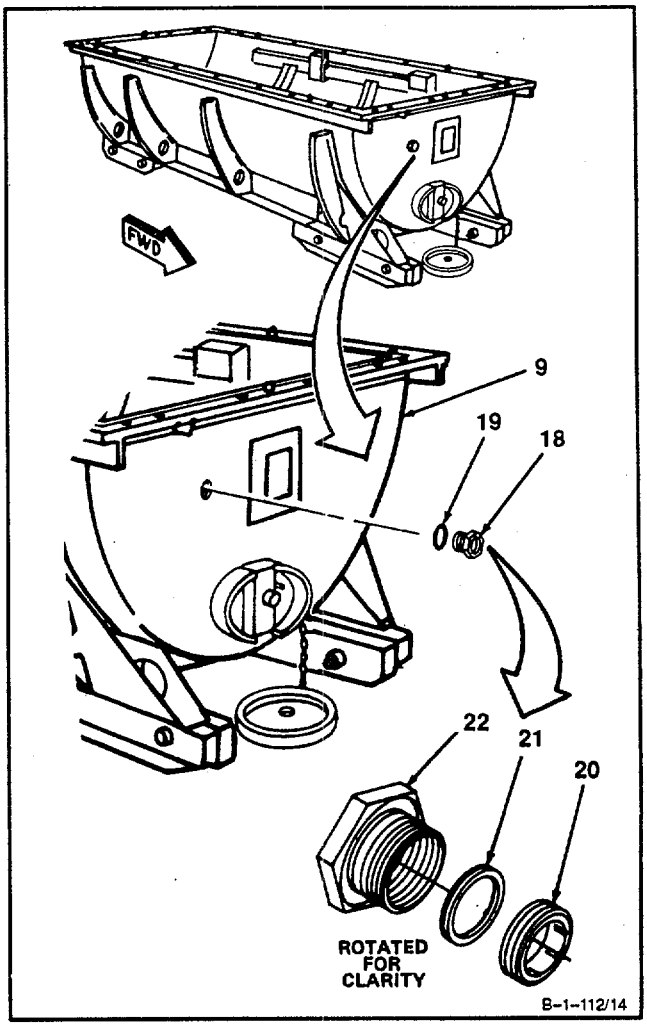

INSPECT

FOLLOW-ON MAINTENANCE:

Install Engine Into Shipping and Storage Container (Task 1-104).
Mark Shipping and Storage Container (Task 1-105).

END OF TASK

1-104 INSTALL ENGINE INTO SHIPPING AND STORAGE CONTAINER 1-104

INITIAL SETUP

Applicable Configurations:

All

Tools:

Powerplant Mechanic's Tool Kit, NSN 5180-00-323-4944
Technical Inspection Tool Kit, NSN 5180-00-323-5114
Torque Wrench, 100-750 Inch-Pounds
Chain with Hooks (Appendix E)
Hoist
Compressed Air Source

Materials:

Bonding Seal (E10)
Desiccant (El 8)
Liquid Soap (E31)
Plastic Cover (E45) (2)
Tape (E39)
Tar (E61)

Personnel Required:

Aircraft Powerplant Repairer (2)
Aircraft Powerplant Inspector

References:

TB 1-1500-341-01
TM 38-750
Task 1-25
Task 1-32

Equipment Condition:

Engine Preserved and Prepared for Shipment or Storage (Ref. Task 1-102)
Shipping and Storage Container Prepared and Inspected (Ref. Task 1-103)
Engine Maintenance Sling Installed (Ref. Task 1-31)

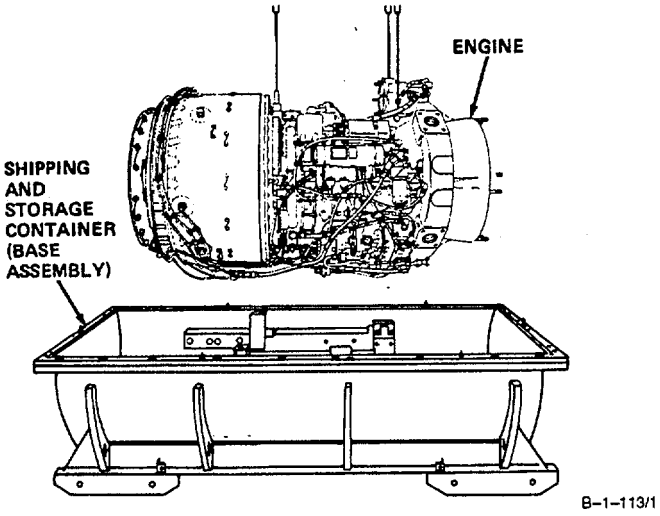

GO TO NEXT PAGE

1-104 INSTALL ENGINE INTO SHIPPING AND STORAGE CONTAINER (Continued) 1-104

NOTE

Procedures for installing left- and right-hand shipping container brackets on engine are the same. Procedure for installing left-hand shipping container bracket is given.

1. **Loosely install bracket** (1), four washers (2), and bolts (3) on bottom inlet housing pad (4).

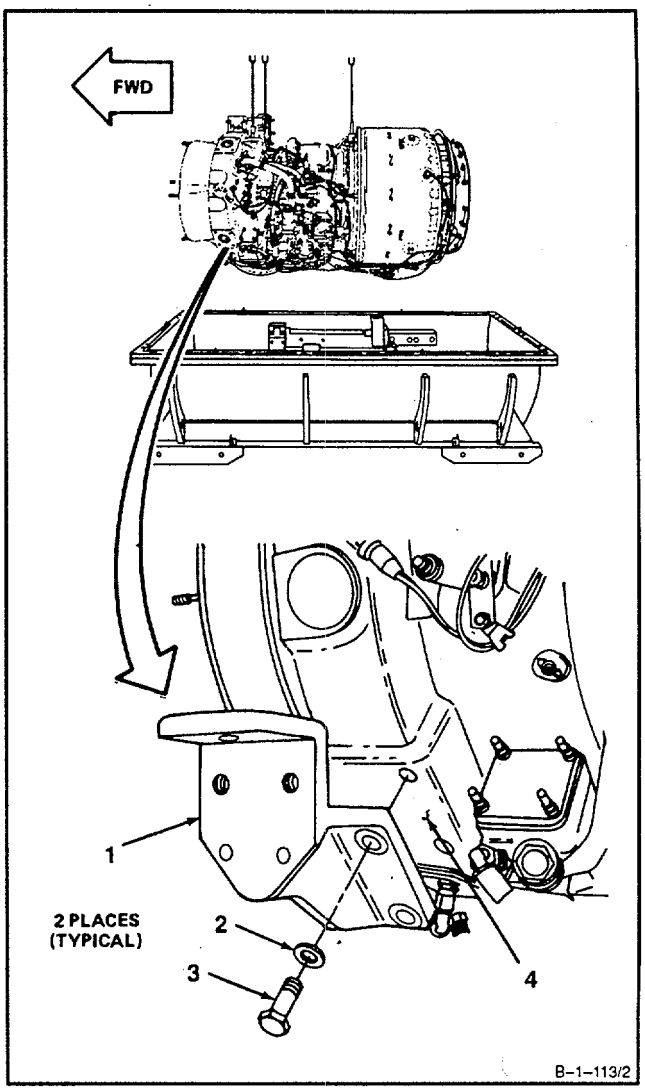

GO TO NEXT PAGE

2. **Install washer (5) and bolt (6)** in bracket (1).

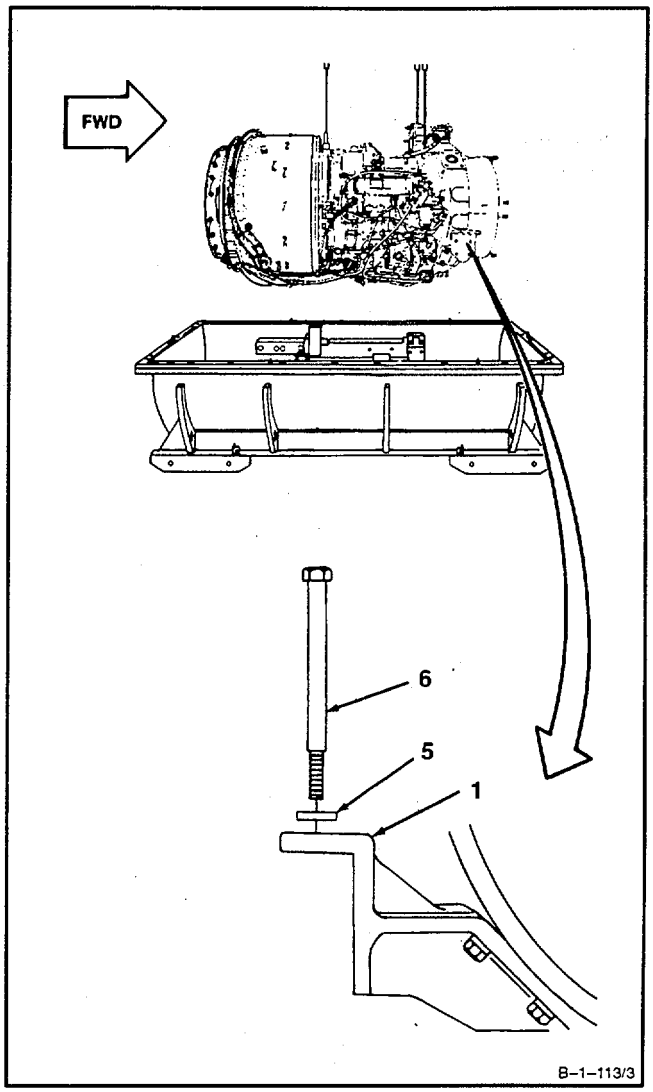

GO TO NEXT PAGE

1-104 INSTALL ENGINE INTO SHIPPING AND STORAGE CONTAINER (Continued) 1-104

3. **Install washer (7) and bolt (8)** in bracket (1).

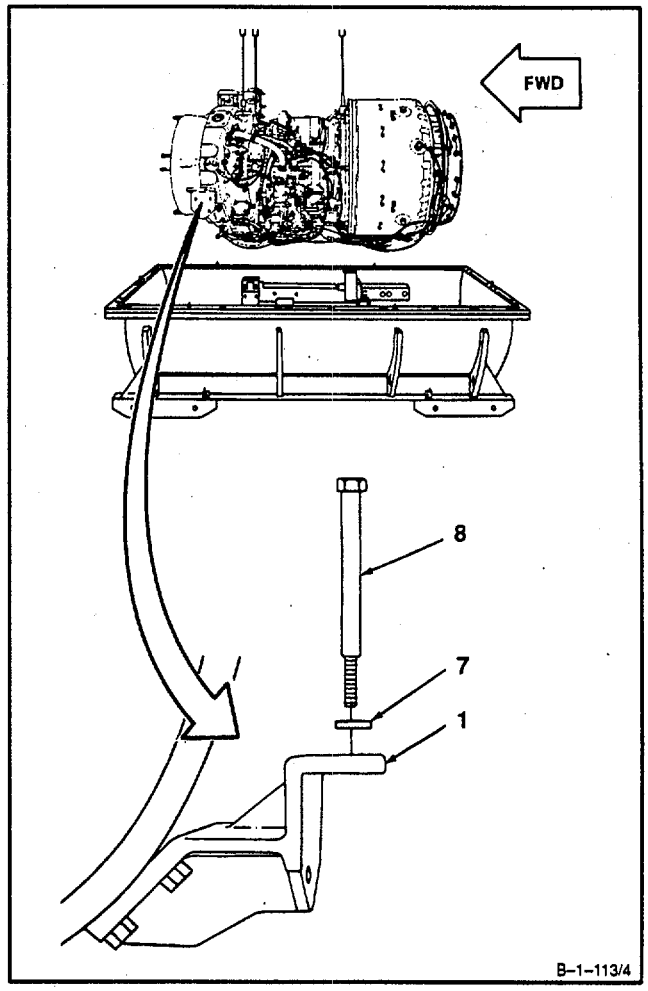

4. **Install plastic cover (E45) (9)** over inlet end of engine. **Install second plastic cover (E45) (10)** over exhaust end of engine. Secure covers with tape (E46).

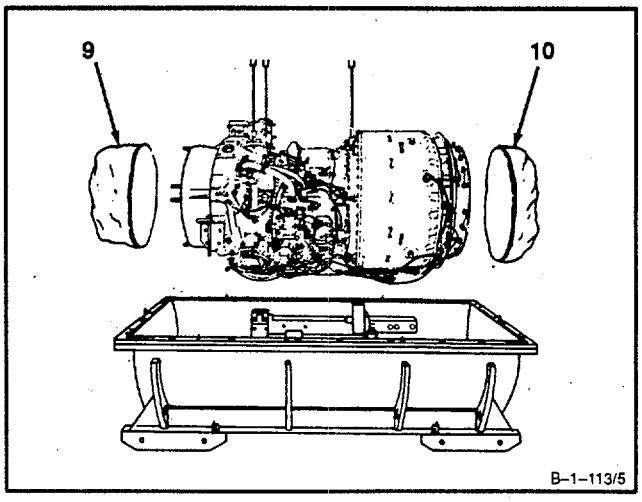

GO TO NEXT PAGE

CAUTION

Do not allow lines and cables to contact or snag container during Installation. Failure to comply will cause damage to lines and cables.

5. Using helper, keep lines and cables free of container. **Lower engine** on frame assembly (11) using bolt (8), installed in bracket (1), as guide.

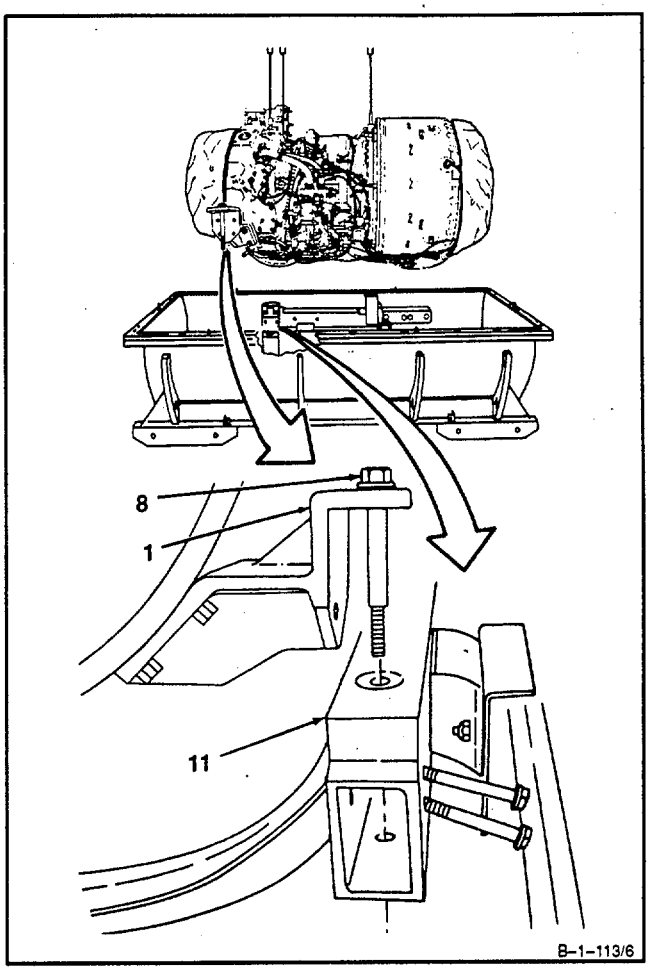

NOTE

Procedures for securing left- and right-hand mounting brackets to shipping container are the same. Procedures for securing left-hand mounting bracket is given.

6. **Loosely Install washer (12) and nut (13)** on bolt (8).

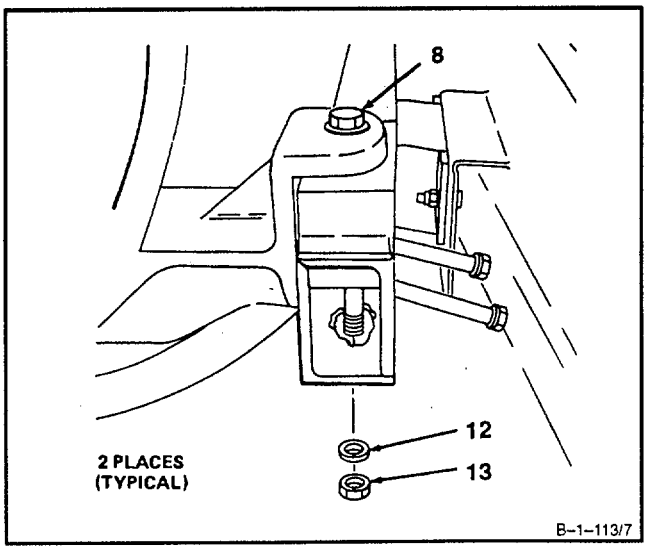

GO TO NEXT PAGE

7. **Loosely Install two washers (14), bolts (15),** washers (16), and nuts (17).

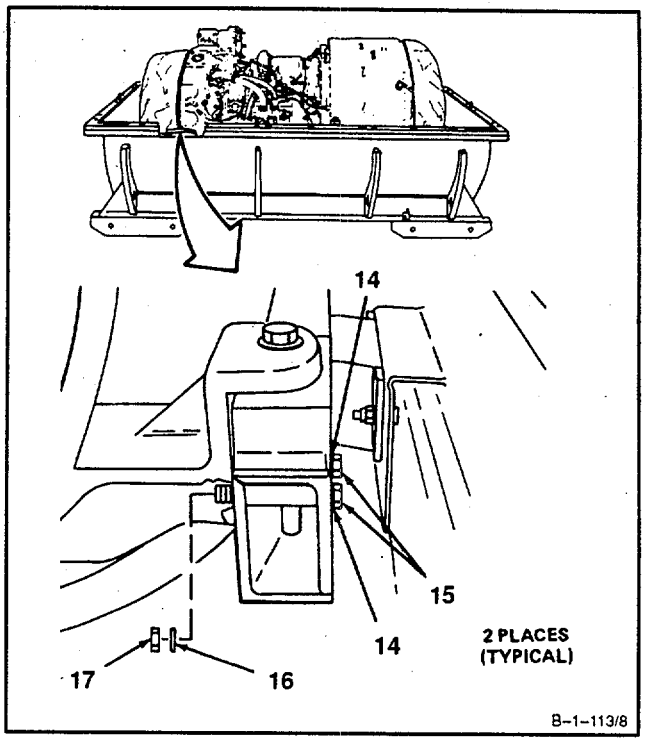

8. **Install bolts (18 and 19)** in clamp (20).

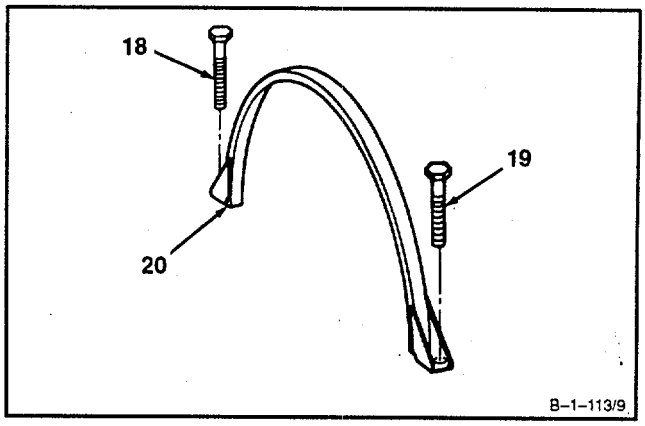

GO TO NEXT PAGE

1-104 INSTALL ENGINE INTO SHIPPING AND STORAGE CONTAINER (Continued) 1-104

9. **Install clamp (20)** with bolts (18 and 19) over engine combustor section (21).

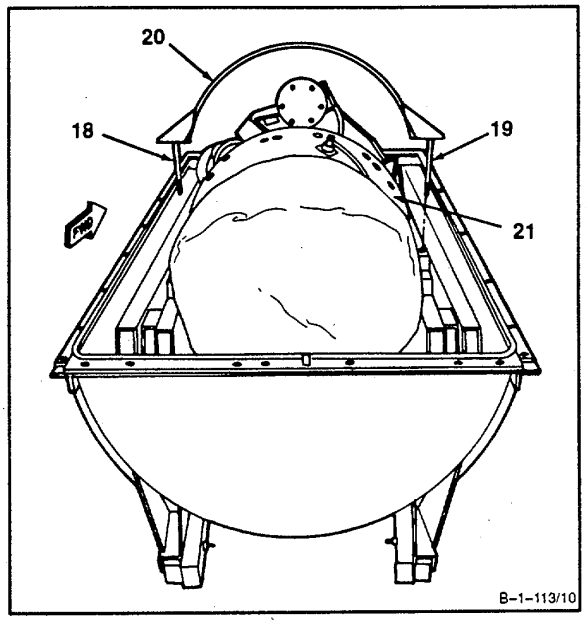

10. Loosely install bolt (19), washer (22), and nut (23) on bracket (24).

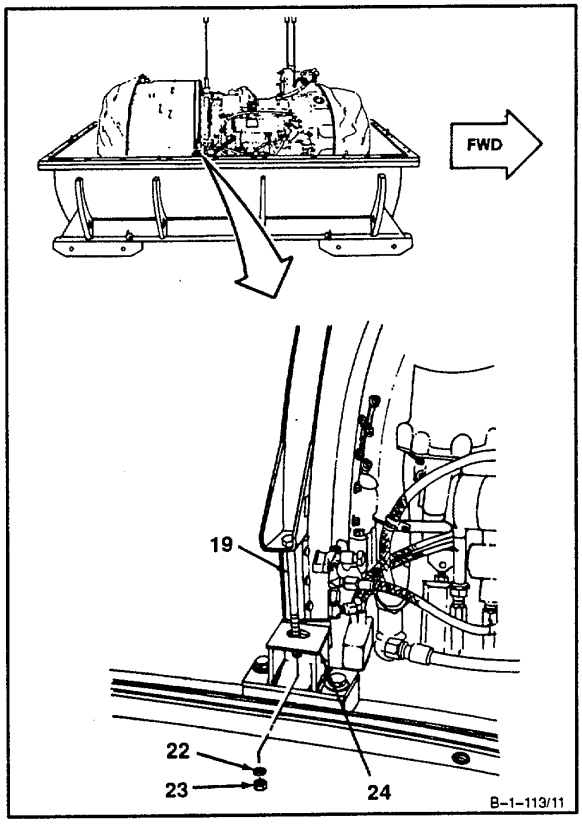

GO TO NEXT PAGE

11. **Loosely Install bolt (18),** washer (25), and nut (26) on bracket (27).

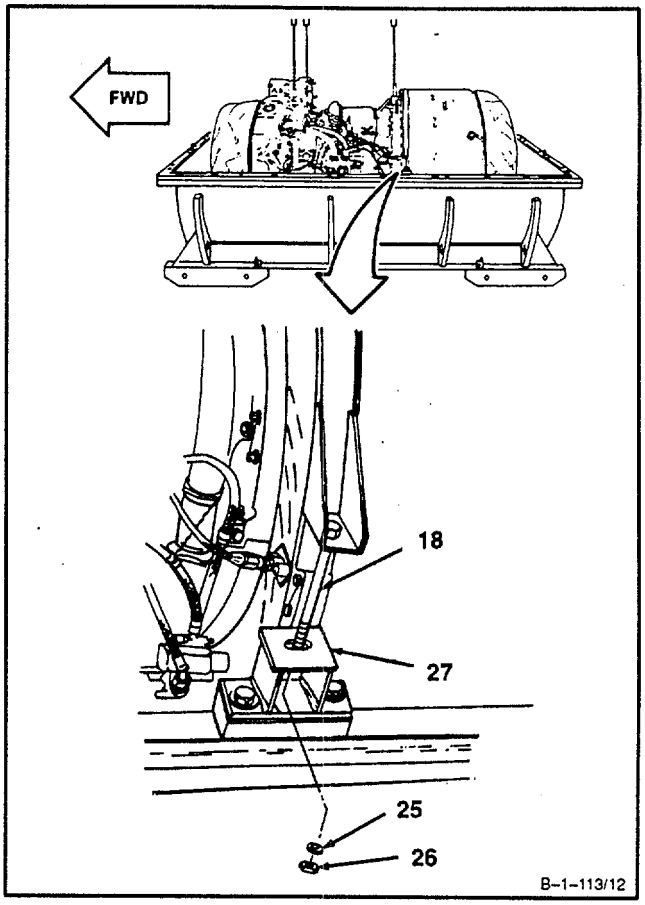

12. **Torque bolt (18) to <u>170 inch-pounds.</u>**

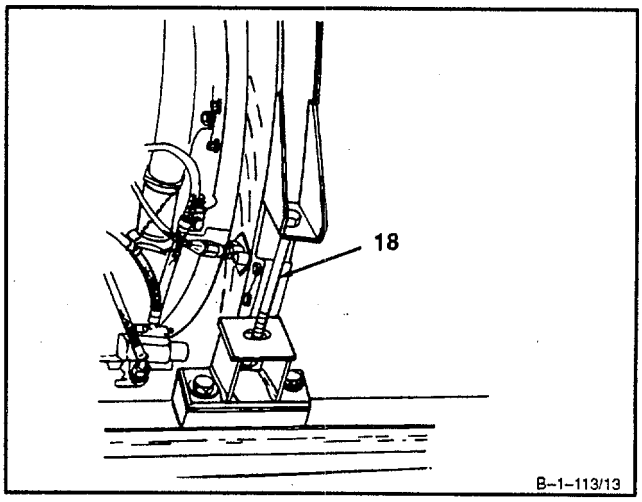

GO TO NEXT PAGE

13. **Torque bolt (19) to 170 inch-pounds.**

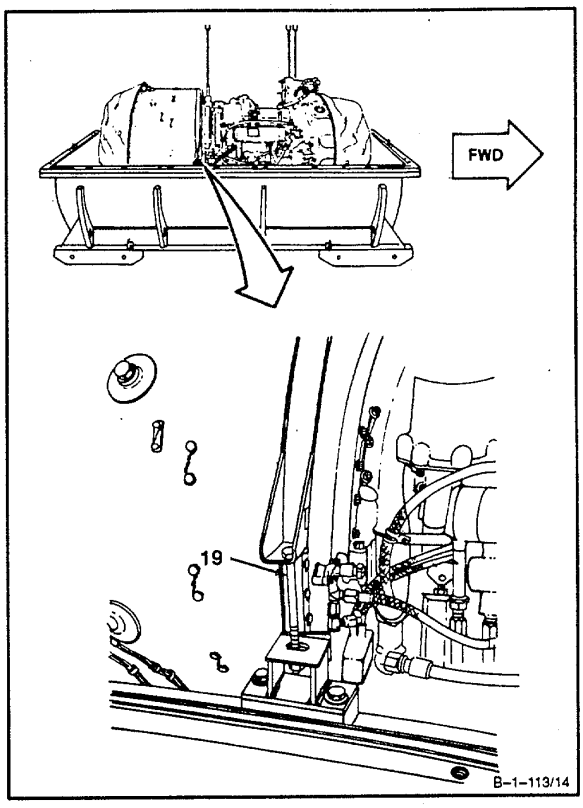

14. **Torque two nuts (13) to 275 inch-pounds.**

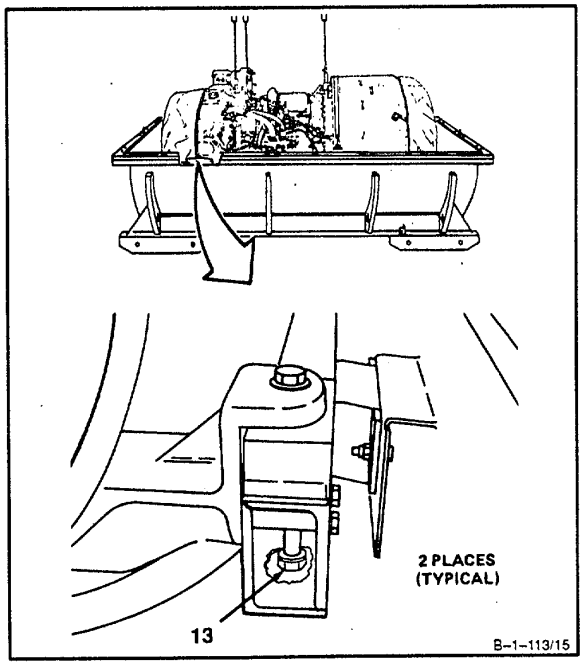

GO TO NEXT PAGE

15. **Tighten four bolts (15) to 275 Inch-pounds.**

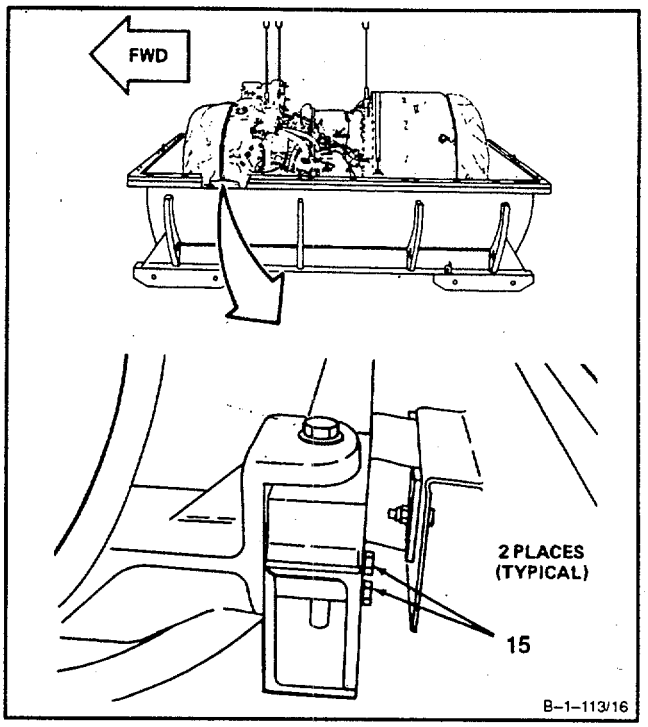

16. **Torque eight bolts (3) to 250 inch-pounds.**

17. **Remove engine maintenance sling (28)** (Ref. Task 1-32).

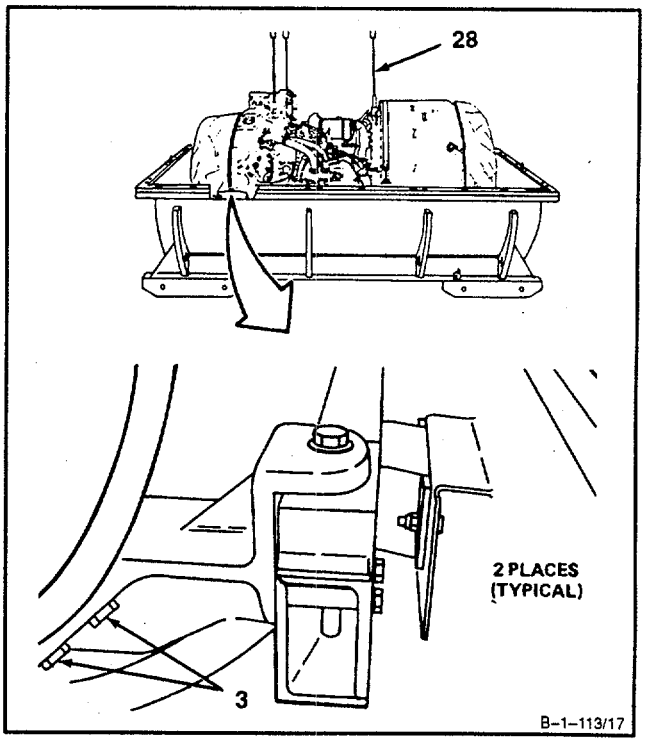

GO TO NEXT PAGE

NOTE

Step 18 shall be performed before cover assembly is lowered onto base assembly.

18. **Install five bags of desiccant (E18) (29)** in desiccant basket (30).

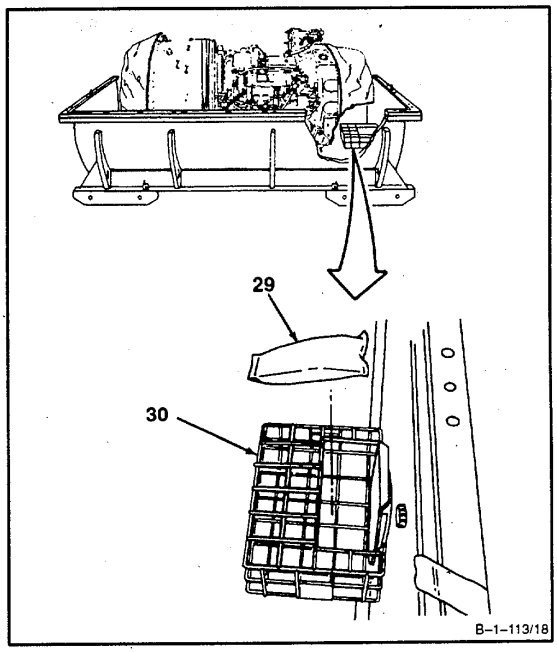

INSPECT

19. **Insert hooks (31)** of chain into rings of cover assembly (32).

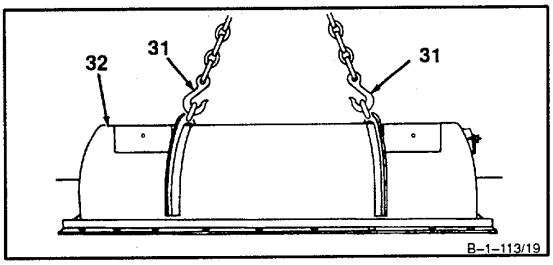

20. **Position cover assembly (32)** over base assembly (33). Use hoist and chain with hooks (Appendix E) (34).

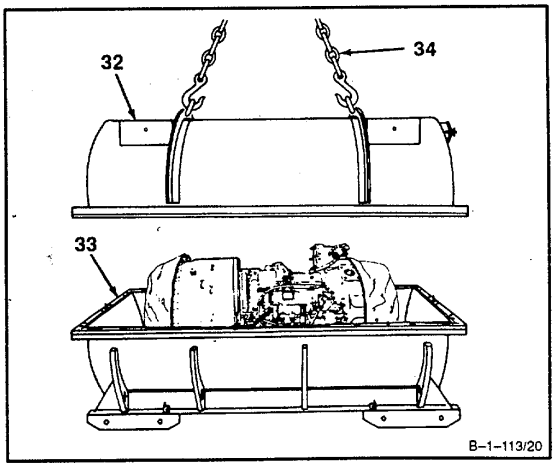

GO TO NEXT PAGE

1-104 INSTALL ENGINE INTO SHIPPING AND STORAGE CONTAINER (Continued) 1-104

21. Using helper, align six holes (35) in cover with six locating pins (36) on base. **Lower and install cover assembly (32)** on base assembly (33).

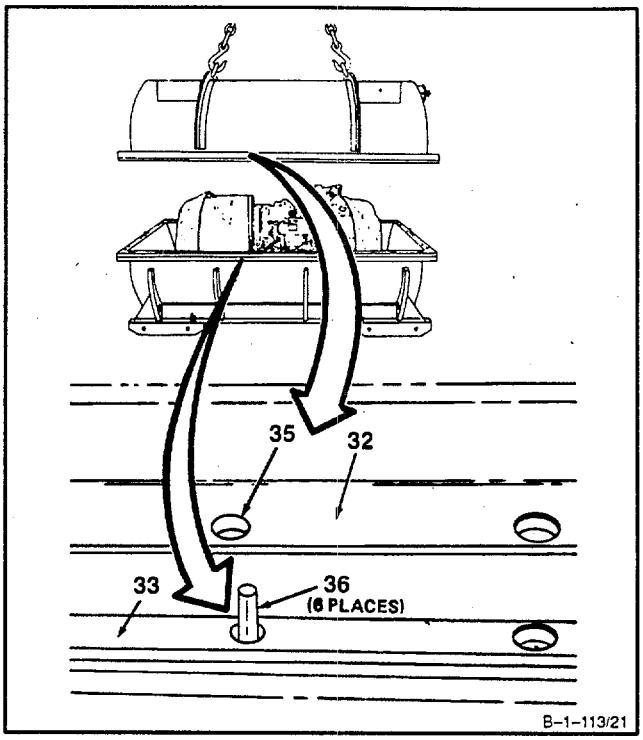

22. Check alignment of six locating pins (36). Release tension in chain with hooks (Appendix E) (34). **Remove chain with hooks.**

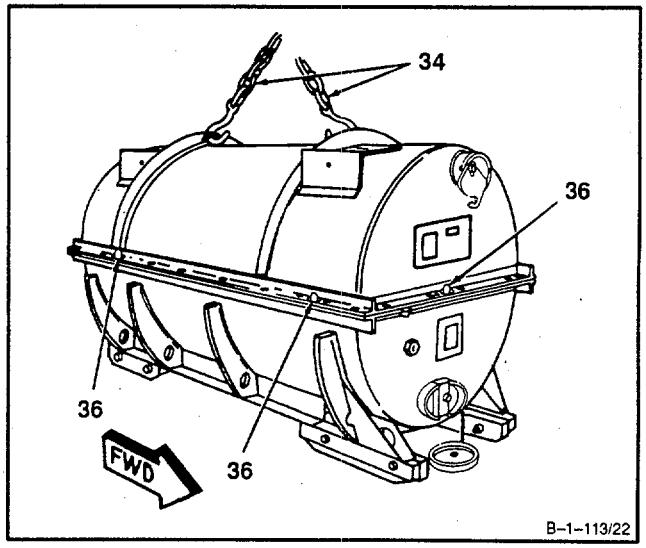

GO TO NEXT PAGE

23. **Install 30 bolts (37) and** nuts (38) in holes (39). **Finger-tighten nuts.**

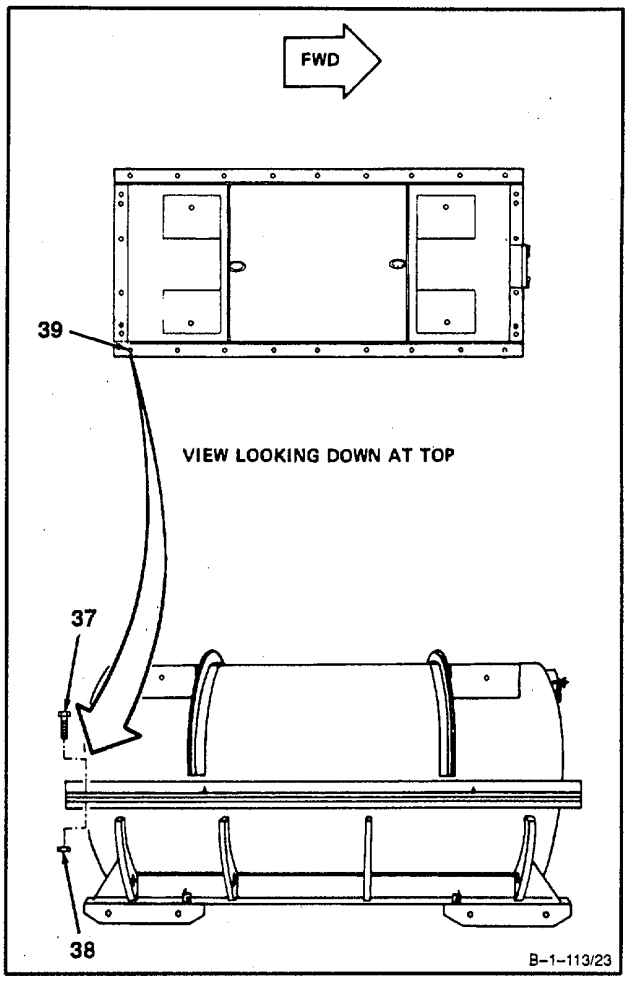

GO TO NEXT PAGE

24. **Torque 30 nuts (38)** at bolt holes (39, 40, and 41) in that order **to 275 inch-pounds.**

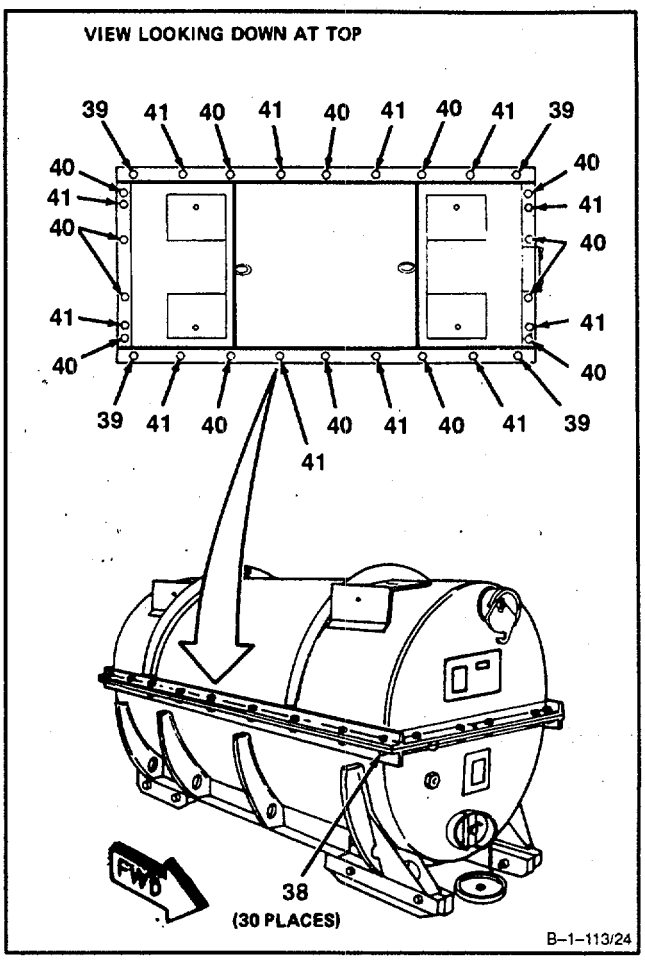

GO TO NEXT PAGE

25. **Install valve stem (42)** in valve (43).

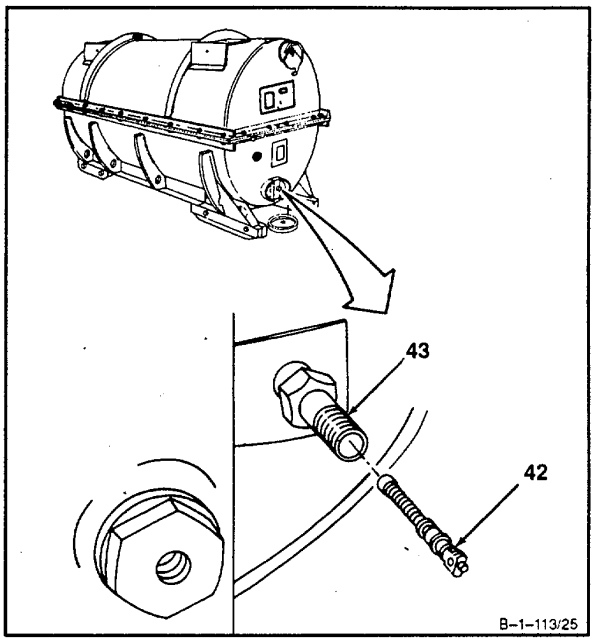

26. **Install slotted end of valve cap (44)** in valve (43).

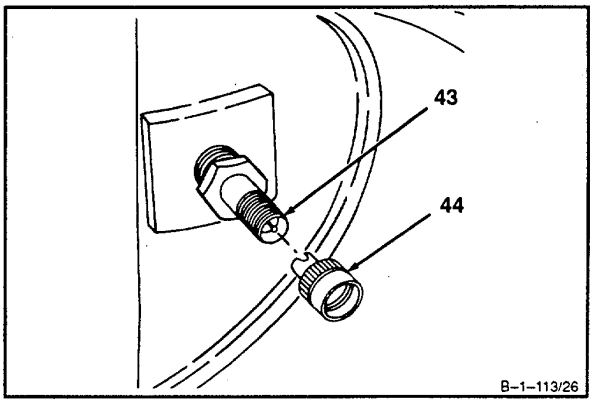

27. **Engage valve stem located Inside valve (43) with valve cap (44).** Turn valve cap (44) clockwise until valve stem is tight.

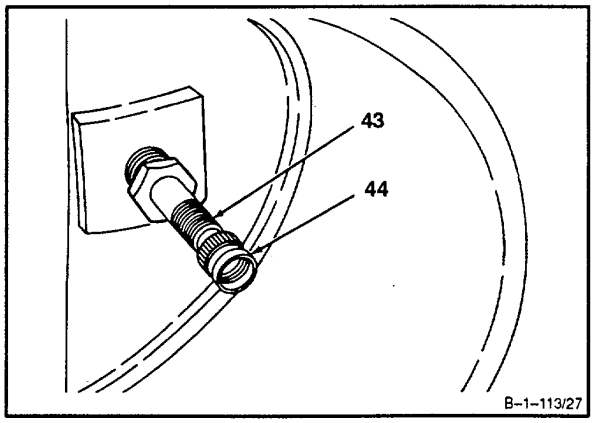

GO TO NEXT PAGE

28. **Remove valve cap (44).**

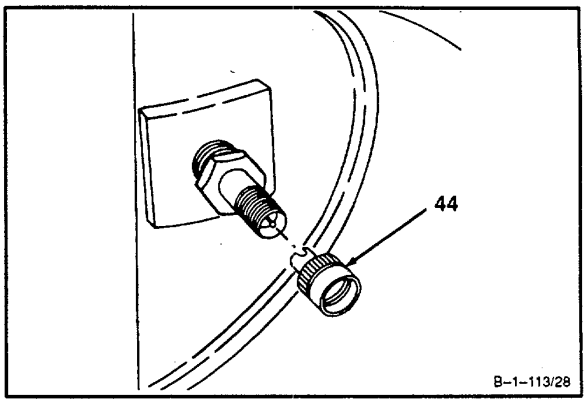

29. **Apply 5 psig air pressure to valve (43).** Use clen dry compressed air.

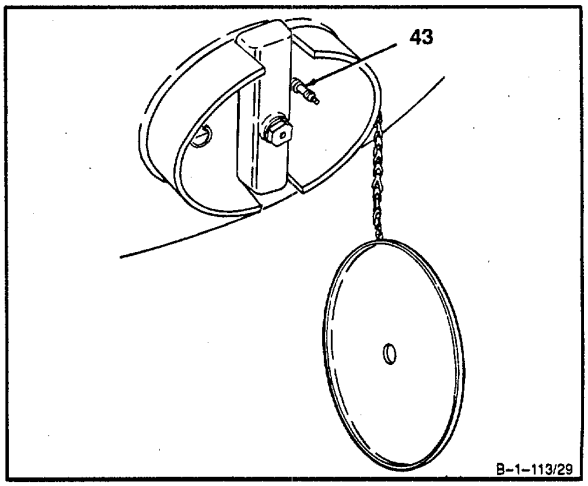

30. **Inspect for leaks** by applying liquid soap (E31) to valve (43) and valve stem (42).

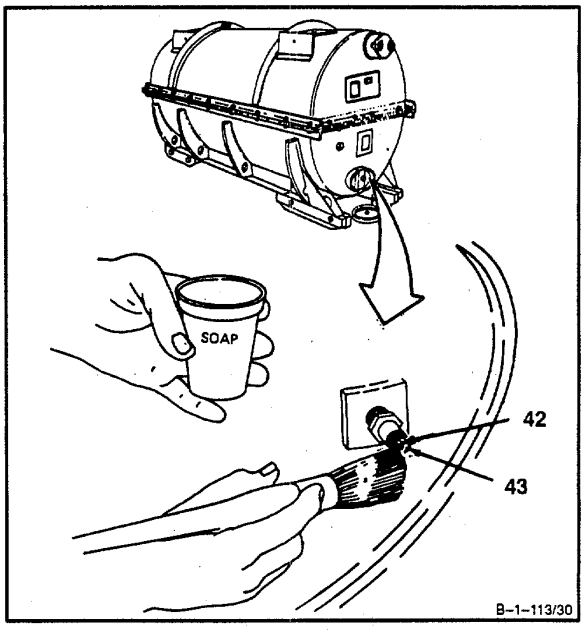

GO TO NEXT PAGE

31. If leak exists at valve stem (42), replace valve stem (42) as follows:

WARNING

Use care during removal of valve stem. Injury to personnel can result. If injury occurs, get medical attention.

a. Remove valve stem (42) from valve (43). Use slotted end of valve cap (44).

b. Install serviceable valve stem (42) in valve (43). Use slotted end of valve cap (44).

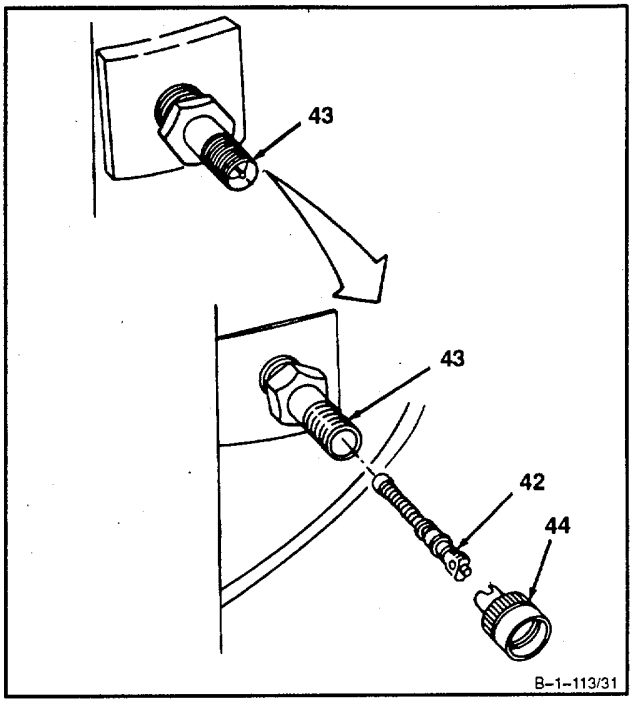

32. If leaks exist at valve (43), tighten valve (43). If valve (43) still leaks, replace valve (43) as follows:

WARNING

Use care during removal of valve. Injury to personnel can result. If injury occurs, get medical attention.

a. Remove valve (43).

b. Install serviceable valve (43).

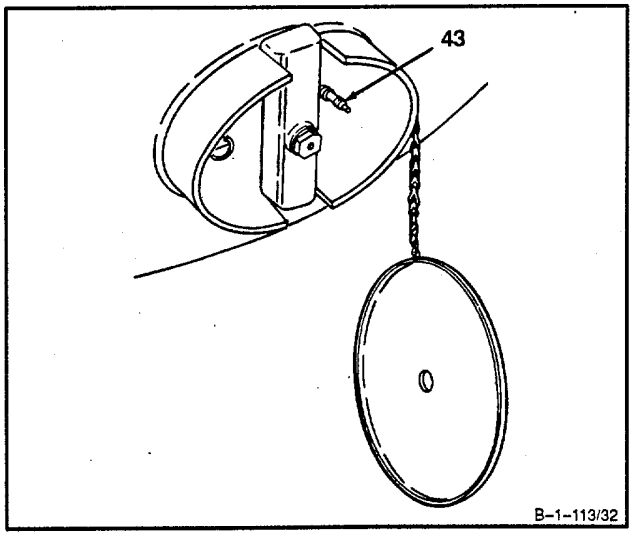

NOTE

Following step only applies if valve stem or valve were replaced. If valve or valve stem were not replaced, omit step 33.

33. Apply <u>5 psig</u> air pressure to valve (43). Use clean, dry compressed air.

GO TO NEXT PAGE

34. **Install valve cap (44)** on valve (43).

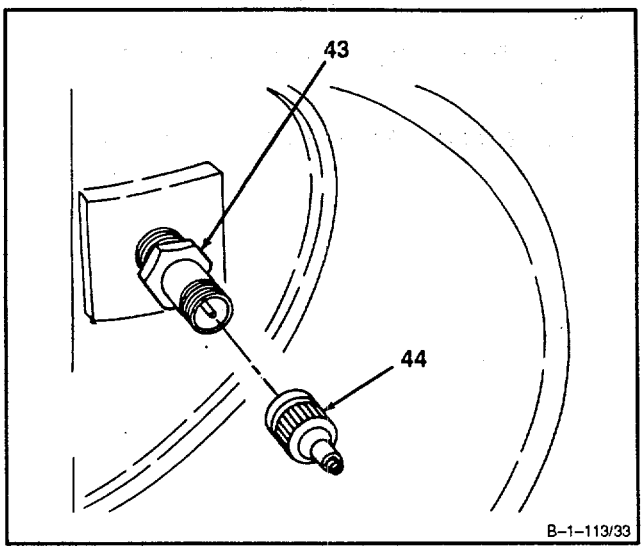

35. **Check for leaks** by applying liquid soap (E31) to shipping container mating flanges (45 and 46). There shall be no leaks. **If leak exists, inspect pressurized shipping and storage container** (Ref. Task 1-25).

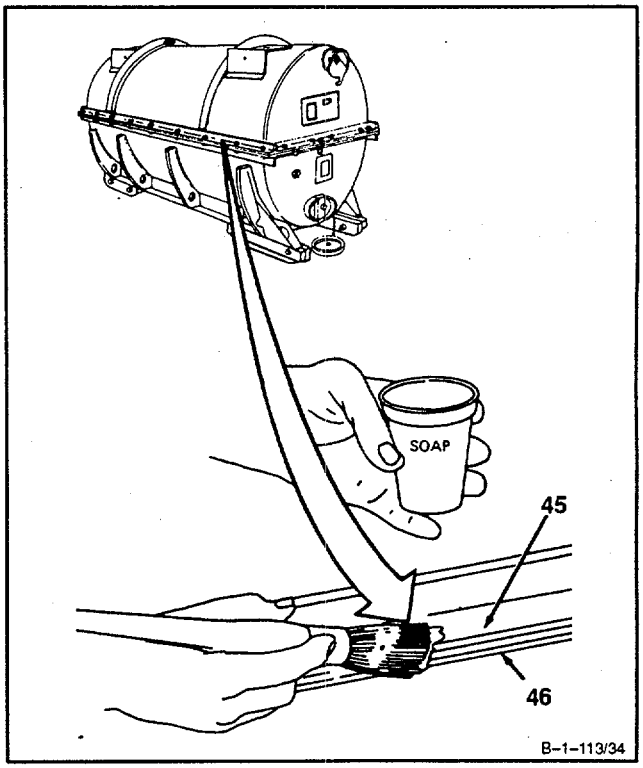

GO TO NEXT PAGE

NOTE

In following step 36, tar is applied to prevent corrosion.

36. **Apply tar (E61) to 30 bolts (37) and nuts (38).**

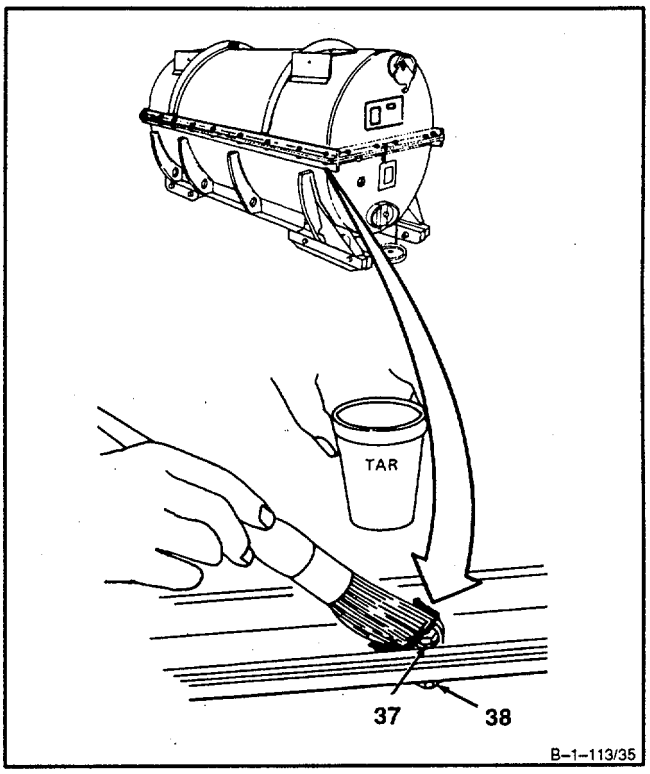

37. **Install cover (47)** and bolt (48).

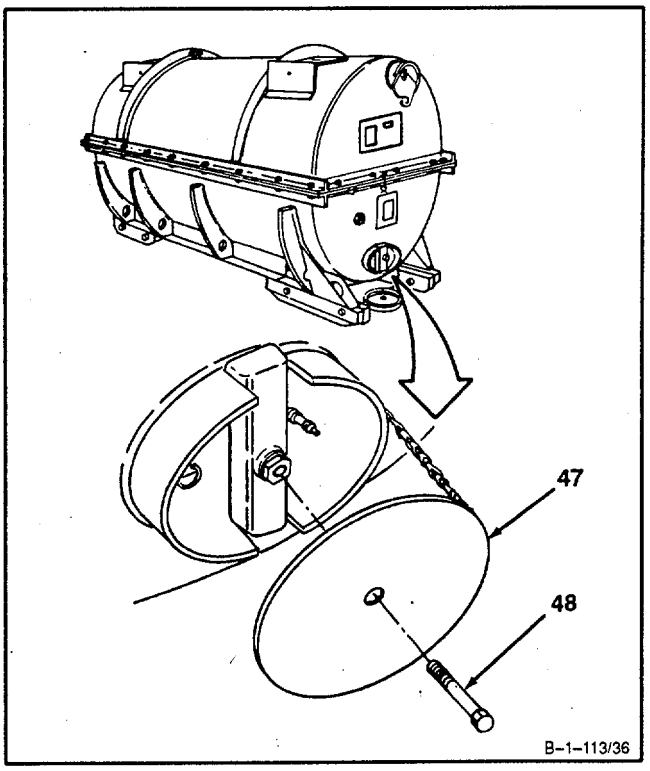

GO TO NEXT PAGE

38. **Install complete engine records** (49) in record receptacle (50) (Ref. DA Pamphlet 738-751).

NOTE

Historical records shall include:

a. **DA Form 2410**, Component Removal and Repair/Overhaul Record.

b. **DA Form 2408-5,** Equipment Modification Record.

c. **DA 2408-16**, Aircraft Component Historical Record for Selected Aircraft Components (Refer to TB 1-1500-341-01).

d. **DA 2408-19**, Aircraft Engine Wheel Historical Record (one for each turbine disc).

e. **Q806**, Final Engine Test Log Sheets.

f. **SG -371,** Rating Sheet.

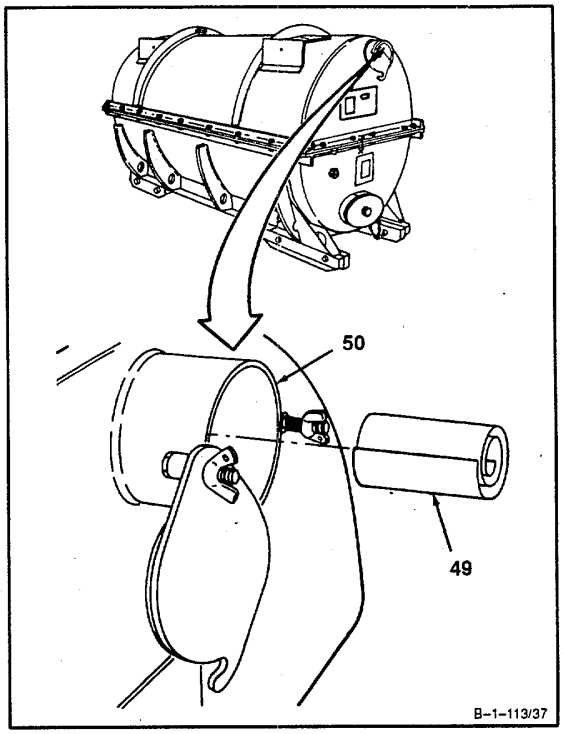

39. **Close cover (51)** and tighten wing nut (52) and wing nut (53).

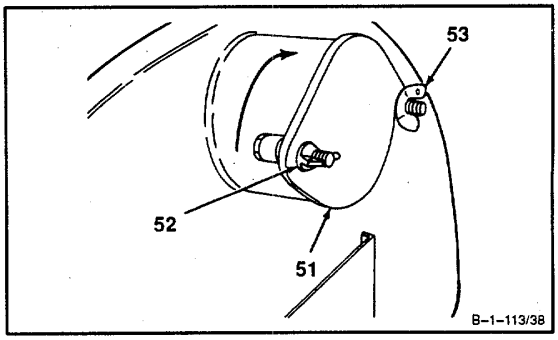

40. **Install bonding seal (E10) (54)** through hole in bolt (55), and hole in wing nut (53). Install one bonding seal (El0) (56) through hole in wing nut (52) and hole in bolt (57).

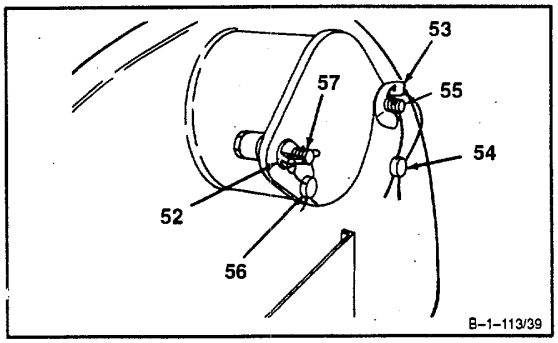

GO TO NEXT PAGE

41. **Install bonding seal (E10) (58)** through hole (59) on forward end of shipping container.

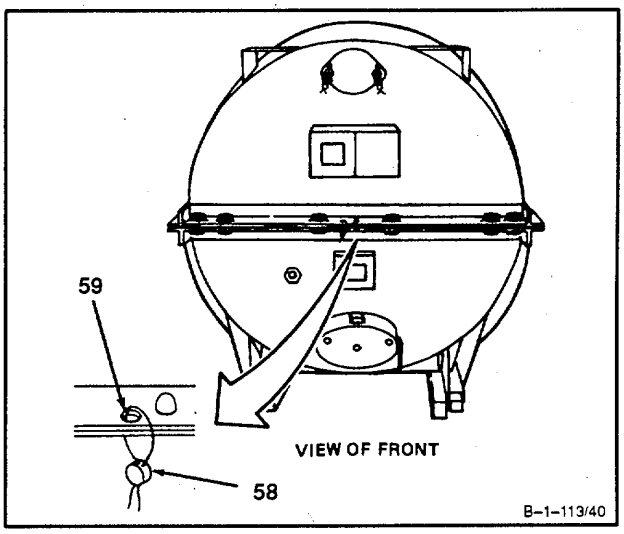

42. **Install bonding seal (E10)** (60) through hole (61) on aft end of shipping container.

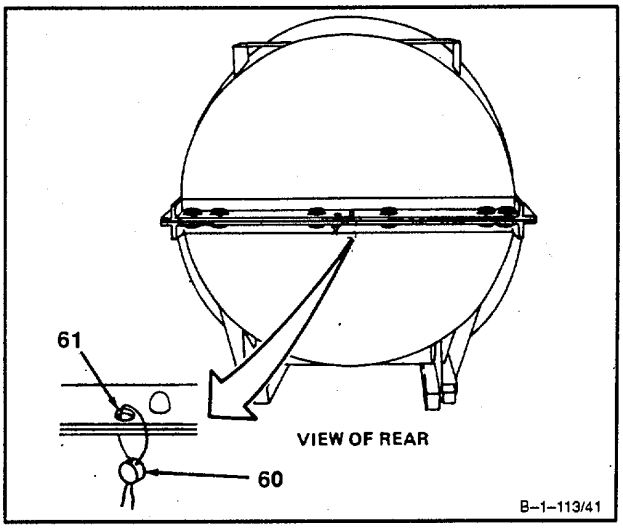

INSPECT

FOLLOW-ON MAINTENANCE:
Mark Shipping and Storage Container (Task 1-105).

END OF TASK

1-105 MARK SHIPPING AND STORAGE CONTAINER 1-105

INITIAL SETUP

Applicable Configurations:

All

Tools:

Powerplant Mechanic's Tool Kit,
NSN 5180-00-323-4944
Technical Inspection Tool Kit,
NSN 5180-00-323-5114
Stencil Set

Materials:

Black Baking Enamel (E9)
White Enamel (E63)

Personnel Required:

Aircraft Powerplant Repairer
Aircraft Powerplant Inspector

Equipment Condition:

Engine Installed in Shipping and Storage Container (Task 1-104)

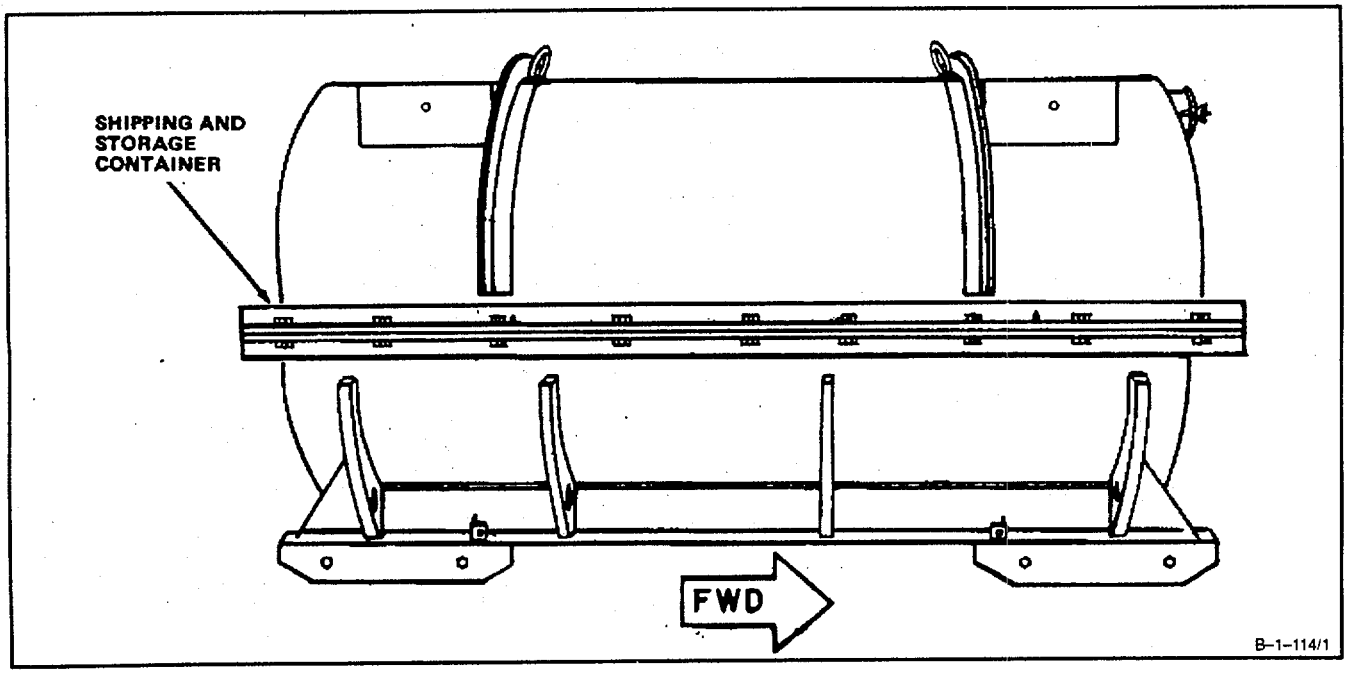

GO TO NEXT PAGE

NOTE

Shipping and storage containers shall be marked as shown.

1. Stencil front of shipping and storage container, using white enamel (E63) as shown.

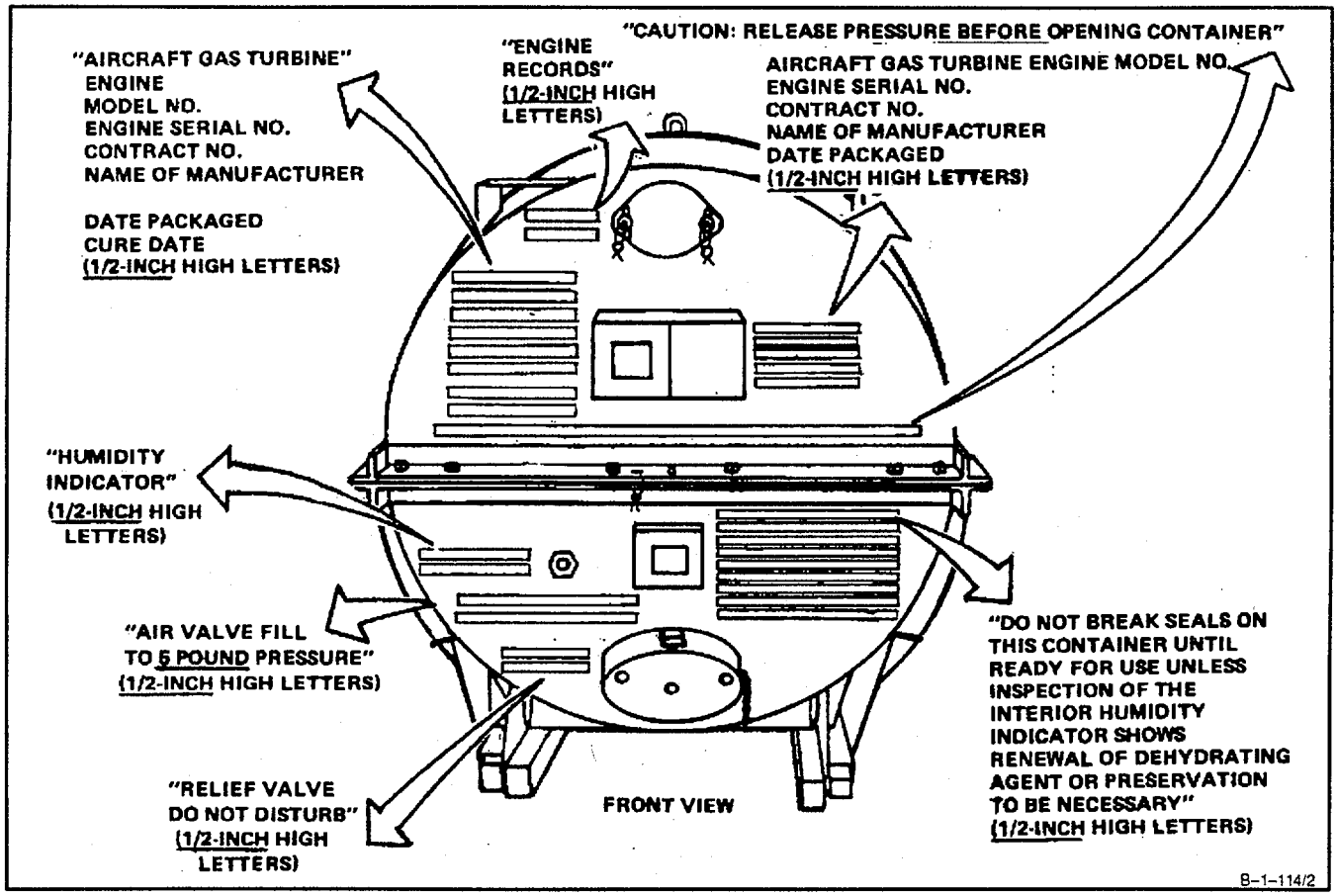

GO TO NEXT PAGE

2. Stencil left side of shipping and storage container, using white enamel (E63) as shown.

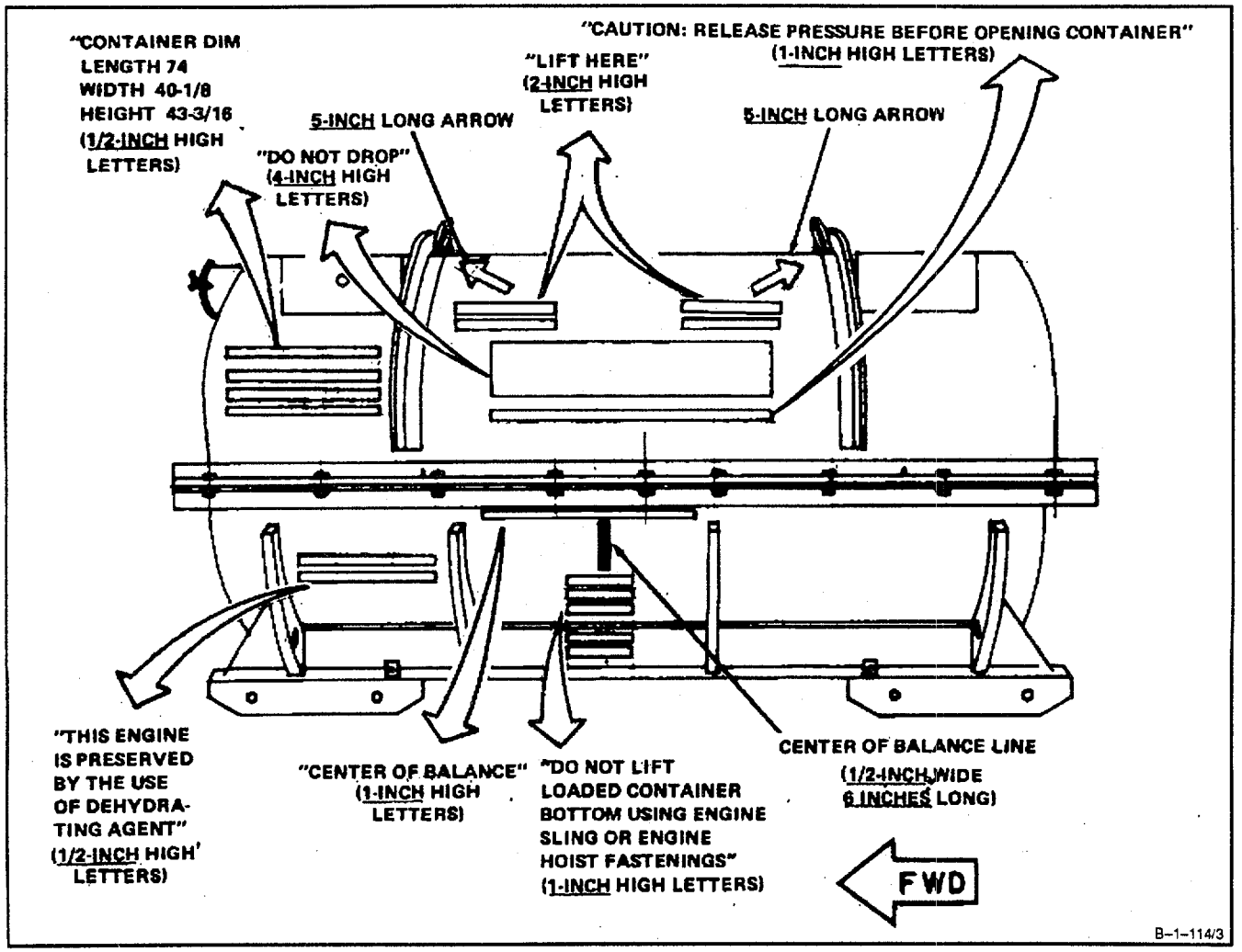

GO TO NEXT PAGE

3. Stencil right side of shipping and storage container using white enamel (E63) as shown.

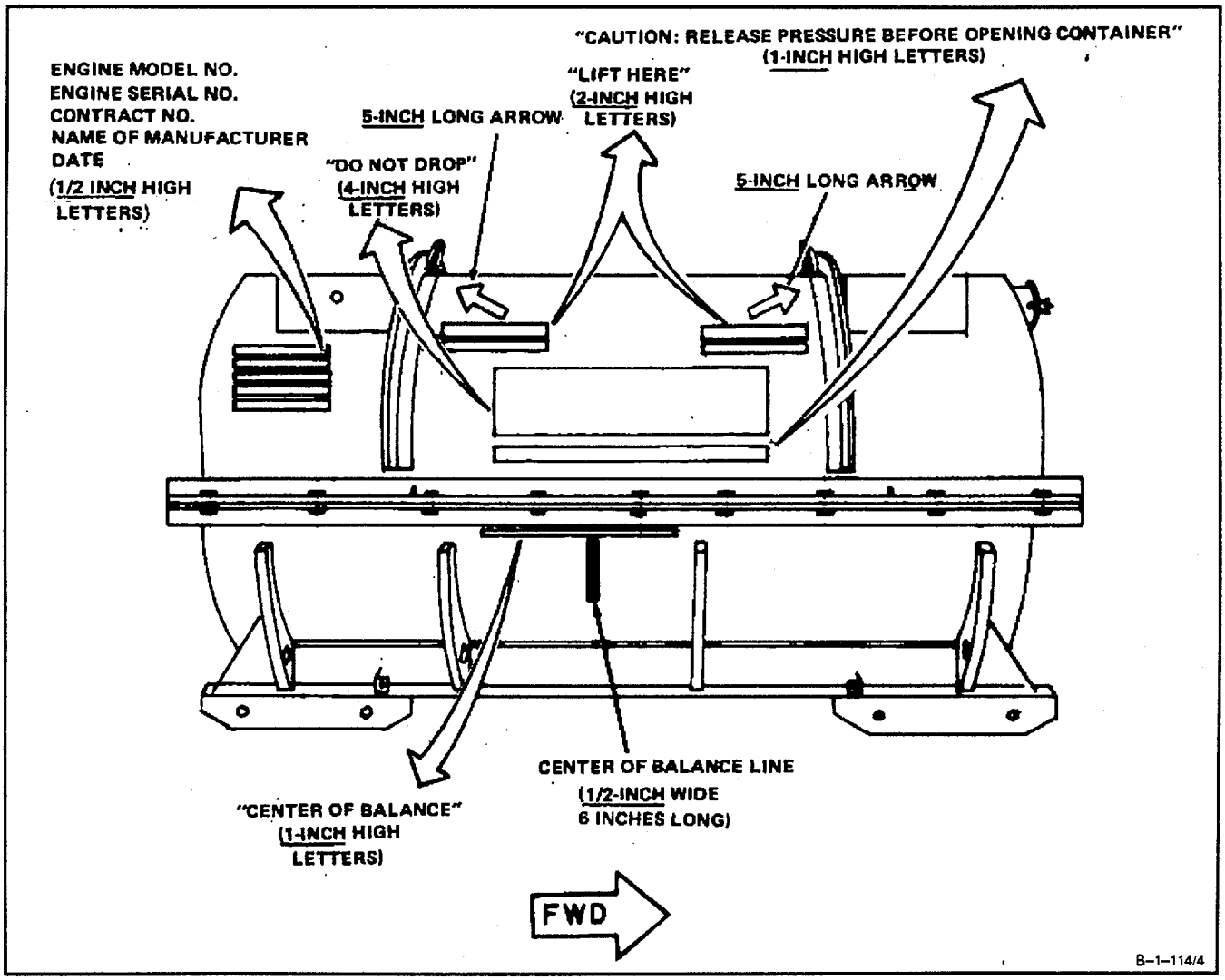

GO TO NEXT PAGE

4. Stencil rear of shipping and storage container, using white enamel (E63) and black enamel (E9).

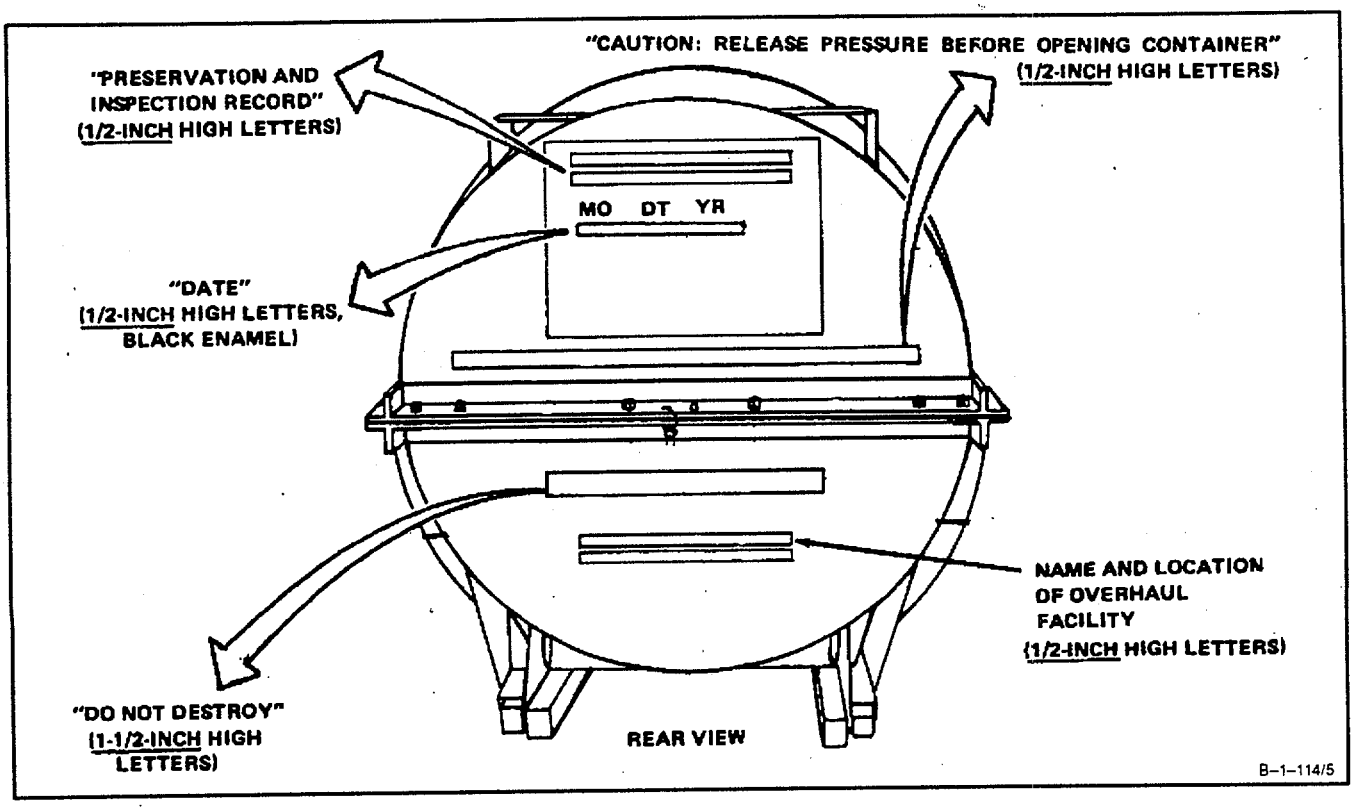

INSPECT

FOLLOW-ON MAINTENANCE:
None

END OF TASK

INITIAL SETUP

Applicable Configurations:

All

Tools:

Powerplant Mechanic's Tool Kit,
NSN 5180-00-323-4944
Technical Inspection Tool Kit,
NSN 5180-00-323-5114

Materials:

Black Baking Enamel (E9)
White Enamel (E63)

Personnel Required:

Aircraft Powerplant Repairer (2)
Aircraft Powerplant Inspector

References:

Task 1-25	Task 2-34	Task 4-34
Task 1-102	Task 2-35	Task 4-35
Task 2-22	Task 2-49	
Task 2-23	Task 2-50	
Task 2-24	Task 2-***51***	

Equipment Condition:

Engine Removed From Shipping and Storage Container (Ref. Task 1-26)

NOTE

Represervation of engine may be repeated as often as necessary.

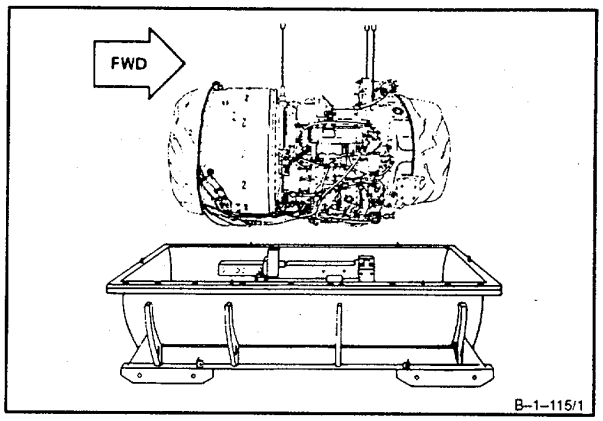

GO TO NEXT PAGE

1. Remove two plastic covers (1).

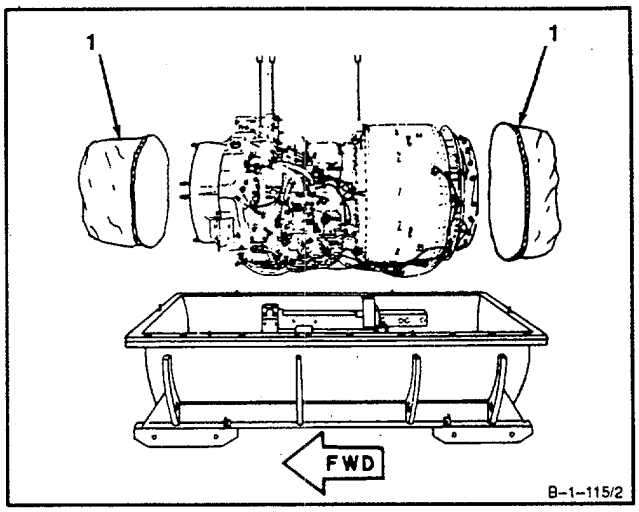

2. **Inspect inlet (2), compressor housing (3), compressor rotor blades (4), and fourth turbine rotor blades (5).** There shall be no corrosion. If corrosion exists, do steps 3 thru 7 as applicable, otherwise go to step 8.

3. **If corrosion exists on air inlet housing, clean, inspect, and repair** (Ref. Tasks 2-49, 2-50 and 2-51).

4. **If corrosion exists on compressor housing, clean, inspect, and repair** (Ref. Tasks 2-22, 2-23, and 2-24).

5. **If corrosion exists on compressor rotor blades, clean, inspect** (Ref. Tasks 2-34, and 2-35).

6. **If corrosion exists on fourth turbine rotor blades, clean and inspect** (Ref. Tasks 4-34 and 4-35).

7. **Inspect shipping and storage container** (Ref. Task 1-25).

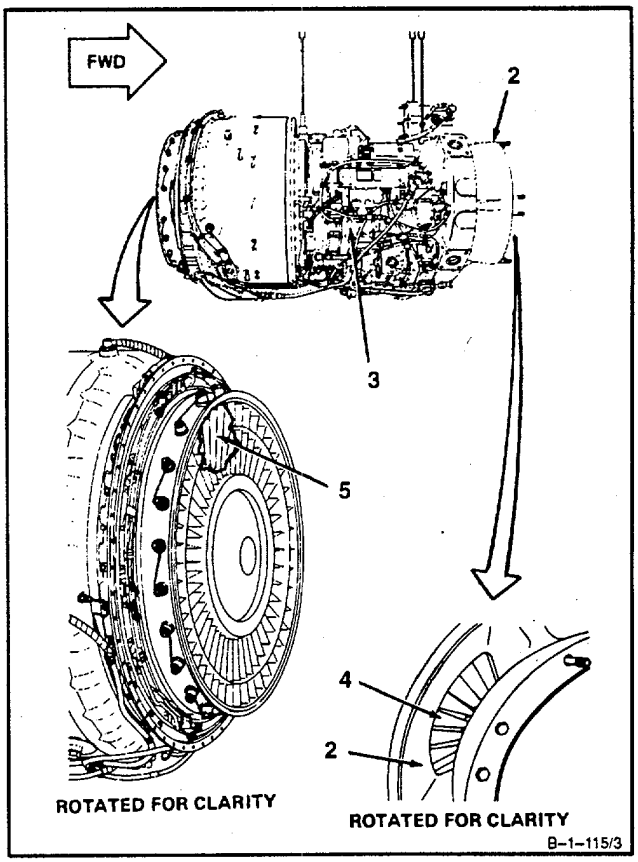

GO TO NEXT PAGE

8. **Preserve and prepare engine (6) for shipment or storage** (Ref. Task 1-102).

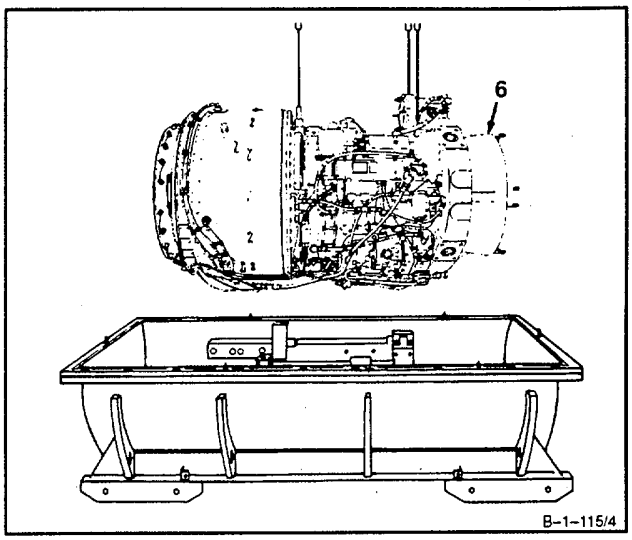

9. **Stencil new preservation and inspection date** on rear of shipping and storage container using white enamel (E63) and black enamel (E9) as shown.

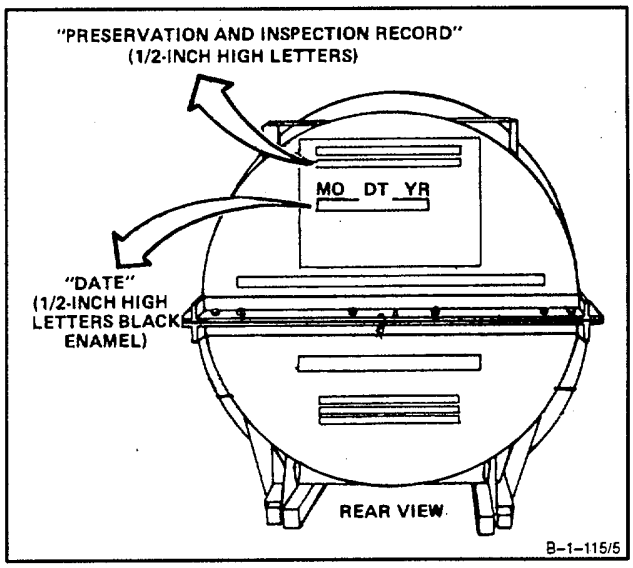

INSPECT

FOLLOW-ON MAINTENANCE:
Install Engine Into Shipping and Storage Container (Task 1-104).
Mark Shipping and Storage Container (Task 1-105).

END OF TASK

1-107 STANDARD TORQUE VALUES 1-107

This section lists standard torque values for general type screws, nuts, and bolts; pipe thread fittings and plugs; flared tubing nuts; jam nuts and bolts; and straight and stepped studs. The values listed in Tables 1-3 thru 1-9 will apply when special torque values are not specified in procedures. Torque wrenches needed are listed at the end of each table. For additional information, refer to TM 55-1500-204-25/1.

Table 1-3. Standard Torque for General Steel Screws, Bolts, and Nuts

THREAD SIZE	SLOTTED-HEAD SCREWS (INCH-POUNDS)	HEXAGON HEAD (6 POINT) AND DOUBLE HEXAGON HEAD (12 POINT)-BOLTS AND NUTS (INCH-POUNDS)
2-56	3	
3-48	4	
4-40	6	
5-40	Z	
6-32	9	
8-32	12	
10-32	20	45
7/32-24	25	70
1/4-28	35	85
5/16-24	45	145
3/8-24	60	290
7/16-20	85	440
1/2-13	105	600
1/2-20	105	600
9/16-18		875
5/8-18		1200
Torque Wrench, 0-30 Inch-Pounds Torque Wrench, 30-150 Inch-Pounds Torque Wrench, 100-750 Inch-Pounds Torque Wrench, 700-1600 Inch-Pounds		

Table 1-4. Standard Torque for Steel ,Taper Pipe Thread, Fittings and Plugs

THREAD SIZE	IN STEEL CASE (INCH-POUNDS)	IN MAGNESIUM OR ALUMINUM CASE (INCH-POUNDS)
1/16-27	40	15
1/8-27	100	35
1/4-18	225	80
3/8-18	365	105
1/2-14	475	150
3/4-14	550	185
1.000-11.5	650	245
Torque Wrench, 0-30 Inch-Pounds Torque Wrench, 30-150 Inch-Pounds Torque Wrench, 100-750 Inch-Pounds		

Table 1-5. Standard Torque for Tube and Hose End Fittings (B-Nuts)

SIZE	FLARED TUBING NUTS			HOSE END FITTINGS
DASH NO. REF.	TUBING OD (INCHES)	ALUMINUM ALLOY TUBING (INCH-POUNDS)	STEEL TUBING (INCH-POUNDS)	STEEL (INCH-POUNDS)
-3	3/16	-	95	85
-4	1/4	55	145	95
-5	5/16	70	190	130
-6	3/8	100	285	175
-8	1/2	200	475	315
-10	5/8	275	675	390
-12	3/4	400	950	675
-16	1	600	1300	925
-20	1-1/4	750	-	-
-24	1-1/2	750	-	-
Torque Wrench, 30-150 Inch-Pounds Torque Wrench, 100-750 Inch-Pounds Torque Wrench, 700-1600 Inch-Pounds				

Table 1-6. Standard Torque for Jam Nuts for Bulkhead Fittings

TUBING OUTSIDE DIAMETER (INCHES)	THREAD SIZE	TORQUE (INCH-POUNDS)
1/8	5/16-24	24
3/16	3/8-24	30
1/4	7/16-20	40
5/16	1/2-20	60
3/8	9/16-18	70
1/2	3/4-16	150
5/8	7/8-14	200
3/4	1-1/16-12	200
1	1-5/16-12	200
1-1/8	1-5/8-12	200
1-1/2	1-7/8-12	200
Torque Wrench, 0-30 Inch-Pounds Torque Wrench, 30-150 Inch-Pounds Torque Wrench, 100-750 Inch-Pounds		

Table 1-7. Standard Torque for Jam Nuts, Bolts, and Fittings Used With Gaskets

TUBING OUTSIDE DIAMETER (INCHES)	THREAD SIZE	NUTS (MS9099, MS9100, MS9200, MS9201); PLUG (MS9015); UNION (AN815); AND BOLT-UNIVERSAL BANJO FITTING (AN774 AND AN775) (INCH-POUNDS)
1/8.	5/16-24	24
3/16	3/8-24	30
1/4	7/16-20	40
5/16	1/2-20	60
3/8	9/16-18	75
1/2	3/4-16	150
5/8	7/8-14	200
3/4	1-1/16-12	300
1	1-5/16-12	50
1-1/8	1-5/8-12	600
1-1/2	1-7/8-12	600
Torque Wrench, 0-30 Inch-Pounds Torque Wrench, 30-150 Inch-Pounds Torque Wrench, 100-750 Inch-Pounds		

Table 1-8. Standard Torque For Stepped Studs

THREAD SIZE		TYPE X (INCH-POUNDS)	TYPE Y (INCH-POUNDS)	TYPE Z (INCH-POUNDS)
NUT END	STUD END			
10-32	1/4-20	35	-	-
1/4-28	5/16-18	80	65	110
5/1 6-24	3/8-16	170	130	225
3/8-24	7/16-14	300	20	395
7/16-20	1/2-13	485	385	625
1/2-20	9/16-12	775	625	950
9/16-18	5/8-11	1125	875	1350
5/8-18	11/16-11	1650	1300	2000
Torque Wrench, 30-150 Inch-Pounds Torque Wrench, 100-750 Inch-Pounds Torque Wrench, 700-1600 Inch-Pounds Torque Wrench, 100-500 Foot-Pounds				

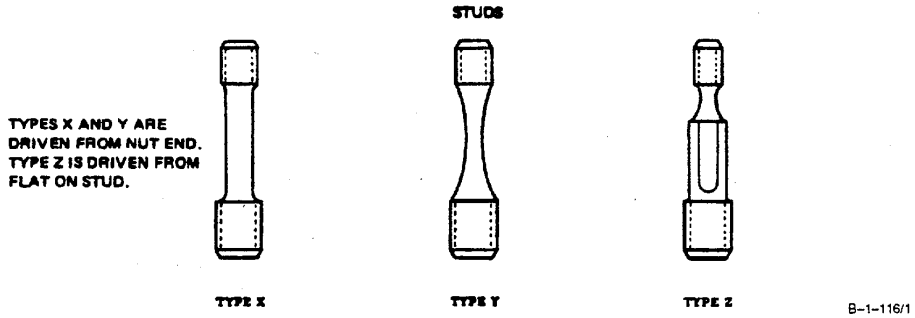

Table 1-9. Standard Torque For Straight Studs

THREAD SIZE		TYPE X (INCH-POUNDS)	TYPE Y (INCH-POUNDS)	TYPE Z (INCH-POUNDS)
NUT END	STUD END			
4-48	4-40	5	-	-
6-40	6-32	10	-	-
8-36	8-32	20	-	-
10-32	10-24	30	-	-
1/4-28	1/4-20	75	75	80
5/16-24	5/16-18	165	165	175
3/8-24	3/8-16	275	275	290
7/16-20	7/16-14	450	325	475
1/2-20	1/2-13	700	550	750
9/16-18	9/16-12	1025	725	1100
5/8-18	5/8-11	1450	1050	1450
Torque Wrench, 0-30 Inch-Pounds Torque Wrench, 30-150 Inch-Pounds Torque Wrench, 100-750 Inch-Pounds Torque Wrench, 700-1600 Inch-Pounds				

SECTION XIII

STANDARD PRACTICES AND PROCEDURES

This section contains Standard Maintenance Practices and Standard Procedures. Standard maintenance practices are those which you should do automatically when doing a task. Instructions for standard maintenance practices will not normally be included in task steps. Standard procedures are common detail procedures you may have to do to complete a task. Initial setup tables list task numbers of standard procedures when you need them. Task steps tell you when to use standard procedures.

1-108 STANDARD MAINTENANCE PRACTICES 1-108

A. General disassembly practices are as follows:

(1) Record and tag defective parts. Record reason for rejection (exclude parts that are normally replaced such as gaskets, packings, etc.).

(2) When disconnecting electrical connectors or hose and tube fittings, remove clamps or brackets, as required, to gain slack and to avoid damage to connectors and fittings.

(3) Tag lines before they are disconnected. Protect all lines, fittings, and ports with clean caps, foil, or plugs. If plastic caps and plugs are used, be sure that no chips are generated during installation.

(4) Wear gloves (E24) when handling lubricating oils or turbine fuels. Wear (E24) during removal and disassembly tasks for all lubricating oil or fuel related components and lines.

(5) During removal tasks, allow fuel and oil lines and components to drain into suitable containers. Storage and disposition of fuel and oil shall be in accordance with proper Army regulations. Wipe up spilled fuels and oils using wiping rag (E64). When required, specific instructions for draining components are included in tasks.

(6) Tie lines and related parts out of the way with twine, not lockwire.

(7) Record thickness of removed shims and tag them, when applicable.

CAUTION

Never use a lead (graphite) pencil to matchmark hot end parts. Lead will contaminate the metal and cause cracks. Damage to engine will occur.

(8) Prior to removal or disassembly, matchmark all hot end parts for proper installation with marking pencil (E38).

(9) Apply penetrating oil (E43) to parts (especially those exposed to high temperatures) to make removal easier. On parts to be reinstalled, remove all penetrating oil from part by cleaning with dry cleaning solvent (E19).

(10) Discard removed packings, cotter pins, retainers, tabwashers, etc.

(11) During disassembly tasks, components may be held in vise (1) with soft jaw caps (2) unless task steps instruct otherwise.

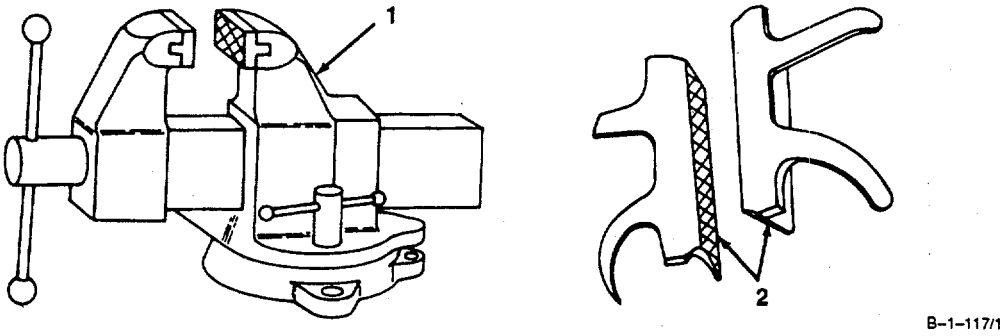

(12) In disassembly tasks, components are removed and wires and hoses disconnected.

(13) Disassembly procedures reflect the total breakdown of a part as it is authorized. You may not need to disassemble a part as far as described in the task. Follow the steps to disassemble only as far as necessary to replace worn or damaged parts.

B. General assembly practices are as follows:

(1) Remove corrosion preventive compounds from parts which are bathed by the engine lubrication system.

(2) Be sure to install all parts properly as tagged at removal or disassembly. Be sure all necessary tolerances are met.

(3) Use new packings, cotter pins, retainers, tabwashers, etc.

(4) Coat packings, before installing, in accordance with the following:

(1) Petrolatum (E44) for fuel system packings.

(a) Shortening compound (E51) for lubrication system packings.

(b) Grease (E27) for pneumatic system packings.

(5) When torquing hardware, observe compliance with torque procedures as required in General Maintenance Manual (Ref. TM 55-1500-204-25/1).

(6) Tables in paragraph 1-107 provide standard torque limits for general type screws, nuts, and bolts; pipe thread fittings and plugs; flared tubing nuts; jam nuts and bolts; stepped, and straight studs. The word install is used when a standard torque is required. If additional tools are required such as crow- foot wrenches, they are listed in the task INITIAL SETUP. These standard torque values apply only when special torque values are not specified in procedures in this manual. A special torque will be cited when the words torque to are used in this manual. Included in the torque tables are the applicable torque wrenches.

(7) When a cotter pin is required, cotter pin holes will be aligned within allowable torque range.

C. When a nut is tightened or loosened on a bolt, the bolt head will be held with a wrench.

D. Guide lines will be used when any item is hoisted overhead.

E. Manufactured item specifics are listed in Appendix E.

F. Before a component or the parts of a component are inspected, they are to be cleaned as required.

G. Nicks, burrs, and scratches are acceptable unless specific criteria is called out in inspection task steps. Sharp projections shall be blend repaired, within specific criteria.

H. Blend-repair shall be accomplished using small files and carborundum stones (Ell). Use crocus cloth (El6) for final polishing; do not use power tools. Blend all repairs and finish smoothly. Lines, scratches, or sharp edges, which are sharp bottomed, are not permitted. The finish stroke of all compressor and turbine blade repair work shall be parallel to leading and trailing edges of blade. When blade is repaired on leading or trailing edges, blend edges with smooth radius as part of repair.

I. Components and installation area will be inspected for condition before installation.

J. Prior to installation, paint will be touched up as required.

K. Following maintenance, work area wil be inspected for foreign objects.

L. Test setups are shown as schematics. Specific attaching hardware is not listed to allow you flexibility in using equivalent equipment.

M. General maintenance procedures such as magnetic particle inspection and threaded insert replacement are not included in maintenance instructions. A reference is made to applicable general maintenance manual for procedures.

INITIAL SETUP
Applicable Configurations:
All
Tools:

Powerplant Mechanic's Tool Kit, NSN 5180-00-323-4944
Technical Inspection Tool Kit, NSN 5180-00-323-5114
Inside Caliper
Outside Caliper
Inside Micrometer Caliper Set
Outside Micrometer Caliper Set
Goggles
Compressed Air Source
Materials:
Carborundum Stone (Ell)
Crocus Cloth (E16)
Crocus Cleaning Solvent (E19)
Dry Cleaning Solvent (El 9)
Lint-Free Cloth (E30)

Personnel Required:
Aircraft Powerplant Repairer
Aircraft Powerplant Inspector

1. **Clean external splines (1), Internal splines (2),** and **gears (3)** as follows:

   a. Wear gloves (E24) and remove all traces of grease and dirt.

   WARNING

   Dry cleaning solvent (E19) is flammable and toxic. It can Irritate skin and cause burns. Use only In well-ventilated area, away from heat and open flame. In case of contact, immediately flush skin or eyes with water for at least 15 minutes. Get medical attention for eyes.

   b. Use dry cleaning solvent (E19) and brush.

   WARNING

   When using compressed air for cleaning, use approved protective equipment for eyes and face. Do not use more than 30 psig air pressure. Do not direct air toward yourself or another person. Failure to comply could result in injury to eyes or skin. In case of injury, get medical attention.

   c. Dry with lint-free cloth (E30), or wearing goggles, blow dry as needed, with clean, dry, compressed air.

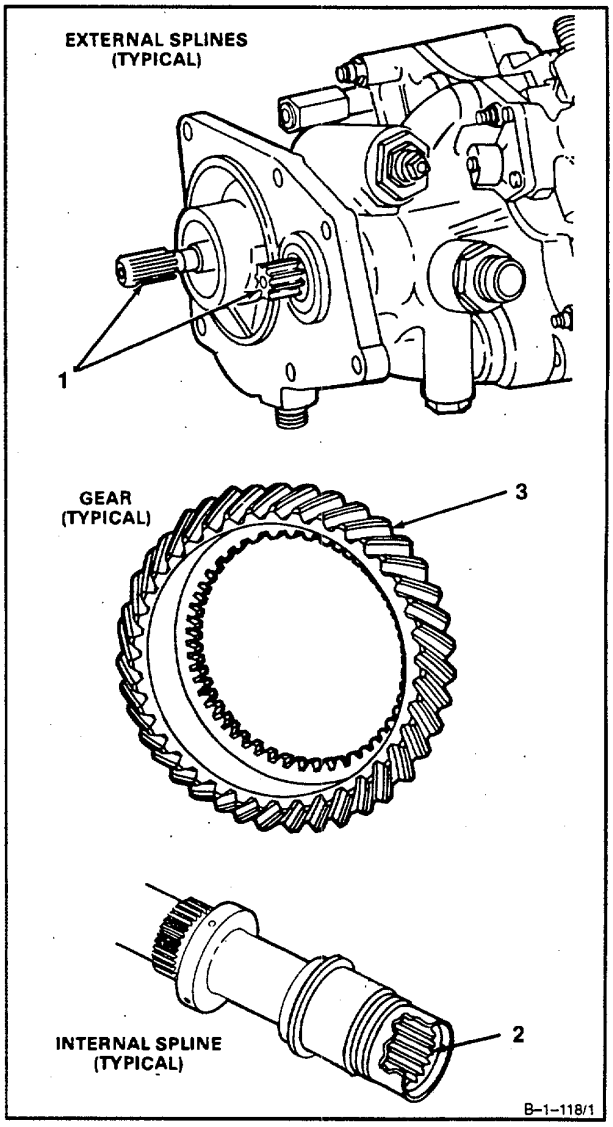

GO TO NEXT PAGE

NOTE

The following inspection procedure applies to both external and internal splines.

2. **Inspect splines (1)** as follows:

   a. There shall be no rust (4).

   b. There shall be no rough edges (5) caused by chipping (6) or gouging (7).

   c. Inspect for wear (8). If wear is noted, perform steps d or e.

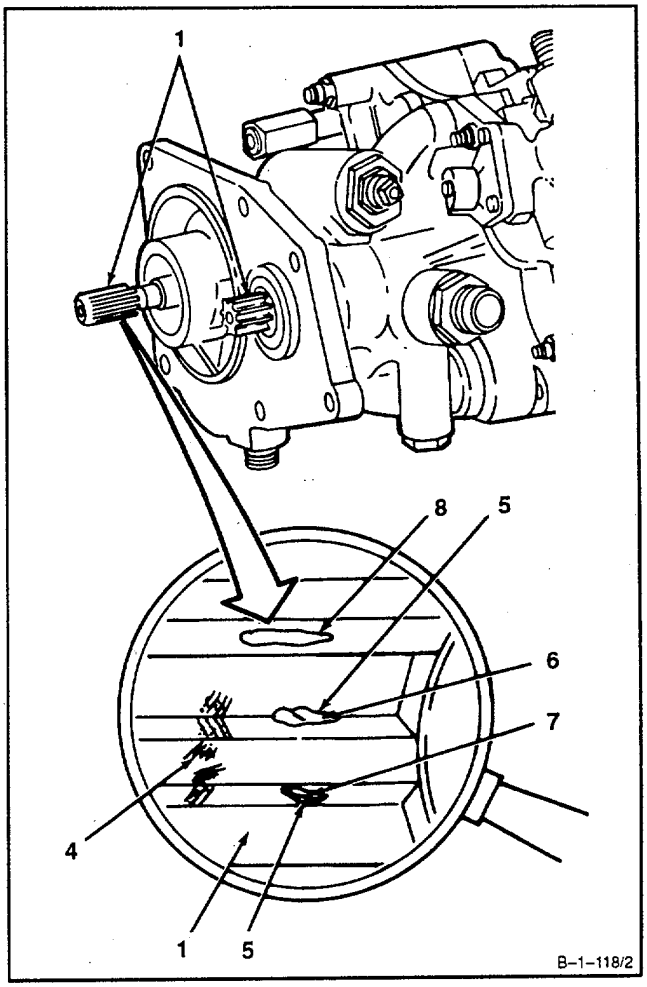

GO TO NEXT PAGE

d. **Determine depth of wear (8) on external splines (9)** as follows:

(1) Remove projecting material (10) on spline (9) by blending. Use carborundum stone (E11).

(2) Determine thickness of spline (9) at area of wear (8). Use outside caliper (11).

(3) Measure set thickness on outside caliper (11). Use thickness gage or inside micrometer caliper. Record as Dimension A.

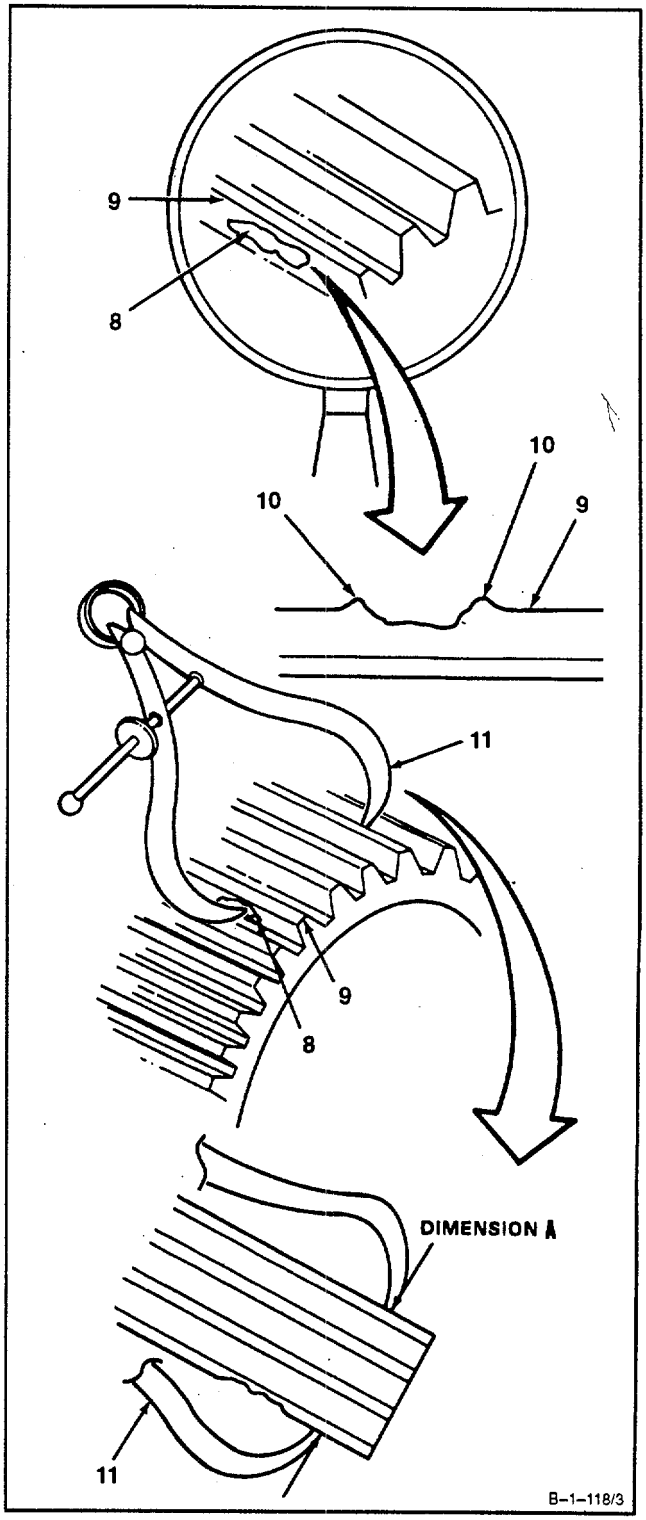

GO TO NEXT PAGE

(4) Determine thickness of undamaged area of spline (9). Use outside caliper (11).

(5) Measure set thickness on outside caliper (11). Use thickness gage or inside micrometer caliper. Record as Dimension B.

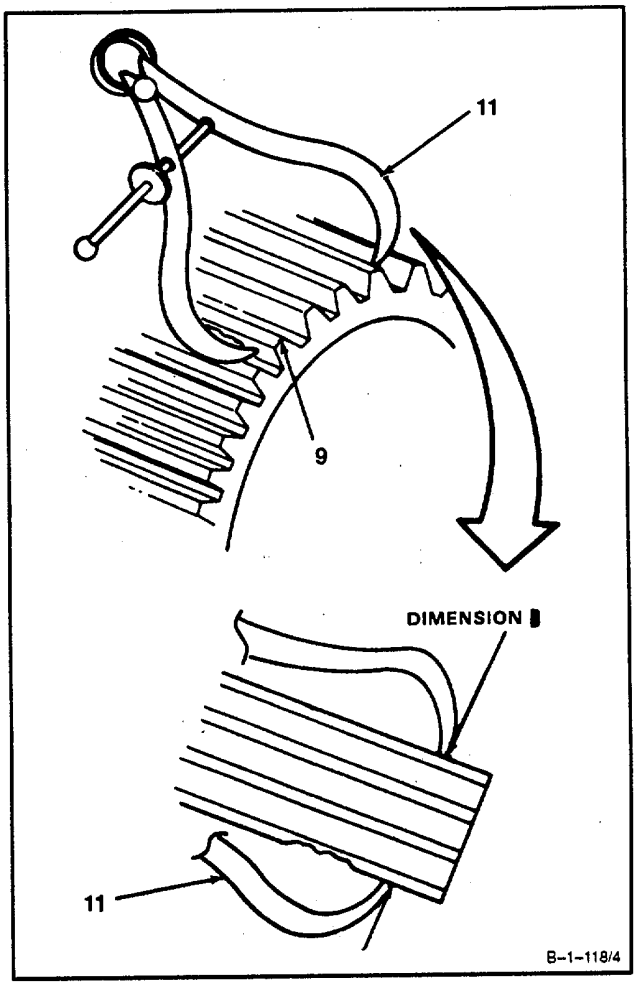

(6) Subtract Dimension A from Dimension B. Result is depth of wear.

(7) Depth of wear shall not exceed dimension given in detail inspection task.

DIMENSION B
-DIMENSION A
DEPTH OF WEAR

B-1-118/5

GO TO NEXT PAGE

e. **Determine depth of wear (12) on Internal splines (13)** as follows:

(1) Remove projecting material (14) on spline (13) by blending. Use carborundum stone (E11).

(2) Determine distance between splines (13) at wear (12) with inside caliper (15).

(3) Measure set thickness on inside caliper (15). Use outside micrometer caliper. Record as Dimension C.

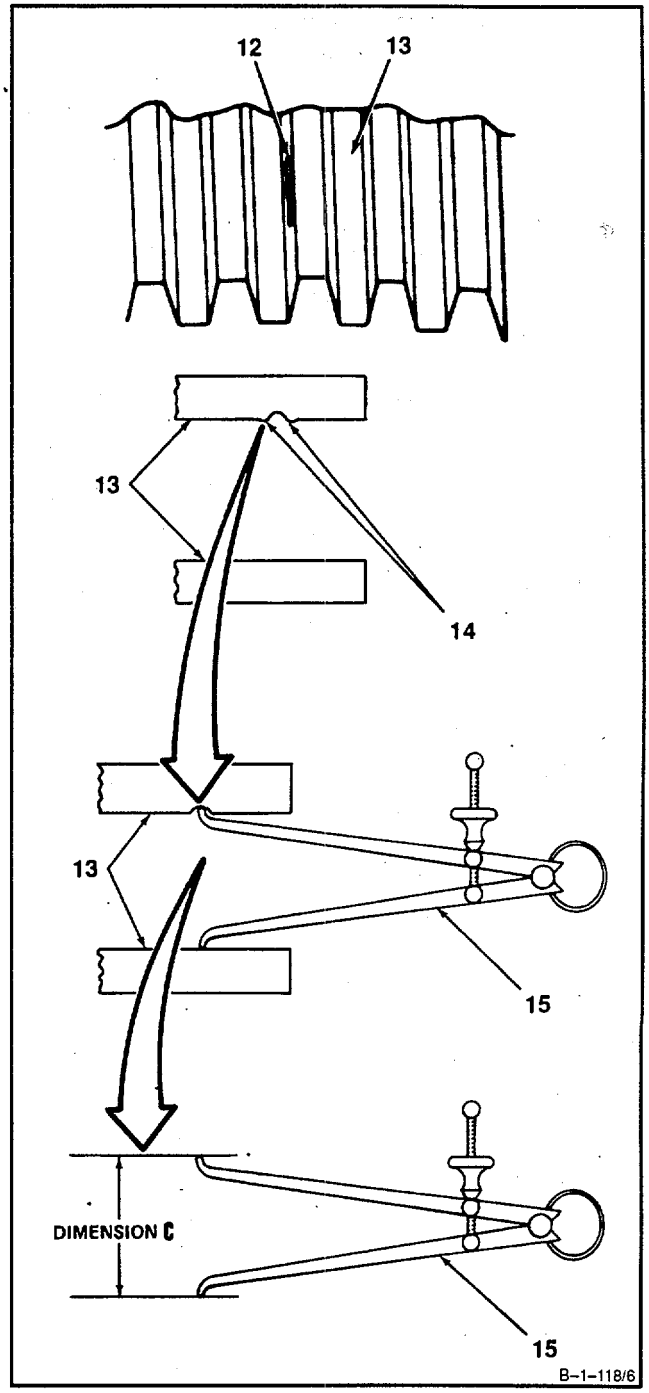

GO TO NEXT PAGE

(4) Determine distance between splines (13) in undamaged area. Use inside caliper (15).

(5) Measure set thickness on inside caliper (15). Use outside micrometer caliper Record as Dimension D.

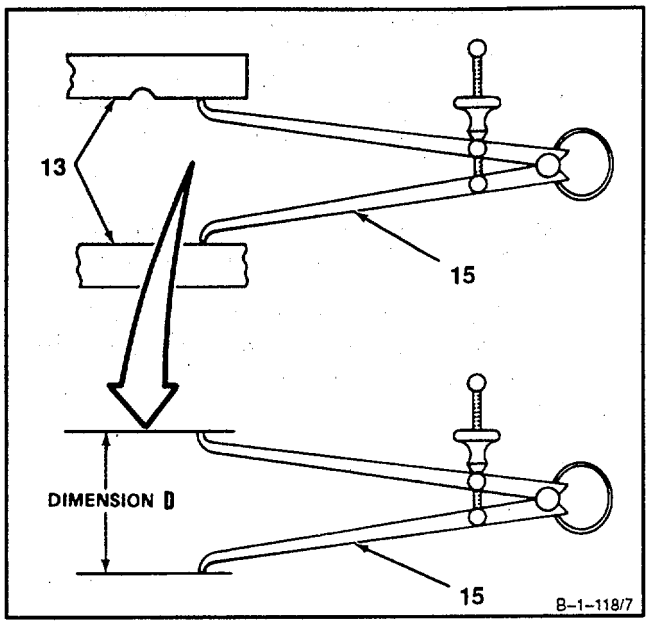

(6) Subtract Dimension D from Dimension C. Result is depth of wear.

(7) Depth of wear shall not exceed dimension given in detail inspection task.

DIMENSION C
–DIMENSION D
DEPTH OF DAMAGE

B-1-118/8

f. There shall be no heavy scoring (16) or medium scoring (17). Light scoring (18) is acceptable.

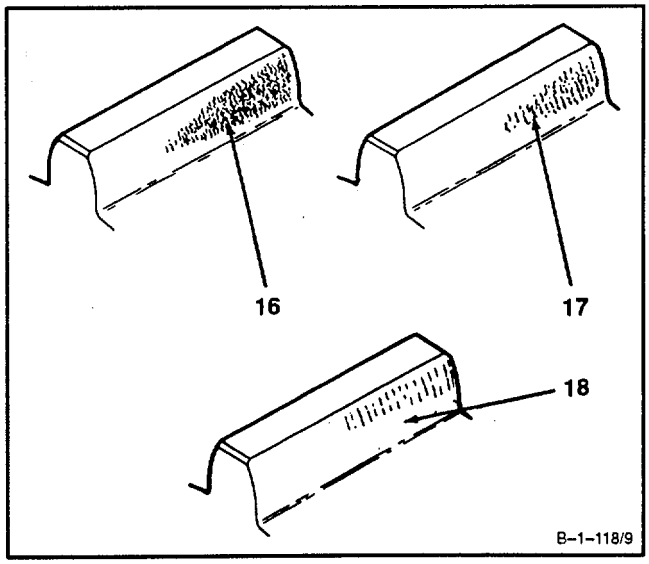

GO TO NEXT PAGE

g. There shall be no spalling (19).

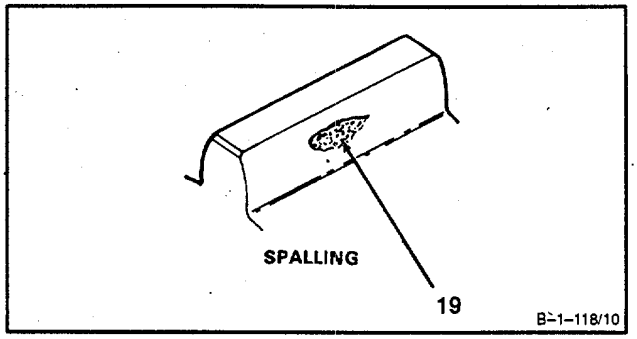

h. There shall be no heavy pitting (20) or medium pitting (21). Light pitting (22) is acceptable.

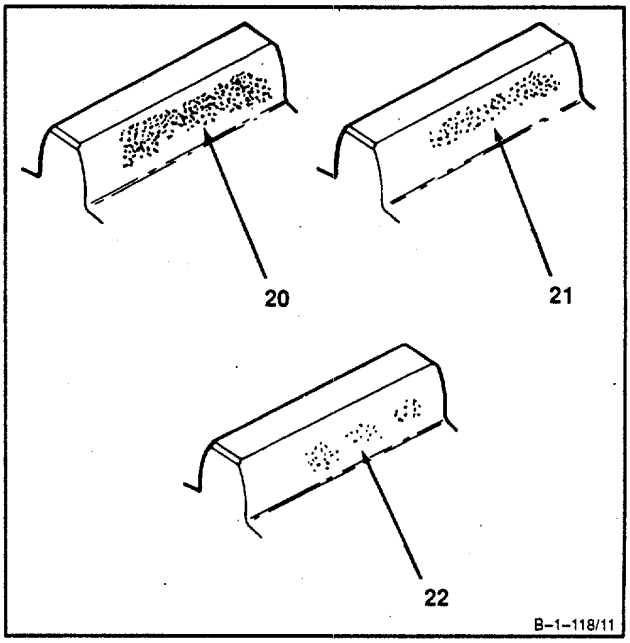

NOTE

The following inspection procedure applies to all gears. Accessory drive pinion gear is shown.

3. Inspect gear (2).

a. There shall be no broken teeth (23).

b. There shall be no overheating condition as indicated by a blue or purple color.

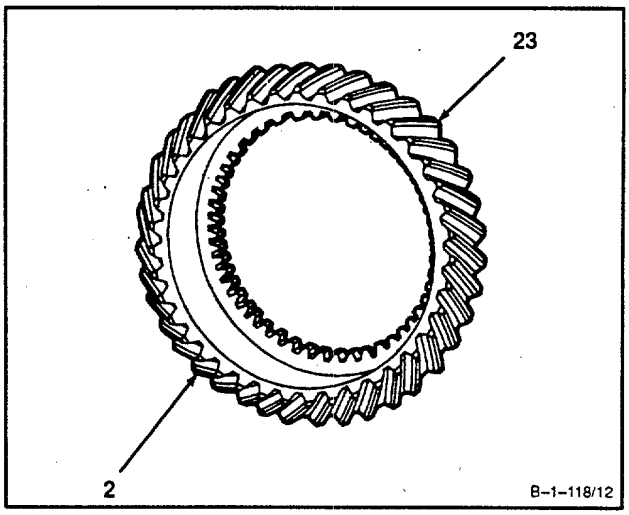

GO TO NEXT PAGE

c. There shall be no heavy frosting (24) or medium frosting (25) on gear splines. Light frosting (26) is acceptable.

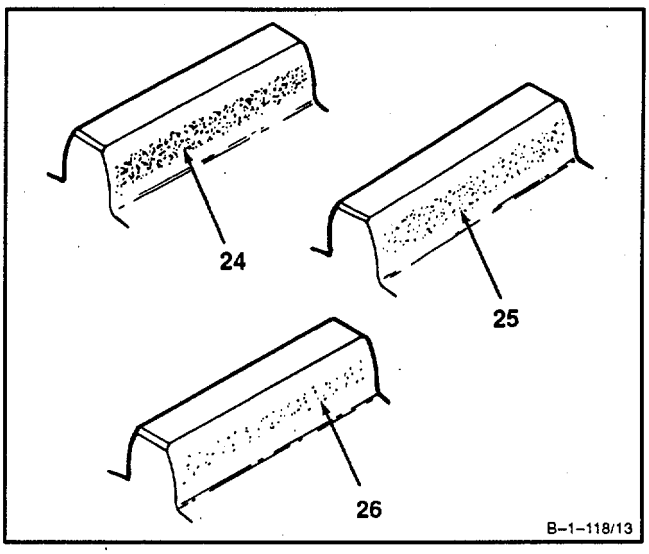

d. There shall be no heavy scoring (27) or medium scoring (28) on gear splines. Light scoring (29) is acceptable.

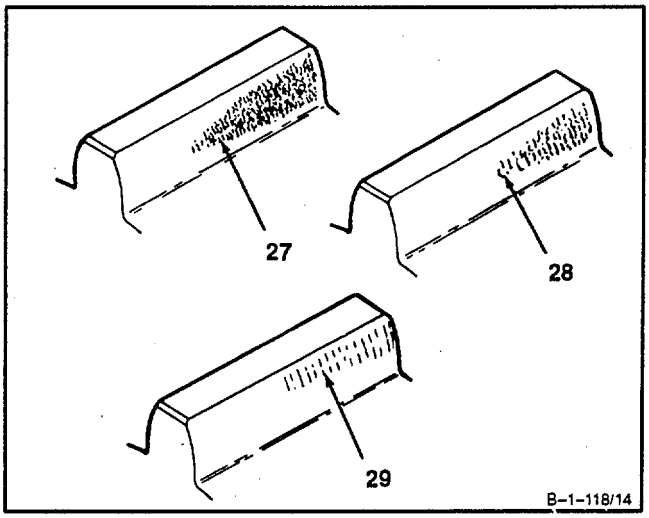

e. There shall be no spalling (30) on gear splines.

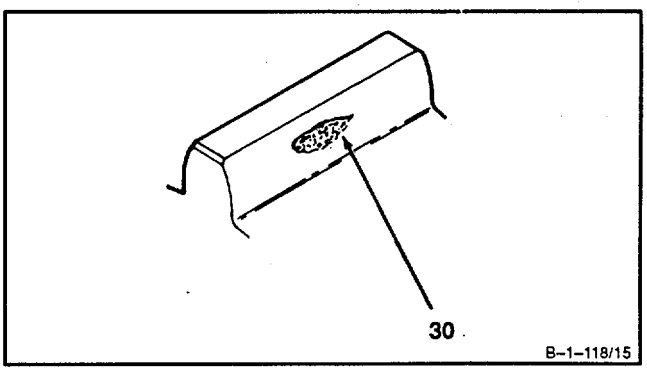

GO TO NEXT PAGE

f. There shall be no medium pitting (31) on gear splines. Light pitting (32) is acceptable.

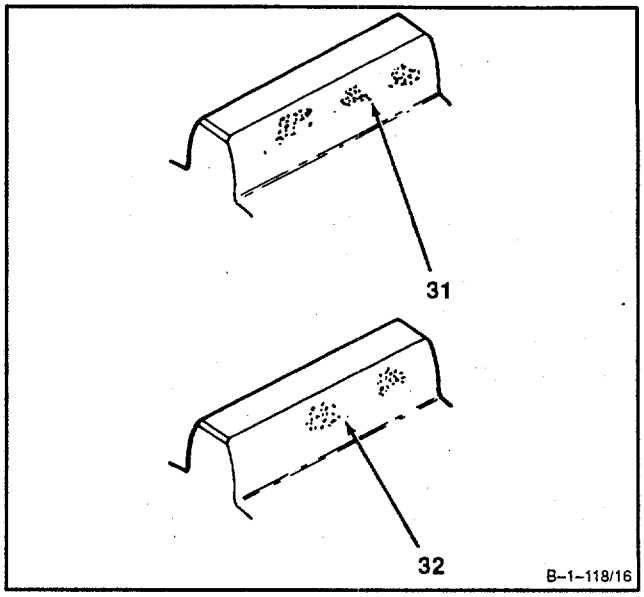

4. **Repair external and internal splines** as follows:

   a. Remove nicks (33) and burrs (34). Use carborundum stone (Ell).

   b. Polish repaired area. Use crocus cloth (E16).

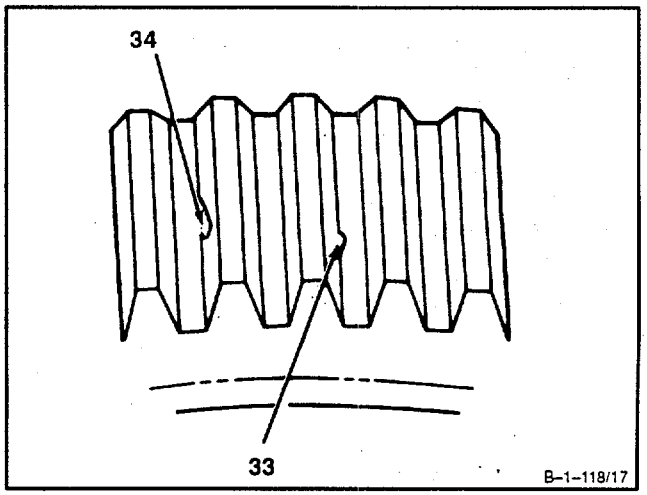

5. **Repair gear teeth** as follows:

   a. Remove nicks (35) and burrs (36) from nonactive surfaces (37). Use carborundum stone (E11).

   b. Polish repaired area. Use crocus cloth (E16).

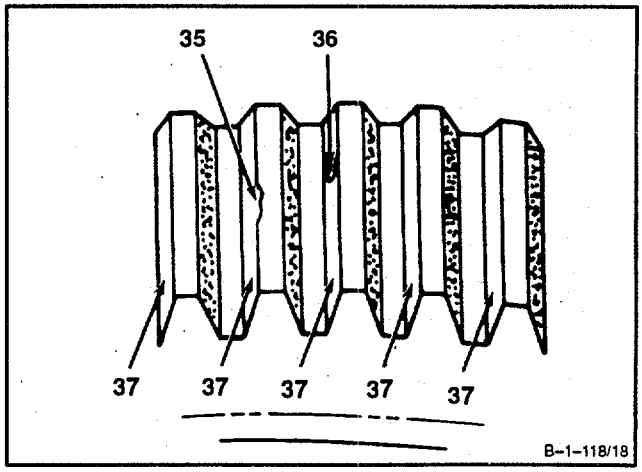

FOLLOW-ON MAINTENANCE:
None

END OF TASK

1-110 TOUCH UP MAGNESIUM AND MAGNESIUM ALLOYS 1-110

INITIAL SETUP

Applicable Configurations:

All

Tools:

Powerplant Mechanic's Tool Kit,
NSN 5180-00-323-4944
Technical Inspection Tool Kit,
NSN 5180-00-323-5114
Wooden Stirring Rod (Appendix E)
Pail, 2-1/2 Gallon
Respirator
Gun Type Heater
Apron
Face Shield

Materials:

Acetone (El)
Acid Swabbing Bush (E2)
Aluminum Oxide Abrasive Paper (E3)
Gloves (E24)
Engine Gray Enamel (E26)
Lint-Free Cloth (E30)
Masking Tape (E39)
Denatured Alcohol (E17)
Nitric Acid (E42)
Sodium Dichromate (E53)

Personnel Required:

Aircraft Powerplant Repairer
Aircraft Powerplant Inspector

Equipment Condition:

Off Engine Task

General Safety Instructions:

WARNING

The compressor housing, air inlet housing, anti-icing air gallery cover, and inlet housing cover assembly are made from a magnesium/nickel alloy containing radioactive thorium; particles of this material, resulting from blending or polishing are hazardous to your health if ingested or otherwise Introduced into your body. Do not eat, drink, or smoke in any area where these particles might be present. Wash your hands thoroughly after working with this material. If exposure or Injury occurs, no matter how slight, get medical attention.

WARNING

Denatured alcohol (E17) is flammable and toxic. It can irritate skin and cause burns. Use only In well-ventilated area, away from heat and open flame. In case of contact, immediately flush skin or eyes with water for at least 15 minutes. Get medical attention for eyes.

WARNING

Acetone (El) is flammable and toxic. It can irritate skin and cause burns. Use only in well-ventilated area, away from heat and open flame. In case of contact, immediately flush skin or eyes with water for at least 15 minutes. Get medical attention for eyes.

WARNING

Sodium dichromate is highly toxic, do not take Internally. Use only with adequate ventilation. Avoid prolonged or repeated contact with skin. Wear approved gloves and goggles, or face shield and apron, and wash hands thoroughly after handling. Wear respirator if sodium dichromate is In powdered form. In case of contact, immediately flush skin and eyes with water for at least 15 minutes. Get medical attention.

WARNING

Both nitric acid and its vapors are a personnel hazard. Avoid contact with skin, eyes or clothing. Avoid inhalation of vapors. In case of contact, immediately flush skin and eyes with water for at least 15 minutes. Get medical attention.

GO TO NEXT PAGE

WARNING

The compressor housing, air Inlet housing, anti-icing air gallery cover, and Inlet housing cover assembly are made from a magnesium/nickel alloy containing radioactive thorium; particles of this material, resulting from blending or polishing are hazardous to your health if ingested or otherwise introduced into your body. Do not eat, drink, or smoke in any area where these particles might be present. Wash your hands thoroughly after working with this material. If exposure or Injury occurs, no matter how slight, get medical attention.

NOTE

The magnesium and magnesium alloy parts used in the T55-L-714 engines have different original finishes, such as epoxy, HAE, synthetesine, and enamel. The following touch up procedure applies to all magnesium and magnesium alloy parts. The purpose of the touch up procedure is to prevent corrosion on these parts.

NOTE

This touch-up procedure can also be used for parts other than magnesium or magnesium alloy having similar original finishes.

NOTE

The following steps show a typical touch up procedure on the upper compressor housing.

1. **Remove corrosion (1) from damaged area** (2). Use aluminum oxide abrasive paper (E3).

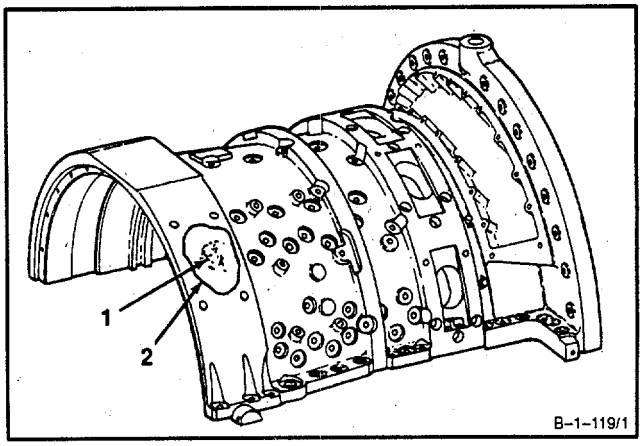

GO TO NEXT PAGE

WARNING

Denatured alcohol (E17) is flammable and toxic. It can Irritate skin and cause burns. Use only In well-ventilated area, away from heat and open flame. In case of contact, immediately flush skin or eyes with water for at least 15 minutes. Get medical attention for eyes.

WARNING

Acetone (El) is flammable and toxic. It can Irritate skin and cause burns. Use only In well-ventilated area, away from heat and open flame. In case of contact, immediately flush skin or eyes with water for at least 15 minutes. Get medical attention for eyes.

2. Wear gloves (E24) and clean damaged area (1).. Use denatured alcohol (E17) followed by acetone (El). Use acid swabbing brush (E2) and lint-free cloth (E30).

3. Let area dry for about 15 minutes.

4. **Mix chrome pickling solution** as follows:

   a. Wear goggles, gloves (E23), and respirator.

   b. Put 1 gallon of water into a pail.

WARNING

Sodium dichromate Is highly toxic, do not take Internally. Use only with adequate ventilation. Avoid prolonged or repeated contact with skin. Wear approved gloves and goggles, or face shield and apron, and wash hands thoroughly after handling. Wear respirator If sodium dichromate is In powdered form. In case of contact, Immediately flush skin and eyes with water for at least 15 minutes. Get medical attention.

   c. Add 1-1/2 pounds of sodium dichromate (E53) to water. Stir solution with wooden stirring rod (Appendix E).

GO TO NEXT PAGE

WARNING

Both nitric acid and its vapors are a personnel hazard. Avoid contact with skin, eyes or clothing. Avoid Inhalation of vapors. In case of contact, immediately flush skin and eyes with water for at least 15 minutes. Get medical attention.

d. Add 1-1/2 pints of nitric acid (E42) to sodium dichromate and water solution. Stir solution with wooden stirring rod (Appendix E).

5. **Brush seven coats of solution on bare magnesium surface (3).** Make sure solution stays on surface for 2 to 5 minutes. Use acid swabbing brush (E2).

6. **Wipe bare magnesium surface** (3). Use clean lint-free cloth (E30) and flush with water.

7. **Dry bare magnesium surface (3) for 10 to 15 minutes.** Use gun-type heater.

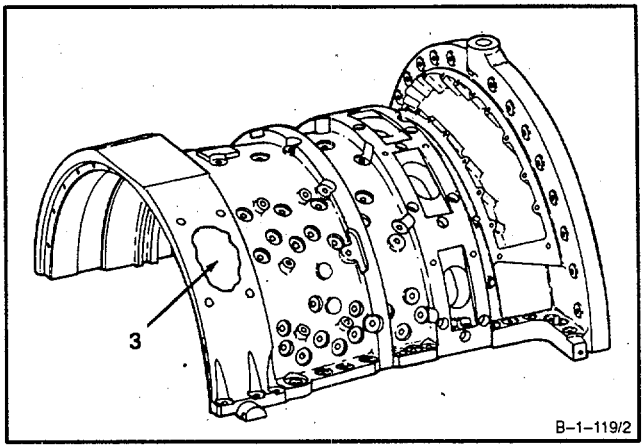

8. **Place masking tape** (E39) (4) **around damaged area (2).**

9. **Brush on engine gray** enamel (E26) over damaged area (2). Use acid swabbing brush (E2).

10. **Let area air dry** for a minimum of 4 hours.

11. Remove masking tape (E39) (4).

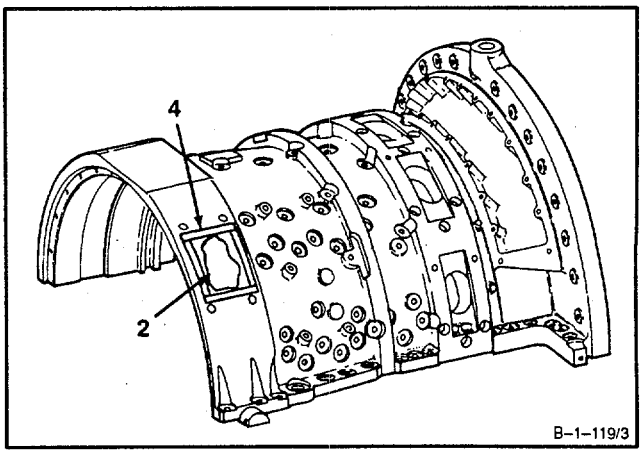

INSPECT

FOLLOW-ON MAINTENANCE:
None

END OF TASK

1-111 DETERMINE DEPTH OF DAMAGE FROM CHAFING, DENTING, SCRATCHING, GOUGING, OR WEAR 1-111

INITIAL SETUP

Applicable Configurations:

All

Tools:

Technical Inspection Tool Kit, NSN 5180-00-323-5114
Dial Indicating Depth Gage
Inside Micrometer Caliper Set
Outside Micrometer Caliper Set
Dual Indicator
Thickness Gage
Hand-File Set
Wire Gages

Materials:

Carborundum Stone (E11)

Personnel Required:

Aircraft Powerplant Inspector

1. Determine depth of damage on flat surfaces (1) as follows:

   a. Remove projecting material (2) by blending. Use carborundum stone (E11).

   b. Measure depth of damage. Use dial indicating depth gage (3).

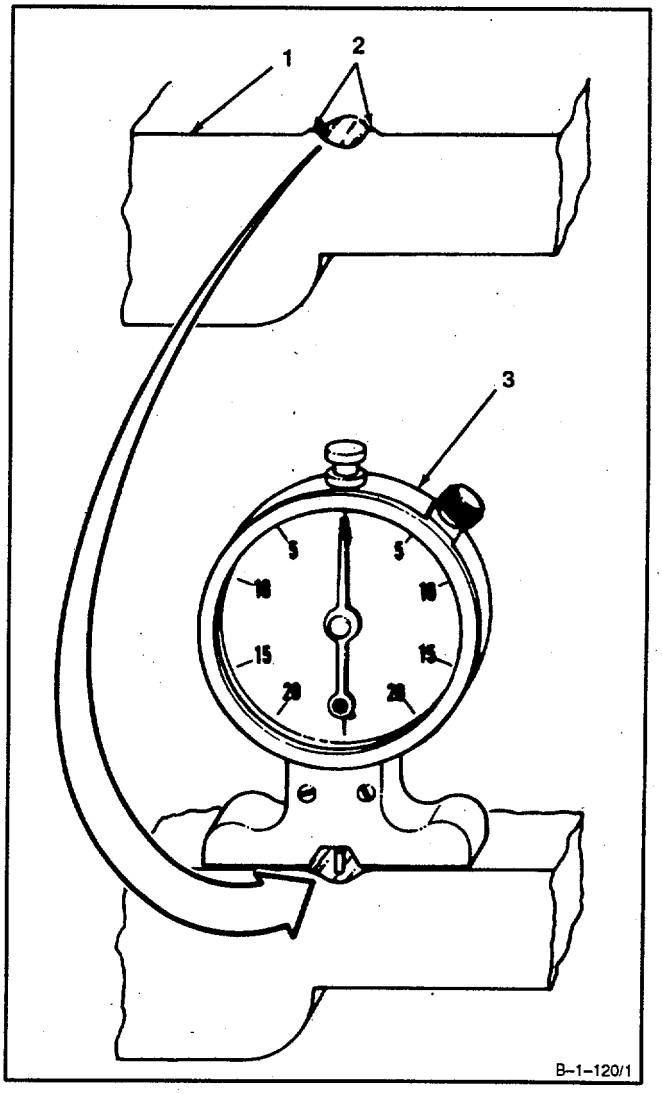

GO TO NEXT PAGE

1-111 DETERMINE DEPTH OF DAMAGE FROM CHAFING, DENTING, SCRATCHING, GOUGING, OR WEAR (Continued) 1-111

2. Determine depth of damage on external parallel surfaces (4) using outside caliper as follows:

   a. Remove projecting material (5) by blending. Use carborundum stone (Ell).

   b. Determine thickness of part at damage. Use outside caliper (6).

   c. Measure set thickness on outside caliper (6). Use thickness gage or inside micrometer caliper. Record as Dimension A.

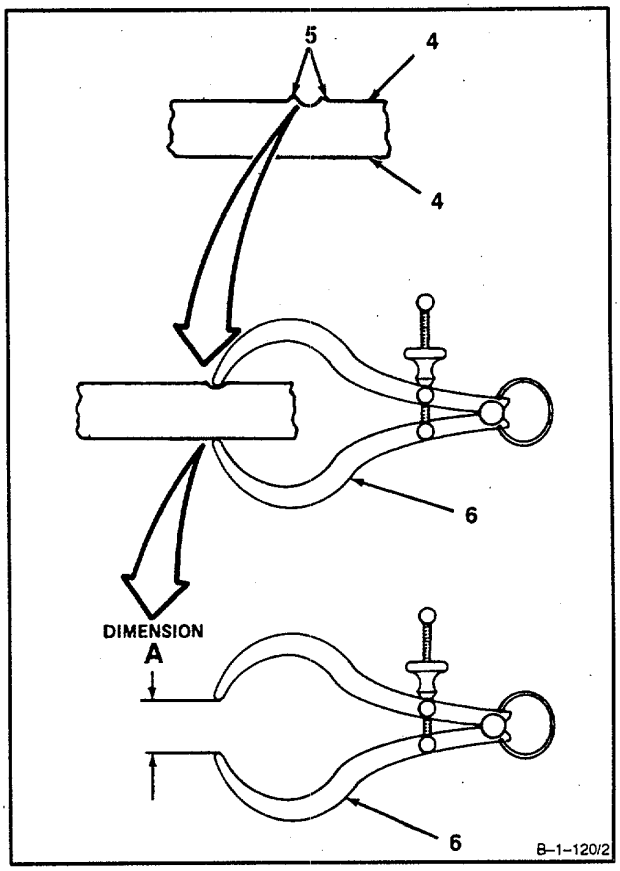

   d. Determine thickness of undamaged area of surfaces (4). Use outside caliper (6).

   e. Measure set thickness on outside caliper (6). Use thickness gage or inside micrometer caliper. Record as Dimension B.

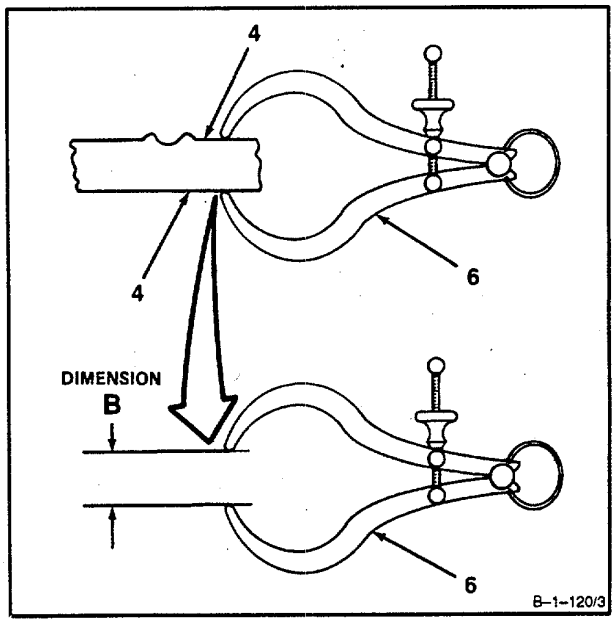

GO TO NEXT PAGE

f. Subtract Dimension A from Dimension B. Answer is depth of damage.

DIMENSION B
–DIMENSION A
DEPTH OF DAMAGE

B–1–120/4

3. Determine depth of damage on internal surfaces (7) using inside caliper as follows:

   a. Remove projecting material (8) by blending. Use hand file.

   b. Determine distance between surfaces (7) at damage. Use inside caliper (9).

   c. Measure set thickness on inside caliper (9). Use outside micrometer caliper. Record as Dimension C.

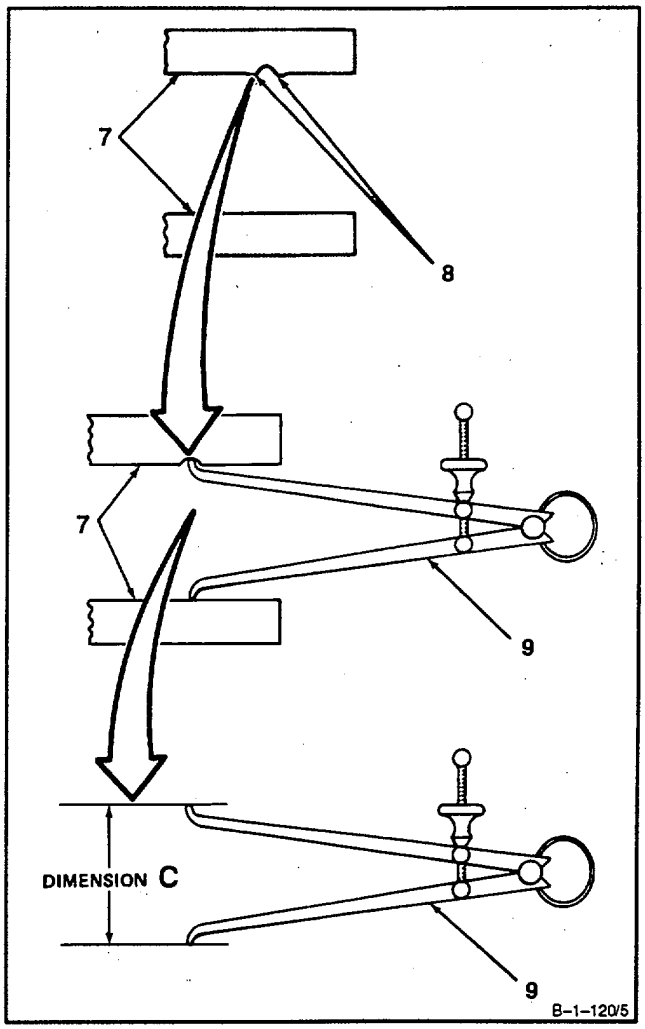

GO TO NEXT PAGE

1-111 DETERMINE DEPTH OF DAMAGE FROM CHAFING, DENTING, SCRATCHING, GOUGING, OR WEAR (Continued) 1-111

d. Determine distance between surfaces (7) in undamaged area. Use inside caliper (9).

e. Measure set thickness on inside caliper (9). Use outside micrometer caliper. Record as Dimension D.

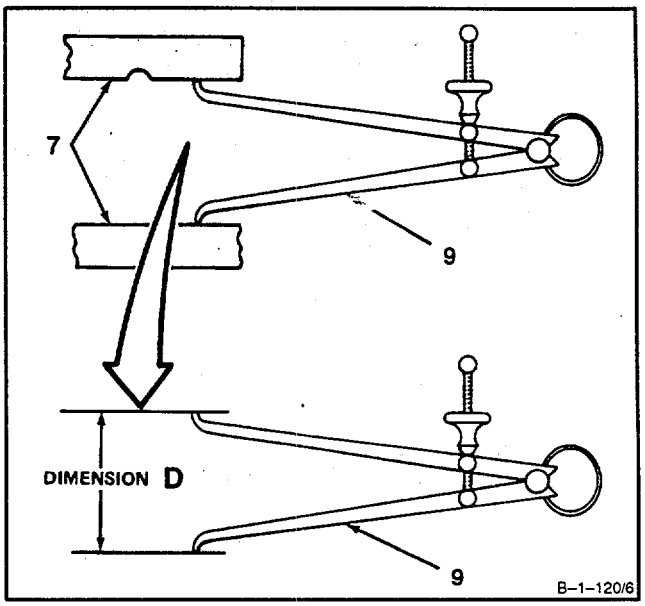

f. Subtract Dimension D from Dimension C. Answer is depth of damage.

DIMENSION C
– DIMENSION D
DEPTH OF DAMAGE

B-1-120/7

GO TO NEXT PAGE

1-111 DETERMINE DEPTH OF DAMAGE FROM CHAFING, DENTING, SCRATCHING, GOUGING, OR WEAR (Continued) 1-111

4. Determine depth of damage by measuring distance between straight edge and bottom of damage. Use wire gage, thickness gage or 6-inch steel rule for applicable damage as follows:

   a. For small round shaped damage (10), install straight edge (11) over damage, and insert wire gage (12).

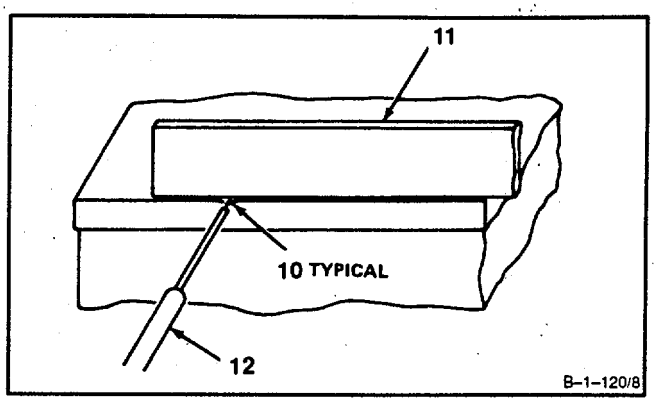

   b. For long flat shaped damage (13), install straight edge (11) over damage, and insert thickness gage (14).

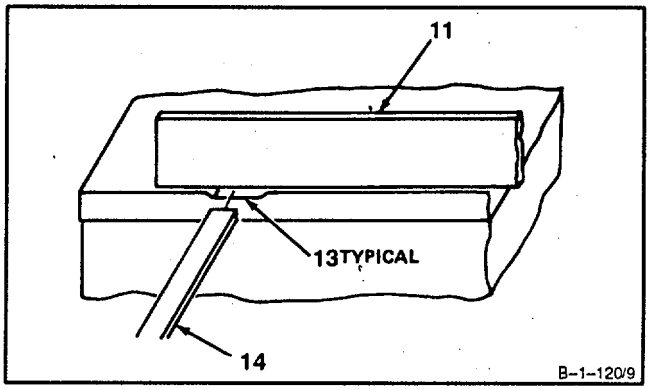

   c. For large areas of damage (15), install straight edge (11) over damage. Measure between bottom of damage and straight edge (11). Use 6-inch steel rule (16).

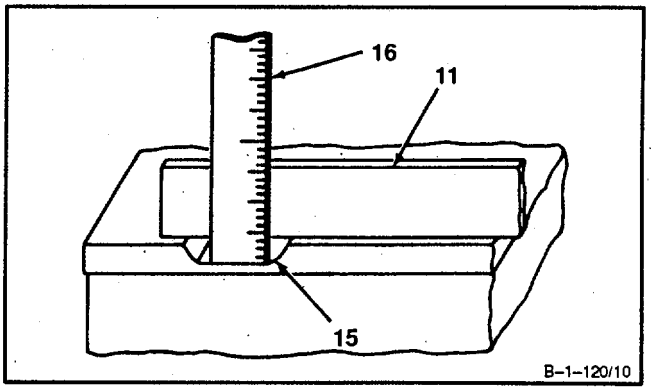

FOLLOW-ON MAINTENANCE:
None

END OF TASK

1-112 INSTALL SPIRAL CHAFING SLEEVE ON HOSES 1-112

INITIAL SETUP

Applicable Configurations:
All

Tools:
Powerplant Mechanic's Tool Kit,
NSN 5180-323-4944
Technical Inspection Tool Kit,
NSN 5180-00-323-5114

Materials:
Spiral Chafing Sleeve (E55)
Spiral Chafing Sleeve (E56)
Spiral Chafing Sleeve (E57)

Personnel Required:
Aircraft Powerplant Repairer
Aircraft Powerplant Inspector

1. If installed, **remove old chafing sleeve** (1) **from** hose (2).

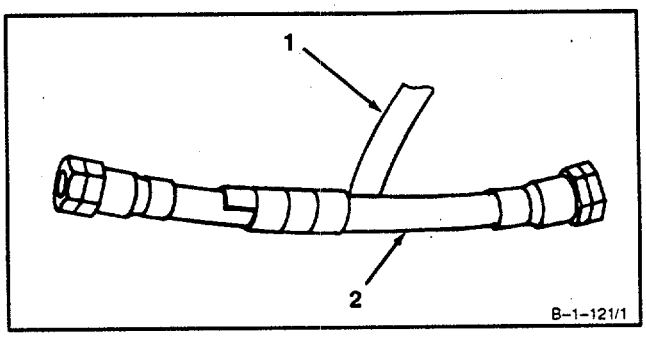

2. Measure length **of hose** (2) to be covered. Record length as **L.**

NOTE

Spiral wrap should be installed where chafing would occur.

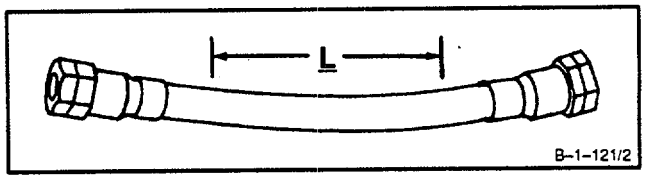

GO TO NEXT PAGE

3. **Determine how much chafing sleeve is needed** as follows:

   a. Find spiral constant and chafing sleeve needed in spiral chafing sleeve table. Record spiral constant as C.

HOSE SIZE	DIAMETER (INCHES)	SPIRAL CONSTANT (C)	CHAFING SLEEVE
–3	3/16	1.2	E55
–4	1/4	1.5	E55
–5	5/16	1.8	E55
–6	3/8	2.1	E55
–8	1/2	1.7	E56
–10	5/8	2.0	E56
–12	3/4	2.4	E57
–16	1	2.4	E57
–20	1–1/4	2.9	E57
–24	1–1/2	3.6	E57

   b. Multiply length of hose to be covered (L) by spiral constant (C). Answer is amount of sleeve needed to cover hose.

   Example:

   To cover 6-inches of -5 hose, multiply 6 times spiral constant, 1.8.

L X C = LENGTH NEEDED

Example:
```
  1.8
 X 6
10.8   INCHES OF
       SLEEVE (E55)
       NEEDED
```

4. Cut length **of sleeve** (3) needed.

5. **Install sleeve** (3) on hose (2).

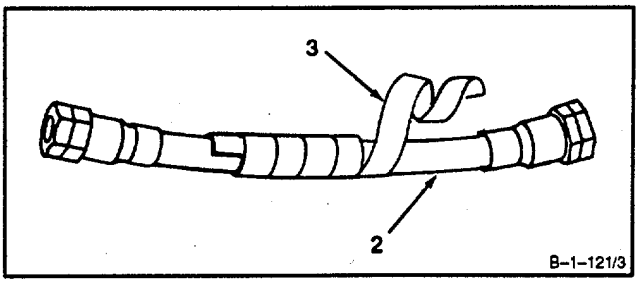

INSPECT

FOLLOW-ON MAINTENANCE:
None

END OF TASK

CHAPTER 2

COMPRESSOR SECTION - MAINTENANCE INSTRUCTIONS

CHAPTER OVERVIEW

This chapter contains maintenance procedures for the compressor section. It is divided into the following sections and tasks:

SECTION	TASK NO.	TITLE	PAGE
I	INTERSTAGE AIR-BLEED ACTUATOR		
	2-1	Remove Interstage Air-Bleed Actuator	2-5
	2-2	Disassemble Interstage Air-Bleed Actuator	2-11
	2-3	Clean Interstage Air-Bleed Actuator	2-13
	2-4	Inspect Interstage Air-Bleed Actuator	2-14
	2-5	Repair Interstage Air-Bleed Actuator	2-15
	2-6	Assemble Interstage Air-Bleed Actuator	2-16
	2-7	Test Interstage Air-Bleed Actuator	2-18
	2-8	Install Interstage Air-Bleed Actuator	2-20
	2-9	Adjust Interstage Air-Bleed Actuator	2-26
II	COMPRESSOR BLEED BAND		
	2-10	Remove Compressor Bleed Band	2-37
	2-11	Clean Compressor Bleed Band	2-40
	2-12	Inspect Compressor Bleed Band	2-41
	2-13	Repair Compressor Bleed Band	2-42
	2-14	Install Compressor Bleed Band	2-43
III	ANTI-ICING AIR GALLERY COVER		
	2-15	Remove Anti-Icing Air Gallery Cover	2-47
	2-16	Clean Anti-Icing Air Gallery Cover	2-50
	2-17	Inspect Anti-Icing Air Gallery Cover	2-52
	2-18	Repair Anti-Icing Air Gallery Cover	2-54
	2-19	Install Anti-Icing Air Gallery Cover	2-56
IV	COMPRESSOR HOUSING		
	2-20	Remove Upper Compressor Housing	2-63
	2-21	Remove Lower Compressor Housing	2-94
	2-22	Clean Compressor Housing	2-120
	2-23	Inspect Compressor Housing	2-121
	2-24	Repair Compressor Housing	2-122
	2-25	Install Upper Compressor Housing	2-124
	2-26	Install Lower Compressor Housing	2-154

SECTION	TASK NO.	TITLE	PAGE
V	STATOR VANE ASSEMBLIES		
	2-27	Remove Stator Vane Assemblies	2-181
	2-28	Clean Stator Vane Assemblies	2-189
	2-29	Inspect Stator Vane Assemblies	2-190
	2-30	Repair Stator Vane Assemblies	2-192
	2-31	Install Stator Vane Assembly - First Stage	2-194
	2-32	Install Stator Vane Assemblies - Second Through Seventh Stages	2-215
VI	COMPRESSOR ROTOR BLADES		
	2-33	Remove Compressor Rotor Blades	2-235
	2-34	Clean Compressor Rotor Blades	2-254
	2-35	Inspect Compressor Rotor Blades	2-256
	2-36	Repair Compressor Rotor Blades	2-286
	2-37	Install Compressor Rotor Blades	2-291
VII	AIR DIFFUSER ASSEMBLY		
	2-38	Repair Air Diffuser Assembly	2-321
VIII	OUTPUT SHAFT SEAL AND HOUSING ASSEMBLY		
	2-39	Remove Output Shaft Seal and Housing Assembly	2-325
	2-40	Clean Output Shaft Seal and Housing Assembly	2-328
	2-41	Inspect Output Shaft Seal and Housing Assembly	2-329
	2-42	Repair Output Shaft Seal and Housing Assembly	2-330
	2-43	Install Output Shaft Seal and Housing Assembly	2-338
IX	INLET HOUSING COVER ASSEMBLY		
	2-44	Remove Inlet Housing Cover Assembly (AVIM)	2-345
	2-45	Clean Inlet Housing Cover Assembly (AVIM)	2-348
	2-46	Inspect Inlet Housing Cover Assembly (AVIM)	2-349
	2-47	Repair Inlet Housing Cover Assembly (AVIM)	2-350
	2-48	Install Inlet Housing Cover Assembly (AVIM)	2-351
X	AIR INLET HOUSING ASSEMBLY		
	2-49	Clean Air Inlet Housing Assembly	2-355
	2-50	Inspect Air Inlet Housing Assembly	2-356
	2-51	Repair Air Inlet Housing Assembly	2-357
XI	T1 TEMPERATURE SENSOR		
	2-52	Remove T1 Temperature Sensor	2-359
	2-53	Clean T1 Temperature Sensor	2-361
	2-54	Inspect T1 Temperature Sensor	2-362
	2-55	Repair T1 Temperature Sensor	2-363
	2-56	Install T1 Temperature Sensor	2-364

SECTION	TASK NO.	TITLE	PAGE
XII	AIR LINES		
	2-57	Remove Hose Assembly (Interstage Air-Bleed Actuator to HMA)	2-367
	2-58	Install Hose Assembly (Interstage Air-Bleed Actuator to HMA)	2-370
	2-59	Remove Tube Assembly (Air Diffuser Assembly to Check Valve)	2-373
	2-60	Install Tube Assembly (Air Diffuser Assembly to Check Valve)	2-375
	2-61	Remove Hose Assembly (Compressor Housing to Inlet Housing)	2-377
	2-62	Install Hose Assembly (Compressor Housing to Inlet Housing)	2-383
	2-63	Remove Hose Assembly (Air Diffuser Assembly to HMA)	2-388
	2-64	Install Hose Assembly (Air Diffuser Assembly to HMA)	2-390
	2-65	Remove Hose Assembly (Check Valve to Interstage Air-Bleed Actuator P3 Inlet)	2-392
	2-66	Install Hose Assembly (Check Valve to Interstage Air-Bleed Actuator P3 Inlet)	2-394
	2-67	Remove Hose Assembly (Water Wash Tee Check Valve to Interstage Air-Bleed Actuator P3 Inlet)	2-396
	2-68	Install Hose Assembly (Water Wash Tee Check Valve to Interstage Air-Bleed Actuator P3 Inlet)	2-398
	2-69	Remove Hose Assembly (Water Wash Tee Check Valve to Interstage Air-Bleed Actuator PM Inlet)	2-400
	2-70	Install Hose Assembly (Water Wash Tee Check Valve to Interstage Air-Bleed Actuator PM Inlet)	2-402
	2-71	Remove Hose Assembly (HMA to Aircraft Bulkhead)	2-404
	2-72	Install Hose Assembly (HMA to Aircraft Bulkhead)	2-407
	2-73	Remove Check Valve (Air Diffuser to Interstage Air-Bleed Actuator)	2-410
	2-74	Clean Check Valve (Air Diffuser to Interstage Air-Bleed Actuator)	2-412
	2-75	Install Check Valve (Air Diffuser to Interstage Air-Bleed Actuator)	2-413
	2-76	Remove Check Valve (Water Wash Tee to Interstage Air-Bleed Actuator P3 Inlet)	2-416
	2-77	Clean Check Valve (Water Wash Tee to Interstage Air-Bleed Actuator P3 Inlet)	2-418
	2-78	Install Check Valve (Water Wash Tee to Interstage Air-Bleed Actuator P3 Inlet)	2-419
	2-79	Remove Check Valve (Water Wash Tee to Interstage Air-Bleed Actuator PM Inlet)	2-421
	2-80	Clean Check Valve (Water Wash Tee to Interstage Air-Bleed Actuator PM Inlet)	2-423
	2-81	Install Check Valve (Water Wash Tee to Interstage Air-Bleed Actuator PM Inlet)	2-424

SECTION I

INTERSTAGE AIR-BLEED ACTUATOR

2-1 REMOVE INTERSTAGE AIR-BLEED ACTUATOR 2-1

INITIAL SETUP

Applicable Configurations:
All

Tools:
Powerplant Mechanic's Tool Kit,
NSN 5180-00-323-4944

Materials:
None

Personnel Required:
Aircraft Powerplant Repairer

Equipment Condition:
Flow Programming Valve Removed (Task 8-19)
Oil Cooler Assembly Removed (Task 8-12)

General Safety Instructions:

WARNING

The Ignition exciter stores very high and possibly fatal voltage. Use extreme care when working around ignition exciter. Serious injury could result If exciter Is accidentally grounded. Do not probe inside of output receptacles with fingers or metal object. Discharge exciter only with insulated screwdriver. In case of shock or Injury, get medical attention.

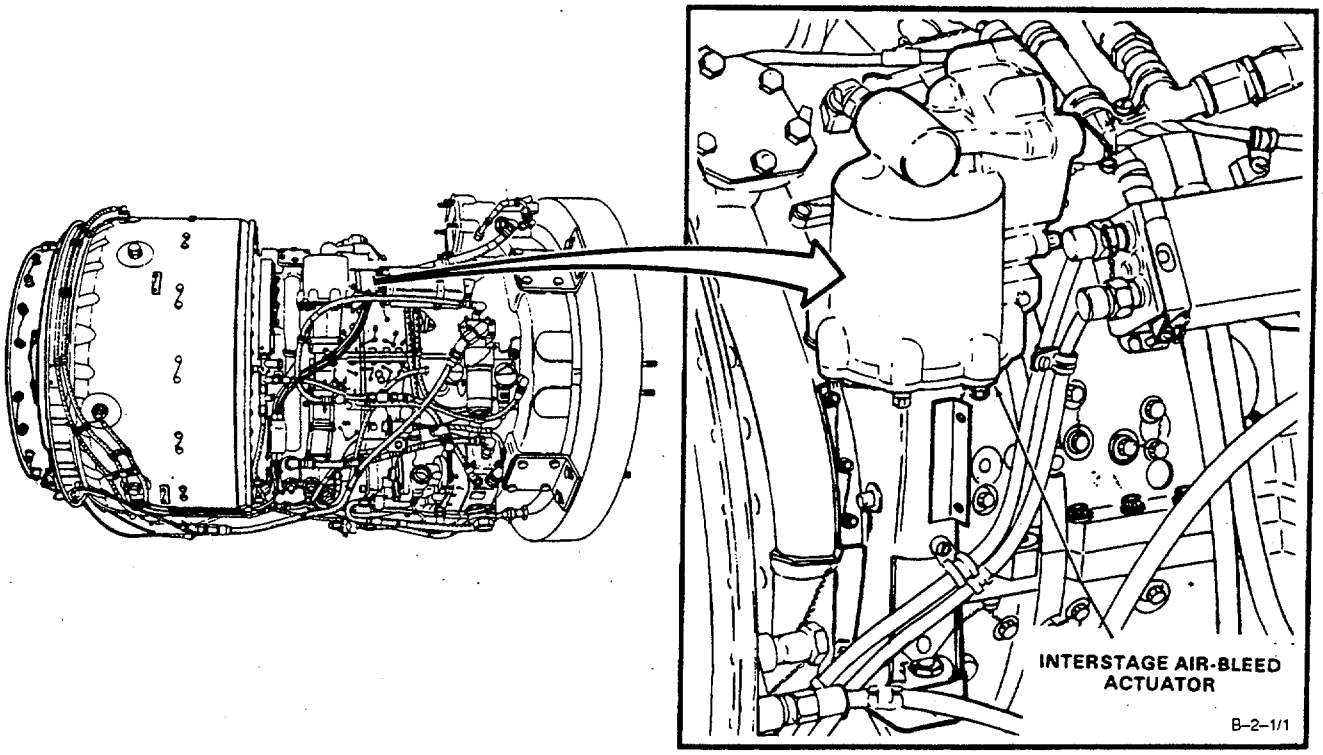

GO TO NEXT PAGE

2-1 REMOVE INTERSTAGE AIR-BLEED ACTUATOR (Continued) 2-1

WARNING

When discharging ignition exciter, remove one lead at a time and discharge receptacle that lead was removed from. Failure to do so may result In serious shock when you are removing second lead. In case of serious shock, get medical attention.

1. **Remove nut** (1) **and screw (2).**

NOTE

Steps 2 and 3 apply to both output receptacles.

2. Remove lockwire and disconnect coil and cable assembly leads (3).

3. **Discharge ignition exciter (4)** by placing tip of insulated screwdriver (5) against pin (6) and edge (7) of receptacle (8).

4. Place leads (3) to one side.

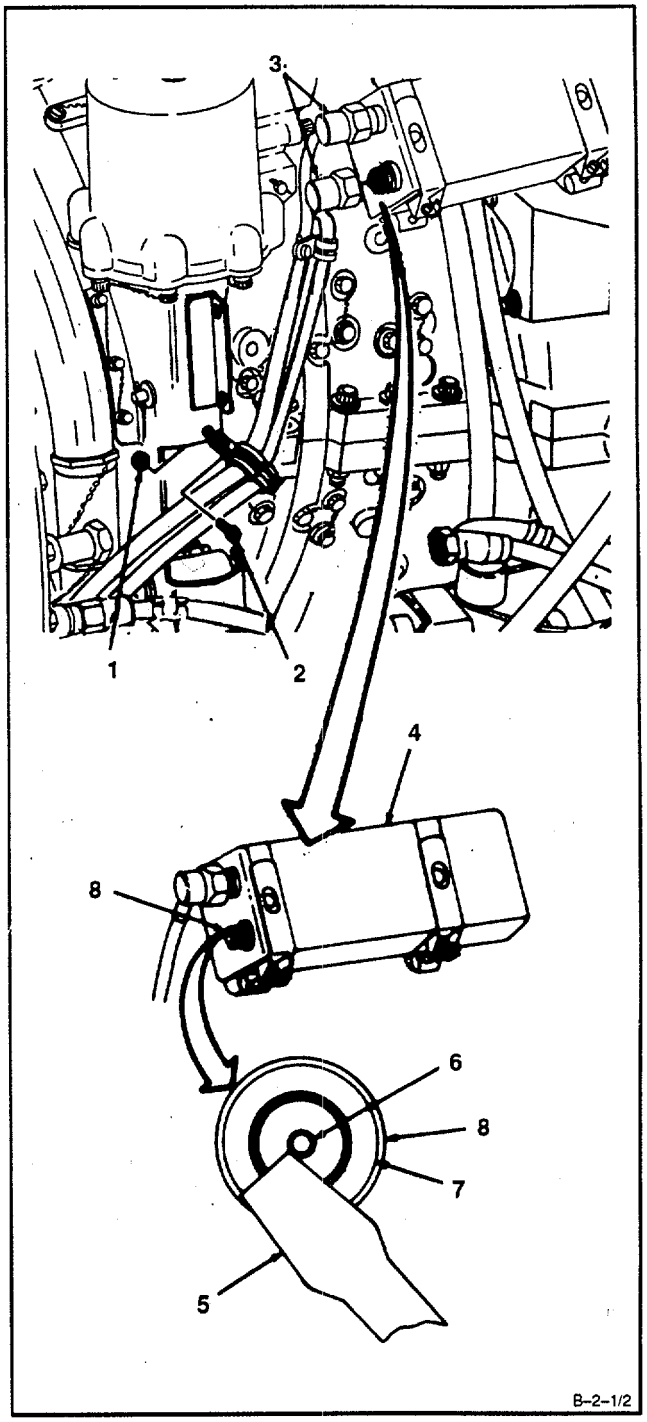

GO TO NEXT PAGE

2-1 REMOVE INTERSTAGE AIR-BLEED ACTUATOR (Continued) 2-1

5. **Disconnect hose assemblies (9, 10, 11, and 12).**

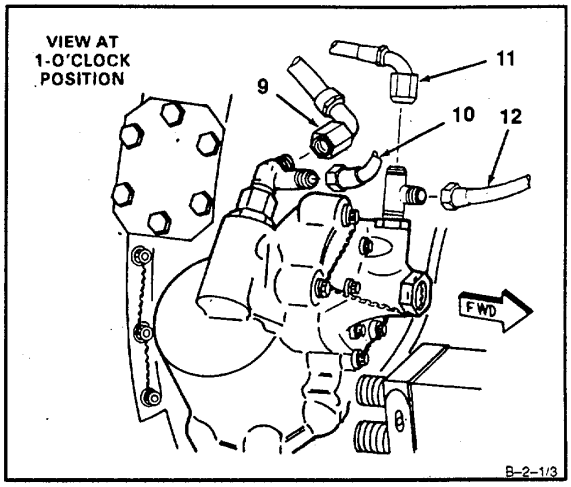

6. Disconnect and **remove tee (13).**

7. Disconnect and **remove tee (14),** nut (15), and packing (16).

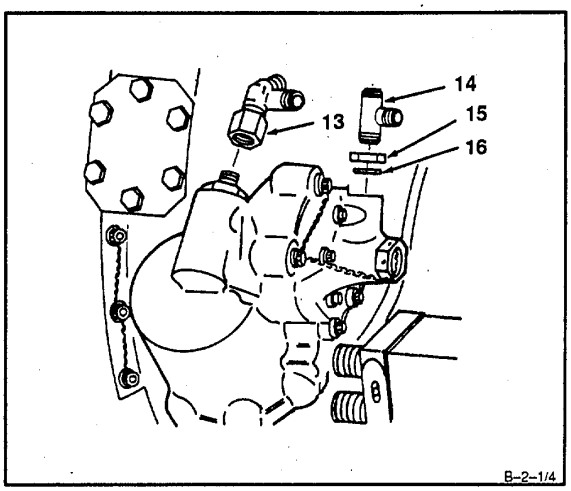

8. Remove cotter pin (17), washer (18), and **pin (19).**

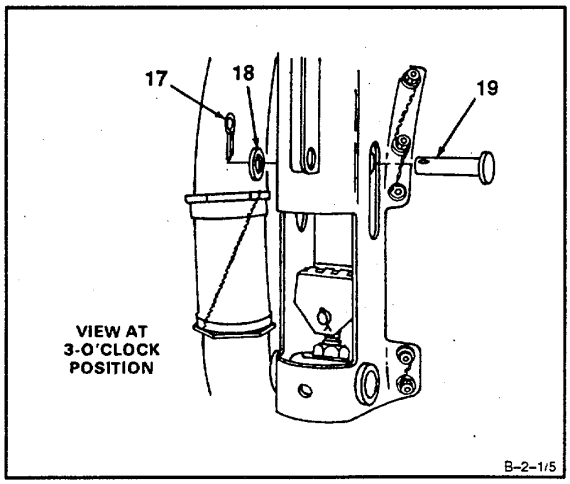

GO TO NEXT PAGE

2-1 REMOVE INTERSTAGE AIR-BLEED ACTUATOR (Continued) 2-1

9. Position piston assembly (20) so pin (21) can be seen through slot (22) in actuator bracket (23).

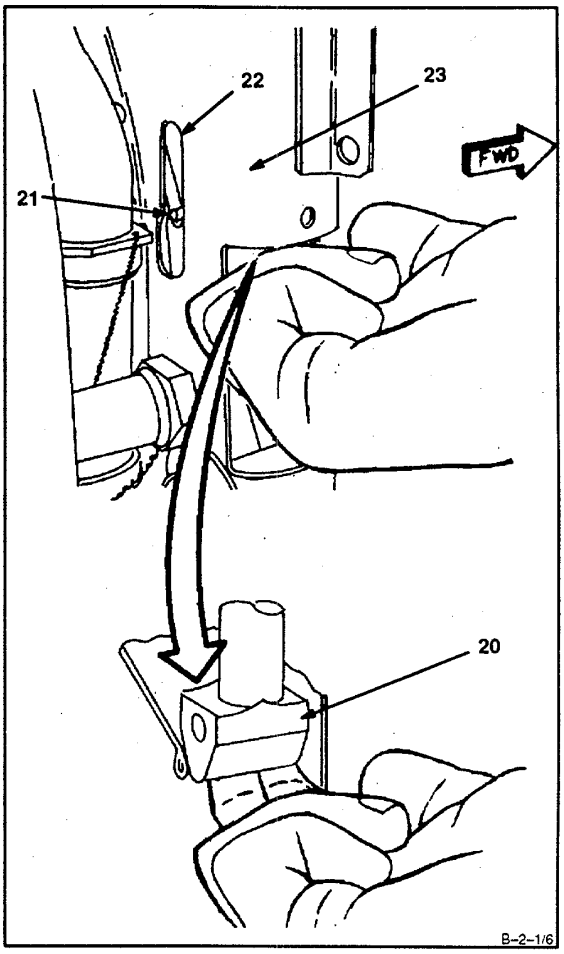

10. Push pin (21) forward as far as possible.

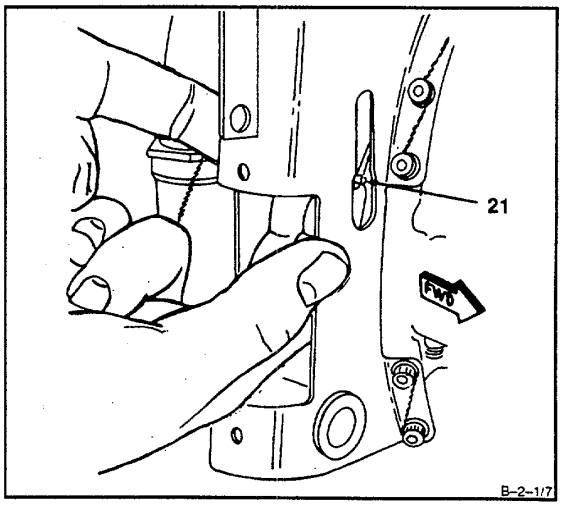

GO TO NEXT PAGE

2-1 REMOVE INTERSTAGE AIR-BLEED ACTUATOR (Continued) 2-1

11. **Remove pin (21).**

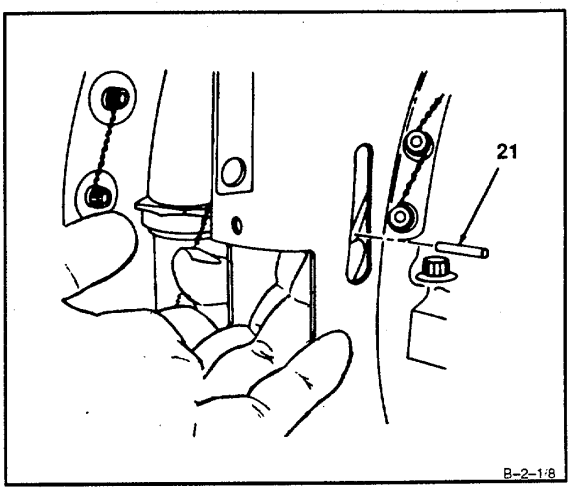

12. Pull lower yoke (24) outward, and push pin (25) forward as far as possible.

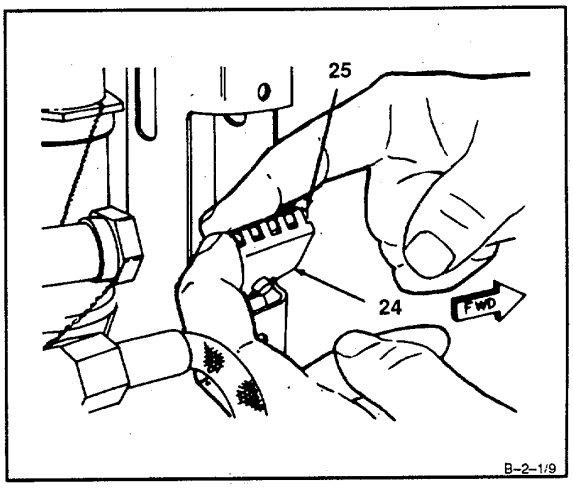

13. **Remove pin (25).**

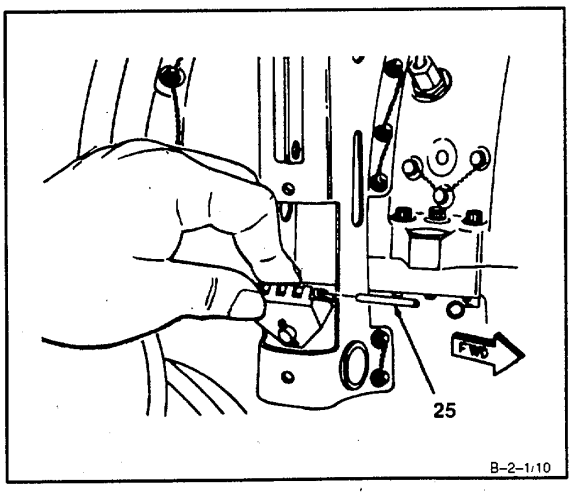

GO TO NEXT PAGE

2-1 REMOVE INTERSTAGE AIR-BLEED ACTUATOR (Continued) 2-1

14. Remove lockwire and ten bolts (26). Remove interstage air-bleed actuator (27).

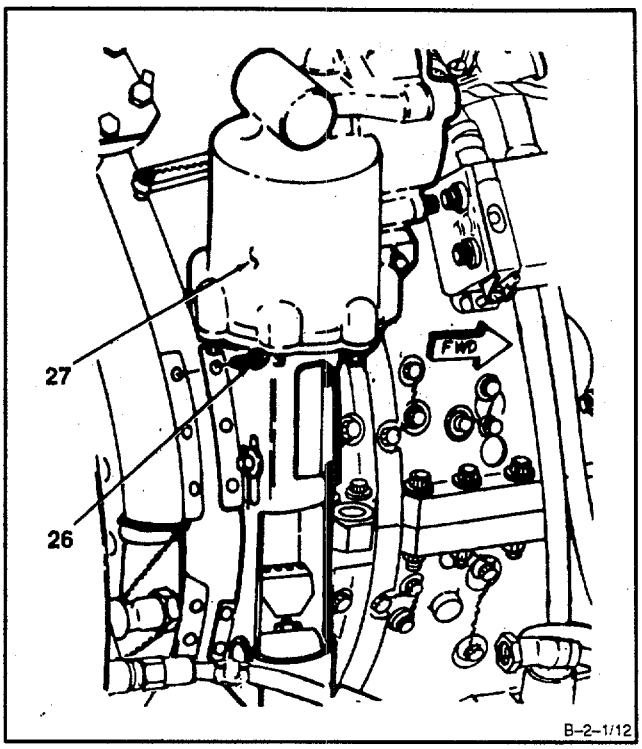

FOLLOW-ON MAINTENANCE:
None

END OF TASK

2-2 DISASSEMBLE INTERSTAGE AIR-BLEED ACTUATOR 2-2

INITIAL SETUP

Applicable Configurations:
All

Tools:
Powerplant Mechanic's Tool Kit,
NSN 5180-00-323-4944
Deep Style Socket, 1-Inch
Vise
Jaw Caps

Materials:
None

Personnel Required:
Aircraft Powerplant Repairer

Equipment Condition:
Off Engine Task
Oil Cooler Assembly Removed (Task 8-12)
Interstage Air-Bleed Actuator Removed (Task 2-1)

1. **Remove reducer (1)** using vise with jaw caps and deep style socket. Remove packing (2).

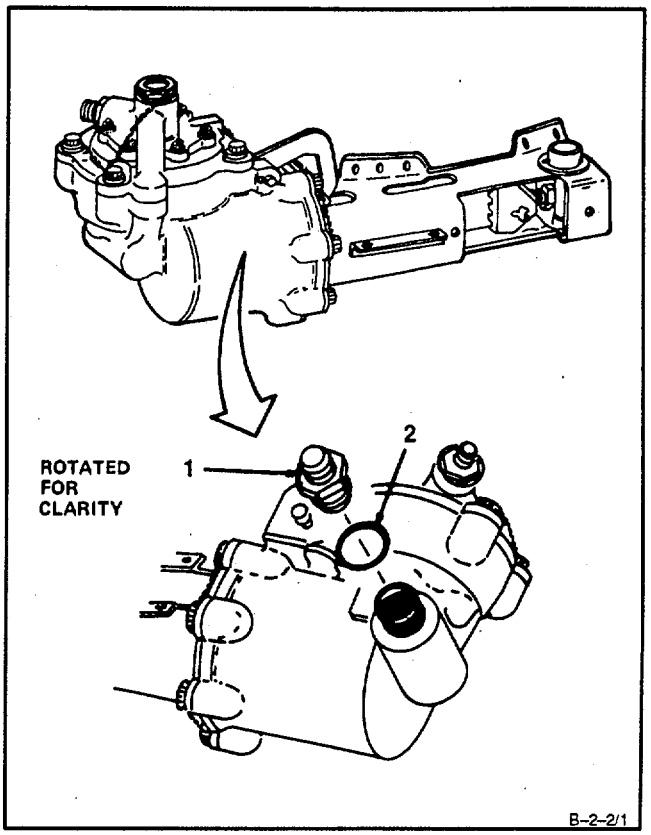

GO TO NEXT PAGE

2-2 DISASSEMBLE INTERSTAGE AIR-BLEED ACTUATOR (Continued) 2-2

2. **Remove strainer element (3).**

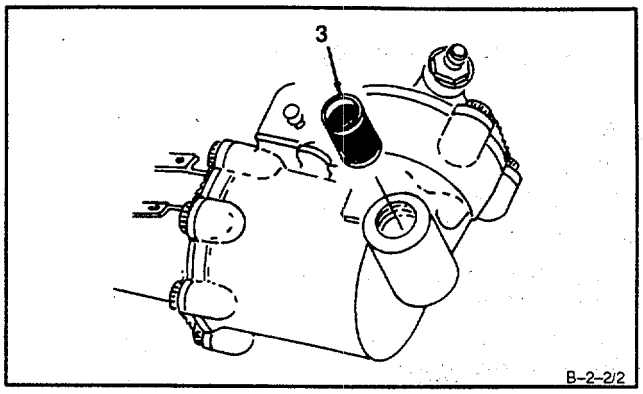

3. **Remove spring (4).**

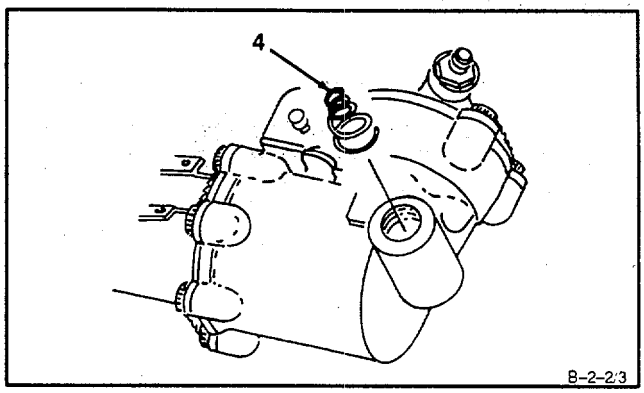

FOLLOW-ON MAINTENANCE:
None

END OF TASK

2-3 CLEAN INTERSTAGE AIR-BLEED ACTUATOR 2-3

INITIAL SETUP

Applicable Configurations:
All

Tools:
Goggles
Dry, Compressed Air Source

Materials:
Dry Cleaning Solvent (E19)
Gloves (E24)
Lint-Free Cloth (E30)

Personnel Required:
Aircraft Powerplant Repairer

Equipment Condition:
Off Engine Task
Oil Cooler Assembly Removed (Task 8-12)
Interstage Air-Bleed Actuator Removed (Task 2-1)
Interstage Air-Bleed Actuator Disassembled (Task 2-2)

General Safety Instructions:

WARNING

These materials are flammable and toxic. They can irritate skin and cause burns. Use only in well-ventilated area, away from heat, sparks and open flame. In case of contact, Immediately flush skin and eyes with water for at least 15 minutes. Get medical attention for eyes.

1. Wear gloves (E24**). Clean Interstage air-bleed actuator (1)** with lint-free cloth (E30) dampened in dry cleaning solvent (E19).

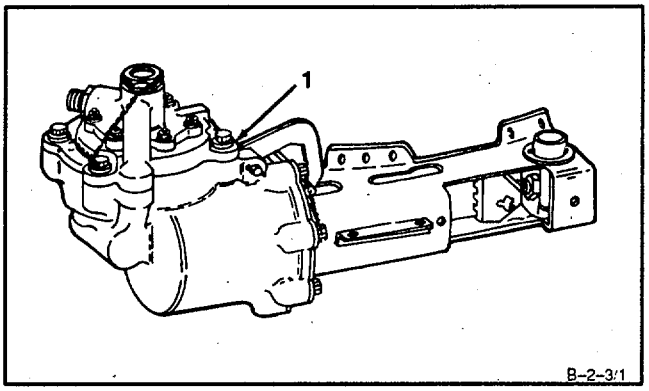

2. **Clean strainer element (2) and spring (3).** Use dry cleaning solvent (E19).

WARNING

When using compressed air for cleaning, use approved protective equipment for eyes and face. Do not use more than 30 psig air pressure. Do not direct air toward yourself or another person. Failure to comply could result in injury to eyes or skin. In case of **injury,** get medi**cal attention.**

3. Wear goggles. **Blow dry strainer element (2)** using clean, dry, compressed air.

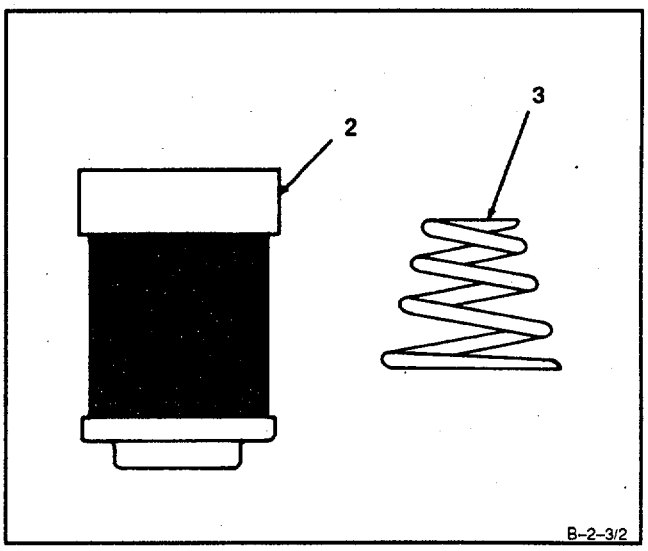

FOLLOW-ON MAINTENANCE:
Inspect Interstage Air-Bleed Actuator (Task 2-4).

END OF TASK

2-4 INSPECT INTERSTAGE AIR-BLEED ACTU ATOR 2-4

INITIAL SETUP

Applicable Configurations:
All

Tools:
Technical Inspection Tool Kit,
NSN 5180-00-323-5114

Materials:
None

Personnel Required:
Aircraft Powerplant Inspector

References:
Task 2-5

Equipment Condition:
Off Engine Task

1. **Inspect Interstage air-bleed actuator** as follows:

   a. **Inspect strainer element (1).** There shall be no tears, punctures, or broken wires in screen.

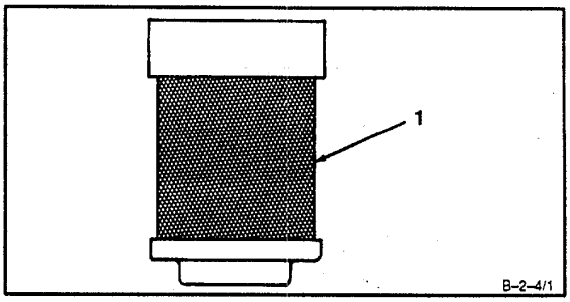

   b. **Inspect spring (2).** There shall be no broken coils.

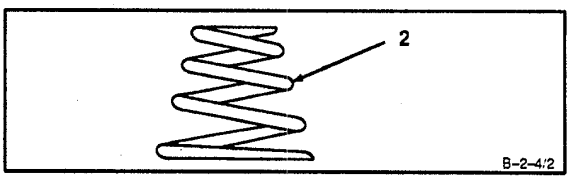

   c. **Inspect bracket (3).**

      (1) There shall be no cracks longer than 12 inch in the gusset support area (4) adjacent to the uppermost holes.

      (2) There shall not be more than one crack less than 1/2inch long.

      (3) There shall be no sharp corners or protrusions which result from tears or gouges.

      (4) There shall be no bends in bracket (3).

   d. **Inspect housing (5) and cover (6).** There shall be no cracks.

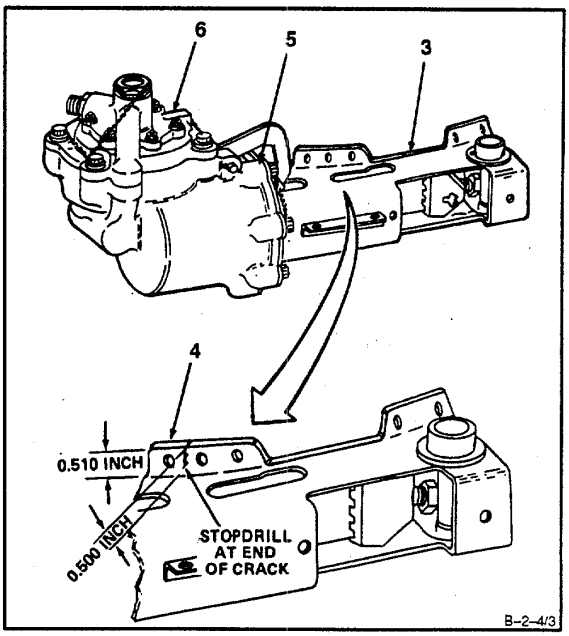

FOLLOW-ON MAINTENANCE:
None

END OF TASK

2-5 REPAIR INTERSTAGE AIR-BLEED ACTUATOR 2-5

INITIAL SETUP

Applicable Configurations:
All

Tools:
Powerplant Mechanic's Tool Kit, NSN 5180-00-323-4944
Technical Inspection Tool Kit, NSN 5180-00-323-5114
Drill Bit, 1/8 inch
Drill Bit, 3/32 inch
Electric Drill, Portable
Hand File Set

Materials:
Crocus Cloth (E16)

Personnel Required:
Aircraft Powerplant Repairer
Aircraft Powerplant Inspector

Equipment Condition:
Off Engine Task

1. **Repair bracket (1)** as follows:

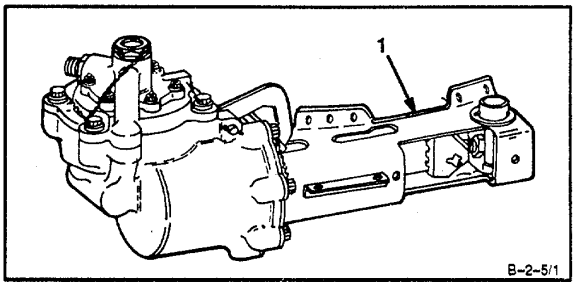

a. **Remove sharp corners or protrusions resulting from tears or gouges In bracket (1)** as follows:

NOTE

This repair is allowed as long as it does not change original shape of existing holes or slots.

(1) Blend repair using file.

(2) Polish repaired area. Use crocus cloth (E16).

b. **Straighten bends in bracket (1).**

NOTE

This repair is allowed as long as it does not generate cracks or affect actuator operation.

c. **Repair not more than one crack (2) ,longer** than **<u>1/2 inch</u>,** located in gusset support area (3) of bracket (1), adjacent to the uppermost bolt holes.

(1) Stop drill hole in bracket at end of crack (2) using 3/32 inch drill bit and portable electric drill.

(2) Remove burrs on each side of stop drilled hole using 1/8 inch drill bit and portable electric drill.

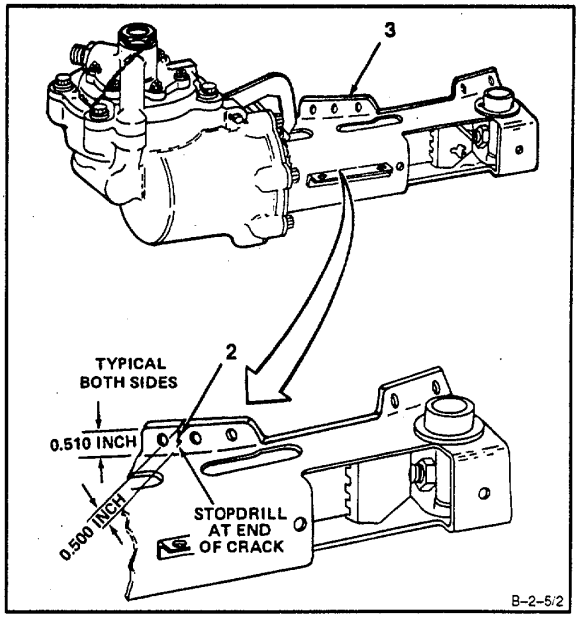

INSPECT

FOLLOW-ON MAINTENANCE:
None

END OF TASK

2-6 INSPECT INTERSTAGE AIR-BLEED ACTUATOR 2-6

INITIAL SETUP

Applicable Configurations:
All

Tools:
Powerplant Mechanic's Tool Kit,
NSN 5180-00-323-4944
Technical Inspection Tool Kit
NSN 5180-00-323-5114
Deep Style Socket, 1-Inch

Materials:
None

Parts:
Packing

Personnel Required:
Aircraft Powerplant Repairer
Aircraft Powerplant Inspector

References:
TM 1-2840-252-23P

Equipment Condition:
Off Engine Task

1. **Install spring (1),** large end down.

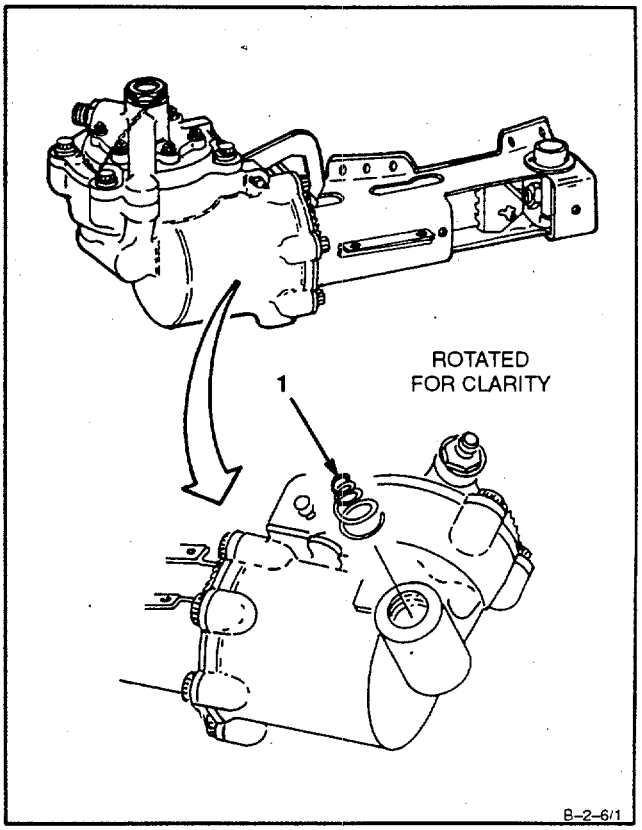

GO TO NEXT PAGE

2. **Install strainer element (2),** open end up.

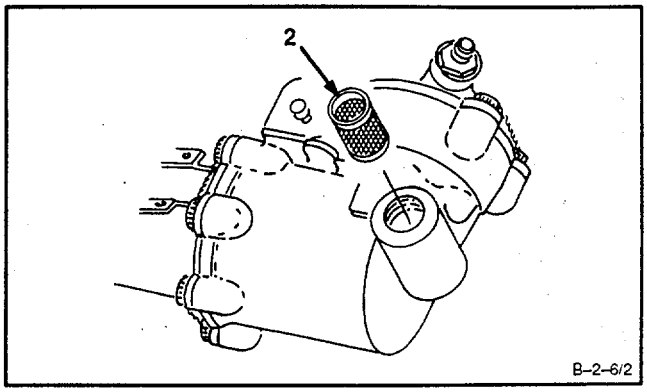

3. **Install** packing (3) and **reducer (4).** Use deepstyle socket.

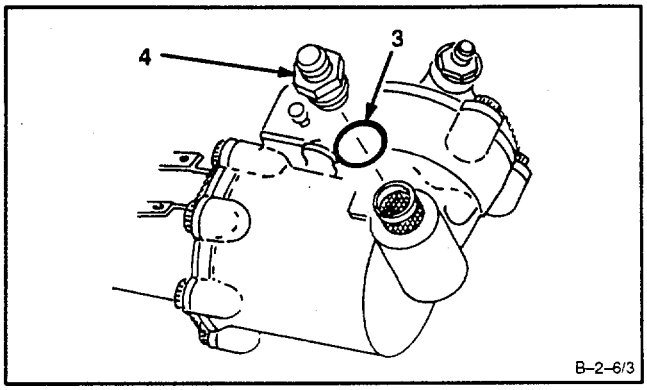

INSPECT

FOLLOW-ON MAINTENANCE:
Test Interstage Air-Bleed Actuator (Task 2-7).

END OF TASK

2-7 TEST INTERSTAGE AIR-BLEED ACTUATOR 2-7

INITIAL SETUP

Applicable Configurations:
All

Tools:
Powerplant Mechanic's Tool Kit,
NSN 5180-00-323-4944
Compressed Air Source
Dial Indicating Pressure
Gage, 0-100 psig
Pressure Gage Tube Assembly (Appendix E)

Parts:
Tube Caps MS9314-03 and MS9314-04

Materials:
None

Parts:
Tube Caps MS9314-03 and MS9314-04

Materials:
None

Personnel Required:
Aircraft Powerplant Repairer

Equipment Condition:
Off Engine Task
Assemble Interstage Air-Bleed Actuator (Task 2-6)

General Safety Instructions:

WARNING

Ensure all fittings and hoses are tight before pressurizing. Relieve air pressure before removing fittings and hoses. Failure to comply could result In Injury to eyes or skin. In case of injury get medical attention.

GO TO NEXT PAGE

2-7 TEST INTERSTAGE AIR-BLEED ACTUATOR (Continued) 2-7

1. **Check for internal leakage in interstage airbleed actuator (1)** as follows:

   a. Install tube cap (2) on P3 port tee (3).

   b. Install tube cap (4) on PM port tee (5).

   c. Attach pressure gage tube assembly (Appendix E) (6) to direct reading 0-100 psig pressure gage (7).

   d. Connect free end of pressure gage tube assembly (Appendix E) (6) to PM tee (5).

   e. Connect hose (8) of compressed air source (9) to P3 tee (3) and ensure valve (10) and regulator (11) are shut off.

   f. Open valve (12) of compressed air source (9) and adjust regulator (11) to read 50 psig on gage (13).

   g. Open valve (10) and ensure no air leakage at tees (3 and 5). Pressure gage (7) shall indicate less than 45 psig.

2. **Remove test equipment from Interstage airbleed actuator (1)** as follows:

   a. Shut off compressed air source (9) by closing valve (12).

   b. Loosen cap (2) and alternately press center stem to release air pressure until gage (13) reads 0 psig.

   c. Remove tube caps (2 and 4).

   d. Remove pressure gage tube assembly (Appendix E) (6) from direct reading 0 to 100 psi pressure gage (7) and PM tee (5).

   e. Remove hose (8) from P3 tee (3).

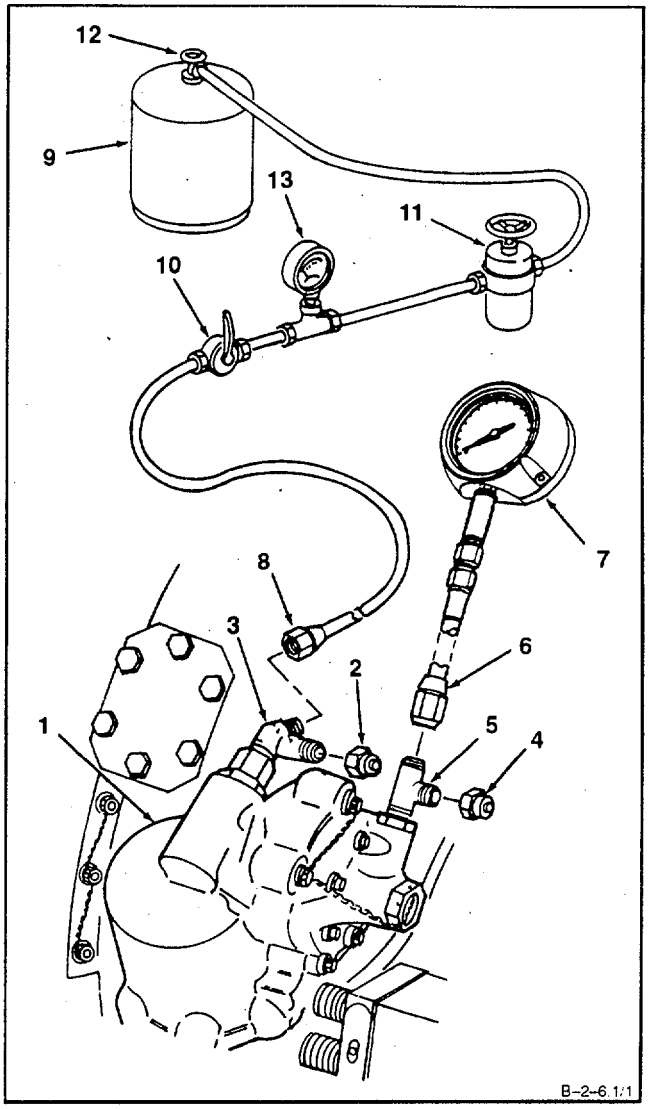

FOLLOW-ON MAINTENANCE:
None

END OF TASK

2-8 INSTALL INTERSTAGE AIR-BLEED ACTUATOR 2-8

INITIAL SETUP

Applicable Configurations:
All

Tools:
Powerplant Mechanic's Tool Kit,
NSN 5180-00-323-4944
Technical Inspection Tool Kit,
NSN 5180-00-323-5114
Torque Wrench,0-30 Inch-Pounds
Torque Wrench, 30-150 Inch-Pounds

Materials:
Lockwire (E33)

Parts:
Cotter Pin

Personnel Required:
Aircraft Powerplant Repairer
Aircraft Powerplant Inspector

References:
TM 1-2840-252-23P
Task 2-9

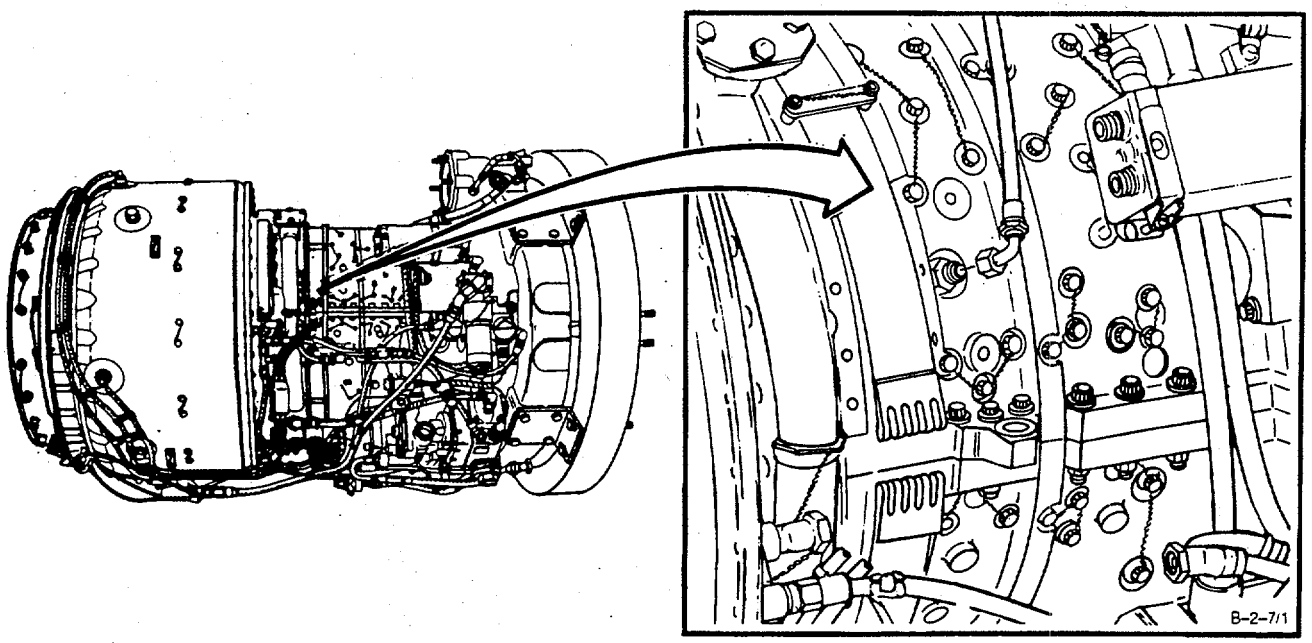

GO TO NEXT PAGE

1. Position interstage air-bleed actuator (1) over ends of bleed band (2) and on compressor housing (3).

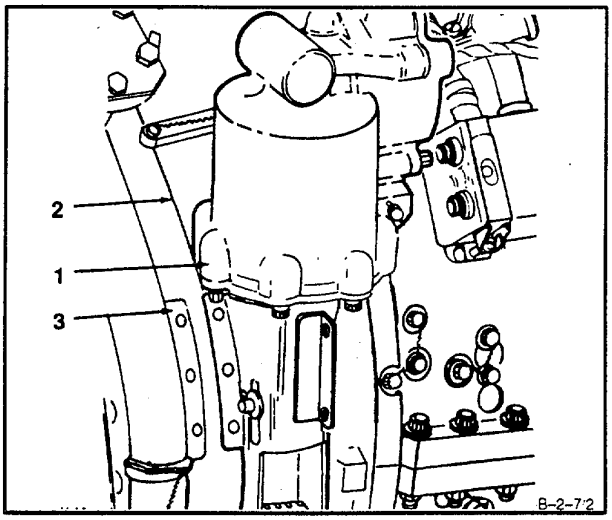

2. Position bleed band (2) and Interlock bleed band upper end (4) with tangs on piston assembly (5).

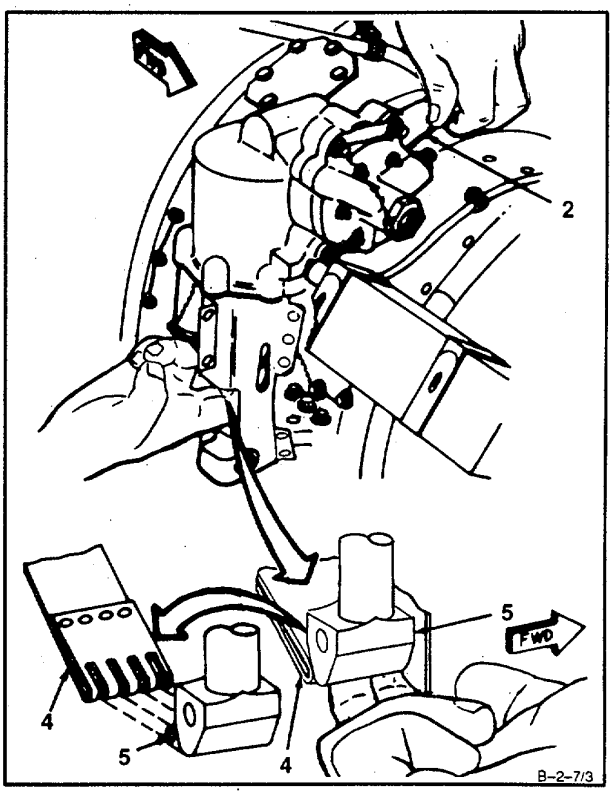

GO TO NEXT PAGE

3. Hold interlocked parts together and position them so bleed band upper end (4) is seen through slot (6). Install pin (7).

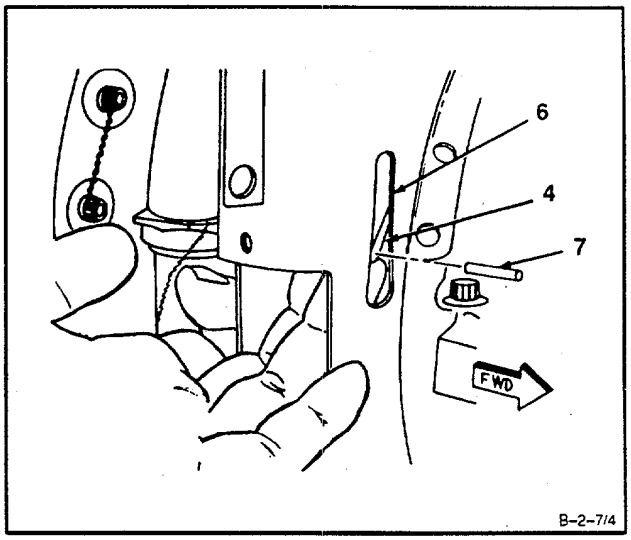

4. Interlock bleed band lower end (8) and tangs of yoke (9). Hold interlocked parts together and position them out of bracket (10). Install pin (11).

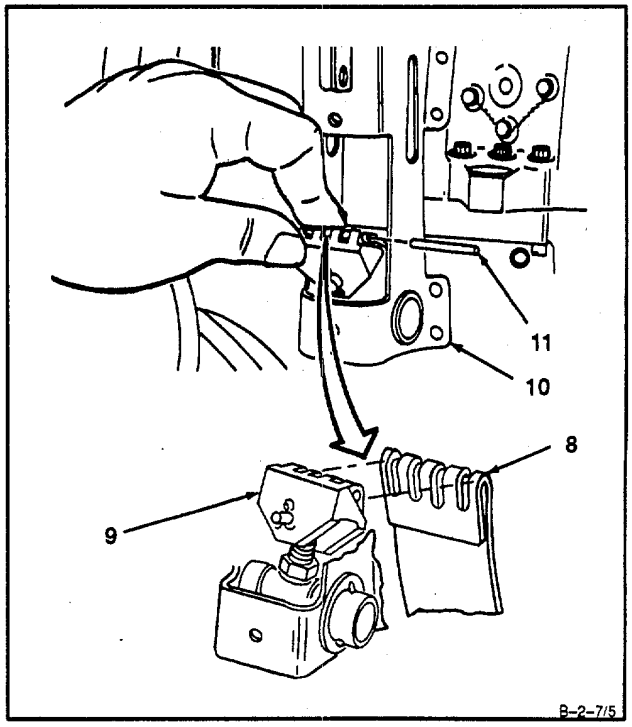

GO TO NEXT PAGE

5. Position piston assembly (5) so hole (12) can be seen through slot (6). **Install pin (13),** washer (14), and cotter pin (15).

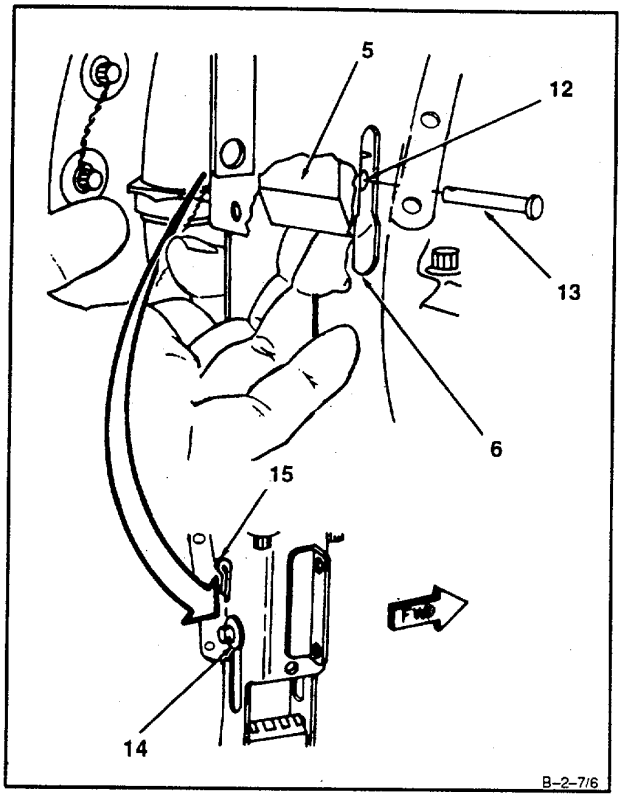

6. Slide end of interstage air-bleed actuator bracket (16) under overspeed solenoid valve bracket (17) and line up two holes (18).

7. Install two bolts (19) on top mounting holes. In- stall eight bolts (20) in remaining mounting holes. **Torque two bolts (19) to <u>10 Inch-pounds</u>. Torque eight bolts (20) to <u>40 Inch-pounds</u>.** Lockwire ten bolts (19 and 20). Use lockwire (E33).

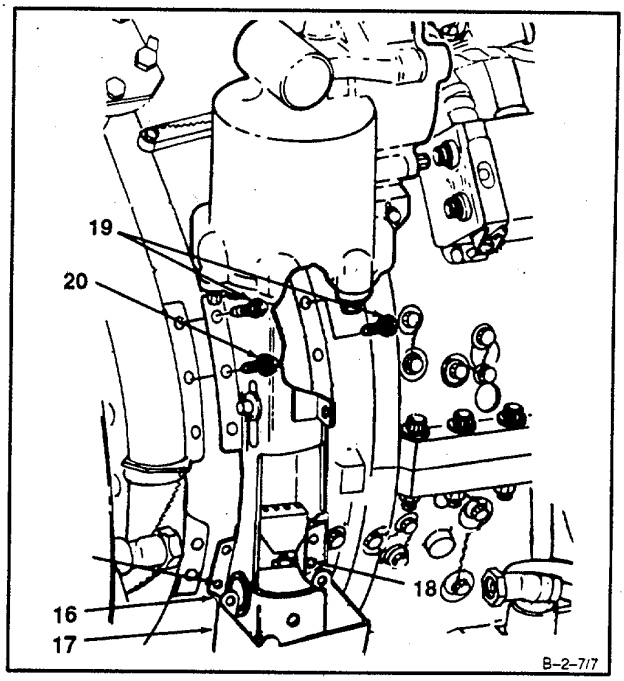

GO TO NEXT PAGE

8. **Install tee (21)** on reducer (22).

9. **Install nut (23)** on tee (24). **Install packing (25)** on tee (24). Position nut to make sure packing is in groove between two sets of threads on tee.

10. **Install tee (24)** into air bleed port (26).

11. **Adjust interstage air-bleed actuator** (Ref. Task 2-9, steps 6 thru 17).

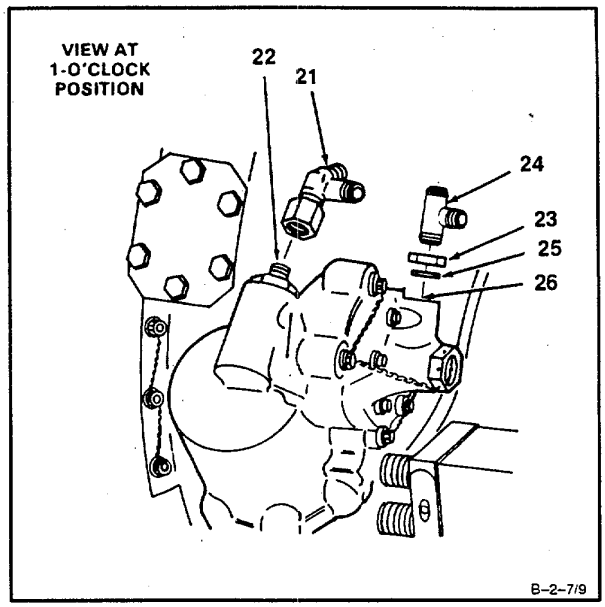

12. **Connect hose assemblies (27 and 28**) to tee (21).

13. **Connect hose assemblies (29 and 30)** to tee (24).

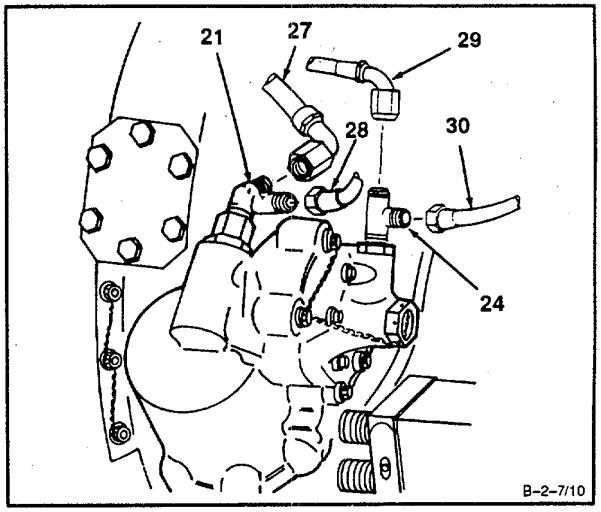

GO TO NEXT PAGE

14. **Connect two coil and cable assembly leads (31)** to ignition exciter output receptacles (32). **Lockwire leads.** Use lockwire (E33).

15. **Install screw (33) and nut (34).**

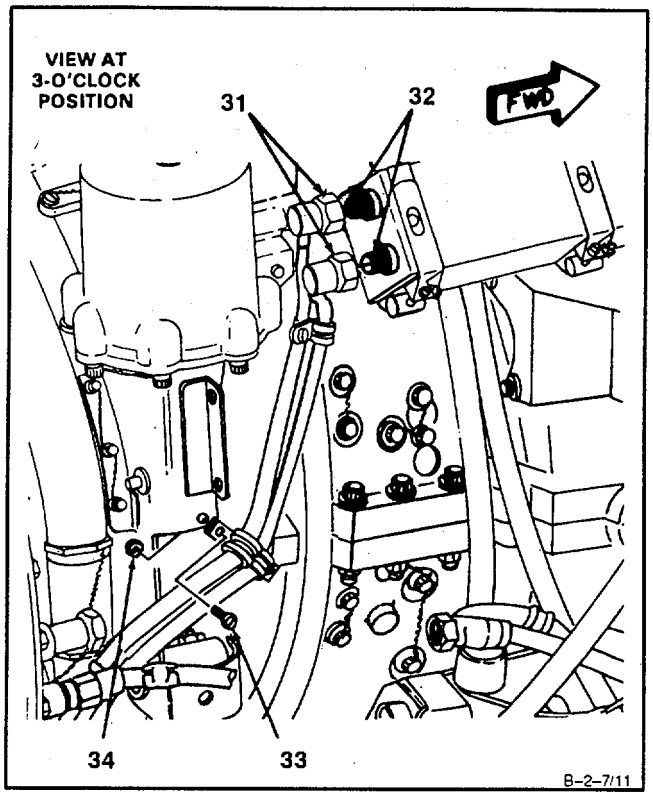

INSPECT

FOLLOW-ON MAINTENANCE:

Install Oil Cooler Assembly (Task 8-18).
Install Flow Programming Valve (Task 8-22).

END OF TASK

INITIAL SETUP

Applicable Configurations:
All
Tools:
Powerplant Mechanic's Tool Kit,
NSN 5180-00-323-4944
Technical Inspection Tool Kit,
NSN 5180-00-323-5114
Compressed Air Source
Torque Wrench, 30-150 Inch-Pounds
Materials:
Carborundum Stone (Ell)
Crocus Cloth (El 6)
Dry Cleaning Solvent (El 9)
Gloves (E24)
Lockwire (E33)
Tube Cap MS9314-03
Wiping Rag (E64)
Personnel Required:
Aircraft Powerplant Repairer
Aircraft Powerplant Inspector

References:

Task 2-10
Task 2-14
Equipment Condition:
Oil Cooler Assembly Removed (Task 8-12)
General Safety Instructions:

WARNING

The Ignition exciter stores very high and possibly fatal voltage. Use extreme care when working around ignition exciter. Serious Injury could result If exciter Is accidentally grounded. Do not probe inside of output receptacles with fingers or metal object. Discharge exciter only with insulated screwdriver. In case of shock or injury, get medical attention.

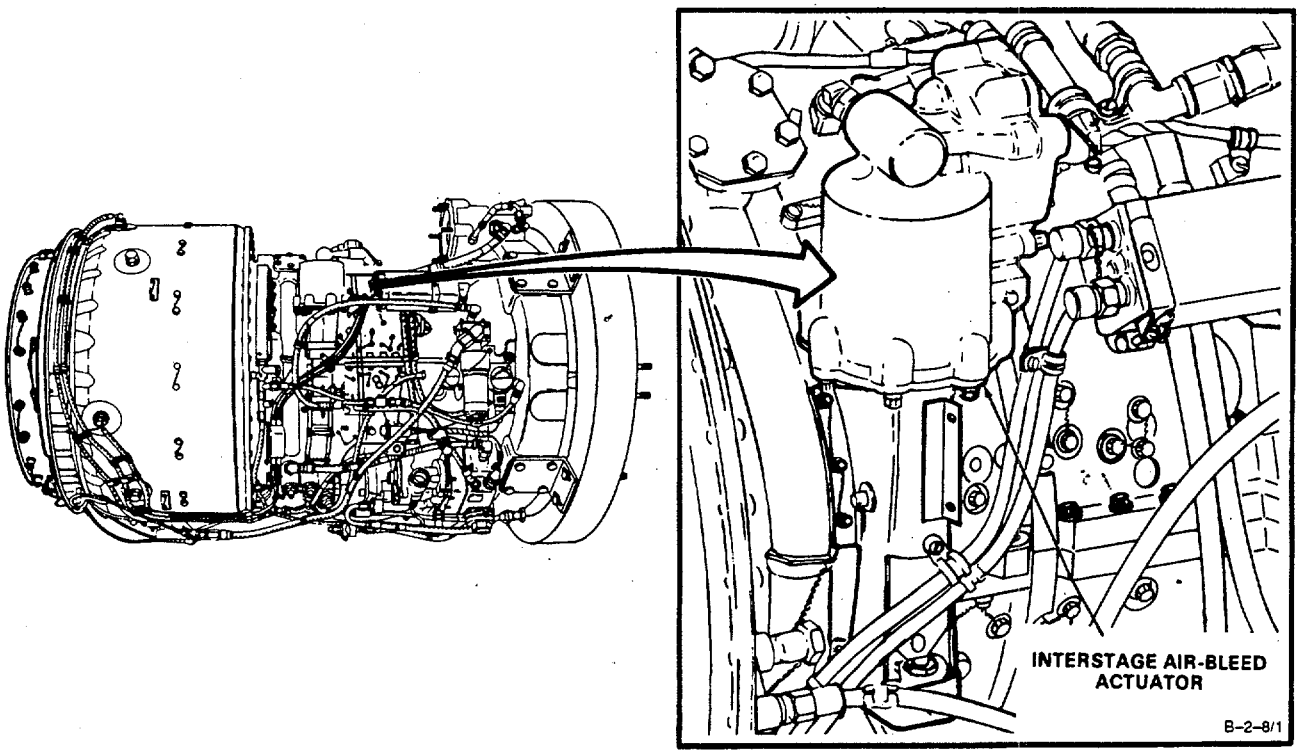

GO TO NEXT PAGE

NOTE

Adjustment of interstage air-bleed actuator can be done with oil cooler removed or in- stalled. This task is shown with oil cooler removed. Procedure is the same.

WARNING

When discharging ignition exciter, remove one lead at a time and discharge receptacle that lead was removed from. Failure to do so may result in serious shock when you are removing second lead. In case of serious shock, get medical attention.

1. **Remove nut (1) and screw (2).**

NOTE

Steps 2 and 3 apply to both output receptacles.

2. Remove lockwire and disconnect coil and cable assembly lead (3).

3. **Discharge ignition exciter (4)** by placing tip of insulated screwdriver (5) against pin (6) and edge (7) of receptacle (8).

4. Place leads (3) to one side.

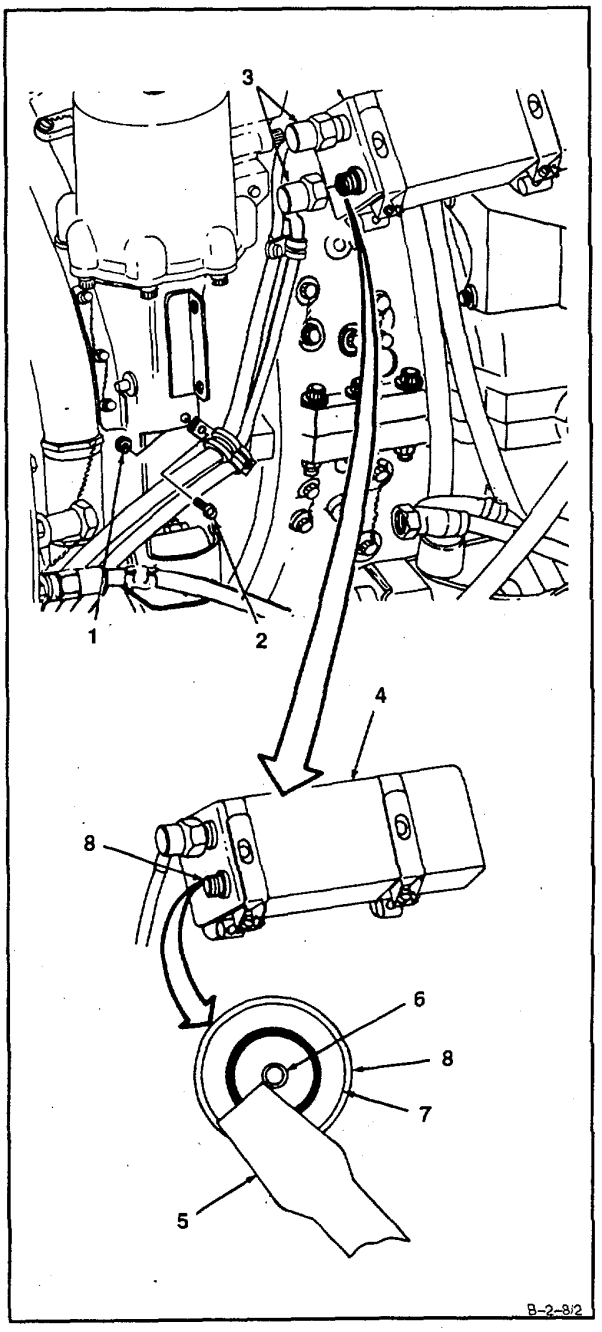

GO TO NEXT PAGE

5. **Disconnect hose assemblies (9, 10, 11, and 12).**

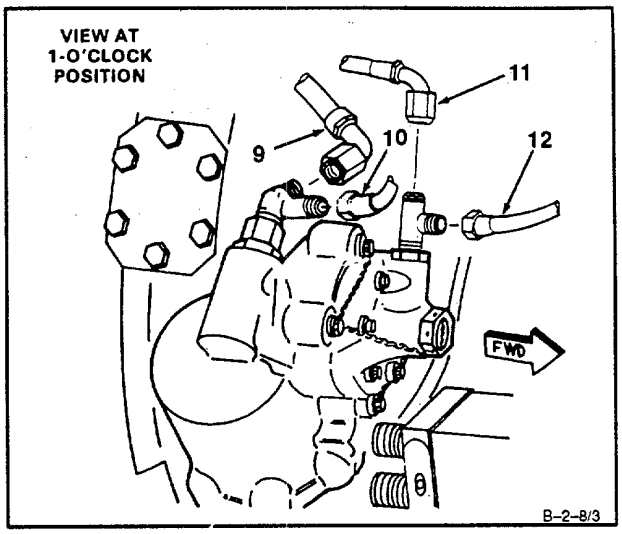

6. Remove lockwire and **loosen upper nut (13) and lower nut (14)** to allow full travel of actuator piston (15).

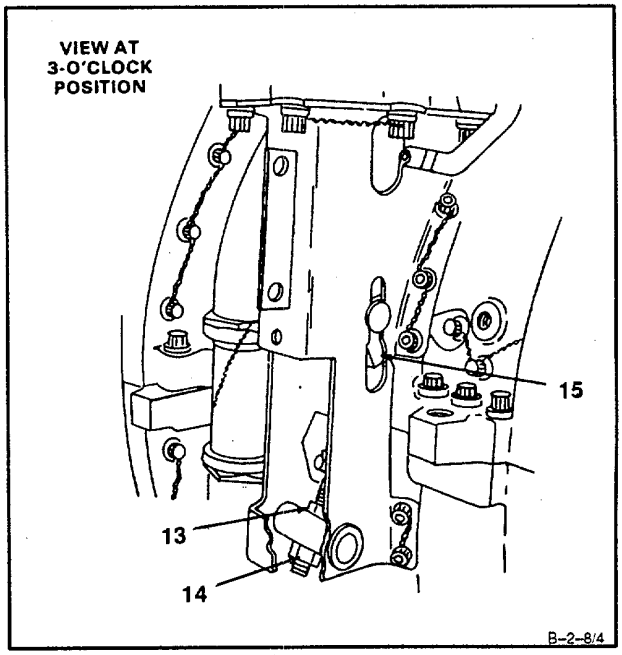

NOTE

Before adjusting actuator, area under bleed band should be checked for foreign objects.

GO TO NEXT PAGE

7. **Install tube cap (16)** on tee (17).

8. **Connect air pressure hose** from compressed air source to tee (17). Apply 60 psig air pressure.

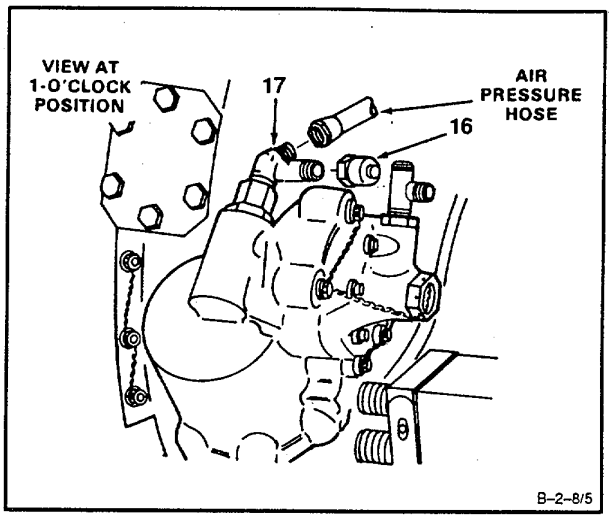

9. **Activate piston (15) to closed position** by placing fingers over two port openings of tee (18).

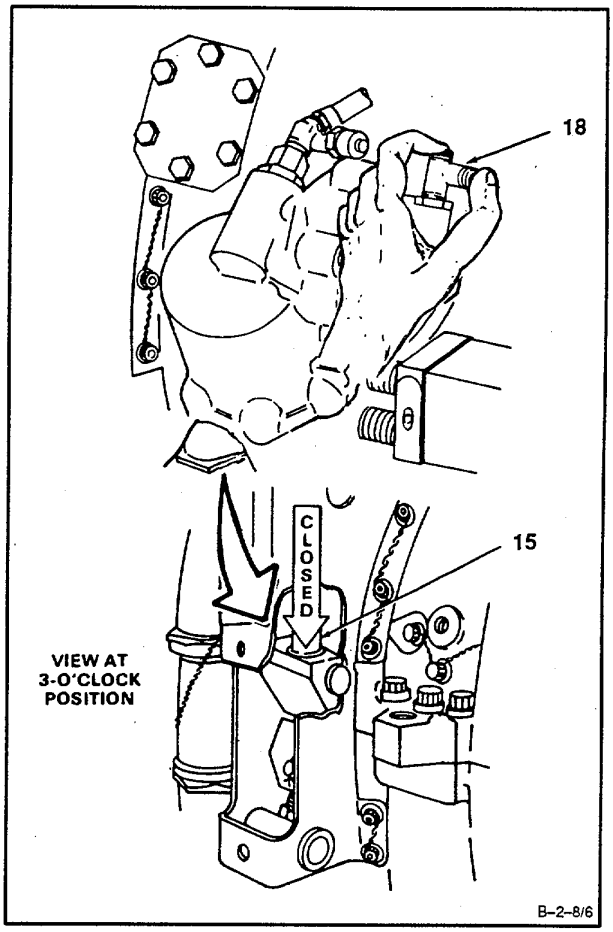

GO TO NEXT PAGE

10. **Adjust nuts (13 and 14) until clearance between shaft of pin (19) and bottom of slot (20) is 1/8 to 3/16-inch.**

11. **Allow piston (15) to return to open position** by removing fingers from tee.

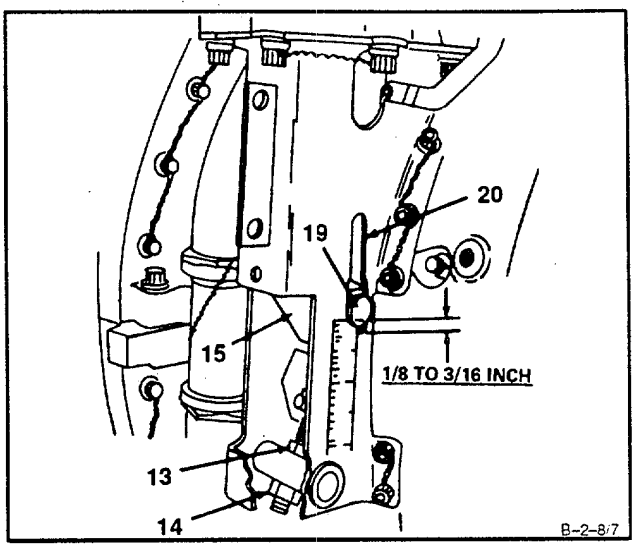

CAUTION

Do not allow yoke to twist when torquing nut. Twisting of yoke may cause binding and will not allow bleed band to close properly.

CAUTION

After torquing, two threads must remain showing below nut. Failure to comply may cause nut to break loose and prevent bleed band from closing. Replace bleed band if two threads do not show.

12. Position yoke (21) against compressor housing (22) and hold upper nut (13). **Torque lower nut (14) to 145 inch-pounds.**

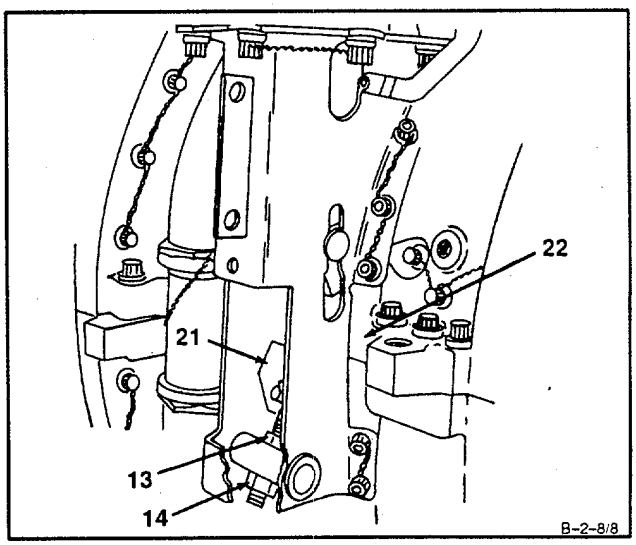

GO TO NEXT PAGE

CAUTION

13. Make sure bleed band pins do not bind against actuator when piston moves to closed position. Binding will not allow bleed band to close properly. 1'3. Activate and release piston (15) several times. Check that pins (23) are not binding. If pins (23) are binding, reposition or replace pins (23).

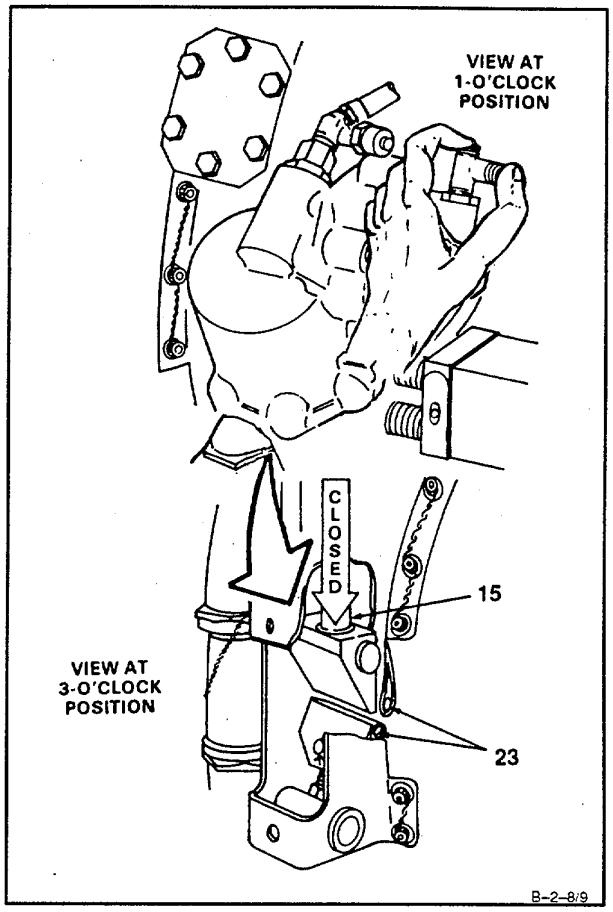

14. With piston (15) in closed position, check clearance between shaft of pin (19) and bottom of slot (20). Clearance shall be 1/8 to 3/16-inch. Allow piston (15) to return to open position.

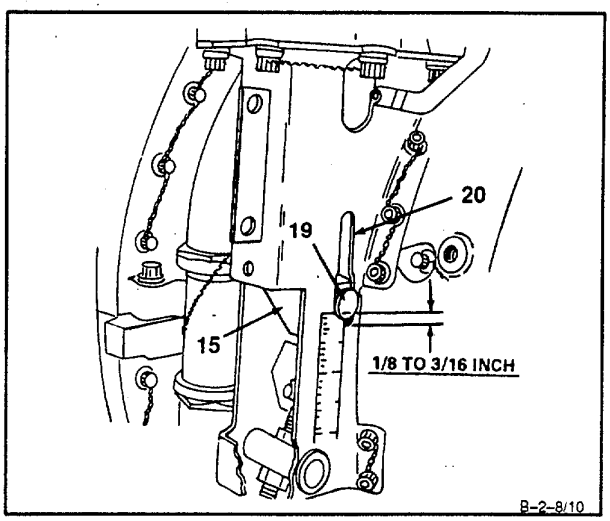

GO TO NEXT PAGE

15. Note location of pin (19). Activate piston (15) to closed position, and **measure distance pin (19) moves from open to closed.** Pin shall move at least 1 .O inch.

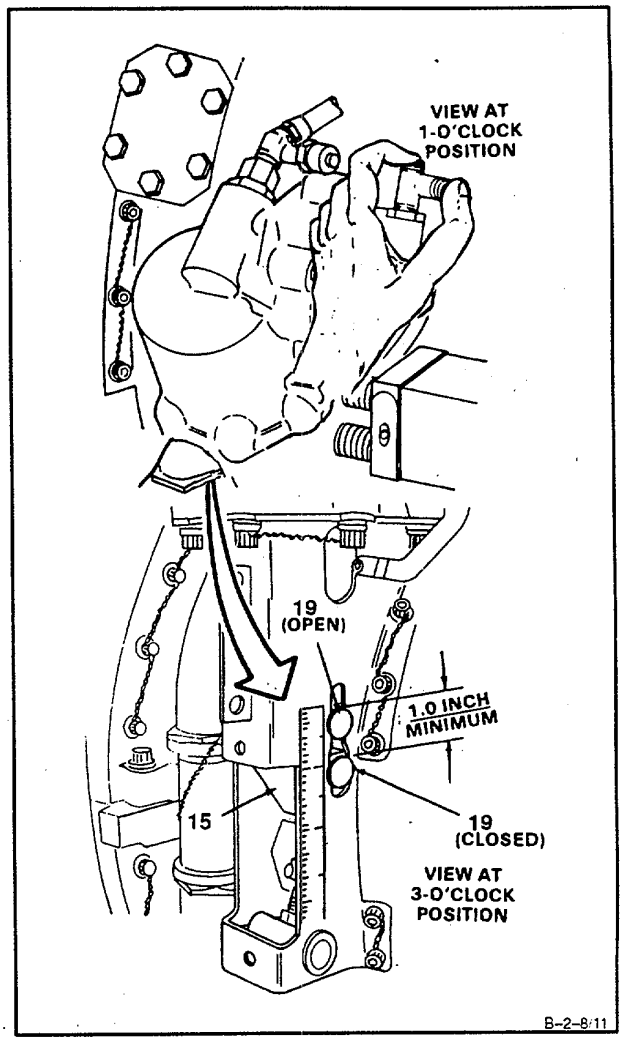

16. If you cannot obtain clearance and minimum pin movement, proceed as follows until requirements are met:

a. **Readjust Interstage air-bleed actuator** (steps 9 thru 14).

b. **If clearance and minimum pin movement cannot be obtained after readjustment, replace compressor bleed band** (Ref. Tasks 2-10 and 2-14).

GO TO NEXT PAGE

17. Place fingers over two port openings of tee (18). **Check clearance between bleed band (24) and compressor housing (22) at 12-, 5-, and 8-o'clock positions.** Use thickness gage. Clearance shall not be more than 0.002-inch drag fit. **If fit is too loose, proceed as follows:**

    a. **Check bleed band** (24) for twists, kinks, and dirt, or other deposits on side that goes against compressor housing (22). **Replace bleed band (24) if twisted or kinked** (Ref. Task 2-10 and 2-14).

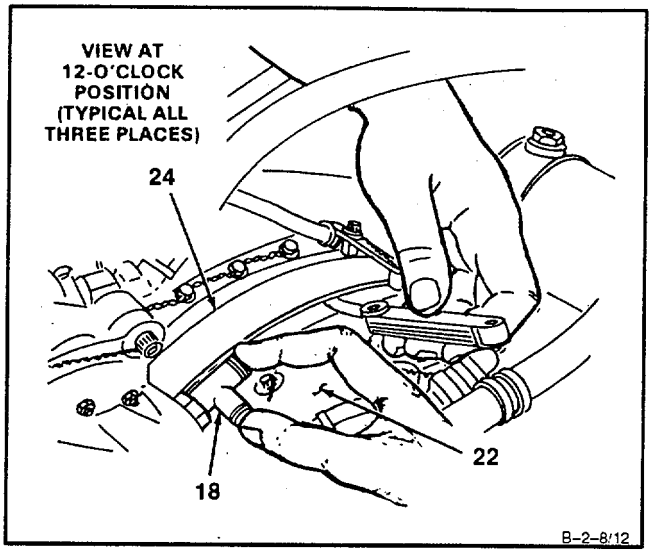

b. **Check compressor housing (22)** for nicks, chafing, and dirt, or other deposits in bleed band area. If nicks, chafing, dirt, or other de- posits are found, proceed as follows:

(1) **Remove compressor bleed band** (Ref. Task 2-10).

WARNING

Dry cleaning solvent (E19) is flammable and toxic. It can irritate skin and cause burns. Use only in well-ventilated area, away from heat and open flame. In case of contact, immediately flush skin or eyes with water for at least 15 minutes. Get medical attention for eyes.

(2) **Clean compressor housing** as follows:

(a) Wear gloves (E24), and clean compressor housing (22). Use brush and wiping rag (E64) dampened in dry cleaning solvent (E19).

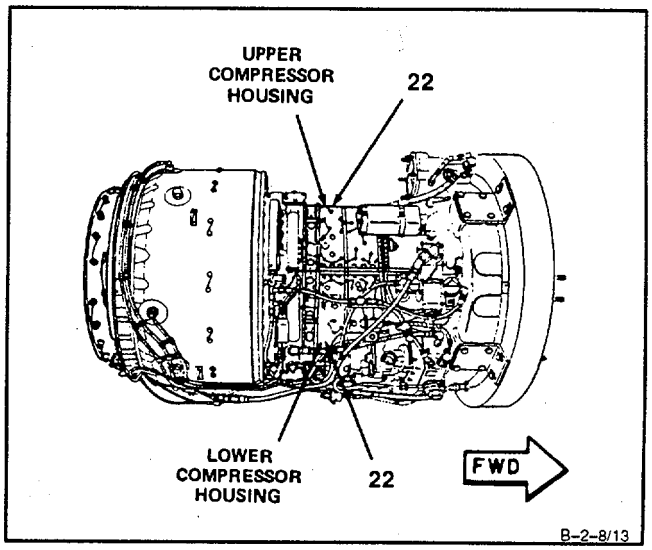

GO TO NEXT PAGE

WARNING

When using compressed air for cleaning, use approved protective equipment for eyes and face. Do not use more than 30 psig air pressure. Do not direct air toward yourself or another person. Failure to comply could result in Injury to eyes or skin. In case of injury, get medical attention.

(b) Wear goggles. Blow dry compressor housing (22) using clean, dry compressed air.

(3) **Inspect compressor housing** (22) as follows:

(a) There shall be no cracks.

(b) There shall be no nicks, dents, or gouges greater than 0.500 inch length to 0.070 inch depth.

(c) There shall be no corrosion or paint damage.

(4) Repair compressor housing as follows:

(a) Repair of nicks, dents, and gouges on outside diameter of compressor housing (22), is acceptable after blend-repair as follows:

1 Defects shall not project into mating surfaces.

2 **Repair gouges** up to 0.500 inch length to 0.070 inch depth.

a Blend all sharp edges using carborundum stone (E11).

b Polish to smooth finish using crocus cloth (E16).

3 **Repair dents** up to 0.500 inch length to 0.070 inch depth.

a Blend all sharp edges using carborundum stone (Ell).

b Polish to smooth finish using crocus cloth (E16).

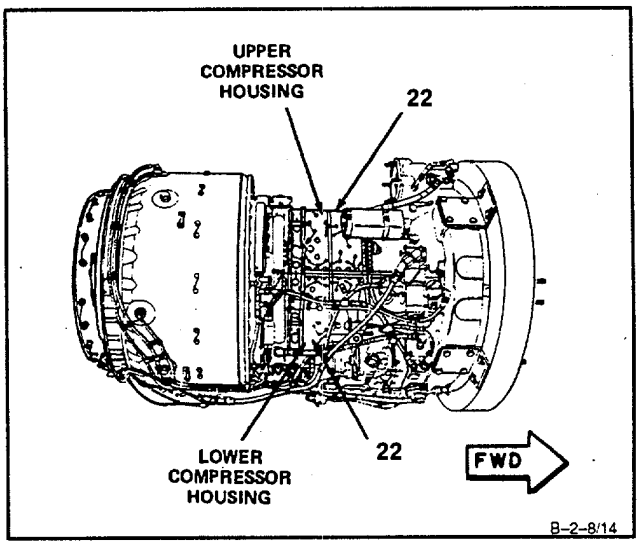

GO TO NEXT PAGE

4 **Repair nicks** up to 0.500 inch length to 0.070 inch depth.

a Blend all sharp edges using carborundum stone (Ell).

b Polish to smooth finish using crocus cloth (E16).

(b) **Repair corrosion damage** up to 0.070 inch depth.

1 Blend all sharp edges using carborundum stone (Ell)

2 Polish to smooth finish using crocus cloth (E16).

(5) **Install compressor bleed band** (Ref. Task 2-14).

18. **Lockwire nuts (13 and 14)** together. Use lockwire (E33).

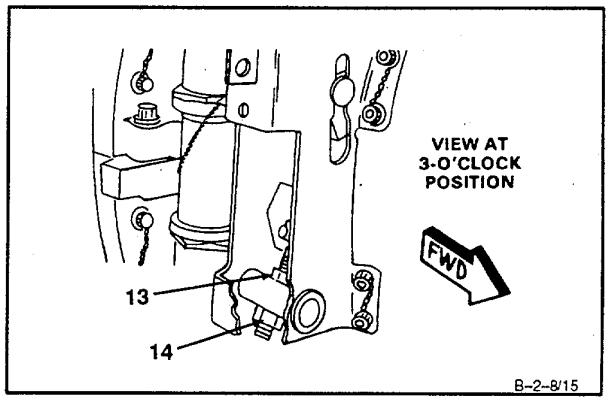

19. **Disconnect air pressure hose** from tee (17).

20. **Remove tube cap (16)** from tee (17).

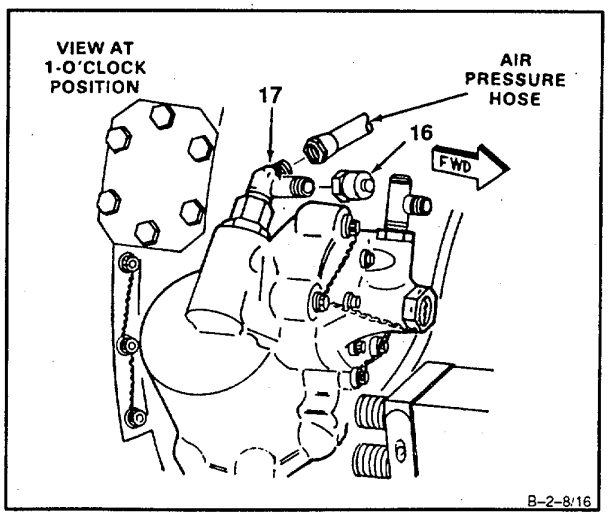

GO TO NEXT PAGE

21. **Connect hose assemblies (9 and 10)** to tee (17).

22. **Connect hose assemblies (11 and 12)** to tee (18).

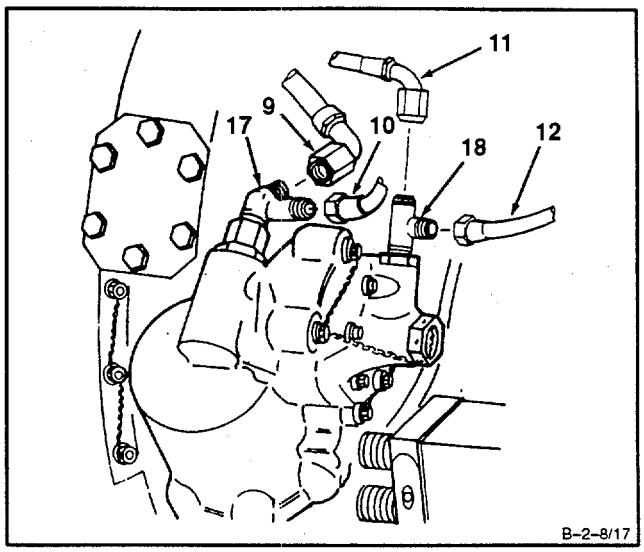

23. **Connect two coil and cable assembly leads (3) to ignition exciter output receptacles (8).** Lockwire lead connectors. Use lockwire (E33).

24. **Install screw (2)** and nut (1).

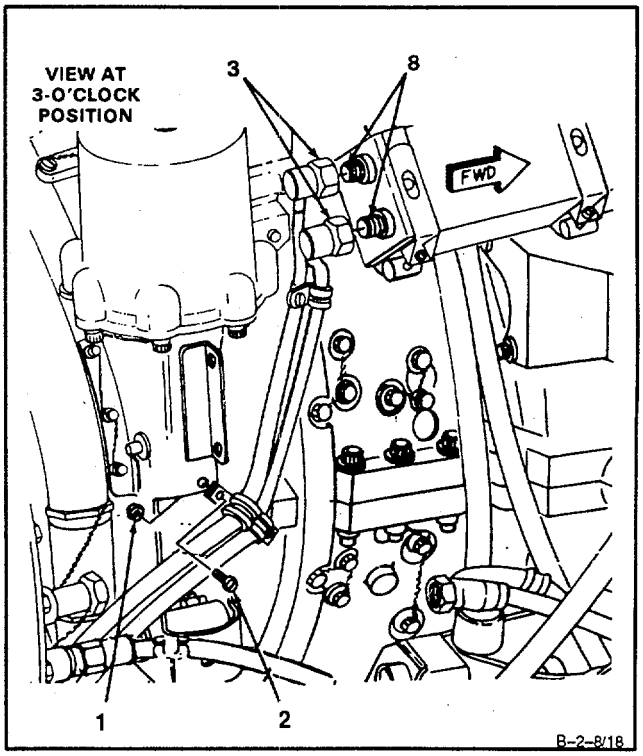

INSPECT

FOLLOW-ON MAINTENANCE:

If Removed, Install Oil Cooler Assembly (Task 8-18).

END OF TASK

SECTION II

COMPRESSOR BLEED BAND

2-10 REMOVE COMPRESSOR BLEED BAND 2-10

INITIAL SETUP

Applicable Configurations:

All

Tools:

None

Materials:

None

Personnel Required:

Aircraft Powerplant Repairer

Equipment Condition:

Flow Programming Valve Removed (Task 8-19)
Oil Cooler Assembly Removed (Task 8-12)
Interstage Air-Bleed Actuator Removed (Task 2-1)

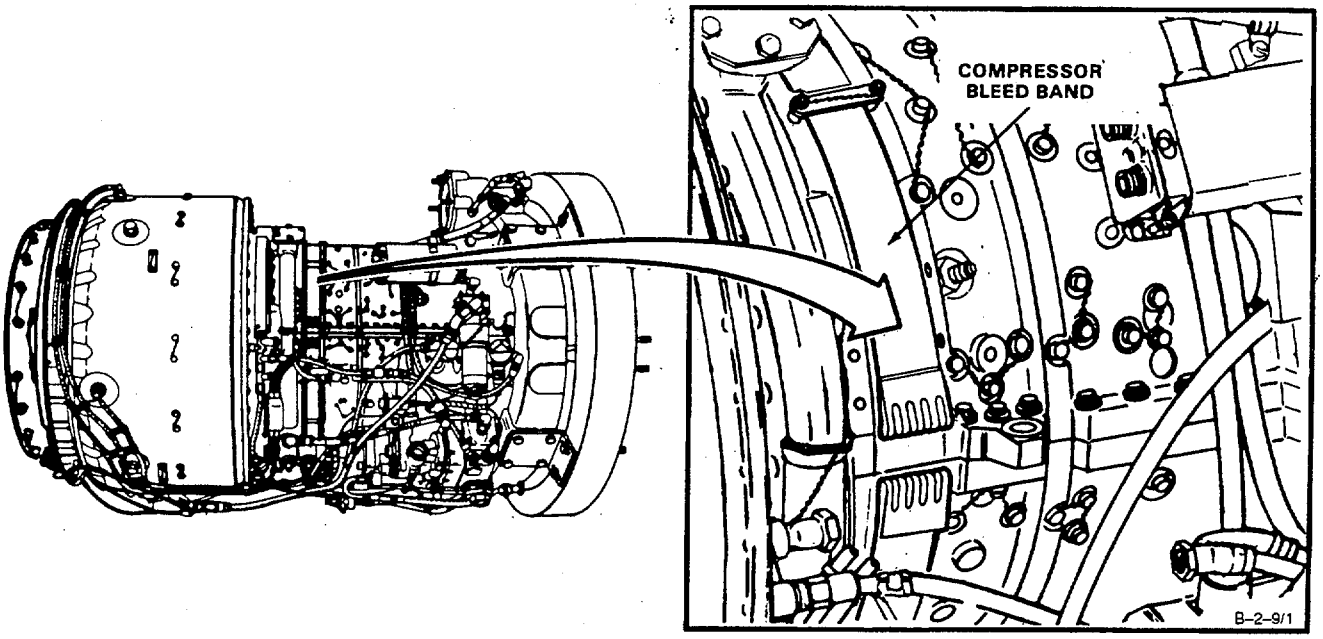

GO TO NEXT PAGE

CAUTION

The bleed band is very thin and bends easily. Be careful not to kink or bend it during handling. If kinked or bent, bleed band must be replaced.

1. Pull lower end (1) of bleed band (2) until trailing end (3) reaches first of five retainers (4).

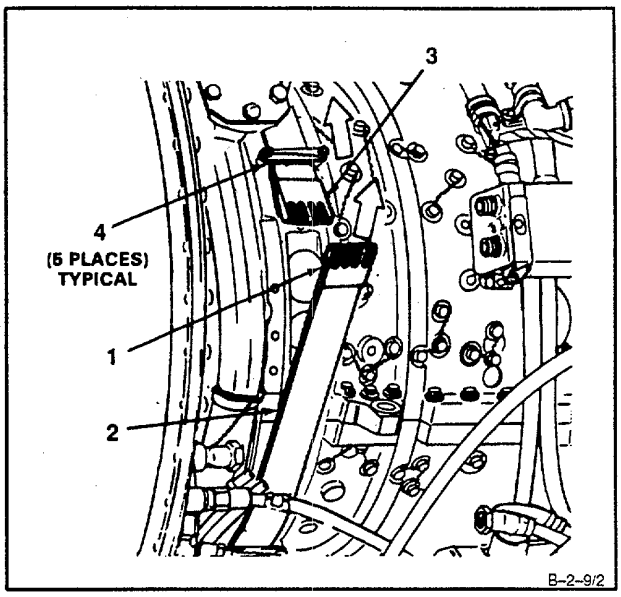

2. Continue pulling bleed band (2). Have helper guide trailing end (3) through five retainers (4).

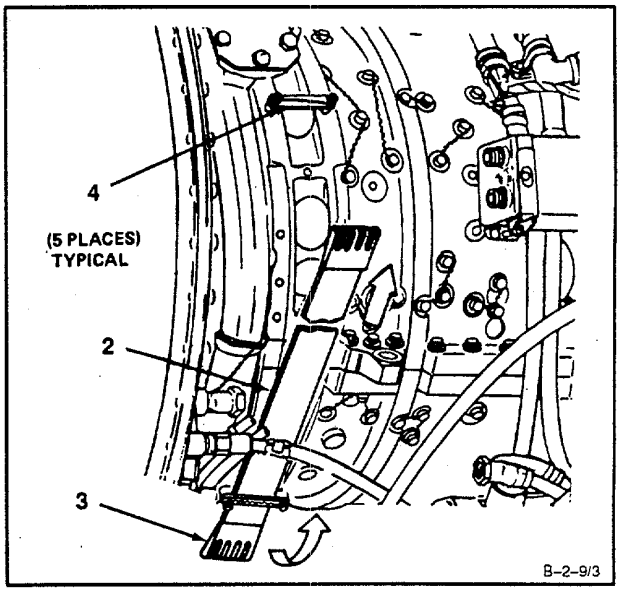

GO TO NEXT PAGE

3. **Remove bleed band (2).**

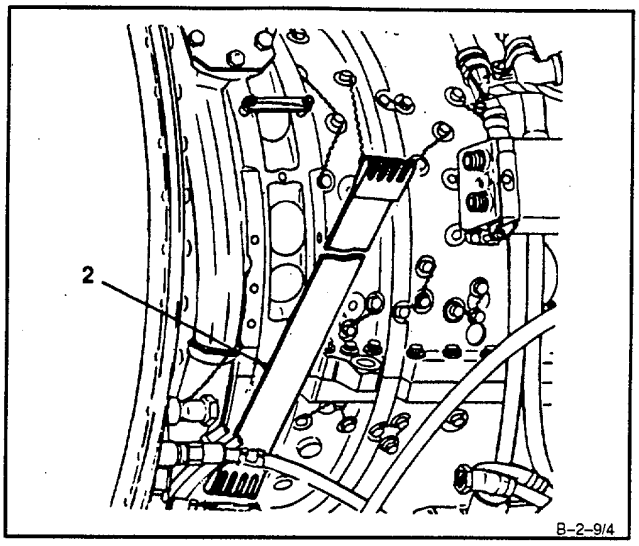

FOLLOW-ON MAINTENANCE:
None

END OF TASK

INITIAL SETUP
Applicable Configurations:

All
Tools:
None
Materials:

Dry Cleaning Solvent (E19)
Gloves (E24)
Lint-Free Cloth (E30)
Personnel Required:
Aircraft Powerplant Repairer
Equipment Condition:
Off Engine Task

Oil Cooler Assembly Removed (Task 8-12)
Interstage Air-Bleed Actuator Removed (Task 2-1)
Compressor Bleed Band Removed (Task 2-10)

General Safety Instructions:

WARNIING

Dry cleaning solvent (E17) is flammable and toxic. It can Irritate skin and cause burns. Use only in well-ventilated area, away from heat and open flame. In case of contact, Immediately flush skin or eyes with water for at least 15 minutes. Get medical attention for eyes.

CAUTION

The bleed band is very thin and bends easily. Be careful not to kink or bend it during handling. If kinked or bent, bleed band must be replaced.

1. Wear gloves (E24). **Clean bleed band** (1) with clean lint-free cloth (E30) dampened in dry cleaning solvent (E19).

2. **Remove residue from band ends** with clean, dry lint-free cloth (E30) after cleaning.

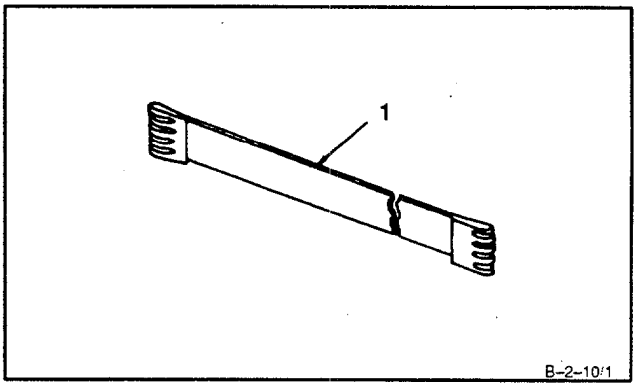

FOLLOW-ON MAINTENANCE:

Inspect Compressor Bleed Band (Task 2-12).

END OF TASK

2-12 INSPECT COMPRESSOR BLEED BAND 2-12

INITIAL SETUP

Applicable Configurations:

All

Tools:

Technical Inspection Tool Kit,
NSN 5180-00-323-5114

Materials

None

Personnel Required:

Aircraft Powerplant Repairer

References:

Task 2-13

Equipment Condition:

Off Engine Task

CAUTION

The bleed band Is very thin and bends easily. Be careful not to kink or bend it during handling. If kinked or bent, bleed band must be replaced.

1. Inspect bleed band (1).

a. There shall be no cracks or distortion.

b. There shall be no edge wear deeper than 0.100 inch on either side over entire length. **Repair edge wear up to 0.100 inch deep** (Ref. Task 2-13).

c. There shall be no scratches deeper than 30 percent of band thickness. There shall be no scratches that cause band to be deformed.

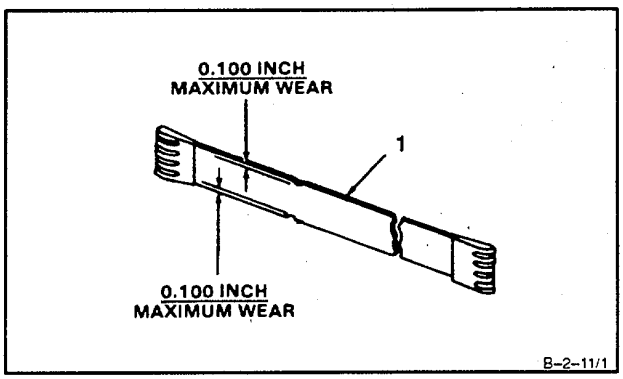

FOLLOW-ON MAINTENANCE:

None

END OF TASK

2–13 REPAIR COMPRESSOR BLEED BAND 2–13

INITIAL SETUP

Applicable Configurations:
All

Tools:
Technical Inspection Tool Kit.
NSN 5180–00–323–5114
Hand File Set

Materials/Parts:
Carborundum Stone (E 11)
Crocus Cloth (E16)
Fluorescent–Penetrant Materials (E73), Appendix C

Personnel Required:
Aircraft Powerplant Repairer
Aircraft Powerplant Inspector

References:
TM 43–0103

Equipment Condition:
Off Engine Task

CAUTION

The bleed band is very thin and bends easily. Be careful not to kink or bend it during handling. If kinked or bent, bleed band must be replaced.

1. **Repair edge wear up to 0.100 inch deep**, on bleed band (1) as follows:

NOTE

Repair is allowed only if depth after repair is not more than 0.100 inch.

a. **Blend–repair** to a smooth contour using carborundum stone (E11).
b. **Remove burrs** around repair from both sides of band. Use file.
c. **Final polish** area with crocus cloth (E16).
d. **Fluorescent–penetrant Inspect** repaired area (Ref. TM 43–0103). Parts requiring fluorescent penetrant inspection will be final cleaned, prior to inspection, with N–Propyl Bromide (vapor degreasing only), (Item E74 Appendix C), DS–108 (Item E75 Appendix C). DS–108, Electron or Positron must be followed by an Acetone (Item E1 Appendix C) or Isopropyl Alcohol (Item E78 Appendix C) rinse or wipe. Parts must be dried until there is no visible solvent residue before applying penetrant. There shall be no cracks.

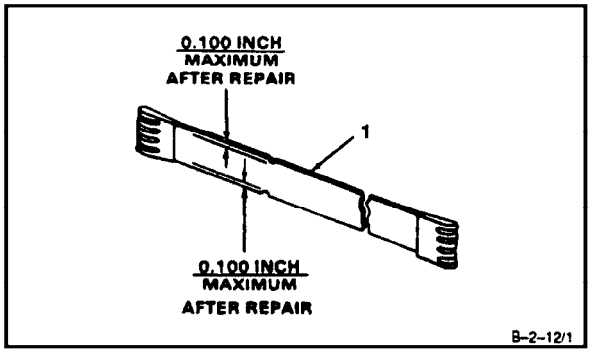

INSPECT
FOLLOW–ON MAINTENANCE
None

END OF TASK

2-14 INSTALL COMPRESSOR BLEED BAND

INITIAL SETUP

Applicable Configurations:

All

Tools:

Technical Inspection Tool Kit,
NSN 5180-00-323-5114

Materials

None

Personnel Required:

Aircraft Powerplant Repairer
Aircraft Powerplant Inspector

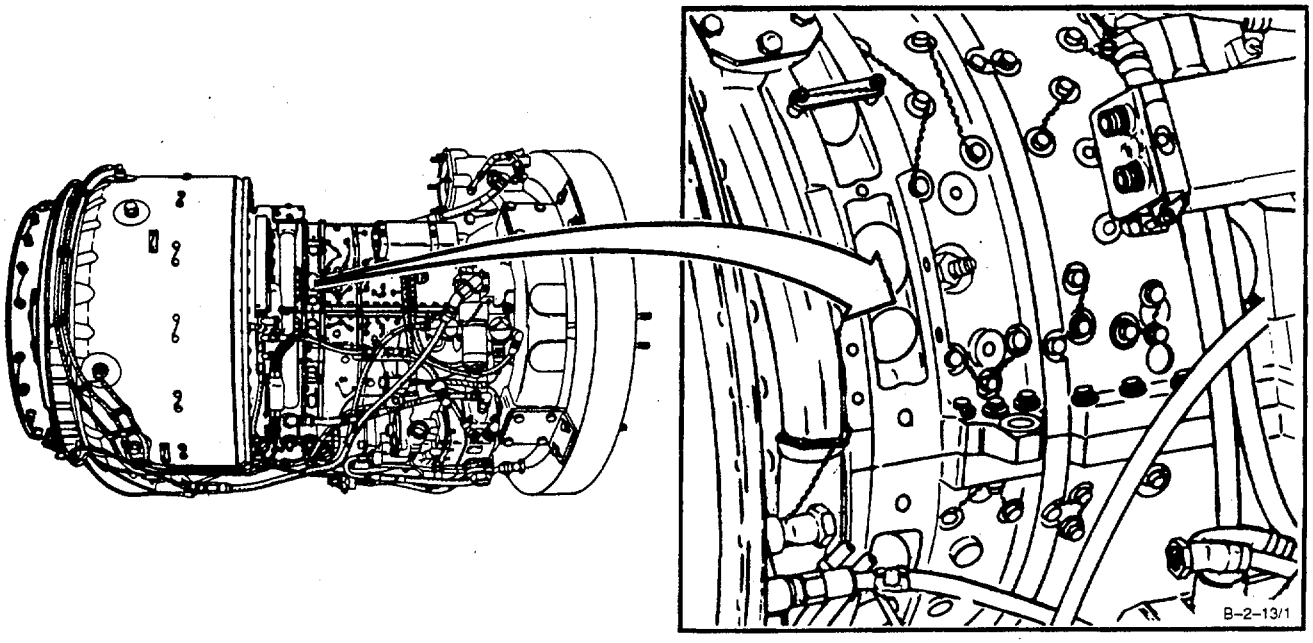

GO TO NEXT PAGE

CAUTION

The bleed band Is very thin and bends easily. Be careful not to kink or bend it during handling. If kinked or bent, bleed band must be replaced.

1. Locate retainer (1) and align bleed band (2) with it.

NOTE
Welded lap must face away from engine.

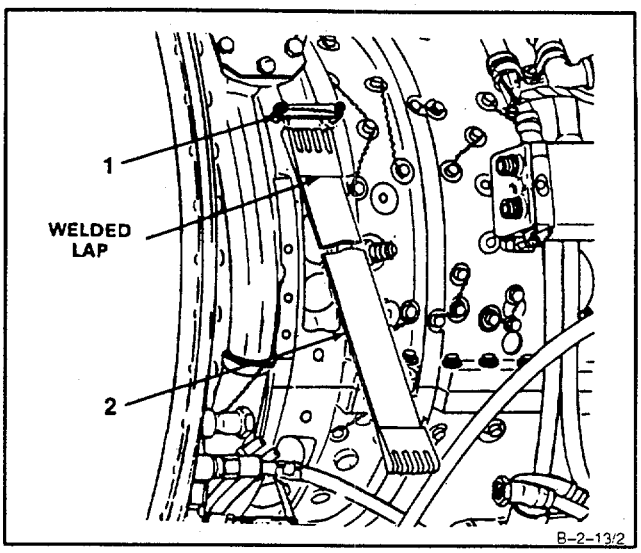

2. Position end of bleed band (2) under and through retainer (1).

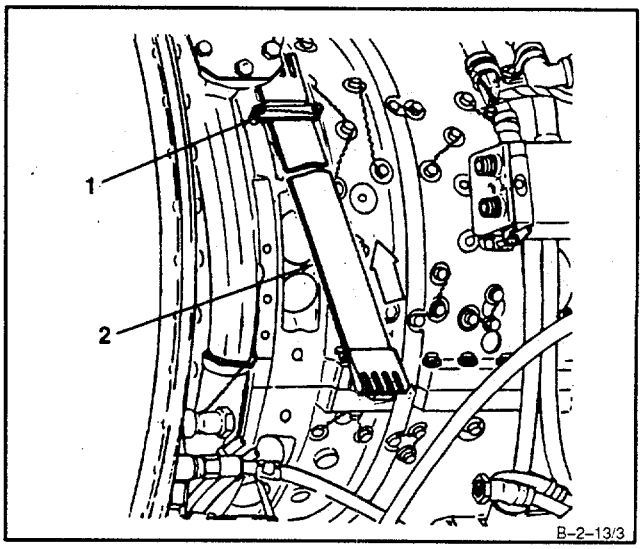

GO TO NEXT PAGE

3. Slide bleed band (2) up and over compressor housing (3) and through two retainers (4).

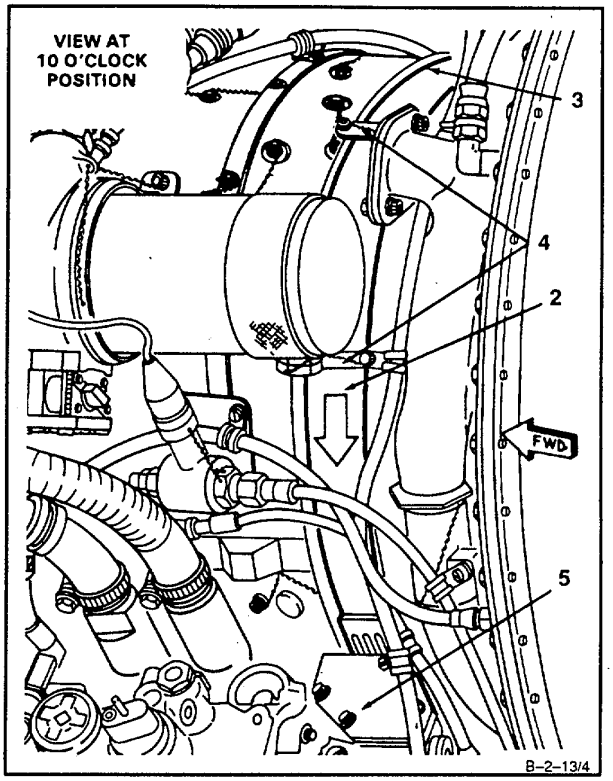

4. Continue sliding bleed band (2) around compressor housing (3). Guide it between hydromechanical assembly (5) and compressor housing (3).

5. Continue sliding bleed band (2) around compressor housing (3). **Install bleed band (2)** under and through two retainers (6) and under overspeed solenoid valve bracket (7) and into position shown.

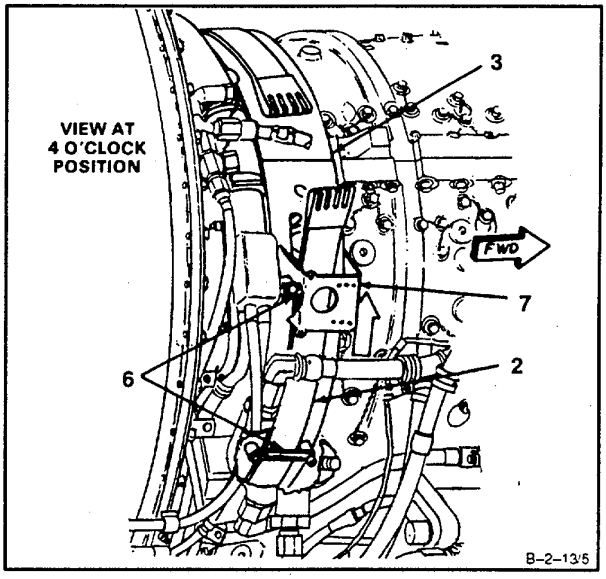

INSPECT

FOLLOW-ON MAINTENANCE:
Install Interstage Air-Bleed Actuator (Task 2-8).
Install Oil Cooler Assembly (Task 8-18).
Install Flow Programming Valve (Task 8-22).

END OF TASK

SECTION III

ANTI-ICING AIR GALLERY COVER

2-15 REMOVE ANTI-ICING AIR GALLERY COVER 2-15

INITIAL SETUP

Applicable Configurations:
All

Tools:
Powerplant Mechanic's Tool Kit,
NSN 5180-00-323-4944
Padded Conduit Pliers

Materials
None

Personnel Required:
Aircraft Powerplant Repairer

Equipment Condition:
Flow Programming Valve Removed (Task 8-19)
Oil Cooler Assembly Removed (Task 8-12)
Interstage Air-Bleed Actuator Removed (Task 2-1)
Dual Chip Detector Removed (Task 8-39)
Hydromechanical Assembly Removed (Task 6-1)
Main Fuel Filter and Bracket Removed (Task 6-28)

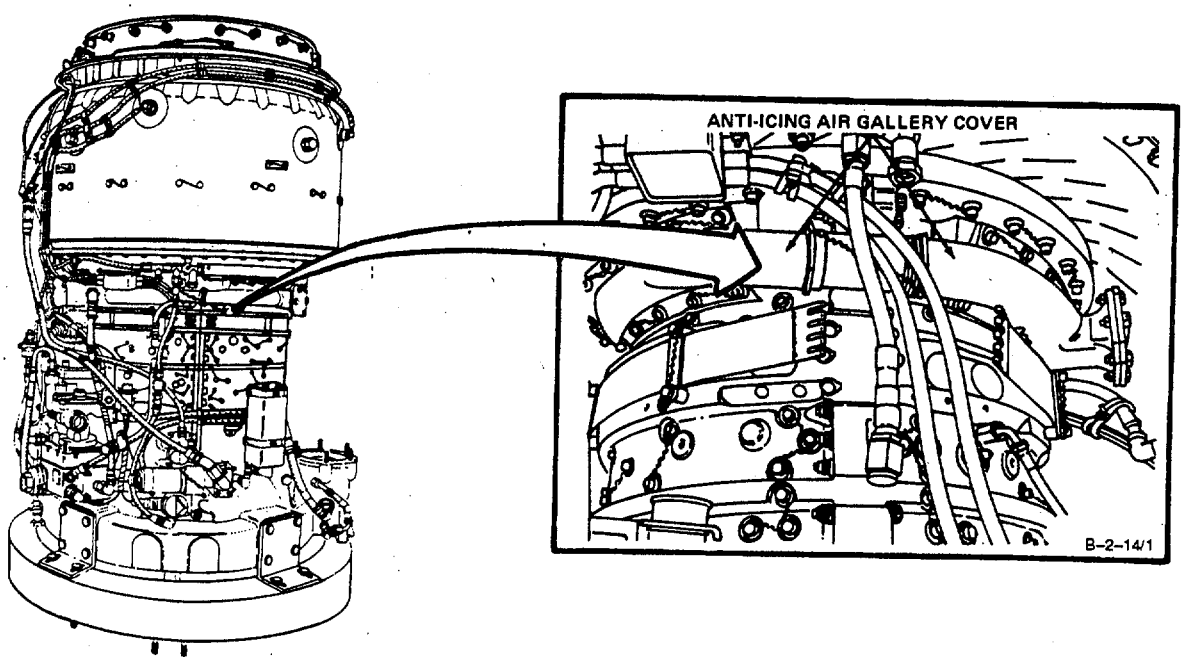

GO TO NEXT PAGE

NOTE

Step 1 applies to connectors at both 3-and 9-o'clock positions. Connector at 3-o'clock position is shown.

NOTE

Do not remove nuts from connector.

1. Remove lockwire and **loosen two nuts (1) on connector (2).** Use padded conduit pliers.

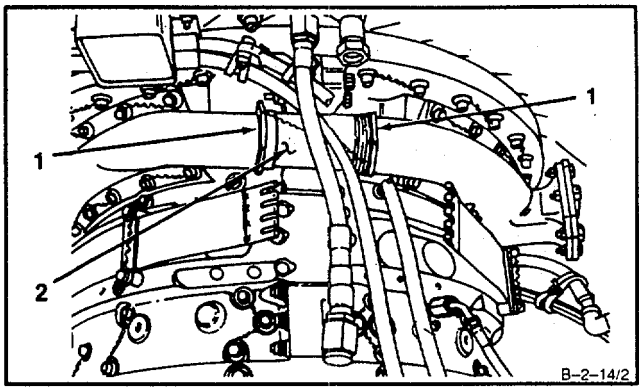

2. **Disconnect hose assembly (3).**

3. **Remove** lockwire and **two bolts (4).**

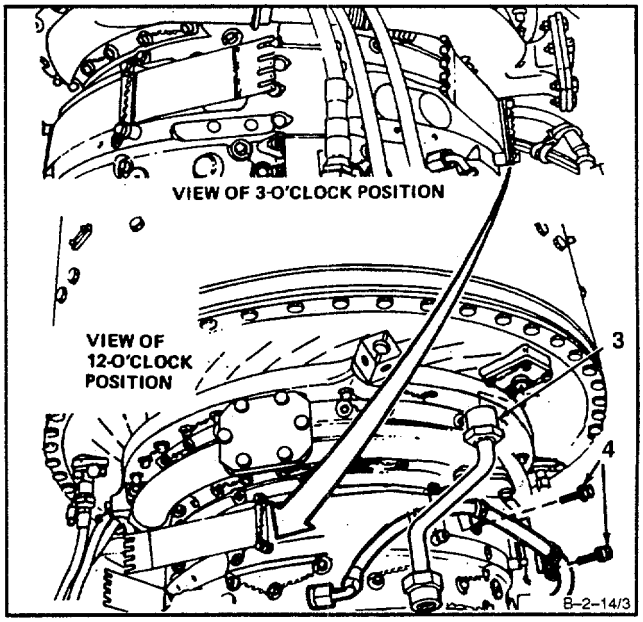

4. **Remove** lockwire, **23 bolts (5),** and washers (6).

5. **Remove anti-icing gallery cover upper half (7)** and gasket (8).

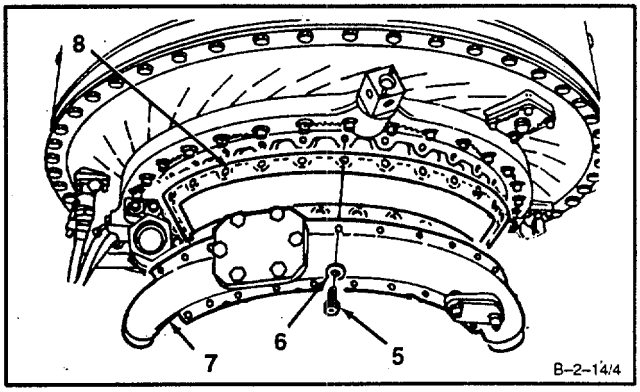

GO TO NEXT PAGE

NOTE

Steps 6 and 7 apply to connectors at both 3- and 9-o'clock positions. Connector at 3-o'clock position is shown.

6. **Remove connector (2)** with two nuts (1) installed.

7. **Remove two nuts (1),** spacers (9), and retainers (10) from connector (2).

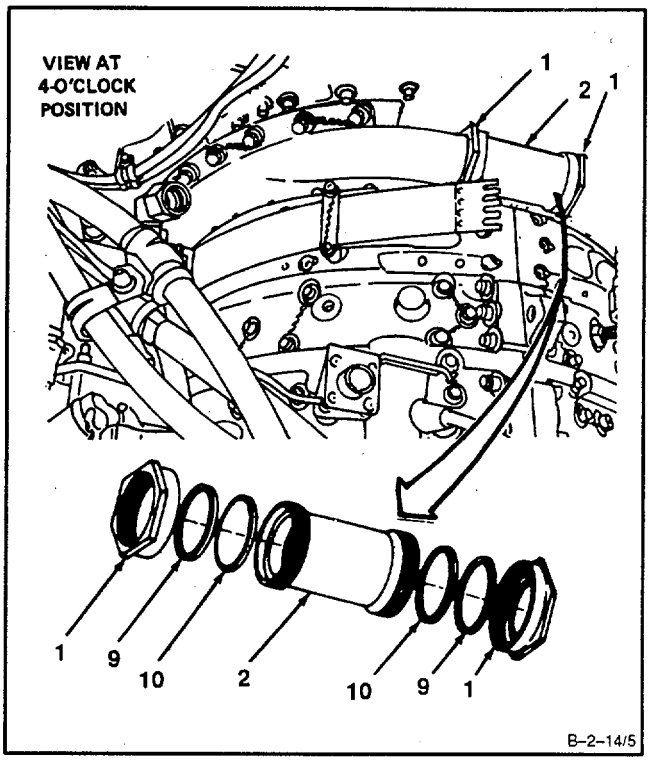

8. **Remove** lockwire, **23 bolts (11),** and two strips (12 and 13).

9. **Remove air gallery cover lower half (14)** and gasket (15).

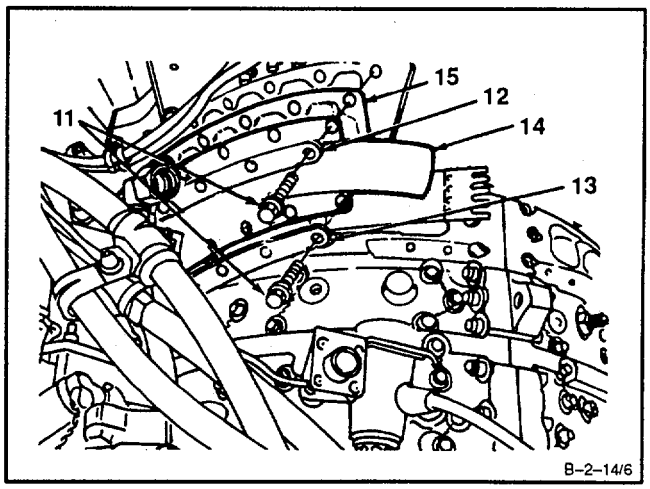

FOLLOW-ON MAINTENANCE:

None

END OF TASK

2-16 CLEAN ANTI-ICING AIR GALLERY COVER 2-16

INITIAL SETUP

Applicable Configurations:

All

Tools:

Powerplant Mechanic's Tool Kit,
NSN 5180-00-323-4944
Putty Knife

Materials:

Dry Cleaning Solvent (E19)
Gloves (E24)
Lint-Free Cloth (E30)

Personnel Required:

Aircraft Powerplant Repairer

Equipment Condition:

Off Engine Task
Oil Cooler Assembly Removed (Task 8-12)
Interstage Air-Bleed Actuator Removed (Task 2-1)
Dual Chip Detector Removed (Task 8-39)
Hydromechanical Assembly Removed (Task 6-1)
Main Fuel Filter and Bracket Removed (Task 6-28)
Anti-Icing Air Gallery Cover Removed (Task 2-15)

General Safety Instructions:

WARNING

Dry cleaning solvent (E17) is flammable and toxic. It can irritate skin and cause burns. Use only In well-ventilated area, away from heat and open flame. In case of contact, Immediately flush skin or eyes with water for at least 15 minutes. Get medical attention for eyes.

WARNING

The anti-icing air gallery cover is made from a magnesium/nickel alloy containing radioactive thorium; particles of this material, resulting from blending or polishing are hazardous to your health If Ingested or otherwise Introduced into your body. Do not eat, drink, or smoke In any area where these particles might be present. Wash your hands thoroughly after working with this material. If exposure or Injury occurs, no matter how slight, get medical attention.

GO TO NEXT PAGE

WARNING

The anti-Icing air gallery cover is made from a magnesium/nickel alloy containing radioactive thorium; particles of this material, resulting from blending or polishing are hazardous to your health if ingested or otherwise Introduced into your body. Do not eat, drink, or smoke In any area where these particles might be present. Wash your hands thoroughly after working with this material. If exposure or injury occurs, no matter how slight, get medical attention.

1. Wear gloves (E24). **Clean anti-icing air gallery cover upper half (1) and lower half (2).** Use lint-free cloth (E30), dampened in dry cleaning solvent (E19). Use putty knife to remove gasket material from sealing surfaces (3). Use brush to clean inside surfaces (4).

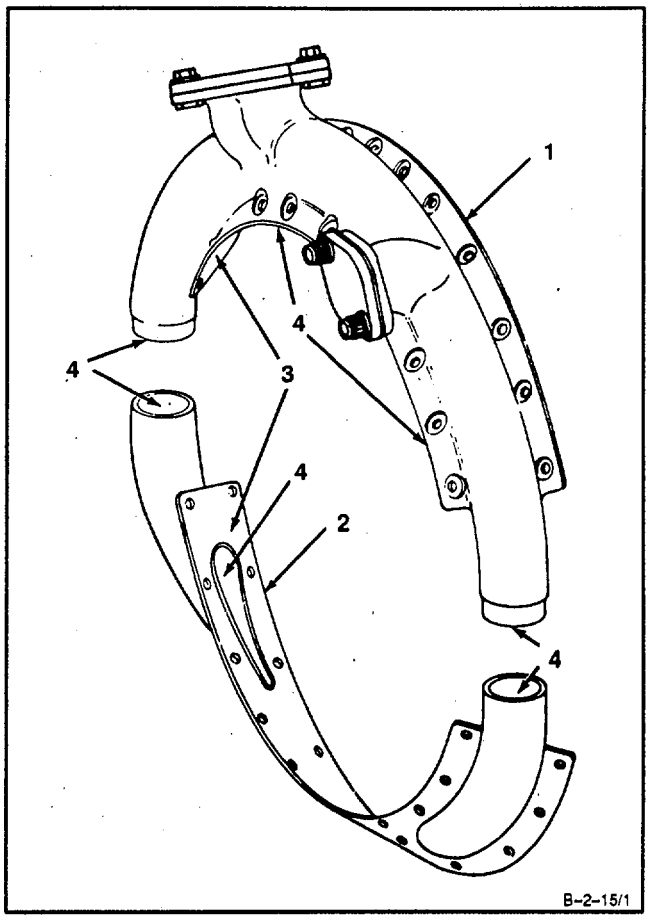

2. **Clean two connectors (5), four nuts (6), four spacers (7), four retainers (8) and two strips (9)** Use lint-free cloth (E30) dampened in dry cleaning solvent (E17). Use brush to clean inside surfaces (10).

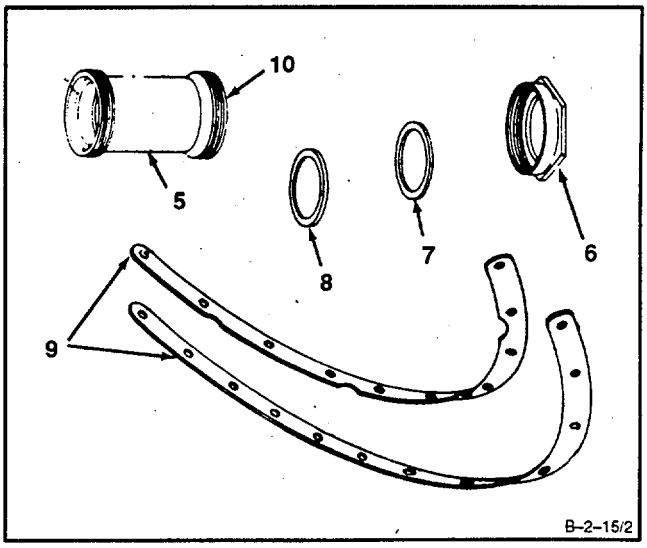

FOLLOW-ON MAINTENANCE:

Inspect Anti-Icing Air Gallery Cover (Task 2-17).

END OF TASK

2-17 INSPECT ANTI-AIR GALLERY COVER 2-17

INITIAL SETUP

Applicable Configurations:

All

Tools:

Technical Inspection Tool Kit,
NSN 5180-00-323-5114

Materials

None

Personnel Required:

Aircraft Powerplant Inspector

Equipment Condition:

Off Engine Task

1. **Inspect anti-Icing air gallery cover upper half (1).**

   a. There shall be no cracks or corrosion.

   b. There shall be no gouges or chafes deeper than 0.030 inch in cover (2). Any length or width gouge or chafe is acceptable.

   c. There shall be no gouges or chafes deeper than 0.015 inch in tubes (3). Any length or width gouge or chafe is acceptable.

   d. There shall be no two gouges or chafes closer to each other than 1 inch.

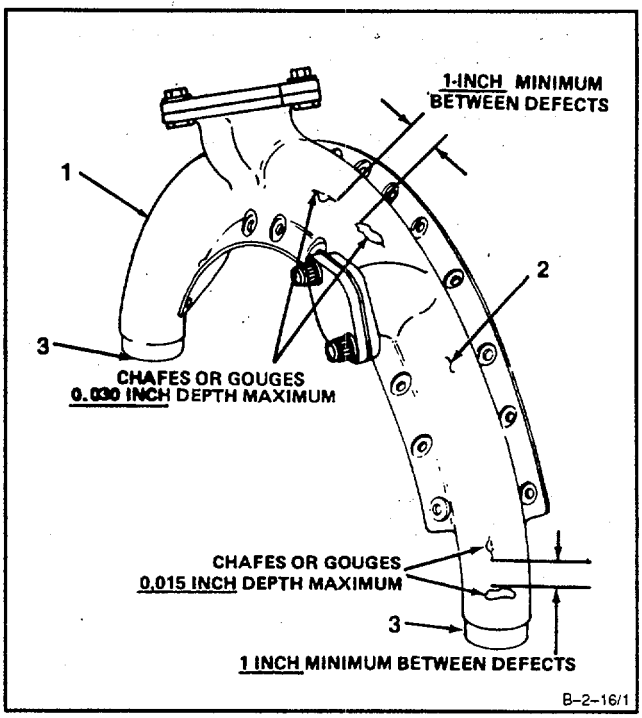

GO TO NEXT PAGE

2. **Inspect anti-Icing air gallery cover lower half (4).**

   a. There shall be no cracks.

   b. There shall be no gouges or chafes deeper than 0.030 inch in cover (5). Any length or width gouge or chafe is acceptable.

   c. There shall be no gouges or chafes deeper than 0.015 inch in tubes (6). Any length or width gouge or chafe is acceptable.

   d. There shall be no two gouges or chafes closer to each other than 1 inch.

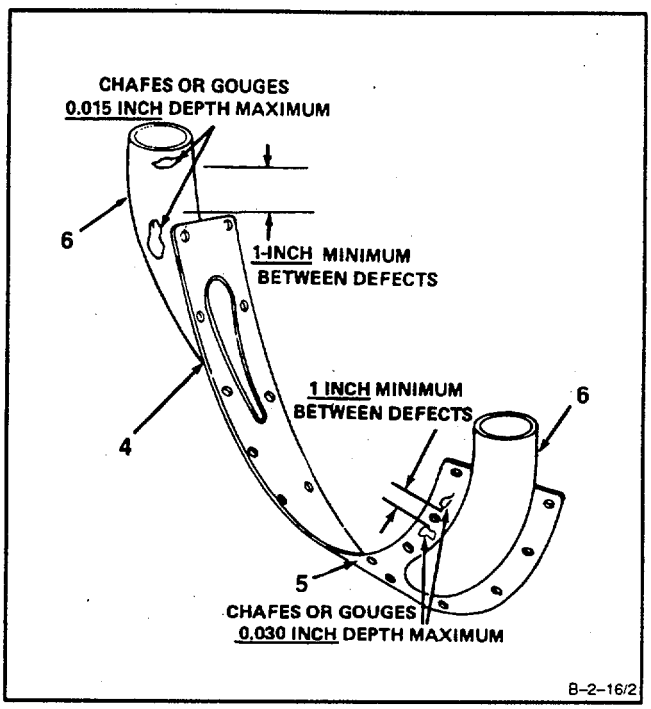

3. **Inspect two connector (7), four nuts (8), four spacers (9), four retainers (10) and two strips (11).** There shall be no cracks.

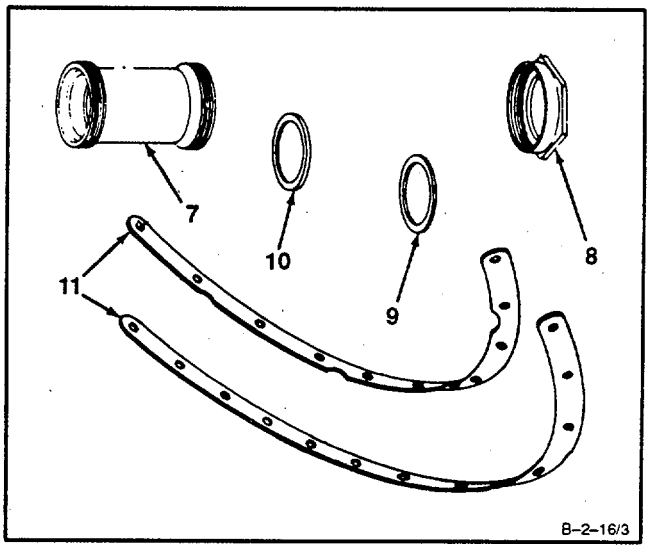

FOLLOW-ON MAINTENANCE:
None

END OF TASK

INITIAL SETUP

Applicable Configurations

All

Tools:

Technical Inspection Tool Kit,
NSN 5180-00-323-5114

Materials:

Acid Swabbing Brush (E2)
Carborundum Stone (E11)
Crocus Cloth (E16)
Gray Enamel (E26)

Personnel Required:

Aircraft Powerplant Repairer
Aircraft Powerplant Inspector

References:

Task 1-110

Equipment Condition:

Off Engine Task

General Safety Instructions:

WARNING

The anti-Icing air gallery cover is made from a magnesium/nickel alloy containing radioactive thorium; particles of this material, resulting from blending or polishing are hazardous to your health if Ingested or otherwise introduced into your body. Do not eat, drink, or smoke in any area where these particles might be present. Wash your hands thoroughly after working with this material. If exposure or injury occurs, no matter how slight, get medical attention.

WARNING

The anti-icing air gallery cover is made from a magnesium/nickel alloy containing radioactive thorium; particles of this material, resulting from blending or polishing are hazardous to your health If Ingested or otherwise Introduced Into your body. Do not eat, drink, or smoke in any area where these particles might be present. Wash your hands thoroughly after working with this material. If exposure or Injury occurs, no matter how slight, get medical attention.

1. **Repair anti-icing air gallery cover upper half (1).**

   a. Repair gouges or chafes up to 0.015 inch deep on tubes (2). Blend repair. Use carborundum stone (Ell) and crocus cloth (E16).

   b. Repair gouges or chafes up to 0.030 inch deep on cover (3). Blend repair. Use carborundum stone (Ell) and crocus cloth (E16).

   c. Repair corroded surfaces or damaged paint. **Use gray enamel (E26)** and acid swabbing brush (E2) (Ref. Task 1-110).

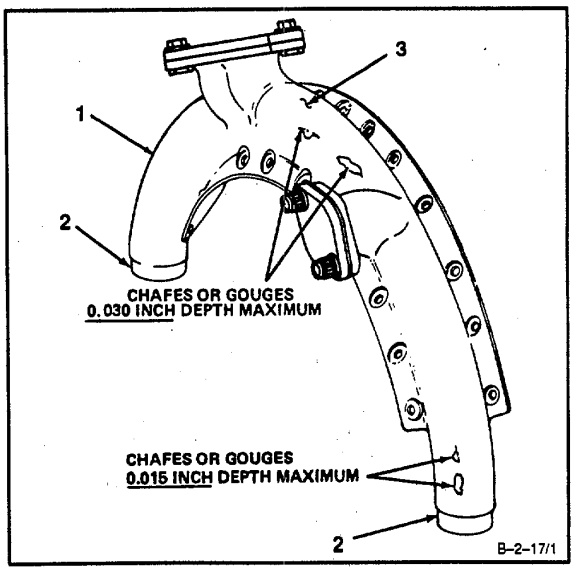

GO TO NEXT PAGE

2. **Repair anti-icing air gallery cover lower half (4).**

   a. Repair gouges or chafes up to 0.015 inch deep on tubes (5). Blend repair. Use carborundum stone (Ell) and crocus cloth (E16).

   b. Repair gouges or chafes up to 0.030 inch deep on cover (6). Blend repair. Use carborundum stone (Ell) and crocus cloth (E16).

   c. Repair corroded surfaces or damaged paint. **Use gray enamel (E26)** and acid swabbing brush (E2) (Ref. Task 1-110).

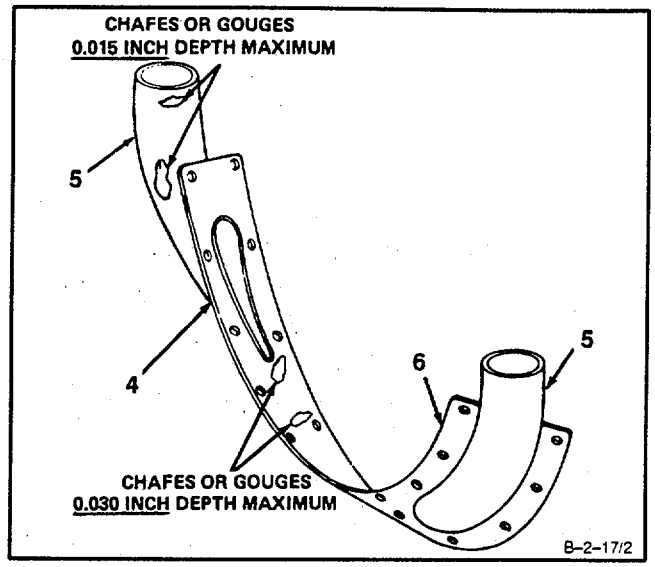

INSPECT

FOLLOW-ON MAINTENANCE:
None

END OF TASK

2-19 INSTALL ANTI-ICING AIR GALLERY COVER 2-19

INITIAL SETUP

Applicable Configurations:
All

Tools:
Powerplant Mechanic's Tool Kit,
NSN 5180-00-323-4944
Technical Inspection Tool Kit,
NSN 5180-00-323-5114
Torque Wrench, 30-150 Inch-Pounds
Open-End Wrench, 1-5/8 Inch

Materials:
Lockwire (E33)

Parts:
Gaskets
Seals

Personnel Required:
Aircraft Powerplant Repairer
Aircraft Powerplant Inspector

References:
TM 1-2840-252-23P

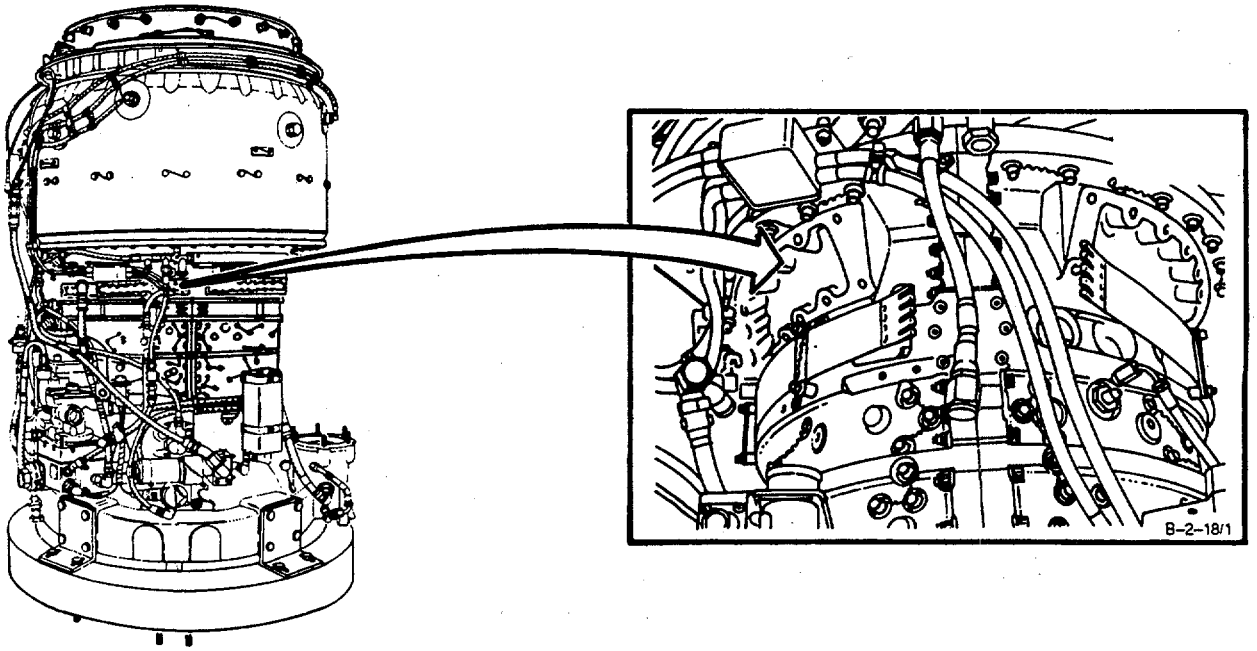

GO TO NEXT PAGE

NOTE

If anti-icing air gallery cover is a replacement, do steps 1 thru 4. If same anti-icing air gallery cover that was removed is to be installed, skip steps 1 thru 4.

1. **Remove** six nuts (1), six bolts (2), **cover (3),** and gasket (4) **from removed air gallery cover upper half** (5).

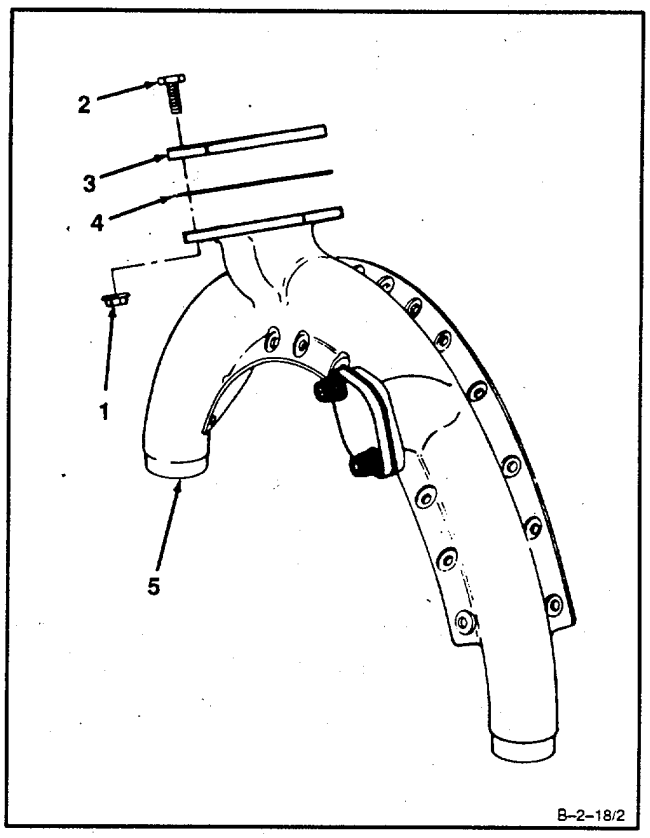

GO TO NEXT PAGE

2. Remove two nuts (6), two bolts (7), four washers (8), **cover (9),** and gasket (10) **from removed air gallery cover upper half (5).**

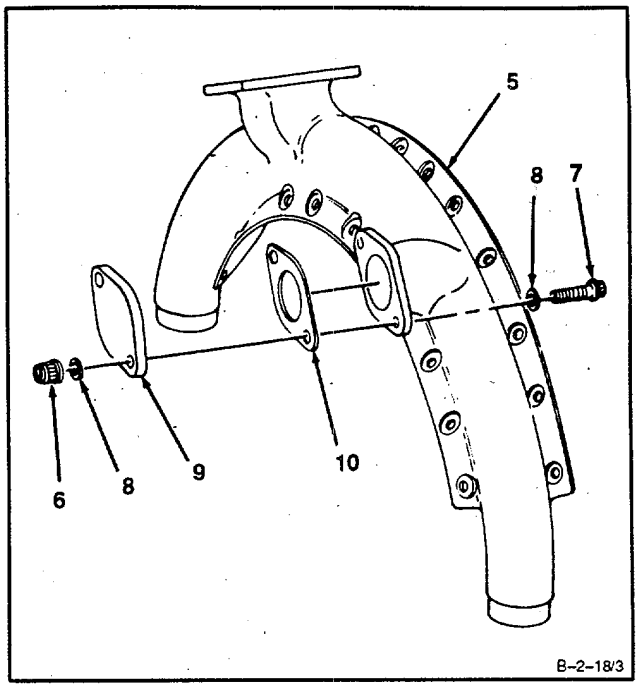

3. Install gasket (10), **cover (9),** two bolts (7), four washers (8), and two nuts (6)**on serviceable air gallery cover upper half (11).**

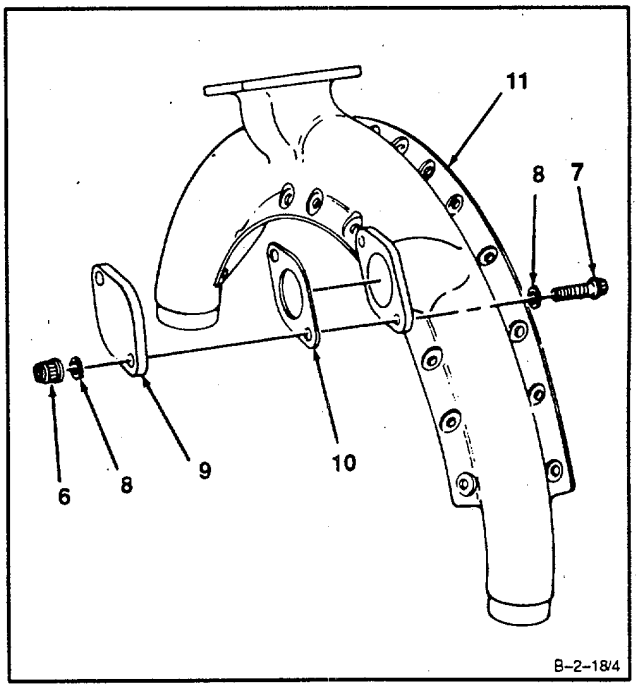

GO TO NEXT PAGE

4. **Install** gasket (4), **cover (3),** six bolts (2), and nuts (1) **on serviceable air gallery cover upper half (11).**

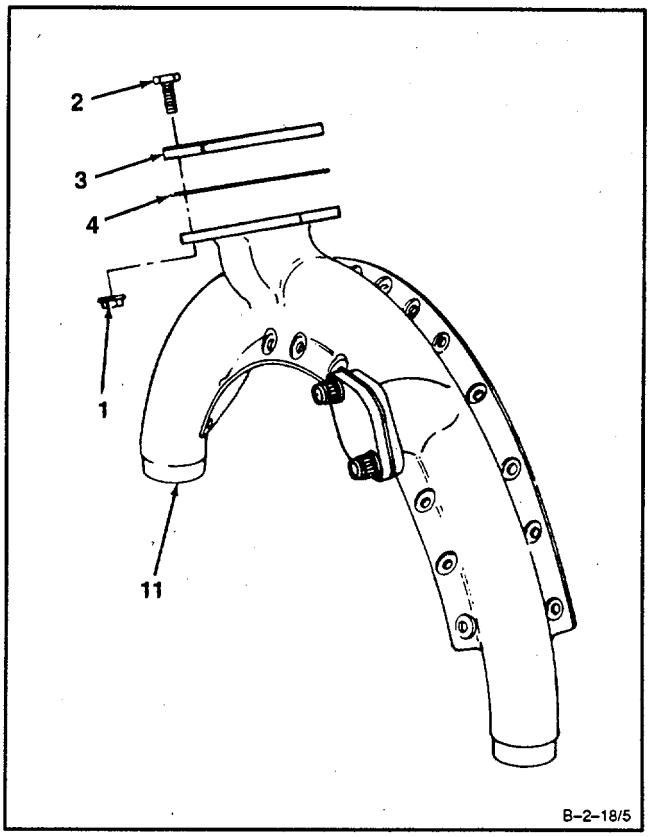

GO TO NEXT PAGE

NOTE

In following step, engage only two or three threads of 23 bolts.

5. **Install** gasket (12), **air gallery cover lower half (13),** and strips (14 and 15) on compressor housing (16). Loosely install 23 bolts (17).

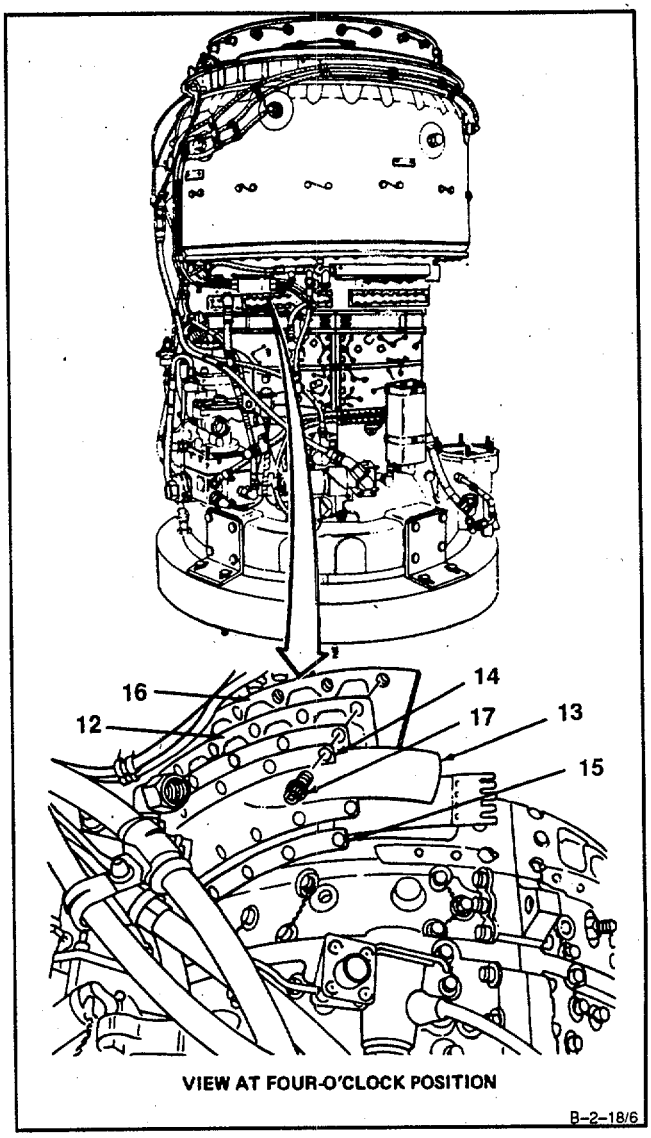

GO TO NEXT PAGE

NOTE

Steps 6 and 7 apply to connectors at each end of air gallery cover lower half (3- and 9-o'clock positions). Connector at 3-o'clock position is shown.

NOTE

When installing nuts on connector, engage about two threads only.

6. **Install** two retainers (18), spacers (19), and **nuts** (20) on connector (21).
7. **Install connectors (21)** on ends of air gallery cover lower half (13).
8. **Torque 23 bolts (17) to 85 inch-pounds** and lockwire. Use lockwire (E33).

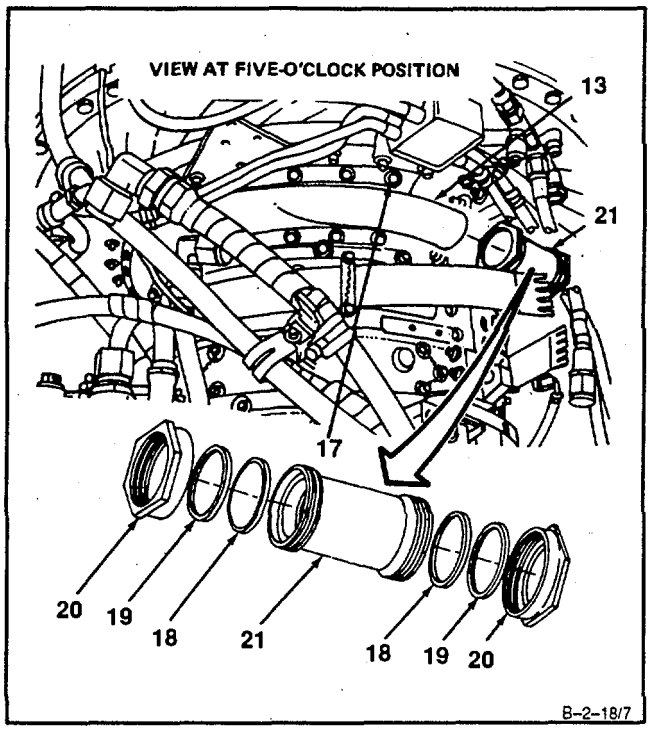

9. Install gasket (22) and **air gallery cover upper half (11)** on compressor housing (16) with ends of air gallery cover upper half (11) in two connectors (21).

NOTE

In following step, engage only two or three threads of 23 bolts.

10. Loosely **install** 23 washers (23) and **bolts** (24). **Torque bolts (24) to 85 inch-pounds** and lockwire. Use lockwire (E33).

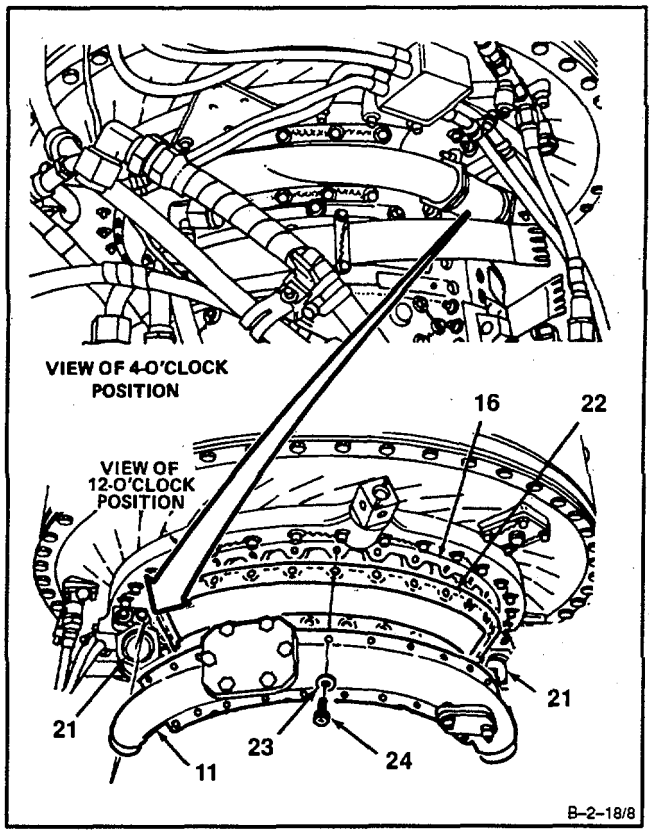

GO TO NEXT PAGE

11. **Connect tube assembly** (25) to adapter (26).

12. **Install two bolts** (27) and lockwire. Use lockwire (E33).

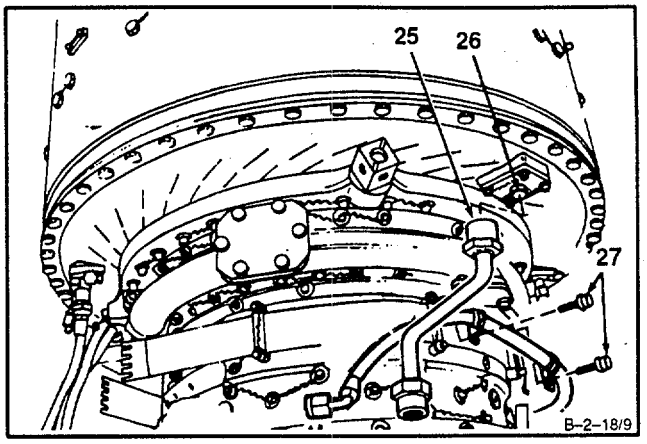

NOTE

Step 13 applies to connectors at 3- and 9-o'clock positions. Connector at 3-o'clock position is shown.

13. **Torque two nuts** (20) **on connectors (21) to** 90 **inch-pounds.** Use crowfoot attachment and 1-5/8 inch open-end wrench. Lockwire nuts (20). Use lockwire (E33).

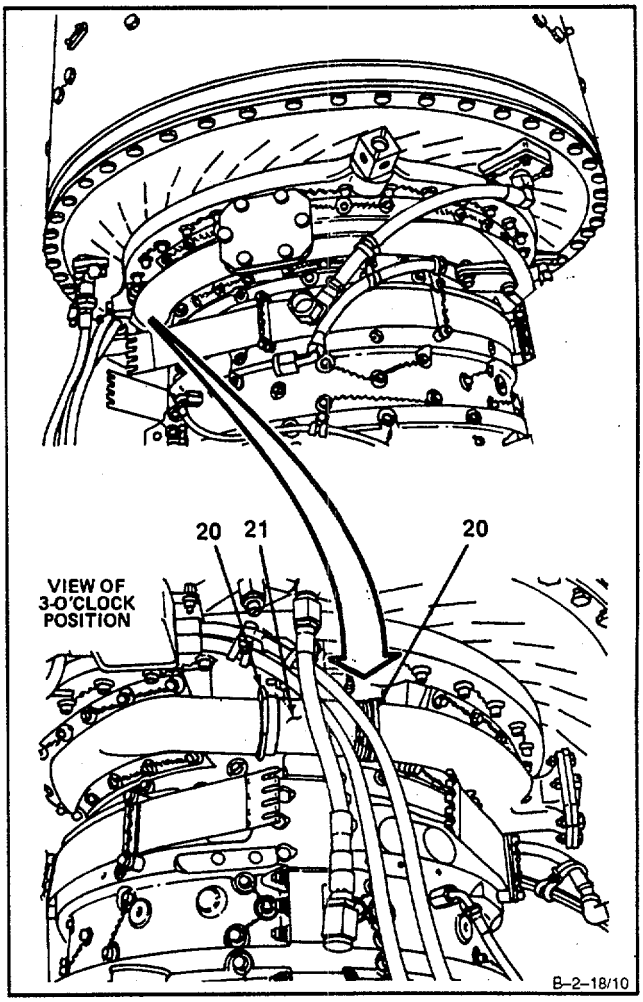

INSPECT

FOLLOW-ON MAINTENANCE:

Install Main Fuel Filter and Bracket (Task 6-34).
Install Hydromechanical Assembly (Task 6-5).
Install Dual Chip Detector (Task 8-46).
Install Interstage Air-Bleed Actuator (Task 2-8).
Install Oil Cooler Assembly (Task 8-18).
Install Flow Programming Valve (Task 8-22).

END OF TASK

SECTION IV

COMPRESSOR HOUSING

2-20 REMOVE UPPER COMPRESSOR HOUSING 2-20

INITIAL SETUP

Applicable Configurations:

All

Tools

Powerplant Mechanic's Tool Kit, NSN 5180-00-323-4944
Mechanical Puller (T4)
Padded Conduit Pliers

Materials:

None

Personnel Required:

Aircraft Powerplant Repairer (2)

Equipment Condition:

Engine Oil System Drained (Task 1-69)
Flow Programming Valve Removed (Task 8-19)
Oil Cooler Assembly Removed (Task 8-12)
In-Line Fuel Filter Assembly Removed (Task 6-35)
Ignition Exciter Removed (Task 7-11)
Oil Filler Assembly and Oil Filler Strainer Removed (Task 8-27)
Starter Drive Removed (Task 5-18)
Main Fuel Filter and Bracket Removed (Task 6-28)
Interstage Air-Bleed Actuator Removed (Task 2-1)
Compressor Bleed Band Removed (Task 2-10)

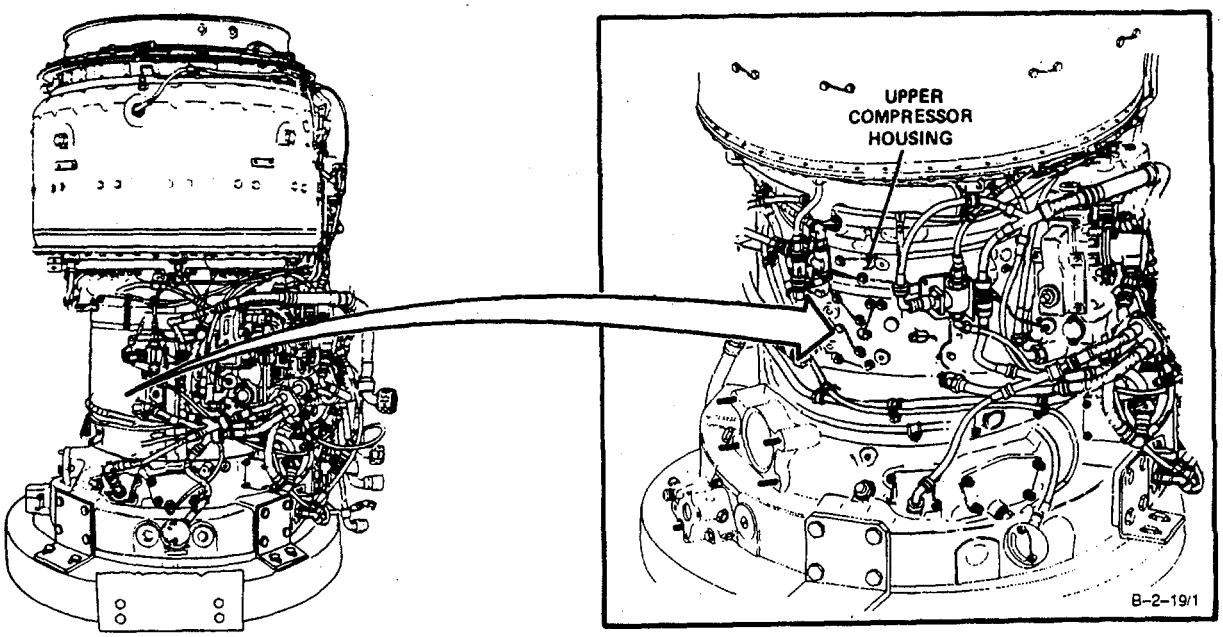

GO TO NEXT PAGE

CAUTION

When removing compressor housing, only upper or lower compressor housing half shall be removed at one time. At no time shall personnel attempt to remove both upper and lower compressor housing halves simultaneously. Failure to comply will cause engine damage.

1. **Remove** lockwire, two bolts (1), two clamps (2 and 3), and **bleed band retainer (4).**

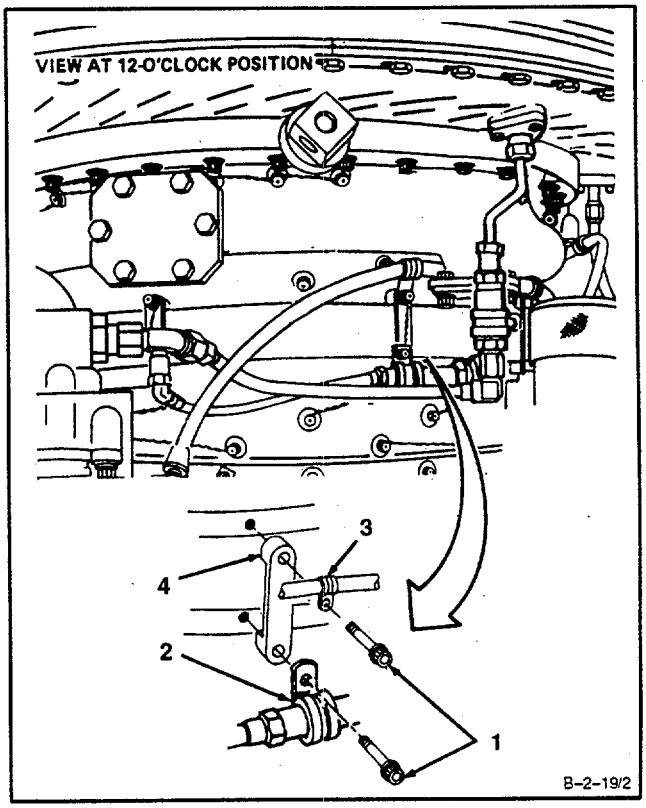

GO TO NEXT PAGE

2. **Disconnect tube assembly** (5) from connector (6).

3. Move water wash assembly (7) aside.

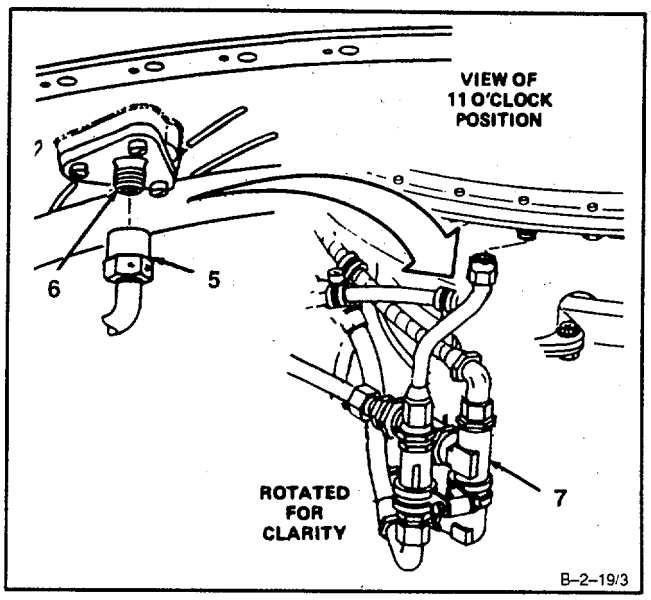

4. **Remove** lockwire, three screws (8), **connector** (9), and packing (10).

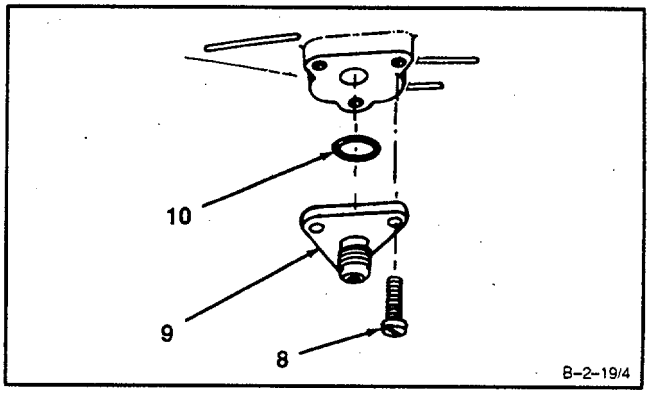

GO TO NEXT PAGE

5. **Remove** two bolts (11) and **bleed band retainer (12).**

6. **Remove** two bolts (13), clamp (14), and **bleed band retainer (15).**

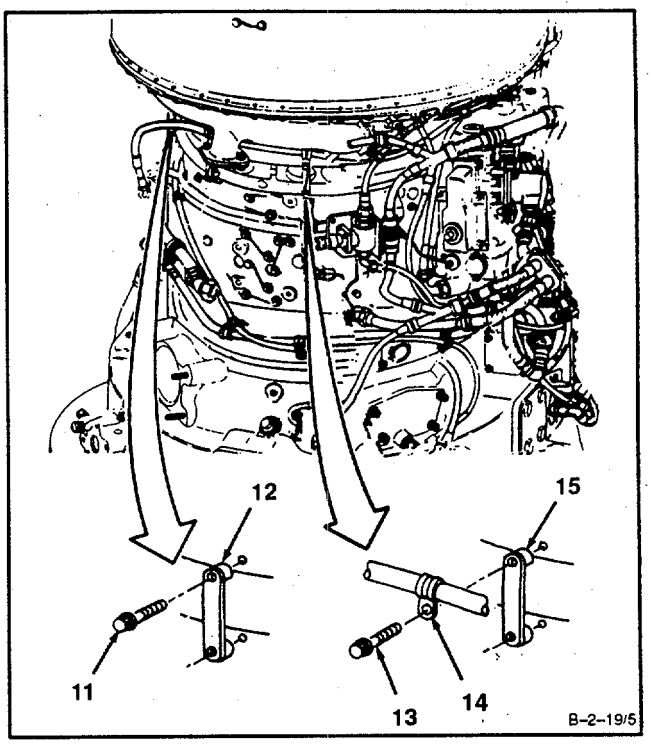

7. **Remove** nut (16), screw (17), and **clamp** (18).

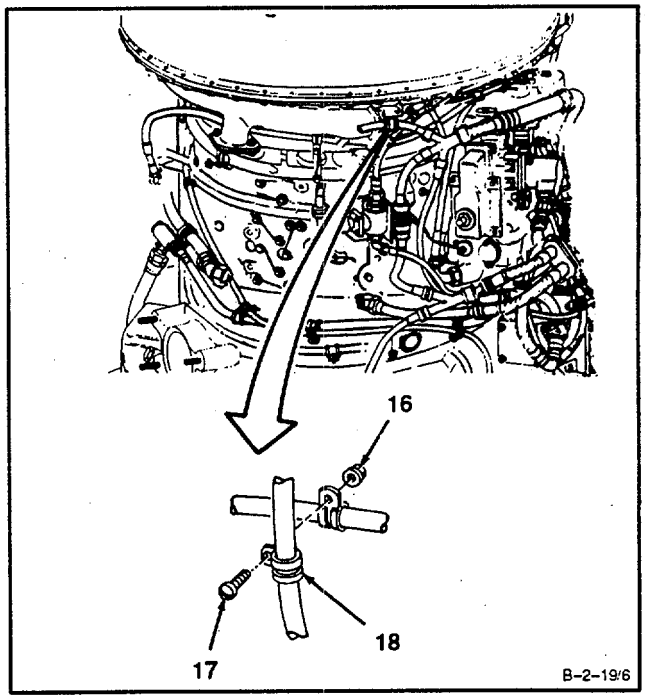

GO TO NEXT PAGE

8. **Disconnect hose assembly (19)** from union (20).

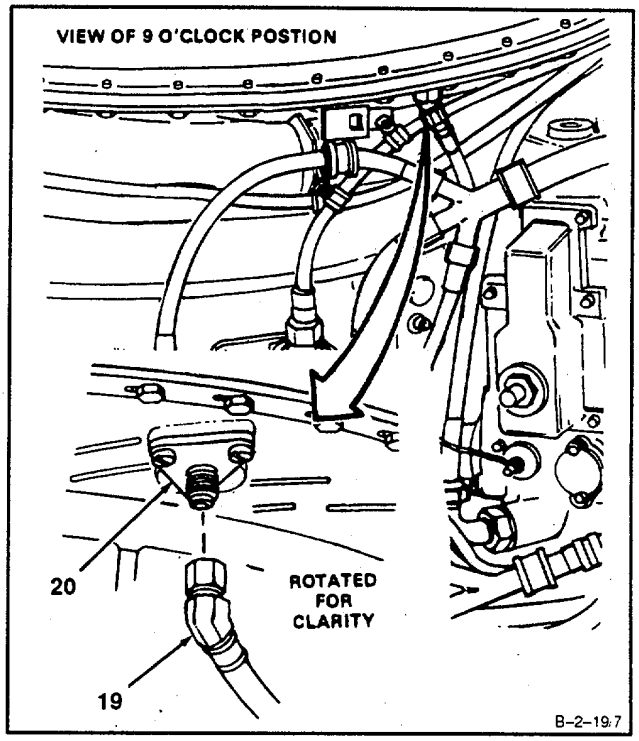

9. **Remove** lockwire, screw (21), **clamp (22**), hose (23), and bracket (24) (as an assembly).

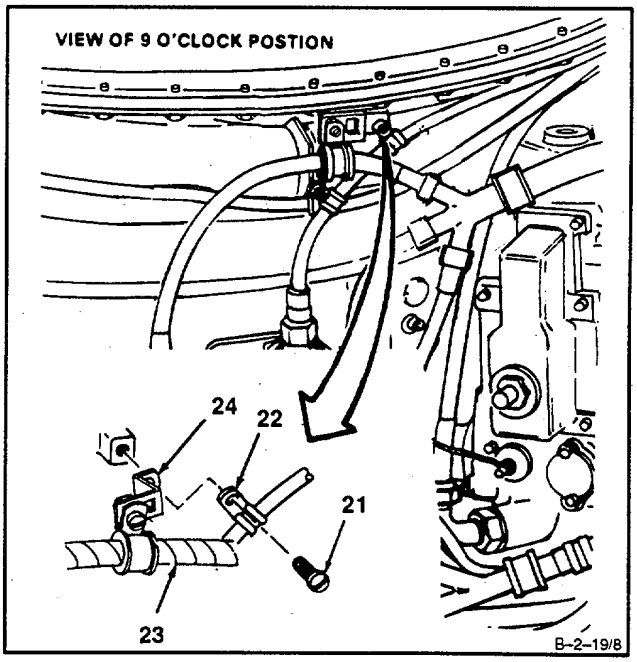

GO TO NEXT PAGE

10. **Disconnect hose assembly (25).**

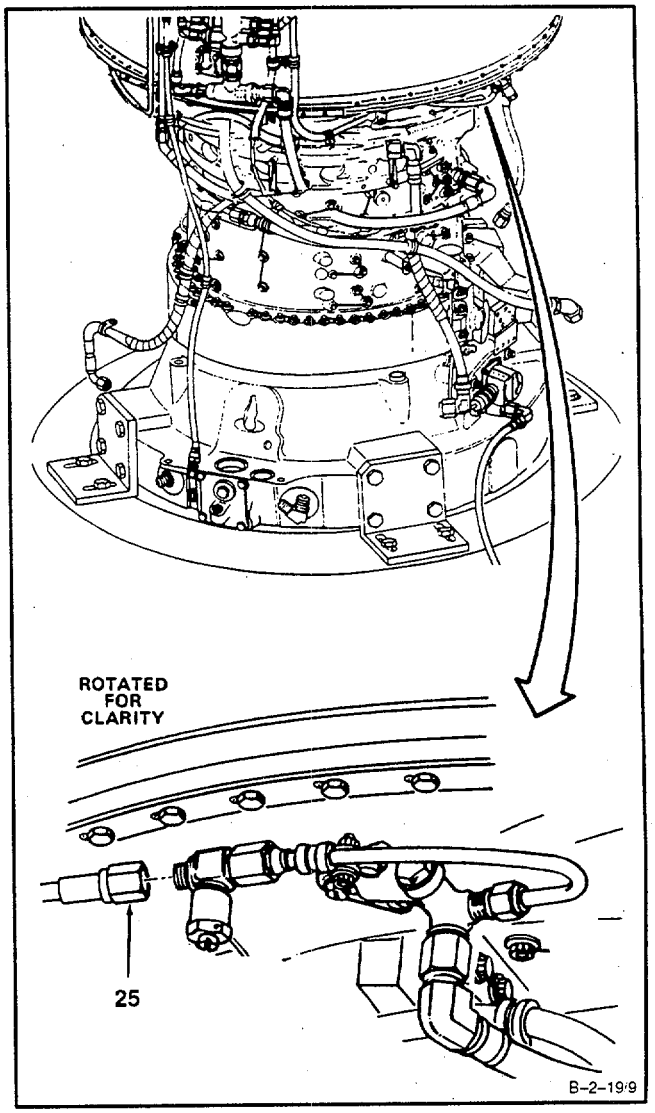

GO TO NEXT PAGE

11. Remove lockwire, two screws (26), and two washers (27).

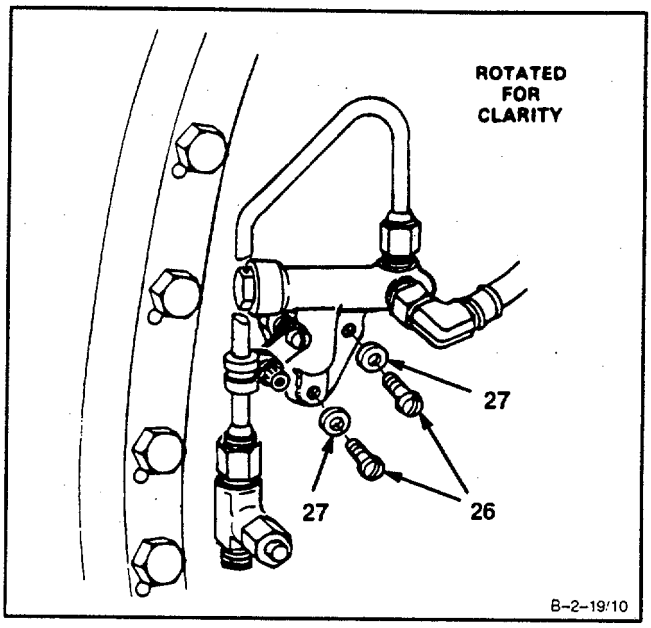

12. **Remove** lockwire, screw (28), bracket (29), two washers (30), No. **2 bearing pressure connector (31),** and packing (34). Leave tube assembly (32) and hose assembly (33) attached to No. 2 bearing pressure connector (31).

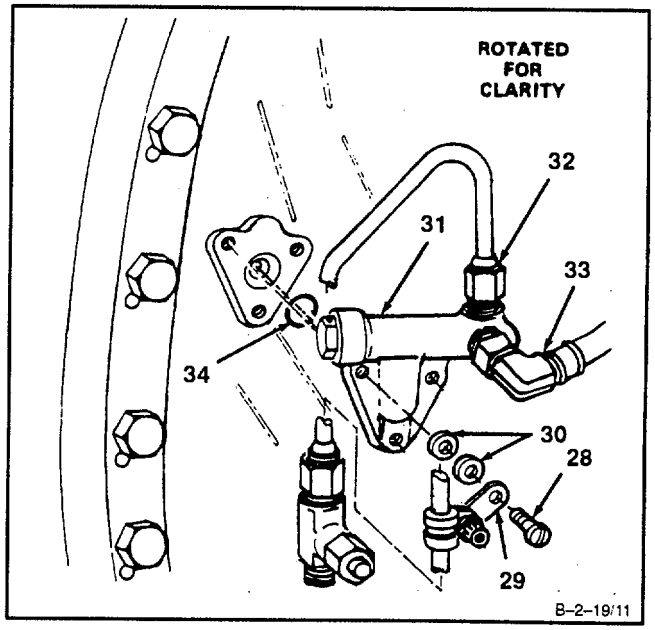

GO TO NEXT PAGE

13. **Disconnect hose assembly** (35) from hydromechanical assembly (36).

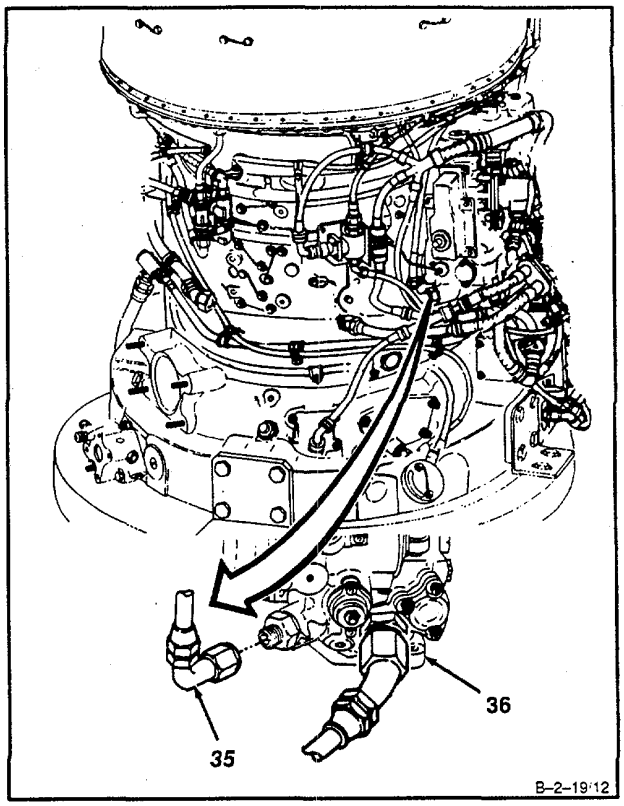

14. **Disconnect electric harness assembly connectors (37 and 38).**

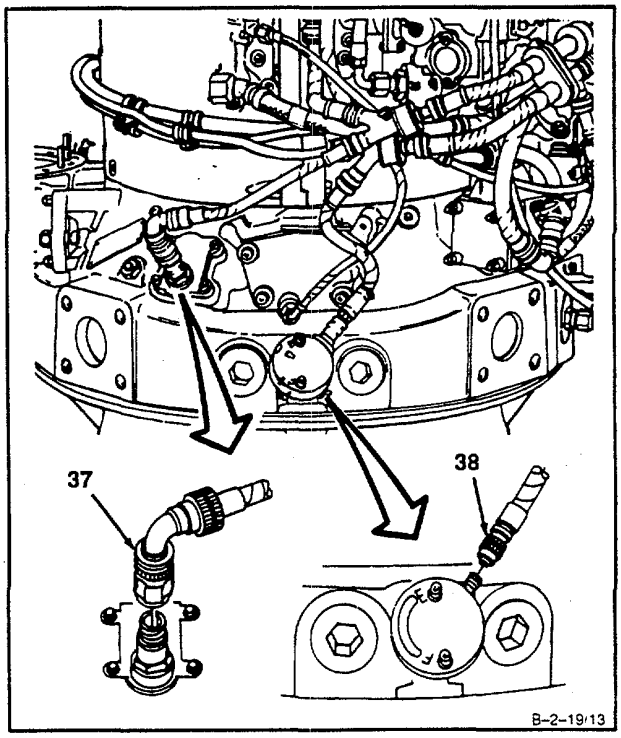

GO TO NEXT PAGE

2-20 REMOVE UPPER COMPRESSOR HOUSING .(Continued)
2-20

15. **Remove** nut **(**39), **clamp (40),** and screw (41).

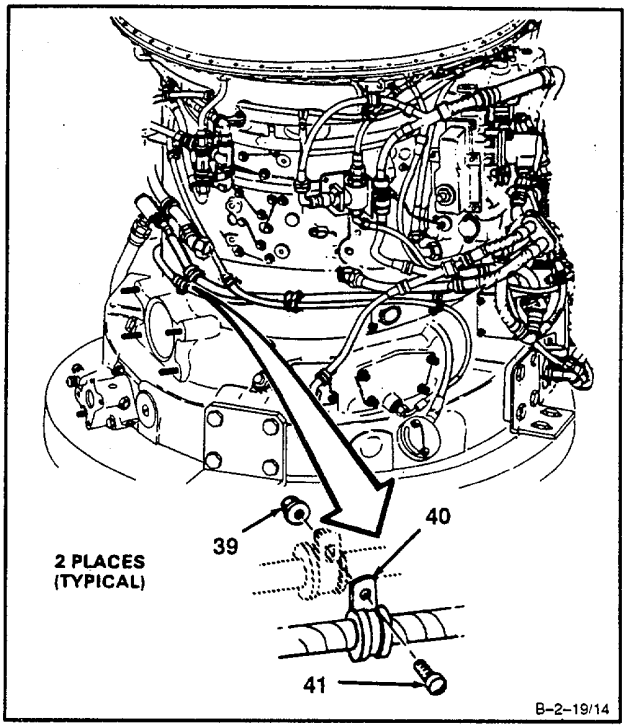

16. **Disconnect electrical connector (42)** from dummy connector (43).

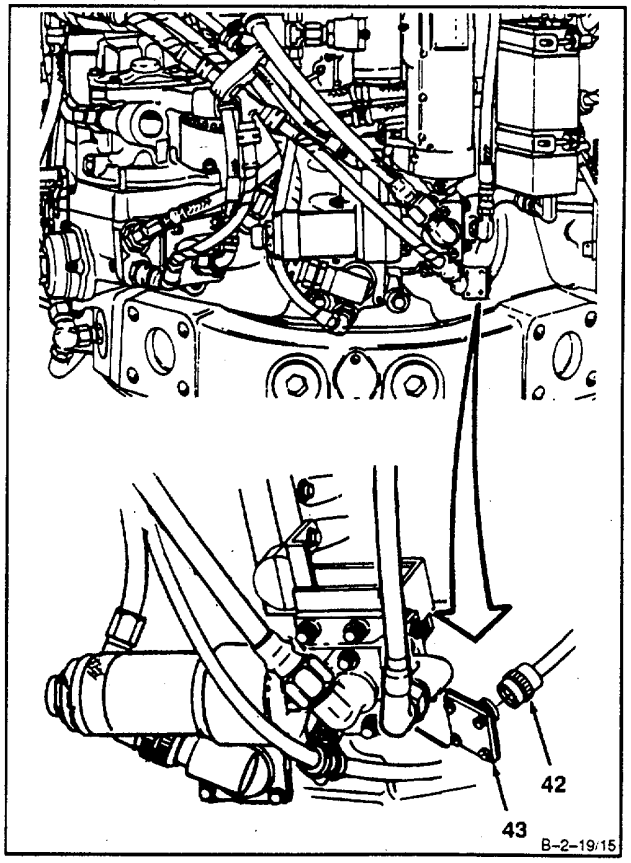

GO TO NEXT PAGE

17. **Remove** lockwire, screw (44), and **clamp (45).**

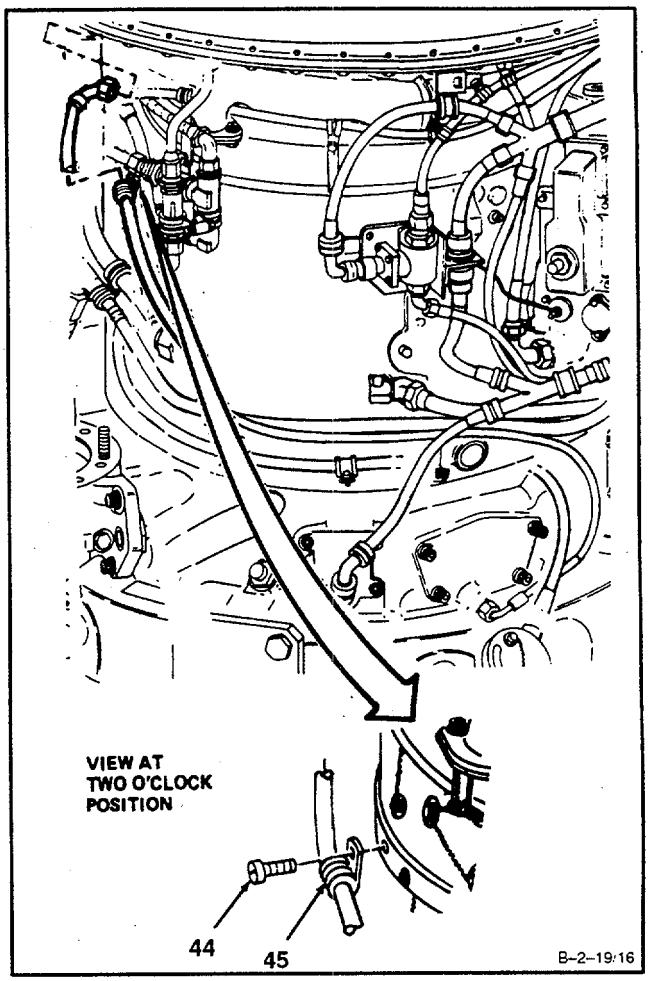

GO TO NEXT PAGE

18. **Remove** nut (46), screw (47), **clamp (48),** and **bracket (49**).

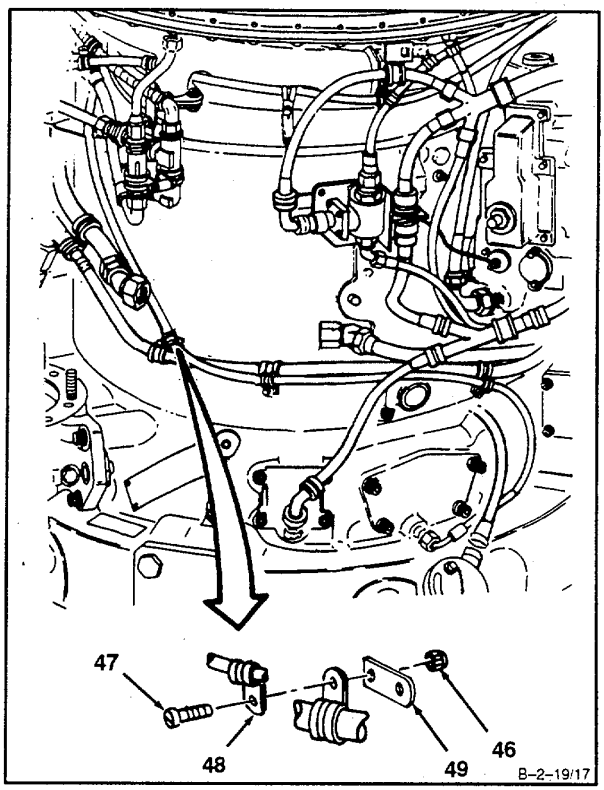

19. **Remove** nut (50), screw (51), and clamp (52).

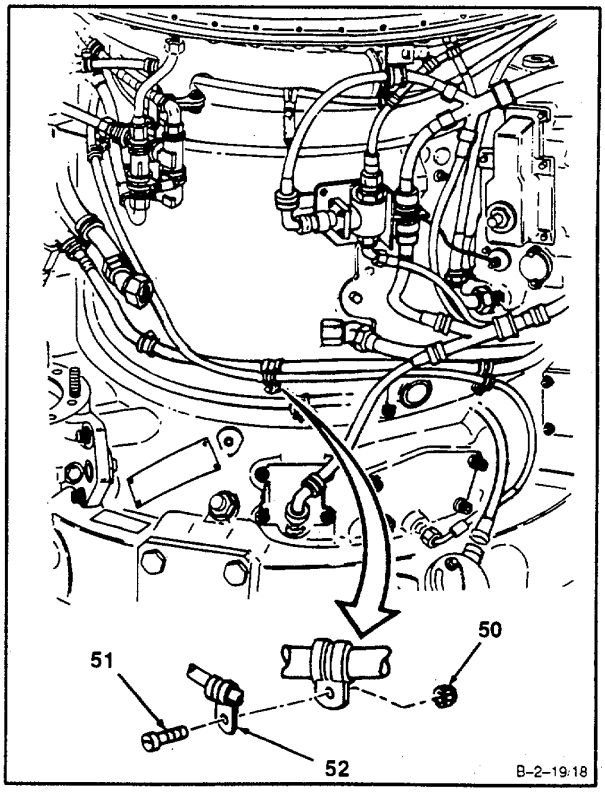

GO TO NEXT PAGE

20. **Remove** nut (53), screw (54), and **clamp (55).**

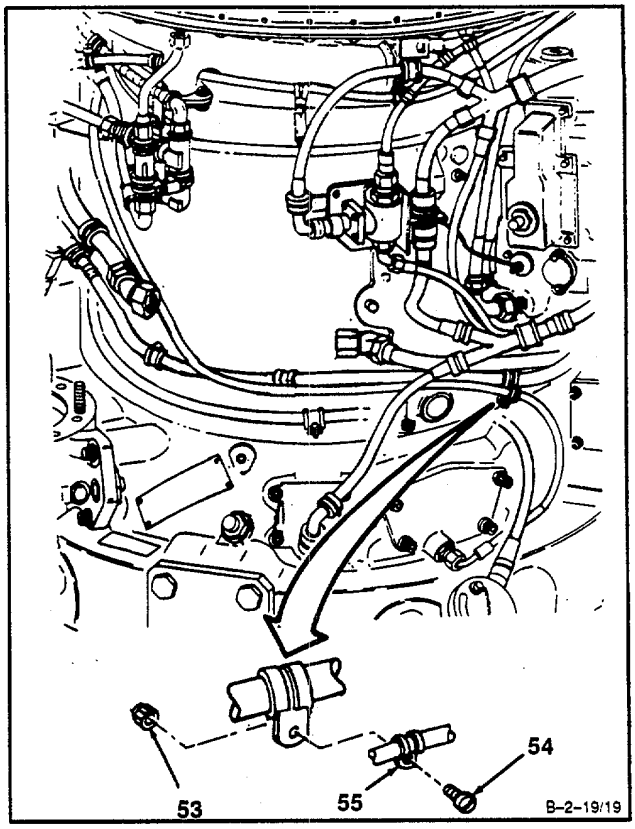

21. **Disconnect hose assembly** (**56)** from union (57).

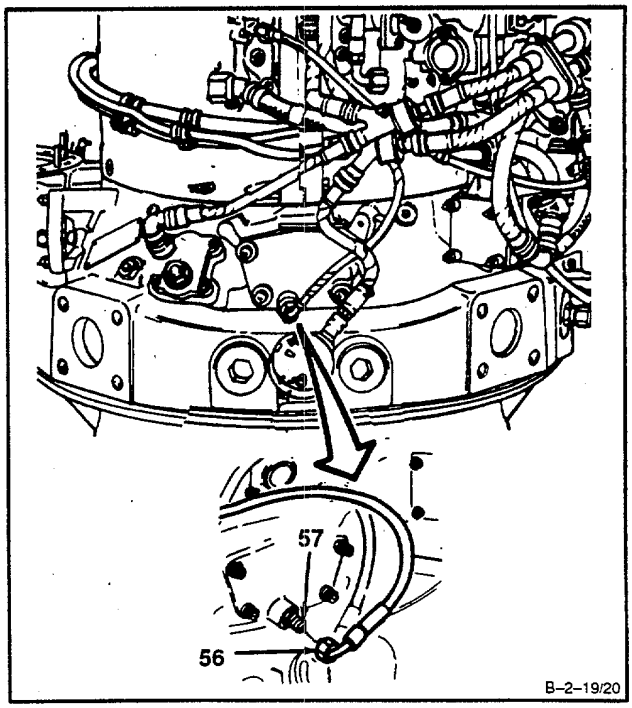

GO TO NEXT PAGE

22. **Disconnect tube and hose assembly (58)** from nipple (59).

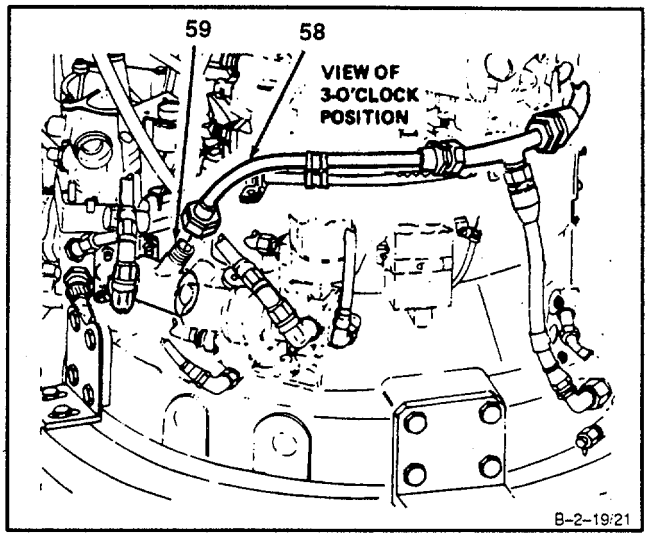

23. **Disconnect hose assembly (60).**

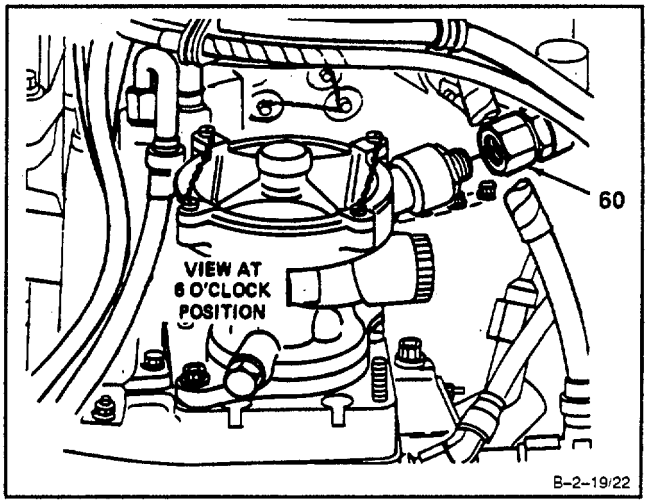

GO TO NEXT PAGE

24. **Disconnect tube and hose assembly (61).**

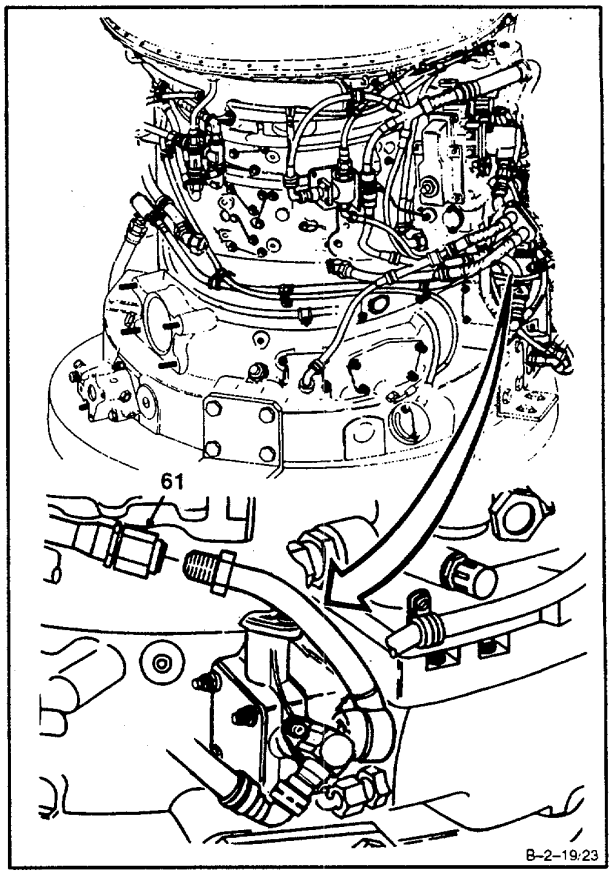

25. **Remove** nut (62), screw (63), and **clamp** (64) from bracket (65).

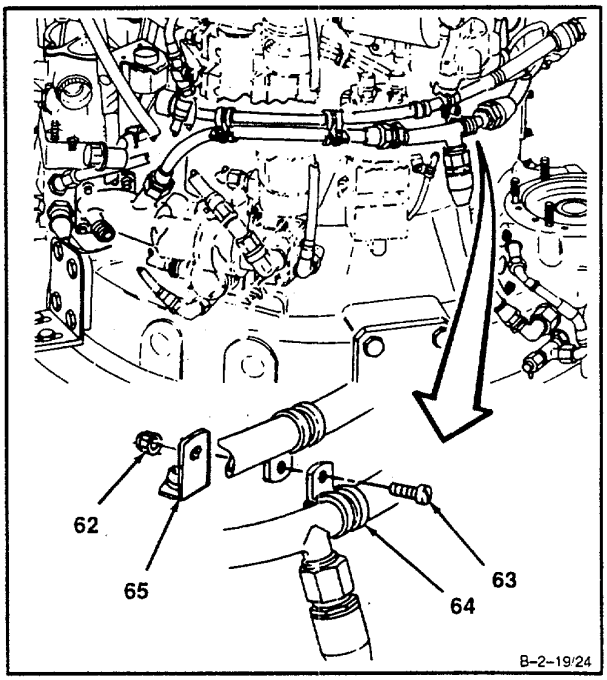

GO TO NEXT PAGE

26. **Disconnect hose assembly (66 and 67).**

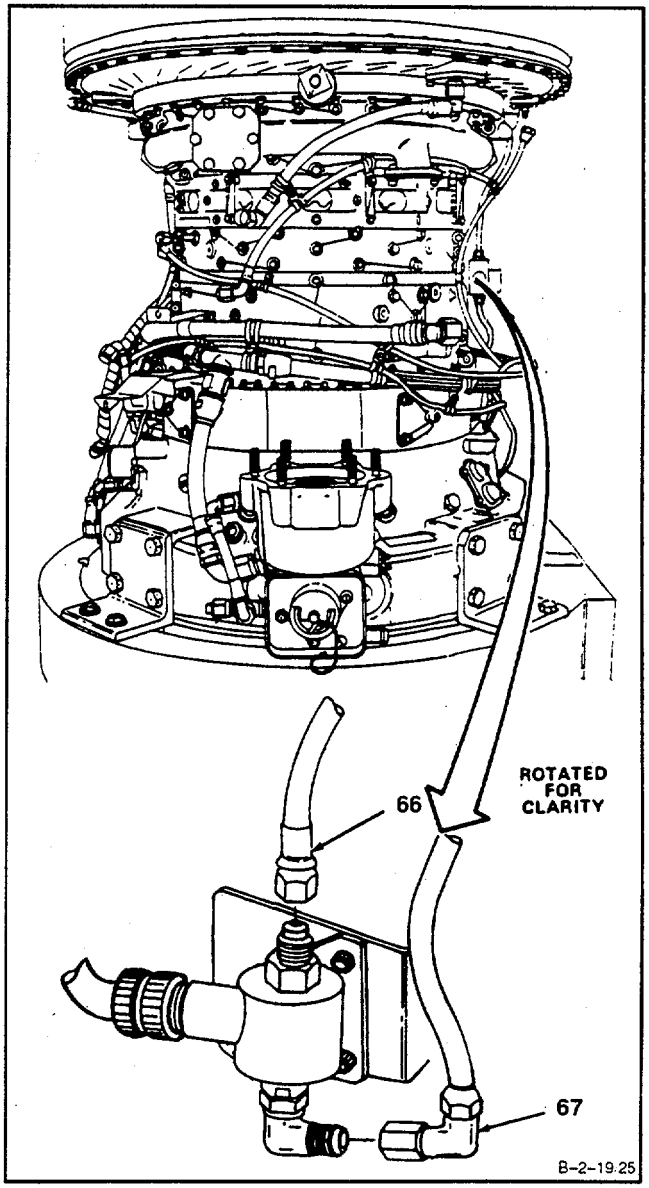

GO TO NEXT PAGE

27. **Remove** two nuts (68), washers (69), bolts (70), and spacers (71).
28. Move aside solenoid valve (72), electric harness (73), and bracket (74) (as an assembly).
29. Move aside electric harness (75 and 76) and bracket (77) (as an assembly).

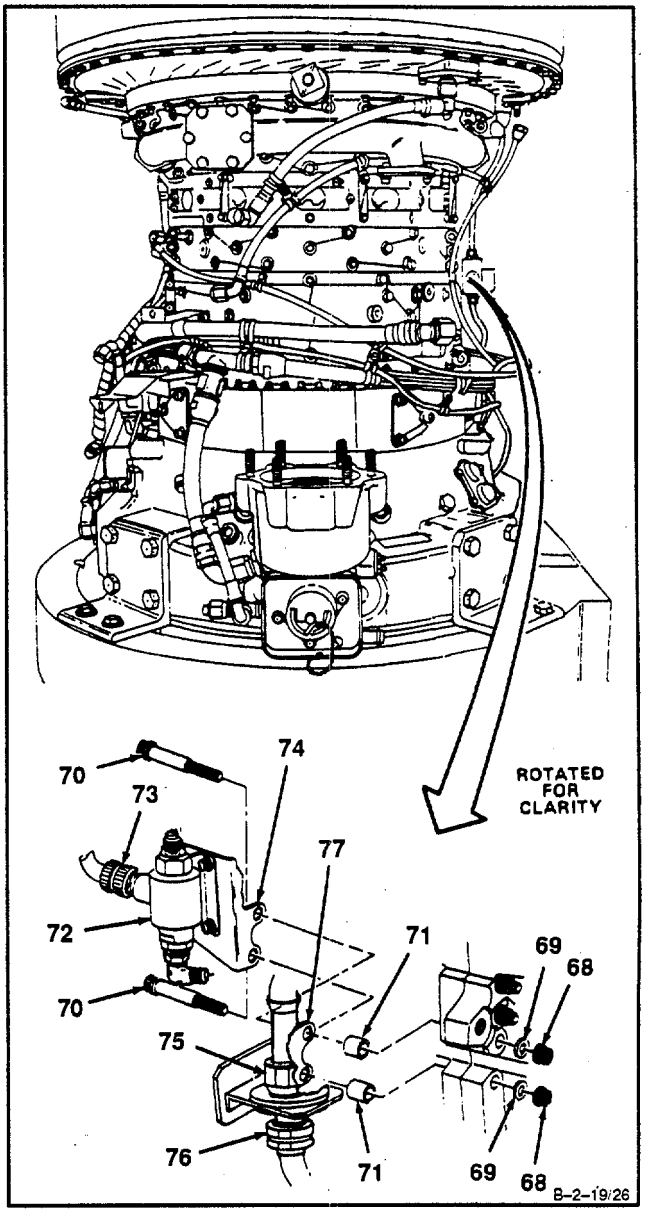

GO TO NEXT PAGE

30. **Remove** lockwire, two bolts (78), washers (79), **bracket (80),** and spacers (81).

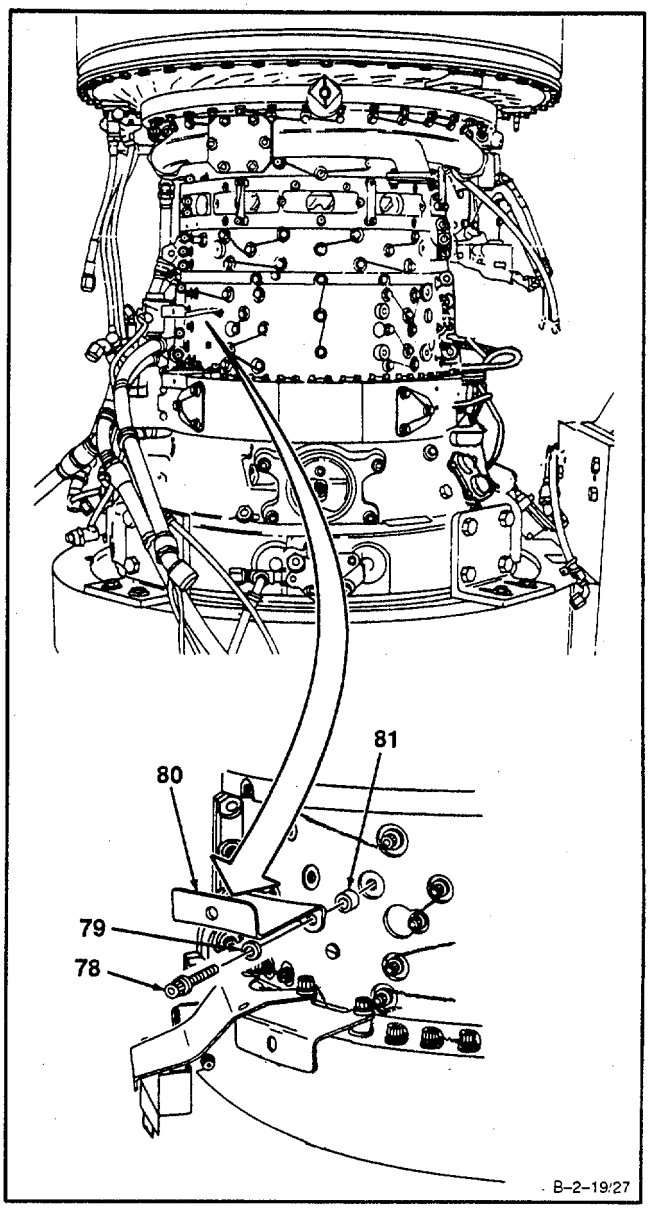

GO TO NEXT PAGE

31. **Remove** lockwire, two bolts (82), washers (83), **bracket (84),** and spacer (85).

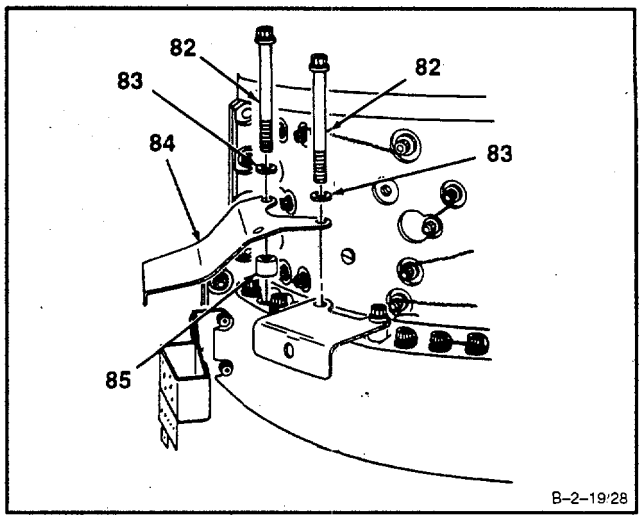

32. **Remove** lockwire, bolt (86), washer (87), **bracket** (88), and spacers (89 and 90).

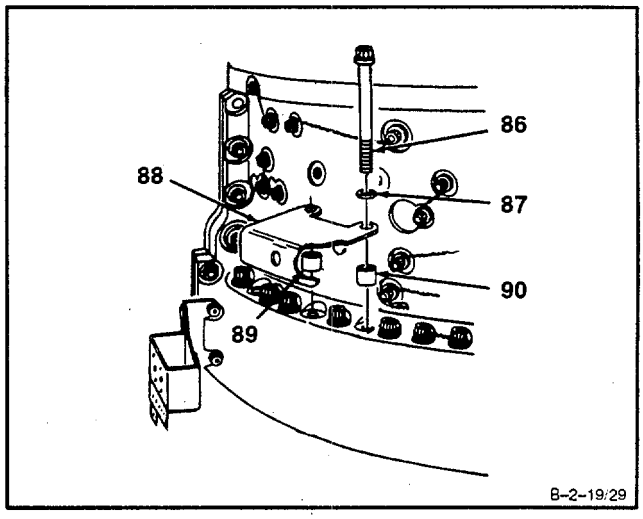

GO TO NEXT PAGE

33. **Remove** lockwire, bolt (91), **bracket (92),** and spacer (93).

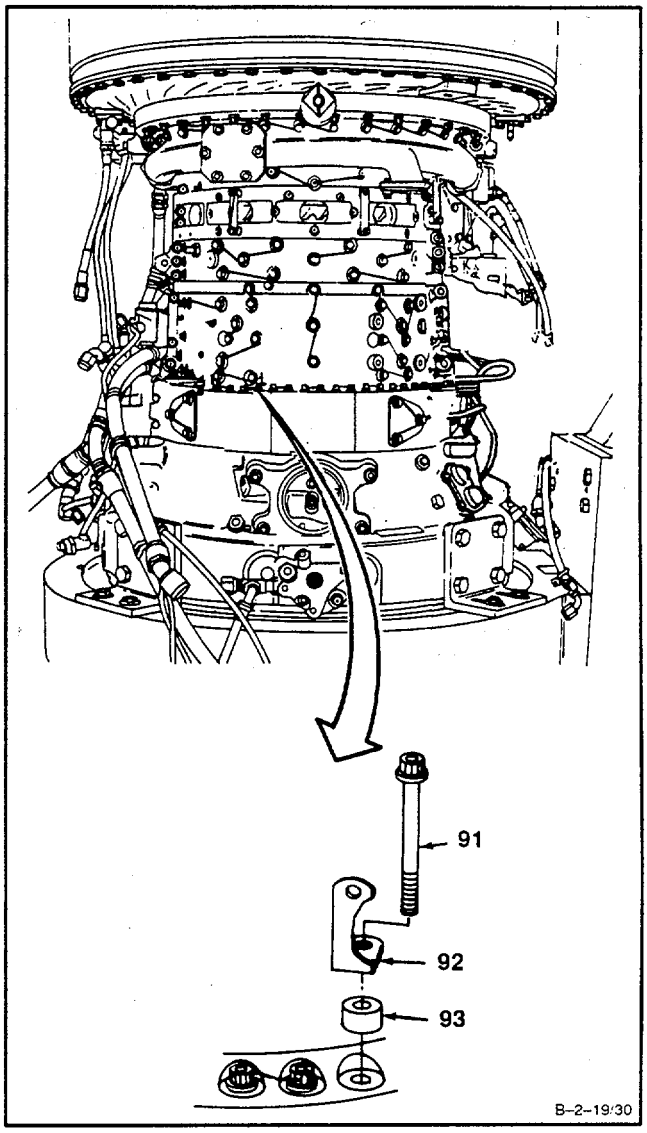

GO TO NEXT PAGE

34. **Remove** lockwire, **24 bolts (94**), and washers (95).

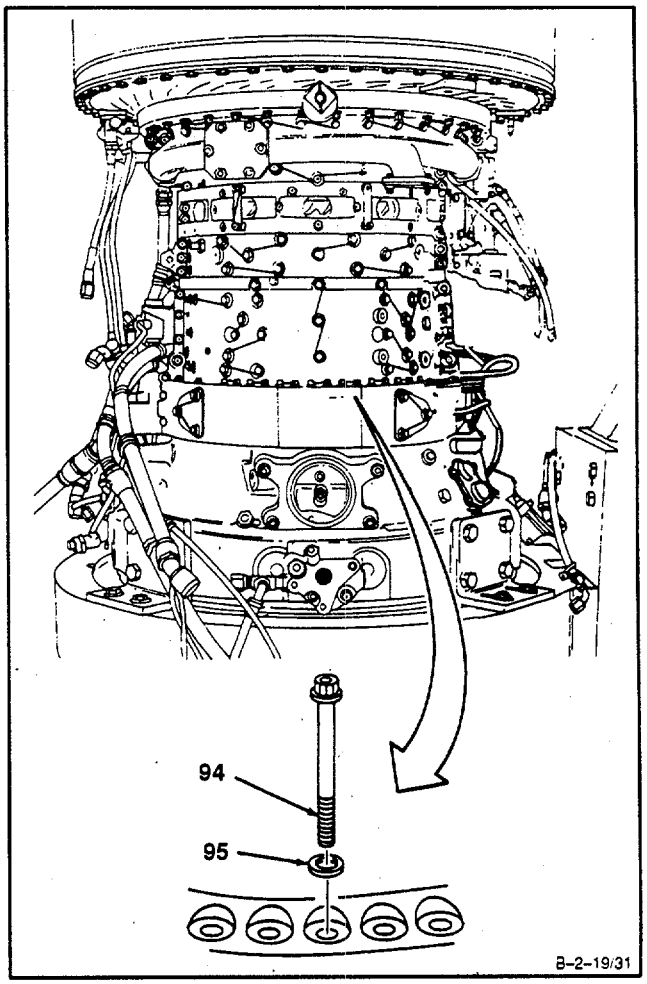

GO TO NEXT PAGE

35. **Remove** lockwire, **16 bolts (96),** and washers (97).

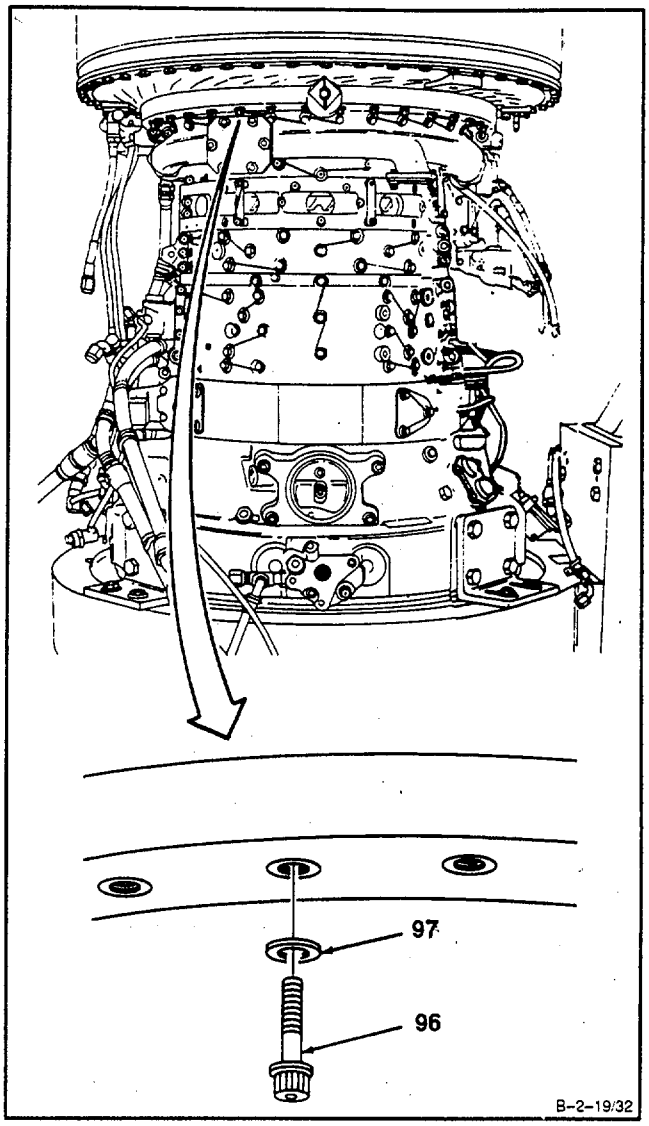

GO TO NEXT PAGE

36. Remove lockwire. **Disconnect nut (98)** from connector (99). Use padded conduit pliers.

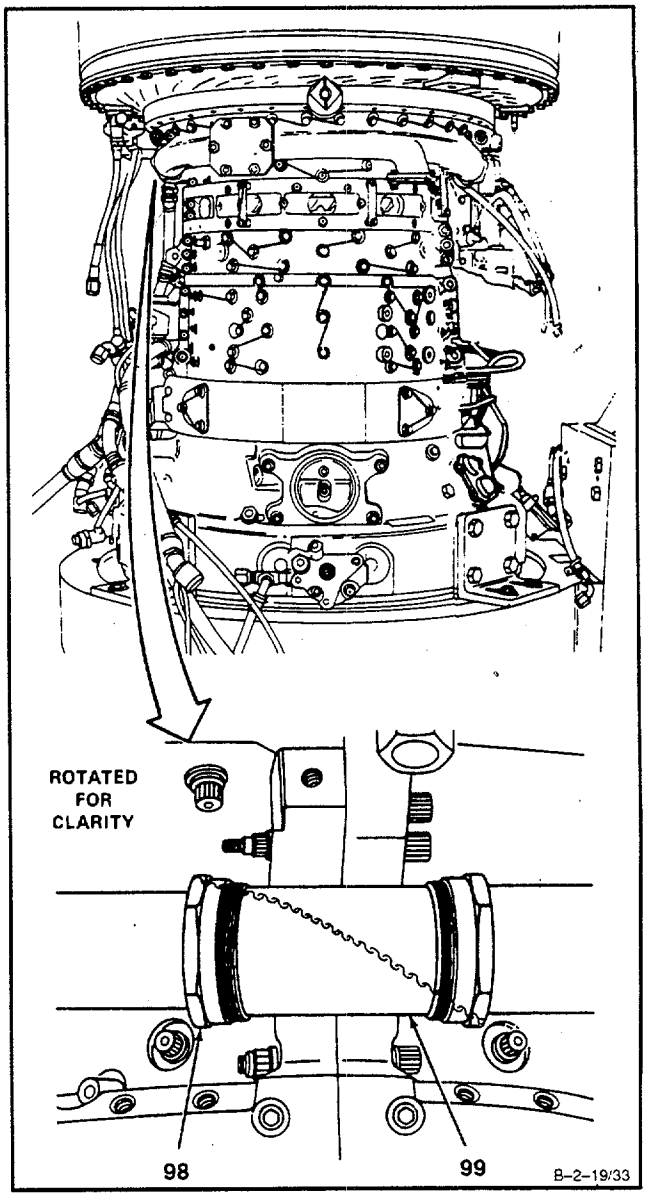

GO TO NEXT PAGE

37. Remove lockwire. **Disconnect nut (100)** from connector (101). Use padded conduit pliers.

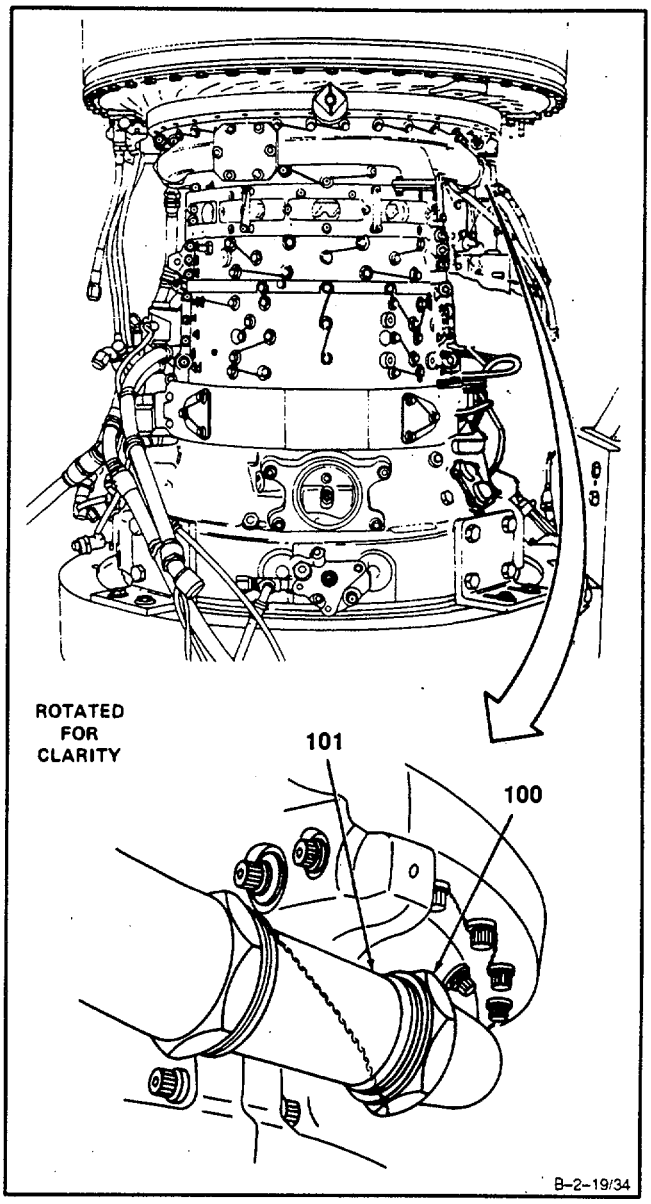

GO TO NEXT PAGE

38. **Remove** lockwire and **bolt (102).**

39. **Remove** two nuts (103), washers (104), bolts (105), **bracket (106),** and spacers (107).

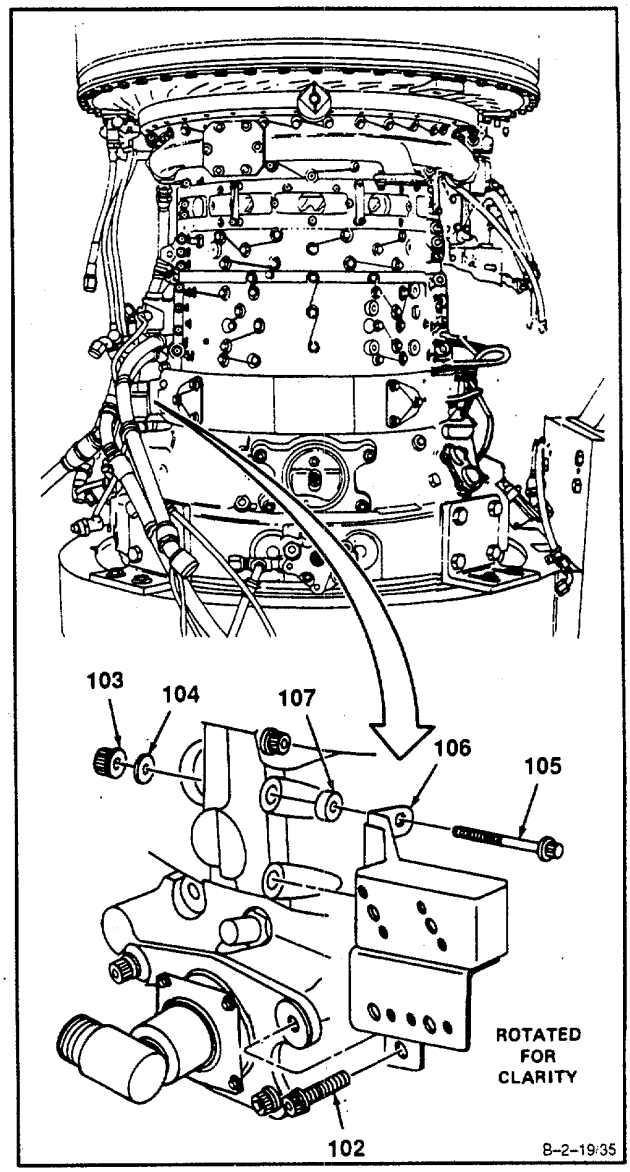

GO TO NEXT PAGE

NOTE

Procedures for removing nuts, bolts, and washers from four dowel pins are the same. Procedure for only one is shown.

40. **Remove** four nuts (108), washers (109), and **bolts (110)** from dowel pins (111).

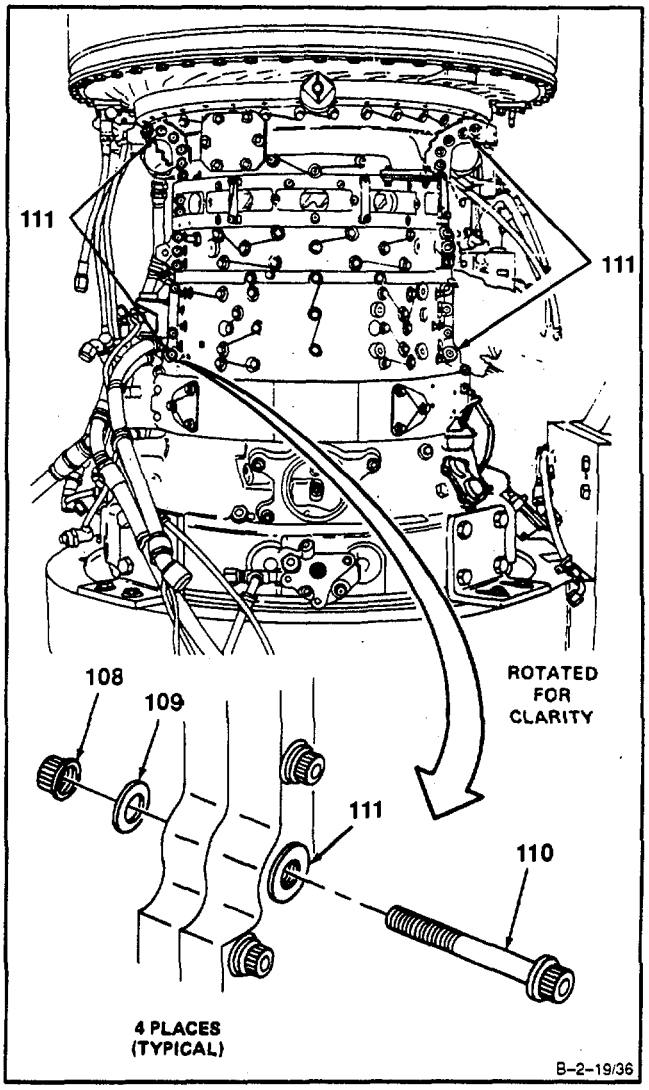

GO TO NEXT PAGE

41. **Thread mechanical puller (T4) (112) into dowel pin (111).**

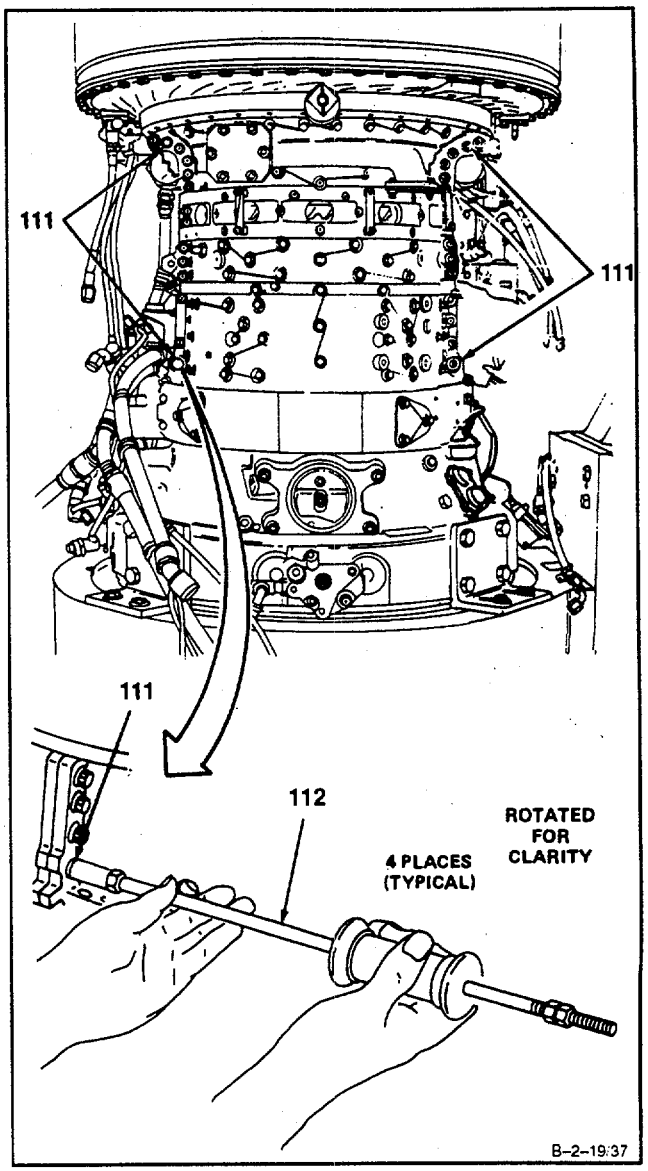

GO TO NEXT PAGE

42. Slide mechanical puller handle (113) up against nuts (114), and **remove dowel pin (111).**

43. Remove dowel pin (111) from mechanical puller (T4) (112).

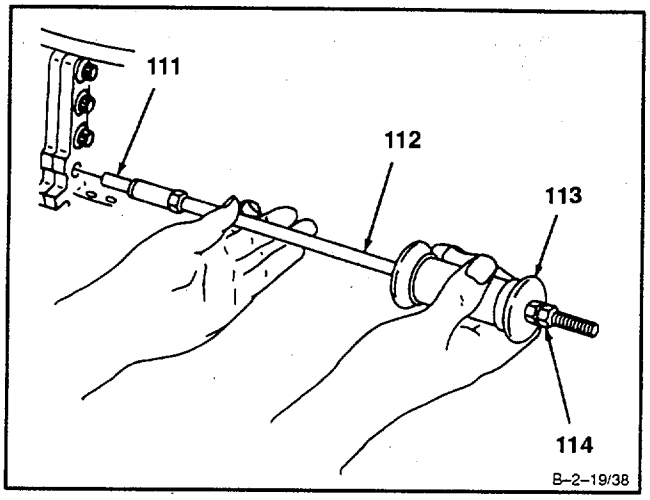

44. **Remove** two nuts (115), four washers (116), and **two bolts (117).**

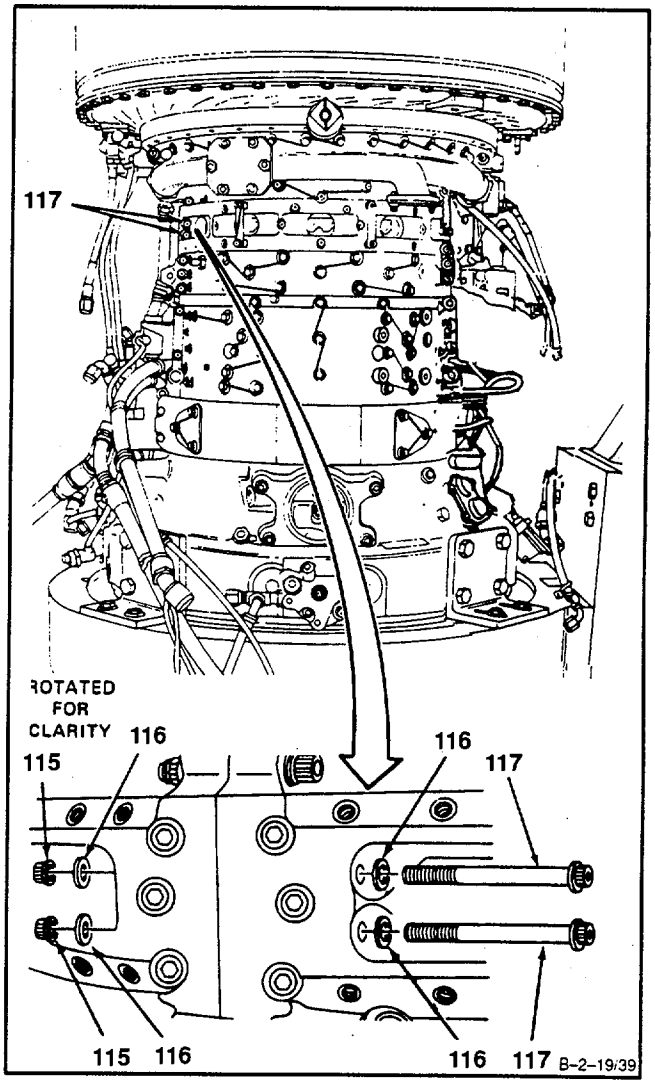

GO TO NEXT PAGE

45. **Remove** two nuts (118), four washers (119), and **two bolts (120).**

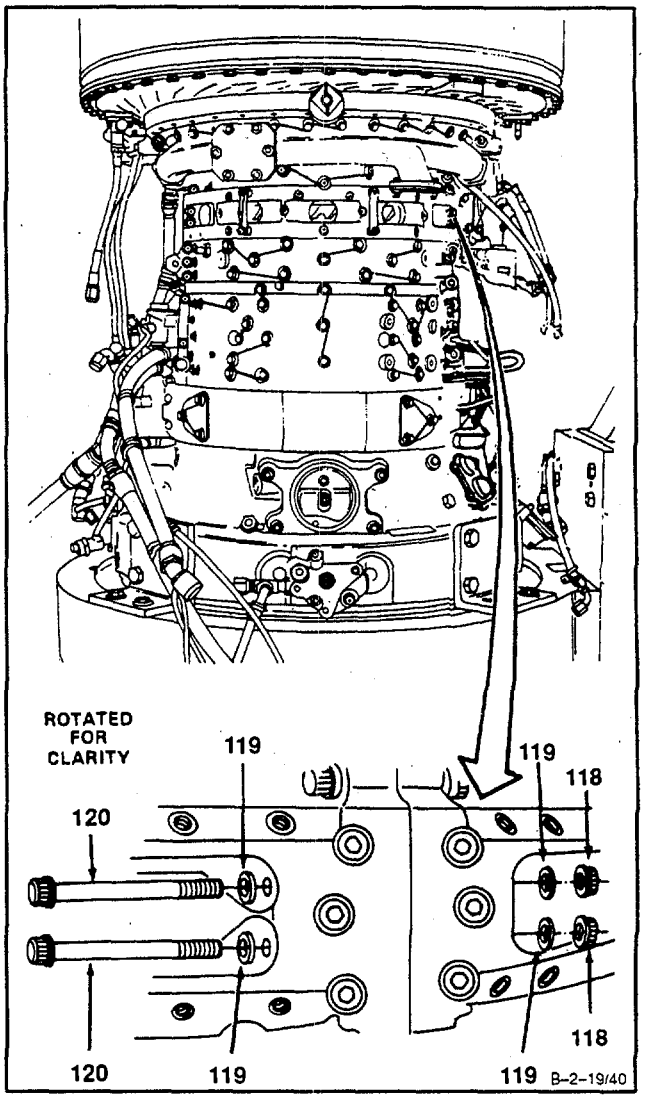

GO TO NEXT PAGE

46. **Remove** three nuts (121), six washers (122), and **three bolts (123).**

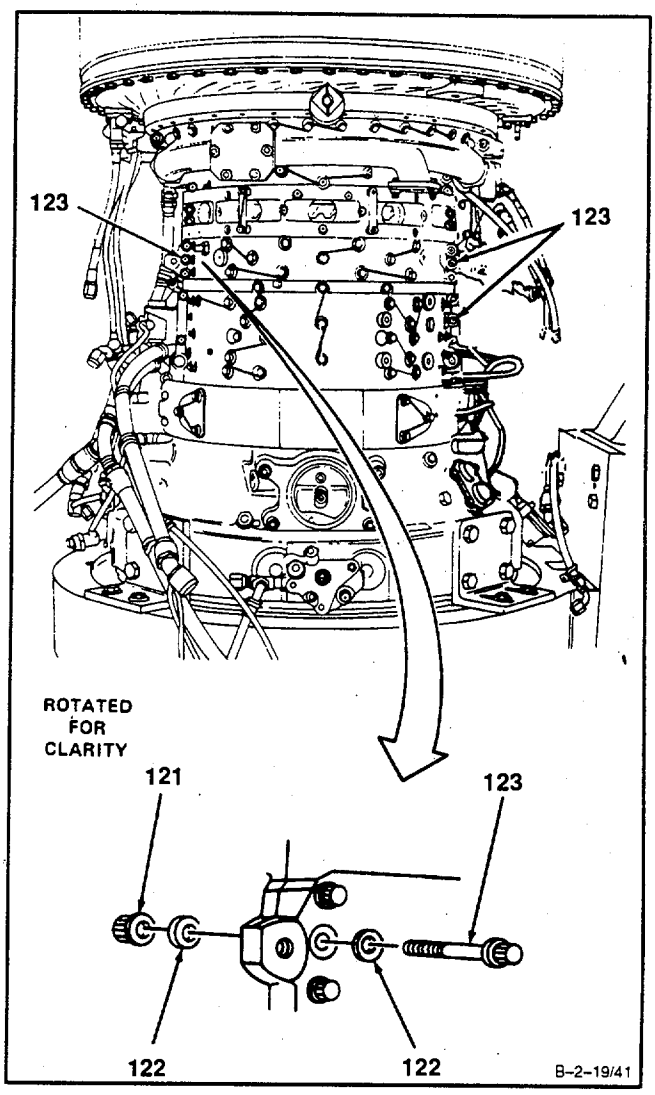

GO TO NEXT PAGE

47. **Remove** 21 nuts (124), 42 washers (125), and **21 bolts (126).**

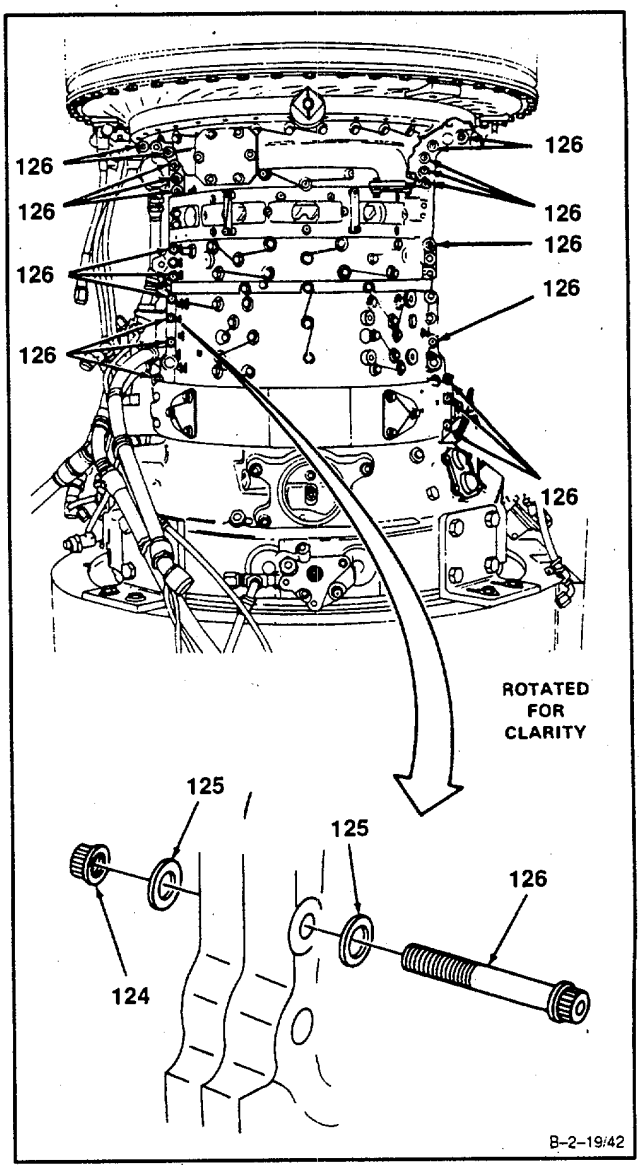

GO TO NEXT PAGE

48. Have helper push down on combustion section and power turbine (127) and **remove upper compressor housing (128).**

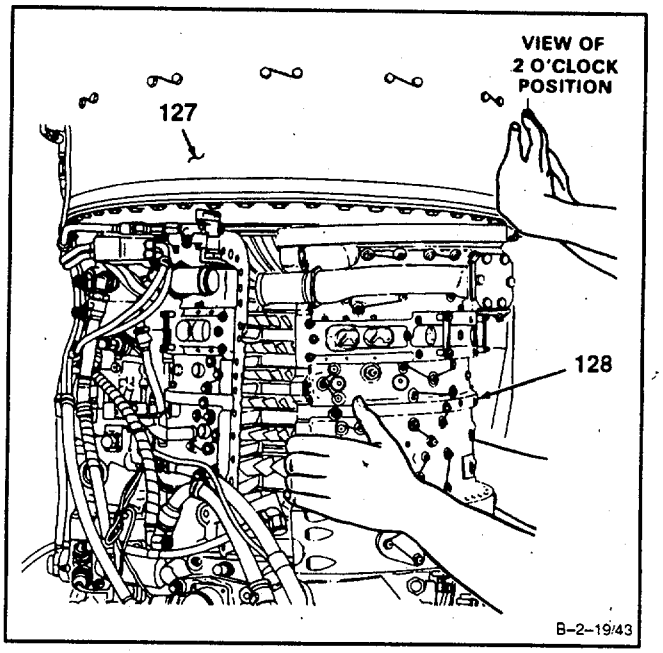

FOLLOW-ON MAINTENANCE:
None

END OF TASK

INITIAL SETUP

Applicable Configurations:

All

Tools:

Powerplant Mechanic's Tool Kit, NSN 5180-00-323-4944
Mechanical Puller (T4)
Padded Conduit Pliers

Materials:

None

Personnel Required:

Aircraft Powerplant Repairer (2)

Equipment Condition:

Engine Oil System Drained (Task 1-69)
Electrical Harness Assemblies Removed (Tasks 7-16, 7-22 and 7-28)
Ignition Coil and Cable Assembly Removed (Task 7-1)
Ignition Exciter Removed (Task 7-11)
Flow Programming Valve Removed (Task 8-19)
Oil Cooler Assembly Removed (Task 8-12)
In-Line Fuel Filter Assembly Removed (Task 6-35)
Dual Chip Detector Removed (Task 8-39)
Fuel Boost Pump Assembly Removed (Task 6-8)
Tube Assembly (Inlet Housing to Main Oil Pump) Removed (Task 8-65)
Main Oil Pump, Speed Pickup Drive Assembly, Scavenge Oil Screen, and Related Parts Removed (Task 8-1)
Hydromechanical Assembly (HMA) Removed (Task 6-1)
Accessory Gearbox Assembly Removed (Task 5-1)
Main Fuel Filter and Bracket Removed (Task 6-28)
Interstage Air-Bleed Actuator Removed (Task 2-1)
Compressor Bleed Band Removed (Task 2-10)
Hose Assembly (Dual Chip Detector to Air Diffuser Assembly) Removed (Task 8-61)
Hose Assembly (Main Oil Pump to Dual Chip Detector) Removed (Task 8-63).
Hose Assembly (Dual Chip Detector to Accessory Gearbox Assembly) Removed (Task 8-57)
Hose Assembly (Dual Chip Detector to Accessory Gearbox Collector) Removed (Task 8-59)
Overspeed Solenoid Valve Removed (Task 6-52)
Tube Assembly (No. 4 and 5 Bearing Scavenge Connector to Tube Assembly) Removed (Task 8-71)
Tube Assembly (Hose Assembly to Primer Tube Assembly) Removed (Task 6-90)

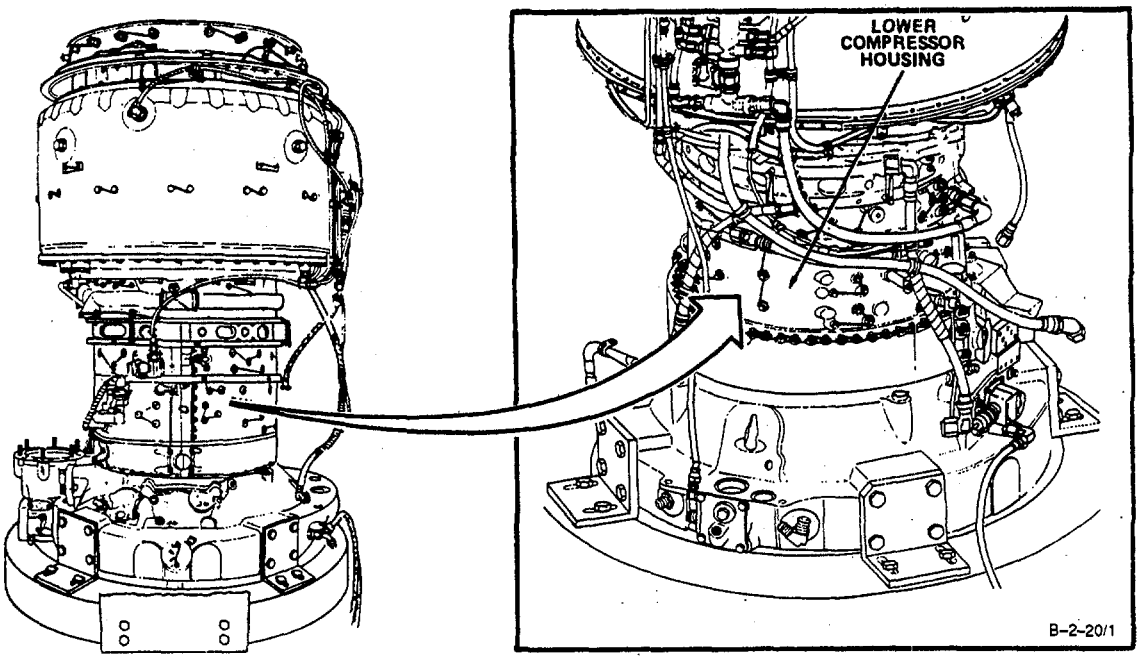

GO TO NEXT PAGE

CAUTION

When removing compressor housing, only upper or lower compressor housing halt shall be removed at one time. At no time shall personnel attempt to remove both upper and lower compressor housing halves at the same time. Failure to comply will cause engine damage.

1. **Disconnect hose assembly (1).**

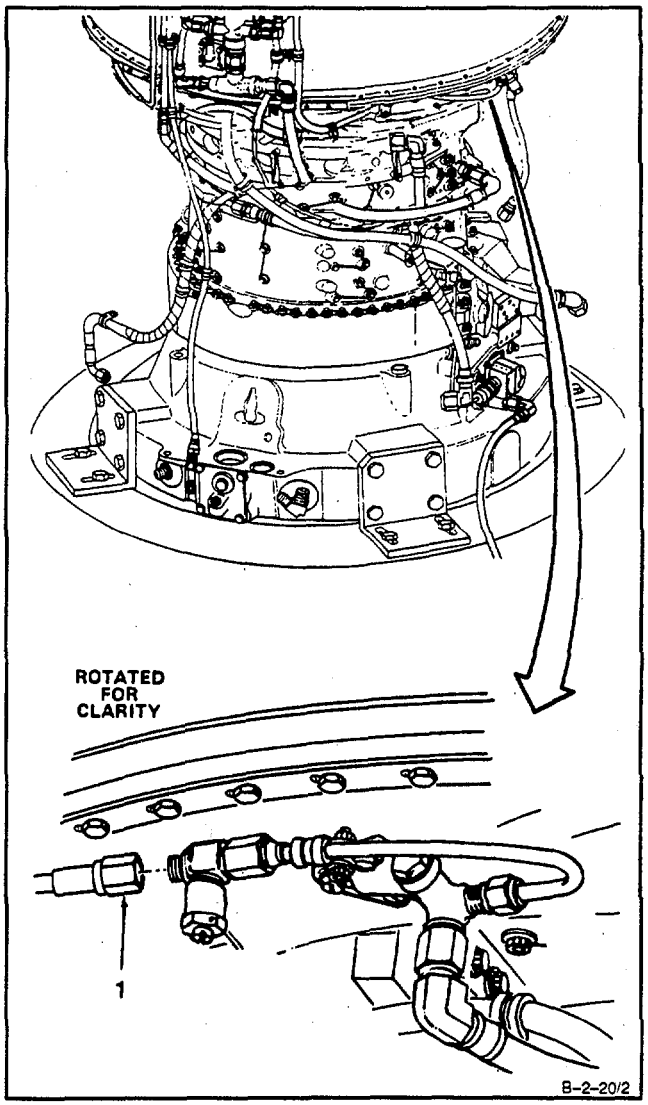

GO TO NEXT PAGE

2. **Remove** lockwire, **two screws (2),** and two washers (3).

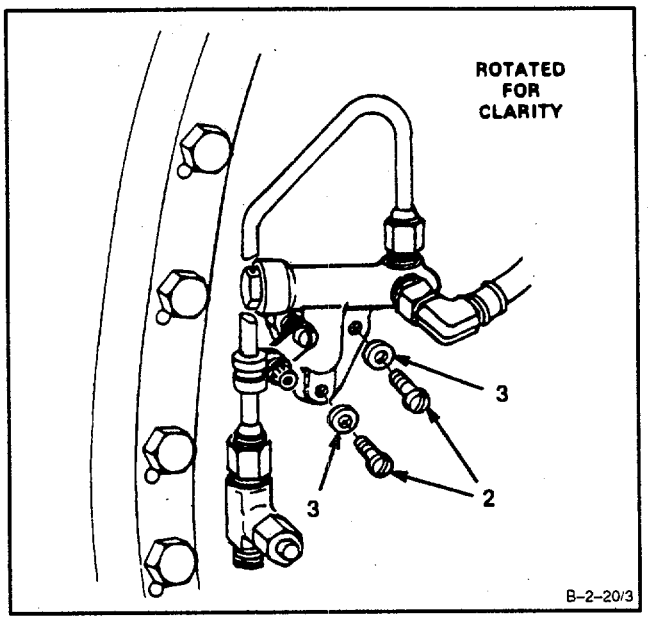

3. **Remove** lockwire, screw (4), bracket (5), two washers (6), **No. 2 bearing pressure connector (7)** with tube assembly (8) and hose assembly (9) connected, and packing (10).

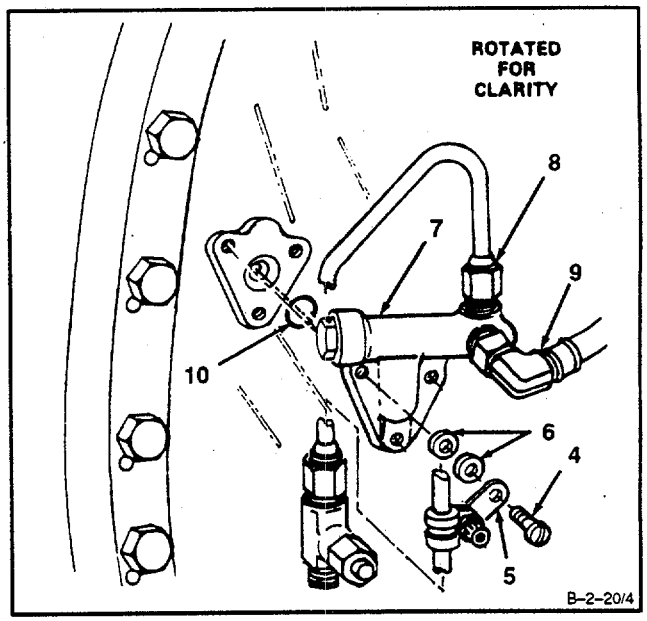

GO TO NEXT PAGE

4. Bend tabs of key washer (11) and **remove** bolt (12), key washer (11), and **bracket (13).**

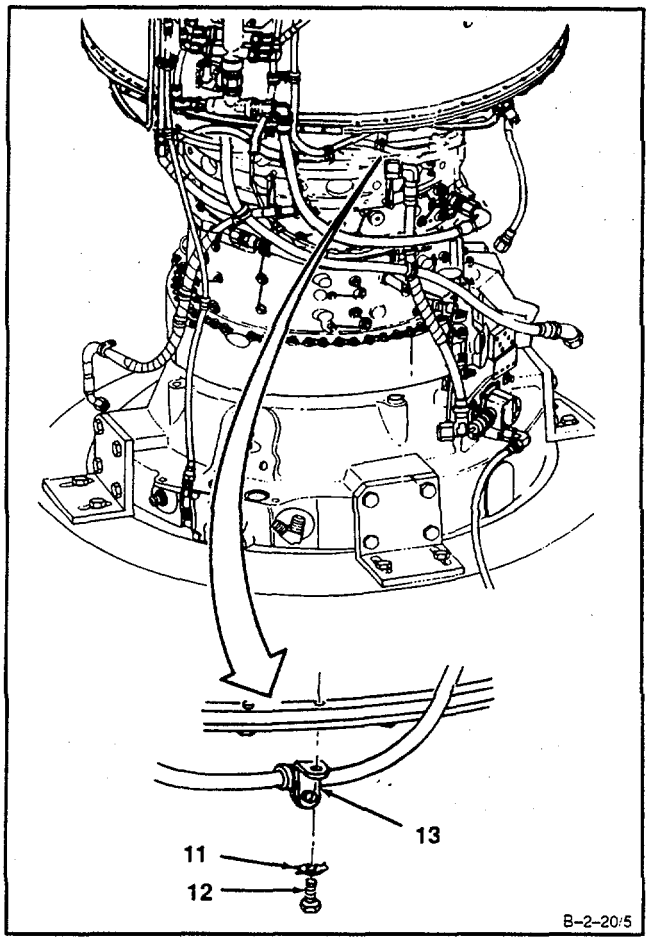

GO TO NEXT PAGE

5. Bend tabs of two key washers (14) and **remove** two bolts (15), key washer (14), and **bracket (16).**

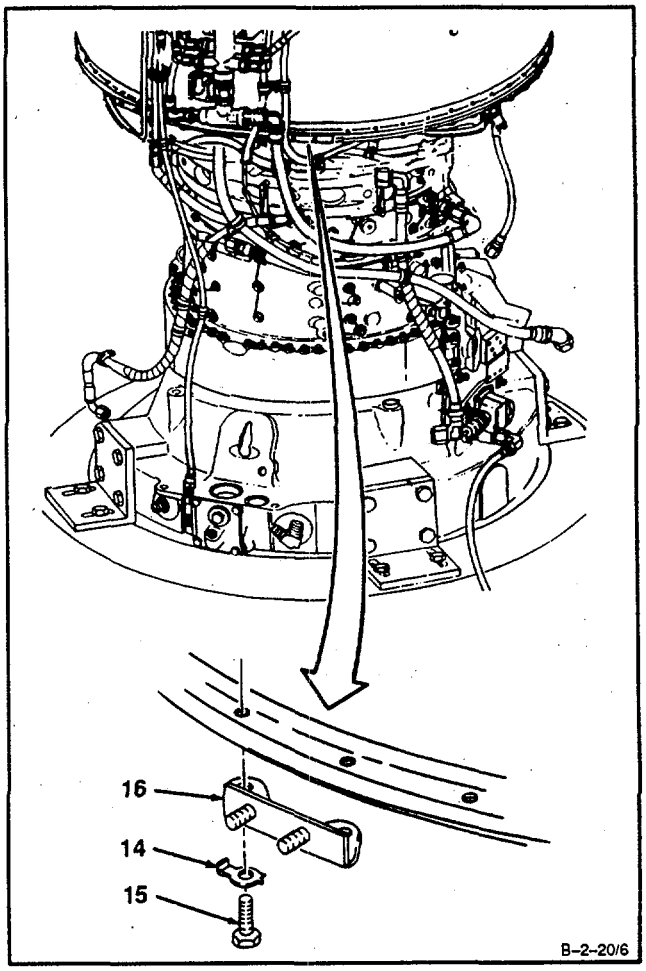

GO TO NEXT PAGE

6. **Remove hose assembly (17).**

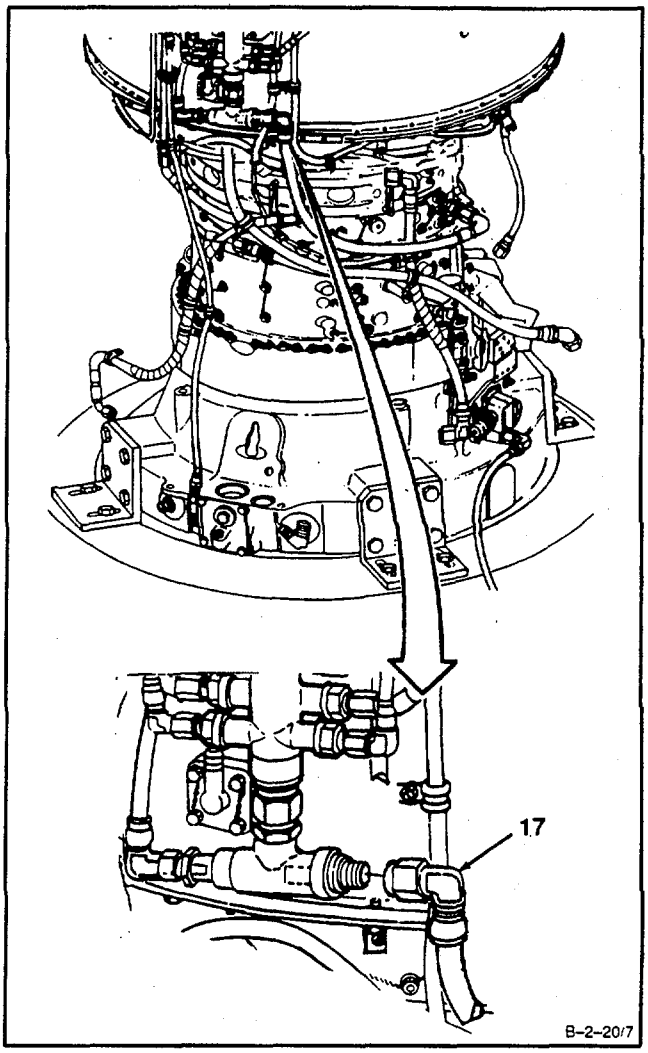

GO TO NEXT PAGE

7. Bend tabs of three key washers (18). **Remove** three bolts (19), key washers (18), and**bracket (20).**

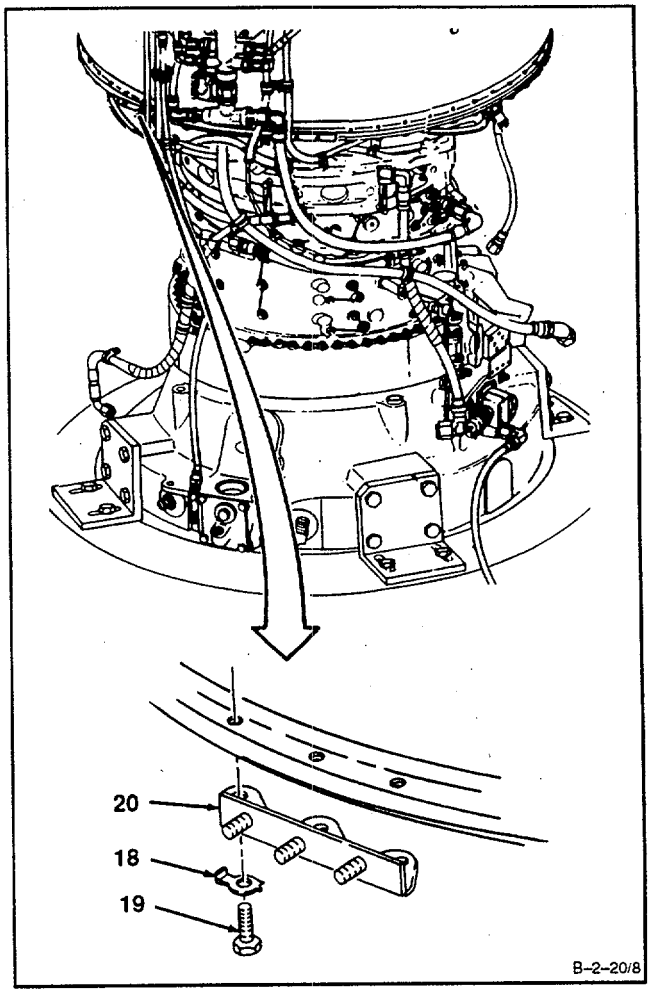

GO TO NEXT PAGE

2-21 REMOVE LOWER COMPRESSOR HOUSING (Continued) 2-21

8. **Remove** lockwire, three screws (21), **union (22),** and packing (23).

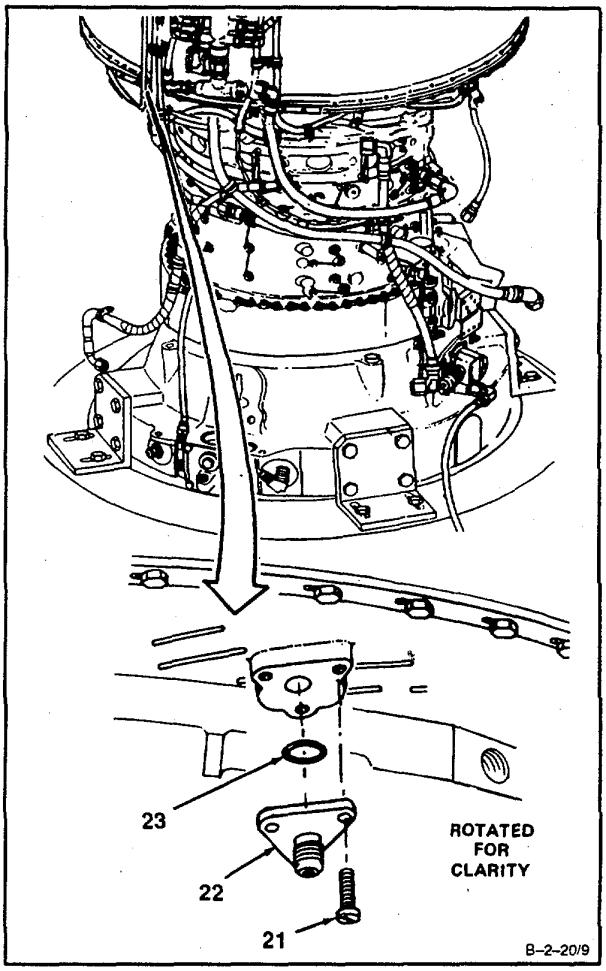

GO TO NEXT PAGE

9. Remove lockwire and **bolt** (24).

10. Remove lockwire and loosen bolt (25) and swing bracket (26) away from housing splitline (27). **Remove spacer (28).**

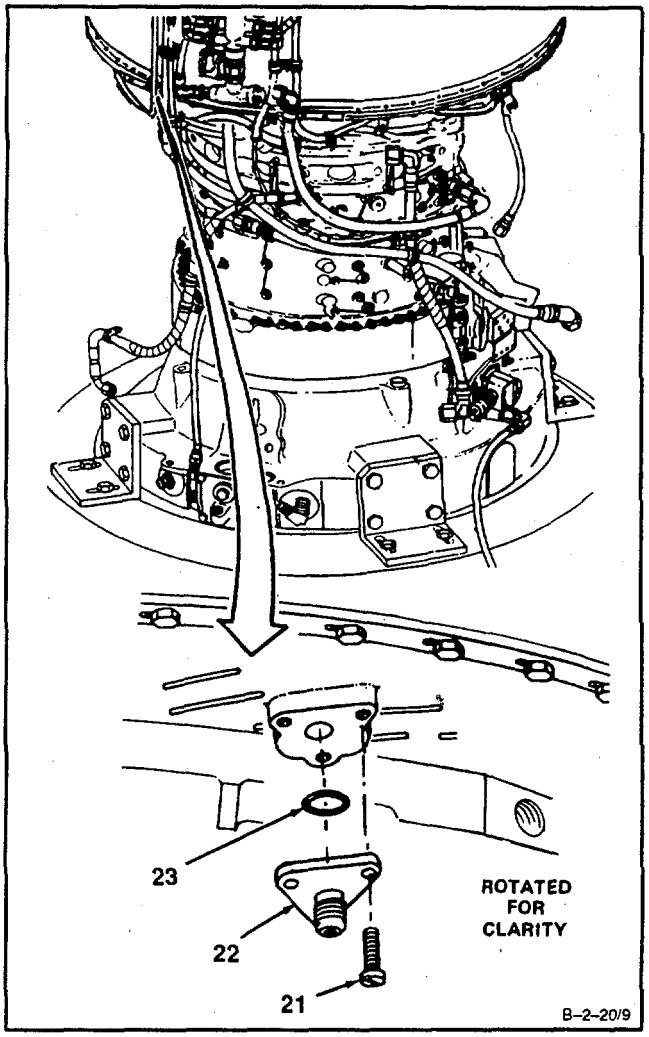

GO TO NEXT PAGE

11. **Remove** lockwire, **bolt (29)**, and washer (30).

12. **Remove** two nuts (31), washers (32), bolts (33), **bracket (34)**, and spacers (35).

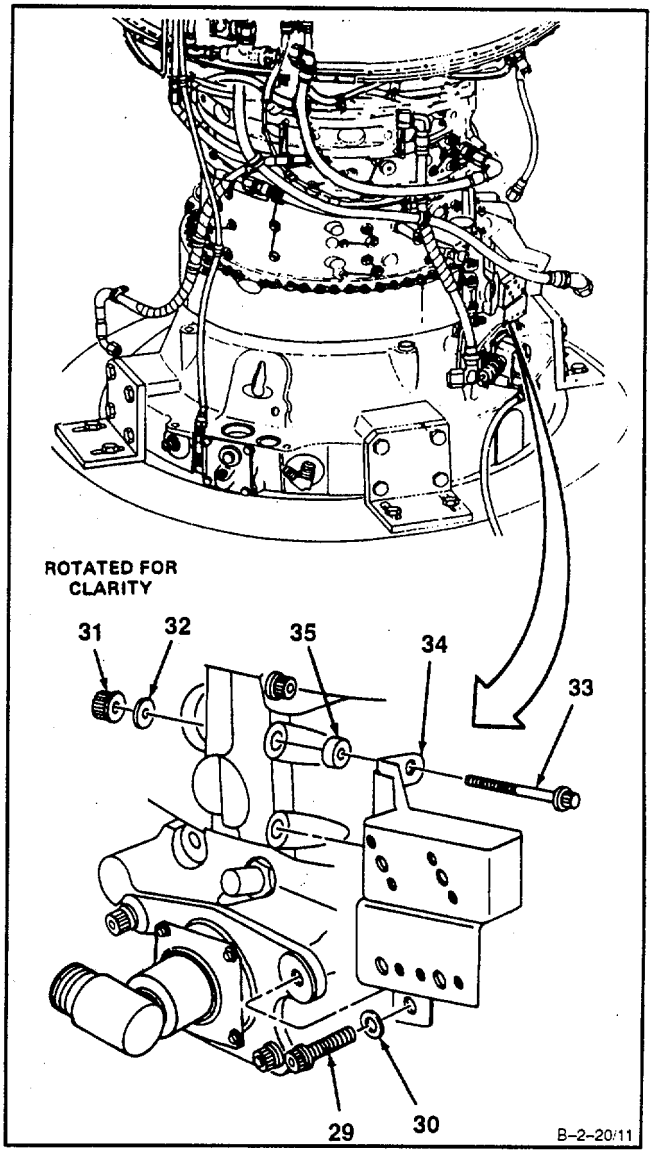

GO TO NEXT PAGE

2-21 REMOVE LOWER COMPRESSOR HOUSING (Continued) 2-21

NOTE

If lockwire is disturbed when disconnecting hose in following step, remove lockwire.

13. **Disconnect hose assembly (36).**

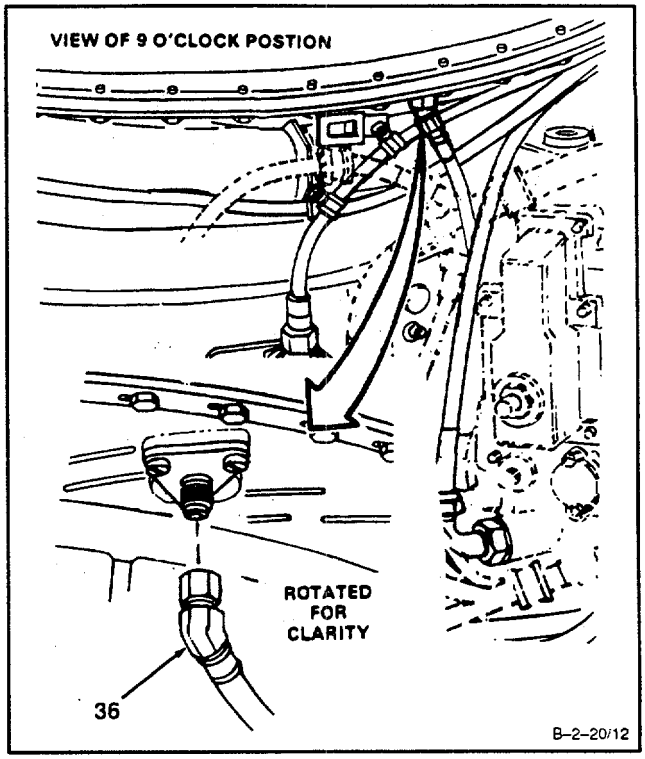

14. **Remove** lockwire, screw (37), **clamp (38**), and bracket (39).

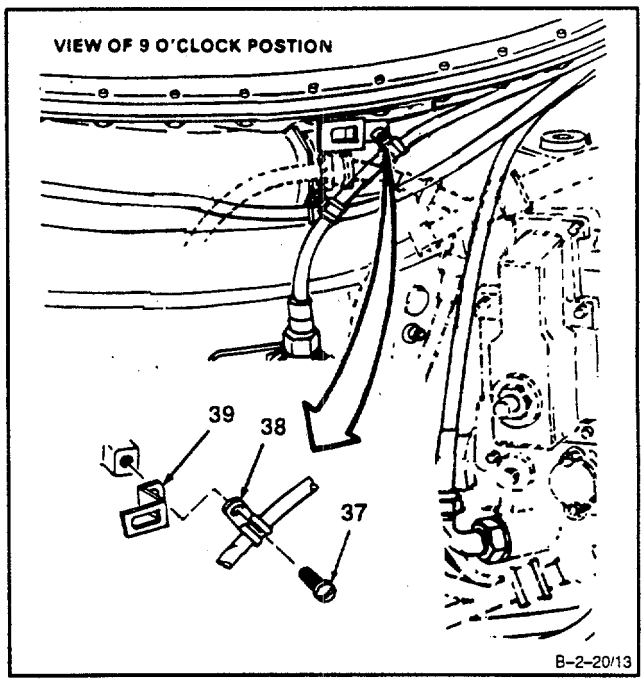

GO TO NEXT PAGE

15. **Remove** two nuts (40), washers (41),**bolts (42),** and spacers (43).

16. Move aside solenoid valve (44), hose assembly (45 and 46), bracket (47) as an assembly, and bracket (48).

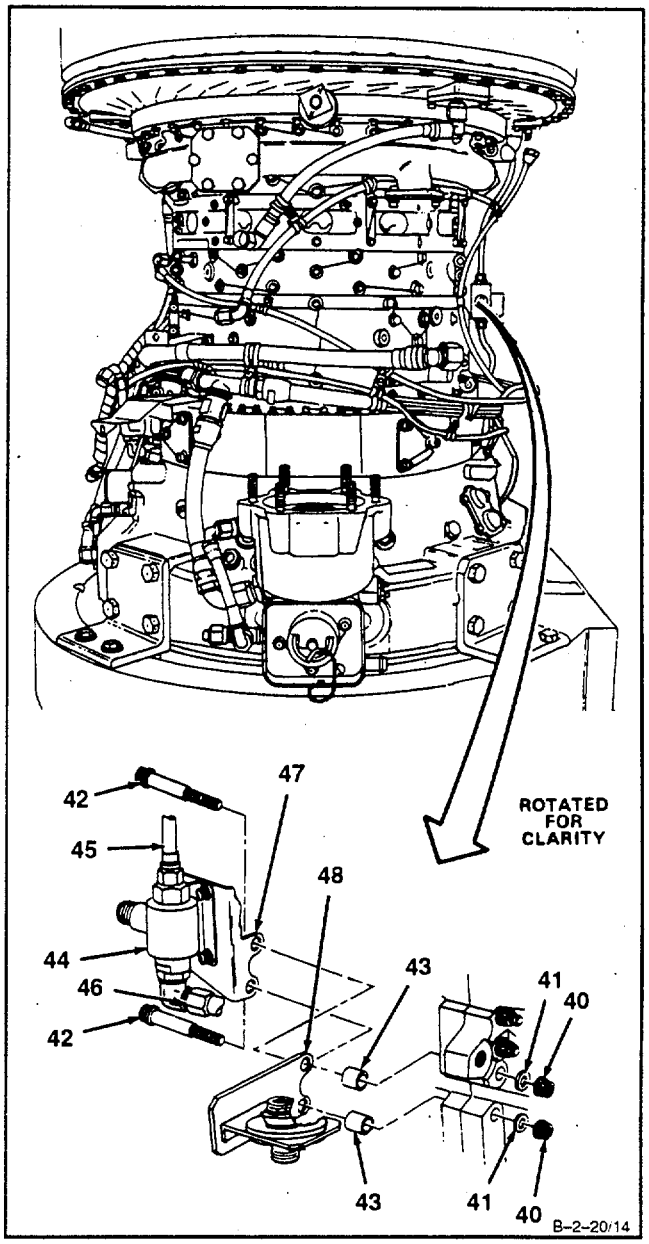

GO TO NEXT PAGE

17. Remove lockwire and **disconnect nut (49)** from connector (50). Use padded conduit pliers.

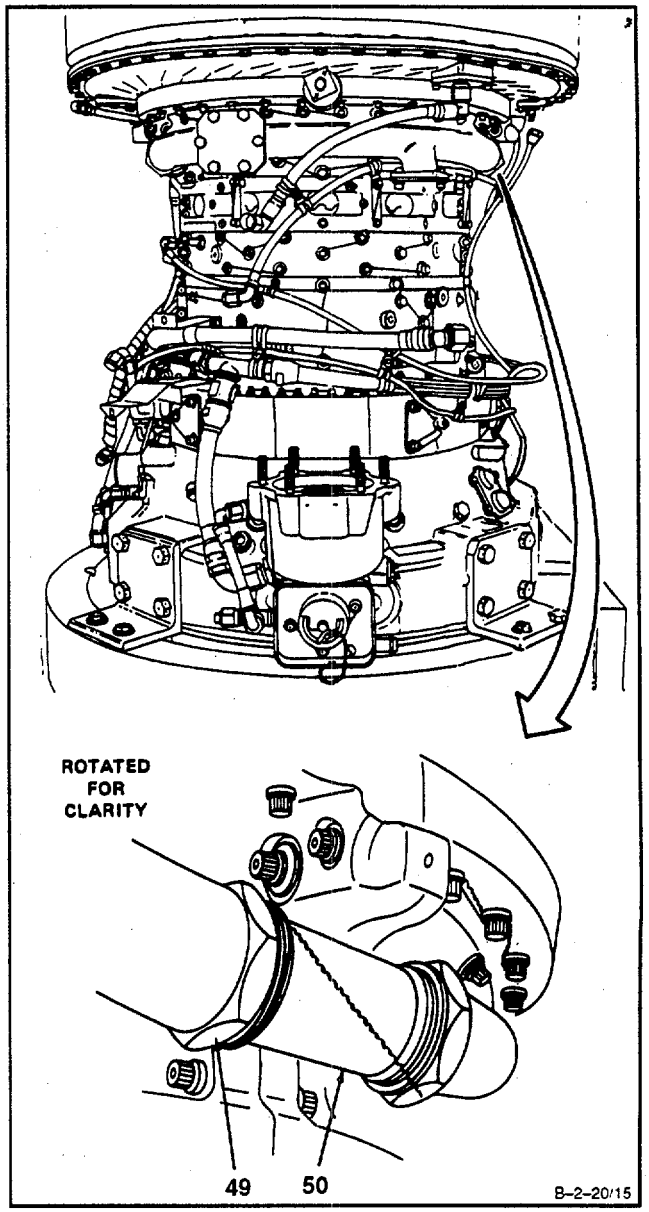

GO TO NEXT PAGE

18. Remove lockwire and **disconnect nut (51)** from connector (52). Use padded conduit pliers.

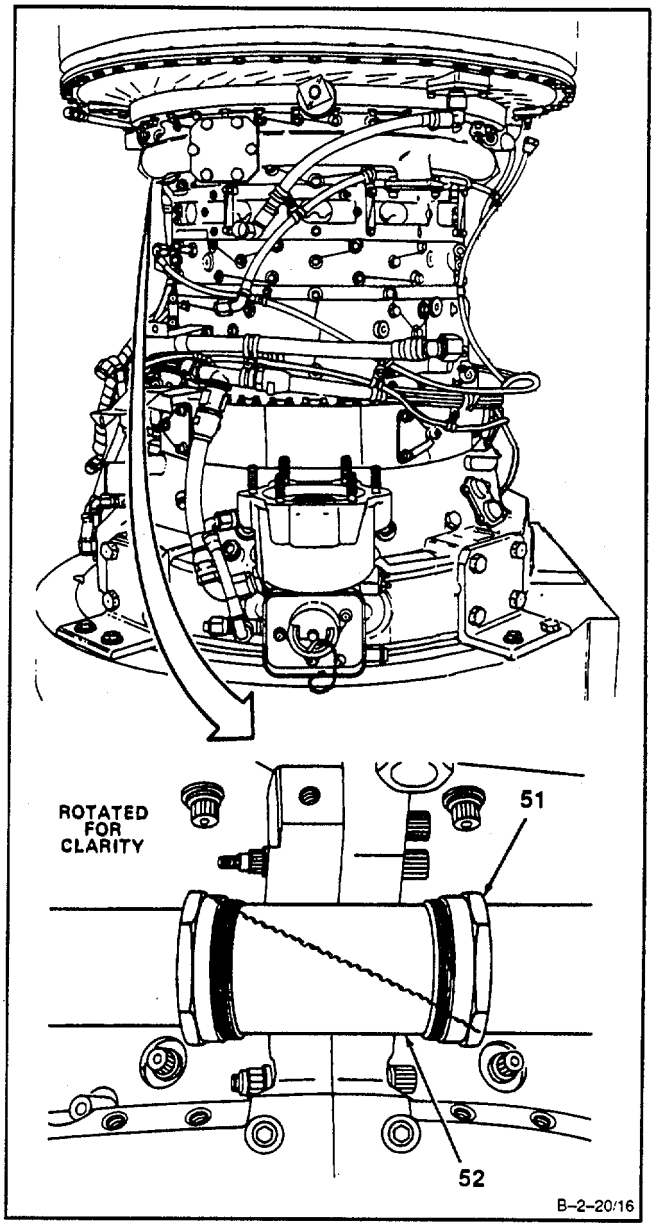

GO TO NEXT PAGE

19. **Remove** lockwire, **four bolts (53),** and washers (54).

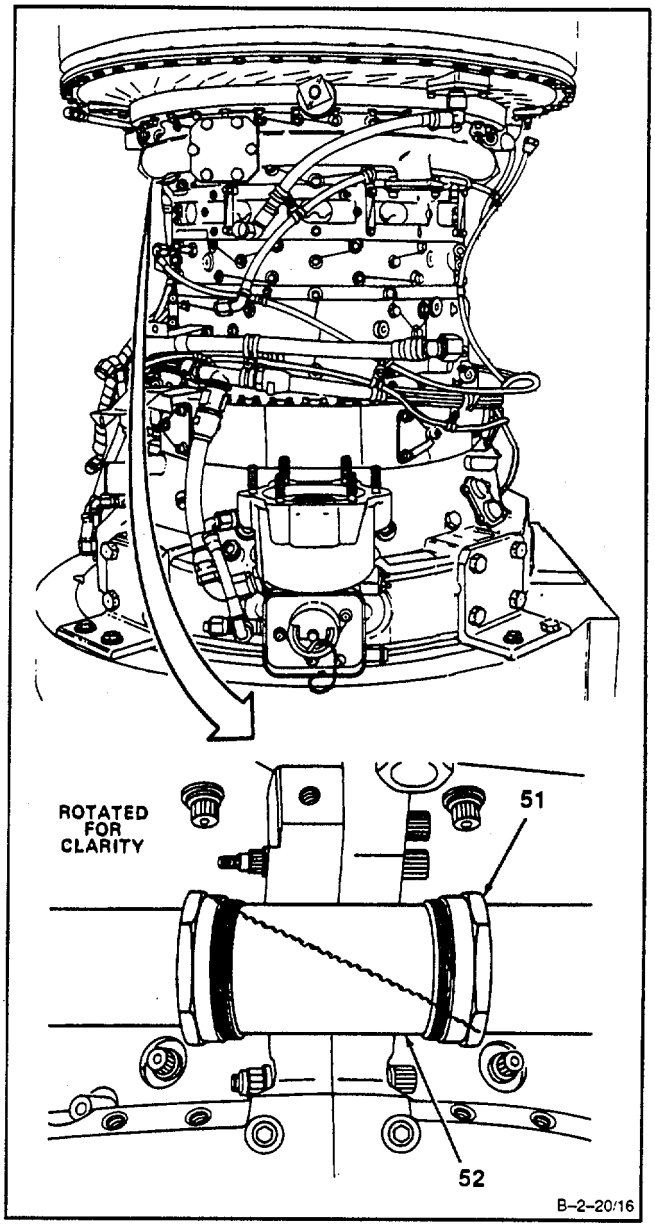

GO TO NEXT PAGE

NOTE

Procedure for removing nuts, bolts, and washers from four dowel pins are the same. Procedure for only one is shown.

20. **Remove** four nuts (55), washers (56), and**bolts (57)** from dowel pins (58).

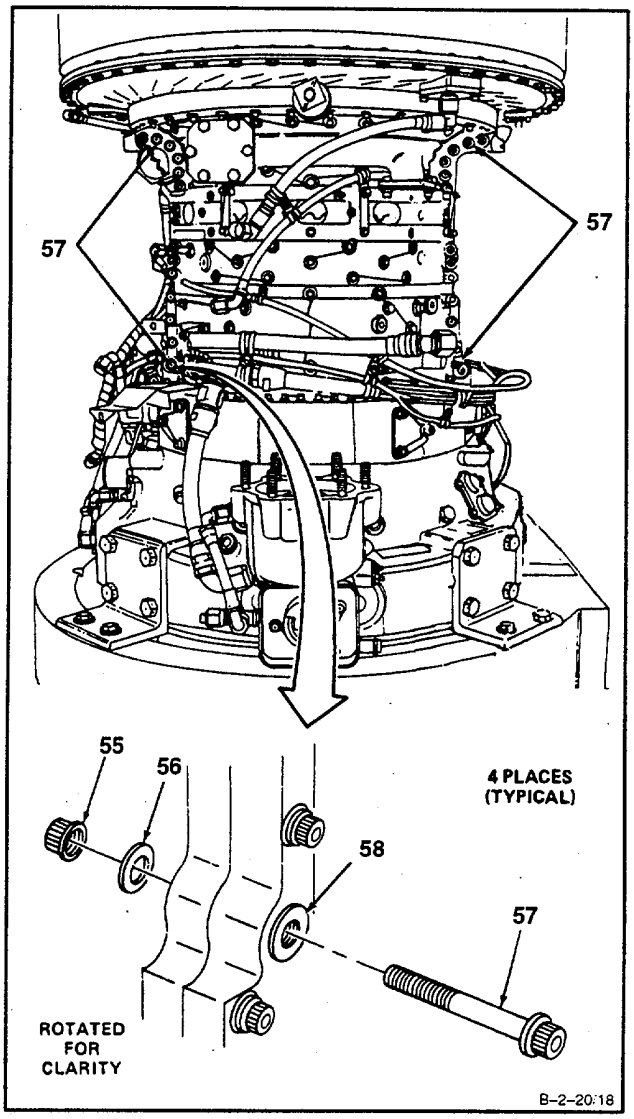

GO TO NEXT PAGE

21. **Thread mechanical puller (T4) (59) into dowel pin (58).**

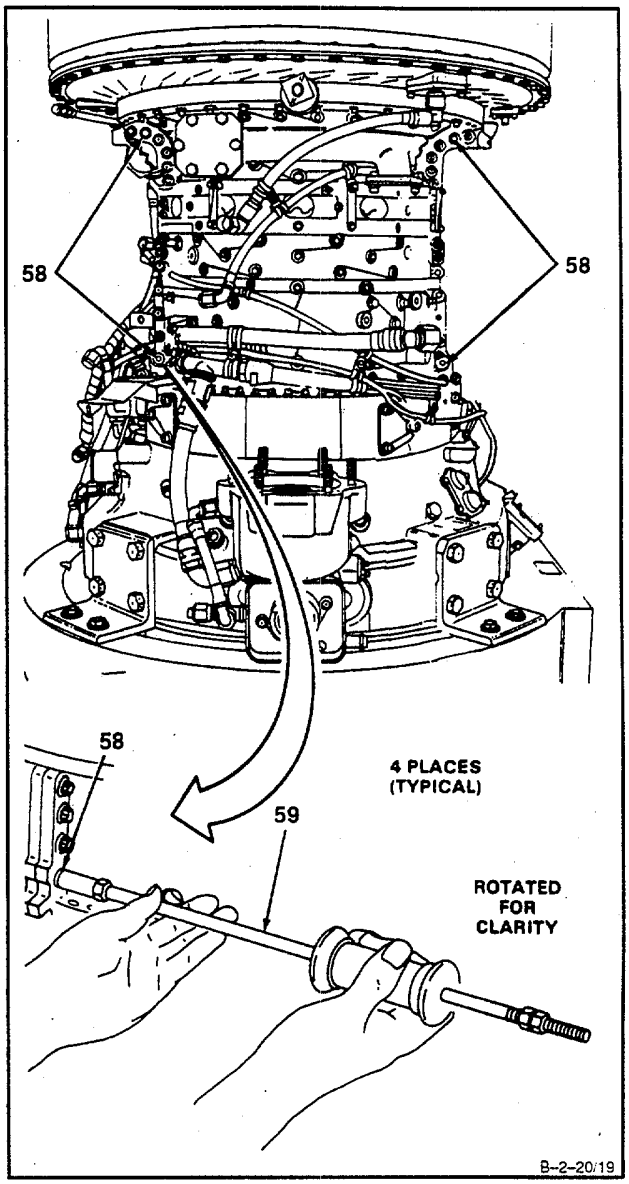

GO TO NEXT PAGE

22. Slide mechanical puller handle (60) up against nuts (61) and **remove dowel pin (58).**

23. Remove dowel pin (58) from mechanical puller (T4) (59).

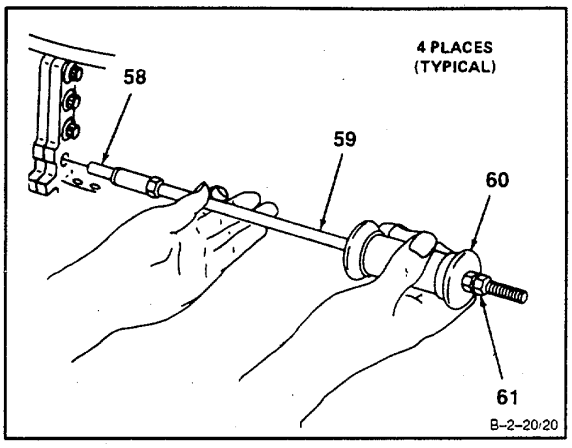

24. **Remove** lockwire, two bolts (62), **bleed band** retainer (63), and bracket (64).

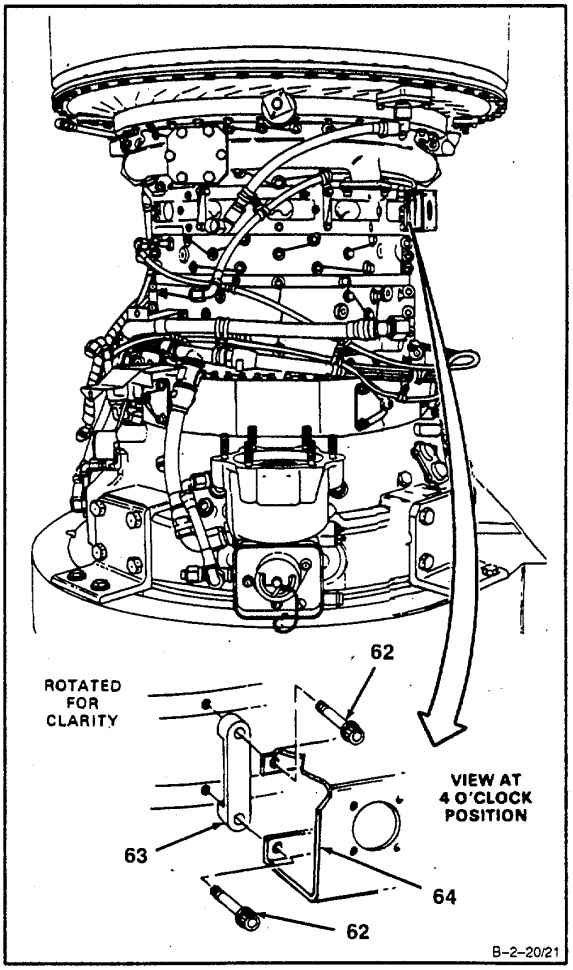

GO TO NEXT PAGE

25. Remove lockwire, two bolts (65), and bleed band retainer (66).

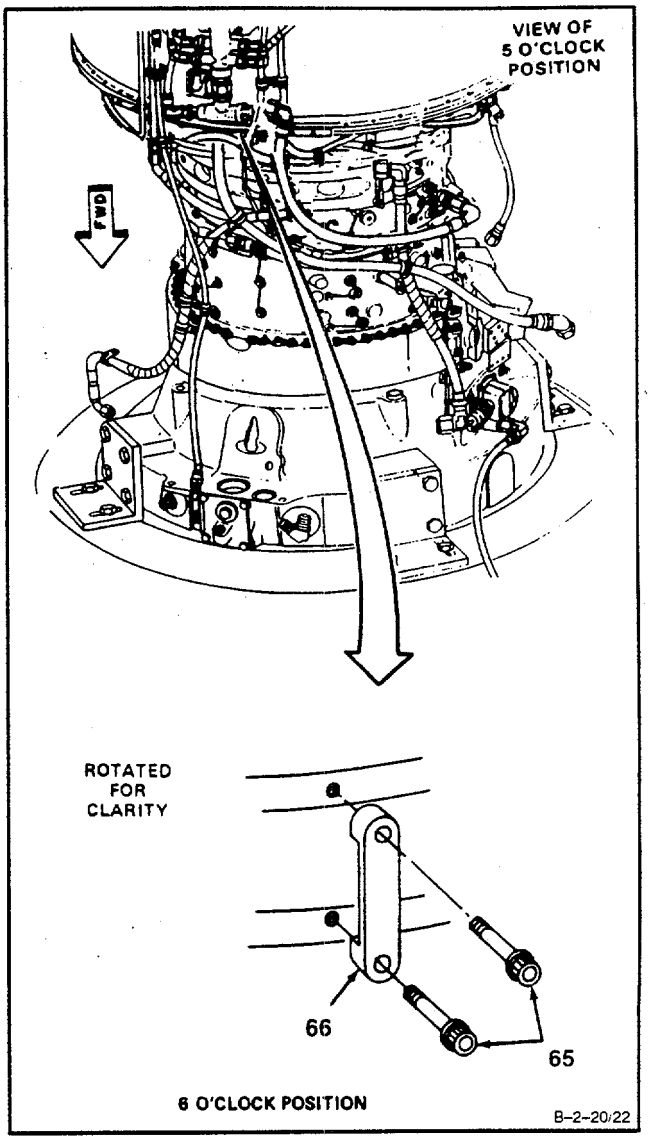

GO TO NEXT PAGE

26. **Remove** lockwire, bolt (67), washer (68), and **bracket (69).**
27. **Remove** lockwire, bolt (70), **bracket (71**), and spacer (72).

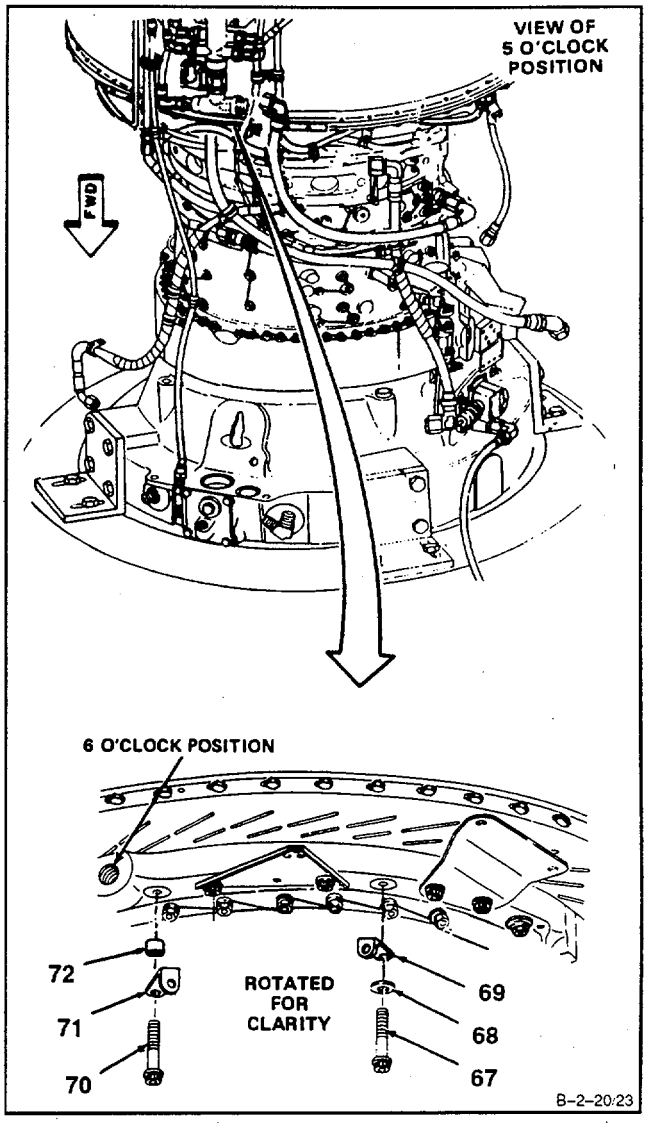

GO TO NEXT PAGE

28. **Remove** lockwire, 14 bolts (73), washers (74), and **brackets (75 and 76).**

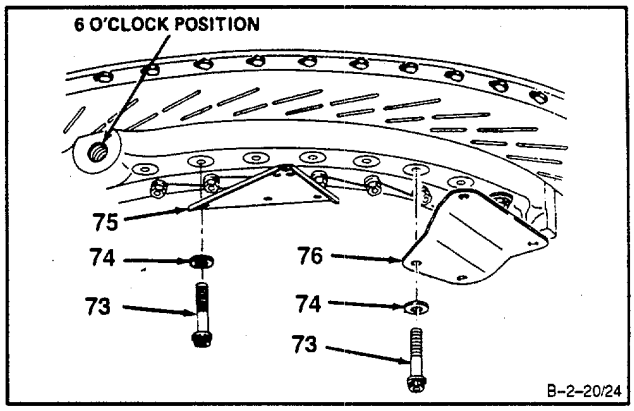

29. **Remove** lockwire, **27 bolts (77**), and washers (78).

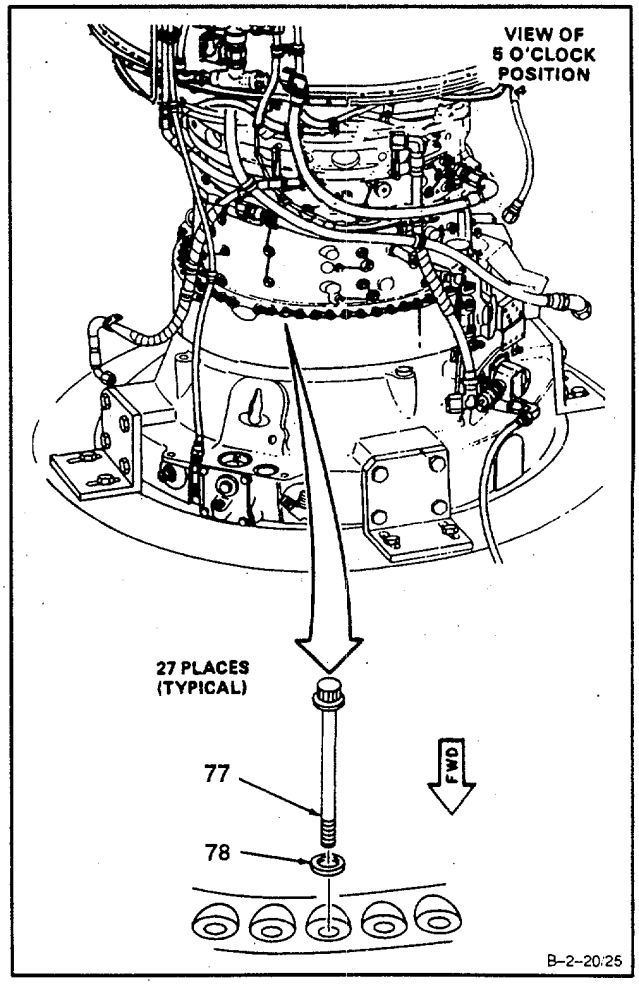

GO TO NEXT PAGE

30. **Remove** two nuts (79), four washers (80), and**two bolts (81**).

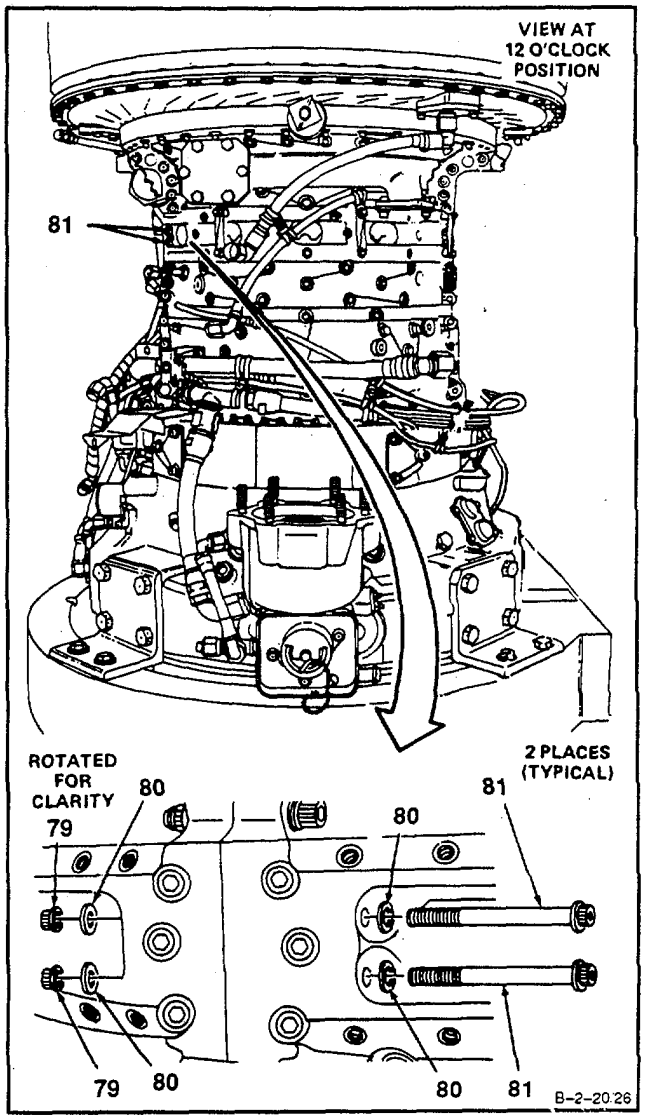

GO TO NEXT PAGE

31. **Remove** two nuts (82), four washers (83), and**two bolts (84).**

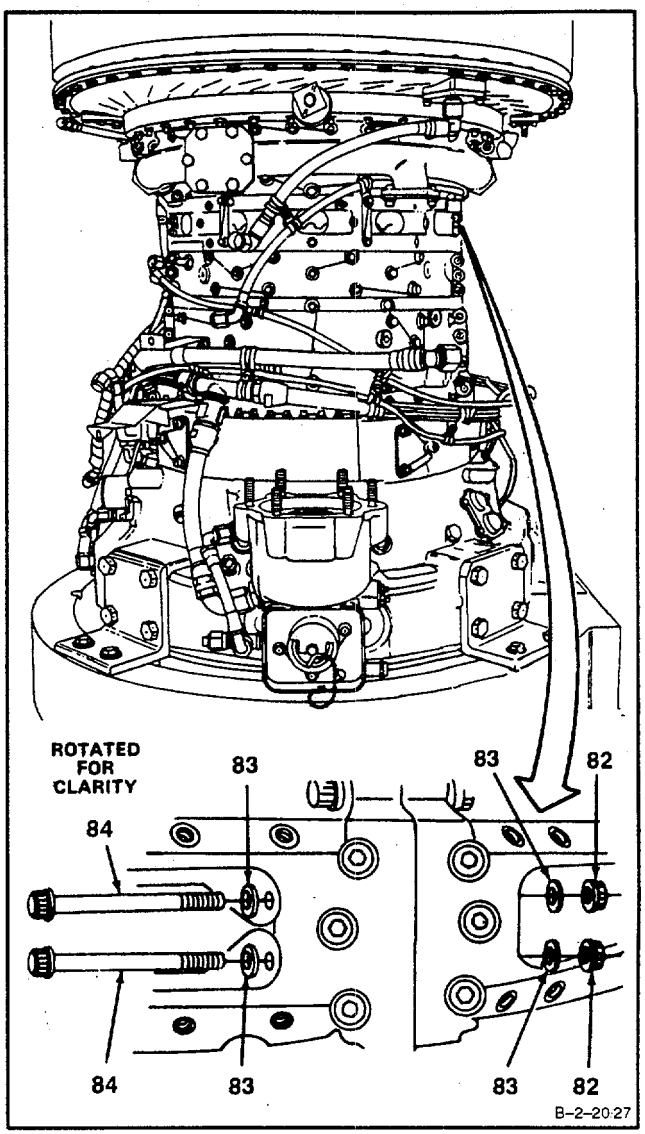

GO TO NEXT PAGE

32. **Remove** three nuts (85), six washers (86), and **three bolts (87**).

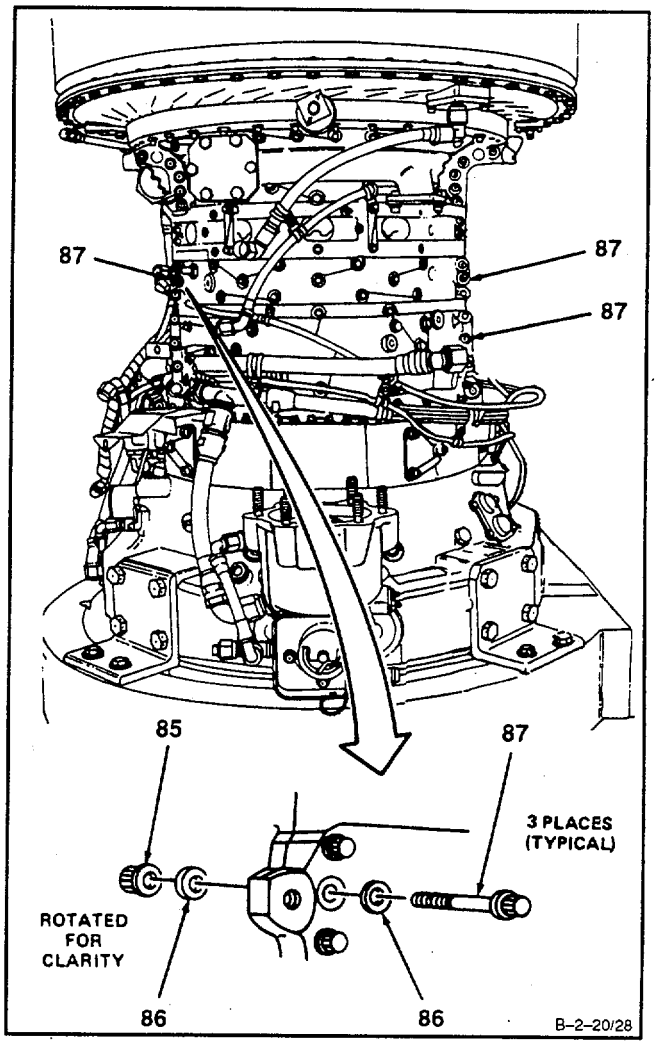

GO TO NEXT PAGE

33. **Remove** 21 nuts (88), 42 washers (89), and **21 bolts (90**).

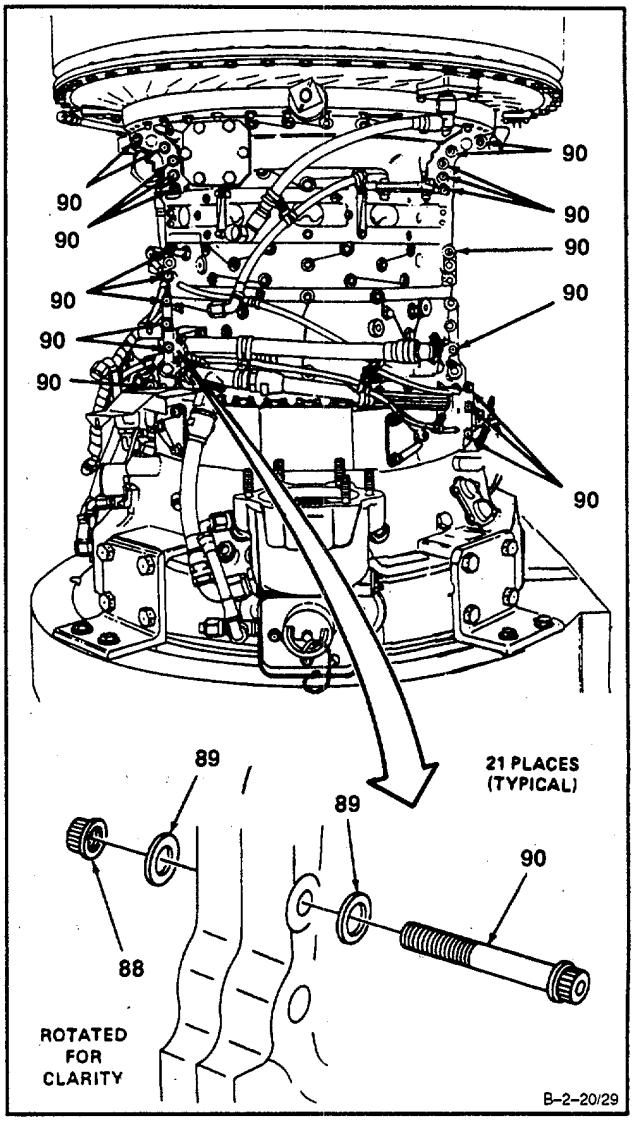

GO TO NEXT PAGE

34. Have helper lift up on combustion section and power turbine (91) and **remove lower compressor housing 92).**

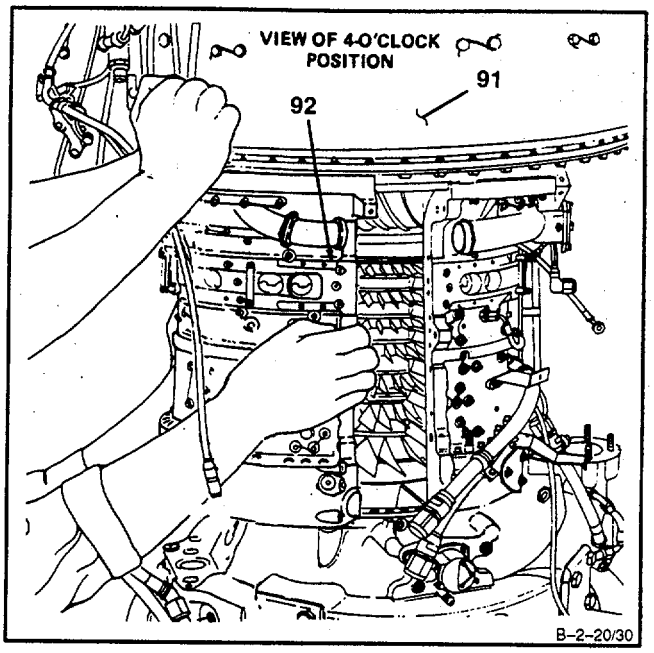

FOLLOW-ON MAINTENANCE:
None

END OF TASK

2-22 CLEAN COMPRESSOR HOUSING 2-22

INITIAL SETUP

Applicable Configurations:
All

Tools:

Powerplant Mechanic's Tool Kit,
NSN 5180-00-323-4944
Goggles
Compressed Air Source
Fiber Brush

Materials:
Dry Cleaning Solvent (E19)
Gloves (E24)

Personnel Required:
Aircraft Powerplant Repairer

Equipment Condition:
Upper Compressor Housing Removed (Task 2-20)
Lower Compressor Housing Removed (Task 2-21)

General Safety Instructions:

WARNING

Dry cleaning solvent (E19) is flammable and toxic. It can irritate skin and cause burns. Use only in well-ventilated area, away from heat and open flame. In case of contact, immediately flush skin or eyes with water for at least 15 minutes. Get medical attention for eyes.

WARNING

WARNING

The following procedure applies to both (upper and lower) compressor halves.

1. Wear gloves (E24), and clean compressor housing (1) and stator vanes (2). Use fiber brush and dry cleaning solvent (E19).

WARNING

When using compressed air for cleaning, use approved protective equipment for eyes and face. Do not use more than 30 psig air pressure. Do not direct air toward yourself or another person. Failure to comply could result in injury to eyes or skin. In case of injury, get medical attention.

2. Wear goggles. **Blow dry compressor housing (1) and stator vanes (2)** using clean, dry compressed air.

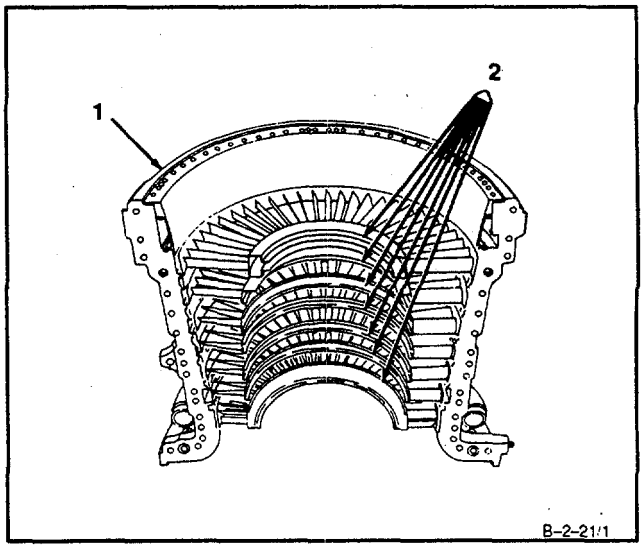

FOLLOW-ON MAINTENANCE:
Inspect Compressor Housing (Task 2-23).

END OF TASK

2-23 INSPECT COMPRESSOR HOUSING 2-23

INITIAL SETUP

Applicable Configurations:
All

Tools:
Technical Inspection Tool Kit,
NSN 5180-00-323-5114

Materials:
None

Personnel Required:
Aircraft Powerplant Inspector

References:
Task 2-29

Equipment Condition:
Off Engine Task
Stator Vane Assemblies Removed (Task 2-27)

NOTE

The following procedure applies to both (upper and lower) compressor halves.

1. **Inspect compressor housing (1)** as follows:

   a. There shall be no cracks.

   b. There shall be no nicks, dents, or gouges greater than 0.500 inch length to 0.070 inch depth.

   c. There shall be no corrosion or paint damage.

   d. Inspect mounting surface for first stage stator vane assembly (2). There shall be no RTV residue.

2. **Inspect seven Inserts (3)** as follows:

   a. There shall be no blade tip rubs.

   b. There shall be no looseness.

   c. There shall be no cracks.

   d. Inspect bolt ends (4). Bolt ends shall be flush or not more than 0.035 inch below surface of inserts (3).

3. **Inspect stator vane assemblies** (Ref. Task 2-29).

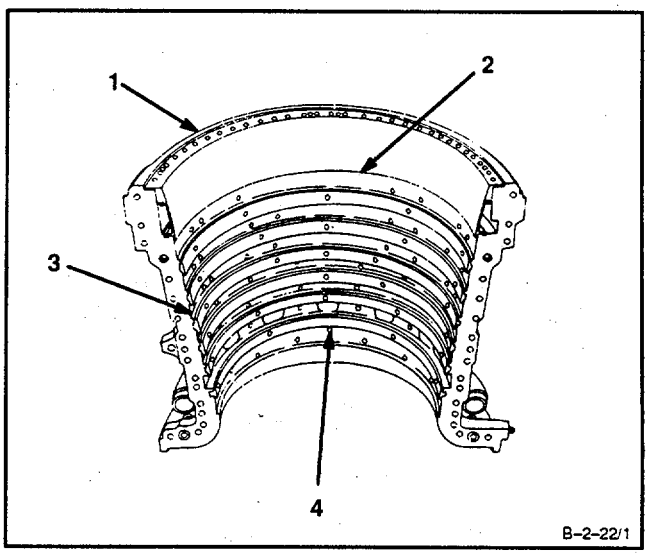

FOLLOW-ON MAINTENANCE:
Install Stator Vane Assembly-First Stage (Task 2-31).
Install Stator Vane Assemblies-Second Through Seventh Stages (Task 2-32).

END OF TASK

2-24 REPAIR COMPRESSOR HOUSING 2-24

INITIAL SETUP

Applicable Configurations:
All

Tools:
Technical Inspection Tool Kit,
NSN 5180-00-323-5114

Materials:
Acid Swabbing Brush
Carborundum Stone (E11)
Crocus Cloth (E16)
Gray Enamel (E26)

Personnel Required:
Aircraft Powerplant Repairer
Aircraft Powerplant Inspector

References:

Equipment Condition:
Off Engine Task
Stator Vane Assemblies Removed (Task 2-27)'

General Safety Instructions:

WARNING

The compressor housing is made from a magnesium/nickel alloy containing radioactive thorium; particles of this material, resulting from blending or polishing are hazardous to your health if ingested or otherwise introduced into your body. Do not eat, drink, or smoke in any area where these particles might be present. Wash your-hands thoroughly after working with this material. If exposure or injury occurs, no matter how slight, get medical attention.

WARNING

The compressor housing is made from a magnesium/nickel alloy containing radioactive thorium; particles of this material, resulting from blending or polishing are hazardous to your health if ingested or otherwise Introduced into your body. Do not eat, drink, or smoke in any area where these particles might be present. Wash your hands thoroughly after working with this material. If exposure or injury occurs, no matter how slight, get medical attention.

NOTE

The following procedures apply to both (upper and lower) compressor halves.

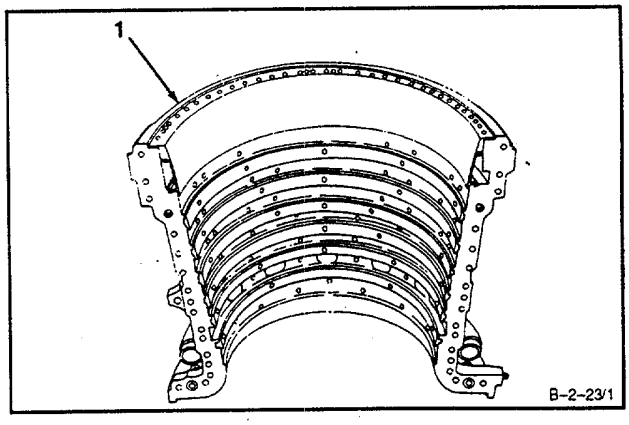

1. Repair nicks, dents, and gouges on inside and outside diameter of compressor housing (1) as follows:

   a. Defects of 0.070 inch depth shall not be opposite each other on the inside and outside diameter of housing (1).

   b. Defects shall not project into mating surfaces.

   c. **Repair gouges** up to 0.500 inch length to 0.070 inch depth.

GO TO NEXT PAGE

(1) Blend all sharp edges using carborundum stone (E11).

(2) Polish to smooth finish using crocus cloth (E16).

d. **Repair dents** up to 0.500 inch length to 0.070 inch depth.

(1) Blend all sharp edges using carborundum stone (E11).

(2) Polish to smooth finish using crocus cloth (E16).

e. **Repair nicks** up to 0.500 inch length to 0.070 inch depth.

(1) Blend all sharp edges using carborundum stone (E11).

(2) Polish to smooth finish using crocus cloth (E16).

2. **Repair corrosion damage** up to 0.070 inch depth.

a. Blend all sharp edges using carborundum stone (E11).

b. Polish to smooth finish using crocus cloth (E16).

c. Use touch-up procedure for magnesium and magnesium alloys (Ref. Task 1-110). Use gray enamel (E26).

3. **Repair damaged paint** on compressor housing (1). Use gray enamel (E26).

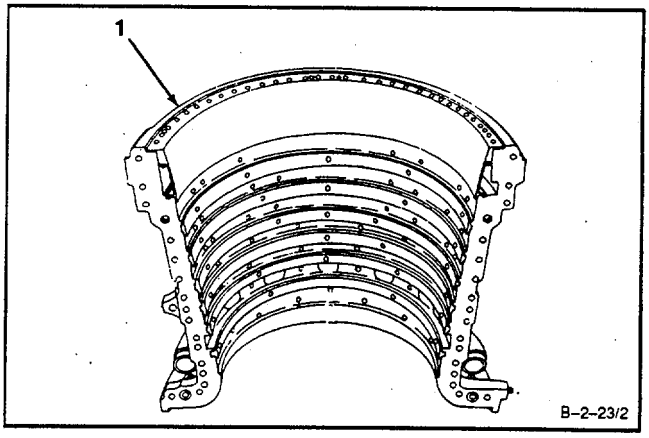

INSPECT

FOLLOW-ON MAINTENANCE:

Install Stator Vane Assembly-First Stage (Task 2-31).
Install Stator Vane Assemblies-Second Through Seventh (Task 2-32).

END OF TASK

2-25 INSTALL UPPER COMPRESSOR HOUSING 2-25

INITIAL SETUP

Applicable Configurations:
All

Tools:
Powerplant Mechanic's Tool Kit,
NSN 5180-00-323-4944
Technical Inspection Tool Kit,
NSN 5180-00-323-5114
Torque Wrench, 0-30 Inch-Pounds
Torque Wrench, 30-150 Inch-Pounds
Open-End Wrench, 1-5/8 Inch
Crowfoot Attachment, 1-5/8 Inch

Materials:
Anti-seize compound (E6)
Lockwire (E33)

Parts:
Packings

Personnel Required:
Aircraft Powerplant Repairer (2)
Aircraft Powerplant Inspector

References:

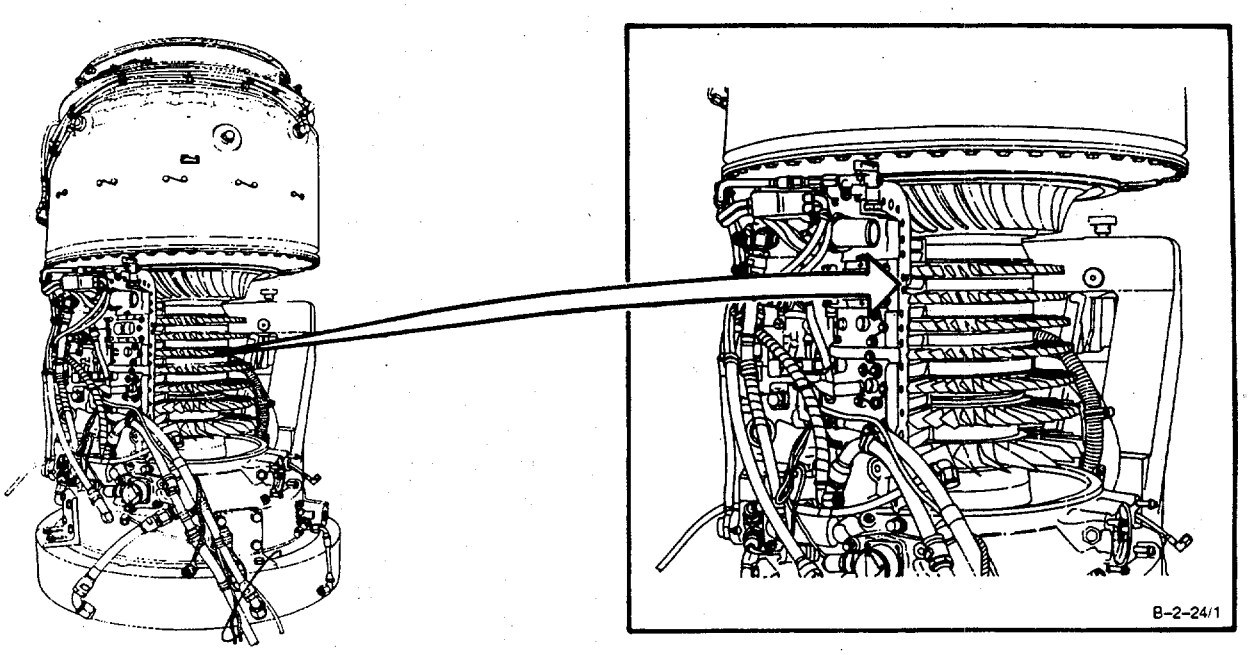

GO TO NEXT PAGE

NOTE

Some engine compressor housings may have provisions for a packing and plug installed at the 9-o'clock position. If required, assure installation.

NOTE

If upper compressor housing is a replacement, do steps 1. and 2. If same upper compressor housing that was removed is being reinstalled, omit steps 1. and 2.

1. Remove hoist adapter assembly (1) and washer (2) from unserviceable upper compressor housing half (3).

2. Install washer (2) and hoist adapter (1) on serviceable upper compressor housing half (3).

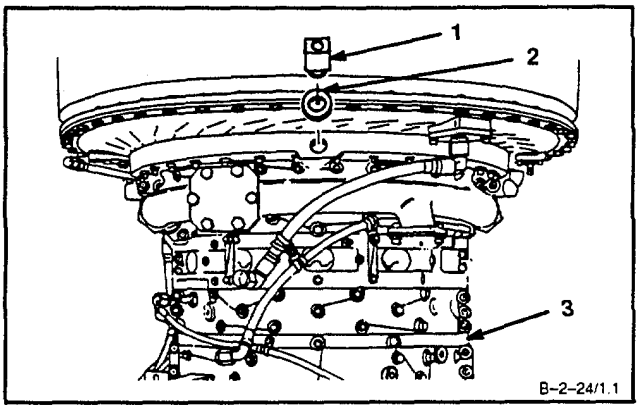

3. Have helper lift up on combustion section and power turbine (4) and install **upper compressor** housing **(3).** Align two connectors (5) with air gallery (6).

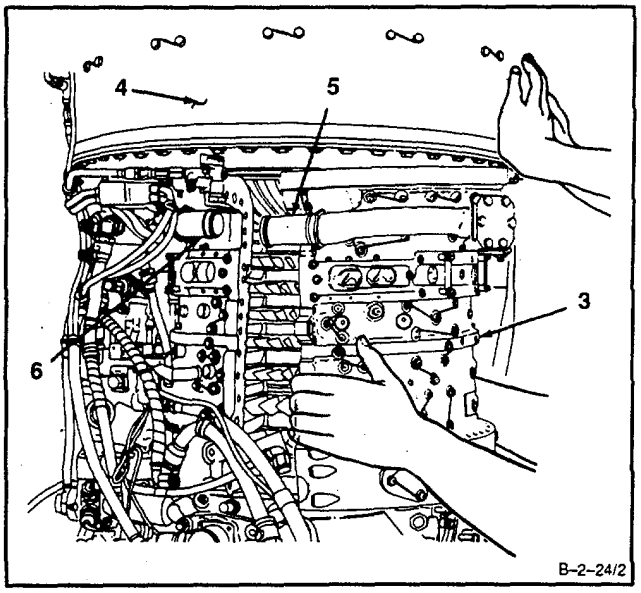

GO TO NEXT PAGE

NOTE

Procedure for installing four dowel pins is the same. Procedure for only one is shown.

4. Align dowel pin (7) with hole (8) and **tap in dowel pin** (7). Use soft face mallet.

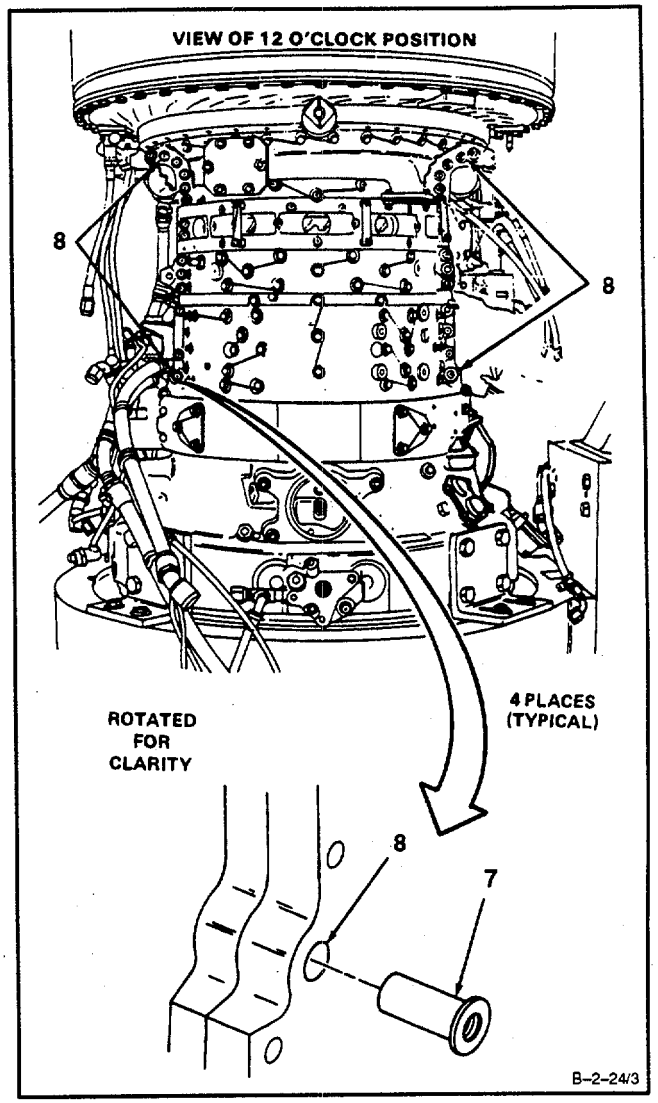

GO TO NEXT PAGE

NOTE

Procedure for installing nuts, bolts, and washers in four dowel pins is the same. Procedure for only one is shown.

5. **Install bolt (9),** washer (10), and nut (11) in dowel pin (7).

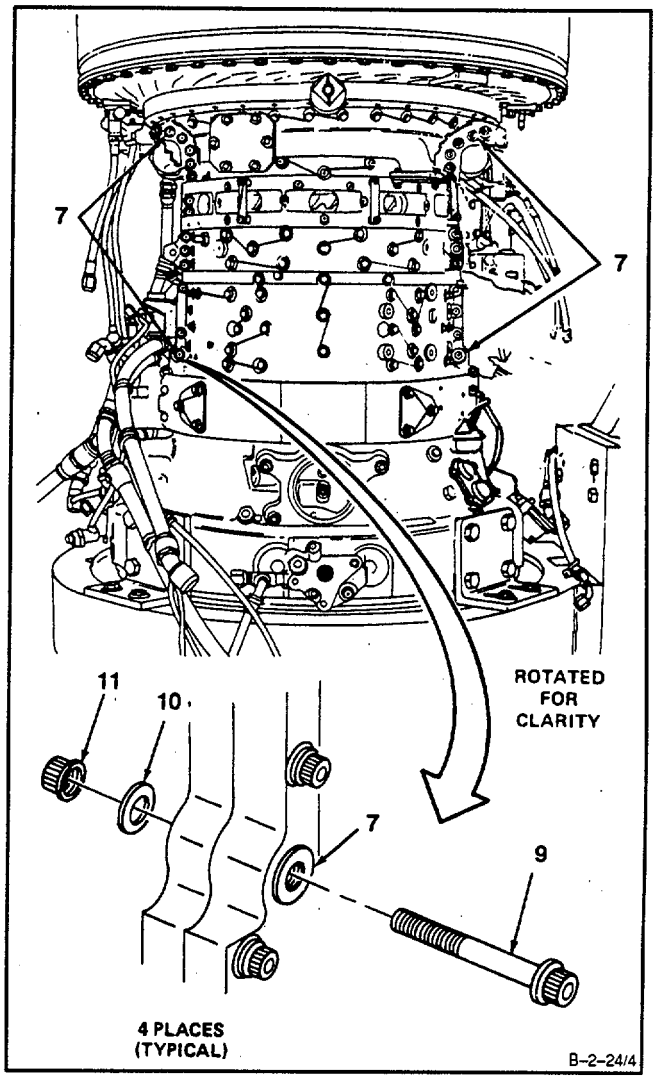

GO TO NEXT PAGE

6. **Install** 42 washers (12), **21 bolts** (13), and nuts (14) into holes (15).

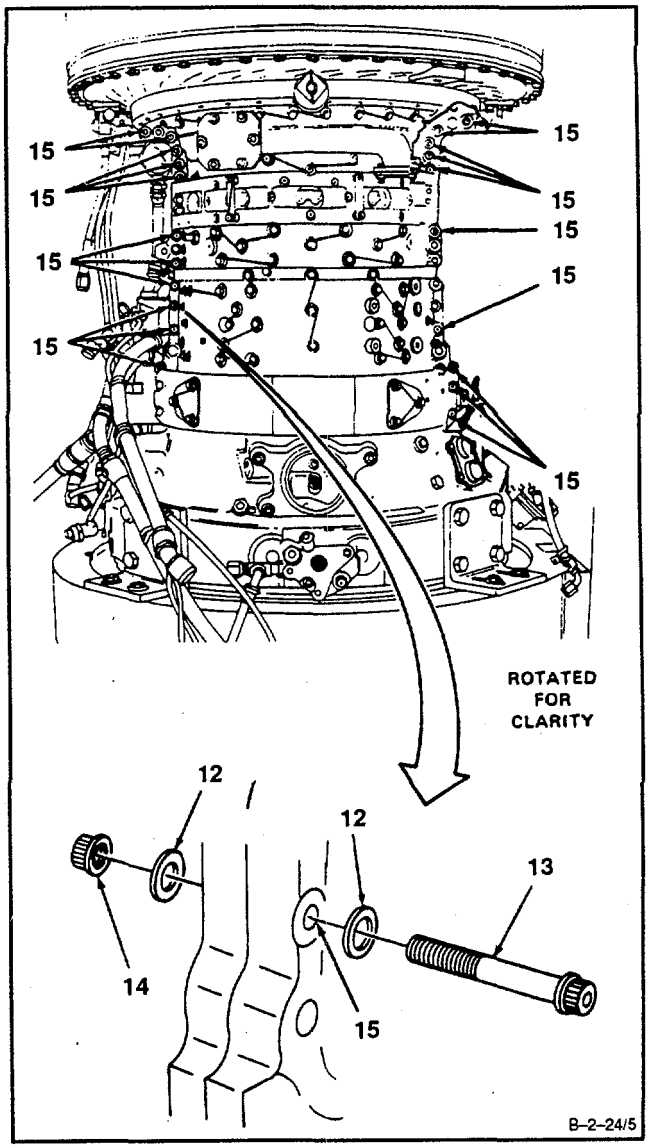

GO TO NEXT PAGE

7. **Install** six washers (16), **three bolts (17),** and nuts (18) into holes (19).

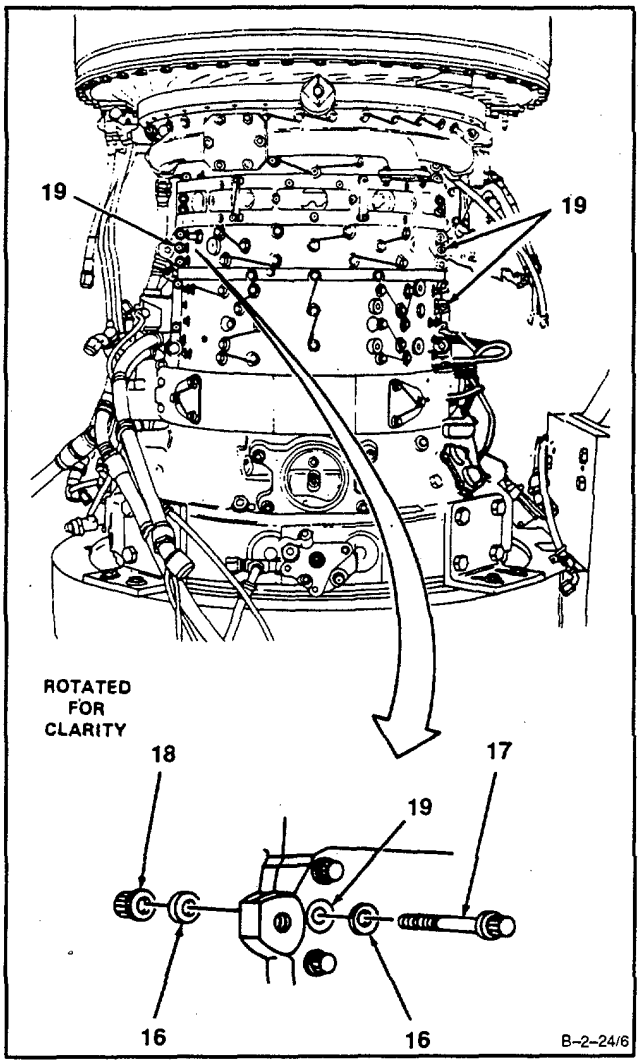

GO TO NEXT PAGE

8. **Install** four washers (20), **two bolts (21),** and two nuts (22).

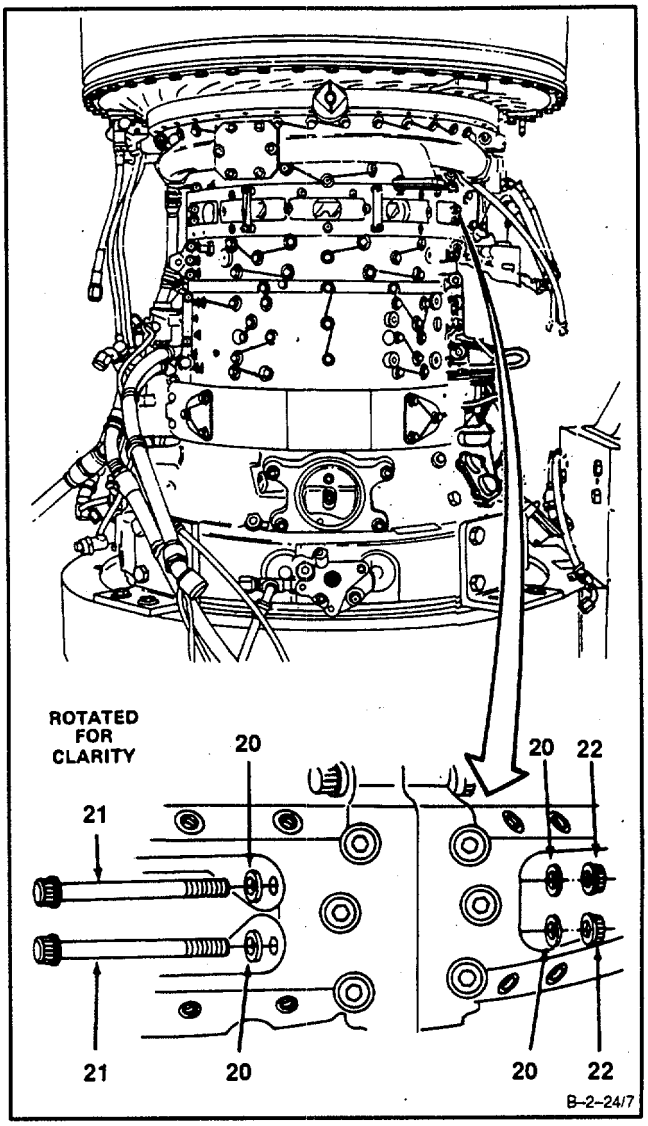

GO TO NEXT PAGE

9. **Install** four washers (23), **two bolts (24),** and two nuts (25).

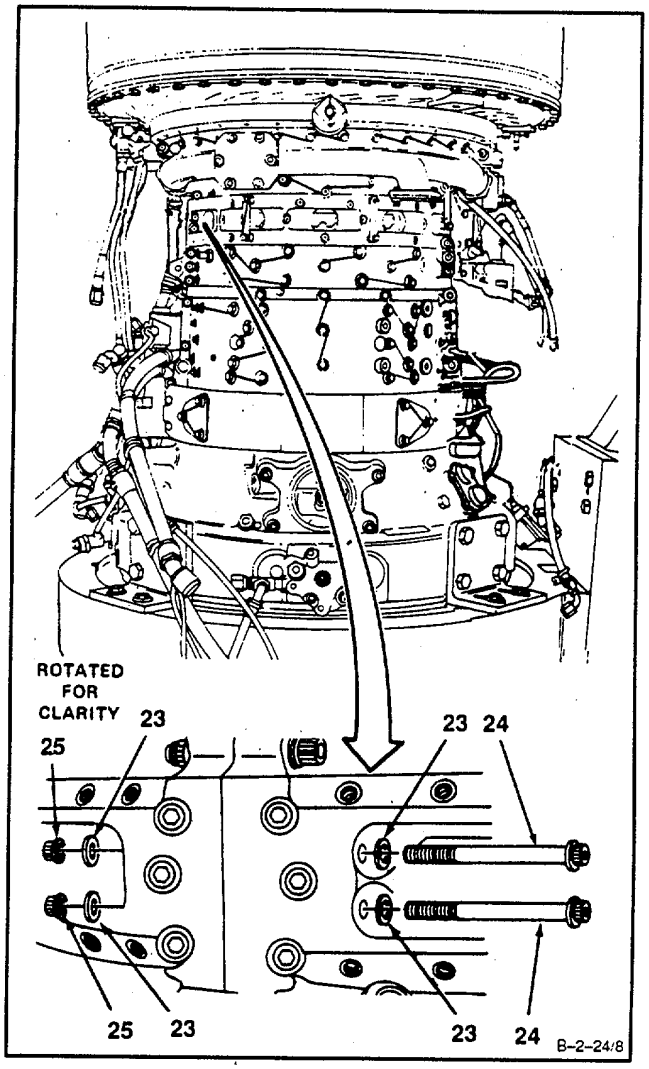

GO TO NEXT PAGE

10. Install two spacers (26), **bracket (27),** two bolts (28), washers (29), nuts (30), and bolt (31). Lockwire bolt (31). Use lockwire (E33).

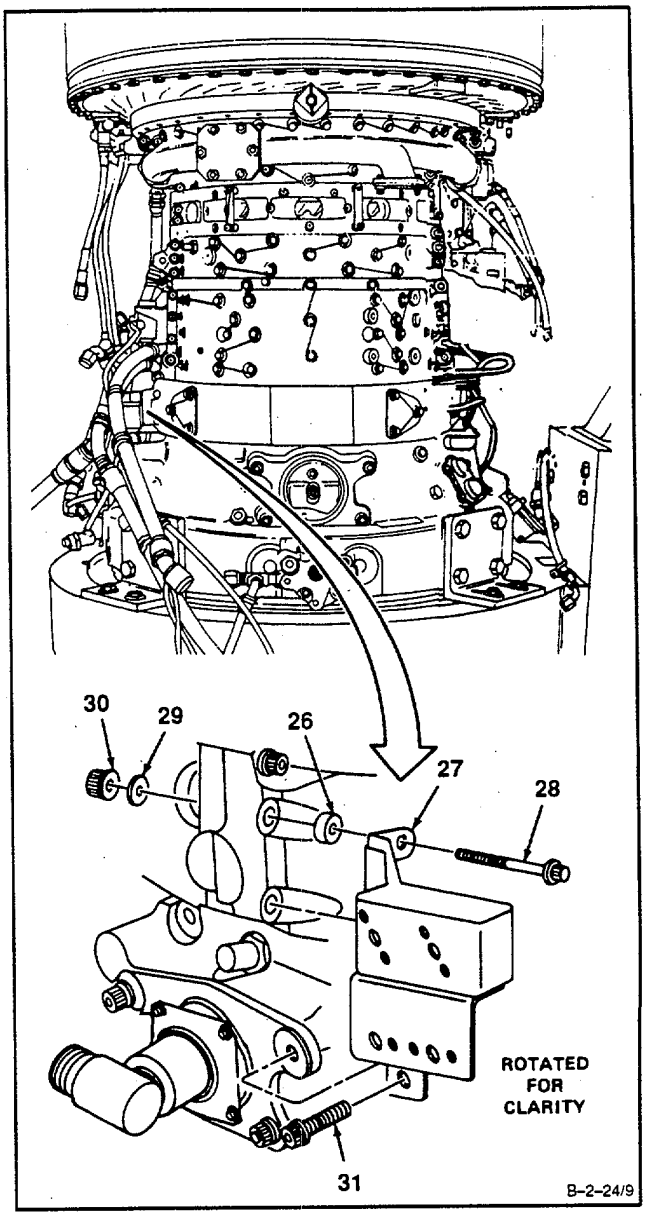

GO TO NEXT PAGE

11. **Connect nut (32)** to connector (33). **Torque nuts (32 and 34) to <u>90 inch-pounds</u>.** Use crowfoot attachment and 1-5/8 inch open-end wrench. Lockwire nuts (32 and 34). Use lockwire (E33).

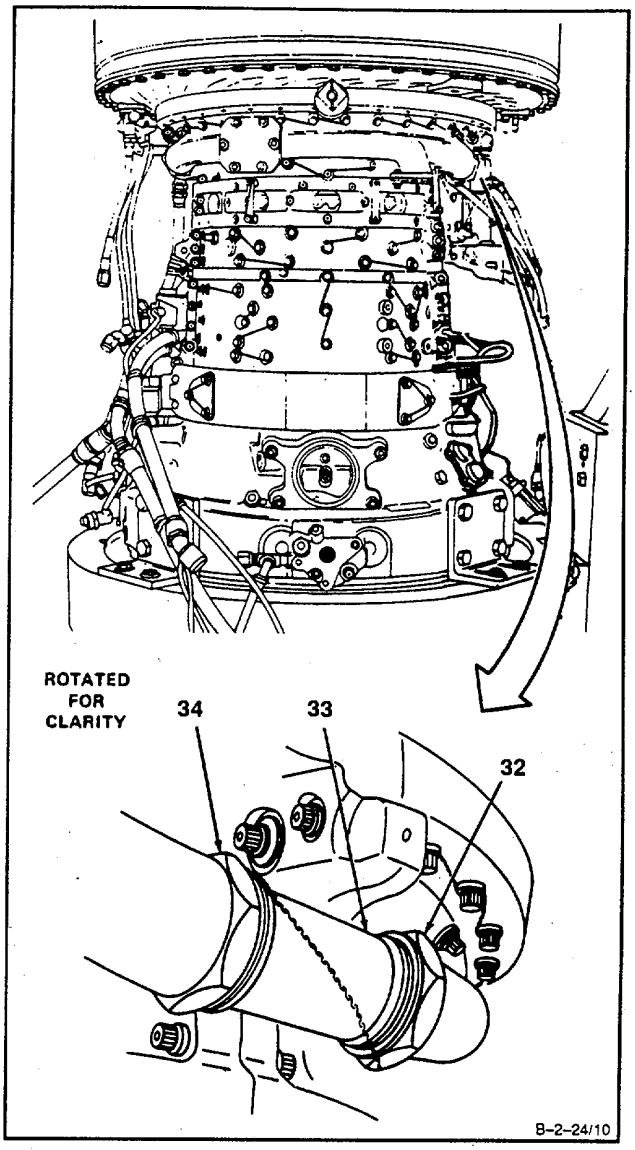

GO TO NEXT PAGE

12. **Connect nut (35)** to connector (36). **Torque nuts (35 and 37) to <u>90 inch-pounds</u>.** Use 1-5/8 inch, crowfoot attachment and 1-5/8 inch open-end wrench. Lockwire nuts (35 and 37). Use lockwire (E33).

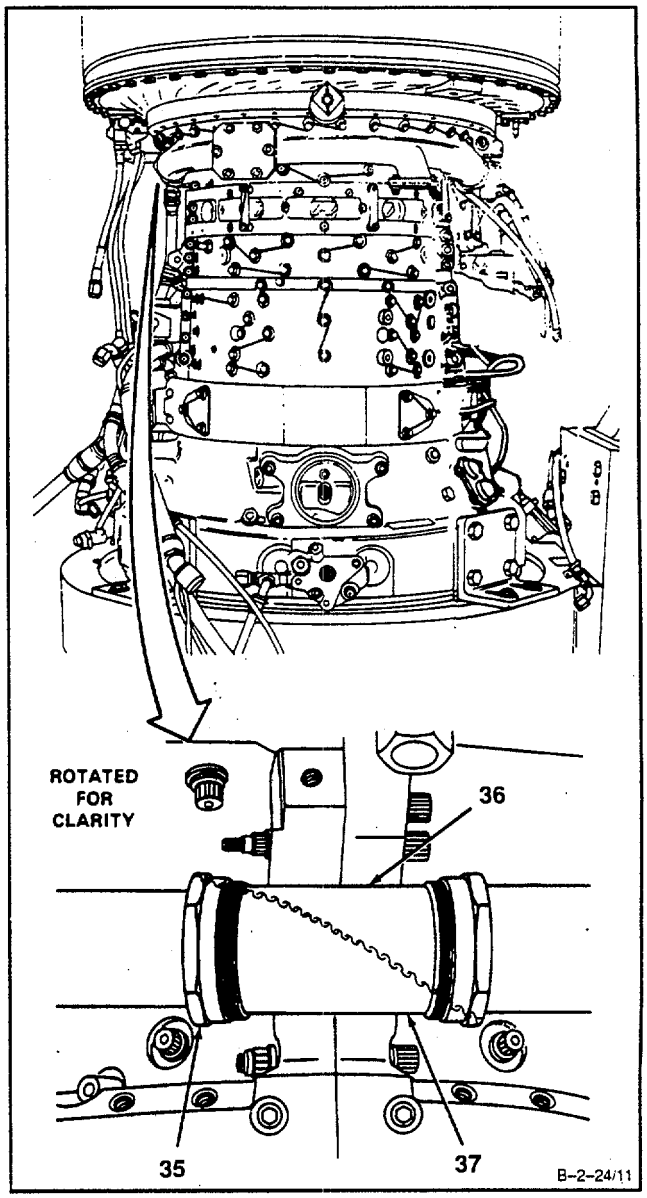

GO TO NEXT PAGE

13. Apply anti-seize compound (E6) to threads of 16 bolts (38, 39, and 40).

14. **Install** eight washers (41) and **bolts (38).**

15. **Install** six washers (41) and **bolts (39).**

16. **Install** two washers (41) and **bolts (40).**

17. Lockwire bolts (38, 39 and 40). Use lockwire (E33).

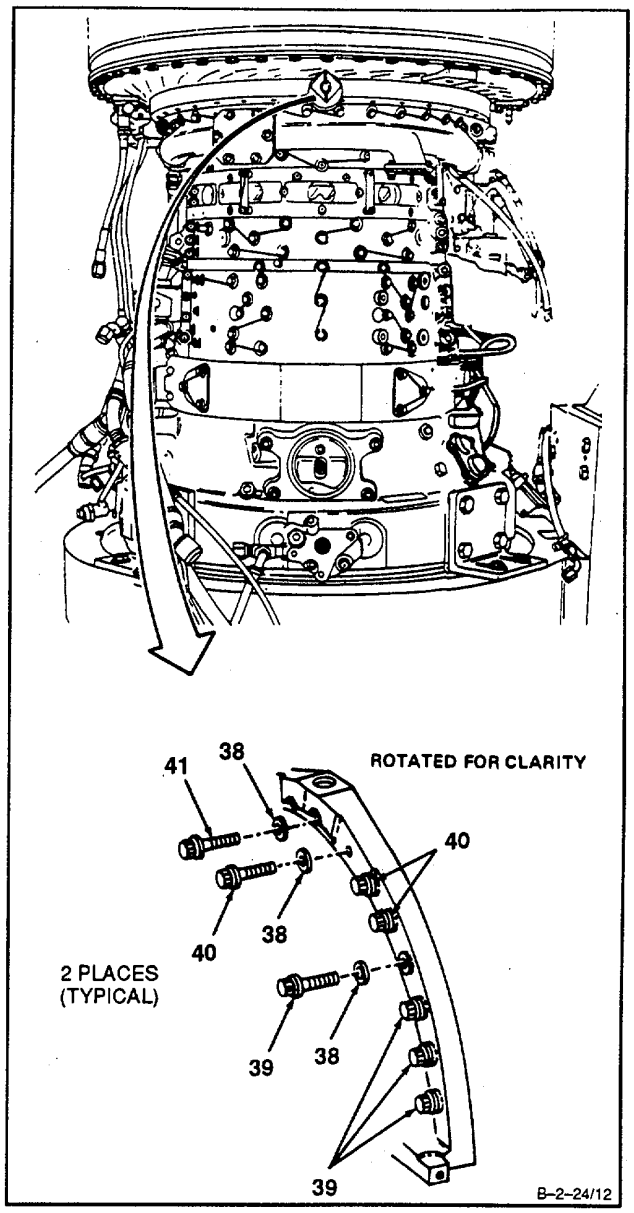

GO TO NEXT PAGE

18. **Install** spacer (42), **bracket (43),** and bolt (44).

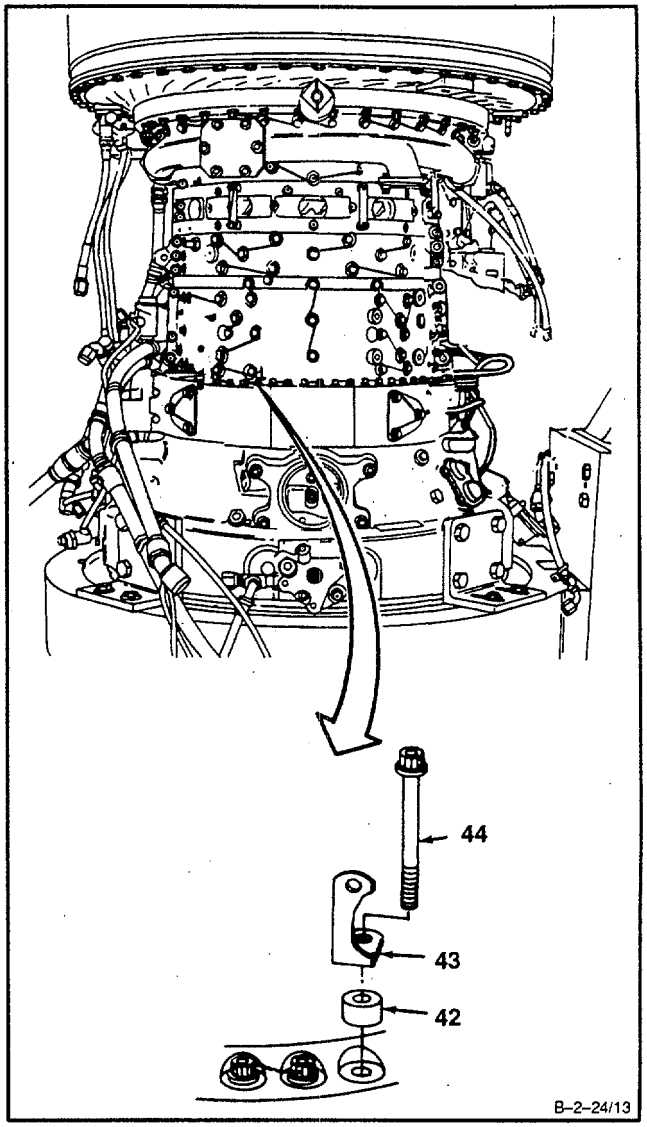

GO TO NEXT PAGE

19. **Install** 24 washers (45) and **bolts (46)** in all holes except for three locations (47).

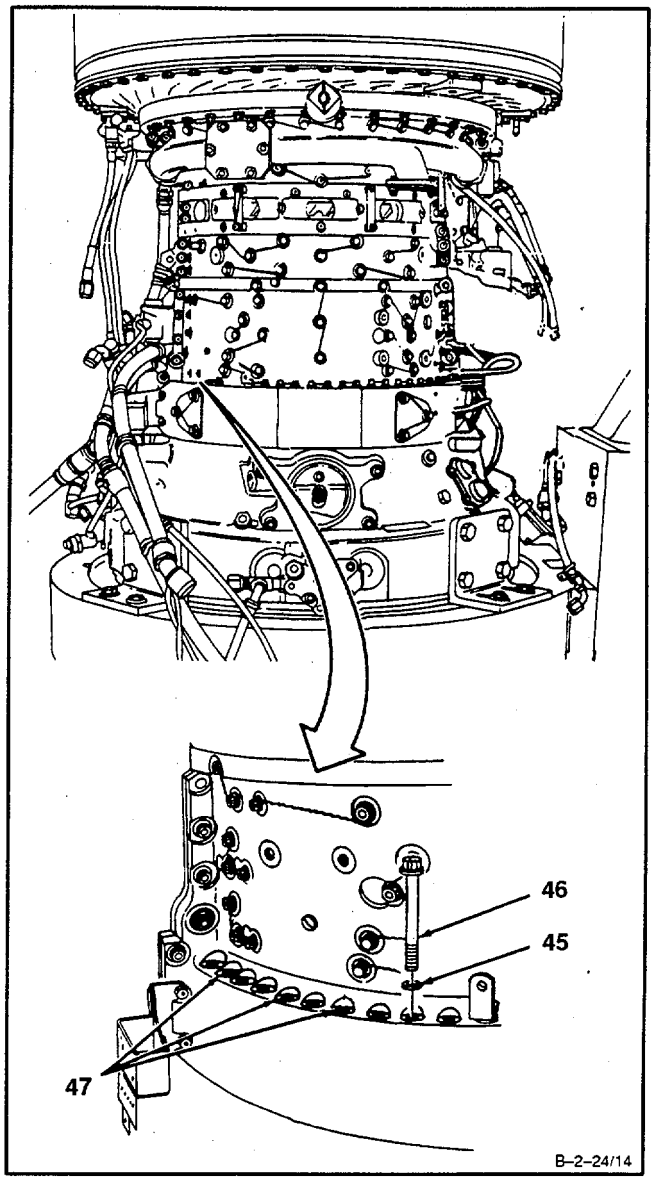

GO TO NEXT PAGE

20. **Install** two spacers (48 and 49), **bracket (50),** washer (51), and bolt (52).

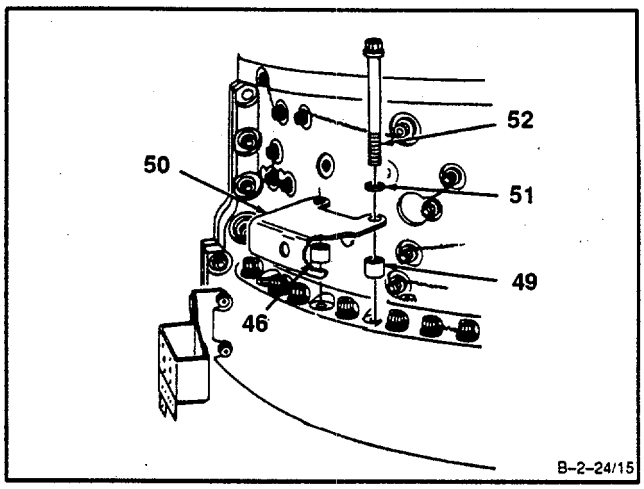

21. **Install** spacer (53), **bracket (54),** two washers (55), and bolts (56). Lockwire bolts (44, 46, 52 and 56). Use lockwire (E33).

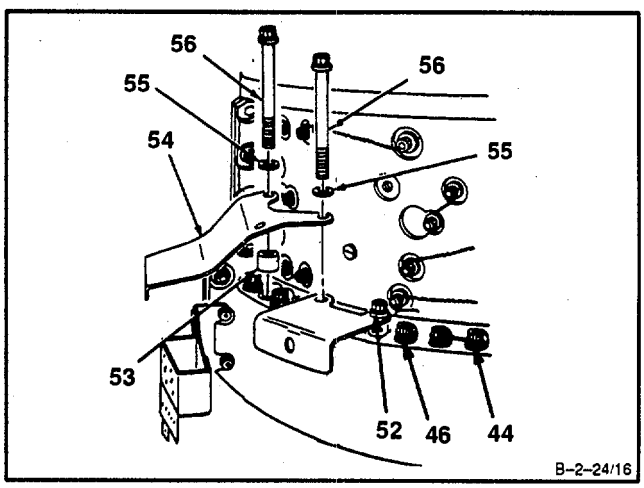

22. **Install** two spacers (57), **bracket (58),** two washers (59), and bolts (60). **Torque bolts (60) to <u>15 inch-pounds.</u>** Lockwire two bolts (60). Use lockwire (E33).

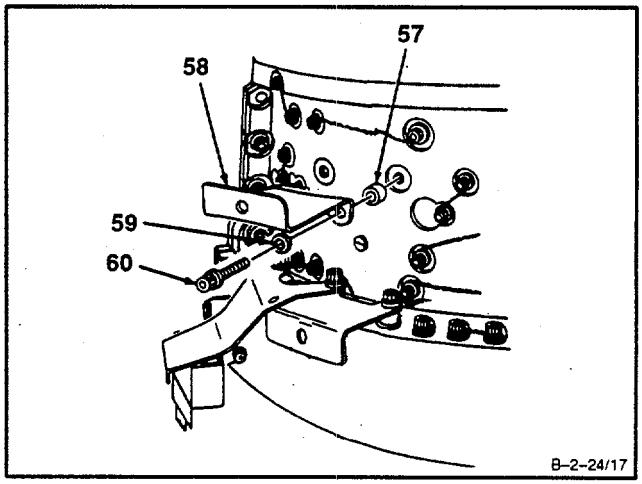

GO TO NEXT PAGE

23. **Install** bracket (61) and **electric harness (62 and 63)** as an assembly.

24. **Install** bracket (64), electrical harness (65), and **solenoid** valve (66) as an assembly.

25. **Install** two spacers (67), **bolts (68),** washers (69), and nuts (70).

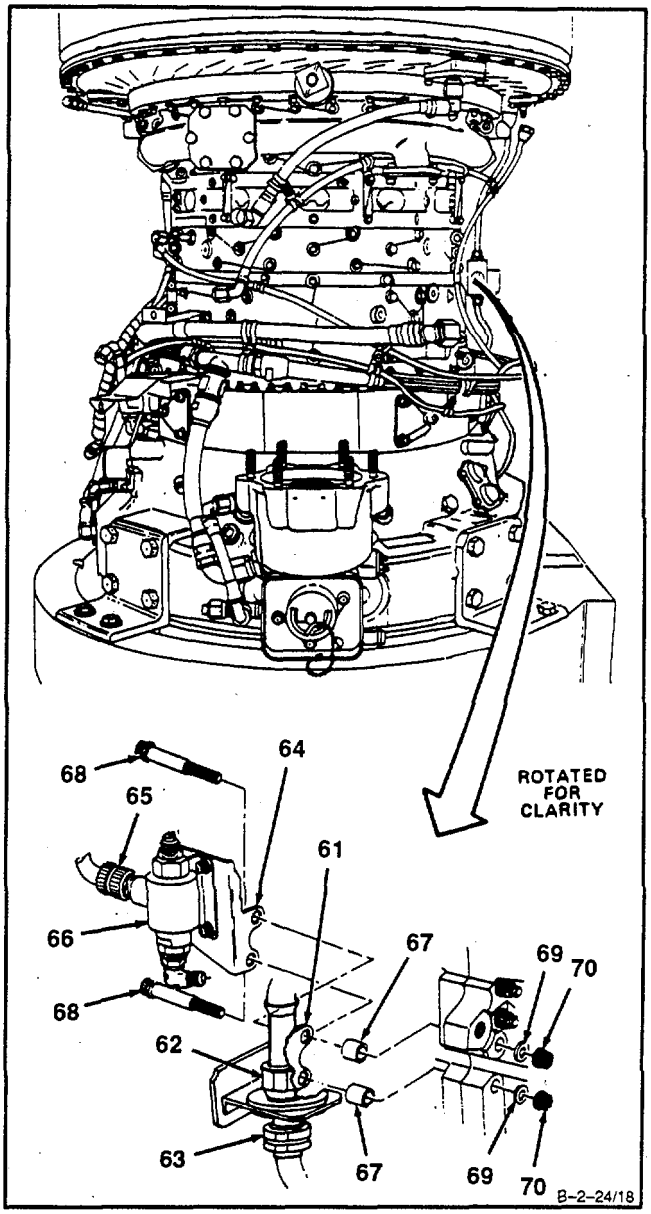

GO TO NEXT PAGE

26. **Connect hose assemblies** (71 and 72) to solenoid valve (73).

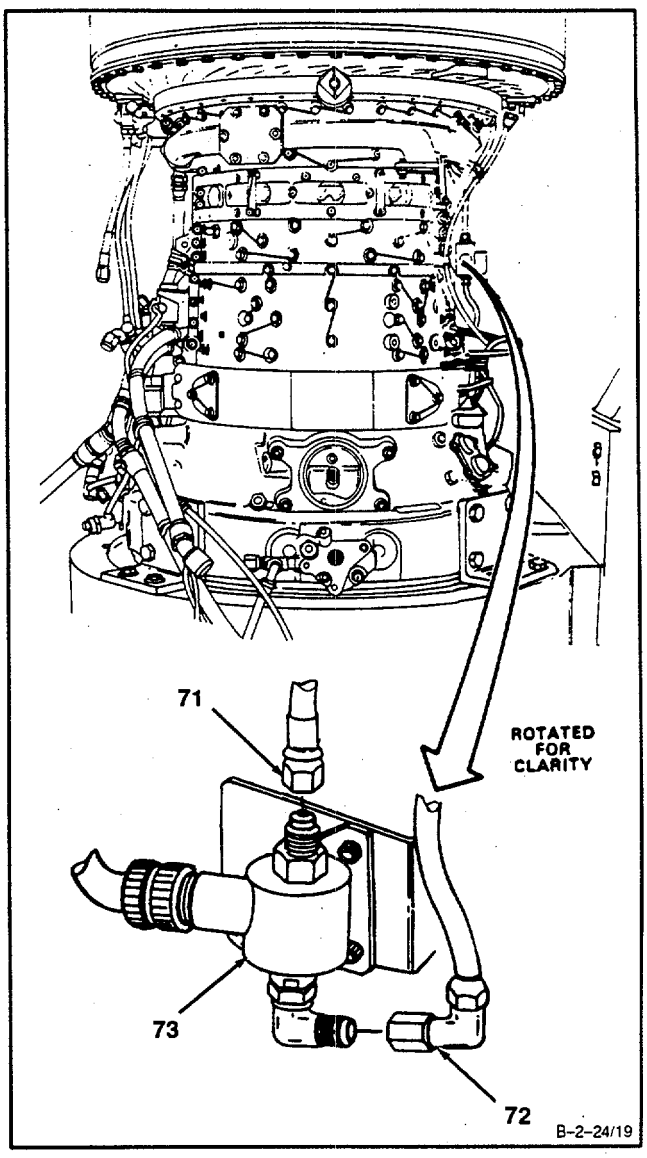

GO TO NEXT PAGE

27. **Install clamp (74),** screw (75), and nut (76) to bracket (77).

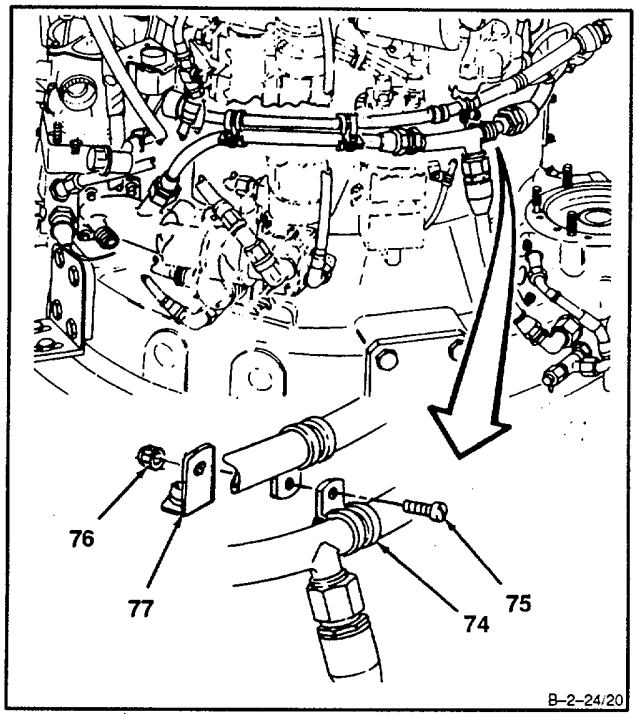

28. **Connect tube and hose assembly (78)** to tube assembly (79).

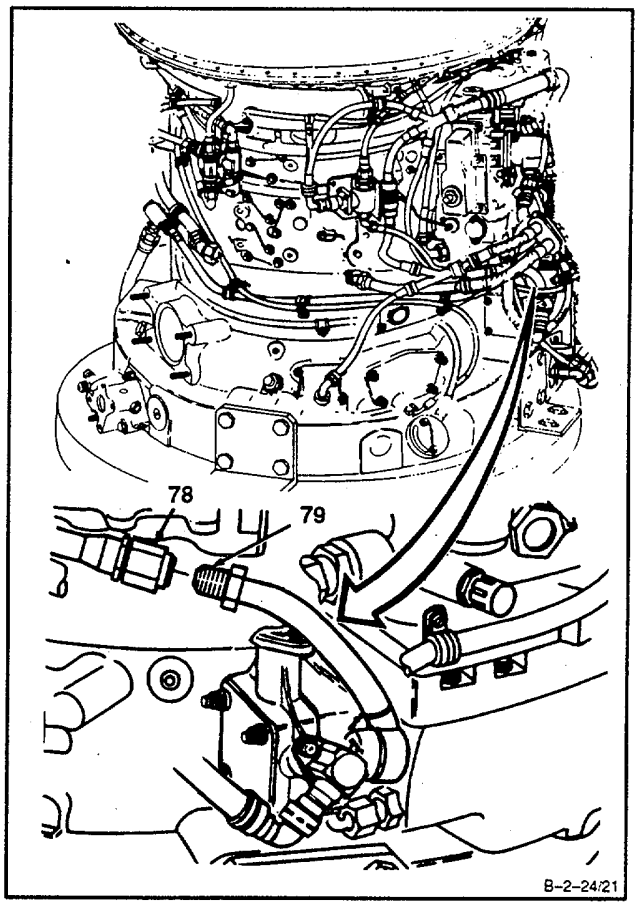

GO TO NEXT PAGE

29. **Connect hose assembly (80)** to fuel boost pump (81).

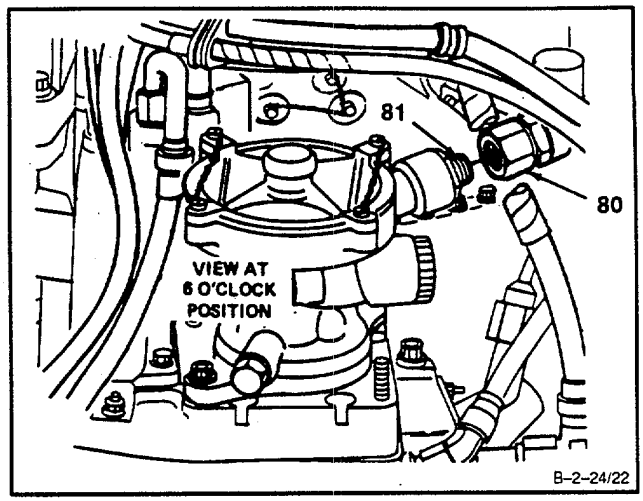

30. **Connect tube and hose assembly (82)** to nipple(83).

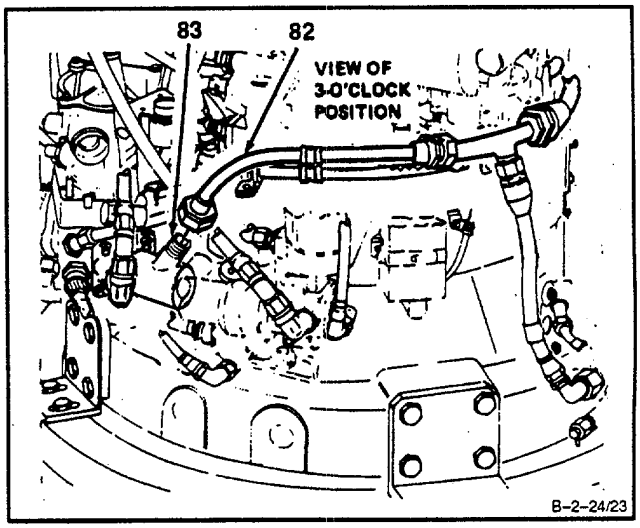

GO TO NEXT PAGE

31. **Disconnect hose assembly (84)** from union (85).

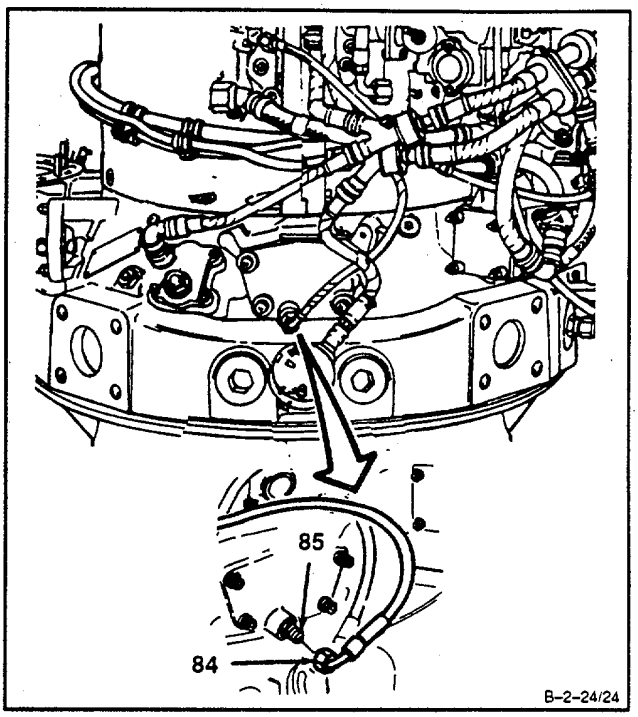

32. **Install clamp (86),** screw (87), and nut (88).

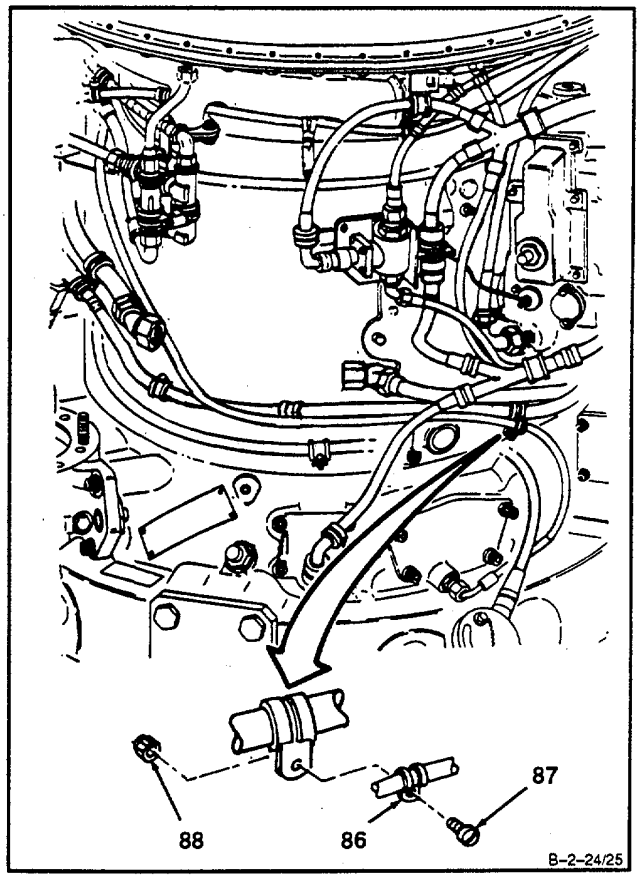

GO TO NEXT PAGE

33. **Install clamp (89),** screw (90), and nut (91).

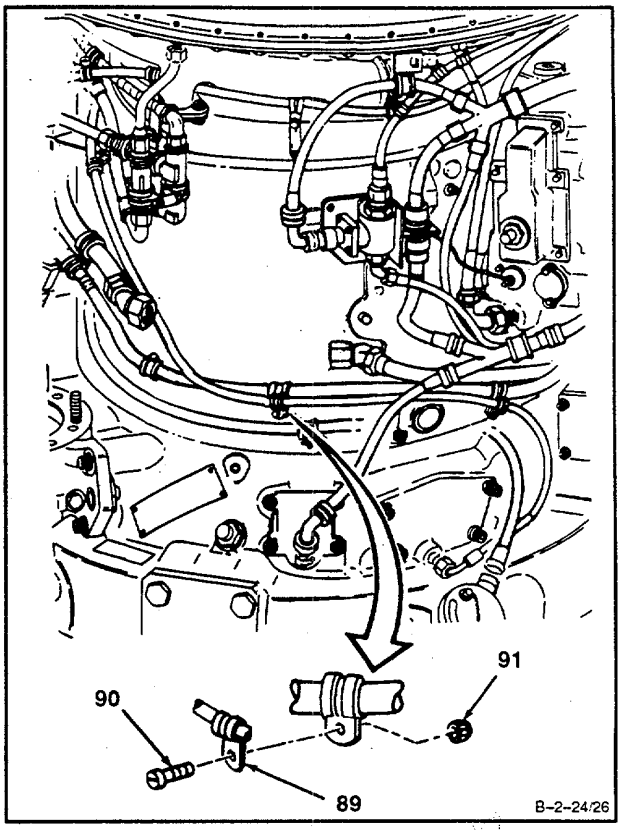

34. **Install clamp (92),** screw (93), and nut (94) to bracket (95).

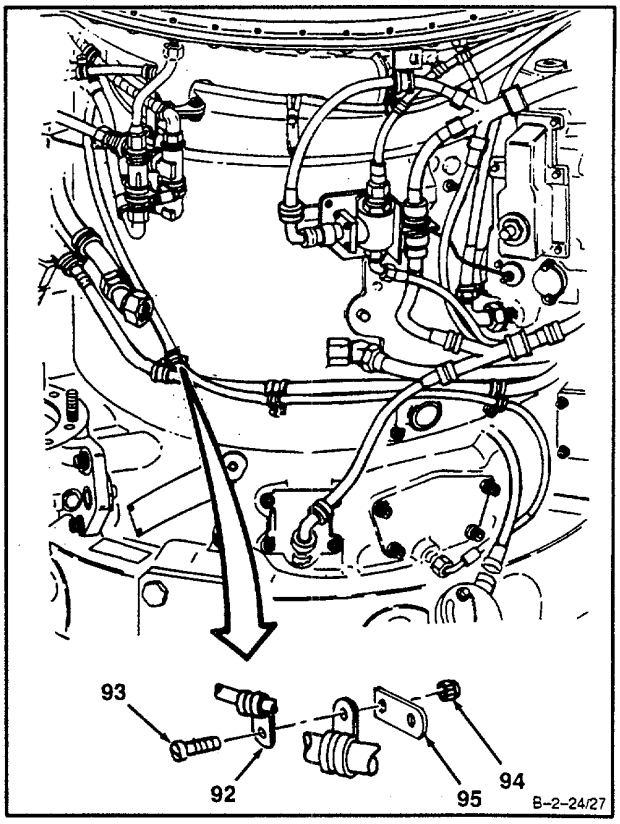

GO TO NEXT PAGE

35. **Install clamp (96)** and screw (97) to compressor housing (3).

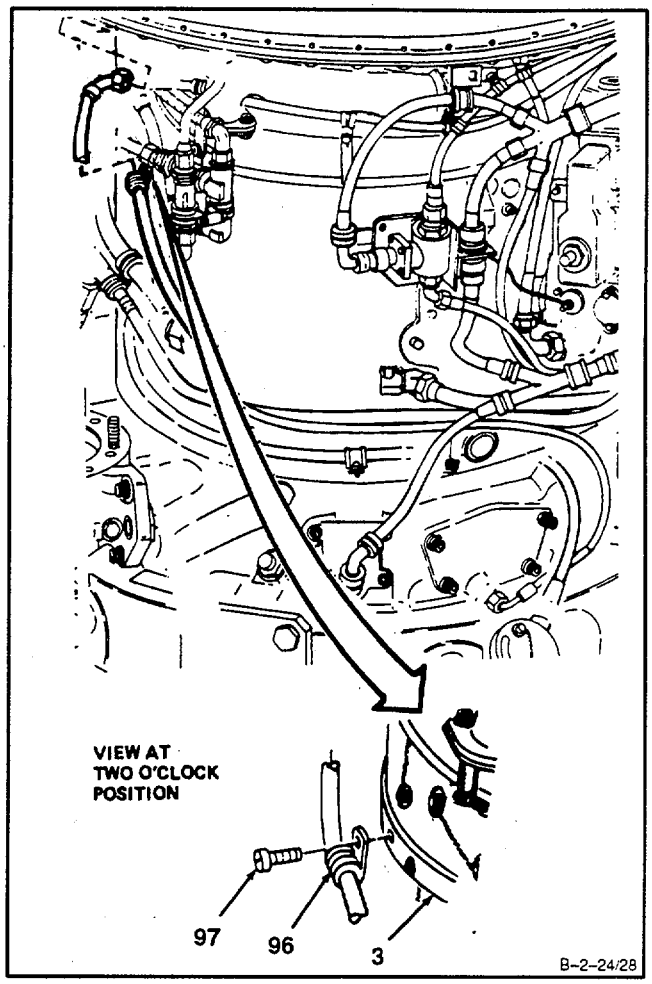

GO TO NEXT PAGE

36. **Install electrical connector (98)** to dummy connector (99).

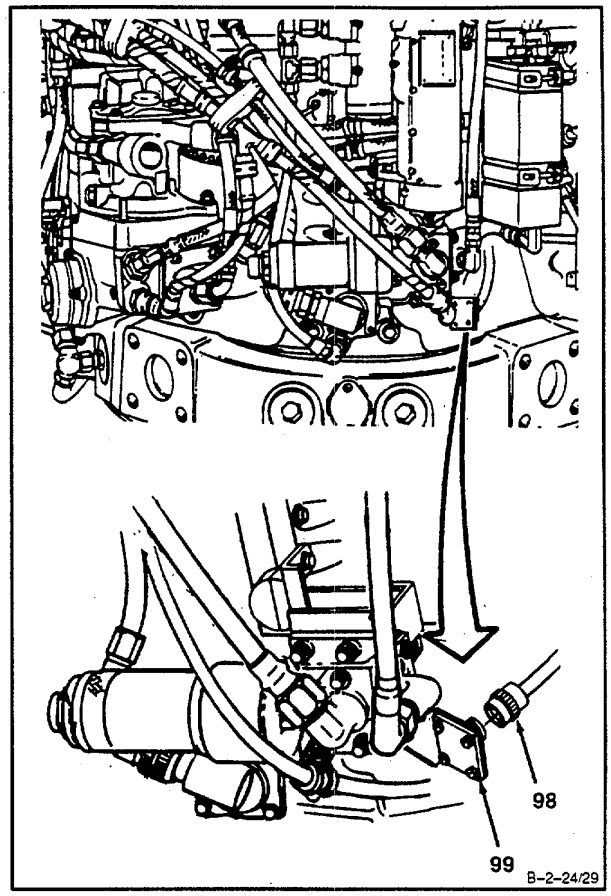

37. **Install clamp (100),** bolt (101), and nut (102).

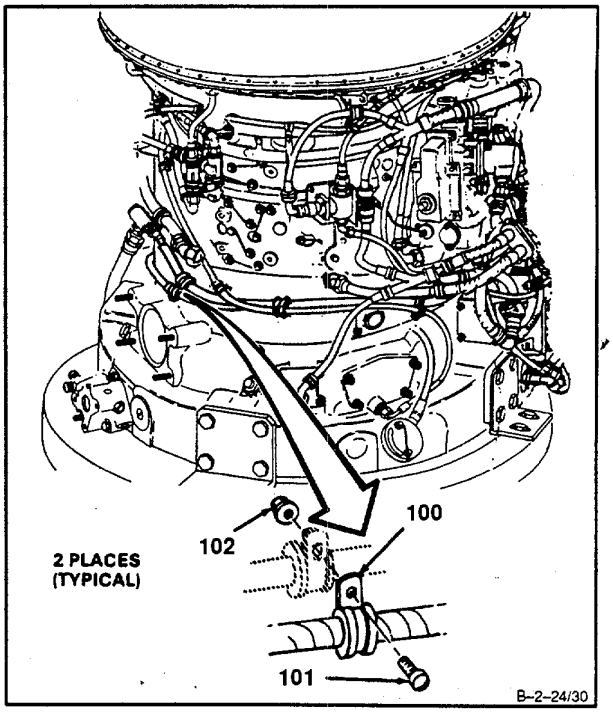

GO TO NEXT PAGE

38. **Connect electric harness assembly (103)** to oil level indicator (104).

39. **Connect electric harness assembly (105)** to T1 sensor (106).

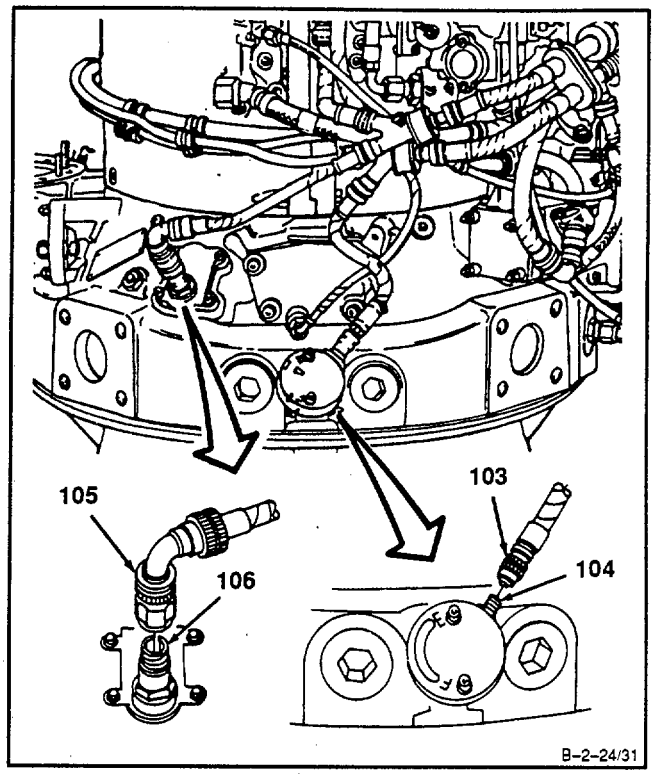

40. **Connect hose assembly (107)** to hydromechanical assembly (108).

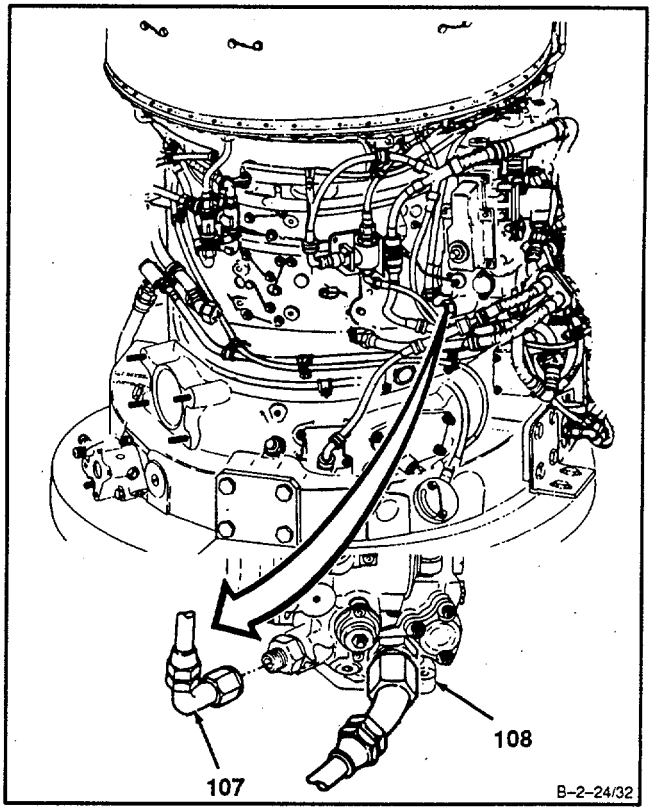

GO TO NEXT PAGE

41. **Install** packing (109), **No. 2 bearing pressure connector assembly (110)** with tube assembly (111) and hose assembly (112) attached, two washers (113), bracket (114), and screw (115). Lockwire screw (115). Use lockwire (E33)

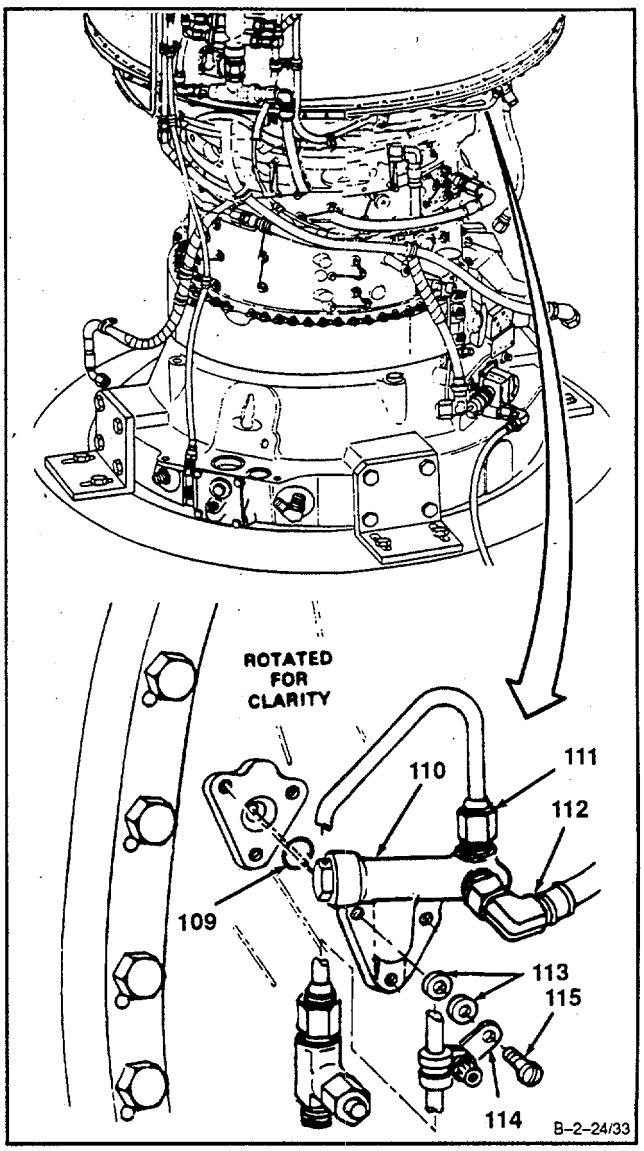

GO TO NEXT PAGE

42. **Install** two washers (116) and **two screws (117).** Lockwire screws (117). Use lockwire (E33).

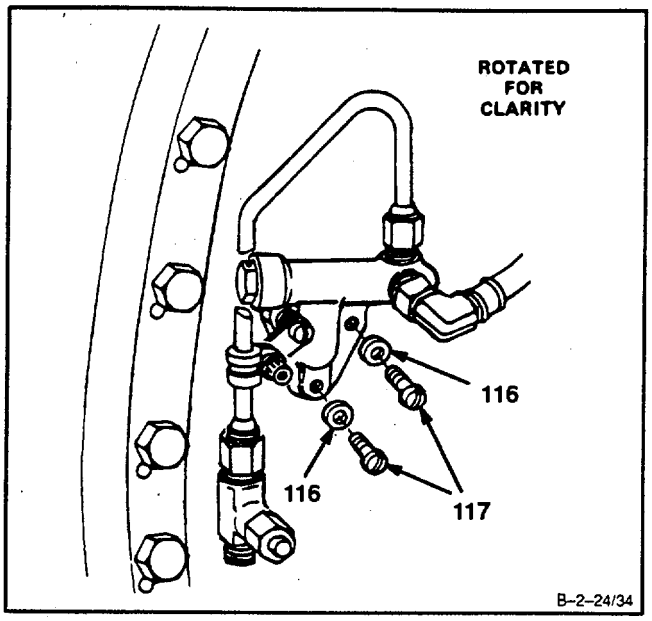

43. **Connect hose assembly (118)** to tee and snubber (119).

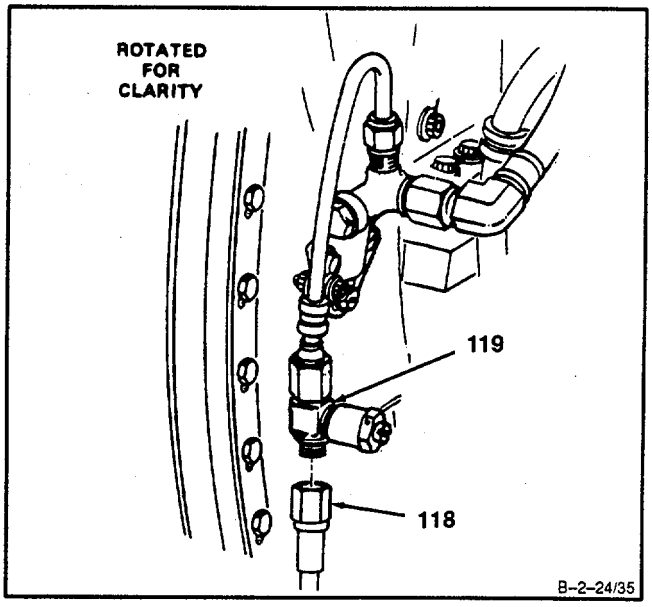

GO TO NEXT PAGE

44. **Install bracket (120) and hose (121)** as an assembly, clamp (122) and screw (123) to compressor housing boss (124).

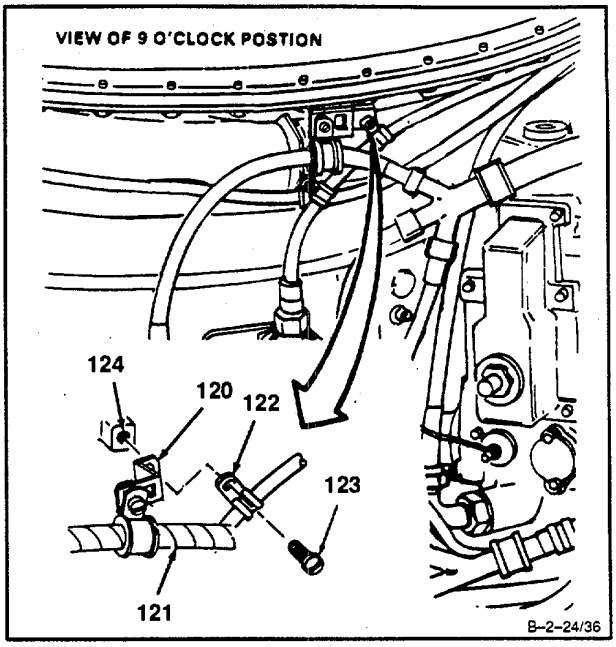

45. **Connect hose assembly (125)** to union (126).

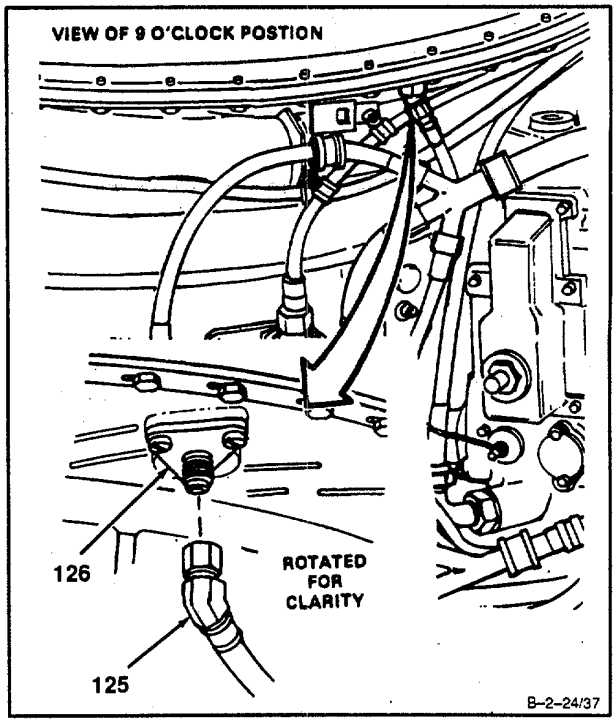

GO TO NEXT PAGE

46. **Install clamp (127),** screw (128), and nut (129).

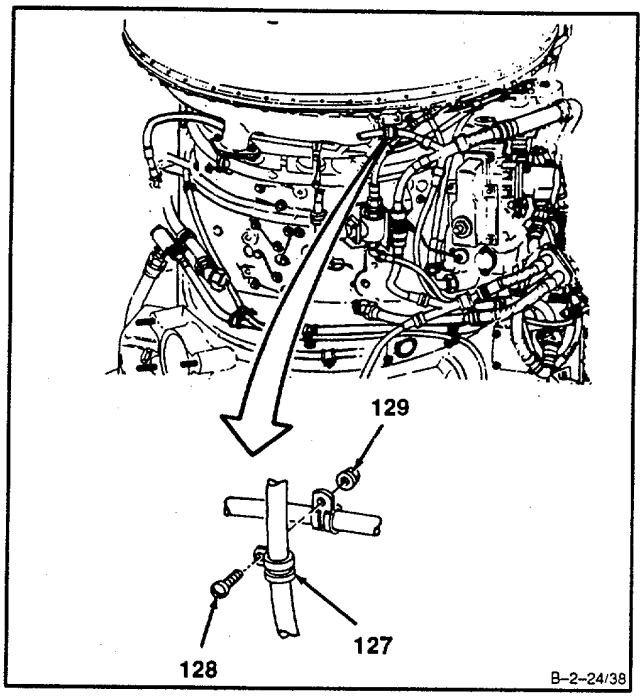

47. **Install bleed band retainer (130),** clamp (131), and two bolts (132). Lockwire bolts (132). Use lockwire (E33).

48. **Install bleed band retainer (133)** and two bolts (134). Lockwire bolts (134). Use lockwire (E33).

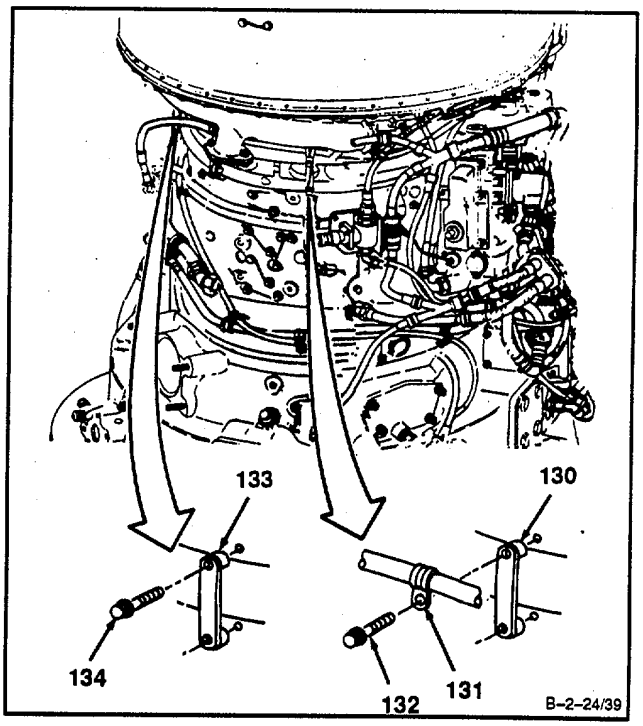

GO TO NEXT PAGE

49. **Install** packing (135), **connector (136),** and three bolts (137). Lockwire bolts (137). Use lockwire (E33).

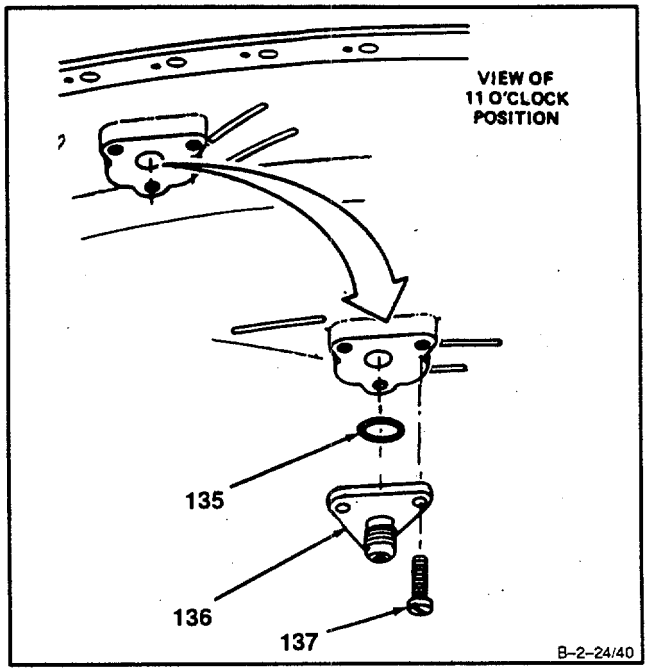

50. Position water wash assembly (138) to connector (139).

51. **Connect tube assembly (140)** to connector (139).

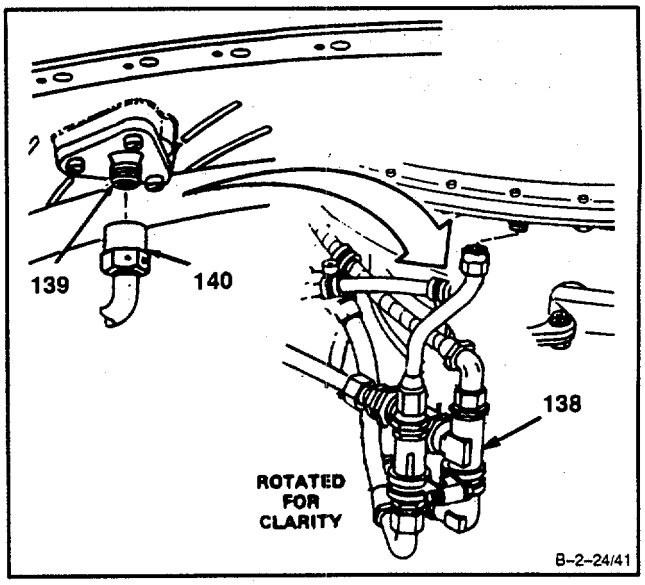

GO TO NEXT PAGE

52. **Install bleed band retainer (141),** clamps (142 and 143), and two bolts (144). Lockwire bolts (144). Use lockwire (E33).

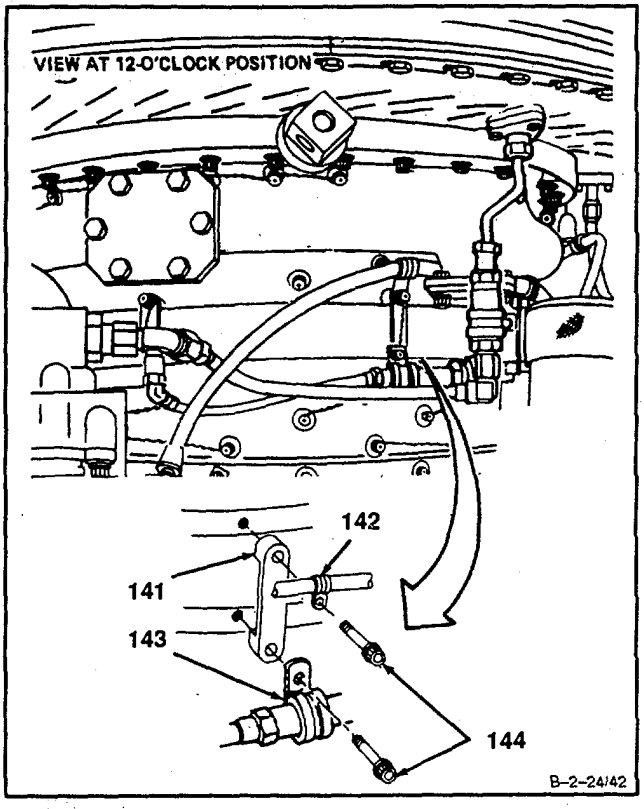

FOLLOW-ON MAINTENANCE:
Install Compressor Bleed Band (Task 2-14).
Install Interstage Air-Bleed Actuator (Task 2-8).
Install Main Fuel Filter and Bracket (Task 6-34).
Install Starter Drive Assembly (Task 5-22).
Install Oil Filler Assembly and Oil Filler Strainer (Task 8-33).
Install Ignition Exciter (Task 7-15).
Install In-Line Fuel Filter Assembly (Task 6-40).
Install Oil Cooler Assembly (Task 8-18).
Install Flow Programming Valve (Task 8-22).
Service Engine Oil System (Task 1-68).

END OF TASK

2-26 INSTALL LOWER COMPRESSOR HOUSING 2-26

INITIAL SETUP

Applicable Configurations:
All

Tools:
Powerplant Mechanic's Tool Kit,
NSN 5180-00-323-4944
Technical Inspection Tool Kit,
NSN 5180-00-323-5114
Torque Wrench, 30-150 Inch-Pounds
Open-End Wrench, 1-5/8 Inch
Crowfoot Attachment

Materials:

Anti-seize compound (E6)
Lockwire (E33)

Parts:
Packings

Personnel Required:
Aircraft Powerplant Repairer (2)
Aircraft Powerplant Inspector

References:
TM 1-2840-252-23P

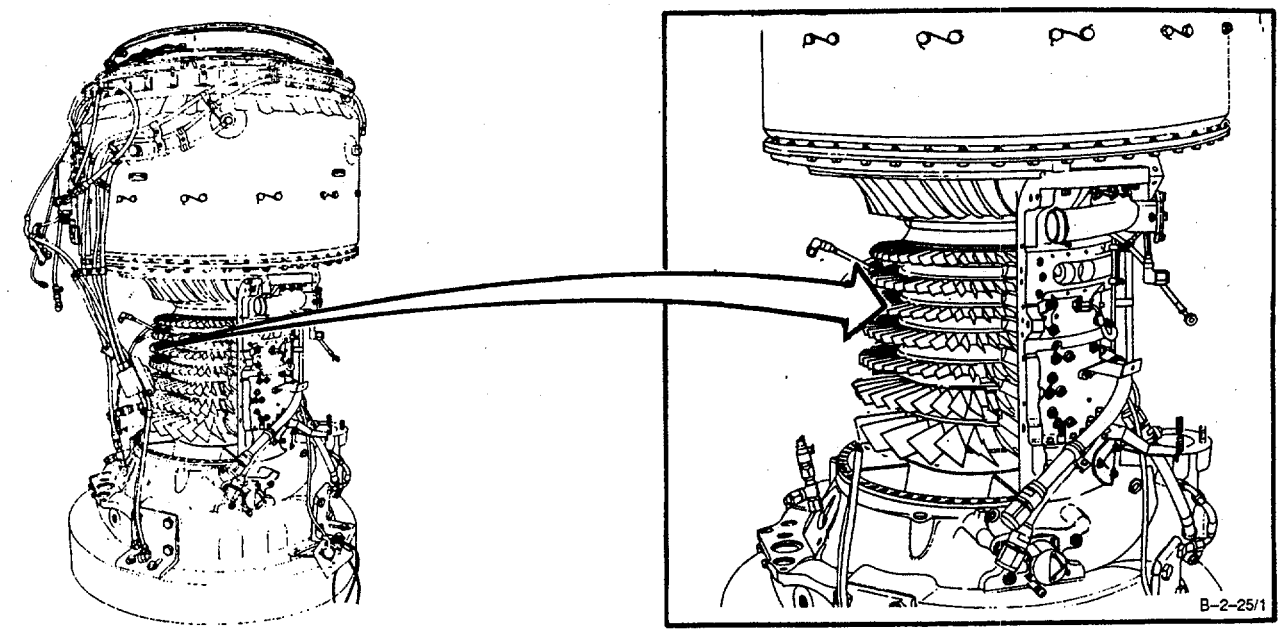

GO TO NEXT PAGE

NOTE

Some engine compressor housings may have provisions for a packing and plug installed at the 9-o'clock position. If required, assure installation.

1. Have helper lift up on combustion section and power turbine (1) and **install lower compressor housing (2).** Align two connectors (3) with air gallery (4).

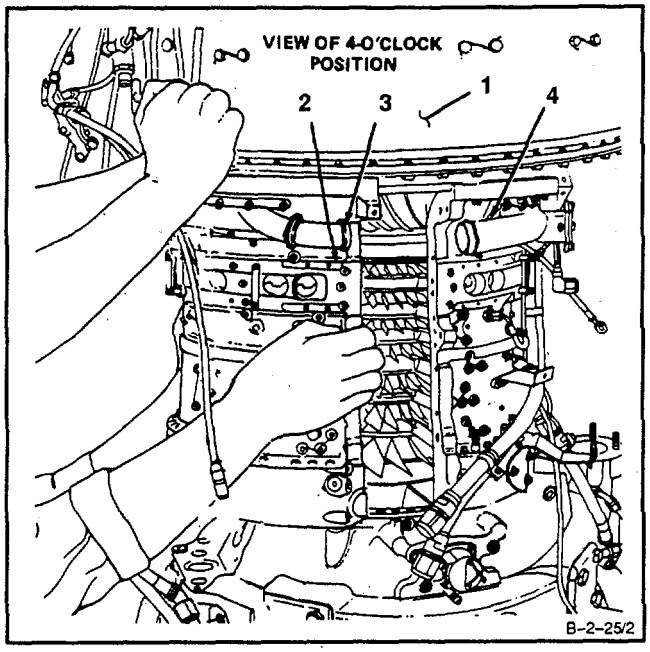

GO TO NEXT PAGE

NOTE

Procedure for installing four dowel pins is the same. Procedure for only one is shown.

2. **Align dowel pin (5)** with hole (6) and tap in dowel pin (5). Use soft-faced mallet.

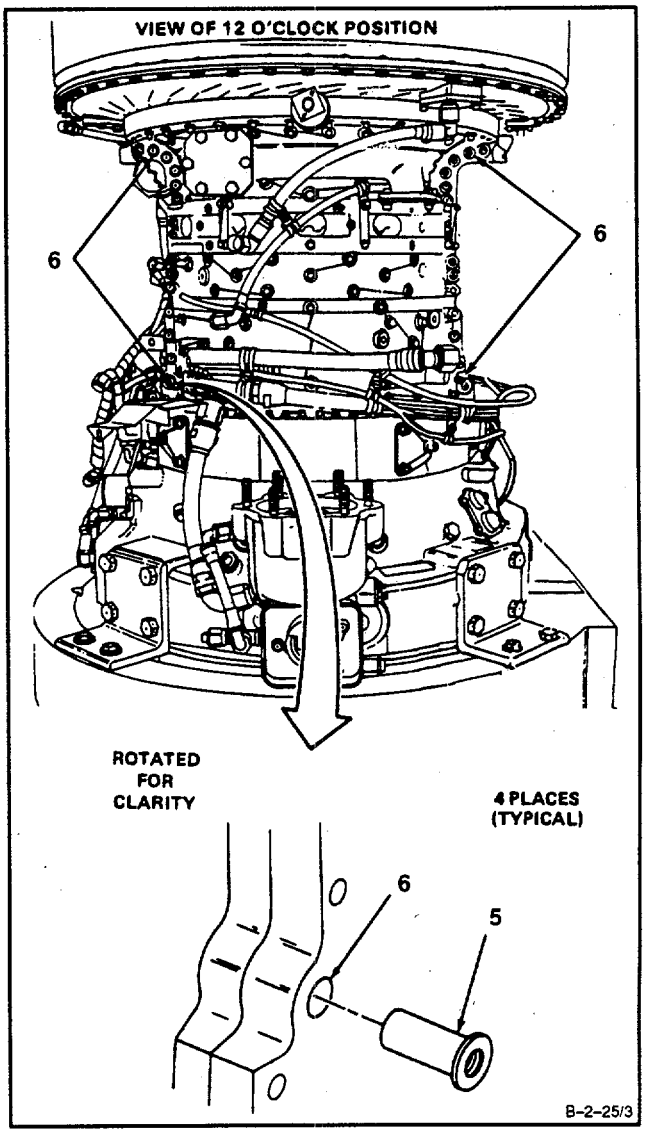

GO TO NEXT PAGE

NOTE

Procedure for installing bolts and washers in four dowel pins is the same. Only one is shown.

3. **Install bolt (7),** washer (8), and nut (9) in dowel pin (5).

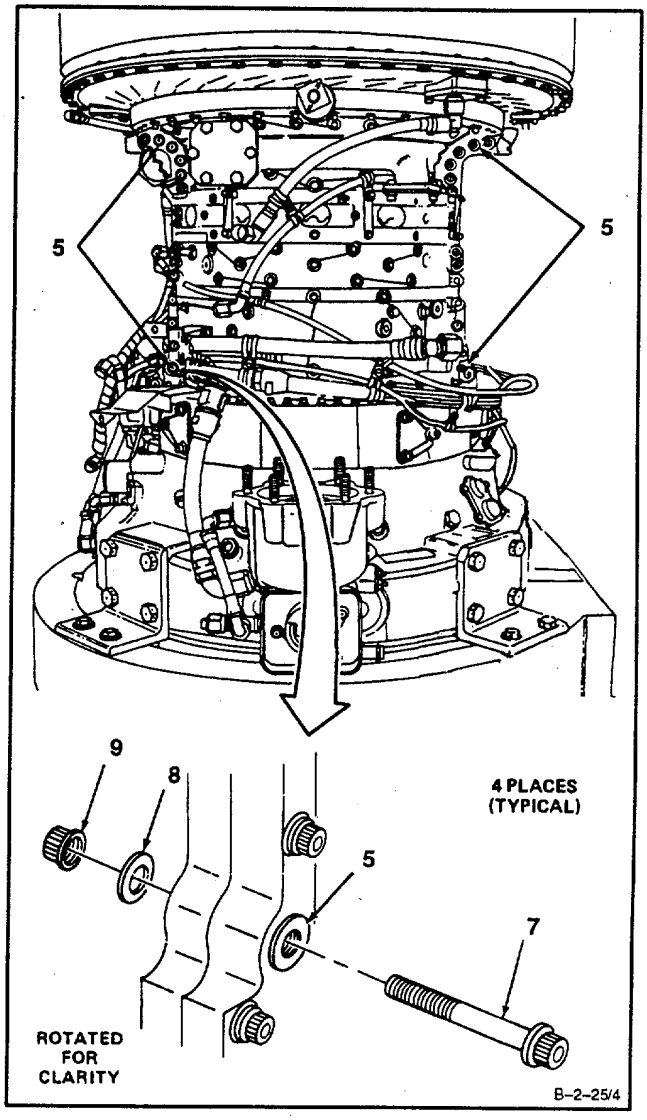

GO TO NEXT PAGE

4. **Install** 42 washers (10), **21 bolts (11),** and 21 nuts (12) into holes (13).

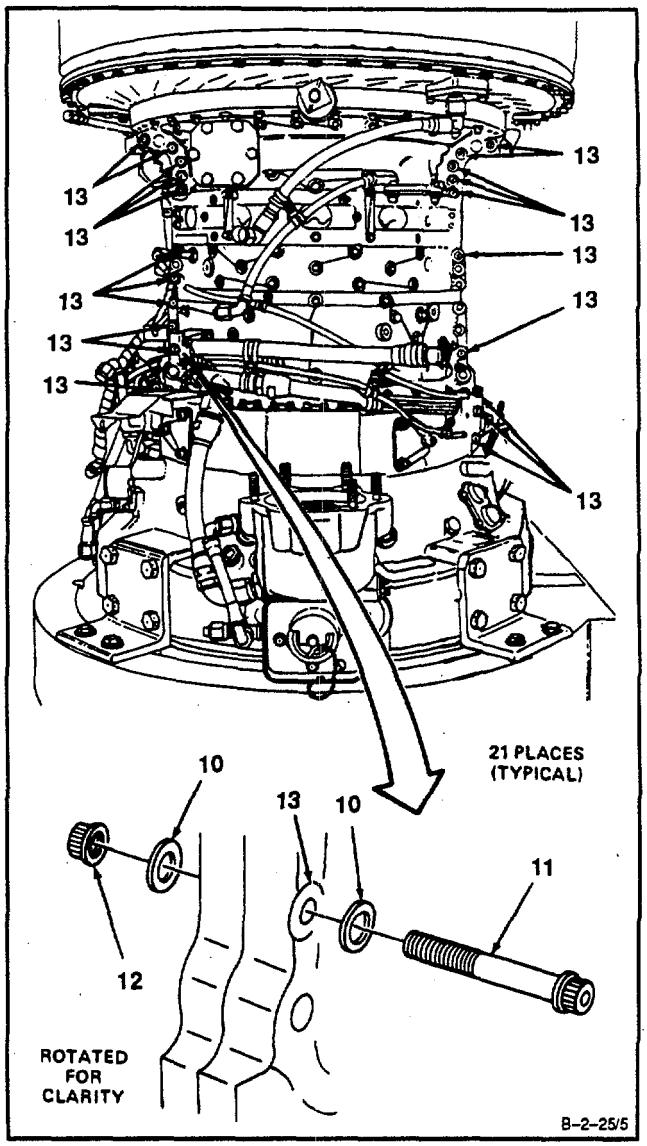

GO TO NEXT PAGE

5. **Install six washers (14),** three bolts (15), and three nuts (16) into holes (17).

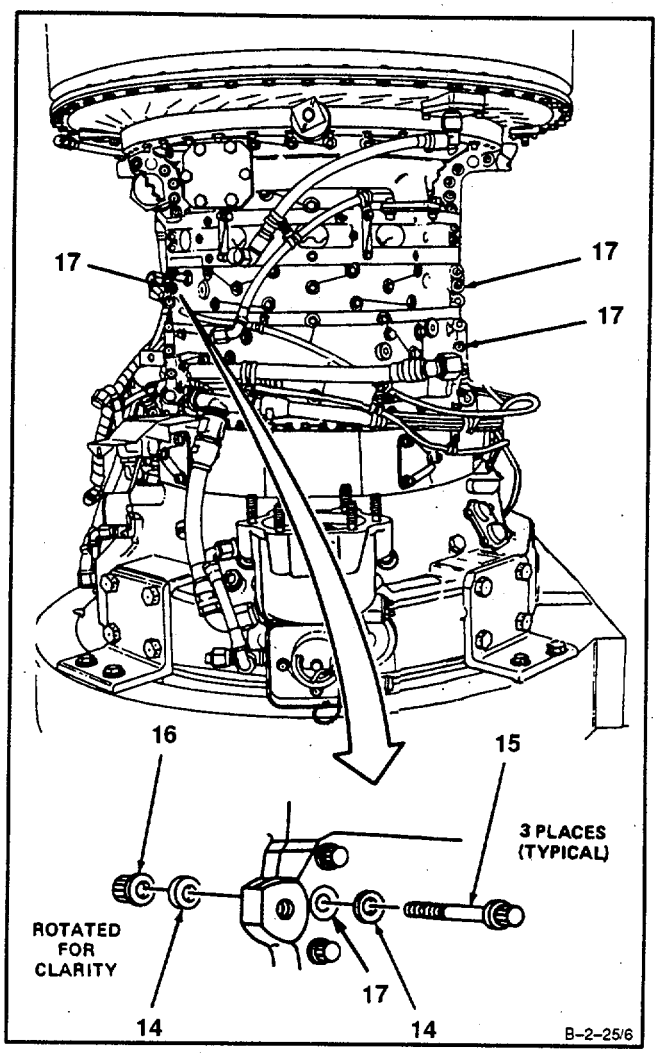

GO TO NEXT PAGE

6. **Install** eight washers (18), **four bolts (19),** and four nuts (20) into holes (21).

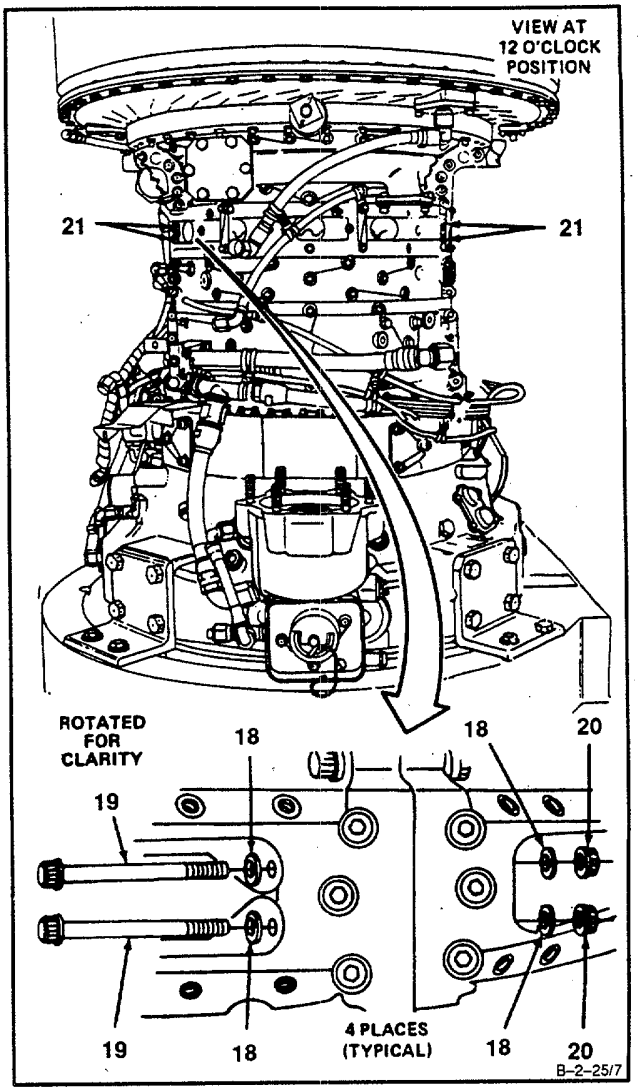

GO TO NEXT PAGE

7. **Install** 27 washers (22) and **bolts** (23). Lockwire bolts (23). Use lockwire (E33).

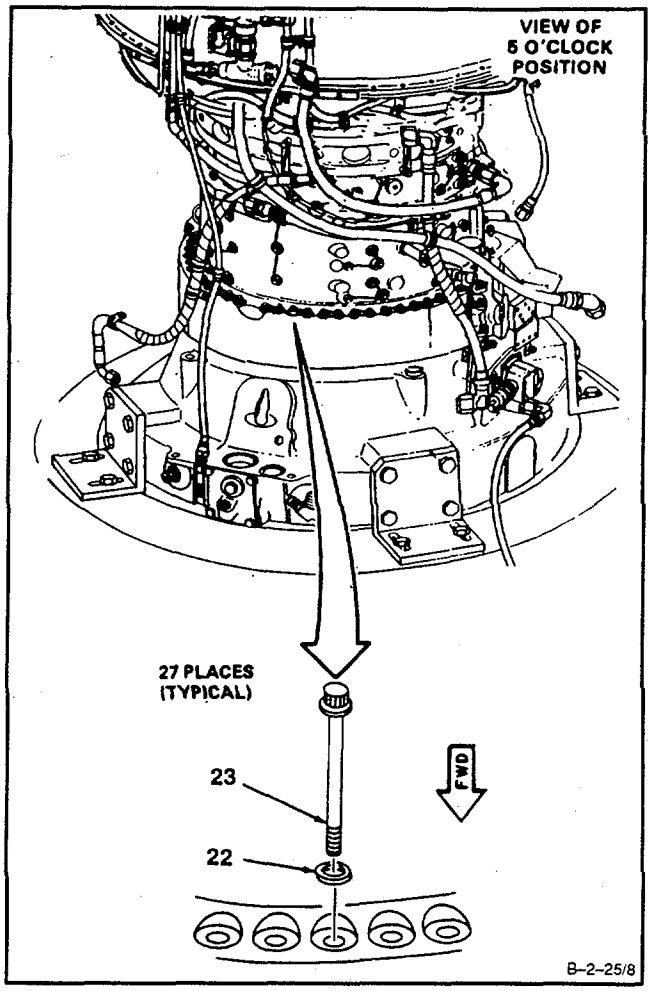

GO TO NEXT PAGE

8. Apply anti-seize compound (E6) to threads of 16 bolts (26, 28, and 31).

9. **Install bracket** (24), two washers (25), and two bolts (26).

10. **Install bracket** (27), three washers (25), and three bolts (28).

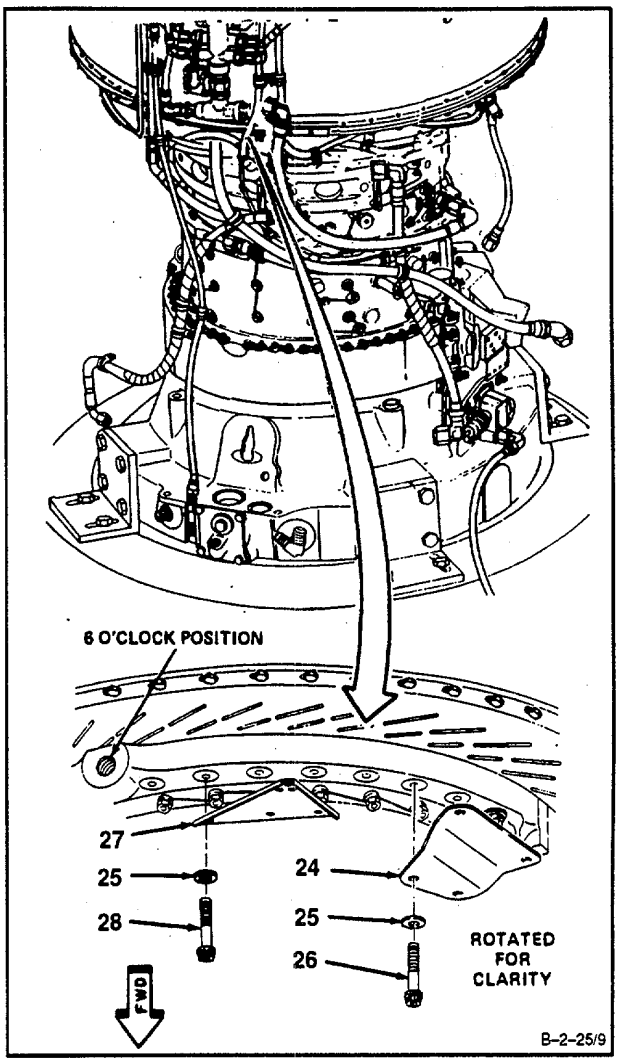

11. **Install bracket (29),** spacer (30), and bolt (31).

12. **Install bracket (32),** washer (25), and bolt (26).

13. Install remaining washer (25) and bolt (26).

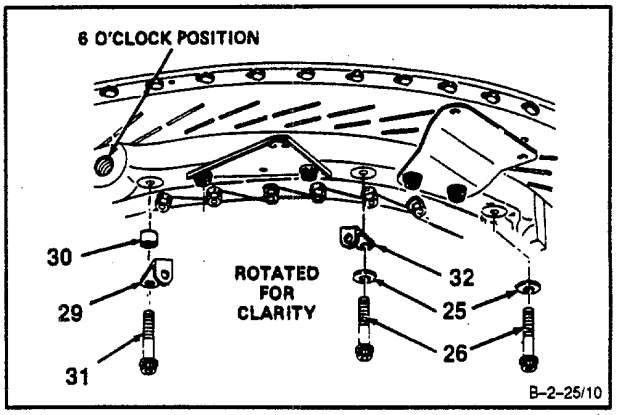

GO TO NEXT PAGE

14. Install four washers (25) and four bolts (26).

15. Install three washers (25) and three bolts (28).

16. Install spacer (30) and bolt (31).

17. Lockwire bolts (26, 28, and 31). Use lockwire (E33).

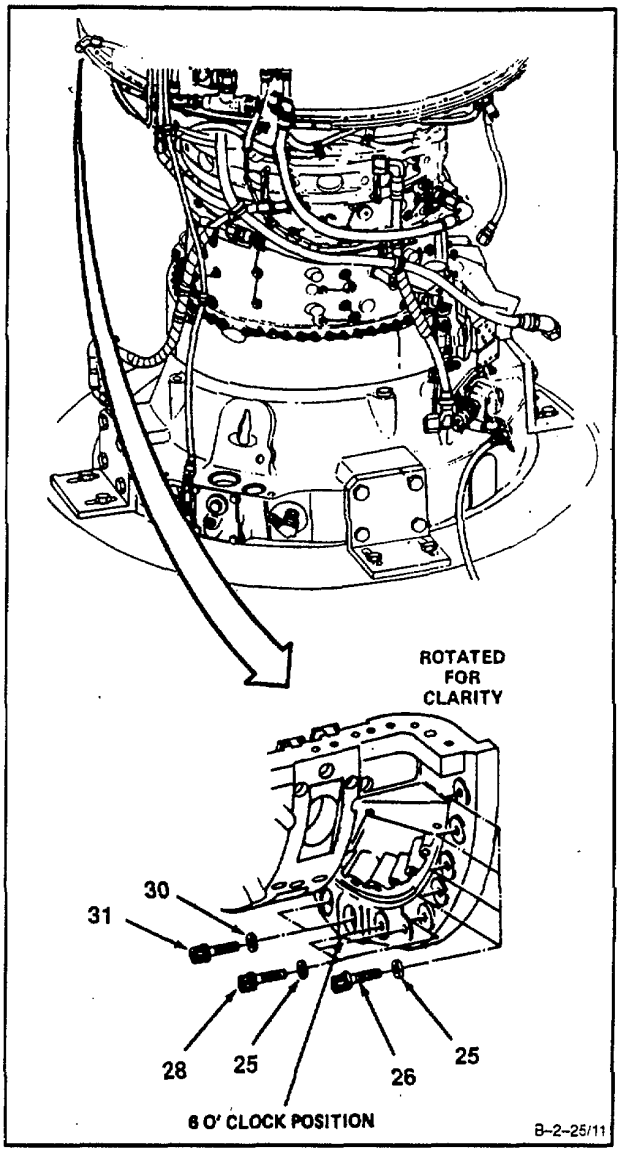

GO TO NEXT PAGE

18. Apply anti-seize compound (E6) to threads of 4 bolts (33).

19. Install four washers (34) and bolts (33) into upper compressor housing bolt holes (35). Lockwire four bolts (33). Use lockwire (E33).

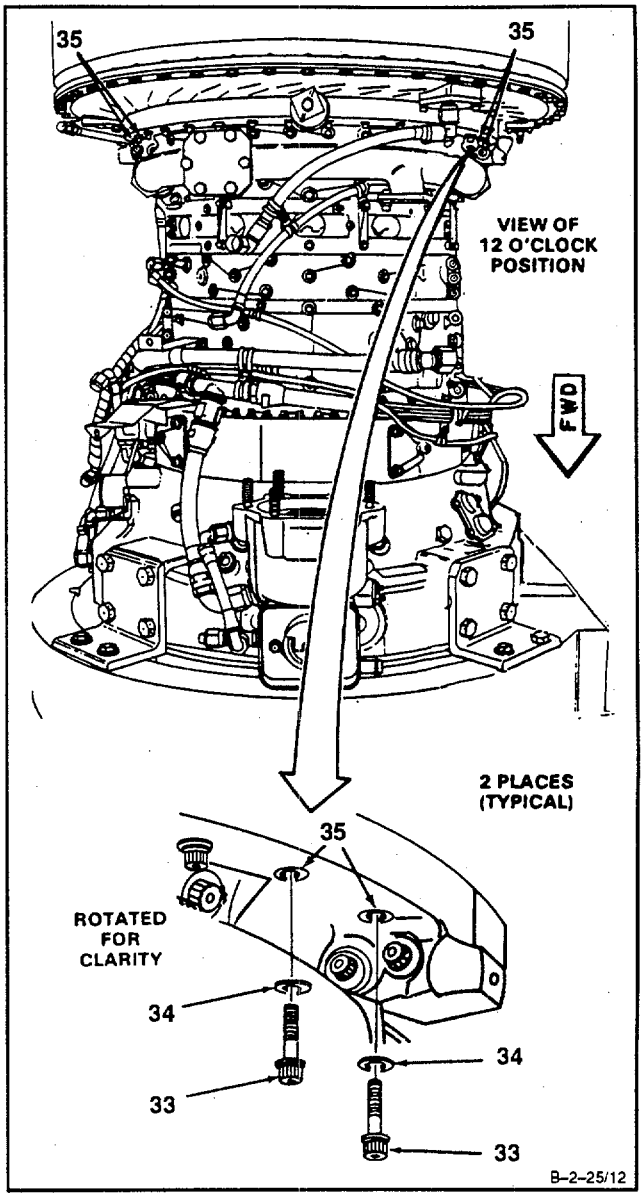

GO TO NEXT PAGE

20. **Install bleed band retainer (36)** and two bolts (37). Lockwire bolts (37). Use lockwire (E33).

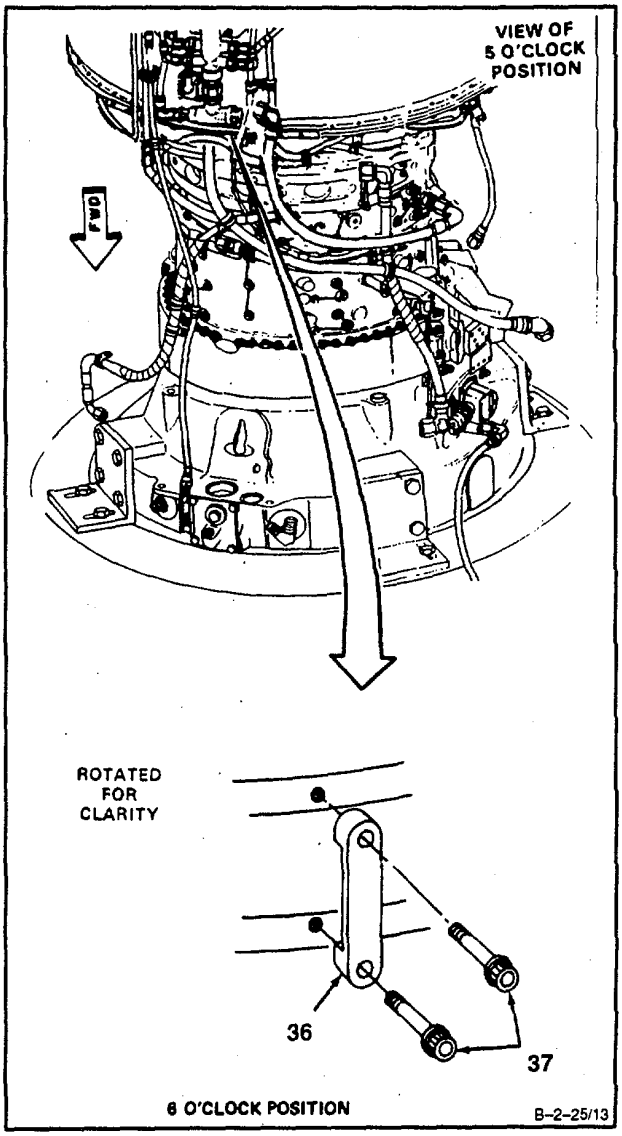

GO TO NEXT PAGE

21. Install bracket (38), bleed band retainer (39), and two bolts (40). Lockwire bolts (40). Use lockwire (E33).

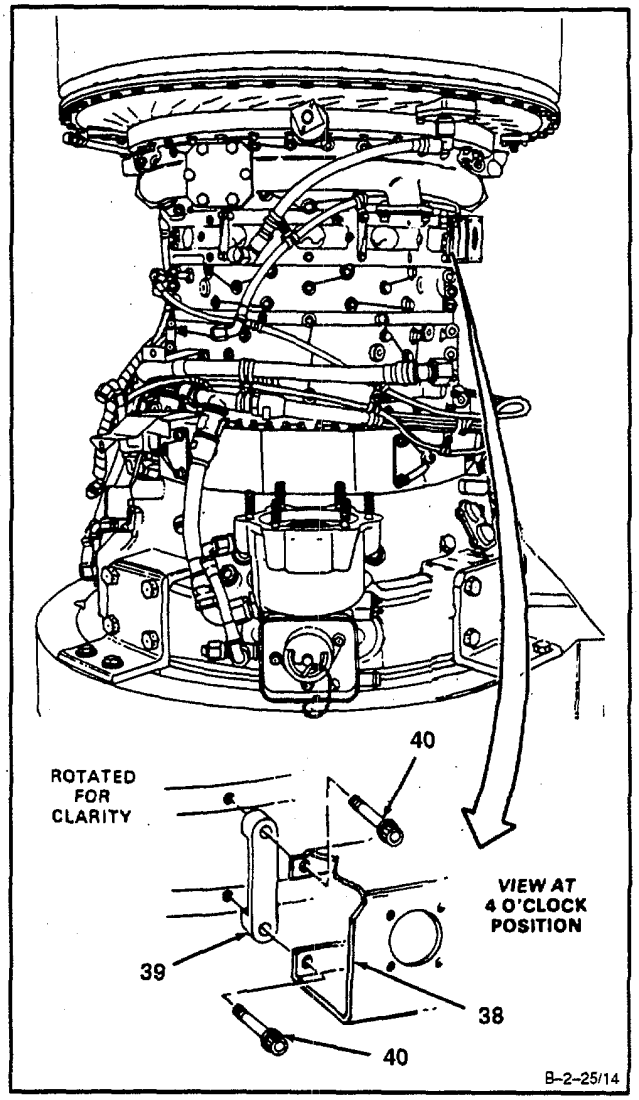

GO TO NEXT PAGE

22. **Connect nut (41)** to connector (42). Hand tighten nut (41). Using crowfoot attachment and 1-5/8 inch open-end wench, **torque nuts (41 and 43) to 90 Inch-pounds.** Lockwire nuts (41 and 43). Use lockwire (E33).

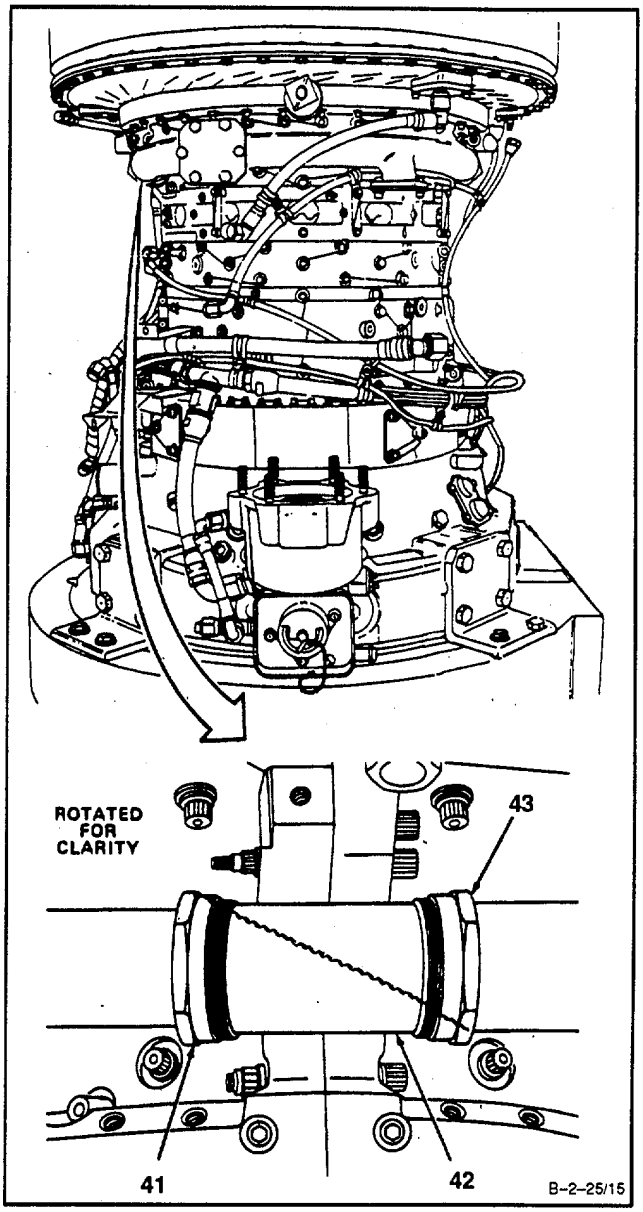

GO TO NEXT PAGE

23. **Connect** nut **(44)** to connector (45). Hand tighten nut (44). Using crowfoot attachment and 1-5/8 inch open-end wench, **torque nuts (44 and 46) to <u>90 Inch-pounds</u>.** Lockwire nuts (44 and 46). Use lockwire (E33).

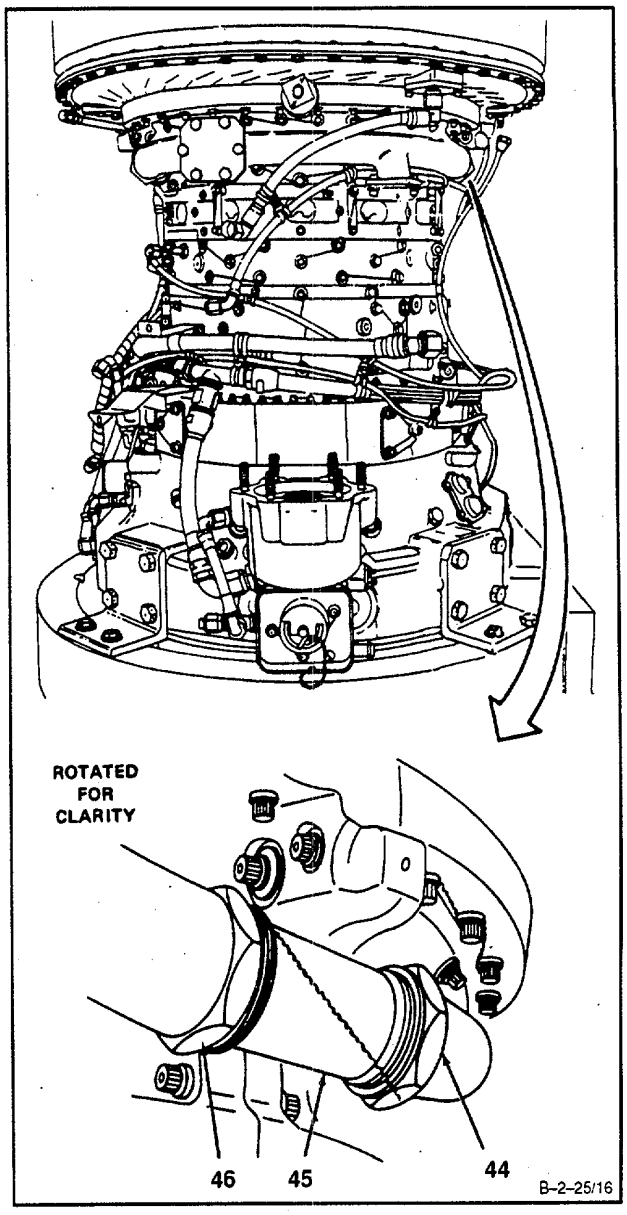

GO TO NEXT PAGE

24. Position bracket (47) on upper compressor housing (48).

25. **Position solenoid valve (49),** hose assemblies (50 and 51), and bracket (52) **on upper compressor housing** (**48)** as an assembly.

26. **Install two** spacers (53), **bolts** (54), washers (55), and nuts (56).

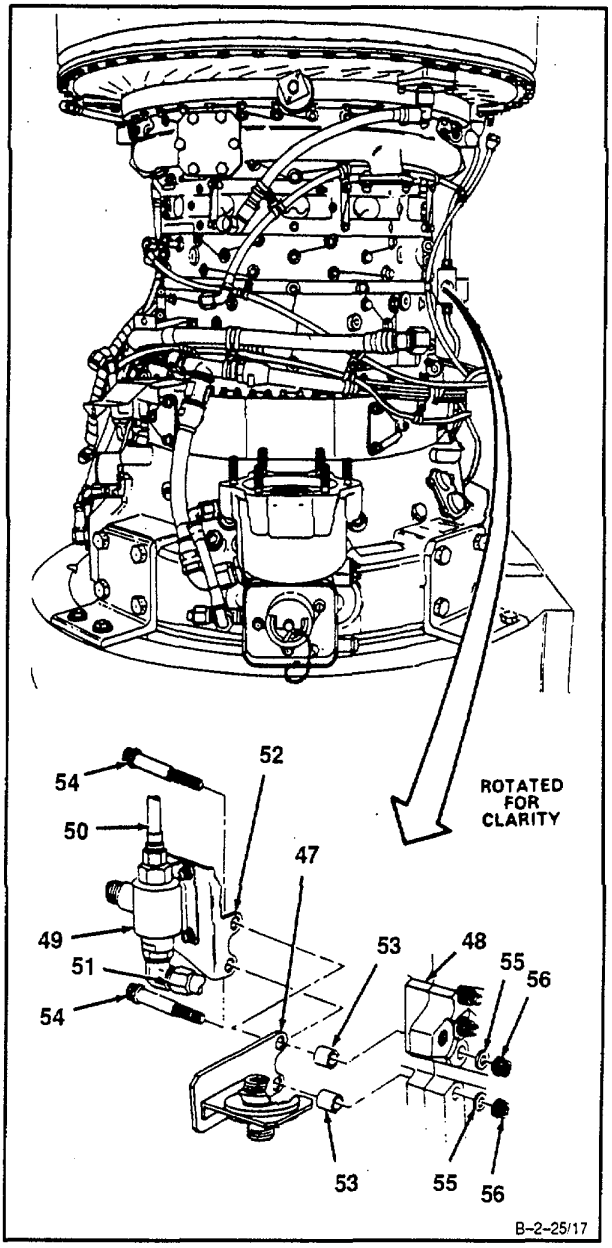

GO TO NEXT PAGE

27. Install bracket (57), clamp (58), and screw (59). Lockwire screw (59). Use lockwire (E33).

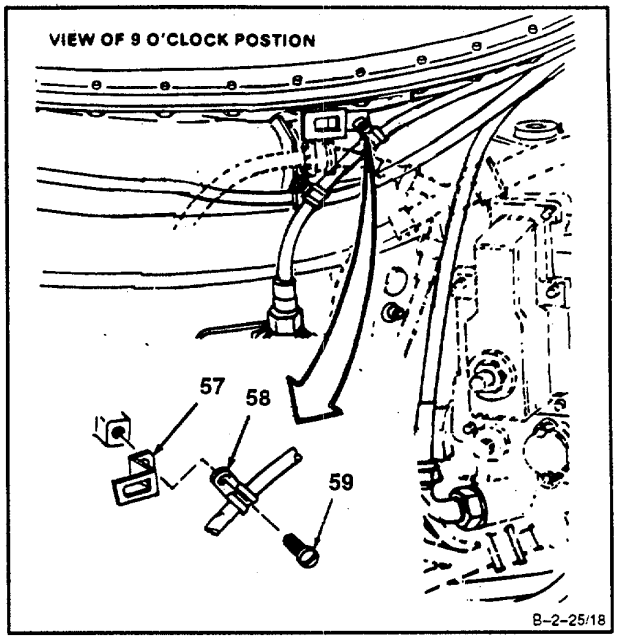

28. **Connect hose assembly** (60) to adapter (61).

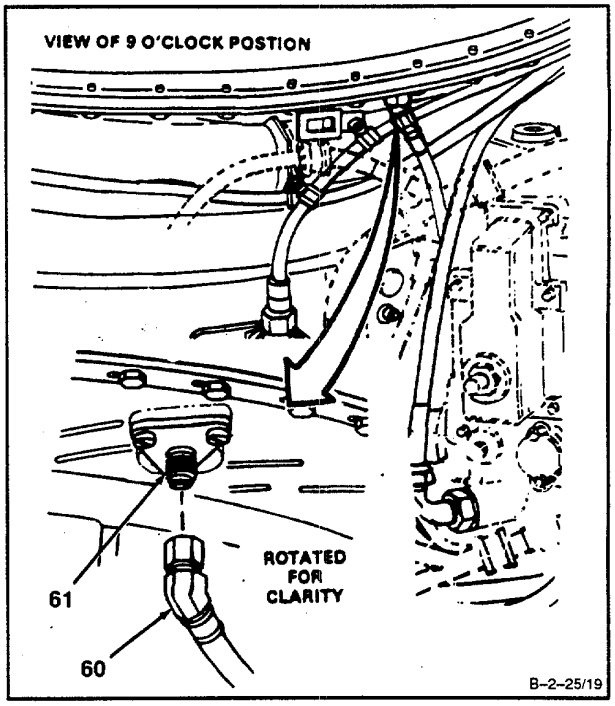

GO TO NEXT PAGE

29. **Install** two spacers (62), **bracket (63),** two bolts (64), washers (65), and nuts (66).

30. Install washer (67) and bolt (68). Lockwire bolt (68). Use lockwire (E33).

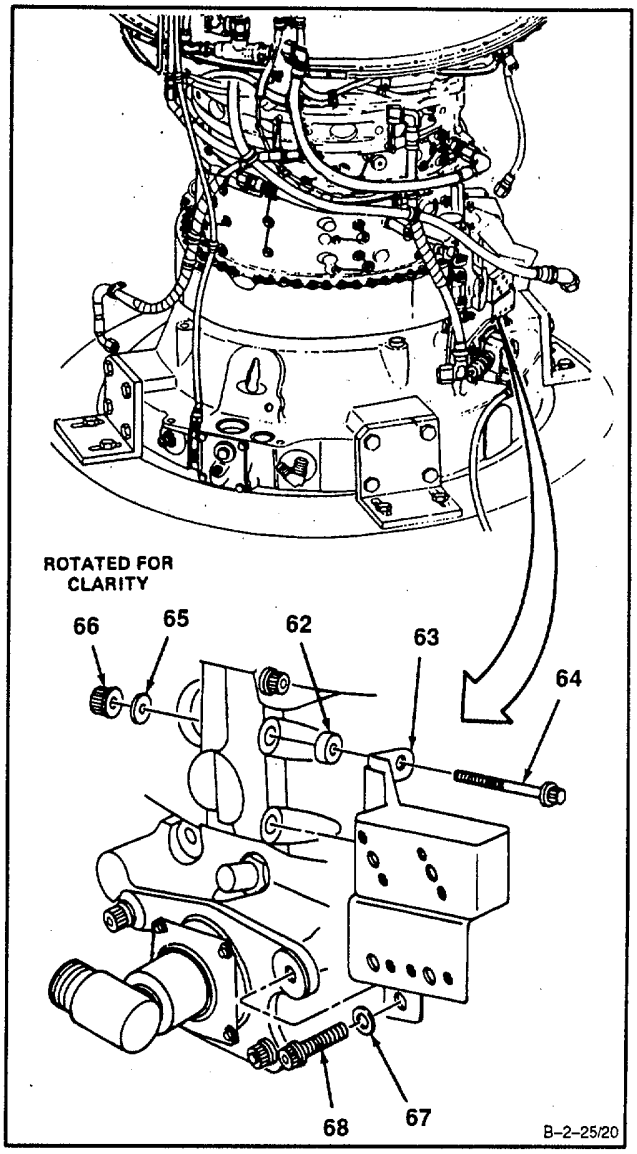

GO TO NEXT PAGE

31. **Install spacer (69).**

32. Swing bracket (70) towards housing splitline (71).

33. **Install two bolts (72). Torque two bolts (72) to <u>82 Inch-pounds</u>.** Lockwire bolts (72). Use lockwire (E33).

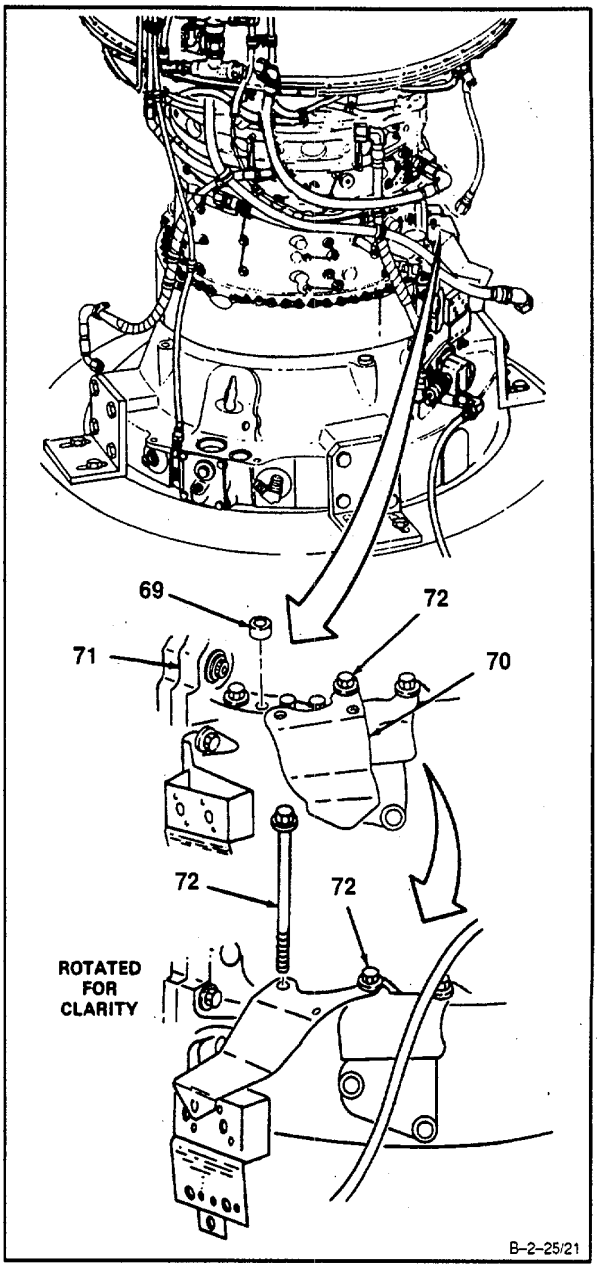

GO TO NEXT PAGE

34. Install packing (73), **union (74),** and three screws (75). Lockwire screws (75). Use lockwire (E33).

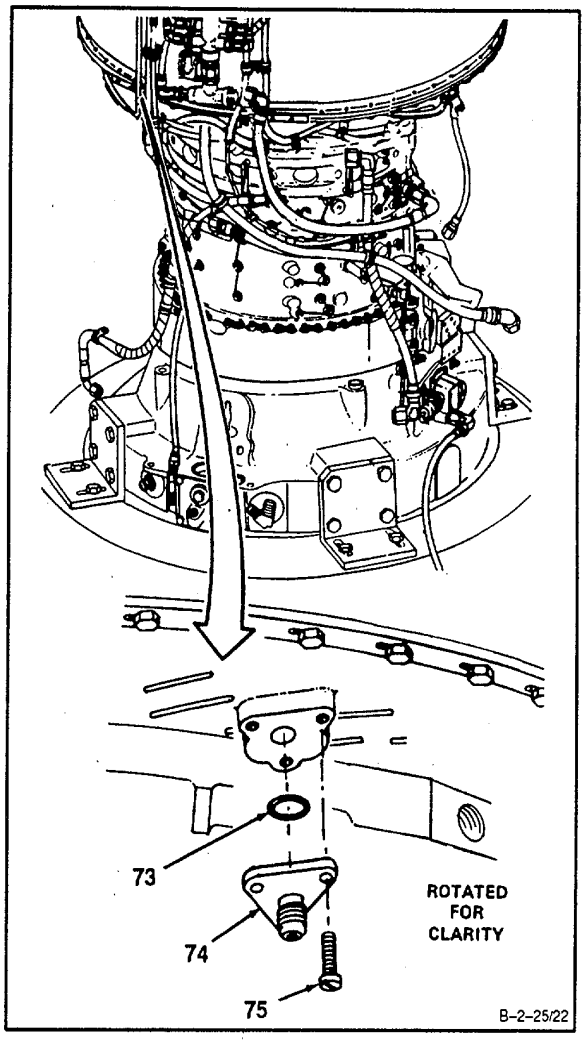

GO TO NEXT PAGE

35. **Install bracket** (76), three key washers (77), and three bolts (78).

36. Lock three bolts (78) by bending tabs of key washers (77).

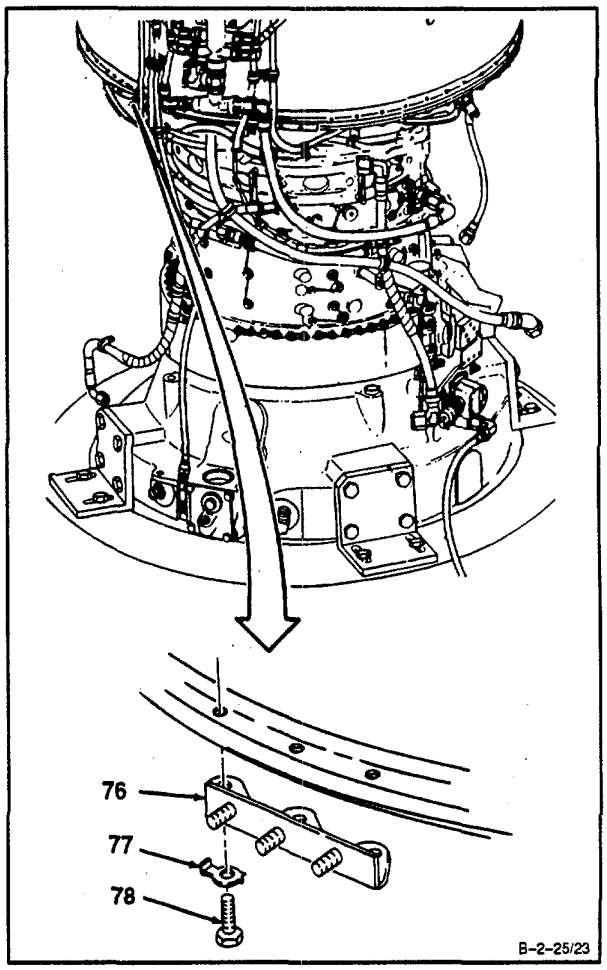

GO TO NEXT PAGE

37. **Connect hose assembly (79)** to pressurizing valve (80).

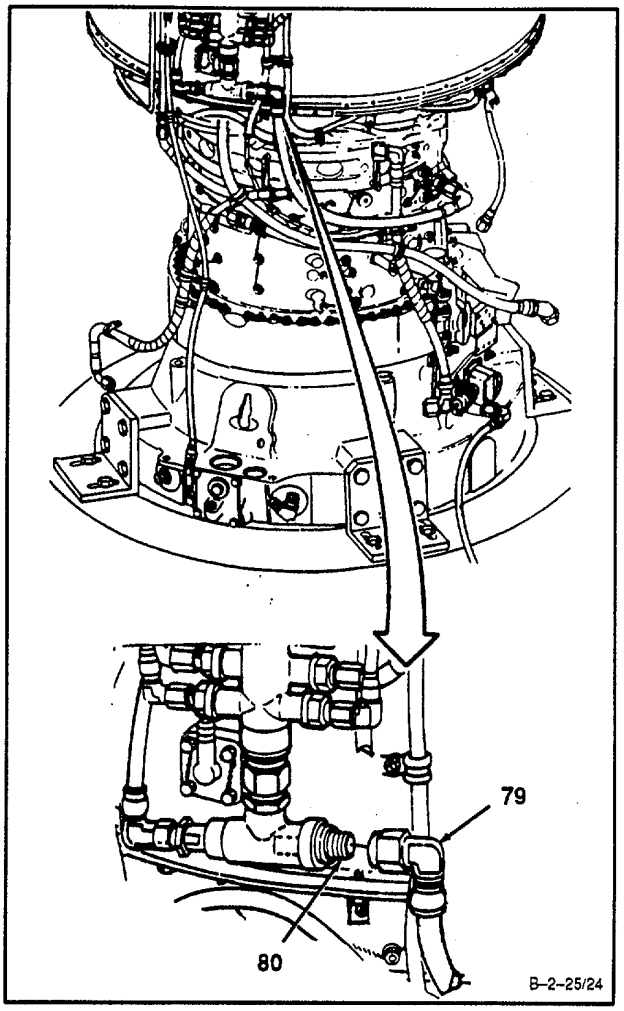

GO TO NEXT PAGE

38. **Install bracket (81),** two key washers (82), and two bolts (83).

39. Lock two bolts (83) by bending tabs of key washers (82).

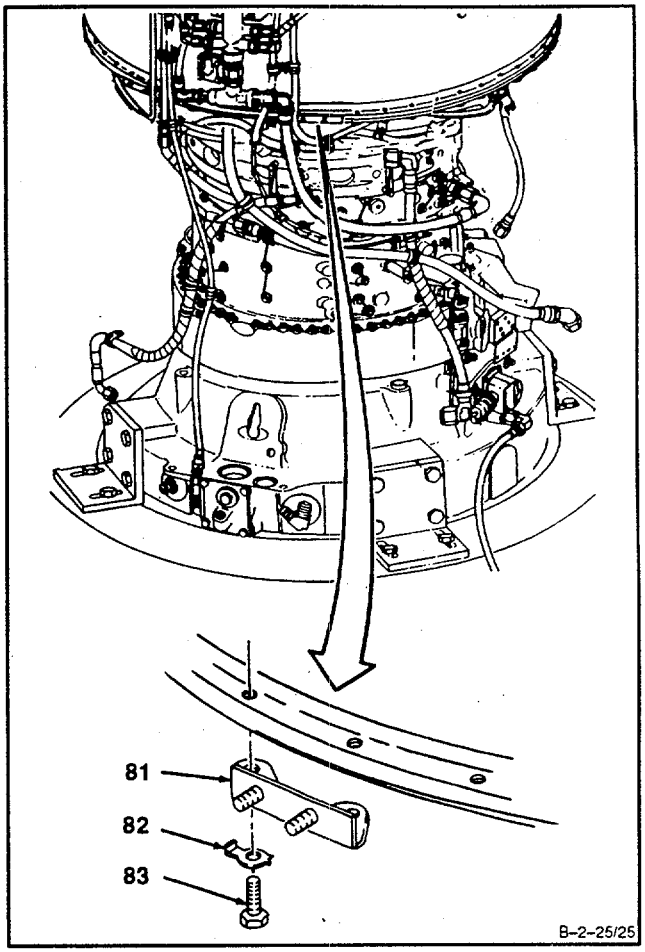

GO TO NEXT PAGE

40. **Install bracket (84),** key washer (85), and bolt (86).

41. Lock bolt (86) by bending tab of key washer (85).

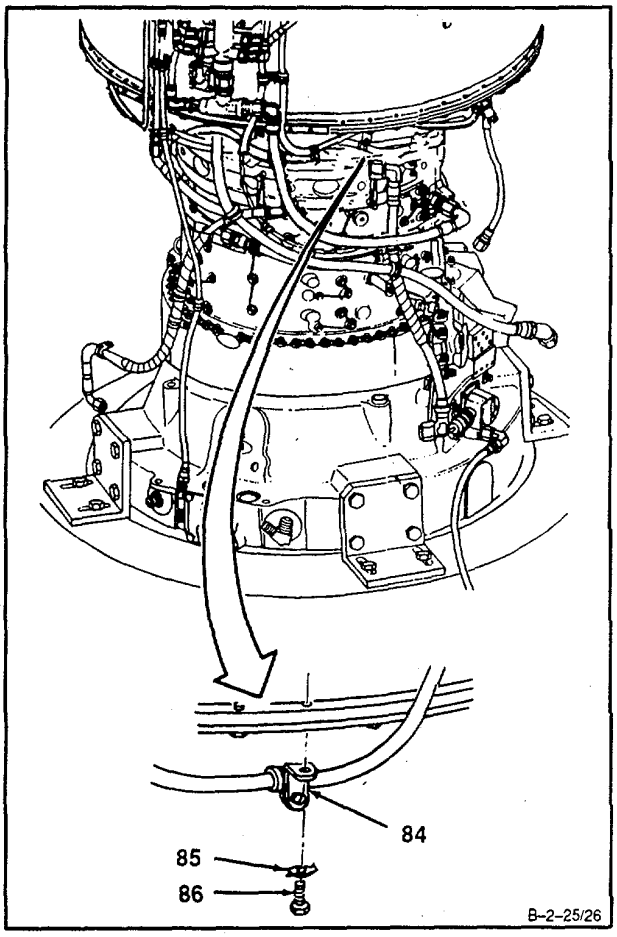

GO TO NEXT PAGE

42. **Install** packing (87), No. 2 **bearing pressure connector assembly** (88) with tube assembly (89) and hose assembly (90) connected with two washers (91), bracket (92), and screw (93). Lock- wire screw (93). Use lockwire (E33).

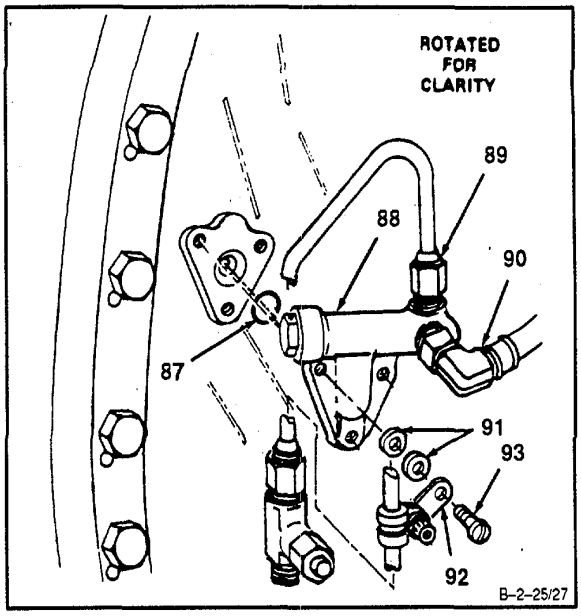

43. **Install** two washers (94) and **two screws (95).** Lockwire screws (95). Use lockwire (E33).

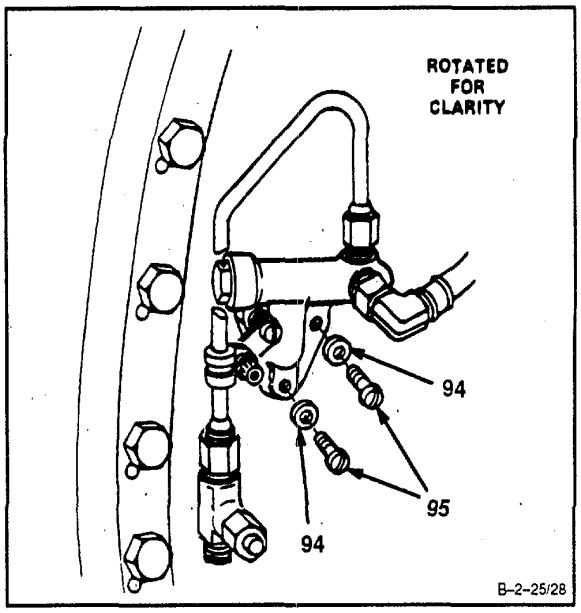

GO TO NEXT PAGE

44. Connect hose assembly (96) to tee and snubber (97).

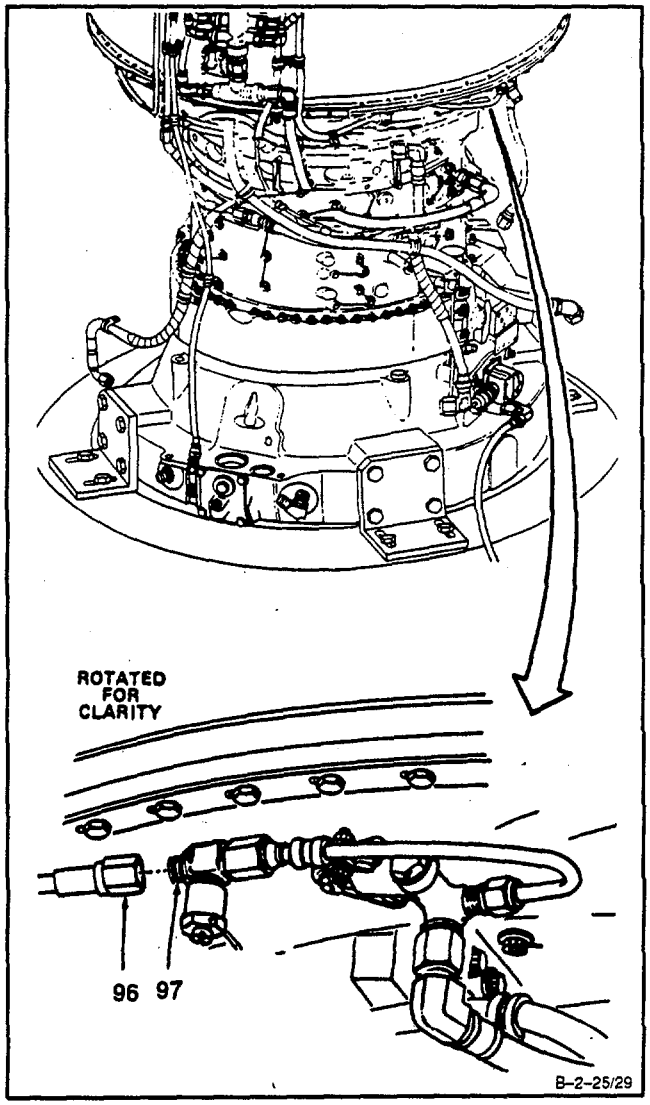

INSPECT

GO TO NEXT PAGE

FOLLOW-ON MAINTENANCE:

Install Tube Assembly (Hose Assembly to Primer Tube Assembly) (Task 6-91)
Install Tube Assembly (No. 4 and 5 Bearing Scavenge Connector to Tube Assembly) (Task 8-72)
Install Overspeed Solenoid Valve (Task 6-56).
Install Compressor Bleed Band (Task 2-14).
Install Interstage Air-Bleed Actuator (Task 2-8).
Install Main Fuel Filter and Bracket (Task 6-34).
Install Accessory Gearbox Assembly (Task 5-7).
Install Hydromechanical Assembly (HMA) (Task 6-5).
Install Dual Chip Detector (Task 8-46).
Install Main Oil Pump, Speed Pickup Drive Assembly, Scavenge Oil Screen, and Related Parts (Task 8-6).
Install Tube Assembly (Inlet Housing to Main Oil Pump) (Task 8-66).
Install Fuel Boost Pump Assembly (Task 6-12).
Install In-Line Fuel Filter Assembly (Task 6-40).
Install Oil Cooler Assembly (Task 8-18).
Install Flow Programming Valve (Task 8-22).
Install Ignition Exciter (Task 7-15).
Install Ignition Coil and Cable Assembly (Task 7-5).
Install Hose Assembly (Dual Chip Detector to Accessory Gearbox Collector) (Task 8-60).
Install Hose Assembly (Dual Chip Detector to Accessory Gearbox Assembly) (Task 8-58).
Install Hose Assembly (Main Oil Pump to Dual Chip Detector) (Task 8-64).
Install Hose Assembly (Dual Chip Detector to Air Diffuser Assembly) (Task 8-62).
Install Electric Harness Assemblies (Tasks 7-21, 7-27, 7-33).
Service Engine Oil System (Task 1-68).

END OF TASK

SECTION V

STATOR VANE ASSEMBLIES

2-27 REMOVE STATOR VANE ASSEMBLIES 2-27

INITIAL SETUP

Applicable Configurations:
All
Tools:
Brass Bristle Wire Brush
Powerplant Mechanic's Tool Kit, NSN 5180-00-323-4944
Materials:
Denatured Alcohol (E17)
Gloves (E24)
Lint-Free Cloth (E30)
Tag (E58)
Personnel Required:
Aircraft Powerplant Repairer
Equipment Condition:
Engine Oil System Drained (Task 1-69)
Electrical Harness Assemblies Removed (Tasks 7-16, 7-22 and 7-28) (Lower Compressor Housing Only)
Ignition Coil and Cable Assembly Removed (Task 7-1) (Lower Compressor Housing Only)
Ignition Exciter Removed (Task 7-11)
Flow Programming Valve Removed (Task 8-19)
Oil Cooler Assembly Removed (Task 8-12)
In-Line Fuel Filter Assembly Removed (Task 6-35)
Oil Filler Assembly and Oil Filler Strainer Removed (Task 8-27) (Upper Compressor Housing Only)
Starter Drive Assembly Removed (Task 5-18) (Upper Compressor Housing Only)
Dual Chip Detector Removed (Task 8-39) (Lower Compressor Housing Only)
Fuel Boost Pump Assembly Removed (Task 6-8) (Lower Compressor Housing Only)
Tube Assembly (Inlet Housing to Main Oil Pump) Removed (Task 8-65) (Lower Compressor Housing Only)
Main Oil Pump, Speed Pickup Drive Assembly, Scavenge Oil Screen, and Related Parts Removed (Task 8-1) (Lower Compressor Housing Only)
Hydromechanical Assembly (HMA) Removed (Task 6-1) (Lower Compressor Housing Only)
Accessory Gearbox Removed (Task 5-1) (Lower Compressor Housing Only)
Main Fuel Filter and Bracket Removed (Task 6-28)
Interstage Air-Bleed Actuator Removed (Task 2-1)
Compressor Bleed Band Removed (Task 2-10)
Hose Assembly (Dual Chip Detector to Air Diffuser Assembly) Removed (Task 8-61)
Hose Assembly (Main Oil Pump to Dual Chip Detector) Removed (Task 8-63).
Hose Assembly (Dual Chip Detector to Accessory Gearbox Assembly) Removed (Task 8-57)
Hose Assembly (Dual Chip Detector to Accessory Gearbox Collector) Removed (Task 8-59)
Overspeed Solenoid Valve Removed (Task 6-52)
Tube Assembly (No. 4 and 5 Bearing Scavenge Connector to Tube Assembly) Removed (Task 8-71)
Tube Assembly (Hose Assembly to Primer Tube Assembly) Removed (Task 6-90)
Upper or Lower Compressor Housing Removed (Task 2-20 or 2-21)

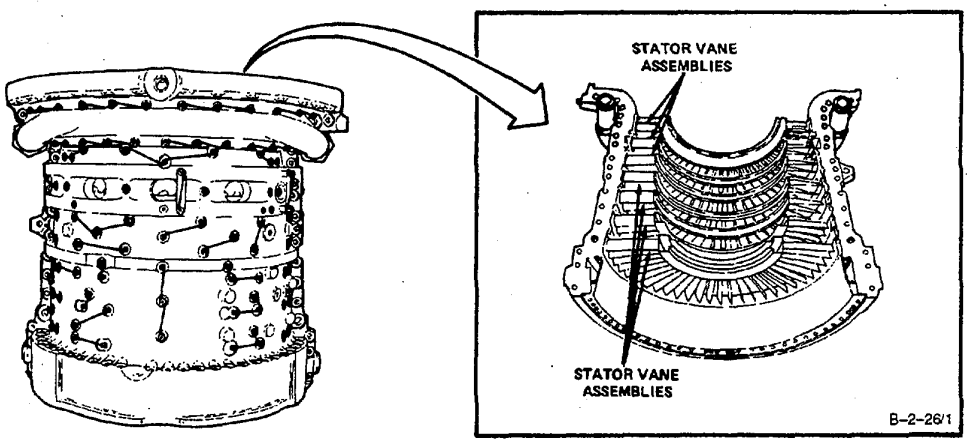

GO TO NEXT PAGE

NOTE

To help in installation, tag (E58) each stator vane assembly as it is removed.

NOTE

Procedures for removing upper and lower compressor housing stator vane assemblies are the same. Instructions for removing lower compressor housing stator vane assemblies are given.

1. Remove lockwire, four bolts (1), and washers (2) from bolt locations (3).

2. **Remove one-half of first stage stator vane (4)** from lower compressor housing (5).

3. Using brass bristle wire brush if necessary, remove RTV from outer shroud (6) of stator vane (4) and recess (7) in compressor housing (5).

4. Using lint-free cloth (E30) dampened with denatured alcohol (E17) if necessary, remove excess RTV from recess in compressor housing. Air dry.

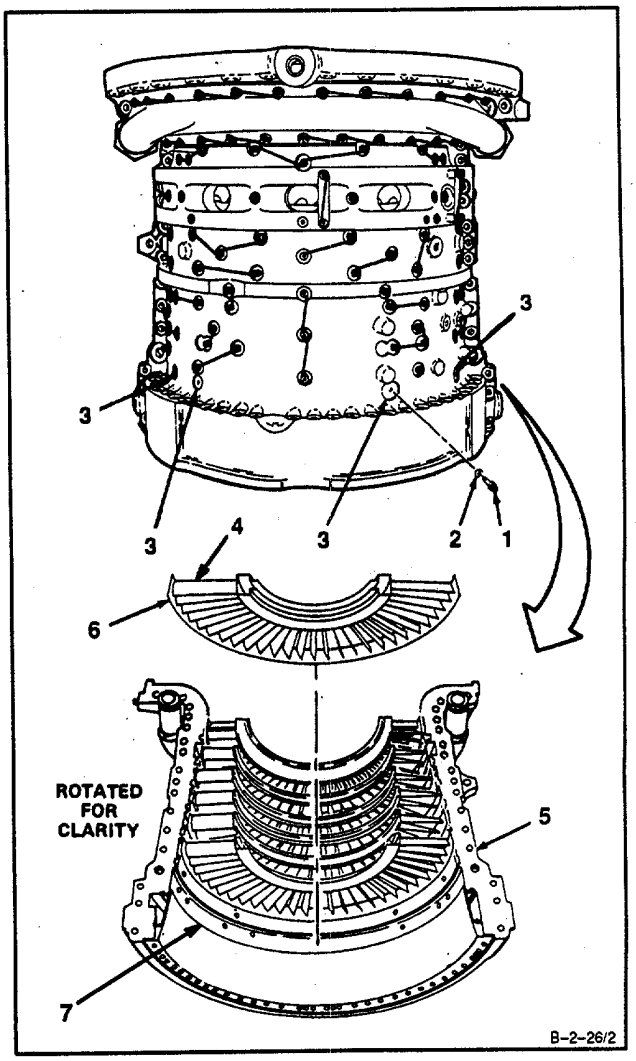

GO TO NEXT PAGE

5. Remove lockwire, eight bolts (8), and washers (9) from bolt locations (10).

6. **Remove one-half of second stage stator vane (11)** from lower compressor housing (5).

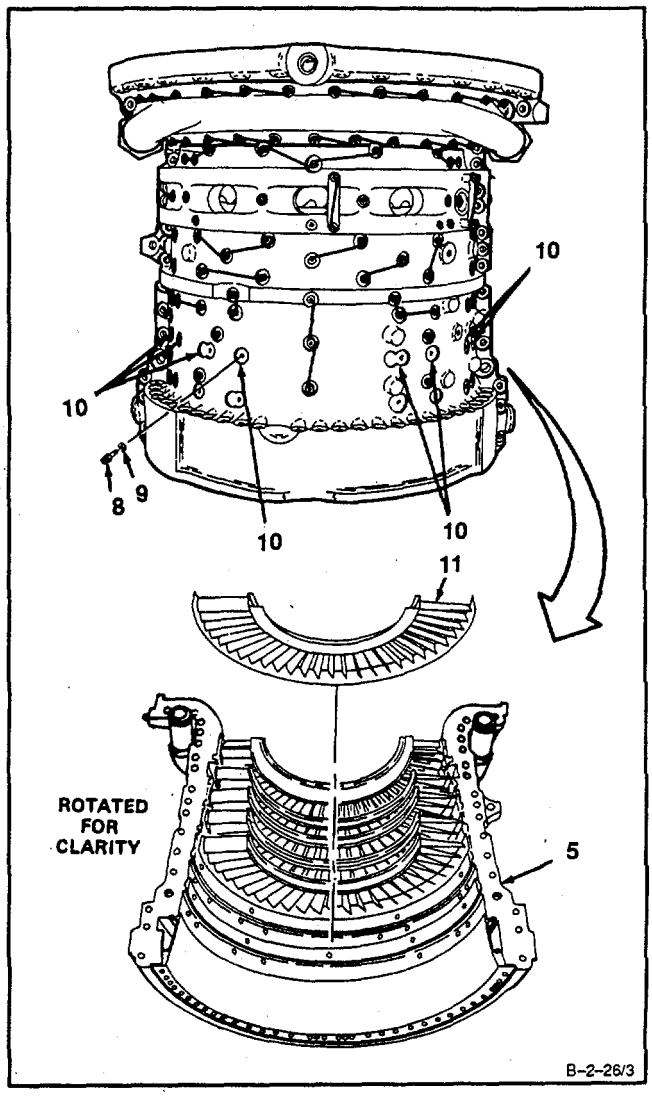

GO TO NEXT PAGE

7. Remove lockwire, eight bolts (12), and washers (13) from bolt locations (14).

8. **Remove one-half of third stage stator vane (15)** from lower compressor housing (5).

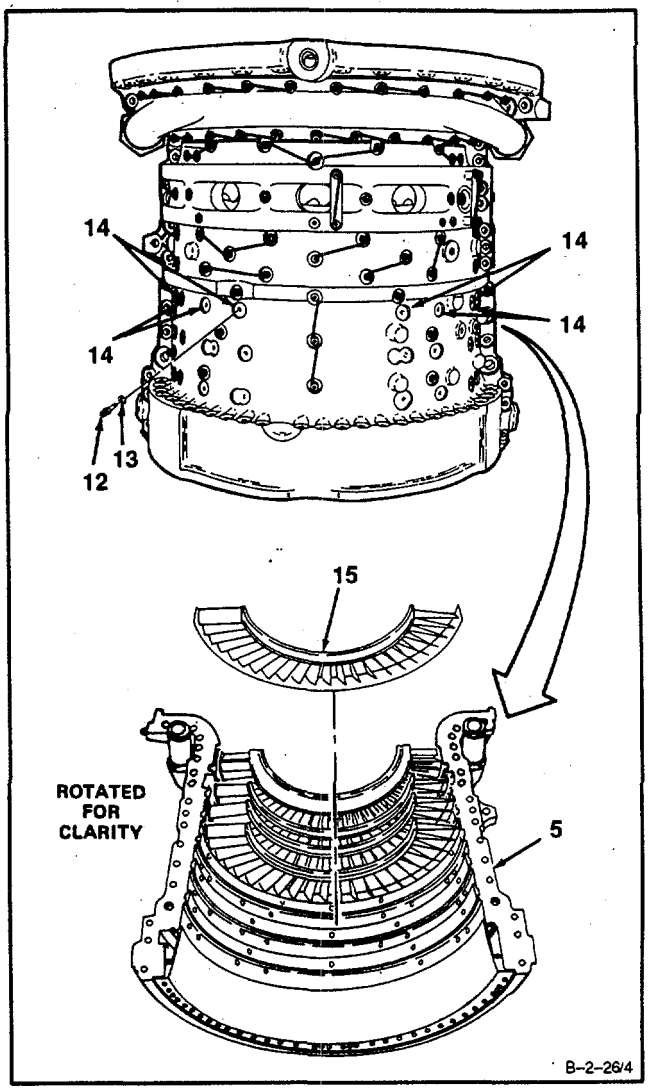

GO TO NEXT PAGE

9. Remove lockwire, six bolts (16), and washers (17) from bolt locations (18).

10. **Remove one-half of fourth stage stator vane (19)** from lower compressor housing (5).

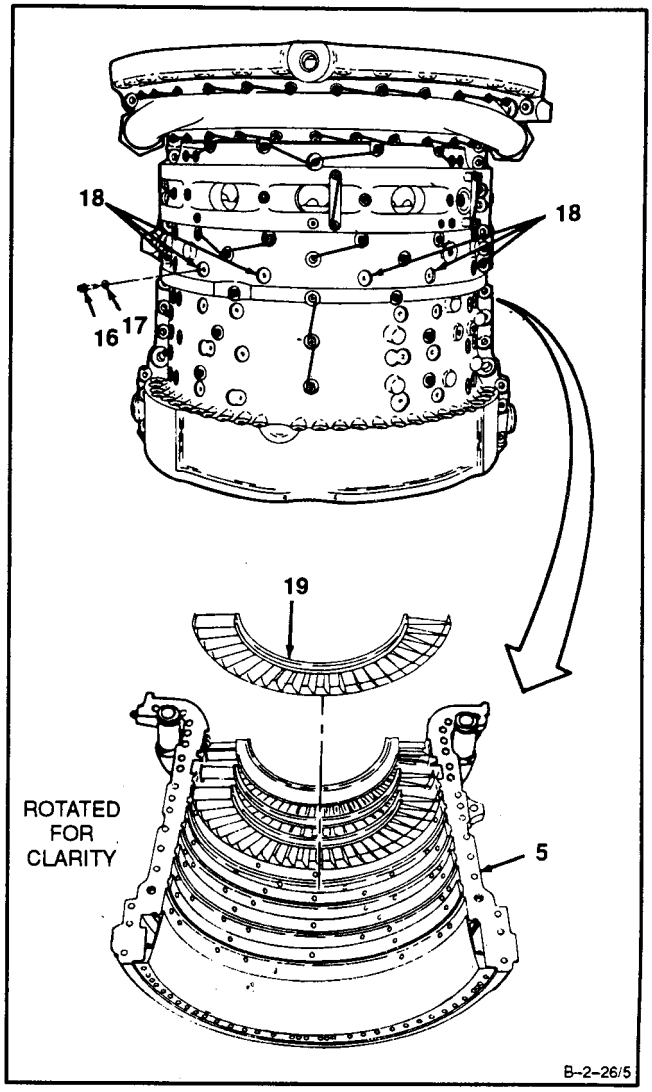

GO TO NEXT PAGE

11. Remove lockwire, six bolts (20), and washers (21) from bolt locations (22).

12. **Remove one-half of fifth stage stator vane (23)** from lower compressor housing (5).

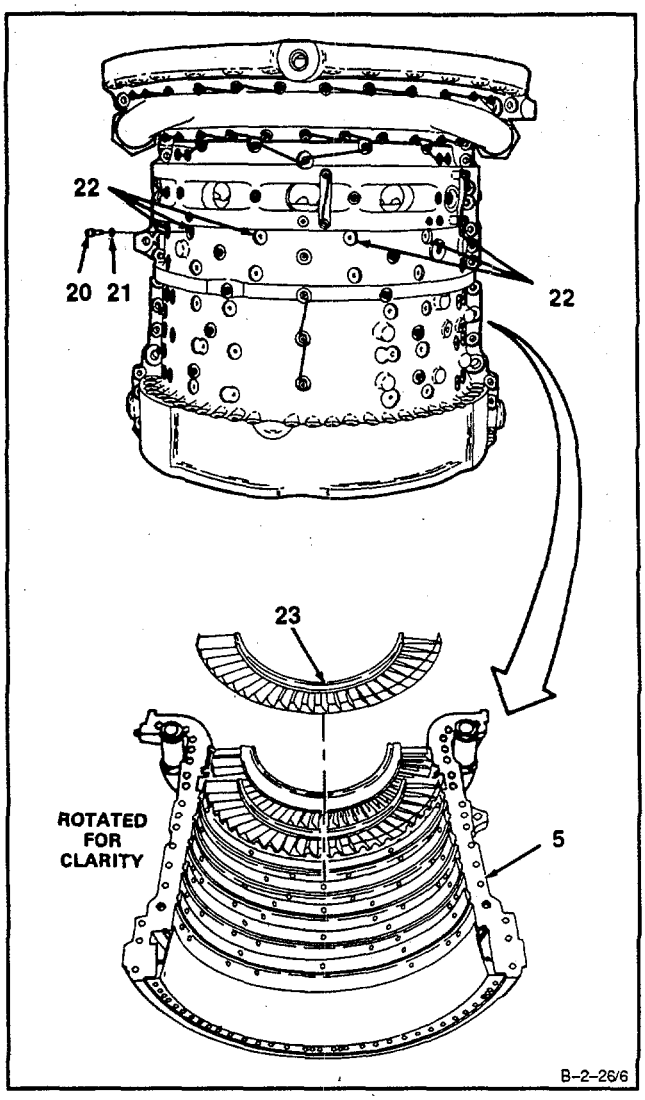

GO TO NEXT PAGE

13. Remove six screws (24) and six locking cups (25) from bolt locations (26).

14. **Remove one-half of sixth stage stator vane (27)** from lower compressor housing (5).

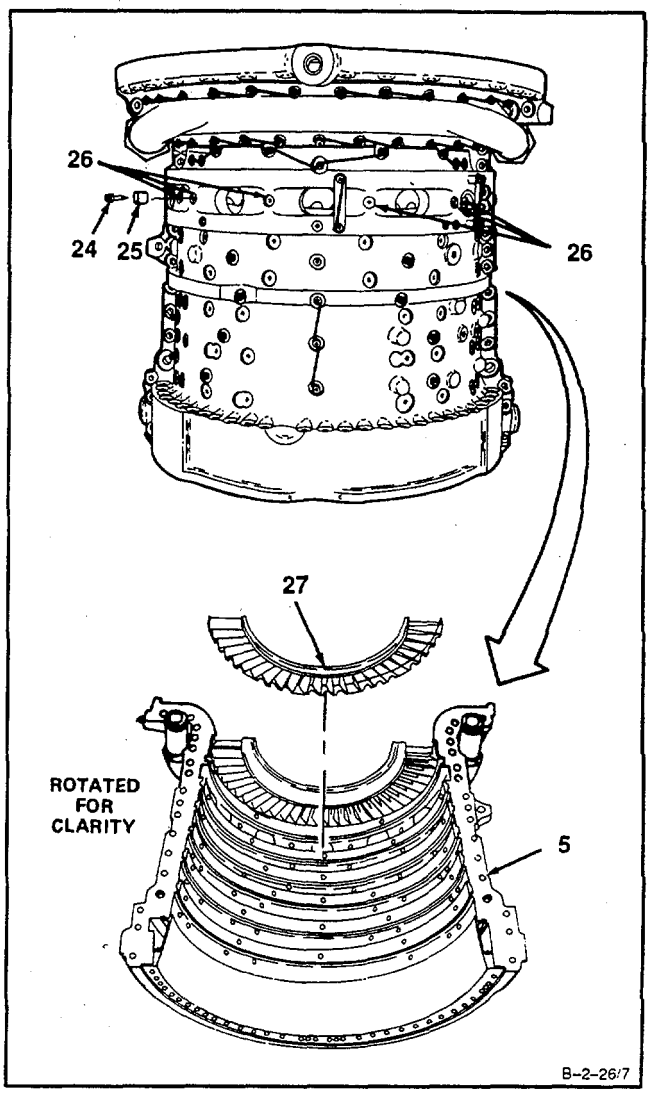

GO TO NEXT PAGE

15. Remove lockwire, nine bolts (28), and nine washers (29) from bolt locations (30).

16. **Remove one-half of seventh stage stator vane (31)** from lower compressor housing (5).

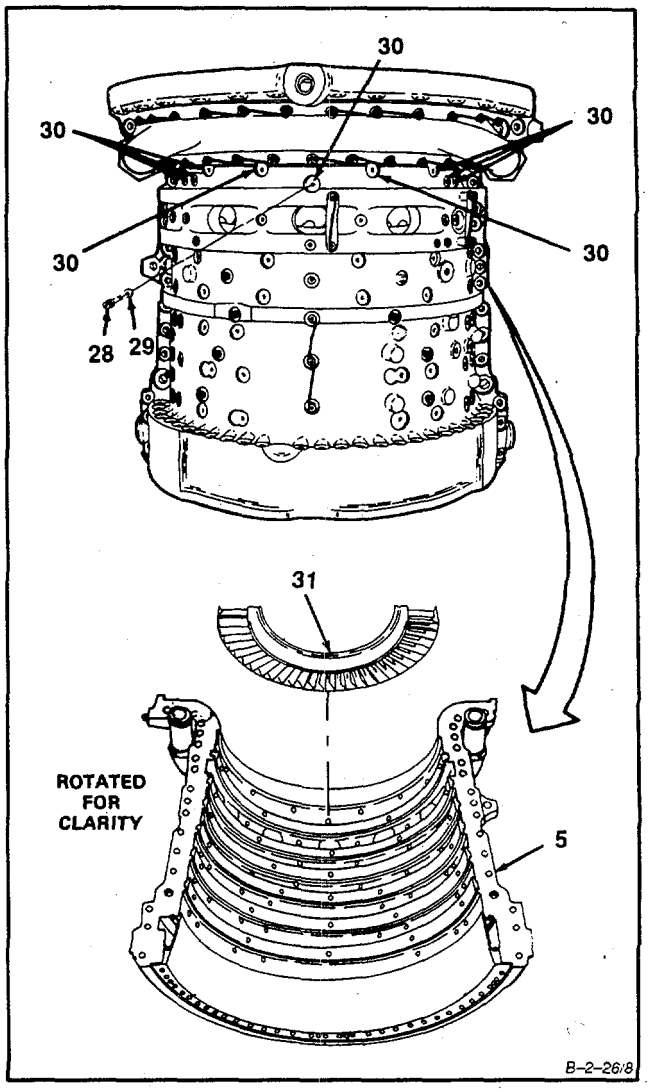

FOLLOW-ON MAINTENANCE:
None

END OF TASK

2-28 CLEAN STATOR VANE ASSEMBLIES 2-28

INITIAL SETUP

Applicable Configurations:
All

Tools:
Goggles
Dry, Compressed Air Source
Fiber Brush

Materials:
Dry Cleaning Solvent (El 9)
Gloves (E24)

Personnel Required:
Aircraft Powerplant Repairer

Equipment Condition:
Compressor Housing Removed (Task 2-20 or 2-21)
Stator Vane Assemblies Removed (Task 2-27)

General Safety Instructions:

WARNING

Dry cleaning solvent (E19) is flammable and toxic. It can irritate skin and cause burns. Use only in well-ventilated area, away from heat and open flame. In case of contact, immediately flush skin or eyes with water for at least 15 minutes. Get medical attention for eyes.

1. Wear gloves (E24) and **immerse stator vane assemblies (1, 2, 3, 4, 5, 6, and 7) in dry cleaning solvent (E17).**

2. Remove contaminants by scrubbing stator vane assemblies with fiber brush.

WARNING

When using compressed air for cleaning, use approved protective equipment for eyes and face. Do not use more than 30 psig air pressure. Do not direct air toward yourself or another person. Failure to comply could result in injury to eyes or skin. In case of injury, get medical attention.

3. Wear goggles. **Blow dry stator vane assemblies** using clean, dry, compressed air.

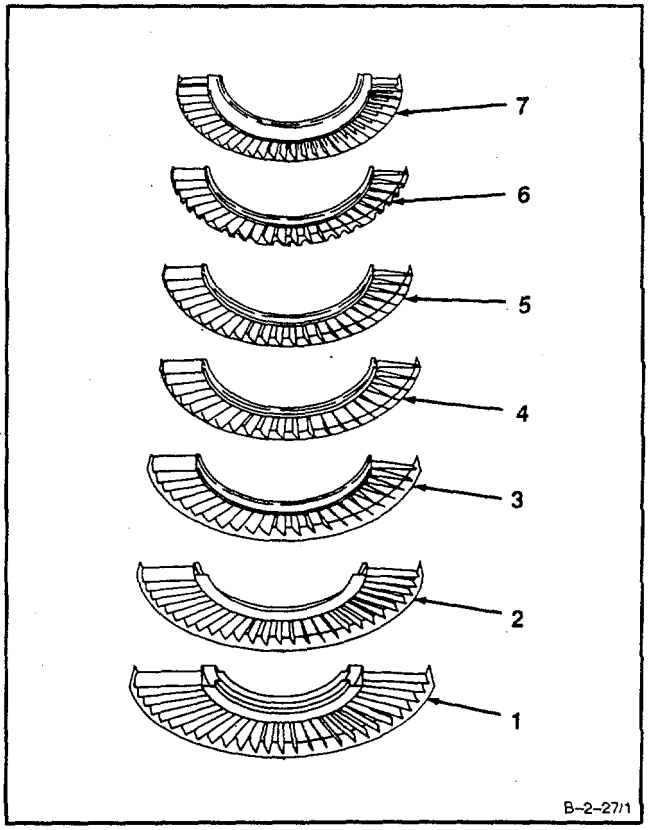

FOLLOW-ON MAINTENANCE:
Inspect Stator Vane Assemblies (Task 2-29).

END OF TASK

2-29 INSPECT STATOR VANE ASSEMBLIES 2-29

INITIAL SETUP

Applicable Configurations:
All

Tools:
Technical Inspection Tool Kit,
NSN 5180-00-323-5114

Materials:
None

Personnel Required:
Aircraft Powerplant Inspector

Equipment Condition:
Off Engine Task

NOTE

The following procedure applies to both upper and lower stator vane halves.

1. **Inspect stator vanes (1)** as follows:

NOTE

Stator vanes may be copper flashed. Copper-flashed stator vanes may appear corroded or rusty. Do not reject stator vanes for this reason.

a. There shall be no cracks. There shall be no damage with sharp edges.

b. There shall be no nicks, burrs, pits, and dents greater than 0.100 inch depth to 0.500 inch length.

c. Airfoil damage (2) shall not be greater than 0.030 inch depth and 0.025 inch length.

d. Leading and trailing edge (3) damage shall not be greater than 0.100 inch depth or 0.500 inch length. The total length of all damage on either edge shall not exceed 40 percent of vane length.

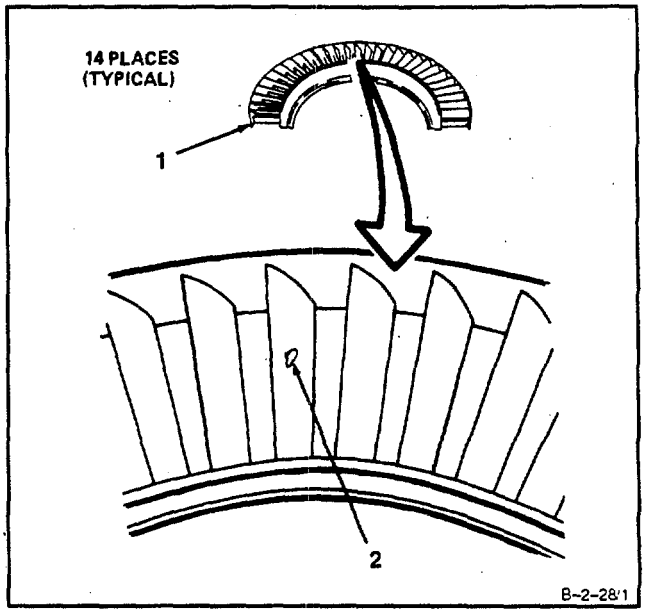

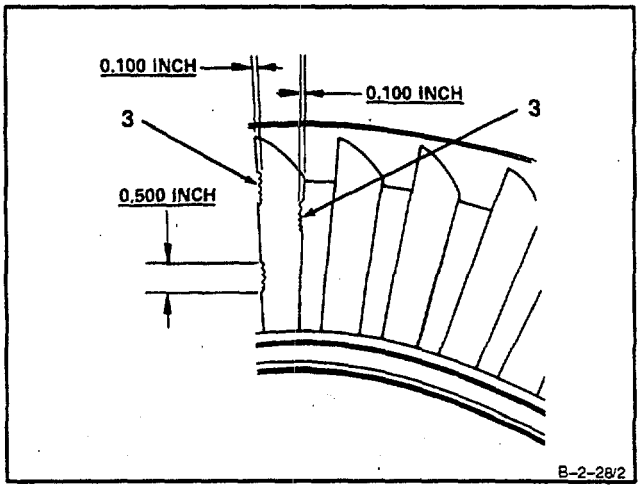

GO TO NEXT PAGE

2–29 INSPECT STATOR VANE ASSEMBLIES (Continued) 2–29

e. Inspect for bent vanes (4).

f. There shall be no cracks in the vane brazement areas (5) longer than 0.100 inch.

g. Inspect lead seal (6), There shall be no nicks, scratches, voids, or pits (7) in lead seals (6) wider than 0.004 inch or longer than 0.015 inch. There shall not be more than one of these defects (7) per inch and not les than 0.250 inch between any defects (7). There shall be no rubs (8) in lead seal (6) wider than 0.004 inch or longer than 1.500 inch.

h. Inspect outer shroud (9) of first stage staor van assembly (1). There shall be no RTV residue.

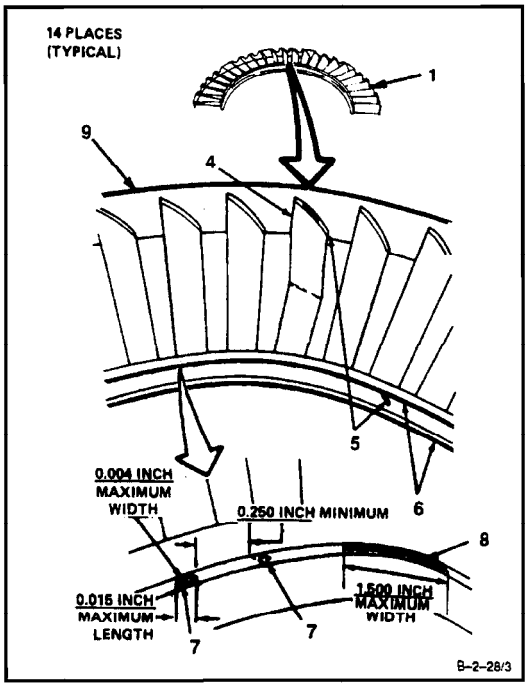

FOLLOW–ON MAINTENANCE
None

END OF TASK

2–30 REPAIR STATOR VANE ASSEMBLIES 2–30

INITIAL SETUP

Applicable Configurations:
All

Tools:
Powerplant Mechanics Tool Kit,
NSN 5180–00–323–4944
Technical Inspection Tool Kit.
NSN 5180–00–323–5114

Materials/Parts:
Carborundum Stone (E 11)
Crocus Cloth (E16)
Fluorescent–Penetrant Materials (E73), Appendix C

Personnel Required:
Aircraft Powerplant Repairer
Aircraft Powerplant Inspector

References:
TM 43–0103

Equipment Condition:
Off Engine Task

NOTE

This repair procedure applies to both top and bottom stator vanes.

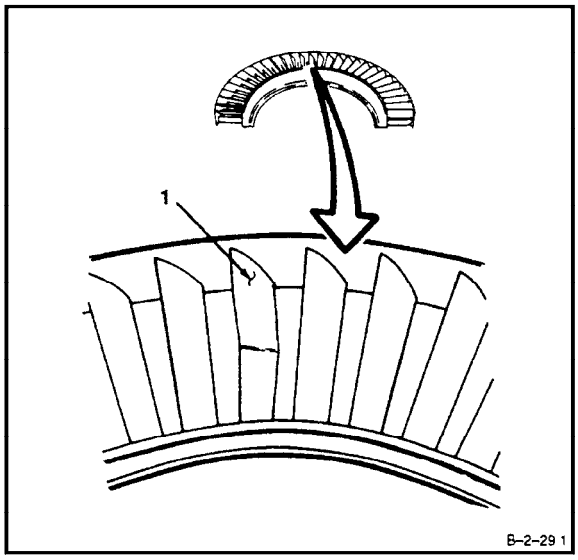

1. **Repair bent vanes**, (1) by cold–straightening vanes (1) with duck–billed pliers. Use duckbilled pliers to firmly hold vane (1). Apply hand pressure and straighten vane (1).

2. **Perform fluorescent penetrant Inspection of vanes** (1) after straightening (Ref. TM 43–0103). Parts requiring fluorescent penetrant inspection will be final cleaned, prior to inspection, with N–Propyl Bromide (vapor degreasing only), (Item E74 Appendix C), DS–108 (Item E75 Appendix C). DS–108, Electron or Positron must be followed by an Acetone (Item E1 Appendix C) or Isopropyl Alcohol (Item E78 Appendix C) rinse or wipe. Parts must be dried until there is no visible solvent residue before applying penetrant. There shall be no cracks.

GO TO NEXT PAGE

3. **Remove nicks, burrs, pits, and dents on vanes (1),** leading edge (2), and trailing edge (3). Depth of repair shall not exceed 0.100 inch. Length of repair shall not exceed 0.500 inch.

   a. Blend all sharp edges using carborundum stone (Ell).

   b. Polish to smooth finish using crocus cloth (El 6).

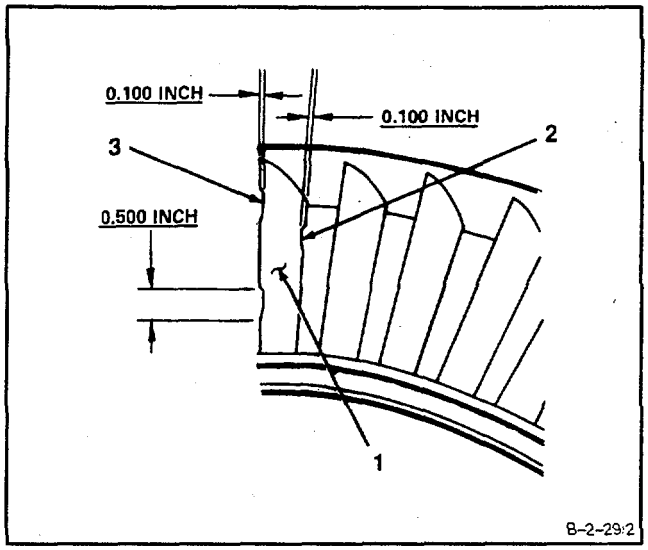

4. **Repair airfoil damage (4)** on vane (1) as follows:

   a. Blend all sharp edges using carborundum stone (Ell).

   b. Polish to smooth finish using crocus cloth (E15). Repair shall not be greater than 0.030 inch depth and 0.025 inch length.

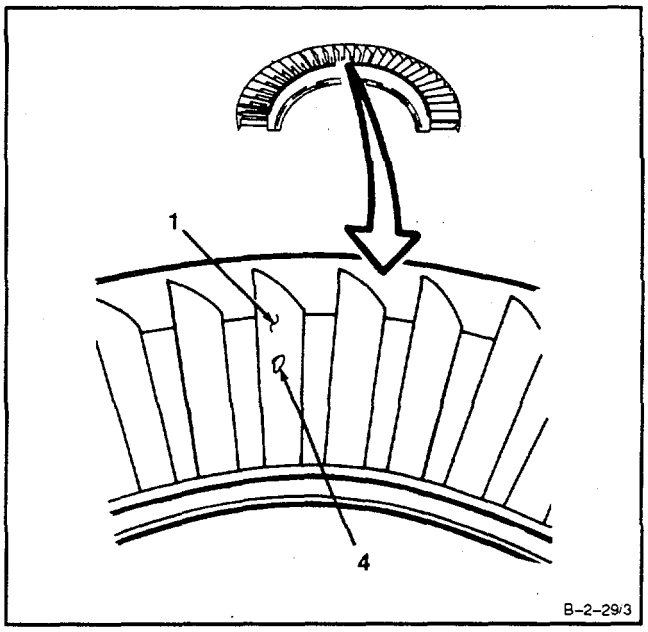

INSPECT

FOLLOW-ON MAINTENANCE:
None

END OF TASK

2-31 INSTALL STATOR VANE ASSEMBLY - FIRST STAG E 2-31

INITIAL SETUP

Applicable Configurations:
All

Tools:
Powerplant Mechanic's Tool Kit, NSN 5180-00-323-4944
Technical Inspection Tool Kit, NSN 5180-00-323-5114
Dry, Compressed Air Source
Flat Hand File
Goggles
Non-Metallic Scraper
RTV Application Kit (T2)
RTV Masking Kit (T46)
Tongue Depressor
Torque Wrench, 0-30 Inch-Pounds
Torque Wrench, 30-150 Inch-Pounds

Materials:
Acetone (El)
Acid Swabbing Brush (E2)
Dry Cleaning Solvent (E19)
Gear Marking Compound (E22)
Gloves (E24)
Lint-Free Cloth (E30)
Lockwire (E33)
Masking tape (E39)
Mold Release Compound (E41)

Personnel Required:
Aircraft Powerplant Repairer
Aircraft Powerplant Inspector

References:
Task 2-20
Task 2-21
Task 2-25
Task 2-26
Task 2-27
Task 2-28

General Safety Instructions:

WARNING

Dry cleaning solvent (E19) is flammable and toxic. It can Irritate skin and cause burns. Use only in well-ventilated area, away from heat and open flame. In case of contact, immediately flush skin or eyes with water for at least 15 minutes. Get medical attention for eyes.

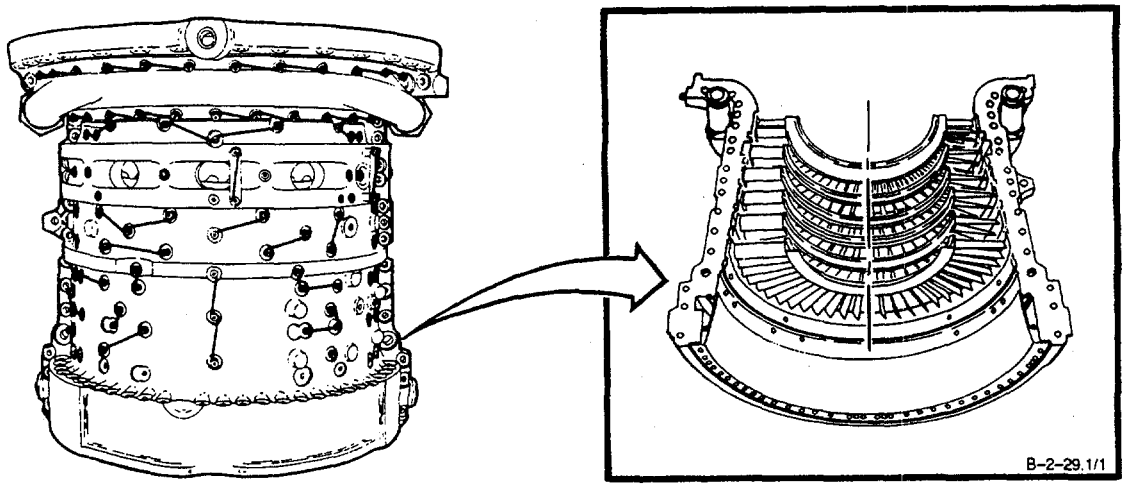

GO TO NEXT PAGE

NOTE

Procedure for installing upper and lower first stage stator assembly are the same. Instructions for installing lower compressor housing first stage stator vane are given.

1. **Inject RTV,** detail of RTV application kit (T2) in first stage stator vane assembly (1) as follows:

WARNING

Acetone (E1) Is flammable and toxic. It can irritate skin and cause burns. Use only in well-ventilated area, away from heat and open flame. In case of contact, immediately flush skin or eyes with water for at least 15 minutes. Get medical attention for eyes.

a. Wear gloves (E24) and using acetone (El) and acid swabbing brush (E2) and lint-free cloth (E30)**clean first stage stator mounting surface (2)** of compressor housing half (3).

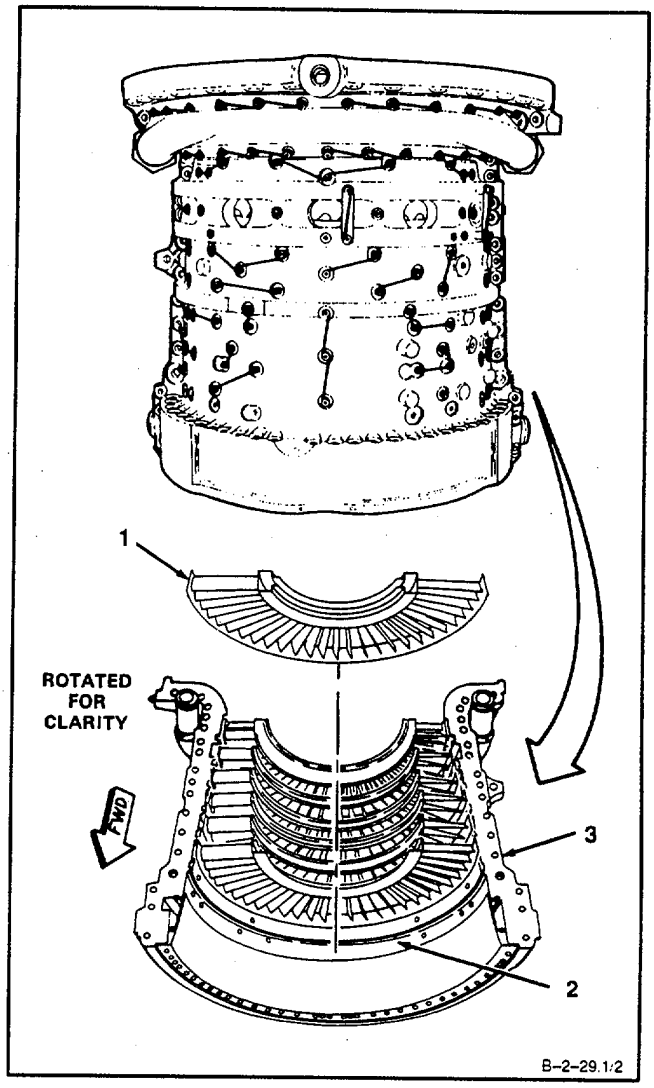

GO TO NEXT PAGE

WARNING

When using compressed air for cleaning, use approved protective equipment for eyes and face. Do not use more than 30 psig air pressure. Do not direct air toward yourself or another person. Failure to comply could result in injury to eyes or skin. In case of injury, get medical attention.

b. Wear goggles. **Blow dry first stage stator mounting surface (2) using clean, dry, compressed air**.

c. **Mask compressor housing half (3)** using 1 inch wide masking tape (E39) (4) leaving first stage stator vane assembly mounting surface (2) unmasked.

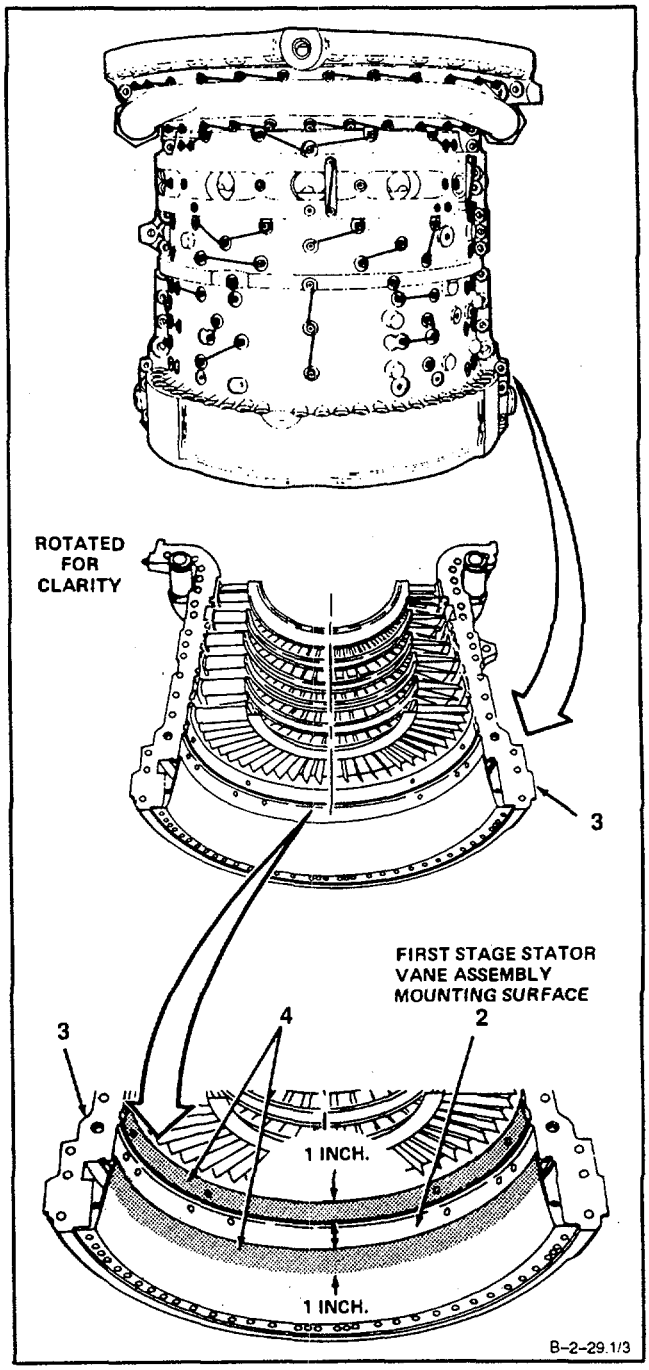

GO TO NEXT PAGE

NOTE

In following step take care not to overspray onto masked areas.

d. **Apply a thin, even film of mold release compound (E41)** to first stage stator vane assembly mounting surface (2) of compressor housing half (3).

e. **Remove masking tape (4).**

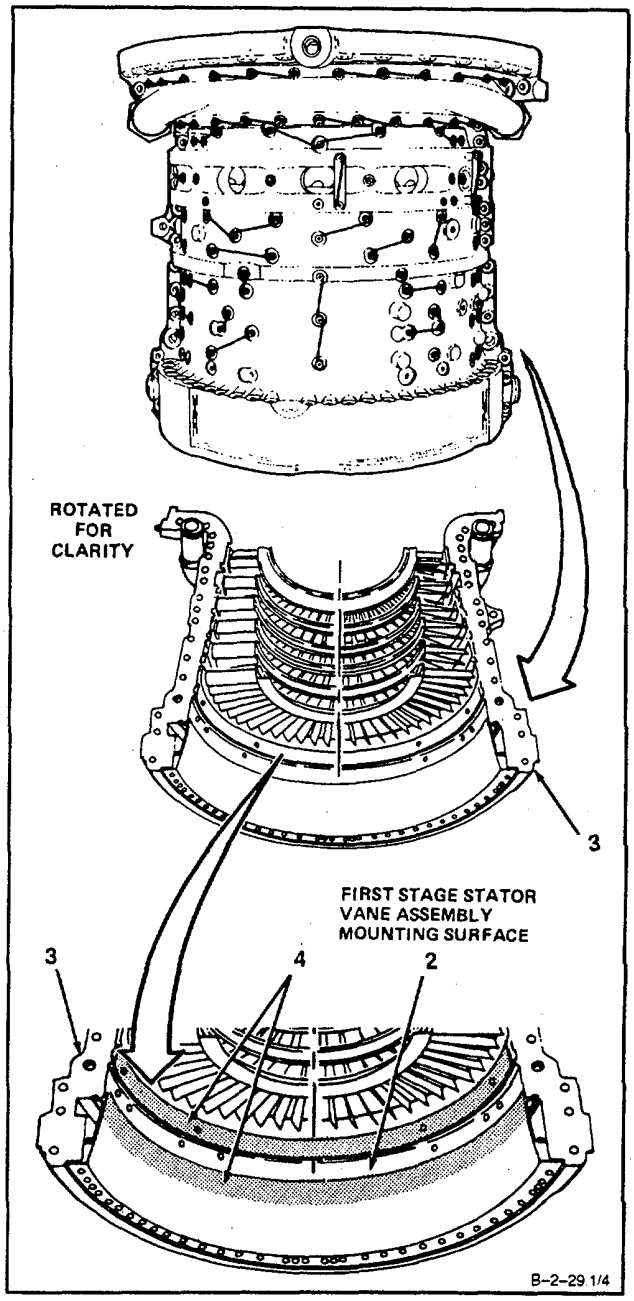

GO TO NEXT PAGE

2-31. INSTALL STATOR VANE ASSEMBLY – FIRST STAGE (Continued) 2-31

NOTE

Ensure drain hole in bottom half of stator assembly is installed at the 6 o'clock position.

2. **Install first stage stator vane (1)** into compressor housing half (3) as follows:

   a. Install four washers (5) and four bolts (6) in bolt hole locations (7). Finger tighten bolts (6).

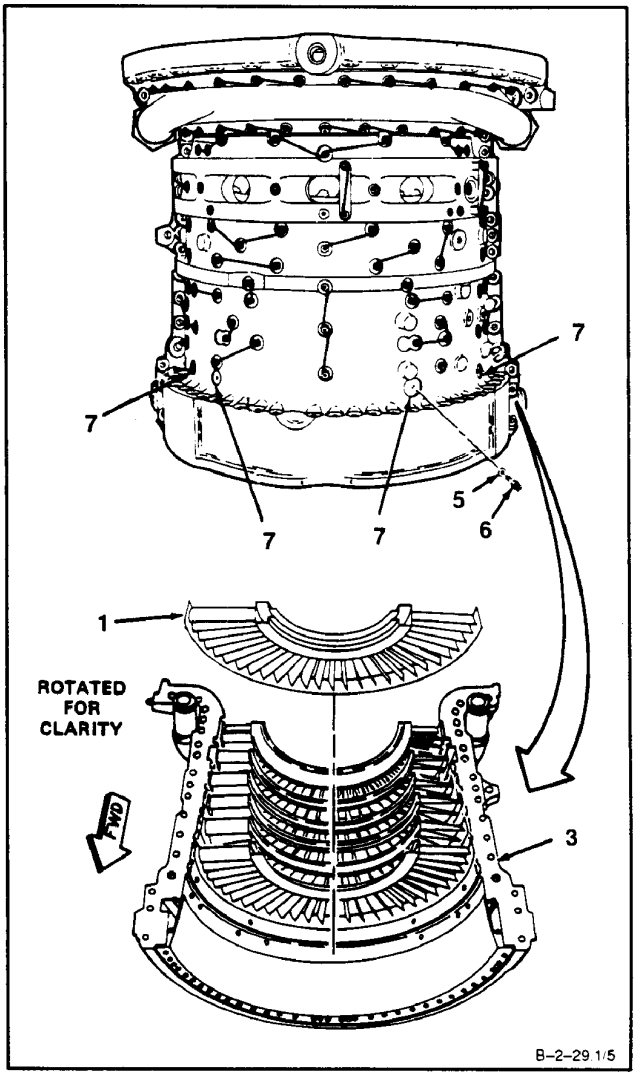

GO TO NEXT PAGE

b. Starting with center bolts (6) torque bolts (6) first to 45 inch-pounds. Loosen all bolts and retorque to 15 inch-pounds using the same order.

c. Check ends of bolts (6). Bolt ends shall be flush, or not more than 0.035 inch below surface of stator. If necessary, add washers under bolt heads. There must be at least one washer under each bolt head.

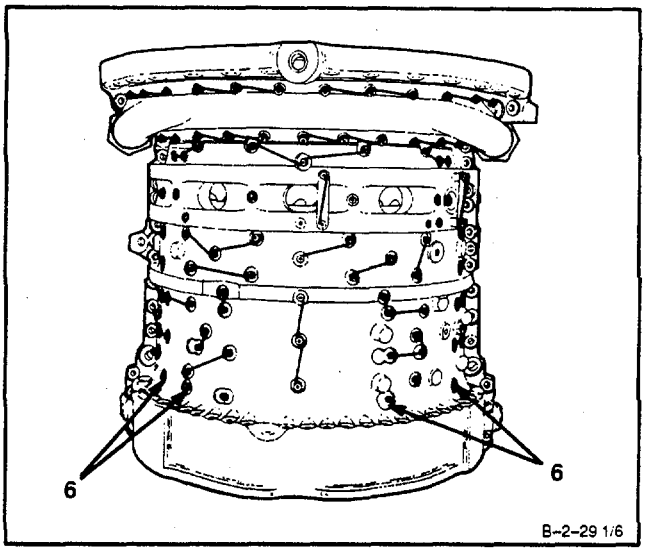

GO TO NEXT PAGE

3. **Inspect for clearance between stator vane shrouds** as follows:

   a. Apply gear marking compound (E22) to both ends (8) of stator vane shroud (9) on installed compressor housing half (10). Use acid swabbing brush (E2).

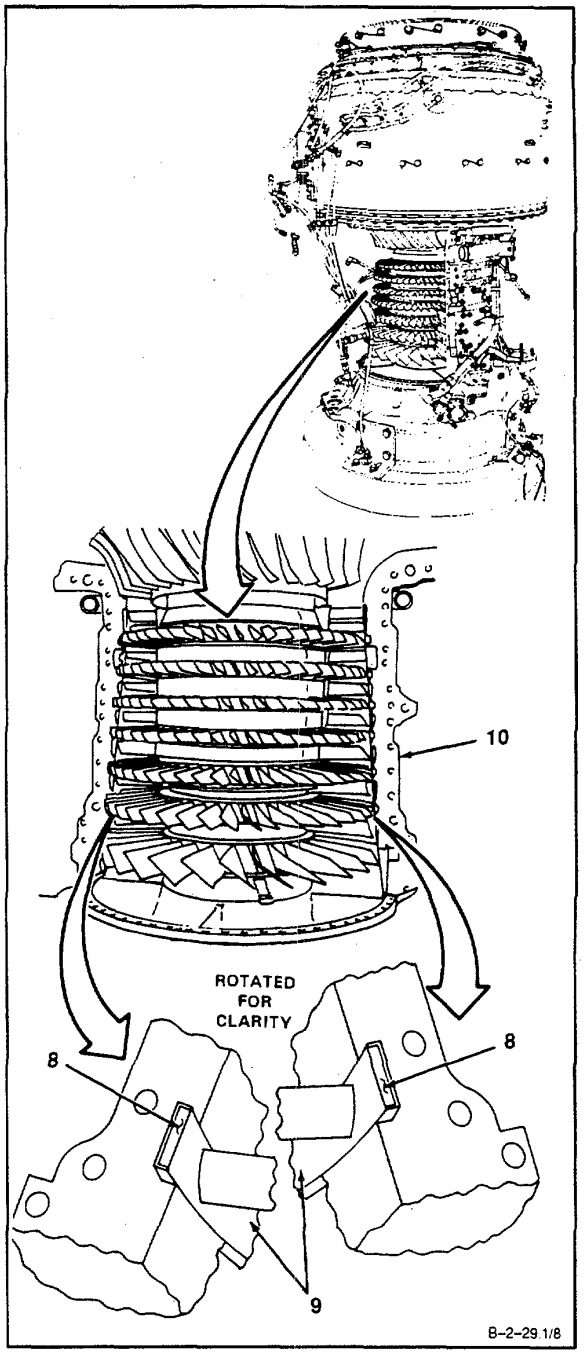

GO TO NEXT PAGE

b. **Temporarily install removed compressor housing half** (Ref. Task 2-25, steps 3 thru 5 or Task 2-26, steps 1 thru 3).

c. **Remove temporarily Installed compressor housing half** (Ref. Task 2-20, steps 40 thru 43 and 48 or Task 2-21, steps 20 thru 23 and 34).

d. Inspect both ends (11) of stator vane shroud (12) of removed compressor housing half (13). There shall be no gear marking compound (E22) visible.

e. If no gear marking compound (E22) is visible, clearance is acceptable.

f. If gear marking compound (E22) is visible proceed as follows:

(1) Loosen stator vane mounting bolts, shift stator vane and retorque mounting bolts (Ref. steps 2b. and 2c.).

(2) Repeat steps 3 a. thru d.

(3) If gear marking compound (E22) is still visible, proceed as follows:

(a) **Remove stator vane assembly** (Ref. Task 2-27).

(b) **File shroud ends (14).** Use flat hand file.

(c) **Clean stator vane assembly** (Ref. Task 2-28).

(d) **Install stator vane assembly** (Ref. steps 1 and 2).

(e) **Repeat steps 3, a thru d.**

(f) **If gear marking compound (E22) is still visible, repeat step 3, f, (3), (a) thru (e).**

(g) Lockwire bolts. Use lockwire (E33).

g. Wear gloves (E24). Using dry cleaning solvent (E17) and brush, clean off all gear marking compound (E22). Wipe dry using lint-free cloth (E30).

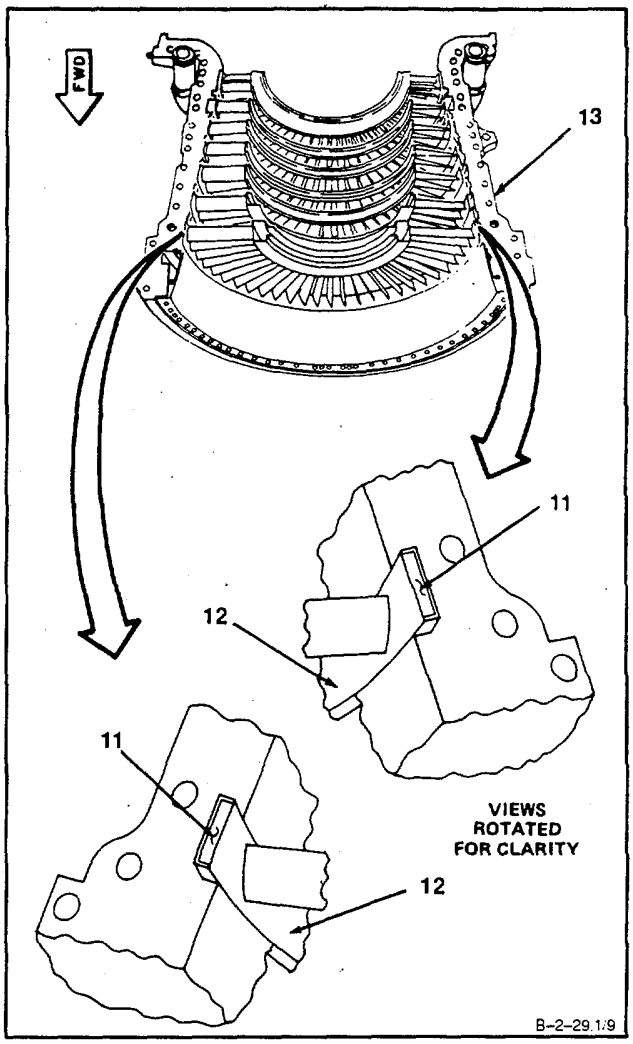

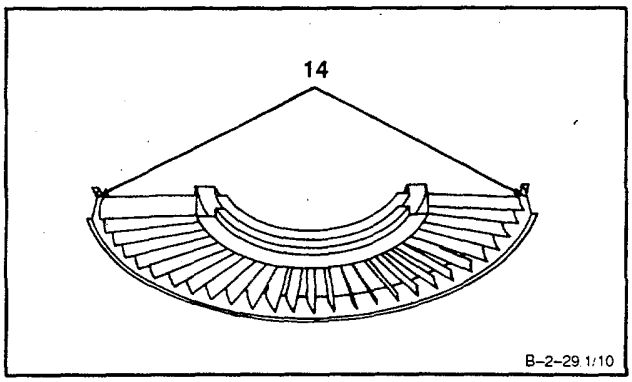

GO TO NEXT PAGE

h. Install first stage stator vane RTV masking kit (T46) as follows:

(1) Install aft retainer (15) with chamfered edge of (16) toward first stage stator vane (17).

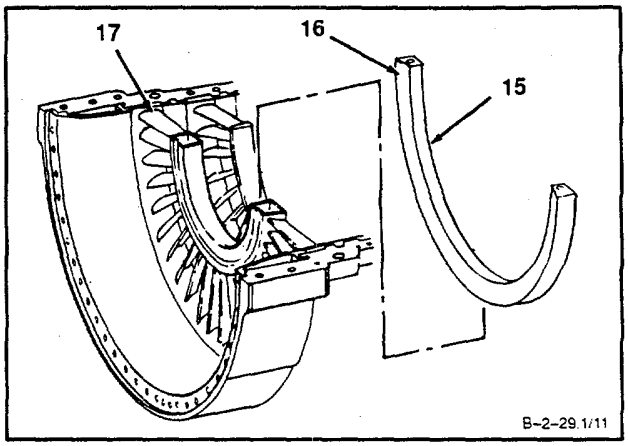

(2) Install forward retainer (18) with cutouts toward first stage stator vane (17).

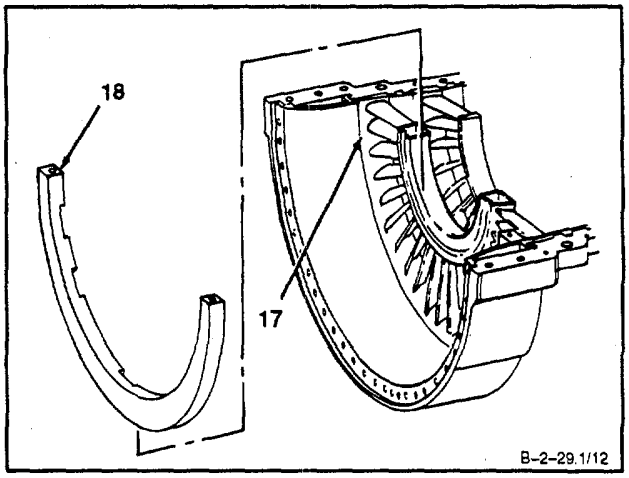

NOTE

Make sure forward and aft retainers are tightly secured against edge of outer shroud of first stage stator vane.

Make sure holes (19) are completely visible.

(3) Position two clamps (20) on retainers (15 and 18). Install two screws (21) thru center holes (22) of clamp (20) and into forward retainer (18).

(4) Install two screws (23) thru aft holes (24) of clamp (20) and into aft retainer (15). Tighten screws evenly.

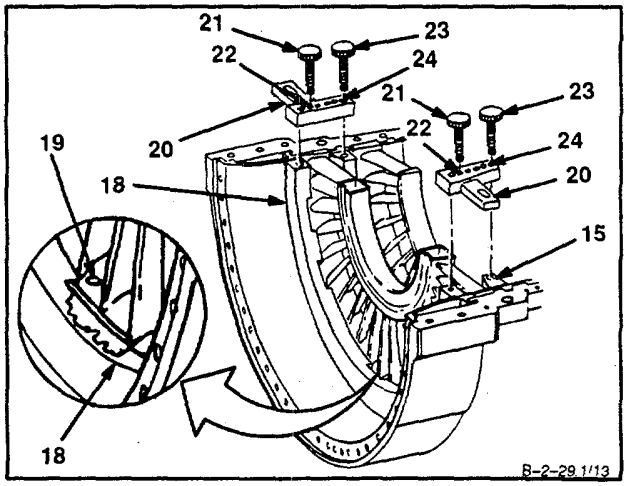

GO TO NEXT PAGE

(5) Install two bolts (25), two washers (26), and two nuts (27). Stagger tighten evenly to clamp retainers in place.

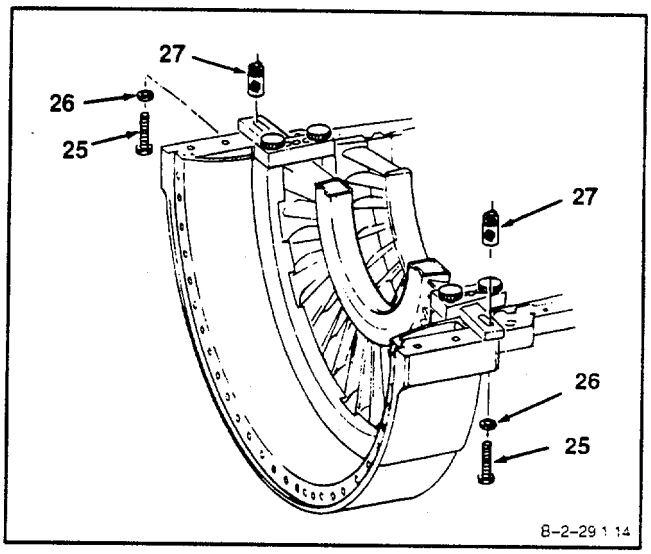

i. Prepare RTV application kit (T2) as follows:

(1) Hold cartridge (28) . Grasp mixing rod (29) and pull back about one inch.

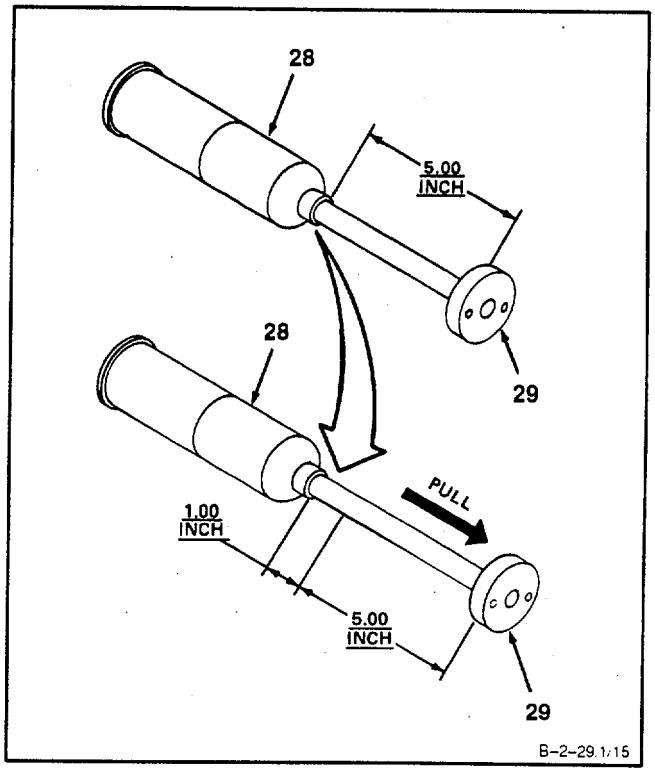

GO TO NEXT PAGE

(2) **Insert ramrod (30)** into hole (31) at top of mixing rod (29).

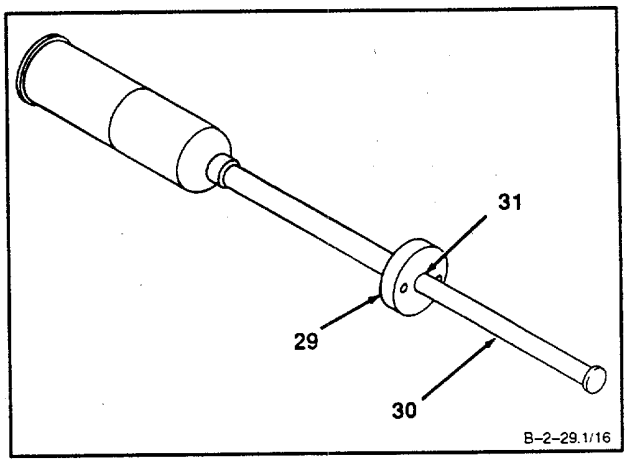

NOTE

In following step use even pressure. Do not use excess force, tap, pound, or jolt ramrod if piston does not break loose easily.

(3) **Inject all of catalyst into** cartridge (28) by pushing ramrod (30) into mixing rod (29).

(4) **Remove ramrod (30)** from mixing rod (29).

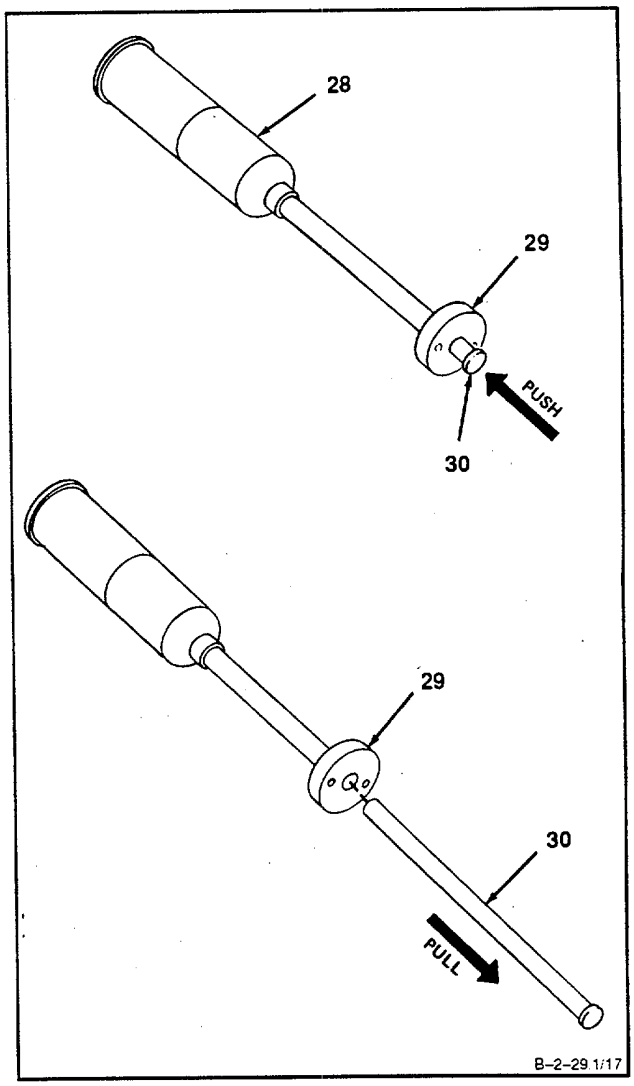

GO TO NEXT PAGE

(5) **Pull mixing rod (29)** from cartridge (28) until it is fully extended.

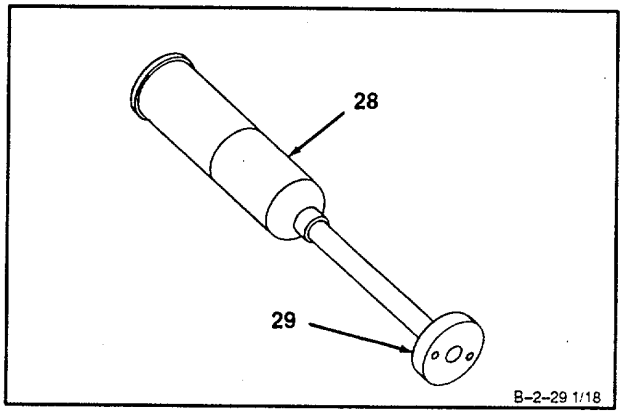

(6) **Turn cartridge (28) upside down.** Align in center of mixing rod (29) with drive screw (32) of mixer (33).

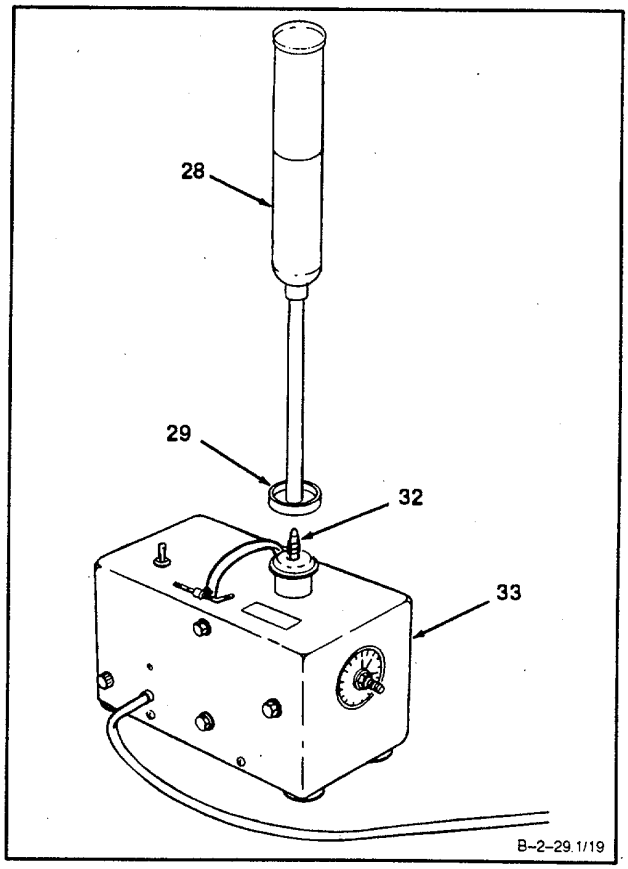

GO TO NEXT PAGE

(7) **Grasp mixing rod (29) firmly** and turn clockwise by hand until drive screw (32) is totally engaged.

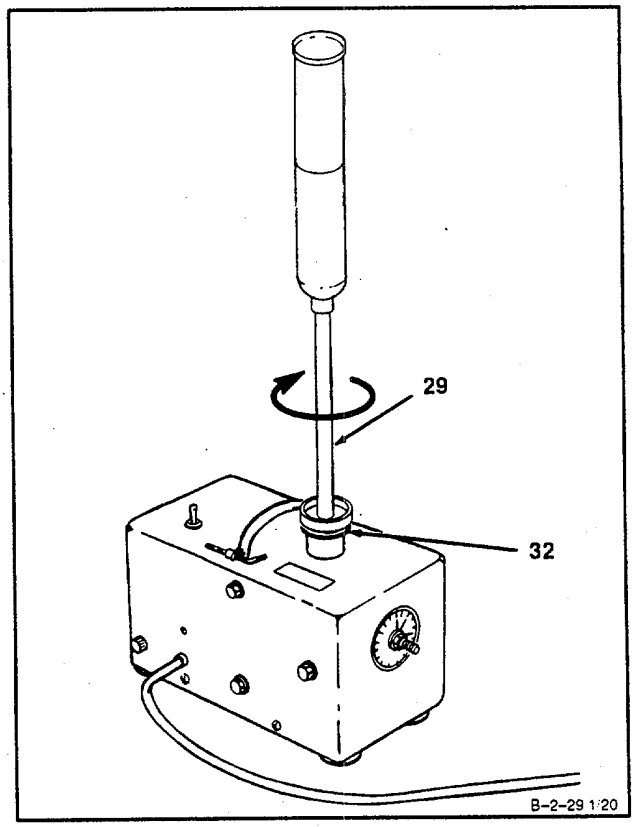

CAUTION

If mixer switch is In REVERSE position, the Internal mixing paddle will disconnect from shaft and result in improper mixing.

(8) **Grasp cartridge (28) firmly**. Turn mixer switch (34) to MIX position. Set timer (35) for 4 minutes.

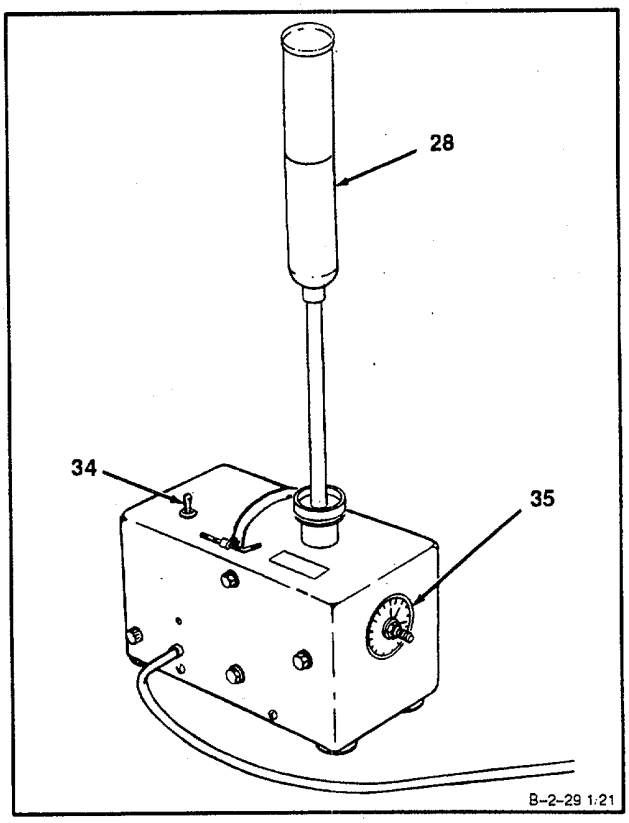

GO TO NEXT PAGE

(9) **Move cartridge (28) up and down.** The internal mixing paddle must traverse the entire filled length of the cartridge (28).

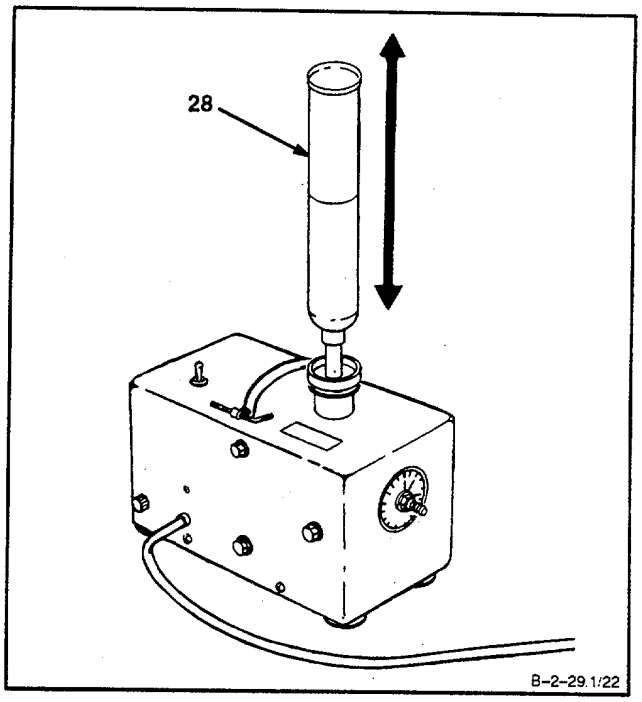

(10) When bell rings on timer, **turn mixer switch (34) OFF.** Mixing rod (29) should be fully extended at this time.

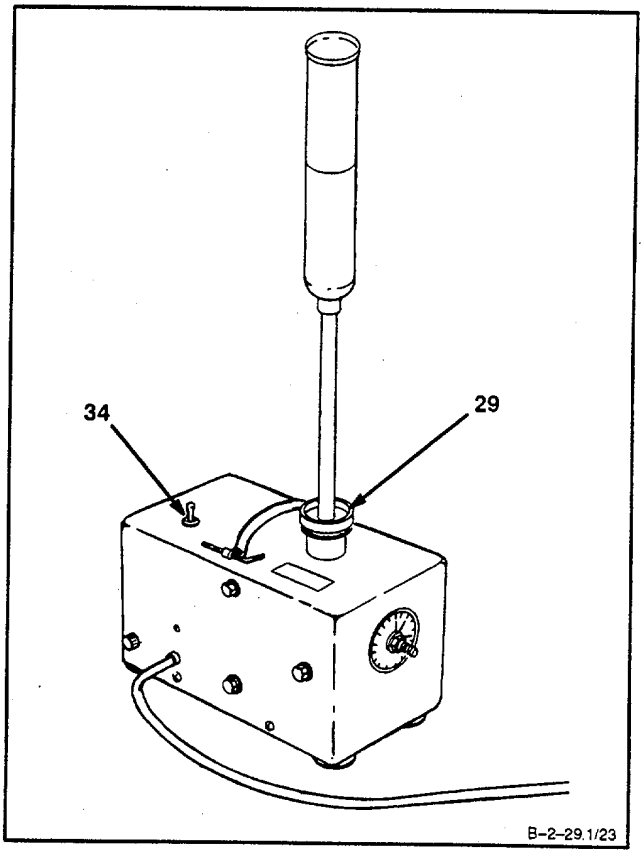

GO TO NEXT PAGE

(11) **Using duckbill pliers, grasp mixing rod (29) firmly and turn mixer switch (34) to REVERSE position**. This will unscrew mixing rod (29) from internal drive screw assembly. When mixing rod is free, turn mixer switch (34) to OFF position.

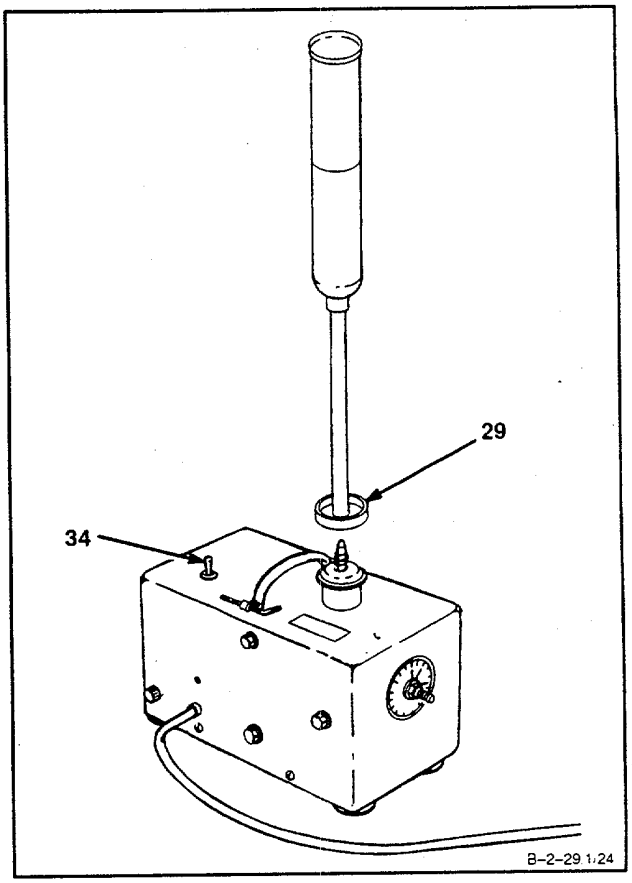

(12) **Grasp cartridge (28)** with mixing rod (29) fully extended.

(13) **Rotate mixing rod (29)** counterclockwise to disengage internal mixing paddle.

(14) **Withdraw mixing rod (29).**

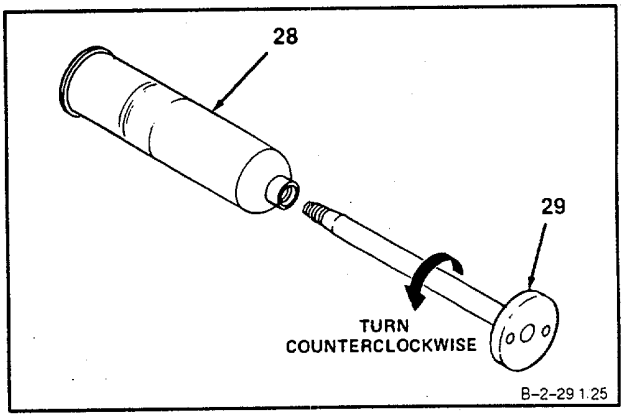

(15) Prepare injection tip as follows:

(a) If Semko No. 410 or No. 440 nozzle is being used, cut tip (36) on a 5 degree angle to expose a 0.125 inch orifice.

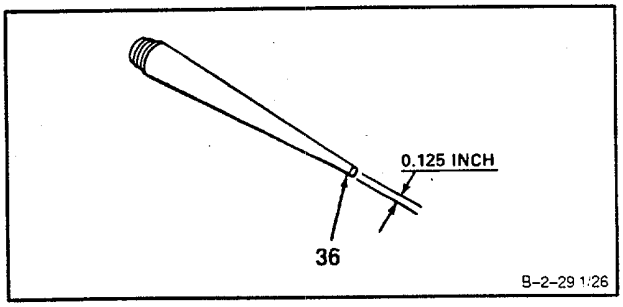

GO TO NEXT PAGE

(b) If Philip Fishman No. FN-250-12-5, needle is used slide cover (37) over needle (38).

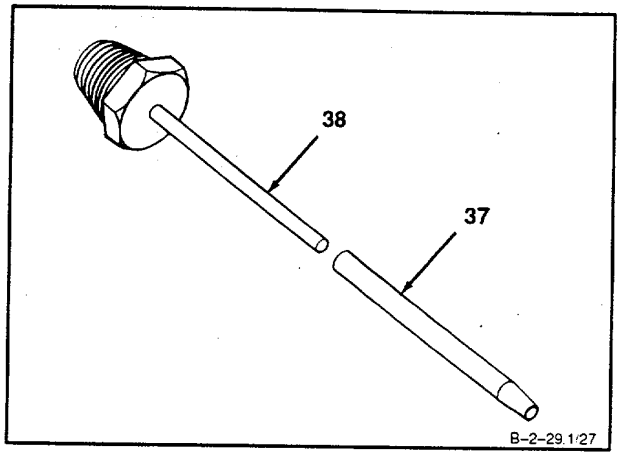

(16) **Install injection tip (36)** on cartridge (28).

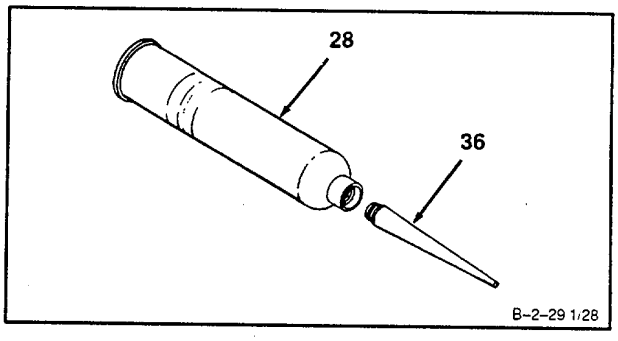

(17) Remove cap (39) from RTV cartridge assembly (40) and **install cartridge assembly (40)** in cartridge holder (41).

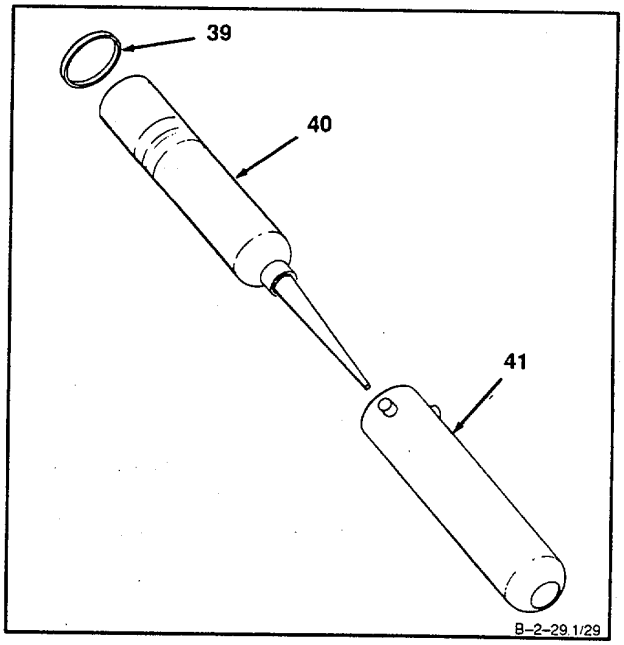

GO TO NEXT PAGE

(18) Install cartridge holder assembly (42) on injection gun (43) . Turn cartridge holder assembly (42) clockwise until pin (44) engages slot (45) on injection gun (43).

(19) Secure cartridge holder assembly (42) to injection gun (43) by turning knob (46) clockwise until it seats firmly.

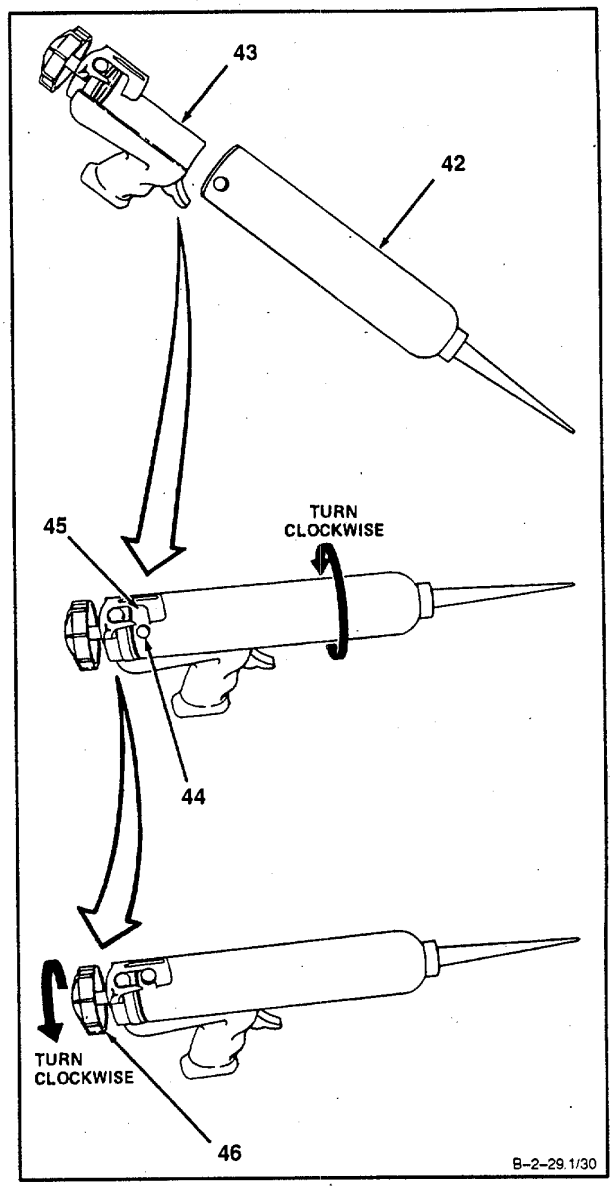

(20) **Install shop air hose (47)** on injection gun assembly (48).

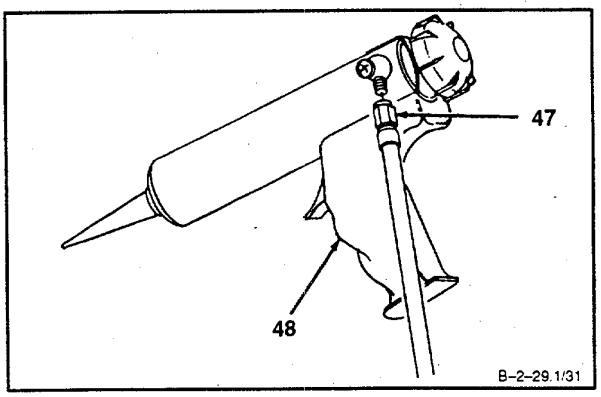

GO TO NEXT PAGE

(21) **Position compressor housing half (3)** facing up and level.

(22) Adjust air pressure regulator to 60 psi. **Inject RTV as follows:**

(a) **Inject RTV through five holes (49)** in stator outer shroud (50) starting with center hole marked 1 and work in sequence alternately toward housing splitline (51).

(b) Inject all five holes (49) until RTV begins to flow out through the five 2.250 Inch areas nearest to the injection holes.

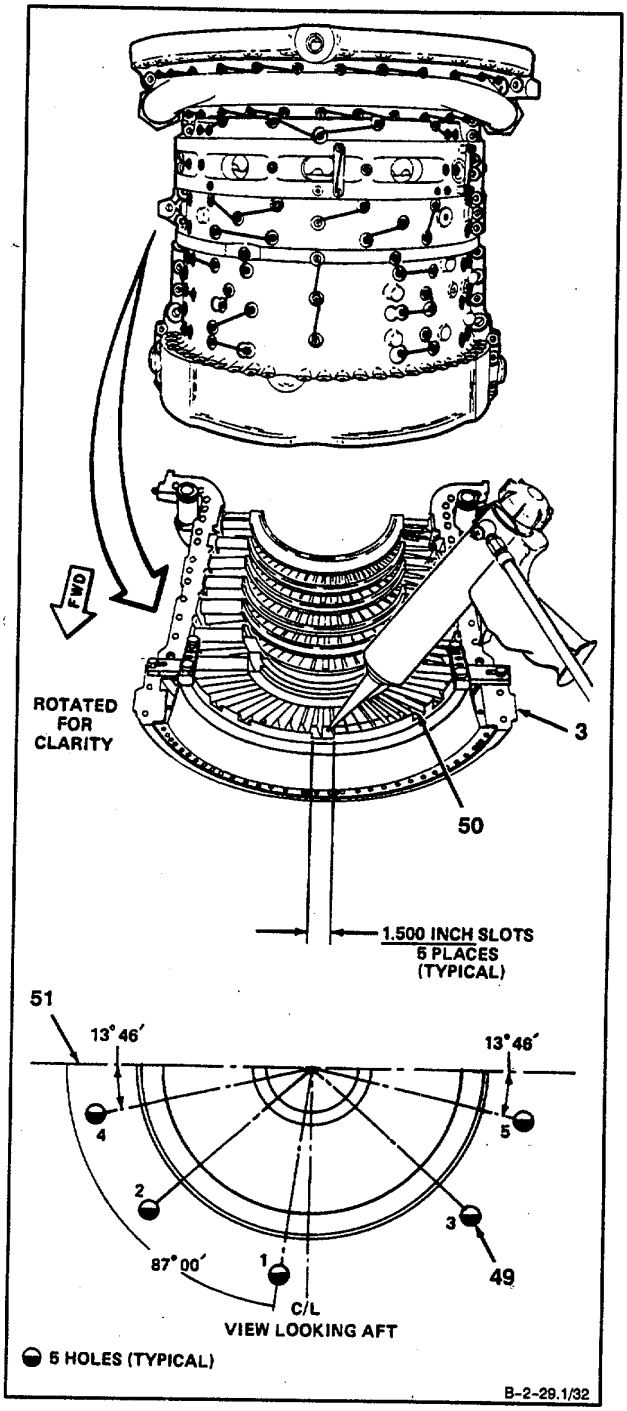

GO TO NEXT PAGE

(c) **Fill outer shroud (50) splitline cavities (52) with RTV.**

(23) **Place compressor housing half (3) in oven** and cure for three hours at 225 degrees F. Ensure compressor housing is level. If suitable oven is not available allow to cure at ambient temperature for 24 hours.

(24) Remove compressor housing from oven and allow to cool for 1/2 hour.

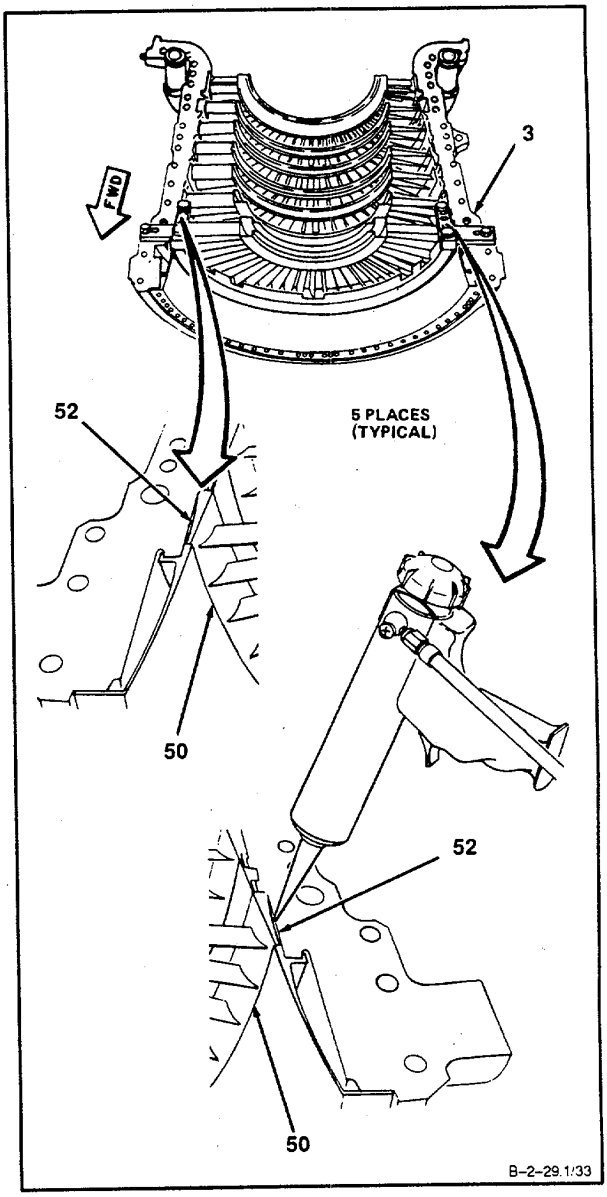

GO TO NEXT PAGE

(a) Remove first stage stator RTV masking kit (T46) as follows:

1 Remove two bolts (25), two washers (26), and tw6 nuts (27).

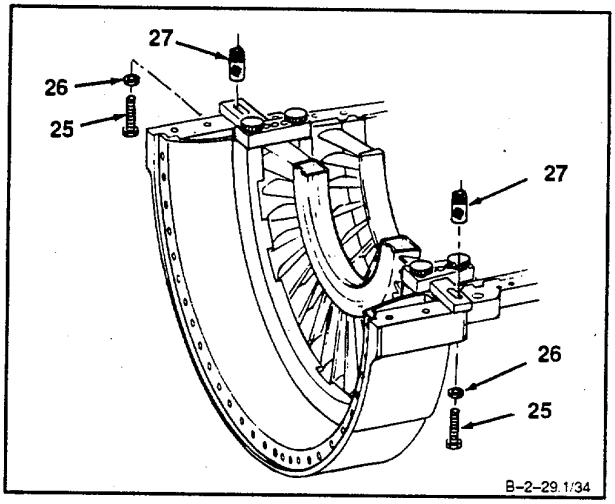

2 Remove two screws (23) from aft retainer (15). Remove two clamps (20) and forward retainer (18) from compressor housing half (3).

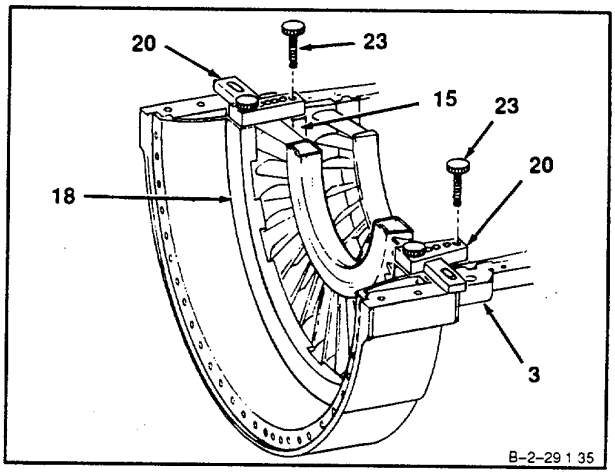

3 Install two screws (23) into aft retainer (15) and remove aft retainer (15) from compressor housing half (3).

(25) Using non-metallic scraper, remove excess RTV from compressor housing half (3) and splitline cavities (52).

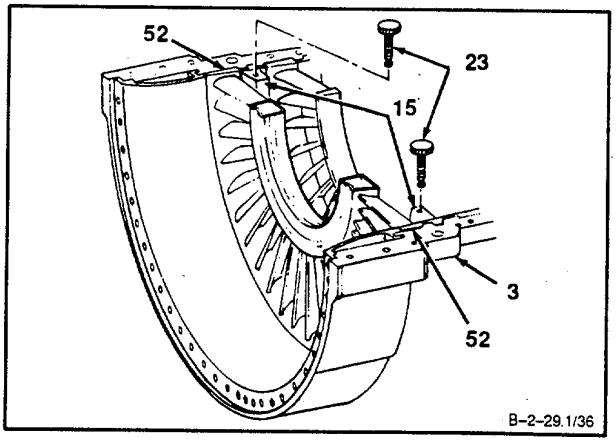

INSPECT

GO TO NEXT PAGE

FOLLOW-ON MAINTENANCE:

Install Upper or Lower Compressor Housing (Task 2-25 or Task 2-26)
Install Tube Assembly (Hose Assembly to Primer Tube Assembly) (Task 6-91)
Install Tube Assembly (No. 4 and 5 Bearing Scavenge Connector to Tube Assembly) (Task 8-72)
Install Overspeed Solenoid Valve (Task 6-56).
Install Compressor Bleed Band (Task 2-14).
Install Interstage Air-Bleed Actuator (Task 2-8).
Install Main Fuel Filter and Bracket (Task 6-34).
Install Accessory Gearbox Assembly (Task 5-7) (Lower Compressor Housing Only)
Install Hydromechanical Assembly (HMA) (Task 6-5) (Lower Compressor Housing Only)
Install Main Oil Pump, Speed Pickup Drive Assembly, Scavenge Oil Screen, and Related Parts (Task 8-6) (Lower Compressor Housing Only)
Install Tube Assembly (Inlet Housing to Main Oil Pump) (Task 8-66) (Lower Compressor Housing Only)
Install Fuel Boost Pump Assembly (Task 6-12) (Lower Compressor Housing Only)
Install Dual Chip Detector (Task 8-46) (Lower Compressor Housing Only)
Install Starter Drive Assembly (Task 5-22) (Upper Compressor Housing Only)
Install Oil Filler Assembly and Oil Filler Strainer (Task 8-33) (Upper Compressor Housing Only)
Install In-Line Fuel Filter Assembly (Task 6-40).
Install Oil Cooler Assembly (Task 8-18).
Install Flow Programming Valve (Task 8-22).
Install Ignition Exciter (Task 7-15).
Install Ignition Coil and Cable Assembly (Task 7-5) (Lower Compressor Housing Only)
Install Hose Assembly (Dual Chip Detector to Accessory Gearbox Collector) (Task 8-60).
Install Hose Assembly (Dual Chip Detector to Accessory Gearbox Assembly) (Task 8-58).
Install Hose Assembly (Main Oil Pump to Dual Chip Detector) (Task 8-64).
Install Hose Assembly (Dual Chip Detector to Air Diffuser Assembly) (Task 8-62).
Install Electric Harness Assemblies (Tasks 7-21, 7-27, 7-33) (Lower Compressor Housing Only)
Service Engine Oil System (Task 1-68).

END OF TASK

2-32 INSTALL STATOR VANE ASSEMBLIES - SECOND THROUGH SEVENTH STAGES

INITIAL SETUP

Applicable Configurations:
All

Tools:

Powerplant Mechanic's Tool Kit, NSN 5180-00-323-4944
Technical Inspection Tool Kit, NSN 5180-00-323-5114
Drive Pin Punch (T36)
Flat Hand File
Torque Wrench 0-30 Inch-Pounds
Torque Wrench 30-150 Inch-Pounds
5/32-Inch Hex Head Driver, 1/4-Inch Drive Socket, NSN 6120-00-596-0940

Materials:

Tongue Depressor
Acid Swabbing Brush (E2)
Dry Cleaning Solvent (E19)
Gloves (E24)
Lint-Free' Cloth (E30)
Lockwire (E33)
Denatured Alcohol (E17)
Gear Marking Compound (E22)
RTV Silicone Rubber Adhesive Sealant (E47)

Personnel Required:
Aircraft Powerplant Repairer
Aircraft Powerplant Inspector

References

Task 2-20	Task 2-26
Task 2-21	Task 2-27
Task 2-25	Task 2-28

General Safety Instructions:

WARNING

Dry cleaning solvent (E19) is flammable and toxic. It can irritate skin and cause burns. Use only in well-ventilated area, away from heat and open flame. In case of contact, Immediately flush skin or eyes with water for at least 15 minutes. Get medical attention for eyes.

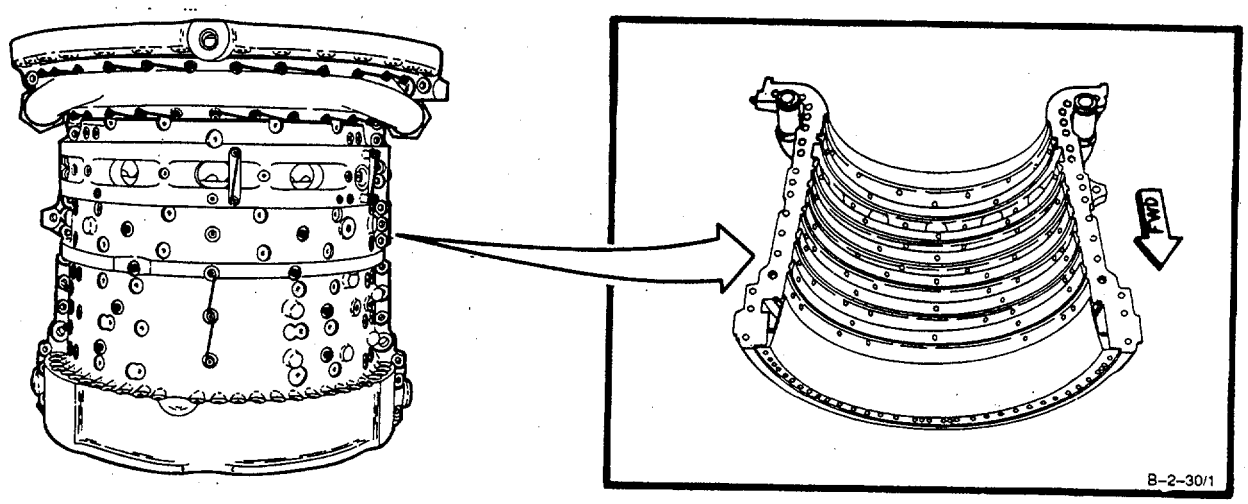

GO TO NEXT PAGE

NOTE

Stator vane assembly halves which meet serviceable limits may be matched with other serviceable vane assembly halves. Rematched halves shall meet all assembly requirements. Rematched halves should have about the same amount of erosion or FOD.

NOTE

Procedures for installing upper and lower compressor housing stator vane assemblies are the same. Instructions for installing lower compressor housing stator vanes are given.

1. **Install one-half of seventh stage stator vane (1) into compressor housing half (2) as follows:**

   a. Install three washers (3) and three bolts (4) in bolt locations (5). Finger tighten bolts (4).

   b. Install six washers (6) and six bolts (7) in bolt locations (8). Finger tighten bolts (7).

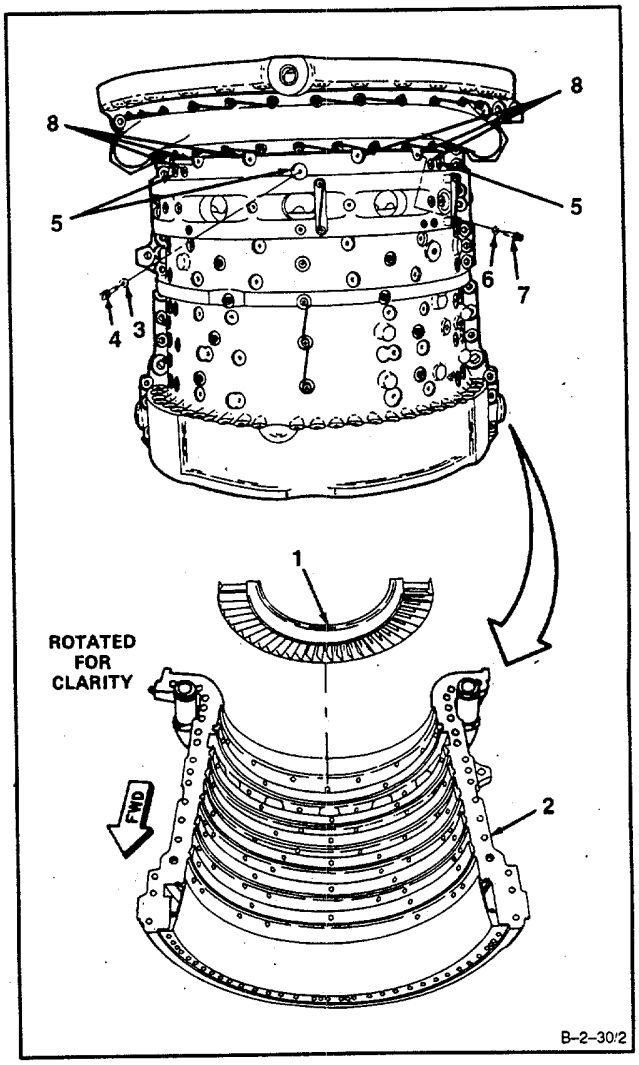

GO TO NEXT PAGE

c. **Torque two bolts (7) to 45 inch-pounds.**

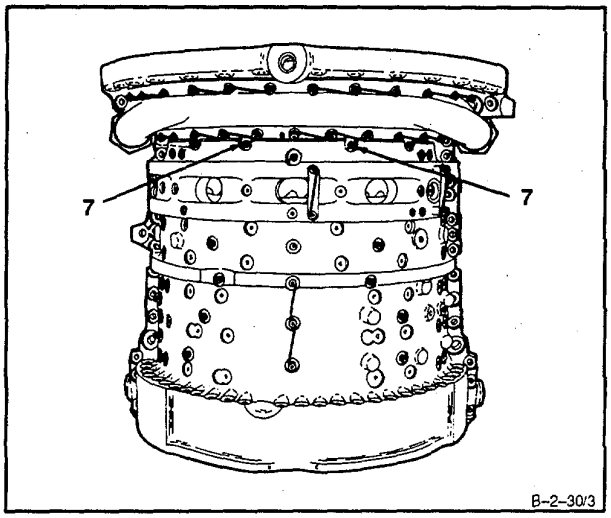

d. **Torque two bolts (7) to 22 inch-pounds.**

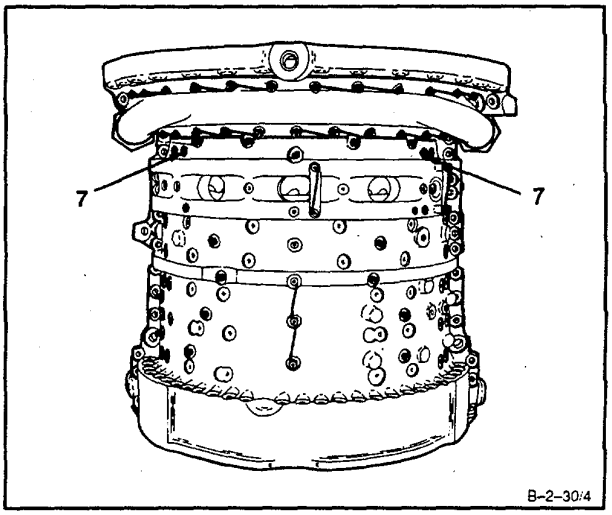

e. **Torque two bolts (4) and two bolts (7) to 15 inch-pounds.**

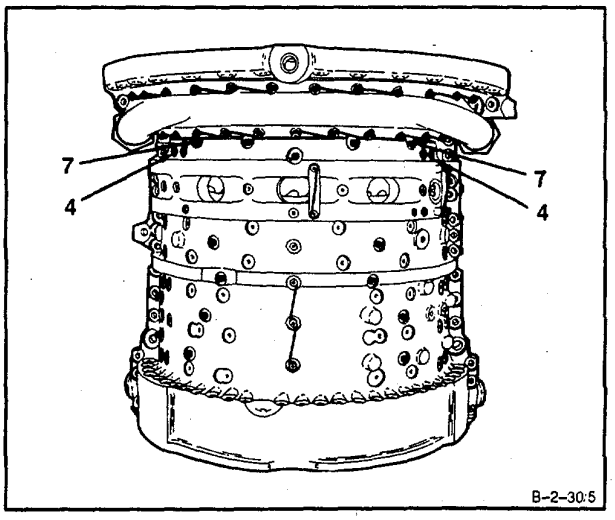

GO TO NEXT PAGE

f. **Torque bolt (4) to 65 pound-inches.**

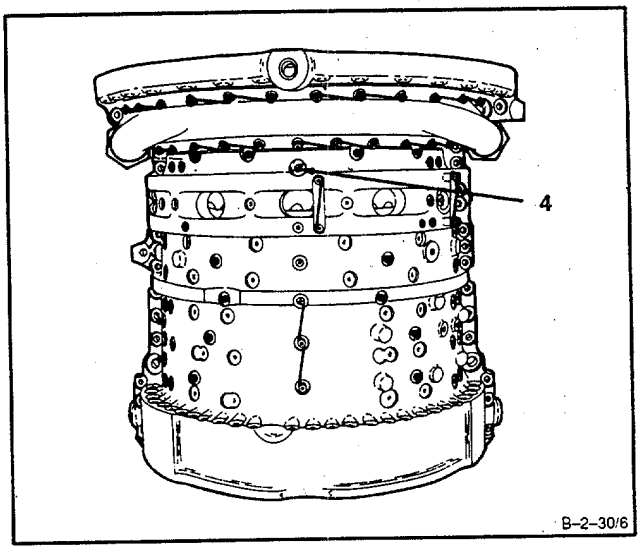

g. **Check ends of bolts (4 and 7). Bolt ends shall be flush or not more than 0.035 inch below surface of stator. If necessary, add washers under bolt heads. There must be at least one washer under each bolt head.**

h. **Calculate gap between stator vane shrouds as outlined In step 7.**

i. Lockwire bolts (4 and 7). Use lockwire (E33).

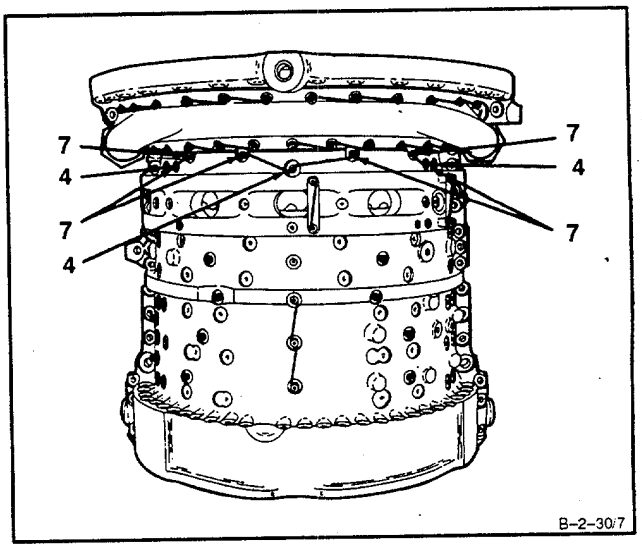

INSPECT

GO TO NEXT PAGE

2. **Install one-half of sixth stage stator vane (9) into compressor housing half (2).**

   a. Install six locking cups (10) and six screws (11) in screw hole locations (12). Finger tighten screws (11).

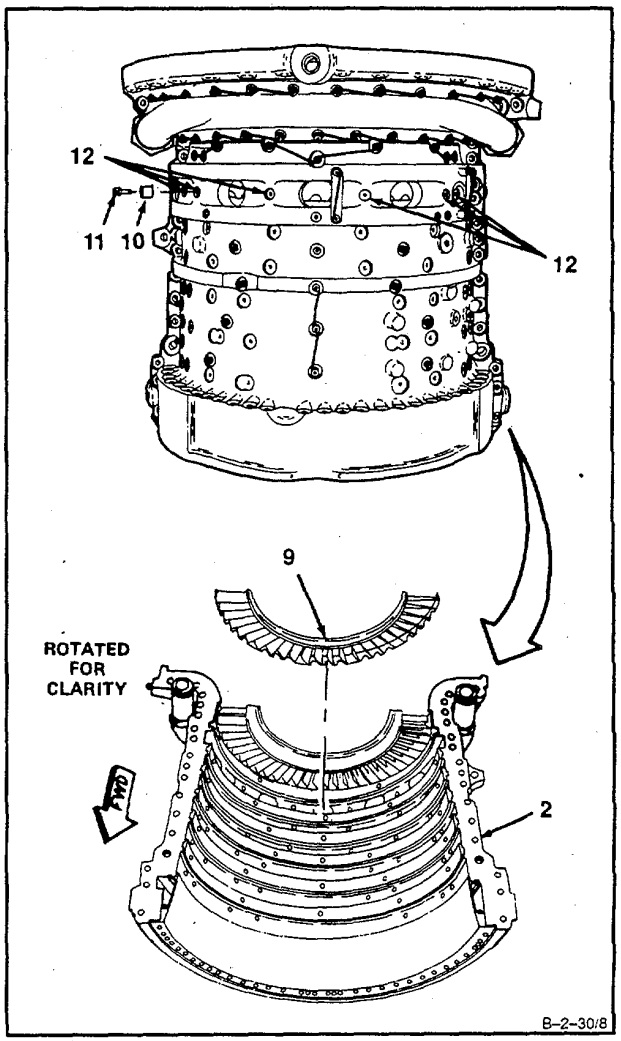

   b. **Torque two screws (11) to <u>45 inch-pounds</u>.**

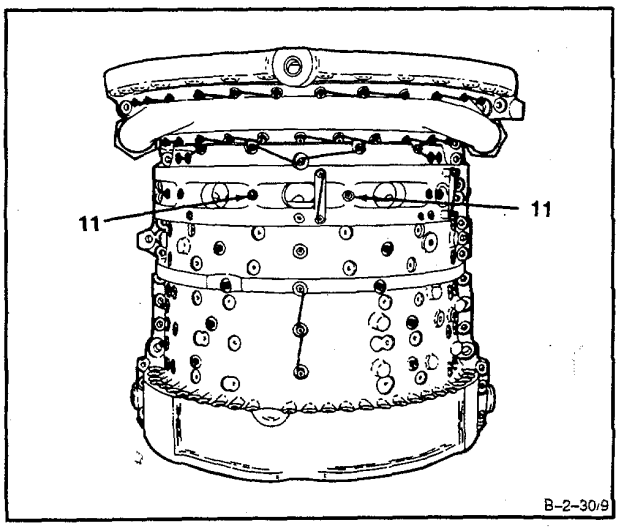

GO TO NEXT PAGE

c. **Torque four screws (11) to 15 inch-pounds**.

d. **Check ends of screws (11). Screw ends shall be flush or not more than 0.035 Inch below surface of stator. If necessary add washers under screw heads. There must be at least one washer under each screw head.**

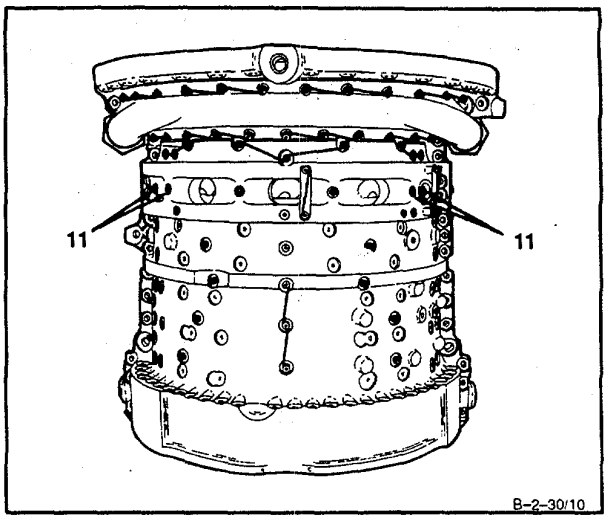

e. **Calculate gap between stator vane shrouds as outlined in step 7.**

f. **Lock six screws (11)** by deforming rim of six locking cups (10). **Deform rim of locking cups (10)** into two screw slots and compressor housing on opposite sides. **Use drive pin punch (T36).**

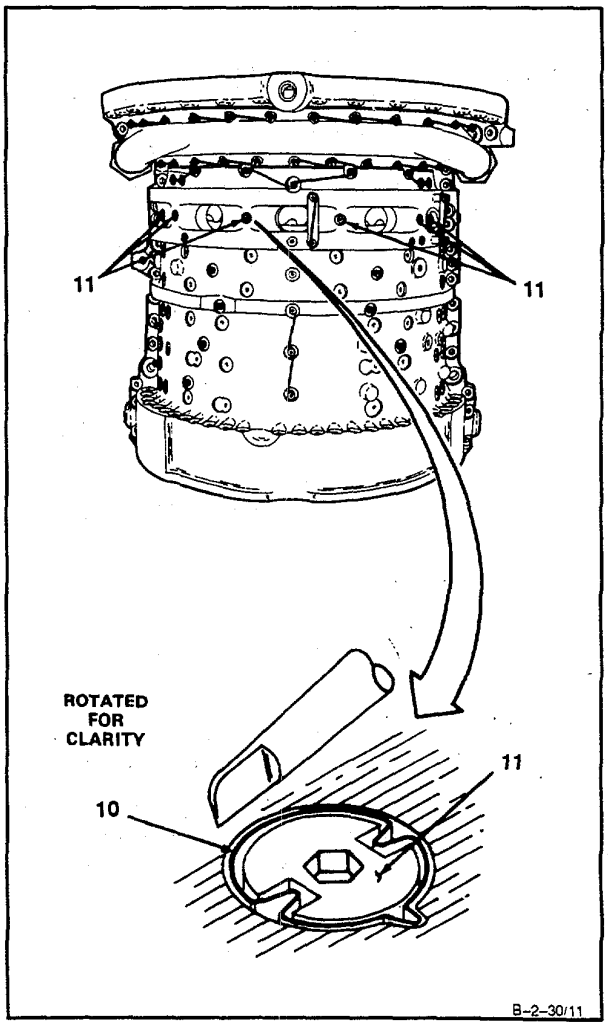

INSPECT

GO TO NEXT PAGE

g. Apply RTV (E47) to sixth stage stator vane assembly counterbored holes (13) as follows:

WARNING

Denatured alcohol (E17) is flammable and toxic. It can irritate skin and cause burns. Use only in well-ventilated area, away from heat and open flame. In case of contact, immediately flush skin or eyes with water for at least 15 minutes. Get medical attention for eyes.

(1) **Clean six holes as follows:**

(a) Wear gloves (E24). Wipe area of compressor housing (2) with lint-free cloth (E30) dampened in denatured alcohol (E17).

WARNING

When using compressed air for cleaning, use approved protective equipment for eyes and face. Do not use more than 30 psig air pressure. Do not direct air toward yourself or another person. Failure to comply could result in injury to eyes or skin. in case of injury, get medical attention.

(b) Wear goggles. Blow dry housing. Use clean, dry compressed air.

(2) **Prepare injection nozzle as follows:**
(a) Cut tip (14) on a 45 degree angle at first cut line (15).
(b) Remove cap (16) and install tip (14) on tube (17).

(3) **Inject RTV (E47) as follows:**
(a) Inject RTV (E47) into all six counterbored holes (13) until RTV covers screw heads (11).
(b) Allow RTV (E47) to cure for twenty-four hours at room temperature.
(c) Using tongue depressor, **remove excessive RTV from compressor housing (2) and screw heads.**

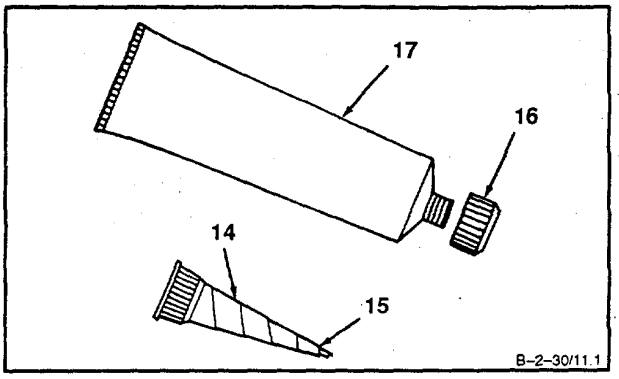

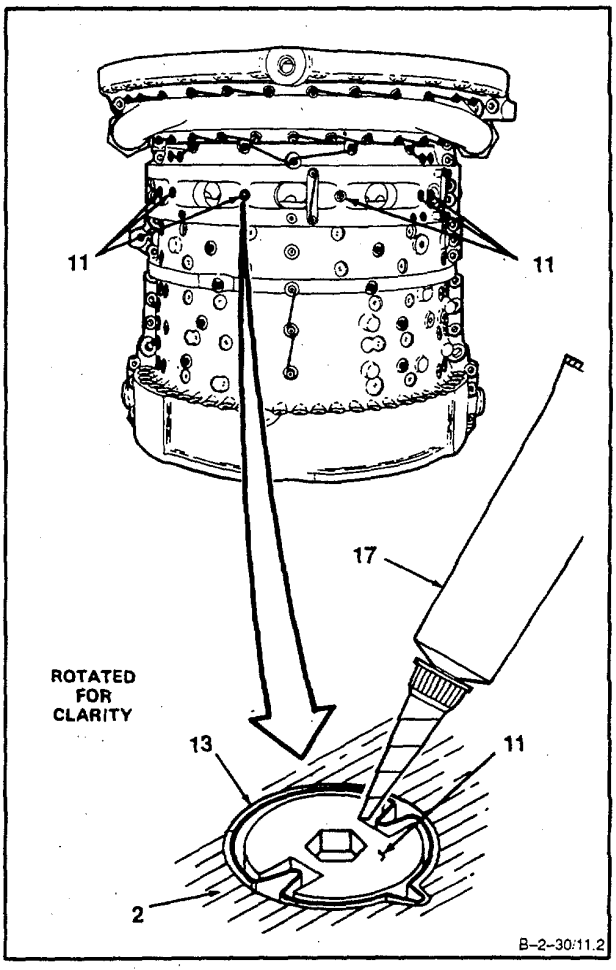

INSPECT

GO TO NEXT PAGE

CAUTION

Make certain that fifth stage stator vane is installed with leading edge of vanes facing forward. If vane assembly is installed wrong, the outer shroud will protrude into airflow path. This may cause unusual stresses on compressor blades which could result in blade failure.

3. **Install one-half of fifth stage stator vane (18) into compressor housing half (2).**

   a. Make certain that leading edge (19) of vane faces forward.

   b. Install six washers (20) and six bolts (21) in bolt hole locations (22). Finger tighten bolts (21).

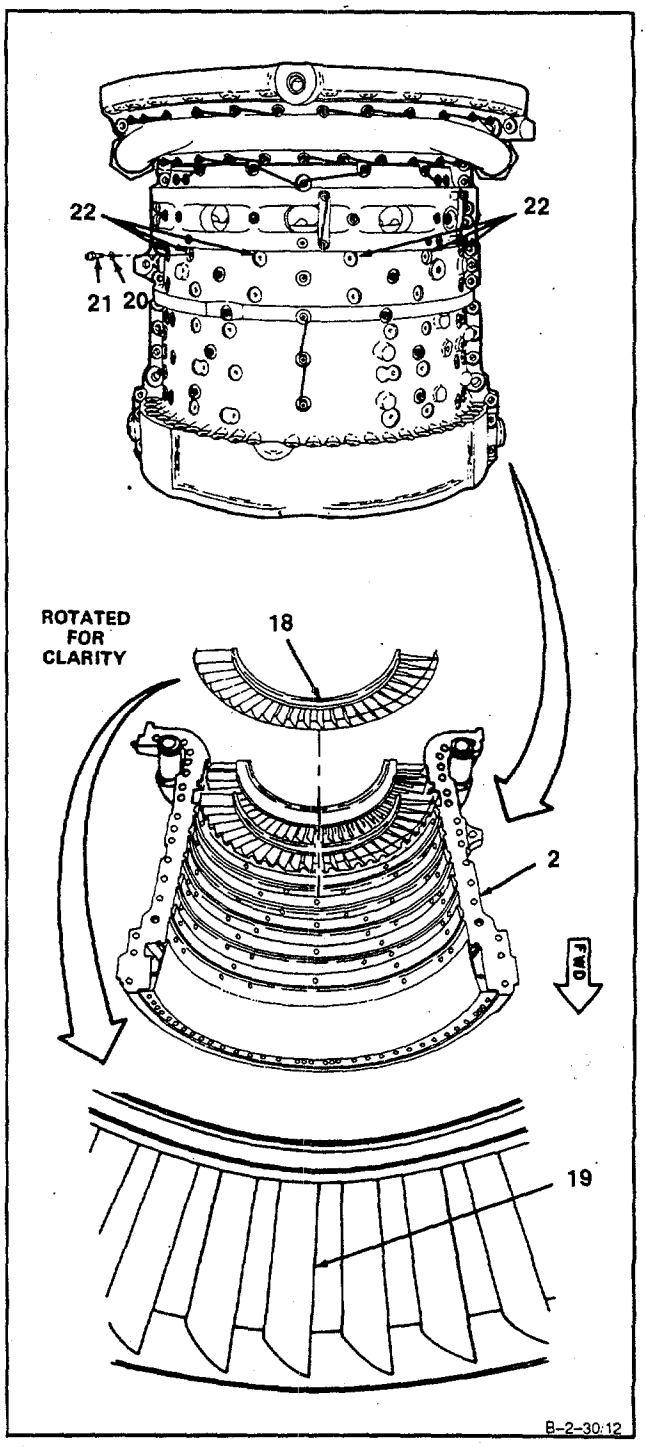

GO TO NEXT PAGE

c. **Torque two bolts (21) to 45 inch-pounds.**

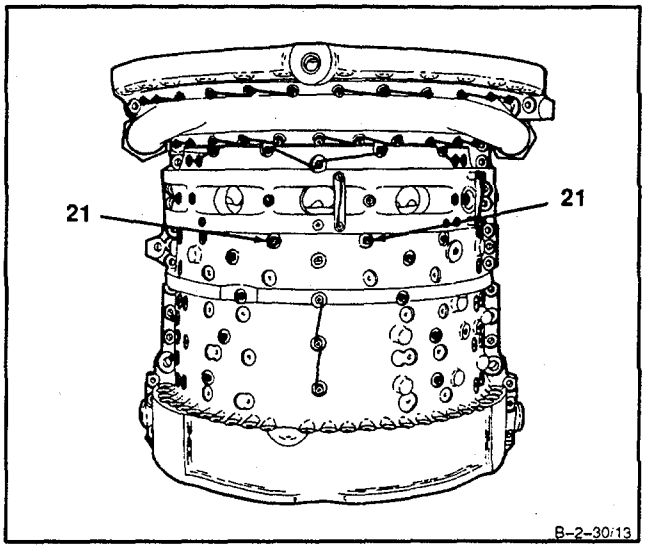

d. **Torque four bolts (21) to 15 inch-pounds.**

e. **Check ends of bolts (21). Bolt ends shall be flush, or not more than 0.035 inch below surface of stator. If necessary add washers under bolt heads. There must be at least one washer under each bolt head.**

f. **Calculate gap between stator vane shrouds as outlined in step 7.**

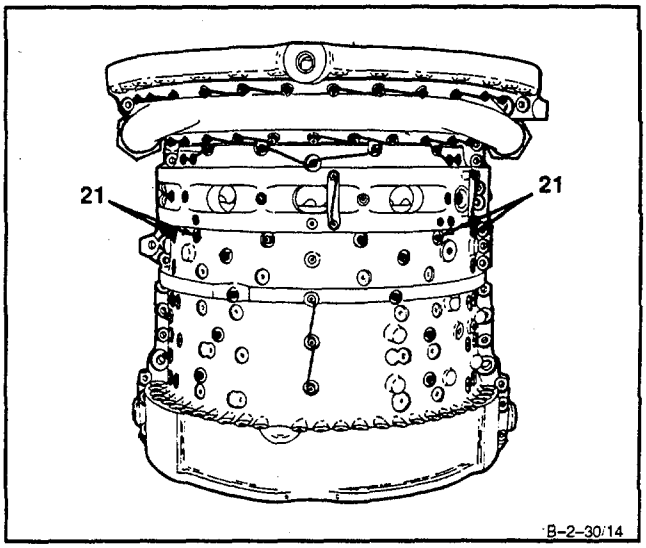

GO TO NEXT PAGE

CAUTION

Make certain that fourth stage vane is installed with leading edge of vanes facing forward. If vane assembly is installed wrong, the outer shroud will protrude into airflow path. This may cause unusual stresses on compressor blades which could result in blade failure.

4. Install one-half of fourth stage stator vane (23) into compressor housing half (2).

a. Make certain that leading edge (24) of vane faces forward.

b. Install six washers (25) and six bolts (26) in bolt hole locations (27). Finger tighten bolts (26).

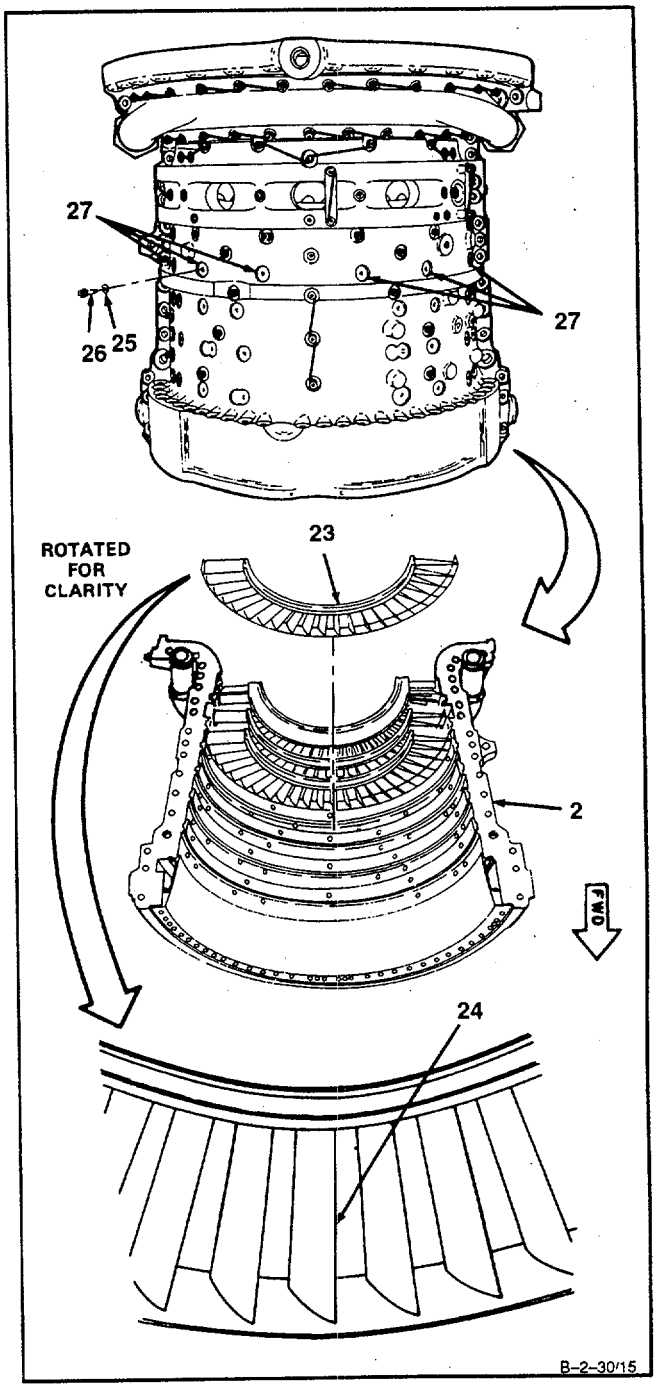

GO TO NEXT PAGE

c. **Torque two bolts (26) to 45 inch-pounds.**

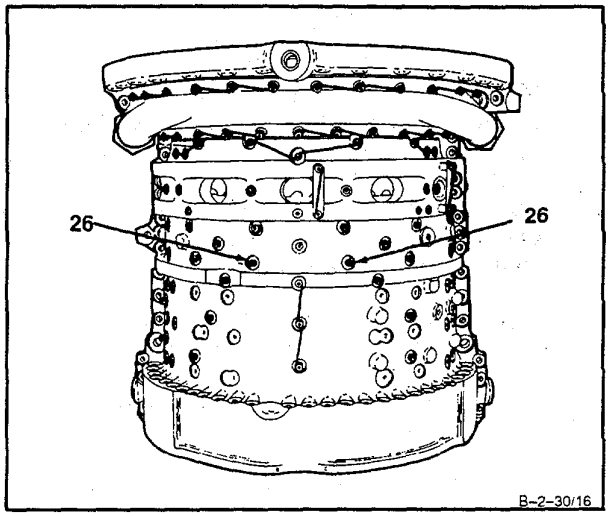

d. **Torque four bolts (26) to 15 inch-pounds.**

e. **Check ends of bolts (26). Bolt ends shall be flush, or not more than 0.035 inch below surface of stator. If necessary add washers under bolt heads. There must be at least one washer under each bolt head.**

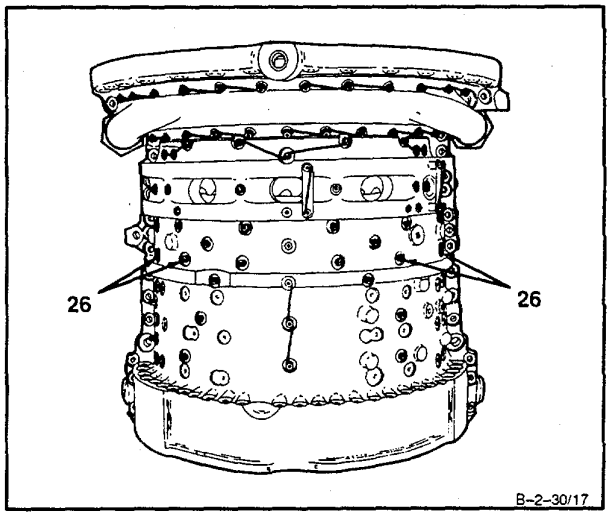

f. **Calculate gap between stator vane shrouds as outlined in step 7.**

g. Lockwire bolts (21 and 26). Use lockwire (E33).

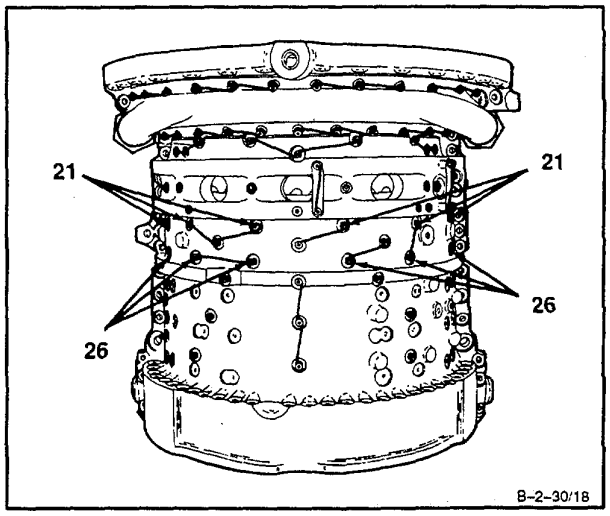

GO TO NEXT PAGE

5. **Install one-half of third stage stator vane (28) into compressor housing half (2).**

   a. Install eight washers (29) and eight bolts (30) in bolt hole locations (31). Finger tighten bolts (30).

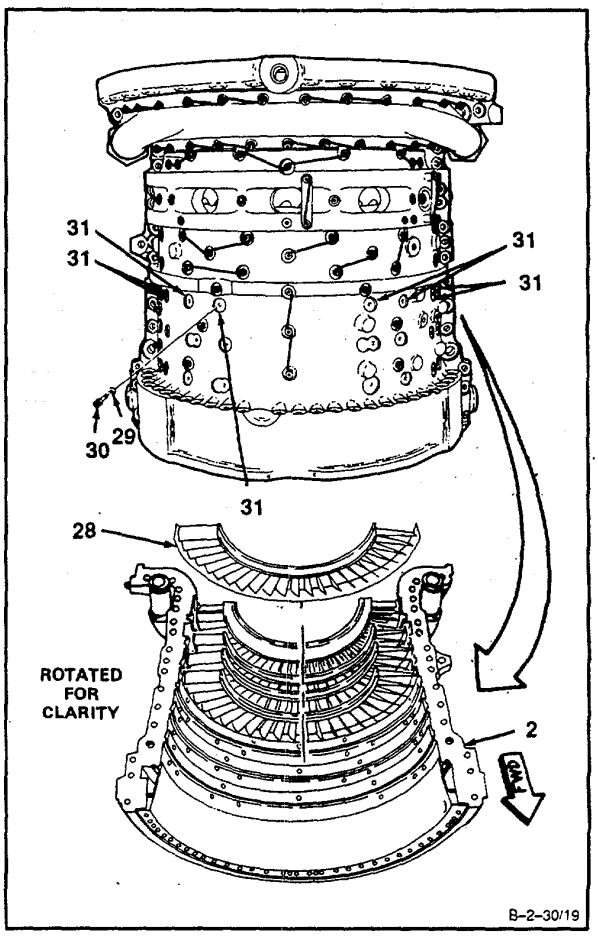

   b. **Torque two bolts (30) to <u>45 inch-pounds.</u>**

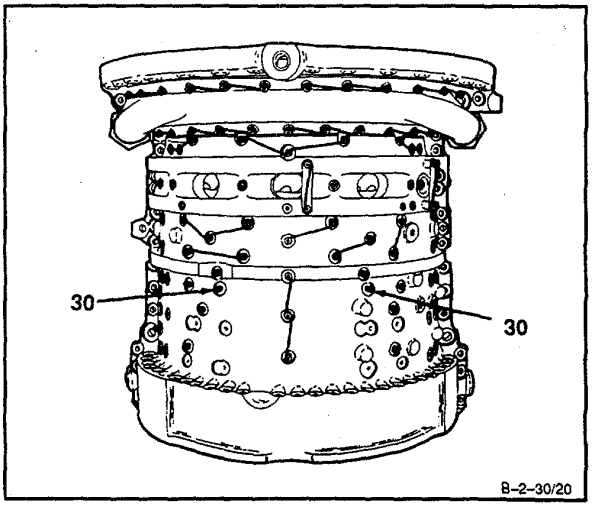

GO TO NEXT PAGE

c. **Torque six bolts (30) to <u>15 inch-pounds.</u>**

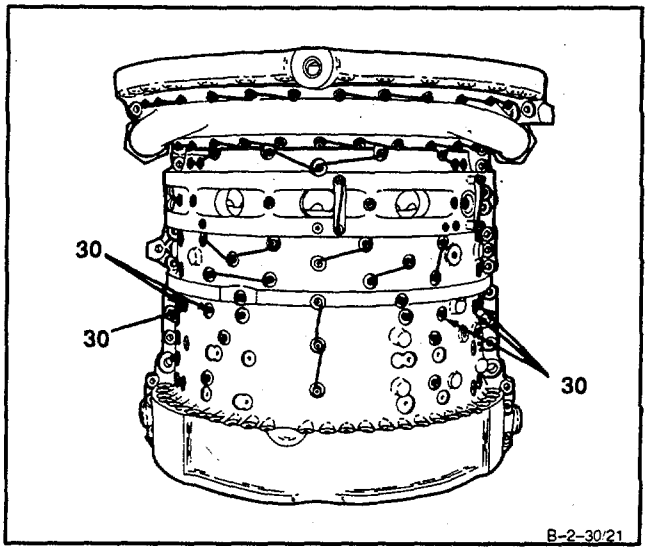

d. **Check ends of bolts (30). Bolt ends shall be flush, or not more than 0.035 inch below surface of stator. If necessary add washers under bolt heads. There must be at least one washer under each bolt head.**

e. **Calculate gap between stator vane shrouds as outlined in step 7.**

f. Lockwire bolts (30). Use lockwire (E33).

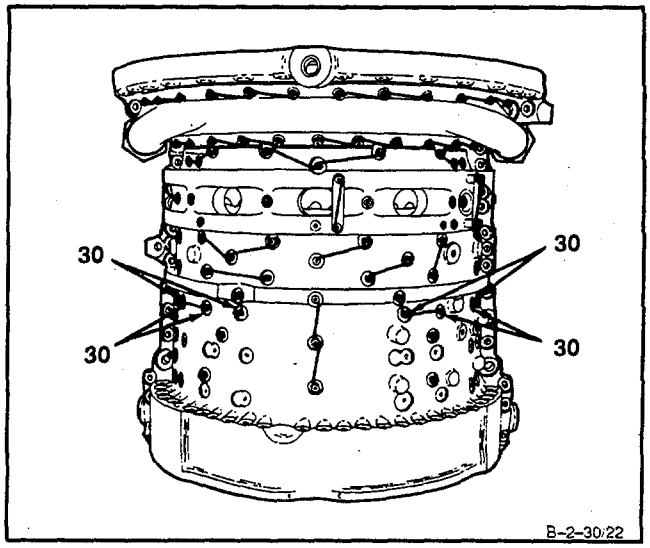

INSPECT

GO TO NEXT PAGE

6. Install one-half of second stage stator vane (32) into compressor housing half (2).

NOTE

Hex head bolt must be installed in fourth bolt hole from 9 o'clock splitline in upper compressor housing.

a. Install eight washers (33) and eight bolts (34) in bolt hole locations (35). Finger tighten bolts (34).

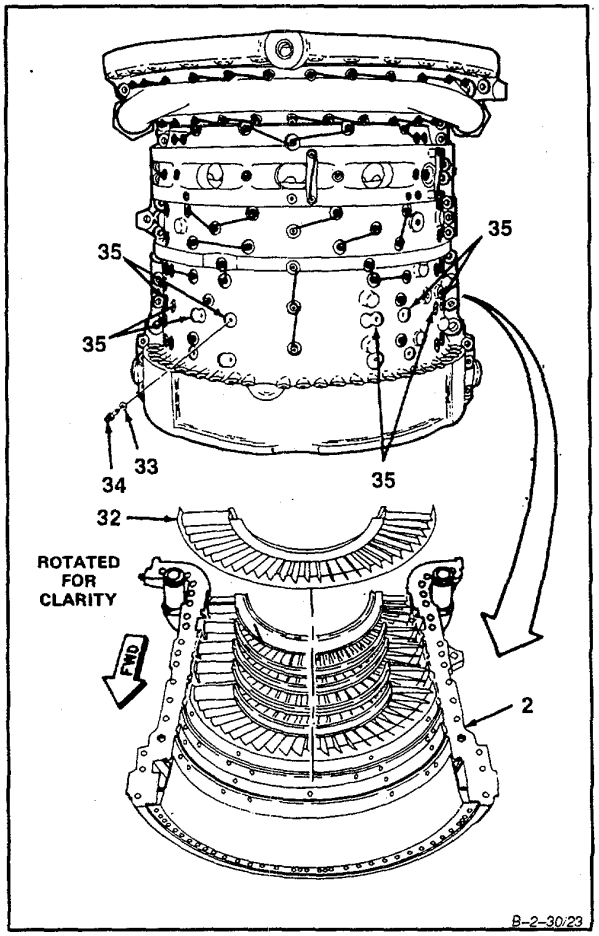

b. **Torque two bolts (34) to <u>45 inch-pounds</u>.**

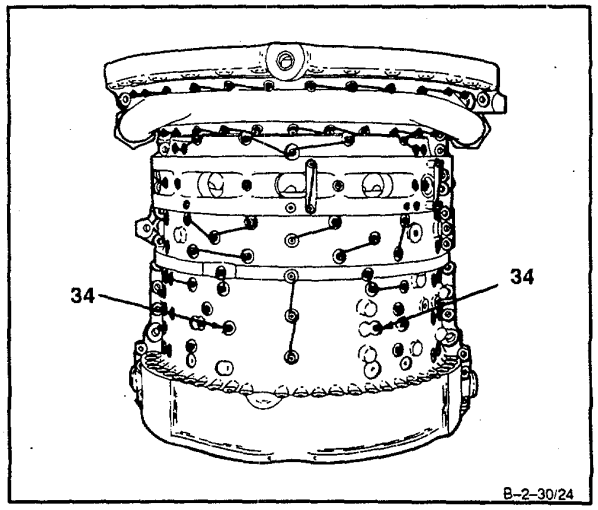

GO TO NEXT PAGE

c. **Torque six bolts (34) to 15 inch-pounds.**

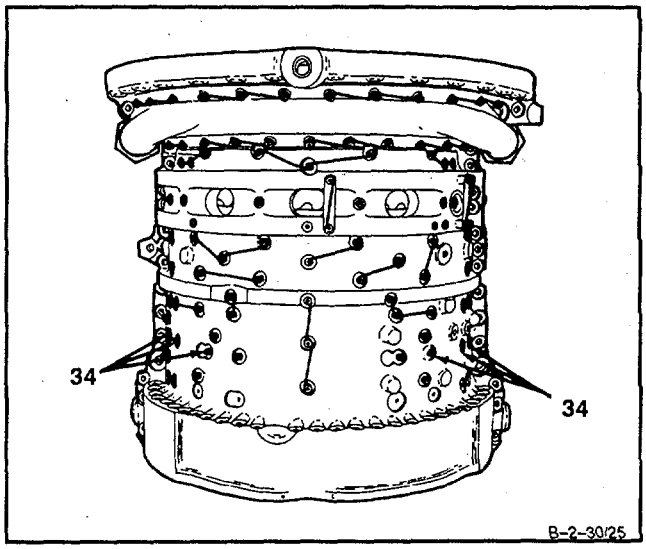

d. **Check ends of bolts (34). Bolt ends shall be flush, or not more than 0.035 inch below surface of stator. If necessary add washers under bolt heads. There must be at least one washer under each bolt head.**

e. **Calculate gap between stator vane shrouds as outlined in step 7.**

f. Lockwire bolts (34). Use lockwire (E33).

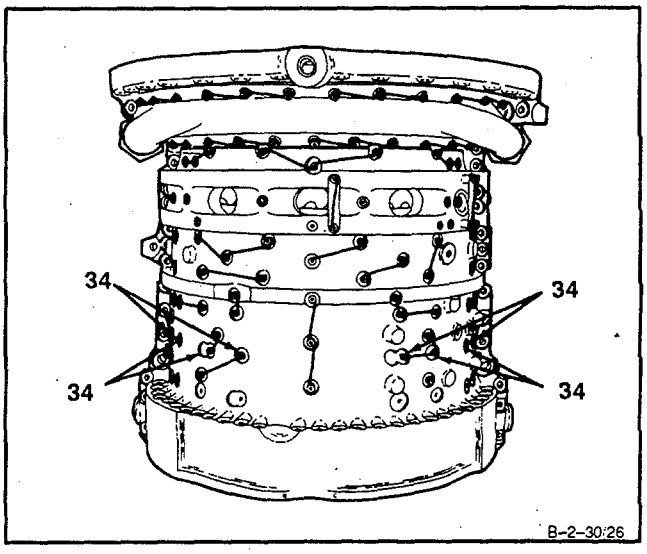

INSPECT

GO TO NEXT PAGE

7. **Inspect for clearance between stator vane shrouds** as follows:

   a. Apply gear marking compound (E22) to both ends (36) of stator vane shroud (37) on installed compressor housing half (38). Use acid swabbing brush (E2).

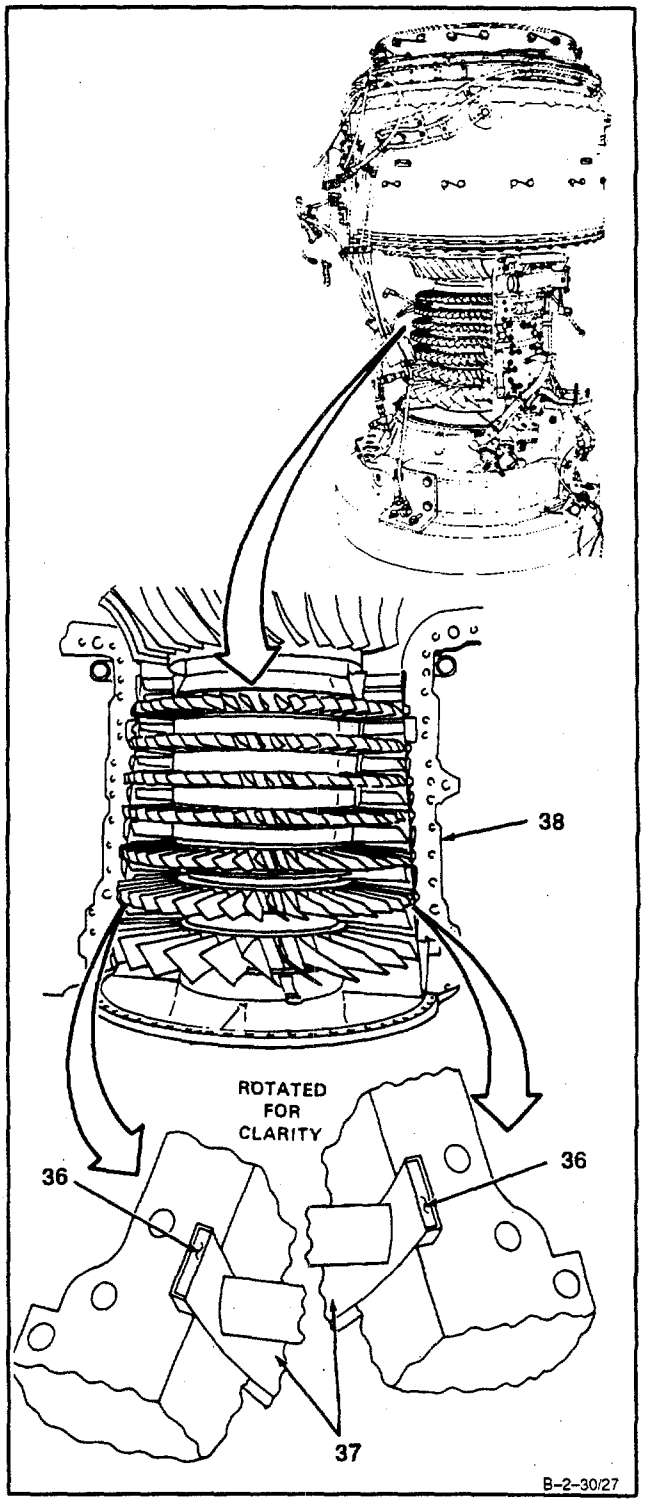

GO TO NEXT PAGE

b. **Temporarily install removed compressor housing half** (Ref. Task 2-25, steps 1 thru 3 or Task 2-26, steps 1 thru 3).

c. **Remove temporarily installed compressor housing half** (Ref. Task 2-20, steps 40 thru 43 and 48 or Task 2-21, steps 20 thru 23 and 34).

d. Inspect both ends (39) of stator vane shroud (40) of removed compressor housing half (41). There shall be no gear marking compound (E22) visible.

e. If no gear marking compound (E22) is visible, clearance is acceptable.

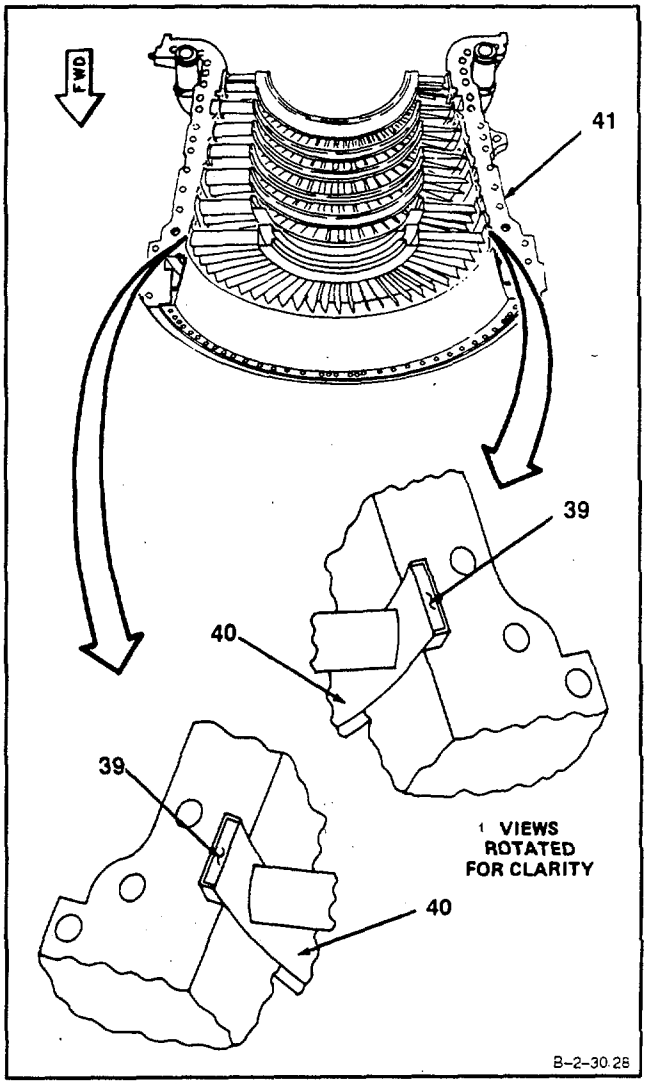

GO TO NEXT PAGE

f. If gear marking compound (E22) is visible, proceed as follows:

(1) Loosen stator vane mounting bolts, shift stator vane and retorque mounting bolts (Refer to steps 1 thru 7).

(2) Repeat steps 7 a thru 7 e.

(3) If gear marking compound (E22) is still visible, proceed as follows:

(a) **Remove stator vane assemblies.** (Ref. 2-27).

(b) **File shroud ends (42).** Use flat hand file.

(c) **Clean stator vane assemblies.** (Ref. Task 2-28).

(d) **Install stator vane assembly** (steps 1 thru 7).

(e) **Repeat steps 7 a thru 7 e.**

(f) **If gear marking compound (E22) Is still visible, repeat step 7 f, (3), (a) thru (f).**

(g) Lockwire bolts. Use lockwire (E33).

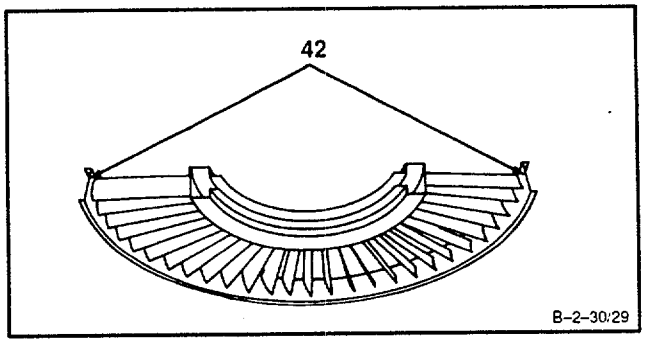

INSPECT

GO TO NEXT PAGE

FOLLOW-ON MAINTENANCE:

Install Upper or Lower Compressor Housing (Task 2-25 or Task 2-26)
Install Tube Assembly (Hose Assembly to Primer Tube Assembly) (Task 6-91)
Install Tube Assembly (No. 4 and 5 Bearing Scavenge Connector to Tube Assembly) (Task 8-72)
Install Overspeed Solenoid Valve (Task 6-56).
Install Compressor Bleed Band (Task 2-14).
Install Interstage Air-Bleed Actuator (Task 2-8).
Install Main Fuel Filter and Bracket (Task 6-34).
Install Accessory Gearbox Assembly (Task 5-7) (Lower Compressor Housing Only)
Install Hydromechanical Assembly (HMA) (Task 6-5) (Lower Compressor Housing Only)
Install Main Oil Pump, Speed Pickup Drive Assembly, Scavenge Oil Screen, and Related Parts (Task 8-6) (Lower Compressor Housing Only)
Install Tube Assembly (Inlet Housing to Main Oil Pump) (Task 8-66) (Lower Compressor Housing Only)
Install Fuel Boost Pump Assembly (Task 6-12) (Lower Compressor Housing Only)
Install Dual Chip Detector (Task 8-46) (Lower Compressor Housing Only)
Install Starter Drive Assembly (Task 5-22) (Upper Compressor Housing Only)
Install Oil Filler Assembly and Oil Filler Strainer (Task 8-33) (Upper Compressor Housing Only)
Install In-Line Fuel Filter Assembly (Task 6-40).
Install Oil Cooler Assembly (Task 8-18).
Install Flow Programming Valve (Task 8-22).
Install Ignition Exciter (Task 7-15).
Install Ignition Coil and Cable Assembly (Task 7-5) (Lower Compressor Housing Only)
Install Hose Assembly (Dual Chip Detector to Accessory Gearbox Collector) (Task 8-60).
Install Hose Assembly (Dual Chip Detector to Accessory Gearbox Assembly) (Task 8-58).
Install Hose Assembly (Main Oil Pump to Dual Chip Detector) (Task 8-64).
Install Hose Assembly (Dual Chip Detector to Air Diffuser Assembly) (Task 8-62).
Install Electric Harness Assemblies (Tasks 7-21, 7-27, 7-33) (Lower Compressor Housing Only)
Service Engine Oil System (Task 1-68).

END OF TASK

SECTION VI

COMPRESSOR ROTOR BLADES

2-33 REMOVE COMPRESSOR ROTOR BLADES 2-33

INITIAL SETUP

Applicable Configurations:
All

Tools:
Powerplant Mechanic's Tool Kit, NSN 5180-00-323-4944
Drift Assembly (T34)
Installing Tool (T35)
Tweezers, NSN 5120-00-247-0868
Twist Drill, NSN 5133-00-232-6398

Materials:
Masking Tape (E39)

Personnel Required:
Aircraft Powerplant Repairer

Equipment Condition:
Engine Oil System Drained (Task 1-69)
Flow Programming Valve Removed (Task 8-19)
Oil Cooler Assembly Removed (Task 8-12)
In-Line Fuel Filter Assembly Removed (Task 6-35)
Ignition Exciter Removed (Task 7-11)
Oil Filler Assembly and Oil Filler Strainer Removed (Task 8-27)
Starter Drive Assembly Removed (Task 5-18)
Main Fuel Filter and Bracket Removed (Task 6-28)
Interstage Air-Bleed Actuator Removed (Task 2-1)
Compressor Bleed Band Removed (Task 2-10)
Upper Compressor Housing Removed (Task 2-20)

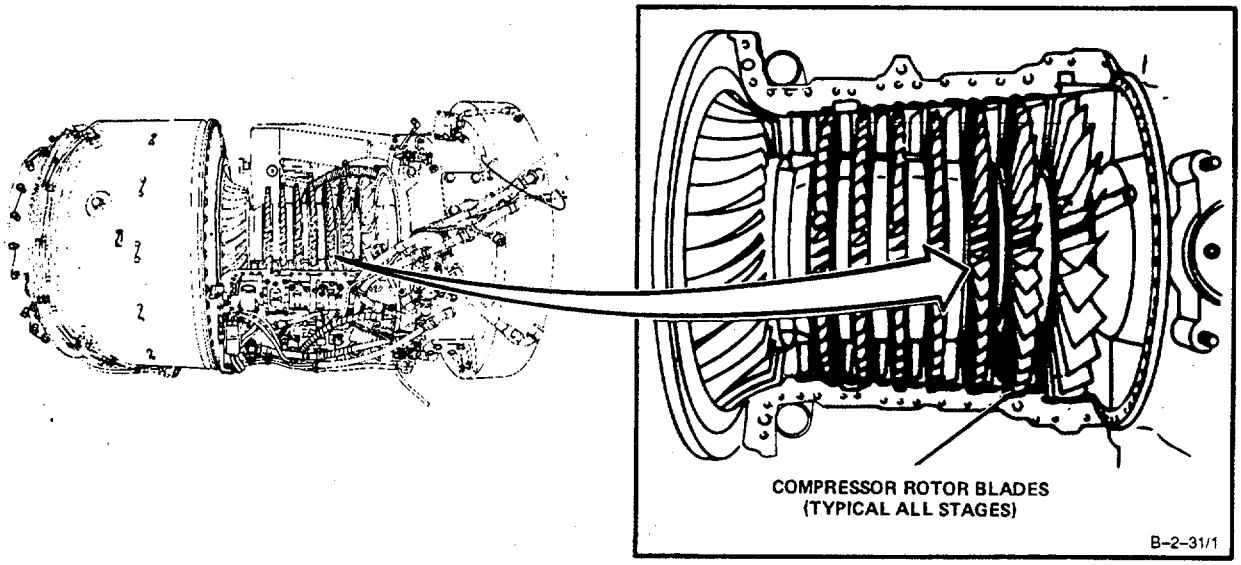

GO TO NEXT PAGE

NOTE

Number of blades and stages in which they were replaced must be entered in engine record. Maximum of 50 blades may be replaced on compressor rotor between overhaul cycles.

NOTE

First, second and third stage blades are removed forward. Removal of first stage blade is described in step 1.

CAUTION

When removing compressor blades, be certain that blade, pieces of lockpin, and spring do not fall into lower compressor housing. These Items could cause compressor rotor malfunction. If these items do fall into lower compressor housing, they must be removed.

1. **Remove first stage blade (1) from disc** as follows:

   a. **Align forward blade root (2)** with slot (3) in bearing housing.

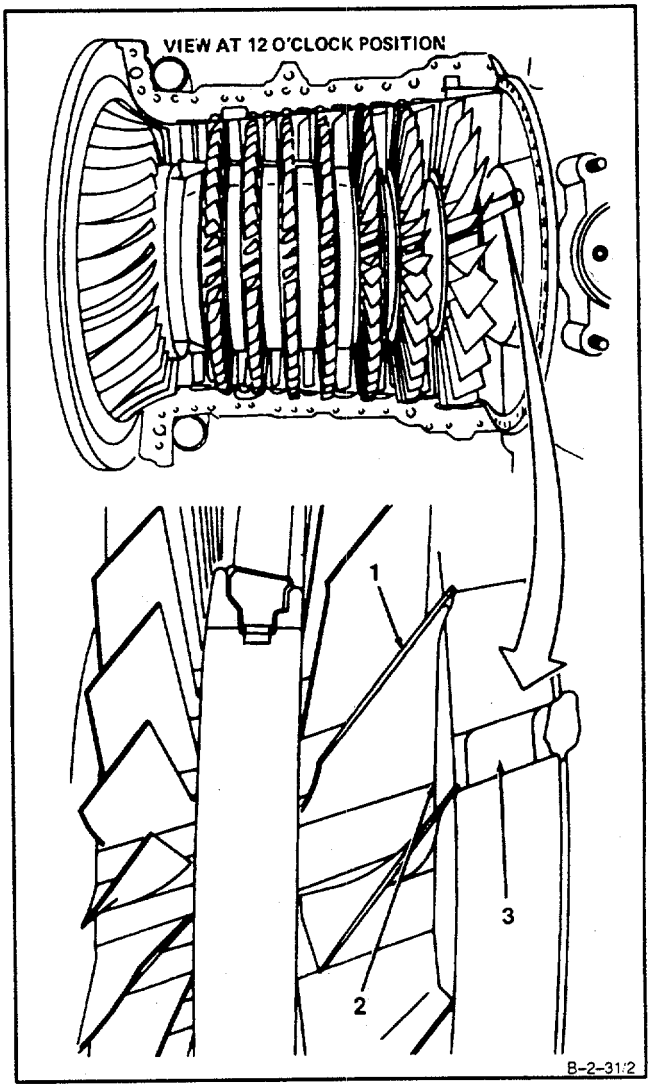

GO TO NEXT PAGE

b. **Twist masking tape (E39) (4), sticky side out,** as shown. **Make the tape (4) 1/2-inch wide.**

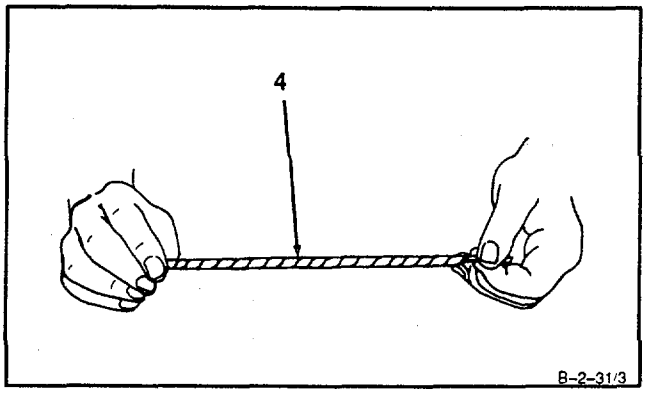

c. **Insert masking tape (E39) (4)** into space forward of first stage disc (5). **Use punch (6)** for insertion.

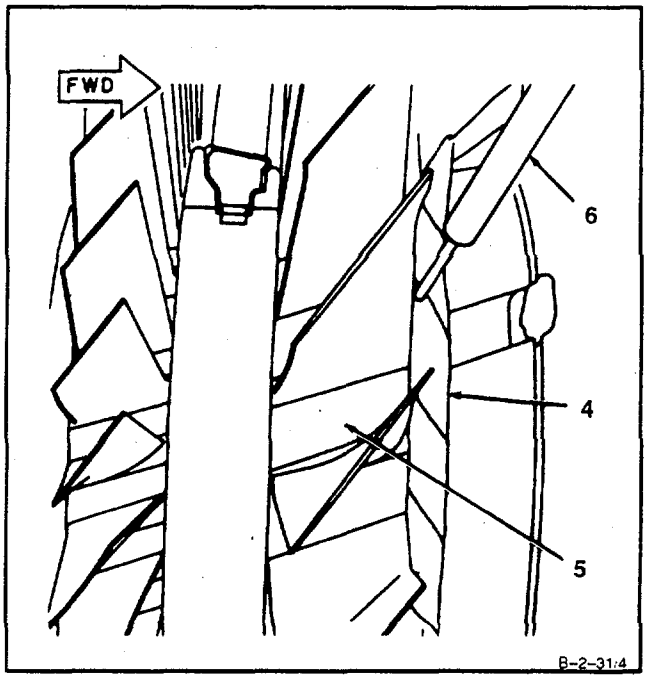

GO TO NEXT PAGE

d. **Position drift assembly (T34) (7) at rear of blade (1).**

CAUTION

In following step, be sure that blade root is aligned with slot. Failure to comply will cause damage to No. 1 bearing housing.

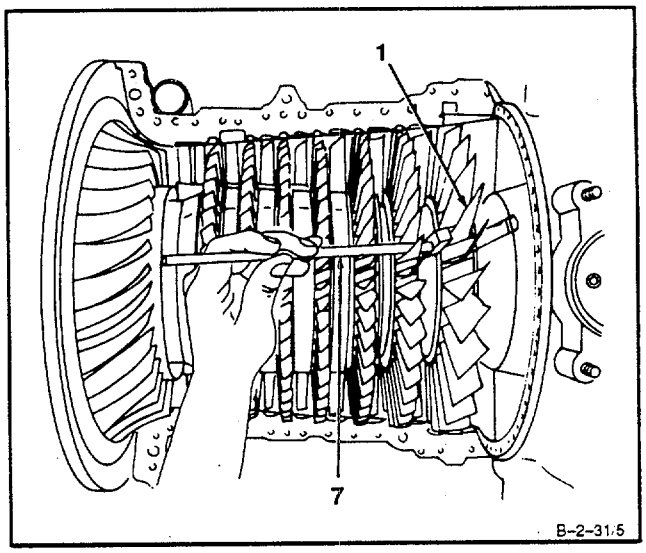

e. **Tap blade (1) firmly forward into slot (3).**
Use ballpeen hammer.

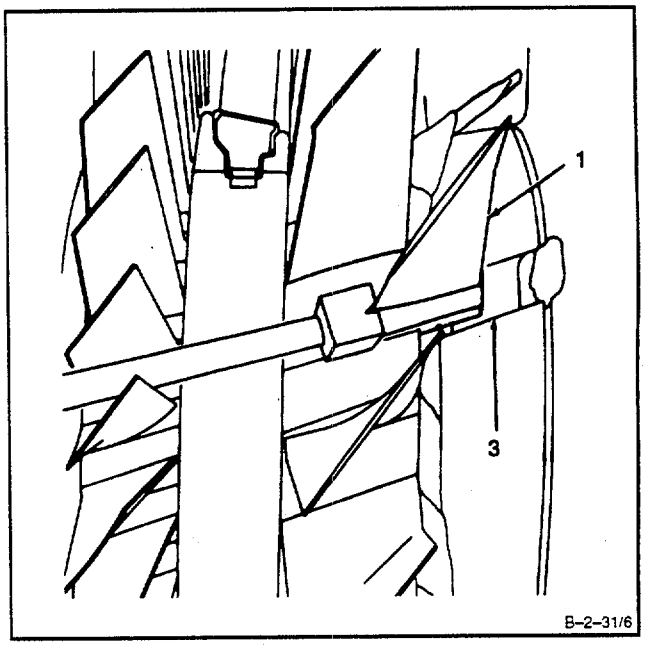

GO TO NEXT PAGE

f. **Continue to tap blade (1) forward until lockpin (8) Is sheared.**

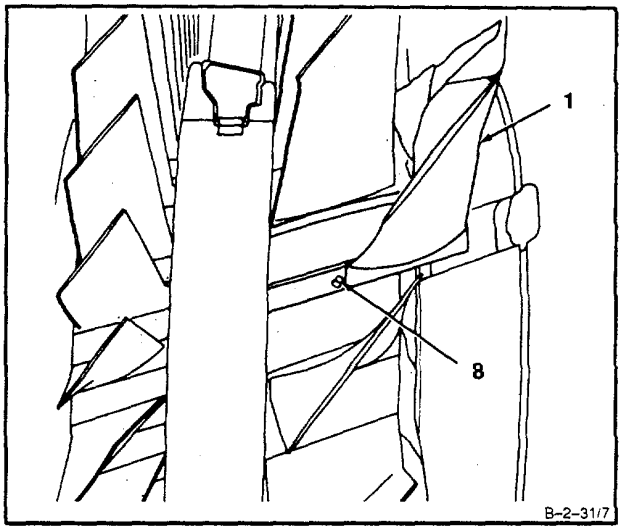

g. Move blade (1) forward and **remove sheared lockpin (8).** Use tweezers (9).

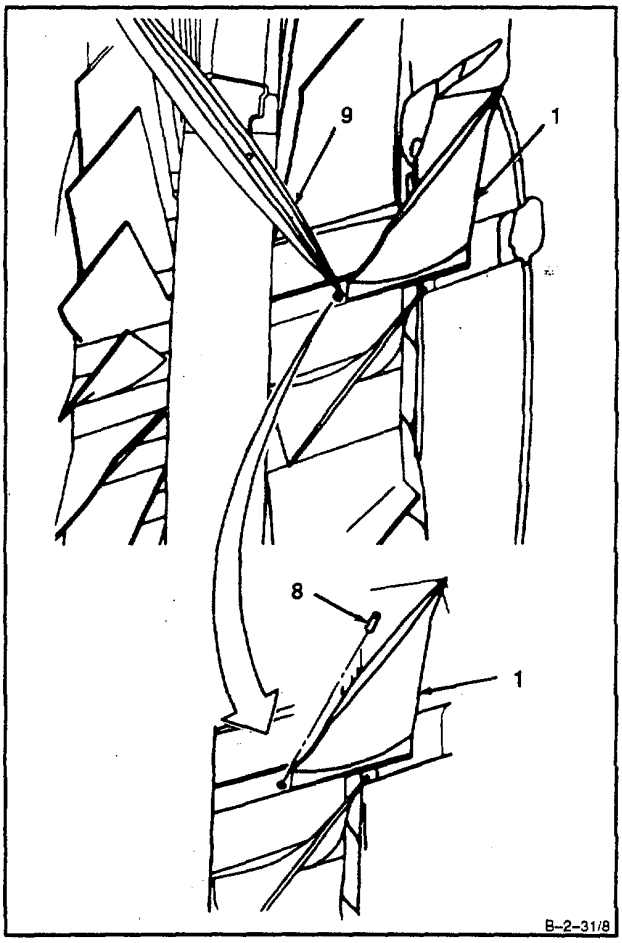

GO TO NEXT PAGE

h. **Remove spring (10).** Use tweezers (9).

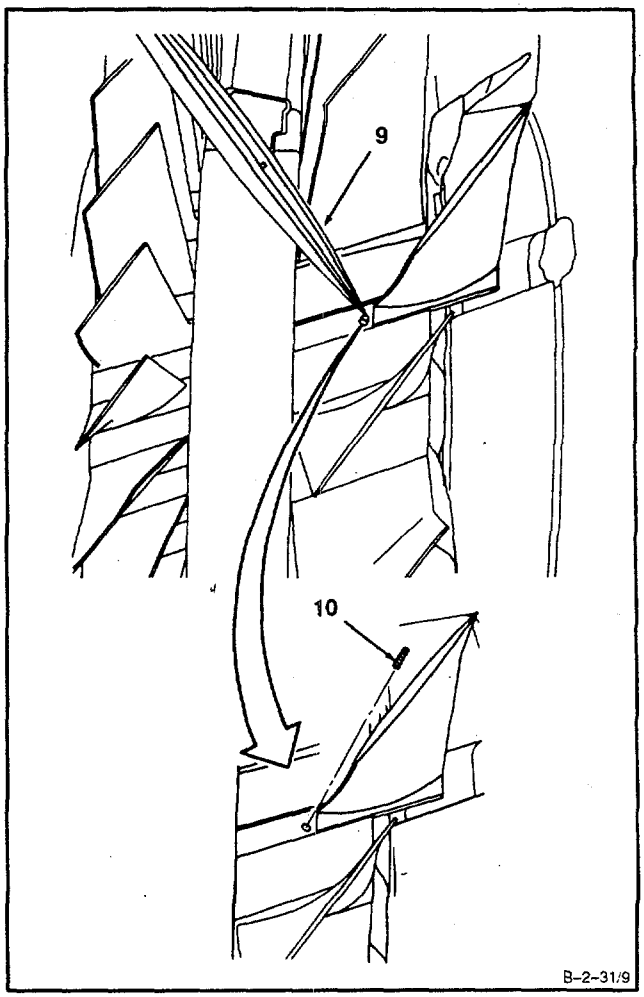

GO TO NEXT PAGE

i. **Remove first stage compressor blade (1).**

j. **Remove sheared lockpin (8)** from blade (1). Use tweezers (9).

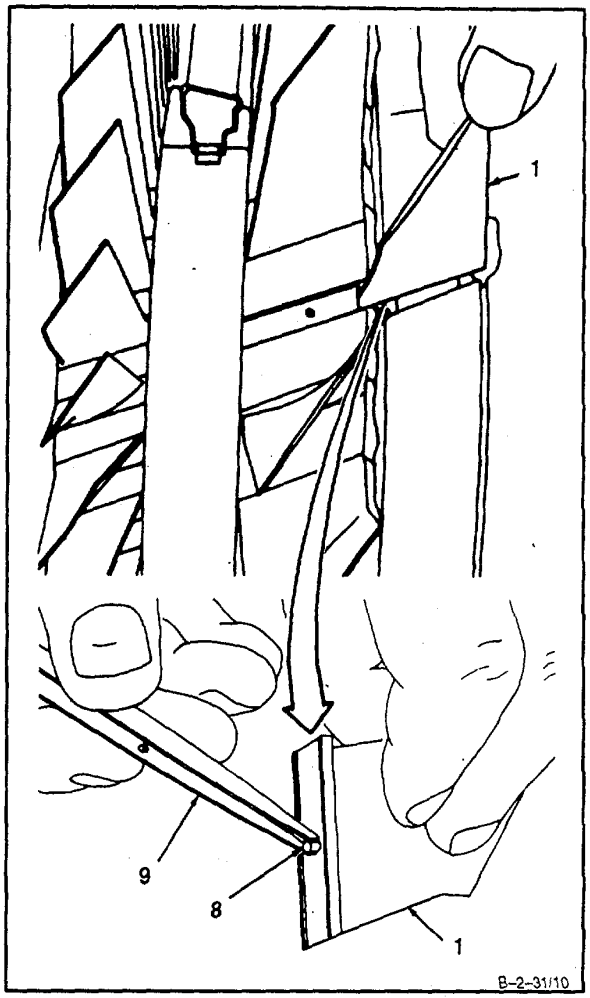

GO TO NEXT PAGE

CAUTION

Do not remove any parent metal from inside lockpin hole. Removing material will enlarge hole. If this happens, compressor rotor assembly will have to be replaced.

k. **Clean out lockpin hole** (**11**). Use twist drill (12). Remove tape.

NOTE

Second and third stage blades are removed forward. Removal of third stage blade is shown.

2. **Remove third stage compressor blades** (13) as follows:

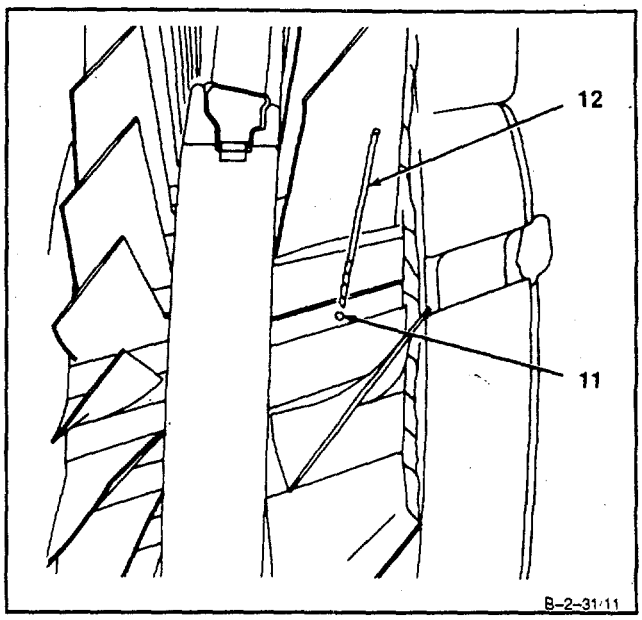

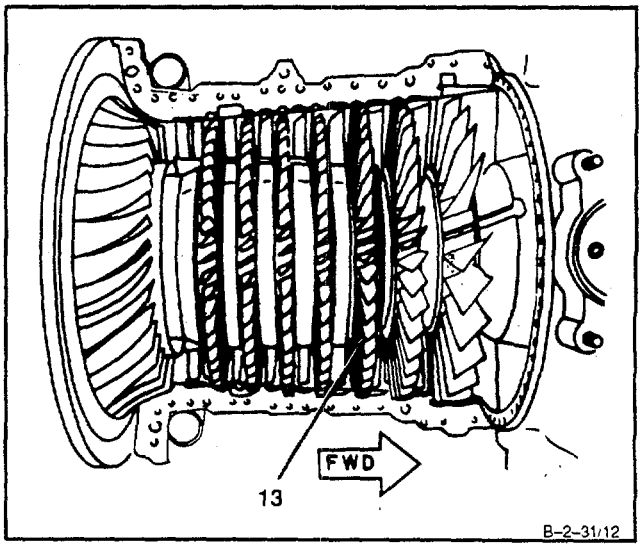

GO TO NEXT PAGE

a. **Twist masking tape (E39) (4), sticky side out. Make the tape 1/2 inch wide.**

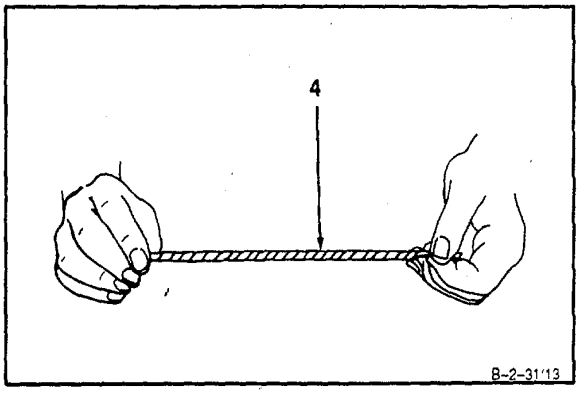

b. **Insert masking tape (E39) (4)** into space forward of third stage disc (14).

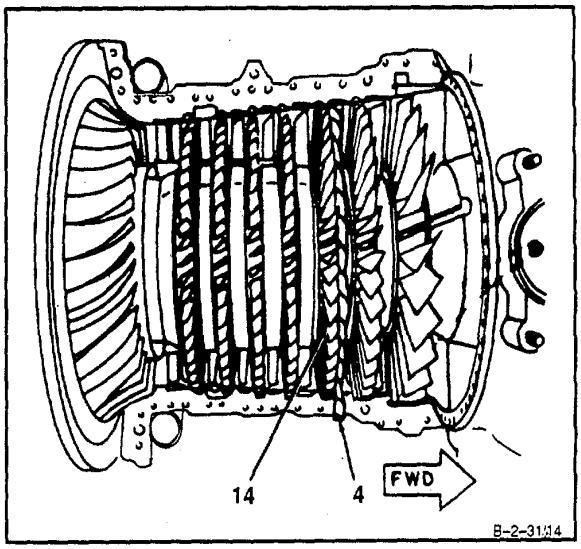

GO TO NEXT PAGE

NOTE

Use drift assembly (T34) for second stage blades. Use installing tool (T35) for third stage blades.

c. **Position Installing tool (T35) (15) at rear of blade (13).**

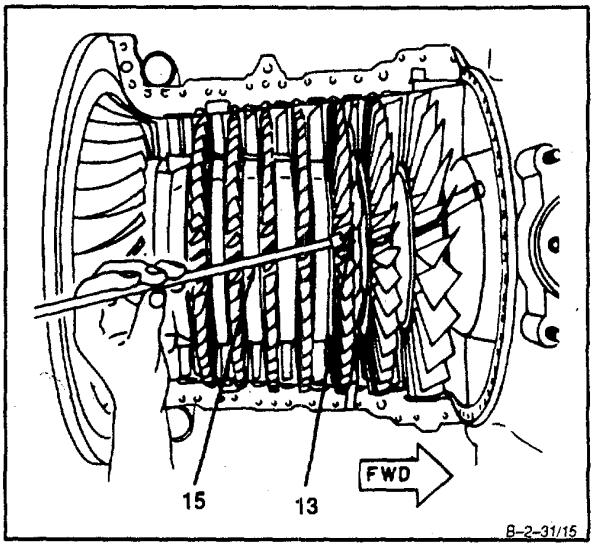

d. **Tap blade (13) firmly forward.** Use ballpeen hammer.

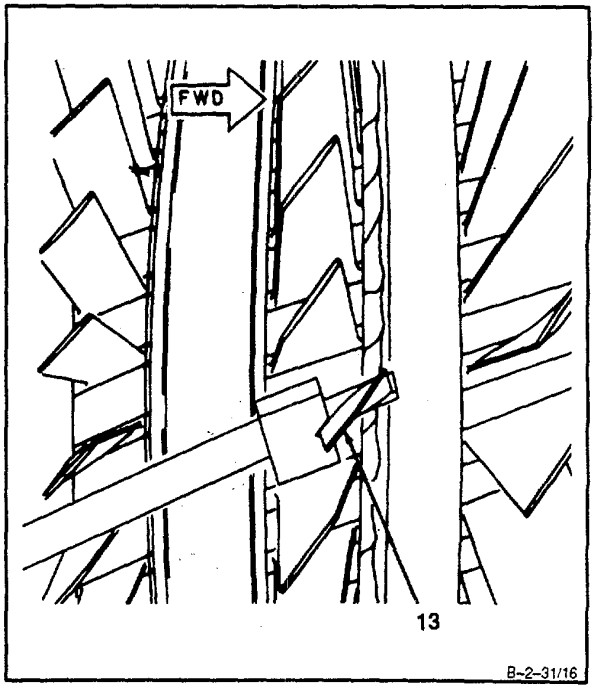

GO TO NEXT PAGE

e. **Continue to tap blade (13) forward until lockpin (16) Is sheared**.

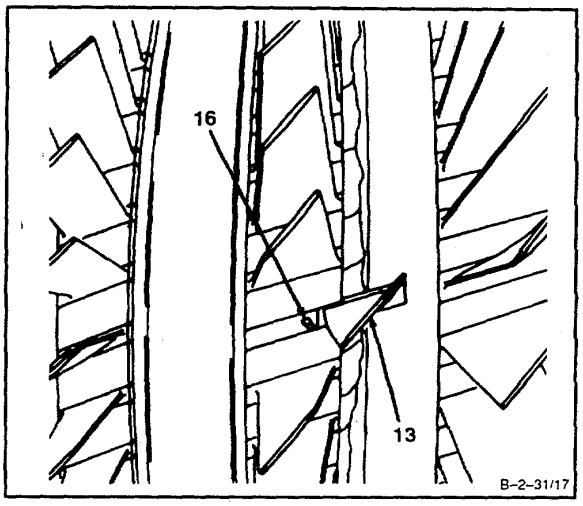

f. Move blade (13) forward and **remove sheared lockpin (16).** Use tweezers (9).

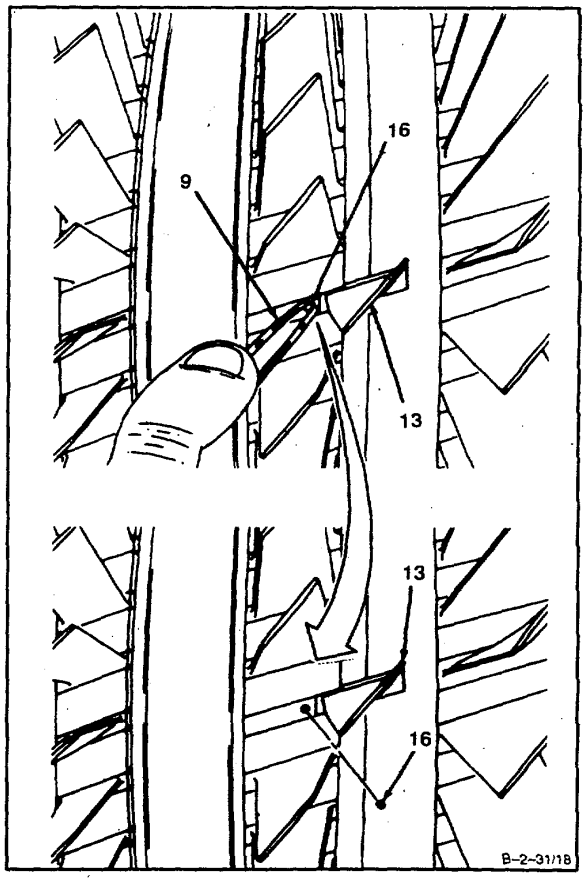

GO TO NEXT PAGE

g. Remove spring (17). Use tweezers (9).

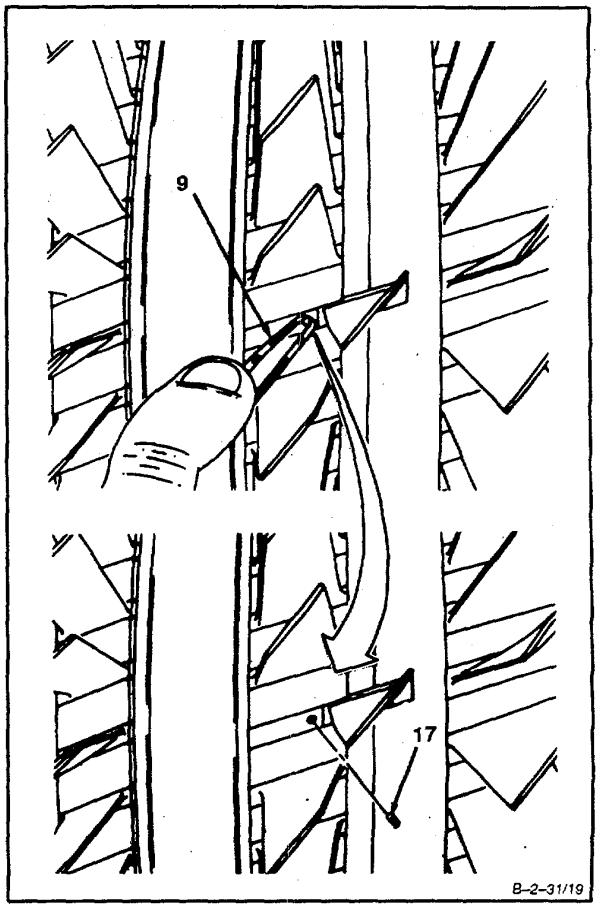

GO TO NEXT PAGE

h. **Remove third stage compressor blade (13).**

i. **Remove sheared lockpin (16)** from blade. Use tweezers (9).

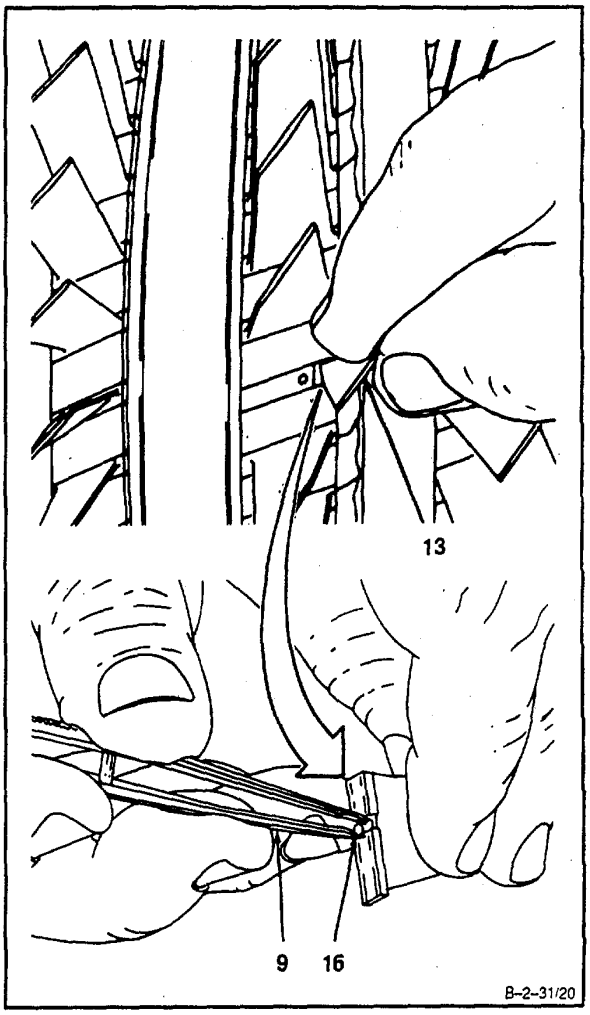

GO TO NEXT PAGE

CAUTION

Do not remove any parent metal from inside retaining pin hole. Removing material will enlarge hole. If this happens compressor rotor assembly will have to be replaced.

j. Clean out lockpin hole (18). Use twist drill (12). Remove tape.

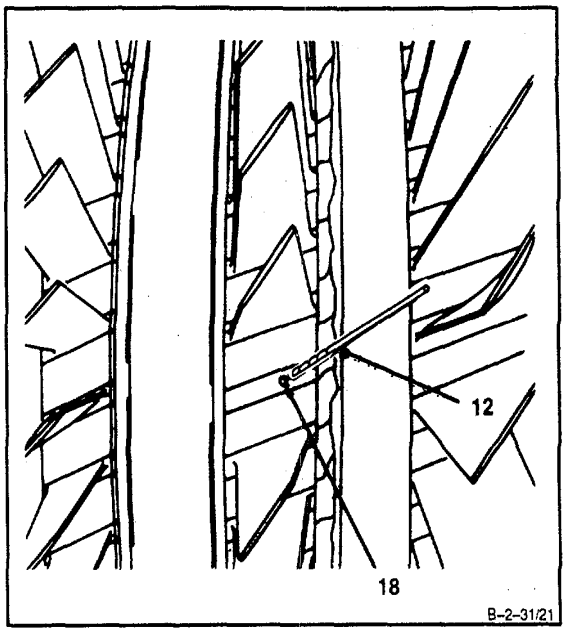

NOTE

Fourth through seventh stage blades shall be removed rearward.

3. **Remove fourth through seventh stage compressor blades (19)** as follows:

NOTE

Procedures to remove fourth through seventh stage blades is the same. Removal of seventh stage blades is shown.

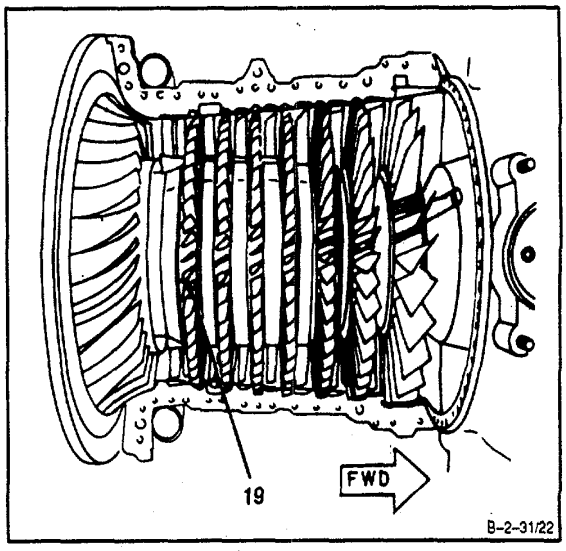

GO TO NEXT PAGE

a. **Twist masking tape (E39) (4), sticky side out. Make the tape 1/2-inch wide.**

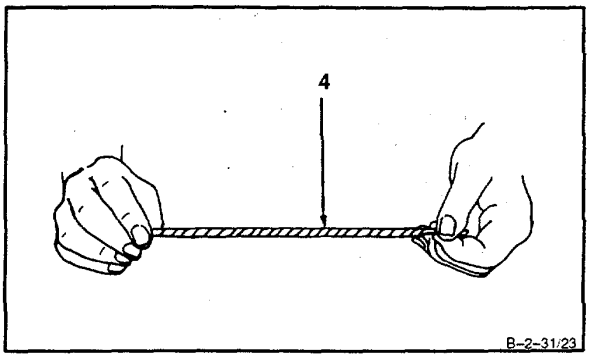

b. **Insert masking tape (E39) (4)** into space rearward of seventh stage disc (20).

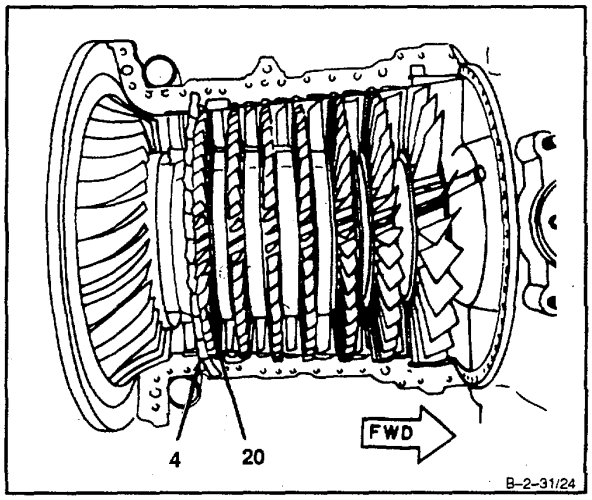

c. **Position Installing tool (T35) (15) forward of blade (19).**

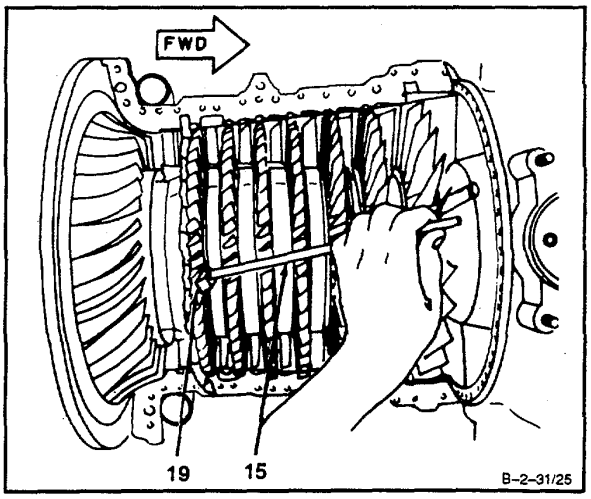

GO TO NEXT PAGE

d. **Tap blade (19) firmly rearward**. Use ballpeen hammer.

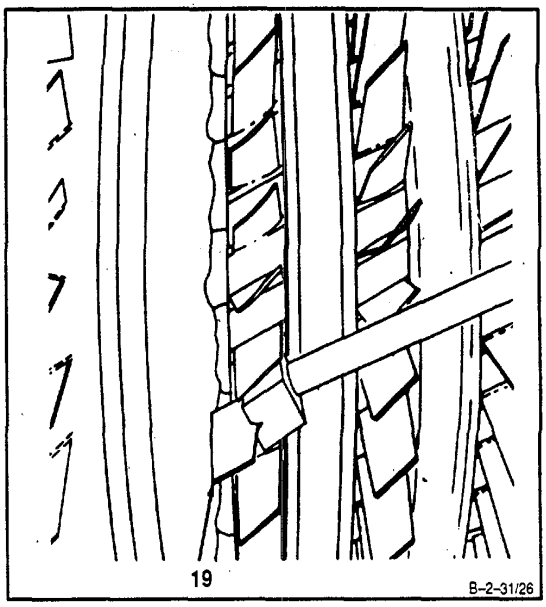

e. **Continue to tap blade (19) rearward until lockpin (21) is sheared.**

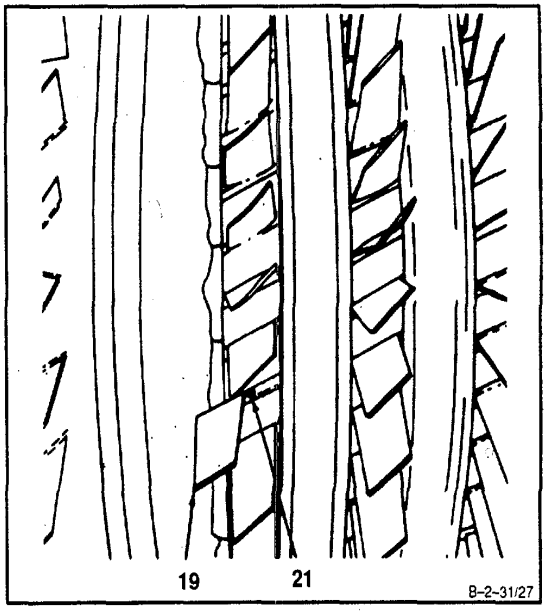

GO TO NEXT PAGE

f. Move blade (19) rearward and **remove sheared lockpin (21).** Use tweezers (9).

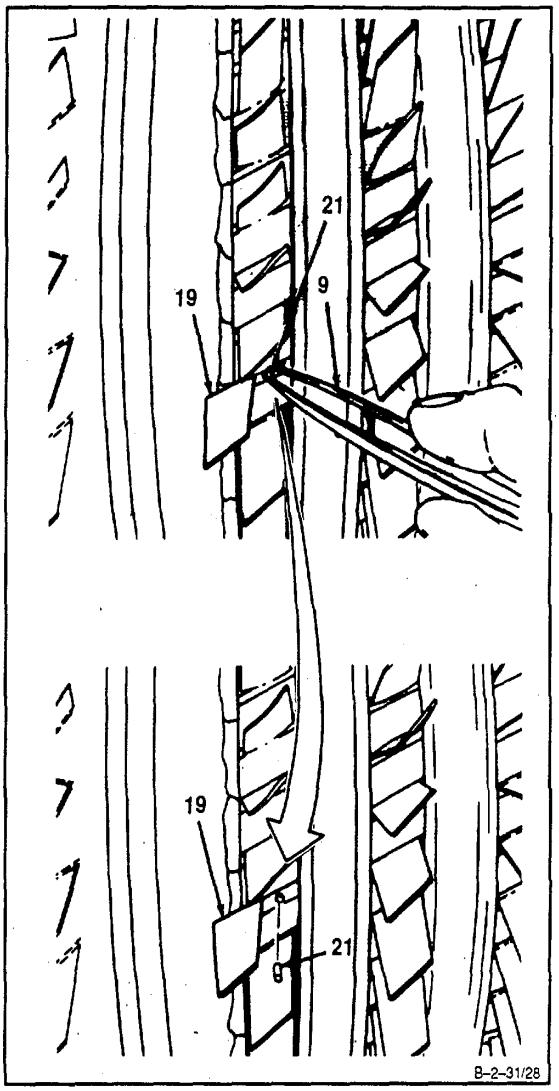

GO TO NEXT PAGE

g. Remove spring (22). Use tweezers (9).

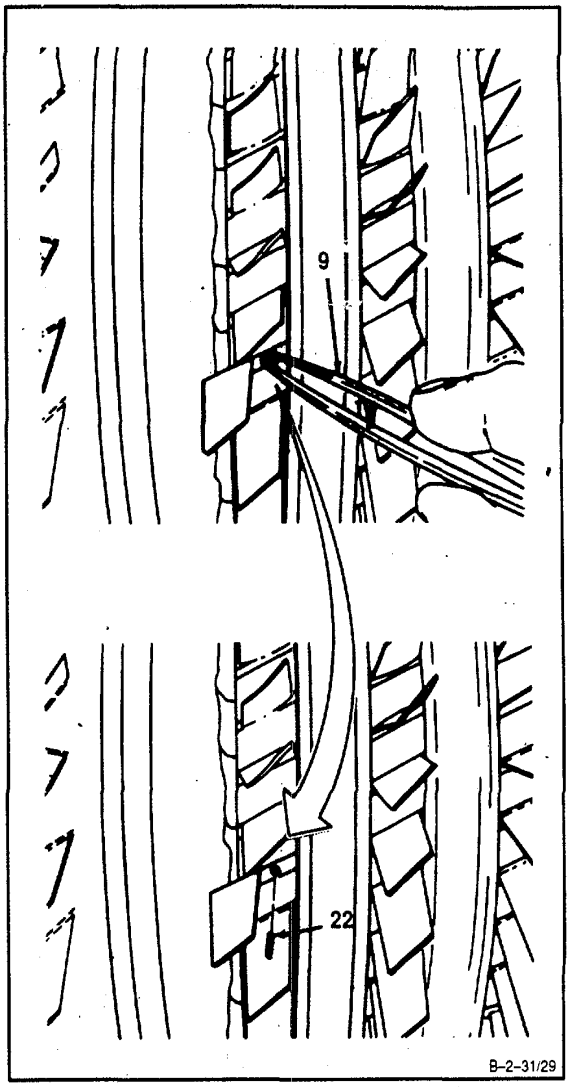

GO TO NEXT PAGE

h. **Remove seventh stage compressor blade (19).**

i. **Remove sheared lockpin (21)** from blade. Use tweezers (9).

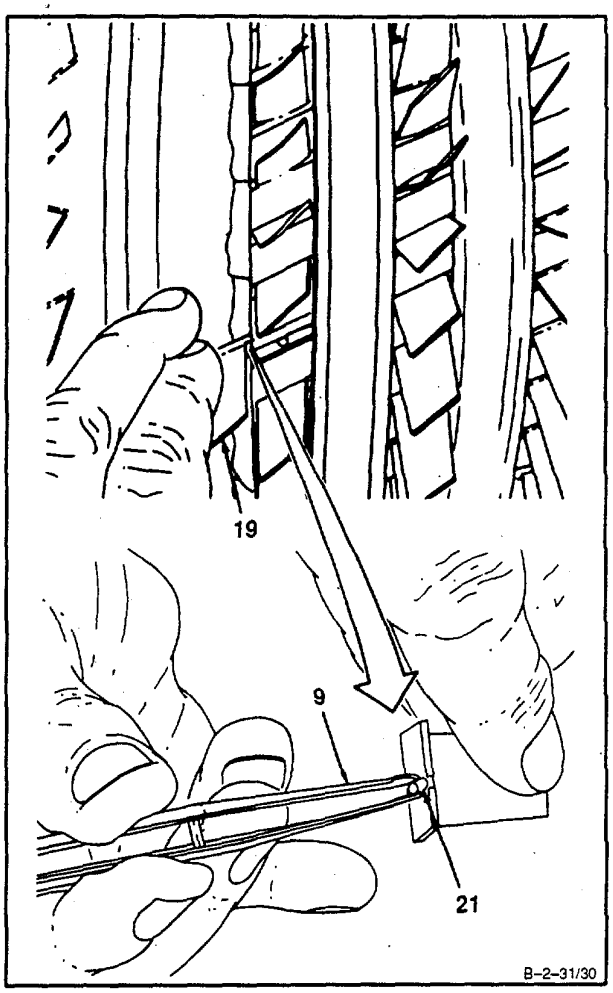

CAUTION

Do not remove any parent metal from inside retaining pin hole. Removing material will enlarge hole. If this happens replace compressor rotor assembly.

j. Clean out lockpin hole (22). Use twist drill (12). Remove tape.

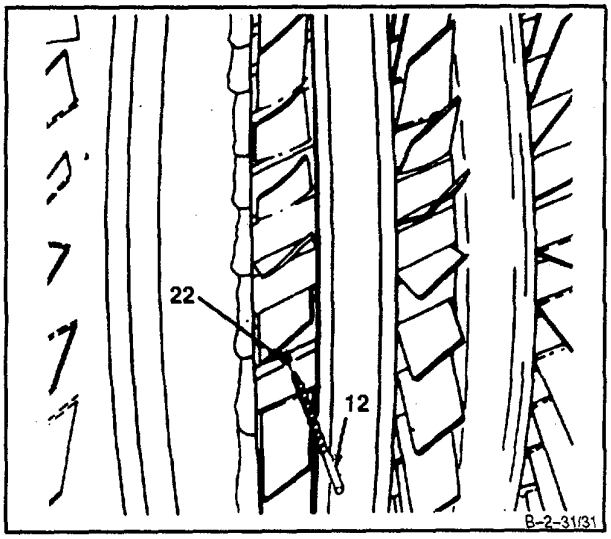

FOLLOW-ON MAINTENANCE:

None

END OF TASK

INITIAL SETUP

Applicable Configurations:

All

Tools:

None

Materials:

Dry Cleaning Solvent (E19)

Gloves (E24)

Lint-Free Cloth (E30)

Personnel Required:

Aircraft Powerplant Repairer

Equipment Condition:

Engine Oil System Drained (Task 1-69)
Oil Cooler Assembly Removed (Task 8-12)
In-Line Fuel Filter Assembly Removed (Task 6-35)
Ignition Exciter Removed (Task 7-11)
Oil Filler Assembly and Oil Filler Strainer Removed (Task 8-27)
Starter Drive Assembly Removed (Task 5-18)
Main Fuel Filter and Bracket Removed (Task 6-28)
Interstage Air-Bleed Actuator Removed (Task 2-1)
Compressor Bleed Band Removed (Task 2-10)
Upper Compressor Housing Removed (Task 2-20)

General Safety Instructions:

WARNING

Dry cleaning solvent (E19) is flammable and toxic. It can irritate skin and cause burns. Use only In well-ventilated area, away from heat and open flame. In case of contact, Immediately flush skin or eyes with water for at least 15 minutes. Get medical attention for eyes.

1. Wear gloves (E24) and **clean compressor rotor blades (1).** Use lint-free cloth (E30) dampened in dry cleaning solvent (E19).

2. **Wipe dry.** Use clean, dry, lint-free cloth (E30).

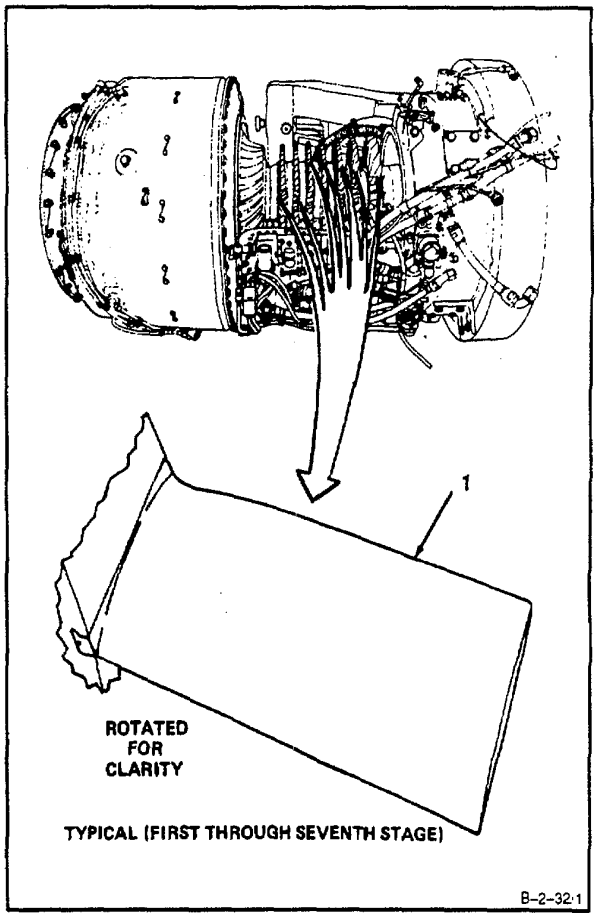

GO TO NEXT PAGE

3. Wear gloves (E24). **Clean centrifugal impeller** (2). Use lint-free cloth (E30) dampened in dry cleaning solvent (E19).

4. **Wipe dry.** Use clean, dry, lint-free cloth (E30).

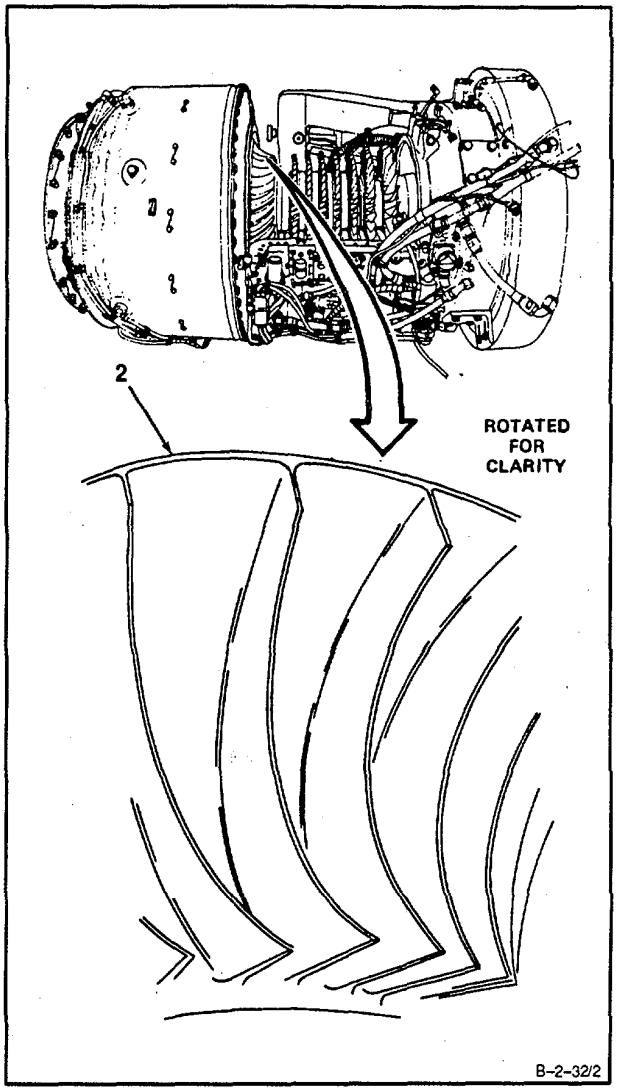

FOLLOW-ON MAINTENANCE:

Inspect Compressor Rotor Blades (Task 2-35).

END OF TASK

2-35 INSPECT COMPRESSOR ROTOR BLADES 2-35

INITIAL SETUP

Applicable Configurations:

All

Tools:

Technical Inspection Tool Kit,
NSN 5180-00-323-5114

Materials:

None

Personnel Required:

Aircraft Powerplant Repairer

Equipment Condition:

Upper Compressor Housing Removed (Task 2-20)

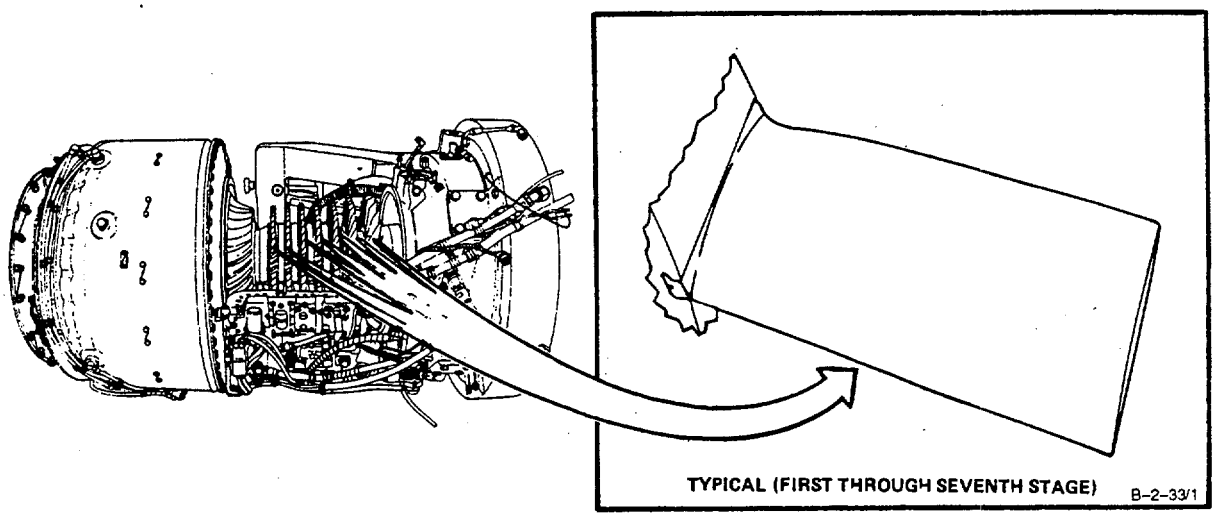

GO TO NEXT PAGE

1. **Inspect first stage compressor rotor blades (1)** as follows:

   a. There shall be no cracks.

   b. There shall be no bends or distortion.

   c. There shall be no corrosion pitting.

   d. There shall be no surface nicks (2) or dents (3) greater than:

      (1) 0.015 inch in depth.

      (2) 0.350 inch in length.

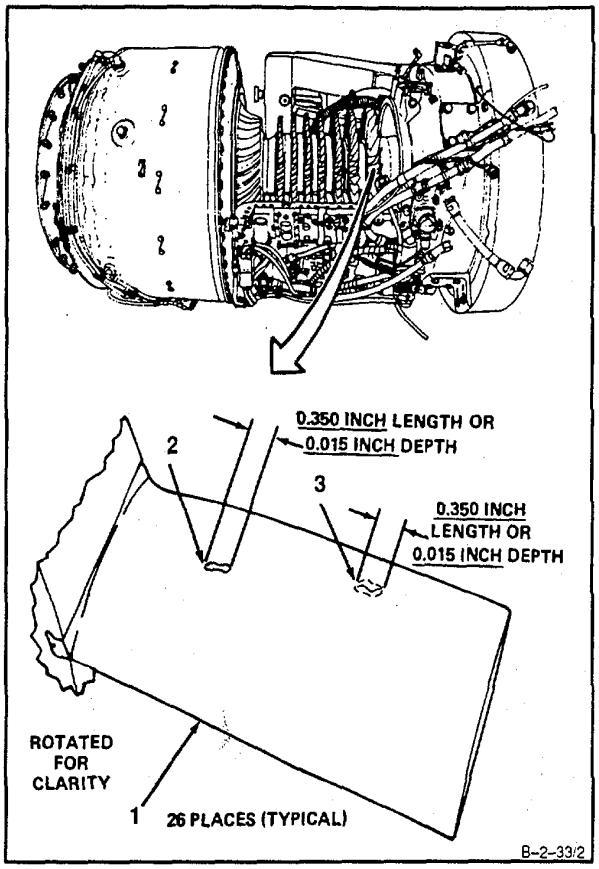

   e. **Inspect blade tip** (4) as follows:

      (1) There shall be no nicks or dents (5) deeper than 0.060 inch.

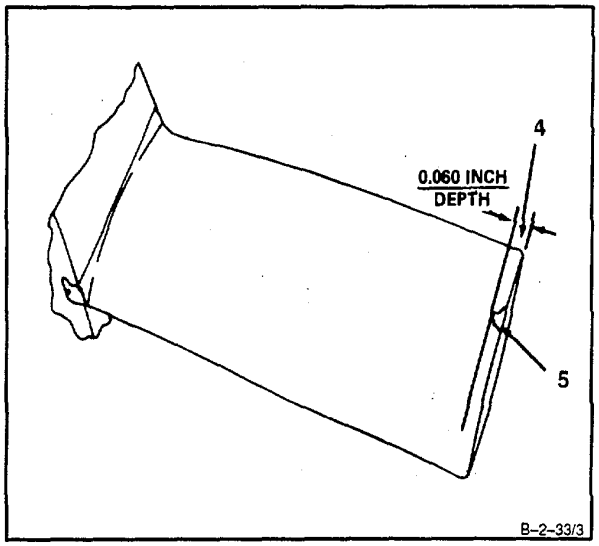

GO TO NEXT PAGE

f. Inspect for leading edge material rollover resulting from erosion. Minor rollover is allowed if within repairable limits. Refer to Task 2-36. Leading edge rollover can be detected by running a fingernail along airfoil on convex side until edge is contacted.

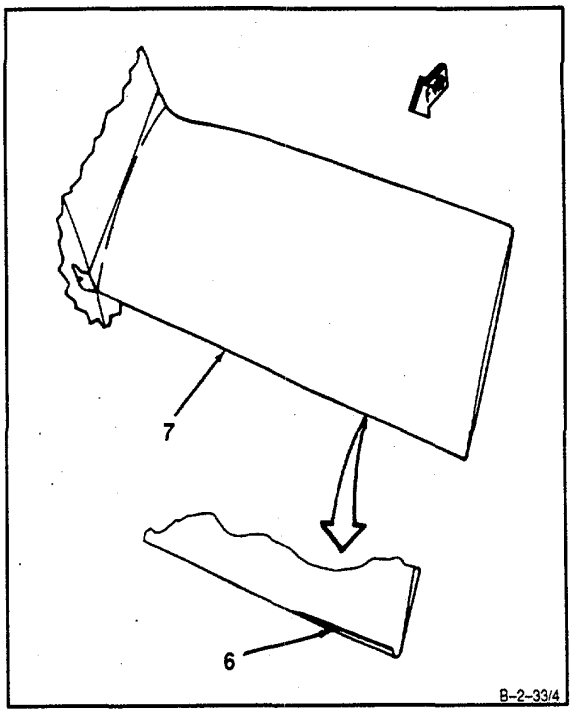

g. **Inspect critical area** (8) as *follows:*

NOTE

No repair is allowed within the critical area (8).

(1) There shall be no nicks.

(2) Smooth dents (9) on leading and trailing edges shall not exceed 0.030 inch in diameter and/or 0.010 inch in depth. These dents (9) must not have sharp edges (10). Minor sand and dust peening (11) is acceptable on leading edge (7).

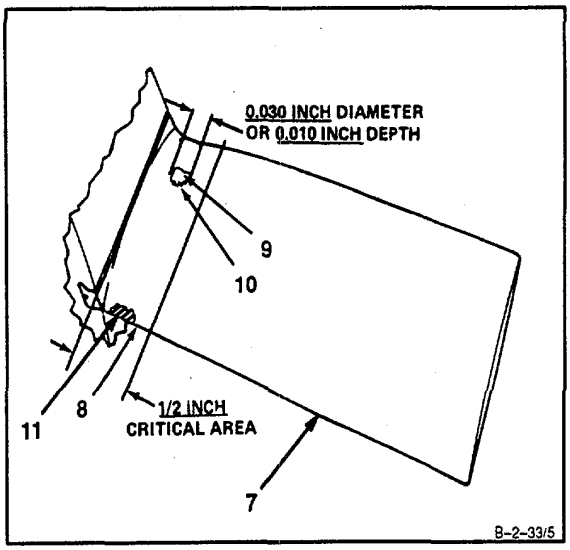

GO TO NEXT PAGE

h. Inspect area between 0.500 inch and 1.125 inches above blade root (12). There shall be no nicks or dents (13) in edges (7 and 14) deeper than 0.025 inch.

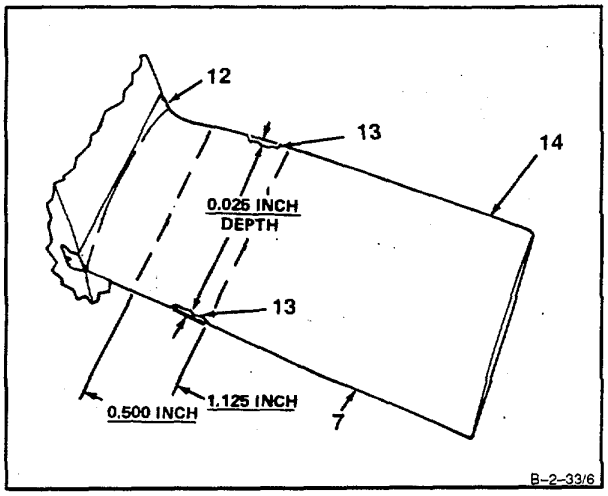

i. Inspect area between 1.125 inches and 1.750 inches above blade root (12). There shall be no nicks or dents (15) in edges (7 and 14) deeper than 0.050 inch.

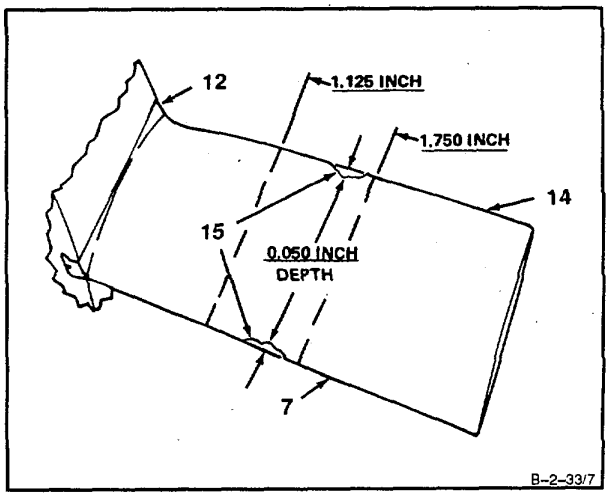

j. Inspect area between 1.750 inches and 2.375 inches above blade root (12). There shall be no nicks or dents (16) in edges (7 and 14) deeper than 0.075 inch.

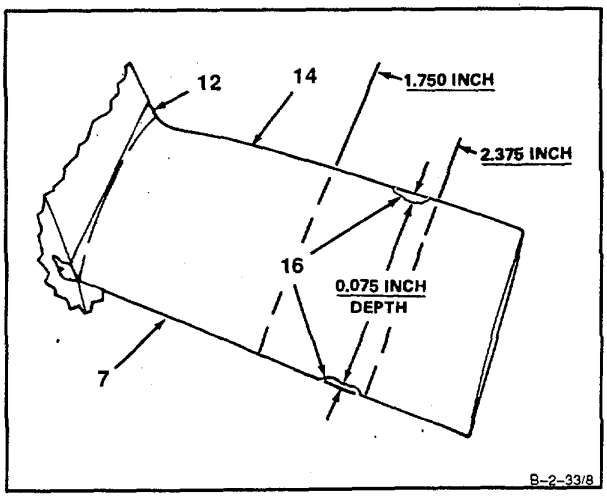

GO TO NEXT PAGE

k. Inspect area between 2.375 inches above blade root (12) and blade tip (4). There shall be no nicks or dents (17) in edges (7 and 14) deeper than 0.100 inch.

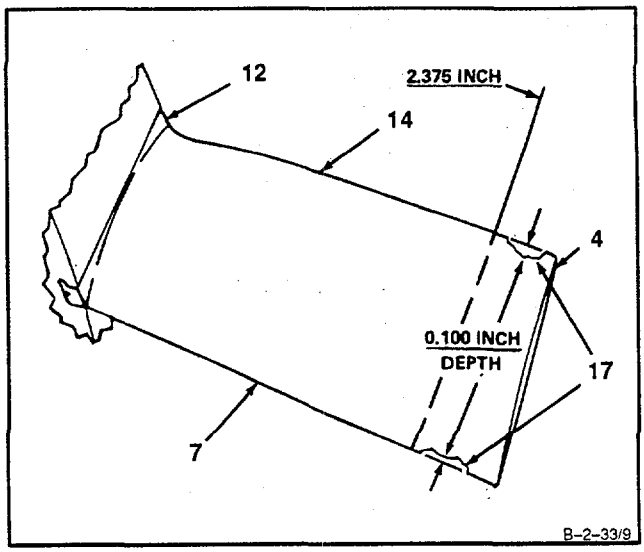

2. **Inspect second stage compressor rotor blades (18)** as follows:

a. There shall be no cracks.

b. There shall be no bends or distortion.

c. There shall be no corrosion pitting.

d. There shall be no surface nicks (19) or dents (20) greater than:

(1) 0.015 inch in depth.

(2) 0.350 inch in length.

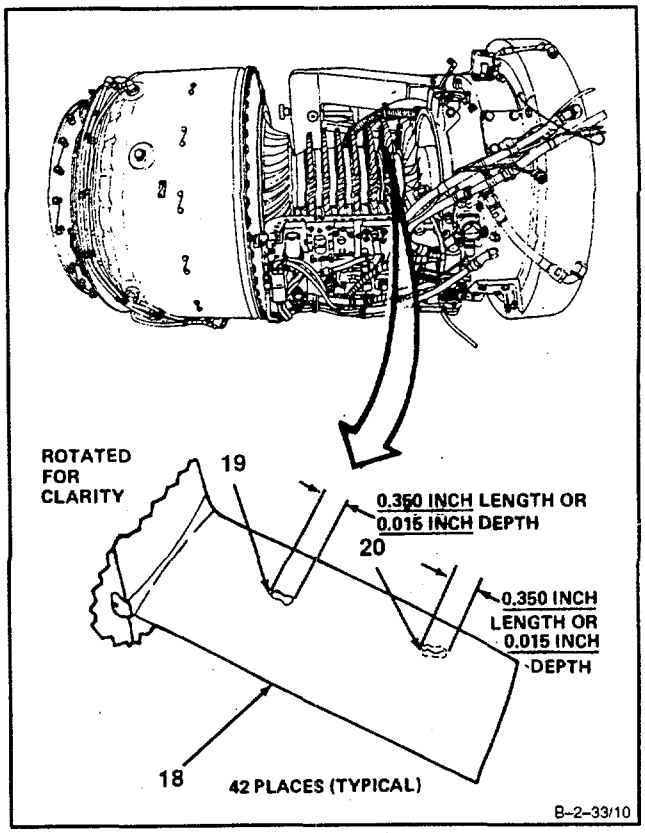

GO TO NEXT PAGE

e. **Inspect blade tip (21)** as follows:

(1) There shall be no nicks or dents (22) deeper than 0.060 inch.

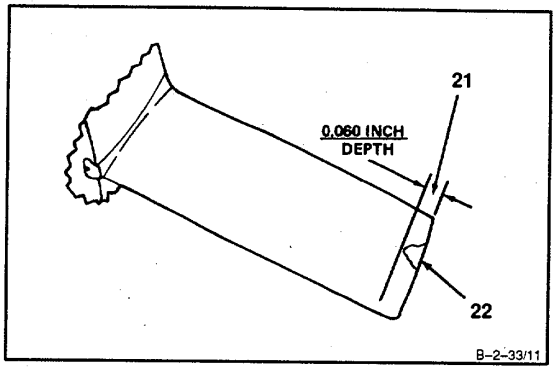

f. There shall be no material rollover (23) on forward surface at blade leading edge (24). Use fingernail to detect rollover.

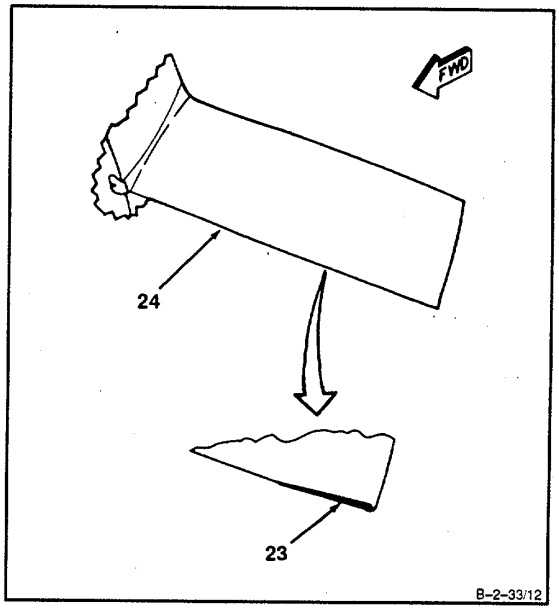

GO TO NEXT PAGE

g. **Inspect critical area (25)** as follows:

(1) There shall be no nicks.

(2) There shall be no surface dents (26) or sand and dust penning (27) deeper than 0.010 inch or wider than 0.030 inch diameter. These dents (26) must not have sharp edges (28).

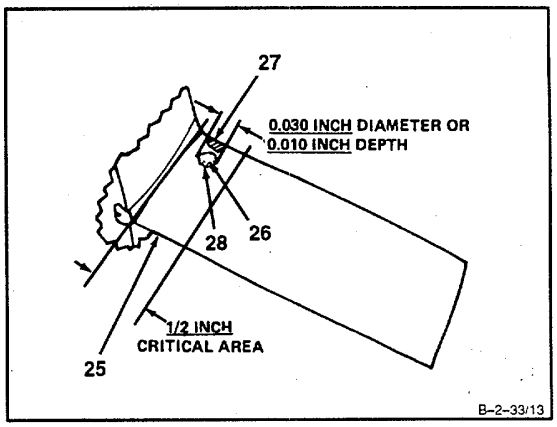

h. Inspect area between 0.500 inch and 1.000 inches above blade root (29). There shall be no nicks or dents (30) in edges (24 and 31) deeper than 0.015 inch.

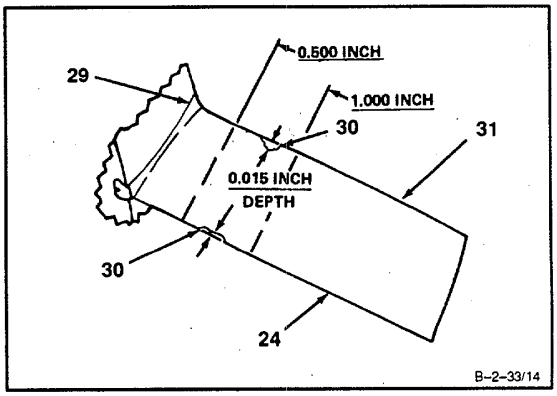

i. Inspect area between 1.000 inches and 1.500 inches above blade root (29). There shall be no nicks or dents (32) in edges (24 and 31) deeper than 0.030 inch.

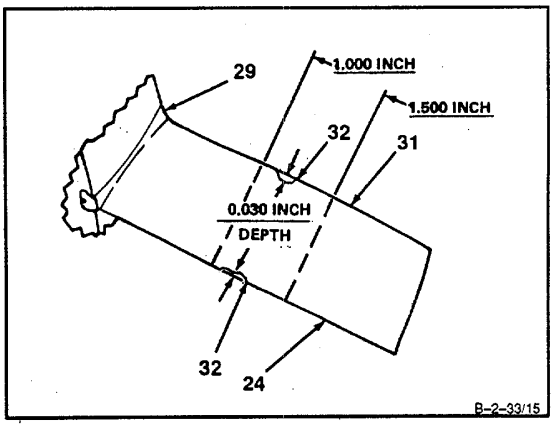

GO TO NEXT PAGE

j. Inspect area between 1.500 inches and 2.000 inches above blade root (29). There shall be no nicks or dents (33) in edges (24 and 31) deeper than 0.045 inch.

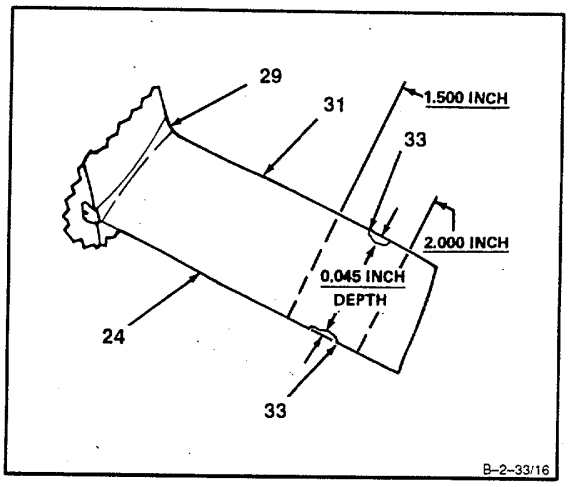

k. Inspect area between 2.000 inches above blade root (29) and blade tip (21). There shall be no nicks or dents (34) in edges (24 and 31) deeper than 0.060 inch.

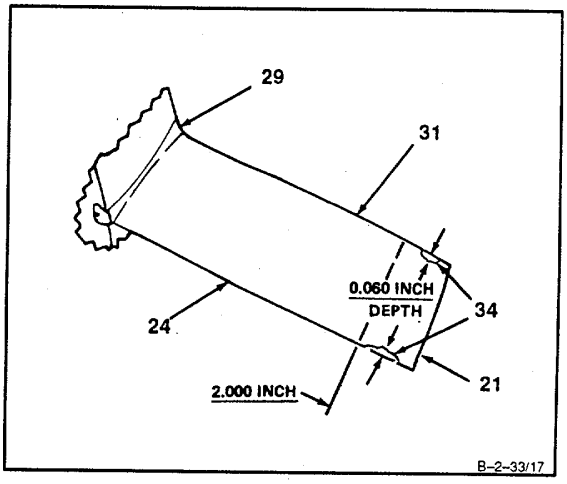

GO TO NEXT PAGE

3. **Inspect third stage compressor rotor blades (35)** as follows:

   a. There shall be no cracks.

   b. There shall be no bends or distortion.

   c. There shall be no corrosion pitting.

   d. There shall be no surface nicks (36) or dents (37) greater than:

      (1) 0.015 inch in depth.

      (2) 0.350 inch in length.

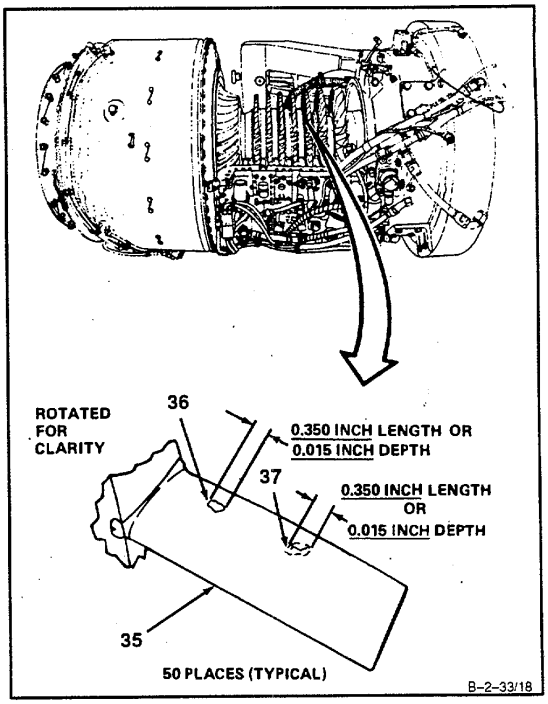

e. Inspect blade tip (38) as follows:

   (1) There shall be no nicks or dents (39) deeper than 0.060 inch.

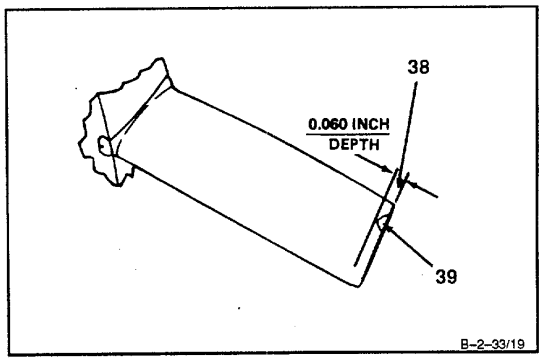

GO TO NEXT PAGE

f. There shall be no material rollover (40) on forward surface at blade leading edge (41). Use fingernail to detect rollover.

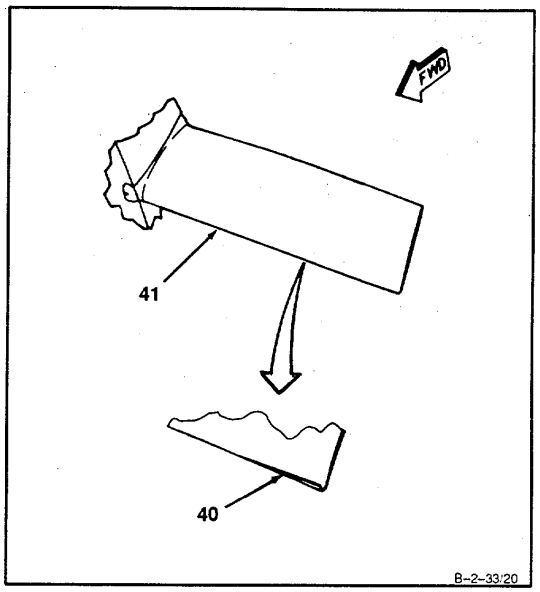

g. **Inspect critical area (42)** as follows:

(1) There shall be no nicks.

(2) There shall be no surface dents (43) or sand and dust penning (44) deeper than 0.010 inch or wider than 0.030 inch diameter. These dents (43) must not have sharp edges (45).

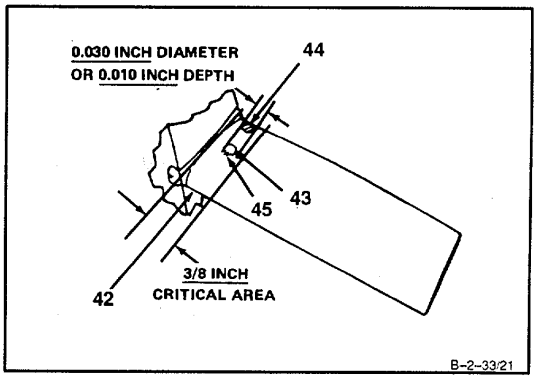

GO TO NEXT PAGE

h. Inspect area between 0.375 inch and 0.875 inch above blade root (46). There shall be no nicks or dents (47) in edges (41 and 48) deeper than 0.015 inch.

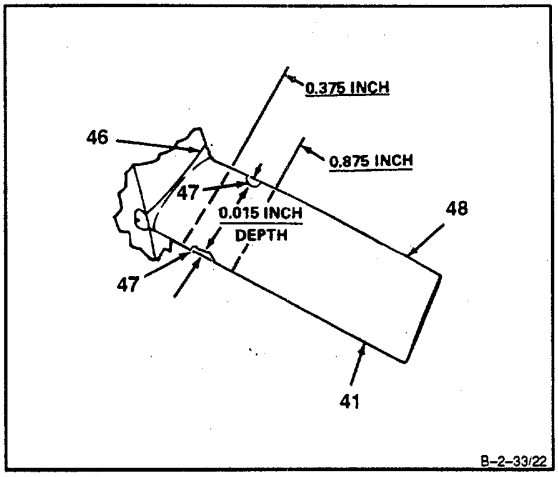

i. Inspect area between 0.875 inch and 1.375 inches above blade root (46). There shall be no nicks or dents (49) in edges (41 and 48) deeper than 0.030 inch.

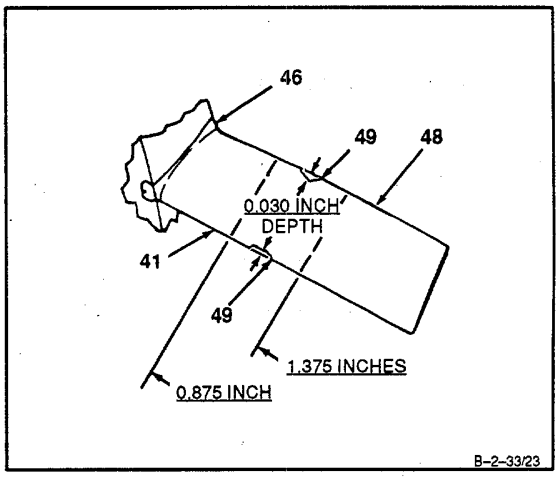

j. Inspect area between 1.375 inches and 1.875 inches above blade root (46). There shall be no nicks or dents (50) in edges (41 and 48) deeper than 0.045 inch.

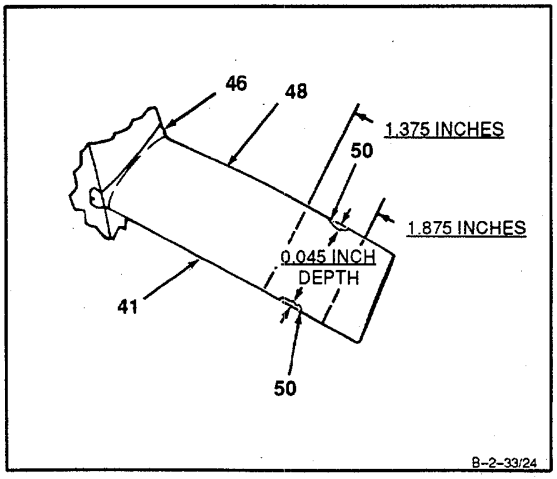

GO TO NEXT PAGE

k. Inspect area between 1.875 inches above blade root (46) and blade tip (38). There shall be no nicks or dents (51) in edges (41 and 48) deeper than 0.060 inch.

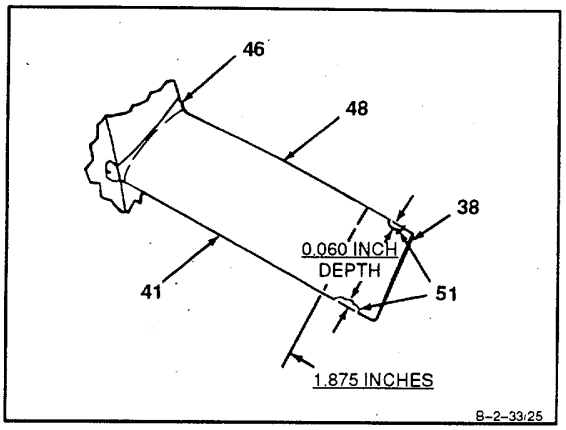

4. **Inspect fourth stage compressor rotor blades (52)** as follows:

   a. There shall be no cracks.

   b. There shall be no bends or distortion.

   c. There shall be no corrosion pitting.

   d. There shall be no surface nicks (53) or dents (54) greater than:

      (1) 0.015 inch in depth.

      (2) 0.350 inch in length.

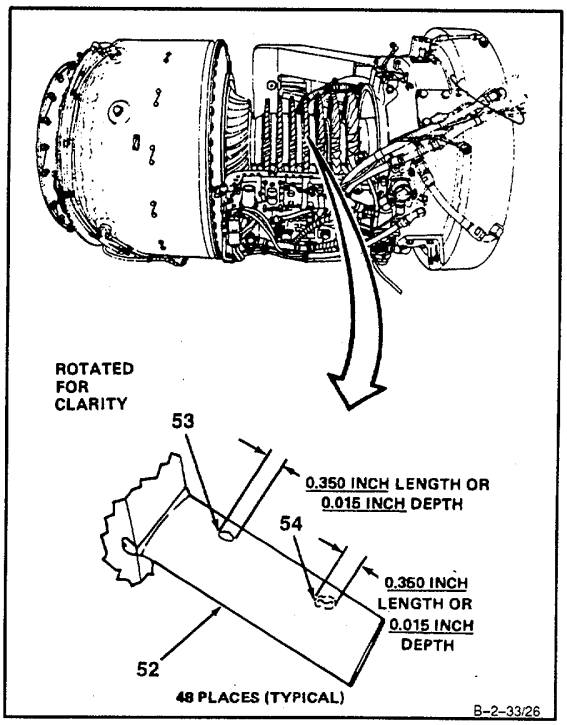

GO TO NEXT PAGE

e. **Inspect blade tip (55)** as follows:

(1) There shall be no nicks or dents (56) deeper than 0.060 inch.

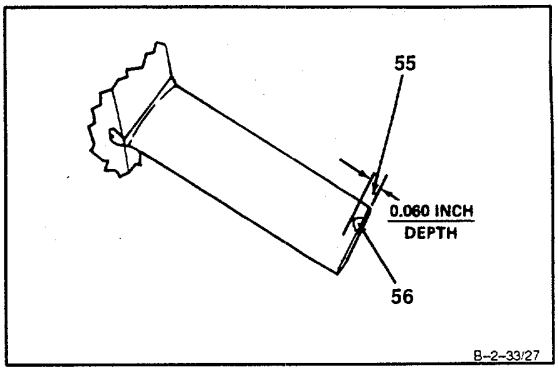

f. There shall be no material rollover (57) on forward surface at blade leading edge (58). Use fingernail to detect rollover.

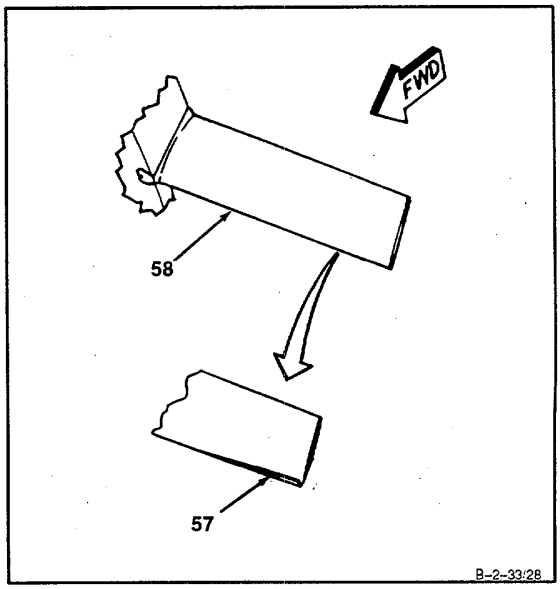

GO TO NEXT PAGE

g. **Inspect critical area (59)** as follows:

(1) There shall be no nicks.

(2) There shall be no surface dents (60) or sand and dust penning (61) deeper than 0.010 inch or wider than 0.030 inch diameter. These dents (60) must not have sharp edges (62).

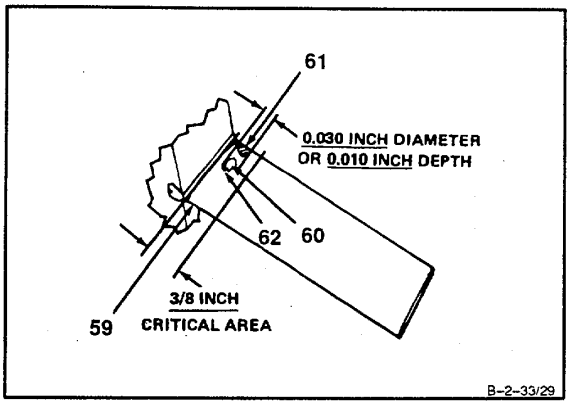

h. Inspect area between 0.375 inch and 0.422 inch above blade root (63). There shall be no nicks or dents (64) in edges (58 and 65) deeper than 0.015 inch.

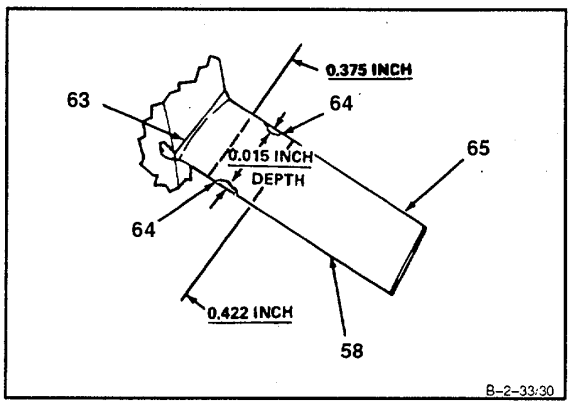

i. Inspect area between 0.422 inch and 0.797 inch above blade root (63). There shall be no nicks or dents (66) in edges (58 and 65) deeper than 0.030 inch.

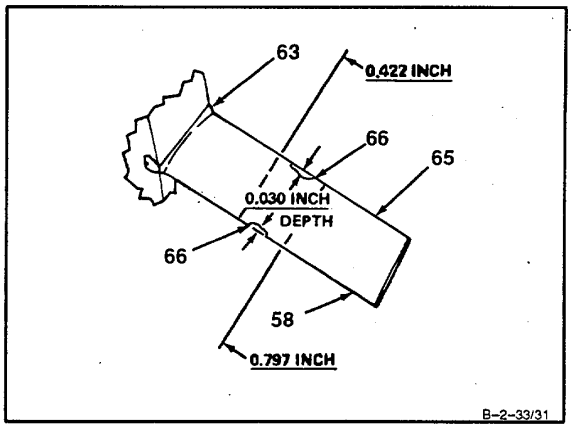

GO TO NEXT PAGE

j. Inspect area between 0.797 inch and 1.219 inches above blade root (63). There shall be no nicks or dents (67) in edges (68 and 65) deeper than 0.045 inch.

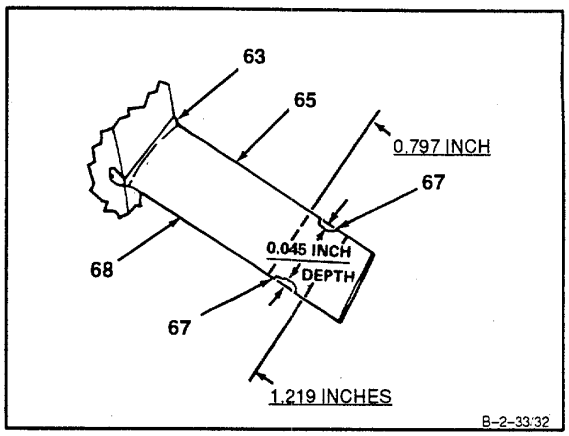

k. Inspect area between 1.219 inches above blade root (63) and blade tip (55). There shall be no nicks or dents (68) in edges (58 and 65) deeper than 0.060 inch.

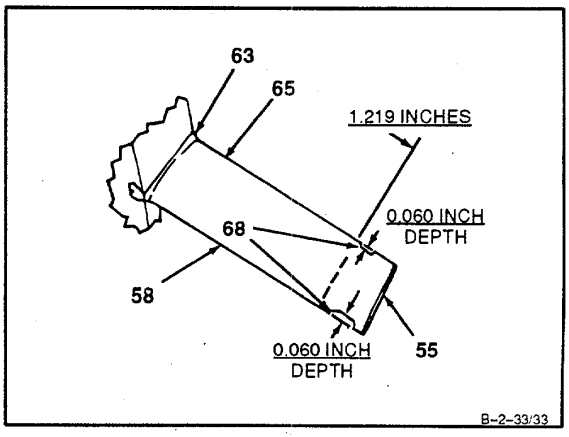

GO TO NEXT PAGE

5. **Inspect fifth stage compressor rotor blades (69)** as follows:

   a. There shall be no cracks.

   b. There shall be no bends or distortion.

   c. There shall be no corrosion pitting.

   d. There shall be no surface nicks (70) or dents (71) greater than:

      (1) 0.015 inch in depth.

      (2) 0.350 inch in length.

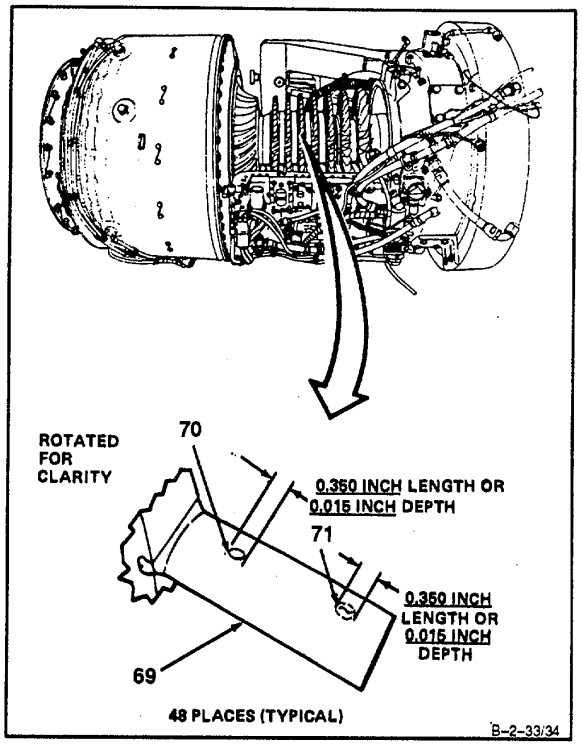

e. **Inspect blade tip (72)** as follows:

   (1) There shall be no nicks or dents (73) deeper than 0.060 inch.

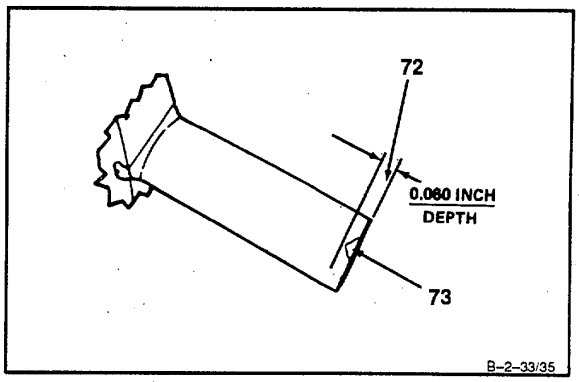

GO TO NEXT PAGE

f. There shall be no material rollover (74) on forward surface at blade leading edge (75). Use fingernail to detect rollover.

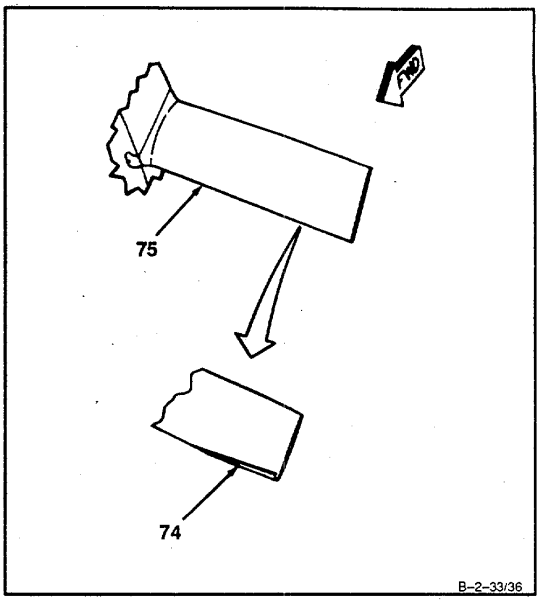

g. **Inspect critical area (76)** as follows:

(1) There shall be no nicks.

(2) There shall be no surface dents (77) or sand and dust penning (78) deeper than 0.010 inch or wider than 0.030 inch diameter. These dents (77) must not have sharp edges (79).

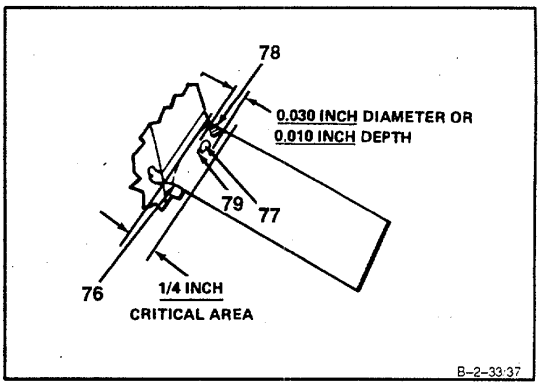

GO TO NEXT PAGE

h. Inspect area between 0.250 inch and 0.641 inch above blade root (80). There shall be no nicks or dents (81) in edges (75 and 82) deeper than 0.015 inch.

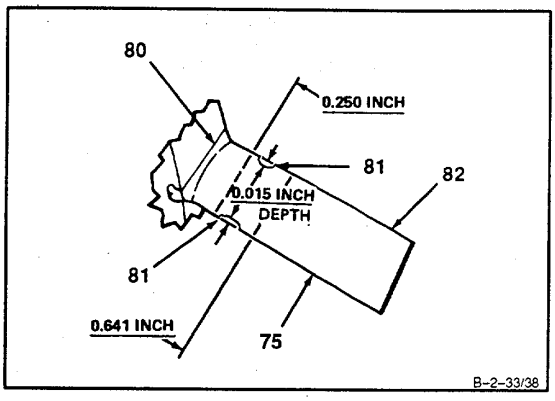

i. Inspect area between 0.641 inch and 1.031 inches above blade root (80). There shall be no nicks or dents (83) in edges (75 and 82) deeper than 0.030 inch.

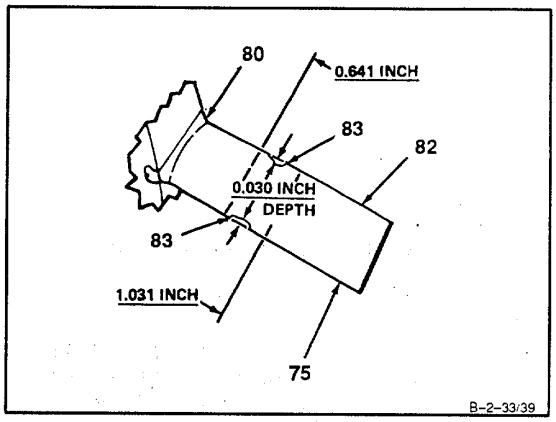

j. Inspect area between 1.031 inches and 1.422 inches above blade root (80). There shall be no nicks or dents (84) in edges (75 and 82) deeper than 0.045 inch.

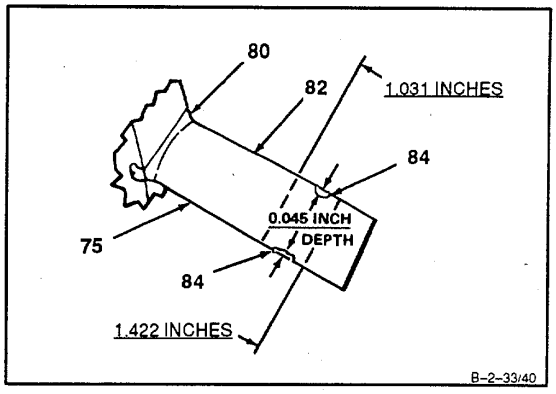

GO TO NEXT PAGE

k. Inspect area between 1.422 inches above blade root (80) and blade tip (72). There shall be no nicks or dents (85) in edges (75 and 82) deeper than 0.060 inch.

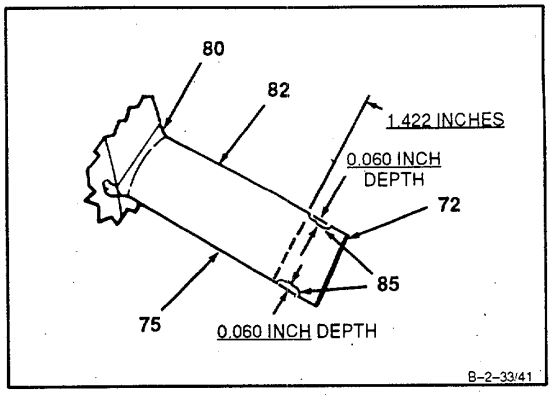

6. **Inspect sixth stage compressor rotor blades (86)** as follows:

a. There shall be no cracks.

b. There shall be no bends or distortion.

c. There shall be no corrosion pitting.

d. There shall be no surface nicks (87) or dents (88) greater than:

(1) 0.015 inch in depth.

(2) 0.350 inch in length.

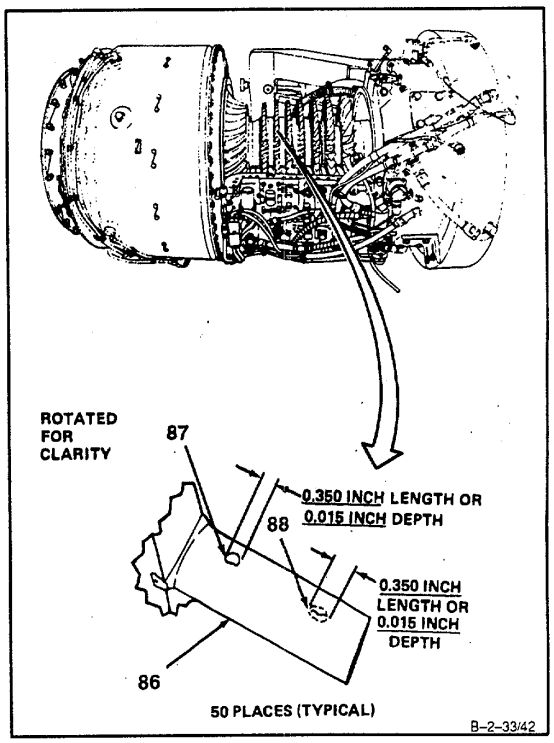

GO TO NEXT PAGE

e. **Inspect blade tip (89)** as follows:

(1) There shall be no nicks or dents (90) deeper than 0.060 inch.

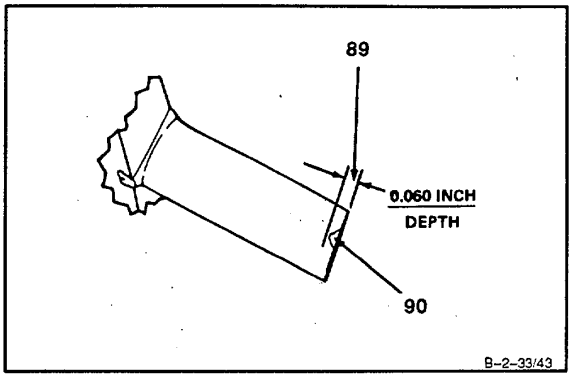

f. There shall be no material rollover (91) on forward surface at blade leading edge (92). Use fingernail to detect rollover.

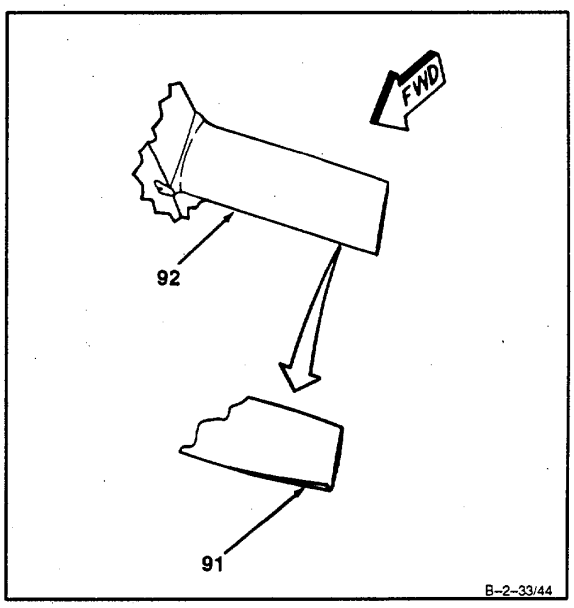

GO TO NEXT, PAGE

g. **Inspect critical area (93)** as follows:

(1) There shall be no nicks.

(2) There shall be no surface dents (94) or sand and dust penning (95) deeper than 0.010 inch or wider than 0.030 inch diameter. These dents (94) must not have sharp edges (96).

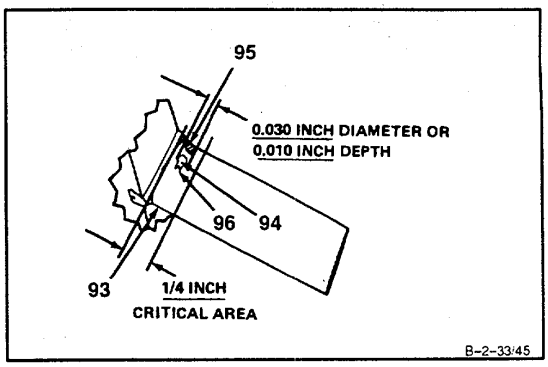

h. Inspect area between 0.250 inch and 0.625 inch above blade root (97). There shall be no nicks or dents (98) in edges (92 and 99) deeper than 0.015 inch.

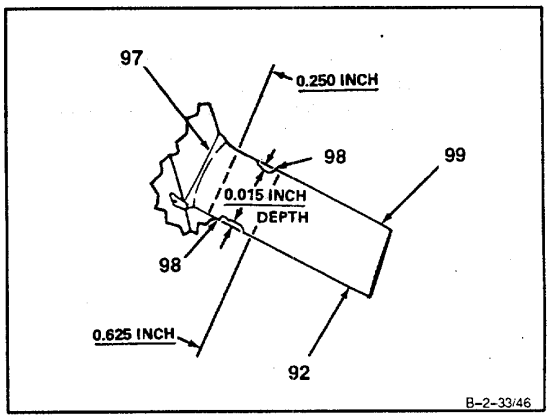

i. Inspect area between 0.625 inch and 1.000 inches above blade root (97). There shall be no nicks or dents (100) in edges (92 and 99) deeper than 0.030 inch.

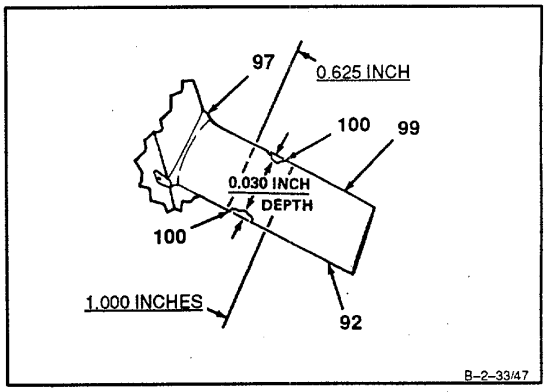

GO TO NEXT PAGE

j. Inspect area between 1.000 inches and 1.375 inches above blade root (97). There shall be no nicks or dents (101) in edges (92 and 99) deeper than 0.045 inch.

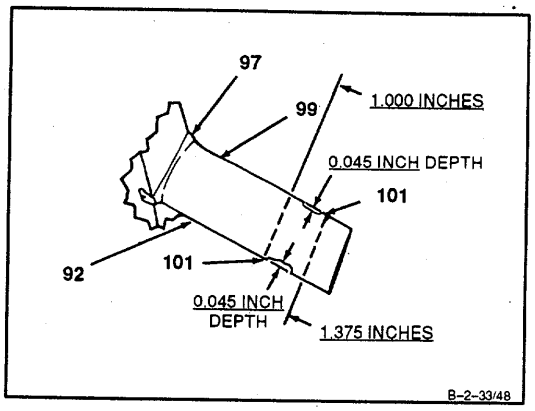

k. Inspect area between 1.375 inches above blade root (97) and blade tip (89). There shall be no nicks or dents (102) in edges (92 and 99) deeper than 0.060 inch.

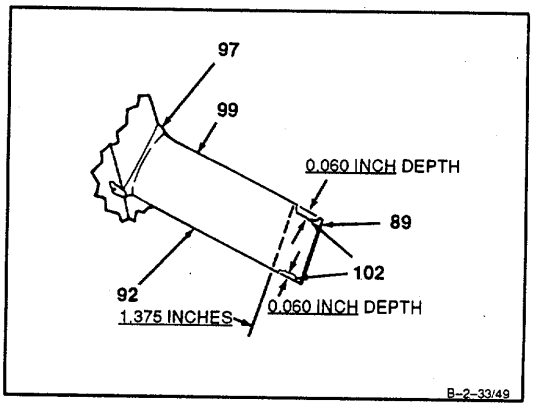

GO TO NEXT PAGE

7. **Inspect seventh stage compressor rotor blades (103)** as follows:

   a. There shall be no cracks.

   b. There shall be no bends or distortion.

   c. There shall be no corrosion pitting.

   d. There shall be no surface nicks (104) or dents (105) greater than:

      (1) 0.015 inch in depth.

      (2) 0.350 inch in length.

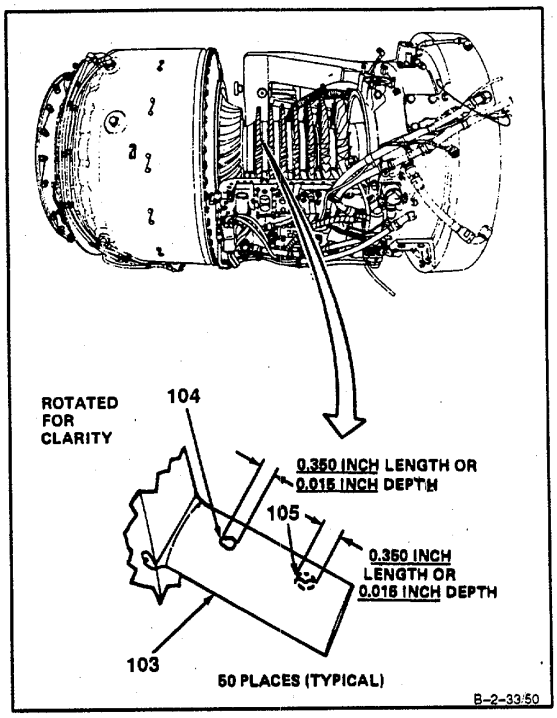

e. **Inspect blade tip (106)** as follows:

   (1) There shall be no nicks or dents (107) deeper than 0.060 inch.

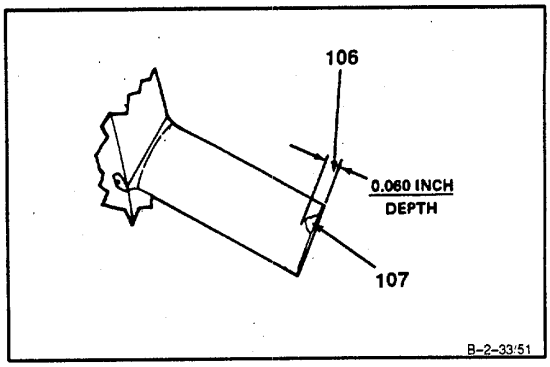

GO TO NEXT PAGE

f. There shall be no material rollover (108) on forward surface at blade leading edge (109). Use fingernail to detect rollover.

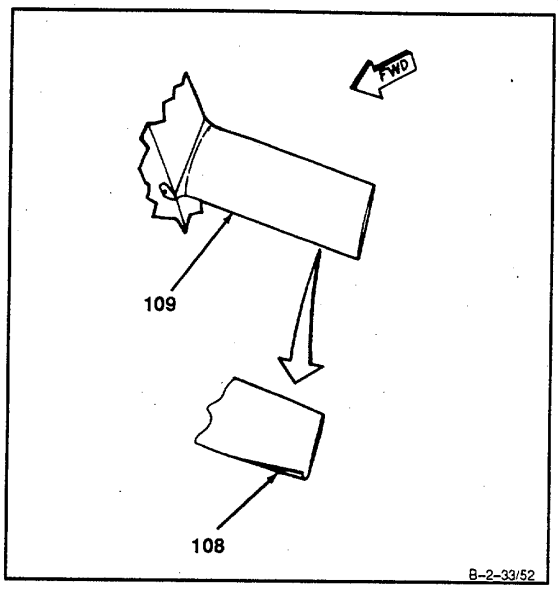

g. **Inspect critical area (110)** as follows:

(1) There shall be no nicks.

(2) There shall be no surface dents (111) or sand and dust penning (112) deeper than 0.010 inch or wider than 0.030 inch diameter. These dents (111) must not have sharp edges (113).

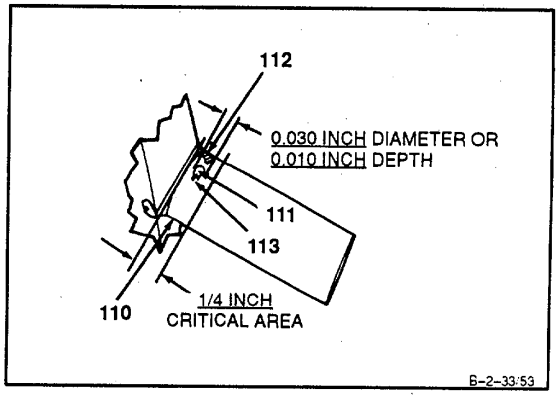

GO TO NEXT PAGE

h. Inspect area between 0.250 inch and 0.594 inch above blade root (114). There shall be no nicks or dents (115) in edges (109 and 116) deeper than 0.015 inch.

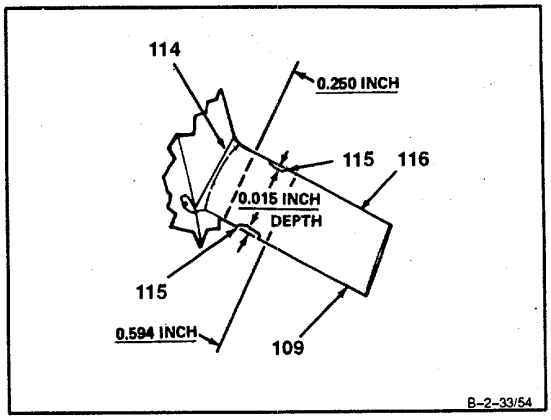

i. Inspect area between 0.594 inch and 0.938 inch above blade root (114). There shall be no nicks or dents (117) in edges (109 and 116) deeper than 0.030 inch.

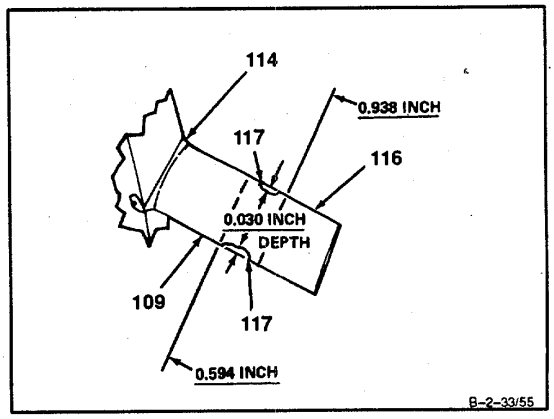

j. Inspect area between 0.938 inch and 1.281 inches above blade root (114). There shall be no nicks or dents (118) in edges (109 and 116) deeper than 0.045 inch

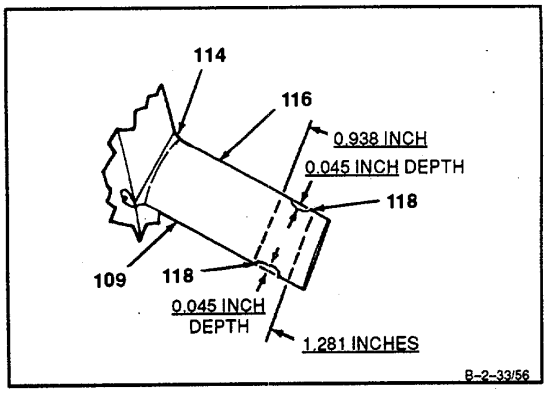

GO TO NEXT PAGE

2-35 INSPECT COMPRESSOR ROTOR BLADES (Continued) 2-35

a. Inspect First and Second Stage Compressor Blades for Erosion as Illustration.

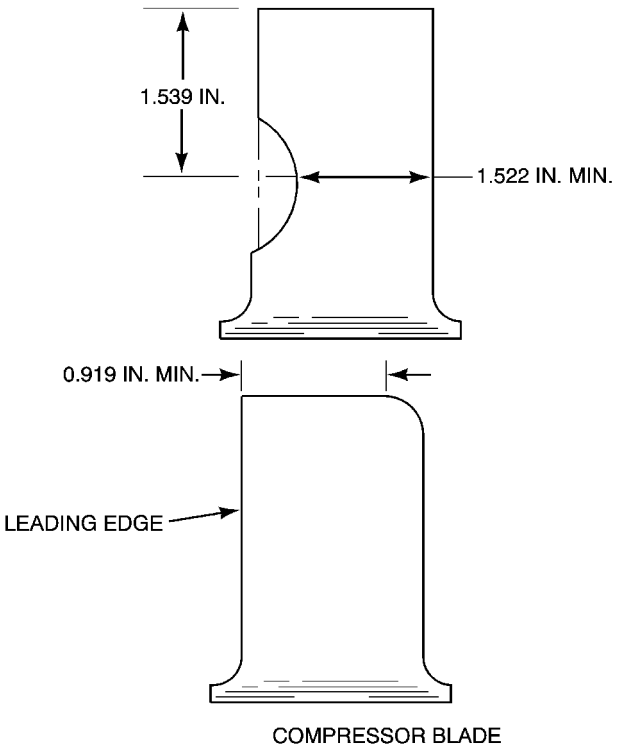

COMPRESSOR BLADE (FIRST AND SECOND STAGES) - EROSION LIMITS

MS026927

b. Inspect Third through Seventh Stages Compressor Blades for Erosion as Illustration.

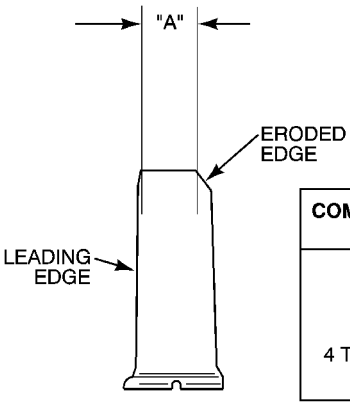

COMPRESSOR STAGE	DIM "A" (INCHES)
3	0.704 MIN.
4 THROUGH 7	0.582 MIN.

COMPRESSOR BLADE (THIRD THROUGH SEVENTH STAGES) - EROSION LIMITS

MS026928

GO TO NEXT PAGE

2-35 INSPECT COMPRESSOR ROTOR BLADES (Continued) 2-35

k. Inspect area between 1.281 inches above blad root (114) and blade tip (106). There shall be no nicks or dents (119) in edges (109 and 116) deeper than 0.060 inch.

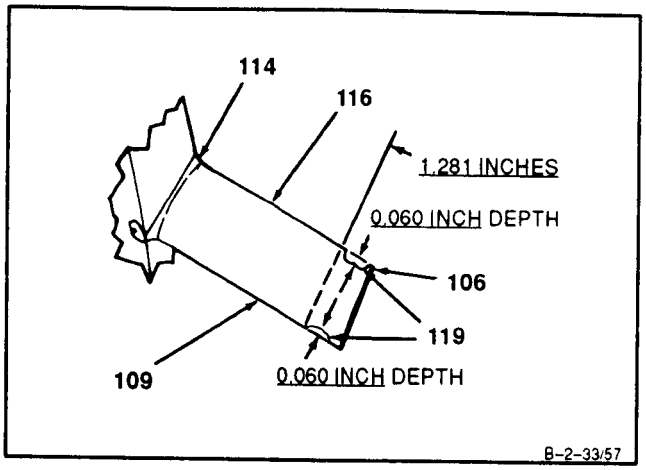

8. **Inspect centrifugal impeller (120)** as follows:

a. **Inspect critical area (121).** There shall be no cracks or nicks. There shall be no bends or distortion. There shall be no dents with sharp edges. There shall be no smooth-edged dents (122) deeper than 0.010 inch or larger than 0.030 inch in diameter.

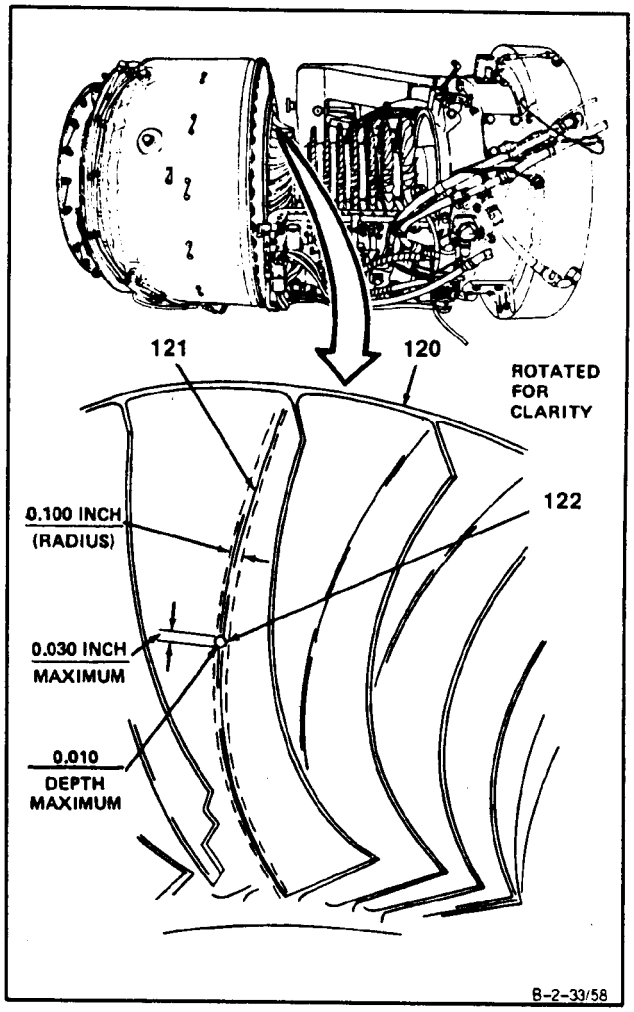

GO TO NEXT PAGE

b. **Inspect leading edge (123).** There shall be no cracks. There shall be no bends or distortion. There shall be no nicks or dents (124) deeper than 0.100 inch or longer than 0.300 inch. These nicks and dents (124) must be separated by at least the length of the longest nick or dent.

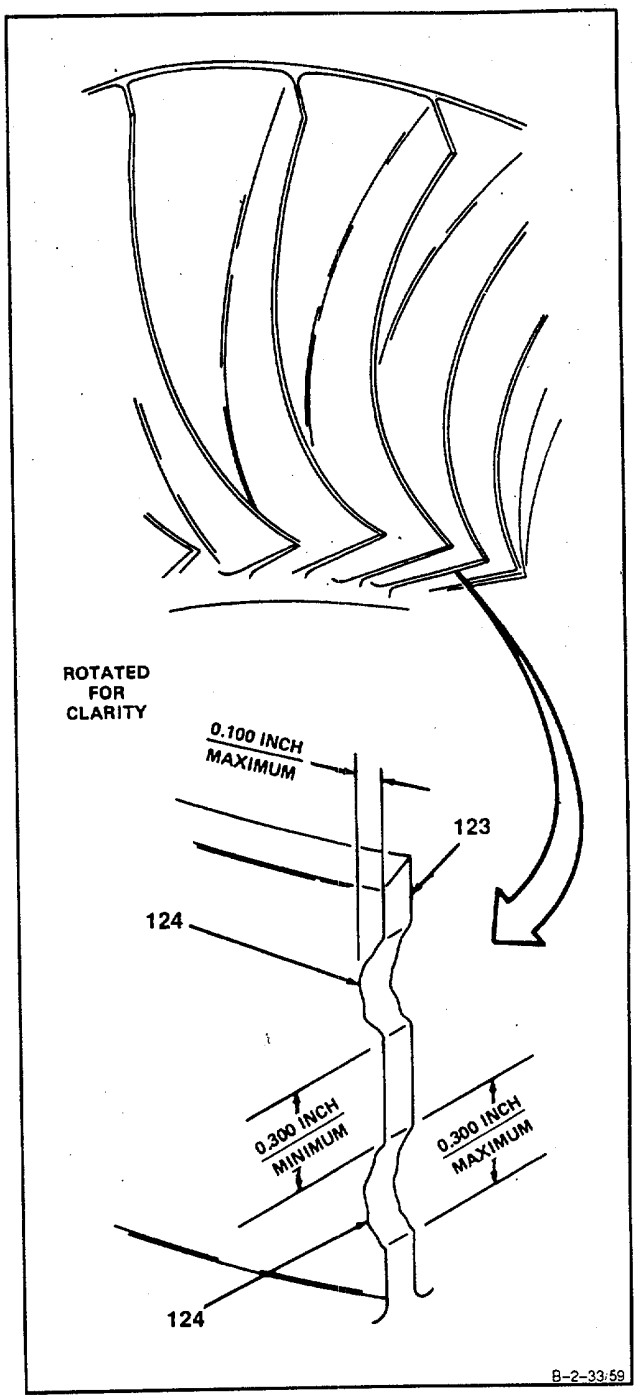

GO TO NEXT PAGE

c. **Inspect trailing edge (125).** There shall be no cracks. There shall be bends or distortion. There shall be no nicks or dents (126) deeper than 0.060 inch or longer than 0.300 inch. These nicks and dents (126) must be separated by at least the length of the longest nick or dent.

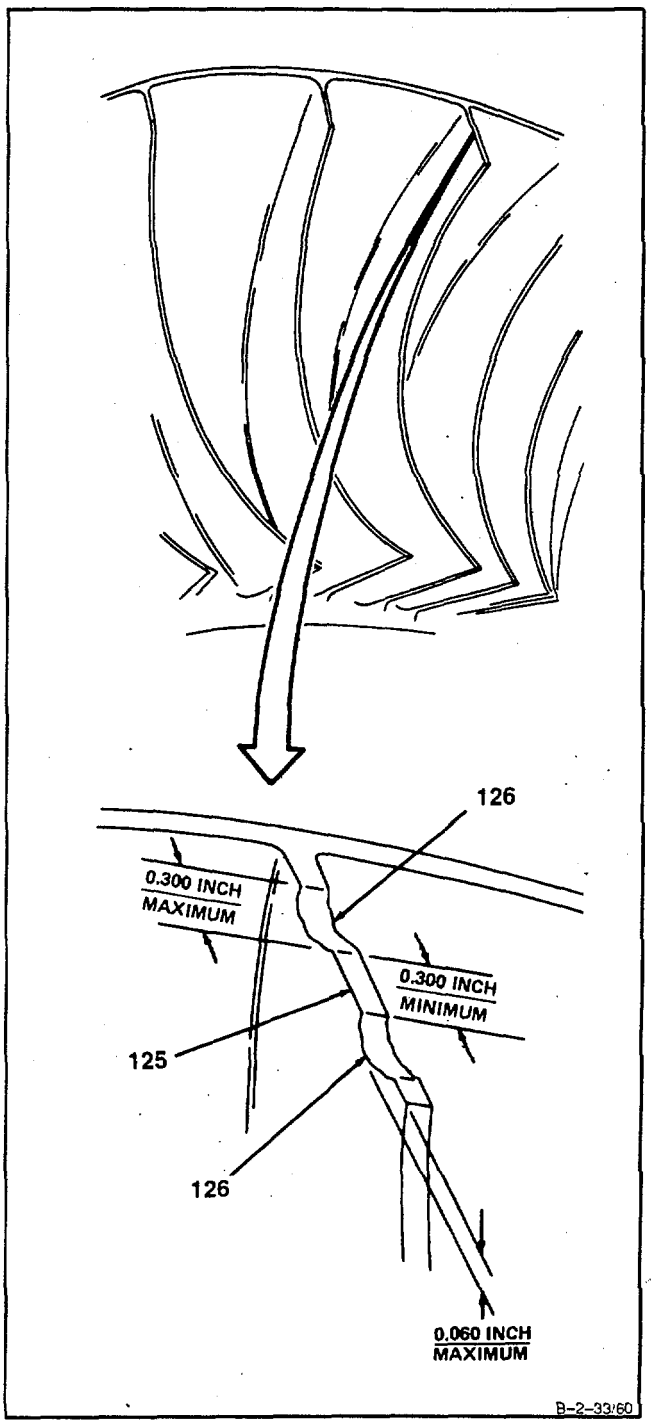

GO TO NEXT PAGE

d. Inspect **blade** tip (127). There shall be no cracks. There shall be no bends or distortion. There shall be no more than six nicks or dents (128). These nicks and dents (128) shall not be deeper than 0.060 inch or longer than 0.300 inch and must be separated by 3/8 inch minimum.

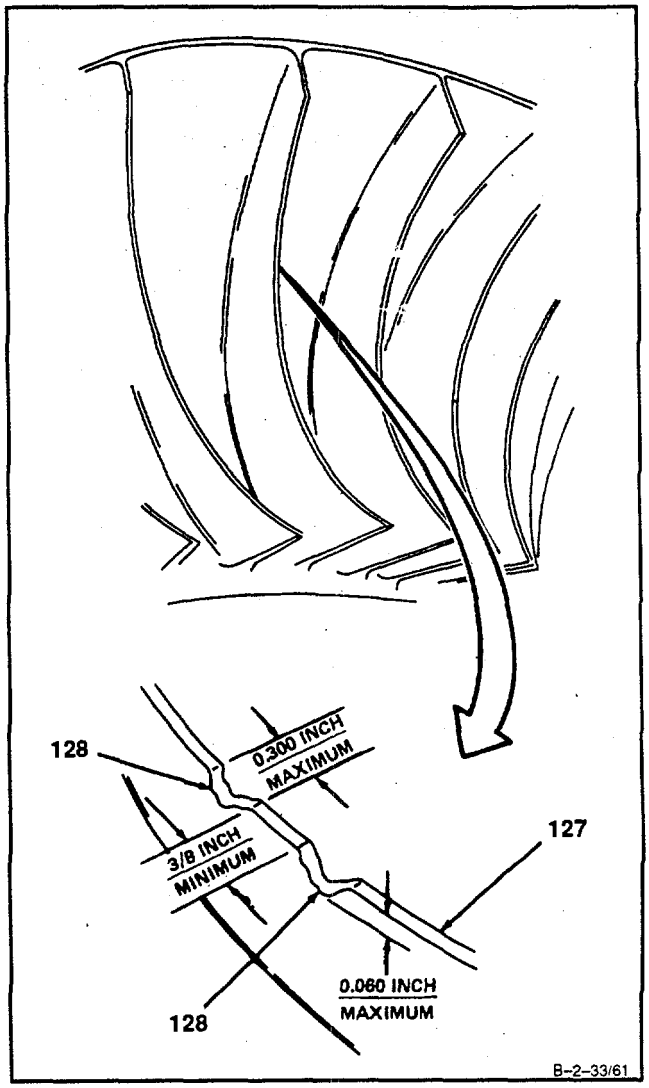

GO TO NEXT PAGE

e. **Inspect airfoil surfaces (129).** There shall be no cracks. There shall be no bends or distortion. There shall be no nicks or dents (130) deeper than 0.030 inch or longer than 0.350 inch. These nicks and dents (130) must be separated by 1/2 inch minimum.

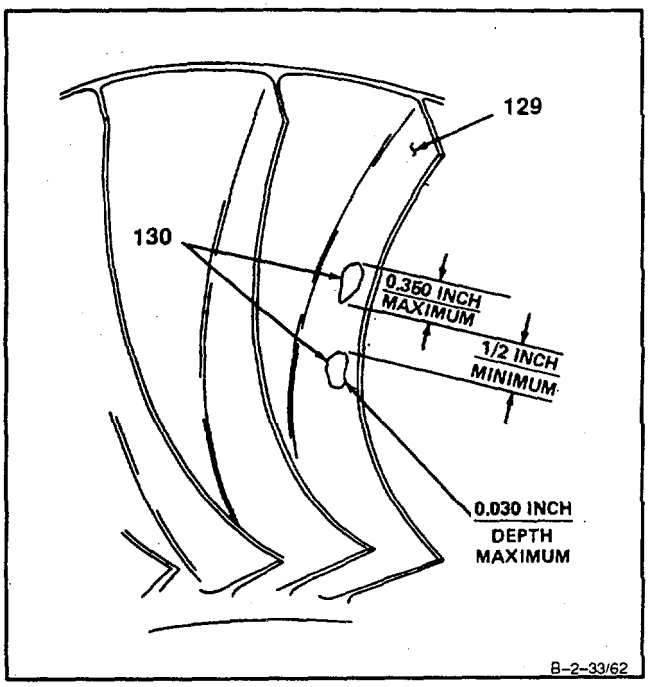

FOLLOW-ON MAINTENANCE:
None

END OF TASK

2-36 REPAIR COMPRESSOR ROTOR BLADES 2-36

INITIAL SETUP

Applicable Configurations:
All

Tools:
Powerplant Mechanic's Tool Kit, NSN 5180-00-323-4944
Technical Inspection Tool Kit, NSN 5180-00-323-5114
Hand File Set
Micrometer Caliper Set
DA Pamphlet 738-751

Materials:
Carborundum Stone (Ell)
Crocus Cloth (E16)

Personnel Required:
Aircraft Powerplant Repairer
Aircraft Powerplant Inspector

References:
Task 2-33
Task 2-35
Task 2-37

NOTE

In following step, finish strokes shall be parallel to leading and trailing edges. When blade is repaired on leading or trailing edges, blend edges to a smooth radius.

1. **Blend-repair compressor rotor blades (1) that have allowable damage (Ref. Task 2-35).** Use files, carborundum stone (E11) and crocus cloth (E16).

2. **Inspect repaired areas of blades (1).** Degree of repair shall not exceed maximum allowable inspection dimensions (Ref. Task 2-35) and the following:

   a. On airfoil surfaces (2), three-quarters of blade thickness shall remain after repair.

   b. Length of any repair shall be at least twice the depth of repair.

   c. Length of any repair shall not be longer than five times the depth of repair.

   d. There shall be no repair in critical area (3) of blade. Repairs begun out of critical area (3) shall not extend into critical area (3).

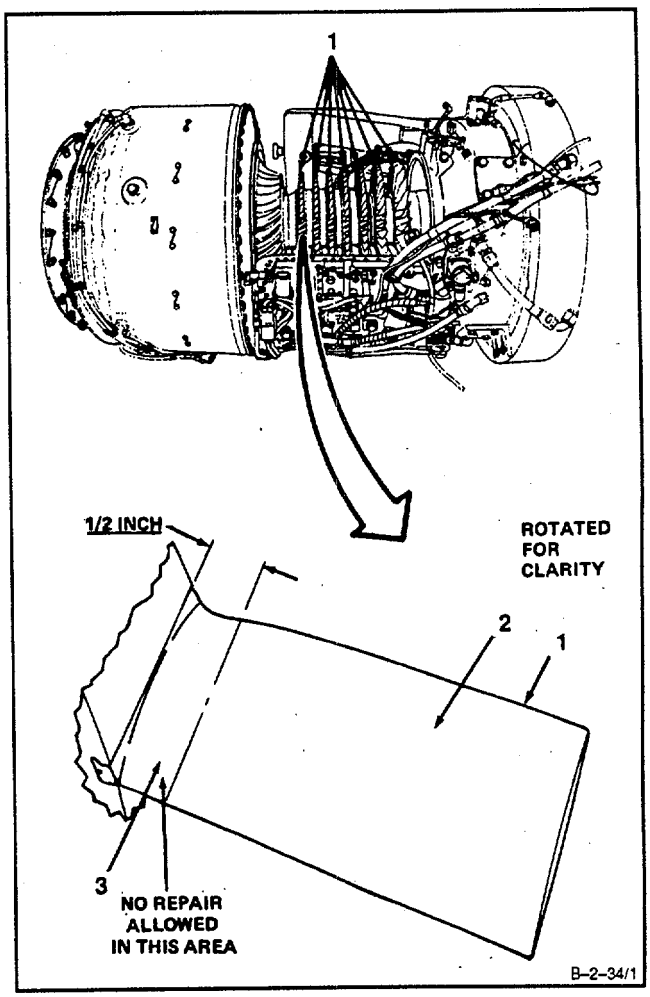

GO TO NEXT PAGE

e. Repairs made within 0.120 inch of blade tip corners (4) shall be blended to a smooth radius.

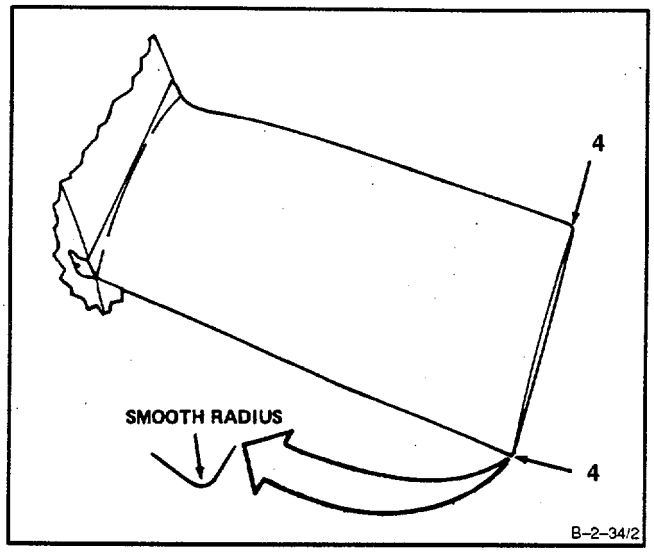

3. **Replace blades (1) that have damage beyond limits or if repair limits cannot be met,** as follows:

NOTE

There shall be no more than 50 blades replaced on compressor rotor between overhaul cycles.

a. **Replace blades** (Ref. Task 2-33 and 2-37).

b. **Record number of blades replaced** in engine log. (Ref. DA Pamphlet 738-751).

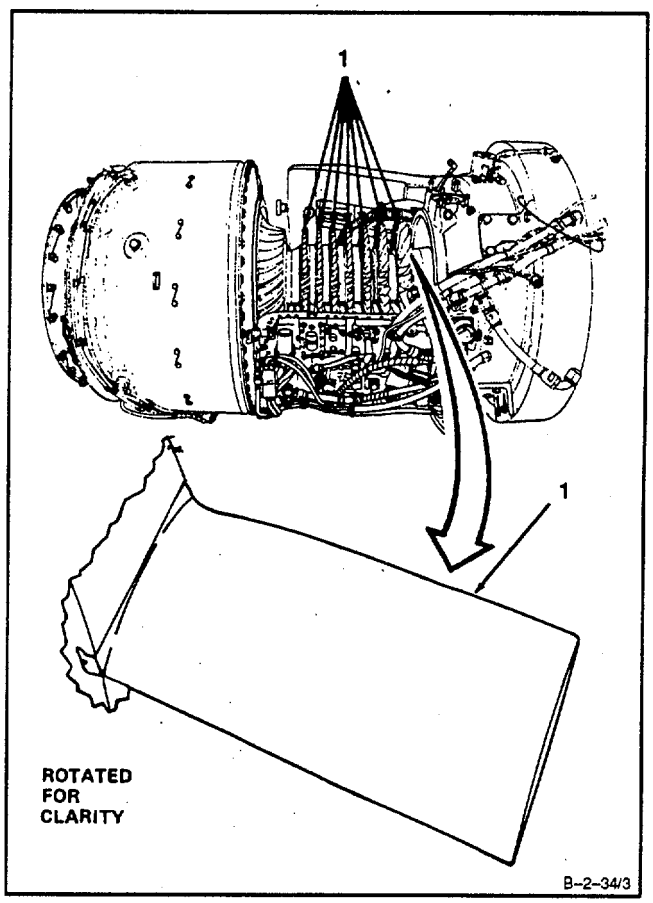

GO TO NEXT PAGE

NOTE
In following step, finish strokes shall be parallel to leading edge.

4. Blend-repair blades (1) to remove material rollover(s) (5). Use files, carborundum stone (E11) and crocus cloth (E16).

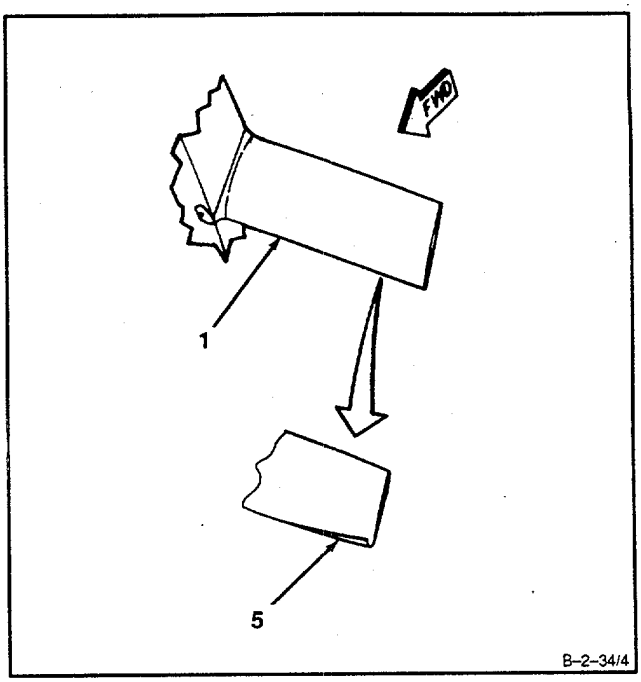

INSPECT

GO TO NEXT PAGE

5. **Repair impeller assembly (6)** as follows:

   a. There shall be no repair in critical area (7) of blade (8).

   NOTE

   The following repair is allowed only if size of defect after repair does not exceed inspection limits (Ref. Task 2-35).

   b. **Blend repair blades (8)** to a smooth contour in area of defect. Use carborundum stone (E11). Make final strokes in radial direction.

   c. **Remove sharp edges** around repair. Use file. Make final strokes in radial direction.

   d. Final **polish repair area.** Use crocus cloth (E16). Make final strokes in radial direction.

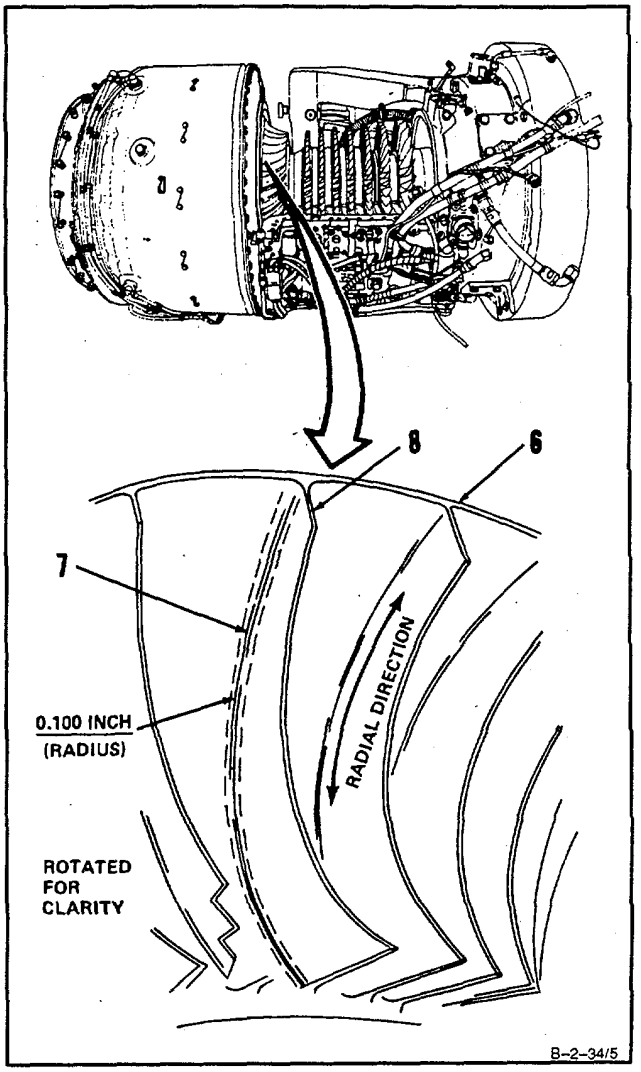

INSPECT

GO TO NEXT PAGE

e. **Inspect repaired area of blades (8)** as follows:

(1) Use micrometer caliper. Measure blade wall thickness (9). Minimum blade wall thickness shall be 0.030 inch.
(2) Inspect blade corners (10). Repaired areas within 0.120 inch of corners (10) shall be blended to a smooth radius.
There shall be no sharp edges.
(3) If damage to impeller assembly (6) exceeds limits after repair, replace engine.

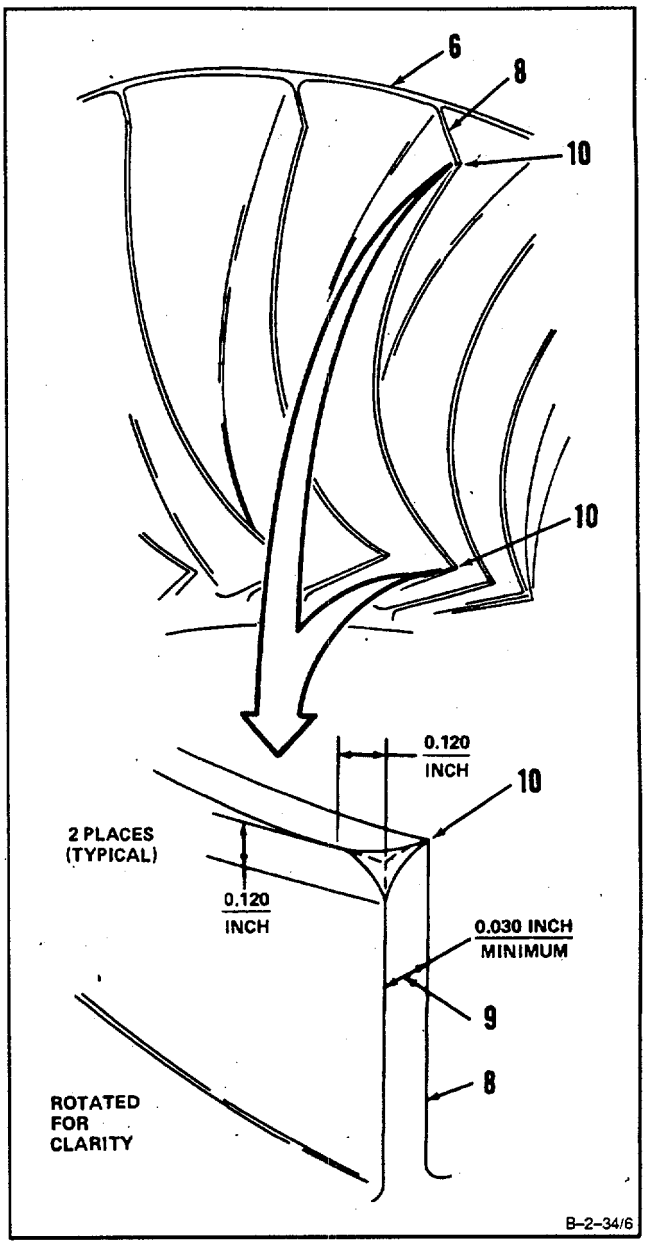

INSPECT

FOLLOW-ON MAINTENANCE:
NONE

END OF TASK

2-37 INSTALL COMPRESSOR ROTOR BLADES 2-37

INITIAL SETUP .

Applicable Configurations:

All

Tools:

Powerplant Mechanic's Tool Kit, NSN 5180-00-323-4944
Technical Inspection Tool Kit, NSN 5180-00-323-5114
Drift Assembly (T34)
Installing Tool (T35)
Dial Indicator Support (T40)
Blade Installation Kit (T47)
Hand File Set
Balance Scale, NSN 6670-00-401-7195
Dial Indicator
Rawhide Mallet
Tweezers, NSN 5120-00-247-0868
Surface Plate

Materials:

Abrasive Paper (E3)
Lockwire (E32)

Parts

Springs
Pins
Key Washers

Personnel Required:

Aircraft Powerplant Repairer (2)
Aircraft Powerplant Inspector

References:

TM 1-2840-252-23P

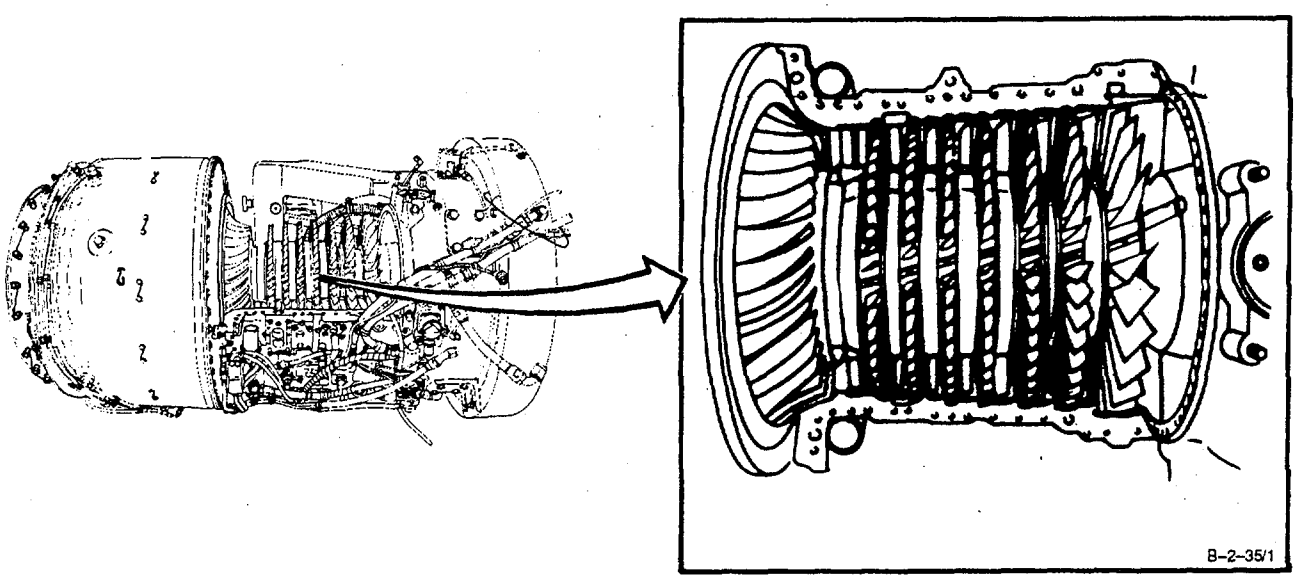

GO TO NEXT PAGE

1. **Install first stage blade** (1) **into disc** as follows:
   a. **Weigh serviceable blade and damaged blade** that is to be replaced using balance scale.

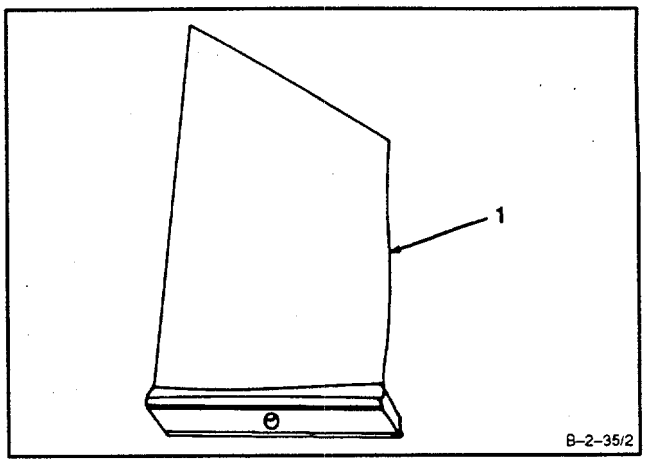

NOTE
Weight of blades shall be within 0.1 gram of each other.

NOTE
Damaged blade may have excessive missing material. If this occurs, remove opposite blade 180 degrees away. Weigh and select serviceable blade having same weight within 0.1 gram difference. If correct blade weight is not available, select two serviceable blades of equal weight. Install blades 180 degrees apart.

NOTE
If more than 10 single blades are replaced, each additional serviceable blade must exactly match weight of blade removed. It may not be possible to match weights of old and serviceable blades. If this happens, additional blades must be replaced in matched sets.

NOTE
Number of blades and stages in which they were replaced must be entered in engine record. Maximum of 50 blades may be replaced on compressor rotor between overhaul cycles.

   b. **Select serviceable blade (1) that is within 0.1 gram in weight of blade to be replaced.** Refer to step a above for weighing procedure.

GO TO NEXT PAGE

c. Remove metal evenly from bottom of base of serviceable blade (1) with abrasive paper (E3) (2) on a flat surface plate (3). Remove just enough metal to obtain slight press fit in disc.

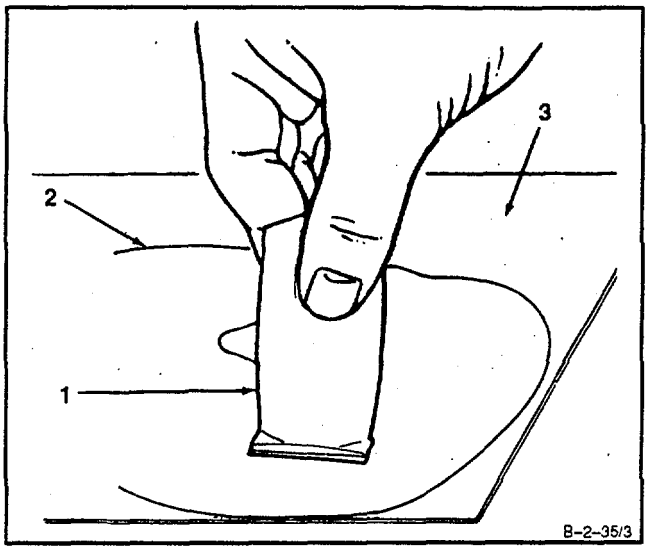

d. Align empty blade slot in disc (4) with slot (5) in bearing housing.

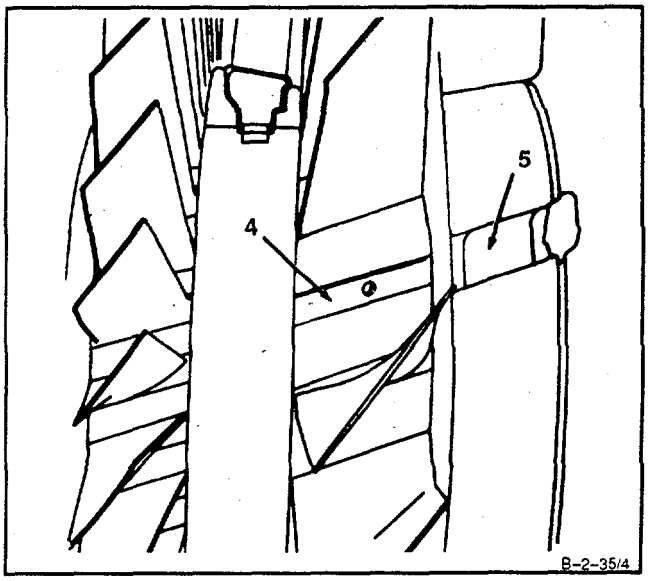

GO TO NEXT PAGE

e. **Install blade (1) rearward** by hand temporarily into disc slot (4).

NOTE

It is not necessary to install lockpin or spring at this time.

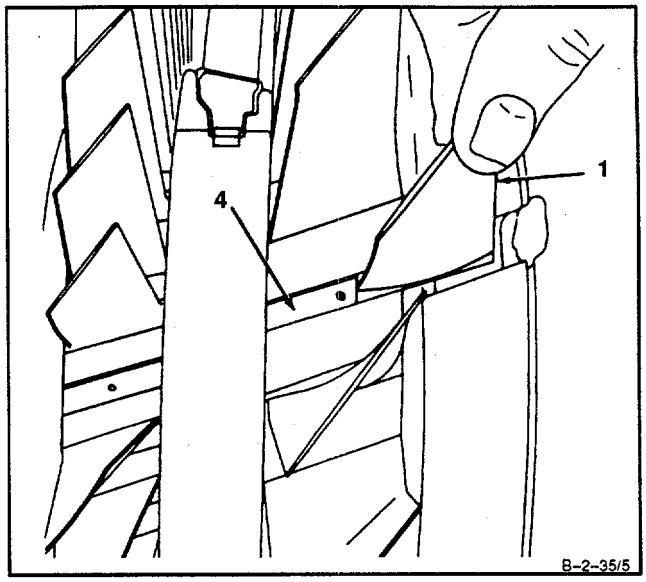

f. **Install dial Indicator** as follows:

(1) Remove three bolts (6) and key washers (7).

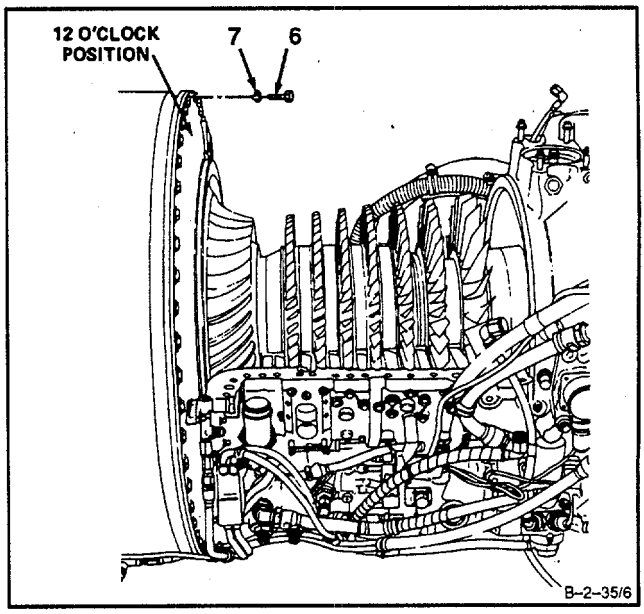

GO TO NEXT PAGE

(2) Install dial indicator support (T40) (8) and three bolts (9) on housing (10).

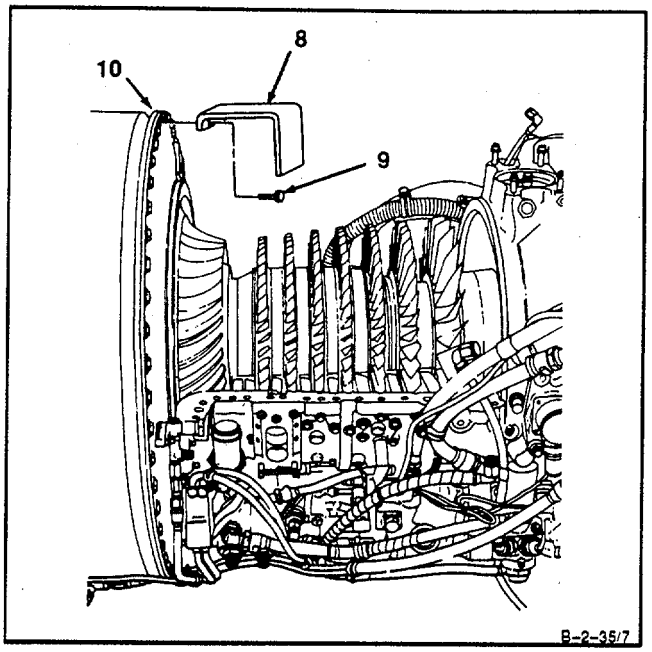

(3) Install dial indicator magnetic base (11) and dial indicator (12) on dial indicator support (8).

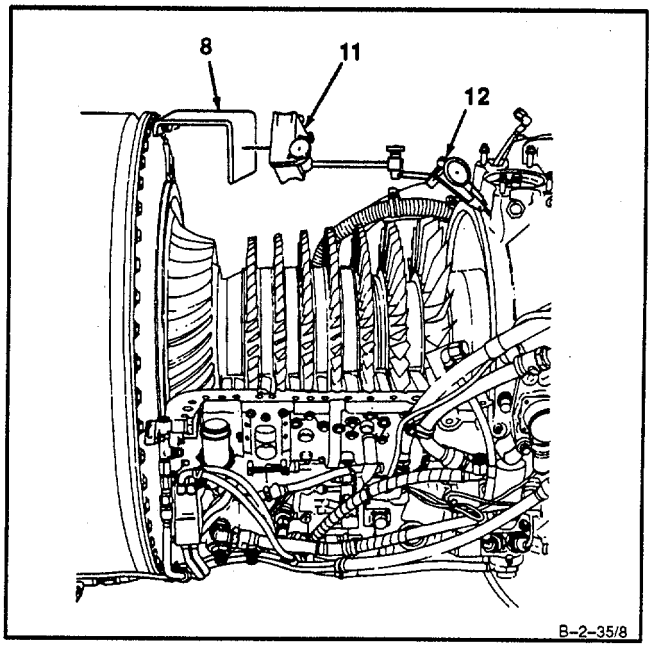

GO TO NEXT PAGE

NOTE

Tip shake limits shall be taken only if blade was replaced.

g. **Check tip shake limits** with dial indicator (12). Measure radial movement of blade by a radial measurement of 2.0 inches from outer rim of disc. **Tip shake limits shall be** 0.005 **to 0.059 Inch. If** minimum tip shake cannot be met, repeat steps c through e. If tip shake exceeds maximum limits, replace blade.

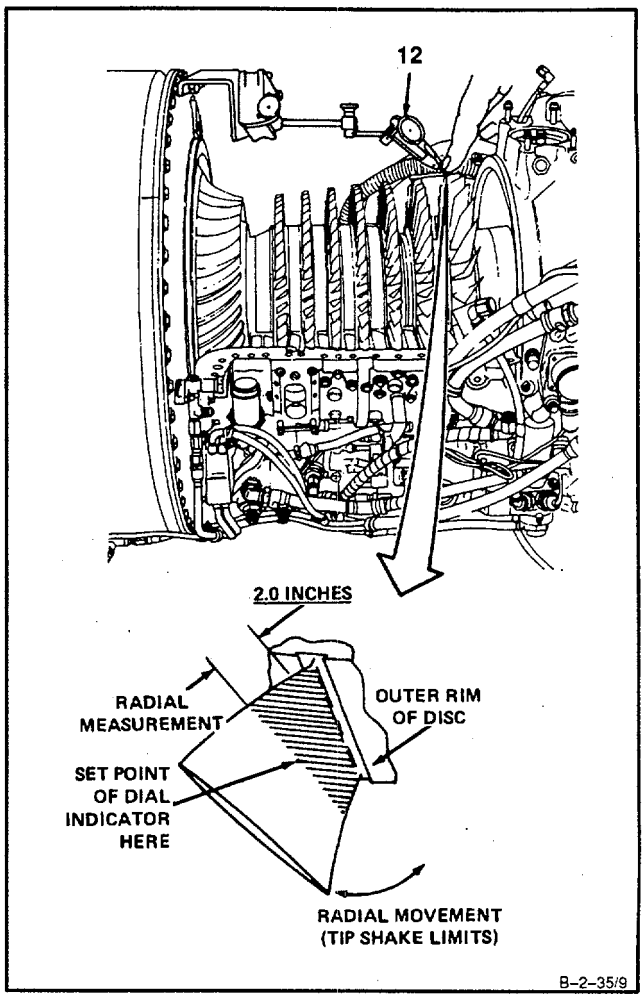

INSPECT

h. **Remove dial indicator** from dial indicator support.

GO TO NEXT PAGE

i. **Measure tip clearance** of serviceable blade (1) using thickness gage (13).

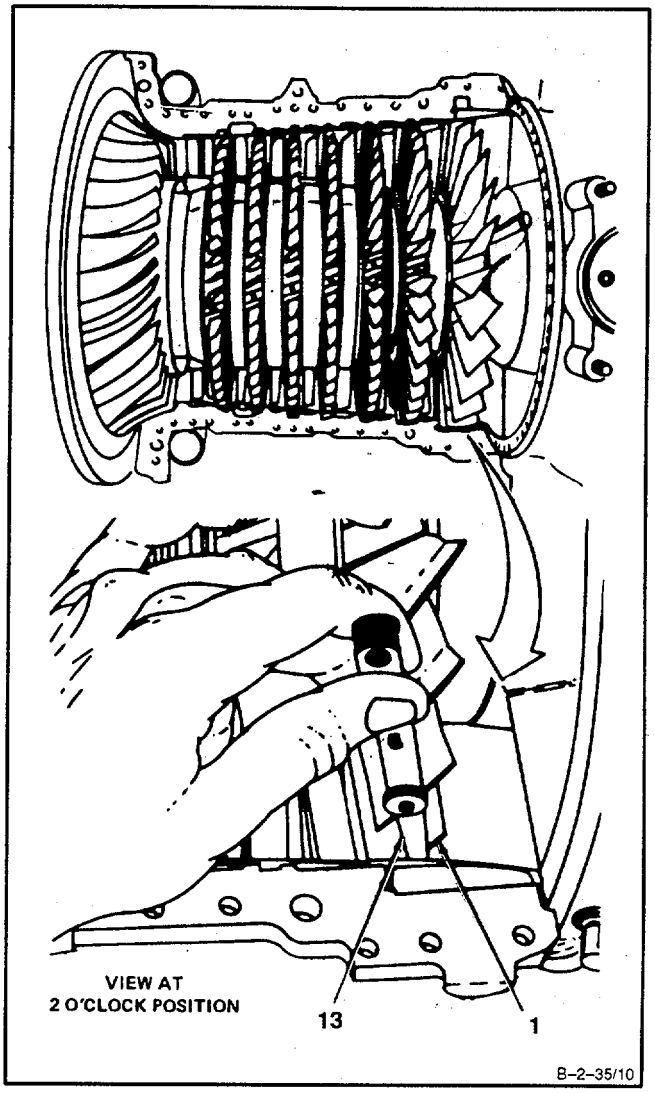

GO TO NEXT PAGE

CAUTION

Do not use power grinder **to** remove **metal from blade. Power** grinder **could easily** damage **blade.**

j. File tip of blade (14) with file (15) to obtain tip clearance equal to two adjacent blades.

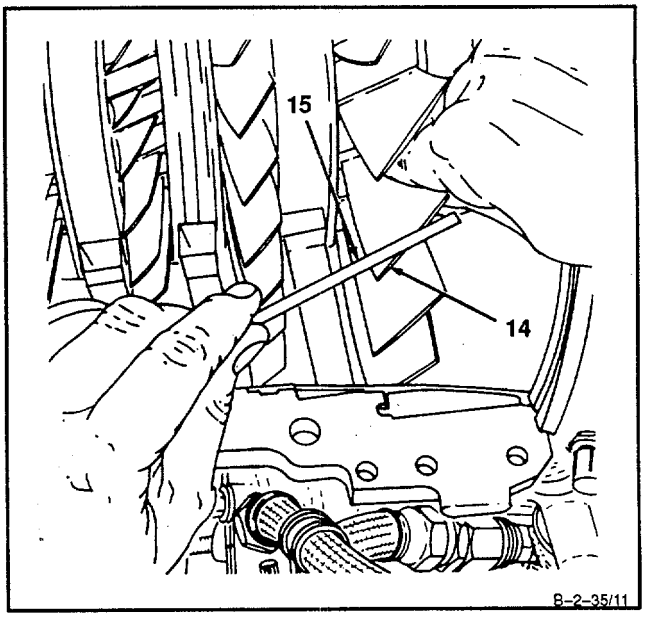

INSPECT

k. Realign blade (1) with slot (5) in bearing housing.

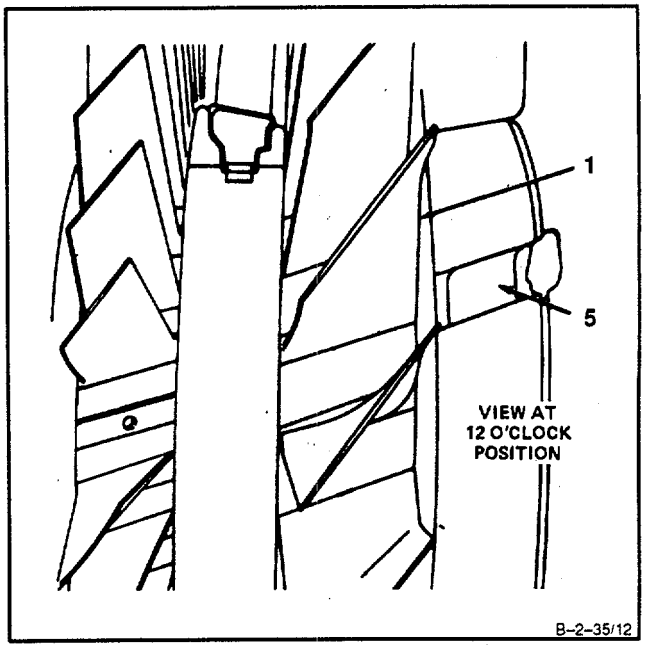

GO TO NEXT PAGE

l. Remove **blade** (1) by hand. Sliding blade forward.

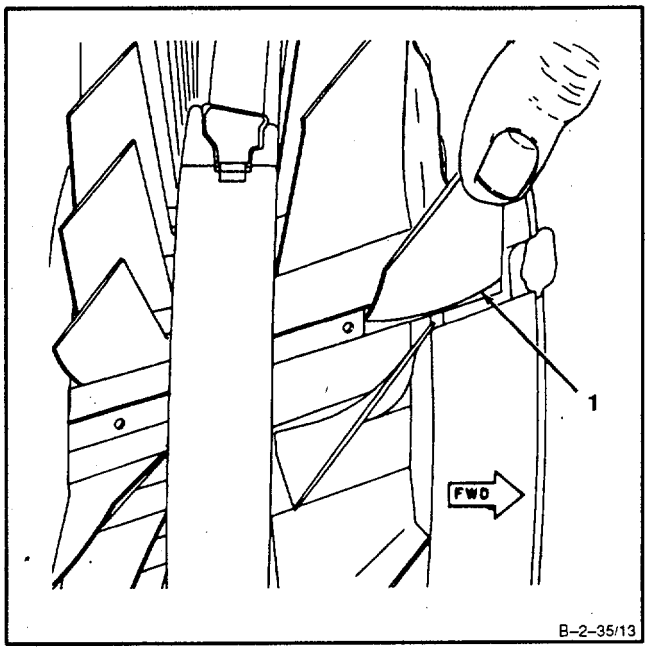

m. Insert length of lockwire (E32) (16) into slot in base of blade (1) as far as it will go.

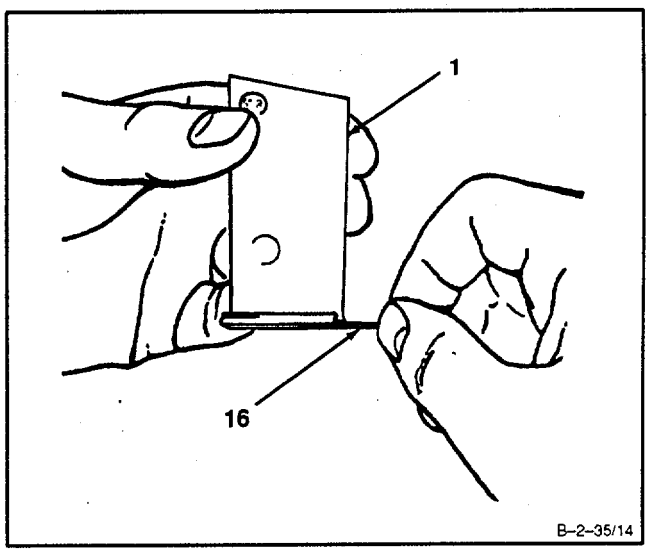

GO TO NEXT PAGE

n. Bend lockwire (16) to indicate depth of slot. **Remove lockwire** (16) and retain for use in following step t.

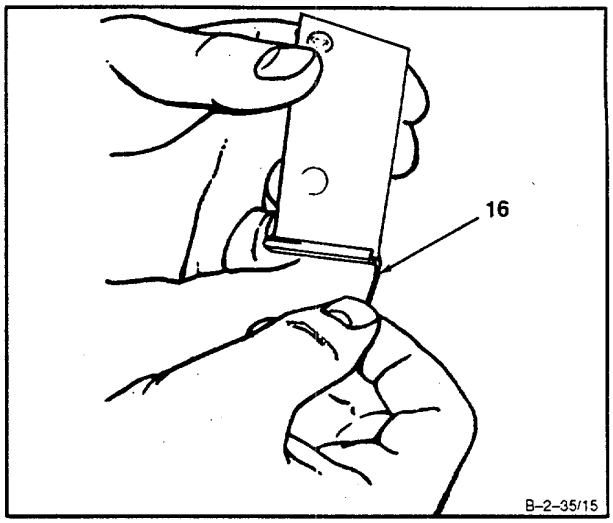

o. Reinsert blade (1) rearward part way into disc slot (4).

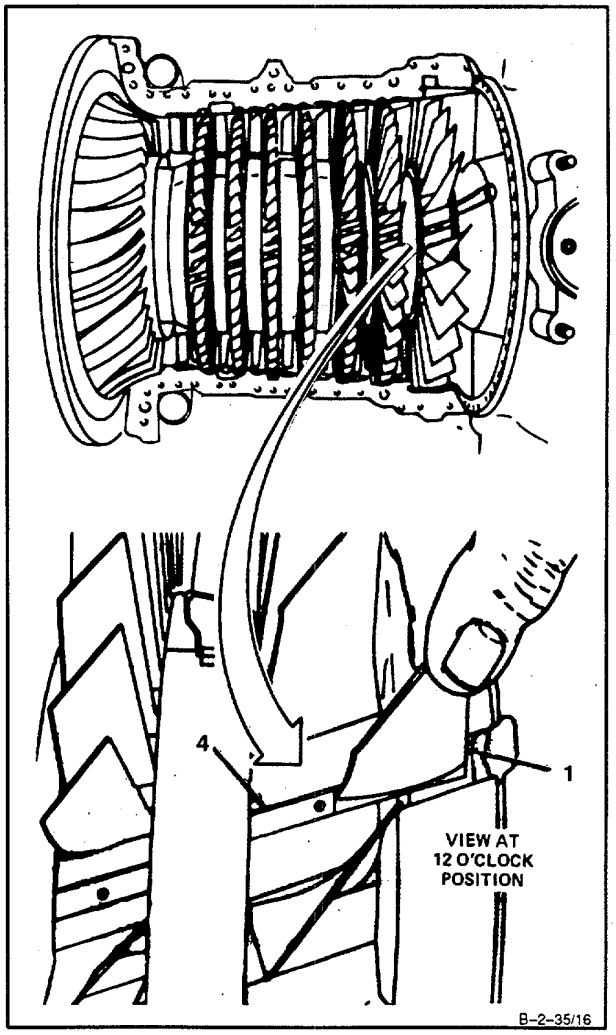

GO TO NEXT PAGE

p. **Install new spring (17)** into hole in disc slot (4) using tweezers (18).

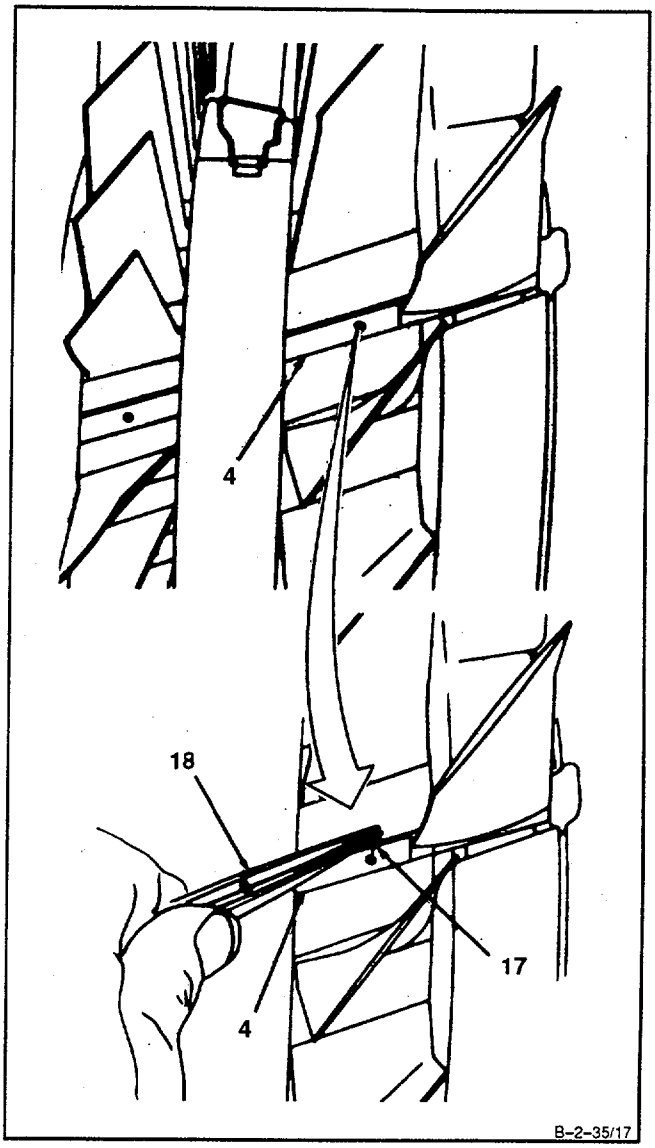

GO TO NEXT PAGE

q. **Install new lockpin (19**) into hole in disc slot (4) using tweezers (18) and scribe (20).

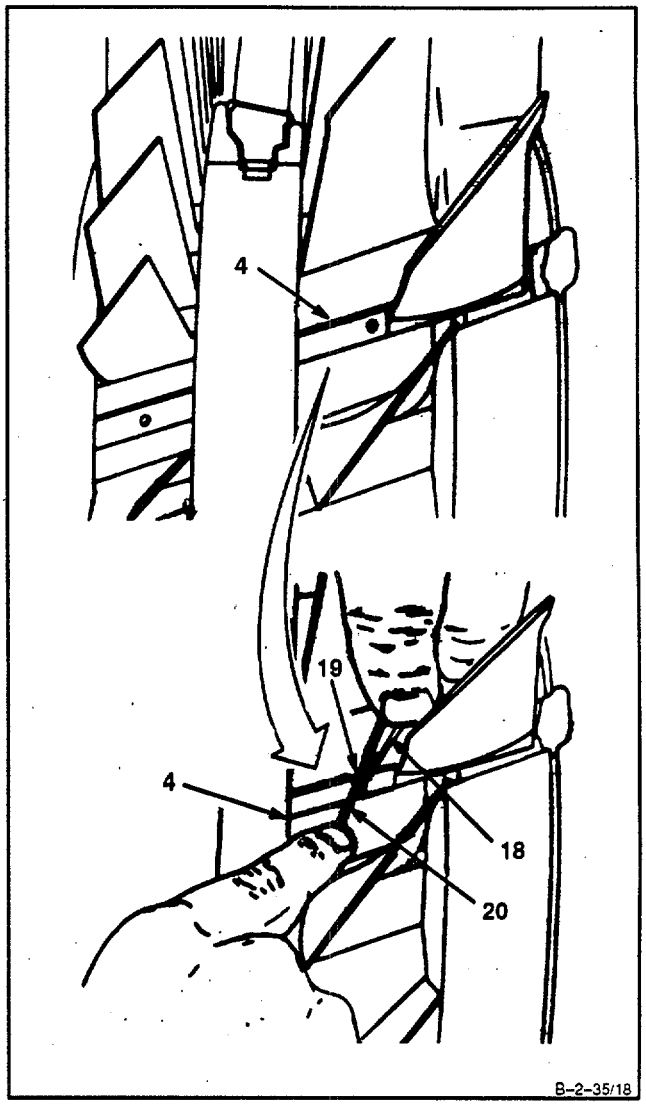

GO TO NEXT PAGE

r. **Depress lockpin (19) with scribe (20)** and install blade (1) rearward. As soon as blade (1) edge catches lockpin pull scribe (20) away.

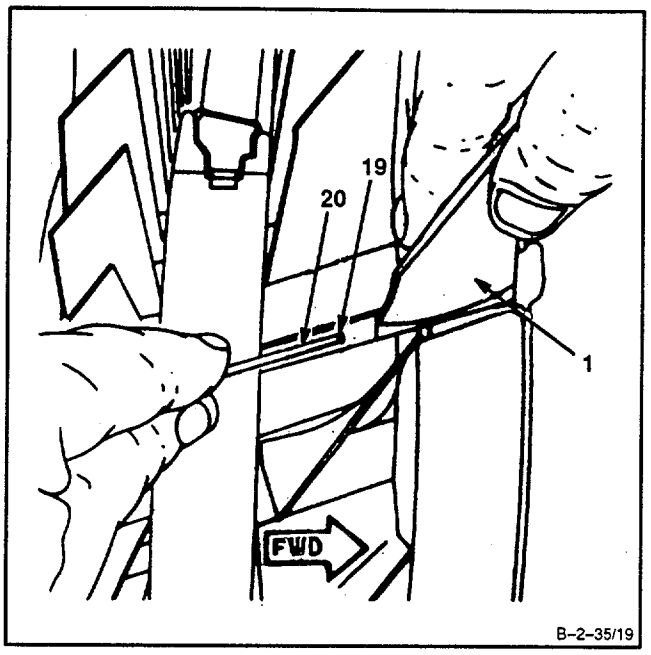

s. **Engage lockpin** by installing blade (1) completely into disc slot by hand.

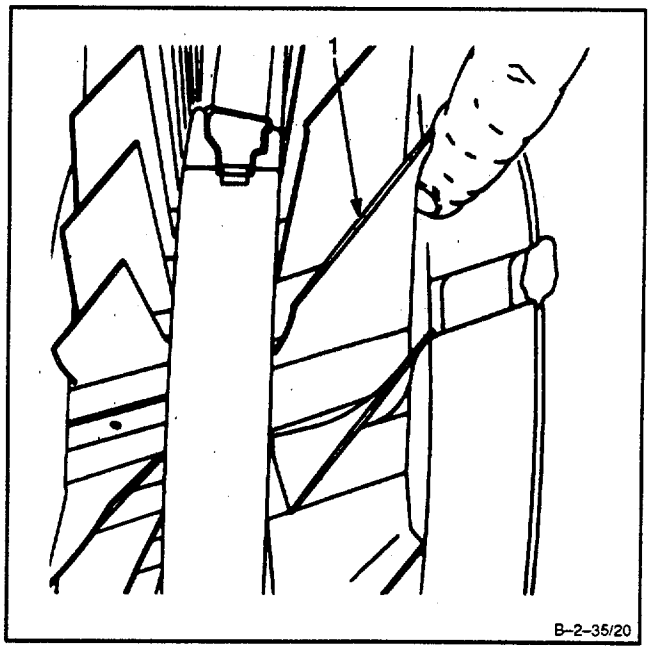

GO TO NEXT PAGE

t. **Check engagement of lockpin** by reinserting bent piece of lockwire (16) used in previous step n. **Insert lockwire (16**) into slot in base of blade (1).

NOTE

Bend of wire shall protrude 1/16 inch from end of blade when wire is bottomed on lockpin.

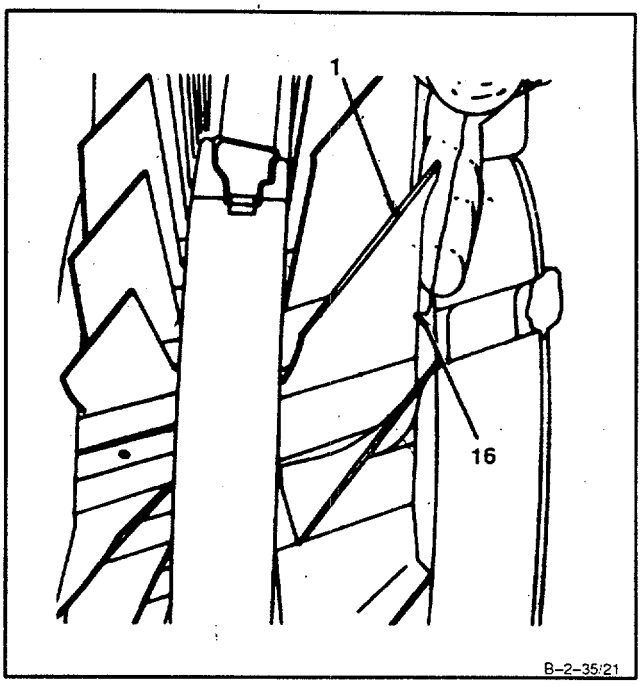

INSPECT

u. **Inspect for blade (1) protrusion from disc. Protrusion at forward face (21) shall not exceed 0.015 Inch. Protrusion at rear face (22) shall not exceed 0.010 Inch.**

v. Inspect lockpin engagement of 26 blades with bent lockwire.

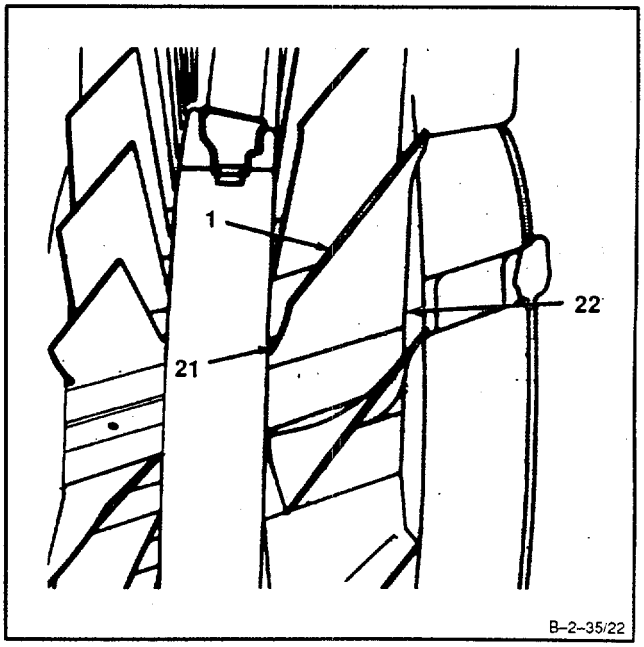

INSPECT

GO TO NEXT PAGE

w. **Check clearance between compressor housing and compressor rotor blades.** Using thickness gage (13). **Check right and left sides** of compressor housing. **Tip clearance shall be 0.016 inch minimum.**

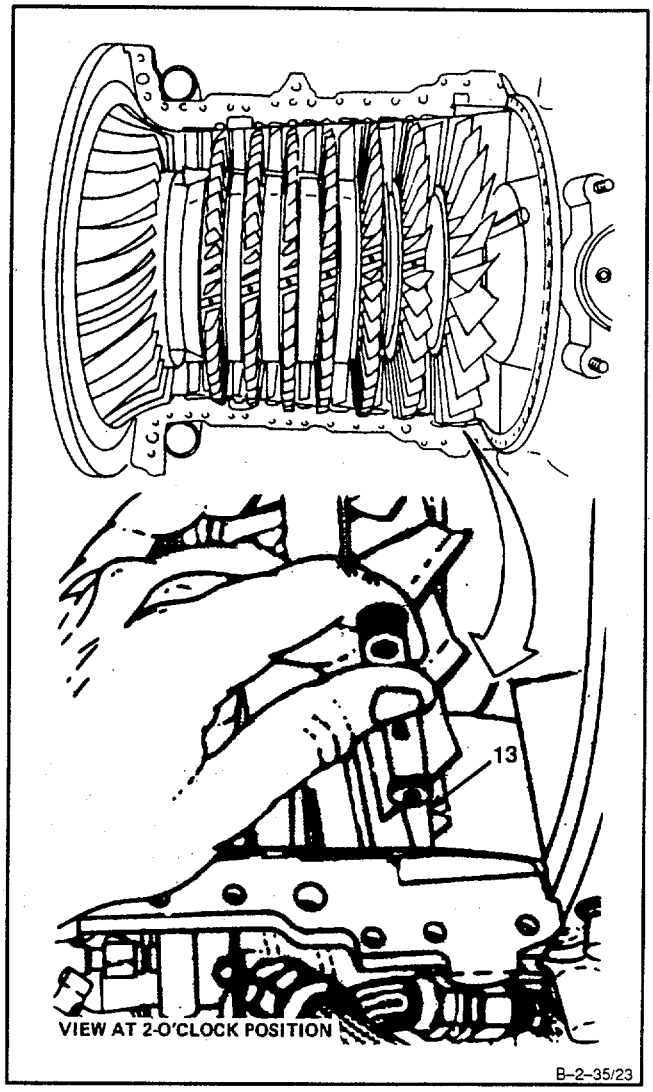

INSPECT

GO TO NEXT PAGE

2. **Install second through seventh stage compressor** blades as follows:

   a. **Weigh serviceable blade and damaged blade** that is to be replaced using balance scale.

NOTE

Weight of blades shall be within 0.1 gram of each other.

NOTE

Damaged blade may have excessive missing material. If this occurs, remove opposite blade 180 degrees away. Weigh and select serviceable blade having same weight within 0.1 gram difference. If correct blade weight is not available, select two serviceable blades of equal weight. Install blades 180 degrees apart.

NOTE

If more than 10 single blades are replaced, each additional serviceable blade must exactly match weight of blade removed. It may not be possible to match weights of old and serviceable blades. If this happens, additional blades must be replaced in matched sets.

NOTE

Number of blades and stages in which they were replaced must be entered in engine record. Maximum of 50 blades may be replaced on compressor rotor between overhaul cycles.

NOTE

This procedure shows third stage compressor blades. It is also applicable to second, fourth, fifth, sixth and seventh stage compressor blades.

GO TO NEXT PAGE

b. **Select serviceable blade (23) that Is within <u>0.1 gram</u> in weight of blade to be replaced.** Refer to step 2 a for weighing procedure.

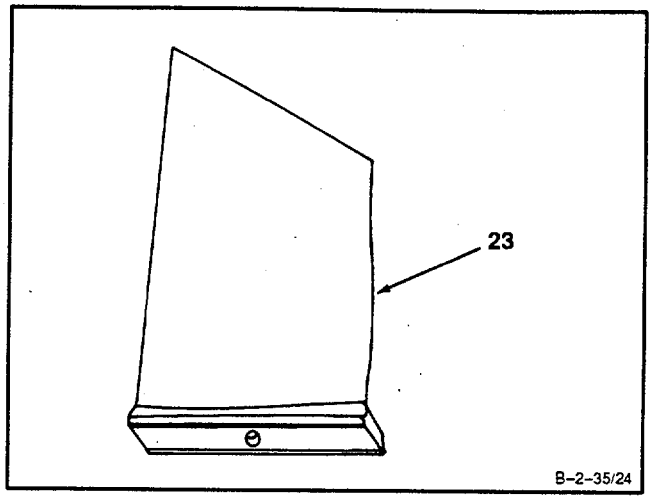

INSPECT

c. **Remove metal evenly from bottom of base of serviceable blade (23)** with abrasive paper (E3) (2) on a flat surface plate (3). **Remove just enough metal to obtain slight press fit in disc.**

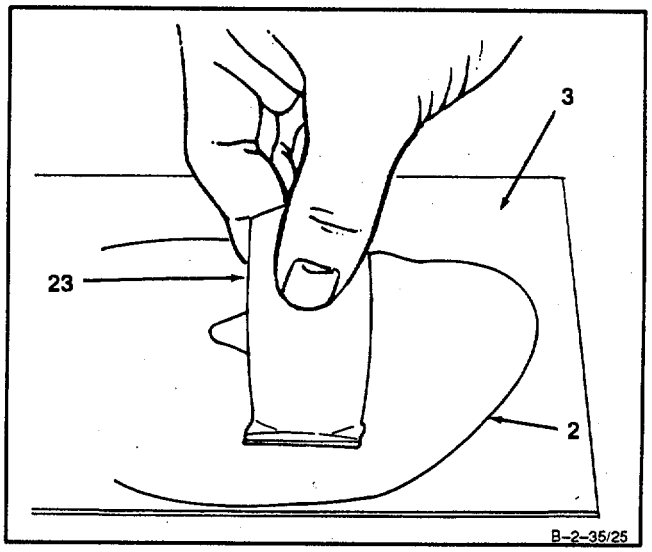

GO TO NEXT PAGE

d. **Install blade (23) rearward temporarily** into compressor disc slot using rawhide mallet and installation tool and rod contained in blade installation kit (T47) (24).

NOTE

It is not necessary to install lockpin or spring at this time.

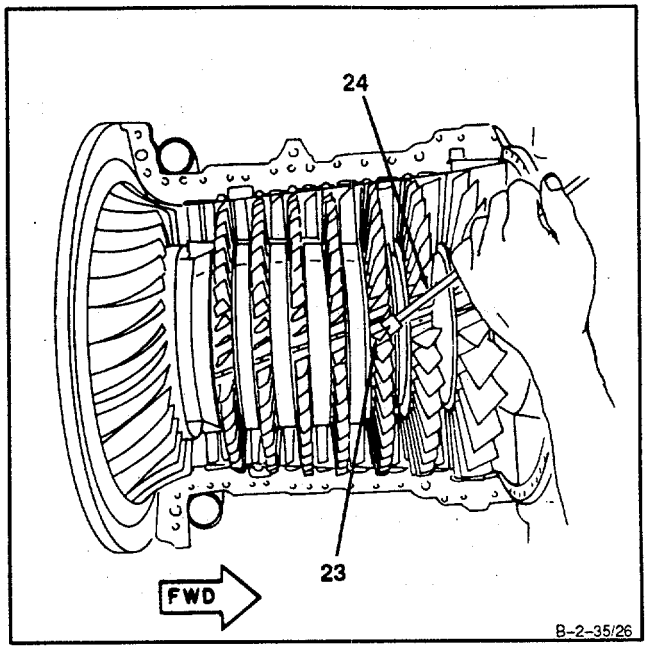

e. **Install dial Indicator magnetic base (11) on dial Indicator support (8).**

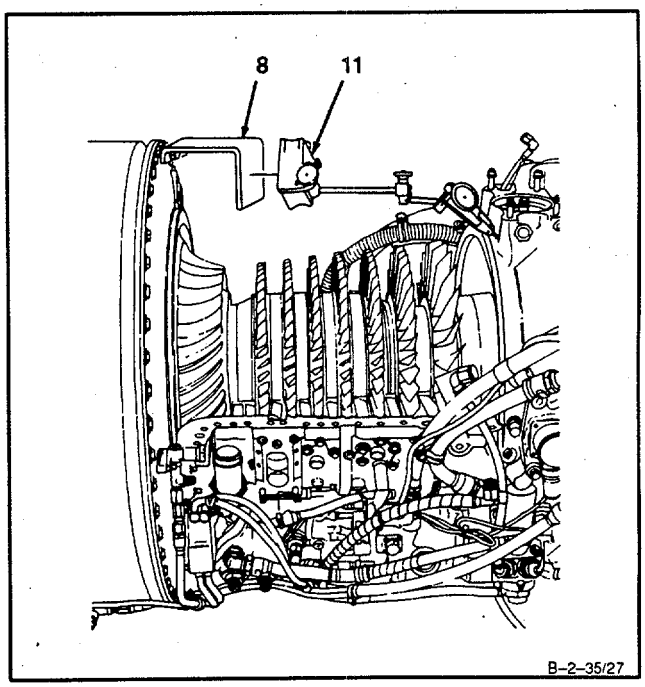

GO TO NEXT PAGE

f. **Check tip shake limits** for second through seventh stage blades with dial indicator (12). **Measure radial movement of blade using a radial measurement from outer rim of disc. Tip shake limits are as follows:**

NOTE

Tip shake limits shall be taken only on replaced blade.

(1) **Second Stage. Measure radial movement of blade using a radial measurement of 1.75 Inches from outer rim of disc. Tip shake limits shall be 0.005 to 0.051 inch.**

(2) **Third Stage. Measure radial movement of blade using a radial measurement of 1.5 Inches from outer rim of disc. Tip shake limits shall be 0.005 to 0.045 inch.**

(3) **Fourth through seventh stage. Measure radial movement of blade using a radial measurement of 1.375 inches from outer rim of disc. Tip shake limits shall be 0.005 to 0.040 inch.**

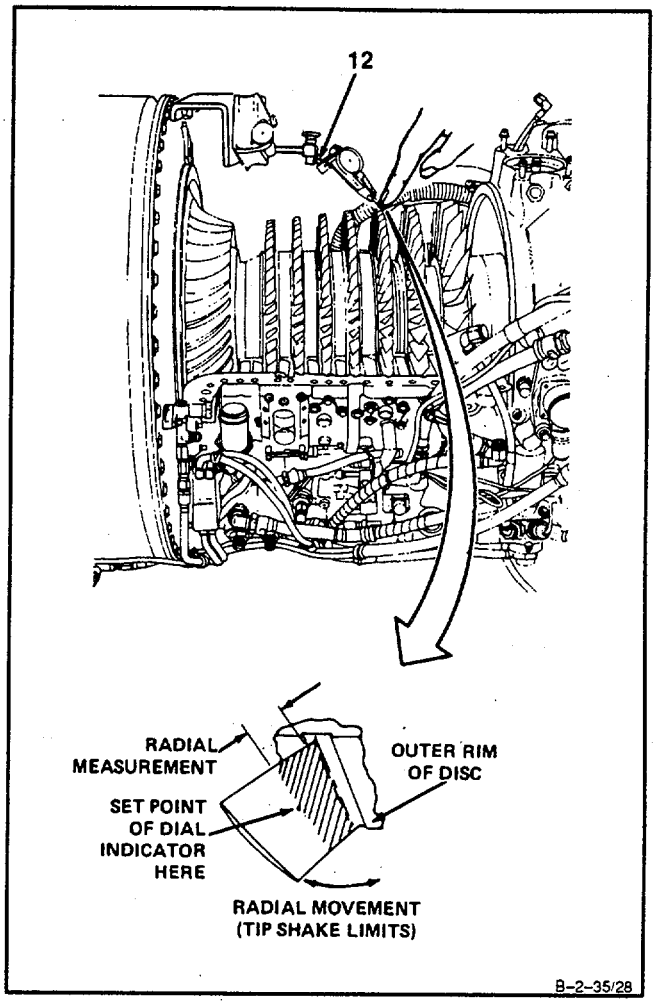

INSPECT

GO TO NEXT PAGE

g. **Remove dial Indicator** as follows:

(1) Remove magnetic base (11) of dial indicator from dial indicator support (8).

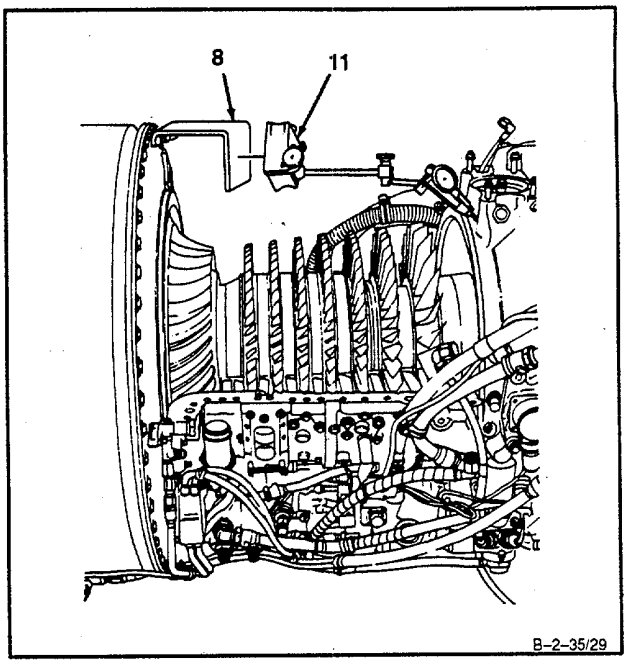

(2) Remove three bolts (9) and dial indicator support (T40) (8) from housing (10).

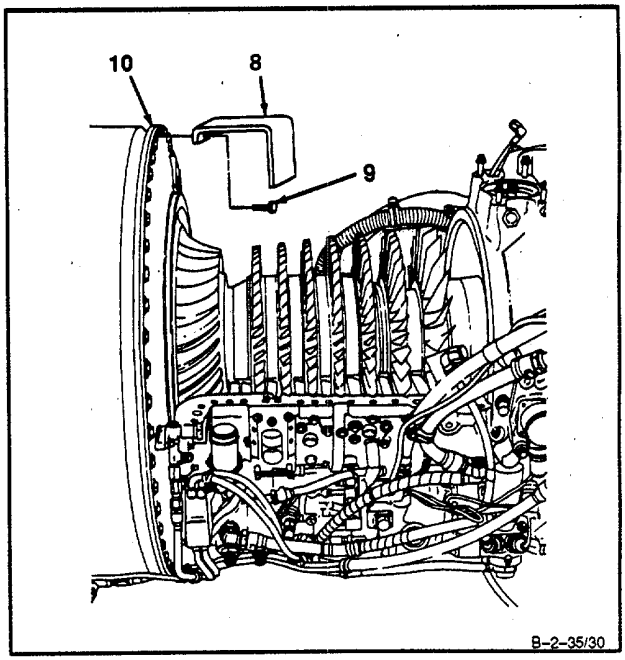

GO TO NEXT PAGE

(3) Install three bolts (6) and key washers (7).

(4) Lock bolts (6) by bending tabs of key washers (7).

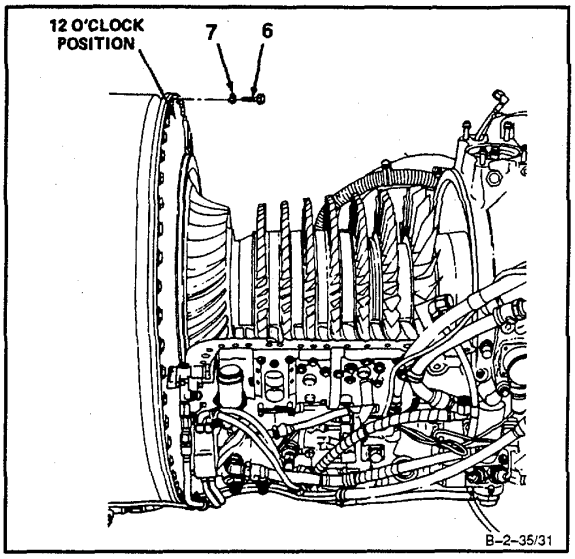

h. **Measure tip clearance** of serviceable blade (23) using thickness gage (13).

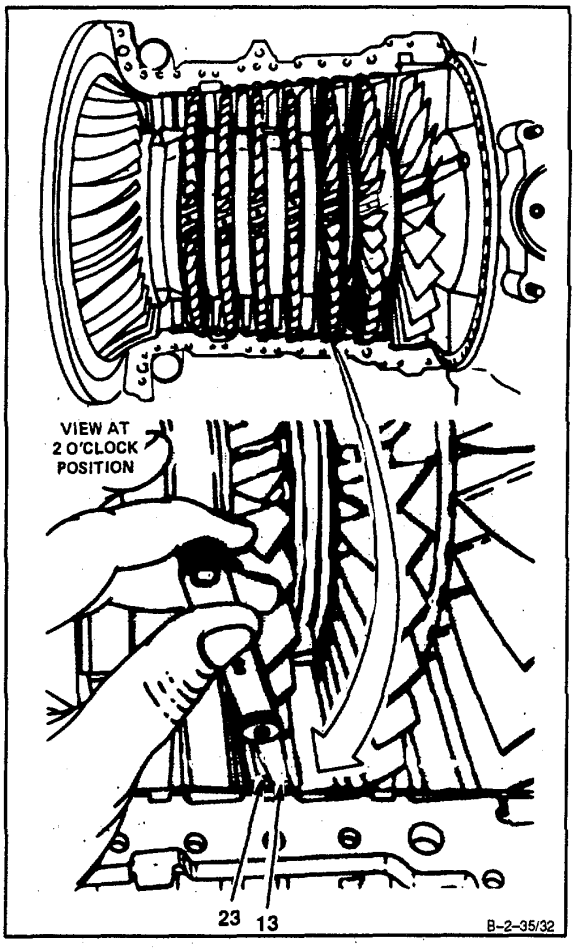

GO TO NEXT PAGE

CAUTION

Do not use power grinder to remove metal from blade. Power grinder could easily damage blade.

i. **File tip of blade (23)** with file (15) to obtain tip clearance equal to two adjacent blades.

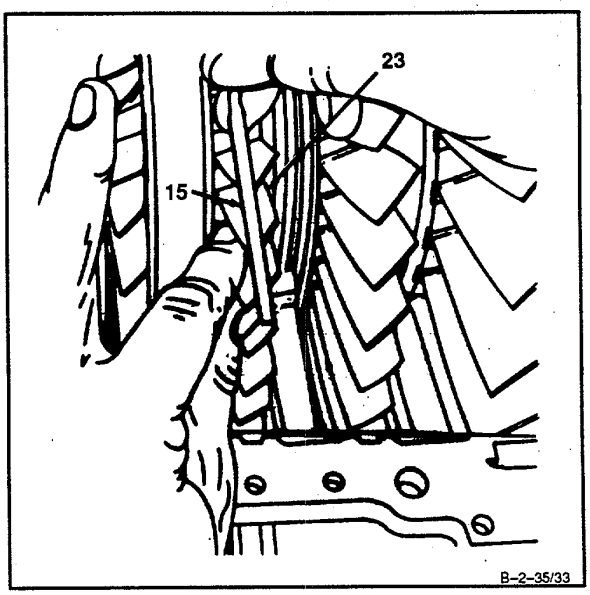

INSPECT

NOTE

In following step, use drift assembly (T34) for second stage blades. Use installing tool (T35) for third through seventh stage blades.

NOTE

In following step, second and third stage blades are removed forward, fourth through seventh stage blades are removed rearward. Third stage blade removal is shown.

j. **Remove blade (23)** using rawhide mallet and installing tool (T35) (25) **by tapping** blade (23) **forward.**

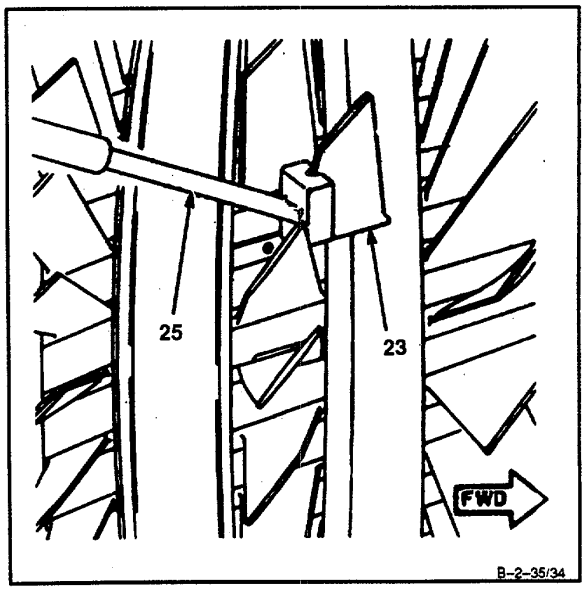

GO TO NEXT PAGE

CAUTION

A new piece of lockwire must be used for each stage.

k. **Insert** length of **lockwire (E32) (16**) into slot in base of blade (23) as far as it will go.

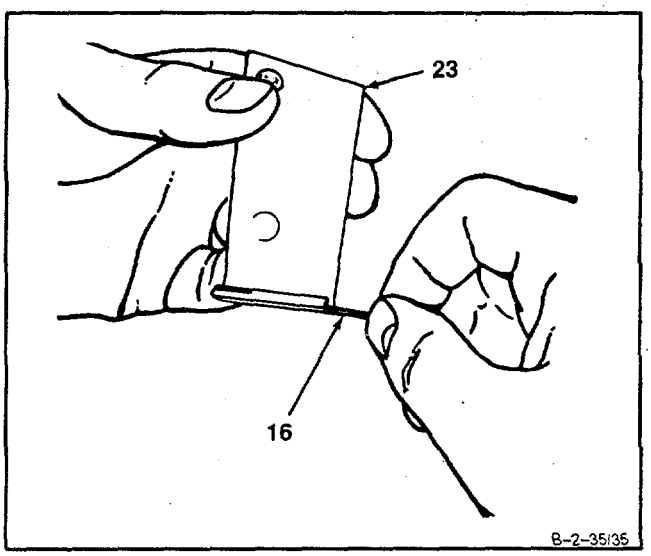

l. **Bend lockwire (16**) to indicate depth of slot. **Remove** lockwire (16) **and retain** for use in following step r.

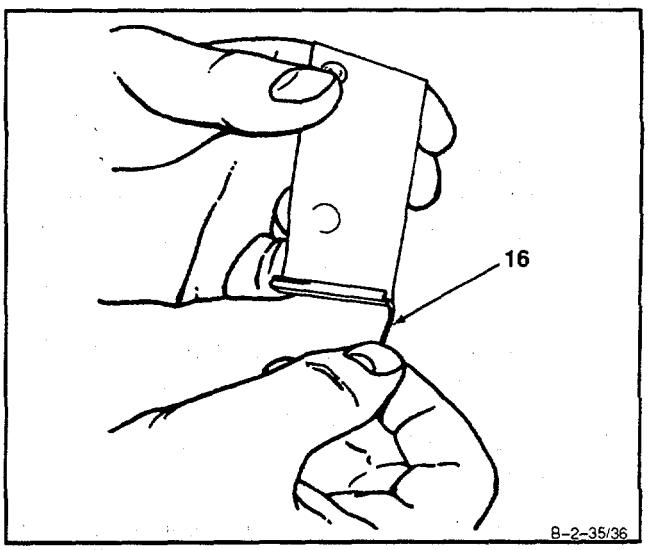

GO TO NEXT PAGE

m. **Reinsert blade (23) rearward** part way into disc slot. Use rawhide mallet and installation tool and rod contained in blade installation kit (T47) (24).

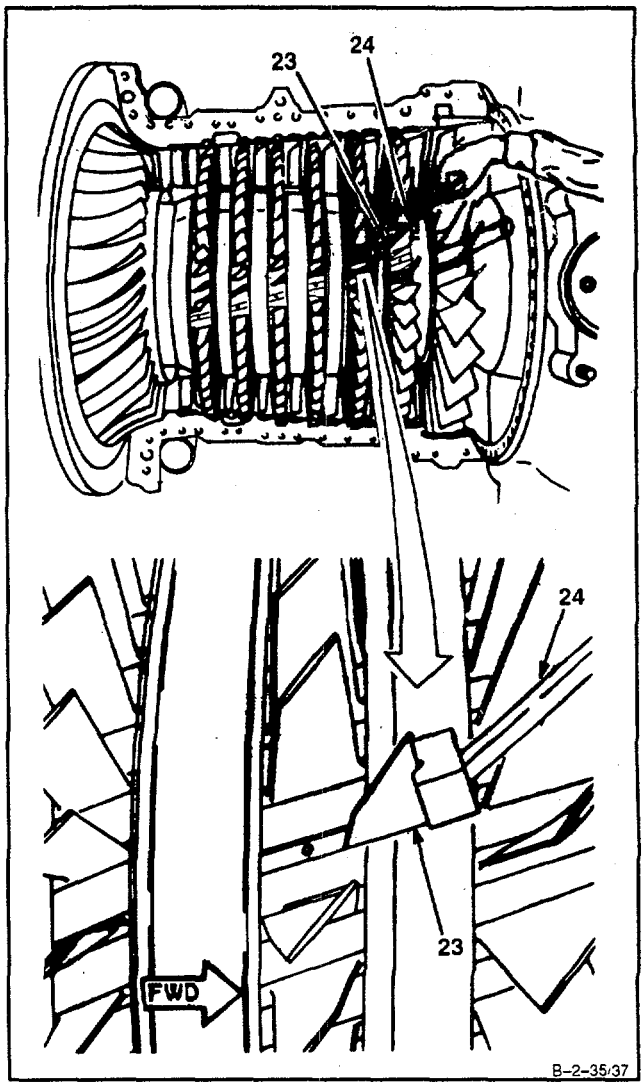

GO TO NEXT PAGE

n. **Install new spring (26)** into hole in disc slot using tweezers (18).

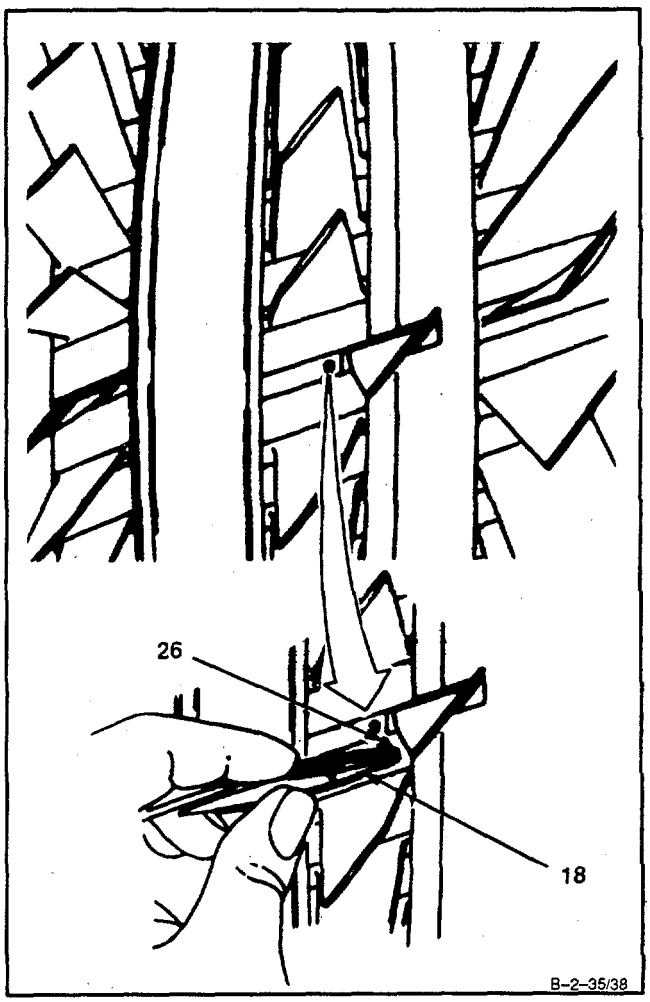

GO TO NEXT PAGE

o. **Install new lockpin (27)** into hole in disc slot using tweezers (18).

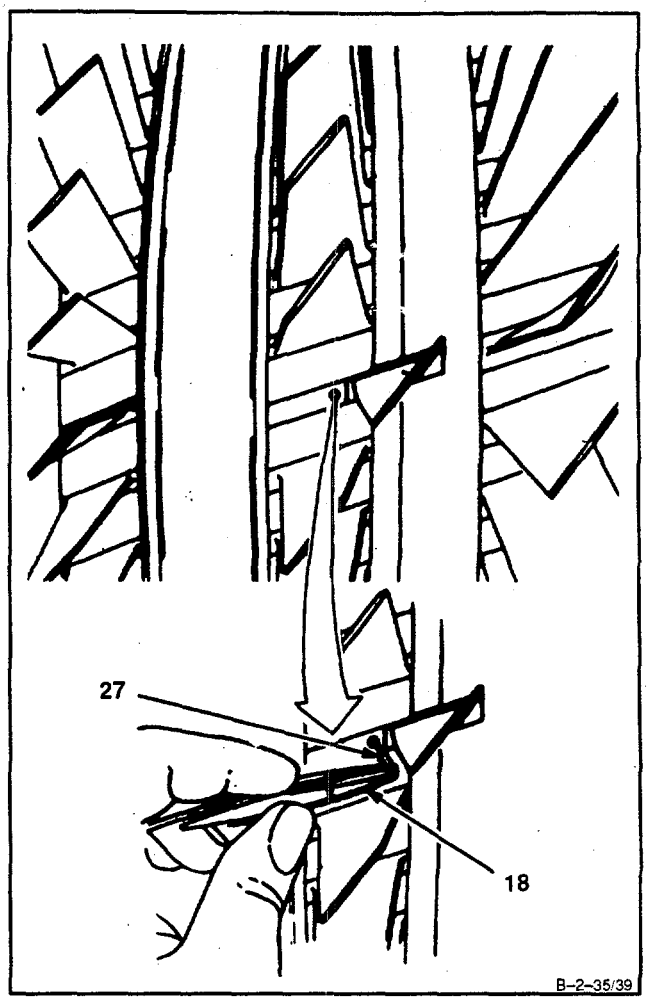

GO TO NEXT PAGE

NOTE

Two people are required for this step.

p. **Depress lockpin** with scribe (20). **Have helper tap blade (23) rearward** into disc slot using rawhide mallet and installation tool and rod contained in kit (T47) (24). As soon as blade (23) catches lockpin, pull scribe (20) away.

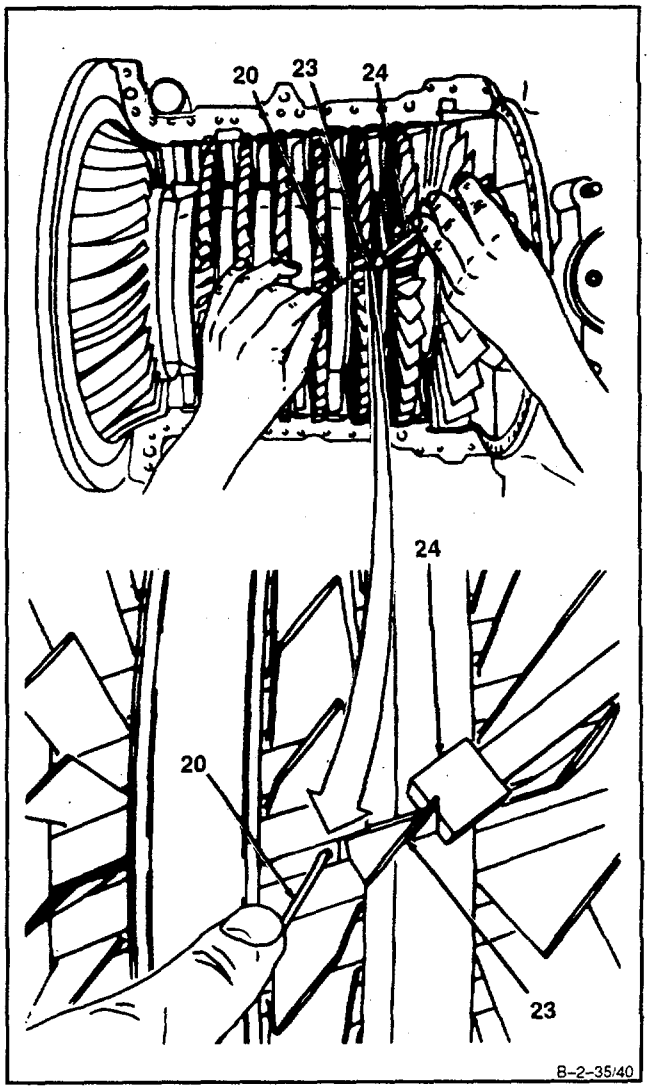

GO TO NEXT PAGE

q. **Engage lockpin** by installing blade (23) rearward completely into disc slot. Use rawhide mallet and installation tool and rod contained in blade installation kit (T47) (24).

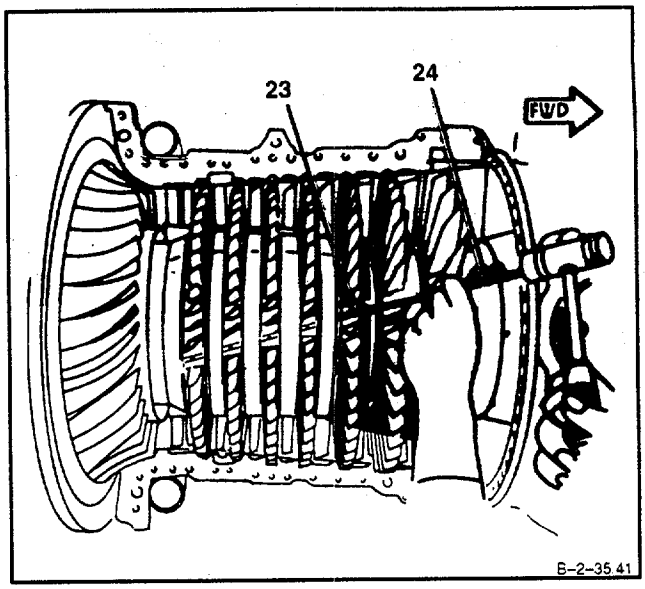

r. **Check engagement of lockpin** by inserting bent piece of lockwire (16) used in previous step l. **Insert lockwire (16)** into slot in base of blade (23) with tweezers (18). Bend of wire shall protrude 1/16 inch from end of blade (23) when wire is bottomed on lockpin.

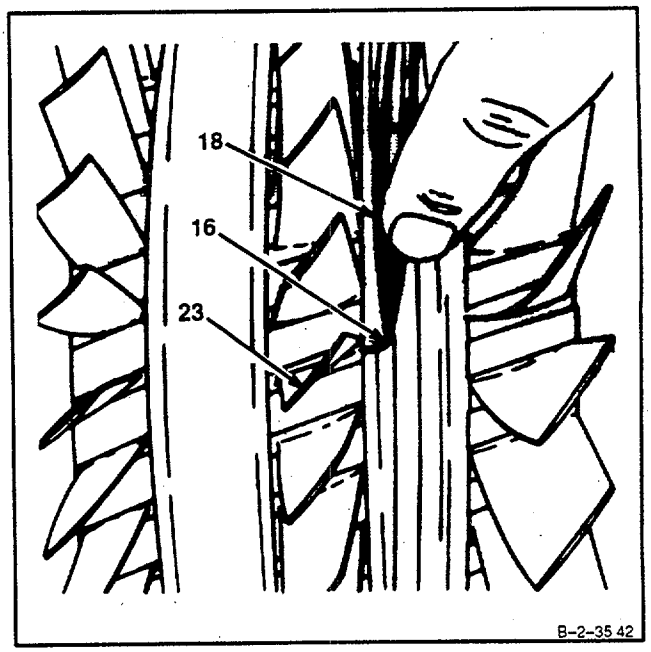

INSPECT

GO TO NEXT PAGE

s. **Inspect for blade (23) protrusion** from disc. **Protrusion at rear face (28) shall not exceed 0.010 inch. Protrusion at forward face (29) shall not exceed following limits:**

(1) **Second stage 0.015 inch.**

(2) **Third stage 0.014 inch.**

(3) **Fourth through seventh stage 0.018 Inch.**

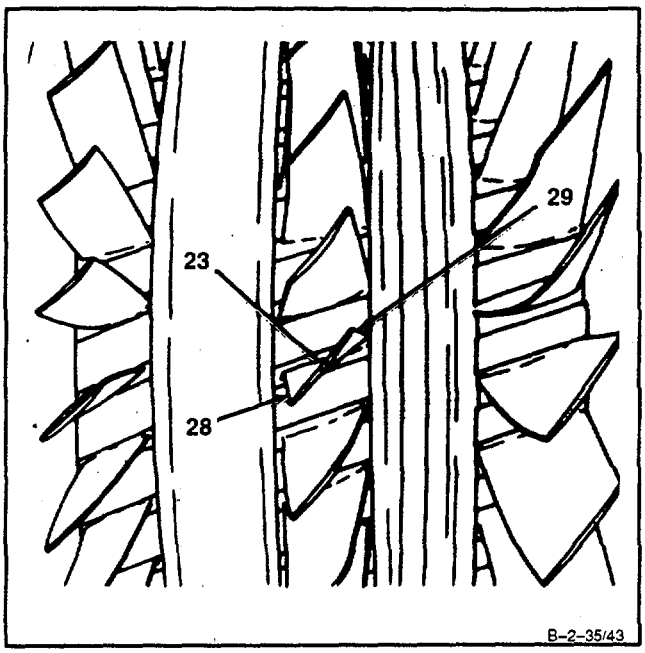

INSPECT

GO TO NEXT PAGE

t. **Check clearance between compressor housing (30) and compressor rotor blades.** Use thickness gage (13). **Check right and left sides** of compressor housing (30). **Tip clearance shall be 0.016 Inch minimum for all second through seventh stages.**

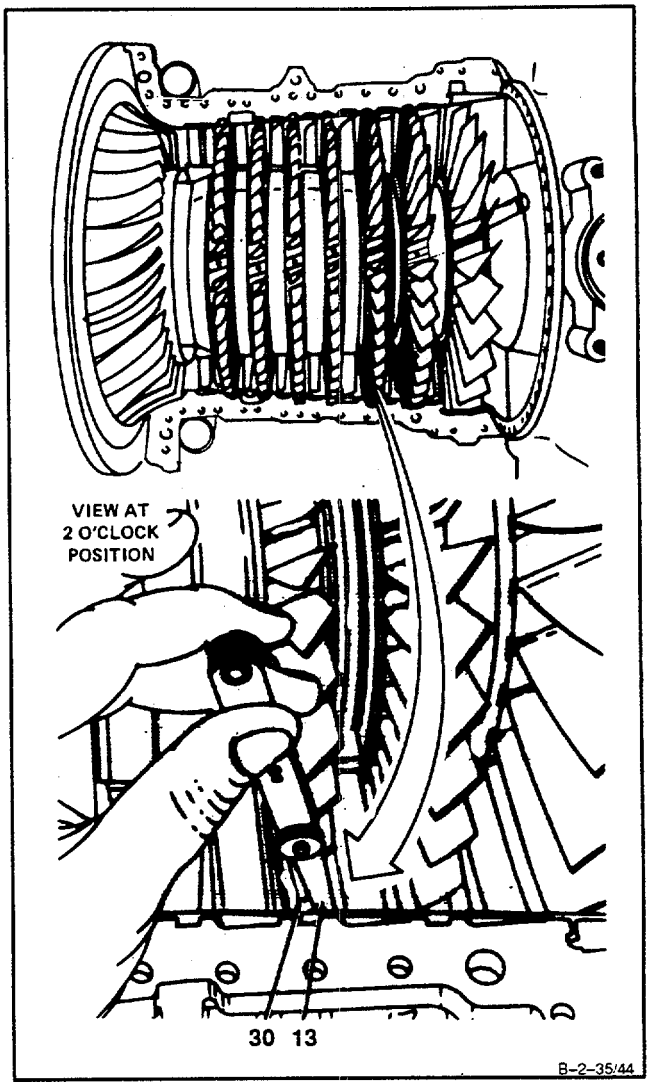

INSPECT

FOLLOW-ON MAINTENANCE:

Install Upper Compressor Housing (Task 2-25).
Install Compressor Bleed Band (Task 2-14).
Install Interstage Air-Bleed Actuator (Task 2-8).
Install Main Fuel Filter and Bracket (Task 6-34).
Install Starter Drive Assembly (Task 5-22).
Install Oil Filter Assembly and Oil Filler Strainer (Task 8-33).
Install Ignition Exciter (Task 7-15).
Install In-Line Fuel Filter Assembly (Task 6-40).
Install Oil Cooler Assembly (Task 8-18).
Install Flow Programming Valve (Task 8-22).
Service Engine Oil System (Task 1-68).

END OF TASK

SECTION VII

AIR DIFFUSER ASSEMBLY

2-38 REPAIR AIR DIFFUSER ASSEMBLY 2-38

INITIAL SETUP

Applicable Configurations:
All

Tools:
Powerplant Mechanic's Tool Kit, NSN 5180-00-323-4944
Technical Inspection Tool Kit, NSN 5180-00-323-5114

Materials:
Lockwire (E33)

Parts:
Packings
Gaskets

Equipment Condition:
Aircraft Powerplant Repairer
Aircraft Powerplant Inspector

References:
TM 1-2840-252-23P

1. **Tighten loose screws (1, 2 and 3), union (4), connector (5), and flange (6).**

   a. Remove lockwire from screws (1, 2, and 3).

   b. Tighten screws (1, 2, and 3).

   c. Lockwire screws (1, 2, and 3). Use lockwire (E33).

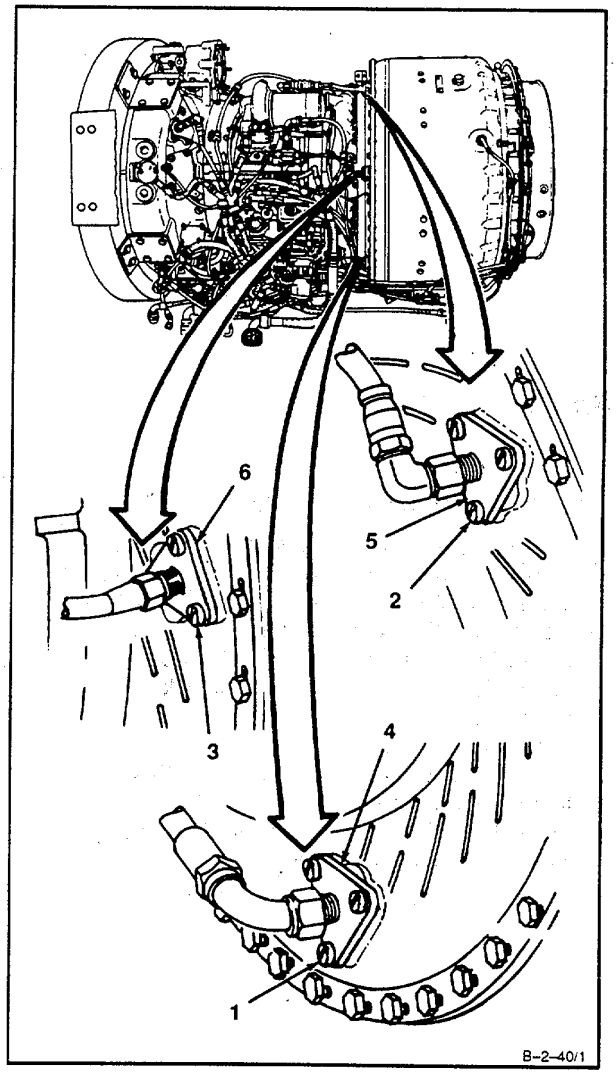

GO TO NEXT PAGE

2. **Repair leaking or cracked union (4)** as follows:

a. Disconnect hose assembly (7) from union (4).

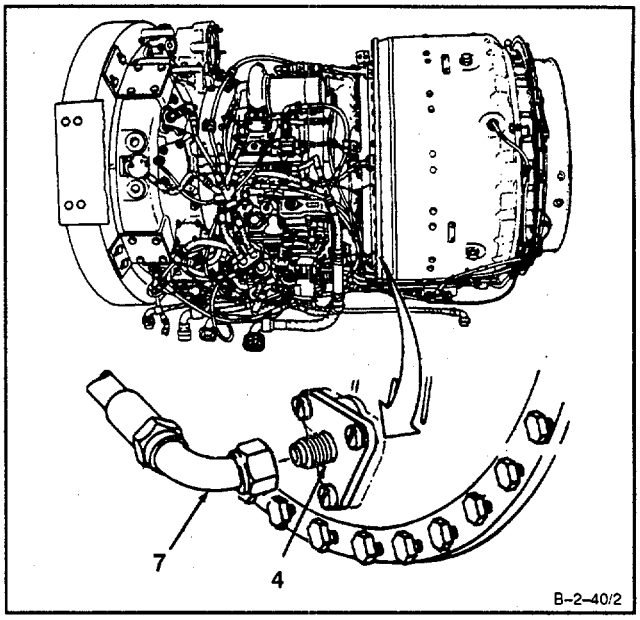

b. Remove lockwire and three screws (1).

c. Remove union (4) and packing (8).

d. Install packing (8), serviceable union (4), and three screws (1).

e. Lockwire three screws (1). Use lockwire (E33).

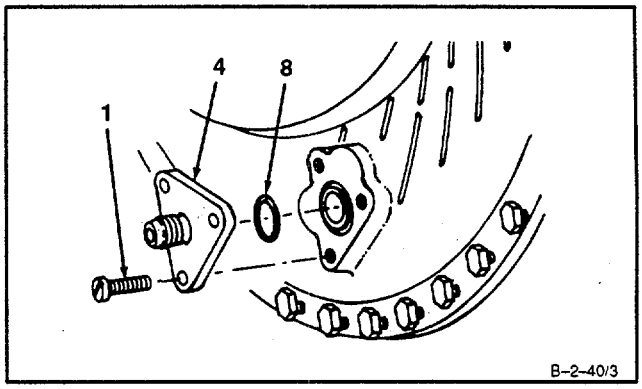

f. Connect hose assembly (7) to union (4).

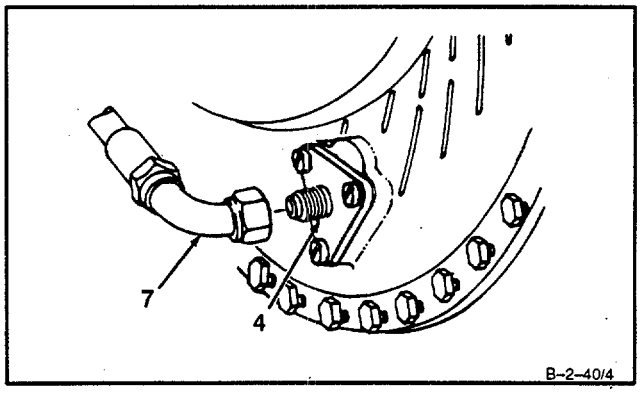

GO TO NEXT PAGE

By Order of the Secretary of the Army:

GORDON R. SULLIVAN
General, United States Army
Chief of Staff

Official:

H. HAMILTON
Administrative Assistant to the
Secretary of the Army
07778

DISTRIBUTION:
To be distributed in accordance with DA Form 12-31-E, block no. 3466, requirements for TM 1-2840-252-23-1.

☆U.S. GOVERNMENT PRINTING OFFICE:1995-655-121/20010

These are the instructions for sending an electronic 2028

The following format must be used if submitting an electronic 2028. The subject line must be exactly the same and all fields must be included; however only the following fields are mandatory: 1, 3, 4, 5, 6, 7, 8, 9, 10, 13, 15, 16, 17, and 27.

From: “Whomever” <whomever@wherever.army.mil>
To: 2028@redstone.army.mil

Subject: DA Form 2028

1. ***From:*** Joe Smith
2. *Unit:* home
3. ***Address:*** 4300 Park
4. ***City:*** Hometown
5. ***St:*** MO
6. ***Zip:*** 77777
7. ***Date Sent:*** 19−OCT−93
8. ***Pub no:*** 55−2840−229−23
9. ***Pub Title:*** TM
10. ***Publication Date:*** 04−JUL−85
11. *Change Number:* 7
12. *Submitter Rank:* MSG
13. ***Submitter FName:*** Joe
14. *Submitter MName:* T
15. ***Submitter LName:*** Smith
16. ***Submitter Phone:*** 123−123−1234
17. ***Problem:*** **1**
18. *Page:* 2
19. *Paragraph:* 3
20. *Line:* 4
21. *NSN:* 5
22. *Reference:* 6
23. *Figure:* 7
24. *Table:* 8
25. *Item:* 9
26. *Total:* 123
27. ***Text:***

This is the text for the problem below line 27.

RECOMMENDED CHANGES TO PUBLICATIONS AND BLANK FORMS For use of this form, see AR 25–30; the proponent agency is ODISC4.	Use Part II (*reverse)* for Repair Parts and Special Tool Lists (RPSTL) and Supply Catalogs/ Supply Manuals (SC/SM)	DATE 8/30/02

TO: (*Forward to proponent of publication or form)(Include ZIP Code)*	FROM: (*Activity and location)(Include ZIP Code)*
Commander, U.S. Army Aviation and Missile Command ATTN: AMSAM–MMC–MA–NP Redstone Arsenal, AL 35898	MSG, Jane Q. Doe 1234 Any Street Nowhere Town, AL 34565

PART 1 – ALL PUBLICATIONS (EXCEPT RPSTL AND SC/SM) AND BLANK FORMS

PUBLICATION/FORM NUMBER	DATE	TITLE
TM 9–1005–433–24	16 Sep 2002	Organizational, Direct Support, And General Support Maintenance Manual for Machine Gun, .50 Caliber M3P and M3P Machine Gun Electrical Test Set Used On Avenger Air Defense Weapon System

ITEM NO.	PAGE NO.	PARA–GRAPH	LINE NO. *	FIGURE NO.	TABLE NO.	RECOMMENDED CHANGES AND REASON
1	WP0005 PG 3		2			Test or Corrective Action column should identify a different WP number.

** Reference to line numbers within the paragraph or subparagraph.*

TYPED NAME, GRADE OR TITLE	TELEPHONE EXCHANGE/ AUTOVON, PLUS EXTENSION	SIGNATURE
MSG, Jane Q. Doe, SFC	788–1234	

EXAMPLE

TO: (*Forward direct to addressee listed in publication*)	**FROM:** (*Activity and location*) (*Include ZIP Code*)	**DATE**
Commander, U.S. Army Aviation and Missile Command ATTN: AMSAM–MMC–MA–NP Redstone Arsenal, AL 35898	MSG, Jane Q. Doe 1234 Any Street Nowhere Town, AL 34565	8/30/02

PART II – REPAIR PARTS AND SPECIAL TOOL LISTS AND SUPPLY CATALOGS/SUPPLY MANUALS

PUBLICATION NUMBER	DATE	TITLE

PAGE NO.	COLM NO.	LINE NO.	NATIONAL STOCK NUMBER	REFERENCE NO.	FIGURE NO.	ITEM NO.	TOTAL NO. OF MAJOR ITEMS SUPPORTED	RECOMMENDED ACTION

PART III – REMARKS (*Any general remarks or recommendations, or suggestions for improvement of publications and blank forms. Additional blank sheets may be used if more space is needed.*)

TYPED NAME, GRADE OR TITLE	TELEPHONE EXCHANGE/AUTOVON, PLUS EXTENSION	SIGNATURE
MSG, Jane Q. Doe, SFC	788–1234	

EXAMPLE

RECOMMENDED CHANGES TO PUBLICATIONS AND BLANK FORMS For use of this form, see AR 25–30; the proponent agency is ODISC4.	Use Part II (*reverse)* for Repair Parts and Special Tool Lists (RPSTL) and Supply Catalogs/ Supply Manuals (SC/SM)	DATE
TO: (*Forward to proponent of publication or form)(Include ZIP Code)* Commander, U.S. Army Aviation and Missile Command ATTN: AMSAM-MMC-MA-NP Redstone Arsenal, AL 35898	FROM: (*Activity and location)(Include ZIP Code)*	

PART 1 – ALL PUBLICATIONS (EXCEPT RPSTL AND SC/SM) AND BLANK FORMS

PUBLICATION/FORM NUMBER	DATE	TITLE

ITEM NO.	PAGE NO.	PARA–GRAPH	LINE NO. *	FIGURE NO.	TABLE NO.	RECOMMENDED CHANGES AND REASON

** Reference to line numbers within the paragraph or subparagraph.*

TYPED NAME, GRADE OR TITLE	TELEPHONE EXCHANGE/ AUTOVON, PLUS EXTENSION	SIGNATURE

TO: (*Forward direct to addressee listed in publication)* Commander, U.S. Army Aviation and Missile Command ATTN: AMSAM-MMC-MA-NP Redstone Arsenal, AL 35898	**FROM:** (*Activity and location) (Include ZIP Code)*	**DATE**

PART II – REPAIR PARTS AND SPECIAL TOOL LISTS AND SUPPLY CATALOGS/SUPPLY MANUALS

PUBLICATION NUMBER	DATE	TITLE

PAGE NO.	COLM NO.	LINE NO.	NATIONAL STOCK NUMBER	REFERENCE NO.	FIGURE NO.	ITEM NO.	TOTAL NO. OF MAJOR ITEMS SUPPORTED	RECOMMENDED ACTION

PART III – REMARKS (*Any general remarks or recommendations, or suggestions for improvement of publications and blank forms. Additional blank sheets may be used if more space is needed.)*

TYPED NAME, GRADE OR TITLE	TELEPHONE EXCHANGE/AUTOVON, PLUS EXTENSION	SIGNATURE

The Metric System and Equivalents

Linear Measure

1 centimeter = 10 millimeters = .39 inch
1 decimeter = 10 centimeters = 3.94 inches
1 meter = 10 decimeters = 39.37 inches
1 dekameter = 10 meters = 32.8 feet
1 hectometer = 10 dekameters = 328.08 feet
1 kilometer = 10 hectometers = 3,280.8 feet

Weights

1 centigram = 10 milligrams = .15 grain
1 decigram = 10 centigrams = 1.54 grains
1 gram = 10 decigram = .035 ounce
1 decagram = 10 grams = .35 ounce
1 hectogram = 10 decagrams = 3.52 ounces
1 kilogram = 10 hectograms = 2.2 pounds
1 quintal = 100 kilograms = 220.46 pounds
1 metric ton = 10 quintals = 1.1 short tons

Liquid Measure

1 centiliter = 10 milliters = .34 fl. ounce
1 deciliter = 10 centiliters = 3.38 fl. ounces
1 liter = 10 deciliters = 33.81 fl. ounces
1 dekaliter = 10 liters = 2.64 gallons
1 hectoliter = 10 dekaliters = 26.42 gallons
1 kiloliter = 10 hectoliters = 264.18 gallons

Square Measure

1 sq. centimeter = 100 sq. millimeters = .155 sq. inch
1 sq. decimeter = 100 sq. centimeters = 15.5 sq. inches
1 sq. meter (centare) = 100 sq. decimeters = 10.76 sq. feet
1 sq. dekameter (are) = 100 sq. meters = 1,076.4 sq. feet
1 sq. hectometer (hectare) = 100 sq. dekameters = 2.47 acres
1 sq. kilometer = 100 sq. hectometers = .386 sq. mile

Cubic Measure

1 cu. centimeter = 1000 cu. millimeters = .06 cu. inch
1 cu. decimeter = 1000 cu. centimeters = 61.02 cu. inches
1 cu. meter = 1000 cu. decimeters = 35.31 cu. feet

Approximate Conversion Factors

To change	*To*	*Multiply by*	*To change*	*To*	*Multiply by*
inches	centimeters	2.540	ounce-inches	Newton-meters	.007062
feet	meters	.305	centimeters	inches	.394
yards	meters	.914	meters	feet	3.280
miles	kilometers	1.609	meters	yards	1.094
square inches	square centimeters	6.451	kilometers	miles	.621
square feet	square meters	.093	square centimeters	square inches	.155
square yards	square meters	.836	square meters	square feet	10.764
square miles	square kilometers	2.590	square meters	square yards	1.196
acres	square hectometers	.405	square kilometers	square miles	.386
cubic feet	cubic meters	.028	square hectometers	acres	2.471
cubic yards	cubic meters	.765	cubic meters	cubic feet	35.315
fluid ounces	milliliters	29,573	cubic meters	cubic yards	1.308
pints	liters	.473	milliliters	fluid ounces	.034
quarts	liters	.946	liters	pints	2.113
gallons	liters	3.785	liters	quarts	1.057
ounces	grams	28.349	liters	gallons	.264
pounds	kilograms	.454	grams	ounces	.035
short tons	metric tons	.907	kilograms	pounds	2.205
pound-feet	Newton-meters	1.356	metric tons	short tons	1.102
pound-inches	Newton-meters	.11296			

Temperature (Exact)

°F	Fahrenheit temperature	5/9 (after subtracting 32)	Celsius temperature	°C

PIN: 073438-000