UNIT, DIRECT SUPPORT AND GENERAL SUPPORT MAINTENANCE REPAIR PARTS AND SPECIAL TOOLS LIST

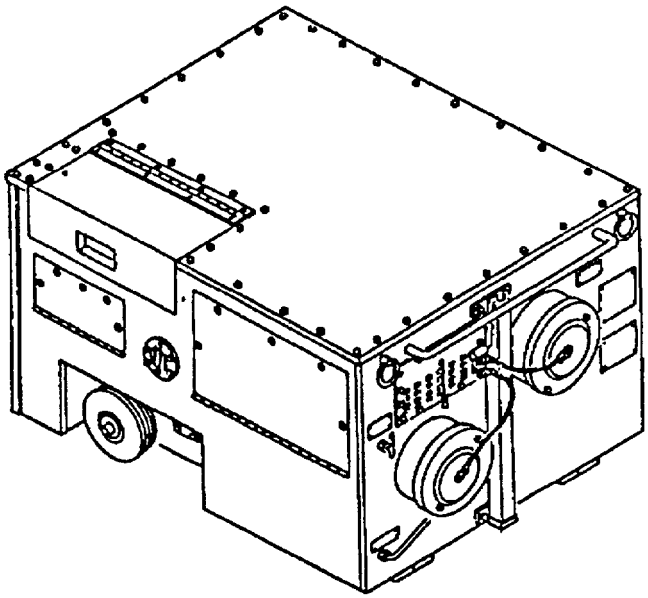

ARMY SPACE HEATER (ASH)

ELECTRICAL POWERED MULTIFUEL, 120,000 BTU

MODEL H120

NSN 4520-01-367-2739

AND

MODEL H120-1

NSN 4520-01-439-1682

DISTRIBUTION STATEMENT A: Approved for public release; distribution unlimited.

HEADQUARTERS, DEPARTMENT OF THE ARMY

1 June 2001

TM 9-4520-258-24P

LIST OF EFFECTIVE PAGES

Date of issue for original manual - 1 July 2000

TOTAL NUMBER OF PAGES FOR FRONT AND REAR MATTER – 140

Page No.	Change No.	Page No.	Change No.
Cover	0	Figure 18 (Sheet 1)	
i	0	Figure 18 (Sheet 2)	0
ii	0	18-1	0
1-6	0	Figure 19	0
Figure 1	0	19-1	0
1-1	0	Figure 20	0
Figure 2	0	20-1	0
2-1	0	Figure 21	0
Figure 3	0	21-1	0
3-1	0	Figure 22	0
Figure 4 (Sheet 1)	0	22-1	0
Figure 4 (Sheet 2)	0	Figure 23	0
4-1	0	23-1	0
4-2	0	Figure 24 (Sheet 1)	0
Figure 5 (Sheet 1)	0	Figure 24 (Sheet 2)	0
Figure 5 (Sheet 2)	0	24-1	0
Figure 5 (Sheet 3)	0	Figure 25 (Sheet 1)	0
5-1	0	Figure 25 (Sheet 2)	0
5-2	0	25-1	0
5-3	0	Figure 26	0
Figure 6	0	26-1	0
6-1	0	Figure 27 (Sheet 1)	0
Figure 7	0	Figure 27 (Sheet 2)	0
7-1	0	27-1	0
Figure 8	0	Figure 28	0
8-1	0	28-1	0
Figure 9	0	Figure 29 (Sheet 1)	0
9-1	0	Figure 29 (Sheet 2)	0
Figure 10	0	29-1	0
10-1	0	Figure 30 (Sheet 1)	0
Figure 11	0	Figure 30 (Sheet 2)	0
11-1	0	30-1	0
Figure 12	0	Figure 31	0
12-1	0	31-1	0
Figure 13 (sheet 1)	0	Figure 32	0
Figure 13 (sheet 2)	0	32-1	0
13-1	0	Figure 33	0
Figure 14	0	33-1	0
14-1	0	Figure 34	0
Figure 15 (sheet 1)	0	34-1	0
Figure 15 (sheet 2)	0	Figure 35	0
15-1	0	35-1	0
Figure 16	0	Figure 36 (Sheet 1)	0
16-1	0	Figure 36 (Sheet 2)	0
Figure 17	0	36-1	0
17-1	0	36-2	0
			0

LIST OF EFFECTIVE PAGES – CONTINUED

Page No.	Change No.
Figure 37	0
37-1	0
Figure 38	0
38-1	0
Figure 39	0
39-1	0
Figure 40	0
40-1	0
Bulk-1	0
I-1	0
I-2	0
I-3	0
I-4	0
I-5	0
I-6	0
I-7	0
I-8	0
I-9	0
I-10	0
I-11	0
I-12	0
I-13	0
I-14	0
I-15	0
I-16	0
I-17	0
I-18	0
I-19	0
I-20	0
I-21	0
I-22	0
I-23	0
I-24	0
I-25	0
I-26	0
I-27	0
I-28	0
I-29	0
I-30	0
I-31	0
I-32	0
I-33	0
I-34	0
I-35	0
I-36	0
I-37	0
I-38	0
I-39	0

TECHNICAL MANUAL

NO. 9-4520-258-24P

HEADQUARTERS
DEPARTMENT OF THE ARMY
WASHINGTON, D.C., 1 June 2001

Unit, Direct Support and General Support Maintenance
Repair Parts and Special Tools List

for

ARMY SPACE HEATER (ASH)
ELECTRICAL POWERED, MULTI-FUEL 120,000 BTU,
MODEL H120
NSN 4520-01-367-2739
AND
MODEL H120-1
NSN 4520-01-439-1682

REPORTING ERRORS AND RECOMMENDING IMPROVEMENTS

You can help improve this manual. If you find any mistakes, or I you know of a way to improve the procedures, please let us know Mail your letter, DA Form 2028 (Recommended Changes to Publications and Blank Forms), or DA Form 2028-2 located in the back of this manual direct to: Commander, U.S. Army Communications Electronics Command at Fort Monmouth, ATTN: AMSEL-LC-LEO-D-CS-CFO, Fort Monmouth, NJ 07703-5006. E-mail: AMSEL-LC-LEO-PUBS-CHG@mail1.monmouth.army.mil. We will send you a reply.

DISTRIBUTION STATEMENT A. Approved for public release; distribution is unlimited.

TABLE OF CONTENTS

Section/Para		Page	Illus/Figure
Section I	INTRODUCTION	1	
Section II	REPAIR PARTS LIST	1-1	
Group 01	Exhaust Pipe, Hose, Cover, Doom and Panels Installation		
	Exhaust Pipe and Elbow	1-1	1
	Flexible Air Ducts	2-1	2
	Control Box Cover	3-1	3
	Top Panel Assembly	4-1	4
	Rear Panel Assembly	5-1	5
	Front Side Door Assembly	6-1	6
	Rear Side Door Assembly	7-1	7
	Air Inlet Cover and Guard	8-1	8
	Dust Cover and Inlet/Discharge Screen	9-1	9

*This manual supersedes TM 9-4520-258-24P, dated 23 November 1994.

TABLE OF CONTENTS - Continued

		Page	Illus/Figure
Group 03	Hose, Tube and Tank Assemblies Installation		
	External Fuel Hose Assembly	16-1	16
	Fuel Tube Assemblies	17-1	17
	Fuel Tank Top Assemblies	18-1	18
	Fuel Drain Cover, Ring Filler Neck, and Tank Isolator	19-1	19
Group 04	Circulating Air Fan/Pump/Motor Assembly Installation		
	Circulating Air Fan/Fuel Pump/Motor Assembly	20-1	20
	Fuel Solenoid Valves and Fittings	21-1	21
	Blower Wheel, Fan Scroll, and Base	22-1	22
	Fuel Pump and Vent Blower Motor	23-1	23
Group 05	Hose, Fan and Mount Combustion Assembly		
	Combustion Air Fan and Mount Assembly	24-1	24
Group 06	Heat Exchanger Assembly		
	Heat Exchanger	25-1	25
	Thermostat Assembly and Cover Plate (Heat Exchanger)	26-1	26
	Detector Flame, Cable, Tube, and Mounting Ring (Heat Exchanger)	27-1	27
	Sight Glass, Support, Clamp, and Saddle (Heat Exchanger)	28-1	28
	Shell, Heat Exchanger, and Burner Assembly	29-1	29
Group 07	Remote Thermostat Assembly Installation		
	Remote Thermostat Assembly (Thermostat and Cable)	30-1	30
Group 08	Power Cable Assembly		
	Power Cable Assembly (P1)	31-1	31
Group 09	External Electrical Lead Assembly		
	External Electrical Lead Assembly	32-1	32
Group 10	Internal Power Thermostat Cable Assembly		
	Internal Power Thermostat Cable (J3)	33-1	33
Group 11	Jack and Wheel Installation		
	Jack Assembly	34-1	34
	Wheel Assembly and Pivot	35-1	35
Group 12	Grille and Damper Installation		
	Air Damper Assembly	36-1	36
Group 13	Eyebolt, Tiedown and Frame Installation		
	Tie Down Ring and Informational Plates	37-1	37
	Handbook Compartment	38-1	38
	Support and Bar (Control Box)	39-1	39
	Frame Assembly	40-1	40
Group 14	Bulk Materials List	Bulk-1	Bulk
Section III	Cross-Reference Indexes		
	National Stock Number Index	I-1	
	Part Number Index	I-4	
	Figure and Item Number Index	I-22	

UNIT, DIRECT SUPPORT AND GENERAL SUPPORT MAINTENANCE REPAIR PARTS AND SPECIAL TOOLS LIST

Section I. INTRODUCTION

1. SCOPE. This RPSTL lists and authorizes spares and repair parts; special tools; special test, measurement, and diagnostic equipment (TMDE); and other special support equipment required for performance of unit, direct support and general support maintenance of the Army Space Heaters (ASH), Model H120 and Model H120-1. It authorizes the requisitioning, issue and disposition of spares, repair parts and special tools as indicated by the source, maintenance and recoverability (SMR) codes.

2. GENERAL. In addition to this section, Introduction, this Repair Parts and Special Tools List is divided into the following sections:

a. SECTION II. REPAIR PARTS LIST. A list of spares and repair parts authorized by this RPSTL for use in the performance of maintenance. This list also includes pads which must be removed for replacement of the authorized parts. Pats lists are composed o functional groups in ascending alphanumeric sequence, with the parts in each group listed in ascending figure and item number sequence. Bulk materials are listed in item name sequence. Items listed are shown on the associated Illustration(s) /(figure(s).

b. SECTION III. SPECIAL TOOLS LIST. A list of special tools, special TMDE, and other special support equipment authorized by this RPSTL (as indicated by Basic of Issue (BOI) information in DESCRIPTION AND USABLE ON CODE column) for the performance of maintenance.

c. SECTION IV. CROSS-REFERENCES INDEXES. A list, in National Item Identification Number (NIIN) sequence, of all National stock numbered items appearing in the listing, followed by a list in alphanumeric sequence of all part numbers appearing in the listings. National stock numbers and part numbers are cross-referenced to each illustration figure and item number appearance. The figure and item number index lists figure and item number in alphanumeric sequence and cross-references NSN, CAGEC and par number.

3. EXPLANATION OF COLUMNS (SECTIONS II AND III).

a. ITEM NO. (Column (1)). Indicates the number used to identify items called out in the illustration.

b. SMR CODE (Column (2)). The Source, Maintenance, and Recoverability (SMR) code is a 5-position code containing supply/requisitioning information, maintenance category authorization criteria, and disposition instruction, as shown in the following breakout:

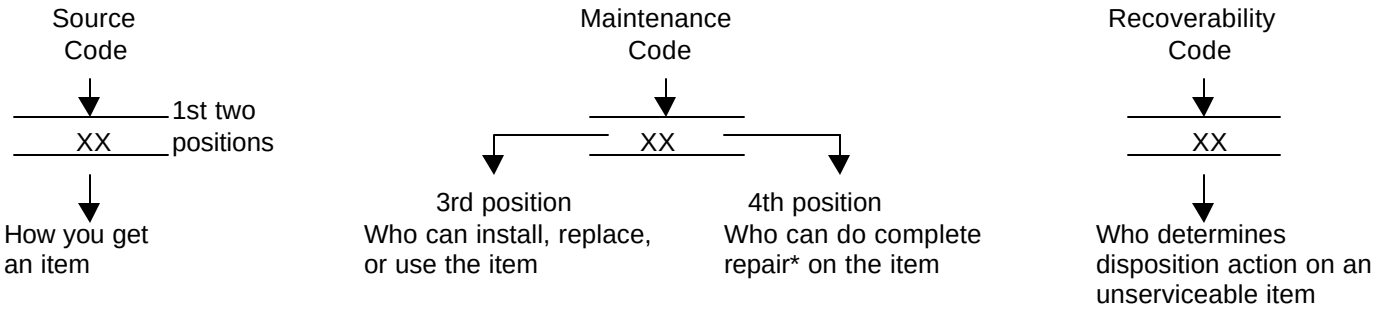

*Compete Repair Maintenance capacity, capability, and authority to perform al corrective maintenance tasks of the "Repair" function in a use/user environment in order to restore serviceability to a failed item.

(1) Source Code. The source code tells you how to get an em needed for maintenance, repair, or overhaul of an end item/equipment. Explanations of source codes follows:

XA - Do not requisition an "XA"-coded item. Order its next higher assembly. (Refer to the NOTE below.)

Source Code	Explanation
PA PB PC** PD PE PF PG	Stocked items; use the applicable NSN to request/requisition items with these source codes. They are authorized to the category indicated by the code entered in the 3rd position of the SMR code. **NOTE: Items coded PC are subject to deterioration.
KD KF KB	Items with these codes are no to be requested/requisitioned individually. They are part of a kit which is authorized to the maintenance category indicated in the 3rd position of the SMR code. The complete kit must be requisitioned and applied.
MO - (Made at Unit/ AVUM Level) MF - (Made at DS/AVIM Level) MH - (Made at GS Level) ML - (Made at Specialized Repair Activity (SRA)) MD - (Made at Depot)	Items with these codes are not to be requested/requisitioned individually. They must be made from bulk material which is identified by the part number in the DESCRIPTION and USABLE ON CODE (UOC) column and listed in the Bulk Material group of the repair parts listed in the RPSTL. If the item is authorized to you by the 3rd position code of the SMR code, but the source code indicates it is made at a higher level, order the item from the higher level of maintenance.
AO - (Assembled by Unit/AVUM Level) AF - (Assembled by DS/AVIM Level) AH - (Assembled by GS Level) AL - (Assembled by Specialized Repair Activity (SRA)) AD - (Assembled by Depot)	Items with these codes are not to be requested/requisitioned individually. The parts that make up the assembled item must be requisitioned or fabricated and assembled at the level of maintenance indicated by the source code. If the 3rd position code of the SMR code authorizes you to replace the item, but the source code indicates the items are assembled at a higher level, order the item from the higher level of maintenance.

XA - Do not requisition an "XA"-coded item. Order its next higher assembly. (Refer to the NOTE below.)
XB - If an "XB" item is not available from salvage, order it using the CAGEC and par number given.
XC - Installation drawing, diagram, instruction sheet, field service drawing, that is identified manufacturer's part number
XD - Item is not stocked. Order an "XD"-coded item through normal supply channels using the CAGEC and part number given, if no NSN is available.

NOTE

Cannibalization or controlled exchange, when authorized, may be used as a source of supply for items with the above source codes, except for those source coded "XA" or those aircraft support items restricted by requirements of AR 750-1.

(2) Maintenance Code. Maintenance codes tell you the level(s) of maintenance authorized to USE and REPAIR support items. The maintenance codes are entered in the third and fourth positions of the SMR code as follows:

(a) The maintenance code entered in the third position tells you the lowest maintenance level authorized to remove, replace, and use an item. The maintenance code entered in the third position will indicate authorization to the following levels of maintenance.

Maintenance Code	Application/Explanation
C -	Crew of operator maintenance done within unit/AVUM maintenance.
O -	Unit level/AVUM maintenance can remove, replace, and use the item.
F -	Direct support/AVIM maintenance can remove, replace, and use the item.
H -	General support maintenance can remove, replace, and use the item.
L -	Specialized repair activity can remove, replace, and use the item.
D -	Depot can remove, replace, and use the item.

(b) The maintenance code entered in the fourth position tells whether or not the item is to be repaired and identifies the lowest maintenance level with the capacity to do complete repair (i.e., perform all authorized repair functions).

NOTE

Some limited repair may be done on an item at a lower level of maintenance, if authorized by the Maintenance Allocation Chart and SMR codes.

Maintenance Code	Application/Explanation
O -	Unit level/AVUM is the lowest level that can do complete repair of the item.
F -	Direct support/AVIM is the lowest level that can do complete repair of the item.
H -	General support is the lowest level that can do complete repair of the item.
L -	Specialized repair activity is the lowest level that can do complete repair of the item.
D -	Depot is the lowest level that can do complete repair of the item.
Z -	Nonrepairable. No repair is authorized.
B -	No repair is authorized. No parts or special tools are authorized for the maintenance of a "B" coded item. However, the item may by reconditioned by adjusting, lubricating, etc., at the user level.

(3) Recoverability Code. Recoverability codes are assigned to items to indicate the disposition action on unserviceable items. The recoverability code is entered in the fifth position of the SMR code as follows:

Recoverability Code	Application/Explanation
Z -	Nonrepairable item. When unserviceable, condemn and dispose of the item at the level of maintenance shown in the third position of SMR code.
O -	Repairable tem. When not economically repairable, condemn and dispose of the item at unit or AVUM level.
F -	Repairable tem. When not economically repairable, condemn and dispose of the item at direct support or AVIM level.
H -	Repairable tem. When not economically repairable, condemn and dispose of the item at general support level.
D -	Repairable Item. When beyond lower level capability, return to depot. Condemnation and disposal of item not authorized below depot level.
L -	Repairable item. Condemnation and disposal not authorized below specialized repair activity (SRA).
A -	Item requires special handling or condemnation procedures because of specific reason (e.g., precious metal content, high dollar value, critical material, or hazardous material). Refer to appropriate manuals/directives for specific instructions.

c. CAGEC (Column (3)). The Commercial and Government Entity Code (CAGEC) is a 5-digit numeric code which is used to identify the manufacturer, distributor, or Government agency/activity that supplies the tem.

d. PART NUMBER (Column (4)). Indicates the primary number used by the manufacturer, (Individual company, firm, corporation, or Government activity), which controls the design and characteristics of the tem by means of its engineering drawings, specification standards, and specification requirements to identify an tem or range of items.

NOTE

When you use an NSN to requisition an item, the item you receive may have a different part number from the number listed.

e. DESCRIPTION AND USABLE ON CODE (UOC)(Column (5)). This column includes the following information:

(1) The Federal item name and, when required, a minimum description to identify the item.

(2) Part number of bulk materials are reference in this column in the line entry to be manufactured/fabricated.

(3) The statement "END OF FIGURE" appears just below the last em description in Column (5) for a given figure in both Section II and Section III.

f. QTY (Column (6)). The QTY (quantity per figure column) indicates the quantity of the tem used in the breakout shown on the illustration figure, which is prepared for a functional group, subfunctional group, or an assembly. A “V" appearing in this column in lieu of a quantity indicates that the quantity is variable and may vary from application to application.

4. EXPLANATION OF COLUMNS (SECTION IV).

a. NATIONAL STOCK NUMBER (NSN) INDEX.

(1) STOCK NUMBER Column. This column lists the NSN in national item identification number (NIIM) sequence. The NIIN consists of the last nine digits of the NSN, i.e.

NSN
4520-01-367-2739
NIIN

When using this column to locate an item, ignore the first four digits of the NSN. Use the complete NSN (13 digits) when requisitioning items by stock number.

(2) FIG. Column. This column lists the number of the figure where the item is identified/located. The figures are in numerical order in Section II and Section III.

(3) ITEM Column. The item number identifies the item associated with the figure listed in the adjacent FIG. column. This item is also identified by the NSN listed on the same line.

b. PART NUMBER INDEX. Part numbers in this index are listed by part number in ascending alphanumeric sequence (i.e., vertical arrangement of letter and number combination which places the first letter or digit of each group in order A-through Z, followed by the numbers 0 through 9 and each following letter or digit in like order).

(1) CAGEC Column. The Commercial and Government Entity Code (CAGEC) is a 5-digit numeric code used to identify the manufacturer, distributor, or Government agency/activity that supplies the item.

(2) PART NUMBER Column. Indicates the primary number used by the manufacturer (individual, firm, corporation, or Government activity), which controls the design and characteristics of the item by means of its engineering drawings, specifications standards, and inspection requirements to identify an item or range of items.

(3) STOCK NUMBER Column. This column lists the NSN for the associated part number and manufacturer identified in the PART NUMBER and CAGEC columns to the left.

(4) FIG. Column. This column lists the number of the figure where the item is identified/located in Section II and Section III.

(5) ITEM Column. This ITEM number is that number assigned to the item as it appears in the figure referenced in adjacent figure number column.

c. FIGURE AND ITEM NUMBER INDEX.

(1) FIG. Column. This lists the number of the figure where the item is Identified/located in Section II and Section III.

(2) ITEM Column. This item number is that number assigned to the item as its appears in the figure referenced in the adjacent number column.

(3) STOCK NUMBER Column. This column lists the NSN for the item.

(4) CAGEC Column. The Commercial and Government Entity Code (CAGEC) is a 5-digit numeric code used to identify the manufacturer, distributor, or Government agency/activity that supplies the item.

(5) PART NUMBER Column. Indicates the primary number used by the manufacturer (individual, firm, corporation, or Government activity), which controls the design and characteristics of the item by means of its engineering drawings, specifications, standards, and inspection requirements to identify an item or range of items in Section II and Section III.

5. SPECIAL INFORMATION.

a. USABLE ON CODE. The usable on code appears in the lower left corner of the Description column heading. Usable on codes are shown as "UOC: " in the Description Column Justified left) on the last line applicable item description/nomenclature. Uncoded items are applicable to all models. Identification of the usable on codes in this RPSTL are:

Code	Used On	
LPL	Model H120-1,	P/N 60200-100
YKR	Model H120,	P/N 60000-100

b. FABRICATION INSTRUCTIONS. Bulks materials required to manufacture items are listed in the Bulk Material Functional Group of this RPSTL. Part number for bulk materials are also referenced in the description column of the line entry for the item to be manufactured/fabricated. Detailed fabrication instructions for items source coded are found in TM 9-4520-258-14.

c. INDEX NUMBERS. Items which have the BULK in the figure column will have an index number shown in the item number column. This index number is a cross-reference between the National Stock Number/Pa Number Index and the bulk material list in Section II.

d. ASSOCIATED PUBLICATIONS. The publication(s) listed below pertains to the Water Pumping Assembly, Diesel Engine Driven, Wheel Mounted, 350 Gallons Per Minute (GPM), 250 Foot Head, Models 350PAW, W-87012 and 350PAWN and their components;

Publication	Short Title
TM 9-4520-258-14	Operator, Unit, Direct Support and General Support Maintenance Manual for the Army Space Heater (ASH), Electrical Powered, Multi-Fuel, 120,000 BTU, Model H120 and Model H120-1.

6. HOW TO LOCATE REPAIR PARTS.

a. When National Stock Number or Part Number is NOT Known.

(1) First. Using the table of contents, determine the assembly group for subassembly group to which the item belongs. This is necessary since figures are prepared for assembly groups and subassembly groups, and listing are divided into the same groups.

(2) Second. Find the figure covering the assembly group or subassembly group to which the item belongs.

(3) Third. Identify the item on the figure and use the figure and Item Number Index to find the NSN.

b. When National Stock Number or Part Number is Known.

(1) First. Using the National Stock Number and Part Number Indexes find the pertinent National Stock Number or Part Number. The NSN index is in National Item Identification Number (NIIN) sequence (see 4.a.). The part numbers in the Part Number index are listed in ascending alphanumeric sequence (see paragraph 4.b.). Both indexes cross-reference you to the illustration figure and item number of the item you are looking for.

(2) Second. Turn to the figure and item number, verify that the item is the one you are looking for, then locate the item number in the parts list for the figure.

7. ABBREVIATIONS. Abbreviations used in this manual are listed in MIL-STD-12.

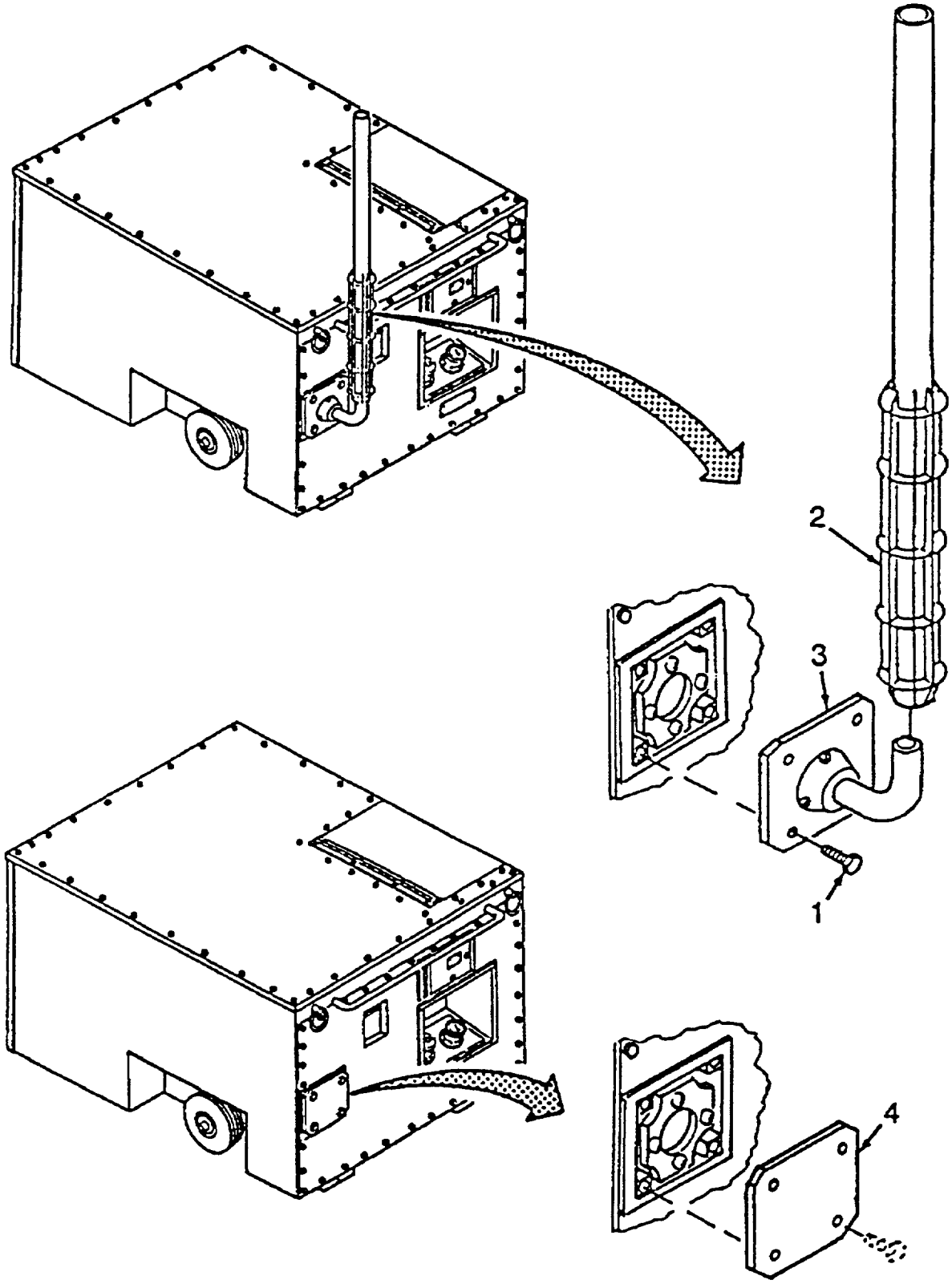

Figure 1. Exhaust Pipe and Elbow.

SECTION II

(1) ITEM NO	(2) SMR CODE	(3) CAGEC	(4) PART NUMBER	(5) DESCRIPTION AND USABLE ON CODES (UOC)	(6) QTY
				GROUP 01 EXHAUST PIPE, HOSE, COVER, DOORS AND PANELS INSTALLATION	
				FIGURE 1 EXHAUST PIPE AND ELBOW	
1	PAOZZ	96906	MS51849-139C	SCREW, MACHINE	4
2	PBOZZ	90598	60561-100	PIPE, EXHAUST	1
3	PBOZZ	90598	60557-100	PIPE ASSEMBLY, METAL	1
4	XBOZZ	90598	60558-100	COVER, PROTECTIVE FOR SHIPPING AND STORAGE ONLY	1

END OF FIGURE

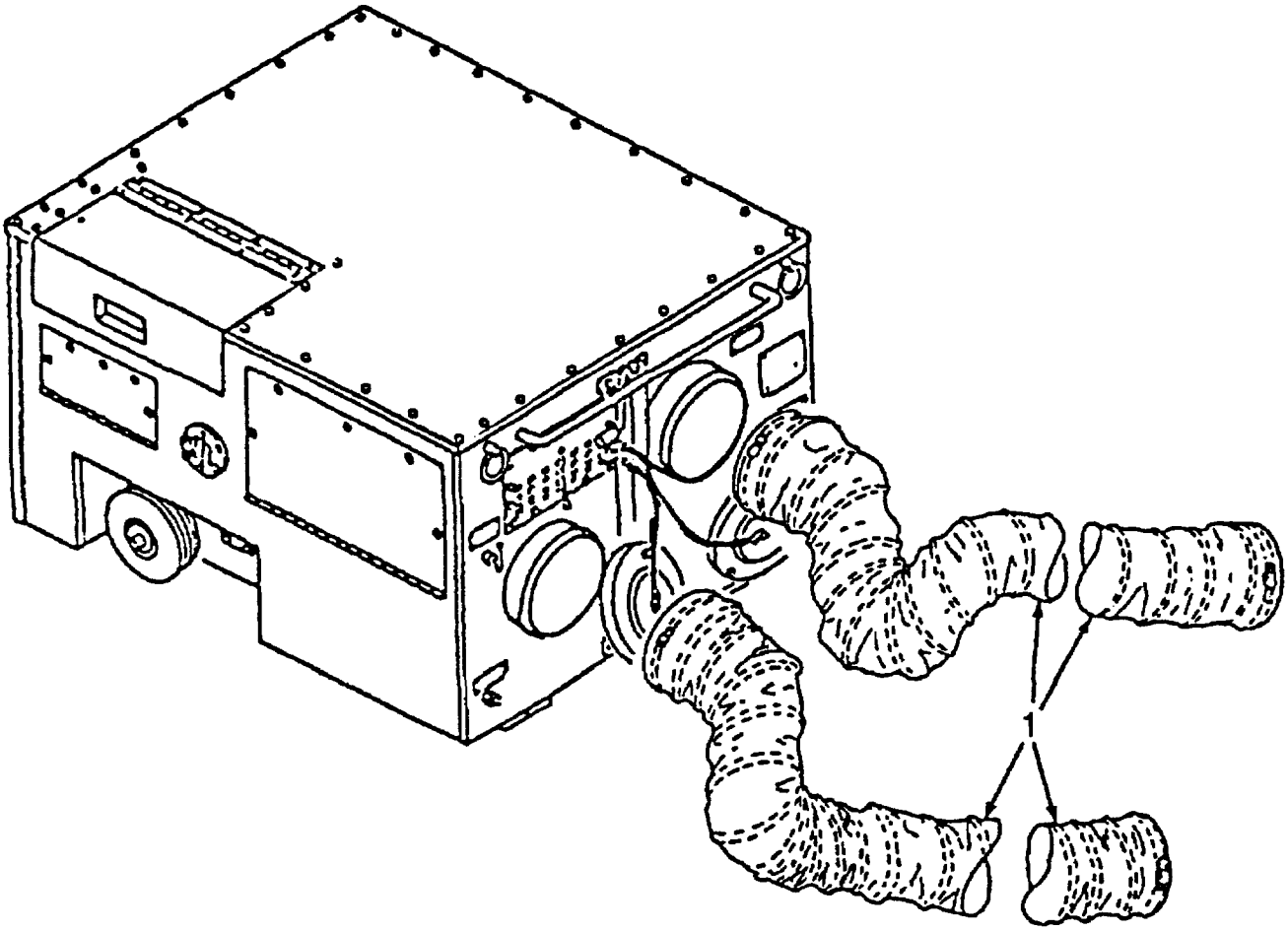

Figure 2. Flexible Air Ducts.

SECTION II

(1) ITEM NO	(2) SMR CODE	(3) CAGEC	(4) PART NUMBER	(5) DESCRIPTION AND USABLE ON CODES (UOC)	(6) QTY
				GROUP 01 **EXHAUST PIPE, HOSE, COVER, DOORS AND PANELS INSTALLATION**	
				FIGURE 2 **FLEXIBLE AIR DUCTS**	
1	PAOZZ	81349	MS38386B2D015	HOSE, AIR, DUCT.....	2

END OF FIGURE

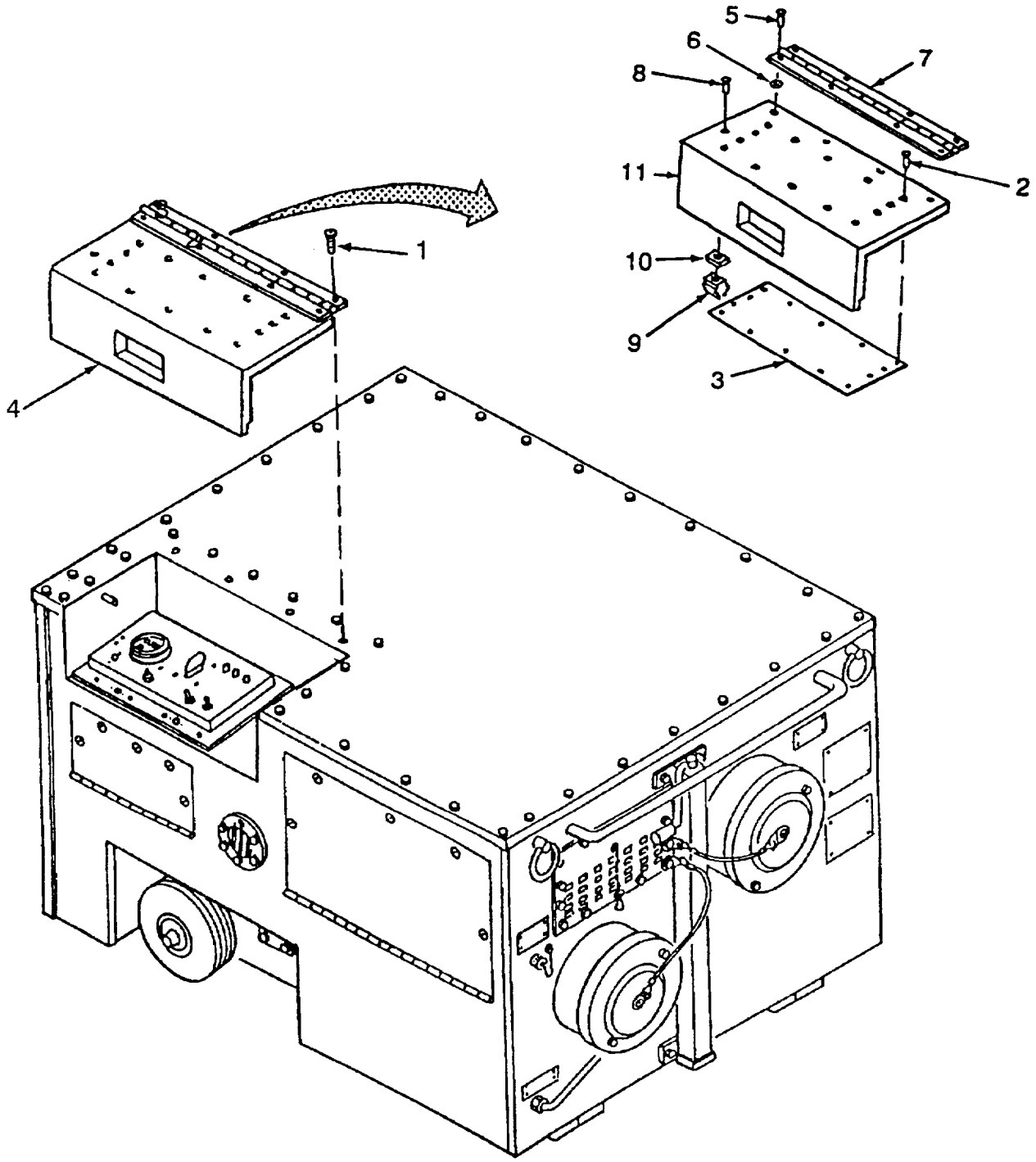

Figure 3. Control Box Cover.

SECTION II

(1) ITEM NO	(2) SMR CODE	(3) CAGEC	(4) PART NUMBER	(5) DESCRIPTION AND USABLE ON CODES (UOC)	(6) QTY
				GROUP 01 **EXHAUST PIPE, HOSE, COVER, DOORS AND PANELS INSTALLATION**	
				FIGURE 3 **CONTROL BOX COVER ASSEMBLY**	
1	PAOZZ	96906	MS51479-1	SCREW, MACHINE	4
2	PAOZZ	06888	AD42AH	RIVET, BLIND	14
3	XBOZZ	90598	60429-1	PLATE, OPERATIONAL, INSTRUCTIONS ..... UOC: YKR	1
3	XBOZZ	90598	60217-1	PLATE, OPERATIONAL, INSTRUCTIONS ..... UOC: LPL	1
4	XBOOO	90598	60040-100	COVER ASSEMBLY, CONTROL	1
5	PAOZZ	81349	M242436-A403H	. RIVET BLIND	4
6	PAOZZ	07707	ABUP4	. WASHER, FLAT, BACKUP	4
7	MOOZZ	90598	60033-1	. HINGE, TOP COVER (MAKE FROM P/N..... MS20257C3-4800 (96906), CUT TO 20.5 INCHES)	1
8	PAOZZ	07707	AD66ABS	. RIVET, BLIND	1
9	PAOZZ	90598	60076-1	. SPRING CLIP HOLDER	1
10	XBOZZ	90598	60078-1	. SPACER, SPRING CLIP	1
11	XBOZZ	90598	60034-1	. COVER, CONTROL BOX	1

END OF FIGURE

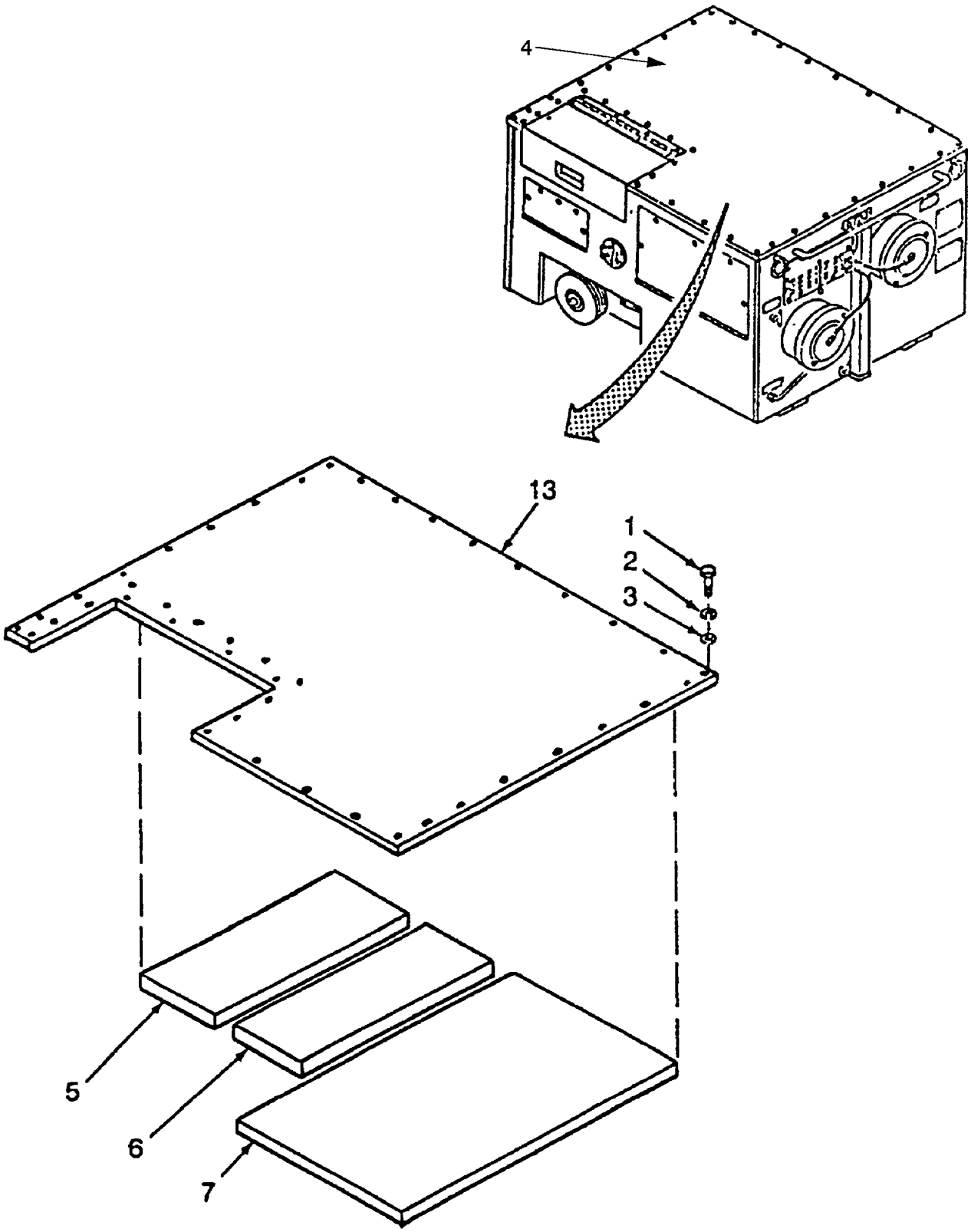

Figure 4. Top Panel Assembly (Sheet 1 of 2).

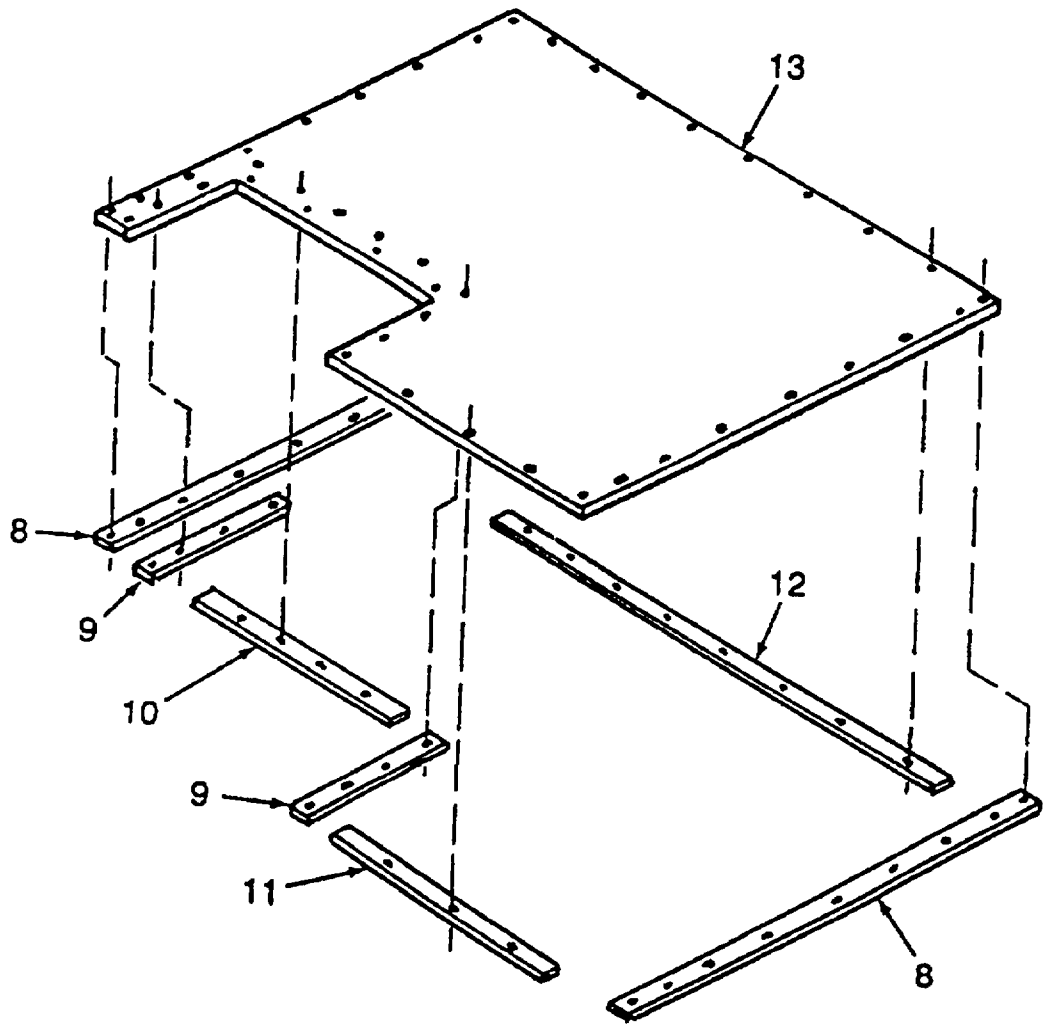

Figure 4. Top Panel Assembly (Sheet 2 of 2).

SECTION II

(1) ITEM NO	(2) SMR CODE	(3) CAGEC	(4) PART NUMBER	(5) DESCRIPTION AND USABLE ON CODES (UOC)	(6) QTY
				GROUP 01 **EXHAUST PIPE, HOSE, COVER, DOORS AND PANELS INSTALLATION**	
				FIGURE 4 **TOP PANEL ASSEMBLY**	
1	PAOZZ	80204	B1821BH025CO75N	SCREW, CAR HEXAGON HEAD	38
2	PAOZZ	96906	MS35338-139	WASHER, LOCK	38
3	PAOZZ	96906	MS15795-810	WASHER, FLAT	38
4	XBOOO	90598	60032-100	PANEL, TOP ASSEMBLY UOC: YKR	1
4	XBOOO	90598	60203-100	PANEL, TOP ASSEMBLY UOC: LPL	1
5	MOOZZ	90598	60188-1	. INSULATION (MAKE FROM P/N 08320116 (86730), CUT TO 9.50WX24.12L)	1
6	MOOZZ	90598	60188-2	. INSULATION ((MAKE FROM P/N 08320116 (86730), CUT TO 9.50WX24.12L)	1
7	MOOZZ	90598	60188-3	. INSULATION (MAKE FROM P/N 08320116 (86730), CUT TO 22.68WX35.75L)	1
8	MOOZZ	90598	60032-2	. GASKET (MAKE FROM P/N R411NPSA (86730), CUT TO 1.44WX39.50L) UOC: YKR	2
8	MOOZZ	90598	60203-2	. GASKET (MAKE FROM P/N R411NPSA (86730), CUT TO 1.44WX39.50L) UOC: LPL	2
9	MOOZZ	90598	60032-4	. GASKET (MAKE FROM P/N R411NPSA (86730), CUT TO 1.44WX13.00L) UOC: YKR	2
9	MOOZZ	90598	60203-4	. GASKET (MAKE FROM P/N R411NPSA (86730), CUT TO 1.44WX13.00L) UOC: LPL	2
10	MOOZZ	90598	60032-5	GASKET (MAKE FROM P/N R411NPSA (86730), CUT TO 1.44WX20.50L) UOC: YKR	1
10	MOOZZ	90598	60203-5	. GASKET (MAKE FROM P/N R411NPSA (86730), CUT TO 1.44WX20.50L) UOC: LPL	1
11	MOOZZ	90598	60032-6	GASKET (MAKE FROM P/N R411NPSA (86730), CUT TO 1.44WX24.12L) UOC: YKR	1
11	MOOZZ	90598	60203-6	. GASKET (MAKE FROM P/N R411NPSA (86730), CUT TO 1.44WX24.12L) UOC: LPL	1

SECTION II

(1) ITEM NO	(2) SMR CODE	(3) CAGEC	(4) PART NUMBER	(5) DESCRIPTION AND USABLE ON CODES (UOC)	(6) QTY
				GROUP 01 **EXHAUST PIPE, HOSE, COVER, DOORS AND PANELS INSTALLATION**	
				FIGURE 4 **TOP PANEL ASSEMBLY**	
12	MOOZZ	90598	60032-3	. GASKET (MAKE FROM P/N R411NPSA (86730), CUT TO 1.44WX47.62L) UOC: YKR	1
12	MOOZZ	90598	60203-3	. GASKET (MAKE FROM P/N R411NPSA (86730), CUT TO 1.44WX47.62L) UOC: LPL	1
13	XBOZZ	90598	60032-1	. PANEL UOC: YKR	1
13	XBOZZ	90598	60203-1	. PANEL UOC: LPL	

END OF FIGURE

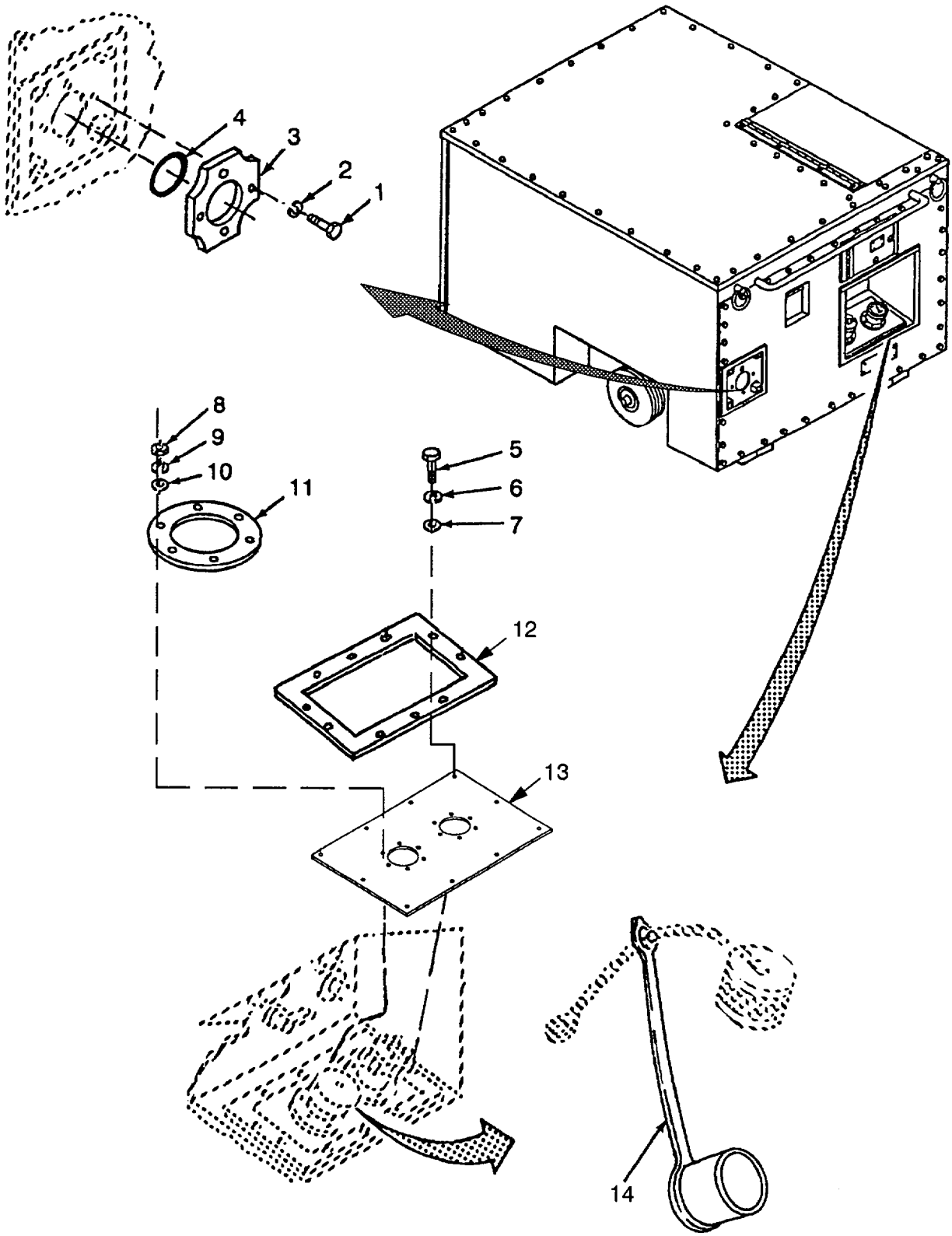

Figure 5. Rear Panel Assembly (Sheet 1 of 3).

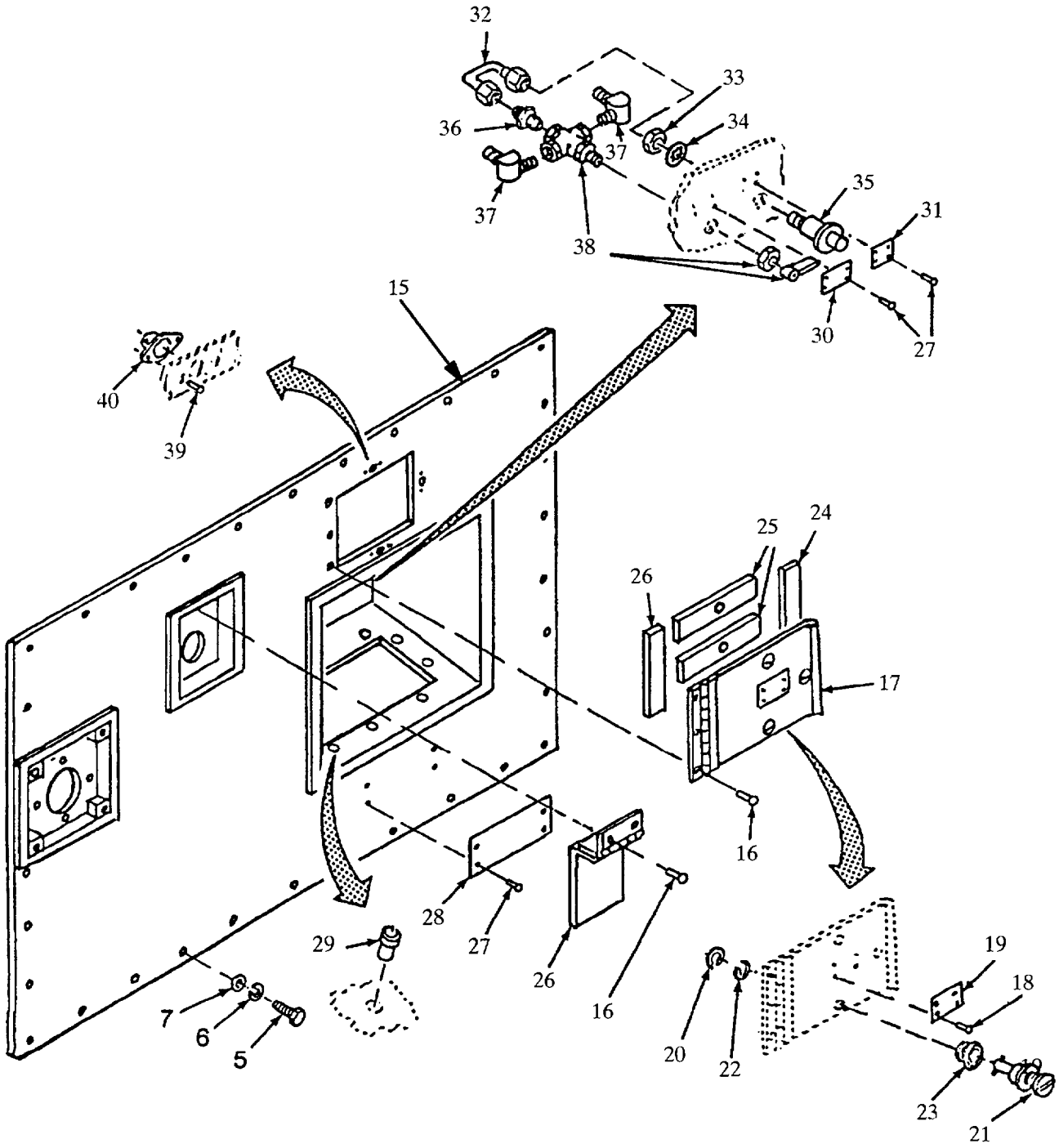

Figure 5. Rear Panel Assembly (Sheet 2 of 3).

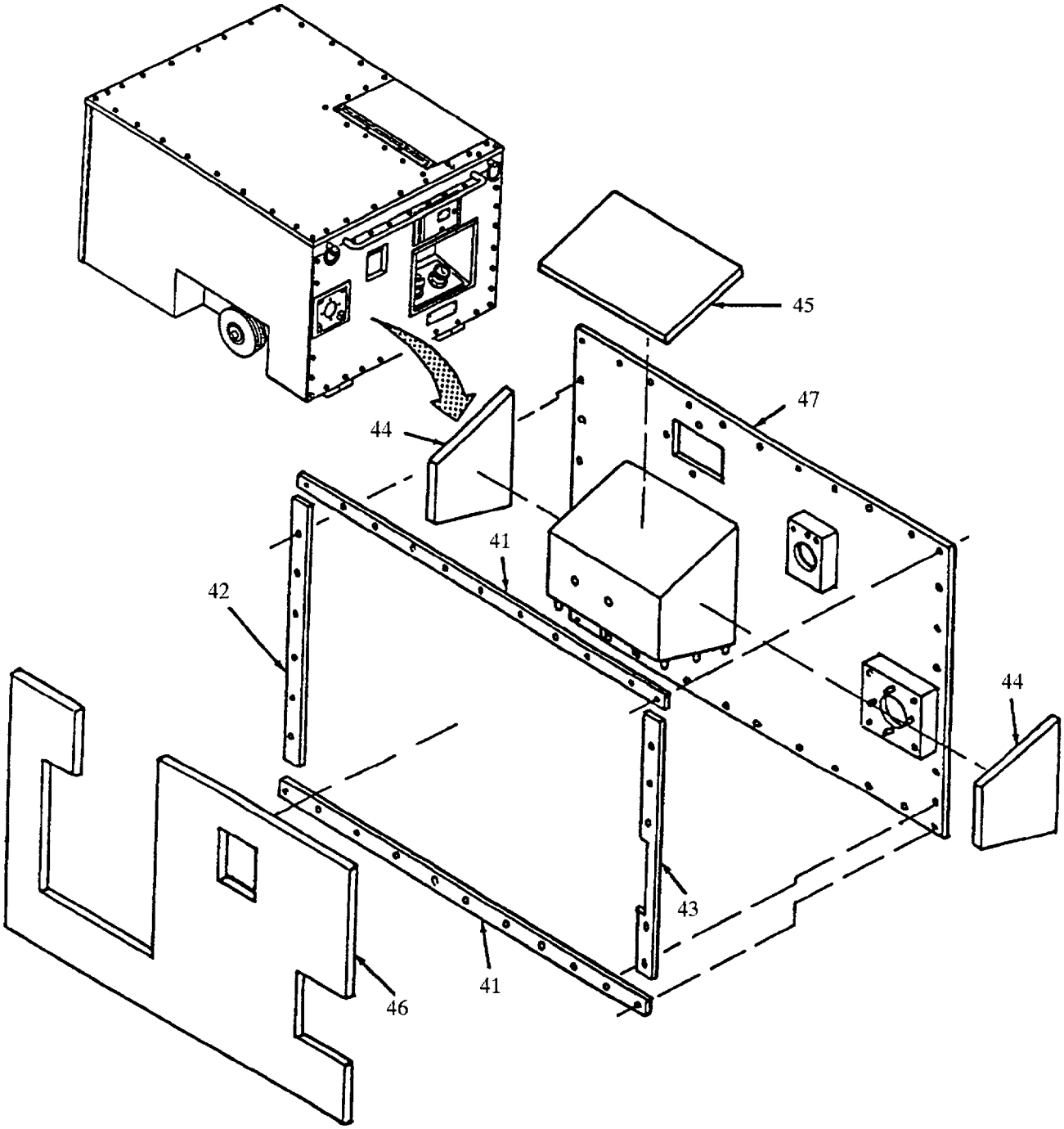

Figure 5. Rear Panel Assembly (Sheet 3 of 3).

SECTION II

(1) ITEM NO	(2) SMR CODE	(3) CAGEC	(4) PART NUMBER	(5) DESCRIPTION AND USABLE ON CODES (UOC)	(6) QTY
				GROUP 01 EXHAUST PIPE, HOSE, COVER, DOORS AND PANELS INSTALLATION	
				FIGURE 5 REAR PANEL ASSEMBLY	
1	PAOZZ	80204	B1821BH031C075N	BOLT, MACHINE	4
2	PAOZZ	96906	MS35338-140	WASHER, LOCK	4
3	XBOZZ	90598	60564-1	PLATE, SEALING	1
4	MOOZZ	90598	60000-158	GASKET (MAKE FROM P/N 0050D (17217), CUT TO 16 INCH LENGTH)	1
5	PAOZZ	80204	B1821BH025C075N	SCREW, CAP HEXAGON HEAD	43
6	PAOZZ	96906	MS35338-139	WASHER, LOCK	43
7	PAOZZ	96906	MS15795-810	WASHER, FLAT	43
8	PAOZZ	96906	MS35649-103	NUT PLAIN, HEXAGON	12
9	PAOZZ	96906	MS35338-138	WASHER, LOCK	12
10	PAOZZ	96906	MS15795-808	WASHER, FLAT	12
11	XBOZZ	90598	60494-1	RING, FILLER	2
12	XBOZZ	90598	60031-1	ISOLATOR, FRAME, FUEL	1
13	XBOZZ	90598	60022-1	ISOLATOR (GASKET), FUEL TANK	1
14	PAOZZ	97111	H2-66M	PLUG, PROTECTIVE, DUST INCLUDES ATTACHING CHAIN UOC: YKR	1
14	PAOZZ	78357	PDP-6	PLUG, PROTECTIVE, DUST INCLUDES ATTACHING CHAIN UOC: LPL	1
15	XBOOO	90598	60638-100	PANEL ASSEMBLY, REAR UOC: YKR	1
15	XBOOO	90598	60213-100	PANEL ASSEMBLY, REAR UOC: LPL	1
16	PAOZZ	07707	AD64H	. RIVET BLIND	5
17	XBOOO	90598	60628-100	. DOOR, ACCESS UOC: YKR	1
17	XBOOO	90598	60220-100	. DOOR, ACCESS UOC: LPL	1
18	PAOZZ	06888	AD42AH	.. RIVET, BLIND UOC: YKR	4
18	PAOZZ	06888	AD42AH	.. RIVET, BLIND UOC: LPL	2
19	XBOZZ	90598	60030-6	.. PLATE, IDENTIFICATION UOC: YKR	1
19	XBOZZ	90598	60202-6	.. PLATE, IDENTIFICATION UOC: LPL	1
20	PAOZZ	71286	4002-SW-SS	.. WASHER, SPLIT	3
21	PAOZZ	71286	4002-8S	.. STUD	3

SECTION II

(1) ITEM NO	(2) SMR CODE	(3) CAGEC	(4) PART NUMBER	(5) DESCRIPTION AND USABLE ON CODES (UOC)	(6) QTY
				GROUP 01 EXHAUST PIPE, HOSE, COVER, DOORS AND PANELS INSTALLATION	
				FIGURE 5 REAR PANEL ASSEMBLY	
22	PAOZZ	71286	40G26-1	.. RING, RETAINING	3
23	PAOZZ	71286	4002-0S	.. EYELET TURNLOCK FASTENER	3
24	MOOZZ	90598	60628-4	.. GASKET (MAKE FROM P/N R411NPSA (86730), CUT TO 1.00WX8.42L) UOC: YKR	2
24	MOOZZ	90598	60220-4	.. GASKET (MAKE FROM P/N R411NPSA (86730), CUT TO 1.00WX8.42L UOC: LPL	2
25	MOOZZ	90598	60628-3	GASKET (MAKE FROM P/N R411NPSA (86730), CUT TO 1.00WX4.84L) UOC: YKR	2
25	MOOZZ	90598	60220-3	.. GASKET (MAKE FROM P/N R411NPSA (86730), CUT TO 1.00WX4.84L) UOC: LPL	2
26	XBOOO	90598	60148-100	. HINGE ASSEMBLY	1
27	PAOZZ	06888	AD42AH	. RIVET, BLIND UOC: YKR	12
27	PAOZZ	06888	AD42AH	. RIVET BLIND UOC: LPL	8
28	XBOZZ	90598	60030-1	. NAMEPLATE UOC: YKR	1
28	XBOZZ	90598	60202-1	. NAMEPLATE UOC: LPL	1
29	PAOZZ	03481	A25KB151	. NUT PLAIN, BLIND RIVET	10
30	XBOZZ	90598	60030-7	. NAMEPLATE UOC: YKR	1
30	XBOZZ	90598	60202-7	. NAMEPLATE UOC: LPL	1
31	XBOZZ	90598	60030-5	. NAMEPLATE UOC: YKR	1
31	XBOZZ	90598	60202-5	. NAMEPLATE UOC: LPL	1
32	XBOZZ	90598	60489-100	. TUBE ASSEMBLY	1
33	PAOZZ	96906	MS24400D6	. NUT PLAN, HEXAGON UOC: YKR	1
33	PAOZZ	96906	AN924-6D	. NUT PLAN, HEXAGON UOC: LPL	1
34	PAOZZ	96906	MS35333-81	. WASHER, LOCK UOC: YKR	1
34	PAOZZ	96906	MS35333-46	. WASHER, LOCK UOC: LPL	1

SECTION II

(1) ITEM NO	(2) SMR CODE	(3) CAGEC	(4) PART NUMBER	(5) DESCRIPTION AND USABLE ON CODES (UOC)	(6) QTY
				GROUP 01 **EXHAUST PIPE, HOSE, COVER, DOORS AND PANELS INSTALLATION**	
				FIGURE 5 **REAR PANEL ASSEMBLY**	
35	PAOZZ	78357	A28-1N6-657	. COUPLING HALF, QUICK UOC: YKR	1
35	PAOZZ	78357	A484-3	. COUPLING HALF QUICK UOC: LPL	1
36	PAOZZ	79470	C5205X6	. ADAPTER, STRAIGHT PIPE	1
37	PAOZZ	96906	MS51504B6Z	. ELBOW, MALE	2
38	PAOZZ	56173	700-4F4F4F-BT	. VALVE, BALL	1
39	PAOZZ	07707	AD43H	. RIVET, BLIND	6
40	PAOZZ	71286	244-16S	. RECEPTACLE, TURNLOCK	3
41	MOOZZ	90598	60638-22	. GASKET (MAKE FROM P/N R411NPSA (86730), CUT TO 1.50WX39.00L) UOC: YKR	2
41	MOOZZ	90598	60213-22	. GASKET (MAKE FROM P/N R411NPSA (86730), CUT TO 1.50WX39.00L) UOC: LPL	2
42	MOOZZ	90598	60638-23	. GASKET (MAKE FROM P/N R411NPSA (86730), CUT TO 1.50WX24.50L) UOC: YKR	1
42	MOOZZ	90598	60213-23	. GASKET (MAKE FROM P/N R411NPSA (86730), CUT TO 1.50WX24.50L) UOC: LPL	1
43	MOOZZ	90598	60638-24	. GASKET (MAKE FROM P/N R411NPSA (86730), CUT TO 1.50WX24.50L) UOC: YKR	1
43	MOOZZ	90598	60213-24	. GASKET (MAKE FROM P/N R411NPSA (86730), CUT TO 1.50WX24.50L) UOC: LPL	1
44	MOOZZ	90598	60179-1	. INSULATION (MAKE FROM P/N 08320116 (86730), CUT TO 8.50WX11.50L	2
45	MOOZZ	90598	60140-21	. INSULATION (MAKE FROM P/N 08320116 (86730), CUT TO 8.75WX13.50L	1
46	MOOZZ	90598	60169-1	. INSULATION (MAKE FROM P/N 08320116 (86730), CUT TO 24.50W X36.00L)	1
47	XBOZZ	90598	60640-100	. PANEL, WELDMENT, REAR UOC: YKR	1
47	XBOZZ	90598	60214-100	. PANEL, WELDMENT REAR UOC: LPL	1
48	XBOZZ	03431	A31KB125	. RIVNUT UOC: YKR, LPL	4

END OF FIGURE

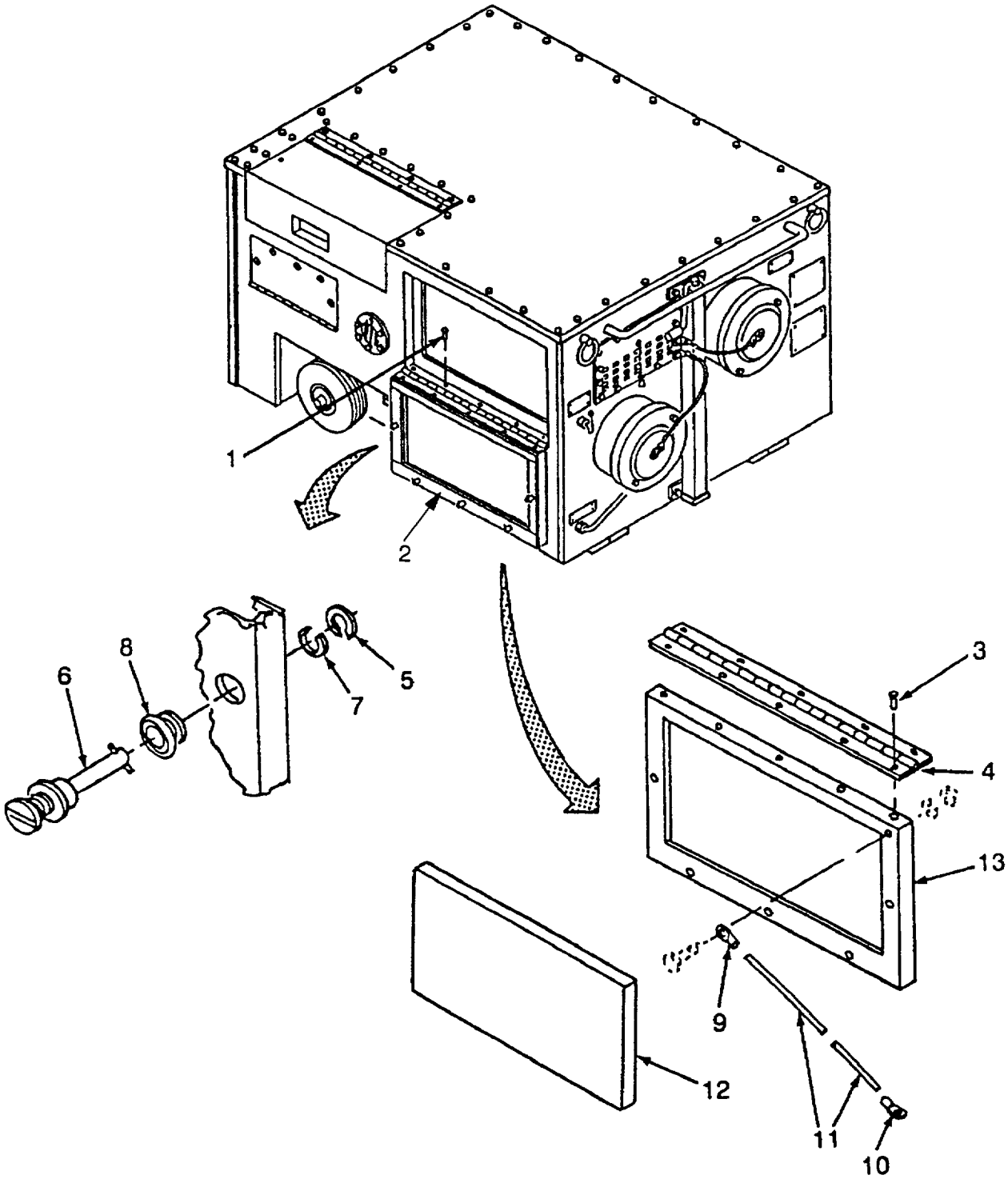

Figure 6. Front Side Door Assembly.

SECTION II

(1) ITEM NO	(2) SMR CODE	(3) CAGEC	(4) PART NUMBER	(5) DESCRIPTION AND USABLE ON CODES (UOC)	(6) QTY
				GROUP 01 EXHAUST PIPE, HOSE, COVER, DOORS AND PANELS INSTALLATION	
				FIGURE 6 FRONT SIDE DOOR ASSEMBLY	
1	PAOZZ	07707	AD64AH	RIVET, BLIND	5
2	XBOOO	90598	60619-100	DOOR ASSEMBLY, FRONT SIDE	1
3	PAOZZ	07707	AD62H	. RIVET, BLIND	5
4	MOOZZ	90598	60617-1	. HINGE (MAKE FROM P/N MS20257C3-4800 (96906) , CUT TO 21.50L	1
5	PAOZZ	71286	4002-SW-SS	. WASHER, SPLIT	5
6	PAOZZ	71286	4002-28S	. STUD ASSEMBLY, TURNLOCK	5
7	PAOZZ	71286	40G26-1	. RING, RETAINING	5
8	PAOZZ	71286	4002-OS	EYELET TURNLOCK FASTENER	5
9	PAOZZ	96906	MS25036-112	. TERMINAL, LUG	1
10	PAOZZ	96906	MS25036-157	. TERMINAL, LUG	1
11	MOOZZ	90598	60619-13	BRAID, WIRE (MAKE FROM P/N 8663 (16428), CUT TO 15 IN L)	1
12	MOOZZ	90598	60174-1	. INSULATION (MAKE FROM P/N 08320116 (2P653) , CUT TO 13.70WX21.81L)	1
13	XBOZZ	90598	60618-1	. PANEL	1

END OF FIGURE

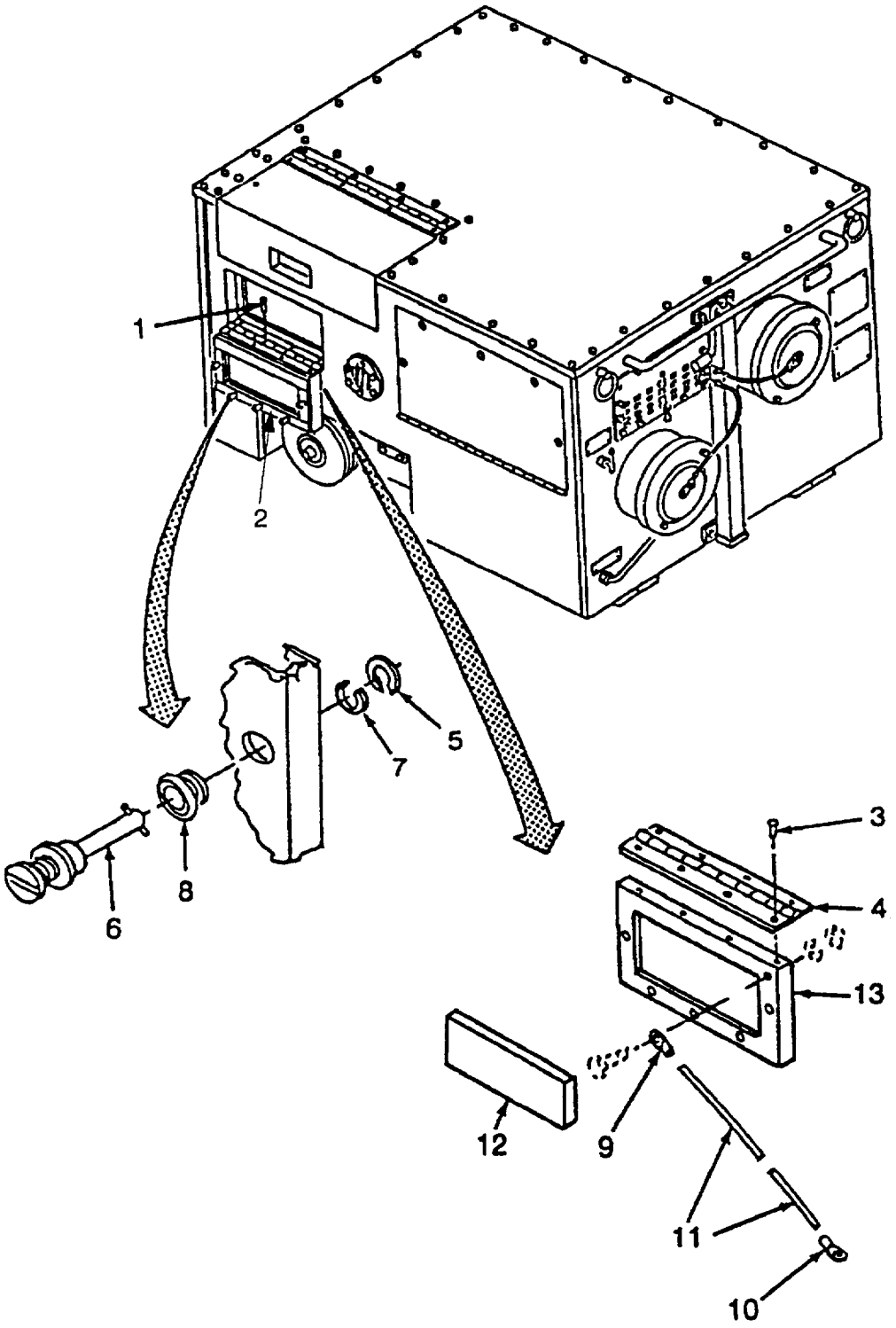

Figure 7. Rear Side Door Assembly.

SECTION II

(1) ITEM NO	(2) SMR CODE	(3) CAGEC	(4) PART NUMBER	(5) DESCRIPTION AND USABLE ON CODES (UOC)	(6) QTY
				GROUP 01 EXHAUST PIPE, HOSE, COVER, DOORS AND PANELS INSTALLATION	
				FIGURE 7 REAR SIDE DOOR ASSEMBLY	
1	PAOZZ	07707	AD64AH	RIVET, BLIND	4
2	XBOOO	90598	60627-100	DOOR ASSEMBLY, SIDE REAR	1
3	PAOZZ	07707	AD62H	. RIVET BLIND	4
4	MOOZZ	90598	60625-1	. HINGE (MAKE FROM P/N MS20257C3-4800 (96906) , CUT TO 15.50)	1
5	PAOZZ	71286	4002-SW-SS	. WASHER, SPLIT	5
6	PAOZZ	71286	4002-28S	. STUD ASSEMBLY, TURNLOCK.	5
7	PAOZZ	71286	40G26-1	. RING, RETAINING	5
8	PAOZZ	71286	4002-OS	EYELET TURNLOCK FASTENER	5
9	PAOZZ	96906	MS25036-112	. TERMINAL, LUG	1
10	PAOZZ	96906	MS25036-157	. TERMINAL, LUG	1
11	MOOZZ	90598	60627-13	. BRAID, WIRE (MAKE FROM P/N 8663 (16428), CUT TO 15 IN)	1
12	MOOZZ	90598	60175-1	. INSULATION (MAKE FROM P/N 08320116 (2P653) , CUT TO 9.57WX15.81L)	1
13	XBOZZ	90598	60626-1	. PANEL	1

END OF FIGURE

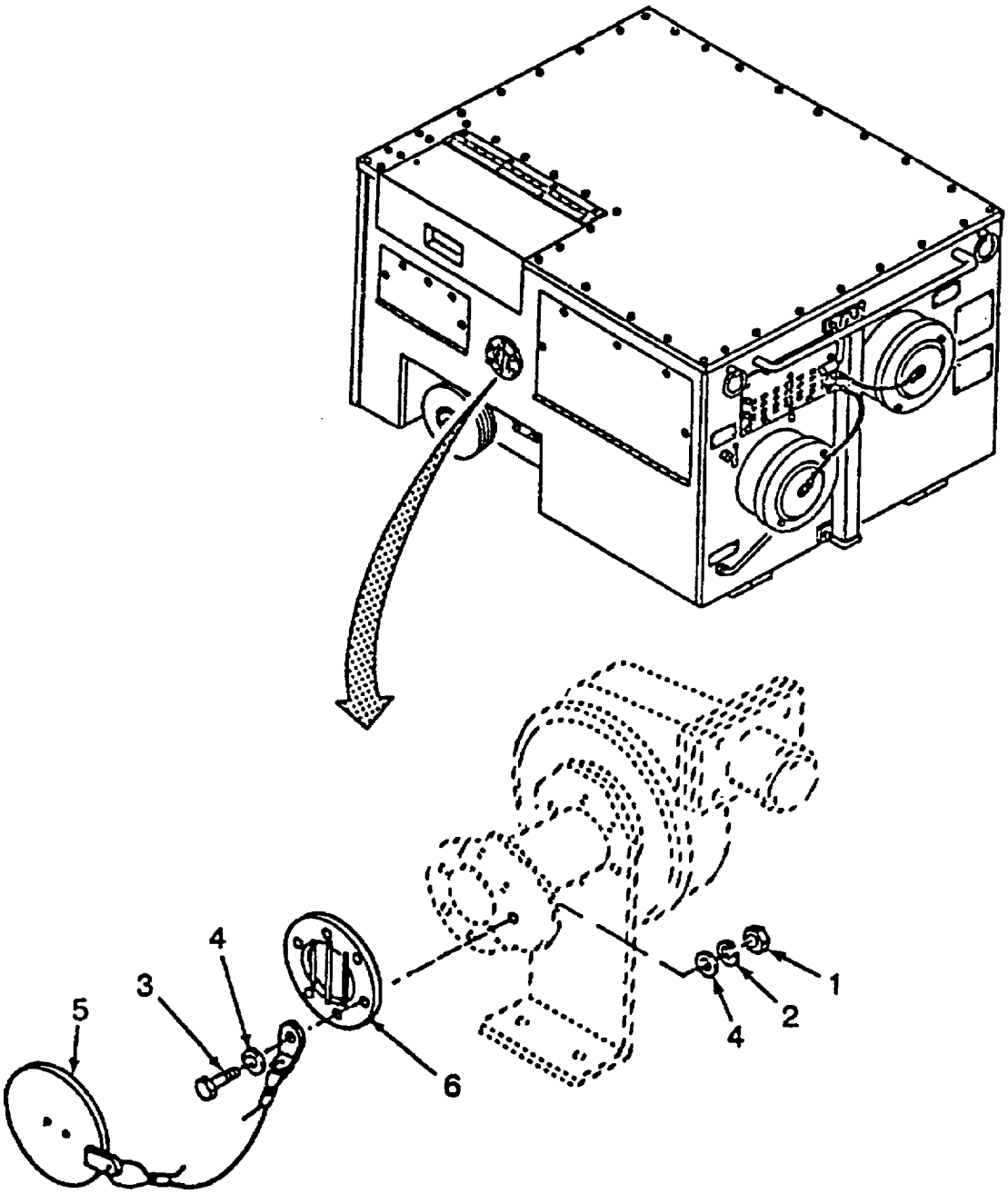

Figure 8. Air Inlet Cover and Guard.

SECTION II

(1) ITEM NO	(2) SMR CODE	(3) CAGEC	(4) PART NUMBER	(5) DESCRIPTION AND USABLE ON CODES (UOC)	(6) QTY
				GROUP 01 EXHAUST PIPE, HOSE, COVER, DOORS AND PANELS INSTALLATION	
				FIGURE 8 AIR INLET COVER AND GUARD	
1	PAOZZ	96906	MS51971-2	NUT, PLAIN, HEXAGON	6
2	PAOZZ	96906	MS35338-139	WASHER, LOCK	6
3	PAOZZ	80204	B1821BH025C088N	SCREW, CAR, HEXAGON HEAD	6
4	PAOZZ	96906	MS15795-810	WASHER, FLAT	12
5	XBOZZ	90598	60048-100	COVER, AIR INLET (INCLUDES ATTACHING CABLE)	1
6	XBOZZ	90598	60557-100	GUARD, COMBUSTION	1

END OF FIGURE

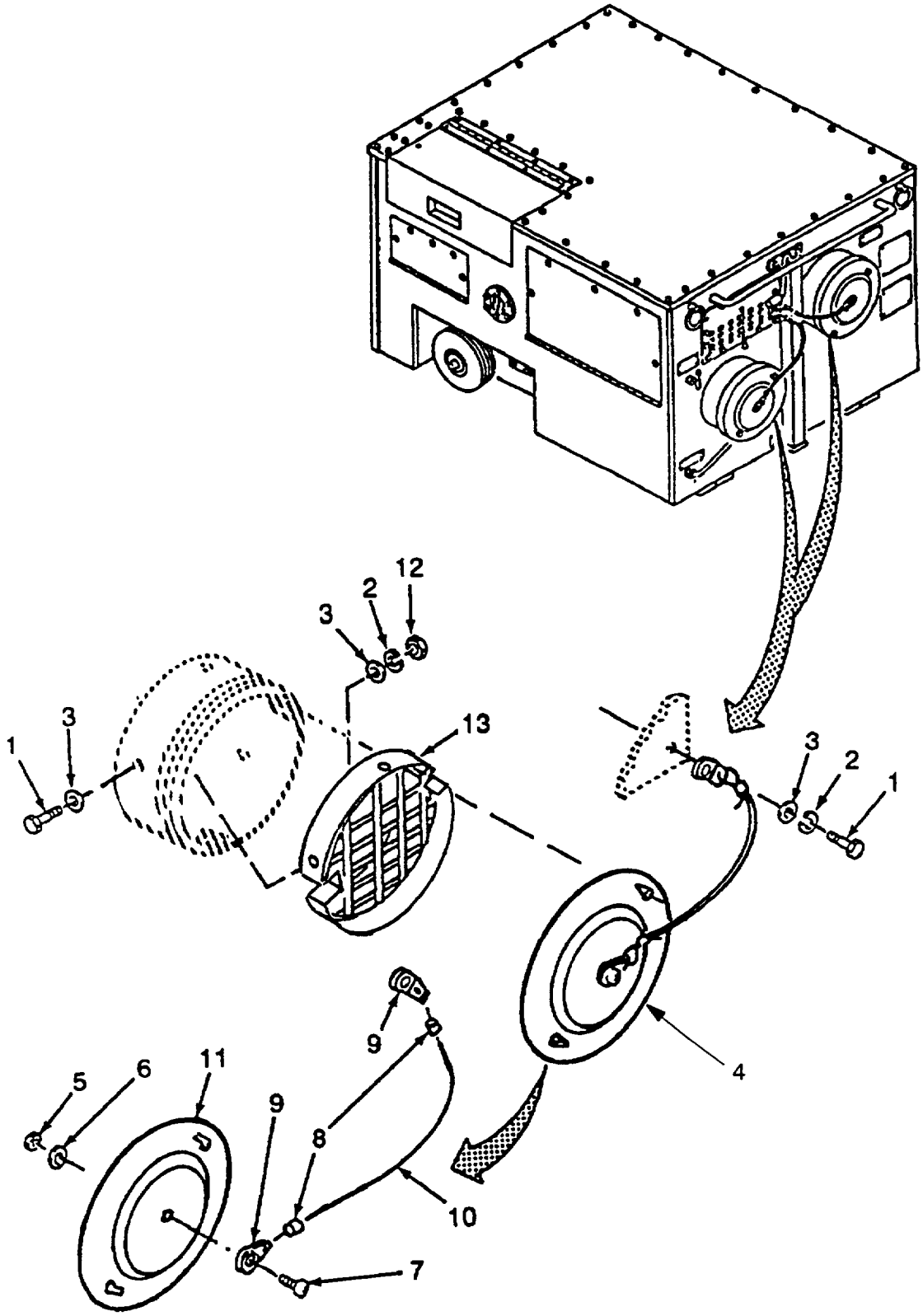

Figure 9. Dust Cover and Inlet/Discharge Screen.

SECTION II

(1) ITEM NO	(2) SMR CODE	(3) CAGEC	(4) PART NUMBER	(5) DESCRIPTION AND USABLE ON CODES (UOC)	(6) QTY
				GROUP 01 EXHAUST PIPE, HOSE, COVER, DOORS AND PANELS INSTALLATION	
				FIGURE 9 DUST COVER AND INLET/ DISCHARGE SCREEN	
1	PAOZZ	96906	MS51849-65C	SCREW, MACHINE	10
2	PAOZZ	96906	MS35338-138	WASHER, LOCK	10
3	PAOZZ	96906	MS15795-808	WASHER, FLAT	18
4	AOOOO	90598	60565-100	COVER, DUCT ASSEMBLY (INCLUDES AT-TACHING CABLE)	2
5	PAOZZ	96906	MS21044C3	. NUT, SELF-LOCKING	1
6	PAOZZ	96906	MS15795-816	. WASHER, FLAT	1
7	PAOZZ	96906	MS51958-64	. SCREW, MACHINE	1
8	PAOZZ	39428	3623T13	. SPLICE, CONDUCTOR	1
9	PAOZZ	90598	60566-1	. CONNECTOR, CABLE	2
10	MOOZZ	90598	60565-4	. CABLE (MAKE FROM P/N HC66-100X063-125 (72954) , CUT TO 16.00L	1
11	XBOZZ	90598	60565-1	. COVER, DUCT	1
12	PAOZZ	96906	MS35650-103	NUT PLAIN, HEXAGON	8
13	XBOZZ	90598	60045-100	SCREEN, INLET/DISCHARGE	2

END OF FIGURE

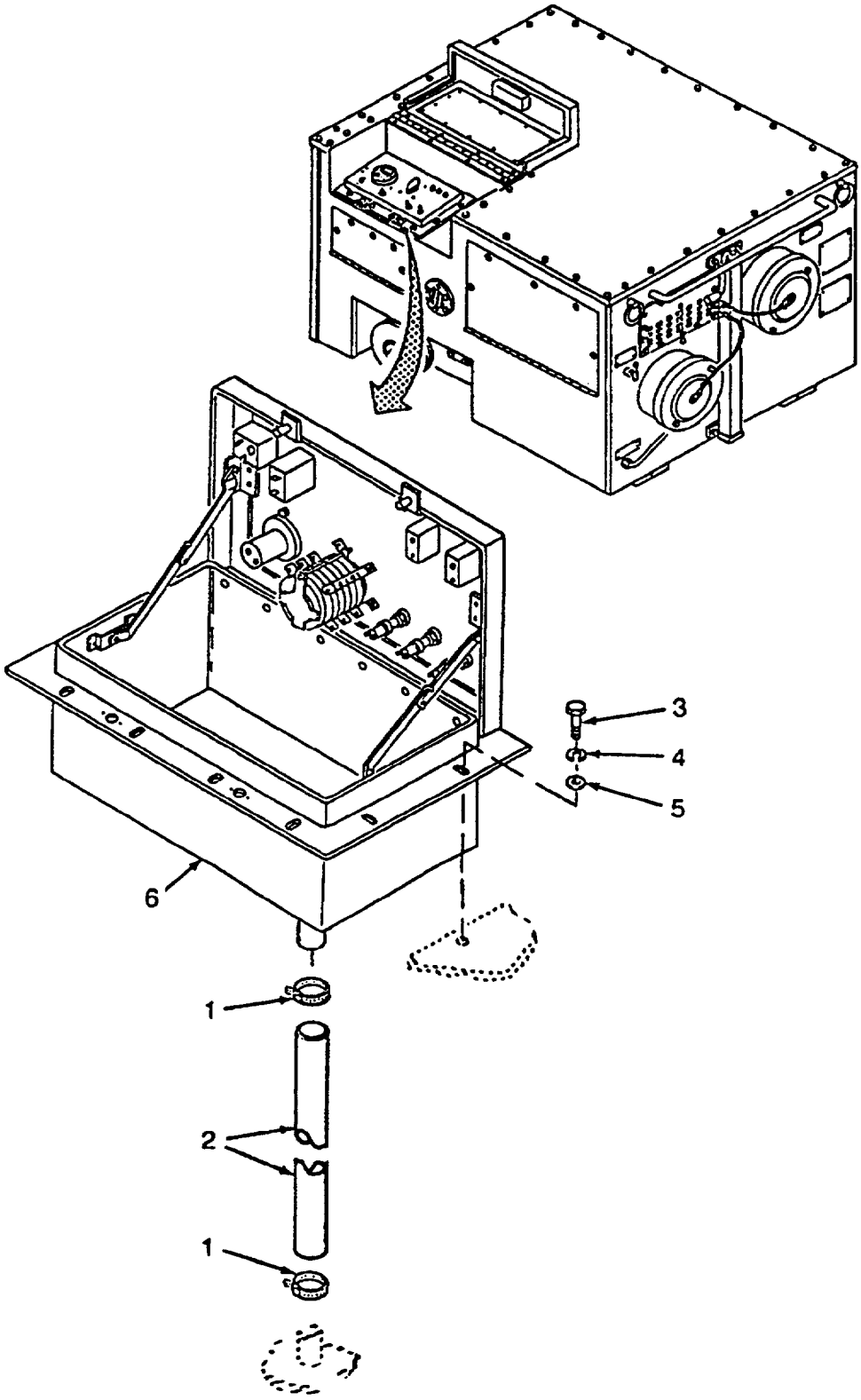

Figure 10. Control Assembly, Electrical.

SECTION II

(1) ITEM NO	(2) SMR CODE	(3) CAGEC	(4) PART NUMBER	(5) DESCRIPTION AND USABLE ON CODES (UOC)	(6) QTY
				GROUP 02 CONTROL AND COMBUSTION ASSEMBLES INSTALLATION	
				FIGURE 10 CONTROL ASSEMBLY, ELECTRICAL	
1	PAOUZ	96906	MS35482-11	CLAMP, HOSE	2
2	MOOZZ	90598	60075-1	TUBE, DRAIN (MAKE FROM P/N AA00038, ... CAGE 86228, CUT TO 18.50 INCHES)	1
3	PAOZZ	80204	B1821BH025C075N	SCREW, CAP, HEXAGON HEAD	12
4	PAOZZ	96906	MS35338-139	WASHER, LOCK	12
5	PAOZZ	96906	MS15795-810	WASHER, FLAT	12
6	AOOFF	90598	60420-100	CONTROL ASSEMBLY	1

END OF FIGURE

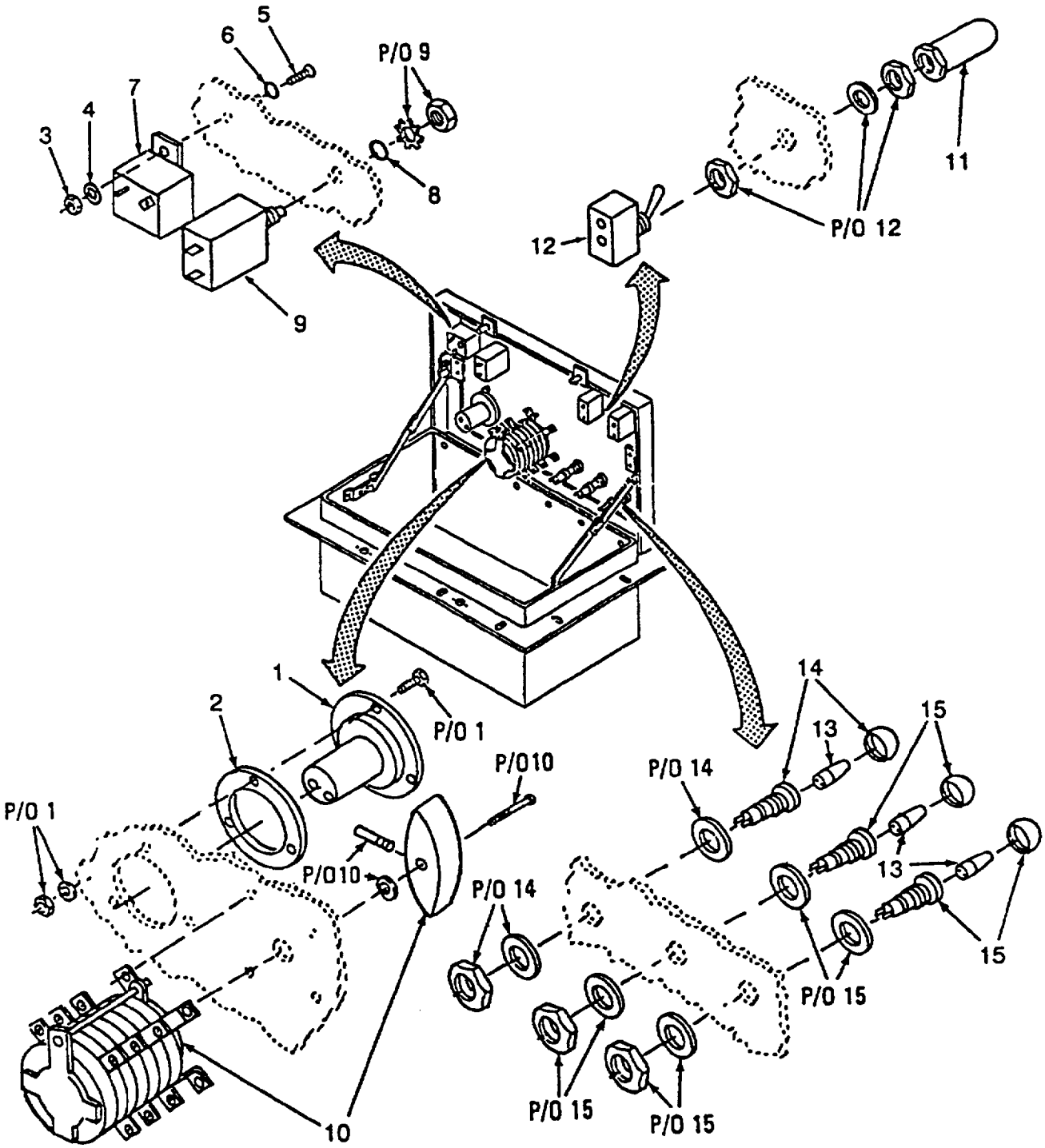

Figure 11. Time Meter, Circuit Breakers, Switches and Light Indicators.

SECTION II

(1) ITEM NO	(2) SMR CODE	(3) CAGEC	(4) PART NUMBER	(5) DESCRIPTION AND USABLE ON CODES (UOC)	(6) QTY
				GROUP 02 CONTROL AND COMBUSTION ASSEMBLIES INSTALLATION	
				FIGURE 11 TIME METER, CIRCUIT BREAKERS, SWITCHES AND LIGHT INDICATORS	
1	PAOZZ	74400	85315	. METER, TIME TOTALIZING (INCLUDES ATTACHING HARDWARE)	1
2	XBOZZ	90598	60824-1	. GASKET (MAKE FROM P/N R411NPSA (2P653) , CUT TO 2.88 OD X 2.00 ID)	1
3	PAOZZ	96906	MS35650-103	. NUT, PLAIN, HEXAGON	2
4	PAOZZ	96906	MS35333-73	. WASHER, LOCK	2
5	PAOZZ	96906	MS51958-67	. SCREW, MACHINE	2
6	PAOZZ	96906	MS9955-107	. PACKING, PREFORMED	2
7	PAOZZ	82647	PDM-25	. CIRCUIT BREAKER	1
8	PAOZZ	96906	MS29513-012	. PACKING, PREFORMED.	1
9	PAOZZ	81541	PR11-1-1.00-XX-S	. CIRCUIT BREAKER (INCLUDES ATTACHING HARDWARE)	1
10	PAOZZ	28057	12804	. SWITCH, ROTARY (INCLUDES ATTACHING. HARDWARE)	1
11	PAOZZ	96906	MS25246-1	. EXTENSION, TOGGLE LE	2
12	PAOZZ	96906	MS24523-30	. SWITCH, TOGGLE (INCLUDES ATTACHING. HARDWARE)	2
13	PAOZZ	92966	120MB	. BULB, LIGHT	3
14	PAOZZ	90598	60424-2	. INDICATOR, LIGHT GREEN (INCLUDES ATTACHING HARDWARE)	2
15	PAOZZ	90598	60424-1	. INDICATOR, LIGHT RED (INCLUDES ATTACHING HARDWARE)	2

END OF FIGURE

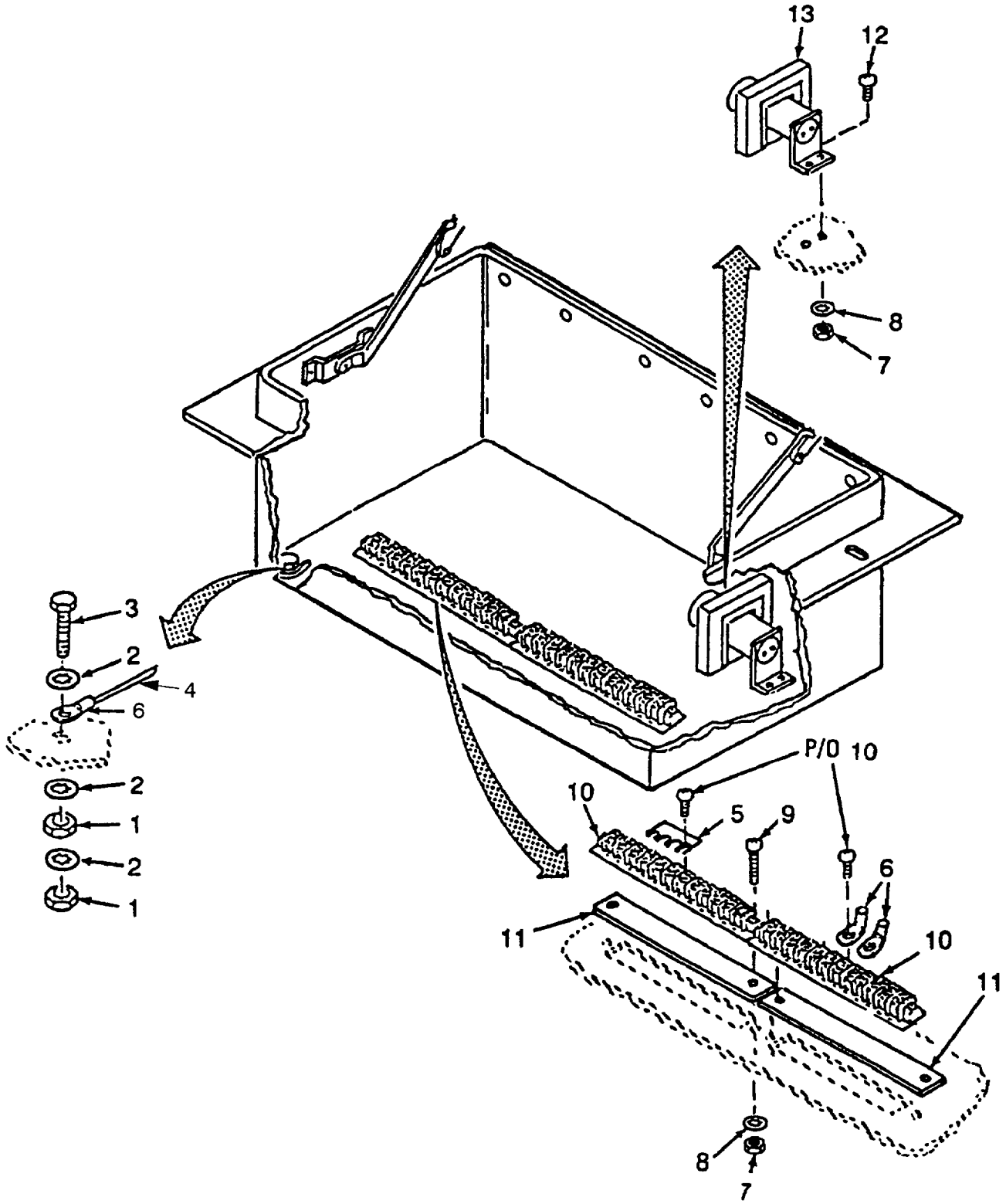

Figure 12. Ground Wire, Terminal Strips and Transformer.

SECTION II

(1) ITEM NO	(2) SMR CODE	(3) CAGEC	(4) PART NUMBER	(5) DESCRIPTION AND USABLE ON CODES (UOC)	(6) QTY
				GROUP 02 CONTROL AND COMBUSTION ASSEMBLES INSTALLATION	
				FIGURE 12 GROUND WIRE, TERMINAL STRIPS AND TRANSFORMER	
1	PAOZZ	96906	MS35691-406	. NUT, PLAIN, HEXAGON	2
2	PAOZZ	96906	MS35333-74	. WASHER, LOCK	3
3	PAOZZ	80204	B1821BH025C100N	. SCREW, CAR, HEXAGON HEAD	2
4	MOOZZ	90598	60402-78	. WIRE, ELECTRICAL (MAKE FROM P/N M5046/1YZ-9, CAGE 81349, CUT TO 12 INCHES	1
5	XBOZZ	73631	267-A42-5	. BUS, CONNECTOR	1
6	PAOZZ	96906	MS25036-106	. TERMINAL, LUG (INSTALLED ON TB3, NUMBERS 6 AND 7 FOR TESTING).	3
7	PAOZZ	96906	MS35649-264	NUT PLAIN, HEXAGON	6
8	PAOZZ	96906	MS35333-154	. WASHER, LOCK	6
9	PAOZZ	96906	MS51957-46	. SCREW, MACHINE	4
10	XBOZZ	73631	GFTSX-12	. TERMINAL STRIP	2
11	XBOZZ	73631	267A19-12	. TERMINAL, MARKER	2
12	PAOZZ	96906	MS51957-28	. SCREW, MACHINE	2
13	PAOZZ	34764	110850	. TRANSFORMER, REMOTE	1

END OF FIGURE

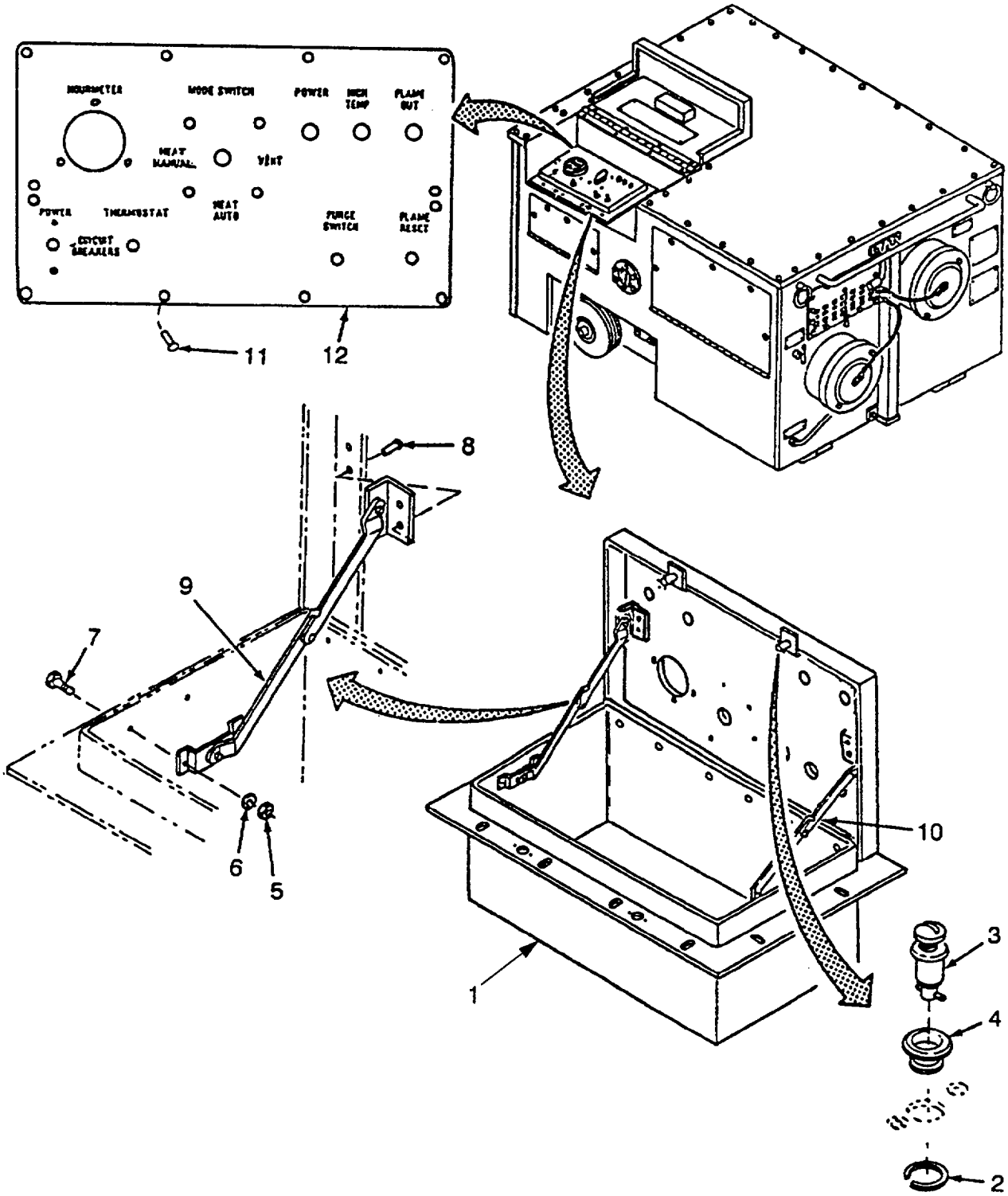

Figure 13. Control Box (Sheet 1 of 2).

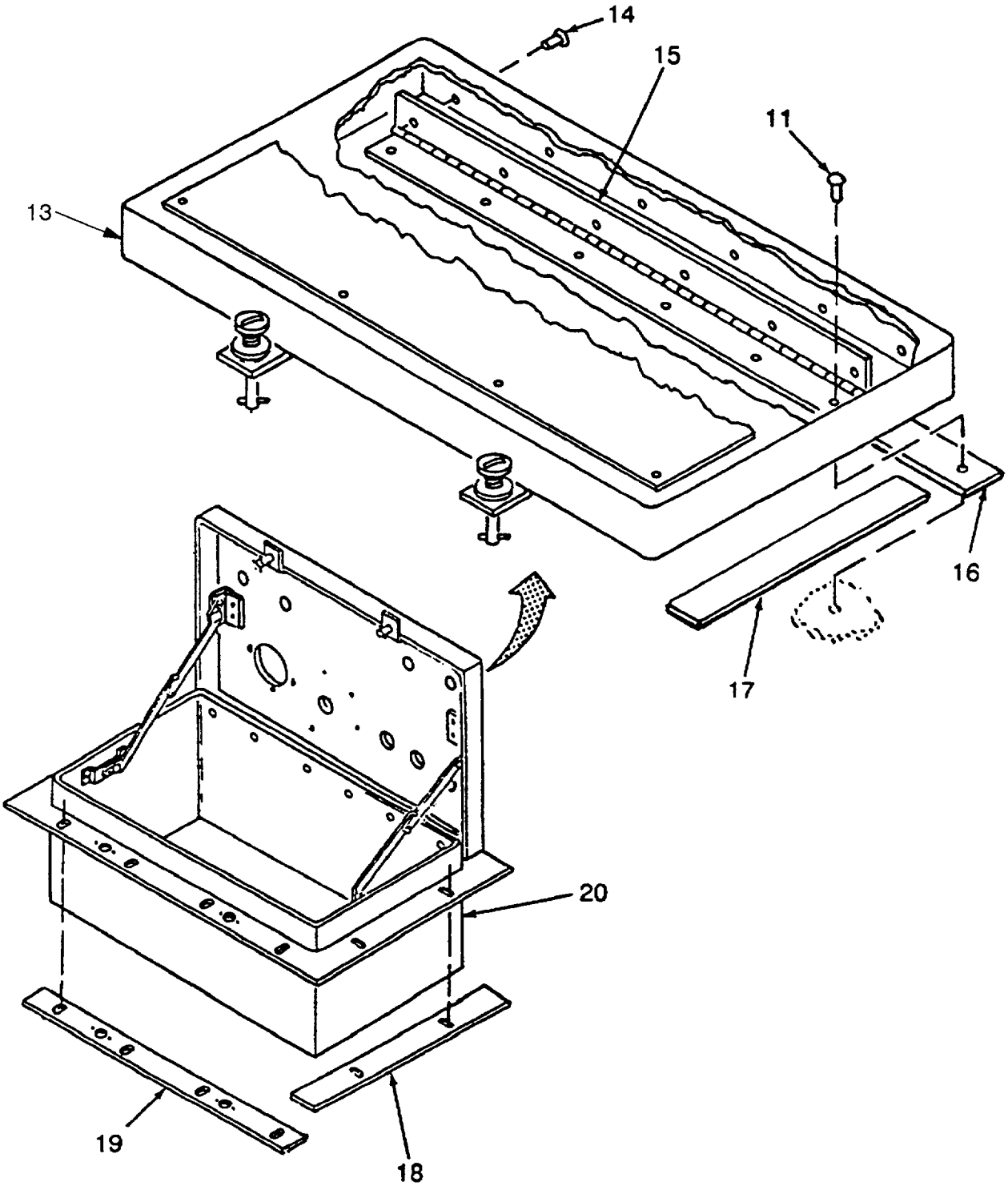

Figure 13. Control Box (Sheet 2 of 2).

SECTION II

(1) ITEM NO	(2) SMR CODE	(3) CAGEC	(4) PART NUMBER	(5) DESCRIPTION AND USABLE ON CODES (UOC)	(6) QTY
				GROUP 02 CONTROL AND COMBUSTION ASSEMBLES INSTALLATION	
				FIGURE 13 CONTROL BOX	
1	XBFFF	90598	60810-100	. . CONTROL BOX	1
2	PAFZZ	71286	40G26-1	. . RING, RETAINING	2
3	PAFZZ	71286	4002-10S	. . STUD ASSEMBLY, TURNLOCK	2
4	PAFZZ	71286	4002-OS	. . EYELET, TURNLOCK FASTENER	2
5	PAFZZ	96906	MS21044C08	. . NUT SELF-LOCKING, HEXAGON	4
6	PAFZZ	96906	MS27183-15	. . WASHER, FLAT	4
7	PAFZZ	96906	MS51957-46	. . SCREW, MACHINE	4
8	PAFZZ	07707	AD64H	. . RIVET, BLIND	4
9	XBFZZ	90598	60817-101	. . SUPPORT, ASSEMBLY LEFT	1
10	XBFZZ	90598	60817-100	. . SUPPORT, ASSEMBLY RIGHT	1
11	PAFZZ	07707	AD42H	. . RIVET, BLIND	18
12	XBFZZ	90598	60011-1	. . PLATE, CONTROL PANEL	1
13	XBFFF	90598	60815-100	. . PANEL ASSEMBLY	1
14	PAFZZ	07707	AD42H	. . . RIVET, BLIND	6
15	MFFZZ	90598	60816-1	. . . HINGE (MAKE FROM P/N MS20257C2-1400 (96906) , CUT TO 14.00L)	1
16	MFFZZ	90598	60815-5	. . GASKET (MAKE FROM P/N MIL-R-6130TY2GRA (81349) , CUT TO 8.00)	2
17	MFFZZ	90598	60815-6	. . GASKET (MAKE FROM P/N MIL-R-6130TY2GRA (81349) , CUT TO 14.16)	2
18	MFFZZ	90598	60810-14	. . GASKET (MAKE FROM P/N MIL-R-6130TY2GRA (81349) , CUT TO 10.93)	2
19	MFFZZ	90598	60810-15	. . GASKET (MAKE FROM P/N MIL-R-6130TY2GRA (81349) , CUT TO 14.78 L	2
20	XBFZZ	90598	60812-100	. . WELDMENT, BOX CONTROL	1

END OF FIGURE

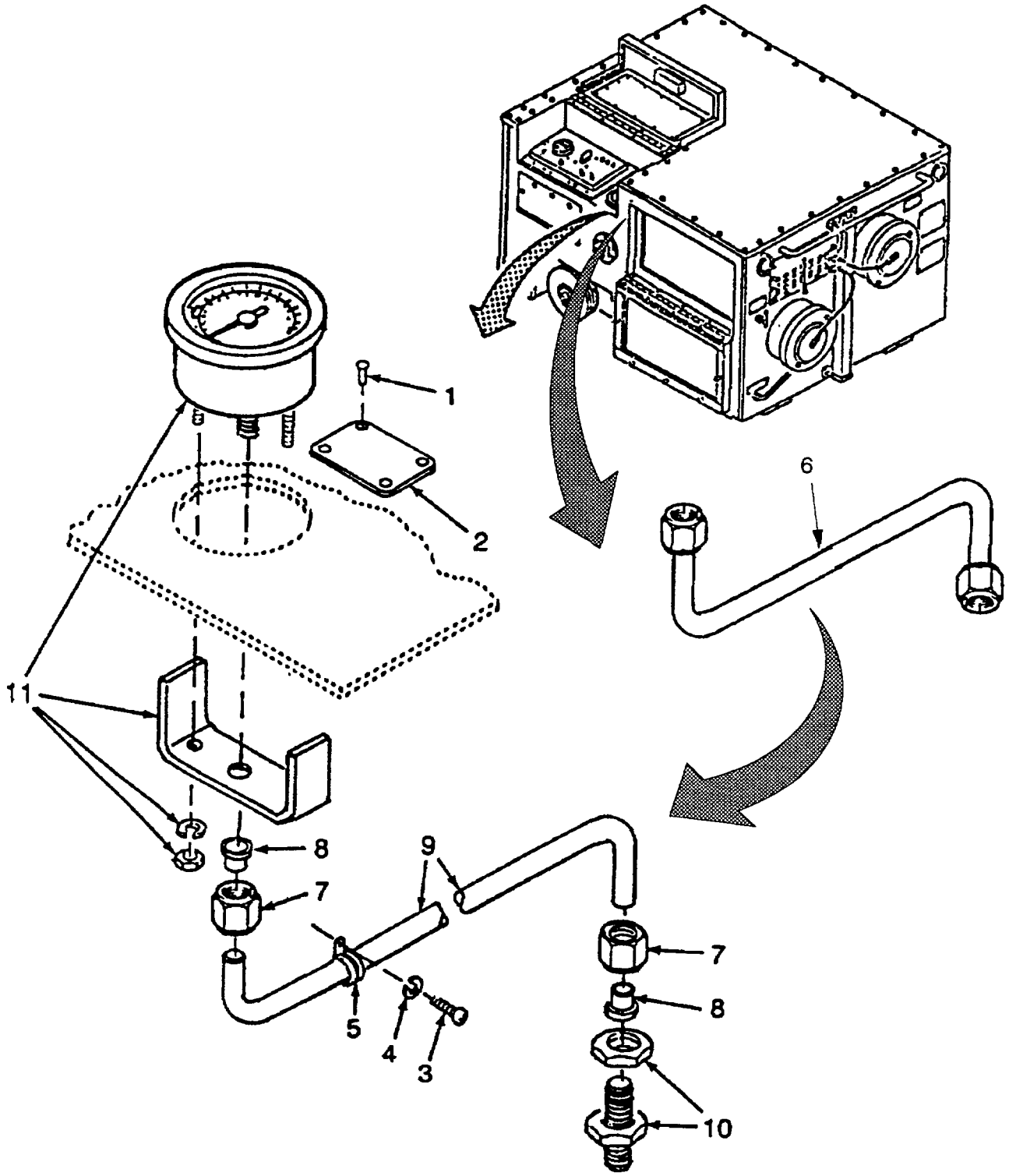

Figure 14. Fuel Pressure Gauge, Tubing and Nameplate.

SECTION II

(1) ITEM NO	(2) SMR CODE	(3) CAGEC	(4) PART NUMBER	(5) DESCRIPTION AND USABLE ON CODES (UOC)	(6) QTY
				GROUP 02 CONTROL AND COMBUSTION ASSEMBLIES INSTALLATION	
				FIGURE 14 FUEL PRESSURE GAUGE, TUBING AND NAMEPLATE	
1	PAOZZ	06888	AD42AH	RIVET, BLIND	4
2	XBOZZ	90598	60012-1	NAMEPLATE, FUEL PRESSURE UOC:YKR	1
2	XBOZZ	90598	60012-2	NAMEPLATE, FUEL PRESSURE UOC: LPL	1
3	PAOZZ	96906	MS51492-07	SCREW, MACHINE	1
4	PAOZZ	96906	MS35333-38	WASHER, LOCK	1
5	PAOZZ	96906	MS21333-67	CLAMP, LOOP	1
6	XBOOO	90598	60488-100	TUBE ASSEMBLY	1
7	PAOZZ	96906	MS51531B4	. NUT, TUBE COUPLING	2
8	PAOZZ	79470	C5165X4	. SLEEVE, FLARED, TUBE	2
9	XBOZZ	90598	60488-1	. TUBING, FORMED	1
10	XBOZZ	90598	60594-1	UNION, BULKHEAD	1
11	PAOZZ	72100	G32781	GAUGE, PRESSURE (INCLUDES ATTACHING HARDWARE)	1

END OF FIGURE

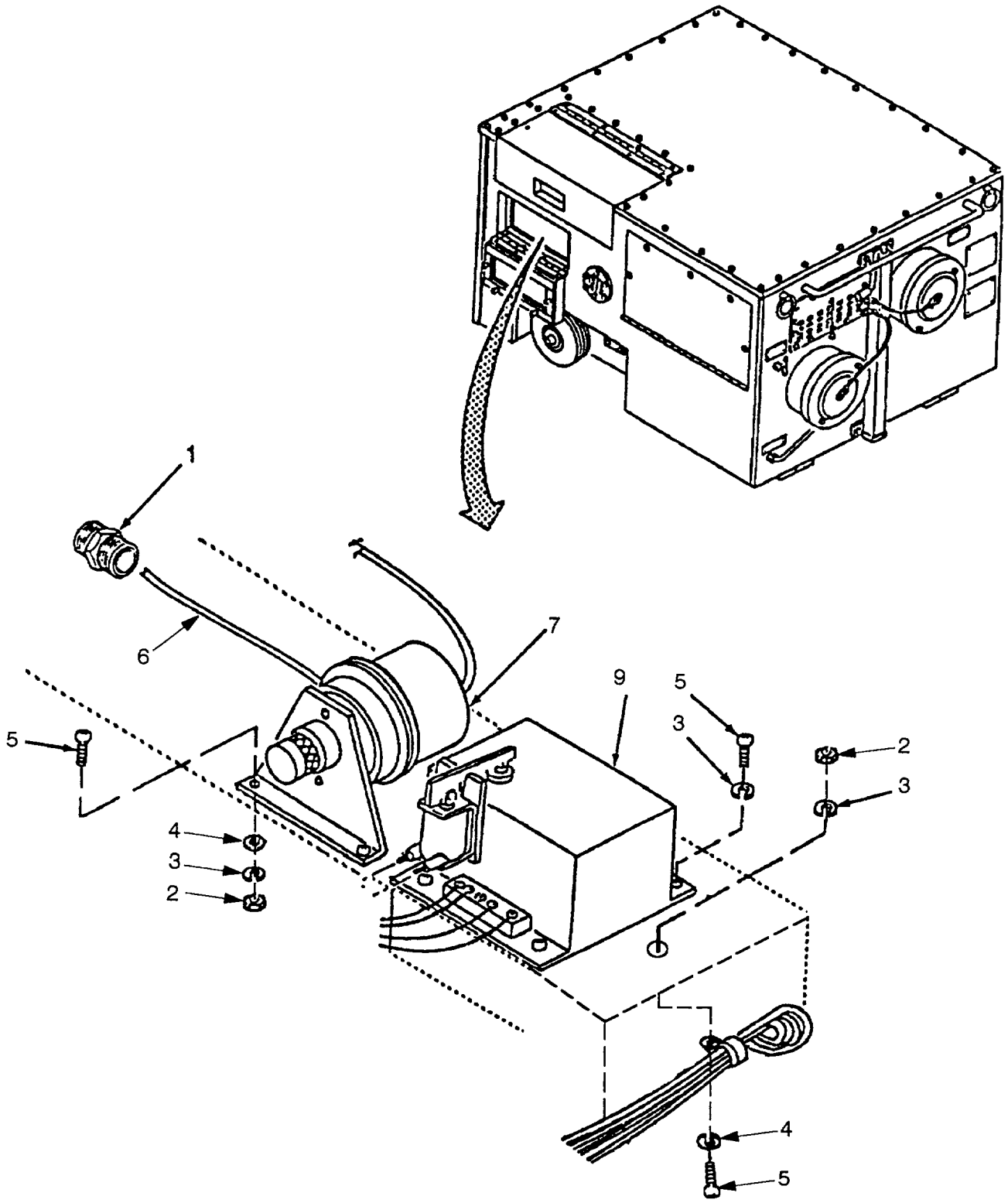

Figure 15. Air Pressure Switch and Combustion Control Relay (Sheet 1 of 2).

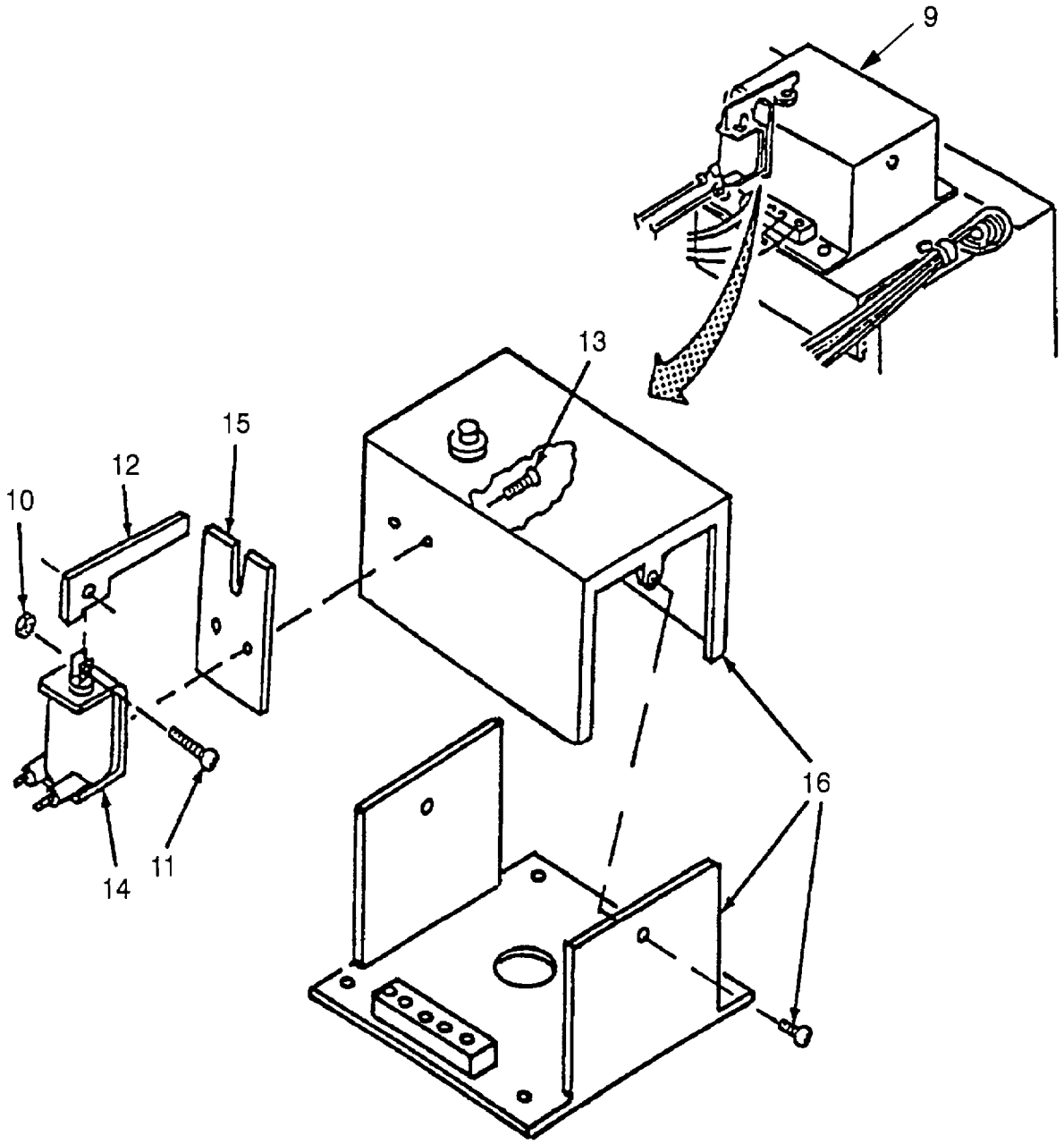

Figure 15. Air Pressure Switch and Combustion Control Relay (Sheet 2 of 2).

SECTION II

(1) ITEM NO	(2) SMR CODE	(3) CAGEC	(4) PART NUMBER	(5) DESCRIPTION AND USABLE ON CODES (UOC)	(6) QTY
				GROUP 02 CONTROL AND COMBUSTION ASSEMBLES INSTALLATION	
				FIGURE 15 AIR PRESSURE SWITCH AND COMBUSTION CONTROL RELAY	
1	XBOZZ	93061	125HB-3-2	ADAPTER, BARB	1
2	PAOZZ	96906	MS35649-282	NUT, HEX HEAD	3
3	PAOZZ	96906	MS35333-38	WASHER, LOCK	7
4	PAOZZ	96906	MS27183-7	WASHER, FLAT	3
5	PAOZZ	96906	MS35206-245	SCREW, MACHINE	7
6	MOOZZ	90598	60079-1	TUBE, NONMETALLIC (MAKE FROM P/N 44-P YELLOW, CAGE 30327, CUT TO 11.25 INCHES)	1
7	PAOZZ	09157	R70-2-HCQ-238	PRESSURE SWITCH, AIR (INCLUDE TUBE, NONMETALLIC, P/N 44-P YELLOW, CAGE 30327)	1
8	PAOZZ	96906	MS21333-67	CLAMP, LOOP	1
9	AOOOO	90598	60811-100	COMBUSTION ASSEMBLY	1
10	PAOZZ	96906	MS21044C04	NUT, SELF-LOCKING, HEXAGON	1
11	PAOZZ	96906	MS51957-15	. SCREW, MACHINE	1
12	XBOZZ	90598	60822-1	. LEVER ARM	1
13	PAOZZ	96906	MS51958-59	. SCREW, MACHINE	2
14	PAOZZ	73662	C3419-M-33	. SOLENOID, FLAMEOUT	1
15	XBOZZ	90598	60821-1	. PLATE, RETAINER	1
16	PAOZZ	65289	668Z-671	. RELAY, COMBUSTION	1

END OF FIGURE

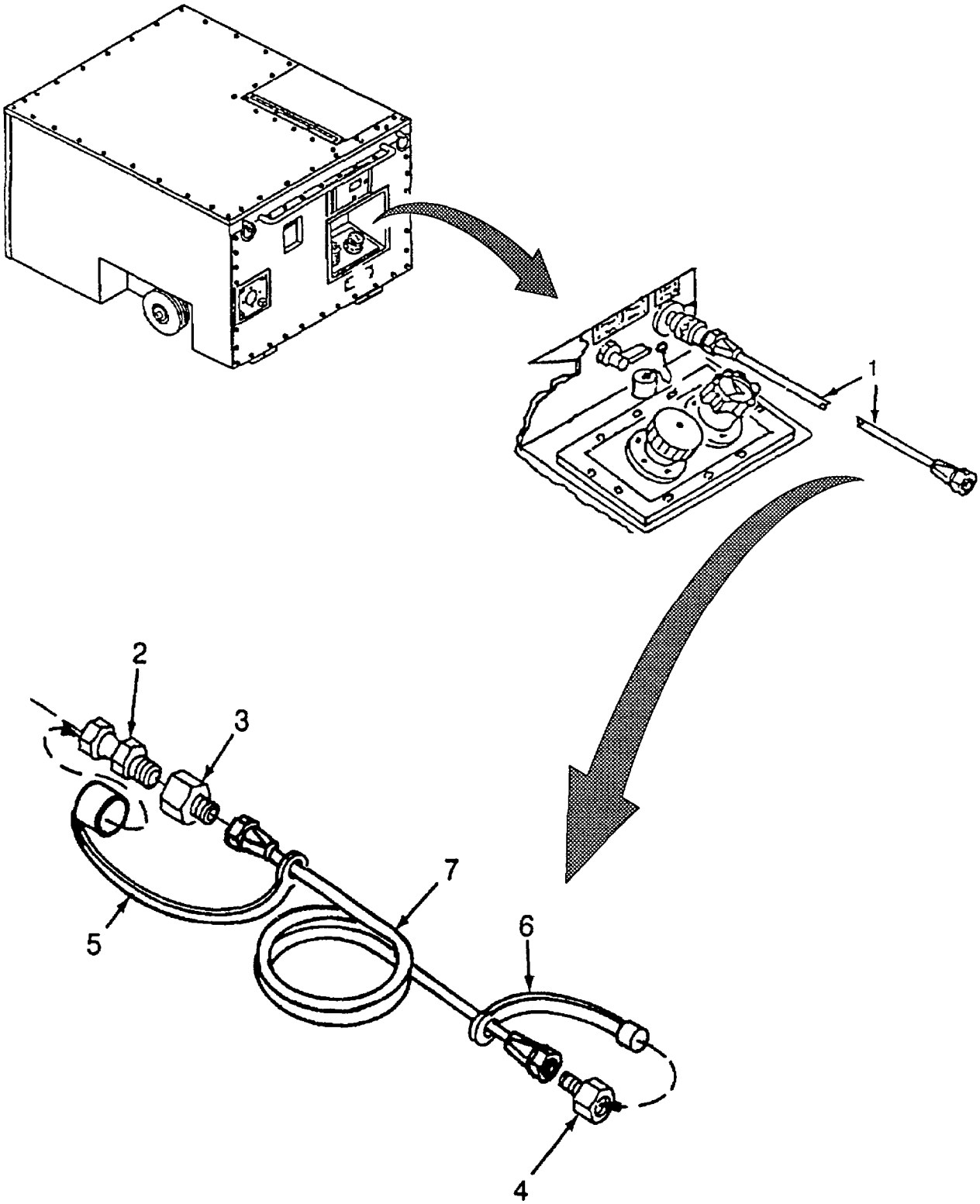

Figure 16. External Fuel Hose Assembly.

SECTION II

(1) ITEM NO	(2) SMR CODE	(3) CAGEC	(4) PART NUMBER	(5) DESCRIPTION AND USABLE ON CODES (UOC)	(6) QTY
				GROUP 03 HOSE, TUBE AND TANK ASSEMBLES INSTALLATION	
				FIGURE 16 EXTERNAL FUEL HOSE ASSEMBLY	
1	PAOOO	90598	60490-100	HOSE ASSEMBLY UOC: YKR	1
1	PAOOO	90598	60210-100	HOSE ASSEMBLY UOC: LPL	1
2	PAOZZ	79470	9100X5X4	. ADAPTER, SWIVEL	1
3	PAOZZ	79470	5887X6	ADAPTER, STRAIGHT, PIPE	1
4	PAOZZ	78357	A28-1C6-6-56	. COUPLING, SHUTOFF UOC: YKR	1
4	PAOZZ	78357	AVHC6-6-EM	. COUPLING, SHUTOFF UOC: LPL	1
5	PAOZZ	97111	H2-66M	. PLUG, PROTECTIVE, DUST	1
6	PAOZZ	97111	H3-65M	CAP, PROTECTIVE, DUST UOC: YKR	1
6	PAOZZ	78357	PDP-6	. CAP, PROTECTIVE, DUST UOC: LPL	1
7	PAOZZ	96906	MS28741-6-3000	. HOSE ASSEMBLY, NONMETALLIC (INCLUDE ADAPTERS, P/N MS24587-6, CAGE 96906)	1

END OF FIGURE

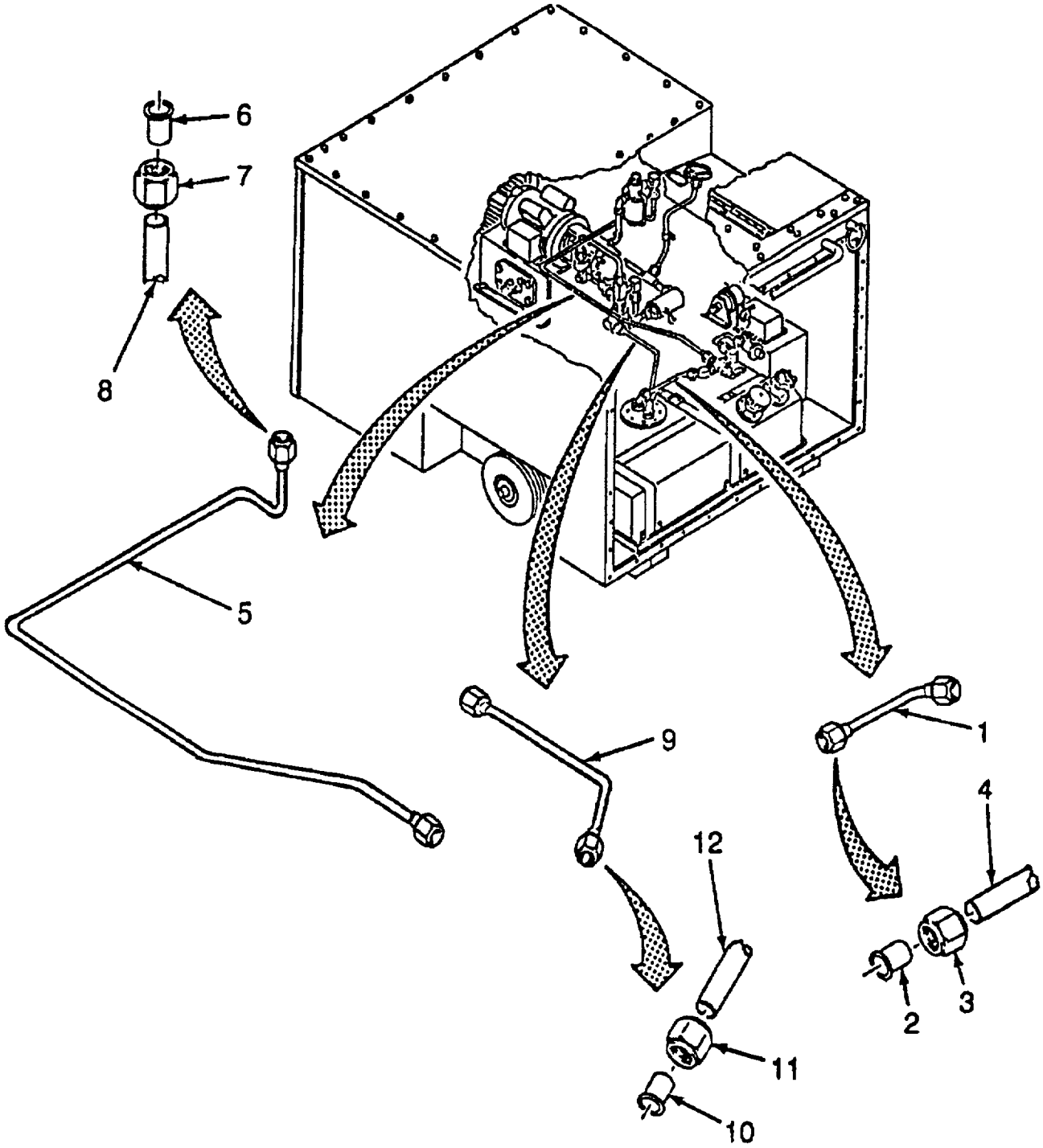

Figure 17. Fuel Tube Assemblies.

SECTION II

(1) ITEM NO	(2) SMR CODE	(3) CAGEC	(4) PART NUMBER	(5) DESCRIPTION AND USABLE ON CODES (UOC)	(6) QTY
				GROUP 03 HOSE, TUBE AND TANK ASSEMBLIES INSTALLATION	
				FIGURE 17 FUEL TUBE ASSEMBLES	
1	XBOOO	90598	60484-100	TUBE ASSEMBLY	1
2	PAOZZ	79470	C5165X6	. SLEEVE, FLARED TUBE	2
3	PAOZZ	96906	MS51531B6Z	. NUT, TUBE COUPLING	2
4	MOOZZ	90598	60484-1	. TUBE, METALLIC (MAKE FROM P/N ASTM B280 (81346) , CUT TO 0.250 OD X 11.00 L)	1
5	XBOOO	90598	60487-100	TUBE ASSEMBLY	1
6	PAOZZ	79470	C5165X4	. SLEEVE, FLARED TUBE	2
7	PAOZZ	96906	MS51531B4	. NUT, TUBE COUPLING	1
8	MOOZZ	90598	60487-1	. TUBE, METALLIC (MAKE FROM P/N ASTM B280 (81346) , CUT TO 0.250 OD X 11.75 L)	1
9	XBOOO	90598	60485-100	TUBE ASSEMBLY	1
10	PAOZZ	79470	C5165X6	. SLEEVE, FLARED TUBE	2
11	PAOZZ	96906	MS51531B6Z	. NUT, TUBE COUPLING	2
12	MOOZZ	90598	60485-1	. TUBE, METALLIC (MAKE FROM P/N ASTM B280 (81346) , CUT TO 0.250 OD X 31.75 L)	1

END OF FIGURE

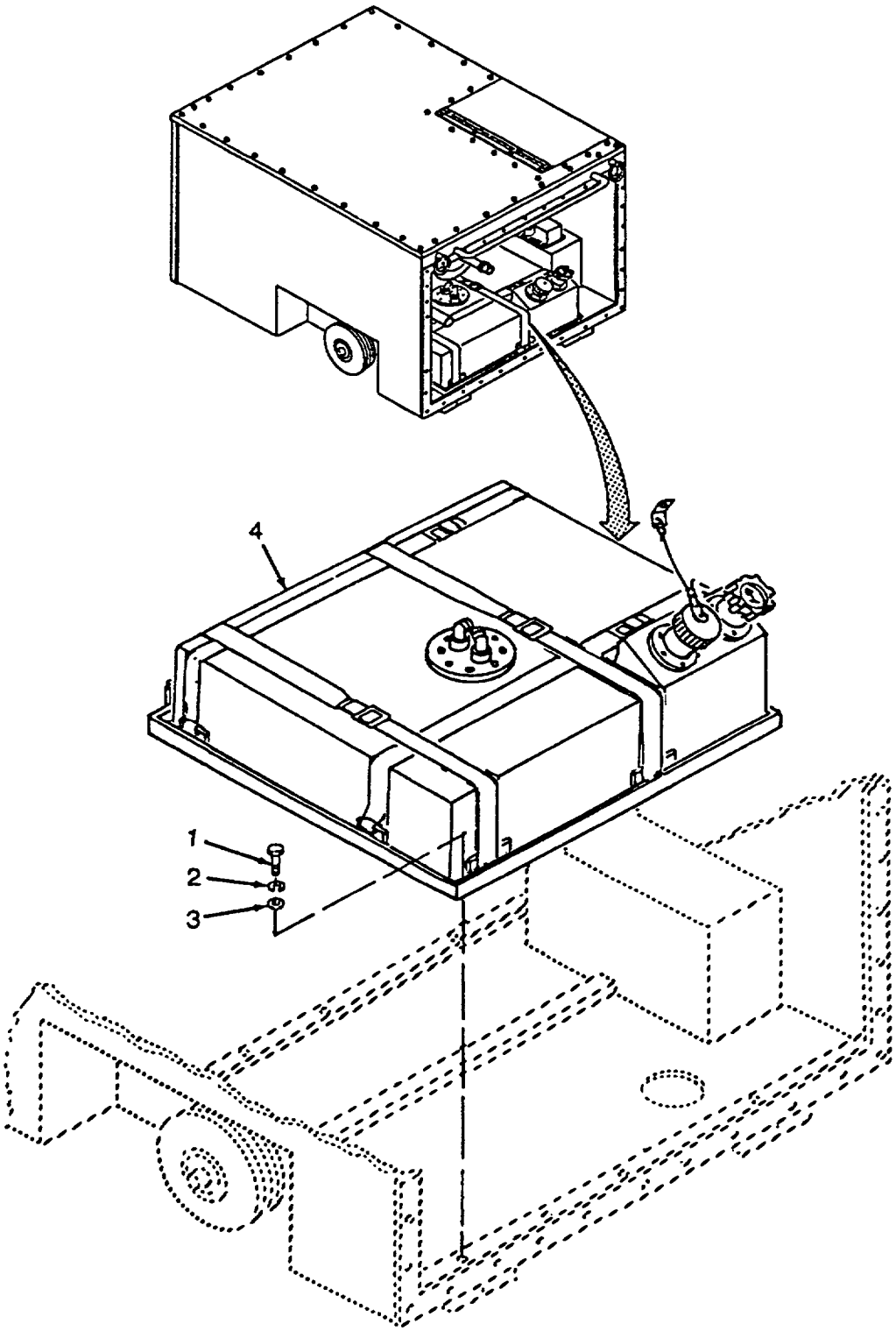

Figure 18. Fuel Tank Top Assembly (Sheet 1 of 2).

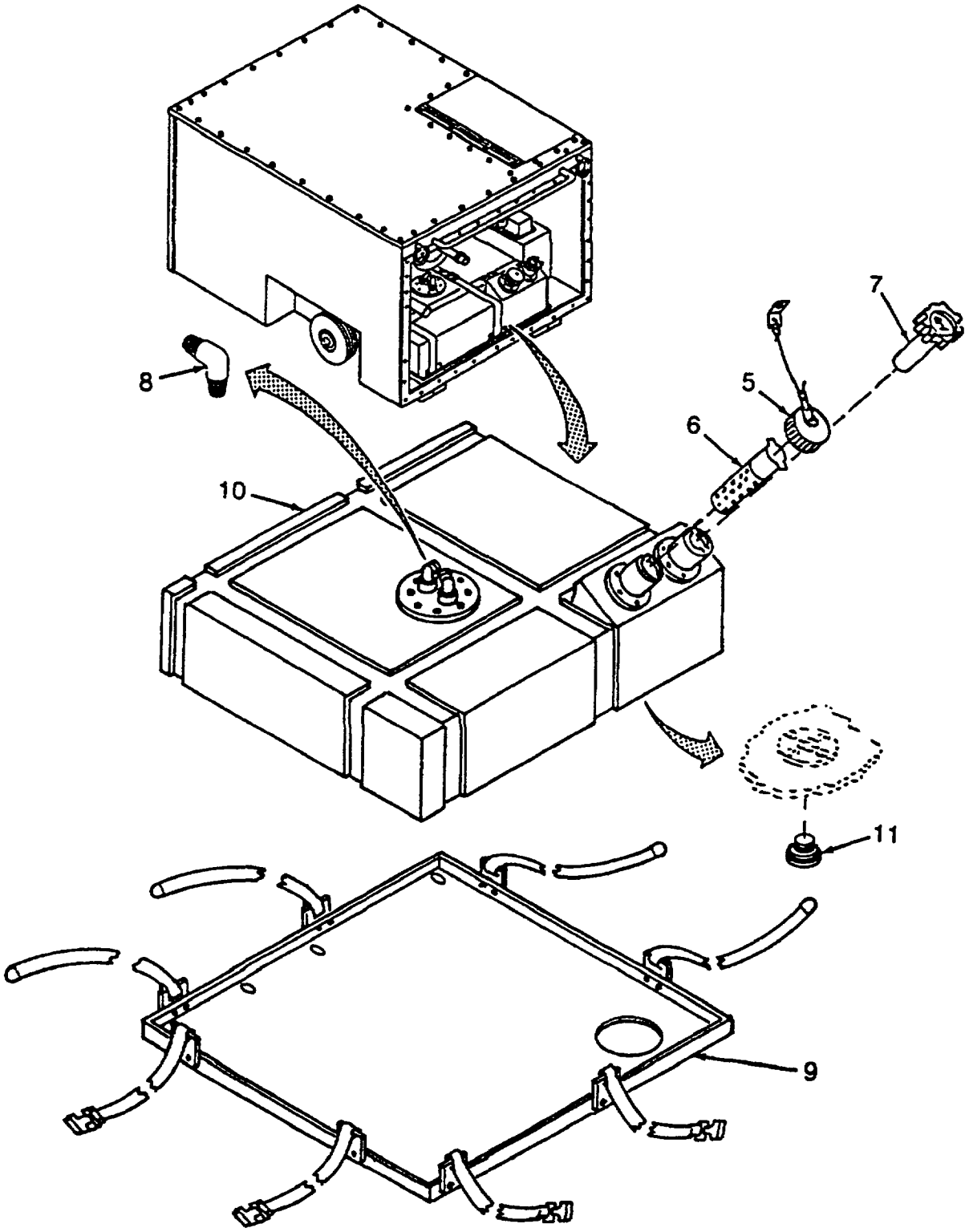

Figure 18. Fuel Tank Top Assembly (Sheet 2 of 2).

SECTION II

(1) ITEM NO	(2) SMR CODE	(3) CAGEC	(4) PART NUMBER	(5) DESCRIPTION AND USABLE ON CODES (UOC)	(6) QTY
				GROUP 03 HOSE, TUBE AND TANK ASSEMBLES INSTALLATION	
				FIGURE 18 FUEL TANK TOP ASSEMBLY	
1	PAOZZ	80204	B1821BH025C075N	SCREW, CAP, HEXAGON HEAD	8
2	PAOZZ	96906	MS35338-1 39	WASHER, LOCK	8
3	PAOZZ	96906	MS15795-810	WASHER, FLAT	8
4	XCOOO	90598	60450-100	TANK, FUEL ASSEMBLY	1
5	PAOZZ	90598	60023-100	. CAP ASSEMBLY, FUEL (INCLUDES ATTACHING CABLE)	1
6	PBOZZ	90598	60027-100	. FILTER, FUEL	1
7	PAOZZ	23224	200984	. GAUGE, FUEL	1
8	PAOZZ	96906	MS51504B6Z	. ELBOW, MALE	2
9	XBOZZ	90598	60029-100	. PAN ASSEMBLY, FUEL	3
10	PBOOO	90598	60451-100	. TANK ASSEMBLY	1
11	PAOZZ	30780	05HP-8	.. PLUG, TUBE FITTING, TANK	1

END OF FIGURE

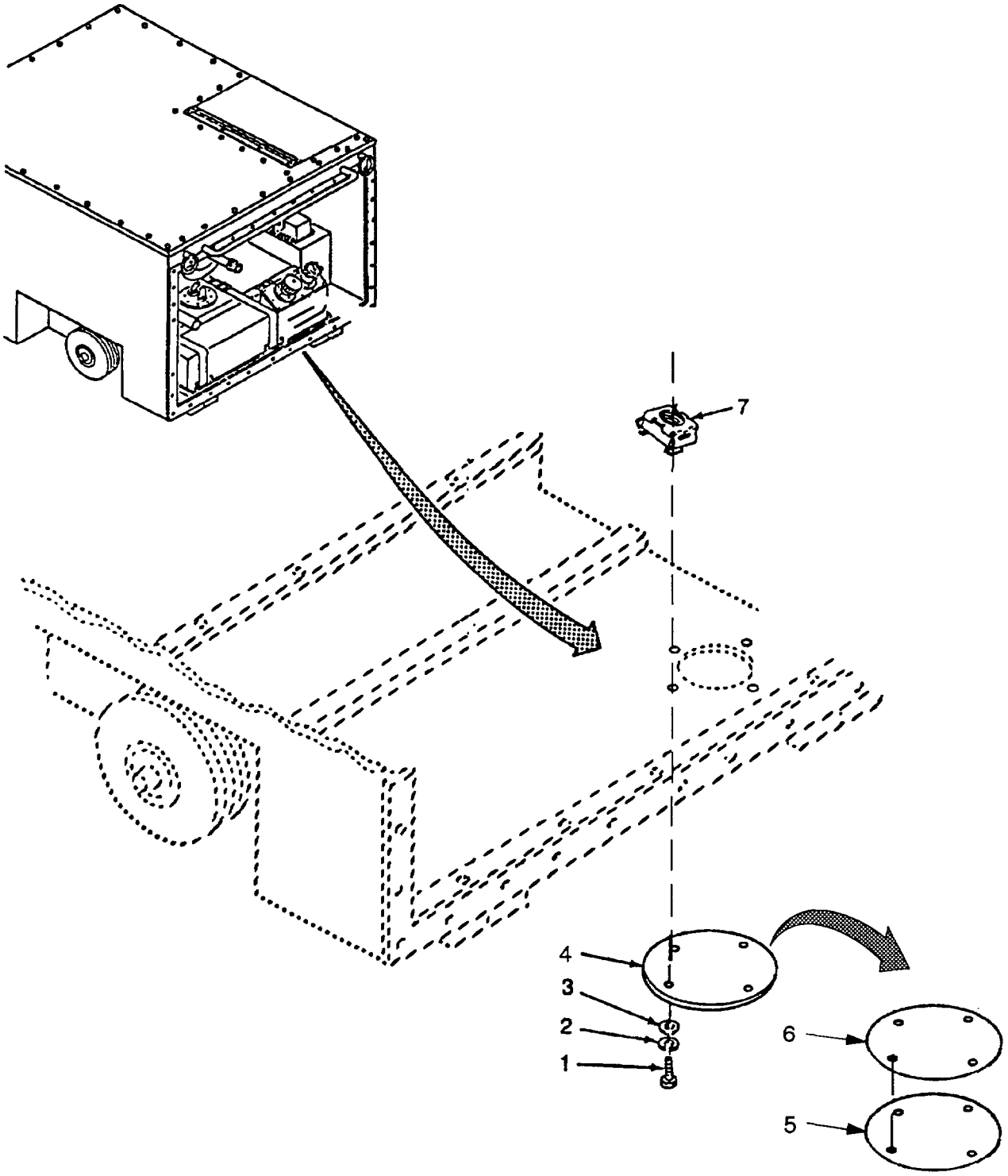

Figure 19. Fuel Drain Cover, Ring Filler Neck and Tank Isolator.

SECTION II

(1) ITEM NO	(2) SMR CODE	(3) CAGEC	(4) PART NUMBER	(5) DESCRIPTION AND USABLE ON CODES (UOC)	(6) QTY
				GROUP 03 **HOSE, TUBE AND TANK ASSEMBLES INSTALLATION**	
				FIGURE 19 **FUEL DRAIN COVER, RING FILLER NECK AND TANK ISOLATOR**	
1	PAOZZ	80204	B1821BH025C075N	SCREW, CAP, HEXAGON HEAD	4
2	PAOZZ	96906	MS35338-139	WASHER, LOCK	4
3	PAOZZ	96906	MS15795-810	WASHER, FLAT	4
4	XBOOO	90598	60498-100	COVER, FUEL DRAIN	1
5	XBOZZ	90598	60498-1	. PLATE	1
6	MOOZZ	90598	60499-1	. GASKET (MAKE FROM P/N MIL-R-68551 (81349), CUT TO 4.250 OD)	1
7	PAOZZ	78553	C7988-1420-3B	RETAINER, NUT AND BOLT	4

END OF FIGURE

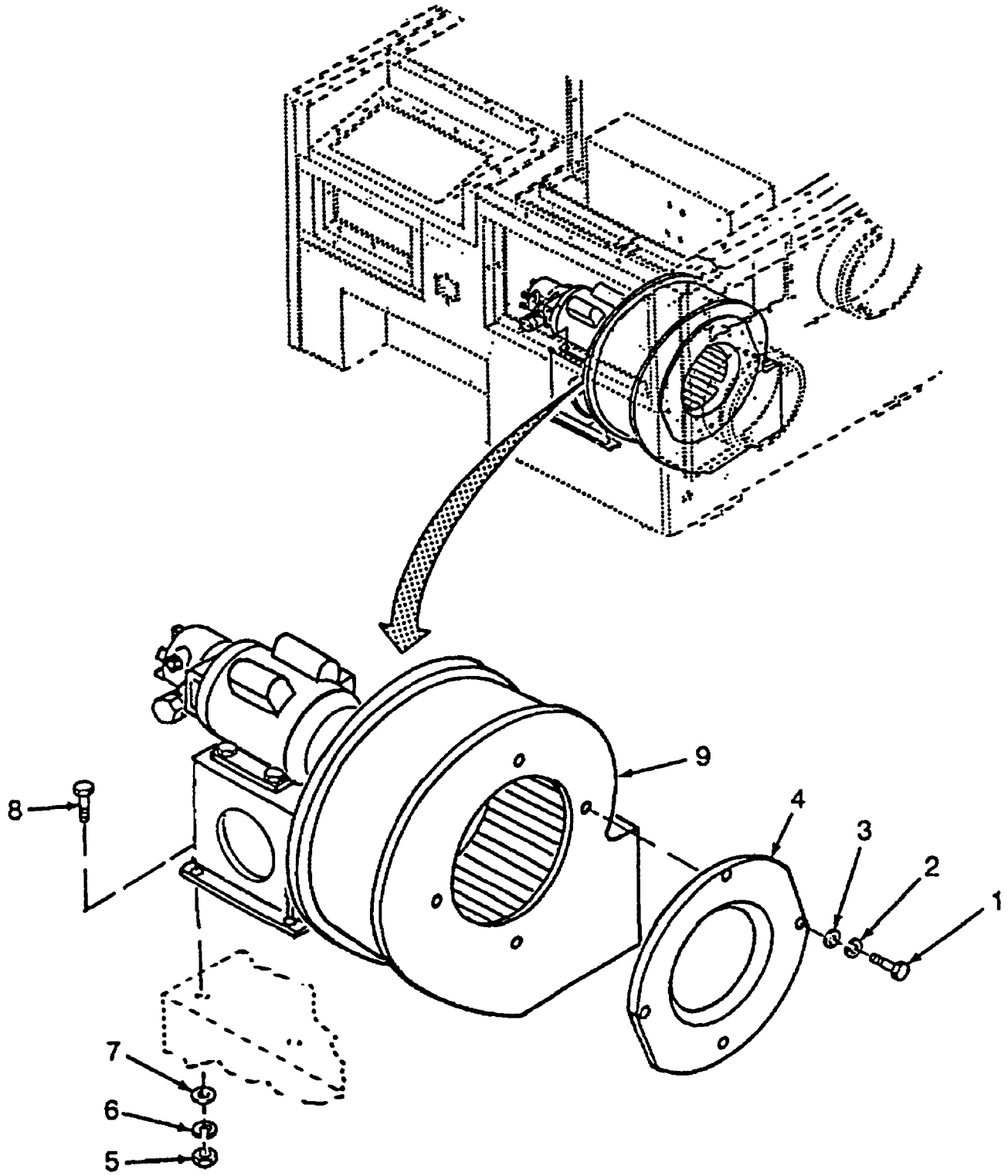

Figure 20. Circulating Air Fan/Fuel Pump/Motor Assembly.

SECTION II

(1) ITEM NO	(2) SMR CODE	(3) CAGEC	(4) PART NUMBER	(5) DESCRIPTION AND USABLE ON CODES (UOC)	(6) QTY
				GROUP 04 **CIRCULATING AIR FAN/PUMP/ MOTOR ASSEMBLY INSTALLATION**	
				FIGURE 20 **CIRCULATING AIR FAN/FUEL PUMP/MOTOR ASSEMBLY**	
1	PAOZZ	80204	B1821BH025C075N	SCREW, CAP, HEXAGON HEAD	4
2	PAOZZ	96906	MS35338-139	WASHER, LOCK	4
3	PAOZZ	96906	MS15795-810	WASHER, FLAT	4
4	XBOZZ	90598	60503-1	INLET CONE	1
5	PAFZZ	96906	MS51971-2	NUT PLAIN, HEXAGON	4
6	PAFZZ	96906	MS35338-140	WASHER, LOCK	4
7	PAFZZ	96906	MS15795-812	WASHER, FLAT	4
8	PAFZZ	80204	B1821BH031C075N	BOLT, MACHINE	4
9	XBOFF	90598	60506-100	FAN, PUMP, MOTOR ASSEMBLY	1

END OF FIGURE

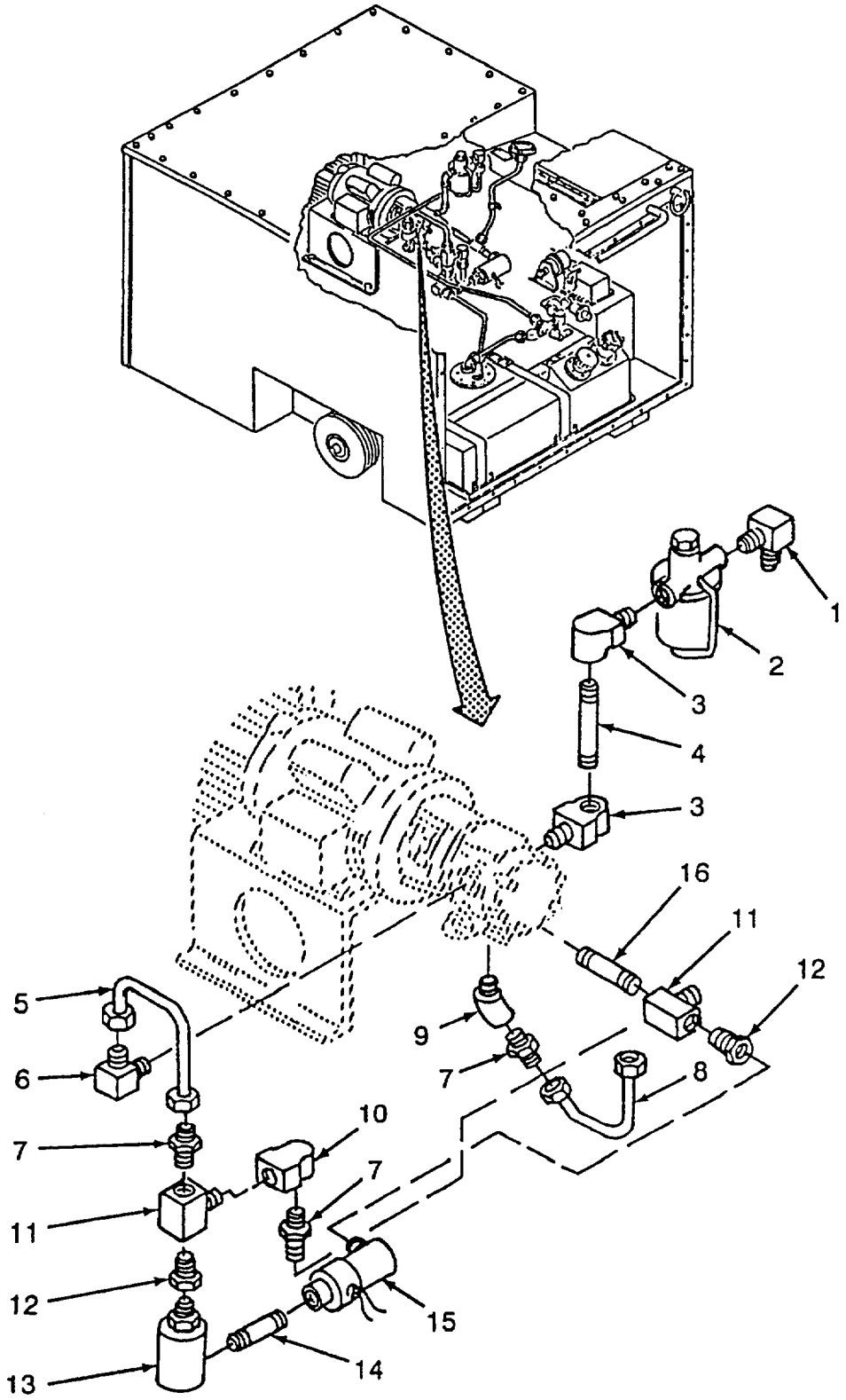

Figure 21. Fuel Solenoid Valves and Fittings.

SECTION II

(1) ITEM NO	(2) SMR CODE	(3) CAGEC	(4) PART NUMBER	(5) DESCRIPTION AND USABLE ON CODES (UOC)	(6) QTY
				GROUP 04 **CIRCULATING AIR FAN/PUMP/ MOTOR ASSEMBLY INSTALLATION**	
				FIGURE 21 **FUEL SOLENOID VALVES AND FITTINGS**	
1	PAOZZ	96906	MS5150486Z	. ELBOW, MALE	1
2	PAOZZ	90005	1752029-01	. FILTER, FLUID (INCLUDES FILTER P/N 1752030-01 AND GASKET P/N 1752036)	1
3	PAOZZ	79470	3400X4	. ELBOW, PIPE	2
4	PAOZZ	96906	MS51846-10	. NIPPLE, PIPE	1
5	XBOZZ	90598	60486-100	. TUBE ASSEMBLY	1
6	PAOZZ	96906	MS51504B4-4Z	. ELBOW, MALE	1
7	PAOZZ	88044	AN816-4	. ADAPTER, STRAIGHT, PIPE	3
8	XBOZZ	90598	60492-100	. TUBE ASSEMBLY	1
9	PAOZZ	79470	3350X2	. ELBOW, PIPE	1
10	PAOZZ	96906	MS51504A4Z	. ELBOW, MALE	1
11	PAOZZ	79470	3750X2	. TEE, PIPE	2
12	PAOZZ	79470	7034X2B	. BUSHING, PIPE	2
13	PAOZZ	73212	3X290	. VALVE, SOLENOID	1
14	PAOZZ	79470	3326X4	. NIPPLE, PIPE	1
15	PAOZZ	73212	6X409	. VALVE, SOLENOID	1
16	PAOZZ	96906	MS51846-6	. NIPPLE, PIPE	1

END OF FIGURE

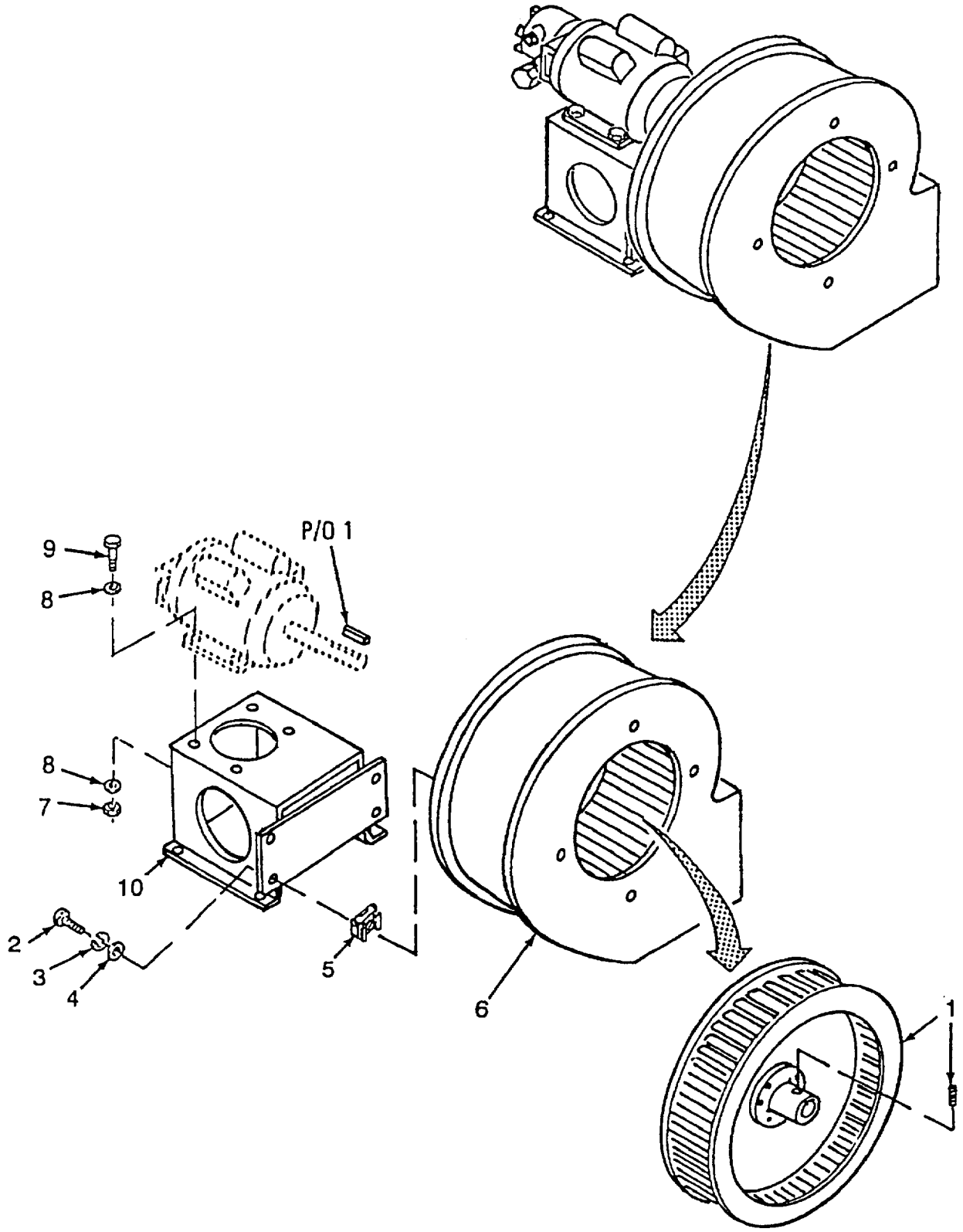

Figure 22. Blower Wheel, Fan Scroll and Base.

SECTION II

(1) ITEM NO	(2) SMR CODE	(3) CAGEC	(4) PART NUMBER	(5) DESCRIPTION AND USABLE ON CODES (UOC)	(6) QTY
				GROUP 04 **CIRCULATING AIR FAN/PUMP/ MOTOR ASSEMBLY INSTALLATION**	
				FIGURE 22 **BLOWER WHEEL, FAN SCROLL AND BASE**	
1	XBFZZ	84636	TBD3	. BLOWER WHEEL (INCLUDES SETSCREW AND KEY)	1
2	PAFZZ	80204	B1821BH025C075N	. SCREW, CAR HEXAGON HEAD	8
3	PAFZZ	96906	MS35338-139	. WASHER, LOCK	8
4	PAFZZ	96906	MS15795-810	. WASHER, FLAT	8
5	PAFZZ	78553	C7988-1420-3B	. RETAINER, NUT AND BOLT	8
6	XBFZZ	90598	60501-100	. FAN SCROLL	1
7	PAFZZ	96906	MS51922-9	. NUT SELF-LOCKING, HEXAGON	4
8	PAFZZ	96906	MS15795-812	. WASHER, FLAT	8
9	PAFZZ	80204	B1821BH031C088N	. BOLT, MACHINE	4
10	XBFZZ	90598	60504-100	. BASE, MOTOR MOUNT.	1

END OF FIGURE

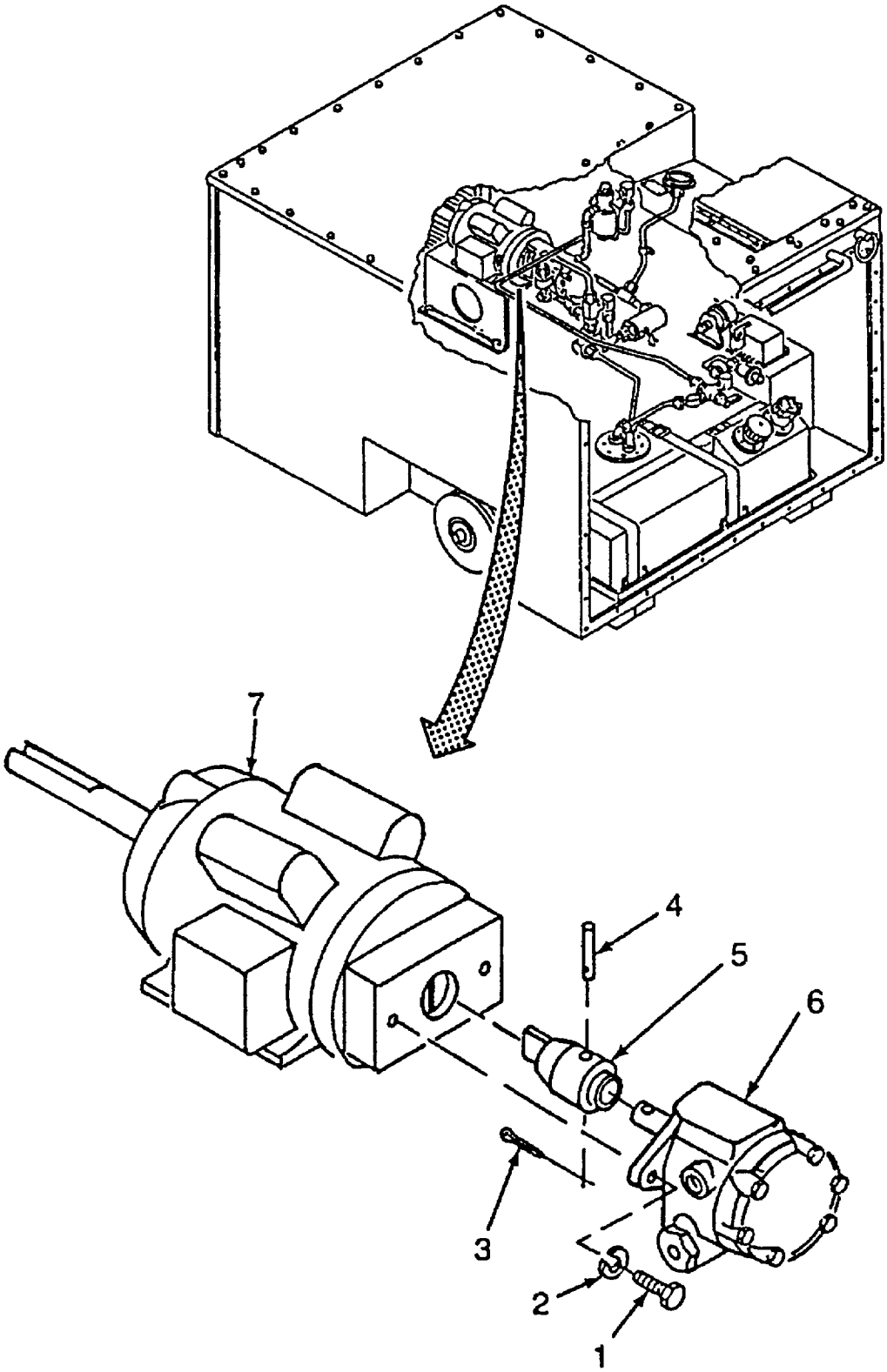

Figure 23. Fuel Pump and Vent Blower Motor.

SECTION II

(1) ITEM NO	(2) SMR CODE	(3) CAGEC	(4) PART NUMBER	(5) DESCRIPTION AND USABLE ON CODES (UOC)	(6) QTY
				GROUP 04 **CIRCULATING AIR FAN/PUMP/ MOTOR ASSEMBLY INSTALLATION**	
				FIGURE 23 **FUEL PUMP AND VENT BLOWER MOTOR**	
1	PAFZZ	96906	MS51849-139C	. SCREW, MACHINE	2
2	PAFZZ	96906	MS35338-141	. WASHER, LOCK	2
3	PAFZZ	96906	MS24665-142	. PIN, COTTER	1
4	PAFZZ	96906	MS171566	. PIN, SPRING	1
5	XBFZZ	90598	60634-1	. COUPLING, FUEL	1
6	PAFZZ	1Y370	J6BC-325-3	. PUMP ROTARY	1
7	PAFZZ	56065	C6P17DB9A	. MOTOR, PUMP	1

END OF FIGURE

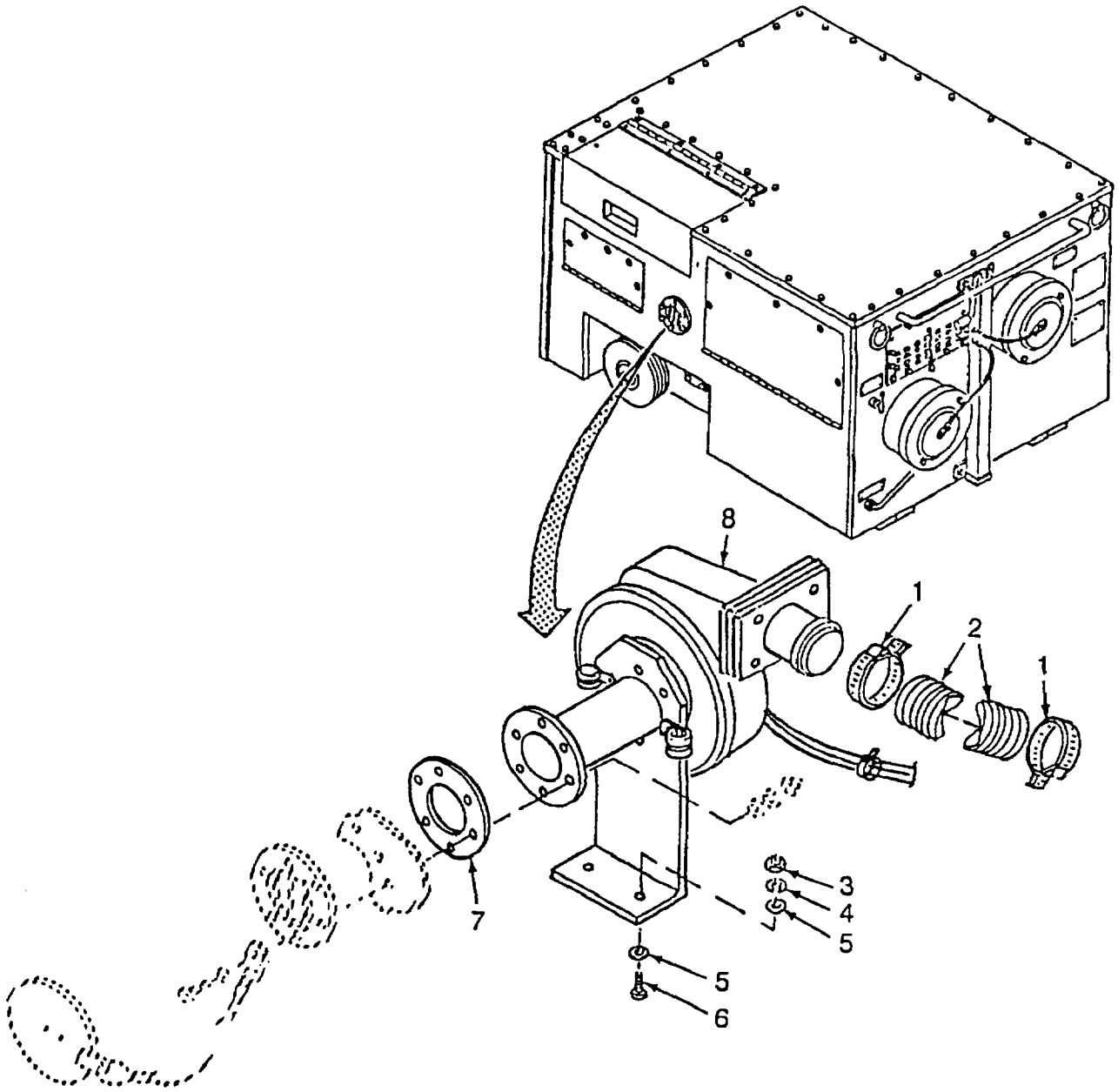

Figure 24. Combustion Air Fan and Mount Assembly (Sheet 1 of 2).

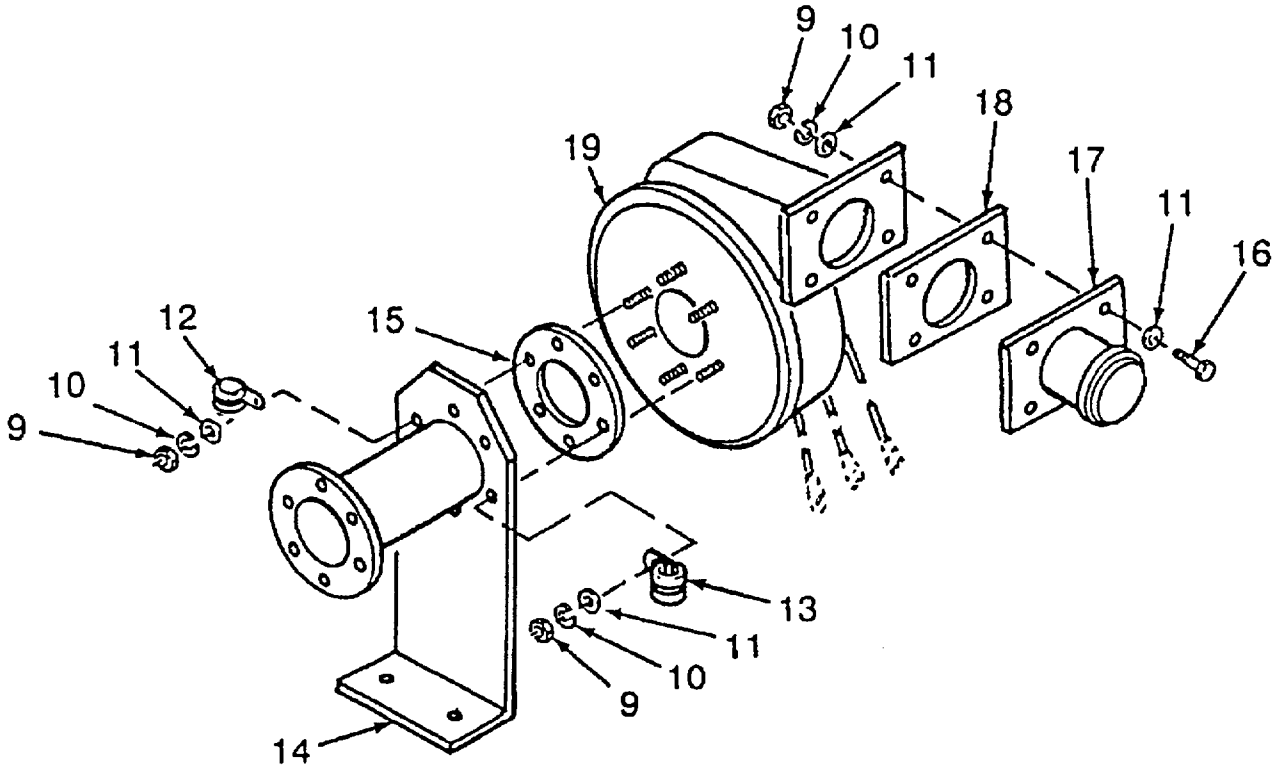

Figure 24. Combustion Air Fan and Mount Assembly (Sheet 2 of 2).

SECTION II

(1) ITEM NO	(2) SMR CODE	(3) CAGEC	(4) PART NUMBER	(5) DESCRIPTION AND USABLE ON CODES (UOC)	(6) QTY
				GROUP 05 **HOSE, FAN AND MOUNT COMBUSTION AIR INSTALLATION**	
				FIGURE 24 **COMBUSTION AIR FAN AND MOUNT ASSEMBLY**	
1	PAOZZ	96906	MS35842-14	CLAMP, HOSE	2
2	MOOZZ	90598	60593-1	HOSE, NONMETALLIC (MAKE FROM P/N 5510K23 (39428), CUT TO 30.00 INCHES)	1
3	PAOZZ	96906	MS51971-1	NUT, PLAIN, HEXAGON	2
4	PAOZZ	96906	MS35338-1 39	WASHER, LOCK	2
5	PAOZZ	96906	MS15795-810	WASHER, FLAT	4
6	PAOZZ	80204	B1821BH025C075N	SCREW, CAP, HEXAGON HEAD	2
7	MOOZZ	90598	60584-1	GASKET (MAKE FROM P/N MIL-R-6855CLIGR50(81349), CUT TO FIT)	1
8	XBOOO	90598	60533-100	FAN AND MOUNT COMBUSTION AIR	1
9	PAOZZ	96906	MS51971-1	. NUT, PLAIN, HEXAGON	10
10	PAOZZ	96906	MS35338-139	. WASHER, LOCK	10
11	PAOZZ	96906	MS15795-810	. WASHER, FLAT	14
12	PAOZZ	96906	MS21333-128	. CLAMP, LOOP	1
13	PAOZZ	96906	MS21333-109	. CLAMP, LOOP	1
14	XBOZZ	90598	60583-100	. BRACKET FAN MOUNT	1
15	MOOZZ	90598	60584-1	. GASKET (MAKE FROM P/N MIL-R-6855CLIGR50 (81349), CUT TO FIT)	1
16	PAOZZ	80204	B1821BH025C075N	. SCREW, CAP, HEXAGON HEAD	4
17	XBOZZ	90598	60592-100	. ADAPTER, COMBUSTION	1
18	MOOZZ	90598	605888-1	. GASKET (MAKE FROM P/N MIL-R-6855CLIGR50 (81349), CUT TO FIT)	1
19	XBOZZ	75511	117313-00	. FAN ASSEMBLY	1

END OF FIGURE

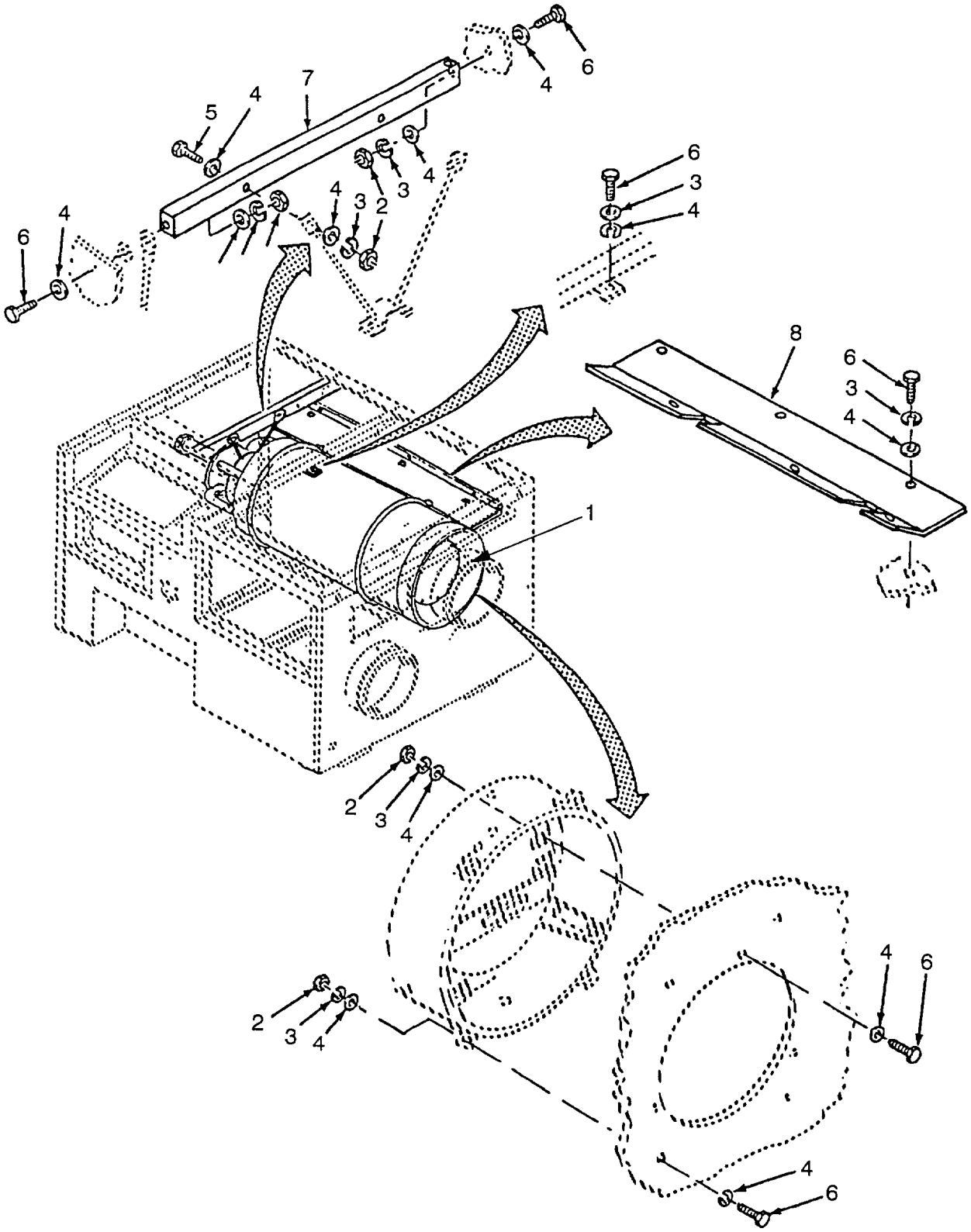

Figure 25. Heat Exchanger (Sheet 1 of 2).

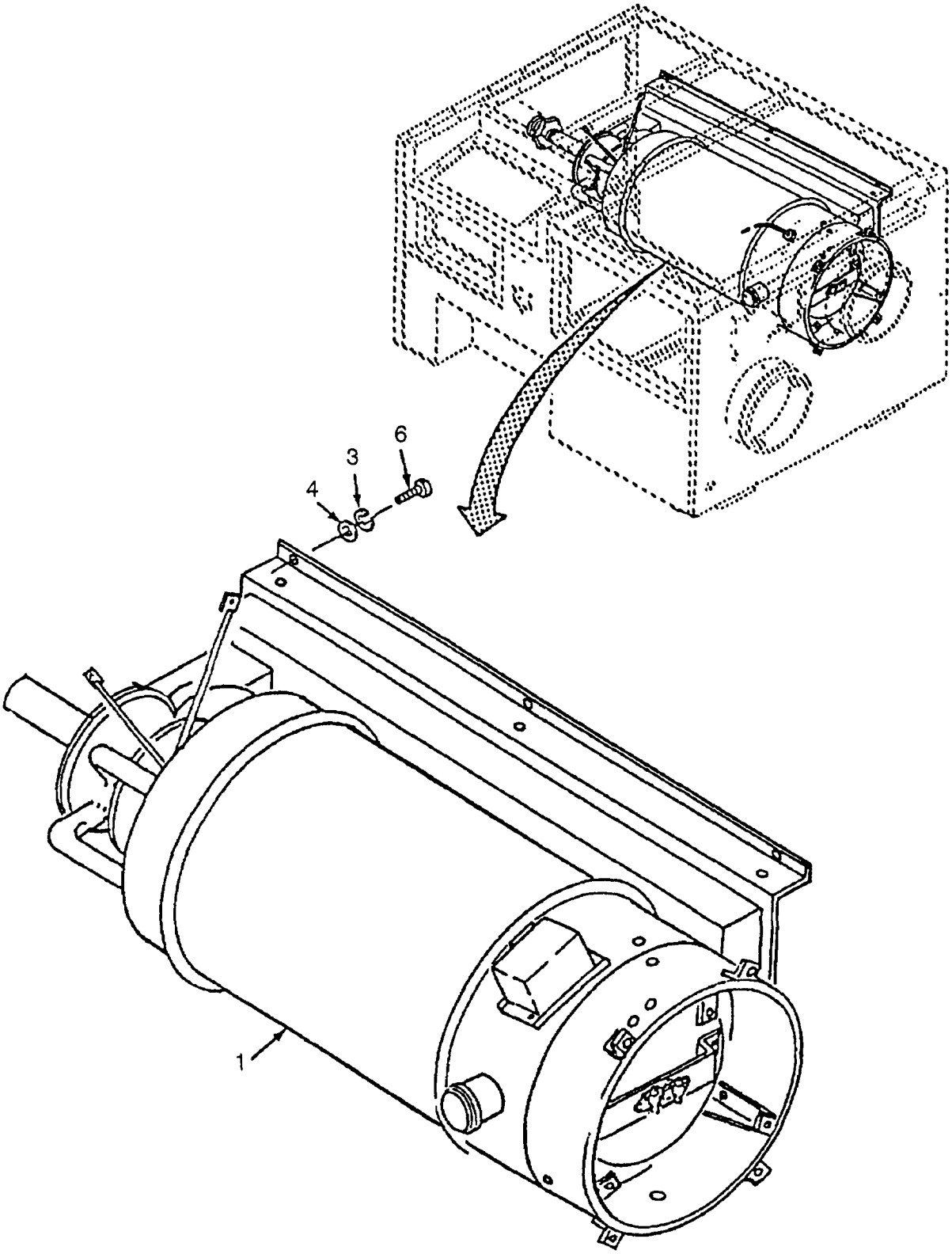

Figure 25. Heat Exchanger (Sheet 2 of 2).

SECTION II

(1) ITEM NO	(2) SMR CODE	(3) CAGEC	(4) PART NUMBER	(5) DESCRIPTION AND USABLE ON CODES (UOC)	(6) QTY
				GROUP 06 HEAT EXCHANGER ASSEMBLY	
				FIGURE 25 HEAT EXCHANGER	
1	XBOFF	90598	60500-100	HEAT EXCHANGER ASSEMBLY ..... UOC:YKR	1
1	XBOFF	90598	60216-100	HEAT EXCHANGER ASSEMBLY ..... UOC: LPL	1
2	PAFZZ	96906	MS51971-2	. NUT, PLAIN, HEXAGON	11
3	PAFZZ	96906	MS35338-139	. WASHER, LOCK	24
4	PAFZZ	96906	MS15795-810	. WASHER, FLAT	31
5	PAFZZ	80204	B1821BH025C088N	. SCREW, CAP, HEXAGON HEAD	2
6	PAFZZ	80204	B1821BH025C075N	. SCREW, CAP, HEXAGON HEAD.....	22
7	XBFZZ	90598	60642-1	. SUPPORT, HEAT EXCHANGER	1
8	XBFZZ	90598	60597-1	. SHIELD, HEAT EXCHANGER.	1

END OF FIGURE

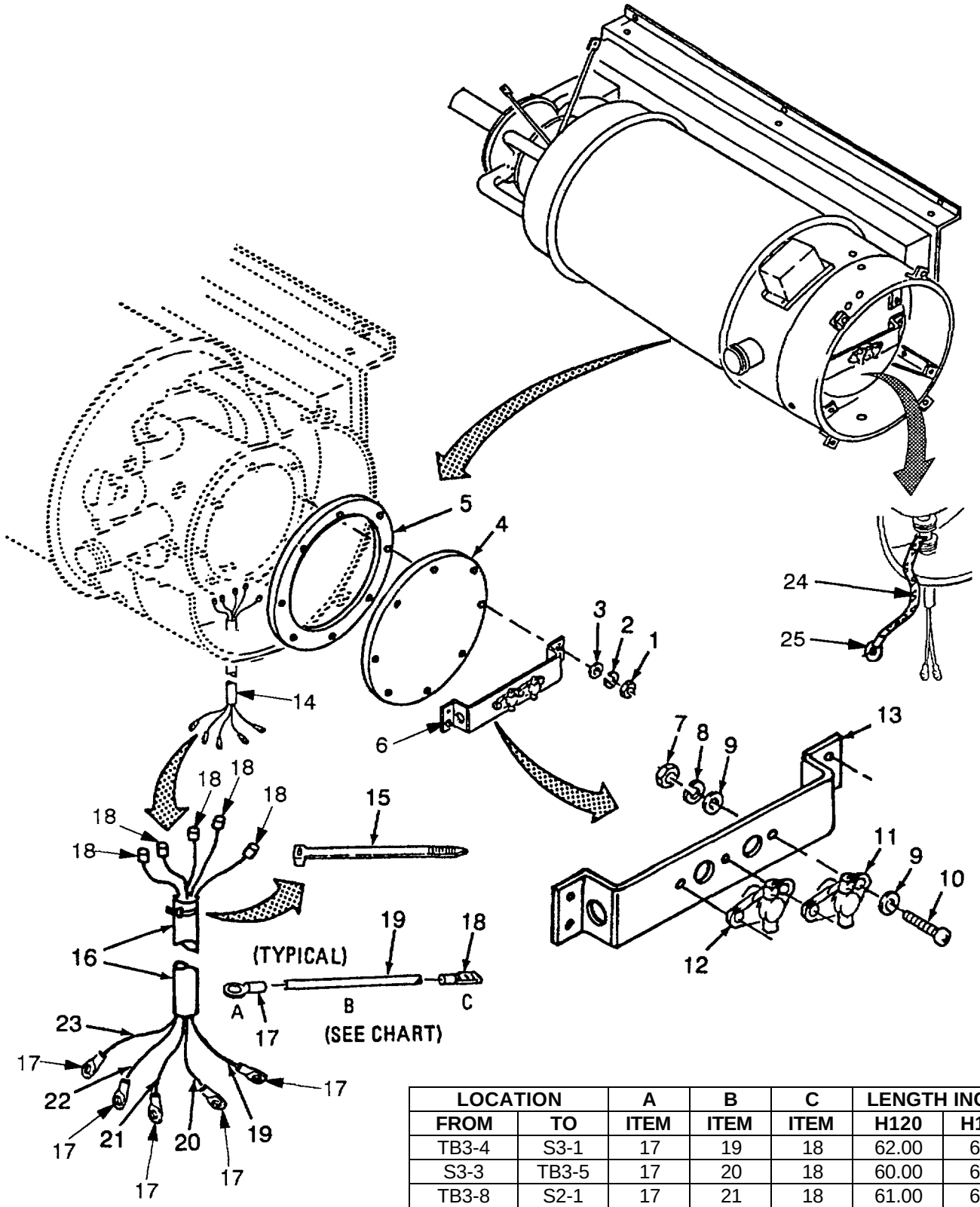

LOCATION		A	B	C	LENGTH INCHES	
FROM	TO	ITEM	ITEM	ITEM	H120	H120-1
TB3-4	S3-1	17	19	18	62.00	62.00
S3-3	TB3-5	17	20	18	60.00	60.00
TB3-8	S2-1	17	21	18	61.00	61.00
S2-3	TB3-9	17	22	18	65.00	65.00
S2-2	TB3-10	17	23	18	62.00	61.00

Figure 26. Thermostat Assembly and Cover Plate (Heat Exchanger).

SECTION II

(1) ITEM NO	(2) SMR CODE	(3) CAGEC	(4) PART NUMBER	(5) DESCRIPTION AND USABLE ON CODES (UOC)	(6) QTY
				GROUP 06 HEAT EXCHANGER ASSEMBLY	
				FIGURE 26 THERMOSTAT ASSEMBLY AND COVER PLATE	
1	PAOZZ	96906	MS35649-2254	. NUT PLAIN, HEXAGON	8
2	PAOZZ	96906	MS35338-138	. WASHER, LOCK UOC: YKR	8
2	PAOZZ	96906	MS35338-153	. WASHER, LOCK UOC: LPL	8
3	PAOZZ	96906	MS15795-810	. WASHER, FLAT	8
4	XBOOO	90598	60517-100	. PLATE, COVER	1
5	MOOZZ	90598	60518-1	.. GASKET (MAKE FROM P/N MIL-R-6130 (81349), CUT TO 10.16 OD X 7.63 ID)	1
6	XBOOO	90598	60441-100	. THERMOSTAT ASSEMBLY	1
7	PAOZZ	96906	MS35649-83	.. NUT PLAIN, HEXAGON	3
8	PAOZZ	96906	MS35338-137	.. WASHER, LOCK	3
9	PAOZZ	96906	MS15795-807	.. WASHER, FLAT	6
10	PAOZZ	96906	MS51492-07	.. SCREW, MACHINE	3
11	PAOZZ	14859	20600D39-153	.. THERMOSTAT, HIGH	1
12	PAOZZ	14856	20601 L8-276	.. SWITCH, THERMOSTATIC	1
13	XBOZZ	90598	60531-1	.. BRACKET, THERMOSTAT	1
14	XBOOO	90598	60440-100	.. WIRING HARNESS	1
15	PAOZZ	96906	MS3367-5-9	… STRAP, TIEDOWN, ELECT	1
16	MOOZZ	90598	60440-7	… SLEEVING, INSULATION (MAKE FROM P/N M230535-109-0 (81349), CUT TO 10 INCHES) .	1
17	PAOZZ	96906	MS25036-106	… TERMINAL, LUG	5
18	PAOZZ	20999	MNU14-250DFI	… TERMINAL, QUICK	5
19	MOOZZ	90598	60440-2	… WIRE, ELECTRICAL ((MAKE FROM P/N. M5086/1 -16-9 (81349), CUT TO 60 INCHES)	1
20	MOOZZ	90598	60440-1	… WIRE, ELECTRICAL (MAKE FROM P/N. M5086/1W-16-9 (81349), CUT TO 62 INCHES)	1
21	MOOZZ	90598	60440-3	… WIRE, ELECTRICAL (MAKE FROM P/N. M5086/1-16-9 (81349), CUT TO 61 INCHES)	1
22	MOOZZ	90598	60440-4	… WIRE, ELECTRICAL (MAKE FROM P/N. M5086/1-16-9 (81349), CUT TO 62 INCHES)	1
23	MOOZZ	90598	60440-5	… WIRE, ELECTRICAL (MAKE FROM P/N. M5086/1-16-9 (81349), CUT TO 65 INCHES)	1
24	MOOZZ	90598	60216-32	… WIRE, BRAID (MAKE FROM P/N 8669 (90816), CUT TO 16 INCHES) UOC: LPL	1
25	PAOZZ	96906	MS20659-108	. TERMINAL, LUG UOC: LPL	1

END OF FIGURE

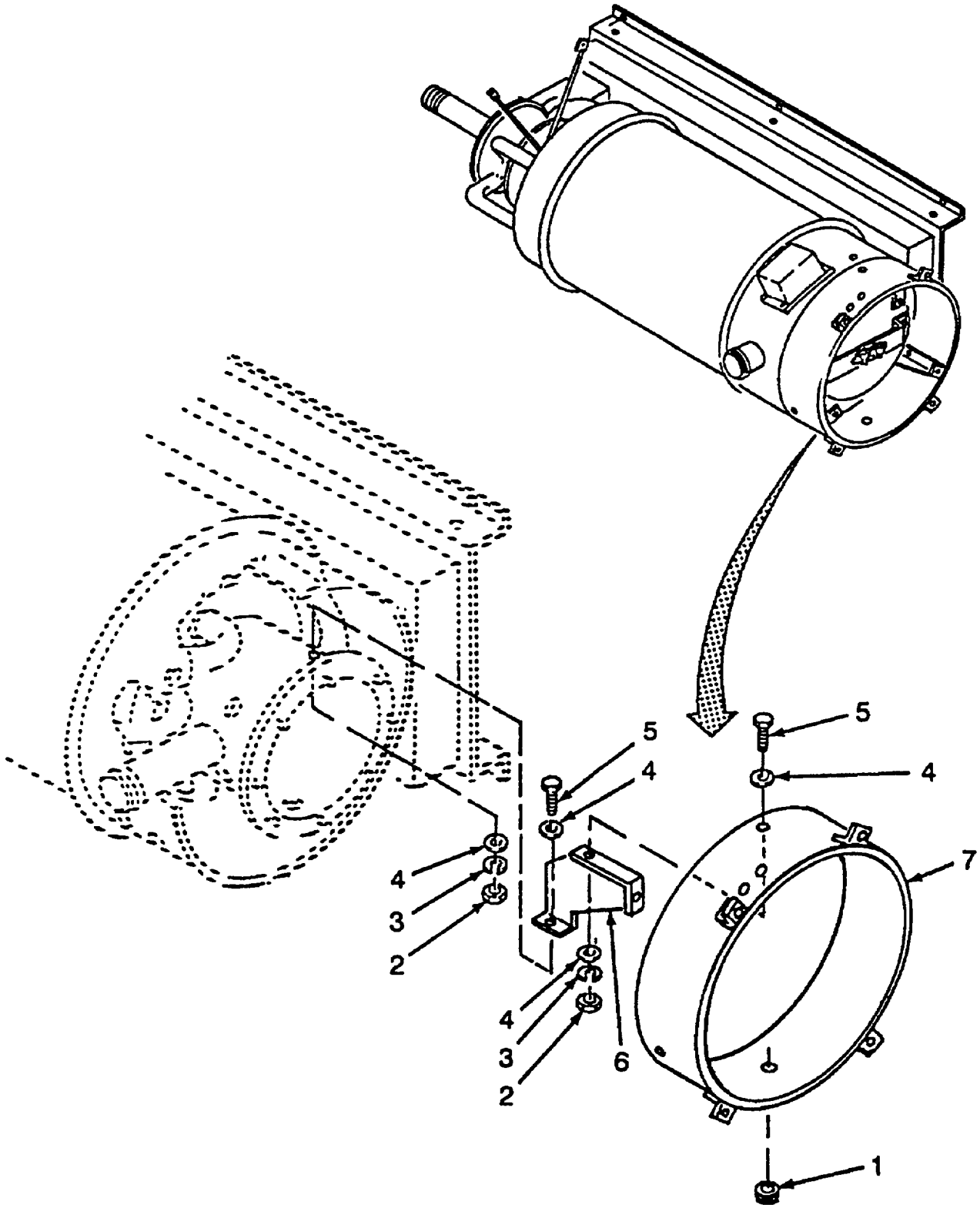

Figure 27. Detector Flame, Cable, Tube and Mounting Ring (Heat Exchange) (Sheet 1 of 2).

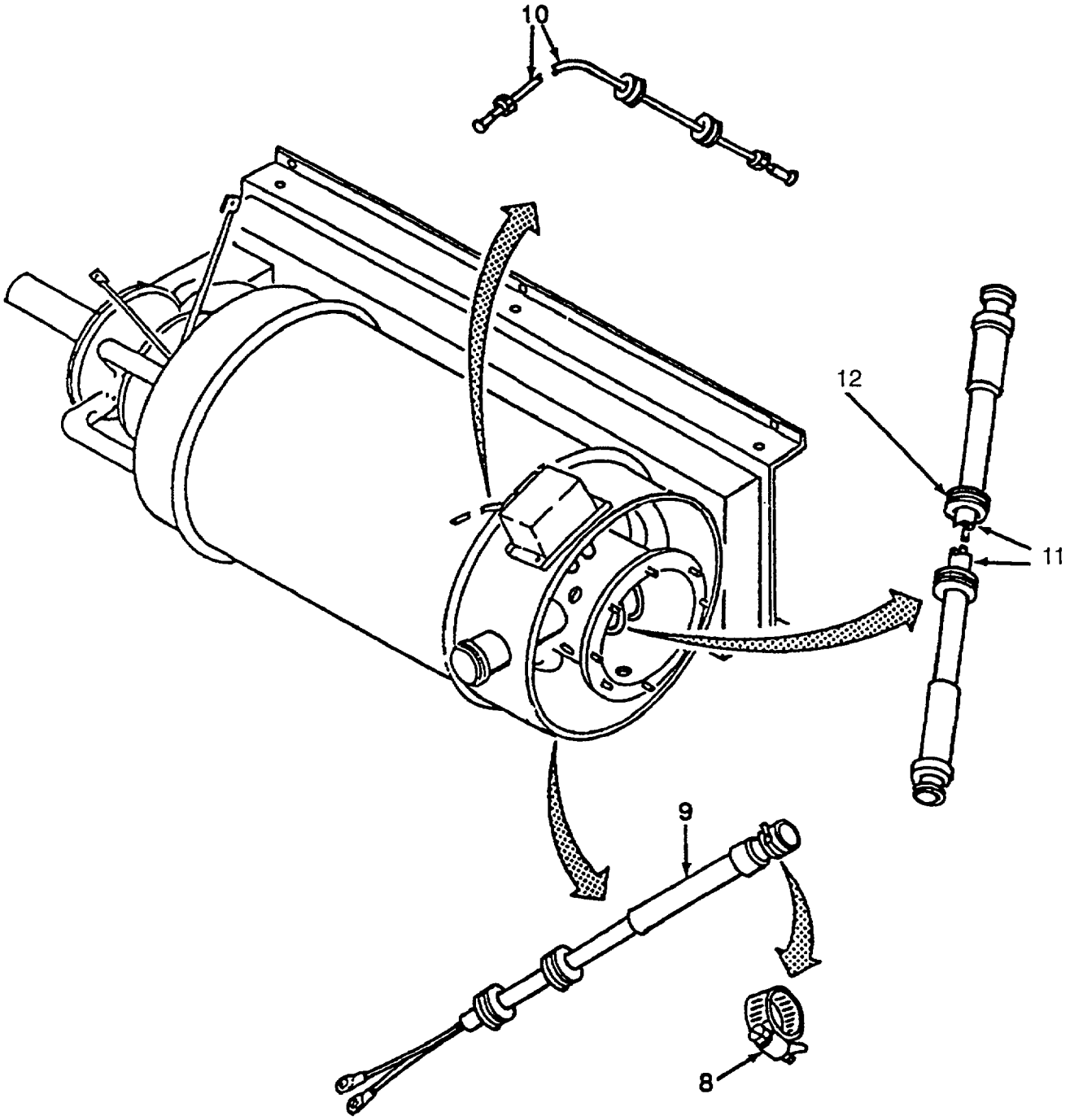

Figure 27. Detector Flame, Cable, Tube and Mounting Ring (Heat Exchanger) (Sheet 2 of 2).

SECTION II

(1) ITEM NO	(2) SMR CODE	(3) CAGEC	(4) PART NUMBER	(5) DESCRIPTION AND USABLE ON CODES (UOC)	(6) QTY
				GROUP 06 HEAT EXCHANGER ASSEMBLY	
				FIGURE 27 DETECTOR FLAME, CABLE, TUBE AND MOUNTING PLATE	
1	PAOZZ	96906	MS35489-11	. GROMMET NONMETALLIC	1
2	PAOZZ	96906	MS51971-2	. NUT PLAIN, HEXAGON	6
3	PAOZZ	96906	MS35338-139	. WASHER, LOCK UOC: YKR	6
3	PAOZZ	96906	MS35338-44	. WASHER, LOCK UOC: LPL	6
4	PAOZZ	96906	MS15795-810	. WASHER, FLAT UOC: YKR	12
4	PAOZZ	96906	MS27183-10	. WASHER, FLAT UOC: LPL	12
5	PAOZZ	80204	B1821BH025C075N	. SCREW, CAR HEXAGON HEAD UOC: YKR	6
5	PAOZZ	80204	MS90725-6	. SCREW, CAP, HEXAGON HEAD UOC: LPL	6
6	XBOZZ	90598	60595-1	. BRACKET, HEAT EXCHANGER UOC: YKR	3
6	XBOZZ	90598	60218-1	· BRACKET, HEAT EXCHANGER UOC: LPL	3
7	XBOZZ	90598	60598-100	. RING, MOUNTING	1
8	PAOZZ	96906	MS35842-11	. CLAMP, HOSE UOC: YKR	1
8	PAOZZ	06034	5801257	. CLAMP, HOSE UOC: LPL	1
9	XBOZZ	90598	60414-100	. DETECTOR, FLAME	1
10	XBOZZ	90598	60480-100	. TUBE ASSEMBLY (INCLUDES GROMMETS, SLEEVES AND NUTS) UOC: YKR	1
10	XBOZZ	90598	60230-100	. TUBE ASSEMBLY (INCLUDES GROMMETS, BRAIDED WIRE, TERMINAL RING, SLEEVES AND NUTS) UOC: LPL	1
11	PAOZZ	90598	60412-100	. CABLE ASSEMBLY (INCLUDES RUBBER GROMMETS)	2
12	PAOZZ	96906	MS35489-11X	. GROMMET NONMETALLIC	2

END OF FIGURE

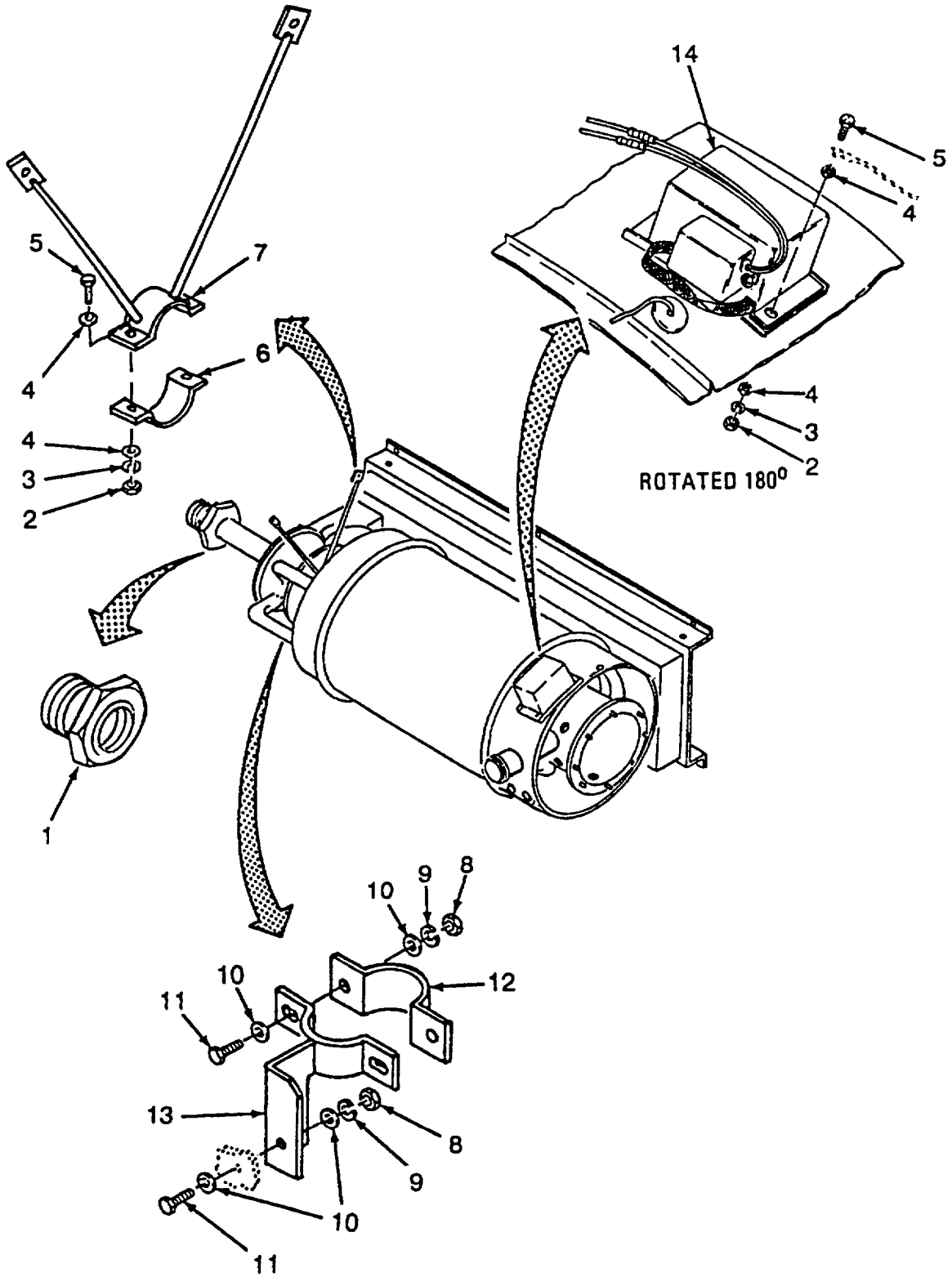

Figure 28. Sight Glass, Support, Clamp and Saddle (Heat Exchanger).

SECTION II

(1) ITEM NO	(2) SMR CODE	(3) CAGEC	(4) PART NUMBER	(5) DESCRIPTION AND USABLE ON CODES (UOC)	(6) QTY
				GROUP 06 HEAT EXCHANGER ASSEMBLY	
				FIGURE 28 SIGHT GLASS, SUPPORT CLAMP AND SADDLE	
1	PAOZZ	70673	P-75	. SIGHT GLASS-PIPE	1
2	PAFZZ	96906	MS51971-1	. NUT PLAIN, HEXAGON UOC: YKR	4
2	PAFZZ	96906	MS51967-2	. NUT PLAIN, HEXAGON UOC: LPL	4
3	PAFZZ	96906	MS35338-139	. WASHER, LOCK UOC: YKR	4
3	PAFZZ	96906	MS35338-44	. WASHER, LOCK UOC: LPL	4
4	PAFZZ	96906	MS15795-810	. WASHER, FLAT UOC: YKR	8
4	PAFZZ	96906	MS27183-10	. WASHER, FLAT UOC: LPL	8
5	PAFZZ	80204	B1821BH025C100N	. SCREW, CAR HEXAGON HEAD UOC: YKR	2
5	PAFZZ	80204	MS90725-8	. SCREW, CAP, HEXAGON HEAD UOC: LPL	2
6	XBFZZ	90598	60539-1	. CLAMP	1
7	XBFZZ	90598	60554-100	. SUPPORT, HEAT EXCHANGER	1
8	PAFZZ	96906	MS35649-204	. NUT, PLAIN, HEXAGON	6
9	PAFZZ	96906	MS35338-138	. WASHER, LOCK	6
10	PAFZZ	96906	MS15795-846	. WASHER, FLAT	12
11	PAFZZ	96906	MS51849-74C	. SCREW, MACHINE	6
12	XBFZZ	90598	60524-100	. CLAMP, WELDMENT	2
13	XBFZZ	90598	60524-1	. SADDLE	2
14	PAFZZ	90598	60444-100	. FILTER/TRANSFORMER (TRANSFORMER NOT INTERCHANGEABLE BETWEEN MODELS) UOC: YKR	1
14	PAFZZ	90598	60227-100	. TRANSFORMER, POWER TRANSFORMER NOT INTERCHANGEABLE BETWEEN MODELS) UOC: LPL	1

END OF FIGURE

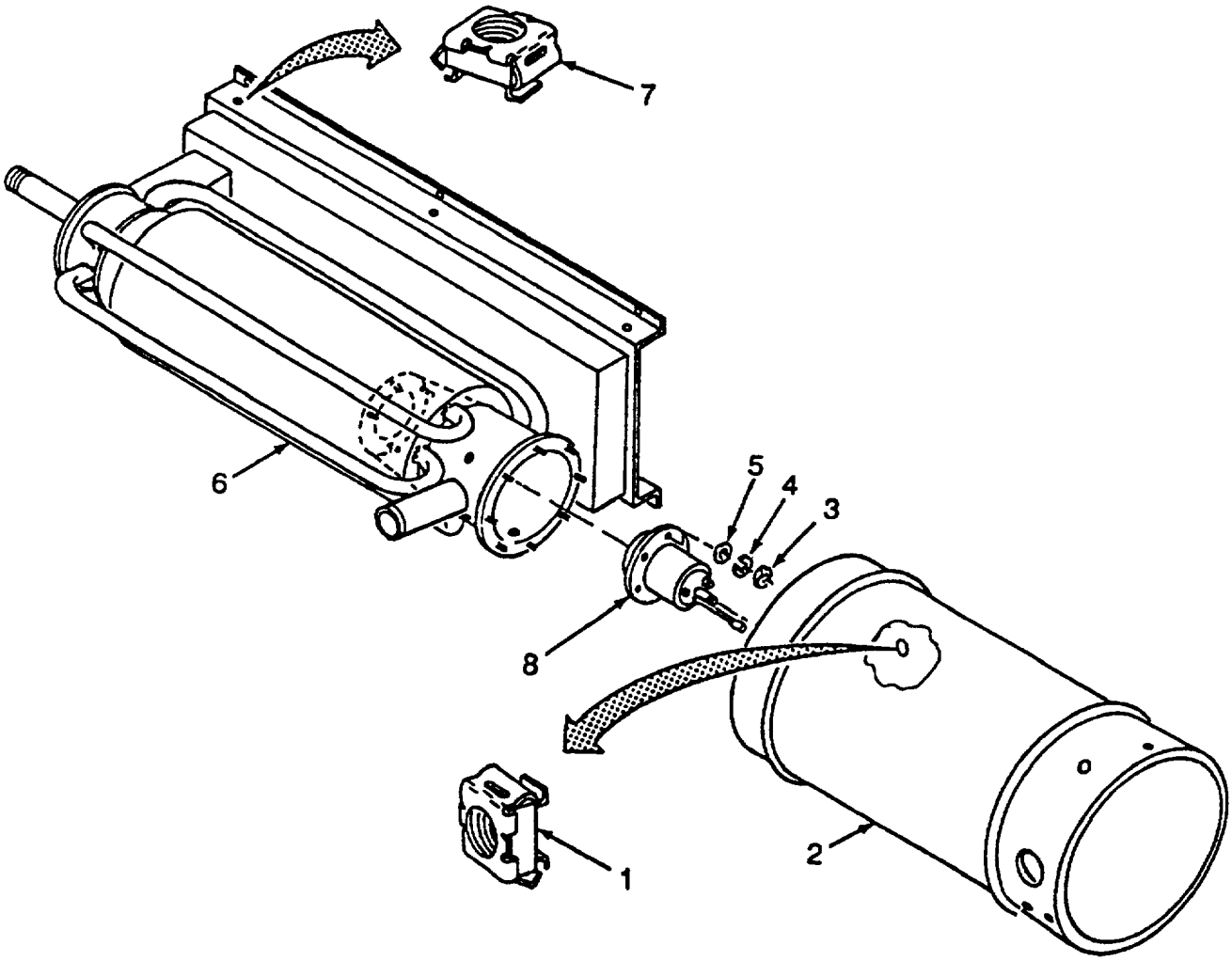

Figure 29. Shell, Heat Exchanger and Burner Assembly (Sheet 1 of 2).

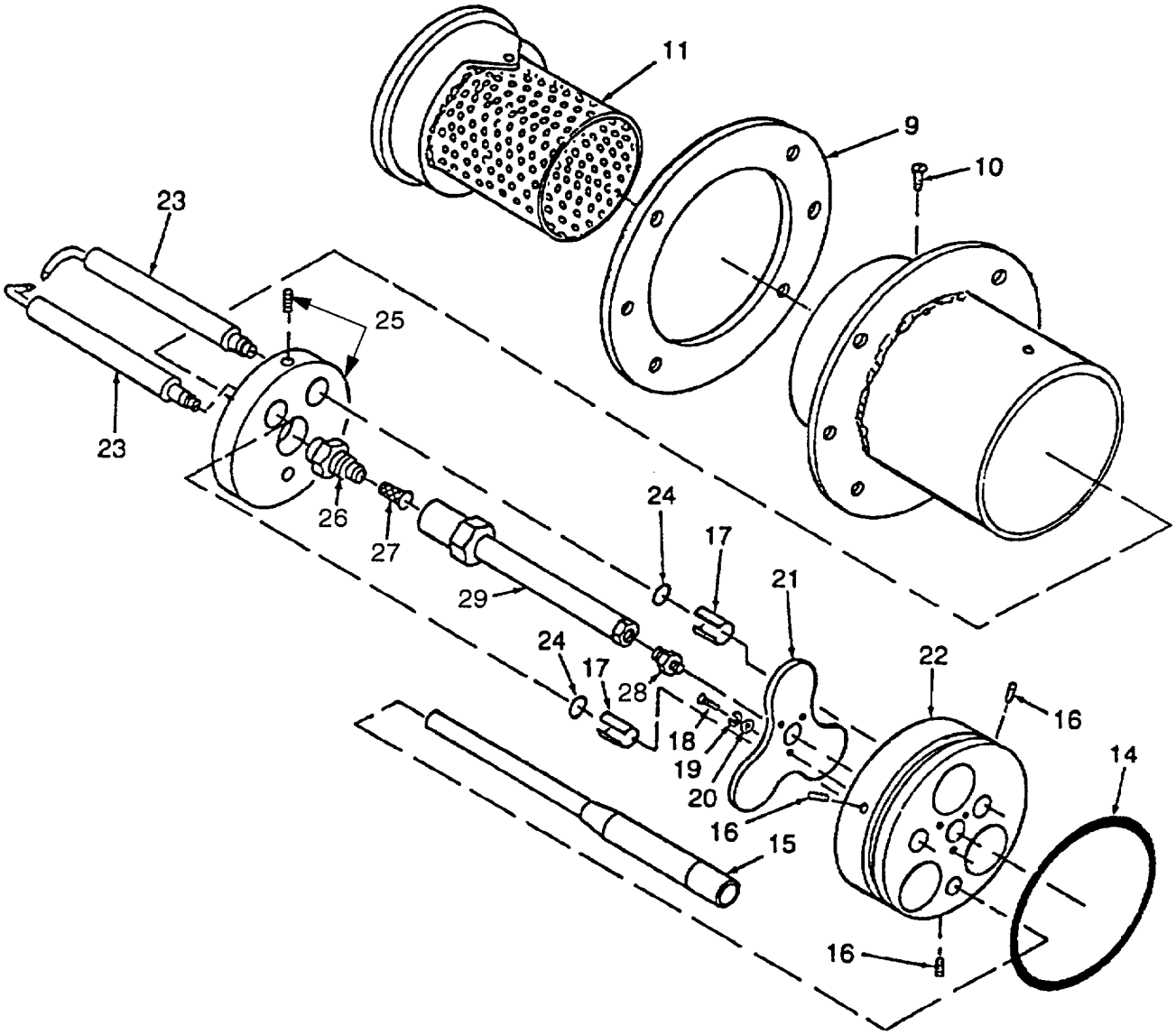

Figure 29. Shell, Heat Exchanger and Burner Assembly (Sheet 2 of 2).

SECTION II

(1) ITEM NO	(2) SMR CODE	(3) CAGEC	(4) PART NUMBER	(5) DESCRIPTION AND USABLE ON CODES (UOC)	(6) QTY
				GROUP 06 HEAT EXCHANGER ASSEMBLY	
				FIGURE 29 SHELL, HEAT EXCHANGER AND BURNER ASSEMBLY	
1	PAFZZ	78553	C7988-1420-38	. RETAINER, NUT AND BOLT	17
2	XBFZZ	90598	60599-1	. SHELL, HEAT EXCHANGER UOC: YKR	1
2	XBFZZ	90598	60219-100	. SHELL, HEAT EXCHANGER UOC: LPL	1
3	PAFZZ	96906	MS35649-2255	. NUT PLAIN, HEXAGON	6
4	PAFZZ	96906	MS35338-138	. WASHER, LOCK	6
5	PAFZZ	96906	MS15795-810	. WASHER, FLAT UOC: YKR	6
5	PAFZZ	96906	MS35338-153	. WASHER, FLAT UOC: LPL	6
6	XBFFF	90598	60521-100	. HEAT EXCHANGER	1
7	PAFZZ	78553	C7988-1420-3B	.. RETAINER, NUT AND BOLT	9
8	XBFFF	90598	60701-100	. BURNER ASSEMBLY	1
9	PAFZZ	90598	60717-1	.. GASKET	1
10	PAFZZ	96906	MS51959-43	.. SCREW, MACHINE	1
11	XBFZZ	90598	60707-100	.. FIRE RING ASSEMBLY	1
12	PAFZZ	96906	MS51029-49	.. SETSCREW	3
13	XBFZZ	90598	60740-100	.. TUBE AND FLANGE	1
14	PAFZZ	76385	239	.. PACKING, PREFORMED	1
15	XBFZZ	90598	60710-100	.. TUBE ASSEMBLY	1
16	PAFZZ	96906	MS1029-53	.. SETSCREW	3
17	PAFZZ	50340	12408	.. BUSHING, ELECTRICAL	2
18	PAFZZ	96906	MS51957-26	.. SCREW, MACHINE	3
19	PAFZZ	96906	MS35338-136	.. WASHER, LOCK	3
20	PAFZZ	96906	MS15795-805	.. WASHER, FLAT	3
21	PAFZZ	90598	60712-1	.. PETAL VALVE	1
22	XBF7Z	90598	60709-1	.. BLOCK	1
23	PAFZZ	90598	60731-100	.. ELECTRODE ASSEMBLY	2
24	PAFZZ	76385	0-129W056762	.. PACKING, PREFORMED	2
25	XBFZZ	90598	60702-100	.. BAFFLE CENTERING (INCLUDES SETSCREW P/N MS51029-55)	1
26	PAOOO	71895	1.25GPH80W	OIL NOZZLE	1
27	PAOZZ	71895	45560-2	FILTER	1
28	PAFZZ	88044	AN816-3	.. ADAPTER, STRAIGHT, PIPE	1
29	PAFZZ	90598	60734-100	.. TUBE ASSEMBLY, FUEL	1

END OF FIGURE

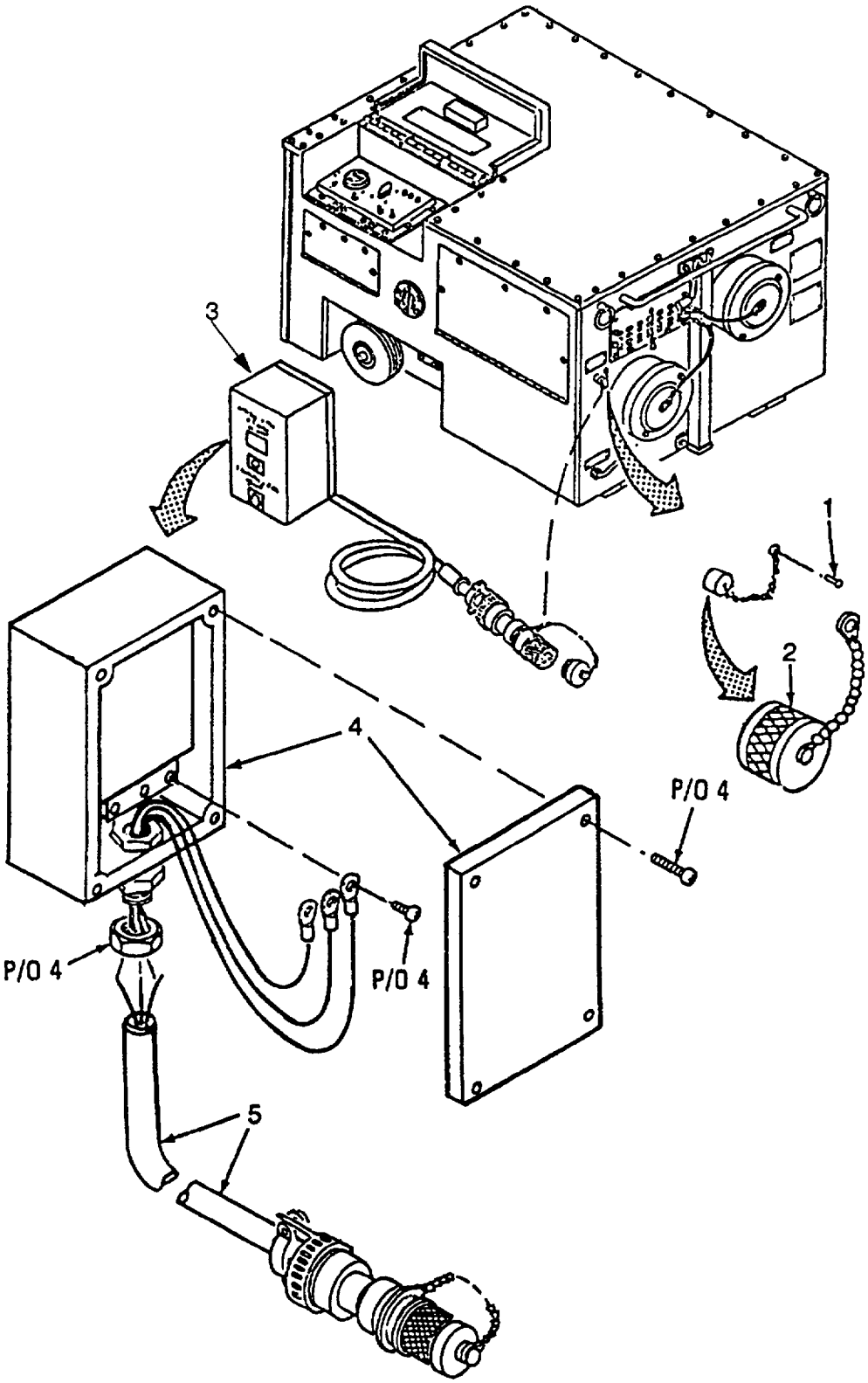

Figure 30. Remote Thermostat Assembly (Thermostat and Cable) (Sheet 1 of 2).

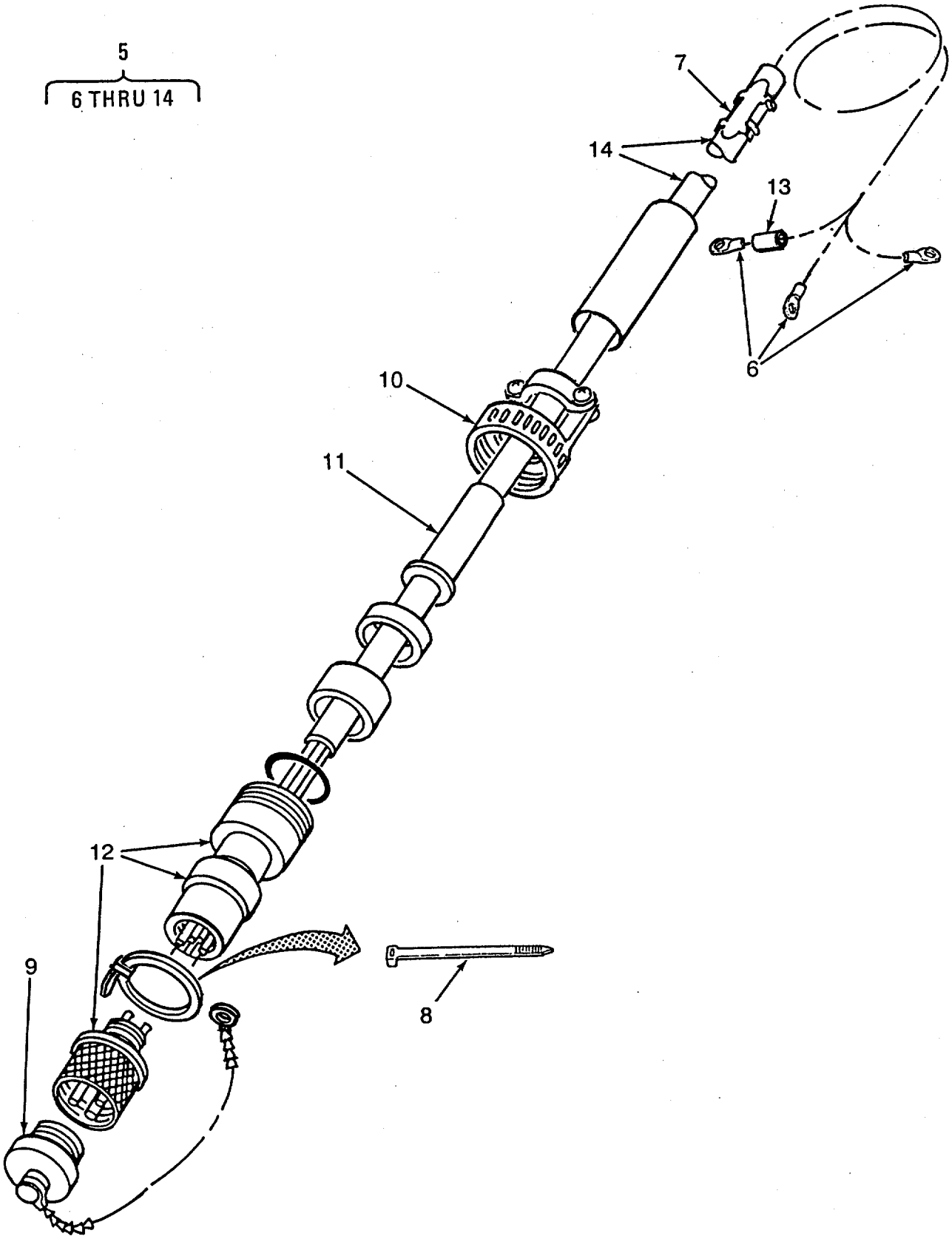

Figure 30. Thermostat Assembly (Thermostat and Cable) (Sheet 2 of 2)

SECTION II

(1) ITEM NO	(2) SMR CODE	(3) CAGEC	(4) PART NUMBER	(5) DESCRIPTION AND USABLE ON CODES (UOC)	(6) QTY
				GROUP 07 REMOTE THERMOSTAT ASSEMBLY INSTALLATION	
				FIGURE 30 REMOTE THERMOSTAT ASSEMBLY (THERMOSTAT AND CABLE)	
1	PAOZZ	07707	AD43AH	RIVET BLIND	1
2	PAOZZ	96906	MS25043-14D	CAP ASSEMBLY (INCLUDES ATTACHING LINK CHAIN)	1
3	XBOOO	90598	60410-100	REMOTE THERMOSTAT ASSEMBLY	1
4	PAOZZ	90598	60404-1	. THERMOSTAT	1
5	XBOOO	90598	60411-100	. THERMOSTAT CABLE ASSEMBLY	1
6	PAOZZ	96906	MS25036-106	.. TERMINAL, LUG	3
7	PAOZZ	96906	MS3368-4-9D	.. STRAP, TIEDOWN	1
8	PAOZZ	96906	MS3367-5-9	.. STRAP, TIEDOWN, ELECTRICAL	1
9	PAOZZ	96906	MS25042-14DA	.. COVER, ELECTRICAL CO (INCLUDES ATTACHING LINK CHAIN)	1
10	PAOZZ	96906	MS504911-17W	.. CONNECTOR, BACKSHELL	1
11	PAOZZ	96906	MS3420-8	.. BUSHING, ELECTRICAL	1
12	PAOZZ	96906	MS3406D14S-7P	.. CONNECTOR, PLUG, ELECTRICAL	1
13	XBOZZ	14304	E29-0003-002	.. BAND, MARKER	3
14	MOOZZ	90598	60411-7	.. CABLE, ELECTRICAL (MAKE FROM P/N CO-03HOF(3/16) 0430 (81349), CUT TO 310 INCHES)	1

END OF FIGURE

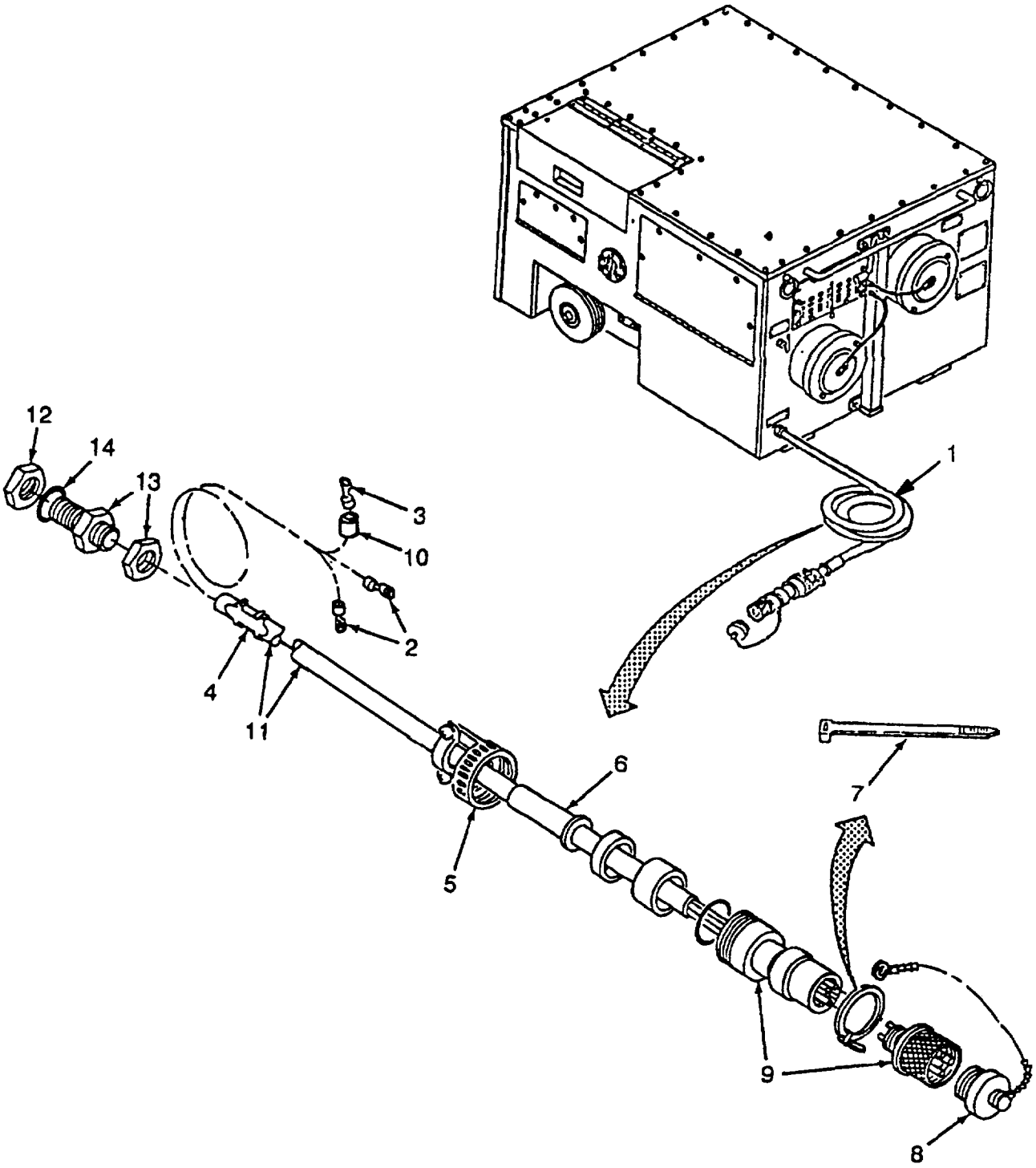

Figure 31. Power Cable Assembly (P1).

SECTION II

(1) ITEM NO	(2) SMR CODE	(3) CAGEC	(4) PART NUMBER	(5) DESCRIPTION AND USABLE ON CODES (UOC)	(6) QTY
				GROUP 08 POWER CABLE ASSEMBLY	
				FIGURE 31 POWER CABLE ASSEMBLY	
1	XBOOO	90598	60411-102	CABLE ASSEMBLY, POWER	1
2	PAOZZ	96906	MS25036-111	TERMINAL, LUG	2
3	PAOZZ	96906	MS25036-157	. TERMINAL, LUG	1
4	PAOZZ	96906	MS3368-4-4D	STRAP, TIEDOWN	1
5	PAOZZ	81349	M85049/11-21W	. ADAPTER, CABLE CLAMP	1
6	PAOZZ	96906	MS3420-12	. BUSHING, NONMETALLIC	1
7	PAOZZ	96906	MS3367-5-9	. STRAP, TIEDOWN, ELECTRICAL	1
8	PAOZZ	96906	MS25042-16DA	COVER, ELECTRICAL CO (INCLUDES ATTACHING LINK CHAIN)	1
9	PAOZZ	96906	MS3406D16-10P	. CONNECTOR, PLUG, ELECTRICAL	1
10	XBOZZ	85480	HSCPS.9-6676W	. MARKER, WIRE	3
11	MOOZZ	90598	60411-17	. CABLE, ELECTRICAL (MAKE FROM P/N CO-03HOF(3/12) 0635 (81349), CUT TO 416 INCHES)	1
12	PAOZZ	28520	2251	LOCKNUT	1
13	PAOZZ	28520	3234	FITTING, LIQUID TIGHT	1
14	PAOZZ	96906	MS9955-023	PACKING, PREFORMED	1

END OF FIGURE

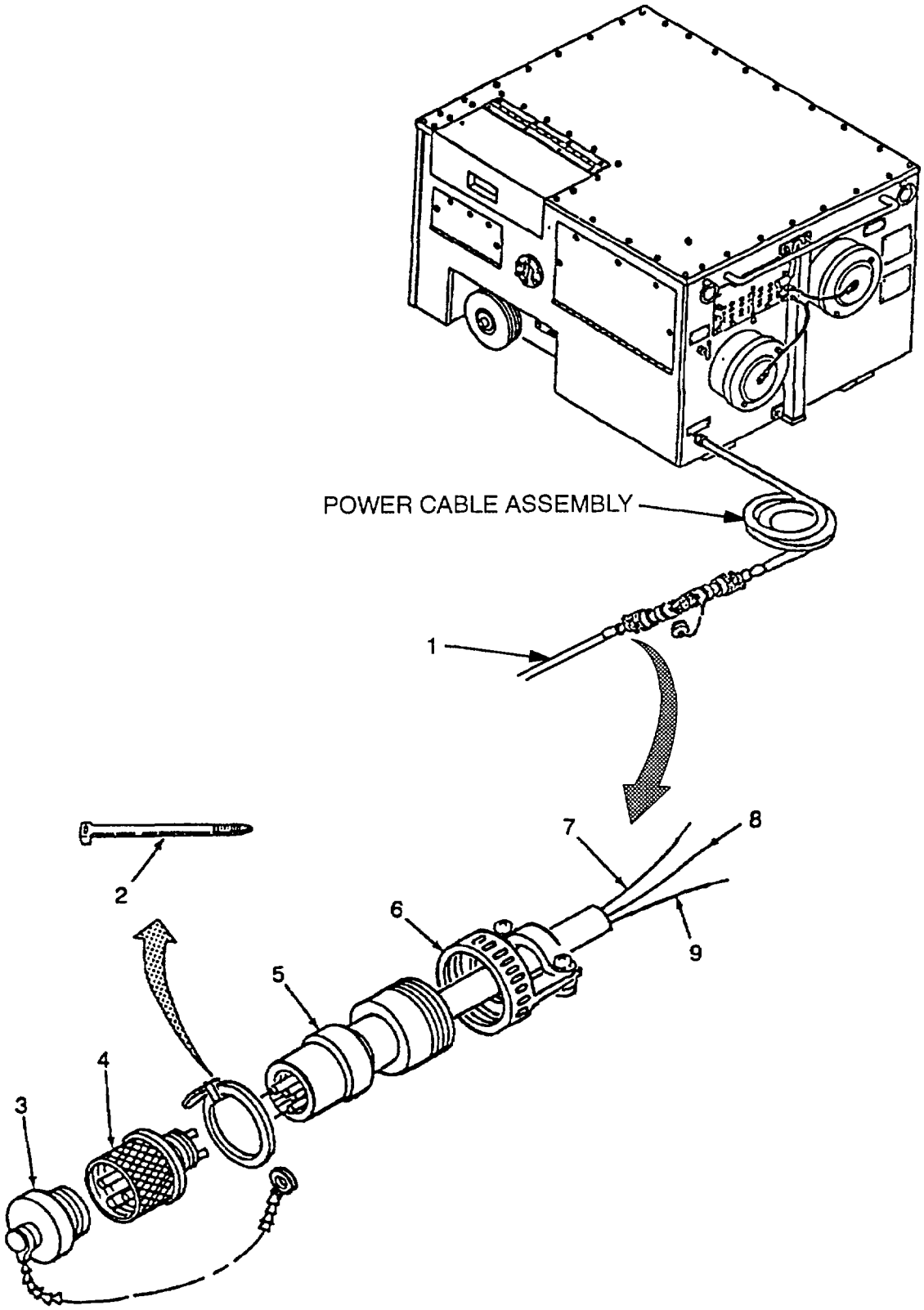

Figure 32. External Electrical Lead Assembly

SECTION II

(1) ITEM NO	(2) SMR CODE	(3) CAGEC	(4) PART NUMBER	(5) DESCRIPTION AND USABLE ON CODES (UOC)	(6) QTY
				GROUP 09 **EXTERNAL ELECTRICAL LEAD ASSEMBLY**	
				FIGURE 32 **EXTERNAL ELECTRICAL LEAD ASSEMBLY**	
*1	XBOOO	97403	13229E8567	EXTERNAL LEAD ASSEMBLY, ELECTRICAL	1
2	PAOZZ	96906	MS3367-5-9	. STRAP, TIEDOWN, ELECTRICAL.....	1
3	PAOZZ	96906	MS25043-16DA	. COVER, ELECTRICAL CO (INCLUDES ATTACHING LINK CHAIN)	1
4	PAOZZ	96906	MS3401D16-10S	. CONNECTOR	1
5	PAOZZ	96906	MS3420-6	. BUSHING, NONMETALLIC	1
6	PAOZZ	81349	M85049/11-112W	. ADAPTER, CABLE CLAMP	1
7	MOOZZ	97403	13229E8567-2	. WIRE, ELECTRICAL (MAKE FROM P/N M5086-1-12-0 (81349), CUT TO LENGTH)	3
8	MOOZZ	97403	13229E8567-3	. WIRE, ELECTRICAL (MAKE FROM P/N M5086-1-12-9 (81349), CUT TO LENGTH)	3
9	MOOZZ	97403	13229E8567-4	. WIRE, ELECTRICAL (MAKE FROM P/N M5086-1-12-5 (81349), CUT TO LENGTH)	3

END OF FIGURE

*When in use, wires 7, 8 and 9 are hard wired to an eternal power source and connector end (4) is connected to the power cable assembly. When not in use, the eternal lead assembly Is stored in the handbook compartment.

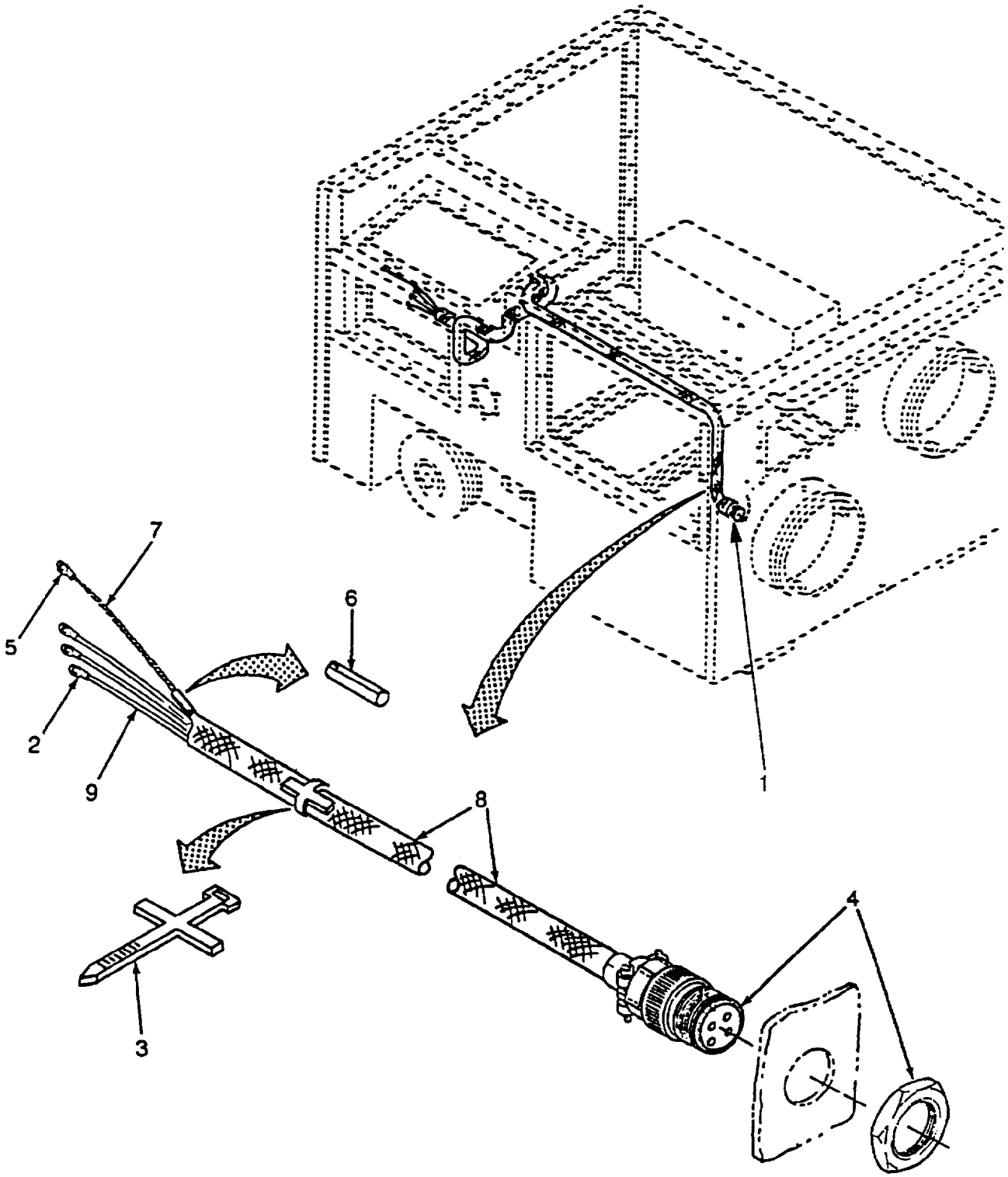

Figure 33. Internal Power Thermostat Cable (J3).

SECTION II

(1) ITEM NO	(2) SMR CODE	(3) CAGEC	(4) PART NUMBER	(5) DESCRIPTION AND USABLE ON CODES (UOC)	(6) QTY
				GROUP 10 **INTERNAL POWER THERMOSTAT CABLE ASSEMBLY**	
				FIGURE 33 **INTERNAL POWER THERMOSTAT CABLE**	
1	XBFFF	90598	60411-101	CABLE ASSEMBLY	1
2	PAFZZ	96906	MS25036-106	TERMINAL, LUG	3
3	PAFZZ	85480	HSCR9-6676W	. MARKER, WIRE	1
4	XBFZZ	96906	MS3404D14S7S	. CONNECTOR, RECEPTACLE	1
5	XBFZZ	96906	MS25036-157	. TERMINAL, LUG	1
6	XBFZZ	81349	M79285-5	. SPLICE, CONDUCTOR	1
7	MFFZZ	90598	60411-23	. BRAID, WIRE (MAKE FROM P/N 8669 (70903), CUT TO 10 INCHES LENGTH)	1
8	MFFZZ	90598	60411-21	. BRAID, WIRE (MAKE FROM P/N 8669 (70903), CUT TO 53 INCHES LENGTH)	1
9	MFFZZ	90598	60411-9	. WIRE, ELECTRICAL (MAKE FROM P/N M50861-16-9 (81349), CUT TO 165 INCHES)	3

END OF FIGURE

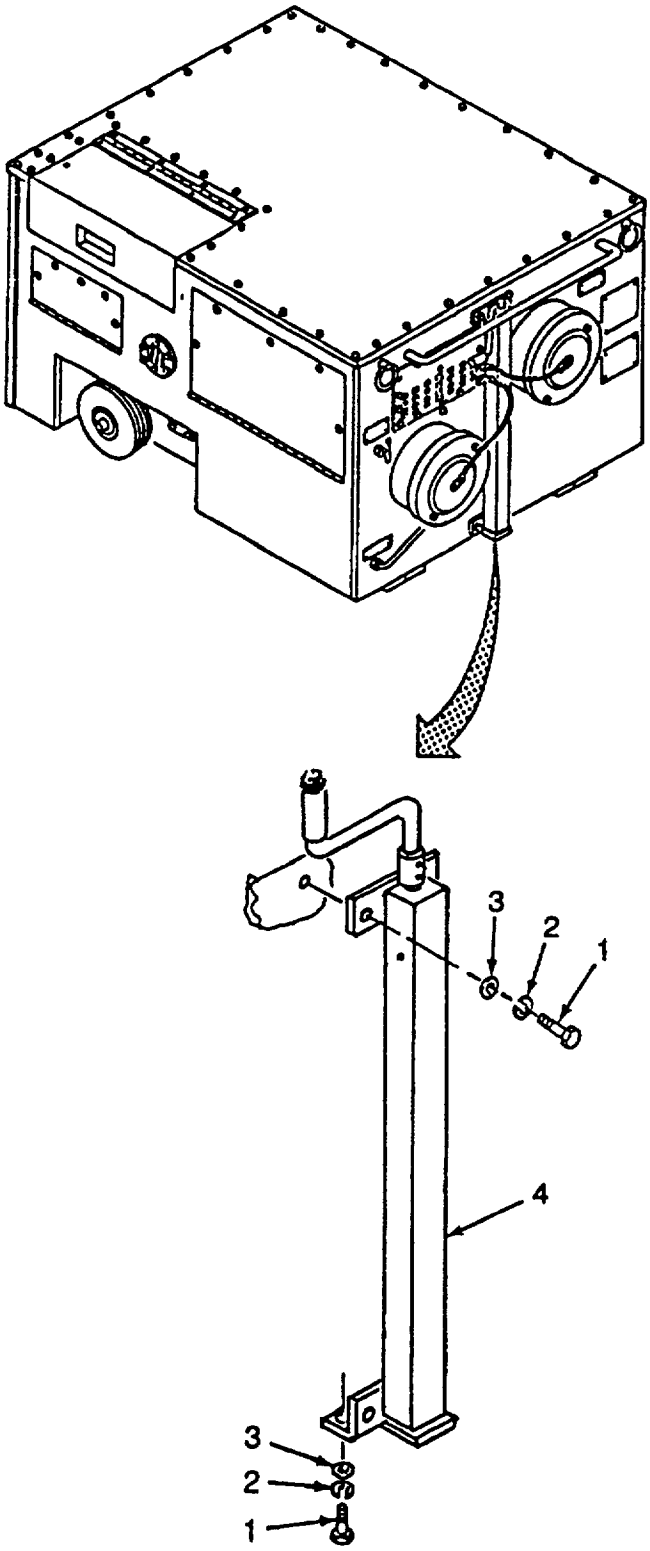

Figure 34. Jack Assembly.

SECTION II

(1) ITEM NO	(2) SMR CODE	(3) CAGEC	(4) PART NUMBER	(5) DESCRIPTION AND USABLE ON CODES (UOC)	(6) QTY
				GROUP 11 JACK AND WHEEL INSTALLATION	
				FIGURE 34 JACK ASSEMBLY	
1	PAOZZ	80204	B1821BH025C088N	SCREW, CAP, HEXAGON HEAD	5
2	PAOZZ	96906	MS35338-139	WASHER, LOCK	5
3	PAOZZ	96906	MS15795-810	WASHER, FLAT	5
4	XBOZZ	90598	60050-100	JACK ASSEMBLY (REPLACE JACK ASSEMBLY WITH P/N 60225-1) UOC: YKR	1
4	XBOZZ	90598	60225-1	JACK ASSEMBLY ..... UOC: LPL	1

END OF FIGURE

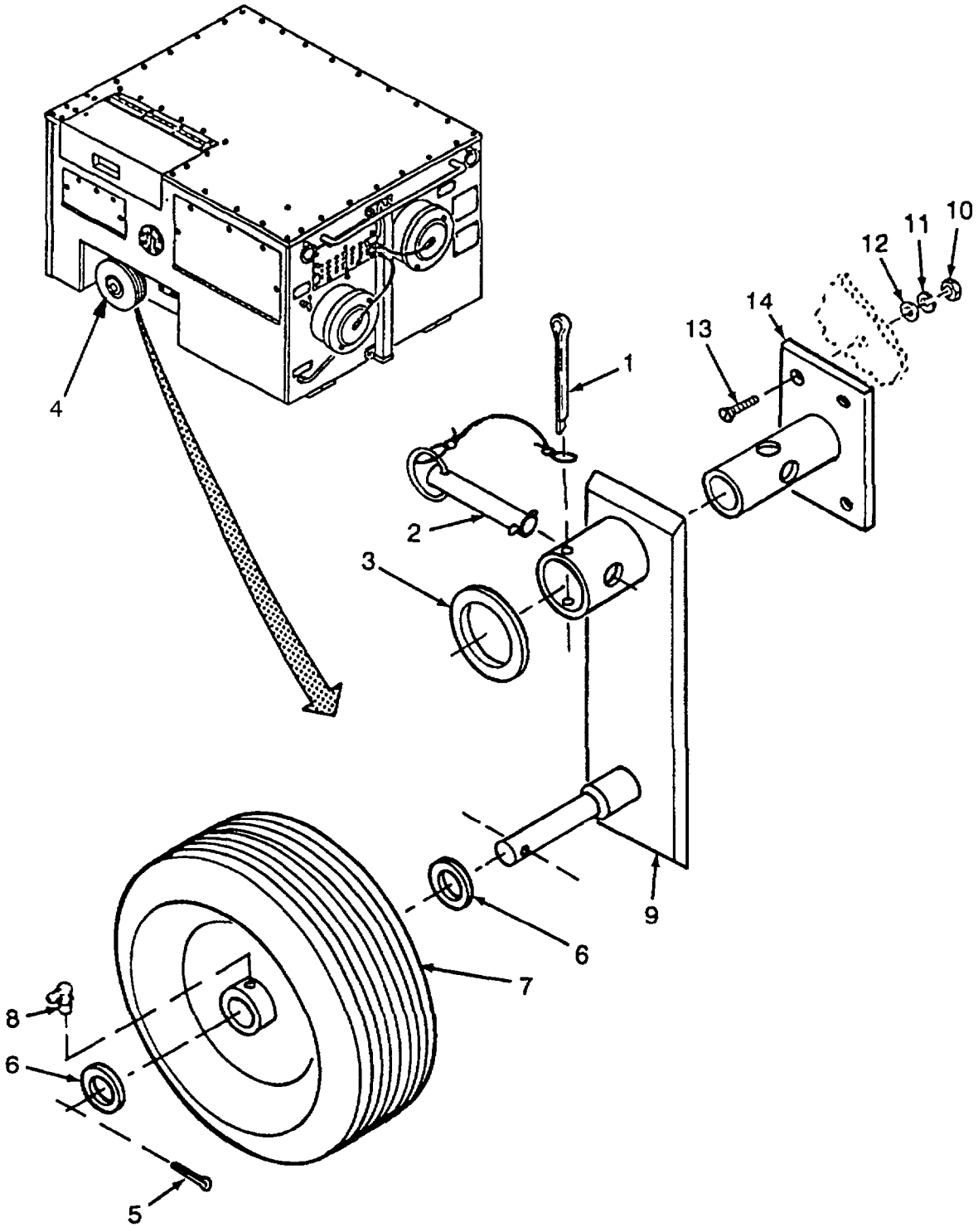

Figure 35. Wheel Assembly and Pivot.

SECTION II

(1) ITEM NO	(2) SMR CODE	(3) CAGEC	(4) PART NUMBER	(5) DESCRIPTION AND USABLE ON CODES (UOC)	(6) QTY
				GROUP 11 JACK AND WHEEL INSTALLATION	
				FIGURE 35 WHEEL ASSEMBLY AND PIVOT	
1	PAOZZ	96906	MS24665-372	PIN, COTTER	2
2	PAOZZ	90598	60104-100	SWAGING SLEEVE, WIRE (INCLUDES ATTACHING CABLE)	2
3	PAOZZ	90598	60020-1	WASHER, WHEEL MOUNT	2
4	XBOOO	90598	60611-100	WHEEL ASSEMBLY	2
5	PAOZZ	96906	MS24665-389	. COTTER PIN UOC: YKR	1
5	PAOZZ	96906	MS24665-372	. COTTER PIN UOC: LPL	1
6	PAOZZ	96906	MS15795-820	. WASHER, FLAT UOC: YKR	2
6	PAOZZ	96906	MS27183-21	. WASHER, FLAT UOC: LPL	2
7	PAOZZ	11431	13868805	. WHEEL	1
8	PAOZZ	11431	915	. FITTING, GREASE	1
9	XBOZZ	90598	60601-100	. ARM, RETRACTABLE	1
10	PAOZZ	96909	MS51971-2	. NUT, PLAN, HEXAGON	8
11	PAOZZ	96906	MS35338-140	WASHER, LOCK	8
12	PAOZZ	96906	MS15795-812	WASHER, FLAT	8
13	PAOZZ	96906	MS51959-99	SCREW, MACHINE	8
14	XBOZZ	90598	60607-100	PIVOT, WHEEL	2

END OF FIGURE

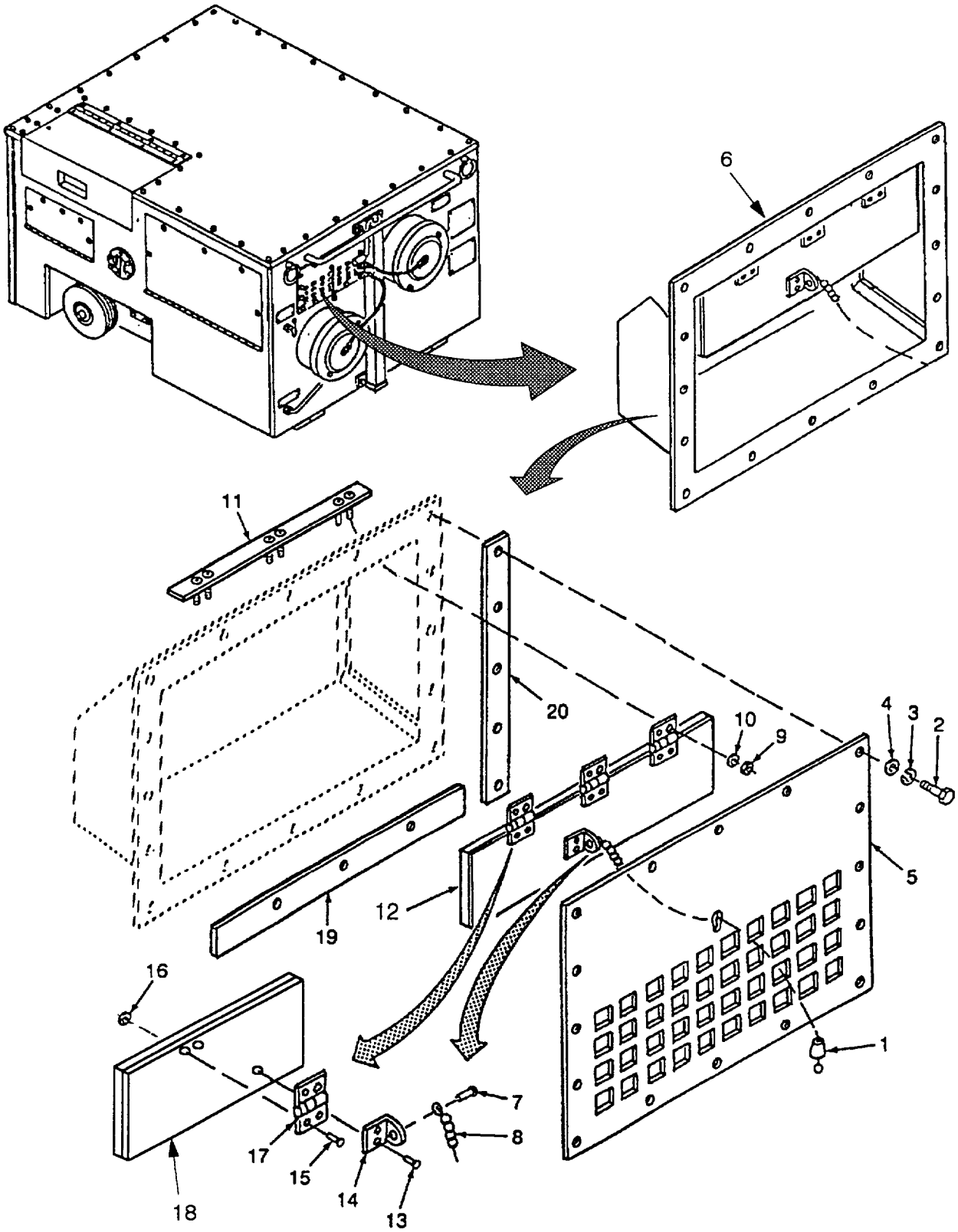

Figure 36. Air Damper Assembly (Sheet 1 of 2).

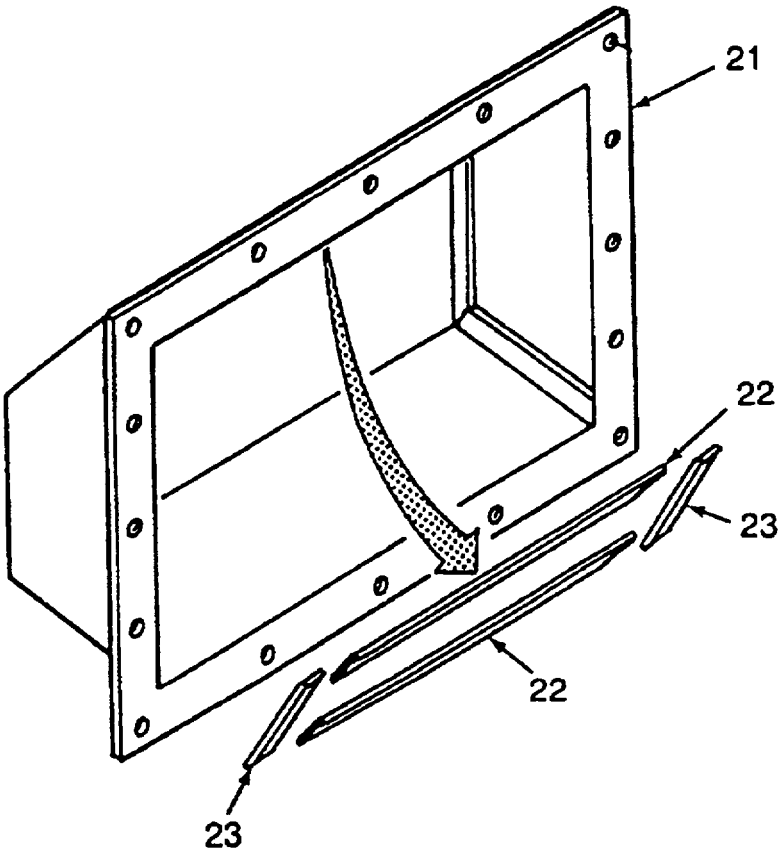

Figure 36. Air Damper Assembly (Sheet 2 of 2).

SECTION II

(1) ITEM NO	(2) SMR CODE	(3) CAGEC	(4) PART NUMBER	(5) DESCRIPTION AND USABLE ON CODES (UOC)	(6) QTY
				GROUP 12 GRILLE AND DAMPER INSTALLATION	
				FIGURE 36 AIR DAMPER ASSEMBLY	
1	XBOZZ	60532	D4524-371	PENDANT WITH SLEEVE	1
2	PAOZZ	96906	MS51849-65C	SCREW, MACHINE	16
3	PAOZZ	96906	MS35338-138	WASHER, LOCK	16
4	PAO7Z	96906	MS15795-808	WASHER, FLAT	16
5	XBOZZ	90598	60110-1	GRILLE	1
6	XBOFF	90598	60106-100	DAMPER ASSEMBLY UOC: YKR	1
6	XBOFF	90598	60206-100	DAMPER ASSEMBLY UOC: LPL	1
7	PAOZZ	81349	M24243/1-F402	. RIVET BLIND	1
8	XBOZZ	60532	CHN2	. CHAIN ASSEMBLY, AIR	1
9	PAOZZ	96906	MS21044C06	. NUT SELF-LOCKING, HEXAGON	6
10	PAOZZ	96906	MS15795-806	. WASHER, FLAT UOC: YKR	6
10	PAOZZ	96906	MS27183-6	. WASHER, FLAT UOC: LPL	6
11	XBOZZ	90598	60111-100	. PLATE, MOUNTING	1
12	XBOFF	90598	60117-100	. DOOR ASSEMBLY	1
13	PAOZZ	07707	AD42H	.. RIVET, BLIND	8
14	XBOZZ	90598	60116-1	.. BRACKET	1
15	PAOZZ	81349	M242436-A403H	.. RIVET BLIND	6
16	PAOZZ	07707	ABUP4	.. WASHER, BACKUP	6
17	XBOZZ	90598	60114-1	.. HINGE	3
18	XBOZZ	90598	60109-1	.. DOOR, DAMPER	1
19	MOOZZ	90598	60106-8	. GASKET (MAKE FROM P/N MIL-R-6130TY2GRA (81349), CUT TO 10.75 INCHES) UOC: YKR	2
19	MOOZZ	90598	60206-8	. GASKET (MAKE FROM P/N MIL-R-6130TY2GRA (81349, CUT TO 10.75 INCHES) UOC: LPL	2
20	MOOZZ	90598	60106-9	. GASKET (MAKE FROM P/N MIL-R-6130TY2GRA (81349), CUT TO 7.88 INCHES) UOC: YKR	2
20	MOOZZ	90598	60206-9	. GASKET (MAKE FROM P/N MIL-R-6130TY2GRA (81349), CUT TO 7.88 INCHES) UOC: LPL	2

SECTION II

(1) ITEM NO	(2) SMR CODE	(3) CAGEC	(4) PART NUMBER	(5) DESCRIPTION AND USABLE ON CODES (UOC)	(6) QTY
				GROUP 12 GRILLE AND DAMPER INSTALLATION	
				FIGURE 36 AIR DAMPER ASSEMBLY	
21	XBFFF	90598	60105-100	. FRAME-DAMPER ASSEMBLY ..... UOC: YKR	1
21	XBFFF	90598	60205-100	. FRAME-DAMPER ASSEMBLY ..... UOC: LPL	1
22	MFFZZ	90598	60105-5	.. GASKET (MAKE FROM P/N MIL-R-6130TY2GRA (81349), CUT TO 8.5 INCHES) ..... UOC: YKR	2
22	MFFZZ	90598	60205-5	.. GASKET (MAKE FROM P/N MIL-R-6130TY2GRA (81349), CUT TO 8.5 INCHES) ..... UOC: LPL	2
23	MFFZZ	90598	60105-6	.. GASKET (MAKE FROM P/N MIL-R-6130TY2GRA (81349), CUT TO 2.88 INCHES) ..... UOC: YKR	2
23	MFFZZ	90598	60205-6	.. GASKET (MAKE FROM P/N MIL-R-6130TY2GRA (81349), CUT TO 2.88 INCHES) ..... UOC: LPL	2

END OF FIGURE

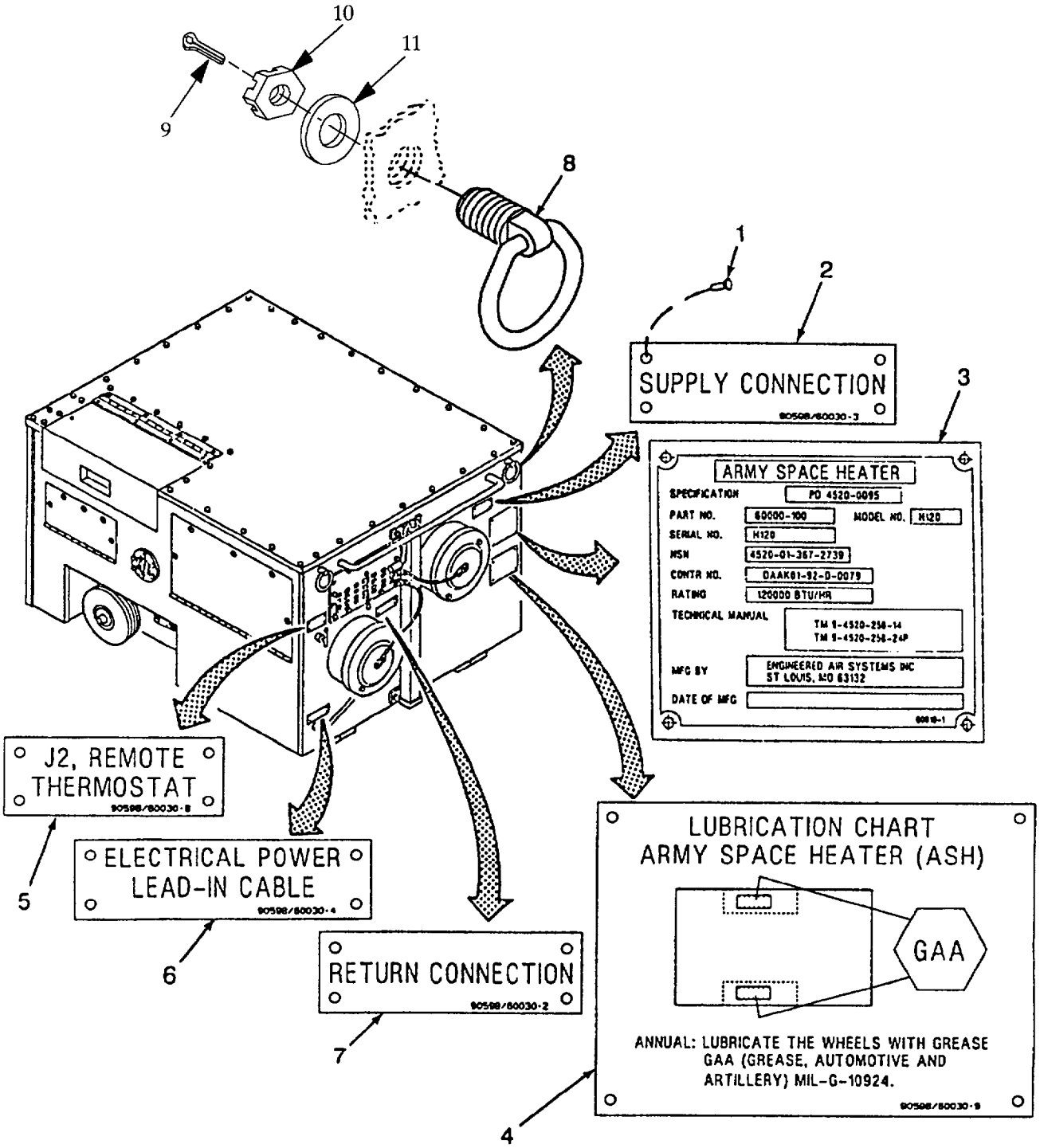

Figure 37. Tie Down Ring and Informational Plates.

SECTION II

(1) ITEM NO	(2) SMR CODE	(3) CAGEC	(4) PART NUMBER	(5) DESCRIPTION AND USABLE ON CODES (UOC)	(6) QTY
				GROUP 13 EYEBOLT, TIEDOWN AND FRAME INSTALLATION	
				FIGURE 37 TIEDOWN RING AND INFORMATIONAL PLATES	
1	PAFZZ	06888	AD42AH	RIVET, BLIND	24
2	XBFZZ	90598	60030-3	NAMEPLATE SUPPLY CONNECTION UOC: YKR	1
2	XBFZZ	90598	60202-3	NAMEPLATE SUPPLY CONNECTION UOC: LPL	1
3	XBFZZ	90598	60010-1	PLATE, IDENTIFICATION UOC: YKR	1
3	XBFZZ	90598	60201-1	PLATE, IDENTIFICATION, FUEL SPECIFICATION UOC: LPL	1
4	XBFZZ	90598	60030-9	NAMEPLATE LUBRICATION CHART ARMY SPACE HEATER (ASH) UOC: YKR	1
4	XBFZZ	90598	60202-9	NAMEPLATE LUBRICATION CHART ARMY SPACE HEATER (ASH) UOC: LPL	1
5	XBFZZ	90598	60030-8	NAMEPLATE J2, REMOTE THERMOSTAT UOC: YKR	1
5	XBFZZ	90598	60202-8	NAMEPLATE J2, REMOTE THERMOSTAT UOC: LPL	1
6	XBFZZ	90598	60030-4	NAMEPLATE ELECTRICAL POWER LEAD-IN CABLE UOC: YKR	1
6	XBFZZ	90598	60202-4	NAMEPLATE ELECTRICAL POWER LEAD-IN CABLE UOC: LPL	1
7	XBFZZ	90598	60030-2	NAMEPLATE RETURN CONNECTION UOC: YKR	1
7	XBFZZ	90598	60202-2	NAMEPLATE RETURN CONNECTION UOC: LPL	1
8	PAOZZ	98313	FDC-1540-5	RINGE, TIE DOWN UOC: YKR	4
8	XBOZZ	90598	60223-1	RINGE, TIE DOWN UOC: LPL	4
9	PAOZZ	96906	MS25665-357	PIN, COTTER UOC: LPL	4
10	PAOZZ	96906	MS35692-61	NUT, SLOTTED, HEXAGON UOC: LPL	4
11	PAOZZ	96906	MS27183-23	WASHER, FLAT UOC: LPL	4

END OF FIGURE

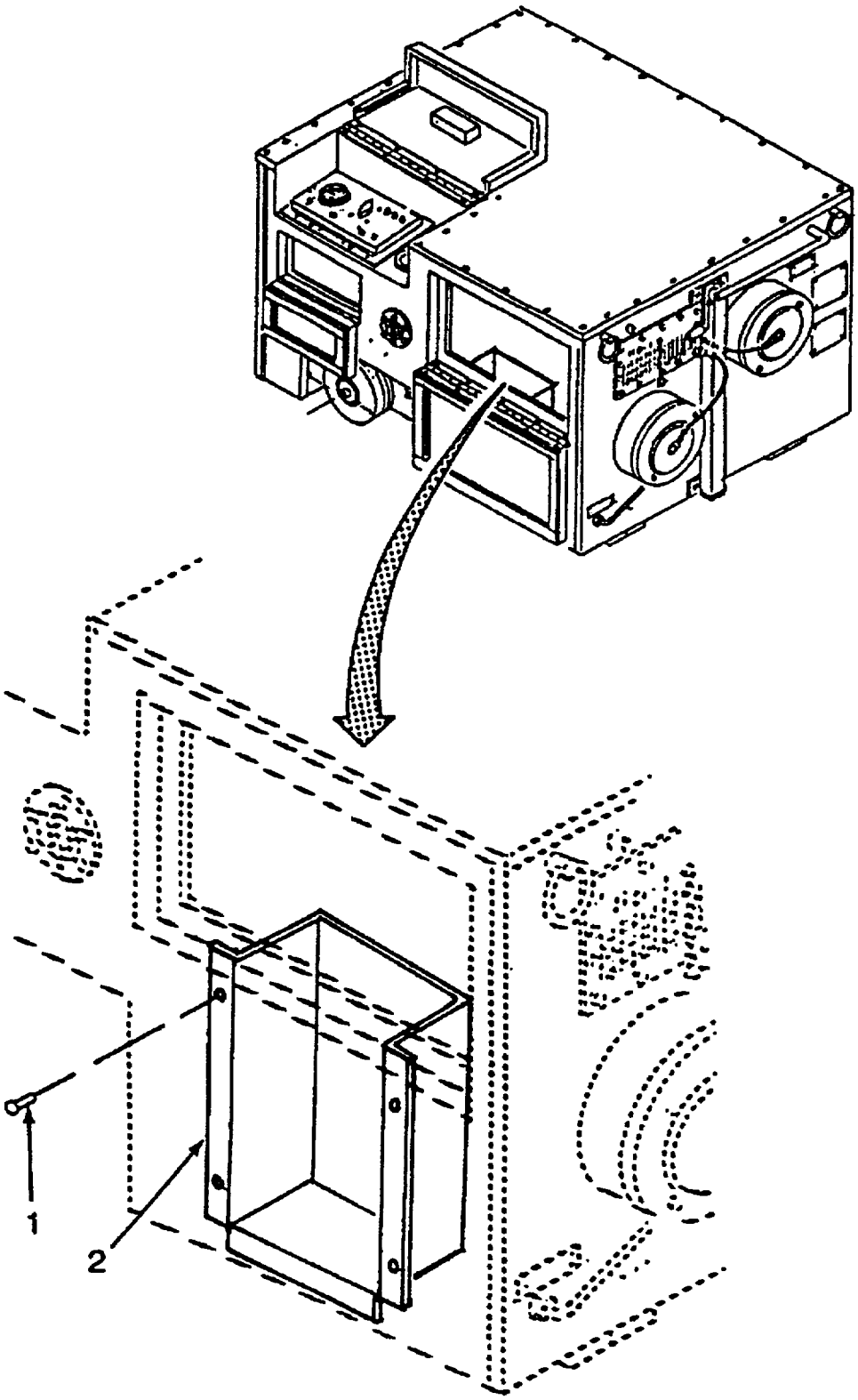

Figure 38. Handbook Compartment.

SECTION II

(1) ITEM NO	(2) SMR CODE	(3) CAGEC	(4) PART NUMBER	(5) DESCRIPTION AND USABLE ON CODES (UOC)	(6) QTY
				GROUP 13 EYEBOLT, TIEDOWN AND FRAME INSTALLATION	
				FIGURE 38 HANDBOOK COMPARTMENT	
1	PAFZZ	07707	AD43AH	RIVET, BLIND	4
2	XBFZZ	90598	60152-1	COMPARTMENT, HANDBOOK	1

END OF FIGURE

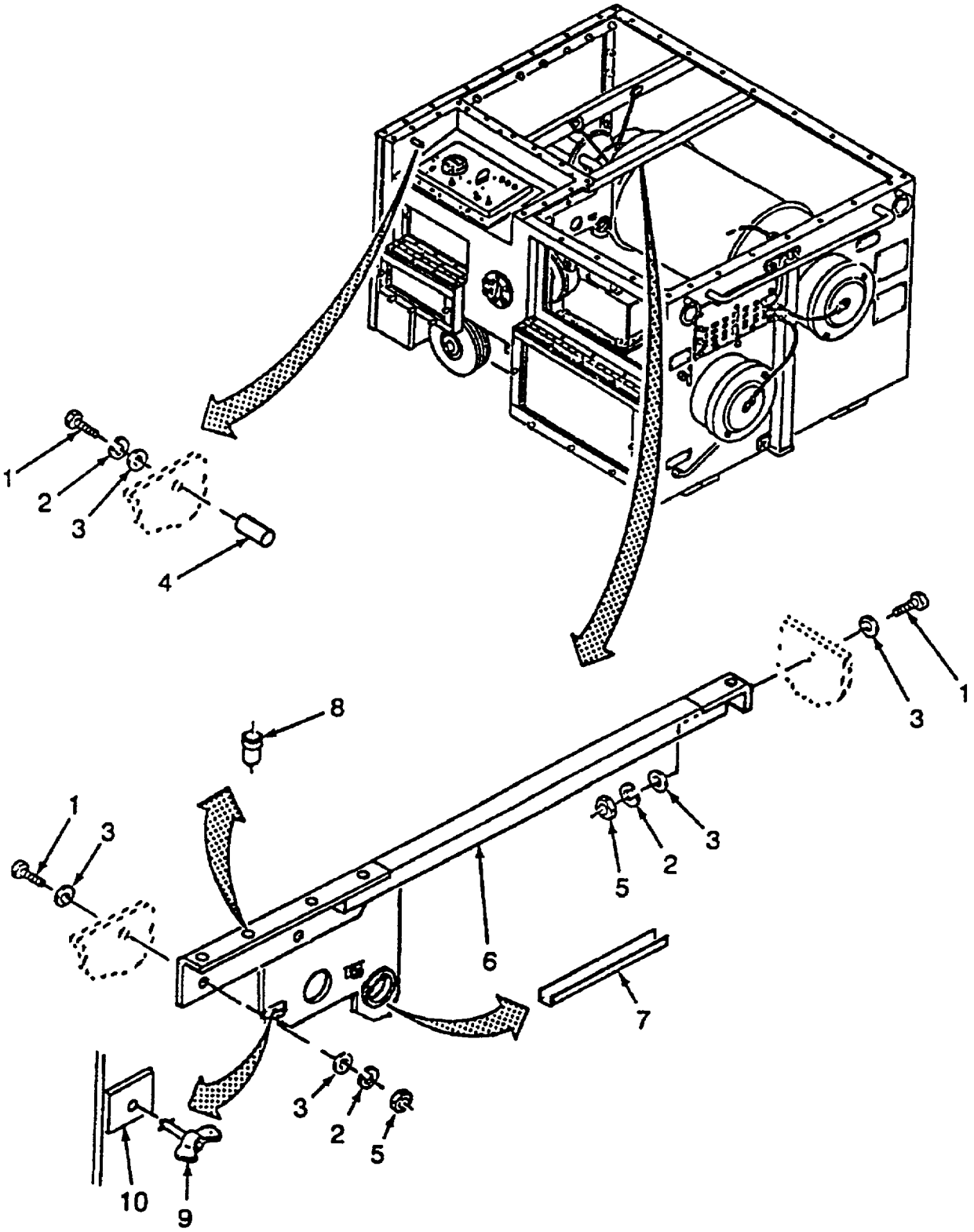

Figure 39. Support and Bar (Control Box).

SECTION II

(1) ITEM NO	(2) SMR CODE	(3) CAGEC	(4) PART NUMBER	(5) DESCRIPTION AND USABLE ON CODES (UOC)	(6) QTY
				GROUP 13 EYEBOLT, TIEDOWN AND FRAME INSTALLATION	
				FIGURE 39 SUPPORT AND BAR	
1	PAFZZ	80204	B1821BH025C075N	SCREW, CAR HEXAGON HEAD	4
2	PAFZZ	96906	MS35338-139	WASHER, LOCK	4
3	PAFZZ	96906	MS15795-810	WASHER, FLAT	7
4	XBFZZ	90598	60077-1	BAR, SPRING CLIP HOLDER	1
5	PAFZZ	96906	MS51971-2	NUT, PLAIN, HEXAGON	3
6	XBOOO	90598	60035-100	SUPPORT, CONTROL BOX	1
7	PAOZZ	96906	MS21266-2N	. GROMMET NONMETALLIC	1
8	PAOZZ	07707	A25K80	. NUT PLAIN, BLIND	2
9	XBOZZ	90598	60046-1	. SCREW, WING	2
10	XBOZZ	90598	60047-1	. CLAMP, EXHAUST ELBOW STORAGE	2

END OF FIGURE

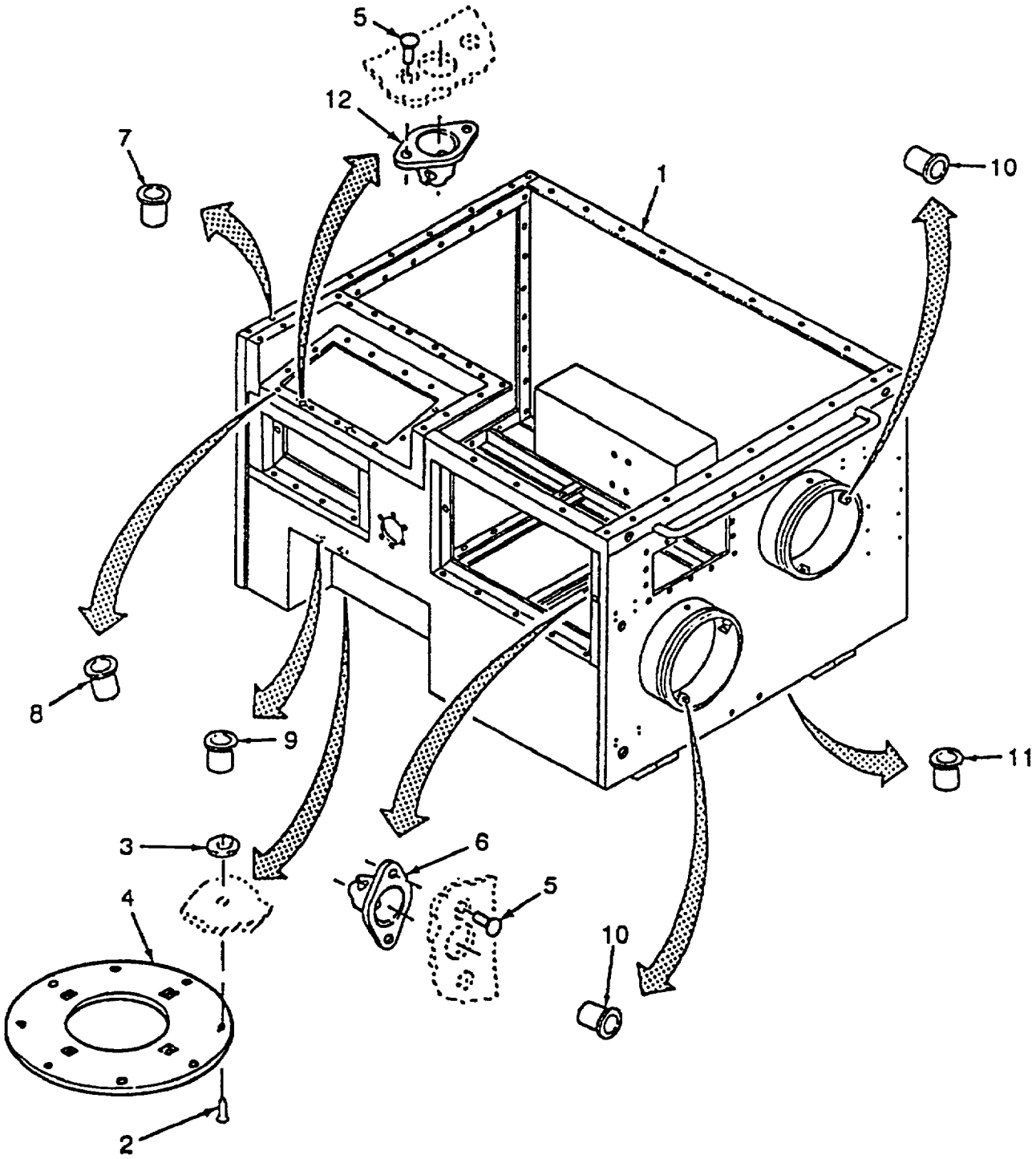

Figure 40. Frame Assembly.

SECTION II

(1) ITEM NO	(2) SMR CODE	(3) CAGEC	(4) PART NUMBER	(5) DESCRIPTION AND USABLE ON CODES (UOC)	(6) QTY
				GROUP 13 EYEBOLT, TIEDOWN AND FRAME INSTALLATION	
				FIGURE 40 FRAME ASSEMBLY	
1	XBFFF	90598	60100-100	FRAME ASSEMBLY	1
				UOC: YKR	
1	XBFFF	90598	60204-100	FRAME ASSEMBLY	1
				UOC: LPL	
2	PAFZZ	06888	AD42AH	. RIVET, BLIND.....	8
3	XBFZZ	07707	ABUP4	. PLATE, BACKUP	8
4	XBFZZ	90598	60497-1	. RING, FUEL DRAIN	1
5	PAFZZ	07707	AK43H	. RIVET, BLIND	24
6	PAFZZ	71286	244-16S	. RECEPTACLE, TURNLOCK	10
7	PAFZZ	03481	A25KB151	. NUT PLAIN, BLIND RIVET	83
				UOC: YKR	
7	PAFZZ	03481	A25KB151	. NUT PLAIN, BLIND RIVET	61
				UOC: LPL	
8	PAFZZ	03481	A10KB116	. NUT PLAIN, BLIND RIVET	20
9	PAFZZ	25472	A8K75	. NUT PLAIN, BLIND RIVET	4
10	PAFZZ	03481	A10K80	. NUT PLAIN, BLIND RIVET	4
11	PAFZZ	03481	S25P280	. NUT PLAIN, BLIND RIVET	5
12	PAFZZ	71826	244-16C	. RECEPTACLE, TURNLOCK	2

END OF FIGURE

SECTION II

(1) ITEM NO	(2) SMR CODE	(3) CAGEC	(4) PART NUMBER	(5) DESCRIPTION AND USABLE ON CODES (UOC)	(6) QTY
				GROUP 14 BULK	
				FIGURE BULK	
1	PAOZZ	81349	MIL-R-6130	RUBBER SHEET CELLULAR, TY2, GRADE A, CONDITION SOFT	V
2	PAOZZ	97592	F19540B14	RUBBER SHEET CELLULAR	V
3	PAOZZ	81349	M23053/5-109-0	INSULATION SLEEVING	V
4	PAOZZ	81349	M5086/1-12-0	WIRE, ELECTRICAL	V
5	PAOZZ	81349	M5086/1-12-5	WIRE, ELECTRICAL	V
6	PAOZZ	81349	M5086/1-12-9	WIRE, ELECTRICAL	V
7	PAOZZ	81349	M5086/1-16-9	WIRE, ELECTRICAL	V
8	PAOZZ	81349	CO-03HOF (3/16) 04 30	CABLE, POWER, ELECTRIC	V
9	PAOZZ	86730	R41NPSA.125X1.50 X100	RUBBERT STRIP	V
10	PAOZZ	86730	R41NPSA.125X1.44 X100	RUBBERT STRIP	V
11	PAOZZ	86730	R41NPSA.125X1.00 X100	RUBBERT STRIP	V
12	PAOZZ	86730	08320116	RUBBER INSULATION	V
13	PAOZZ	96906	MS20257C3-4800	HINGE, BUTT	V
14	PAOZZ	96906	MS20257C2-1400	HINGE, BUTT	V
15	PAOZZ	81349	MIL-R-6855CL1GR 50	RUBBER, SYNTHETIC	V
16	PAOZZ	04741	1BC9350	TUBE, METALLIC	V
17	PAOZZ	81349	CO-03HOF (3/12) 06 35	CABLE, POWER, ELECTRIC	V
18	PAOZZ	39428	5510K23	HOSE, AIR DUCT	V
19	PAOZZ	81349	M8794-6	HOSE, NONMETALLIC	V
20	PAOZZ	16428	8663	BRAID, WIRE 0.219IDX0.219OD, 12AWG, 34 SINGLE CONDUCTOR, COPPER, TIN STRANDED, TUBULAR BRAID	V
21	PAFZZ	72380	D226196-9	BRAID, WIRE	V
22	PAOZZ	81348	QQB575R34T0500	BRAID, WIRE	V
23	PAOZZ	72954	HC66-100X063-125	ROPE, WIRE	V
24	PAOZZ	90816	8660	WIRE, BRAIDED UOC: LPL	V
25	PAOZZ	90816	8669	WIRE, BRAIDED UOC: LPL	V
26	PAOZZ	30327	44-P YELLOW	TUBING, NONMETALLIC	V
27	PAOZZ	86228	AAB00037	TUBING, NONMETALLIC	V

END OF FIGURE

SECTION IV

CROSS-REFERENCE INDEXES

NATIONAL STOCK NUMBER INDEX

STOCK NUMBER	FIG.	ITEM
5310-00-003-9174	35	6
5310-00-021-7088	40	8
6145-00-044-3579	BULK	18
5305-00-054-5649	15	11
5305-00-054-6650	29	18
5305-00-054-6652	12	12
5305-00-054-6671	12	9
5305-00-054-6671	13	7
5315-00-059-0491	35	1
5310-00-059-0491	35	5
5305-00-059-3655	15	13
5305-00-059-3660	9	7
5305-00-059-3663	11	5
5340-00-067-3868	24	13
5305-00-068-0502	27	5
5305-00-068-0508	4	1
5305-00-068-0508	5	5
5305-00-068-0508	10	3
5305-00-068-0508	18	1
5305-00-068-0508	19	1
5305-00-068-0508	20	1
5305-00-068-0508	22	2
5305-00-068-0508	24	6
5305-00-068-0508	24	16
5305-00-068-0508	25	6
5305-00-068-0508	27	5
5305-00-068-0508	39	1
5305-00-071-2505	8	3
5305-00-071-2505	25	5
5305-00-071-2505	34	1
5325-00-074-3301	39	7
5340-00-079-7837	14	5
5310-00-082-1404	36	10
5305-00-088-9520	29	12
4310-00-106-5657	36	8
5975-00-111-3208	26	15
5975-00-111-3208	30	8
5975-00-111-3208	31	7
5975-00-111-3208	32	2
5940-00-115-2674	26	25
5320-00-129-9706	36	7
5320-00-140-4965	6	1
5320-00-140-4965	7	1
5325-00-141-3291	5	40
5325-00-141-3291	40	6
5940-00-143-4777	6	10
5940-00-143-4777	7	10
5940-00-143-4777	31	3
5940-00-143-4777	33	5
5940-00-143-4794	6	9
5940-00-143-4794	7	9
5320-00-143-6149	5	39
5320-00-143-6149	40	5
6145-00-170-5274	BULK	21
5310-00-184-8628	9	6
4730-00-187-0839	29	28
4730-00-187-0840	21	7
5315-00-187-9384	35	5
5310-00-188-7969	40	9
4730-00-193-2707	21	16
4730-00-196-1964	21	4
4710-00-203-3171	BULK	16
5940-00-204-8990	31	2
5310-00-208-9255	9	5
4730-00-222-1837	21	14
5975-00-223-7543	30	7
5975-00-223-7543	31	4
5310-00-225-3839	28	5
5305-00-225-3843	12	3
5305-00-225-3843	28	5
5310-00-225-4680	40	10
5306-00-226-4825	5	1
5306-00-226-4825	20	8
5306-00-226-4826	22	9
9340-00-230-0441	28	1
5330-00-248-3836	11	8

SECTION IV

CROSS-REFERENCE INDEXES

NATIONAL STOCK NUMBER INDEX

STOCK NUMBER	FIG.	ITEM
5310-00-250-9477	26	1
4730-00-263-2733	21	11
5925-00-270-3998	11	7
5310-00-275-9310	26	7
4730-00-277-5683	21	9
4730-00-277-9386	21	12
4720-00-278-1323	BULK	19
5340-00-282-3745	BULK	13
5940-00-283-5280	12	6
5940-00-283-5280	26	17
5940-00-283-5280	30	6
5940-00-283-5280	33	2
5325-00-291-9366	27	1
5340-00-297-0312	19	7
5340-00-297-0312	22	5
5340-00-297-0312	29	1
5340-00-297-0312	29	7
5315-00-298-1481	37	9
4730-00-314-8366	14	7
4730-00-314-8366	17	7
4730-00-334-7840	16	3
5306-00-337-4160	37	8
5320-00-343-5435	38	1
5320-00-409-6841	3	8
4720-00-472-7095	BULK	26
6145-00-519-1333	BULK	17
5310-00-543-2740	12	2
5365-00-543-3388	5	22
5365-00-543-3388	6	7
5365-00-543-3388	7	7
5365-00-543-3388	13	2
5310-00-543-4385	5	34
5310-00-543-5933	11	4
6145-00-548-2920	BULK	3
6145-00-553-7598	BULK	8
5310-00-559-0070	15	3
5325-00-559-7849	6	6
5325-00-559-7849	7	6
4010-00-575-6233	BULK	10
6145-00-578-6072	BULK	21
6145-00-578-7521	BULK	20
5310-00-582-5677	4	3
5310-00-582-5677	5	7
5310-00-582-5677	8	4
5310-00-582-5965	27	3
5310-00-582-5965	28	3
5310-00-582-5677	10	5
5310-00-582-5677	18	3
5310-00-582-5677	19	3
5310-00-582-5677	20	3
5310-00-582-5677	22	4
5310-00-582-5677	24	5
5310-00-582-5677	24	11
5310-00-582-5677	25	4
5310-00-582-5677	27	4
5310-00-582-5677	28	4
5310-00-582-5677	29	5
5310-00-582-5677	34	3
5310-00-582-5677	39	3
5305-00-593-3663	11	5
5365-00-598-5416	31	6
5310-00-614-3505	35	6
5310-00-615-1556	28	10
5310-00-619-1148	9	3
5310-00-619-1148	5	10
5310-00-619-1148	36	4
5310-00-620-4421	5	29
5310-00-620-4421	40	7
5310-00-625-5756	20	7
5310-00-625-5756	22	8
5310-00-625-5756	35	12
5310-00-638-2605	5	33
5310-00-638-2605	5	33
5325-00-639-7264	40	12
5325-00-646-8092	5	18
5325-00-646-8092	6	8

SECTION IV

CROSS-REFERENCE INDEXES

NATIONAL STOCK NUMBER INDEX

STOCK NUMBER	FIG.	ITEM
5325-00-646-8092	7	8
5325-00-646-8092	13	4
5930-00-683-1626	11	12
5340-00-702-2848	24	12
5310-00-722-5998	29	20
5305-00-724-5851	29	16
5310-00-761-6882	27	2
5310-00-761-6882	28	2
5305-00-765-4257	29	10
5310-00-767-0445	20	5
5310-00-767-0445	35	10
5310-00-767-0445	8	1
5310-00-767-0445	24	3
5310-00-767-0445	25	2
5310-00-767-0445	39	5
5325-00-803-5723	5	21
5310-00-809-4058	27	4
5310-00-809-4058	28	4
5310-00-809-4061	13	6
5310-00-809-8533	37	11
5310-00-809-8546	5	10
5310-00-809-9156	39	9
5310-00-809-8544	15	4
4730-00-816-8558	17	2
4730-00-816-8558	17	10
5340-00-818-2064	BULK	13
5365-00-820-4535	32	5
5325-00-839-2277	13	3
5310-00-852-8593	5	8
5310-00-855-1102	29	3
6645-00-864-6794	11	1
6145-00-865-2058	BULK	20
5340-00-886-7226	3	9
5310-00-880-5976	36	10
5310-00-880-5978	26	9
5320-00-882-8388	3	5
5320-00-882-8388	36	15
5310-00-903-5966	24	9
5310-00-903-5966	28	2
4730-00-908-3194	27	8
4730-00-908-6292	24	1
5970-00-914-3118	BULK	9
4130-00-922-2439	36	1
5930-00-929-2599	11	11
5310-00-929-6395	29	19
5320-00-932-1972	13	11
5320-00-932-1972	13	14
5320-00-932-1972	36	13
5310-00-933-8119	26	8
5310-00-933-8120	9	2
5310-00-933-8120	5	11
5310-00-933-8120	26	2
5310-00-933-8120	28	10
5310-00-933-8120	29	4
5310-00-933-8120	36	3
5310-00-933-8121	4	2
5310-00-933-8121	5	6
5310-00-933-8121	8	2
5310-00-933-8121	10	4
5310-00-933-8121	18	2
5310-00-933-8121	19	2
5310-00-933-8121	20	2
5310-00-933-8121	22	3
5310-00-933-8121	24	4
5310-00-933-8121	24	10
5310-00-933-8121	25	3
5310-00-933-8121	27	3
5310-00-933-8121	28	3
5310-00-933-8121	34	2
5310-00-933-8121	39	2
5310-00-934-0226	26	2
5310-00-934-0226	29	5
5310-00-934-9757	15	2
5310-00-934-9760	28	8
5310-00-934-9761	12	7
5975-00-936-7377	30	11

SECTION IV

CROSS-REFERENCE INDEXES

NATIONAL STOCK NUMBER INDEX

STOCK NUMBER	FIG.	ITEM
5310-00-939-1060	5	34
6240-00-939-7859	11	13
5320-00-956-7355	5	16
5320-00-956-7355	13	8
5320-00-956-7362	6	3
4320-00-956-7362	7	3
5305-00-958-5254	35	13
4730-00-969-6941	14	8
4730-00-969-6941	17	6
5310-00-974-6623	5	2
5310-00-974-6623	20	6
5310-00-974-6623	35	11
5310-00-982-4999	15	10
5310-00-982-6813	36	9
5310-00-982-6814	13	5
5310-00-984-0388	5	20
5310-00-984-0388	6	5
5310-00-984-0388	7	5
5310-00-984-3806	22	7
5305-00-984-6193	15	5
5310-00-984-7042	23	2
5310-00-988-2652	9	12
5310-00-988-2652	11	3
5310-00-998-0608	37	10
5935-01-025-2137	31	9
5935-01-025-2139	30	12
5950-01-046-3764	12	13
5940-01-079-1936	32	6
5940-01-082-3321	26	18
5975-01-092-8655	29	17
5325-01-104-4987	27	12
5320-01-110-7954	3	2
5320-01-110-7954	5	18
5320-01-110-7954	5	18
5320-01-110-7954	5	27
5320-01-110-7954	5	27
5320-01-110-7954	14	1
5320-01-110-7954	37	1
5320-01-110-7954	40	2
5310-01-145-3154	14	4
5310-01-145-3154	15	8
5310-01-145-4564	12	8
5310-01-159-8559	12	1
9320-01-163-2054	BULK	1
5935-01-172-9912	30	10
5935-01-175-8420	30	9
5935-01-181-1670	32	6
5935-01-181-6651	30	2
5935-01-184-7188	32	3
5315-01-187-9528	23	3
5935-01-189-3220	31	8
5340-01-190-7979	5	8
5340-01-190-7979	16	6
5935-01-193-5713	31	5
5310-01-198-1722	40	11
5330-01-200-1541	BULK	2
4730-01-210-3516	21	6
4730-01-212-2601	5	37
4730-01-212-2601	18	8
4730-01-212-2601	18	8
4730-01-227-1954	21	11
4730-01-240-6108	21	3
6145-01-276-1547	BULK	5
5940-01-279-4928	9	8
4820-01-280-3975	5	38
5930-01-289-7374	26	12
4730-01-290-1366	16	4
4810-01-290-4925	21	13
4810-01-291-9533	21	15
5305-01-292-6306	14	3
5305-01-292-6306	26	10
4320-01-299-0460	23	6
5315-01-302-9982	23	4
5340-01-307-4394	5	14
5340-01-307-4394	16	5
2910-01-312-1406	21	2

SECTION IV

CROSS-REFERENCE INDEXES

NATIONAL STOCK NUMBER INDEX

STOCK NUMBER	FIG.	ITEM
4730-01-317-8241	5	35
5330-01-329-9654	29	14
4730-01-331-2049	5	36
6150-01-335-3449	32	1
5305-01-342-5174	28	11
5340-01-356-5057	16	6
5305-01-358-3743	23	1
5975-01-364-5613	31	13
5305-01-383-6136	9	1
5305-01-383-6136	36	2
5925-01-397-6052	11	9
5950-01-397-7319	28	14
6150-01-397-7320	27	12
5930-01-397-7371	15	7
5935-01-397-9876	32	4
5945-01-398-2758	15	14
5330-01-398-4993	11	6
5330-01-398-4995	31	14
2530-01-398-5396	35	7
4730-01-398-5665	16	2
4730-01-398-5677	35	8
6105-01-398-7369	23	7
5945-01-398-7370	15	16
6685-01-398-7371	30	4
4730-01-398-8234	17	3
4730-01-398-8234	17	11
4730-01-398-8325	21	10
4710-01-398-8361	1	3
4710-01-398-8364	29	29
5310-01-398-9656	3	6
5310-01-398-9656	36	16
5310-01-398-9656	40	3
5330-01-398-9728	29	9
4720-01-398-9929	2	1
6685-01-399-0065	14	11
4520-01-399-0872	1	2
4520-01-399-1406	29	21
6680-01-399-1607	18	7
5310-01-399-1676	35	3
5340-01-399-2018	18	5
4530-01-399-2423	29	26
6210-01-399-2448	11	14
6210-01-399-2452	11	15
9320-01-399-3000	BULK	12
5930-01-399-3255	11	10
2910-01-399-4210	18	6
2910-01-399-5522	18	10
4720-01-399-5523	BULK	18
5975-01-400-0600	31	12
5315-01-400-5794	35	2
5340-01-406-7969	9	9
5330-01-410-8140	29	24
9320-01-411-7397	BULK	15
5330-01-412-1879	BULK	9
5330-01-413-2056	BULK	11
9320-01-418-7780	BULK	10

SECTION IV

CROSS-REFERENCE INDEXES

PART NUMBER INDEX

CAGEC	PART NUMBER	STOCK NUMBER	FIG.	ITEM
03481	A10K80	5310-00-225-4680	40	10
03481	A10KB116	5310-00-021-7088	40	8
07707	A25K80	5310-00-809-9156	39	8
03481	A25KB151	5310-00-620-4421	5	29
03481	A25KB151	5310-00-620-4421	40	7
03481	A25KB151	5310-00-620-4421	40	7
78357	A28-1C6-6-56	5340-00-079-7837	15	4
78357	A28-1N6-657	4730-01-317-8241	5	35
03431	A31KB125		5	48
25472	A8K75	5310-00-188-7969	40	9
86228	AAB00038		BULK	26
07707	ABUP4	5310-01-398-9656	3	6
07707	ABUP4	5310-01-398-9656	36	16
07707	ABUP4	5310-01-398-9656	40	3
06888	AD42AH	5320-01-110-7954	3	2
06888	AD42AH	5320-01-110-7954	5	18
06888	AD42AH	5320-01-110-7954	5	18
06888	AD42AH	5320-01-110-7954	5	27
06888	AD42AH	5320-01-110-7954	5	27
06888	AD42AH	5320-01-110-7954	14	1
06888	AD42AH	5320-01-110-7954	37	1
06888	AD42AH	5320-01-110-7954	40	2
07707	AD42H	5320-00-932-1972	13	11
07707	AD42H	5320-00-932-1972	13	14
07707	AD42H	5320-00-932-1972	36	13
07707	AD43AH	5320-00-343-5435	30	1
07707	AD43AH	5320-00-343-5435	38	1
07707	AD62H	5320-00-956-7362	6	3
07707	AD62H	4320-00-956-7362	7	3
07707	AD64AH	5320-00-140-4965	6	1
07707	AD64AH	5320-00-140-4965	7	1
07707	AD64H	5320-00-956-7355	5	16
07707	AD64H	5320-00-956-7355	13	8
07707	AD66ABS	5320-00-409-6841	3	8
07707	AK43H	5320-00-143-6149	5	39
07707	AK43H	5320-00-143-6149	40	5

SECTION IV

CROSS-REFERENCE INDEXES

PART NUMBER INDEX

CAGEC	PART NUMBER	STOCK NUMBER	FIG.	ITEM
88044	AN816-3	4730-00-187-0839	29	30
88044	AN816-4	4730-00-187-0840	21	7
96906	AN924-6D	5310-00-638-2605	5	33
80204	B1821BH025C075N	5305-00-068-0508	4	1
80204	B1821BH025C075N	5305-00-068-0508	5	5
80204	B1821BH025C075N	5305-00-068-0508	10	3
80204	B1821BH025C075N	5305-00-068-0508	18	1
80204	B1821BH025C075N	5305-00-068-0508	19	1
80204	B1821BH025C075N	5305-00-068-0508	20	1
80204	B1821BH025C075N	5305-00-068-0508	22	2
08204	B1821BH025C075N	5305-00-068-0508	24	6
80204	B1821BH025C075N	5305-00-068-0508	24	16
80204	B1821BH025C075N	5305-00-068-0508	25	6
80204	B1821BH025C075N	5305-00-068-0508	27	5
80204	B1821BH025C075N	5305-00-068-0508	39	1
80204	B1821BH025C088N	5305-00-071-2505	8	3
80204	B1821BH025C088N	5305-00-071-2505	25	5
80204	B1821BH025C088N	5305-00-071-2505	34	1
80204	B1821BH025C100N	5305-00-225-3843	12	3
80204	B1821BH025C100N	5305-00-225-3843	28	5
80204	B1821BH031C075N	5306-00-226-4825	5	1
80204	B1821BH031C075N	5306-00-226-4825	20	8
80204	B1821BH031C088N	5306-00-226-4826	22	9
73662	C3419-M-33	5945-01-398-2758	15	14
79470	C5165X4	4730-00-969-6941	14	8
79470	C5165X4	4730-00-969-6941	17	6
79470	C5165X6	4730-00-816-8558	17	2
79470	C5165X6	4730-00-816-8558	17	10
79470	C5205X6	4730-01-331-2049	5	36
56065	C6P17DB9A	6105-01-398-7369	23	7
78553	C7988-1420-3B	5340-00-297-0312	19	7
78553	C7988-1420-3B	5340-00-297-0312	22	5
78553	C7988-1420-3B	5340-00-297-0312	29	1
78553	C7988-1420-3B	5340-00-297-0312	29	7
60532	CHN2	4130-00-106-5657	36	8
81349	CO-03HOF(3/12)0635	6145-00-519-1333	BULK	17

SECTION IV

CROSS-REFERENCE INDEXES

PART NUMBER INDEX

CAGEC	PART NUMBER	STOCK NUMBER	FIG.	ITEM
81349	CO-03HOF(3/16)0430	6145-00-553-7598	BULK	8
72380	D226196-9	6145-00-170-5274	BULK	21
60532	D4524-371		36	1
14304	E29-0003-002		30	13
98313	FDC-1540-5	5306-00-337-4160	37	8
97592	F19540B14	5330-01-200-1541	BULK	2
72100	G32781	6685-01-399-0065	14	11
73631	GFTSX-12		12	10
97111	H2-66M	5340-01-307-4394	5	14
97111	H2-66M	5340-01-307-4394	16	5
97111	H3-65M	5340-01-356-5057	16	6
72954	HC66-100X063-125	4010-00-575-6233	BULK	23
85480	HSCP.9-6676W		33	3
85480	HSCPS.9-6676W		31	10
1Y370	J6BC-325-3	4320-01-299-0460	23	6
81349	M23053/5-109-0	5970-00-914-3118	BULK	3
81349	M24243/1-F402	5320-00-129-9706	36	7
83149	M24243/6-A403H	5320-00-882-8388	3	5
81349	M24243/6-A403H	5320-00-882-8388	36	15
81349	M38386B2D015	4720-01-398-9929	2	1
81349	M5086/1-12-0	6145-00-044-3579	BULK	4
81349	M5086/1-12-5	6145-01-276-7547	BULK	5
81349	M5086/1-12-9	6145-00-578-7521	BULK	6
81349	M5086/1-16-9	6145-00-578-6072	BULK	7
81349	M7928/5-5	5940-01-079-1936	33	6
81349	M85049/11-21W	5935-01-193-5713	31	5
81349	M85049/11-21W	5935-01-193-5713	32	6
81349	M8794-6	4720-00-278-1323	BULK	19
81349	MIL-R-6130	9320-01-163-2054	BULK	1
81349	MIL-R-6855CL1GR50	9320-01-411-7397	BULK	15
20999	MNU14-250DFI	5940-01-082-3321	26	18
96906	MS15795-805	5310-00-722-5998	29	20
96906	MS15795-806	5310-00-880-5976	36	10
96906	MS15795-807	5310-00-880-5978	26	9
96906	MS15795-808	5310-00-619-1148	9	3
96906	MS15795-808	5310-00-619-1148	5	10

SECTION IV

CROSS-REFERENCE INDEXES

PART NUMBER INDEX

CAGEC	PART NUMBER	STOCK NUMBER	FIG.	ITEM
96906	MS15795-808	5310-00-619-1148	36	4
96906	MS15795-810	5310-00-582-5677	4	3
96906	MS15795-810	5310-00-582-5677	5	7
96906	MS15795-810	5310-00-582-5677	8	4
96906	MS15795-810	5310-00-582-5677	10	5
96906	MS15795-810	5310-00-582-5677	18	3
96906	MS15795-810	5310-00-582-5677	19	3
96906	MS15795-810	5310-00-582-5677	20	3
96906	MS15795-810	5310-00-582-5677	22	4
96906	MS15795-810	5310-00-582-5677	24	5
96906	MS15795-810	5310-00-582-5677	24	11
96906	MS15795-810	5310-00-582-5677	25	4
96906	MS15795-810	5310-00-582-5677	26	3
96906	MS15795-810	5310-00-582-5677	27	4
96906	MS15795-810	5310-00-582-5677	28	4
96906	MS15795-810	5310-00-582-5677	29	5
96906	MS15795-810	5310-00-582-5677	34	3
96906	MS15795-810	5310-00-582-5677	39	3
96906	MS15795-812	5310-00-625-5756	20	7
96906	MS15795-812	5310-00-625-5756	22	8
96906	MS15795-812	5310-00-625-5756	35	12
96906	MS15795-816	5310-00-184-8628	9	6
96906	MS15795-820	5310-00-614-3505	35	6
96906	MS15795-846	5310-00-615-1556	28	10
96906	MS171566	5315-01-302-9982	23	4
96906	MS20257C2-1400	5340-00-818-2064	BULK	14
96906	MS20257C3-4800	5340-00-282-3745	BULK	13
96906	MS20659-108	5940-00-115-2674	26	25
96906	MS21044C03		9	5
96906	MS21044C04	5310-00-982-4999	15	10
96906	MS21044C06	5310-00-982-6813	36	9
96906	MS21044C08	5310-00-982-6814	13	5
96906	MS21266-2N	5325-00-074-3301	39	7
96906	MS21333-109	5340-00-067-3868	24	13
96906	MS21333-128	5340-00-702-2848	24	12
96906	MS21333-67	5340-00-079-7837	14	5

SECTION IV

CROSS-REFERENCE INDEXES

PART NUMBER INDEX

CAGEC	PART NUMBER	STOCK NUMBER	FIG.	ITEM
96906	MS21333-67	5340-00-079-7837	15	4
96906	MS24400D6	5310-00-638-2605	5	33
96906	MS24665-142	5310-01-187-9528	23	3
96906	MS24665-372	5315-00-059-0491	35	1
96906	MS24665-372	5310-00-059-0491	35	5
96906	MS24665-389	5315-00-187-9384	35	5
96906	MS25036-106	5940-00-283-5280	12	6
96906	MS25036-106	5940-00-283-5280	26	17
96906	MS25036-106	5940-00-283-5280	30	6
96906	MS25036-106	5940-00-283-5280	33	2
96906	MS25036-111	5940-00-204-8990	31	2
96906	MS25036-112	5940-00-143-4794	6	9
96906	MS25036-112	5940-00-143-4794	7	9
96906	MS25036-157	5940-00-143-4777	6	10
96906	MS25036-157	5940-00-143-4777	7	10
96906	MS25036-157	5940-00-143-4777	31	3
96906	MS25036-157	5940-00-143-4777	33	5
96906	MS25042-14DA	5935-01-175-8420	30	9
96906	MS25042-16DA	5935-01-189-3220	31	8
96906	MS25043-14D	5935-01-181-6651	30	2
96906	MS25043-16DA	5935-01-184-7188	32	3
96906	MS25246-1		11	11
96906	MS25423-30	5930-00-683-1626	11	12
96906	MS25665-357	5315-00-298-1481	37	9
96906	MS27183-10	5310-00-809-4058	27	4
96906	MS27183-10	5310-00-809-4058	28	4
96906	MS27183-15	5310-00-809-4061	13	6
96906	MS27183-21	5310-00-003-9174	35	6
96906	MS27183-23	5310-00-809-8533	37	11
96906	MS27183-6	5310-00-082-1404	36	10
96906	MS27183-7	5310-00-809-8544	15	4
96906	MS28741-6-3000		16	7
96906	MS29513-012	5330-00-248-3836	11	8
96906	MS33656-6	4730-01-290-1366	16	4
78357	MS33657-6		5	35
96906	MS3367-5-9	5975-00-111-3208	26	15

SECTION IV

CROSS-REFERENCE INDEXES

PART NUMBER INDEX

CAGEC	PART NUMBER	STOCK NUMBER	FIG.	ITEM
96906	MS3367-5-9	5975-00-111-3208	30	8
96906	MS3367-5-9	5975-00-111-3208	31	7
96906	MS3367-5-9	5975-00-111-3208	32	2
96906	MS3368-4-4D	5975-00-223-7543	31	4
96906	MS3368-4-9D	5975-00-223-7543	30	7
96906	MS3401D16-10S	5935-01-397-9876	32	4
96906	MS3404D14S7S		33	4
96906	MS3406D14S-7P	5935-01-025-2139	30	12
96906	MS3406D16-10P	5935-01-025-2137	31	9
96906	MS3420-12	5365-00-598-5416	31	6
96906	MS3420-6	5365-00-820-4535	32	5
96906	MS3420-8	5975-00-936-7377	30	11
96906	MS35190-307	5303-00-958-5254	34	13
96906	MS35206-245	5305-00-984-6193	15	5
96906	MS35333-15	5310-01-145-3154	15	8
96906	MS35333-38	5310-00-559-0070	15	3
96906	MS35333-46	5310-00-543-4385	5	34
96906	MS35333-73	5310-00-543-5933	11	4
96906	MS35333-74	5310-00-543-2740	12	2
96906	MS35333-81	5310-00-939-1060	5	34
96906	MS35333-154	5310-01-145-4564	12	8
96906	MS35333-155	5310-01-145-3154	14	4
96906	MS35338-136	5310-00-929-6395	29	19
96906	MS35338-137	5310-00-933-8119	26	8
96906	MS35338-138	5310-00-933-8120	9	2
96906	MS35338-138	5310-00-933-8120	5	9
96906	MS35338-138	5310-00-933-8120	26	2
96906	MS35338-138	5310-00-933-8120	28	9
96906	MS35338-138	5310-00-933-8120	29	4
96906	MS35338-138	5310-00-933-8120	36	3
96906	MS35338-139	5310-00-933-8121	4	2
96906	MS35338-139	5310-00-933-8121	5	6
96906	MS35338-139	5310-00-933-8121	8	2
96906	MS35338-139	5310-00-933-8121	10	4
96906	MS35338-139	5310-00-933-8121	18	2
96906	MS35338-139	5310-00-933-8121	19	2

SECTION IV

CROSS-REFERENCE INDEXES

PART NUMBER INDEX

CAGEC	PART NUMBER	STOCK NUMBER	FIG.	ITEM
96906	MS35338-139	5310-00-933-8121	20	2
96906	MS35338-139	5310-00-933-8121	22	3
96906	MS35338-139	5310-00-933-8121	24	4
96906	MS35338-139	5310-00-933-8121	24	10
96906	MS35338-139	5310-00-933-8121	25	2
96906	MS35338-139	5310-00-933-8121	27	3
96906	MS35338-139	5310-00-933-8121	28	3
96906	MS35338-139	5310-00-933-8121	34	2
96906	MS35338-139	5310-00-933-8121	40	2
96906	MS35338-140	5310-00-974-6623	5	2
96906	MS35338-140	5310-00-974-6623	20	6
96906	MS35338-140	5310-00-974-6623	35	11
96906	MS35338-141	5310-00-984-7042	23	2
96906	MS35338-153	5310-00-934-0226	26	2
96906	MS35338-153	5310-00-934-0226	29	5
96906	MS35338-44	5310-00-582-5965	27	3
96906	MS35338-44	5310-00-582-5965	28	3
96906	MS35482-11		10	1
96906	MS35489-11	5325-00-291-9366	27	1
96906	MS35489-11X	5325-01-104-4987	27	12
96906	MS35649-103	5310-00-852-8593	5	8
96906	MS35649-204	5310-00-934-9760	28	8
96906	MS35649-282	5310-00-934-9757	15	2
96906	MS35649-2254	5310-00-250-9477	26	1
96906	MS35649-2255	5310-00-855-1102	29	3
96906	MS35649-264	5310-00-934-9761	12	7
96906	MS35649-83	5310-00-275-9310	26	7
96906	MS35650-103	5310-00-988-2652	9	12
96906	MS35650-103	5310-00-988-2652	11	3
96906	MS35691-406	5310-01-159-8559	12	1
96906	MS35692-61	5310-00-998-0608	37	10
96906	MS35842-11	4730-00-908-3194	27	8
96906	MS35842-14	4730-00-908-6292	24	1
96906	MS504911-17W	5935-01-172-9912	30	10
96906	MS51029-49	5305-00-088-9520	29	12
96906	MS51029-53	5305-00-724-5851	29	16

SECTION IV

CROSS-REFERENCE INDEXES

PART NUMBER INDEX

CAGEC	PART NUMBER	STOCK NUMBER	FIG.	ITEM
96906	MS51029-55	5305-00-724-5849	29	26
96906	MS51479-1		3	1
96906	MS51492-07	5305-01-292-6306	14	3
96906	MS51492-07	5305-01-292-6306	26	10
96906	MS51504A4Z	4730-01-398-8325	21	10
96906	MS51504B4-4Z	4730-01-210-3516	21	6
96906	MS51504B6Z	4730-01-212-2601	5	37
96906	MS51504B6Z	4730-01-212-2601	18	8
96906	MS51504B6Z	4730-01-212-2601	21	1
96906	MS51531B4	4730-00-314-8366	14	7
96906	MS51531B4	4730-00-314-8366	17	7
96906	MS51531B6Z	4730-01-398-8324	17	3
96906	MS51531B6Z	4730-01-398-8324	17	11
96906	MS518349-139C	5303-01-358-3743	1	1
96906	MS51846-10	4730-00-196-1964	21	4
96906	MS51846-6	4730-00-193-2707	21	16
96906	MS51849-139C		23	1
96906	MS51849-65C		9	1
96906	MS51849-65C		36	2
96906	MS51849-74C	5305-01-342-5174	28	11
96906	MS51922-9	5310-00-984-3806	22	7
96906	MS51957-15	5305-00-054-5649	15	11
96906	MS51957-26	5305-00-054-6650	29	18
96906	MS51957-28	5305-00-054-6652	12	12
96906	MS51957-46	5305-00-054-6671	12	9
96906	MS51957-46	5305-00-054-6671	13	7
96906	MS51958-59	5305-00-059-3655	15	13
96906	MS51958-64	5305-00-059-3660	9	7
96906	MS51958-67	5305-00-059-3663	11	5
96906	MS51959-43	5305-00-765-4257	29	10
96906	MS51971-1	5310-00-903-5966	24	9
96906	MS51971-1	5310-00-903-5966	25	2
96906	MS51971-1	5310-00-903-5966	28	2
96906	MS51971-2	5310-00-767-0445	39	5
96906	MS51971-2	5310-00-767-0445	8	1
96906	MS51971-2	5310-00-767-0445	20	5

SECTION IV

CROSS-REFERENCE INDEXES

PART NUMBER INDEX

CAGEC	PART NUMBER	STOCK NUMBER	FIG.	ITEM
96906	MS51971-2	5310-00-767-0445	24	3
96906	MS51971-2	5310-00-767-0445	27	2
96906	MS51967-2	5310-00-767-0445	28	2
96906	MS51971-2	5310-00-767-0445	35	10
80204	MS90725-6	5305-00-068-0502	27	5
80204	MS90725-8	5310-00-225-3839	28	5
96906	MS9955-023	5330-01-398-4995	31	14
96906	MS9955-107		11	6
70673	P-75	9340-00-230-0441	28	1
82647	PDM-25	5925-00-270-3998	11	7
78357	PDP-6	5340-01-190-7979	5	14
78357	PDP-6	5340-01-190-7979	16	6
81541	PR11-1-1.00-XX-S		11	9
81348	QQB575R34T0500	6145-00-548-2920	BULK	22
86730	R411NPSA.125X1.00X100		BULK	11
86730	R411NPSA.125X1.44X100		BULK	10
86730	R411NPSA.125X1.50X100		BULK	9
09157	R70-C-HCQ-238	5930-01-397-7371	15	7
03481	S25P280	5310-01-198-1722	40	11
84636	TBD3		22	1
06090	WCSM-19/6-1200-S		27	13
17217	0050D		BULK	16
76385	0-1290/056762	5330-01-410-8140	29	24
30780	05HP-8	4730-01-227-1954	18	11
86730	08320116	9320-01-399-3000	BULK	12
04741	1BC9350	4730-00-203-3171	BULK	16
71895	1.25GPH80W	4530-01-399-2423	29	28
34764	110850	5950-01-046-3764	12	13
75511	117313-00		24	19
92966	120MB	6240-00-939-7859	11	13
50340	12408	5975-01-092-8655	29	17
93061	125HB-3-2		15	1
28057	12804		11	10
97403	13229E8567	6150-01-335-3449	32	1
97403	13229E8567-2		32	7
97403	13229E8567-3		32	8

SECTION IV

CROSS-REFERENCE INDEXES

PART NUMBER INDEX

CAGEC	PART NUMBER	STOCK NUMBER	FIG.	ITEM
97403	13229E8567-4		32	9
11431	13868805	2530-01-398-5396	35	7
90005	1752029-01	2910-01-312-1406	21	2
90005	1752036		21	17
23224	200984	6680-01-399-1607	18	7
14859	20600D39-153		26	11
14859	20601K8-276	5930-01-289-7374	26	12
28520	2251	5975-01-400-0600	31	12
76385	239	5330-01-329-9654	29	14
71826	244-16C	5325-00-639-7264	40	12
71286	244-16S	5325-00-141-3291	5	40
71286	244-16S	5325-00-141-3291	40	6
73631	267A19-12		12	11
73631	267-A42-5		12	5
28520	3234	5975-01-364-5613	31	13
79470	3326X4	4730-00-222-1837	21	14
79470	3350X2	4730-00-277-5683	21	9
79470	3400X4	4730-01-240-6108	21	3
39428	3623T13	5940-01-279-4928	9	8
79470	3750X2	4730-00-263-2733	21	13
73212	3X290	4810-01-290-4925	21	23
71286	4002-0S	5325-00-646-8092	5	18
71286	4002-0S	5325-00-646-8092	6	8
71286	4002-0S	5325-00-646-8092	7	8
71286	4002-0S	5325-00-646-8092	13	4
71286	4002-10S	5325-00-839-2277	13	3
71286	4002-28S	5325-00-559-7849	6	6
71286	4002-28S	5325-00-559-7849	7	6
71286	4002-8S	5325-00-803-5723	5	21
71286	4002-SW-SS	5310-00-984-0388	5	20
71286	4002-SW-SS	5310-00-984-0388	6	5
71286	4002-SW-SS	5310-00-984-0388	7	5
71286	40G26-1	5365-00-543-3388	5	22
71286	40G26-1	5365-00-543-3388	6	7
71286	40G26-1	5365-00-543-3388	7	7
71286	40G26-1	5365-00-543-3388	13	2

SECTION IV

CROSS-REFERENCE INDEXES

PART NUMBER INDEX

CAGEC	PART NUMBER	STOCK NUMBER	FIG.	ITEM
30327	44-P YELLOW	4720-00-472-7095	BULK	27
71895	45560-2		29	29
39428	5510K23	4720-01-399-5523	BULK	18
06034	5801257		27	8
79470	5887X6	4730-00-334-7840	16	3
90598	60000-158		5	4
90598	60010-1		37	3
90598	60011-1		13	12
90598	60012-1		14	2
90598	60020-1	5310-01-399-1676	35	3
90598	60022-1		5	13
90598	60023-100	5340-01-399-2018	18	5
90598	60027-100	2910-01-399-4210	18	6
90598	60029-100		18	9
90598	60030-1		5	28
90598	60030-2		37	7
90598	60030-3		37	2
90598	60030-4		37	6
90598	60030-5		5	31
90598	60030-6		5	14
90598	60030-7		5	30
90598	60030-8		37	5
90598	60030-9		37	4
90598	60031-1		5	12
90598	60032-1		4	13
90598	60032-100		4	4
90598	60032-2		4	8
90598	60032-3		4	12
90598	60032-4		4	9
90598	60032-5		4	10
90598	60032-6		4	11
90598	60033-1		3	7
90598	60034-1		3	11
90598	60035-100		39	6
90598	60040-100		3	4
90598	60045-100		9	13

SECTION IV

CROSS-REFERENCE INDEXES

PART NUMBER INDEX

CAGEC	PART NUMBER	STOCK NUMBER	FIG.	ITEM
90598	60046-1		39	9
90598	60047-1		39	10
90598	60048-100		8	5
90598	60050-100		34	4
90598	60075-1		10	2
90598	60076-1	5340-00-886-7226	3	9
90598	60077-1		39	4
90598	60078-1		3	10
90598	60079-1		15	6
90598	60100-100		40	1
90598	60104-100	5315-01-400-5794	35	2
90598	60105-100		36	21
90598	60105-5		36	22
90598	60105-6		36	23
90598	60106-100		36	6
90598	60106-8		36	19
90598	60106-9		36	20
90598	60109-1		36	18
90598	60110-1		36	5
90598	60111-100		36	11
90598	60114-1		36	17
90598	60116-1		36	14
90598	60117-100		36	12
90598	60140-21		5	45
90598	60148-100		5	26
90598	60152-1		38	2
90598	60169-1		5	46
90598	60174-1		6	12
90598	60175-1		7	12
90598	60179-1		5	44
90598	60188-1		4	5
90598	60188-2		4	6
90598	60188-3		4	7
90598	60201-1		37	3
90598	60202-1		5	28
90598	60202-2		37	7

SECTION IV

CROSS-REFERENCE INDEXES

PART NUMBER INDEX

CAGEC	PART NUMBER	STOCK NUMBER	FIG.	ITEM
90598	60202-3		37	2
90598	60202-4		37	6
90598	60202-5		5	34
90598	60202-6		5	19
90598	60202-7		5	30
90598	60202-8		37	5
90598	60202-9		37	4
90598	60203-1		4	13
90598	60203-100		4	4
90598	60203-2		4	8
90598	60203-3		4	12
90598	60203-4		4	9
90598	60203-5		4	10
90598	60203-6		4	11
90598	60204-100		40	1
90598	60205-100		36	21
90598	60205-5		36	22
90598	60205-6		36	23
90598	60206-100		36	6
90598	60206-8		36	19
90598	60206-9		36	20
90598	60210-100		16	1
90598	60213-100		5	15
90598	60213-22		5	41
90598	60213-23		5	42
90598	60213-24		5	43
90598	60214-100		5	47
90598	60216-100		25	7
90598	60216-32		26	24
90598	60217-1		3	3
90598	60218-1		27	6
90598	60219-100		29	2
90598	60220-100		5	17
90598	60220-3		5	25
90598	60220-4		5	24
90598	60223-1		37	8

SECTION IV

CROSS-REFERENCE INDEXES

PART NUMBER INDEX

CAGEC	PART NUMBER	STOCK NUMBER	FIG.	ITEM
90598	60225-1		34	4
90598	60227-100	5950-01-397-7319	28	14
90598	60230-100		27	10
90598	60402-78		12	4
90598	60404-1	6685-01-398-7371	30	4
90598	60410-100		30	3
90598	60411-100		30	5
90598	60411-101		33	1
90598	60411-102		31	1
90598	60411-17		31	11
90598	60411-23		33	7
90598	60411-7		30	14
90598	60411-9		33	9
90598	60412-100	6150-01-397-7320	27	11
90598	60414-100		27	9
90598	60420-100		10	6
90598	60424-1	6210-01-399-2452	11	15
90598	60424-2	6210-01-399-2448	11	14
90598	60429-1		3	3
90598	60434-1		12	13
90598	60440-1		26	20
90598	60440-100		26	14
90598	60440-2		26	19
90598	60440-3		26	21
90598	60440-4		26	22
90598	60440-5		26	23
90598	60440-7		26	16
90598	60441-100		26	6
90598	60444-100		28	14
90598	60450-100		18	4
90598	60451-100	2910-01-399-5522	18	10
90598	60480-100		27	10
90598	60484-1		17	4
90598	60484-100		17	1
90598	60485-1		17	12
90598	60485-100		17	9

SECTION IV

CROSS-REFERENCE INDEXES

PART NUMBER INDEX

CAGEC	PART NUMBER	STOCK NUMBER	FIG.	ITEM
90598	60486-100		21	5
90598	60487-1		17	8
90598	60487-100		17	5
90598	60488-1		14	9
90598	60488-100		14	6
90598	60489-100		5	32
90598	60490-100		16	1
90598	60492-100		21	8
90598	60494-1		5	11
90598	60497-1		40	4
90598	60498-1		19	5
90598	60498-100		19	4
90598	60499-1		19	6
90598	60500-100		25	1
90598	60501-100		22	6
90598	60503-1		20	4
90598	60504-100		22	10
90598	60506-100		20	9
90598	60517-100		26	4
90598	60518-1		26	5
90598	60521-100		29	6
90598	60524-1		28	13
90598	60524-100		28	12
90598	60531-1		26	13
90598	60533-100		24	8
90598	60539-1		28	6
90598	60554-100		28	7
90598	60557-100	4710-01-398-8361	1	3
90598	60558-100		1	4
90598	60561-100	4520-01-399-0872	1	2
90598	60564-1		5	3
90598	60565-1		9	11
96906	60565-100		9	4
90598	60565-4		9	10
90598	60566-1		9	9
90598	60583-100		24	14

SECTION IV

CROSS-REFERENCE INDEXES

PART NUMBER INDEX

CAGEC	PART NUMBER	STOCK NUMBER	FIG.	ITEM
90598	60584-1		24	7
90598	60584-1		24	15
90598	60587-100		8	6
90598	60588-1		24	18
90598	60592-100		24	17
90598	60593-1		24	2
90598	60594-1		14	10
90598	60595-1		27	6
90598	60597-1		25	8
90598	60598-100		27	7
90598	60599-1		29	2
90598	60601-100		35	9
90598	60607-100		35	14
90598	60611-100		35	4
90598	60617-1		6	4
90598	60618-1		6	13
90598	60619-100		6	2
90598	60619-13		6	11
90598	60625-1		7	4
90598	60626-1		7	13
90598	60627-100		7	2
90598	60627-13		7	11
90598	60628-100		5	17
90598	60628-3		5	25
90598	60628-4		5	24
90598	60634-1		23	5
90598	60638-100		5	15
90598	60638-22		5	41
90598	60638-23		5	42
90598	60638-24		5	43
90598	60640-100		5	47
90598	60642-1		25	7
90598	60701-100		29	8
90598	60702-1		29	27
90598	60702-100		29	25
90598	60707-100		29	11

SECTION IV

CROSS-REFERENCE INDEXES

PART NUMBER INDEX

CAGEC	PART NUMBER	STOCK NUMBER	FIG.	ITEM
90598	60709-1		29	22
90598	60710-100		29	15
90598	60712-1	4520-01-399-1406	29	21
90598	60717-1	5330-01-398-9728	29	9
90598	60731-100		29	23
90598	60734-100	4710-01-398-8364	29	31
90598	60740-100		29	13
90598	60810-100		13	1
90598	60810-14		13	18
90598	60810-15		13	19
90598	60811-100		15	9
90598	60812-100		13	20
90598	60815-100		13	13
90598	60815-5		13	16
90598	60815-6		13	17
90598	60816-1		13	15
90598	60817-100		13	10
90598	60817-101		13	9
90598	60821-1		15	15
90598	60822-1		15	12
90598	60824-1		11	2
65289	668Z-671	5930-01-398-7370	15	16
73212	6X409	4810-01-291-9533	21	15
56173	700-4F4F4F-BT	4820-01-280-3975	5	33
79470	7034X2B	4730-00-277-9386	21	12
74400	85315	6645-00-864-6794	11	1
90816	8660		BULK	24
16428	8663	6145-00-865-2058	BULK	20
90816	8669		BULK	25
98752	8720699-1	5930-01-289-7374	26	12
90598	90411-21		33	8
79470	9100X5X4	4730-01-398-5665	16	2
11431	915	4730-01-398-5677	35	8

SECTION IV

CROSS-REFERENCE INDEXES

FIGURE AND ITEM NUMBER INDEX

FIG.	ITEM	STOCK NUMBER	CAGEC	PART NUMBER
BULK	1	9320-01-163-2054	81349	MIL-R-6130
BULK	2	5330-01-200-1541	97592	F19540B14
BULK	3	5970-00-914-3118	81349	M23053/5-109-0
BULK	4	6145-00-044-3579	81349	M5086/1-12-0
BULK	5	6145-01-276-7547	81349	M5086/1-12-5
BULK	6	6145-00-578-7521	81349	M5086/1-12-9
BULK	7	6145-00-578-6072	81349	M5086/1-16-9
BULK	8	6145-00-553-7598	81349	CO-03HOF(3/16)0430
BULK	9	5330-01 -412-1879	86730	R41NPSA.125X1.50X100
BULK	10	9320-01-418-7780	86730	R41NPSA.125X1.44X100
BULK	11	5330-01-413-2056	86730	R411NPSA.125X1.00X100
BULK	12	9320-01-399-3000	86730	08320116
BULK	13	5340-00-282-3745	96906	MS20257C3-4800
BULK	14	5340-00-818-2064	96906	MS20257C2-1400
BULK	15	9320-01-411-7397	81349	MIL-R-6855CL1GR50
BULK	16	4710-00-203-3171	04741	1BC9350
BULK	17	6145-00-519-1333	81349	CO-03HOF(3/12)0635
BULK	18	4720-01-399-5523	39428	5510K23
BULK	19	4720-00-278-1323	81349	M8794-6
BULK	20	6145-00-865-2058	16428	8663
BULK	21	6145-00-170-5274	72380	D226196-9
BULK	22	6145-00-548-2920	81348	QQB575R34T0500
BULK	23	4010-00-575-6233	72954	HC66-100X063-125
BULK	24		90816	8660
BULK	25		90816	8669
BULK	26	4720-00-472-7095	30327	44-P YELLOW
BULK	27		86228	AAB00037
1	1		96906	MS518349-139C
1	2	4520-01-399-0872	90598	60561-100
1	3	4710-01-398-8362	90598	60557-100
1	4		90598	60558-100
2	1	4720-01-398-9929	81349	M38386B2D015
3	1		96906	MS51479-1
3	2	5320-01-110-7954	06888	AD42AH
3	3		90598	60217-1
3	3		90598	60429-1
3	4		90598	60040-100

SECTION IV

CROSS-REFERENCE INDEXES

FIGURE AND ITEM NUMBER INDEX

FIG.	ITEM	STOCK NUMBER	CAGEC	PART NUMBER
3	5	5320-00-882-8388	83149	M24243/6-A403H
3	6	5310-01-398-9656	07707	ABUP4
3	7		90598	60033-1
3	8	5320-00-409-6841	07707	AD66ABS
3	9	5340-00-886-7226	90598	60076-1
3	10		90598	60078-1
3	11		90598	60034-1
4	1	5305-00-068-0508	80204	B1821BH025C075N
4	2	5310-00-933-8121	96906	MS35338-139
4	3	5310-00-582-5677	96906	MS15795-810
4	4		90598	60032-100
4	4		90598	60203-100
4	5		90598	60188-1
4	6		90598	60188-2
4	7		90598	60188-3
4	8		90598	60032-2
4	8		90598	60203-2
4	9		90598	60032-4
4	9		90598	60203-4
4	10		90598	60032-5
4	10		90598	60203-5
4	11		90598	60032-6
4	11		90598	60203-6
4	12		90598	60032-3
4	12		90598	60203-3
4	13		90598	60032-1
4	13		90598	60203-1
5	1	5306-00-226-4825	80204	B1821BH031C075N
5	2	5310-00-974-6623	96906	MS35338-140
5	3		90598	60564-1
5	4		90598	60000-158
5	5	5305-00-068-0508	80204	B1821BH025C075N
5	6	5310-00-933-8121	96906	MS35338-139
5	7	5310-00-582-5677	96906	MS15795-810
5	8	5310-00-852-8593	96906	MS35649-103
5	9	5310-00-933-8120	96906	MS35338-138
5	10	5310-00-809-8546	96906	MS15795-808

SECTION IV

CROSS-REFERENCE INDEXES

FIGURE AND ITEM NUMBER INDEX

FIG.	ITEM	STOCK NUMBER	CAGEC	PART NUMBER
5	11		90598	60494-1
5	12		90598	60031-1
5	13		90598	60022-1
5	14	5340-01-307-4394	97111	H2-66M
5	14	5340-01-190-7979	78357	PDP-6
5	15		90598	60213-100
5	15		90598	60638-100
5	16	5320-00-956-7355	07707	AD64H
5	17		90598	60220-100
5	17		90598	60628-100
5	18	5320-01-110-7954	06888	AD42AH
5	18	5320-01-110-7954	06888	AD42AH
5	19		90598	60030-6
5	19		90598	60202-6
5	20	5310-00-984-0388	71286	4002-SW-SS
5	21	5325-00-803-5723	71286	4002-8S
5	22	5365-00-543-3388	71286	40G26-1
5	23		71286	4002-0S
5	24		90598	60220-4
5	24		90598	60628-4
5	25		90598	60220-3
5	25		90598	60628-3
5	26		90598	60148-100
5	27	5320-01-110-7954	06888	AD42AH
5	27	5320-01-110-7954	06888	AD42AH
5	28		90598	60030-1
5	28		90598	60202-1
5	29	5310-00-620-4421	03481	A25KB151
5	30		90598	60030-7
5	30		90598	60202-7
5	31		90598	60030-5
5	31		90598	60202-5
5	32		90598	60489-100
5	33	5310-00-638-2605	96906	AN924-6D
5	33	5310-00-638-2605	96906	MS24400D6
5	34	5310-00-543-4385	96906	MS35333-46
5	34	5310-00-939-1060	96906	MS35333-81

SECTION IV

CROSS-REFERENCE INDEXES

FIGURE AND ITEM NUMBER INDEX

FIG.	ITEM	STOCK NUMBER	CAGEC	PART NUMBER
5	35	4730-01-317-8241	78357	A28-1N6-657
5	35		78357	A484-3
5	36	4730-01-331-2049	79470	C5205X6
5	37	4730-01-212-2601	96906	MS51504B6Z
5	38	4820-01-280-3975	56173	700-4F4F4F-BT
5	39	5320-00-143-6149	07707	AK43H
5	40	5325-00-141-3291	71286	244-16S
5	41		90598	60213-22
5	41		90598	60638-22
5	42		90598	60213-23
5	42		90598	60638-23
5	43		90598	60213-24
5	43		90598	60638-24
5	44		90598	60179-1
5	45		90598	60140-21
5	46		90598	60169-1
5	47		90598	60214-100
5	47		90598	60640-100
5	48		03431	A31KB125
6	1	5320-00-140-4965	07707	AD64AH
6	2		90598	60619-100
6	3	5320-00-956-7362	07707	AD62H
6	4		90598	60617-1
6	5	5310-00-984-0388	71286	4002-SW-SS
6	6	5325-00-559-7849	71286	4002-28S
6	7	5365-00-543-3388	71286	40G26-1
6	8	5325-00-646-8092	71286	4002-0S
6	9	5940-00-143-4794	96906	MS25036-112
6	10	5940-00-143-4777	96906	MS25036-157
6	11		90598	60619-13
6	12		90598	60174-1
6	13		90598	60618-1
7	1	5320-00-140-4965	07707	AD64AH
7	2		90598	60627-100
7	3	4320-00-956-7362	07707	AD62H
7	4		90598	60625-1
7	5	5310-00-984-0389	71286	4002-SW-SS

SECTION IV

CROSS-REFERENCE INDEXES

FIGURE AND ITEM NUMBER INDEX

FIG.	ITEM	STOCK NUMBER	CAGEC	PART NUMBER
7	6	5325-00-559-7849	71286	4002-28S
7	7	5365-00-543-3388	71286	40G26-1
7	8	5325-00-646-8092	71286	4002-0S
7	9	5940-00-143-4794	96906	MS25036-112
7	10	5940-00-143-4777	96906	MS25036-157
7	11		90598	60627-13
7	12		90598	60175-1
7	13		90598	60626-1
8	1	5310-00-767-0445	96906	MS51971-2
8	2	5310-00-933-8121	96906	MS35338-139
8	3	5305-00-071-2505	80204	B1821BH025C088N
8	4	5310-00-582-5677	96906	MS15795-810
8	5		90598	60048-100
8	6		90598	60557-100
9	1	5305-01-383-6136	96906	MS51849-65C
9	2	5310-00-933-8120	96906	MS35338-138
9	3	5310-00-619-1148	96906	MS15795-808
9	4		96906	60565-100
9	5	5310-00-208-9255	96906	MS21044C3
9	6	5310-00-184-8628	96906	MS15795-816
9	7	5305-00-059-3660	96906	MS51958-64
9	8	5940-01-279-4928	39428	3623T13
9	9	5340-01-406-7969	90598	60566-1
9	10		90598	60565-4
9	11		90598	60565-1
9	12	5310-00-988-2652	96906	MS35650-103
9	13		90598	60045-100
10	1		96906	MS35482-11
10	2		90598	60075-1
10	3	5305-00-068-0508	80204	B1821BH025C075N
10	4	5310-00-933-8121	96906	MS35338-139
10	5	5310-00-582-5677	96906	MS15795-810
10	6		90598	60420-100
11	1	6645-00-864-6794	74400	85315
11	2		90598	60824-1
11	3	5310-00-988-2652	96906	MS35650-103
11	4	5310-00-543-5933	96906	MS35333-73

SECTION IV

CROSS-REFERENCE INDEXES

FIGURE AND ITEM NUMBER INDEX

FIG.	ITEM	STOCK NUMBER	CAGEC	PART NUMBER
11	5	5305-00-059-3663	96906	MS51958-67
11	6	5330-01-398-4993	96906	MS9955-107
11	7	5925-00-270-3998	82647	PDM-25
11	8	5330-00-248-3836	96906	MS29513-012
11	9	5925-01-397-6052	81541	PR11-1-1.00-XX-S
11	10	5930-01-399-3255	28057	12804
11	11	5930-00-929-2599	96906	MS25246-1
11	12	5930-00-683-1626	96906	MS25423-30
11	13	6240-00-939-7859	92966	120MB
11	14	6210-01-399-2448	90598	60424-2
11	15	6210-01-399-2452	90598	60424-1
12	1	5310-01-159-8559	96906	MS35691-406
12	2	5310-00-543-2740	96906	MS35333-74
12	3	5305-00-225-3843	80204	B1821BH025C100N
12	4		90598	60402-78
12	5		73631	267-A42-5
12	6	5940-00-283-5280	96906	MS25036-106
12	7	5310-00-934-9761	96906	MS35649-264
12	8	5310-01-145-4564	96906	MS35333-154
12	9	5305-00-054-6671	96906	MS51957-46
12	10		73631	GFTSX-12
12	11		73631	267A19-12
12	12	5305-00-054-6652	96906	MS51957-28
12	13	5850-01-046-3764	34764	110850
13	1		90598	60810-100
13	2	5365-00-543-3388	71286	40G26-1
13	3	5325-00-839-2277	71286	4002-10S
13	4	5325-00-646-8092	71286	4002-0S
13	5	5310-00-982-6814	96906	MS21044C08
13	6	5310-00-809-4061	96906	MS27183-15
13	7	5305-00-054-6671	96906	MS51957-46
13	8	5320-00-956-7355	07707	AD64H
13	9		90598	60817-101
13	10		90598	60817-100
13	11	5320-00-932-1972	07707	AD42H
13	12		90598	60011-1
13	13		90598	60815-100

SECTION IV

CROSS-REFERENCE INDEXES

FIGURE AND ITEM NUMBER INDEX

FIG.	ITEM	STOCK NUMBER	CAGEC	PART NUMBER
13	14	5320-00-932-1972	07707	AD42H
13	15		90598	60816-1
13	16		90598	60815-5
13	17		90598	60815-6
13	18		90598	60810-14
13	19		90598	60810-15
13	20		90598	60812-100
14	1	5320-01-110-7954	06888	AD42AH
14	2		90598	60012-1
14	2		90598	60012-2
14	3	5305-01-292-6306	96906	MS51492-07
14	4	5310-01-145-3154	96906	MS35333-38
14	5	5340-00-079-7837	96906	MS21333-67
14	6		90598	60488-100
14	7	4730-00-314-8366	96906	MS51531B4
14	8	4730-00-969-6941	79470	C5165X4
14	9		90598	60488-1
14	10		90598	60594-1
14	11	6685-01-399-0065	72100	G32781
15	1		93061	125HB-3-2
15	2	5310-00-934-9757	96906	MS35649-282
15	3	5310-00-559-0070	96906	MS35333-38
15	4	5310-00-809-8544	96906	MS27183-7
15	5	5305-00-984-6193	96906	MS35206-245
15	6		90598	60079-1
15	7	5930-01-397-7371	09157	R70-C-HCQ-238
15	8	5310-01-145-3145	96906	M835333-15
15	9		90598	60811-100
15	10	5310-00-982-4999	96906	MS21044C04
15	11	5305-00-054-5649	96906	MS51957-15
15	12		90598	60822-1
15	13	5305-00-059-3655	96906	MS51958-59
15	14	5945-01-398-2758	73662	C3419-M-33
15	15		90598	60821-1
15	16	5930-01-398-7370	65289	668Z-671
16	1		90598	60210-100
16	1		90598	60490-100

SECTION IV

CROSS-REFERENCE INDEXES

FIGURE AND ITEM NUMBER INDEX

FIG.	ITEM	STOCK NUMBER	CAGEC	PART NUMBER
16	2	4730-01-398-5665	79470	9100X5X4
16	3	4730-00-334-7840	79470	5887X6
16	4	4730-01-290-1366	96906	MS33656-6
16	5	5340-01-307-4394	97111	H2-66M
16	6	5340-01-356-5057	97111	H3-65M
16	6	5340-01-190-7979	78357	PDP-6
16	7		96906	MS28741-6-3000
17	1		90598	60484-100
17	2	4730-00-816-8558	79470	C5165X6
17	3	4730-01-398-8324	96906	MS51531B6Z
17	4		90598	60484-1
17	5		90598	60487-100
17	6	4730-00-969-6941	79470	C5165X4
17	7	4730-00-314-8366	96906	MS51531B4
17	8		90598	60487-1
17	9		90598	60485-100
17	10	4730-00-816-8558	79470	C5165X6
17	11	4730-01-398-8234	96906	MS51531B6Z
17	12		90598	60485-1
18	1	5305-00-068-0508	80204	B1821BH025C075N
18	2	5310-00-933-8121	96906	MS35338-139
18	3	5310-00-582-5677	96906	MS15795-810
18	4		90598	60450-100
18	5	5340-01-399-2018	90598	60023-100
18	6	2910-01-399-4210	90598	60027-100
18	7	6680-01-399-1607	23224	200984
18	8	4730-01-212-2601	96906	MS51504B6Z
18	9		90598	60029-100
18	10	2910-01-399-5522	90598	60451-100
18	11	4730-01-227-1954	30780	05HP-8
19	1	5305-00-068-0508	80204	B1821BH025C075N
19	2	5310-00-933-8121	96906	MS35338-139
19	3	5310-00-582-5677	96906	MS15795-810
19	4		90598	60498-100
19	5		90598	60498-1
19	6		90598	60499-1
19	7	5340-00-297-0312	78553	C7988-1420-3B

SECTION IV

CROSS-REFERENCE INDEXES

FIGURE AND ITEM NUMBER INDEX

FIG.	ITEM	STOCK NUMBER	CAGEC	PART NUMBER
20	1	5305-00-068-0508	80204	B1821BH025C075N
20	2	5310-00-933-8121	96906	M835338-139
20	3	5310-00-582-5677	96906	MS15795-810
20	4		90598	60503-1
20	5	5310-00-767-0445	96906	MS51971-2
20	6	5310-00-974-6623	96906	MS35338-140
20	7	5310-00-625-5756	96906	MS15795-812
20	8	5306-00-226-4825	80204	B1821BH031C075N
20	9		90598	60506-100
21	1	4730-01-212-2601	96906	MS51504B6Z
21	2	2910-01-312-1406	90005	1752029-01
21	3	4730-01-240-6108	79470	3400X4
21	4	4730-00-196-1964	96906	MS51846-10
21	5		90598	60486-100
21	6	4730-01-210-3516	96906	MS51504B4-4Z
21	7	4730-00-187-0840	88044	AN816-4
21	8		90598	60492-100
21	9	4730-00-277-5683	79470	3350X2
21	10	4730-01-398-8325	96906	MS51504A4Z
21	11	4730-00-263-2733	79470	3750X2
21	12	4730-00-277-9386	79470	7034X2B
21	13	4810-01-290-4925	73212	3X290
21	14	4730-00-222-1837	79470	3326X4
21	15	4810-01-291-9533	73212	6X409
21	16	4730-00-193-2707	96906	MS51846-6
21	17		90005	1752036
22	1		84636	TBD3
22	2	5305-00-068-0508	80204	B1821BH025C075N
22	3	5310-00-933-8121	96906	MS35338-139
22	4	5310-00-582-5677	96906	MS15795-810
22	5	5340-00-297-0312	78553	C7988-1420-3B
22	6		90598	60501-100
22	7	5310-00-984-3806	96906	MS51922-9
22	8	5310-00-625-5756	96906	MS15795-812
22	9	5306-00-226-4826	80204	B1821BH031C088N
22	10		90598	60504-100
23	1	5305-01-358-3743	96906	MS51849-139C

SECTION IV

CROSS-REFERENCE INDEXES

FIGURE AND ITEM NUMBER INDEX

FIG.	ITEM	STOCK NUMBER	CAGEC	PART NUMBER
23	2	5310-00-984-7042	96906	MS35338-141
23	3	5315-01-187-9528	96906	MS24665-142
23	4	5315-01-302-9982	96906	MS171566
23	5		90598	60634-1
23	6	4320-01-299-0460	1Y370	J6BC-325-3
23	7	6105-01-398-7369	56065	C6P17DB9A
24	1	4730-00-908-6292	96906	MS35842-14
24	2		90598	60593-1
24	3	5310-00-767-0445	96906	MS51971-2
24	4	5310-00-933-8121	96906	MS35338-139
24	5	5310-00-582-5677	96906	MS15795-810
24	6	5305-00-068-0508	08204	B1821BH025C075N
24	7		90598	60584-1
24	8		90598	60533-100
24	9	5310-00-903-5966	96906	MS51971-1
24	10	5310-00-933-8121	96906	MS35338-139
24	11	5310-00-582-5677	96906	MS15795-810
24	12	5340-00-702-2848	96906	MS21333-128
24	13	5340-00-067-3868	96906	MS21333-109
24	14		90598	60583-100
24	15		90598	60584-1
24	16	5305-00-068-0508	80204	B1821BH025C075N
24	17		90598	60592-100
24	18		90598	60588-1
24	19		75511	117313-00
25	1		90598	60216-100
25	1		90598	60500-100
25	2	5310-00-767-0445	96906	MS51971-2
25	3	5310-00-933-8121	96906	MS35338-139
25	4	5310-00-582-5677	96906	MS15795-810
25	5	5305-00-071-2505	80204	B1821 BH025C088N
25	6	5305-00-068-0508	80204	B1821BH025C075N
25	7		90598	60642-1
25	8		90598	60597-1
26	1	5310-00-250-9477	96906	MS35649-2254
26	2	5310-00-933-8120	96906	MS35338-138
26	2	5310-00-934-0226	96906	MS35338-153

SECTION IV

CROSS-REFERENCE INDEXES

FIGURE AND ITEM NUMBER INDEX

FIG.	ITEM	STOCK NUMBER	CAGEC	PART NUMBER
26	3		96906	MS15795-810
26	4		90598	60517-100
26	5		90598	60518-1
26	6		90598	60441-100
26	7	5310-00-275-9310	96906	MS35649-83
26	8	5310-00-933-8119	96906	MS35338-137
26	9	5310-00-880-5978	96906	MS15795-807
26	10	5305-01-292-6306	96906	MS51492-07
26	11		14859	20600D39-153
26	12	5930-01-289-7374	14859	20601 K8-276
26	13		90598	60531-1
26	14		90598	60440-100
26	15	5975-00-111-3208	96906	MS3367-5-9
26	16		90598	60440-7
26	17	5940-00-283-5280	96906	MS25036-106
26	18	5940-01-082-3321	20999	MNU14-250DFI
26	19		90598	60440-2
26	20		90598	60440-1
26	21		90598	60440-3
26	22		90598	60440-4
26	23		90598	60440-5
26	24		90598	60216-32
26	25	5940-00-115-2674	96906	MS20659-108
27	1	5325-00-291-9366	96906	MS35489-11
27	2	5310-00-761-6882	96906	MS51971-2
27	3	5310-00-933-8121	96906	MS35338-139
27	3	5310-00-582-5965	96906	MS35338-44
27	4	5310-00-582-5677	96906	MS15795-810
27	4	5310-00-809-4058	96906	MS27183-10
27	5	5305-00-068-0508	80204	B1821BH025C075N
27	5	5305-00-068-0502	80204	MS90725-6
27	6		90598	60218-1
27	6		90598	60595-1
27	7		90598	60598-100
27	8		06034	5801257
27	8	4730-00-908-3194	96906	MS35842-11
27	9		90598	60414-100

SECTION IV

CROSS-REFERENCE INDEXES

FIGURE AND ITEM NUMBER INDEX

FIG.	ITEM	STOCK NUMBER	CAGEC	PART NUMBER
27	10		90598	60230-100
27	10		90598	60480-100
27	11	6150-01-397-7320	90598	60412-100
27	12	5325-01-104-4987	96906	MS35489-11X
28	1	9340-00-230-0441	70673	P-75
28	2	5310-00-903-5966	96906	MS51971-1
28	2	5310-00-761-6882	96906	MS51967-2
28	3	5310-00-933-8121	96906	MS35338-139
28	3	5310-00-582-5965	96906	MS35338-44
28	4	5310-00-582-5677	96906	MS15795-810
28	4	5310-00-809-4058	96906	MS27183-10
28	5	5305-00-225-3843	80204	B1821BH025C100N
28	5	5310-00-225-3839	80204	MS90725-8
28	6		90598	60539-1
28	7		90598	60554-100
28	8	5310-00-934-9760	96906	MS35649-204
28	9	5310-00-933-8120	96906	MS35338-138
28	10	5310-00-615-1556	96906	MS15795-846
28	11	5305-01-342-5174	96906	MS51849-74C
28	12		90598	60524-100
28	13		90598	60524-1
28	14	5950-01-397-7319	90598	60227-100
28	14		90598	60444-100
29	1	5340-00-297-0312	78553	C7988-1420-3B
29	2		90598	60219-100
29	2		90598	60599-1
29	3	5310-00-855-1102	96906	MS35649-2255
29	4	5310-00-933-8120	96906	MS35338-138
29	5	5310-00-582-5677	96906	MS15795-810
29	5	5310-00-934-0226	96906	MS35338-153
29	6		90598	60521-100
29	7	5340-00-297-0312	78553	C7988-1420-38
29	8		90598	60701-100
29	9	5330-01-398-9728	90598	60717-1
29	10	5305-00-765-4257	96906	MS51959-43
29	11		90598	60707-100
29	12	5305-00-088-9520	96906	MS51029-49

SECTION IV

CROSS-REFERENCE INDEXES

FIGURE AND ITEM NUMBER INDEX

FIG.	ITEM	STOCK NUMBER	CAGEC	PART NUMBER
29	13		90598	60740-100
29	14	5330-01-329-9654	76385	239
29	15		90598	60710-100
29	16	5305-00-724-5851	96906	MS51029-53
29	17	5975-01-092-8655	50340	12408
29	18	5305-00-054-6650	96906	MS51957-26
29	19	5310-00-929-6395	96906	MS35338-136
29	20	5310-00-722-5998	96906	MS15795-805
29	21	4520-01-399-1406	90598	60712-1
29	22		90598	60709-1
29	23		90598	60731-100
29	24	5330-01-410-8140	76385	0-129Q056762
29	25		90598	60702-100
29	26	4530-01-399-2423	71895	1.25GPH80W
29	27		71895	45560-2
29	28	4730-00-187-0839	88044	AN816-3
29	29	4710-01-398-8364	90598	60734-100
30	1	5320-00-343-5435	07707	AD43AH
30	2	5935-01-181-6651	96906	MS25043-14D
30	3		90598	60410-100
30	4	6685-01-398-7371	90598	60404-1
30	5		90598	60411-100
30	6	5940-00-283-5280	96906	MS25036-106
30	7	5975-00-223-7543	96906	MS3368-4-9D
30	8	5975-00-111-3208	96906	MS3367-5-9
30	9	5935-01-175-8420	96906	MS25042-14DA
30	10	5935-01-172-9912	96906	MS5049/11-17W
30	11	5975-00-936-7377	96906	MS3420-8
30	12	5935-01-025-2139	96906	MS3406D14S-7P
30	13		14304	E29-0003-002
30	14		90598	60411-7
31	1		90598	60411-102
31	2	5940-00-204-8990	96906	MS25036-111
31	3	5940-00-143-4777	96906	MS25036-157
31	4	5975-00-223-7543	96906	MS3368-4-4D
31	5	5935-01-193-5713	81349	M8504911-21W
31	6	5365-00-598-5416	96906	MS3420-12

SECTION IV

CROSS-REFERENCE INDEXES

FIGURE AND ITEM NUMBER INDEX

FIG.	ITEM	STOCK NUMBER	CAGEC	PART NUMBER
31	7	5975-00-111-3208	96906	MS3367-5-9
31	8	5935-01-189-3220	96906	MS25042-16DA
31	9	5935-01-025-2137	96906	MS3406D16-10P
31	10		85480	HSCPS.9-6676W
31	11		90598	60411-17
31	12	5975-01-400-0600	28520	2251
31	13	5975-01-364-5613	28520	3234
31	14	5330-01-398-4995	96906	MS9955-023
32	1	6150-01-335-3449	97403	13229E8567
32	2	5975-00-111-3208	96906	MS3367-5-9
32	3	5935-01-184-7188	96906	MS25043-16DA
32	4	5935-01-397-9876	96906	MS3401 D16-10S
32	5	5365-00-820-4535	96906	MS3420-6
32	6	5935-01-181-1670	81349	N8504911-112W
32	7		97403	13229E8567-2
32	8		97403	13229E8567-3
32	9		97403	13229E8567-4
33	1		90598	60411-101
33	2	5940-00-283-5280	96906	MS25036-106
33	3		85480	HSCR9-6676W
33	4		96906	MS3404D14S7S
33	5	5940-00-143-4777	96906	MS25036-157
33	6	5940-01-079-1936	81349	M79285-5
33	7		90598	60411-23
33	8		90598	90411-21
33	9		90598	60411-9
34	1	5305-00-071-2505	80204	B1821 BH025C088N
34	2	5310-00-933-8121	96906	MS35338-139
34	3	5310-00-582-5677	96906	MS15795-810
34	4		90598	60050-100
34	4		90598	60225-1
35	1	5315-00-059-0491	96906	MS24665-372
35	2	5315-01-400-5794	90598	60104-100
35	3	5310-01-399-1676	90598	60020-1
35	4		90598	60611-100
35	5	5310-00-059-0491	96906	MS24665-372
35	5	5315-00-187-9384	96906	MS24665-389

SECTION IV

CROSS-REFERENCE INDEXES

FIGURE AND ITEM NUMBER INDEX

FIG.	ITEM	STOCK NUMBER	CAGEC	PART NUMBER
35	6	5310-00-614-3505	96906	MS15795-820
35	6	5310-00-003-9174	96906	MS27183-21
35	7	2530-01-398-5396	11431	13868805
35	8	4730-01-398-5677	11431	915
35	9		90598	60601-100
35	10	5310-00-767-0445	96906	MS51971-2
35	11	5310-00-974-6623	96906	MS35338-140
35	12	5310-00-625-5756	96906	MS15795-812
35	13	5305-00-958-5254	96906	MS35190-307
35	14		90598	60607-100
36	1	4130-00-922-2439	60532	D4524-371
36	2	5303-01-383-6136	96906	MS51849-65C
36	3	5310-00-933-8120	96906	MS35338-138
36	4	5310-00-619-1148	96906	MS15795-808
36	5		90598	60110-1
36	6		90598	60106-100
36	6		90598	60206-100
36	7	5320-00-129-9706	81349	M242431 -F402
36	8	4130-00-106-5657	60532	CHN2
36	9	5310-00-982-6813	96906	MS21044C06
36	10	5310-00-880-5976	96906	MS15795-806
36	10	5310-00-082-1404	96906	MS27183-6
3	11		90598	60111-100
36	12		90598	60117-100
36	13	5320-00-932-1972	07707	AD42H
36	14		90598	60116-1
36	15	5320-00-882-8388	81349	M24243/6-A403H
36	16	5310-01-398-9656	07707	ABUP4
36	17		90598	60114-1
36	18		90598	60109-1
36	19		90598	60106-8
36	19		90598	60206-8
36	20		90598	60106-9
36	20		90598	60206-9
36	21		90598	60105-100
36	21		90598	60205-100
36	22		90598	60105-5

SECTION IV

CROSS-REFERENCE INDEXES

FIGURE AND ITEM NUMBER INDEX

FIG.	ITEM	STOCK NUMBER	CAGEC	PART NUMBER
36	22		90598	60205-5
36	23		90598	60105-6
36	23		90598	60205-6
37	1	5320-01-110-7954	06888	AD42AH
37	2		90598	60030-3
37	2		90598	60202-3
37	3		90598	60010-1
37	3		90598	60201-1
37	4		90598	60030-9
37	4		90598	60202-9
37	5		90598	60030-8
37	5		90598	60202-8
37	6		90598	60030-4
37	6		90598	60202-4
37	7		90598	60030-2
37	7		90598	60202-2
37	8		90598	60223-1
37	8	5306-00-337-4160	98313	FDC-1540-5
37	9	5315-00-298-1481	96906	MS25665-357
37	10	5310-00-998-0608	96906	MS35692-61
37	11	5310-00-809-8533	96906	MS27183-23
38	1	5320-00-343-5435	07707	AD43AH
38	2		90598	60152-1
39	1	5305-00-068-0508	80204	B1821BH025C075N
39	2	5310-00-933-8121	96906	MS35338-139
39	3	5310-00-582-5677	96906	MS15795-810
39	4		90598	60077-1
39	5	5310-00-767-0445	96906	MS51971-2
39	6		90598	60035-100
39	7	5325-00-074-3301	96906	MS21266-2N
39	8	5310-00-809-9156	07707	A25K80
39	9		90598	60046-1
39	10		90598	60047-1
40	1		90598	60100-100
40	1		90598	60204-100
40	2	5320-01-110-7954	06888	AD42AH
40	3	5310-01-398-9656	07707	ABUP4

SECTION IV

CROSS-REFERENCE INDEXES

FIGURE AND ITEM NUMBER INDEX

FIG.	ITEM	STOCK NUMBER	CAGEC	PART NUMBER
40	4		90598	60497-1
40	5	5320-00-143-6149	07707	AK43H
40	6	5325-00-141-3291	71286	244-16S
40	7	5310-00-620-4421	03481	A25KB151
40	7		03481	A25KB151
40	8	5310-00-021-7088	03481	A10KB116
40	9	5310-00-188-7969	25472	A8K75
40	10	5310-00-225-4680	03481	A10K80
40	11	5310-01-198-1722	03481	S25P280
40	12	5325-00-639-7264	71826	244-16C

By Order of the Secretary of the Army:

ERIC K. SHINSEKI
General, United States Army
Chief of Staff

Official:

JOEL B. HUDSON
Administrative Assistant to the
Secretary of the Army
0022809

DISTRIBUTION:

To be distributed in accordance with the initial distribution number (IDN) 256247 requirements for TM 9-4520--258-24P.

RECOMMENDED CHANGES TO EQUIPMENT TECHNICAL PUBLICATIONS

SOMETHING WRONG WITH THIS PUBLICATION

THEN ... JOT DOWN THE INFO ABOUT IT ON THIS FORM. CAREFULLY TEAR IT OUT. FOLD IT AND DROP IT IN THE MAIL.

FROM: (PRINT YOUR UNIT'S COMPLETE ADDRESS)
Commander
Stateside Army Depot
ATTN: AMSTA-US
Stateside, N.J. 07703-5007

DATE SENT
10 July 1975

PUBLICATION NUMBER	PUBLICATION DATE	PUBLICATION TITLE
TM 11-5840-340-20P	23 Jan 74	Radar Set AN/PRC-76

BE EXACT PIN-POINT WHERE IT IS

PAGE NO	PARA GRAPH	FIGURE NO	TABLE NO	IN THIS SPACE TELL WHAT IS WRONG AND WHAT SHOULD BE DONE ABOUT IT:
2-25	2-28			Recommend that the installation antenna alignment procedure be changed throughout to specify a 20 IFF antenna lag rather than 10. REASON: Experience has shown that with only a 10 lag, the antenna servo system is too sensitive to wind gusting in excess of 25 knots, and has a tendency to rapidly accelerate and decelerate as it hunts, causing strain to the drive train. Hunting is minimized by adjusting the lag to 20 without degradation of operation.
3-10	3-3		3-1	Item 5, Functional column. Change • 2 dB" to • 3 dB". REASON: The adjustment procedure for the TRANS POWER FAULT indicator calls for a 3 dB (500 watts) adjustment to light the TRANS POWER FAULT indicator.
5-6	5-8			Add new step f.1 to read, • Replace cover plate removed in step e.1, above." REASON: To replace the cover plate.
		FO-3		Zone C 3. On J1-2, change • +24 VDC" to • +5 VDC". REASON: This is the output line of the 5 VDC power supply. +24 VDC is the input voltage.

SAMPLE

PRINTED NAME, GRADE OR TITLE AND TELEPHONE NUMBER
SSG I. M. DeSpiritof 999-1776

SIGN HERE

DA FORM 1 JUL 72 2028-2

PREVIOUS EDITIONS ARE OBSOLETE

P.S. - IF YOUR OUTFIT WANTS TO KNOW ABOUT YOUR RECOMMENDATION MAKE A CARBON COPY OF THIS AND GIVE IT TO YOUR HEADQUARTERS.

TEAR ALONG DOTTED LINE

REVERSE OF DA FORM 2028-2

FILL IN YOUR
UNIT'S ADDRESS

FOLD BACK

DEPARTMENT OF THE ARMY

OFFICIAL BUSINESS

PLEASE
AFFIX
STAMP
POSTAGE
REQUIRED

Commander
U.S. Army Communications-Electronics Command
and Fort Monmouth
ATTN: AMSEL-LC-LEO-D-CS-CFO
Fort Monmouth, New Jersey 07703-5006

SAMPLE

TEAR ALONG DOTTED LINE

RECOMMENDED CHANGES TO EQUIPMENT TECHNICAL PUBLICATIONS

SOMETHING WRONG WITH THIS PUBLICATION

THEN ... JOT DOWN THE INFO ABOUT IT ON THIS FORM. CAREFULLY TEAR IT OUT. FOLD IT AND DROP IT IN THE MAIL.

FROM: (PRINT YOUR UNIT'S COMPLETE ADDRESS)

DATE SENT

PUBLICATION NUMBER	PUBLICATION DATE	PUBLICATION TITLE

BE EXACT PIN-POINT WHERE IT IS

PAGE NO	PARA GRAPH	FIGURE NO	TABLE NO

IN THIS SPACE TELL WHAT IS WRONG AND WHAT SHOULD BE DONE ABOUT IT:

PRINTED NAME, GRADE OR TITLE AND TELEPHONE NUMBER

SIGN HERE

DA FORM 1 JUL 79 **2028-2**

PREVIOUS EDITIONS ARE OBSOLETE

P.S. - IF YOUR OUTFIT WANTS TO KNOW ABOUT YOUR RECOMMENDATION MAKE A CARBON COPY OF THIS AND GIVE IT TO YOUR HEADQUARTERS.

TEAR ALONG DOTTED LINE

REVERSE OF DA FORM 2028-2

FILL IN YOUR
UNIT'S ADDRESS

FOLD BACK

DEPARTMENT OF THE ARMY

OFFICIAL BUSINESS

PLEASE
AFFIX
STAMP
POSTAGE
REQUIRED

TEAR ALONG DOTTED LINE

Commander
U.S. Army Communications-Electronics Command
and Fort Monmouth
ATTN: AMSEL-LC-LEO-D-CS-CFO
Fort Monmouth, New Jersey 07703-5006

THE METRIC SYSTEM AND EQUIVALENTS

'NEAR MEASURE

. Centimeter = 10 Millimeters = 0.01 Meters = 0.3937 Inches
1 Meter = 100 Centimeters = 1000 Millimeters = 39.37 Inches
1 Kilometer = 1000 Meters = 0.621 Miles

'VEIGHTS

Gram = 0.001 Kilograms = 1000 Milligrams = 0.035 Ounces
1 Kilogram = 1000 Grams = 2.2 lb.
1 Metric Ton = 1000 Kilograms = 1 Megagram = 1.1 Short Tons

LIQUID MEASURE

1 Milliliter = 0.001 Liters = 0.0338 Fluid Ounces
1 Liter = 1000 Milliliters = 33.82 Fluid Ounces

SQUARE MEASURE

1 Sq. Centimeter = 100 Sq. Millimeters = 0.155 Sq. Inches
1 Sq. Meter = 10,000 Sq. Centimeters = 10.76 Sq. Feet
1 Sq. Kilometer = 1,000,000 Sq. Meters = 0.386 Sq. Miles

CUBIC MEASURE

1 Cu. Centimeter = 1000 Cu. Millimeters = 0.06 Cu. Inches
1 Cu. Meter = 1,000,000 Cu. Centimeters = 35.31 Cu. Feet

TEMPERATURE

5/9(°F - 32) = °C
212° Fahrenheit is evuivalent to 100° Celsius
90° Fahrenheit is equivalent to 32.2° Celsius
32° Fahrenheit is equivalent to 0° Celsius
9/5C° + 32 =°F

APPROXIMATE CONVERSION FACTORS

TO CHANGE	TO	MULTIPLY BY
Inches	Centimeters	2.540
Feet	Meters	0.305
Yards	Meters	0.914
Miles	Kilometers	1.609
Square Inches	Square Centimeters	6.451
Square Feet	Square Meters	0.093
Square Yards	Square Meters	0.836
Square Miles	Square Kilometers	2.590
Acres	Square Hectometers	0.405
Cubic Feet	Cubic Meters	0.028
Cubic Yards	Cubic Meters	0.765
Fluid Ounces	Milliliters	29.573
ıts	Liters	0.473
arts	Liters	0.946
allons	Liters	3.785
Ounces	Grams	28.349
Pounds	Kilograms	0.454
Short Tons	Metric Tons	0.907
Pound-Feet	Newton-Meters	1.356
Pounds per Square Inch	Kilopascals	6.895
Miles per Gallon	Kilometers per Liter	0.425
Miles per Hour	Kilometers per Hour	1.609

TO CHANGE	TO	MULTIPLY BY
Centimeters	Inches	0.394
Meters	Feet	3.280
Meters	Yards	1.094
Kilometers	Miles	0.621
Square Centimeters	Square Inches	0.155
Square Meters	Square Feet	10.764
Square Meters	Square Yards	1.196
Square Kilometers	Square Miles	0.386
Square Hectometers	Acres	2.471
Cubic Meters	Cubic Feet	35.315
Cubic Meters	Cubic Yards	1.308
Milliliters	Fluid Ounces	0.034
Liters	Pints	2.113
Liters	Quarts	1.057
'ers	Gallons	0.264
.ms	Ounces	0.035
.ograms	Pounds	2.205
Metric Tons	Short Tons	1.102
Newton-Meters	Pounds-Feet	0.738
Kilopascals	Pounds per Square Inch	0.145
'lometers per Liter	Miles per Gallon	2.354
›meters per Hour	Miles per Hour	0.621

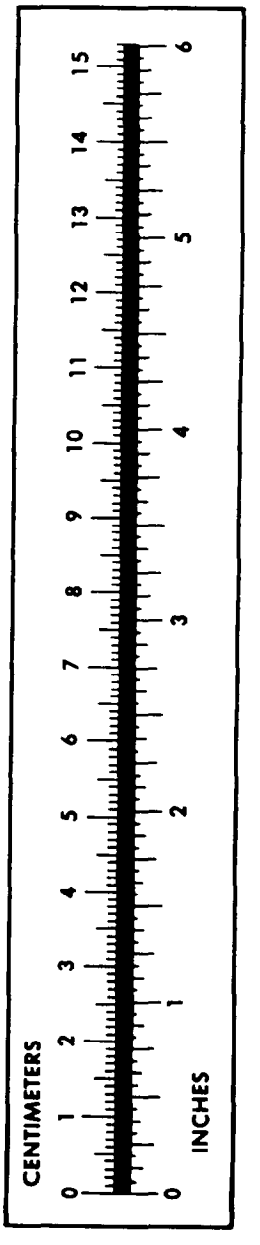

PIN: 073357-000