TECHNICAL MANUAL

DIRECT SUPPORT MAINTENANCE MANUAL

FOR

CONTROL, RADIO SET GROUPS AN/GRA-39

NSN 5820-00-889-3860
AN/GRA-39A
NSN 5820-00-082-3998
AN/GRA-39B
NSN 5820-00-949-9909
AN/GRA-39C
NSN 5820-01-196-0204

INTRODUCTION PAGE 1-1

PRINCIPALS OF OPERATION PAGE 1-5

DIRECT SUPPORT TROUBLESHOOTING PAGE 2-2

MAINTENANCE PROCEDURES PAGE 2-19

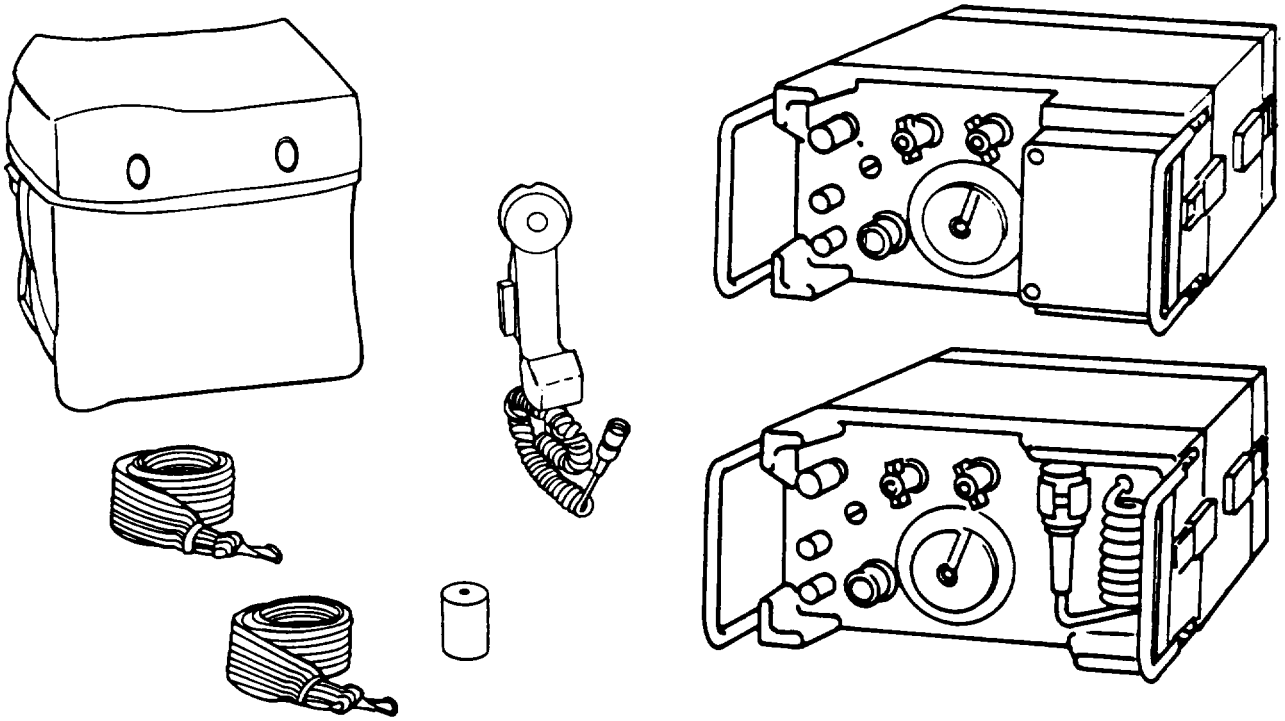

HEADQUARTERS, DEPARTMENT OF THE ARMY

1 JULY 1991

Approved for public release: distribution is unlimited.

DESTRUCTION NOTICE - Destroy by any method that will prevent disclosure of contents or reconstruction of the document.

5 SAFETY STEPS TO FOLLOW IF SOMEONE IS THE VICTIM OF ELECTRICAL SHOCK

1. DO NOT TRY TO PULL OR GRAB THE INDIVIDUAL
2. IF POSSIBLE, TURN OFF THE ELECTRICAL POWER
3. IF YOU CANNOT TURN OFF THE ELECTRICAL POWER, PULL, PUSH, OR LIFT THE PERSON TO SAFETY USING A DRY WOODEN POLE OR A DRY ROPE OR SOME OTHER INSULATING MATERIAL
4. SEND FOR HELP AS SOON AS POSSIBLE
5. AFTER THE INJURED PERSON IS FREE OF CONTACT WITH THE SOURCE OF ELECTRICAL SHOCK, MOVE THE PERSON A SHORT DISTANCE AWAY AND IMMEDIATELY START ARTIFICIAL RESUSCITATION

WARNING

ELECTRICAL SHOCK HAZARD

Do not press the RINGER button when touching the line binding posts.

TECHNICAL MANUAL

No. 11-5820-477-30

HEADQUARTERS
DEPARTMENT OF THE ARMY
Washington, DC, 1 July 1991

Direct Support Maintenance Manual for CONTROL, RADIO SET GROUPS

AN/GRA-39 NSN 5820-00-889-3860
AN/GRA-39A NSN 5820-00-082-3998
AN/GRA-39B NSN 5820-00-949-9909
AN/GRA-39C NSN 5820-01-196-0204

REPORTING ERRORS AND RECOMMENDING IMPROVEMENTS

You can help improve this manual. If you find any mistakes or if you know of a way to improve the procedures, please let us know. Mail your letter, DA Form 2028 (Recommended Changes to Publications and Blank Forms), or DA Form 2028-2 located in the back of this manual direct to: Commander, US Army Communications-Electronics Command and Fort Monmouth, ATTN: AMSEL-LC-LM-LT, Fort Monmouth, New Jersey 07703-5000. In either case, a reply will be furnished direct to you.

TABLE OF CONTENTS

		Page
	How to Use This Manual	iii
CHAPTER 1.	INTRODUCTION	
	Overview	1-1
Section I.	General information	1-1
Section II.	Equipment Description and Data	1-2
Section III.	Principals of Operation	1-5
CHAPTER 2.	DIRECT SUPPORT MAINTENANCE	
	Overview	2-1
Section I.	Repair Parts, Special Tools, TMDE and Support Equipment	2-1
Section II.	Direct Support Troubleshooting	2-2
Section III.	Maintenance Procedures	2-19
APPENDIX A	REFERENCES	A-1
APPENDIX B	EXPENDABLE/DURABLE SUPPLIES AND MATERIALS LIST	B-1

•This manual supersedes TM 11-5820-477-35, 9 January 1963, including all changes.

LIST OF ILLUSTRATIONS

Figure Number	Title	Page
1-1	Radio Set Control Group AN/GRA-39(*),Typical	1-0
1-2	Major Components	1-4
1-3	Remote Control Unit C-2328/GRA-39, Block Diagram	1-7
1-4	Remote Control Units C-2328A/GRA-39, C-2328B/GRA-39 and C-2328C/GRA-39 (with Call Lamp), Block Diagram	1-8
1-5	Local Control Unit C-2329/GRA-39, Block Diagram	1-14
1-6	Local Control Units C-2329A/GRA-39, C-2329B/GRA-39 and C-2329C/GRA-39 (with Call Lamp), Block Diagram	1-15
2-1	Component Checks	2-4
2-2	Remote Control Unit C2328(*)/GRA-39 Component Location and Voltages	2-6
2-3	Local Control Unit C-2329(*)/GRA-39 Component Location and Vottages	2-13
2-4	Magneto G201 (Remote Control Unit) Replacement	2-21
2-5	Magneto G101 (Local Control Unit) Replacement	2-21
2-6	RF Filter Assembly Components,C-2328B/GRA-39 and C-2329B/GRA-39	2-25
2-7	RF Filter Assembly Components,C-2328C/GRA-39 and C-2329C/GRA-39	2-26
2-8	Buzzer Assembly DS101 or DS201 Replacement	2-29
2-9	Buzzer Adjustment (DS1O1 or DS201)	2-30
2-10	Call Lamp and Control Relay Replacement (A-, B-and C-Models)	2-33
2-11	Remote Control Unit Chassis Component Replacement	2-35
2-12	Local Control Unit Chassis Component Replacement	2-38
2-13	Remote Control Unit Panel Assembly Component Replacement	2-41
2-14	Local Control Unit Panel Assembly Component Replacement	2-42
2-15	Battery Cable Replacement	2-45
2-16	Clamping Catch Replacement	2-46
2-17	TEL-REMOTE-RADIO Switch S102A of C-2329/GRA-39 and C-2329A/GRA-39, Wiring Diagram	2-48
FO-1	Control,Radio Set C-2328/GRA-39 (Remote Control Unit), Schematic Diagram	FP-1
FO-2	Control, Radio Set C-2328A/GRA-39 (Remote Control Unit), Schematic Diagram	FP-3
FO-3	Control, Radio Set C-2328B/GRA-39 (Remote Control Unit), Schematic Diagram	FP-5
FO-4	Control, Radio Set C-2328C/GRA-39 (Remote Control Unit), Schematic Diagram	FP-7
FO-5	Control, Radio Set C-2329/GRA-39 (Local Control Unit), Schematic Diagram	FP-9
FO-6	Control, Radio Set C-2329A/GRA-39 (Local Control Unit), Schematic Diagram	FP-11
FO-7	Control, Radio Set C-2329B/GRA-39 (Local Control Unit), Schematic Diagram	FP-13
FO-8	Control, Radio Set C-2329C/GRA-39 (Local Control Unit), Schematic Diagram	FP-15
FO–9	Control, Radio Set C–2328(*)/GRA–39 (Remote Control Unit) Functional Block Diagram	FP–17
FO-10	Control, Radio Set C–2328(*)/GRA-39 (Local Central Unit) Functional Block Diagram	FP-18

LIST OF TABLES

Table Number	Title	Page
2-1	Remote Control Unit Dc Resistance	2-3
2-2	Local Control Unit Dc Resistance	2-5
2-3	Troubleshooting, Remote Control Unit	2-9
2-4	Troubleshooting, Local Control Unit	2-15

HOW TO USE THIS MANUAL

This manual is designed to help you keep your control, radio set in good operating condition. The front cover index is provided for quick reference to important information. There is also an index located in the final pages for use in locating specific items of information.

Warning pages are located in the front of this manual. You should learn the warnings before performing any maintenance on the equipment.

Paragraphs in this manual are numbered by chapter and order of appearance within a chapter. A subject index appears at the beginning of each chapter listing sections that are included in that chapter. A more specific subject index is located at the beginning of each section to help you find the exact paragraph you are looking for.

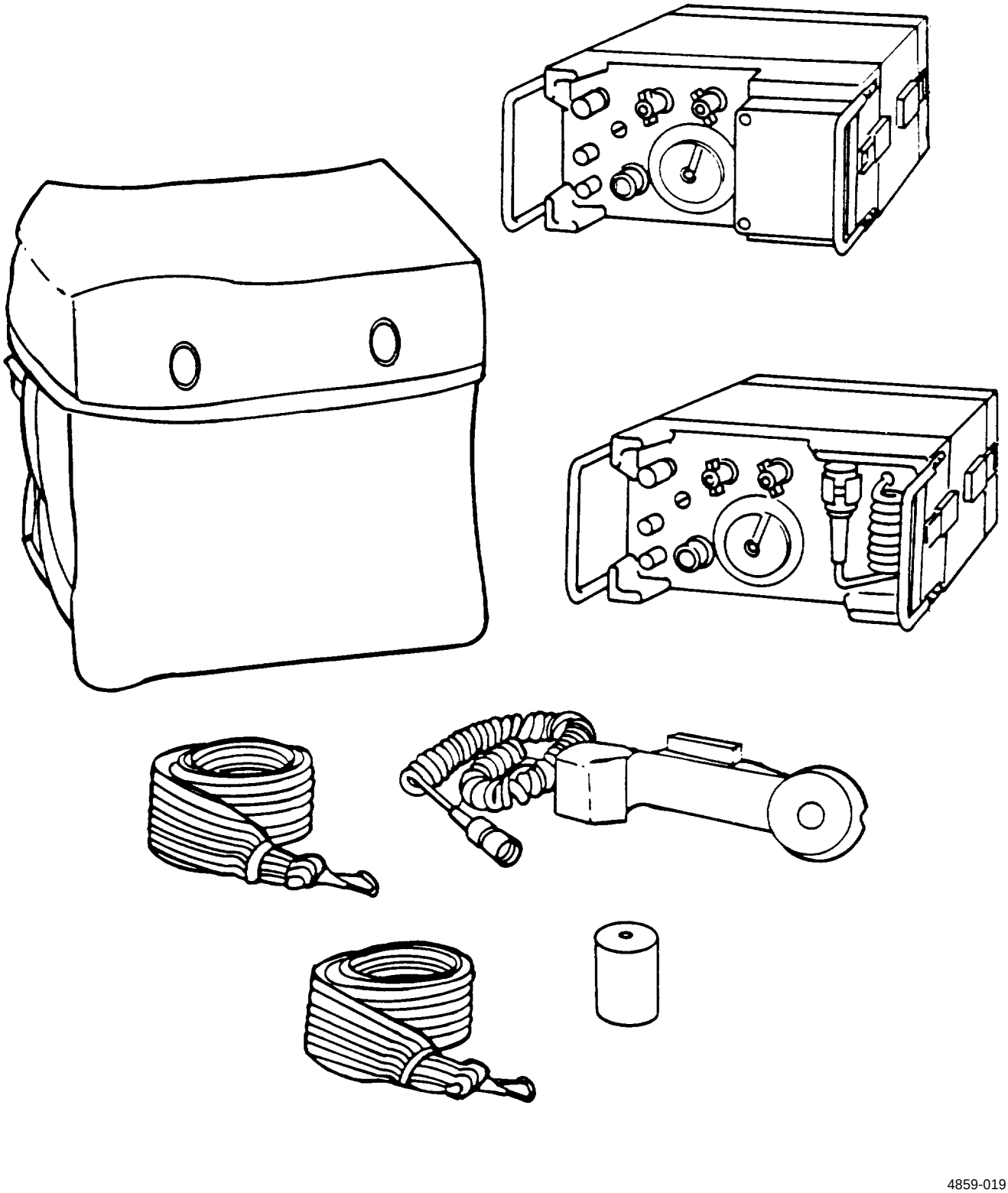

Figure 1-1. Radio Set Control Group AN/GRA-39(*), Typical.

CHAPTER 1

INTRODUCTION

Page

Section I. General Information . . . . . I-I
Section II. Equipment Description and Data 1-2
Section Ill. Principles of Operation 1-5

OVERVIEW

The general information, description and principles of operation contained in this chapter provide data for direct support personnel to use and maintain Radio Set Control Groups AN/GRA-39, AN/GRA-39A, AN/GRA-39B and AN/GRA-39C. This chapter lists reporting procedures, equipment improvement recommendations and storage procedures. Equipment description and data include particular model differences. Principles of operation explains functioning of each model.

Section L GENERAL INFORMATION

Para. Page

1-1 scope 1-1
1-2 Consolidated Index of Army Publications and Blank Forms 1-1
1-3 Maintenance Forms, Records and Reports 1-2
1-4 Reporting Equipment Improvement Recommendations (EIR) 1-2
1-5 Administrative Storage 1-2
1-6 Destruction of Army Electronics Material 1-2

1-1. **Scope**

This manual covers direct support (DS) maintenance of Radio Set Control Group AN/GRA-39, AN/GRA-39A, AN/G RA-39B and AN/G RA-39C (figure 1 -1). It includes instructions and data relevant to direct support maintenance for troubleshooting, component replacement and, where applicable, component adjustment. Where information applies to all models covered by this manual, the equipment shall be referred to as AN/GRA-39(*). Where information applies to all component local control units, the equipment shall be referred to as C-2329(*)/ GRA-39. Where information applies to all component remote control units, the equipment shall be referred to as C-2328(*)/GRA-39.

1-2. **Consolidated Index of Army Publications and Blank Forms**

Refer to the latest issue of DA PAM 25-30 to determine whether there are new editions, changes, or additional publications pertaining to the equipment.

1-3. Maintenance Forms, Records, and Reports

a. Reports of Maintenance and Unsatisfactory Equipment. Department of the Army forms and procedures used for equipment maintenance will be those prescribed by DA Pam 738-750, as contained in Maintenance Management Update.

b. Reporting of item and Packaging Discrepancies. Fill out and forward SF 364 (Report of Discrepancy (ROD)) as prescribed in AR735-11-2/DLAR 4140.55/SECNAVINST 4355.18/AFR 400-54/MCO 4430.3J.

c. Transportation Discrepancy Report (TDR) (SF 361). Fill out and forward Transportation Discrepancy Report (TDR) (SF 361) as prescribed in AR 55-38/NAVSUPINST 461 0.33C/AFR 75-18/MCO P4610.19D/DLAR 4500.15.

1-4. Reporting Equipment Improvement Recommendations (EIR)

If your equipment needs improvement let us know. Send us an EIR. You, the user, are the only one who can tell us what you don't like about the equipment. Let us know why you don't like the design or performance. Put it on an SF 368 (Product Quality Deficiency Report). Mail it to Commander, US Army Communications-Electronics Command and Fort Monmouth, ATTN: AMSEL-ED-PH, Fort Monmouth, New Jersey 07703-5000. We'll send you a reply.

1-5. Administrative Storage

Equipment issued to and used by Army activities will have preventive maintenance performed in accordance with the PMCS charts before storing. When removing the equipment from administrative storage, the PMCS should be performed to assure operational readiness. Disassembly and repacking of equipment for shipment or for limited storage is covered in manual TM 11-5820-477-12.

1-6. Destruction of Army Electronics Materiel

Destruction of Army electronics materiel to prevent enemy use shall be in accordance with TM 750-244-2.

Section II. EQUIPMENT DESCRIPTION AND DATA

Para.		Page
1-7	Equipment Characteristics, Capabilities and Features	1-3
1-8	Description of Major Components	1-3
1-9	Differences Between Models	1-5
1-10	Equipment Data	1-5
1-11	Safety, Care and Handling	1-5

NOTE

The information in this section applies to all models of the radio set control group, except where noted.

1-7. **Equipment Characteristics, Capabilities and Features**

The AN/GRA-39(*) is used in conjunction with a radio receiver-transmitter or a local battery switchboard to expand the interfacing capability of the radio or switchboard. When connected with a radio, the AN/GRA-39(*) enables the operator to transmit and receive voice frequency communications through the radio for a distance of up to two miles (3.3 kilometers) from the radio. When connected with a switchboard, the AN/GRA-39(*) is used 10 accomplish net radio interface (NRI), by which voice communication is established between a field telephone (switchboard subscriber) and a radio. In either application, communication can be initiated by the remote control unit operator or by the local control unit operator. Transmissions initiating at the local control unit do not involve the remote control unit. However, transmissions initiating at the remote unit require the presence of an appropriately set local unit in the system.

When a handset is connected to both the local control unit and the remote control unit, two-way communication is possible between the two units independent of any radio or switchboard in the system.

The local and remote control units are battery powered. The two units have identical battery requirements. Each control unit has a waterproof case, and each has two D-rings for attachment of a sling which allows the unit to be carried or hung on an appropriate object. All operating controls on each unit are located in the front panel.

Identification of the components of each radio set control group covered by this manual can be found in TM 11-5820-477-12.

1-8. **Description of Major components (figure 1-2)**

Item	Description
1. Local Control Unit	Has a control cable for direct connection to a receiver-transmitter and a 5-pin AUDIO connector for attachment of a handset, when required. Two LINE binding posts on front panel permit connection to remote control unit for radio operation, or to remote and switchboard for NRI operation. A-, B- and C- models have a call lamp to signal incoming calls, and RFI filtering capability.
2. Remote Control Unit	Has a 5-pin AUDIO connector for attachment of a handset (radio operation) or connector for jumper wires to switchboard (NRI operation). A built-in loudspeaker allows operator to monitor calls in progress. Two LINE binding posts on front panel permit connection to local control unit for radio operation, or to local and switchboard, for NRI operation. A-, B-, and C- models have a call lamp to signal incoming calls, and RFI filtering capability.
3. Handset	Allows operator to communicate with other parties in the system

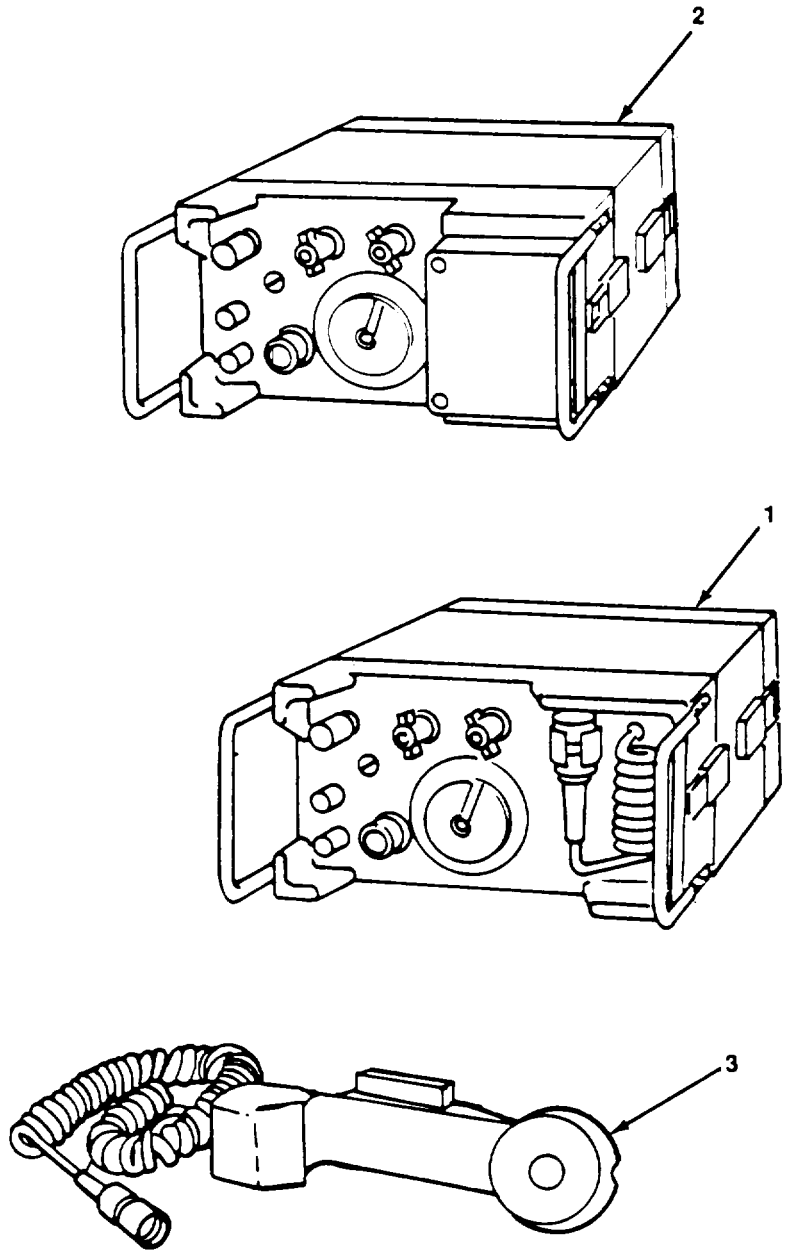

4859-001

Figure 1-2. Major Components.

1-9. **Differences Between Models**

a. Local control units C-2329A/GRA-39, C-2329B/GRA-39 and C-2329C/GRA-39, and remote control units C-2328A/GRA-39, C-2328B/GRA-39 and C-2328C/GRA-39 each have a call lamp on the front panel with an associated control relay inside the housing, and radio frequency interference (RFI) filtering capability. The C-2328A/GRA-39 and C-2329A/GRA-39 (comprising AN/GRA-39A), and the C-2328C/GRA-39 and C-2329C/GRA-39 (comprising AN/GRA-39C), each have a sealed RFI filter assembly consisting of capacitors and inductors. The C-2328B/GRA-39 and C-2329B/GRA-39 (comprising AN/GRA-39B) each have a sealed RFI filter assembly consisting of capacitors and resistors. The basic model (AN/GRA-39) has no call lamp or RFI filtering.

b. The basic and A- models have identical wiring. The B- model component boards Al 02 and A201 have a different printed wiring layout, resulting in different wire routing from P102 and P201 to the circuit boards. The C-model is identical to the B- model.

c. The basic and A- models have been modified to add a 560-ohm resistor (R123) to improve monitoring when Radio Set AN/PRC-25 is operated in the SQUELCH mode. This resistor was already a component of the B- and C- models.

1-10. **Equipment Data**

Refer to TM 11-5820-477-12 for a description of the equipment and a listing of additional equipment required.

1-11. **Safety, Care and Handling**

Do not use ungrounded equipment. Throughout this manual are warnings, cautions and notes designed to protect personnel and equipment. Learn the warnings on the warning page before attempting to install, operate or perform maintenance on the equipment, and observe all warnings and cautions as you come upon them in the text. Learn the applicable warnings and cautions associated with each item of additional equipment used in the system, as outlined in their respective technical manual.

Section III. PRINCIPLES OF OPERATION

Para.		Page
1-12	Functioning of Remote Control Unit C-2328(*)/GRA-39	1-5
1-13	Stage Analysis of Remote Control Unit C-2328(*)/GRA-39	1-9
1-14	Battery Voltage Distribution, Remote Control Unit C-2328(*)/GRA-39	1-11
1-15	Functioning of Local Control Unit C-2329(*)/GRA-39	1-13
1-16	Stage Analysis of Local Control Unit C-2329(*)/GRA-39	1-16
1-17	Battery Voltage Distribution, Local Control Unit C-2329(*)/GRA-39	1-18

1-12. **Functioning of Remote Control Unit C-2329(*)/GRA-39 (figures 1-3 and 1-4)**

NOTE

The following discussion applies to all models of Control, Radio Set C-2328(*)/GRA-39, except where noted.

a. Telephone Operation Between Sites.

(1) *Ringing.* The operator at the local site is signaled when the RINGER button is pressed and released rapidly several times. This action activates magneto G201 to generate a ringing signal. When the RINGER button is pressed, switch S203, which normally connects buzzer DS201 (and a call lamp circuit in models A, B and C) to audio line transformer T201, is actuated to connect the magneto to T201. The ringing signal is coupled through T201, through the line to the local site. Incoming ringing signals are coupled through T201 to activate buzzer DS201. In A-, B- and C- models, incoming ringing signals are also applied to the call lamp control relay to activate the call lamp visual signal. For operation of DS201, TEL-RAD-RAD/SPKR switch S202 may be in any position. However, it must be set at TEL for the operator at the remote site to hear the local operator's voice.

(2) *Telephone communication.* Transmitted voice signals generated in the microphone of Handset H-138/U are amplified by audio amplifiers Q201 and Q202 in the preamplifier and are coupled through T201, through the line to the local site. Incoming voice signals from the local site are coupled by T201 to the H-138/U earpiece through S202.

b. Operation of Radio Set From Remote Control Unit.

(1) Transmitting. For this type of operation, the TEL-RAD-RAD/SPKR switch is in either the RAD or RAD/SPKR position. Voice signals developed in the handset microphone are applied to audio amplifiers Q201 and Q202. The amplified output signals are coupled by audio line transformer T201 to the LINE binding posts. Oscillator Q204 produces a 3,900-hertz (Hz) signal tone which is applied to audio amplifier Q205. Output signals of Q205 are coupled by T201 to the LINE binding posts. The voice signals and the 3,900-Hz signal are transmitted over the field wire to the local control unit. The 3,900-Hz signal tone activates circuits in the local control unit which keys the transmitter portion of the radio set.

(2) *Receiving.* Audio signals from the radio set receiver are returned to the remote control unit through the local control unit and field wire.

(a) Audio signals appearing at the LINE binding posts are coupled by audio line transformer T201, switch S202 (RAD position), filter FL201, VOLUME control R208, to audio driver Q203. Output signals of audio driver Q203 are coupled by audio transformer T202 through relay K201 (deenergized) and switch S202, to the handset earpiece.

(b) When the TEL-RAD-RAD/SPKR switch is set to RAD/SPKR, battery voltage is applied to power amplifiers Q206 and Q207. The audio signals are coupled from audio driver Q203 to power amplifiers Q206 and Q207 by audio transformer T202. The output of power amplifiers Q206 and Q207 is coupled to loudspeaker LS201 by audio transformer T203.

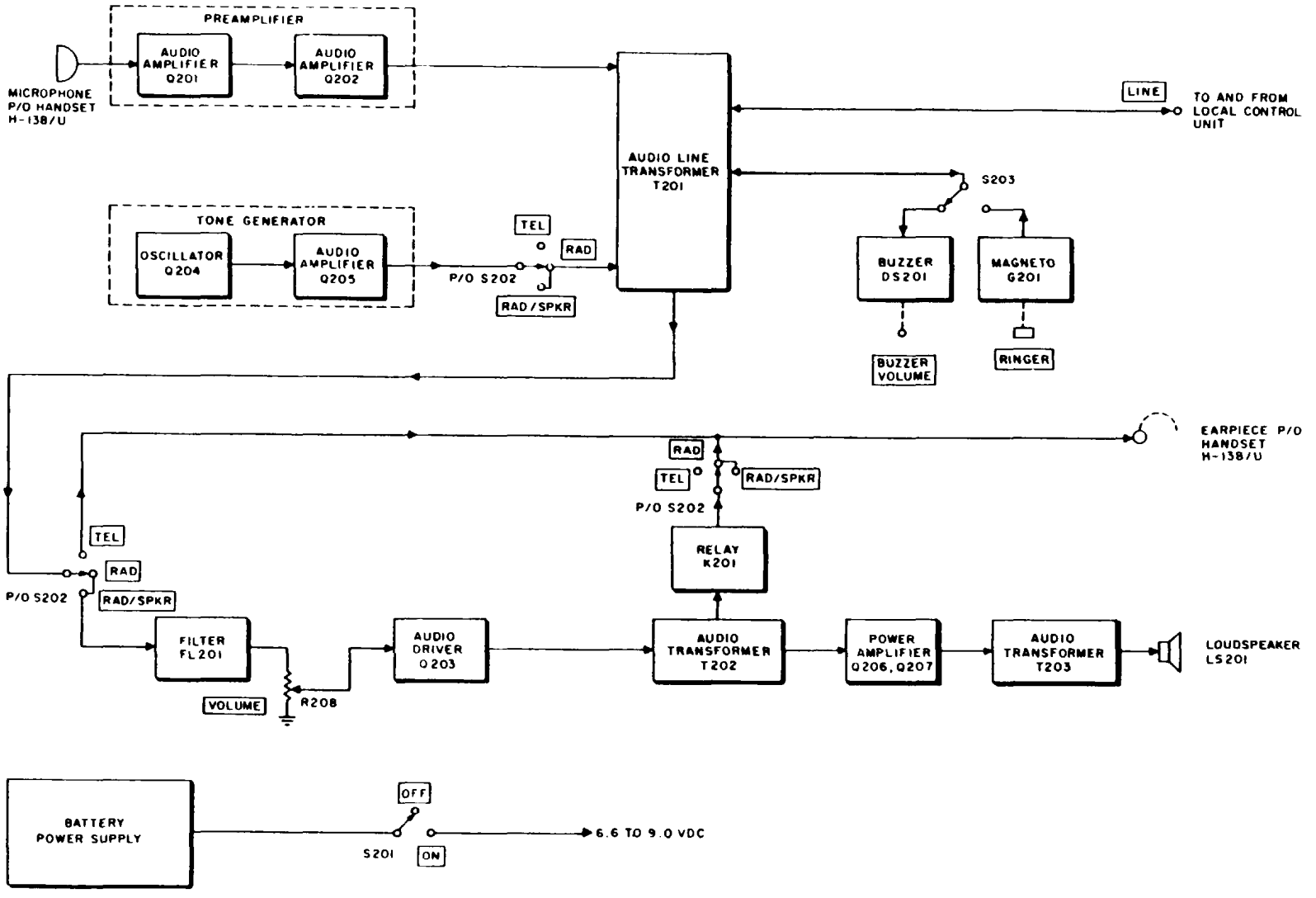

TM5820-477-35-2

Figure 1-3. Remote Control Unit C-2328/GRA-39, Block Diagram.

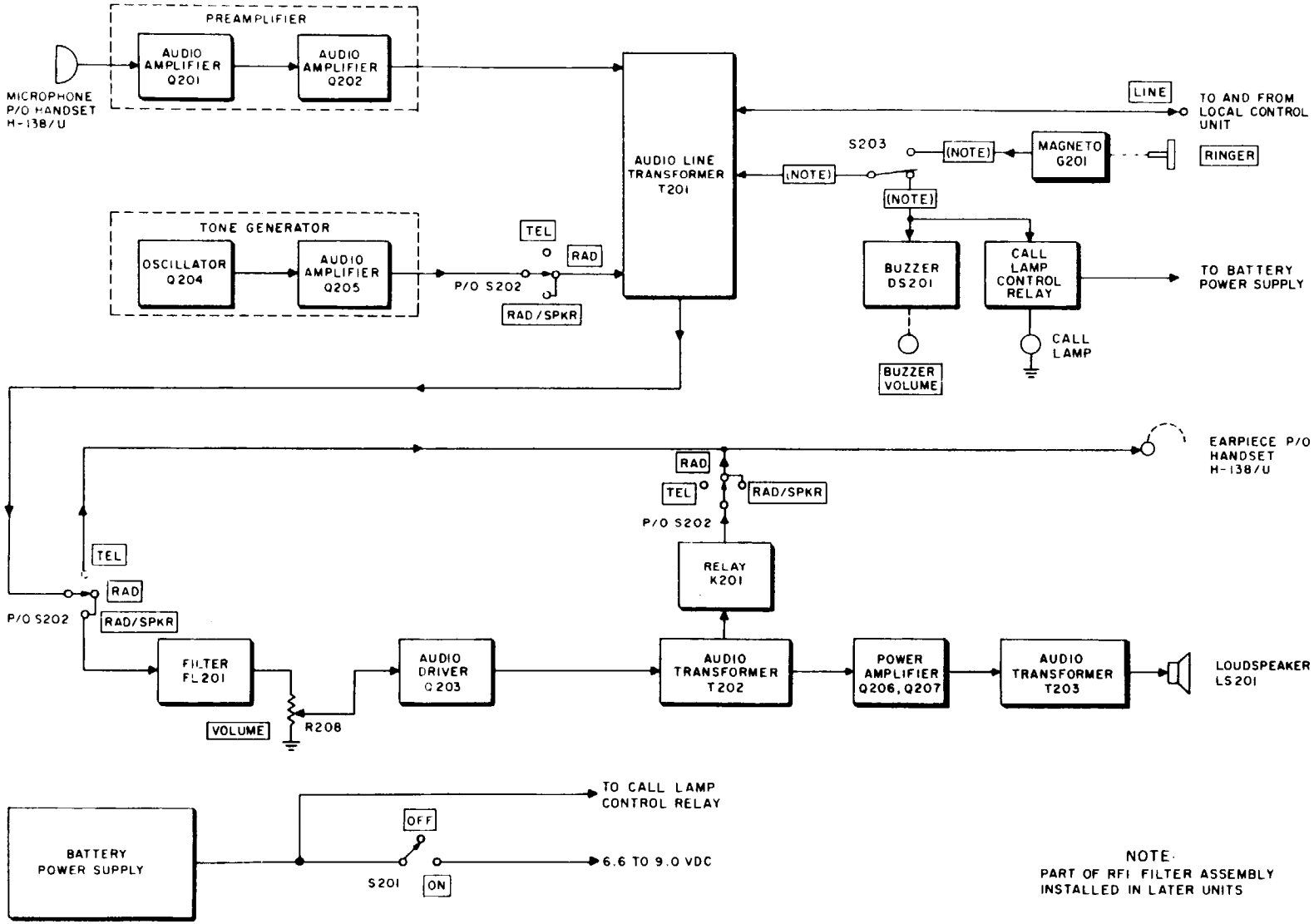

Figure 1-4. Remote Control Units C-2328A/GRA-39, C-2328B/GRA-39 and C-2328C/GRA-39 (with Call Lamp), Block Diagram.

c. Power Supply. The chart below lists the circuits energized when TEL-RAD-RAD/SPKR switch *S202* is in the position indicated.

S202 Position	Circuit Energized
TEL	Audio amplifiers Q201 and Q202.
RAD	Audio amplifiers Q201 and Q202, oscillator Q204 and audio amplifier Q205.
RAD/SPKR	Audio amplifiers Q201 and Q202, oscillator Q204 and audio amplifier Q205.
	Audio driver Q203.
	Power amplifier Q206.

d. Sidetone. During telephone communication or transmission of voice signals through the radio set, a sidetone signal developed in the H-138/U microphone is applied to the H-138/U earpiece.

(1) TEL position. Voice signals developed in the H-138/U microphone are applied through audio line transformer T201, switch S202, to the H-138/U earpiece.

(2) *RAD or RAD/SPKR position.* Voice signals developed in the H-138/U microphone are applied through audio line transformer T201, switch S202, filter FL201, VOLUME control R208, audio driver Q203, audio transformer T202, relay K201 (deenergized), and switch S202, to the H-138/U earpiece.

1-1 3. Stage Analysis of Remote Control Unit C-2328(*)/GRA-39 (figures FO-1 through FO-4)

NOTE

The following discussion applies to all models of Control, Radio Set C-2328(*)/GRA-39, except where noted.

Refer to schematic diagrams FO-1, FO-2, FO-3 and FO-4 for minor differences between models.

The setting of the TEL-RAD-RAD/SPKR switch determines the distribution of battery voltage to the stages in a. through e. below. This action is described in paragraph 1-14.

a. Preamplifier (Q201 and Q202). Audio amplifiers Q201 and Q202 amplify the low level audio signals, developed in the handset microphone, by approximately 57 decibels (dB).

(1) *Audio amplifier Q201.* When the handset push-to-talk switch is pressed, audio signals developed by the handset microphone are applied to pin D of J201 and pin A of P201. The audio signals at pin A of J204 are coupled by capacitor C201 to the base of Q201. The amplifier audio output of Q201 is coupled by capacitor C204 to the base of audio amplifier Q202. Resistors R201 and R205 forma voltage divider to establish the base-to-emitter forward bias. Battery voltage is applied to Q201 through emitter swamping resistor R202 bypassed by capacitor C202. Resistor R206 is the collector load resistor. Capacitor C203 shapes the high frequency output response of Q201.

(2) *Audio amplifier Q202.* The input audio signals to Q202 are amplified by approximately 33 dB. Capacitors C204, C205, and C206 and resistors R203, R204, and R207 are functionally the same as their respective components in the Q201 circuit (para 1-13a.(1)). Resistor R227 acts as part of the emitter resistance and also provides degenerative feedback. The preamplifier output is connected through pin H on J204 and P201 to the primary (terminals 1 and 2) of audio line transformer T201. Terminal 2 of T201 is grounded through CR201 and the push-to-talk switch of the handset. The induced voltage into the secondary of T201 (terminals 5 and 6) is applied to LINE binding posts J202 and J203. Battery voltage is applied to the preamplifier through pin J of J204.

b. Tone Generator (Q204 and Q205). The tone generator consists of oscillator Q204 and audio amplifier Q205.

Oscillator Q204, a modified shunt-fed Hartley oscillator, produces the 3,900-Hz signal tone which activates circuits in the local control unit to key the transmitter portion of the radio set. Audio amplifier Q205 amplifies the 3,900-Hz output oscillator of Q204.

(1) *Oscillator* Q204. Oscillator circuit Q204 begins generating noise when battery voltage is applied. Tuned tank circuit filter FL202 allows only the frequency to which it is tuned (3,900-Hz) to pass to the transistor base. Capacitor C212 couples the 3,900-Hz output to the base of audio amplifier Q205.

(a) Capacitor C211 is the coupling capacitor for the feedback loop. Resistor R219 reduces the amplitude of the feedback signal. Resistors R217 and R218 form a voltage divider t hat establishes the forward and reverse bias levels. Capacitor C210 bypasses resistor R218. Resistor R220 is the emitter swamping resistor.

(b) When the handset push-to-talk switch is pressed, battery voltage is applied through terminal 4 of component board A201. The TEL-RAD-RAD/SPKR switch must be in RAD or RAD/SPKR position.

(2) *Audio amplifier Q205.* Audio amplifier Q205 provides the output of the oscillator with a gain of approximately 35 dB. All parts of audio amplifier Q205, except R226, are functionally the same as their respective parts in audio amplifier Q202 (para. 1-13a.(2)). Resistors R226 and R221 forma signal voltage divider to reduce signal amplitude at the base of Q205. The 3,900-Hz output signal is connected to the primary (terminals 1 and 2) of T201 through terminal 1 of component board A201. The 3,900-Hz tone and audio signals are coupled to the secondary of T201 (terminals 5 and 6) to the LINE binding posts. Battery voltage is applied through terminal 3 of component board A201.

c. Audio Driver Q203. Audio driver Q203 amplifies the signals from the receiver section of the associated radio set by approximately 25 dB.

(1) Signals present at pin B of J204 are coupled by capacitor C208 to the base of audio driver Q203. Resistors R209, R210, and R213 establish the bias voltage for Q203. Capacitor C207 and resistor R209 provide alternating current (ac) decoupling for the battery voltage. Resistor R211 is the emitter swapping resistor bypassed by capacitor C209. Resistor R212 provides degenerative feedback.

(2) Output signals of audio driver Q203 are applied through pin E of J204 and P201 to terminals 1 and 2 of transformer T202. Battery voltage is applied to Q203 through pins F and D of P201 which mate with pins F and D of J204.

d. Power Amplifiers Q206 and Q207. Power amplifiers Q206 and Q207 are a push-pull amplifiers which provide sufficient power gain to drive loudspeaker LS201. The amplifiers operate only when the TEL-RAD-RAD/SPKR switch is in RAD/SPKR position. When the TEL-RAD-RAD/SPKR switch is in either the TEL or RAD position, battery voltage is removed from terminal 16 of component board A202, and a short circuit is placed across the voice coil of loudspeaker LS201.

(1) Output signals of audio driver Q203 (para. 1-13c.(1)) are devebped across the primary (terminals 1 and 2) of T202 and are induced into the secondary of T202 (terminals 5, 6, and 7). The output of Q206 is applied across one-half the primary of transformer T203 (terminals 1 and 2). The output of Q207 is applied across the other half of the primary of T203 (terminals 3 and 2). Output signals devebped across the full primary of T203 (terminals 1 and 3) are induced into its secondary (terminals 4 and 5) driving loudspeaker LS201.

(2) Battery voltage is applied to Q206 and 0207 through emitter swamping resistors R215 and R216. Diode CR202 and resistor R214 forma voltage divider which supplies a small forward bias. Diode CR202 also provides improved temperature stabilization.

e. Ringing Circuits. Buzzer DS201 is normally in the circuit to reproduce the 20-Hz voltage generated by the magneto in the local control unit. When the RINGER button is pressed, microswitch S203 disconnects buzzer DS201 (and in A-, B- and C- models, the visual signal call lamp circuit) and places magneto G201 on the line. Continued travel of the RINGER button shaft cranks the magneto to produce the 20-Hz voltage which causes a response in the local unit buzzer (and in A-, B- and C- models, the call lamp). The BUZZER VOLUME control mechanically controls the loudness of the buzzer.

NOTE

In the later A-, B- and C- models, a radio frequency (RF) filter assembly is connected in series with terminals of switch S203.

1-14. Battery Voltage Distribution, Remote Control Unit C-2328(*)/GRA-39

(figures FO-1 through FO-4)

The distribution of battery voltage depends on the position of the TEL-RAD-RAD/SPKR switch. The application for each function is traced in the following paragraphs a. through d. OFF-ON switch S201 is considered to be at ON throughout this discussion.

NOTE

The following discussion applies to all models of Control, Radio Set C-2328(*)/GRA-39, except where noted.

The application of the battery voltage is traced to a terminal of component board A201 or a pin of connector P201. The application from these points is covered in paragraph 1-13.

a. RAD Position. With the TEL-RAD-RAD/SPKR switch in RAD position, battery voltage is applied to audio driver Q203 during receive operation and to the preamplifier ((2201, Q202) and the tone generator (Q204, Q205) during transmit operation.

(1) Receive operation. The battery voltage is connected to pin D of P201 and contact 10 of switch S202B. Switch S202B (contacts 10 and 8) and relay K201 (terminals 4 and 3) connect the battery voltage to pin F of P201 .

(2) *Transmit operation.* The battery voltage is connected through switch S202B (contacts 10 and 8) to terminal 1 of relay K201. When the handset push-to-talk switch is pressed, a ground is applied through resistor R225 to terminal 5 of relay K201 and causes the relay to energize. Relay K201 (terminals 4 and 2) connects the voltage to terminal 4 of component board A201 to provide operating voltage for oscillator Q204. From terminals 4 and 2 of relay K201, voltage is applied through switch S202B (contacts 2 and 12) to terminal 3 of component board A201 to provide operating voltage for audio amplifier Q205 and pin J of P201 to provide operating voltage to the preamplifier (Q201 and Q202).

b. RAD/SPKR Position. With the TEL-RAD-RAD/SPKR switch in the RAD/SPKR position, battery voltage is applied to audio driver Q203 and power amplifiers Q206 and Q207 during receive operation, and to the preamplifier (C1201, Q202) and the tone generator (Q204, C1205) during transmit operation.

(1) Receive operation. The battery voltage is connected to pin D of P201 to provide operating voltage to audio driver Q203. Battery voltage is connected to pin F of P201 through switch S202B (contacts 10 and 9) and relay K201 (terminals 4 and 3) to provide operating voltage to audio driver Q203. Battery voltage for power amplifiers Q206 and Q207 is connected to terminal 16 of component board A201 through switch S202 (contacts 6 and 5).

NOTE

In this condition, contacts 9 and 10 of switch S202B connect terminal 5 of transformer T203 to capacitor C215 to apply an ac ground.

(2) *Transmit operation.* When the handset push-to-talk switch is pressed, ground is applied through resistor R225 to terminal 5 of relay K201 and causes the relay to energize. Battery voltage is connected through switch S202B (contacts 10 and 9) and relay K201 (terminals 4 and 2) to terminal 4 of component board A201 to provide operating voltage for oscillator Q204. Switch S202B (contacts 2 and 1) connects the battery voltage to terminal 3 of component board A201 to provide operating voltage for audio amplifier Q205, and to pin J of P201 to provide operating voltage for the preamplifier (Q201 and Q202).

c. TEL Position. With the TEL-RAD-RAD/SPKR switch in the TEL position, battery voltage is applied to the preamplifier (Q201, Q202) during both transmit and receive operation. The voltage is connected from the battery through switch S202B (contacts 10 and 7) to pin J of P201.

d. Battery Supply. The battery supply consists of six BA-30 D cells connected in series. Capacitor C215 is used for ac decoupling of the battery supply.

NOTE

in the A-, B- and C- models the call lamp circuit is connected directly to the battery supply side of switch S201.. (Refer to FO-2, FO-3 and FO-4, respectively.)

1- 15. Functioning of Local Control Unit C-2329(*)/GRA-39 (figures 1-5 and 1-6)

NOTE

The following discussion applies to all models of Control, Radio Set C-2329(*)/GRA-39, except where noted.

a. Telephone Operation Between Sites.

(1) Ringing. Signaling the operator at the remote site requires that the RINGER button be pressed and released rapidly several times; this action activates magneto G101 to generate a ringing signal. When the RINGER button is pressed, switch S103, which normally connects buzzer DS101 (and in A-, B- and C- models, a call lamp signal) to audio line transformer T101, is actuated to connect the magneto to T101. The ringing signal is coupled through T101, through the line to the remote site. Incoming ringing signals are coupled through T101 to activate buzzer DS101. In A-, B- and C- models, incoming ringing signals are also applied to the call lamp control relay to activate the call lamp visual signal. For operation of DS101, TEL-REMOTE-RADIO switch S102 may be in any position; however, it must be held at the TEL position for the operator at the remote site to hear the local operator's voice.

(2) *Telephone communication.* With the TEL-REMOTE-RADIO switch held in the TEL position, transmitted voice signals generated in the microphone of the H-138/U are amplified by audio amplifiers Q101 and Q102 in the preamplifier and are coupled through T101 through the line to the remote site. Incoming voice signals from the remote site are coupled by T101 to the H-138/U earpiece through switch S102.

b. Operation of Radio Set From Local Control Unit.

(1) *Transmitting.* With the TEL-REMOTE-RADIO switch held in the spring-loaded RADIO position (with the handset push-to-talk switch pressed), voice signals developed in the handset microphone are connected through switch S102, transformer T102, and filter FL104 to the radio set transmitter. Relay K101 is energized and, in turn, keys the radio set transmitter.

(2) *Receiving.* With the TEL-REMOTE-RADIO switch in REMOTE or held in the RADIO position, signals from the radio set are applied directly through switch S102 to the handset earpiece.

c. Operation of Radio Set From Remote Control Unit. With the TEL-REMOTE-RADIO switch in the REMOTE position, the local control unit couples the signals from the remote control unit to the radio set transmitter and the signals from the radio set receiver to the remote control unit.

(1) Transmitting. Voice and 3,900-Hz signals present at the LINE binding pests are coupled through T101 to filters FL101 and FL102, respectively. Filter FL102 is a series-tuned filter which passes only a 3,900-Hz signal. Filter FL101 is a parallel-tuned filter, which provides rejection to the 3,900-Hz signal and allows voice signals to pass. Filter FL102 applies the 3,900-Hz signal to resonant relay amplifier (Q103, Q104, and Q105). The 3,900-Hz signal is amplified, rectified, filtered, and provides a direct current (de) voltage output to energize relay K101. When relay K101 is energized, it applies a ground circuit in the radio set which causes the transmitter to be keyed. This condition allows voice signals from the remote control unit, present at filter FL101, to be applied through relay K101 to the attenuator. The attenuator reduces the strength of the voice signals approximately the same amount as they were amplified in the remote control unit preamplifier. Signals present at the output of the attenuator are then coupled through switch S102, transformer T102, and filter FL104 to the radio set transmitter. Filter FL104 provides further rejection to the 3,900-Hz tone signal.

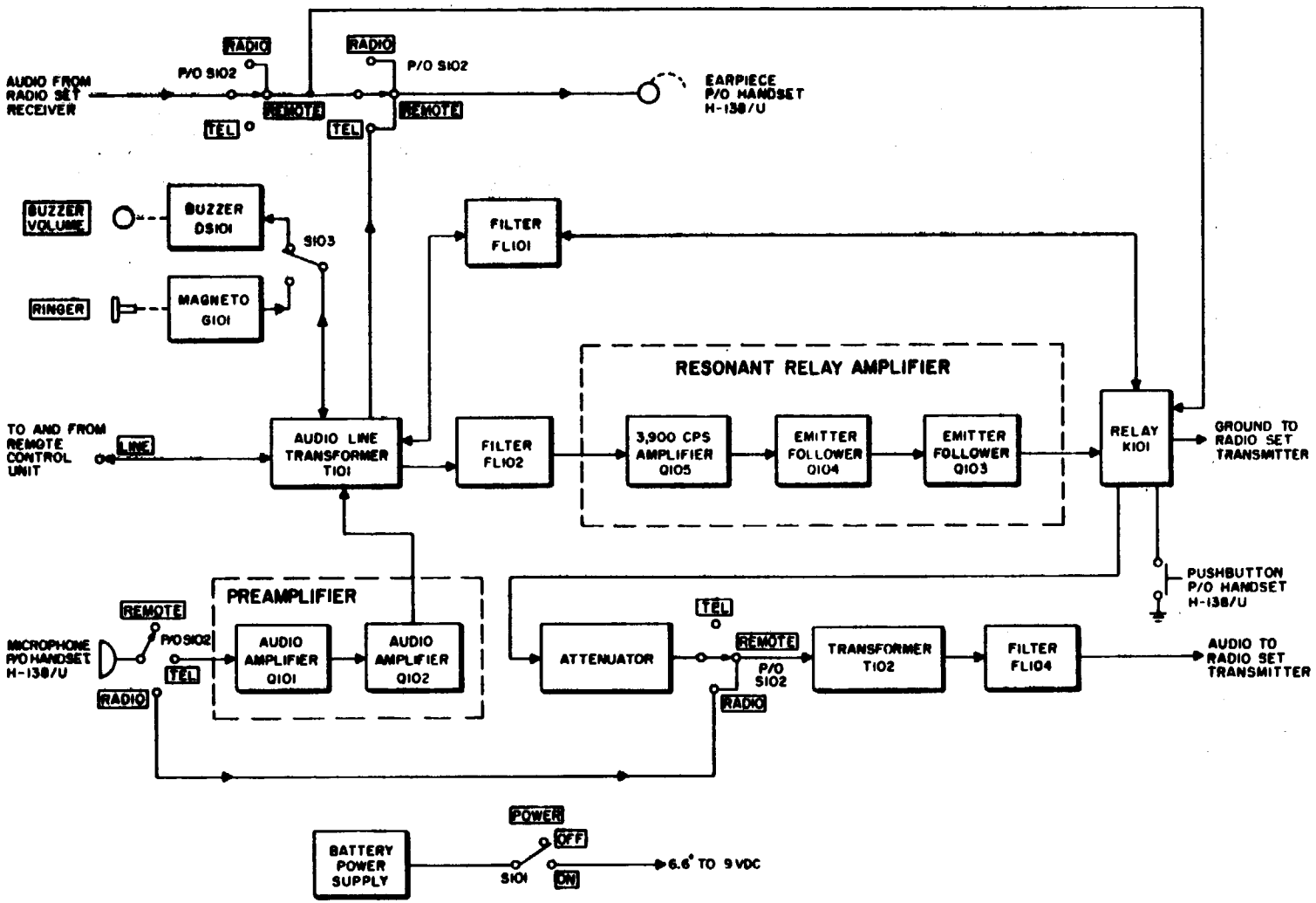

TM5820-477-35-5

Figure 1-5. Local Control Unit C-2329/GRA-39, Block Diagram.

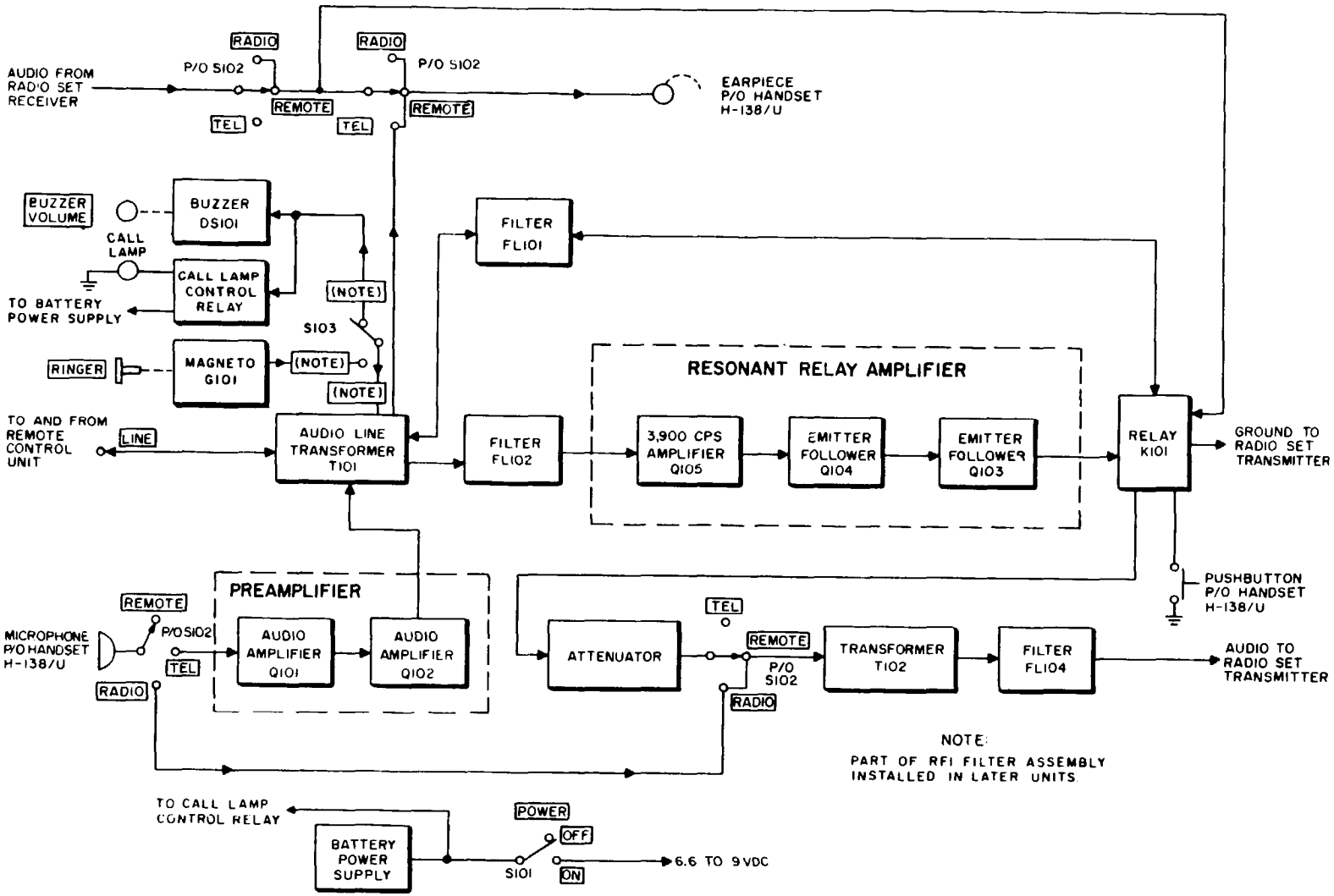

Figure 1-6. Local Control Units C-2329A/GRA-39, C-2329B/GRA-39 and C-2329C/GRA-39 (with Call Lamp), Block Diagram.

(2) *Receiving.* Signals from the radio set receiver are applied through switch S102, relay K101, filter FL101, and audio line transformer T101 to the LINE binding post. From here the signals are coupled to the remote control unit over the connecting field wire. Signals from the receiver are also applied through S102 to the local control unit operator's earpiece.

d. Sidetone. During telephone communication (para. 1-15a.(2)) or transmission of voice signals through the radio set (para 1-15b.(1)), a sidetone signal developed in the H-138/U microphone is applied to the H-138/U earpiece.

(1) *TEL* position. Voice signals developed in the H-138/U microphone are applied through the preamplifier (Q101 and Q102), T101, and S102 to the H-138/U earpiece.

(2) *RADIO position.* Voice signals developed in the H-138/U microphone are applied through S102,T102, and FL104 to the radio set. Sidetone developed in the radio set is applied through S101 to the H-138/U earpiece.

e. Power Supply. The chart below lists the circuits energized when the TEL-REMOTE-RADIO switch is in the position indicated.

S102 Position	Circuit Energized
REMOTE	Preamplifier (Q101, Q102).
	Resonant relay amplifier (0103, Q104, Q105).
RADIO	Relay K1O1.
TEL	Preamplifier (Q101, Q102).

I- I 6. Stage Analysis of Local Control Unit C-2329(*)/GRA-39 (figures FO-5 through FO-8)

NOTE

The following discussion applies to all models of Control, Radio Set C-2329(*)/GRA-39, except where noted.

Refer to schematic diagrams FO-5, FO-6 FO-7 and FO-8 for minor differences between models.

The setting of the TEL-REMOTE-RADIO switch determines the distribution of battery voltage to the stages in paragraphs a. through c. below. This action is described in paragraph 1-17.

a. Prearnplifier (0101 and Q102). The local control unit prearnplifier is functionally the same as the preamplifier (Q201, Q202) in the remote control unit. For explanation of the circuit and component functions, see paragraph 1-13a.

b. Resonant Relay Arnplifier (Q103, (Q104, and Q105). The resonant relay amplifier consists of 3,900-Hz amplifier Q105 and two emitter followers Q103 and Q104. Emitter followers 0103 and Q104 rectify the output of 3,900-Hz amplifier Q105.

(1) Signals present at the LINE binding posts (when the TEL-REMOTE-RADIO switch is in the REMOTE position) are coupled through the secondary of T101 (terminals 3 and 4) to terminal of filter FL102. Filter FL102 passes only the 3,900-Hz signal and rejects all other signals. From terminal 2 of filter FL102 the 3,900-Hz signal is applied to pins B of P102 and J104.

(2) The 3,900-Hz signal is coupled by capacitor Cl 10 to the base of 3,900-Hz amplifier Q105. Capacitor Cl 07 couples the output of Q105 to emitter follower Q104. Resistor R111 provides a termination for filter FL102. Resistors R108 and R110 form a voltage divider to establish the base-to-emitter forward bias for Q105. Battery voltage is applied to the emitter of Q105 through voltage-dropping resistor R112 and emitter swamping resistor R109. Capacitor Cl 08 bypasses resistor R112. Inductor L101 is the collector load for Q105. The 3,900-Hz amplifier, Q105, is selectively tuned by filter FL103. Filter FL103 peaks the 3,900-Hz signal.

(3) Emitter follower Q104 is directly coupled to emitter follower Q103. The base of Q103 is biased at the battery voltage through the low dc resistance of filter FL103. Battery voltage is applied to the emitter of Q104 through emitter swamping resistor R120. Capacitor Cl 09 integrates the output present at the emitter of Q103 and applies this dc voltage to pin E of J104. The dc voltage present at pin E of P102 is applied through switch S102, section A rear (contacts 6 and 8) to terminal 5 of relay K101.

(4) Battery voltage is applied to relay K101 (terminal 1) through switch S102, section B rear (contacts 12 and 10). With a 3,900-Hz signal present at the LINE binding posts, the negative-going dc output of the resonant relay amplifier tends to cause the voltage on terminal 5 of relay K101 to approach zero. The difference in potential on the coil of K101 causes it to energize. When K101 energizes, ground is applied throughK101 (contacts 8 and 6) and P101 (pin C) to a circuit in the radio set, which keys the transmitter.

(5) Operating voltage for the resonant relay amplifier is applied through pins D and F of P102 and J104.

c. Attenuator. The attenuator is a pad consisting of three L sections. Resistors R114 through R119 make up the attenuator and provide approximately 50-dB attenuation of the signal, which reduces it to the approximate level of a microphone output.

(1) The voice and 3,900-Hz signals present at the LINE binding posts are coupled through the secondary of T101 (terminals 3 and 4) to filter FL101 (terminal 2). Filter FL101 is a parallel-tuned filter which attenuates the 3,900-Hz signal. When relay K101 has been energized, the voice and attenuated 3,900-Hz signals at the output of FL101 (terminal 1) are applied through K101 (terminals 4 and 2) to the attenuator.

(2) Output signals of the attenuator, terminal 7, are applied through switch S102, section B rear (contacts 2 and 4) to the primary (terminals 1 and 2) of transformer T102. Transformer T102 provides ground isolation between the local control unit and the radio set. Signals induced in the secondary winding (terminals 3 and 4) of transformer T102 are applied through filter FL104 (terminals 2 and 1) and connector P101 (pin D) to the radio set. Filter FL104 further attenuates the 3,900-Hz signal.

d. Ringing Circuits. Magneto G101, buzzer DS101, microswitch S103, and the call lamp circuit are functionally the same as their respective components in the remote control unit. Refer to (para. 1-13e. for explanation of these components in the remote control unit.

1-17. Battery Voltage Distribution, Local Control Unit C-2329(*)/GRA-39 (figures FO-5 through FO-8)

NOTE

The following discussion applies to all models of Control, Radio Set C-2329(*)/GRA-39, except where noted.

In the A-, B- and C- models, the call lamp circuit is connected directly to the battery supply side of switch S101. (Refer to FO-6, FO-7 and FO-8, respectively.)

The distribution of the battery voltage depends on the position of the TEL-REMOTE-RADIO switch. The application for each function is traced in the following paragraphs a. through c. POWER switch S101 is considered to be at ON throughout this discussion.

NOTE

The application of the battery voltage is traced to a pin of connector P102. The application from these pins is discussed in paragraph 1-16.

a. REMOTE Position. With the TEL-REMOTE-RADIO switch in REMOTE position, battery voltage is applied through switch S102, section B rear (contacts 12 and 10) to terminal 1 of relay K101. Battery voltage is also applied to the resonant relay amplifier through contacts 8 and 6 of S102, section B rear to P102 (pin F) and, through filter FL103, to P102, pin D.

b. TEL Position. With the TEL-REMOTE-RADIO switch in TEL position, battery voltage is applied to the preamplifier through switch S102, section B rear (contacts 8 and 5) to PI 02, pin J.

c. *RADIO Position.* With the TEL-REMOTE-RADIO switch in RADIO position, battery voltage is applied through switch S102, section B rear (contacts 12 and 11) to terminal 1 of relay K101.

CHAPTER 2

DIRECT SUPPORT MAINTENANCE

Page

Section I. Repair Parts, Special Tools, TMDE and Support Equipment 2-1
Section II. Direct Support Troubleshooting. 2-2
Section III. Maintenance Procedures 2-19

OVERVIEW

The maintenance procedures in this chapter provide information for direct support personnel to inspect, troubleshoot or repair Radio Set Control Groups AN/GRA-39, AN/GRA-39A, AN/GRA-39B and AN/GRA-39C. This chapter also lists tools and test equipment required for direct support maintenance.

Troubleshooting procedures which begin with the operational and equipment performance checks in TM 11-5820-477-12, are carried to a higher category in this chapter.

The direct support maintenance procedures that follow, supplement procedures described in the operator's and organizational maintenance manual TM 11-5820-477-12.

Section I. REPAIR PARTS, SPECIAL TOOLS,TMDE AND SUPPORT EQUIPMENT

Para. Page

2-1 Tool and Test Equipment Requirements 2-1
2-2 Repair Parts 2-1

2-1. **Tool and Test Equipment Requirements**

For authorized test and diagnostic equipment, refer to the Maintenance Allocation Chart in the Operator's and Organizational Maintenance Manual TM 11-5820-477-12. No. special tools or support equipment are required for direct support maintenance of the AN/GRA-39(*).

2-2. **Repair Parts**

Designated repair parts are listed and illustrated in TM 11-5820-477-23P Repair Parts and Special Tools List for Control, Radio Set AN/GRA-39, AN/GRA-39A, AN/GRA-39B, and AN/GRA-39C.

Section II. DIRECT SUPPORT TROUBLESHOOTING

Para.		Page
2-3	General	2-2
2-4	Preliminary Procedures	2-3
2-5	Dc Resistance of Transformers and Coils	2-3
2-6	Remote Control Unit Troubleshooting	2-5
2-7	Local Control Unit Troubleshooting	2-12

2-3. General

The first step in troubleshooting is to trace the fault to a specific system or subsystem. The next step is to localize the fault to a particular assembly, such as a printed circuit card. The final step is to isolate the fault by tracing it to a defective component, such as a resistor, transformer or switch. Fault isolation is limited to those items which may be repaired or replaced at direct support level. This primarily includes replacement or repair (by component replacement) of the chassis assembly and panel assembly on each of the control units that make up the AN/GRA-39(*).

Some faults, such as burned-out resistors, arcing and shorted relay coils and transformer windings, can often be identified by sight, smell or hearing. Visual inspection is used to locate faults without testing or measuring circuits. Most faults, however, must be isolated by checking voltages and resistances. Dc resistance of transformers and coils (paragraph 2-5) will isolate a malfunction to a defective component on the chassis. The voltage measurements given in tables 2-1 and 2-2 provide the data needed to check operating voltages of specific major circuits.

The troubleshooting tables are designed to supplement the operational checks detailed in the equipment performance checklist in TM 11-5820-477-12. If previous operational checks have resulted in reference to a particular item on the troubleshooting table, go directly to the referenced item.

This section has two troubleshooting tables. Table 2-3 pertains to the remote control unit. Table 2-4 pertains to the local control unit. Each table lists the common malfunctions that may occur during operation and maintenance of the AN/GRA-39(*) and after unit maintenance has been performed. Each malfunction is followed by a list of tests or inspections and corrective actions. These test or inspections and corrective actions should be performed in the order listed. This manual cannot list all malfunctions that may occur. If you encounter a problem that is not listed or cannot be corrected by the listed corrective action, notify your supervisor.

Refer to the Maintenance Allocation Chart in the operator's and unit maintenance manual TM 11-5820-477-12 for a list of equipment required for direct support troubleshooting.

WARNING

Do not press RINGER button (of either the local or the remote unit) when touching line binding posts. Electrical shock may result.

CAUTION

When a corrective action entails component replacement, refer to the applicable maintenance paragraph, paying particular attention to all pertinent cautions and notes, before attempting replacement.

2-4. **preliminary Procedures (figure 2-1)**

Before troubleshooting can be performed, the control unit must be installed in a bench test setup. Refer to the operator's and unit maintenance manual, TM 11-5820-477-12, for bench test setup data. For component checks, perform the following:

a. Release the two front clamps and slide the remote or local control unit chassis out of its case.

b. Loosen four captive screws and remove component board A202 (remote control unit) or Al 02 (local control unit) from chassis.

c. Place on bench without disconnecting connector P201 from J204 (remote control unit) or P102 from J104 (local control unit).

cf. Upon completion of tests, replace component board and secure with four captive screws.

e. Slide chassis into its case, close the two front clamps.

2-5. **Dc Resistance of Transformers and Coils**

Dc resistance readings are made with components disconnected. Determine resistance between terminals as indicated in tables 2-1 and 2-2.

CAUTION

Do not make any resistance measurements on control units except as specified. Current in multimeter battery can destroy transistors. In some cases, 0.1 volt applied between base and emitter in reverse direction can destroy the transistor.

Table 2-1. Remote Control Unit Dc Resistance

Transformer or Coil	Terminals	Ohms
T201	1-2	80 ±10%
	3-4	60 ±10%
	5-6	70 ±10%
T202	1-2	125 ± 20%
	3-4	100 ± 20%
	5-6	75 ± 20%
	6-7	82 ± 20%
	5-7	50 ± 20%
T203	1-2	5 ±25%
	2-3	6 ±25%
	4-5	0.9 ±25%
FL201	1-2	2.75 ±10%
FL202	1-2	2.75 ±10%
K201	1-5	480 ±10%

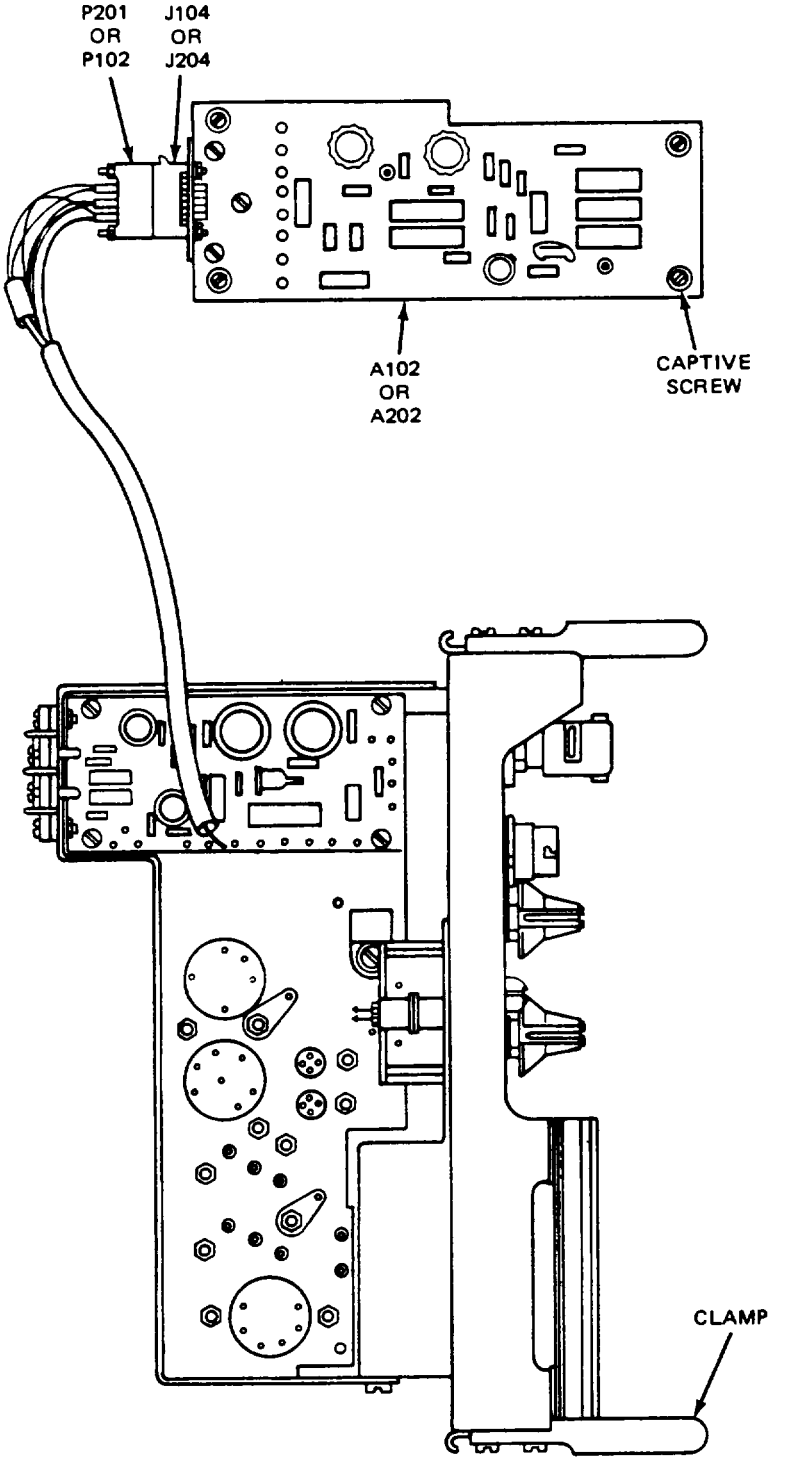

4859-02

Figure 2-1. Component Checks.

Table 2-2. Local Control Unit DC Resistance

Transformer or Coil	Terminals	Ohms
T101	1-2	80 ±10%
	3-4	60 ±10%
	5-6	70 ±10%
T102	1-2	25 ±10%
	3-4	56 ±10%
L101		500 ±25%
FL101	1-2	2.75 ±10%
FL103	1-2	2.75 ±10%
FL104	1-2	2.75 ±10%
K101	1-5	480 ±10%

2-6. **Remote Control Unit Troubleshooting**

Table 2-3 lists troubleshooting procedure for remote control unit C-2328(*)/GRA-39. (Refer to figure 2-2 for the locations of components identified in table 2-3.)

CAUTION

This equipment is transistorized. Observe all cautions given to prevent transistor damage.

NOTE

The information in table 2-3 applies to all models of the remote control unit, except where noted.

COMPONENT BOARD A201 VOLTAGE MEASUREMENTS

TERMINAL NO	1	2	3	4	5	6	7	8	9	10	11	12	13	14	15	16	17
TEL	1.2 8.4*	0	9	0	0	0	0	0	0	0	9	45 8.2*	0	0	0 8 *	0	0 7.8*
RAD	1.2 0*	5.4 0*	9 0*	8.8 0*	5.4 0*	5.4 0*	0	0	0	0	9	45 0*	.95 0*	0	0 9*	. 0	2.6 9 *
RAD/SPKR	1.2 0*	5.4 0*	9 0*	9 0*	5.4 0*	5.4 0*	0	0	0 8.8*	0	9	45 0*	0 9 *	0	0 9 *	0 9 *	2.6 9 *

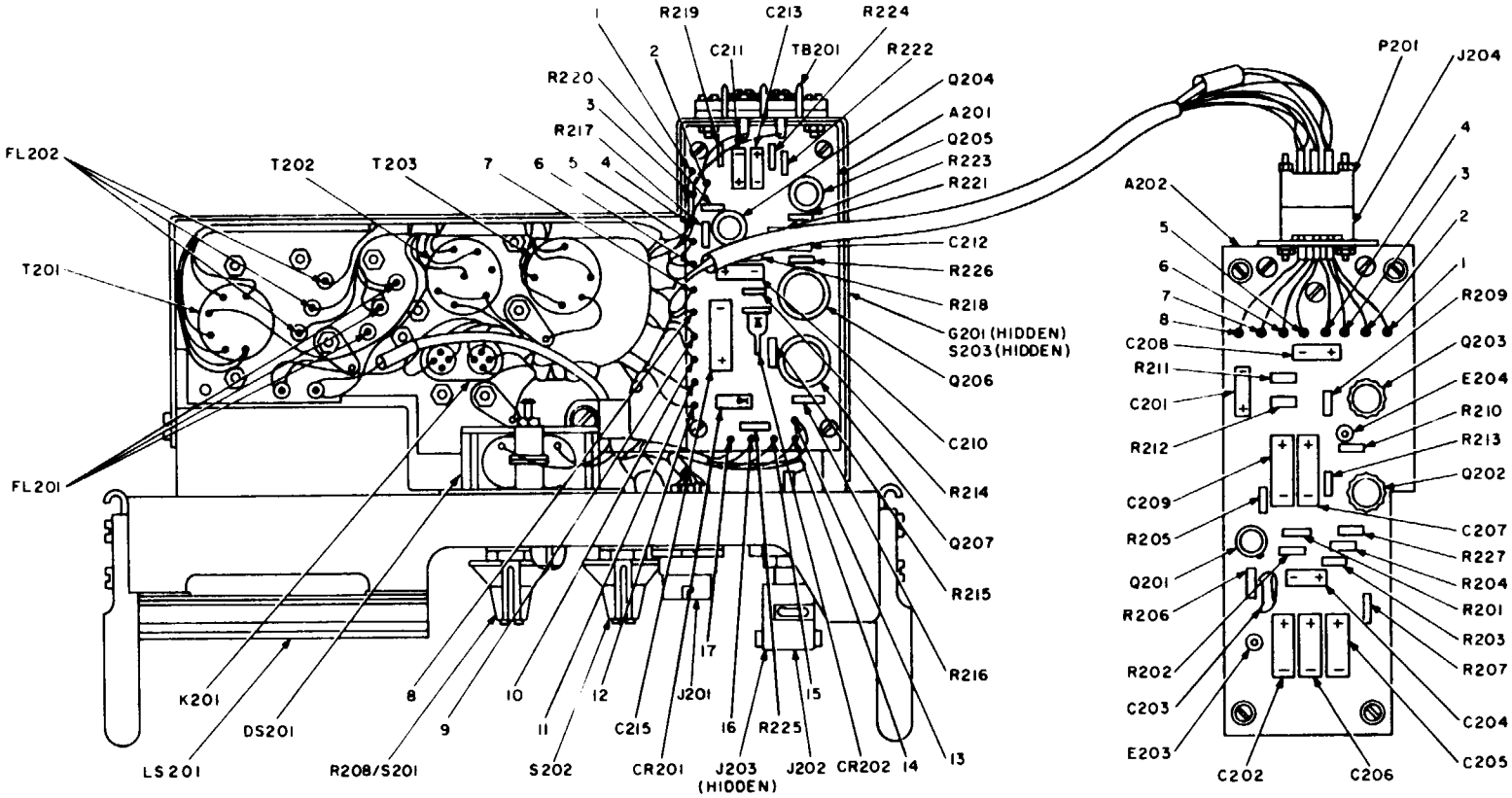

COMPONENT BOARD A202 VOLTAGE MEASUREMENTS

TERMINAL NO	1	2	3	4	5	6	7	8
TEL	1 2 8.4*	9.	0 .1*	9	0 7.4*	0	0	0
RAD	1.2 0*	9 0*	85 88*	9	8.7 9 *	0	0	0
RAD/SPKR	1 2 0*	9 0*	0 88*	9	0 7.2*	0	0	0

NOTES

1. SUPPLY VOLTAGE TO UNIT IS 9 VOLTS.
2. ALL MEASUREMENTS MADE WITH NO SIGNAL APPLIED.
3. LINE TERMINALS TO UNIT ARE OPEN.
4. MEASUREMENTS MADE WITH HANDSET PUSHBUTTON DEPRESSED UNLESS NOTED BY ASTERISK (*).
5. ALL MEASUREMENTS MADE TO CHASSIS GROUND.

A. C-2328(*)/GRA-39

4859-003.1

Figure 2-2. Remote Control Unit C-2328(*)/GRA-39 Component Location and Voltages (Sheet 1 of 3).

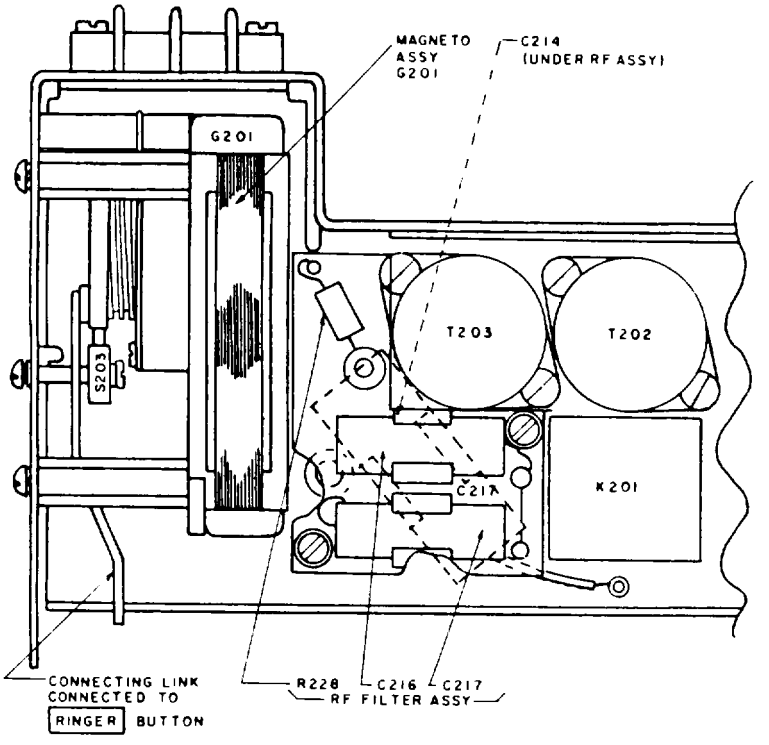

B. C-2328B/GRA-39

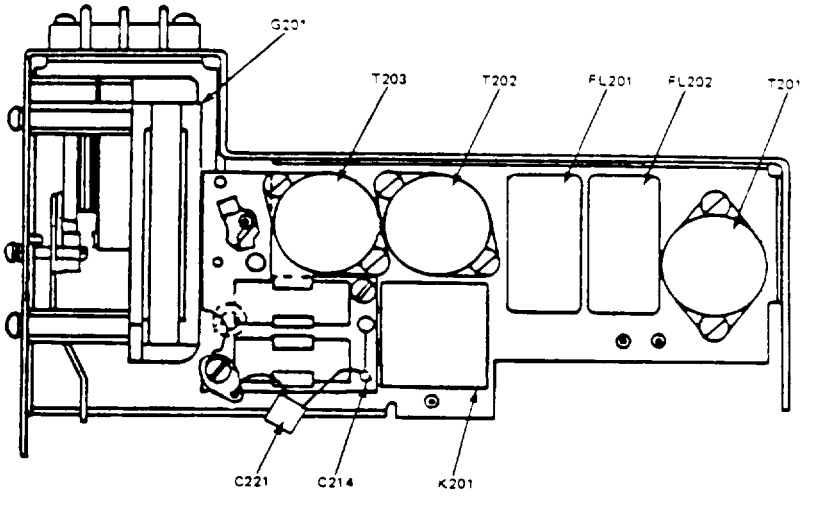

C. C-2328C/GRA-39

4859-003.2

Figure 2-2. Remote Control Unit C-2328(*)/GRA-39 Component Location and Voltages (Sheet 2 of 3).

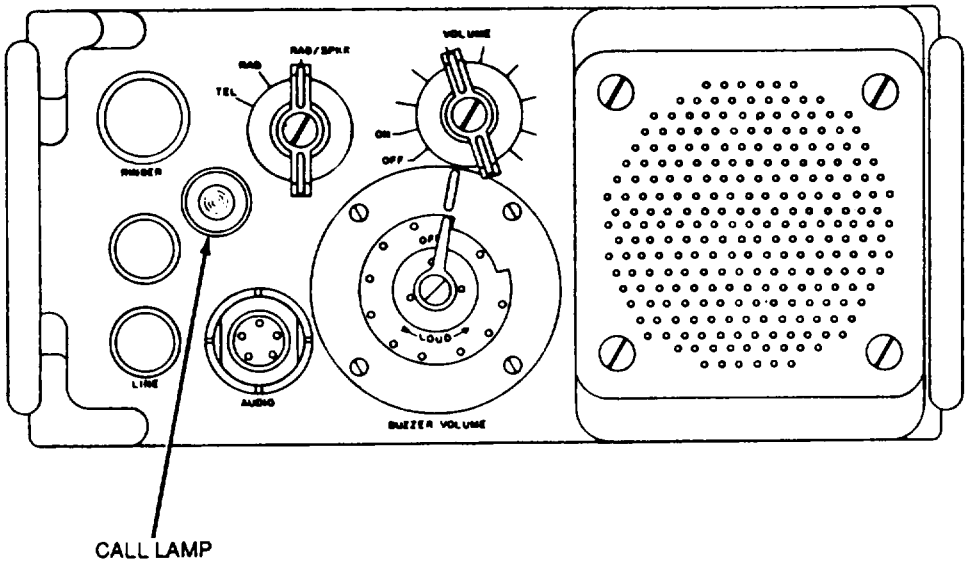

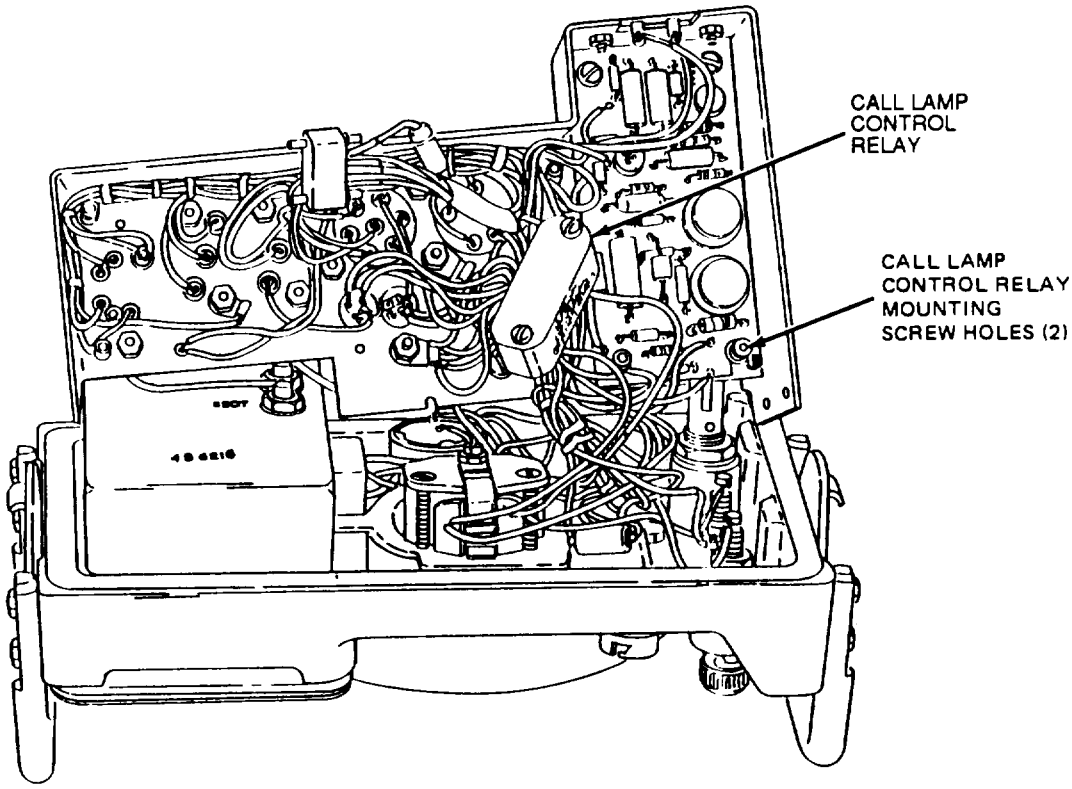

D. C-2328A/GRA-39, C-2328B/GRA-39 AND C-2328C/GRA-39

4059-403.3

Figure 2-2. Remote Control Unit C-2328(*)/GRA-39 Component Location and Voltages (Sheet 3 of 3).

Table 2-3. Troubleshooting, Remote Control Unit.

Malfunction Test or Inspection Corrective Action
1. NO RINGER SIGNAL OUTPUT.
Step 1. Check magneto G201 for output voltage. If output is inadequate, replace magneto (paragraph 2-9).
Step 2. Check capacitor C214. If defective, replace (paragraph 2-13).
Step 3. Check audio line transformer T201 by checking winding resistance between terminals 5 and 6 of transformer (paragraph 2-5). If defective, replace (paragraph 2-13).
Step 4. Check for proper mechanical functioning and continuity of microswitch S203. If defective, replace (paragraph 2-13).
2. BUZZER IS NOT ACTIVATED WHEN RINGER BUTTON ON LOCAL CONTROL UNIT IS PRESSED.
Step 1. Check capacitor C214. If defective, replace (paragraph 2-13).
Step 2. Check for proper mechanical functioning and continuity of microswitch S203. If defective, replace (paragraph 2-13).
3. CALL LAMP DOES NOT LIGHT WHEN RINGER BUTTON ON LOCAL CONTROL UNIT IS PRESSED (A -, B- AND C- MODELS ONLY).
Step 1. Check for defective lamp. If defective, replace (paragraph 2-14).
Step 2. Check for defective call lamp control relay by checking relay windings out of the circuit. Resistance between terminals 1 and 2 should be 5,000 ohms; resistance between terminals 3 and 4, should be infinite. If defective, replace (paragraph 2-12).
NOTE In A-, B- and C- models, ringing signals are applied through an RF filter assembly. Check the continuity of the RF filter (figures FO-2 through FO-4) if the call lamp or the buzzer of either control unit is not activated.
Step 3. Check for defective buzzer DS201. If defective, replace (paragraph 2-11).

Table 2-3. Troubleshooting, Remote Control Unit (rent).

Malfunction Test or Inspection	Corrective Action
4. NO OPERATION FOR ANY POSITION OF TEL-RAD-RAD/SPKR SWITCH.	
Step 1. Check switch S201 by checking for battery voltage at terminal 11 of component board A201 when switch S201 is in ON position.	If defective, replace switch (paragraph 2-13).
Step 2. Check for defective capacitor C215.	If defective, replace (paragraph 2-13).
Step 3. Check switch S202 for continuity of switch contacts for each position.	If defective, replace (paragraph 2-14).
5. TELEPHONE COMMUNICATION SIGNALS ARE RECEIVED BUT CANNOT BE TRANSMITTED TO LOCAL CONTROL UNIT.	
Step 1. Check for defective preamplifier (audio amplifier Q201 and Q202) by checking for signal voltage at terminal 2 of component board A202.	If defective, replace Q201 and/or Q202 (paragraph 2-13).
Step 2. Check connectors P201 and J204 for continuity (pins A, C, H, J).	Replace defective connector(s) (paragraph 2-1 3).
Step 3. Check for defective switch S202. Check continuity of switch contacts 7 and 10.	If defective, replace (paragraph 2-14).
Step 4. Check audio line transformer T201 by checking winding resistance between terminals 1 and 2 of transformer (paragraph 2-5).	If defective, replace (paragraph 2-13).
Step 5. Check for defective AUDIO connector J201 by checking continuity of connector (all pins).	If defective, replace (paragraph 2-14).
6. TELEPHONE COMMUNICATIONS ARE SENT OUT BUT NOT RECEIVED BY REMOTE CONTROL UNIT.	
Step 1. Check audio line transformer T201 by checking winding resistance between terminals 3 and 4 of transformer (paragraph 2-5).	If defective, replace (paragraph 2-13).
Step 2. Check for defective switch S202 by checking continuity of switch (section A, contacts 4, 1,9, 12).	If defective, replace (paragraph 2-14).

Table 2-3. Troubleshooting, Remote Control Unit (cont).

Malfunction Test or Inspection Corrective Action
7. RADIO SET SIGNALS ARE NOT RECEIVED BY REMOTE CONTROL UNIT HANDSET EARPIECE.
Step 1. Check for defective audio line transformer T201 by checking resistance of all transformer windings (paragraph 2-5). If defective, replace transformer T201 (paragraph 2-13).
Step 2. Check for defective capacitor C214. If defective, replace (paragraph 2-13).
Step 3. Check for defective switch S202 by checking continuity of switch (section A, contacts 4, 2, 3, and 12,10,11). If defective, replace (paragraph 2-14).
Step 4. Check for defective filter FL201 by checking resistance of filter (paragraph 2-5). If defective, replace (paragraph 2-13).
Step 5. Check for defective VOLUME control potentiometer to determine if it is open. If defective, replace (paragraph 2-14).
Step 6. Check for defective connector P201 or J204 by checking continuity between connectors (pins B, D, F, E). Replace defective connector (paragraph 2-13).
Step 7. Check for defective audio driver Q203 by checking for presence of operating voltage at terminals 6 and 4 of component board A202. If defective, replace (paragraph 2-13).
Step 8. Check for defective transformer T202 by making resistance measurements of transformer (paragraph 2-5). If defective, replace (paragraph 2-13).
Step 9. Check for defective relay K201, by checking continuity of relay (terminals 7 and 8). If defective, replace (paragraph 2-13).
8. RADIO SET SIGNALS ARE NOT RECEIVED BY REMOTE CONTROL UNIT INTERNAL LOUDSPEAKER.
Step 1. Perform all tests/inspections listed in malfunction 6.
Step 2. Check for defective transformer T202 by making resistance measurements between terminals 5, 6 and 7 of transformer (paragraph 2-5). If defective, replace (paragraph 2-13).

Table 2-3. Remote Control Unit Troubleshooting (cont).

Malfunction Test or Inspection Corrective Action
8. RADIO SET SIGNALS ARE NOT RECEIVED BY REMOTE CONTROL UNIT INTERNAL LOUDSPEAKER (cont).
Step 3. Check for defective power amplifiers Q206 and Q207 by checking for presence of operating voltage at terminal 16 of component board A201. If defective, replace Q206 and/or Q207 (paragraph 2-13).
Step 4. Check for defective transformer T203 by checking resistance of transformer windings (paragraph 2-5). If defective, replace (paragraph 2-13).
Step *5.* Check for defective loudspeaker by checking continuity of loudspeaker voice coil. If defective, replace loudspeaker (paragraph 2-14).
Step 6. Check for defective switch S202 by checking continuity of switch (section B, contacts 10 and 8). If defective, replace (paragraph 2-14).
Step 7. Check for defective relay K201 by checking continuity of relay (contacts 1,4 and 2). If defective, replace (paragraph 2-13).
9. RADIO SET TRANSMITTER IS NOT ENERGIZED BY REMOTE CONTROL UNIT.
Step 1. Check for defective oscillator Q204 by checking for presence of operating voltage at terminal 4 of component board A201. If defective, replace oscillator (paragraph 2-13).
Step 2. Check for defective audio amplifier Q205 by checking for presence of operating voltage at terminal 3 of component board A201. If defective, replace audio amplifier (paragraph 2-13).
Step 3. Check for defective audio line transformer T201 by checking resistance of transformer windings (paragraph 2-5). If defective, replace (paragraph 2-13).
Step 4. Check for defective capacitor C214. If defective, replace (paragraph 2-13).

2-7. **Local Control Unit Troubleshooting**

Table 2-4 lists troubleshooting procedures for local control unit C-2329(*)/GRA-39. (Refer to figure 2-3 for the locations of components identified in table 2-4.)

COMPONENT BOARD A101 VOLTAGE MEASUREMENTS

TERMINAL NO	1	2	3	4	5	6	7	8
TEL	0	.03 9 *	0	.03 9 *	9	0	0	0
REMOTE	0	0	0	0	9	0	0	0
RADIO	0	0 9 *	0	26 9 *	84 9 *	0	0	0

COMPONENT BOARD A102 VOLTAGE MEASUREMENTS

TERMINAL NO	1	2	3	4	5	6	7	8
TEL	6 9 *	9	.03	0	.02	0	0	0
REMOTE	0	0	9	9	9	0	0	.2
RADIO	0	0	0	0	0	0	0	1.3

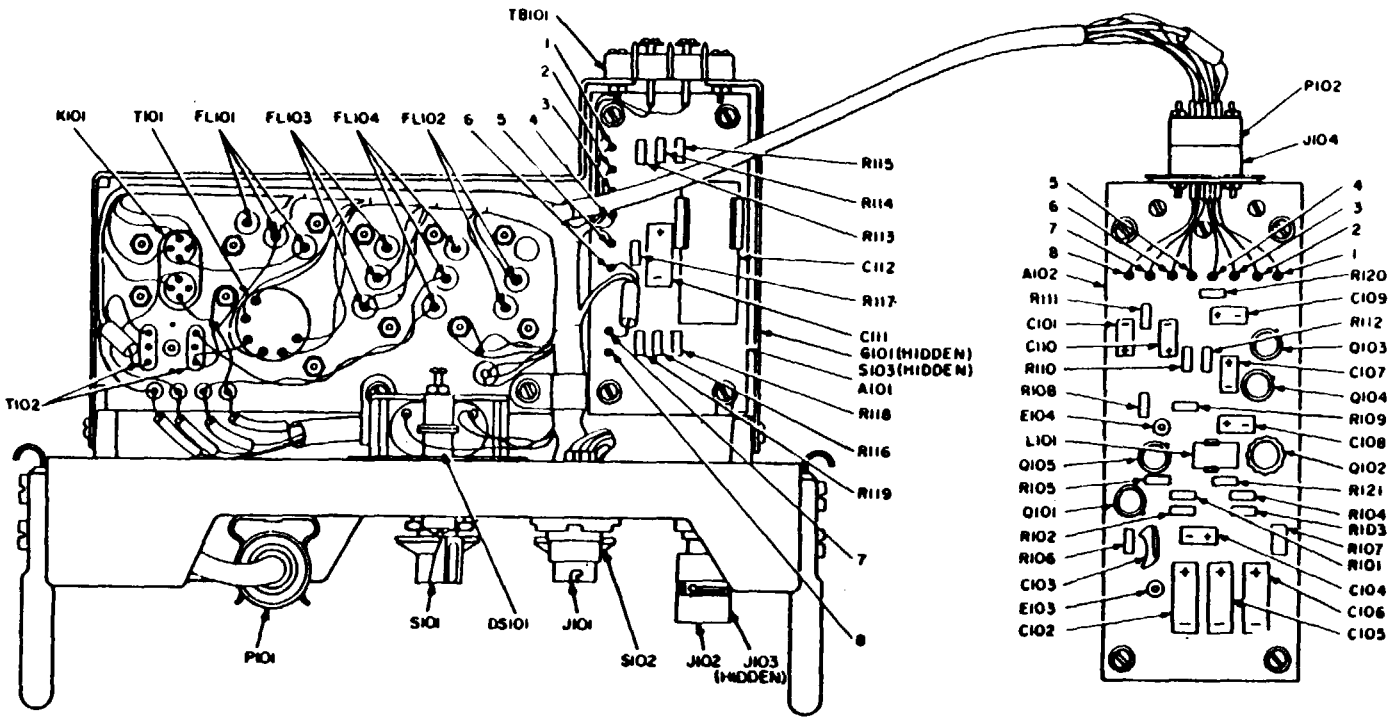

NOTES:

1. SUPPLY VOLTAGE TO UNIT IS 9.0 VOLTS.
2. ALL MEASUREMENTS MADE WITH NO SIGNAL APPLIED
3. LINE TERMINALS ON UNIT ARE OPEN.
4. MEASUREMENTS MADE WITH HANDSET PUSHBUTTON DEPRESSED UNLESS NOTED WITH ASTERISK (*).
5. ALL MEASUREMENTS MADE TO CHASSIS GROUND.

Figure 2-3. Local Control Unit C-2329(*)/GRA-39 Component Location and Voltages (Sheet 1 of 2).

4859-004.1

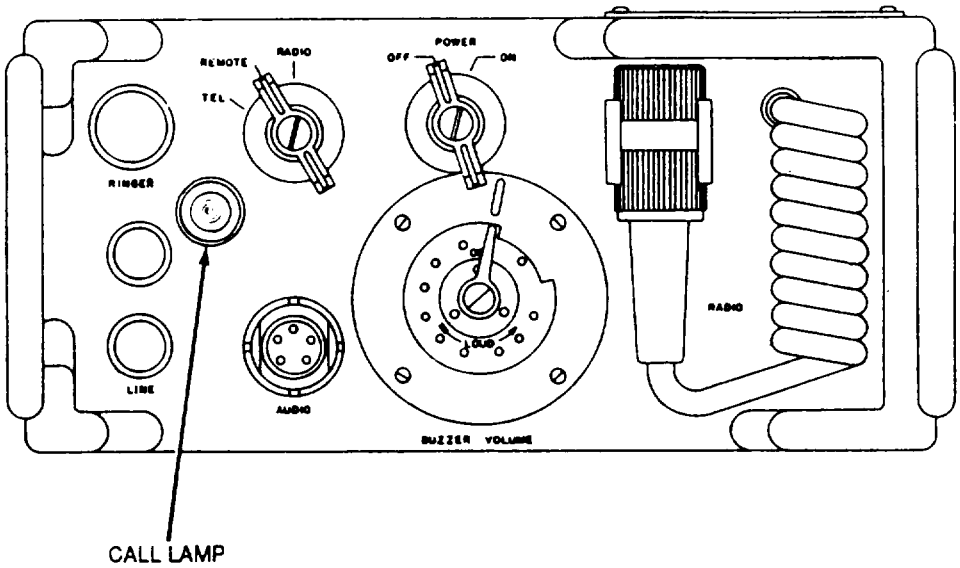

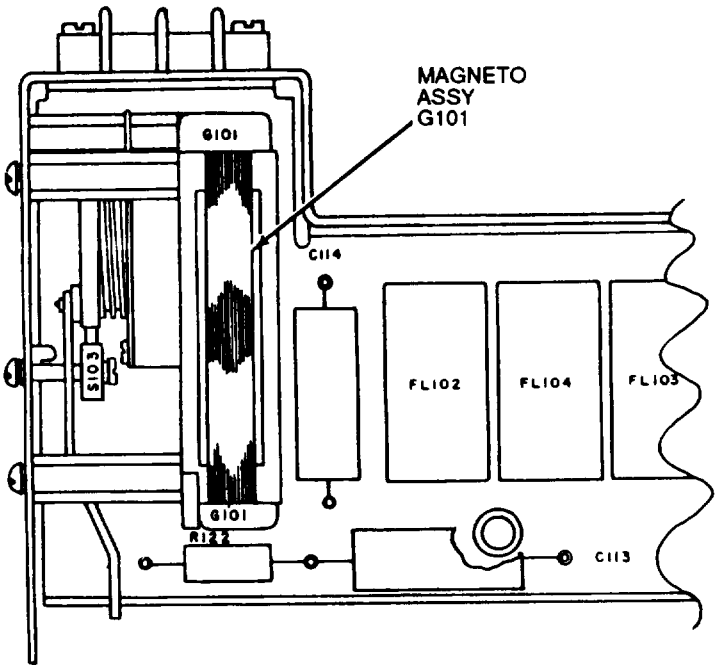

4859-004.2

Figure 2-3. Local Control Unit C-2329(*)/GRA-39 Component Location and Voltages (Sheet 2 of 2).

NOTE

The information in table 2-4 applies to all models of the local control unit, exc
noted.

Table 2-4. Troubleshooting, Local Control Unit.

Malfunction Test or Inspection Corrective Action
1. NO RINGER SIGNAL OUTPUT.
Step 1. Check magneto G101 for output voltage. If output is inadequate, replace magneto (paragraph 2-9).
Step 2. Check capacitor C112. If defective, replace (paragraph 2-13).
Step 3. Check audio line transformer T101 by checking winding resistance between terminals 5 and 6 of transformer (paragraph 2-5). If defective, replace (paragraph 2-13).
Step 4. Check for proper mechanical functioning and continuity of microswitch S103. If defective, replace (paragraph 2-13).
2. BUZZER IS NOT ACTIVATED WHEN RINGER BUTTON ON REMOTE CONTROL UNIT
Step 1. Check capacitor C112. If defective, replace (paragraph 2-13).
Step 2. Check for proper mechanical functioning and continuity of microswitch S103. If defective, replace (paragraph 2-13).
3. CALL LAMP DOES NOT LIGHT WHEN RINGER BUTTON ON REMOTE CONTROL UN (A-, B- AND C- MODELS ONLY).
Step 1. Check for defective lamp. If defective, replace (paragraph 2-14).
Step 2. Check for defective call lamp control relay by checking relay windings out of the Resistance between terminals 1 and 2 should be 5,000 ohms; resistance betwee and 4 should be infinite. If defective, replace (paragraph 2-12).

Table 2-4. Troubleshooting, Local Control Unit (cent).

Malfunction
Test or Inspection
Corrective Action

NOTE

In later units of the A-, B- and C- models, ringing signals are applied through an RF filter assembly. Check the continuity of the RF filter (figures FO-6 through FO-8) if the call lamp or the buzzer of either control unit is not activated.

4. NO OPERATION FOR ANY POSITION OF TEL-REMOTE-RADIO SWITCH.

Step 1. Check switch S101 by checking for battery voltage at contact 5 when switch is in ON position.
If defective, replace (paragraph 2-14).

Step 2. Check capacitor C111.
If defective, replace (paragraph 2-13).

Step 3. Check switch S102 for continuity of switch contacts for each position.
If defective, replace (paragraph 2-14).

5. TELEPHONE COMMUNICATIONS ARE RECEIVED, BUT NOT SENT OUT TO REMOTE CONTROL UNIT.

Step 1. Check for defective preamplifier (audio amplifiers Q101 and Q102) by checking for battery voltage at terminal 2 of component board A102.
If defective, replace Q101 and/or Q102 (paragraph 2-13).

Step 2. Check connectors P102 and J104 for continuity (pins A, C, H, J).
Replace defective connector(s) (paragraph 2-13).

Step 3. Check for defective switch S102. Check continuity of switch (section A front, contacts 3 and 11, section B front, contacts 8 and 5).
If defective, replace (paragraph 2-14).

Step 4. Check audio line transformer T101 by checking winding resistance between terminals 1 and 2 of transformer (paragraph 2-5).
If defective, replace (paragraph 2-13).

Step 5. Check for defective AUDIO connector J101 by checking continuity of connector (pins A, C, D).
If defective, replace (paragraph 2-14).

6. TELEPHONE COMMUNICATIONS ARE SENT OUT BUT NOT RECEIVED BY LOCAL CONTROL UNIT.

Step 1. Check audio line transformer T101 by checking winding resistance between terminals 3 and 4 of transformer (paragraph 2-5).
If defective, replace (paragraph 2-13).

Table 2-4. Troubleshooting, Local Control Unit (cent).

Malfunction Test or Inspection Corrective Action
6. TELEPHONE COMMUNICATIONS ARE SENT OUT BUT NOT RECEIVED BY LOCAL CONTROL UNIT (cent)
Step 2. Check for defective switch S102 by checking continuity of switch (section A rear, contacts 4 and 1). If defective, replace (paragraph 2-14).
7. RADIO SET TRANSMITTER IS NOT ENERGIZED BY LOCAL CONTROL UNIT.
Step 1. Check for defective relay K101 by checking for presence of battery voltage at contact 1. a. If battery voltage is present, set TEL-REMOTE-RADIO switch to RADIO. b. Press handset push-to-talk switch and check for continuity between pin C of RADIO connector P101 and ground.
Step 2. Check for defective switch S102 by checking continuity of switch (section A rear, contacts 6 and 8 and section B rear, contacts 10 and 12). If defective, replace (paragraph 2-14).
Step 3. Check for defective RADIO connector P101 by checking continuity of all pins. If defective, replace (paragraph 2-14).
8. RADIO SET TRANSMITTER IS NOT ENERGIZED BY REMOTE CONTROL UNIT.
Step 1. Check for defective relay K101 using procedure in malfunction 7, step 1. If defective, replace (paragraph 2-13).
Step 2. Check for defective resonant relay amplifier by checking for presence of operating voltage at terminals 3, 4, and 5 of component board A102. If defective, replace amplifier (paragraph 2-13).
Step 3. Check for defective connectors P102 and J104 by checking continuity of connectors (pins A, D, E, or F). Replace defective connector(s) (paragraph 2-13).
9. RADIO SET TRANSMITTER IS ENERGIZED BY LOCAL CONTROL UNIT BUT SIGNALS ARE NOT TRANSMITTED.
Step 1. Check for defective filter FL101 by checking resistance of filter (paragraph 2-5). If defective, replace (paragraph 2-13).
Step 2. Check for defective switch S102 by checking continuity of switch S102 (section A front, contacts 11 and 5 and section B rear, contacts 3 and 4). If defective, replace (paragraph 2-14).

Table 2-4. Troubleshooting, Local Control Unit (cent).

Malfunction Test or Inspection Corrective Action
9. RADIO SET TRANSMITTER IS ENERGIZED BY LOCAL CONTROL UNIT BUT SIGNALS ARE NOT TRANSMITTED (cent).
Step 3. Check for defective transformer T102 by checking resistance of all transformer windings paragraph 2-5). If defective, replace (paragraph 2-13).
Step 4. Check for defective filter FL104 by checking resistance of filter (paragraph 2-5). If defective, replace (paragraph 2-13).
Step 5. Check for defective connector PI 01 by checking continuity of connector (pin D). If defective, replace (paragraph 2-14).
10. RADIO SET TRANSMITTER IS ENERGIZED BY REMOTE CONTROL UNIT BUT SIGNALS ARE NOT TRANSMITTED.
Step 1. Check for defective filter FL101 by checking resistance of filter (paragraph 2-5). If defective, replace (paragraph 2-13).
Step 2. Check for defective relay K101 by checking continuity of relay (terminals 4 and 2). If defective, replace (paragraph 2-13).
Step 3. Check for defective attenuator by checking for open resistor R114, R115, R116, R117, R118 or R119. Replace defective resistor(s) (paragraph 2-13).
Step 4. Check for defective switch S102 by checking continuity of switch (section B rear, contacts 2 and 4). If defective, replace (paragraph 2-14).
Step 5. Check for defective Transformer T102 by checking resistance of all transformer windings (paragraph 2-5). If defective, replace (paragraph 2-13).
Step 6. Check for defective filter FL104 by checking resistance of filter (paragraph 2-5). If defective, replace (paragraph 2-13).
Step 7. Check for defective RADIO connector P101 by checking continuity of connector (pin D). If defective, replace (paragraph 2-14).

Section III. MAINTENANCE PROCEDURES

Para.		Page
2-8	General	2-19
2-9	Magneto G101 or G201	2-20
2-10	RF Filter Assembly	2-24
2-11	Buzzer Assembly DS101 or DS201	2-28
2-12	Call Lamp Control Relay (A-B-and C- Models)	2-32
2-13	Chassis Components	2-34
2-14	Panel Components	2-40
2-15	Retractable Battery Cable	2-44
2-16	Front and Rear Clamping Catch.	2-46
2-17	Error in Applying MWO 11-5820-477-30/1	2-47

2-8. General Maintenance procedures described in this section apply to all four models of the Radio Set Control Group covered by this manual, except where noted. All procedures require tool kit TK-105/G. This tool kit includes a soldering iron. During procedures requiring soldering and unsoldering, be sure to use the soldering iron in the kit. Do not use a soldering gun or a soldering iron with a capacity in excess of 25 watts, since use of either of these can damage equipment components.

2-9. Magneto G101 or G201

This task covers: a. Removal b. Installation

INITIAL SETUP

Tools

Tool Kit, Electronic Equipment TK-105/G

NOTE

Magneto G101 is located on local control unit. Magneto G201 is located on remote control unit. Removal, inspection and installation procedures are the same for both.

a. Removal (fgures 2-4 and 2-5)

(1) Release clamp on each side of control unit and slide chassis out of case.

(2) Press RINGER button fully and hold cam so that if cannot move.

(3) Pull RINGER button forward until it is disengaged from connector link (1).

(4) Remove four panhead screws (2) and four lockwashers (3) attaching magneto (4) to chassis.

CAUTION

Do not use a soldering gun; damaging voltages can be induced in the components. Use a pencil-type soldering iron with 25 watt maximum capacity. Both control units are transistorized. If only at-operated iron is available, use an isolating transformer.

NOTE

When removing soldered leads, tag each lead as it is unsoldered from its terminal to facilitate reconnection.

(5) Tag and unsolder wires connected to magneto (4).

(6) Remove magneto (4).

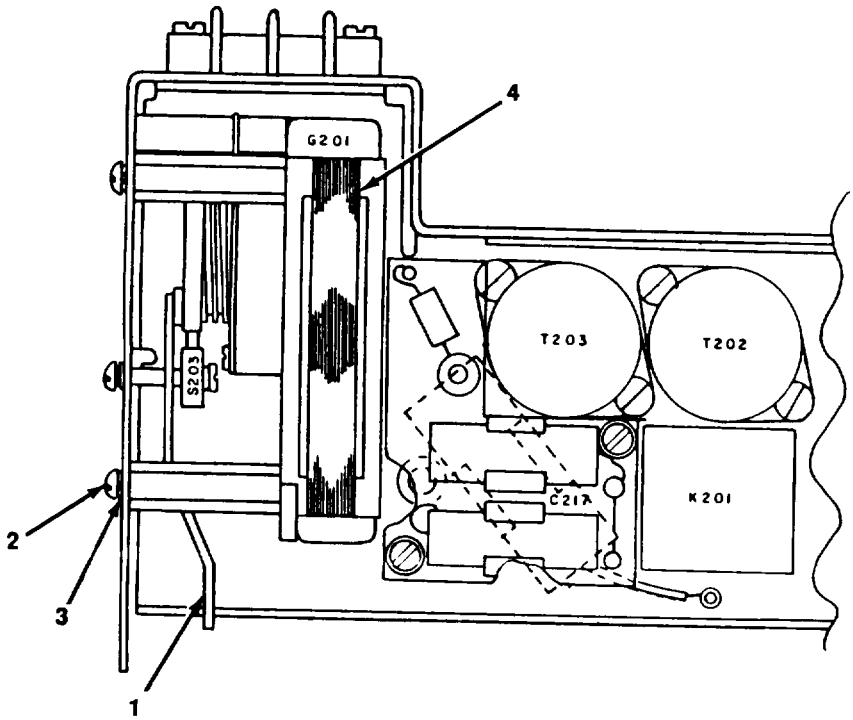

4859-005

Figure 2-4. Magneto G201 (Remote Control Unit) Replacement.

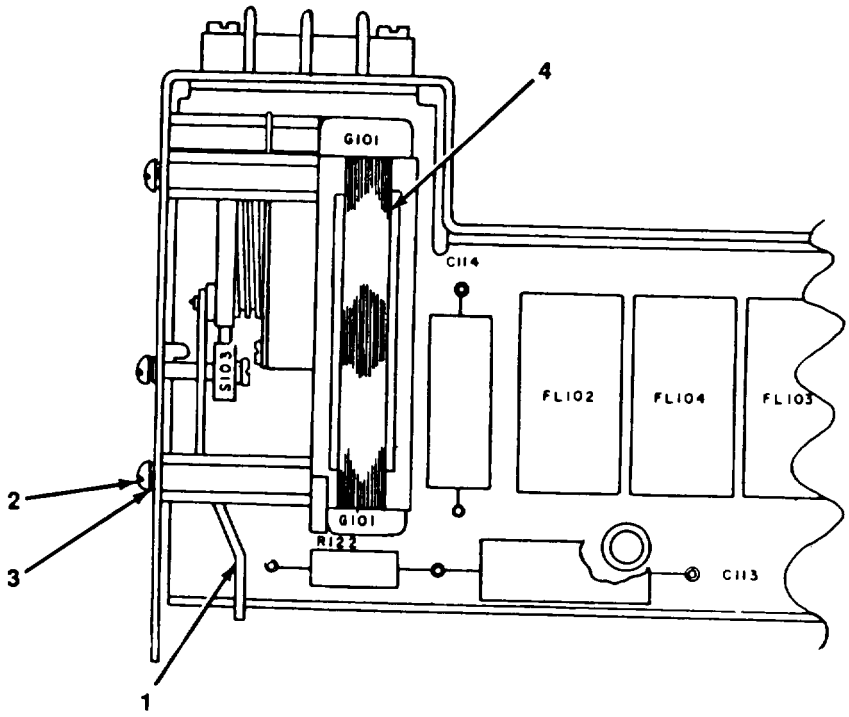

48590-006

Figure 2-5. Magneto G101 (Local Control Unit) Replacement.

2-9. Magneto G101 or G201 (cont)

b. Installation. (figures 2-4 and 2-5)

(1) Position magneto (4) in chassis.

CAUTION

Do not use a soldering gun; damaging voltages can be induced in the components. Use a pencil-type soldering iron with a 25-watt maximum capacity, If only at-operated iron is available, use an isolating transformer.

(2) Solder tagged wires to proper terminals on magneto (4).

(3) Fasten magneto (4) to unit with four panhead screws (2) and four lockwashers (3).

(4) Pull RINGER button forward and engage slot in connecting link (1) in baron ringer button.

(5) Slide control unit chassis into case and secure with clamps.

2-10. **RF Filter Assembly (A-, B- and C- Models Only)**

This task covers: Replacement

INITIAL SETUP

Tools

Tool Kit, Electronic Equipment TK-105/G

Replacement. (figures 2-6 and 2-7)

CAUTION

Do not use a soldering gun. Damaging voltages can be induced in the components. Use a pencil-type soldering iron with 25-watt maximum capacity. Both control units are transistorized. If only an at-operated iron is available, use an isolating transformer.

NOTE

When removing soldered leads, tag each lead for identification as it is unsoldered from its terminal to facilitate reconnection.

The specific components that comprise the RF filter assembly vary depending on the particular control unit (local or remote) and model. The procedures described in this paragraph are typical for all units and models.

The C-2328A/GRA-39 and C-2329A/GRA-39 (comprising the AN/GRA-39A) have sealed RF filter assemblies consisting of unspecified components that cannot be replaced individually. if a fault is detected, the entire sealed unit must be replaced.

(1) Release clamp on each side of control unit and slide chassis out of case.

(2) Tag and unsolder wires connected to RF filter assembly components (1) and remove components from chassis (2).

(3) Position new RF filter assembly components (1) on chassis (2) and solder tagged wires to proper terminals on RF components.

(4) Slide chassis into case and secure with clamps.

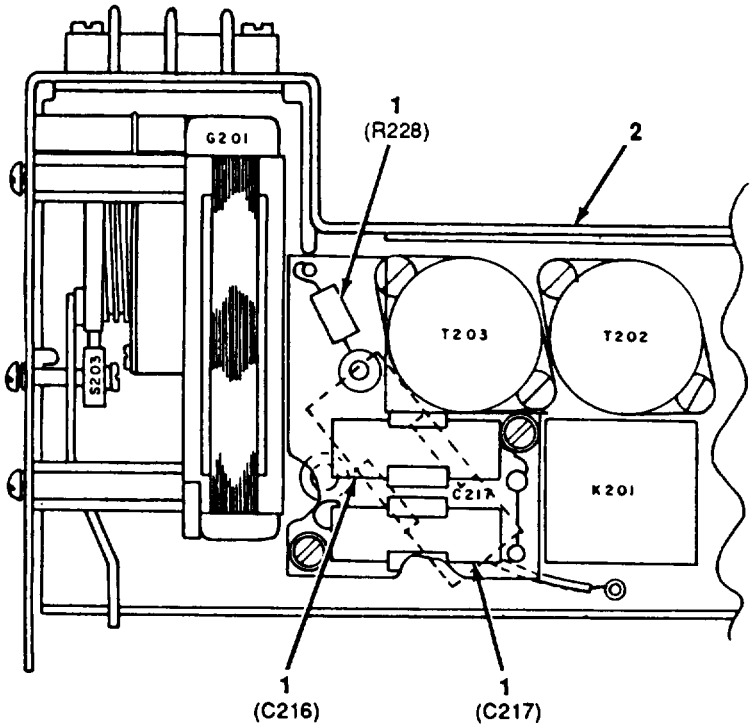

A. REMOTE CONTROL UNIT

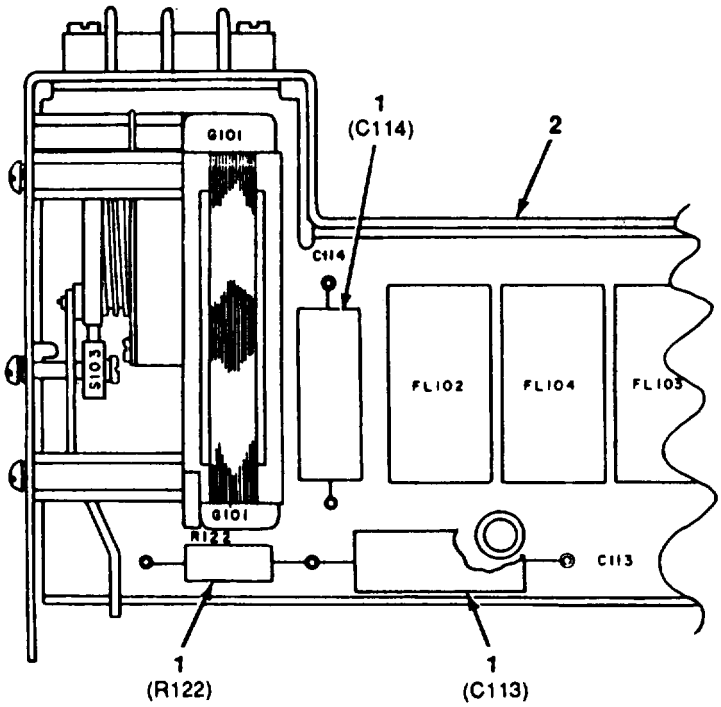

B. LOCAL CONTROL UNIT

Figure 2-6. RF Filter Assembly Components, C-2328B\GRA-39 and C-2329BIGRA-39.

2-10. **RF Filter Assembly (A-, B- and C- Models Only) (cont)**

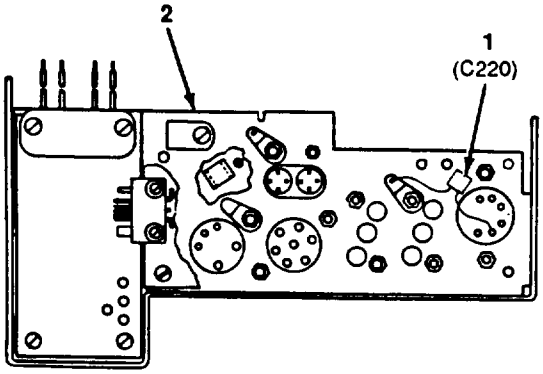

TOP VIEW

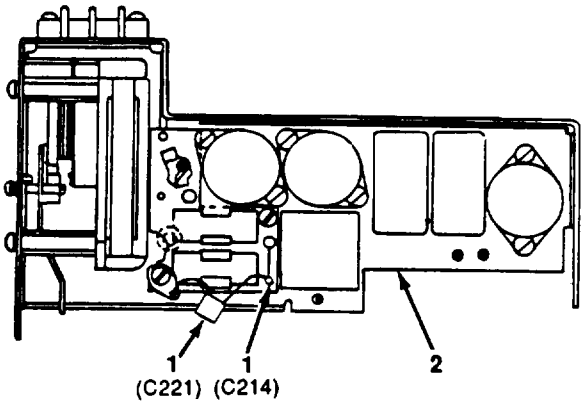

BOTTOM VIEW

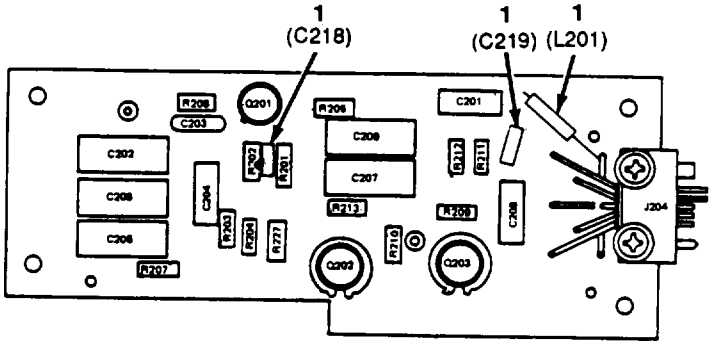

PRINTED CIRCUIT BOARD A202

A. REMOTE CONTROL UNIT

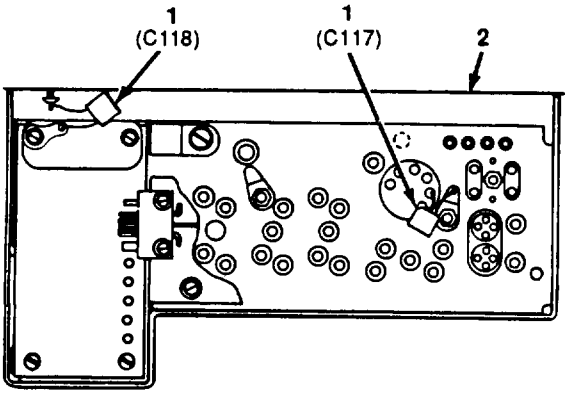

BOTTOM VIEW

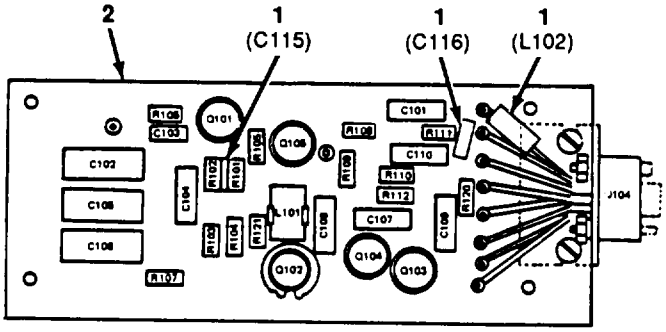

PRINTED CIRCUIT BOARD A102

B. LOCAL CONTROL UNIT

4859-008

Figure 2-7. RF Filter Assembly Components, C-2328C/GRA-39 and C-2329C/GRA-39.

2-11. **Buzzer Assembly DS101 or DS201**

This task covers: a. Removal b. Installation c. Adjustment

INITIAL SETUP

Tools	*Personnel Required*
Tool Kit, Electronic Equipment TK-105/G Spanner Wrench	2 Technicians

NOTE

Buzzer assembly DS101 is located on local control unit. Buzzer assembly DS201 is located on remote control unit. Removal, installation and adjustment procedures are the same for both.

a. Removal (figure 2-8)

CAUTION

Do not use a soldering gun; damaging voltages can be induced in the components. Use a pencil-type soldering iron with 25 watt maximum capacity. Both control units are transistorized. If only at-operated iron is available, use an isolating transformer.

NOTE

When removing soldered leads, tag each lead as it is unsoldered from its terminal to facilitate reconnection.

(1) Release clamp on each side of control unit and slide chassis out of case.

(2) Tag and unsolder three wires connected to buzzer assembly (1).

(3) Remove four flathead screws (2) securing cover assembly (3) to front panel. Remove cover assembly.

(4) Using spanner wrench, unscrew ring nut (4) which secures buzzer assembly (1) to front panel.

(5) Remove O-ring retainer (5), O-ring (6), diaphragm assembly (7) and spacer ring (8) and remove buzzer assembly (1).

b. Installation. (figure 2-8)

(1) Insert buzzer assembly (1) into front panel opening.

(2) Install spacer ring (8), diaphragm (7), O-ring (6), O-ring retainer (5), and ring nut (4) on buzzer unit (1).

(3) Tighten ring nut (4) , using spanner wrench.

(4) Position cover assembly (3) on front panel over ring nut (4) and secure with four flathead screws (2).

CAUTION

Do not use a soldering gun; damaging voltages can be induced in the components. Use a pencil-type soldering iron with a 25-watt maximum capacity. If only at-operated iron is available, use an isolating transformer.

(5) Solder tagged wires to proper terminals on buzzer assembly (1).

(6) Slide chassis into case and secure with clamps.

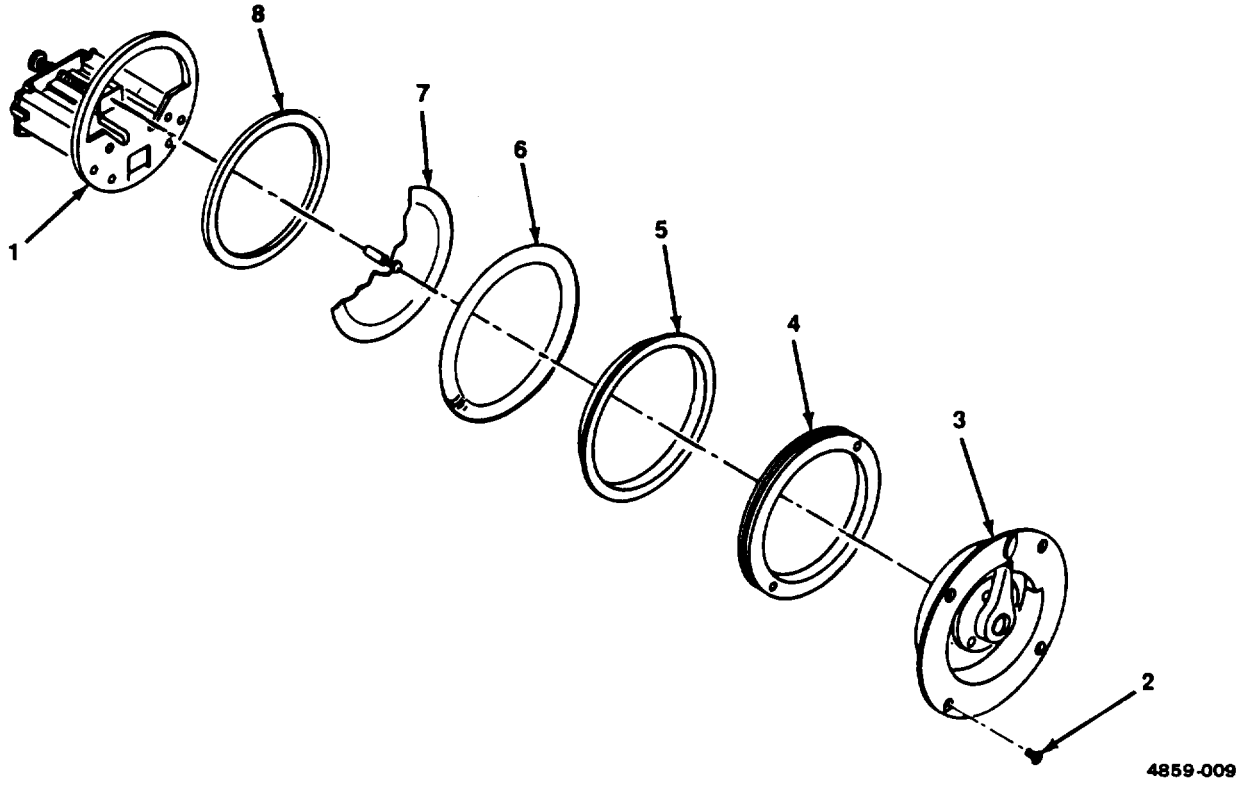

Figure 2-8. Buzzer Assembly DS1O1 or DS201, *Replacement.*

2-11. **Buzzer Assembly DS101 or DS201 (cont)**

c. *Adjustment* (figure 2-9)

NOTE

Two persons are required for buzzer assembly adjustment.

(1) Release clamp on each side of control unit and slide chassis out of case.

(2) Set BUZZER VOLUME control (1) to midrange position.

(3) Connect control unit to another control unit using field wire.

(4) Press RINGER button on second control unit.

(5) Insert screwdriver into BUZZER ADJUSTMENT hole on rear of chassis.

(6) Adjust buzzer adjustment screw (2) until buzzer can be heard at a distance of 15 feet.

(7) Set BUZZER VOLUME control (1) to OFF.

(8) Press RINGER button on second control unit. No sound should be heard from buzzer assembly.

(9) Slide chassis into case and secure with clamps.

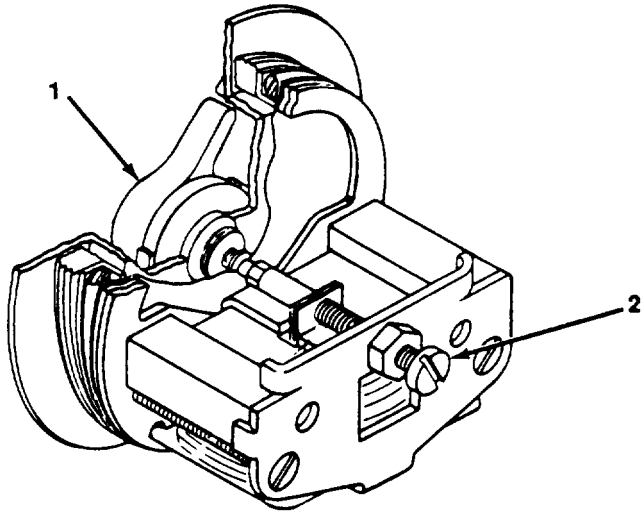

4859-010

Figure 2-9. Buzzer Adjustment (DS1O1 or DS201).

2-12. Call Lamp Control Relay (A-, B- and C- Models Only)

This task covers: a. Removal b. Installation

INITIAL SETUP

Tools

Tool Kit, Electronic Equipment TK-105/G

NOTE

Both local control unit and remote control unit are equipped with call lamps. Replacement procedures are the same for both control units on all three models specified.

a. Removal. (figure 2-1 O)

(1) Release clamp on each side of control unit and slide chassis out of case.

(2) Remove six panhead screws securing front panel (1) to chassis

(3) Pull out RINGER button (2) until it is disengaged from magneto connecting link, freeing front panel (1) from chassis (3).

(4) Loosen call lamp control relay mounting screws (4) and lift call lamp control relay (5) from component board A101 or A201 (6).

CAUTION

Do not use a soldering gun; damaging voltages can be induced in the components. Use a pencil-type soldering iron with 25 watt maximum capacity. Both control units are transistorized. If only at-operated iron is available, use an isolating transformer.

NOTE

When removing soldered leads, tag each lead as it is unsoldered from its terminal to facilitate reconnection.

(5) Tag and unsolder wires connected to call lamp control relay (5) and remove relay.

b. Installation (figure 2-10)

CAUTION

Do not use a soldering gun; damaging voltages can be induced in the components. Use a pencil-type soldering iron with 25 watt maximum capacity. Both control units are transistorized. If only at-operated iron is available, use an isolating transformer.

(1) Solder tagged wires to proper terminals on call lamp control relay (5).

(2) Secure relay to component board A101 or A201 (6) by engaging mounting screws (4) in screw holes (7) and tightening.

(3) Secure front panel (1) to chassis (3) by installing six panhead screws.

(4) Pull RINGER button (2) forward and engage connecting link to RINGER button bar.

(5) Slide chassis into case and secure with clamps.

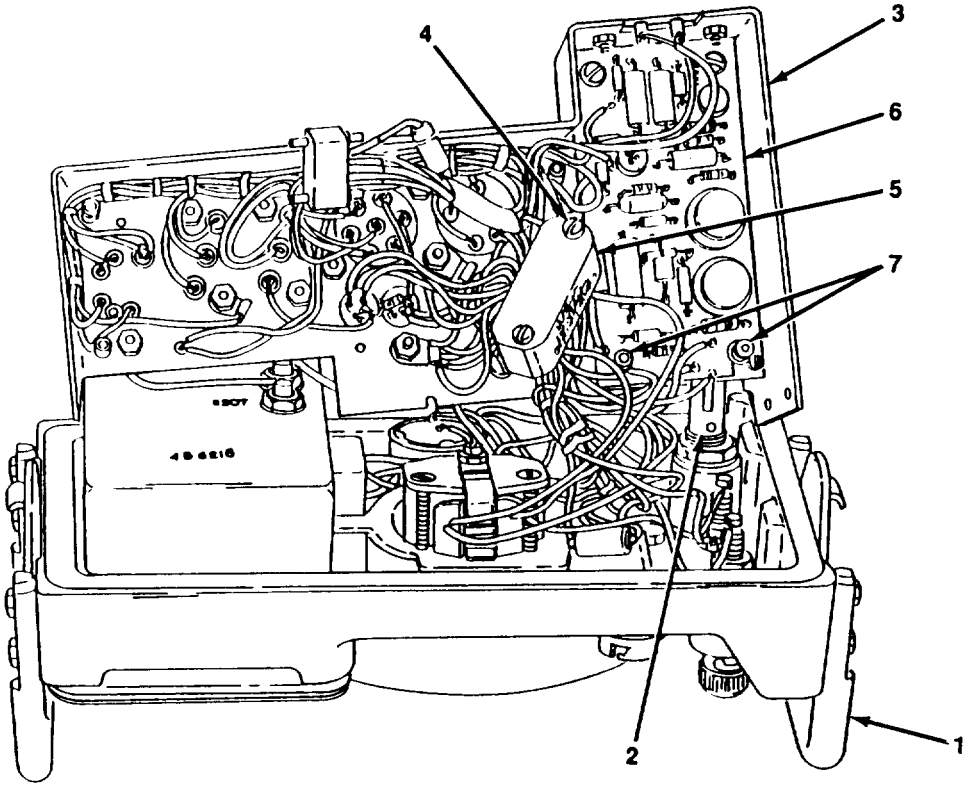

4859-011

Figure 2-10. Call Lamp Control Relay Replacement (A-, B- and C- Models), Typical.

2-13. Chassis Parts Replacement

This task covers: Replacement

INITIAL SETUP

Tools

Tool Kit, Electronic Equipment TK-105/G

NOTE

Procedures described in this paragraph are typical for local control unit (all models) and remote control unit (all models).

Replacement. (figures 2-11 and 2-12). Most of the chassis components in the AN/G RA-39(*) are removed by unscrewing attaching hardware and/or unsoldering wires. The components are easily reached with the chassis removed from the case.

CAUTION

Do not use a soldering gun; damaging voltages can be induced in components. Use a pencil-type soldering iron with a 25-watt maximum capacity. Both control units are transistorized. If only at-operated irons are available, use an isolating transformer.

NOTE

When removing soldered leads, tag each lead as it is unsoldered from its terminal.

(1) Release clamp on each side of control unit and slide chassis out of case.

(2) Unsolder wire(s) from component.

(3) Remove attaching hardware, if applicable, and remove component from chassis.

(4) Position replacement component on chassis. Secured with attaching hardware, if applicable.

(5) Solder tagged wire(s) to proper component terminal(s).

(6) Slide control unit into case and secure with clamps.

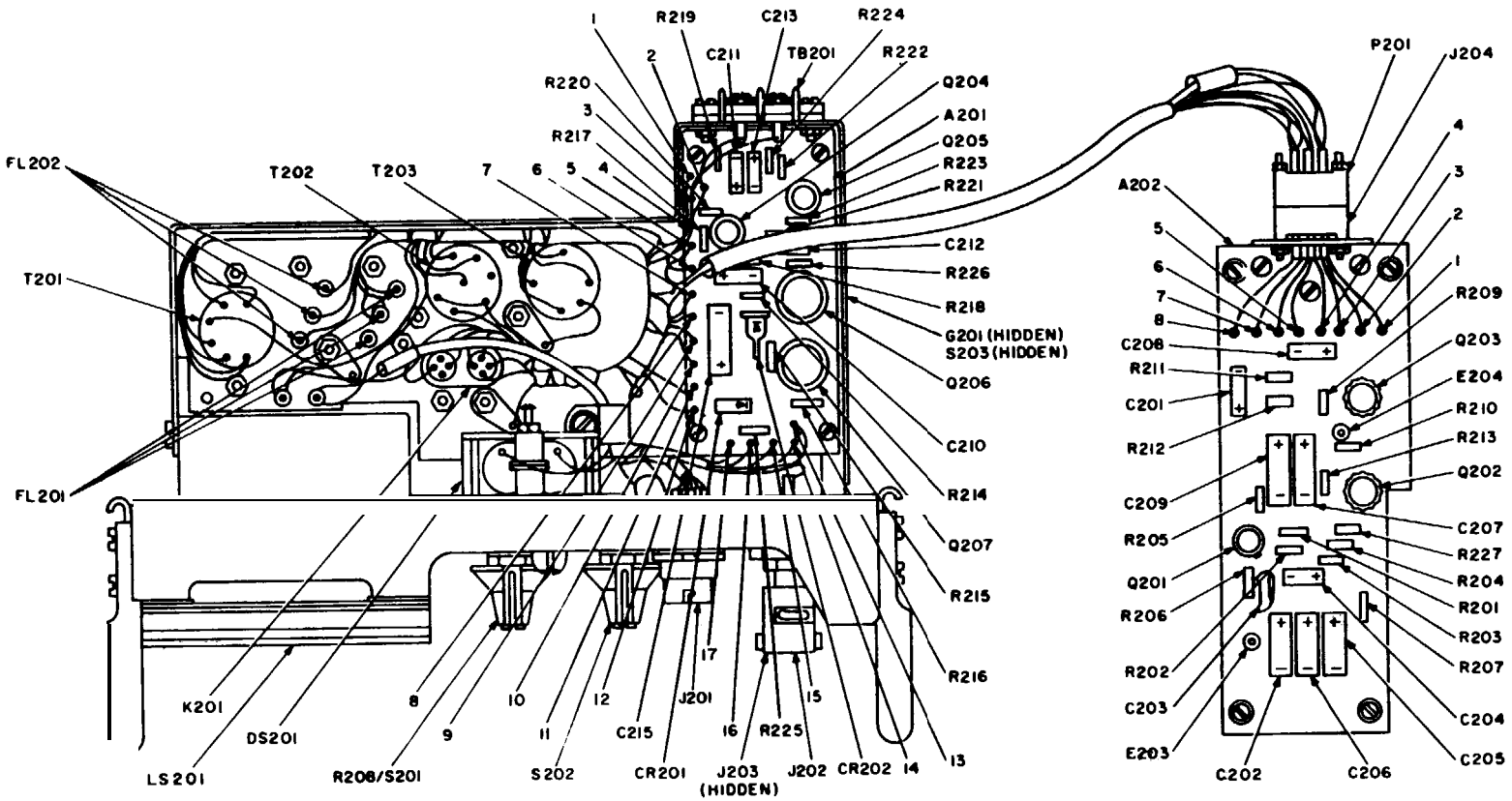

A. C-2328(*)/GRA-39

4859-012.1

Figure **2-11.** *Remote Control Unit Chassis Component Replacement (Sheet 1 of* **3**).

2-13. **Chassis Parts Replacement (cont)**

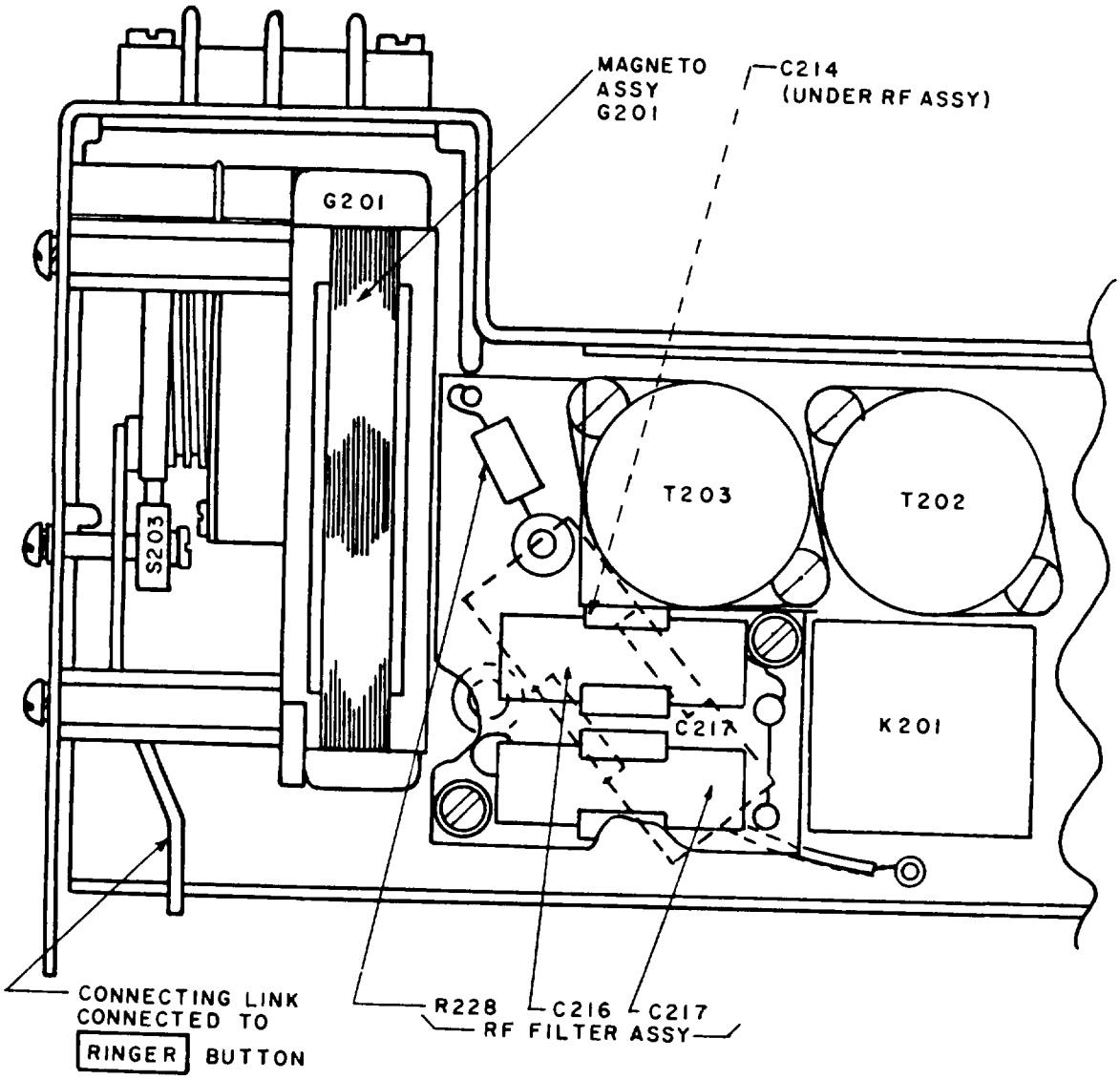

B. C-2328B/GRA-39

Figure 2-11. Re mote Control Unit Chassis Component Replacement (Sheet 2 of 3). 48599~12.2

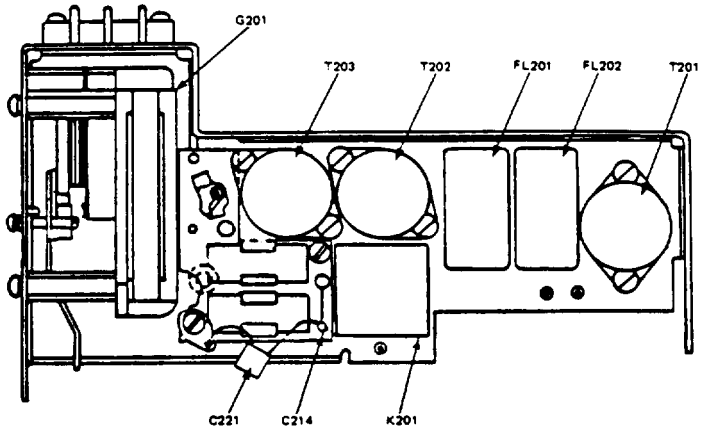

TOP VIEW

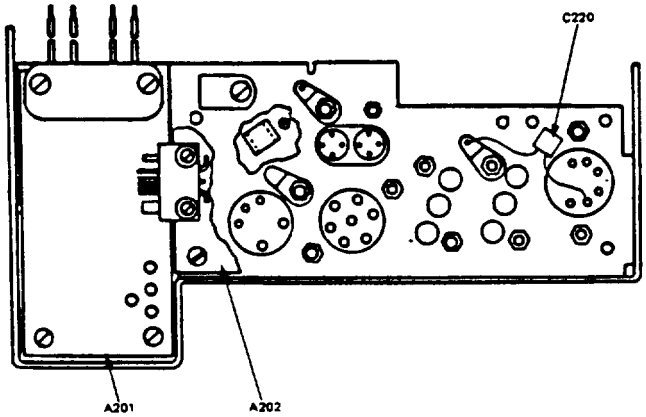

BOTTOM VIEW

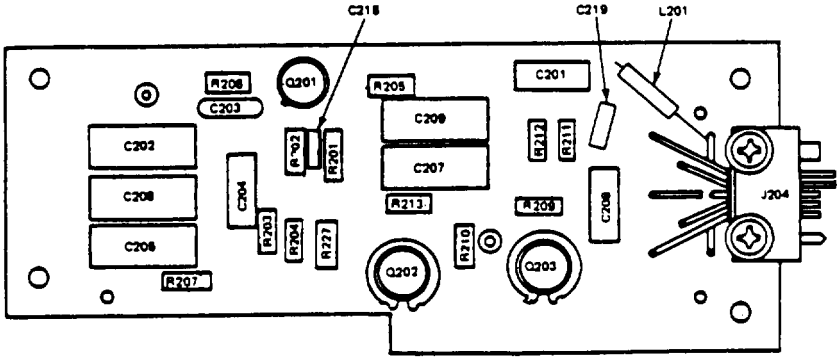

PRINTED CIRCUIT BOARD

C. C-2328C/GRA-39

4659412.3

Figure 2-11. Remote Control Unit Chassis Component Replacement (Sheet 3 of 3).

2-13. Chassis Parts Replacement (cont)

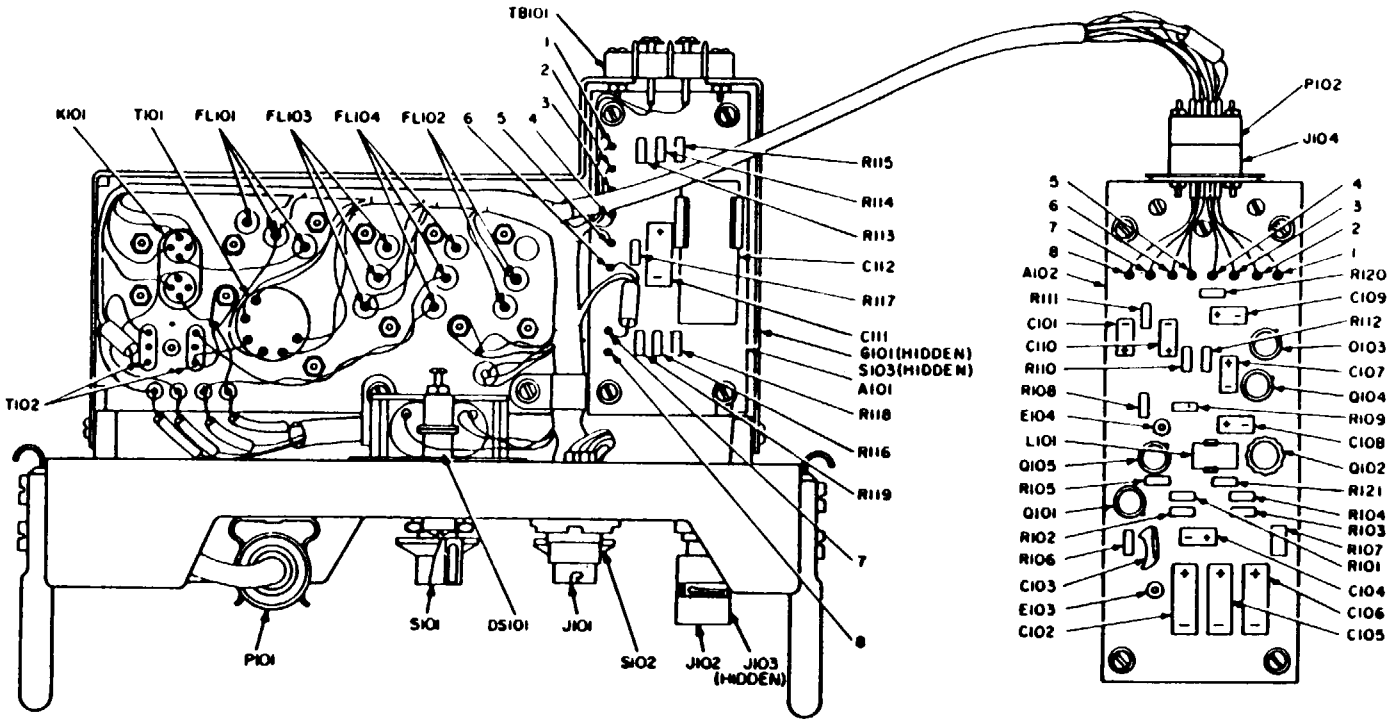

Figure 2-12. Local Control Unit Chassis Component Replacement (Sheet 1 of 2).

4859-013.1

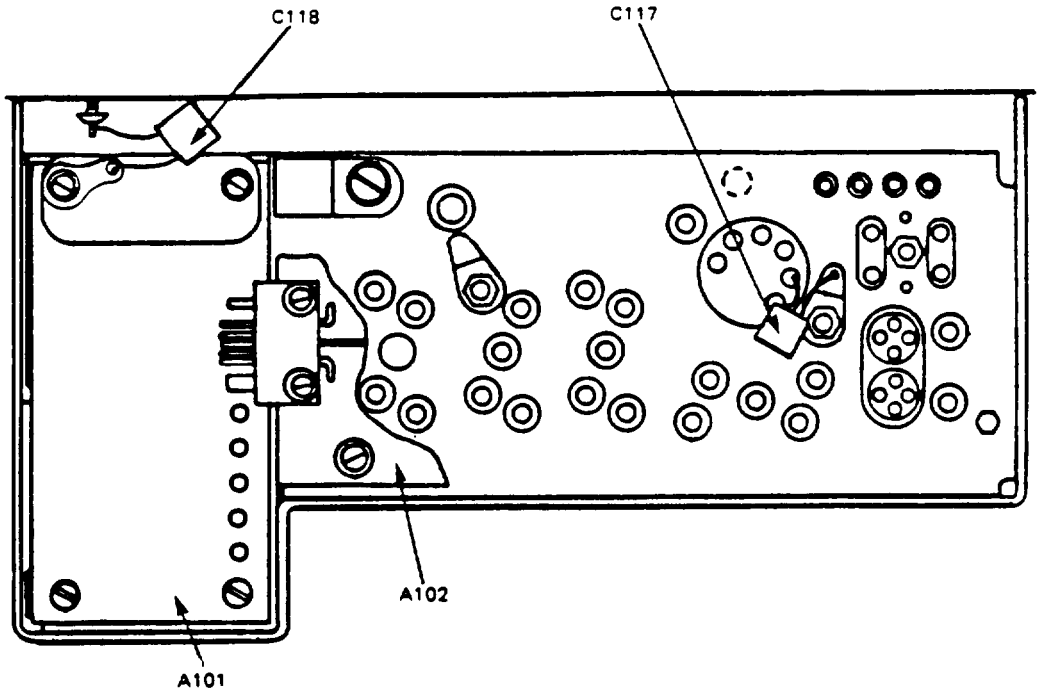

BOTTOM VIEW

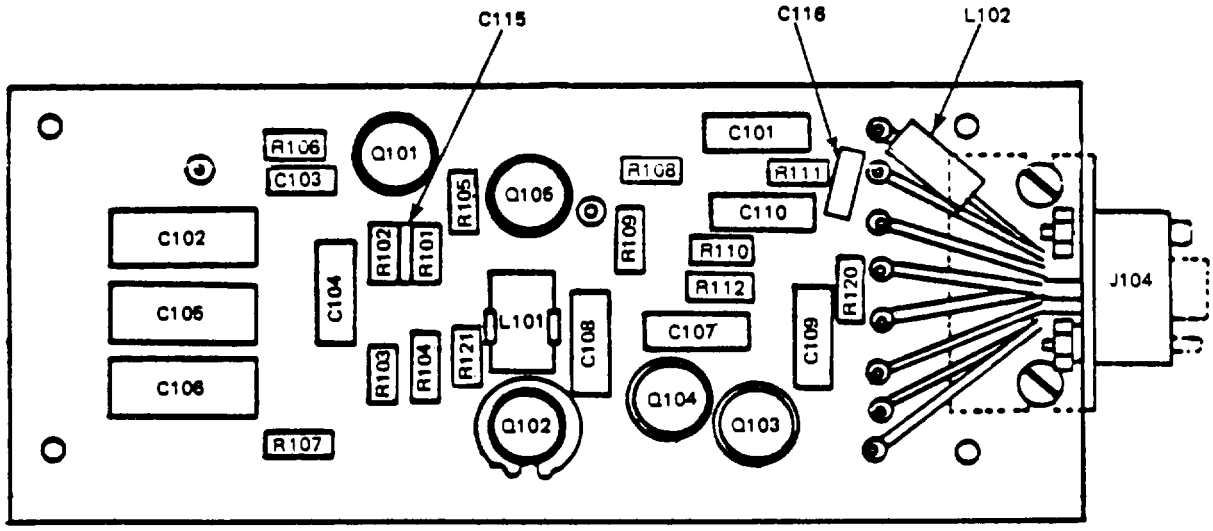

PRINTED CIRCUIT BOARD

4859-013-2

Figure 2-12. Local Control Unit Chassis Component Replacement (Sheet 2 of 2).

2-14. **Panel Parts Replacement**

This task covers: Replacement

INITIAL SETUP

Tools

Tool Kit, Electronic Equipment TK-105/G

NOTE

Procedures described in this paragraph are typical for local control unit (all models) and remote control unit (all models).

Replacement. (figures 2-13 and 2-1 4) Most of the panel components on the AN/G RA-39(*) are removed by unscrewing attaching hardware and/or unsoldering wires. The components are easily accessed directly from the front panel.

CAUTION

Do not use a soldering gun; damaging voltages can be induced in the components. Use a pencil-type soldering iron with a 25-watt maximum capacity. Both control units are transistorized, If only at-operated irons are available, use an isolating transformer.

NOTE

When removing soldered leads, tag each lead as it is unsoldered from its terminal.

(1) Release clamp on each side of control unit and slide chassis out of case.

(2) Unsolder wire(s) from component.

(3) Remove attaching hardware, if applicable, and remove component from front panel.

(4) Position replacement component on front panel. Secure with attaching hardware, if applicable,

(5) Solder tagged wire(s) to proper component terminal(s).

(6) Slide control unit into case and secure with clamps.

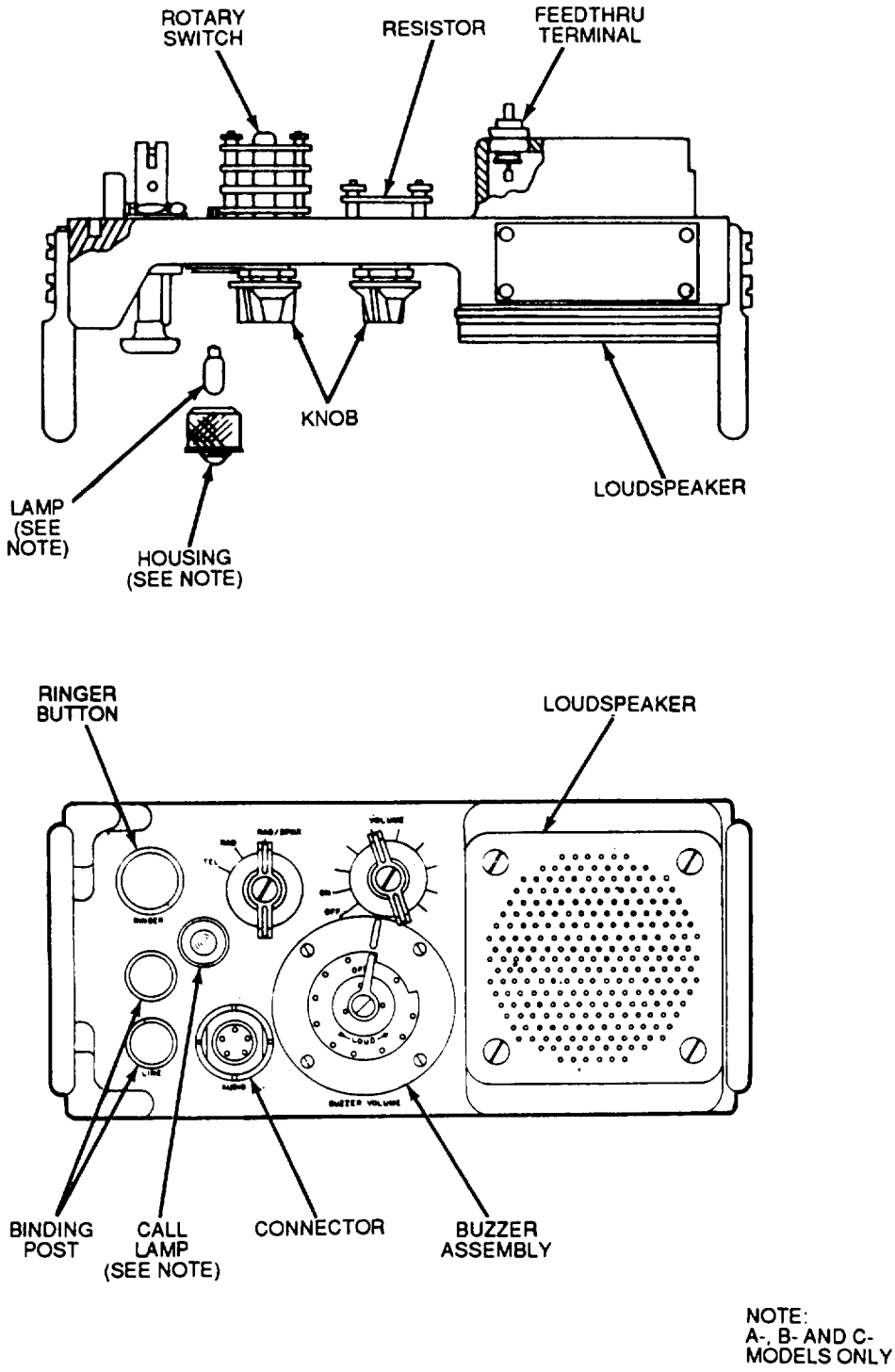

Figure 2-13. Remote Control Unit Panel Assembly Component Replacement.

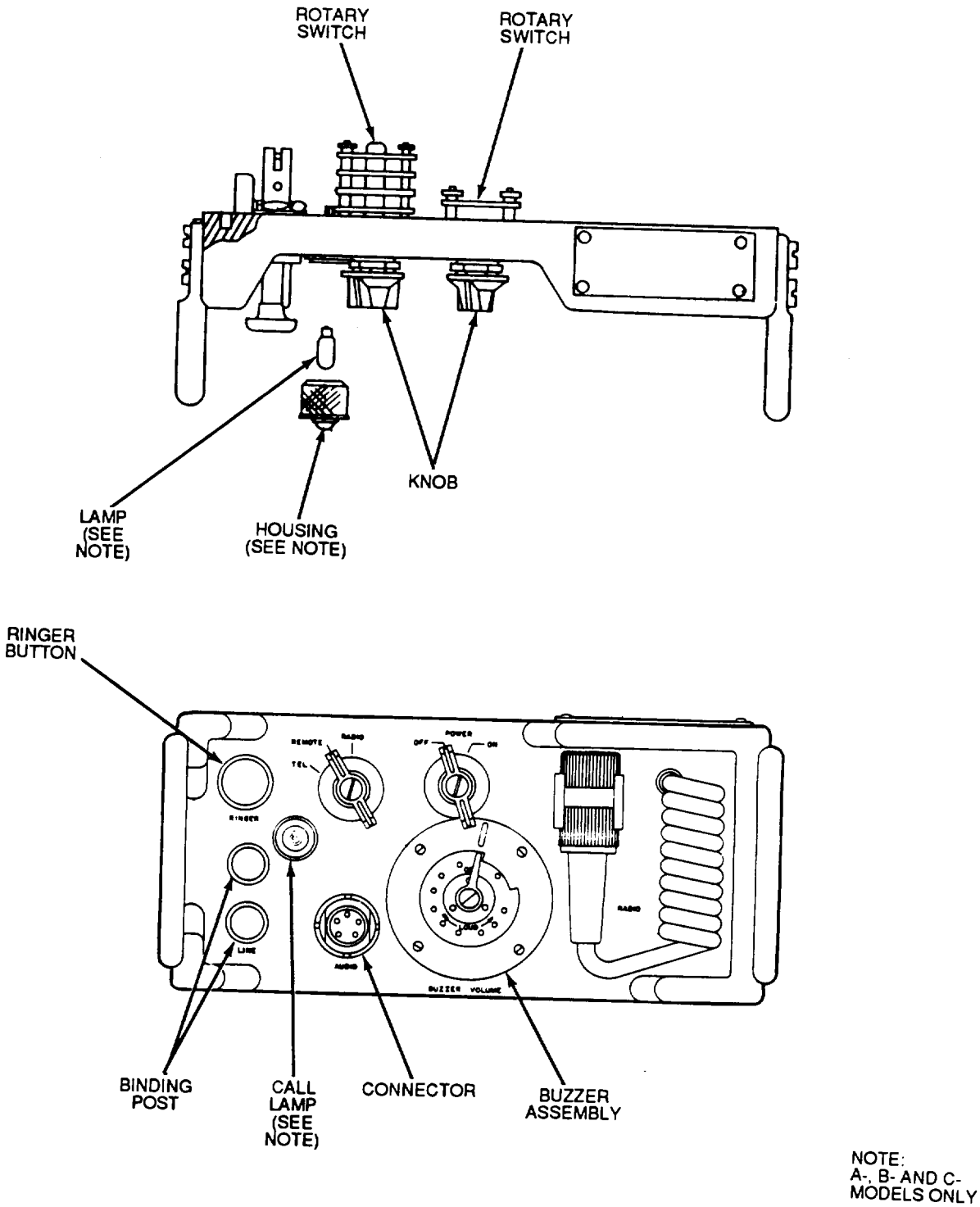

Figure 2-14. Local Control Unit Panel Assembly Component Replacement.

2-15. Retractable Battery Cable

This task covers: a. Removal b. Installation

INITIAL SETUP

Tools

Tool Kit, Electronic Equipment TK-105/G

NOTE

Procedures described in this paragraph are typical for local control unit (all models) and remote control unit (all models).

a. Removal (figure 2-15)

(1) Release clamps on each side of control unit and slide chassis out of case.

(2) Remove batteries from battery box.

(3) Remove three roundhead screws (l), and three lockwashers (2) and remove battery cable (3) from terminal board (4).

CAUTION

Do not use a soldering gun; damaging voltages can be induced in the components. Use a pencil-type soldering iron with a 25-watt maximum capacity. Both control units are transistorized. If only at-operated irons are available, use an isolating transformer.

(4) Unsolder battery cable (3) from feed-through terminals (5).

(5) Remove screw (6) and cable clamp (7) and remove battery cable (3) from case (8).

b. Installation. (figure 2-16)

(1) Wrap cable clamp (7) around cable (3) and mount clamp to case (8) with screw (6).

CAUTION

Do not use a soldering gun; damaging voltages can be induced in the components. Use a pencil-type soldering iron with a 25-watt maximum capacity. Both control units are transistorized. If only at-operated irons are available, use an isolating transformer.

(2) Solder battery cable (3) to feed-through terminals (5).

(3) Attach battery cable (3) to terminal (4) with three roundhead screws (1) and three lockwashers (2).

(4) Replace batteries in box

(5) Slide chasis into case and secure with clamps.

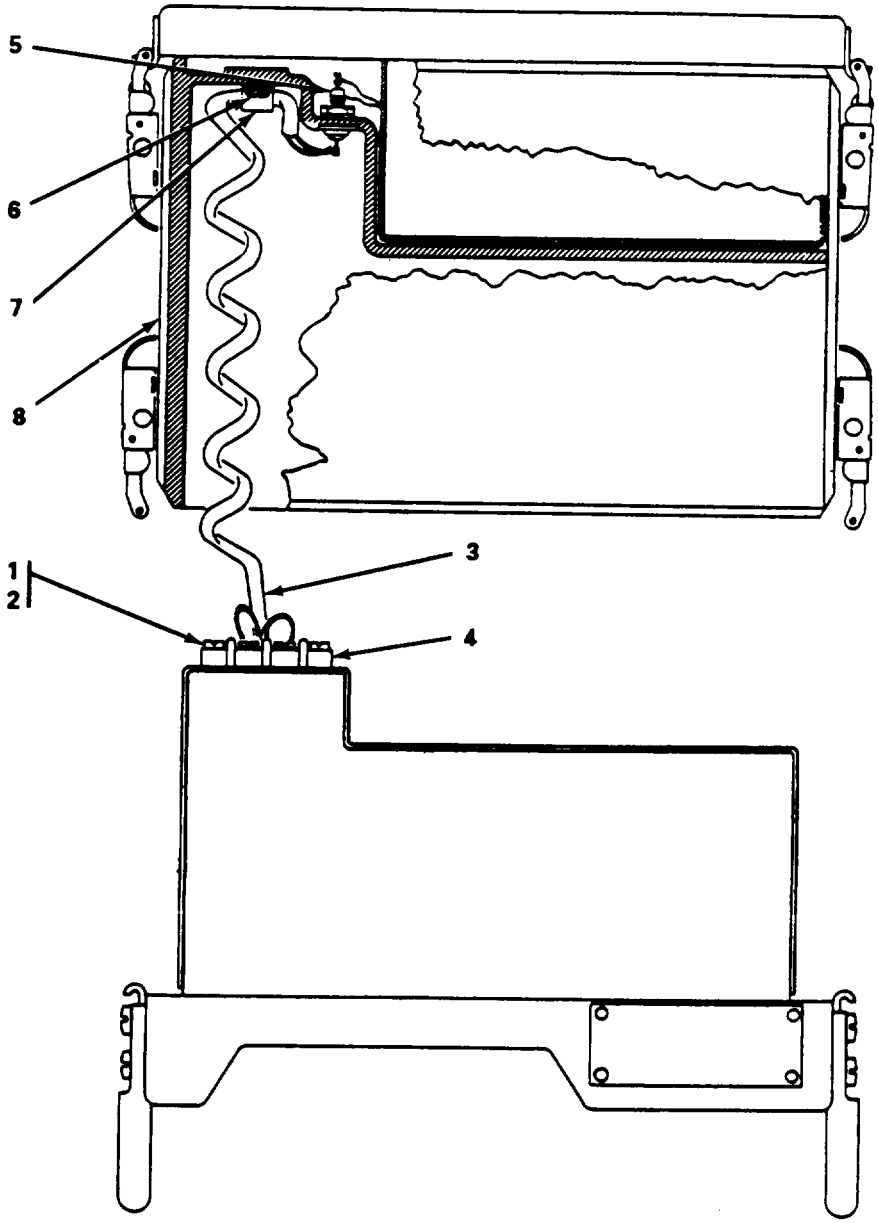

485

Figure 2-15. Battery Cable Replacement.

2-16. **Front and Rear Clamping Catch**

This task covers: Replacement

INITIAL SETUP

Tools

Screwdriver

Replacement (figure 2-16)

(1) Release clamp hooks.

(2) Remove two flathead screws (1) and remove front clamping catch (2) or rear clamping catch (3) from case (4).

(3) Align clamping catch (2 or 3) with screw holes in case (4).

(4) Install two flathead screws (1).

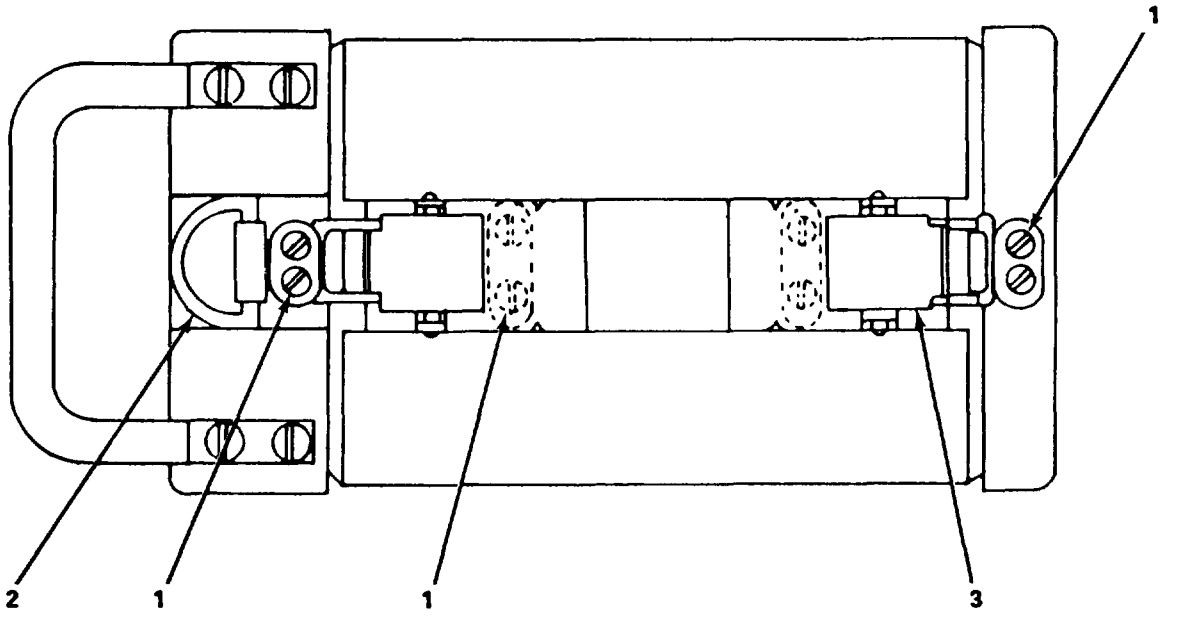

Figure 2-16. *Clamping Catch Replacement.*

2-17. **Error in Applying MWO 11-5820-477-30/1**

a. Instructions in MWO 11-5820-477-30/1 (Modification of Radio Set Control Groups AN/GRA-39 and AN/G RA-39A to Improve Communications When Used With Radio Set AN/PRC-25 in Squelch Mode, 11 April 1967, which was rescinded by DA Cir 310-25,6 Oct. 71) assumed a wiring condition on TEL-REMOTE-RADIO switch S102 of the C-2329/GRA-39 and C-2329A/GRA-39 that did not exist on all units. After performing the MWO on some units, the operator could not communicate with the other control unit when switch S102 was in TEL position.

b. There is a jumper between terminals 4 and 9 of S102A (rear) in some units and not in others. A blue-white wire is connected between terminal B of AUDIO receptacle J101 and terminal 4 of S102 A in some units and to terminal 9 of S102A (rear) in other units. The MWO removed the jumper wire and connected a 560-ohm resistor (RI 23) between terminal B of J101 and terminal 9 of S102A (rear). In units where the blue-white wire ran to terminal 4 of S102A, the equipment performed correctly; in units where the wire ran to terminal 9 of S102A, telephone communication between operators of control units could not occur.

c. To determine whether units C-2329/GRA-39 and C-2329A/GRA-39 were modified correctly, make either of the following tests:

(1) Set the control switch to TEL. Make a resistance measurement between terminal B of AUDIO receptacle J101 and terminal B of RADIO receptacle P101. It should be 560 ohms (R123). If it is O ohm, the MWO was not applied or it was done incorrectly.

(2) Perform an operational test as follows:

(a) Connect field wire between the remote and local control units and set the control switches to TEL position.

(b) Using the handset connected to the AUDIO receptacles, communicate between the two units. If the local control unit operator has no sidetone and cannot hear the remote control unit operator, the MWO was performed incorrectly.

d. To repair equipment that fails the tests (step c. above), proceed as follows. (Refer to figure 2-18.) Inspect switch S102A (rear) to determine if the blue-white wire from terminal B of J101 is connected to terminal 4 or 9 of S102A (rear) (A, figure 2-18).

(1) If the wire is connected to terminal 4 of S102A (rear), do not disturb the blue-white wire, but cut the jumper from terminals 4 and 9 of the switch. Connect a 560-ohm resistor (NSN 5905-00-682-41 09) (same as resistor R115 in TM 11-5820-477-35P) between terminal B of J101 and terminal 9 of S102A (rear) (B, figure 2-18). Put insulation sleeving on the resistor leads.

(2) If the blue-white wire is connected to terminal 9 of the switch, DO NOT REMOVE THE JUMPER FROM TERMINAL 4 OF THE SWITCH. Instead, remove both the blue-white wire and the jumper from terminal 9 of the switch. Strip 3/8 inch of insulation from each wire, splice the two wires together, solder them, and insulate the splice with electrical tape (C, figure 2-1 8). Connect the 560-ohm resistor (NSN 5905-00-682-4109) between terminal B of J101 and terminal 9 of the switch.

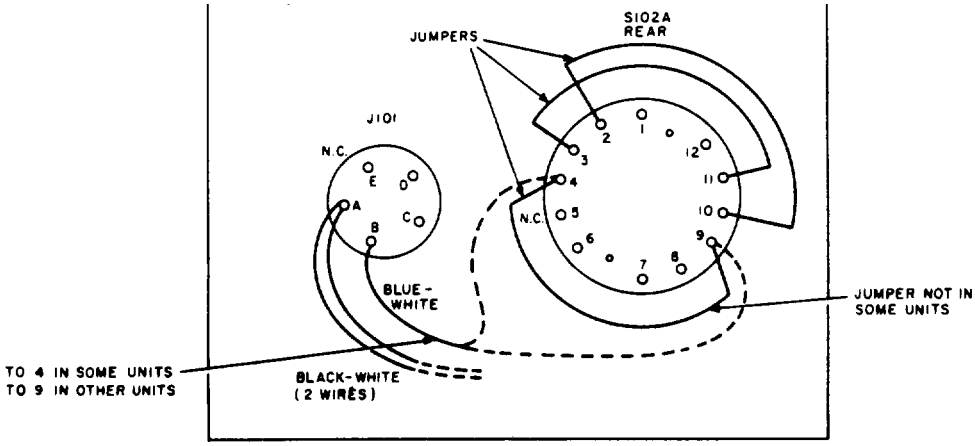

A. S102A (REAR), WIRING BEFORE MODIFICATION.

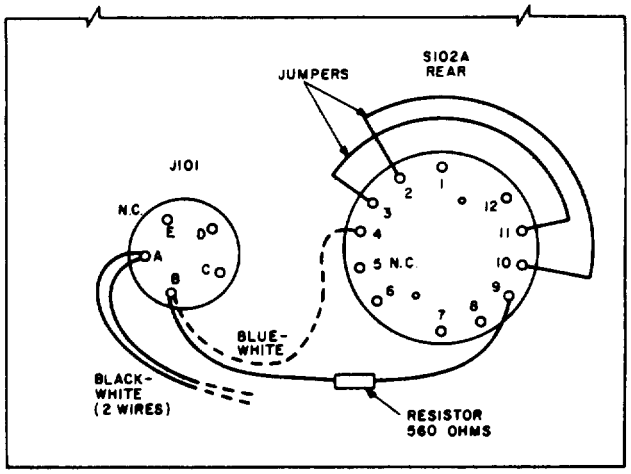

B. S102A (REAR), WIRING AFTER MODIFICATION WHEN BLUE-WHITE WIRE IS CONNECTED TO TERMINAL 4.

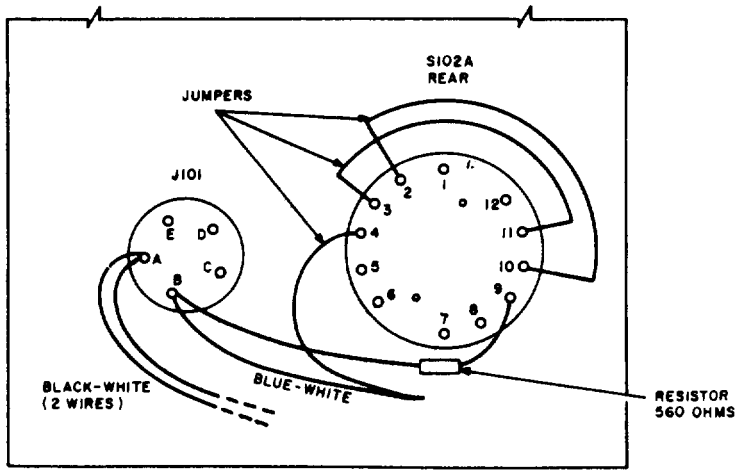

C. S102A (REAR), WIRING AFTER MODIFICATION WHEN BLUE-

Figure 2-17. TEL-REMOTE-RADIO Switch S102A of C-2329/GRA-39 and C-2329A/GRA-39, Wiring Diagram.

(3) If the blue-white wire is missing and the jumper wire has been removed, remove switch S102A to gain access to terminal 4 on the same wafer as terminal 9 (B, figure 2-18): Connect a blue-white wire between B of J101 and terminal 4 of S102A (rear). Connect the 560-ohm resistor between terminal B of J101 and terminal 9 of the switch.

APPENDIX A

REFERENCES

A-1. Scope

This appendix lists all forms, field manuals, technical manuals and miscellaneous publications referenced in this manual.

A-2. Forms

Consolidated Index of Army Publications and Blank Forms . . . . . DA Pam 25-30

The Army Maintenance Management System (TAMMS) . . . . . DA Pam 728-750

A-3. Field Manuals

First Aid for Soldiers . . . . . FM 21-11

A-4. Technical Manuals

Operator's, Organizational, Direct Support and General Support Maintenance Manual: Spectrum Analyzers TS-723A/U, TS-723B/U, TS-723C/U, and TS-723D/U . . . . TM 11-6625 -255-14

Operator's and Organizational Maintenance Manual for Radio Set Control Groups AN/GRA-39 (NSN 5820-00-889-3680), AN/GRA-39A (NSN 5820-00-949-9909), AN/GRA-39B (NSN 5820-00-949-9909) and AN/GRA-39C (NSN 5820-01-196-0204) TM11-5820-477-12

Organizational and Direct Support Maintenance Repair Parts and Special Tools List: Radio Set Control Groups AN/GRA-39 (NSN 5820-00-889-3680), AN/GRA-39A (NSN 5820-00-949-9909), AN/GRA-39B (NSN 5820-00-949-9909) and AN/GRA-39C (NSN 5820-01-196-0204) ., ... TM 11-5820-477-23P

Operator's, Organizational, DS, GS, and Depot Maintenance Manual: Multimeters ME-26A/U, ME-26B/U (NSN 6625-00-360-2493), ME-26C/U (NSN 6625-00-646-9409) and ME-26D/U (NSN 6625-00-913-9781) . . . . . TM 11-6625-200-15

Operator and Organizational Maintenance Manual: Voltmeter, Meter ME-30A/U, and Voltmeters, Electronic ME-30B/U, ME-30C/U, and ME-30E/U . . . . . TM 11-6625-320-12

Operator's, Organizational, DS, GS, and Depot Maintenance Manual: Multimeter TS-352B/U TM11-6625-366-15

Operator's, Organizational, Direct Support and General Support Maintenance Manual: Signal Generator AN/URM-127 (NSN 6625-00-783-5965) . . . . . TM 11-6625-683-14

Operator's Manual: Digital Readout, Electronic Counter AN/USM-207
(NSN 6625-00-911-6368), ...TM 11-6625-700-10

Procedures for Destruction of Army Electronics Materiel to Prevent Enemy Use . . . . . TM 750-244-2

APPENDIX B

EXPENDABLE/DURABLE SUPPLIES AND MATERIALS LIST

Section I. INTRODUCTION

B-1 . **Scope**

This appendix lists expendable supplies and materials you will need to operate and maintain the AN/GRA-39(*). These items are authorized to you by CTA 50-970, Expendable Items (Except Medical, Class V, Repair Parts, and Heraldic Items).

B-2. **Explanation of Columns.**

a. Column (1) – Item Number. This number is assigned to the entry in the listing.

b. Column (2) – Level. This column identifies the lowest level of maintenance that requires the listed item.

F – Direct Support

c. Column (3) – National Stock Number. This is the National stock number assigned to the item; use it to request or requisition the item,

d. Column (4) – Description. Indicates the Federal item name, and, if required, a description to identify the item. The last line for each item indicates the Federal Supply Code for Manufacturer (FSCM) in parentheses followed by the part number.

e. Column (5) – Unit of Measure (U/M). Indicates the measure used in performing the actual maintenance function. This measure is expressed by a two-character alphabetical abbreviation (e.g., ea, in, pr). If the unit of measure differs from the unit of issue, requisition the lowest unit of issue that will satisfy your requirements.

Section II. EXPENDABLE/DURABLE SUPPLIES AND MATERIALS

(1) Item Number	(2) Level	(3) National Stock Number	(4) Description	(5) U/M
1	F	3439-00-922-4555	Solder SN60WRMAP3	

RECOMMENDED CHANGES TO EQUIPMENT TECHNICAL PUBLICATIONS

SOMETHING WRONG WITH THIS PUBLICATION?

FROM (PRINT YOUR UNIT'S COMPLETE ADDRESS)
Commander
Stateside Army Depot
ATTN: AMSTA-US
Stateside, N.J. 07703-5007

DATE SENT
10 July 1975

PUBLICATION NUMBER	PUBLICATION DATE	PUBLICATION TITLE
TM 11-5840-340-12	23 Jan 74	Radar Set AN/PRC-76

BE EXACT PIN-POINT WHERE IT IS

PAGE NO	PARA-GRAPH	FIGURE NO	TABLE NO	IN THIS SPACE TELL WHAT IS WRONG AND WHAT SHOULD BE DONE ABOUT IT:
2-25	2-28			Recommend that the installation antenna alignment procedure be changed throughout to specify a 2° IFF antenna lag rather than 1°. REASON: Experience has shown that with only a 1° lag, the antenna servo system is too sensitive to wind gusting in excess of 25 knots, and has a tendency to rapidly accelerate and decelerate as it hunts, causing strain to the drive train. Hunting is minimized by adjusting the lag to 2° without degradation of operation.
3-10	3-3		3-1	Item 5, Function column. Change "2 db" to "3db." REASON: The adjustment procedure for the TRANS POWER FAULT indicator calls for a 3 db (500 watts) adjustment to light the TRANS POWER FAULT indicator.
5-6	5-8			Add new step f.1 to read, "Replace cover plate removed in step e.1, above." REASON: To replace the cover plate.
		F03		Zone C 3. On J1-2, change "+24 VDC to "+5 VDC." REASON: This is the output line of the 5 VDC power supply. +24 VDC is the input voltage.

PRINTED NAME GRADE OR TITLE AND TELEPHONE NUMBER
SSG I. M. DeSpiritof 999-1776

SIGN HERE
SSG I. M. DeSpiritof

DA FORM 1 JUL 79 2028-2

PREVIOUS EDITIONS ARE OBSOLETE.

P.S.--IF YOUR OUTFIT WANTS TO KNOW ABOUT YOUR RECOMMENDATION MAKE A CARBON COPY OF THIS AND GIVE IT TO YOUR HEADQUARTERS

TEAR ALONG PERFORATED LINE

SAMPLE

FILL IN YOUR UNIT'S ADDRESS

FOLD BACK

DEPARTMENT OF THE ARMY

OFFICIAL BUSINESS

Commander
US Army Communications-Electronics Command
and Fort Monmouth
ATTN: AMSEL-LC-LM-LT
Fort Monmouth, New Jersey 07703-9988

SAMPLE

FOLD BACK

TEAR ALONG PERFORATED LINE

RECOMMENDED CHANGES TO EQUIPMENT TECHNICAL PUBLICATIONS

THEN...JOT DOWN THE DOPE ABOUT IT ON THIS FORM. CAREFULLY TEAR IT OUT. FOLD IT AND DROP IT IN THE MAIL.

SOMETHING WRONG WITH THIS PUBLICATION?

FROM: (PRINT YOUR UNIT'S COMPLETE ADDRESS

DATE SENT

PUBLICATION NUMBER	PUBLICATION DATE	PUBLICATION TITLE
TM 11-5820-477-30	1 July 1991	Control, Radio Set Groups AN/GRA-39,-39A,-39B,-39C

BE EXACT PIN-POINT WHERE IT IS

PAGE NO	PARA-GRAPH	FIGURE NO.	TABLE NO.

IN THIS SPACE TELL WHAT IS WRONG AND WHAT SHOULD BE DONE ABOUT IT:

PRINTED NAME GRADE OR TITLE AND TELEPHONE NUMBER

SIGN HERE

TEAR ALONG PERFORATED LINE

DA FORM 1 JUL 79 2028-2

PREVIOUS EDITIONS ARE OBSOLETE

P.S.—IF YOUR OUTFIT WANTS TO KNOW ABOUT YOUR RECOMMENDATION MAKE A CARBON COPY OF THIS AND GIVE IT TO YOUR HEADQUARTERS

TEAR ALONG PERFORATED LINE

FILL IN YOUR UNIT'S ADDRESS

FOLD BACK

DEPARTMENT OF THE ARMY

OFFICIAL BUSINESS

Commander
US Army Communications-Electronics Command
and Fort Monmouth
ATTN: AMSEL-LC-LM-LT
Fort Monmouth, New Jersey 07703-9988

FOLD BACK

RECOMMENDED CHANGES TO EQUIPMENT TECHNICAL PUBLICATIONS

THEN...JOT DOWN THE DOPE ABOUT IT ON THIS FORM. CAREFULLY TEAR IT OUT. FOLD IT AND DROP IT IN THE MAIL.

SOMETHING WRONG WITH THIS PUBLICATION?

FROM: (PRINT YOUR UNIT'S COMPLETE ADDRESS

DATE SENT

PUBLICATION NUMBER	PUBLICATION DATE	PUBLICATION TITLE
TM 11-5820-477-30	1 July 1991	Control, Radio Set Groups AN/GRA-39,-39A,-39B,-39C

BE EXACT PIN-POINT WHERE IT IS

PAGE NO	PARA-GRAPH	FIGURE NO.	TABLE NO.

IN THIS SPACE TELL WHAT IS WRONG AND WHAT SHOULD BE DONE ABOUT IT:

PRINTED NAME GRADE OR TITLE AND TELEPHONE NUMBER

SIGN HERE

DA FORM 1 JUL 79 2028-2

PREVIOUS EDITIONS ARE OBSOLETE

P.S.—IF YOUR OUTFIT WANTS TO KNOW ABOUT YOUR RECOMMENDATION MAKE A CARBON COPY OF THIS AND GIVE IT TO YOUR HEADQUARTERS

TEAR ALONG PERFORATED LINE

FILL IN YOUR
UNIT'S ADDRESS

FOLD BACK

DEPARTMENT OF THE ARMY

OFFICIAL BUSINESS

Commander
US Army Communications-Electronics Command
and Fort Monmouth
ATTN: AMSEL-LC-LM-LT
Fort Monmouth, New Jersey 07703-9988

FOLD BACK

TEAR ALONG PERFORATED LINE

RECOMMENDED CHANGES TO EQUIPMENT TECHNICAL PUBLICATIONS

THEN...JOT DOWN THE DOPE ABOUT IT ON THIS FORM. CAREFULLY TEAR IT OUT. FOLD IT AND DROP IT IN THE MAIL.

SOMETHING WRONG WITH THIS PUBLICATION?

FROM: (PRINT YOUR UNIT'S COMPLETE ADDRESS

DATE SENT

PUBLICATION NUMBER	PUBLICATION DATE	PUBLICATION TITLE
TM 11-5820-477-30	1 July 1991	Control, Radio Set Groups AN/GRA-39,-39A,-39B,-39C

BE EXACT PIN-POINT WHERE IT IS

PAGE NO	PARA-GRAPH	FIGURE NO.	TABLE NO.

IN THIS SPACE TELL WHAT IS WRONG AND WHAT SHOULD BE DONE ABOUT IT:

PRINTED NAME GRADE OR TITLE AND TELEPHONE NUMBER

SIGN HERE

DA FORM 1 JUL 79 2028-2

PREVIOUS EDITIONS ARE OBSOLETE

P.S.—IF YOUR OUTFIT WANTS TO KNOW ABOUT YOUR RECOMMENDATION MAKE A CARBON COPY OF THIS AND GIVE IT TO YOUR HEADQUARTERS

TEAR ALONG PERFORATED LINE

FILL IN YOUR UNIT'S ADDRESS

FOLD BACK

DEPARTMENT OF THE ARMY

OFFICIAL BUSINESS

Commander
US Army Communications-Electronics Command
and Fort Monmouth
ATTN: AMSEL-LC-LM-LT
Fort Monmouth, New Jersey 07703-9988

FOLD BACK

TEAR ALONG PERFORATED LINE

By Order of the Secretary of the Army:

CARL E. VUONO
General, United States Army
Chief of Staff

Official:

PATRICIA P. HICKERSON
Colonel United States Amy
The Adjutmant General

DISTRIBUTION:

To be distributed in accordance with DA Form 12–51–E, block 2236, Direct Support/General Support Maintenance requirements for TM 11–5820–477-30.

* U. S. GOVERNMENT PRINTING OFFICE 1994 0 - 300-421 (01218)

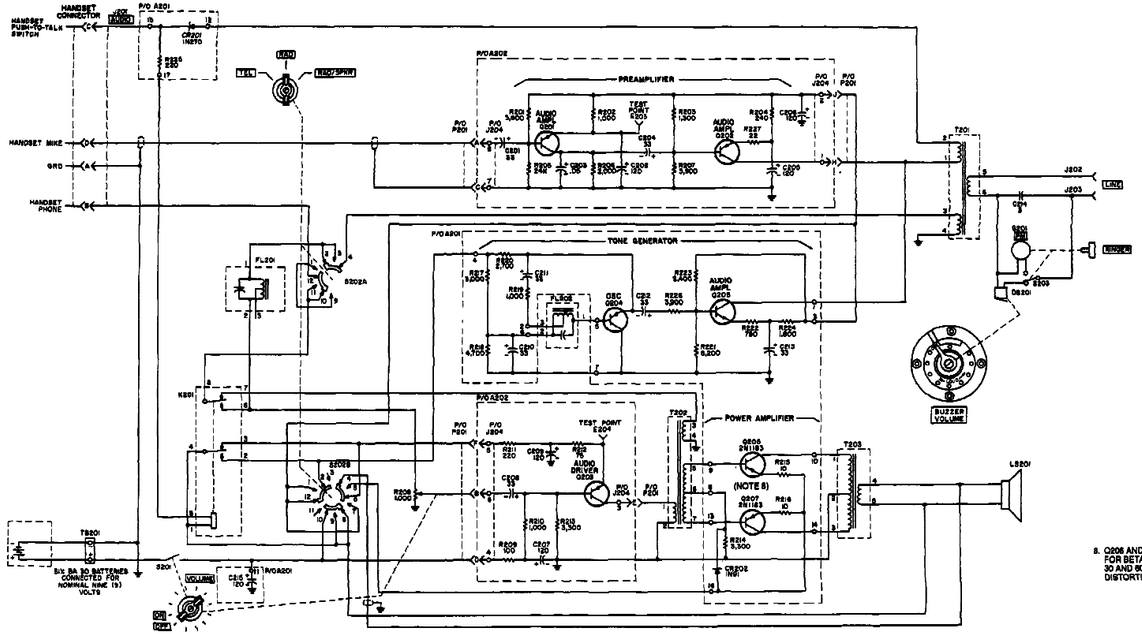

NOTES:

1. REFERENCE DESIGNATIONS ARE ABBREVIATED. PREFIX THE DESIGNATION WITH UNIT NUMBER OR ASSEMBLY DESIGNATION OR BOTH.
2. UNLESS OTHERWISE INDICATED, RESISTANCES ARE IN OHMS, CAPACITANCES ARE IN UF, TRANSISTORS ARE 2N5326.
3. ▭ INDICATES EQUIPMENT MARKING.
4. RECEPTACLE VIEWED FROM PIN OR RECEPTACLE END.

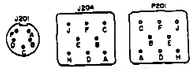

5. TRANSFORMER TERMINAL IMPEDANCES

T201	T202	T203
1-2 1500 Ω 3-4 600 Ω 5-6 600 Ω	1-2 1500 Ω 3-4 1000 Ω 5-7 4000 Ω CT	1-3 265 Ω CT 4-5 8Ω

6. SWITCH S202 IS VIEWED FROM KNOB END. FRONT OF WAFER IS SIDE TOWARD CONTROL KNOB. WAFER NEAREST CONTROL KNOB IS SECTION A.
7. SWITCH S202 SHOWN IN RAD POSITION.

TABLE OF CONTACTS MADE		
SWITCH SECTION	SWITCH POSITION	CONTACTS
S202A	TEL	1-4, 9-12
	RAD	2-4, 10-12
	RAD/SPKR	3-4, 11-12
S202B	TEL	11-3, 7-10, 3-6
	RAD	12-2, 8-10, 4-6
	RAD/SPKR	1-2, 8-10, 4-6

8. Q206 AND Q207 SELECTED FOR BETA RATING BETWEEN 30 AND 60 (AFFECTS OUTPUT DISTORTION).

TM5820-477-30-5

FO-1. Control, Radio Set C-2328/GRA-39 (Remote Control Unit), Schematic Diagram

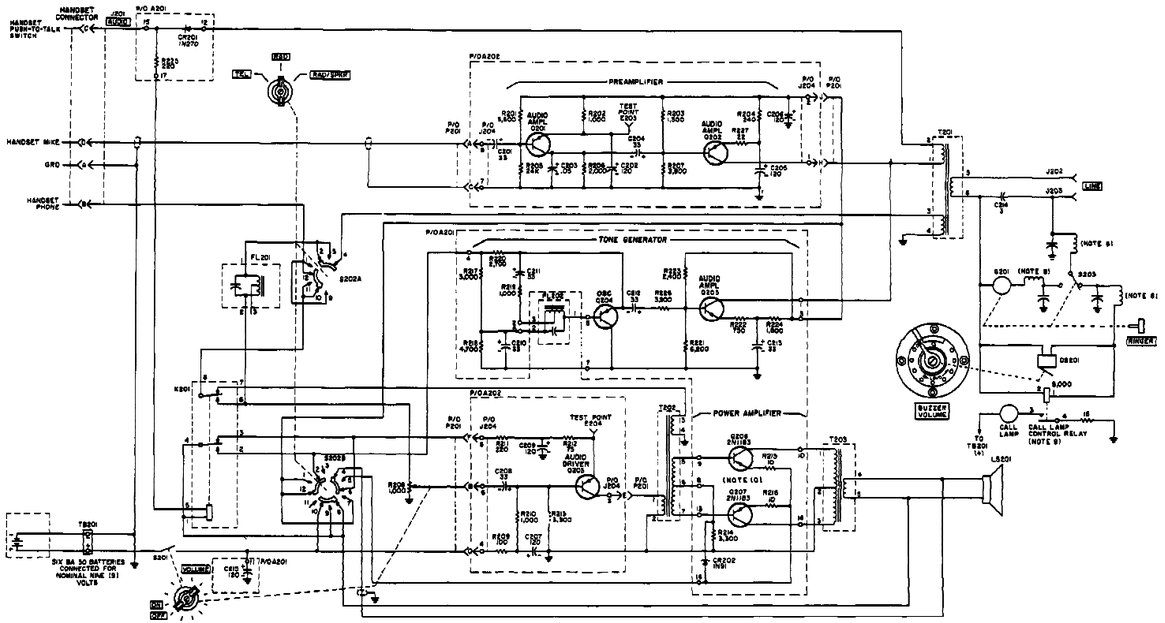

NOTES:

1. REFERENCE DESIGNATIONS ARE ABBREVIATED. PREFIX THE DESIGNATION WITH UNIT NUMBER OR ASSEMBLY DESIGNATION OR BOTH.
2. UNLESS OTHERWISE INDICATED, RESISTANCES ARE IN OHMS, CAPACITANCES ARE IN UF, TRANSISTORS ARE 2N525.
3. ▭ INDICATES EQUIPMENT MARKING.
4. RECEPTACLE VIEWED FROM PIN OR RECEPTACLE END.

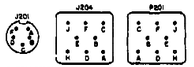

5. TRANSFORMER TERMINAL IMPEDANCES

T201	T202	T203
1-2 1500 Ω 3-4 600 Ω 5-6 600 Ω	1-2 1600 Ω 3-4 1000 Ω 5-7 4000 Ω CT	1-3 288 Ω CT 4-5 8 Ω

6. SWITCH S202 IS VIEWED FROM KNOB END. FRONT OF WAFER IS SIDE TOWARD CONTROL KNOB. WAFER NEAREST CONTROL KNOB IS SECTION A.
7. SWITCH S202 SHOWN IN RAD POSITION.

TABLE OF CONTACTS MADE		
SWITCH SECTION	SWITCH POSITION	CONTACTS
S202A	TEL RAD RAD/SPKR	1-4, 9-12 2-6, 10-12 3-6, 11-12
S202B	TEL RAD RAD/SPKR	11-2, 7-10, 3-5 12-2, 8-10, 4-5 1-2, 9-10, 8-5

8. PART OF SEALED RADIO FREQUENCY FILTER ASSEMBLY
9. CALL LAMP CONTROL RELAY IS A SEALED UNIT.
10. Q206 AND Q207 SELECTED FOR BETA RATING BETWEEN 50 AND 60! AFFECTS OUTPUT DISTORTION!

EL5820-477-35-CS-TM-5

FO-2. Control, Radio Set C-2328/GRA-39 (Remote Control Unit), Schematic Diagram

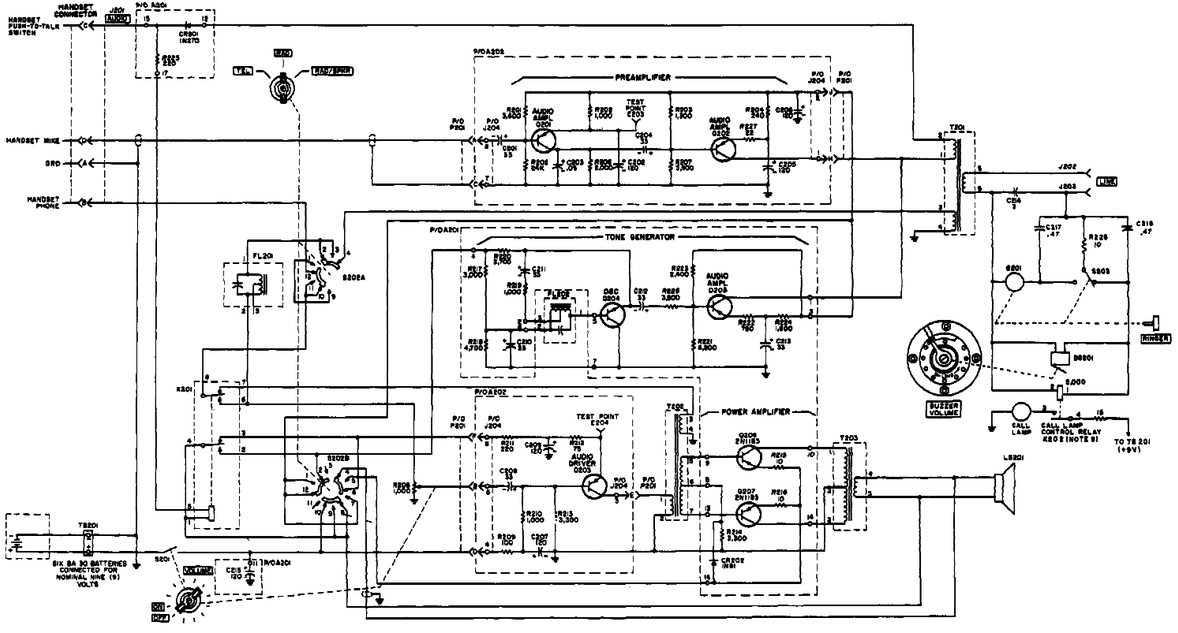

NOTES:

1. REFERENCE DESIGNATIONS ARE ABBREVIATED. PREFIX THE DESIGNATION WITH UNIT NUMBER OR ASSEMBLY DESIGNATION OR BOTH.
2. UNLESS OTHERWISE INDICATED, RESISTANCES ARE IN OHMS, CAPACITANCES ARE IN UF. TRANSISTORS ARE 2N526.
3. ▭ INDICATES EQUIPMENT MARKING.
4. RECEPTACLE VIEWED FROM PIN OR RECEPTACLE END.

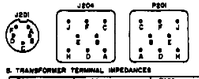

5. TRANSFORMER TERMINAL IMPEDANCES

T201	T202	T203
1-2 1500 Ω 3-4 600 Ω 5-6 600 Ω	1-2 1600 Ω 3-4 1000 Ω 5-7 4000 Ω CT	1-2 240 Ω CT 4-5 8 Ω

6. SWITCH S202 IS VIEWED FROM KNOB END. FRONT OF WAFER IS SIDE TOWARD CONTROL KNOB. WAFER NEAREST CONTROL KNOB IS SECTION A.
7. SWITCH S202 SHOWN IN FAD POSITION.

TABLE OF CONTACTS MADE

SWITCH SECTION	SWITCH POSITION	CONTACTS
S202A	TEL	1-4, 9-12
	RAD	2-4, 10-12
	RAD/SPKR	3-4, 11-12
S202B	TEL	11-2, 7-10, 3-6
	RAD	12-2, 8-10, 4-6
	RAD/SPKR	1-2, 5-10, 5-6

9. CALL LAMP CONTROL RELAY IS A SEALED UNIT.

TM5820-477-35-CS-TM-1

FO-3. Control, Radio Set C-2328B/GRA-39 (Remote Control Unit), Schematic Diagram

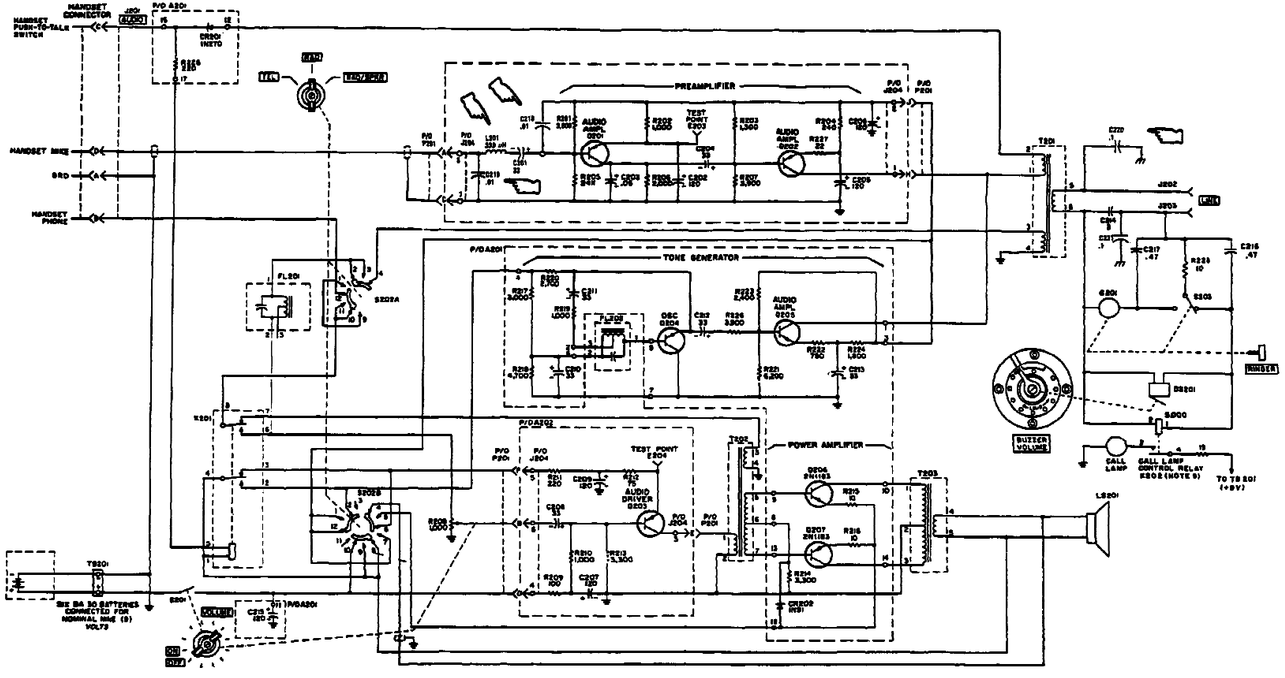
HANDSET CONNECTOR
HANDSET PUSH-TO-TALK SWITCH
HANDSET MIC
GND
HANDSET PHONE
PREAMPLIFIER
TONE GENERATOR
POWER AMPLIFIER
AUDIO AMPL Q201
AUDIO AMPL Q202
AUDIO DRIVER Q203
OSC Q204
TEST POINT E201
TEST POINT E202
TEST POINT E203
FL201
S202A
S202B
S201
T201
T202
T203
T204
J201
J202
J203
J204
P201
CR1
CR2
CR3
CR4
CR5
CR6
CR7
CR8
CR9
CR10
CR11
CR12
CR13
CR14
CR15
CR16
CR17
CR18
CR19
CR20
CR21
CR22
CR23
CR24
CR25
CR26
CR27
CR28
CR29
CR30
CR31
CR32
CR33
CR34
CR35
CR36
CR37
CR38
CR39
CR40

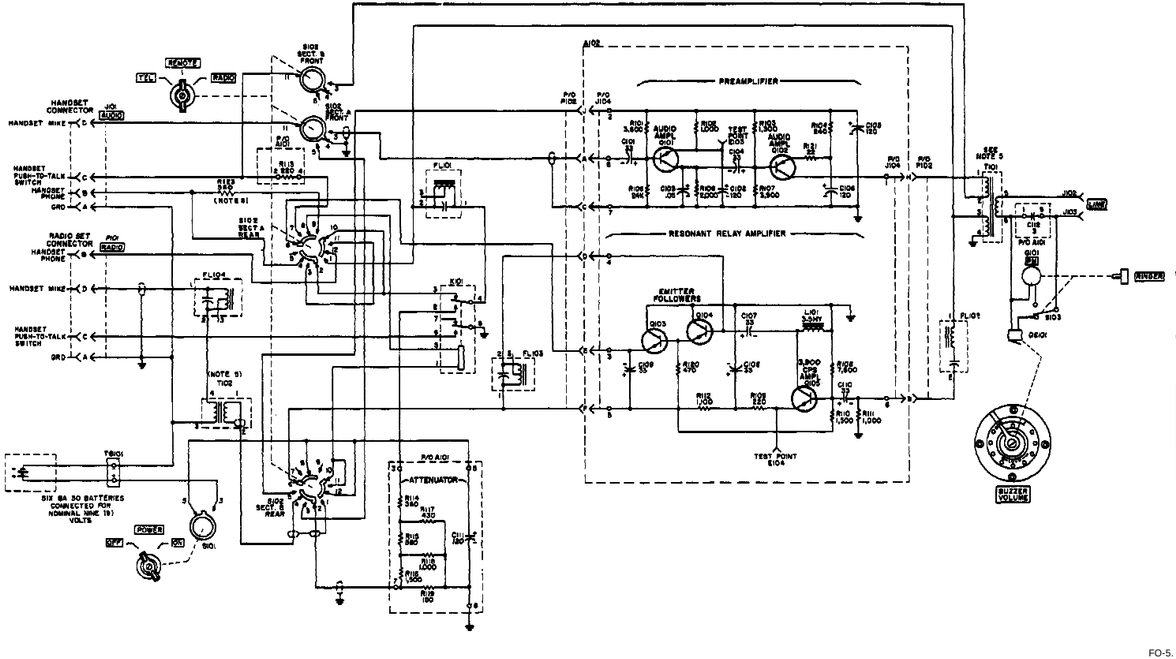

NOTES:

1. REFERENCE DESIGNATIONS ARE ABBREVIATED. PREFIX THE DESIGNATION WITH UNIT NUMBER OR ASSEMBLY DESIGNATION OR BOTH.
2. UNLESS OTHERWISE INDICATED, RESISTANCES ARE IN OHMS, CAPACITANCES ARE IN UF, TRANSISTORS ARE 2N404.
3. ▭ INDICATES EQUIPMENT MARKING.
4. RECEPTACLE VIEWED FROM PIN OR RECEPTACLE END.

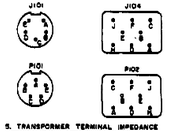

5. TRANSFORMER TERMINAL IMPEDANCE

T101	T102
1-2 = 150Ω 3-4 = 600Ω 5-6 = 600Ω	1-2 = 500Ω 3-4 = 600Ω

6. SWITCH S102 IS VIEWED FROM KNOB END. FRONT OF WAFER IS SIDE TOWARD CONTROL KNOB. WAFER NEAREST CONTROL KNOB IS SECTION A.
7. SWITCH S102 SHOWN IN REMOTE POSITION.

TABLE OF CONTACTS MADE

SWITCH SECTION	SWITCH POSITION	CONTACTS
S102 A FRONT	TEL REMOTE RADIO	3-11 4-11 5-11
S102 A REAR	TEL REMOTE RADIO	2-8, 1-4, 8-12 6-8, 2-4, 10-12 7-8, 3-4, 11-12
S102 B FRONT	TEL REMOTE RADIO	3-11 4-11 5-11
S102 B REAR	TEL REMOTE RADIO	5-8, 1-4, 9-12 6-8, 2-4, 10-12 7-8, 3-4, 11-12

8. RESISTOR R123 INSTALLED PER MWO 11-5820-477-30/1

EL5820-477-39-CS-TM-5

FO-5. Control, Radio Set C-2329/GRA-39 (Local Control Unit), Schematic Diagram.

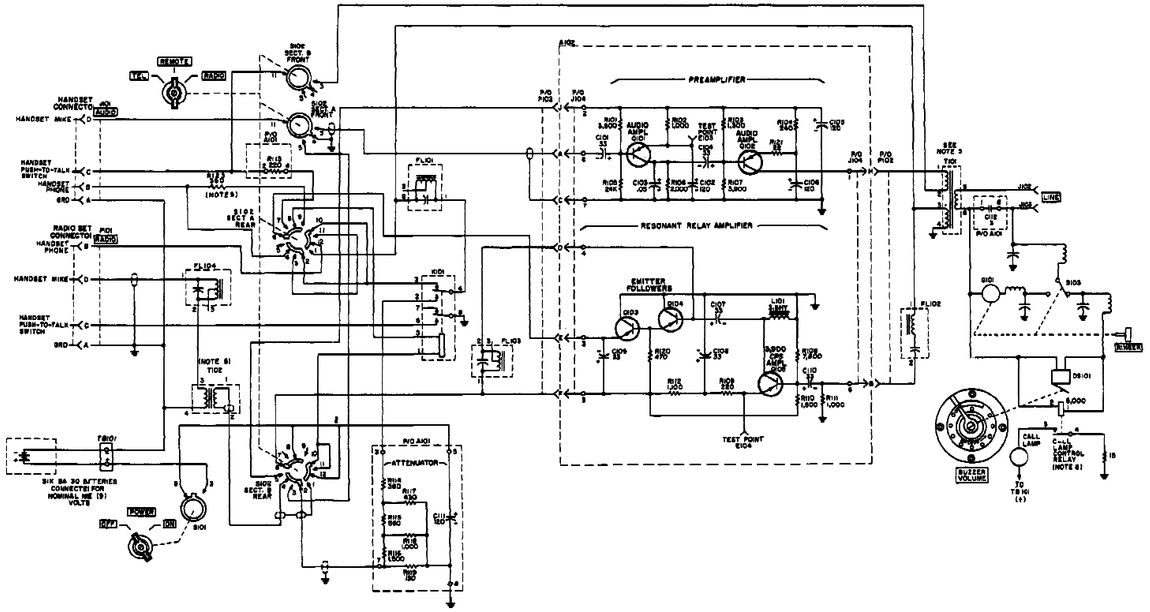

NOTES:

1. REFERENCE DESIGNATIONS ARE ABBREVIATED. PREFIX THE DESIGNATION WITH UNIT NUMBER OR ASSEMBLY DESIGNATION OR BOTH.
2. UNLESS OTHERWISE INDICATED, RESISTANCES ARE IN OHMS, CAPACITANCES ARE IN UF, TRANSISTORS ARE 2N526.
3. ▭ INDICATES EQUIPMENT MARKING.
4. RECEPTACLE VIEWED FROM PIN OR RECEPTACLE END.

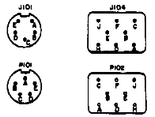

5. TRANSFORMER TERMINAL IMPEDANCE

T1D1	T1D2
1-2 = 150Ω 3-4 = 600Ω 5-6 = 900Ω	1-2 = 300Ω 3-4 = 600Ω

6. SWITCH S1D2 IS VIEWED FROM KNOB END. FRONT OF WAFER B SIDE TOWARD CONTROL KNOB. WAFER NEAREST CONTROL KNOB IS SECTION A.
7. SWITCH S1D2 SHOWN IN REMOTE POSITION.

TABLE OF CONTACTS MADE		
SWITCH SECTION	SWITCH POSITION	CONTACTS
SIDE A FRONT	TEL REMOTE RADIO	3-11 4-11 5-11
SIDE A REAR	TEL REMOTE RADIO	1-9, 1-4, 9-12 5-8, 2-4, 10-12 7-8, 3-4, 11-12
SIDE B FRONT	TEL REMOTE RADIO	3-11 4-11 5-11
SIDE B REAR	TEL REMOTE RADIO	1-9, 1-4, 9-12 5-8, 2-4, 10-12 7-8, 3-4, 11-12

9. CALL LAMP CONTROL RELAY 13 A SEALED UNIT
10. R123 INSTALLED PER MWO 11-5820-477-30/1

SL5820-477-C5-TM-7

FO-6. Control, Radio Set C-2329A/GRA-39 (Local Control Unit), Schematic Diagram

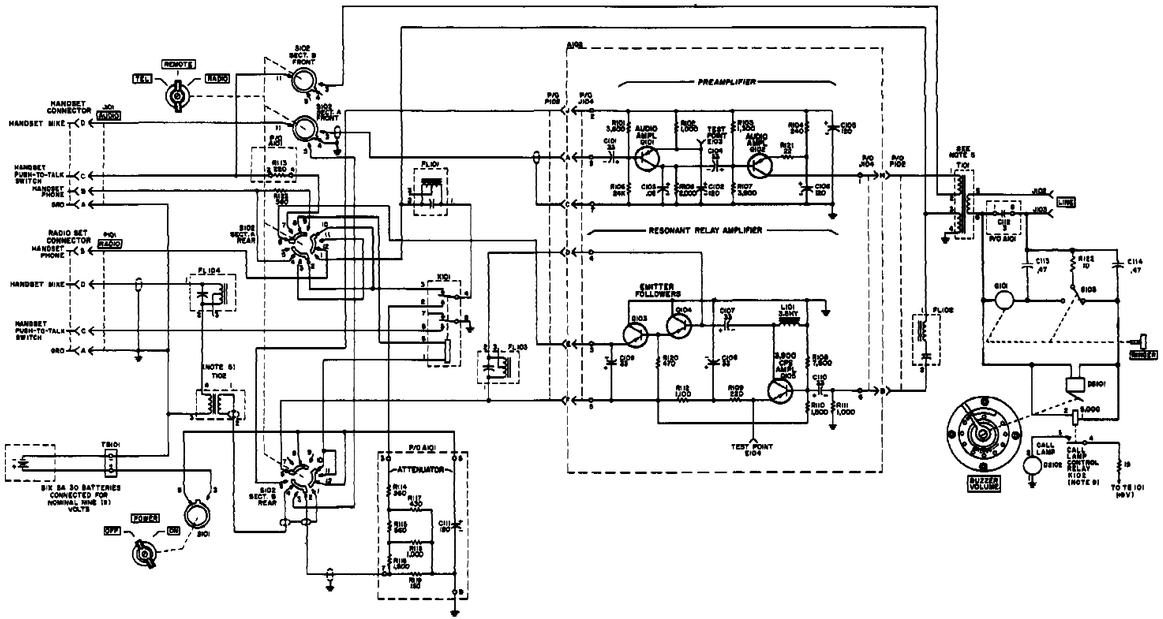

NOTES:

1. REFERENCE DESIGNATIONS ARE ABBREVIATED. PREFIX THE DESIGNATION WITH UNIT NUMBER OR ASSEMBLY DESIGNATION OR BOTH.
2. UNLESS OTHERWISE INDICATED, RESISTANCES ARE IN OHMS, CAPACITANCES ARE IN UF, TRANSISTORS ARE SHOWN.
3. ▭ INDICATES EQUIPMENT MARKING.
4. RECEPTACLE VIEWED FROM PIN OR RECEPTACLE END.

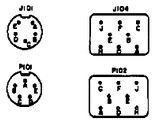

5. TRANSFORMER TERMINAL IMPEDANCE

T101	T102
1-2 = 1900Ω 3-4 = 500Ω 5-6 = 500Ω	1-2 = 500Ω 3-4 = 500Ω

6. SWITCH S102 IS VIEWED FROM KNOB END. FRONT OF WAFER IS SIDE TOWARD CONTROL KNOB. WAFER NEAREST CONTROL KNOB IS SECTION A.
7. SWITCH S102 SHOWN IN REMOTE POSITION.

TABLE OF CONTACTS MADE		
SWITCH SECTION	SWITCH POSITION	CONTACTS
S102 A FRONT	TEL REMOTE RADIO	3-11 4-11 5-11
S102 A REAR	TEL REMOTE RADIO	1-6, 1-9, 2-12 6-9, 2-6, 10-12 7-9, 2-9, 11-12
S102 B FRONT	TEL REMOTE RADIO	3-11 4-11 5-11
S102 B REAR	TEL REMOTE RADIO	6-8, 1-4, 9-12 6-9, 8-4, 12-16 7-8, 9-4, 11-12

9. CALL LAMP CONTROL RELAY IS A SEALED UNIT.

FO-7. Control, Radio Set C-2329B/GRA-39 (Local Control Unit), Schematic Diagram.

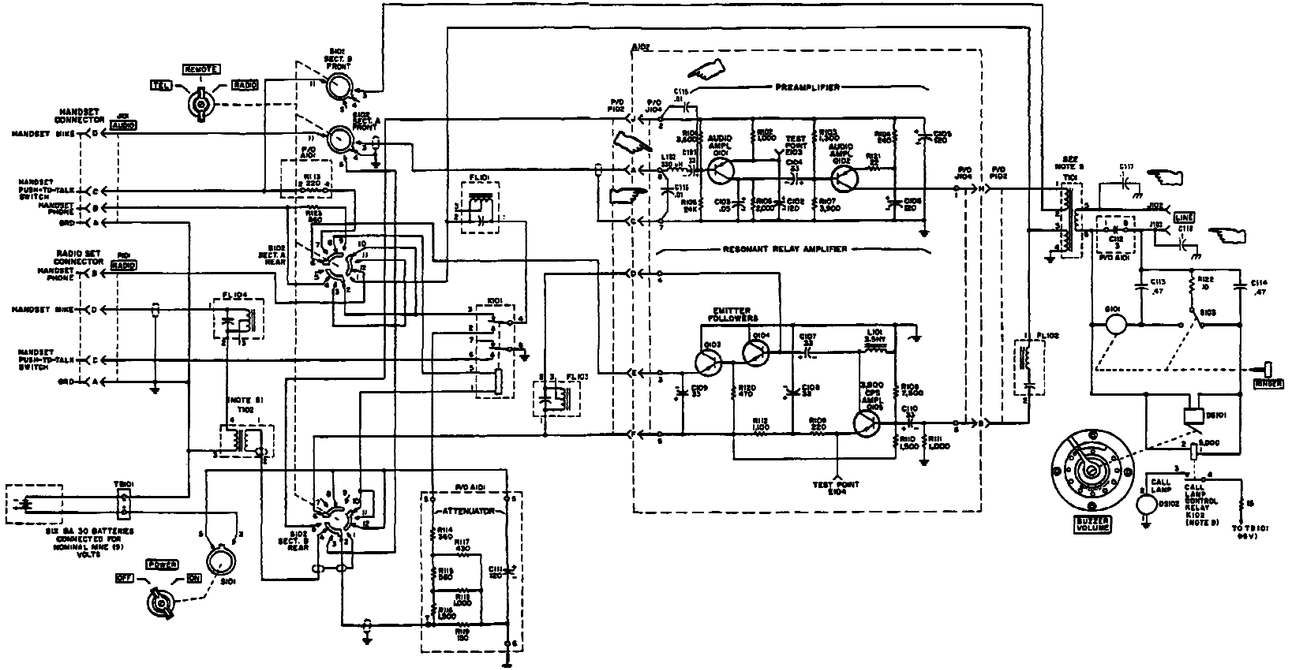

NOTES:

1. REFERENCE DESIGNATIONS ARE ABBREVIATED. PREFIX THE DESIGNATION WITH UNIT NUMBER OR ASSEMBLY DESIGNATION OR BOTH.

2. UNLESS OTHERWISE INDICATED, RESISTANCES ARE IN OHMS, CAPACITANCES ARE IN UF, TRANSISTORS ARE 2N524.

3. ▭ INDICATES EQUIPMENT MARKING.

4. RECEPTACLE VIEWED FROM PIN OR RECEPTACLE END

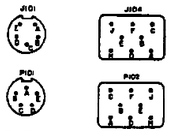

5. TRANSFORMER TERMINAL IMPEDANCES

T101	T102
1-2 = 150OHS 3-4 = 800Z 5-6 = 800Z	1-2 = 300Z 3-4 = 600Z

6. SWITCH S102 IS VIEWED FROM KNOB END. FRONT OF WAFER IS SIDE TOWARD CONTROL. WAFER NEAREST CONTROL KNOB IS SECTION A.

7. SWITCH S102 SHOWN IN REMOTE POSITION.

TABLE OF CONTACTS MADE		
SWITCH SECTION	SWITCH POSITION	CONTACTS
S102 A FRONT	TEL REMOTE RADIO	3-11 4-11 5-11
S102 A REAR	TEL REMOTE RADIO	3-8, 1-4, 9-12 5-6, 2-4, 10-12 7-8, 3-4, 11-12
S102 B FRONT	TEL REMOTE RADIO	3-11 4-11 5-11
S102 B REAR	TEL REMOTE RADIO	5-6, 1-4, 9-12 5-6, 2-4, 10-12 7-8, 3-4, 11-12

8. CALL LAMP CONTROL IS A SEALED UNIT.

9. CALL LAMP CONTROL RELAY IS A SEALED UNIT.

TM 5820-477-35-C6-TM-2

FO-8. Control, Radio Set C-2329C/GRA-39 (Local Control Unit), Schematic Diagram

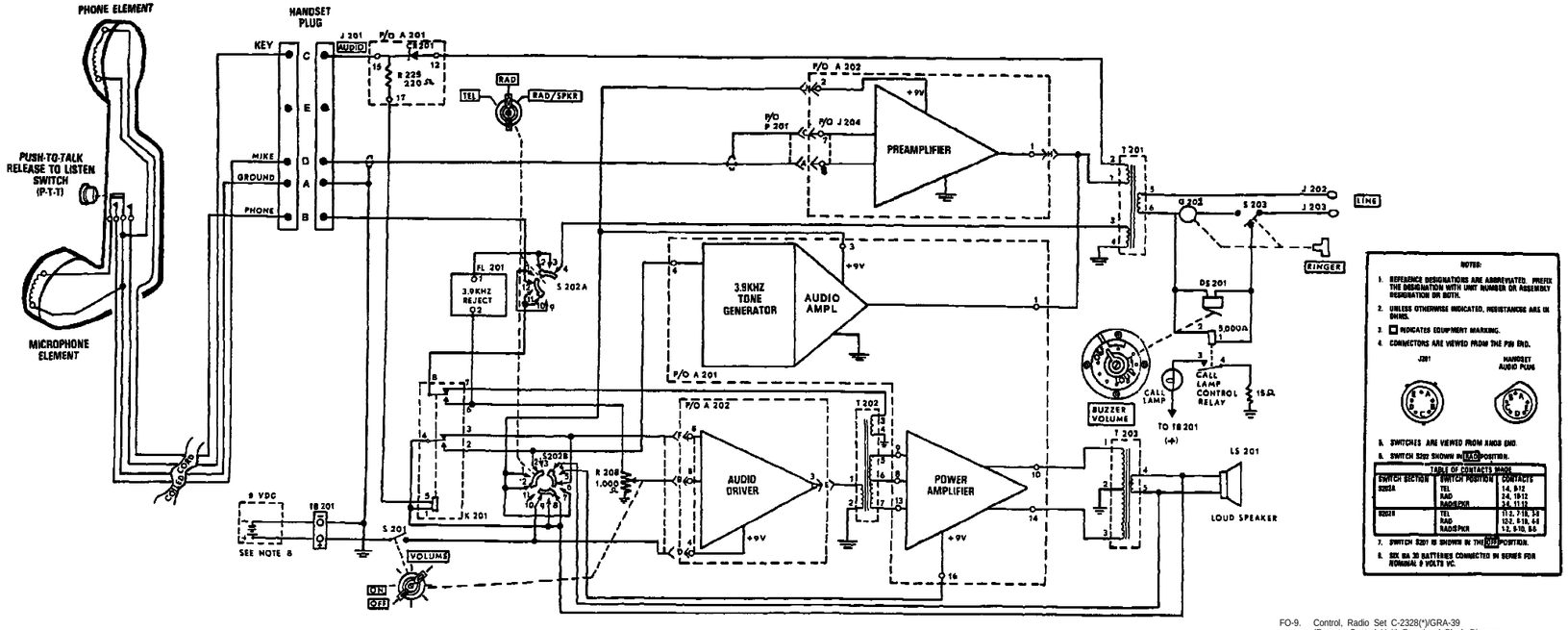

FO-9. Control, Radio Set C-2328(*)/GRA-39 (Remote Control Unit) Functional Block Diagram

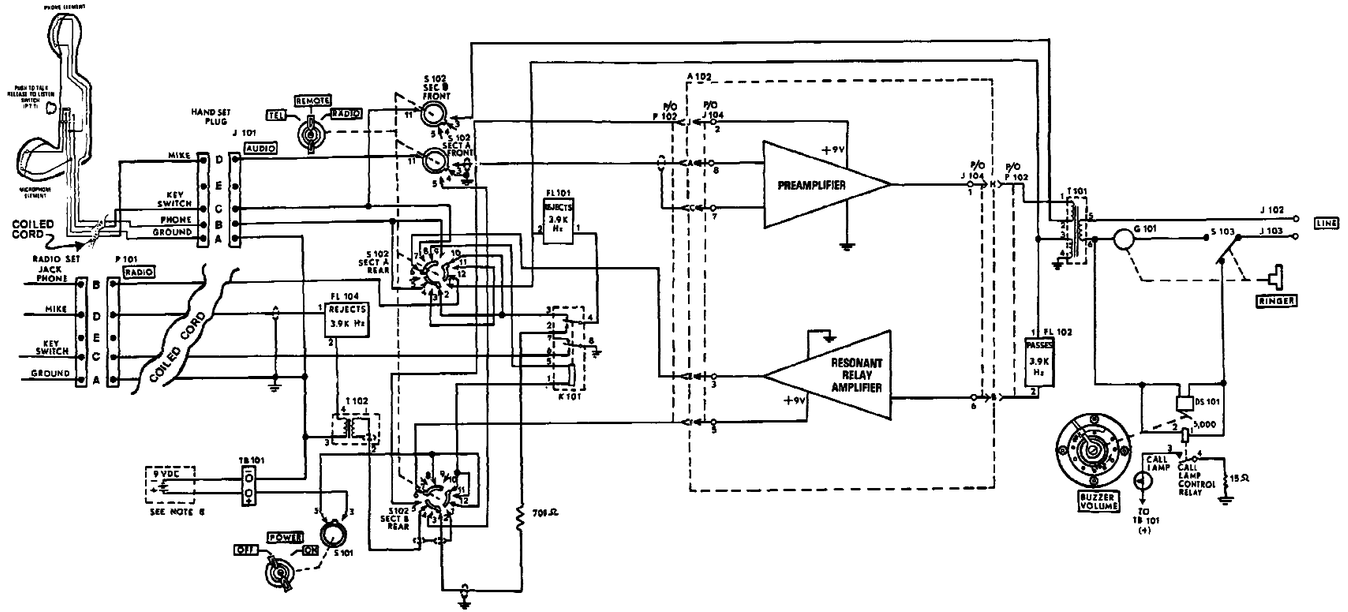

NOTES:

1. REFERENCE DESIGNATIONS ARE ABBREVIATED. PREFIX THE DESIGNATION WITH UNIT NUMBER OF ASSEMBLY DESIGNATION OR BOTH.
2. UNLESS OTHERWISE INDICATED, RESISTANCES ARE IN OHMS.
3. ▭ INDICATES EQUIPMENT MARKING.
4. CONNECTORS ARE VIEWED FROM THE P/N END.

5. SWITCHES ARE VIEWED FROM THE KNOB END.
6. SWITCH S102 SHOWN IN REMOTE POSITION.

TABLE OF CONTACTS MADE		
SWITCH SECTION	SWITCH POSITION	CONTACTS
S102 A FRONT	TEL REMOTE RADIO	3-11 4-11 5-11
S102 A REAR	TEL REMOTE RADIO	5-8, 14-, 8-12 6-8, 2-6, 10-12 7-8, 3-4, 11-12
S102 B FRONT	TEL REMOTE RADIO	3-11 4-11 5-11
S102 B REAR	TEL REMOTE RADIO	5-8, 1-4, 8-12 6-8, 2-6, 10-12 7-8, 3-4, 11-12

7. SWITCH S101 SHOWN IN OFF POSITION.
8. SIX BA 30 BATTERIES CONNECTED IN SERIES FOR NOMINAL 9 VOLTS DC

FO-10. Control, Radio Set C-2329(*)/GRA-39
(Local Control Unit) Functional Block Diagram

PIN: 068233-000