TM 5-6115-632-14&P

TECHNICAL MANUAL

OPERATOR'S, UNIT, INTERMEDIATE DIRECT SUPPORT AND INTERMEDIATE GENERAL SUPPORT MAINTENANCE MANUAL (INCLUDING REPAIR PARTS AND SPECIAL TOOLS LISTS)

POWER UNIT PU-753/M (NSN 6115-00-033-1389) MEP-003A 10 KW 60 HZ GENERATOR SET M116A2 2-WHEEL, 2-TIRE, MODIFIED TRAILER

This manual supersedes Chapter 14 of TM 5-6115-594-14&P dated 25 September 1984.

Approved for public release. Distribution is unlimited.

HEADQUARTERS, DEPARTMENT OF THE ARMY

17 JUNE 1988

CHANGE

NO.5

HEADQUARTERS
DEPARTMENT OF THE ARMY
WASHINGTON, D.C., 15 April 1997

Operator's, Unit, Intermediate Direct Support and
Intermediate General Support Maintenance Manual
(Including Repair Parts and Special Tools Lists)

POWER UNIT, PU-753/M
(NSN 611 5-0 -33-1389)
MEP-003A 10 KW 60 HZ GENERATOR SET
M116A2 2-WHEEL, 2-TIRE, MODIFIED TRAILER

DISTRIBUTION STATEMENT A: Approved for public release; distribution is unlimited

TM 5-6115-632-14&P, 17 June 1988, is changed as follows:

1. Remove and insert pages as indicated below. New or changed text material is indicated by a vertical bar in the margin. An illustration change is indicated by a miniature pointing hand.

Remove pages	Insert pages
D-21 and D-22	D-21 and D-22
D-23/(D-24 Blank)	D-23/(D-24 Blank)

2. Retain this sheet in front of manual for reference purposes.

By Order of the Secretary of the Army:

DENNIS J. REIMER
General, United States Army
Chief of Staff

Official

JOEL B. HUDSON
Administrative Assistant to the
Secretary of the Army
03175

DISTRIBUTION:
To be distributed in accordance with DA Form 12-25-E, block no. 3867, requirements for TM 5-6115-632-14&P.

CHANGE

NO. 4

HEADQUARTERS
DEPARTMENT OF THE ARMY
WASHINGTON, D.C., 30 September 1996

Operator's, Unit, Intermediate Direct Support and
Intermediate General Support Maintenance Manual
(Including Repair Parts and Special Tools Lists)

POWER UNIT, PU-753/M
(NSN 6115-00-033-1389)
MEP-003A 10 KW 60 HZ GENERATOR SET
M116A2 2-WHEEL, 2-TIRE, MODIFIED TRAILER

DISTRIBUTION STATEMENT A: Approved for public release; distribution is unlimited

TM 5-6115-632-14&P, 17 June 1988, is changed as follows:

1. Remove and insert pages as indicated below. New or changed text material is indicated by a vertical bar in the margin. An illustration change is indicated by a miniature pointing hand.

Remove pages	Insert pages
i and ii	i and ii
1-1 and 1-2	1-1 and 1-2
D-7 and D-8	D-7 and D-8
D-11 through D-16	D-11 through D-16
D-19 through D-22	D-19 through D-22

2. Retain this sheet in front of manual for reference purposes.

By Order of the Secretary of the Army:

DENNIS J. REIMER
General, United States Army
Chief of Staff

Official:

JOEL B. HUDSON
Administrative Assistant to the
Secretary of the Army
02496

DISTRIBUTION:
To be distributed in accordance with DA Form 12-25-E, block no. 3867, requirements for TM 5-6115-632-14&P.

CHANGE

NO. 3

HEADQUARTERS
DEPARTMENT OF THE ARMY
WASHINGTON, D.C., 17 September 1991

Operator's, Unit, Intermediate Direct Support
and Intermediate General Support Maintenance
Manual (Including Repair Parts and Special Tools Lists)

POWER UNIT
PU-753/M (NSN 6115-00-033-1389)
MEP-003A 10 KW 60 HZ GENERATOR SET
Ml16A2 2–WHEEL, 2-TIRE, MODIFIED TRAILER

Approved for public release; distribution is unlimited

TM 5–6115–632–14&P, 17 June 1988, is changed as follows:

1. Remove and insert pages as indicated below. New or changed text material is indicated by a vertical bar in the margin. An illustration change is indicated by a miniature pointing hand.

Remove pages	Insert pages
3–5 and 3-6	3–5 and 3-6
3-11 and 3–12	3-11 and 3-12

2. Retain this sheet in front of manual for reference purposes.

By Order of the Secretary of the Army:

GORDON R. SULLIVAN
General, United States Army
Chief of Staff

Official:
PATRICIA P. HICKERSON
Brigadier General, United States Army
The Adjutant General

DISTRIBUTION:
To be distributed in accordance with DA Form 12–25.E, (qty rqr block no. 3867)

CHANGE

NO. 2

HEADQUARTERS
DEPARTMENT OF THE ARMY
WASHINGTON, D.C., 1 May 1991

Operator's, Unit, Intermediate Direct Support
and Intermediate General Support Maintenance Manual
(Including Repair Parts and Special Tools Lists)

POWER UNIT
PU-753/M (NSN 6115-00-033-1389)
MEP-003A 10 KW 60 HZ GENERATOR SET
M116A2 2-WHEEL, 2-TIRE, MODIFIED TRAILER

Approved for public release; distribution is unlimited

TM 5-6115-632-14&P, 17 June 1988, is changed as follows:

1. Remove and insert pages as indicated below. New or changed text material is indicated by a vertical bar in the margin. An illustration change is indicated by a miniature pointing hand.

Remove pages	Insert pages
1-3 and 1-4	1-3 and 1-4

2. Retain this sheet in front of manual for reference purposes.

By Order of the Secretary of the Army:

CARL E. VUONO
General, United States Army
Chief of Staff

Official:

PATRICIA P. HICKERSON
Colonel, United States Army
The Adjutant General

DISTRIBUTION:
To be distributed in accordance with DA Form 12-25E, (qty rqr block no. 3867)

CHANGE

No. 1

HEADQUARTERS
DEPARTMENT OF THE ARMY
WASHINGTON, D.C. 25 October 1989

Operator's, Unit, Intermediate Direct Support
And Intermediate General Support Maintenance
Manual (Including Repair Parts and
Special Tools Lists)

POWER UNIT
PU-753/M (NSN 6115-00-033-1389)
MEP-003A 10 KW 60 HZ GENERATOR SET
M116A2 2-WHEEL, 2-TIRE, MODIFIED
TRAILER

Approved for public release. Distribution is unlimited.

TM 5-6115-632-14&P, 17 June 1988, is changed as follows:

1. Remove and insert pages as indicated below. New or changed text material is indicated by a vertical bar in the margin. An illustration change is indicated by a miniature pointing hand.

Remove pages	Insert pages
4-7 through 4-12	4-7 through 4-12

2. Retain this sheet in front of manual for reference purposes.

By Order of the Secretary of the Army:

CARL E. VUONO
General, United States Army
Chief of Staff

Official:

WILLIAM J. MEEHAN, II
Brigadier General, United States Army
The Adjutant General

DISTRIBUTION:
To be distributed in accordance with DA Form 12-25A, Operator, Unit, Direct Support and General Support Maintenance requirements for Generator Set, Diesel Engine Driven, Trailer Mounted.

SAFETY STEPS TO FOLLOW IF SOMEONE IS THE VICTIM OF ELECTRICAL SHOCK

DO NOT TRY TO PULL OR GRAB THE INDIVIDUAL

IF POSSIBLE, TURN OFF THE ELECTRICAL POWER

IF YOU CANNOT TURN OFF THE ELECTRICAL POWER, PULL, PUSH, OR LIFT THE PERSON TO SAFETY USING A WOODEN POLE OR A ROPE OR SOME OTHER INSULATING MATERIAL

SEND FOR HELP AS SOON AS POSSIBLE

AFTER THE INJURED PERSON IS FREE OF CONTACT WITH THE SOURCE OF ELECTRICAL SHOCK, MOVE THE PERSON A SHORT DISTANCE AWAY AND IMMEDIATELY START ARTIFICIAL RESUSCITATION

WARNING

All specific cautions and warnings contained in this manual shall be strictly adhered to. Otherwise, severe injury, death and/or damage to the equipment may result.

HIGH VOLTAGE

is produced when this power unit is in operation.

DEATH

or severe burns may result if personnel fail to observe safety precautions. Do not operate this power unit until the ground terminal stud has been connected to a suitable ground. Disconnect the battery ground cable on the generator set before removing and installing components on the engine or in the electrical control panel system. Remove all rings, watches, and other jewelry when performing maintenance on this equipment. Loose fitting clothing should be secured to prevent it catching in moving parts. Do not attempt to service or otherwise make any adjustments, connections or reconnections of wires or cables until generator set is shut down and completely de-energized.

DANGEROUS GASES

Batteries generate explosive gas during charging: therefore, utilize extreme caution. Do not smoke, or use open flame in the vicinity of the generator set when servicing batteries.

Exhaust discharge contains noxious and deadly fumes. Do not operate power unit generator set in enclosed areas unless exhaust discharge is properly vented to the outside.

To avoid sparking between filler nozzle and fuel tank, always maintain metal to metal contact between filler nozzle and fuel tank when filling generator set fuel tank.

Do not smoke or use open flame in the vicinity of the generator set while fueling.

LIQUIDS UNDER HIGH PRESSURE

are generated as a result of operation of the power unit generator set. Do not expose any part of the body to a high pressure leak in the fuel injection system.

NOISE

Operating noise level of the generator set can cause hearing damage. Ear protectors, as recommended by the medical or safety officer, must be worn when working near this power unit.

WARNING

Clean parts in a well-ventilated area. Avoid inhalation of solvent fumes and prolonged exposure of skin to cleaning solvent. Wash exposed skin thoroughly. Dry cleaning solvent (P-D-680) used to clean parts is potentially dangerous to personnel and property. Do not use near open flame or excessive heat. Flash point of solvent is 100°F. to 138°F. (38°C. to 59 °C.).

TECHNICAL MANUAL

NO. 5-6115-632-14&P

HEADQUARTERS
DEPARTMENT OF THE ARMY
WASHINGTON, D.C., 17 June 1988

Operator's, Unit, Intermediate Direct Support and
Intermediate General Support Maintenance Manual
(Including Repair Parts and Special Tools Lists)

POWER UNIT, PU-753/M
(NSN 6115-00-033-1389)
MEP-003A 10 KW 60 HZ GENERATOR SET
M116A2 2-WHEEL, 2-TIRE, MODIFIED TRAILER

REPORTING ERRORS AND RECOMMENDING IMPROVEMENTS

You can help improve this manual. If you find any mistakes, or if you know of a way to improve these procedures, please let us know. Mail your letter or DA Form 2028 (Recommended Changes to Publications and Blank Forms), or DA Form 2028-2 located in the back of this manual directly to: Commander, US Army Aviation and Troop Command, ATTN: AMSAT-I-MP, 4300 Goodfellow Blvd., St. Louis, MO 63120-1798. You may also submit your recommended changes by E-mail directly to <mpmt%avma28@st-louis-emh7.army.mil>. A reply will be furnished directly to you. Instructions for sending an electronic 2028 may be found at the back of this manual immediately preceding the hard copy 2028.

DISTRIBUTION STATEMENT A: Approved for public release; distribution is unlimited

TABLE OF CONTENTS

		PAGE
CHAPTER 1	INTRODUCTION	
Section I	General	1-1
Section II	Description and Data	1-2
CHAPTER 2	OPERATING INSTRUCTIONS	
Section I	Operating Procedures	2-1
Section II	Operation of Auxiliary Equipment	2-1
Section III	Operation Under Unusual Conditions	2-2
CHAPTER 3	OPERATOR/CREW MAINTENANCE INSTRUCTIONS	
Section I	Consumable Operating and Maintenance Supplies	3-1
Section II	Lubrication Instructions	3-1
Section III	Preventive Maintenance Checks and Services (PMCS)	3-1
Section IV	Troubleshooting	3-17
Section V	Operator/Crew Maintenance	3-17

*This manual supersedes Chapter 14 of TM 5-6115-594-14&P dated 25 September 1984.

CHAPTER 4	UNIT MAINTENANCE	
Section I	Service Upon Receipt of Equipment	4-1
Section II	Movement to a New Worksite	4-6
Section III	Repair Parts, Special Tools, Special Test, Measurement and Diagnostic Equipment (TMDE)	4-7
Section IV	Lubrication Instructions	4-7
Section V	Preventive Maintenance Checks and Services	4-8
Section VI	Troubleshooting	4-13
Section VII	Radio Interference Suppression	4-13
Section VIII	Maintenance of Power Plant Trailer	4-13
CHAPTER 5	INTERMEDIATE (FIELD), (DIRECT SUPPORT AND GENERAL SUPPORT) MAINTENANCE INSTRUCTIONS	
Section I	Introduction	5-1
Section II	Maintenance of Power Plant Trailer	5-1
Section III	Generator Set	5-7
CHAPTER 6	TEST AND INSPECTION AFTER REPAIR	
Section I	General Requirements	6-1
Section II	Inspection	6-1
Section III	Operational Tests	6-1
APPENDIX A	REFERENCES	A-1
APPENDIX B	COMPONENTS OF END ITEM AND BASIC ISSUE ITEMS LISTS	B-1
APPENDIX C	MAINTENANCE ALLOCATION CHART	C-1
APPENDIX D	UNIT, INTERMEDIATE (FIELD) (DIRECT SUPPORT AND GENERAL SUPPORT) AND DEPOT MAINTENANCE REPAIR PARTS AND SPECIAL TOOLS LIST	D-1

LIST OF ILLUSTRATIONS

Figure	Title	Page
1-1	Power Unit, Roadside Front, Three-Quarter View	1-2
1-2	Power Unit, Curbside Rear, Three-Quarter View	1-3
3-1	Fitted Cover Installed on Power Unit	3-18
3-2	Fitted Cover Rolled Up for Removal	3-19
3-3	Tarpaulin Support Replacement	3-20
3-4	Bow Assembly Replacement	3-20
4-1	Uncrating Generator Set	4-1
4-2	Unpacking Fitted Cover, Bows and Tarpaulin Support	4-2
4-3	Installing Power Unit	4-4
4-4	External Fuel Line Connection	4-6
4-5	Fuel Can Bracket Replacement	4-14
4-6	Accessory Box Replacement	4-15
4-7	Fire Extinguisher Bracket Replacement	4-15
5-1	Leg Prop Assembly Replacement	5-2
5-2	Fender and Bed Replacement	5-4
5 3	Accessory Box Repair	5-6
5 4	Power Unit Markings	5-7
5 5	Detaching Generator Set from Trailer	5-8
5-6	Lifting Generator Set	5-9
B-1	Components of End item	B-2
B-2	Basic Issue items	B-3
D-1	Enclosure	D-10
D-2	Generator Set	D-12
D-3	Trailer Body	D-14
D-4	Accessory Box	D-18
D-5	Leg Prop Assembly	D-20

LIST OF TABLES

Number	Title	Page
3-1	Consumable Operating and Maintenance Supplies	3-1
3-2	Operator/Crew Preventive Maintenance Checks and Services (PMCS)	3-4
4-1	Unit Preventive Maintenance Checks and Services (PMCS)	4-9

CHAPTER 1
INTRODUCTION

Section I. GENERAL

1-1. Scope. This manual is for your use in operating and maintaining the Power Unit, PU-753/M. The PU-753/M is a mobile power unit used to supply power to any system or equipment requiring up to 10 kW of 60 Hz input operating power. In addition to operating instructions and operator, unit, and intermediate direct support and general support maintenance procedures, this manual contains a Repair Parts and Special Tools List for the power unit.

1-2. Limited Applicability. Some portions of this publication are not applicable to both services. These portions are prefixed to indicate the service to which they pertain: (A) for Army, and (F) for Air Force. Portions not prefixed are applicable to both services.

1-3. Maintenance Forms and Records.

a. (A) Maintenance forms and records used by Army personnel are prescribed by DA Pam 738-750.

b. (F) Maintenance forms and records used by Air Force personnel are prescribed in AFM66-1 and the applicable 00-20 Series Technical Orders.

1-4. Reporting of Errors. Reporting of errors and omissions and recommendations for improvement of this publication by the individual user is encouraged. Reports should be submitted as follows:

a. (A) Army DA Form 2028 directly to: Commander, US Army Aviation and Troop Command, ATTN: U AMSAT-I-MT, 4300 Goodfellow Boulevard, St. Louis, MO 63120-1798.

b. (F) Air Force AFTO Form 22 directly to: Commander, Sacramento Air Logistics Center, ATTN: SM-ALC-MMEDTA, McClellan Air Force Base, CA, 95652-5609, in accordance with TO-00-5-1.

1-5. Reporting Equipment Improvement Recommendations (EIR). El R's will be prepared using SF 368, U Product Quality Deficiency Report. Instructions for preparing EIR's are provided in DA PAM 738-750, The Army Maintenance Management System. EIR's should be mailed directly to: Commander, US Army Aviation and Troop Support Command, ATTN: AMSAT-I-MDO, 4300 Goodfellow Boulevard, St. Louis, MO 63120-1798.

1-6. Levels of Maintenance Accomplishment.

a. (A) Army users shall refer to the Maintenance Allocation Chart (MAC) for tasks and levels of maintenance to be performed.

b. (F) Air Force users shall accomplish maintenance at the user level consistent with their capability in accordance with policies established in AFM 66-1.

1-7. Destruction of Army Materlel. Destruction of Army materiel to prevent enemy use shall be in accordance with TM 750-244-3.

1-8. Administrative Storage.

a. Army equipment placed in administrative storage will have preventive maintenance performed in accordance with the PMCS tables before storage. When equipment is removed from storage, PMCS will be performed to ensure operational readiness.

b. (F) For administrative storage procedures for Air Force equipment, refer to TO 35-1-4, Processing and Inspection of Aerospace Ground Equipment for Storage and Shipment.

1-9. Preparation for Shipment and Storage.

a. (A) Army – Refer to TB 740-97-2.

b. (F) Air Force – Refer to TO 35-1-4 for component of end item generator sets and TO 38-1-5 for installed engine.

Section II. DESCRIPTION AND DATA

1-10. Description. Power Unit PU-753/M is made up of one Tactical Utility Generator Set, DOD Model MEP-003A, mounted on a modified M116A2 trailer. The generator set is an air-cooled, diesel engine-driven unit with a load capacity of 10 KW at 60 Hz. The trailer is a two-wheeled unit with a 3/4-ton carrying capacity. The modifications to the basic trailer provide stowage for the accessories and all equipment necessary for mobile operation as well as providing a work platform for the operator and maintenance personnel. Figures 1-1 and 1-2 illustrate the power unit with the fitted cover removed to show the generator set.

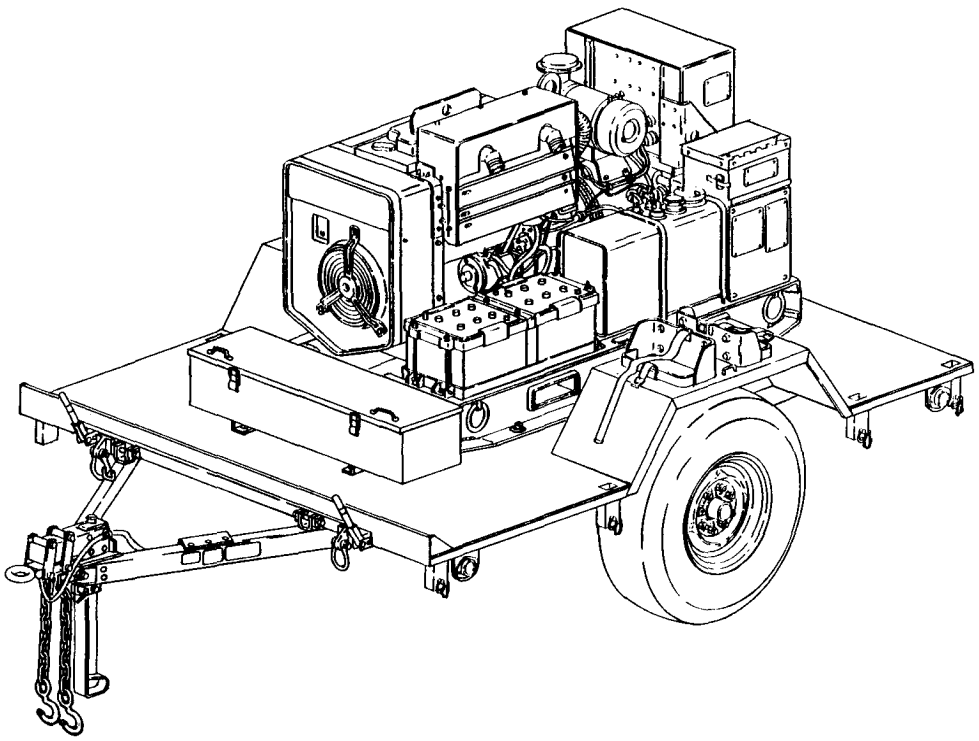

Figure 1-1. Power Unit, Roadside Front, Three-Quarter View.

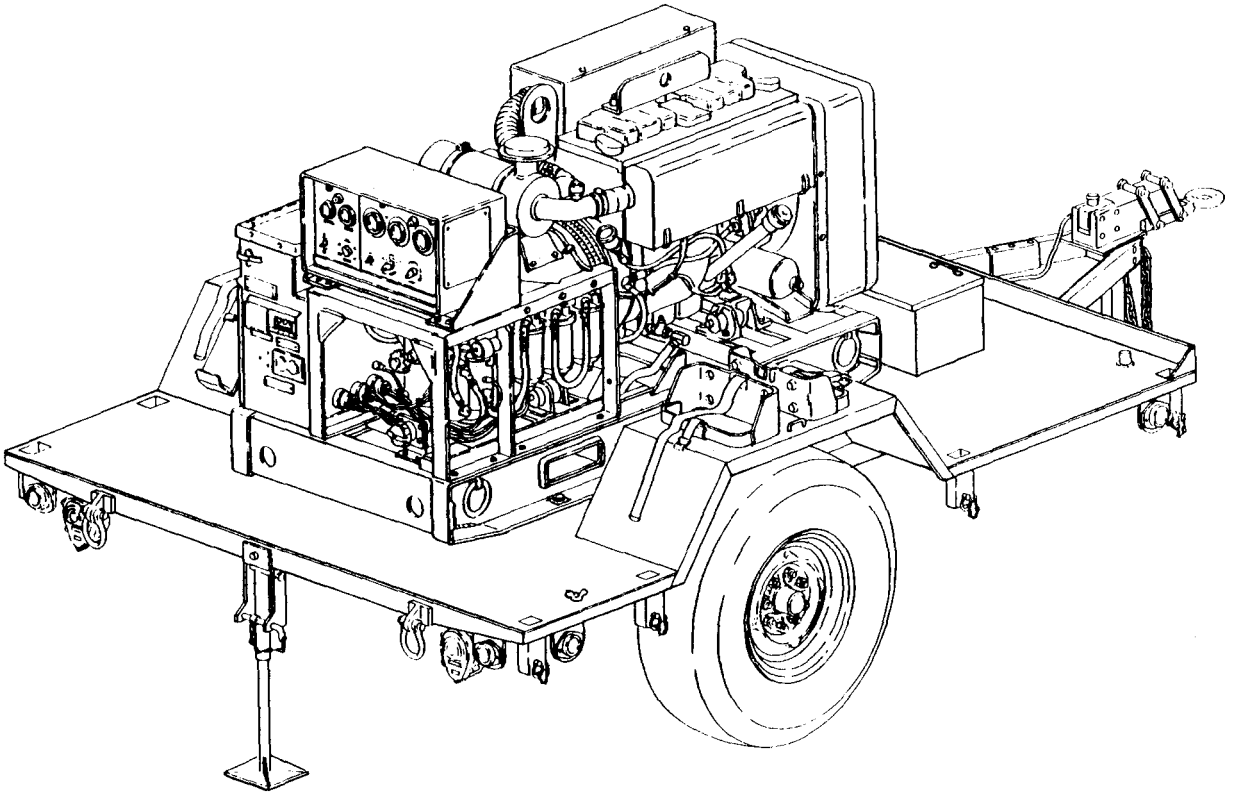

Figure 1-2. Power Unit, Curbside Rear, Three-Quarter View.

1-11. Tabulated Data. The tabulated data provides operator and unit level personnel with the dimensions and weights for Power Unit, PU-753/M. These specifications are computed from the combined dimensions and weights of the generator set and trailer as modified for use with the power unit. Specifications of the individual components can be found in their respective technical publications. For additional information concerning Generator Set, DOD Model MEP-003A, refer toTM5-6115-585-12 and -34. For additional information on the M116A2 trailer, refer to TM 9-2330-202-14&P. The tabulated data also includes the location and content of all data plates unique to the power unit.

a. Identification and Instruction Plates.

(1) Identification plate.

(a) Location. This plate is located on the front curbside frame between the trailer body and the drawbar ring.

(b) Content.

US
POWER UNIT
PU 753/M
KW 10
HERTZ 60
NSN 6115-00-033-1389

(2) *Instruction plate*

(a) *Location.* This plate is located near the ground stud on the rear, curbside corner of the trailer body.

(b) Content.

GROUND TERMINAL

b. Tabulated Data for Power Unit.

Overall Length	142 inches (360.8 centimeters)
Overall Width	73.5 inches (186.7 centimeters)
Overall Height	74.75 inches (189.8 centimeters)
Net Weight (empty)	2890 pounds (1310 kilograms)
Net Weight (Filled)	3040 pounds (1378.7 kilograms)
Shipping Weight	3060 pounds (1387.7 kilograms)
Cubage	412.23 cubic feet (11.63 cubic meters)

1-12. Differences Between Models. There are no differences between models, serial numbers, or serial number groups applicable to this equipment.

☆U.S. GOVERNMENT PRINTING OFFICE: 1991 - 554-030/40101

PIN: 064390-002

CHAPTER 2

OPERATING INSTRUCTIONS

Section I. OPERATING PROCEDURES

2.1. Operating Procedures. The typical mission for any mobile power generating equipment can be described in three steps or phases. In the first phase, the power unit is towed to the worksite and installed by unit level technicians (paragraph 4-2). In the second phase of the mission, the operator starts the generator set, runs it to power a system or equipment, and eventually shuts it down. In the final phase, the power unit is dismantled, packed up and either moved to a new work site or returned to standby status (paragraph 4-3). This final phase is also accomplished by unit level technicians.

WARNING

Do not operate generator set until it is properly grounded (paragraph 4-2, b.) Serious injury or death by electrocution can result from operating an ungrounded generator set.

Operating noise level of generator can cause hearing damage. Ear protectors, as recommended by medical or safety officer, must be worn when working near power unit.

CAUTION

To avoid damage to equipment, make certain of voltage, frequency, and phase requirements of load connected to generator set.

NOTE

Before starting generator set, do your Before PMCS as described in table 3-2.

In order to perform the operator's task during the mission, refer to the data plate located on the right-hand side of the generator set control cubicle. Follow the operating instructions on the data plate to start and run the generator set. Monitor and adjust generator set power output as required during operation. At the end of the mission, shut down the generator set in accordance with the operating instructions on the data plate. For a copy of the information on the data plate, as well as more detailed operating procedures for the generator set, refer to TM 5-6115-585-12. For trailer operating procedures, refer to TM 9-2330-202-14&P.

Section II. OPERATION OF AUXILIARY EQUIPMENT

2-2. **Operation of Auxiliary Equipment.** There is no auxiliary equipment supplied with the power unit.

Section III. OPERATION UNDER UNUSUAL CONDITIONS

2-3. Operation Under Unusual Conditions. When operating the power unit under unusual conditions such as extremes in temperature or difficult terrain, there are steps that must be taken to protect the equipment.

a. Refer to TM 5-6115-585-12 for special procedures when operating the generator set under unusual conditions.

b. Refer to TM 9-2330-202-14&P for special procedures when operating the trailer under unusual conditions.

CHAPTER 3

OPERATOR/CREW MAINTENANCE INSTRUCTIONS

Section I. CONSUMABLE OPERATING AND MAINTENANCE SUPPLIES

3-1. Consumable Supplies. Consumable supplies used in the maintenance and operation of the power unit are listed in Table 3-1.

Table 3-1. Consumable Operating and Maintenance Supplies.

(1) Component application	(2) National stock number	(3) Description	(4) Qty required for initial operation	(5) Qty required 8 hours operation	(6) Notes
General Cleaning	6850-00-664-5685	Solvent, Drycleaning, P-D-680	1 quart	As required	
Leg Prop Assembly	9150-00-190-0904	Grease, Automotive and Artillery, GAA	1 pound	As required	
Leg Prop Assembly	9150-00-186-6681	Oil, Lubricating, OE/HDO-30	1 quart	As required	
	9150-00-402-4478	Oil, Lubricating, OEA	1 quart	As required	

Section II. LUBRICATION INSTRUCTIONS

3-2. **General.** Detailed instructions for the lubrication of the major components of the power unit are contained in the applicable Lubrication Orders (LO's). Refer to DA Pam 310-1 to ensure the latest editions of the LO's are used.

3.3. **Generator Lubrication.** Refer to TM 5-6115-585-12 for generator set Lubrication Order.

3-4. **Trailer Lubrication.** There are no operator/crew lubrication requirements for the power unit trailer. However, the operator shall assist unit maintenance.

Section III. PREVENTIVE MAINTENANCE CHECKS AND SERVICES (PMCS)

NOTE

The PMCS chart in this section contains all necessary Operator/Crew preventive maintenance checks and services for this equipment.

3.5. **General.** The preventive maintenance checks and services listed in Table 3-2 are grouped according to stages of equipment operation or time intervals. Using the following as a guide, do the checks and services at the intervals shown.

a. Before you operate, perform your before (B) PMCS. Observe all CAUTIONS and WARNINGS.

b. While you operate, perform your during (D) PMCS. Observe all CAUTIONS and WARNINGS.

c. After you operate, be sure to perform your after (A) PMCS.

d. Do (W) PMCS weekly.

e. Do (M) PMCS monthly.

f. If equipment fails to operate, refer to Section IV Troubleshooting. If the problem cannot be corrected, see paragraph 3-8, Reporting Deficiencies.

3-6. **Purpose of PMCS Table.** The purpose of the PMCS table is to provide a systematic method of inspecting and servicing the equipment. In this way, small defects can be detected early before they become a major problem causing the equipment to fail to complete its mission. The PMCS table is arranged with the individual PMCS procedures listed in sequence under assigned intervals. The most logical time (before, during, or after operation) to perform each procedure determines the interval to which it is assigned. Make a habit of doing the checks and services in the same order each time and anything wrong will be seen quickly. See paragraph 3-7 for an explanation of the columns in table 3-2.

3.7. **Explanation of Columns.** The following is a list of the PMCS table column headings with a description of the information found in each column.

a. Item No. This column shows the sequence in which the checks and services are to be performed, and is used to identify the equipment area on the Equipment Inspection and Maintenance Worksheet, DA Form 2404.

b. Interval This column shows when each check is to be done.

c. Item to be Inspected/Procedures. This column identifies the general area or specific part where the check or service is to be done, lists the checks or services to be done and explains how to do them.

d. Equipment is Not Ready/Available If This column lists conditions that make the equipment unavailable for use because it is unable to perform its mission or because it would represent a safety hazard. Do not accept or operate equipment with a condition in the “Equipment is Not Ready/Available If” column.

3.8. **Reporting Deficiencies.** If you discover any problem with the equipment during PMCS or while operating it that you are unable to correct, it must be reported. Refer to DA Pam 738-750 and report the deficiency using the proper forms.

3-9. **Special Instructions.** Preventive maintenance is not limited to performing the checks and services listed in the PMCS table. Covering unused receptacles, stowing unused equipment and other routine procedures such as equipment inventory, cleaning components, and touch-up painting are not listed in the PMCS table. These are things you should do any time you see they need to be done. If a routine check is listed in the PMCS table it is because other operators have reported problems with this item. Take along tools and cleaning cloths needed to perform the required checks and services. Use the information in the following paragraphs to help you identify problems at any time.

a. Routine Inspections. Use the following information to help identify potential problems before and during checks and services.

WARNING

Drycleaning solvent P-D-680 is both toxic and flammable. Wear safety goggles and gloves and use in a well-ventilated area. Avoid prolonged breathing of vapors and avoid skin contact. Do not use near open flame or excessive heat. Flash point of solvent is 100°F to 138°F (38°C to 59°C). If you become dizzy while using P-D-680, get fresh air immediately and get medical aid. If P-D-680 contacts eyes, flush with water and get medical aid immediately.

(1) Keep it clean. Dirt, grease, and oil get in the way and may cover up a serious problem. Use drycleaning solvent P-D-680, to clean metal surfaces. Use soap and water to clean rubber or plastic parts and material.

(2) Bolts, nuts, and screws. Check them all to make sure they're not loose, missing, bent, or broken. Don't try to check them all with a tool, but look for chipped paint, bare metal, or rust around bolt heads. If you find one loose, tighten it or report it to unit maintenance.

(3) Welds. Look for loose or chipped paint, rust, or gaps where parts are welded together. If a broken weld is found, report it to higher level of maintenance.

(4) Electrical wires, connectors, terminals and receptacles. Look for cracked or broken insulation, bare wires, and loose or broken connectors. Tighten loose connectors and make sure the wires are in good condition. Examine terminals and receptacles for serviceability.

(5) Hoses and fluid lines. Look for wear, damage, and leaks. Make sure clamps and fittings are tight. Wet spots and stains around a fitting or connector can mean a leak. If a leak comes from a loose connector, tighten it. If something is broken or worn out, report it to unit maintenance.

b. *Leakage Definitions.* It is necessary for you to know how fluid leakage affects the status of your equipment. The following are definitions of the types/classes of leakage you need to know to be able to determine the status of your equipment. Learn and be familiar with them. When in doubt, NOTIFY YOUR SUPERVISOR!

Leakage Definitions:

Class I	Seepage of fluid (as indicated by wetness or discoloration) not great enough to form drops.
Class II	Leakage of fluid great enough to form drops but not enough to cause drops to drip from item being checked/inspected.
Class III	Leakage of fluid great enough to form drops that fall from the item being checked/inspected.

CAUTION

Equipment operation is allowable with minor leakage (Class I or II) of any fluid except fuel. Of course, consideration must be given to the fluid capacity in the item being checked/inspected. When in doubt, notify your supervisor.

When operating with Class I or II leaks, continue to check fluid level more often than required in the PMCS. Parts without fluid will stop working and/or cause equipment damage.

Class Ill leaks should be reported to your supervisor or unit maintenance.

Table 3-2. Operator/Crew Preventive Maintenance Checks and Services (PMCS)

NOTE

If the equipment must be kept in continuous operation, check and service only those items that can be checked and serviced without disturbing operation. Make the complete checks and services when the equipment can be shut down.

Within designated interval, these checks are to be performed in the order listed.

B – Before D – During A – After W – Weekly M – Monthly

Item no.	Interval					Item to be inspected. Procedure: check for and have repaired, filled, or adjusted as needed	Equipment is not ready/available if:
	B	D	A	W	M		
						WARNING Before performing any maintenance that requires climbing on or under trailer, set trailer handbrakes, chock wheels, and lower rear leg prop. Injury to personnel could result from trailer suddenly rolling or tipping. NOTE Perform weekly as well as before PMCS if you are the assigned operator but have not operated the equipment since the last weekly inspection.	

Table 3–2. Operator/Crew Preventive Maintenance Checks and Services (PMCS) - Cont.

b – Before D – During A – After W – Weeklv M – Monthly

Item No.	Interval B	D	A	W	M	Item to be Inspected. Procedure: check for and have repaired, filled, or adjusted as needed	Equipment is Not Ready/ Available If
						NOTE Perform weekly as well as before PMCS if you are operating the equipment for the first time.	
1	●					GENERATOR SET EXTERIOR NOTE Slight fuel leak (Class I or II leaks) by the control unit shaft is normal and is necessary to lubricate shaft. Any other fuel leak or fuel leakage around the control unit shaft is a Class III leak and makes the equipment not ready/available.	
						a. Check on, around, and beneath the generator set (1) for fuel or oil leaks.	A Class III lubrication oil or any class fuel leak is detected.
						b. Check that generator set (1) grounds are properly installed, and grounding connections are tight.	Not properly grounded.
2	●					FUEL GAGE Check fuel gage (2) for sufficient fuel for continuous operation.	

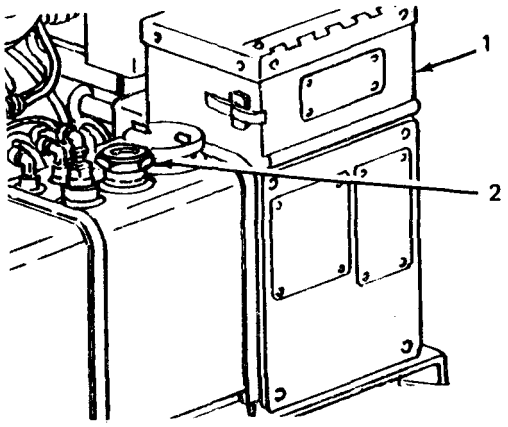

Table 3-2. Operator/Crew Preventive Maintenance Checks and Services (PMCS) - CONT.

B - Before D - During A – After W – Weekly M - Monthly

Item no.	Interval B	D	A	W	M	Item to be inspected. Procedure: check for and have repaired, filled, or adjusted as needed	Equipment is not ready/available if:
3	●					ENGINE OIL LEVEL Check oil filler dipstick (3) for proper oil level. Add oil as required. 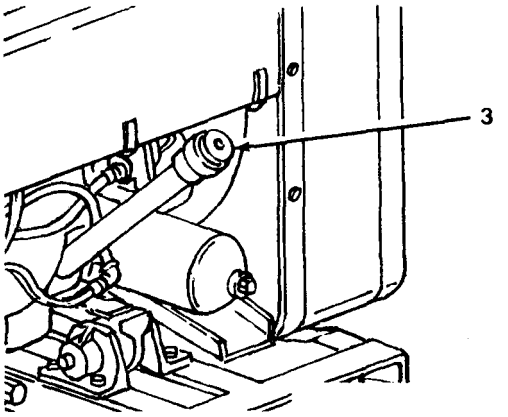 	
4	●	●				AIR CLEANER INDICATOR Check indicator (4) for a restricted air cleaner. If red warning indicator becomes visible, notify unit maintenance for cleaning or replacement. 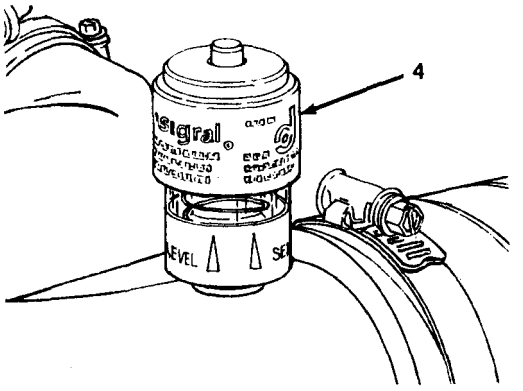 	

Table 3-2. Operator/Crew Preventive Maintenance Checks and Services (PMCS) – CONT.

B – Before D – During A – After W – Weekly M – Monthly

Item no.	Interval B	D	A	W	M	Item to be inspected. Procedure: check for and have repaired, filled, or adjusted as needed	Equipment is not ready/available if:
5	●					ACCESSORIES	
						Check that the following accessories are not missing.	
						a. Sledge hammer	
						b. Fire extinguisher	Fire extinguisher is missing.
						c. Driver/puller	
						d. Ground rods.	Ground rods are missing.
6	●					BRACKETS	
						Check fire extinguisher and fuel can mounting brackets for loose hardware and broken fittings.	
7	●					TIRES	
						a. Check tires (5) for cuts, foreign objects, or unusual tread wear. Remove any stones from between the treads.	One tire is flat, missing, or unserviceable.
						b. Check that tire pressure is 35 psi (241.22 kPa) when tires are cool.	
8	●					WHEELS	
						Check for damage and for missing or loose stud nuts (6).	One or more wheel is damaged. One or more stud nuts are loose or missing.

Table 3-2. Operator/Crew Preventive Maintenance Checks and Services (PMCS) - CONT.

B - Before D – During A – After W – Weekly M – Monthly

Item no.	Interval B	D	A	W	M	Item to be inspected. Procedure: check for and have repaired, filled, or adjusted as needed	Equipment is not ready/available if:
8	●					WHEELS – CONT 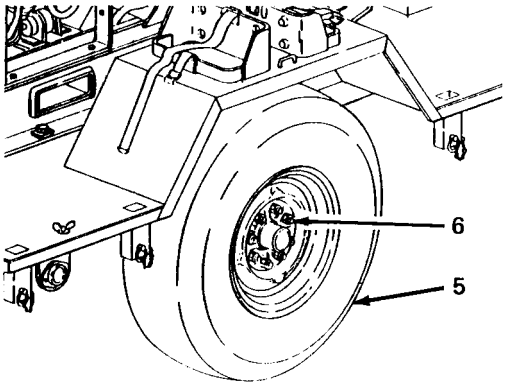 	
9	●					DRAWBAR RING	
						Check drawbar ring (7) for insecure mounting and obvious damage.	Ring is loose or bent.
10	●					INTERVEHICULAR CABLE	
						Check cable (8) and connector for cuts and breaks.	Intervehicular cable is broken or missing.
11	●					SAFETY CHAINS	
						Check safety chains (9) for insecure mounting and obvious damage.	Safety chains are missing or unsecured.

Table 3-2. Operator/Crew Preventive Maintenance Checks and Services (PMCS) – CONT.

B – Before D – During A – After W – Weekly M – Monthly

Item no.	Interval B	D	A	W	M	Item to be inspected. Procedure: check for and have repaired, filled, or adjusted as needed	Equipment is not ready/available if:
11	●					SAFETY CHAINS – CONT 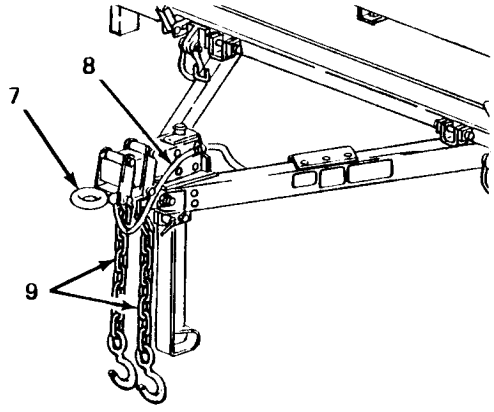 	
12	●					BOW ASSEMBLIES AND TARPAULIN SUPPORT Inspect for damaged bow assemblies (10) or tarpaulin support (11).	
13	●					FITTED COVER a. Check fitted cover (12) for missing and defective tiedown straps and snap fasteners (13). b. Check for missing and defective ropes (14). c. Check for missing and defective straps and buckles (15). d. Check for ripped seams and tears.	

Table 3-2. Operator/Crew Preventive Maintenance Checks and Services (PMCS) – CONT.

B - Before D – During A – After W – Weekly M – Monthly

Item no.	Interval B	D	A	W	M	Item to be inspected. Procedure: check for and have repaired, filled, or adjusted as needed	Equipment is not ready/available if:
13						FITTED COVER – CONT 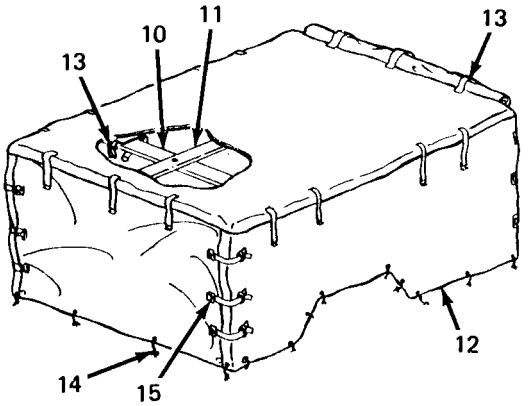 	
14		●				LIGHTS a. With intervehicular cable connected to towing vehicle, operate vehicle light switch through all settings and check lights. **NOTE** An assistant is required while checking brake lights. b. Step on brake pedal and check brake lights (16). 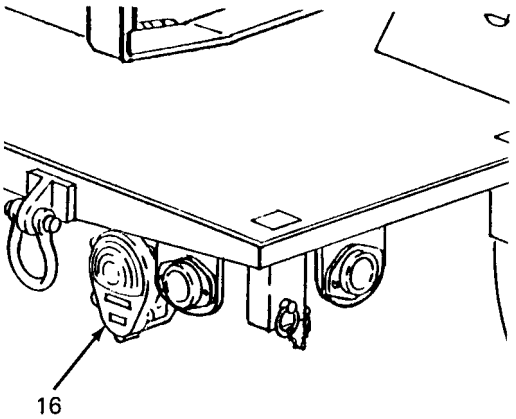 	

Table 3-2. Operator/Crew Preventive Maintenance Checks and Services (PMCS) - CONT.

B - Before D - During A - After W - Weekiy M - Monthly

Item no.	Interval B	D	A	W	M	Item to be inspected. Procedure: check for and have repaired, filled, or adjusted as needed	Equipment is not ready/available if:
15	●	•				HYDRAULIC HOSES AND TUBES Check brake system hoses and tubes, and check under vehicle for signs of brake fluid leaks.	Any brake fluid leaks are detected.
16		•				SUPPORT LEG ASSEMBLY With trailer connected to towing vehicle, check support leg assembly (17) for ease of operation.	Support leg assembly is seized.
17		•				REAR LEG PROP ASSEMBLY inspect leg prop assembiy (18) for broken or missing parts.	Leg prop assembly is unserviceable.

Table 3-2. Operator/Crew Preventive Maintenance Checks and Services (PMCS) - CONT.

B - Before D - During A - After W - Weekly M - Monthly

Item no.	Interval B	D	A	W	M	Item to be inspected. Procedure: check for and have repaired, filled, or adjusted as needed	Equipment is not ready/available if:
18		●				BRAKE SYSTEM	
						Test brake system by hooking trailer to towing vehicle and applying brakes.	Service brakes fail to operate.
19		●				TRAILER OPERATION	
						a. Be alert for any unusual noises while towing trailer. Stop and investigate any unusual noises.	
						b. Ensure that trailer is tracking/following correctly behind towing vehicle with no side pull.	
20		●				GENERATOR SET GAGES AND INSTRUMENTS	
						a. Check that battery indicator (19) is in yellow area while batteries are charging and in green area when batteries are fully charged.	Battery indicator not in green or yellow area.
						b. Check that frequency meter (20) indicates 60 Hz (red line) when generator is operating under load.	Correct frequency cannot be maintained.
						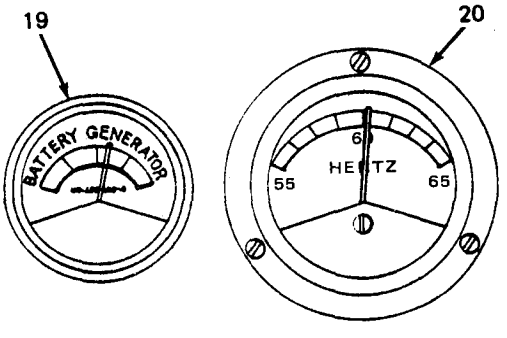	
						c. Check that current meter (21) reading does not exceed 100% or more than **5%** load difference between phases.	

*U. S. Government Printing Office: 1991-554-030/40132

Table 3-2. Operator/Crew Preventive Maintenance Checks and Services (PMCS) – CONT.

B – Before D – During A – After W – Weekly M – Monthly

Item no.	Interval B	D	A	W	M	Item to be inspected. Procedure: check for and have repaired, filled, or adjusted as needed	Equipment is not ready/available if:
20						GENERATOR SET GAGES AND INSTRUMENTS – CONT	
						d. Check that voltmeter (22) indicates desired output voltage as determined by load connections and amps-volts switch. 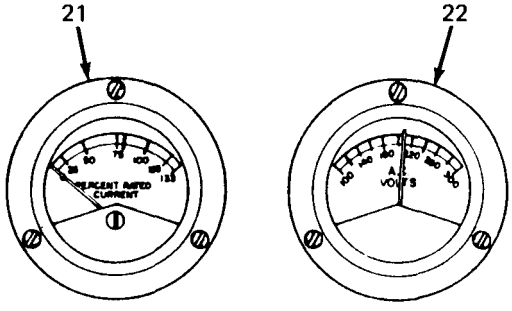	Desired voltage cannot be obtained and maintained.
						e. Check engine oil pressure gage (23) for 25 psig indication. 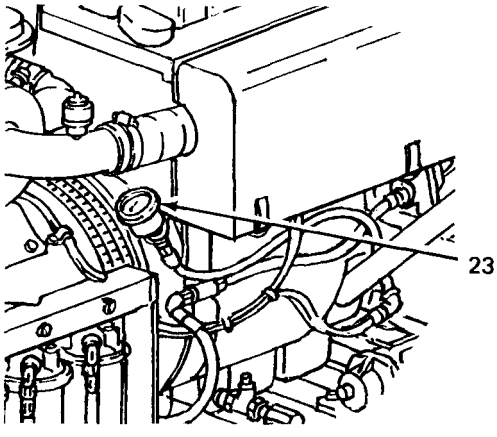	Oil pressure drops below 15 psig.

Table 3-2. Operator/Crew Preventive Maintenance Checks and Services (PMCS) - CONT.

B - Before D – During A – After W - Weekly M – Monthly

Item no.	Interval B	D	A	W	M	Item to be inspected. Procedure: check for and have repaired, filled, or adjusted as needed	Equipment is not ready/available if:
21			●			FUEL TANK a. Fill tank (24) upon completion of operation. **NOTE** Fuel system temperature must be above freezing when draining water and sediment. b. Open drain (25) and drain water and sediment from fuel tank. Allow to drain until fuel runs clean. 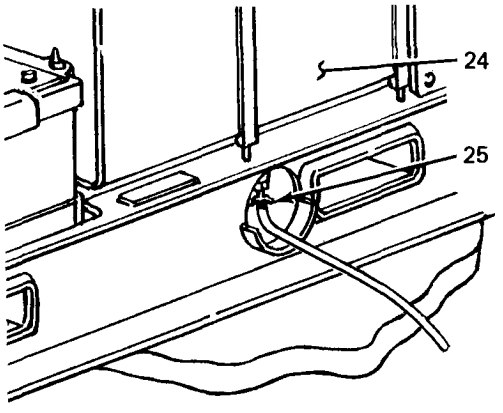	
22			●			FUEL STRAINER AND FILTERS Drain water and sediment from strainer (26), primary (27) and secondary (28) filters. Allow to drain until fuel runs clean.	

Table 3-2. Operator/Crew Preventive Maintenance Checks and Services (PMCS) – CONT.

B – Before D – During A – After W – Weekly M – Monthly

Item no.	Interval B	D	A	W	M	Item to be inspected. Procedure: check for and have repaired, filled, or adjusted as needed	Equipment is not ready/available if:
22						FUEL STRAINER AND FILTERS – CONT 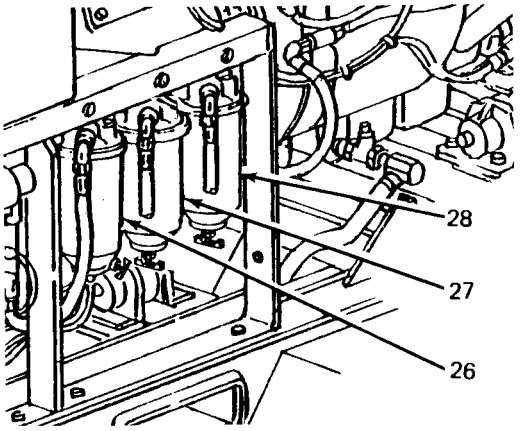	
23			●			HANDBRAKES With trailer hooked to towing vehicle, set handbrakes (29). Move trailer slightly to see if handbrakes hold wheels. 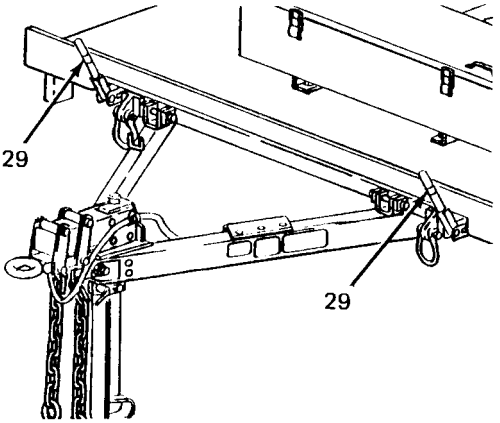	

Table 3-2. Operator/Crew Preventive Maintenance Checks and Services (PMCS) – CONT.

B – Before D – During A – After W - Weekly M – Monthly

Item no.	Interval B	D	A	W	M	Item to be inspected. Procedure: check for and have repaired, filled, or adjusted as needed	Equipment is not ready/available if:
24			●			BRAKE DRUMS AND HUBS WARNING A defect in the operation of the brakes or hub can cause these parts to get hot enough to cause serious burns. Use extreme caution when attempting to detect heat in this area. Feel for overheating to detect dragging or binding.	Brakes or hub are dragging or binding.
25				●		REFLECTORS Check for damaged or missing reflectors,	
26				●		BATTERIES Check battery (30) electrolyte level. Level should be about 3/4 inch above top of plates. Add water if level is low. Use clean water (distilled water if available).	

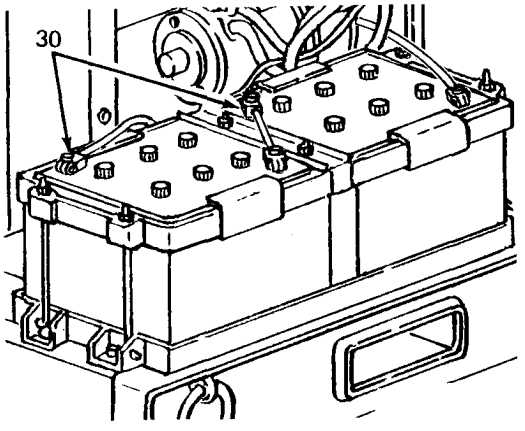

Table 3-2. Operator/Crew Preventive Maintenance Checks and Services (PMCS) – CONT.

B – Before D – During A – After W – Weekly M – Monthly

Item no.	Interval B	D	A	W	M	Item to be inspected. Procedure: check for and have repaired, filled, or adjusted as needed	Equipment is not ready/available if:
27					●	FIRE EXTINGUISHER Inspect and weigh fire extinguisher. (See paragraph 3-12.)	
28					●	TRAILER FRAME Inspect entire chassis frame for damage, cracks, and broken welds.	Frame is obviously broken or cracked.

Section IV. TROUBLESHOOTING

3-10. Power Unit Troubleshooting. There are no troubleshooting procedures authorized at operator level for the power unit end item. Troubleshooting procedures for the individual generator set and trailer are contained in their respective technical manuals referenced below.

a. Generator Set Troub/eshooting. Refer to TM 5-6115-585-12 for troubleshooting procedures.

b. Trailer Troubleshooting. Refer to TM 9-2330-202-14&P for troubleshooting procedures.

Section V. OPERATOR/CREW MAINTENANCE

3-11. Enclosure Maintenance. Maintenance of the enclosure at operator level is limited to replacement of the fitted cover and/or the bows.

a. Fitted Cover Replacement. (See figures 3-1 and 3-2.)

(1) *removal.*

(a) Untie 27 ropes (1, figure 3-1) fastening fitted cover to trailer body (2).

(b) Unfasten six straps and buckles (3) securing rear curtain (4). Roll up curtain, and secure with three rollup straps (5) provided.

(c) Unfasten six straps and buckles (3) securing front curtain (6). Roll up curtain, and secure with three rollup straps (5) provided.

(d) Roll up each side (7) of fitted cover, in turn, and secure each side with four rollup straps (5) provided.

(e) Working under fitted cover (1, figure 3-2), unfasten eight straps (2) securing fitted cover to bow assemblies (3). Remove fitted cover.

(2) *Installation.*

NOTE

Front curtain is provided with three tie-down ropes. Rear curtain only has two ropes.

(a) Position fitted cover (1, figure 3-2) on top of bows (3) making certain front of fitted cover is at front of trailer.

(b) Secure fitted cover (1) to bow assembly (3) with eight straps (2) provided.

(c) Unfasten rollup straps (5, figure 3-1) securing sides of fitted cover and lower both sides (7).

(d) Unfasten rollup straps (5) securing front and rear curtains (4,6) and lower both curtains.

(e) Secure front and rear curtains (4, 6) to sides (7) with six straps and buckles (3) provided on each curtain.

(f) Secure fitted cover to trailer body (2) with 27 ropes (1) provided.

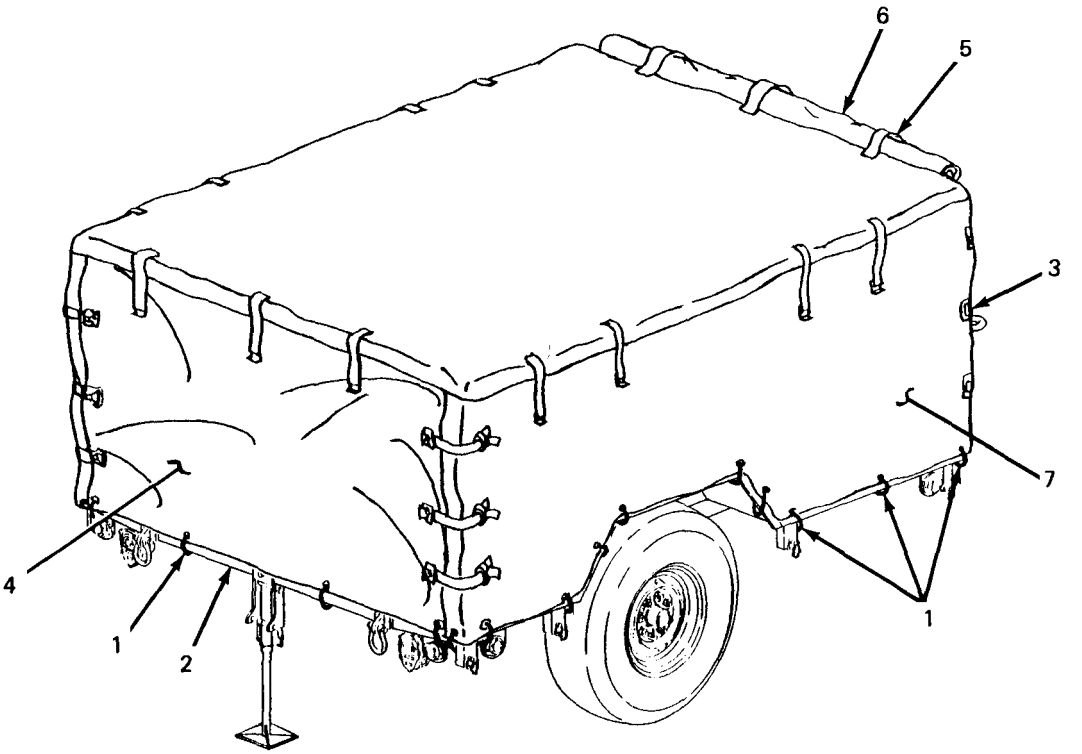

Figure 3-1. Fitted Cover Installed on Power Unit.

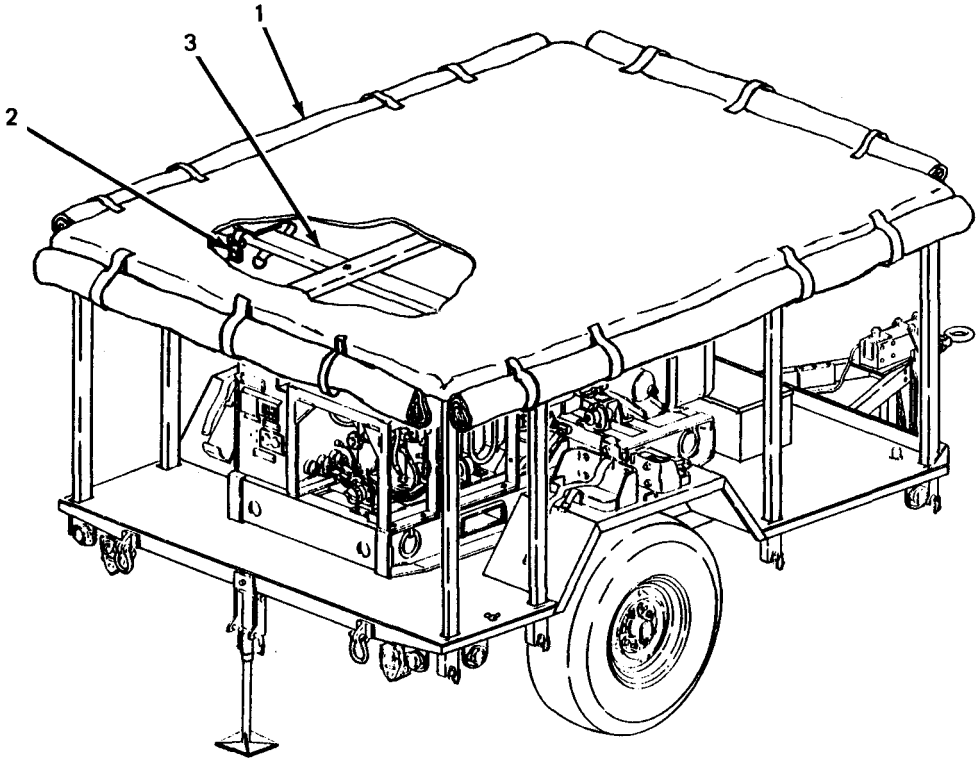

Figure 3-2. Fitted Cover Rolled Up for Removal.

b. Tarpaulin Support and Bow Assembly Replacement. (See figures 3-3 and 3-4.)

(1) Removal.

(a) Remove fitted cover (paragraph 3-11, a.(l)).

(b) Remove one screw (1, figure 3-3), one flat washer (2), one lockwasher (3) and one wing nut (4) securing tarpaulin support (5) to each of four bow assemblies (6) and remove tarpaulin support.

(c) Remove two quick release pins (1, figure 3-4) securing each bow assembly (2) in pocket (3) on trailer body (4). Lift each bow out of pocket and off trailer body.

(2) *Installation.*

(a) Lift each bow (2, figure 3-4) onto trailer, aline bow ends with pockets (3) in trailer body (4) and drop bow in place. Secure each bow assembly with two quick release pins (1) provided.

(b) Position tarpaulin support (5, figure 3-3) on bows (6) and secure tarpaulin support to each bow with one screw (1), one flat washer (2), one lockwasher (3) and one wing nut (4).

(c) Install fitted cover on trailer (paragraph 3-11, a.(2)).

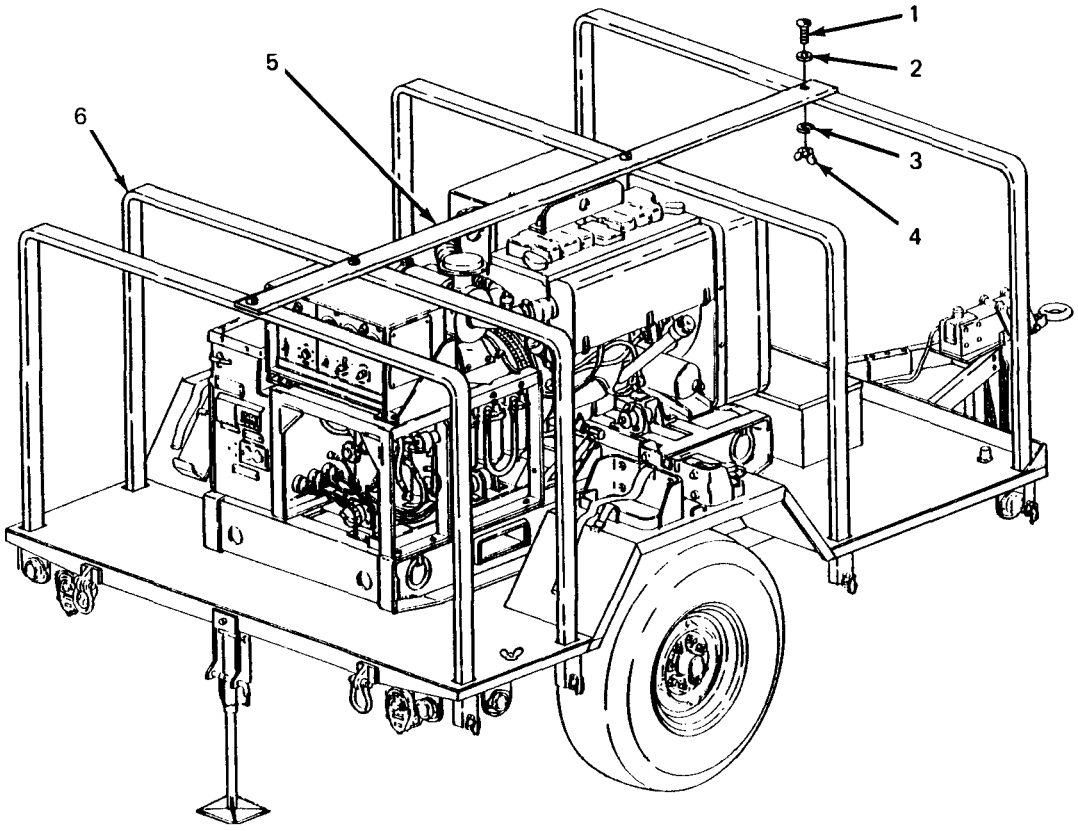

Figure 3-3. Tarpaulin Support Replacement.

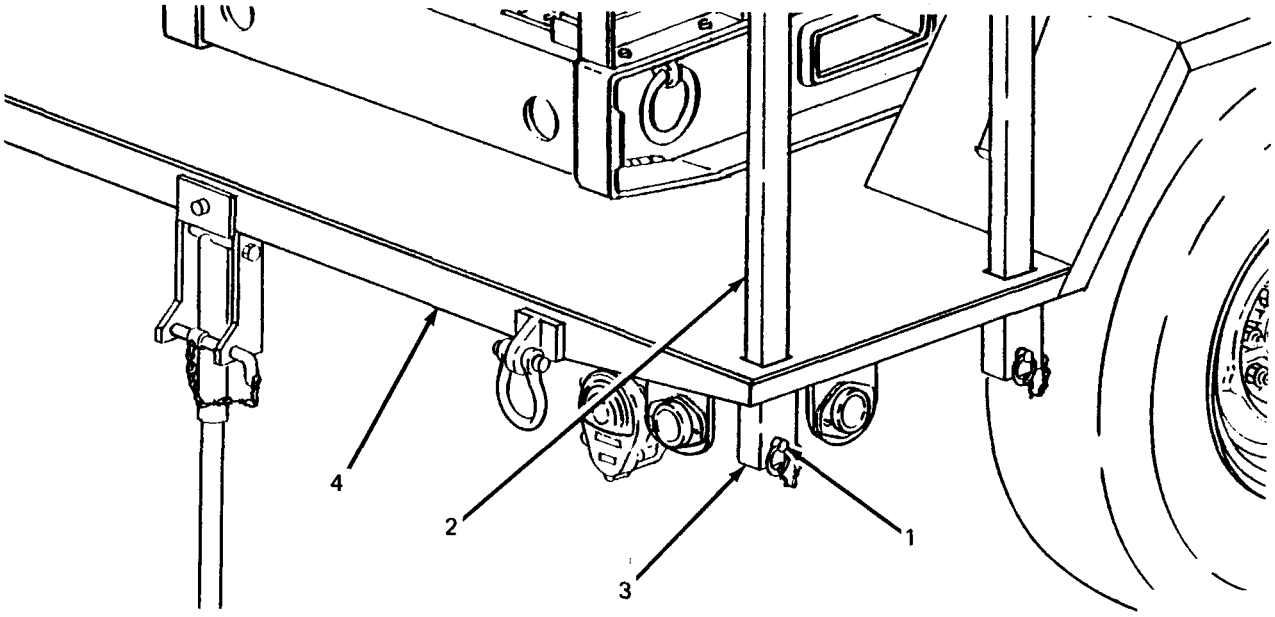

Figure 3-4. Bow Assembly Replacement.

3-12. Fire Extinguisher Maintenance.

WARNING

Monobromotrifluoroethane liquid or gas (Halon 1301) can cause death or serious injury if personnel fail to observe safety precautions. Inhalation of monobromotrifluoroethane gas at concentrations of 5% to 6% for more than 4 or 5 minutes may result in serious cardiac or central nervous system effects. Liquid Halon 1301 (including the spray in the immediate vicinity of the discharge) may freeze the skin on contact. In the event of frostbite, warm the affected area quickly to body temperature. Immerse hands in warm water or place hands in armpits. Get medical attention promptly.

CAUTION

Do not attempt to verify readiness of fire extinguisher by partially discharging unit. Any discharge of contents will require refilling.

The PU-753/M Power Unit is equipped with a 2-3/4 lb Halon fire extinguisher. Maintenance is limited to weighing the fire extinguisher monthly to insure that it is sufficiently charged. Fully charged, the fire extinguisher (with head and horn attached) weighs 5 lb. Send the unit to specialized activity for recharging if it weighs 4 lb, 12 oz or less.

CHAPTER 4

UNIT MAINTENANCE

Section I. SERVICE UPON RECEIPT OF EQUIPMENT

4-1. Inspecting and Servicing Equipment. The power unit is unpacked, inspected, and serviced as described in the following paragraphs. Unpacked equipment must be checked against the Equipment Packing List to ensure completeness. Discrepancies must be reported in accordance with instructions in DA Pam 738-750.

a. *Unpacking Power Unit. (See* figures 4-1 and 4-2.) The generator set is packed in place on the trailer body. Before beginning the unpacking procedure, locate, remove, and save the waterproof envelopes marked Depreservation Guide.

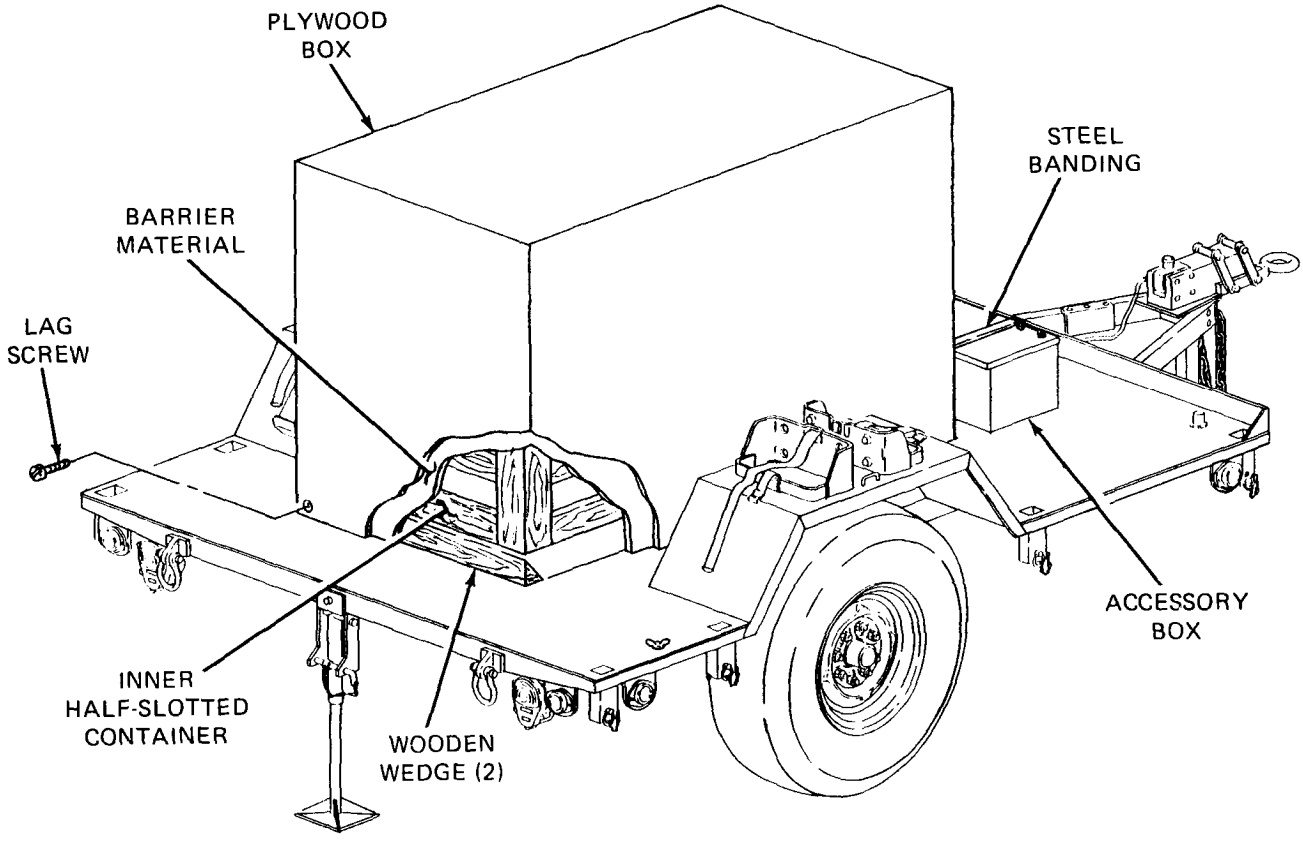

Figure 4-1. Uncrating Generator Set.

WARNING

Steel banding used in packaging of power unit has sharp edges. Care should be taken when cutting and handling banding to avoid injury to personnel.

(1) Remove lag screws securing plywood box cover over generator set and lift cover off generator. Remove wooden wedges positioned around base of generator.

(2) Remove and save package of technical manuals secured to barrier material covering generator.

(3) Remove barrier material surrounding inner container.

(4) Remove inner, half-slotted container from around generator set.

(5) Remove coiled ground cable from within base of generator set.

(6) Remove packaged fire extinguisher taped to generator set. Unpack and secure fire extinguisher in bracket on roadside fender.

(7) Unpack and inventory contents of accessory box.

(8) Install ground wire between generator set ground stud and power unit ground terminal.

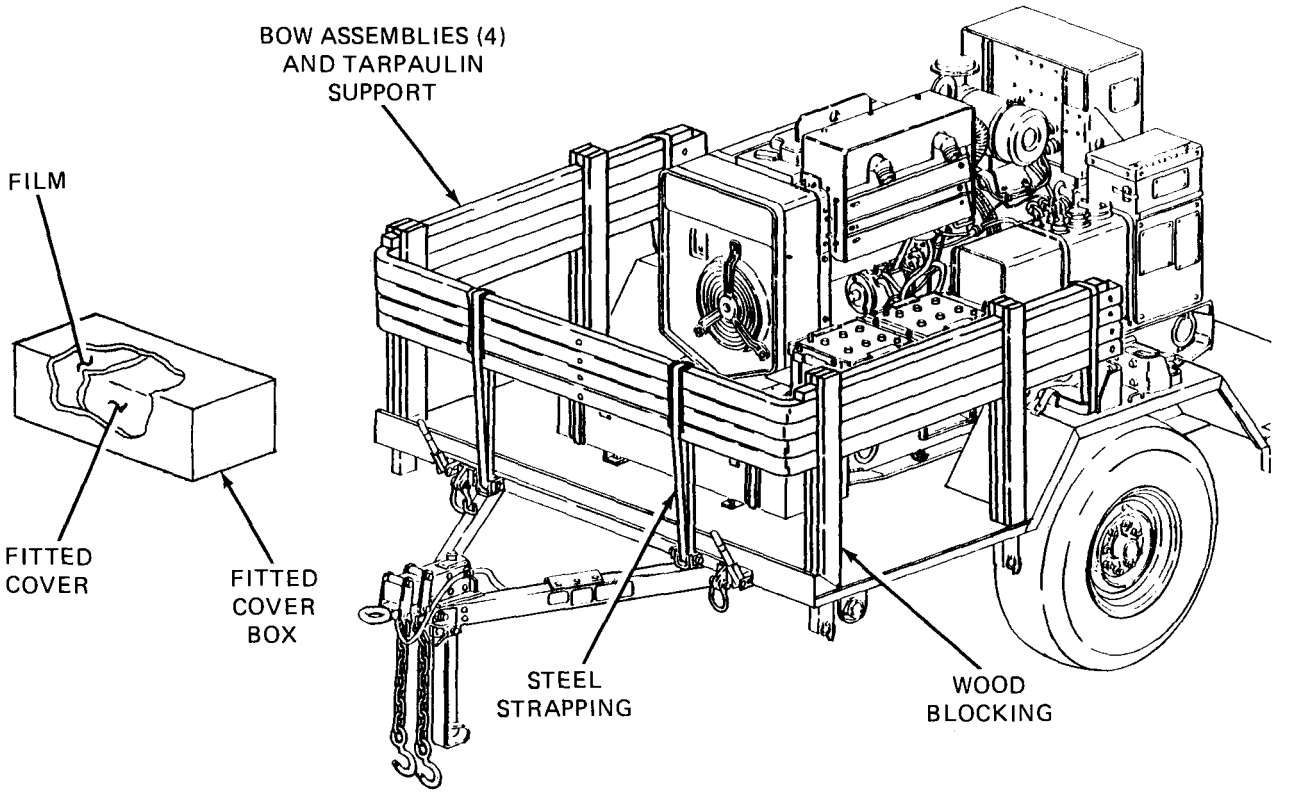

Figure 4-2. Unpacking Fitted Cover, Bows and Tarpaulin Support.

(9) Remove box containing fitted cover.

NOTE

Inspection and servicing of equipment will be easier to perform before fitted cover is put in place on power unit.

(10) Remove protective film from fitted cover and set fitted cover aside.

(11) Remove strapping and wood blocking securing bows and tarpaulin support from trailer.

(12) Refer to DA Form 2258, Depreservation Guide for Vehicles and Equipment, packed with power unit and follow instructions given for putting unit in service.

(13) Stow all authorized accessories in the accessory box.

(14) Install bows and tarpaulin support on power unit (paragraph 3-11, b (2)).

(15) Install fitted cover on power unit (paragraph 3-11, a (2)).

b. Inspection and Servicing of Generator Set. Refer to Servicing Upon Receipt of Material in TM 5-6115-585-12 for initial inspection and servicing procedures.

c. *Inspection and Servicing of Trailer.* Refer to Servicing Upon Receipt of Material in TM 9-2330-202-14&P for initial inspection and servicing procedures.

4-2. **Installation.** (See figure 4-3.) Installation of the power unit at a worksite involves positioning the trailer and grounding the power unit.

a. Positioning Power Unit. Position the power unit on the worksite as follows:

(1) Select on area as level as possible to install power unit and position trailer.

(2) Set trailer handbrakes and lower trailer support leg.

(3) Chock both wheels and lower rear leg prop assembly. Adjust leg prop assembly by turning inner leg until leg base makes firm contact with ground.

(4) Lift and secure fitted cover in raised position away from generator set exhaust.

WARNING

Remove fire extinguisher and fuel cans from power unit when generator set is in operation. This will insure that, in the event of fire, extra fuel will not be involved and extinguisher will remain accessible.

(5) Locate fuel cans and fire extinguisher on ground away from power unit.

WARNING

Do not operate generator set until power unit is properly grounded (paragraph 4-2, b.). Serious injury or death by electrocution can result from operating an ungrounded power unit.

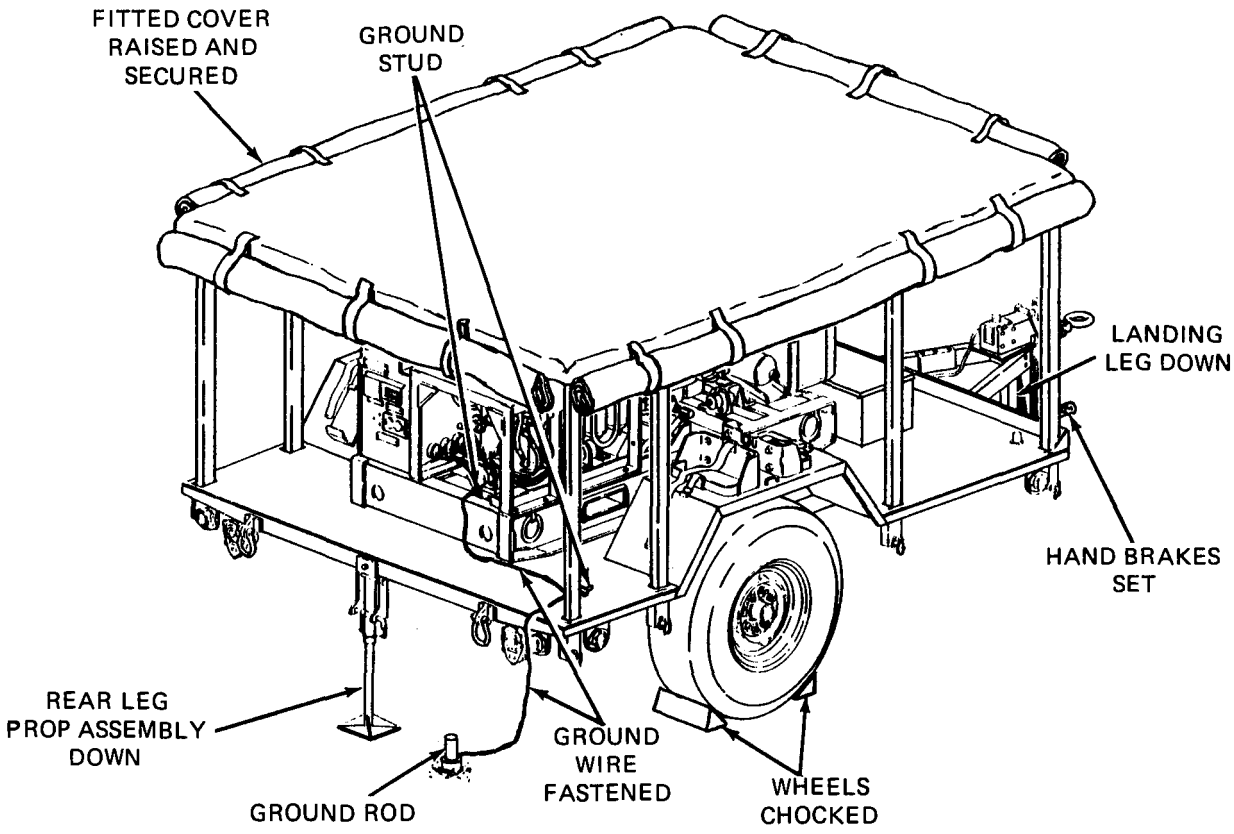

Figure 4-3. Installing Power Unit.

CAUTION

To avoid damage to equipment, make certain of voltage, frequency, and phase requirements of load being connected to generator set.

(6) Refer to data plate on load terminal board cover and to TM5-6115-585-12. Connect power unit to system or equipment to be powered.

b. Grounding. Check that generator set is grounded to GROUND TERMINAL stud on trailer body. Using ground wire supplied with power unit, connect power unit to a suitable ground as described below. The following sources of a good ground are listed in order of preference.

NOTE

As a substitute for the supplied ground wire, any copper wire of at least No. 6 AWG maybe used.

(1) *Underground water system.* Ground power unit to one of the accessible pipes in an underground water system. Make certain underground pipe is made of metal and there is no insulation, such as a water meter, between ground wire and earth.

(2) *Ground rod.* Drive ground rod a minimum of eight feet into earth. A ground rod must have a minimum diameter of 5/8-inch, if solid, or 3/4-inch if pipe.

NOTE

It maybe necessary to saturate the area around ground rod with water if soil conditions are dry.

(3) *Ground plate.* Ground power unit to a metal plate buried four feet deep. Ground plate should cover a minimum area of nine square feet.

c. *Extemal Fuel Line Connection. (See* figure 4-4.) The power unit generator set can be fueled from an external source such as a five-gallon fuel can or 55 gallon drum. This eliminates the need for frequent refilling of the generator's fuel tank during long intervals of operation.

(1) Remove fuel can adapter and fuel pickup tube from storage locations on generator set and assemble by threading pickup tube into adapter.

(2) Thread one end of auxiliary fuel line onto fuel can adapter fitting and tighten.

(3) Connect free end of auxiliary fuel line to AUXILIARY FUEL CONNECTION. This connection is located immediately below control cubicle on right-hand side of generator set.

(4) Insert fuel can adapter in external fuel source and secure by pressing down on lever.

(5) Set MASTER SWITCH on control panel to PRIME AND RUN AUX FUEL position.

NOTE

When generator set is run on auxiliary fuel, as described above, fuel is first pumped into generator set fuel tank by auxiliary fuel pump. Fuel is then fed to generator set engine from fuel tank.

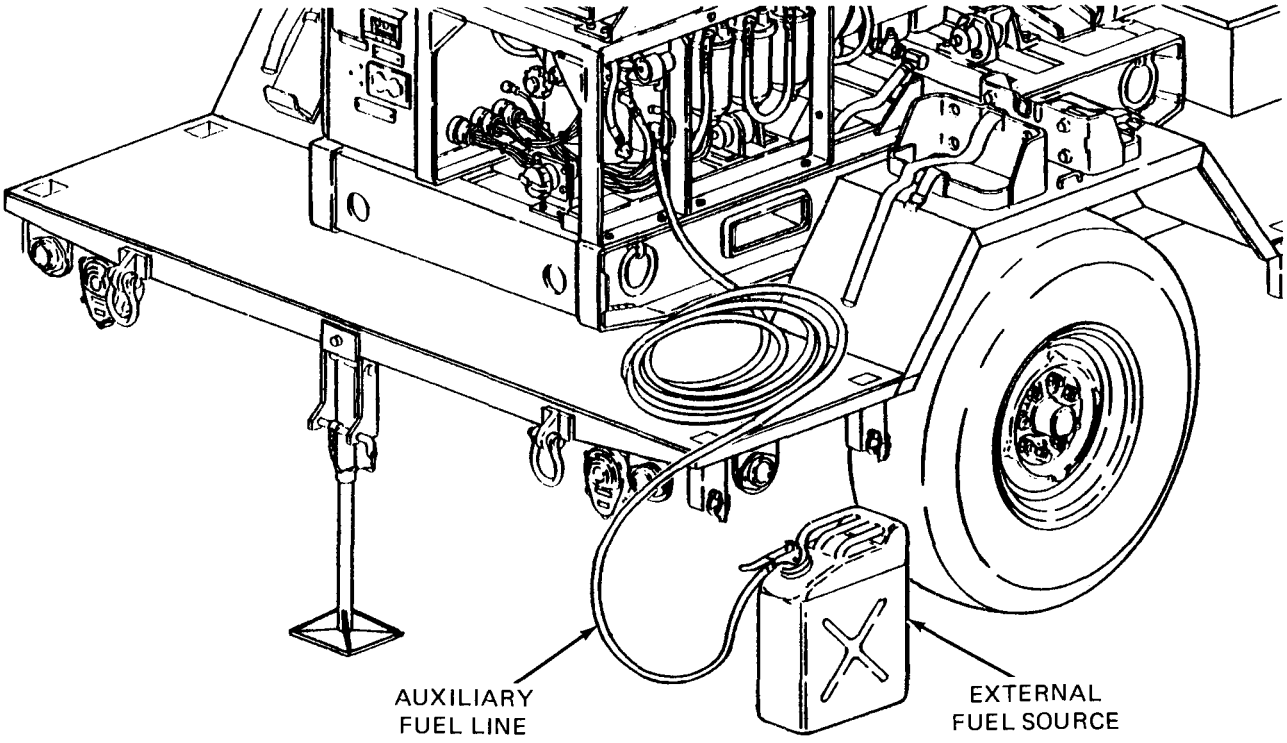

Figure 4-4. External Fuel Line Connection.

Section II. MOVEMENT TO A NEW WORKSITE

4-3. **Dismantling for Movement. Because** the power unit is designed to be mobile, a minimum amount of effort is required to relocate to a new worksite. Procedures are as follows:

a. Disconnect power unit from system or equipment being powered.

b. Disconnect ground cable from source of ground and from power unit GROUND TERMINAL stud. Roll up cable and store in accessory box.

c. Using slide hammer, remove ground rod. Disassemble, clean, and stow ground rod in accessory box.

d. Disconnect power unit from external fuel source, if applicable.

e. Stow any remaining authorized equipment in accessory box.

f. Secure fire extinguisher and fuel cans in their respective mounting brackets.

9. Lower and secure fitted cover in place on power unit.

h. Remove locking pin from leg prop assembly on rear of trailer. Swing leg prop back and up into traveling position and secure with pin.

i. Attach power unit to towing vehicle. (Refer to TM 9-2330-202-14&P.)

j. Release trailer handbrakes.

4-4. **Reinstallation After Movement.** After movement to a new worksite, install power unit in accordance with paragraph 4-2.

Section Ill. REPAIR PARTS, SPECIAL TOOLS, SPECIAL TEST, MEASUREMENT AND DIAGNOSTIC EQUIPMENT (TMDE)

4-5. Tools and Equipment. There are no special tools or equipment required to maintain the PU-753/M power unit.

4-6. Maintenance Repair Parts. Repair parts and equipment for maintenance of this power unit are listed and illustrated in the repair parts and special tools list in Appendix D of this manual.

Section IV. LUBRICATION INSTRUCTIONS

4-7. **General.** Detailed instructions for the lubrication of the major components of the power unit are contained in the applicable Lubrication Orders (LO's). Refer to DA Pam 310-1 to ensure that the latest editions of the L.O.'S are used. This section contains lubrication instructions that are not included in the Lubrication Orders.

4-8. **Generator Lubrication.** Refer to TM 5-6115-585-12 for generator set Lubrication Order.

4.9. **Trailer Assembly Lubrication.**

a. Trai/er Lubrication. Refer to TM 9-2330-202-14&P for trailer Lubrication Order.

b. Leg Prop Assembly Lubrication. The rear leg prop assembly is a modification to the standard M116A2 trailer and, as such, does not appear in the associated L.O. Semiannually lubricate leg prop assembly as follows:

WARNING

Clean parts in a well-ventilated area. Avoid inhalation of solvent fumes and prolonged exposure of skin to cleaning solvent. Wash exposed skin thoroughly. Dry cleaning solvent (P-D-680) used to clean parts is potentially dangerous to personnel and property. Do not use near open flame or excessive heat. Flash point of solvent is 100°F. to 138°F. (38°C. to 59°C.).

(1) Clean hydraulic lubrication fitting and area around lubrication points with P-D-680 or equivalent.

(2) Inject sufficient GAA grease into hydraulic fitting to lubricate screw threads inside leg prop assembly.

NOTE

Refer to Lubrication Order in TM 9-2330-202-14&P for lubricating oils specified for use within different anticipated temperature ranges.

(3) Apply OE lubricating oil to both ends of leg prop assembly pivot shaft.

Section V. PREVENTIVE MAINTENANCE CHECKS AND SERVICES

NOTE

The PMCS chart in this section contains all necessary unit preventive maintenance chdcks and services for this equipment.

4-10. General. The trailer assembly and generator set must be inspected and serviced systematically to insure that the power unit is ready for operation at all times. Inspection will allow defects to be discovered and corrected before they result in serious damage or failure. Table 4-1 contains a tabulated list of preventive maintenance checks and services to be performed by unit maintenance personnel. All of the unit PMCS on the trailer is scheduled to be performed semiannually. Unit PMCS on the generator set is scheduled weekly or on a per-hours-of-operation basis. The running time meter on the control panel is used to determine the qenerator set operatinq time. Using the followinq as a guide, do the checks and services at the intervals shown. Observe all CAUTIONS and WARNINGS.

a. For PMCS performed on an operating time basis, perform your hourly (H) PMCS as close as possible to the time intervals indicated.

NOTE

For units in continuous operation, perform PMCS before starting operation if continuous operation will extend service interval past that which is shown.

b . Perform your weekly (W) PMCS every week or 40 hours of generator set operating time.

c. Perform your monthly (M) PMCS every month or 100 hours of generator set operating time.

d. Do your semiannual (S) PMCS once every six months or 500 hours of generator set operating time.

e. Do your annual (A) PMCS once every year or 1000 hours of generator set operating time.

f If you discover a problem with the equipment, refer to Section Vl, Troubleshooting. If you cannot correct the problem, refer to paragraph 4-12, Reporting Deficiencies.

4-11. Explanation of Columns. The following is a list of the PMCS table column headings with a description of the information found in each column.

a. Item *No.* This column shows the sequence in which to do the checks and services, and is used to identify the equipment area on the Equipment Inspection and Maintenance Worksheet, DA Form 2404.

b. Interval. This column shows when each check is to be done.

c. Item to be Inspected. This column identifies the general area or specific part where the check or service is to be done.

d. Procedures. This column lists the checks or service you have to do and explains how to do them.

4-12. Reporting Deficiencies. If you discover any problem with the equipment during PMCS that you are unable to correct, it must be reported. Refer to DA Pam 738-750 and report the deficiency using the proper forms.

Table 4-1. Unit Preventive Maintenance Checks and Services (PMCS).

H – Hours of operation (As indicated) **W – Weekly (40 hours)** **M – Monthly (100 hours)** **S – Semiannually (500 hours)** **A – Annually (1000 hours)**

Item no.	Interval					Item to be Inspected	Procedures
	H	W	M	S	A		
							WARNING Before performing any maintenance that requires climbing on or under trailer, set trailer handbrakes, chock wheels, and lower rear leg prop. injury to personnel could result from trailer suddenly rolling or tipping.
1			●			Generator Set	Inspect generator set for fuel and oil leaks, loose or missing components and hardware, and unusual wear or deterioration. Clean generator set. NOTE Fuel system must be above freezing temperature when draining water and sediment from strainer, filters, and tank.
2			Ž			Fuel Strainer and Filters	Open drains on fuel strainer, and primary and secondary filters. Drain water and sediment (para 3-20, TM 5-6115-585-12). Allow to drain until fuel runs clean.
3			●			Fuel Tank	Open drain on fuel tank and drain water and sediment (para 3-13, TM 5-6115-585-12). Allow to drain until fuel runs clean.
4				●		Fuel Pumps	Clean or replace, as necessary, fuel strainer in bottom of fuel pump.

Table 4-1. Unit Preventive Maintenance Checks and Services (PMCS). – CONT.

H – Hours of operation (As indicated)	W – Weekly (40 hours)	M – Monthly (100 hours)	S – Semiannually (500 hours)	A – Annually (1000 hours)

Item no.	Interval					Item to be Inspected	Procedures
	H	W	M	S	A		
5	100					Lubricating Oil and Filter	Change lubricating oil and filter every 100 hours of operation (L.0. 5-6115-585-12).
6	300					Fuel Strainer	Clean fuel strainer every 300 hours of operation (para 4-20, TM 5-6115-585-12).
7	500					Primary Fuel Filter	Service primary filter every 500 hours of operation (para 4-20, TM 5-6115-585-12).
8	1000					Secondary Fuel Filter	Service secondary filter every 1000 hours (para 4-20, TM 5-6115-585-12).
9	300					Batteries	Perform a hydrometer test on batteries every 300 hours, or quarterly. Refer to para 4-25c, TM 5-6115-585-12 for test procedures.
10	500					Crankcase Breather	Inspect breather tube every 500 hours. Clean as necessary (para 4-45, TM 5-6115-585-12).
11	100					Dust Caps on Air Cleaner	Clean out dust caps on air cleaner assembly every 100 operating hours (more frequently under ususual conditions).
12	1000					Air Cleaner	Clean every 1000 operating hours or as conditions dictate. Replace air cleaner every 2000 operating hours.
13				●		Taillights	Replace any broken or cracked lenses or defective bulbs (page 4-52, TM 9-2330-202-14&P).
14				●		Intervehicular Cable	Check for cuts, breaks, frayed wires, or damaged plug.
15				●		Drawbar Ring	Check security of mounting. Inspect ring for excessive wear.

Table 4-1. Unit Preventive Maintenance Checks and Services (PMCS). – CONT.

H - Hours of operation (As indicated)	W -- Weekly (40 hours)	M – Monthly (100 hours)	S – Semiannually (500 hours)	A – Annually (1000 hours)

Item no.	Interval					Item to be Inspected	Procedures
	H	W	M	S	A		
16				●		Safety Chains	Inspect for broken links or missing chain(s).
17				●		Reflectors	Replace any cracked, broken, or missing reflectors (page 4-232, TM 9-2330-202-14&P).
18				●		Data Plates and Markings	Make sure data plates are legible and secure. Replace illegible data plates (page 4-236, TM 9-2330-202-14&P),
19				●		Support Leg Assembly	Inspect brackets and leg for bent or broken parts.
20				●		Rear Leg Prop	Inspect bracket and leg prop for bent or broken parts.
21				●		Suspension Assemblies	a. Inspect shackles, bearings, pins, leaf springs and spring eyes for damage or broken parts. b. Inspect mounting brackets for cracks or loose or missing hardware. c. Inspect shock absorbers for damage or leaks.
22				●		Axle	a. Check for damaged axle tube. b. Check for loose or missing U-bolts or nuts.
23				●		Wheels and Tires	a. Check serviceability of tires as indicated in TM 9-2610-200-24. b. Tighten wheel stud nuts.

Table 4-1. Unit Preventive Maintenance Checks and Services (PMCS). – CONT.

H - Hours of operation (As indicated)	W – Weekly (40 hours)	M – Monthly (100 hours)	S - Semiannually (500 hours)	A – Annually (1000 hours)

Item no.	Interval H	W	M	S	A	Item to be Inspected	Procedures
24				●		Brakes	a. Inspect brake linings for wear. Replace if brake shoe lining is less than l/8-inch (3.2 mm) thick (page 4-140, TM 9-2330-202-14&P). b. Inspect brake adjusting screw, retaining screw, retaining pins, springs, and clips for corrosion and wear. c. Inspect hydraulic wheel cylinders for leaks. d. Adjust brake (page 4-154, TM 9-2330-202-14&P).
25					●	Wheel Bearings	Clean and repack. (page 4-180), TM 9-2330-202-14&P).
26				●		Hydraulic Brake Actuator	a. Check security of brake actuator mounting. b. Service brake actuator (page 4-156, TM 9-2330-202-14&P).
27				●		Hydraulic Brake Tubes and Hoses	Inspect for dents, cracks, loose connections and leaks.
28				●		Trailer – Road Test	Perform road test paying special attention to items that were repaired or adjusted, in accordance with TM 9-2330-202-14.

☆ U.S GOVER NMENT PRINTING OFFICE 1989 - 654-030/00384

Section VI. TROUBLESHOOTING

4-13. Power Unit Troubleshooting. There are no troubleshooting procedures authorized at unit level for the power unit end item. Troubleshooting procedures for the individual generator set and trailer are contained in their respective technical manuals referenced below.

a. Generator Set Troubleshooting. Refer to TM 5-6115-585-12 for troubleshooting procedures applicable to the generator set.

b. Trailer Troubleshooting. Refer to TM 9-2330-202-14&P for troubleshooting procedures applicable to the trailer.

Section VII. RADIO INTERFERENCE SUPPRESSION

4-14. General Methods Used to Attain Proper Suppression. Essentially, suppression is attained by providing a low resistance path to ground for stray currents. The methods used include shielding ignition and high-frequency wires, grounding the frame with bonding straps, and using filtering systems.

4-15. Radio Interference Suppression Components. All component parts on the power unit end item, whose primary or secondary function is radio interference suppression, are on the generator set. Refer to TM 5-6115-585-12 for location of radio interference suppression components.

Section VIII. MAINTENANCE OF POWER UNIT TRAILER

4-16. **General.** This section of the manual contains unit level maintenance procedures for components of the MII6A2 trailer added when the trailer is used as part of the PU-753/M power unit. These components are not covered in the overall trailer maintenance manual. For all other unit maintenance procedures on the trailer, refer to TM 9-2330-202-14&P.

WARNING

Before performing any maintenance that requires climbing on or under trailer, set trailer handbrakes, chock both wheels, and lower rear leg prop. Injury to personnel could result from trailer suddenly rolling or tipping.

4-17. **Fuel Can Bracket Replacement. (See** figure 4-5.) There are four fuel can brackets supplied with the PU-753/M. Two brackets are mounted on top of each fender. Replacement procedures described below are typical for all four.

a. Removal.

(1) Remove four screws (1, figure 4-5), four nuts (2) and four flat washers (3) securing bracket (4) to fender (5).

(2) Remove bracket (4) from fender (5).

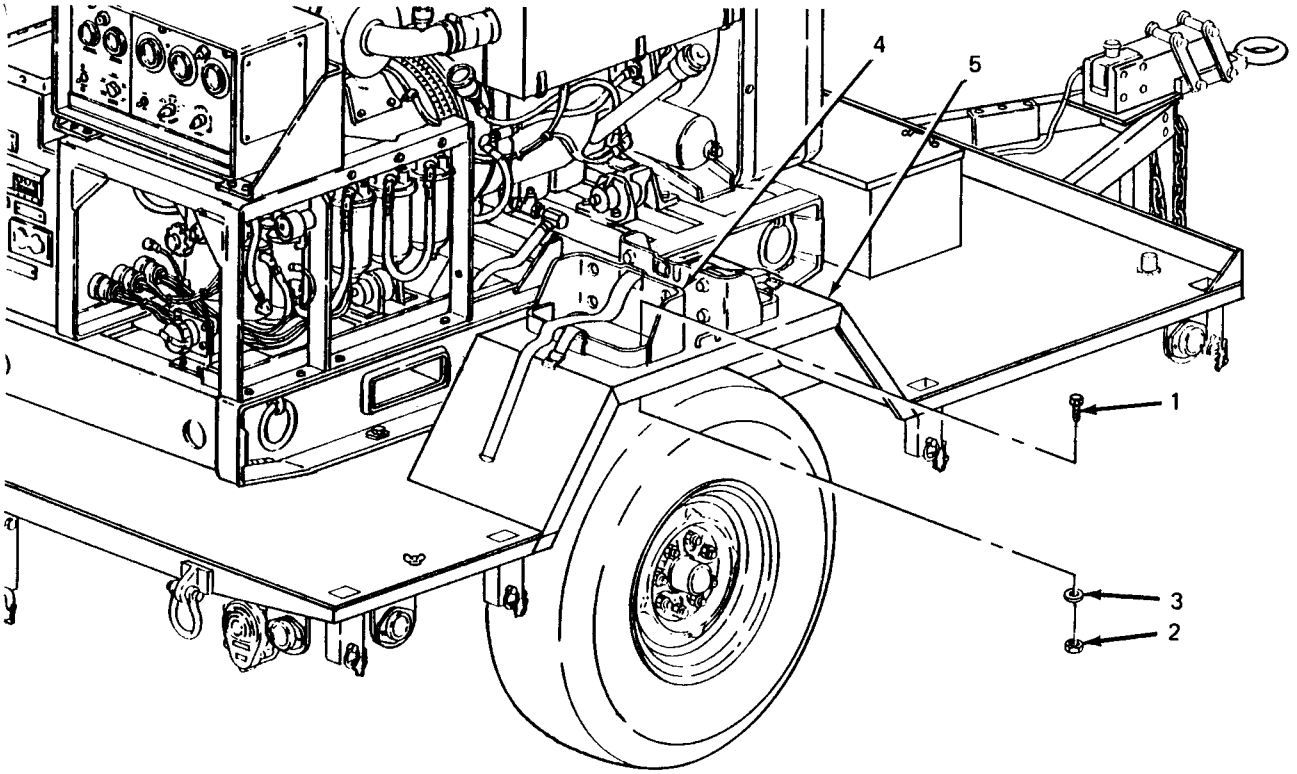

Figure 4-5. Fuel Can Bracket Replacement.

b. Installation.

(1) Position fuel can bracket (4) on fender (5).

(2) Insert four screws (1) down through bracket (4) and through fender (5).

(3) Install one washer (3) and one nut (2) onto each screw (1). Tighten hardware to secure bracket (4).

4-18. Accessory Box Replacement. (See figure 4-6.) The accessory box is mounted to the trailer bed forward of the generator set.

a. Removal.

(1) Remove four screws (1, figure 4-6), four flat washers (2), and four nuts (3) securing accessory box (4) to trailer bed (5).

(2) Lift accessory box (4) off trailer (5).

b. Installation.

(1) Position accessory box (4) on trailer bed (5).

(2) Insert four screws (1) through accessory box mounting brackets and trailer bed (5).

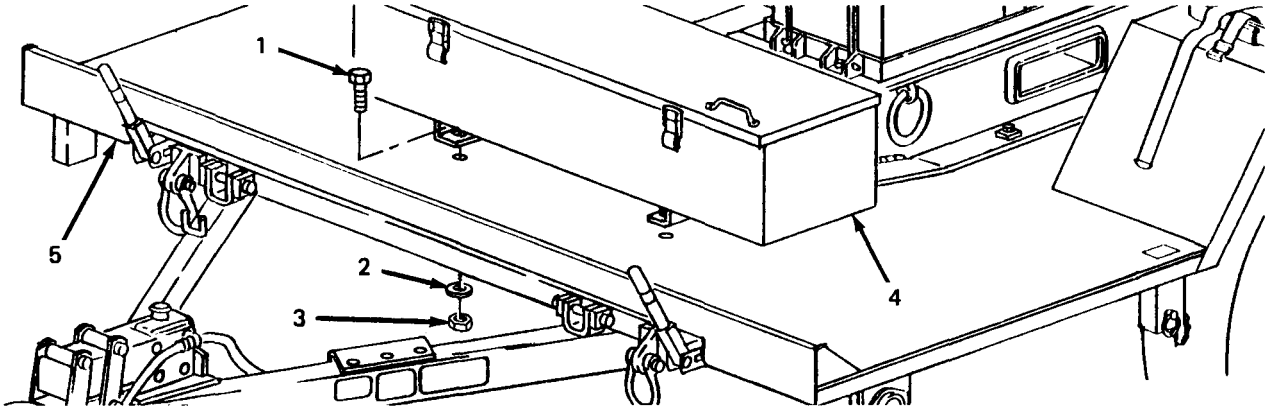

Figure 4-6. Accessory Box Replacement.

(3) Working under trailer, install one flat washer (2) and one nut (3) on each screw (1). Tighten hardware to secure accessory box *(4).*

4-19. Fire Extinguisher Bracket Replacement. (See figure 4-7.) The fire extinguisher supplied with the power unit is carried in a bracket mounted on the rear of the trailer roadside fender.

a. Removal.

(1) Remove four screws (1, figure 4-7), four nuts (2), and four flat washers (3) securing bracket (4) to fender(5).

(2) Remove bracket (4) from fender (5).

b. Installation.

(1) Position fire extinguisher bracket (4) on fender (5).

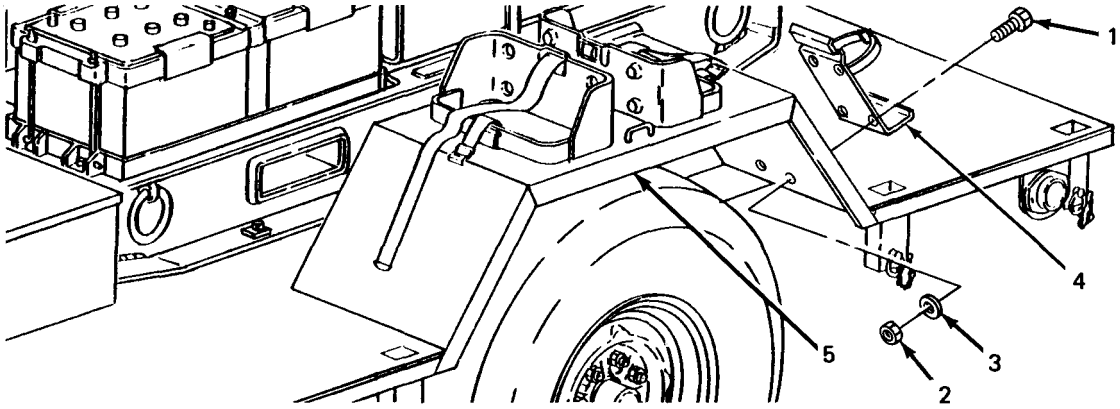

Figure 4-7. Fire Extinguisher Bracket Replacement.

(2) Insert four screws (1) down through bracket (4) and through fender (5).

(3) Install one flat washer (3) and one nut (2) on each screw (1). Tighten hardware to secure bracket (4).

4-20. **Leg Prop Assembly Servicing.** Servicing of the leg prop assembly is limited to semiannual lubrication (paragraph 4-9, b.).

CHAPTER 5

INTERMEDIATE (FIELD) (DIRECT SUPPORT AND GENERAL SUPPORT) MAINTENANCE INSTRUCTIONS

Section I. INTRODUCTION

5-1. General. This chapter contains Intermediate Direct Support and General Support level maintenance procedures for components of the M116A2 trailer added when the trailer is used as part of the PU-753/M power unit. These components are not covered in the overall trailer maintenance manual. For all other intermediate direct. and general support maintenance procedures on the trailer, refer to TM 9-2330-202-14&P. For intermediate direct and general support maintenance procedures on the generator set, refer to TM 5-6115-585-34.

WARNING

Before performing any maintenance that requires climbing on or under trailer, set trailer handbrakes, chock wheels and lower rear leg prop. Injury to personnel could result from trailer suddenly rolling or tipping.

Section II. MAINTENANCE OF POWER UNIT TRAILER

5-2. **Leg Prop Assembly Maintenance.** Maintenance of the leg prop assembly at the Intermediate Direct Support and General Support level consists of repairing or replacing the assembly as required.

a. *Leg Prop Assembly Replacement. (See* figure 5-1.)

(1) *Removal.*

(a) While supporting leg prop assembly, pull out angled bar (1, figure 5-1) and lower leg from traveling position.

(b) Line up boss (2) on upper leg (3) with holes in bracket (4) and insert angled bar (1) to lock leg in support position.

(c) Remove either one of two cotter pins (5) from leg prop assembly pivot shaft (6).

(d) While steadying leg prop assembly, remove shaft (6) with remaining cotter pin (5) in place.

WARNING

When angled bar is removed in step (e), leg prop assembly will fall from bracket if not supported. To prevent injury to personnel or damage to equipment, do not permit leg assembly to drop.

(e) Lift leg assembly slightly to take weight off angled bar (1) and remove bar.

(f) Lower leg assembly from bracket (4).

(9) Remove three screws (7), three flat washers (8), three lockwashers (9), and three nuts (10) and remove bracket (4) from trailer frame (11).

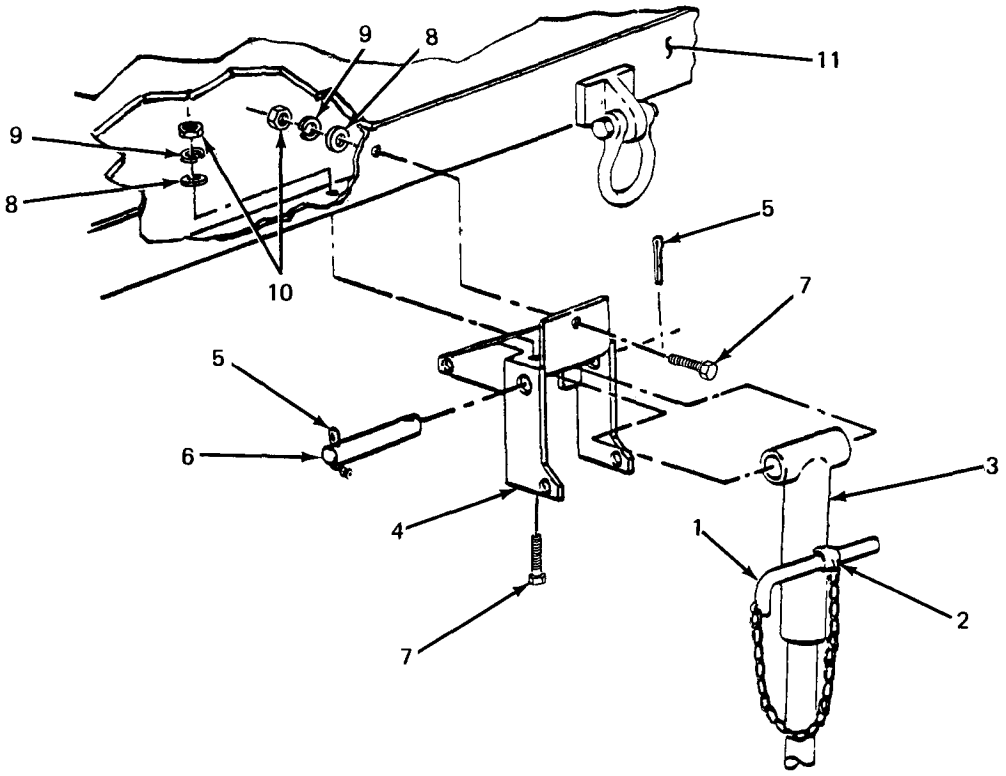

Figure 5-1. Leg Prop Assembly Replacement.

(2) Installation.

(a) Position bracket *(4)* on trailer frame (11) and install three screws (7), three flat washers (8), three lockwashers (9) and three nuts (10). Tighten hardware to secure bracket.

(b) Lift leg prop assembly into bracket (4) and secure by inserting angled bar (1) through holes in bracket and boss (2) on upper leg (3).

(c) Position leg prop assembly to line up boss (2) on top of leg with pivot holes in bracket (4). Insert pivot shaft (6).

(d) Insert cotter pin (5) in pivot shaft (6) and bend cotter pin legs in opposite directions.

(e) Pull out angled bar (1) to unlock leg prop assembly.

(f) Swing leg prop assembly up into traveling position and secure by inserting angled bar (1) through holes in bracket (4) and boss (2) on upper leg (3).

b. Leg Prop Assembly Repair. Repair of the leg prop assembly is limited to welding and repainting. However, partial disassembly is possible to facilitate repair. If required, repaint in accordance with MIL-T-704, Type F, color Green No. 383 of MIL-C-46168.

(1) Disassembly.

(a) Remove leg prop assembly from trailer (paragraph 5-2, a.(l)).

(b) Clamp leg prop assembly in vise with spring pin facing up.

(c) Using suitable drift, drive spring pin out of upper leg and remove leg base.

(2) Assemb/y.

(a) Clamp upper leg in vise with spring pin hole facing up.

(b) Insert leg base into upper leg and turn leg base until hole in screw lines up with hole in upper leg.

(c) Install spring pin to secure leg base to upper leg.

(d) Install leg prop assembly on trailer (paragraph 5-2, a. (2)).

5-3. Trailer Bed and Fenders Repair and Replacement. (See figure 5-2.) The body of the modified trailer consists of a single weldment that includes both fenders and the bed of the trailer.

a. Removal.

(1) Remove fitted cover (paragraph 3-11, a.(1)).

(2) Remove tarpaulin support and four bow assemblies (paragraph 3-11, b.(1)).

(3) Remove accessory box (paragraph 4-18, a.).

(4) Remove generator set (paragraph 5-7, a.).

(5) Remove 10 screws (1, figure 5-2), 20 flat washers (2), and 10 nuts (3) securing trailer body (4) to trailer chassis (5).

NOTE

Observe position of screws securing rear braces on trailer body to trailer chassis.

(6) Remove 16 screws (6), 32 flat washers (7) and 16 nuts (8) securing trailer body (4) to trailer chassis (5).

NOTE

Removal of the trailer body requires the removal and disassembly of both handbrake lever assemblies. The handbrake lever assemblies are symmetrical and this procedure is typical for both.

(7) Remove two screws (9), two spacers (10), and two nuts (11) and remove roadside handbrake lever assembly (12) from trailer chassis (5).

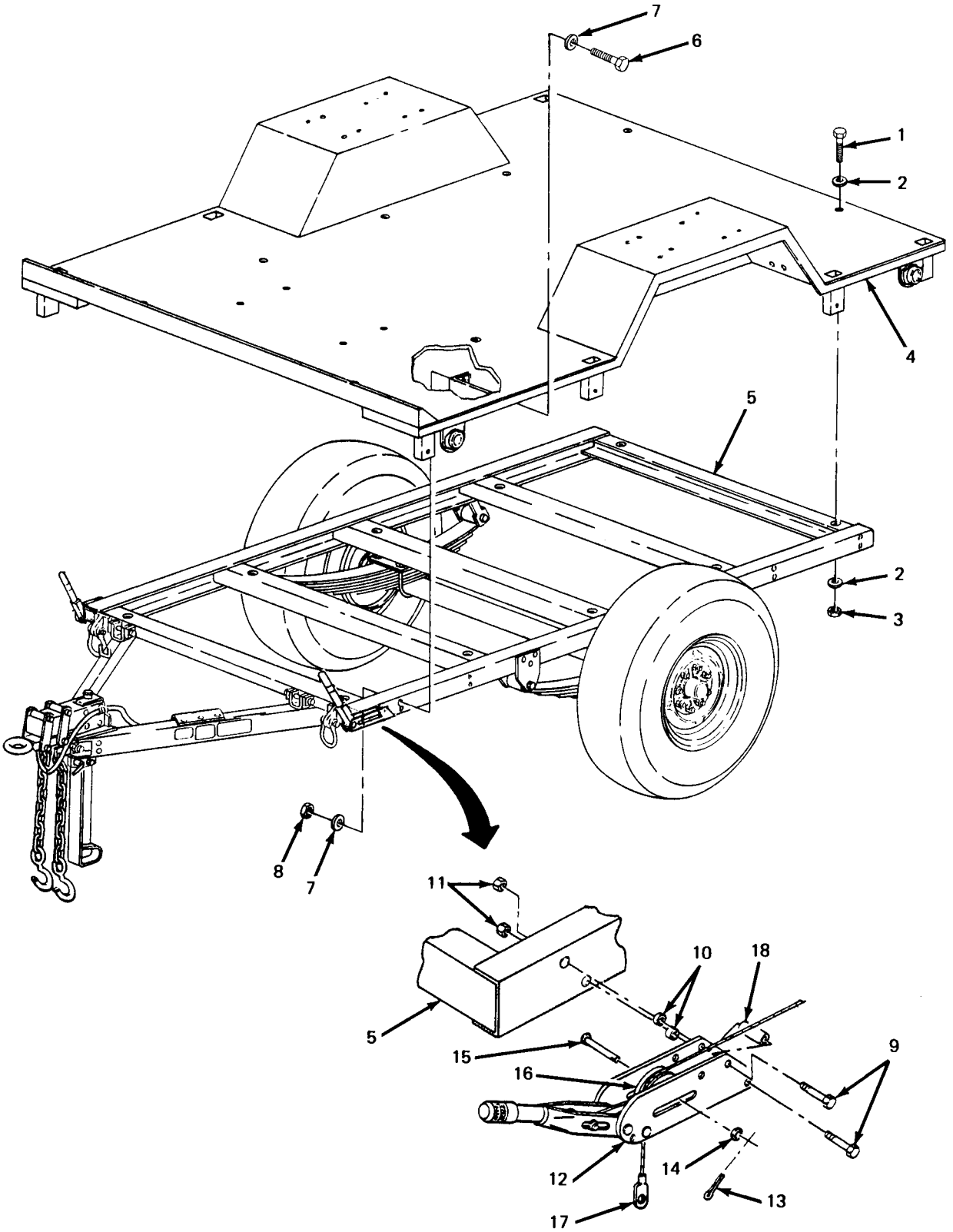

Figure 5-2. Fender and Bed Replacement.

(8) Remove cotter pin (13), washer (14), shaft (15), and pulley (16) from handbrake lever assembly (12).

(9) Working under trailer, pull handbrake cable clevis (17) back through the holes in the front two braces on the trailer body.

(10) Repeat steps (7) through (9) to remove and disassemble curbside handbrake lever assembly.

WARNING

When lifting trailer body, use lifting equipment with a minimum lifting capacity of 500 lb. Do not stand under trailer body while it is being lifted. Failure to observe these precautions can cause injury to personnel or damage to equipment.

(11) Using suitable lifting equipment with a minimum lifting capacity of 500 lb, lift trailer body (4) off of trailer chassis (5).

b. Repair. Repair of the trailer bed and fenders is limited to straightening, welding, and repainting. If required, repaint in accordance with MIL-T-704, Type F, color Green, NO. 383 of MIL-C-46168.

c. Installation.

WARNING

When lifting trailer body, use lifting equipment with a minimum lifting capacity of 500 lb. Do not stand under trailer body while it is being lifted. Failure to observe these precautions can cause injury to personnel or damage to equipment.

(1) Using suitable lifting equipment with a mimimum lifting capacity of 500 lb, lift trailer body (4) onto trailer chassis (5) and aline mounting holes.

(2) Insert 10 screws (1) with flat washers (2) through trailer bed and through trailer chassis frame rails.

(3) Working under trailer, install one flat washer (2) and one nut (3) on each screw (1).

(4) Insert 16 screws (6) with 16 flat washers (7) through trailer body braces into trailer chassis.

(5) Working under trailer, install one flat washer (7) and one nut (8) on each screw (6). Tighten hardware to secure trailer body to trailer chassis.

(6) Feed roadside handbrake cable clevis (17) forward through holes in front two braces on trailer body.

(7) Wrap handbrake cable around pulley (16), position pulley in handbrake lever assembly (12) and insert shaft (15).

(8) Install washer (14) and cotter pin (13) to secure shaft (15).

(9) Assemble handbrake lever assembly (12) using two screws (9) and two spacers (10). Make certain top screw (9) goes through spacer (18) and bottom screw (9) goes through handbrake cable clevis.

(10) Position assembled handbrake lever assembly (12) on trailer chassis (5) and install two nuts (11). Tighten hardware.

(11) Repeat steps (6) through (10) to assemble and install curbside handbrake lever assembly.

(12) Install generator set (paragraph 5-7, b.).

(13) Install accessory box (paragraph 4-18, b.).

(14) Install tarpaulin support and four bow assemblies (paragraph 3-11, b.(2)).

(15) Install fitted cover (paragraph 3-11, a.(2)).

5-4. Fitted Cover Repair. Repairs to the fitted cover shall be made in accordance with FM 10-16, Fabric Repairing.

5-5. *Accessory* Box Repair. (See figure 5-3.) The accessory box is repaired by replacing the hasp, the catches and the footmans loops, as required. The box itself may be straightened, welded, and repainted. If required, repaint in accordance with MIL-T-704, Type F, color Green, No. 383 of MIL-C-46168.

a, *Catch and Hasp Replacement.*

(1) Grind off or drill out solid rivets (1, figure 5-3) securing catch or hasp (2) to accessory box (3).

(2) Position new catch or hasp (2) on accessory box and secure with solid rivets (1).

(3) Touch up with paint as required.

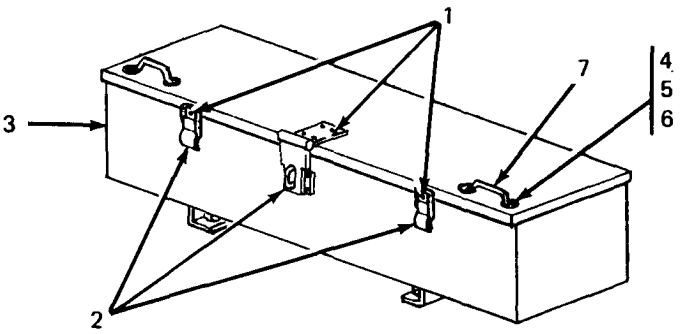

Figure 5-3. Accessory Box Repair,

b. Footmans Loop Replacement.

(1) Remove two screws (4, figure 5-3), two flat washers (5), and two self-locking nuts (6) securing footmans loop (7) to accessory box lid.

(2) Position new footmans loop (7) on accessory box (3) and install with two screws (4) two washers (5), and two self-locking nuts (6).

5-6. **Marking.** (See figure 5-4.) The power unit four-digit registration number, preceded by the prefix "VC" and the words "U.S. ARMY, " is marked in three places on the trailer. Marking is done in accordance with MIL-STD-642. On the fender, over each wheel, "T.P. 35 PSI" is marked in 1.00 ± .12 inch high characters in accordance with MIL-STD-130. Figure 5-4 shows the approximate location of markings on the power unit. If required, touch-up painting of the base color is done in accordance with MIL-T-704, Type F, color Green, No. 383 of MIL-C-46168.

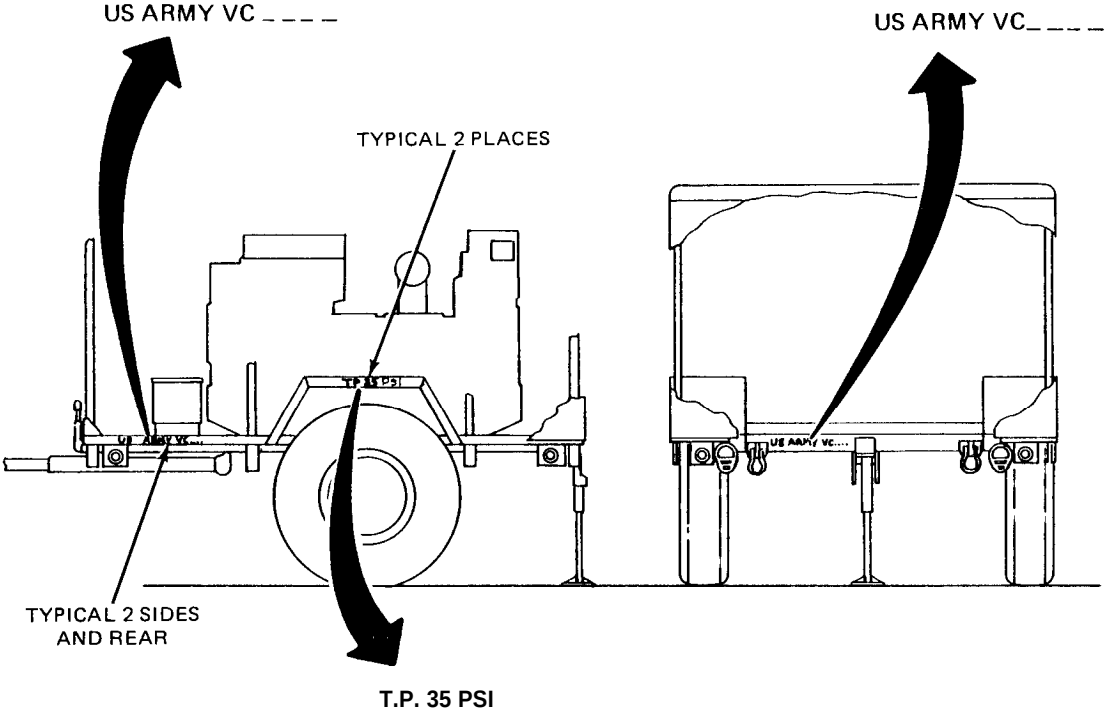

Figure 5-4. Power Unit Markings.

Section III. GENERATOR SET

5-7. Generator Set Replacement. (See figures 5-5 and 5-6.)

a. Removal.

(1) Remove fitted cover (paragraph 3-11, a.(1)).

(2) Remove tarpaulin support and four bow assemblies (paragraph 3-11, b.(1)).

(3) Disconnect ground wire (1, figure 5-5) from generator set (2) to GROUND TERMINAL stud (3) on trailer bed (4).

NOTE

The beveled washers (6) may have been welded in place.

(4) Remove four bolts (5), four beveled washers (6), four flat washers (7), four lockwashers (8) and four nuts (9) securing generator set (2), to trailer (4).

(5) Remove engine oil drain hose (10) from grommet in trailer bed.

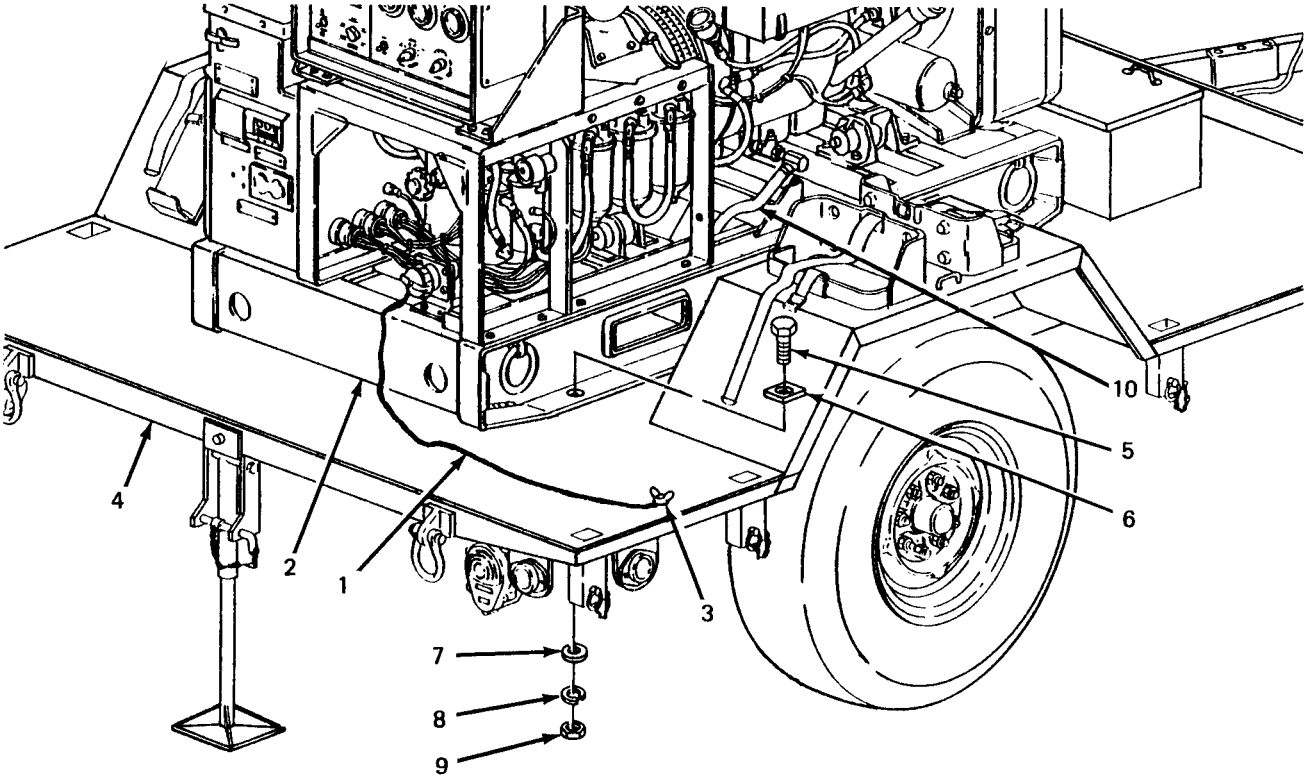

Figure 5-5. Detaching Generator Set from Trailer.

WARNING

When lifting generator set, use lifting equipment with a minimum lifting capacity of 1500 lb. Do not stand under generator while it is being lifted. Failure to observe these precautions can cause injury to personnel or damage to equipment.

(6) Attach lifting equipment with a minimum lifting capacity of 1500 lb (1, figure 5-6) to lifting eye (2) on top of generator set (3) and remove generator set from trailer.

b. Installation.

WARNING

When lifting generator set, use lifting equipment with a minimum lifting capacity of 1500 lb. Do not stand under generator while it is being lifted. Failure to observe these precautions can cause injury to personnel or damage to equipment.

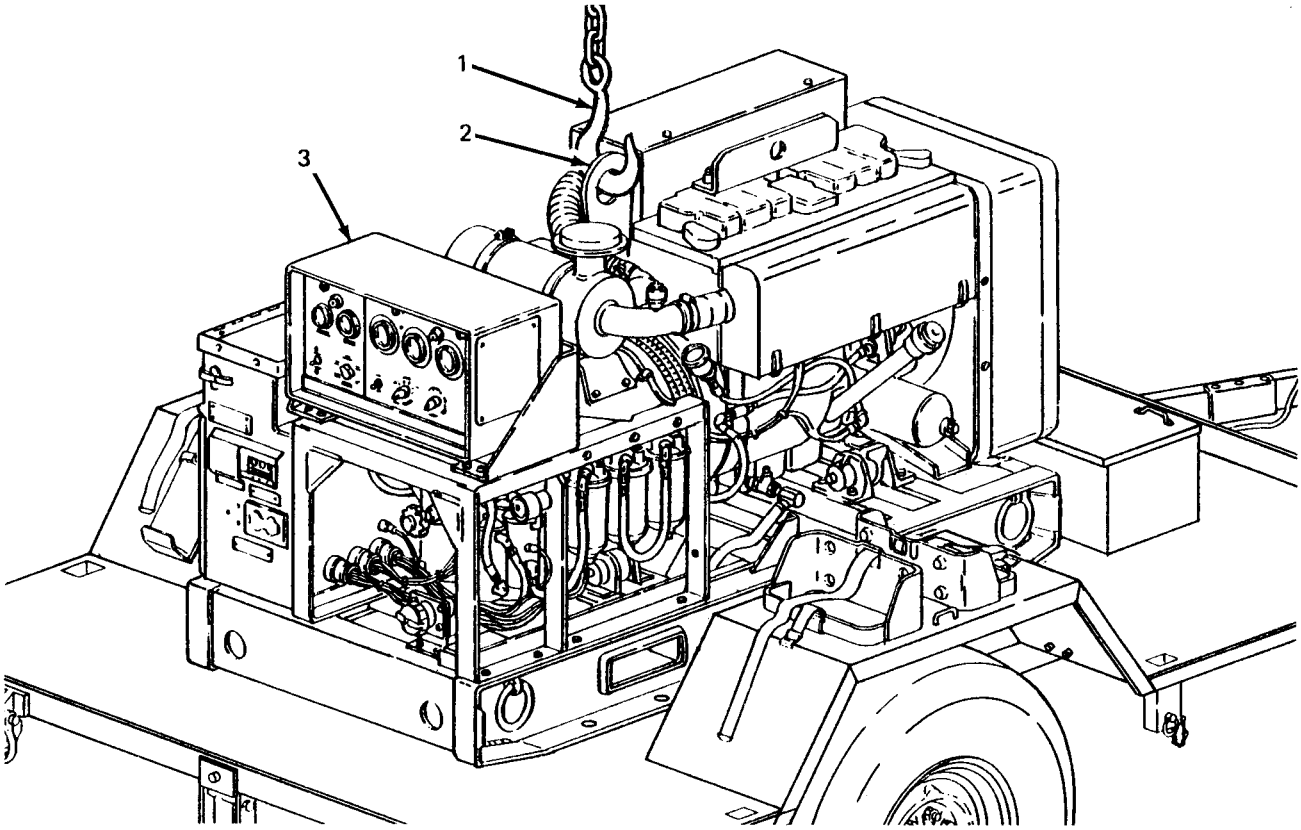

Figure 5-6. Lifting Generator Set.

(1) Attach lifting equipment with a minimum lifting capacity of 1500 lb (1, figure 5-6) to lifting *eye (2)* on top of generator set (3) and lift generator.

(2) Lower generator set (2, figure 5-5) onto trailer bed (4) and aline mounting holes.

(3) Insert four bolts (5) with beveled washers (6) down through generator set skid and trailer bed (4).

(4) Working under trailer, install one flat washer (7), one lockwasher (8) and one nut (9) on each bolt (5).

(5) Position beveled washers (6) so that bolt heads are parallel to top of washers. While holding beveled washers in position, tighten hardware to secure generator set (2) to trailer (4).

(6) Insert engine oil drain hose (10) through grommet in trailer bed.

(7) Install tarpaulin support and four bows assemblies (paragraph 3-11, b.(2)).

(8) Install fitted cover (paragraph 3-11, a.(2)).

CHAPTER 6

TEST AND INSPECTION AFTER REPAIR

Section I. GENERAL REQUIREMENTS

6-1. General Requirements. The activity performing the repair is responsible for the performance of all applicable tests and inspections specified in the technical manuals referenced below. Activities performing maintenance on any component of the power unit must perform those tests and inspections required by the applicable component or system repair instruction.

Section II. INSPECTION

6-2. **Generator Set Inspections.** Refer to TM 5-6115-585-12 and -34 for inspections required following repair of the generator set.

6-3. **Trailer Inspections.** Refer to TM 9-2330-202-14&P for inspections required following repair of the trailer.

Section III. OPERATIONAL TESTS

6-4. **Generator Set Operational Tests.** Refer to TM 5-6115-585-12 and -34 for operational tests required to verify satisfactory performance of the generator set.

6-5. **Trailer Operational Tests.** Refer to TM 9-2330-202-14&P for operational tests required to verify satisfactory performance of the trailer.

APPENDIX A

REFERENCES

A1. Scope. This appendix lists all pamphlets, forms, technical manuals, specifications and miscellaneous publications referenced in this manual.

A-2. **Forms and Records.**

Air Force Maintenance Management Program	AFM-66-1
Technical Order System Publication Improvement Report and Reply	AFTO Form 22
Recommended Changes to Publications and Blank Forms	DA Form 2028
Depreservation Guide for Vehicles and Equipment	DA Form 2258
Equipment Inspection and Maintenance Worksheet	DA Form 2404
Maintenance Request	DA Form 2407
Consolidated Index of Army Publications	DA PAM 310-1
The Army Maintenance Management System (TAMMS)	DA PAM 738-750
Product Quality Deficiency Report	SF 368

A-3. Military Specifications.

Chemical Agent Resistant Aliphatic Polyurethane Coating	MIL-C-46168
Identification Marking of U.S. Military Property	MIL-STD-130
Identification Marking of Combat and Tactical Transport	MIL-STD-642
Treatment and Painting of Materiel	MIL-T-704

A-4. Technical Manuals.

Fabric Repairing, Tents, Canvas, Webbing	FM 10-16
Operator and Organizational Maintenance Manual for Generator Set, Diesel Engine Driven, Tactical Skid Mounted, 10 KW, 1 Phase, 2 Wire; 1 Phase, 3 Wire and 3 Phase, **4** Wire; 120, 12/240 and 120/208 V (DOD Model MEP-003A) Utility Class 400 HZ (6115-00-465-1027)	TM 5-6115-585-12
Organizational, Direct Support and General Support Maintenance Repair Parts and Special Tools List (Including Depot Maintenance Repair Parts and Special Tools) for Generator Sets, Diesel Engine Driven, Tactical Skid Mounted, 10 KW, 1 Phase, 2 Wire; 1 Phase, 3 Wire; 3 Phase, 4 Wire, 120, 120/240 and 120/208 V (DOD Model MEP-003A) Utility Class, 60 HZ (NSN 6115-00-465-1030) and (Model MEP-112A), Utility Class, 400 Hz (6115-00-465-1O27)	TM 5-6115-585-24P
Intermediate (Field) (Direct and General Support) and Depot Level Maintenance Manual for Generator Set, Diesel Engine Driven, Tactical Skid Mounted, 10 KW, 1 Phase, 2 Wire; 1 Phase, 3 Wire; 3 Phase, 4 Wire, 120, 120/240 and 120/208 V (DOD Model MEP-003A), Utility Class, 60 HZ (NSN 6115-00-465-1030) and (Model MEP-112A), Utility Class, 400HZ (6115-00-465-1027)	TM 5-6115-585-34
Procedures for Destruction of Equipment to Prevent Enemy Use (Mobility Equipment Command)	TM 750-244-3

Operator's, Organizational, Direct Support and General Support Maintenance Manual Including Repair Parts and Special Tools List for Trailer, Cargo: 3/4-Ton, 2-Wheel, M101 (NSN 2330-00-738-9509), M101AI (2330-00-898-6779), M101A2 (2330-01-101-4697) and Chassis, Trailer 3/4-Ton, 2-Wheel, M1 16 (2330-00-542-5987), M116A1 (2330-00-898-6780) and M116A2(2330-01-101-8434). . . . . TM 9-2330-202-14&P

Organizational, Direct Support, and General Support Care Maintenance and Repair of Pneumatic Tires and Inner Tubes . . . . . TM 9-2610-200-24

Air Force Technical Order System. TO-00-5-1

Painting and Marking of USAF Aerospace Ground Equipment. . . . . TO 35-1-3

Processing and Inspection of Aerospace Ground Equipment for Storage and Shipment . . . . . TO 35-1-4

Processing and Inspection of Non-Mounted, Non-Aircraft Gasoline and Diesel Engines for Storage and Shipment . . . . . TO 38-1-5

Lubrication Order, Generator Set, Diesel Engine Driven, Tactical Skid Mounted, 10KW L05-6115-585-12

A-5. Technical Bulletins.

Preservation of USAMECOM Mechanical Equipment for Shipment and Storage . . . . . TB 740-97-2

APPENDIX B

COMPONENTS OF END ITEM AND BASIC ISSUE ITEMS LISTS

Section I INTRODUCTION

B-1. Scope. This appendix lists components of end item and basic issue items for the power unit to: help you inventory items required for safe and efficient operation.

B-2. General. The Components of End Item and Basic Issue Items Lists are divided into the following sections.

a. Section II. Components of End Item. This listing is for informational purposes only, and is not authority to requisition replacements. These items are part of the end item, but are removed and separately packaged for transportation or shipment. As part of the end item, these items must be with the end item whenever it is issued or transferred between property accounts. Illustrations are furnished to assist you in identifying the items.

b. *Section III. Basic Issue Items.* These are the minimum essential items required to place the power unit in operation, to operate it, and to perform emergency repairs. Although shipped separately packaged, Bll must be with the power unit during operation and whenever it is transferred between property accounts. The illustrations will assist you with hard-to-identify items. This manual is your authority to request/requisition replacement Bll, based on TOE/MTOE authorization of the end item.

B-3. **Explanation of Columns.** The following provides an explanation of columns found in the tabular listings:

a. Column (1), Illustration Number (IIIus No.). This *column* indicates the number assigned to the item.

b. Column (2), National Stock Number. Indicates the National stock number assigned to the item.

c. *Column (3), Description.* Indicates the federal item name and, if required, a minimum description to identify and locate the item. The last line for each item indicates the FSCM (in parentheses) followed by the part number. If item needed differed for different models of this equipment, the model would be shown under the “Usable on Code” heading in this column. The Usable On Code is not applicable for this equipment.

d. *Column (4), Unit of Measure (U/M).* Indicates the measure used in performing the actual operational/maintenance function. This measure is expressed by a two-character alphabetical abbreviation (eg, ea, in, pr).

e. Column (5), Quantity Required (Qty Req’d). Indicates the quantity of the item authorized to be used with/on the equipment.

Section II. COMPONENTS OF END ITEM

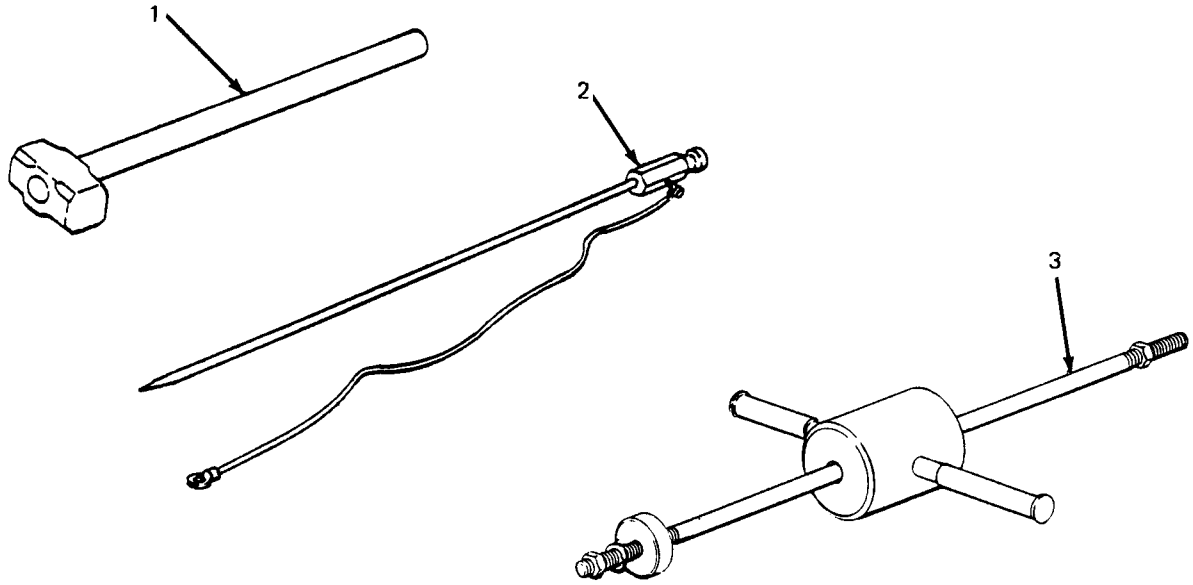

Figure B-1. Components of End Item

(1) Illus no.	(2) National stock number	(3) Description FSCM and part number	Usable on code	(4) U/M	(5) Qty'd req'd
1	5120-00-243-2957	Hammer, Hand, Engineers 8 lb. (3.6kg) (81348) GGG-H-86		EA	1
2	5975-00-878-3791	Rod, Ground, Driven, Sectional 9 ft (2.7 m) (81349) MIL-R-1 1461		EA	2
3	5120-01-013-1676	Hammer, Slide (97403) 13226E7741		EA	1

Section III. BASIC ISSUE ITEMS

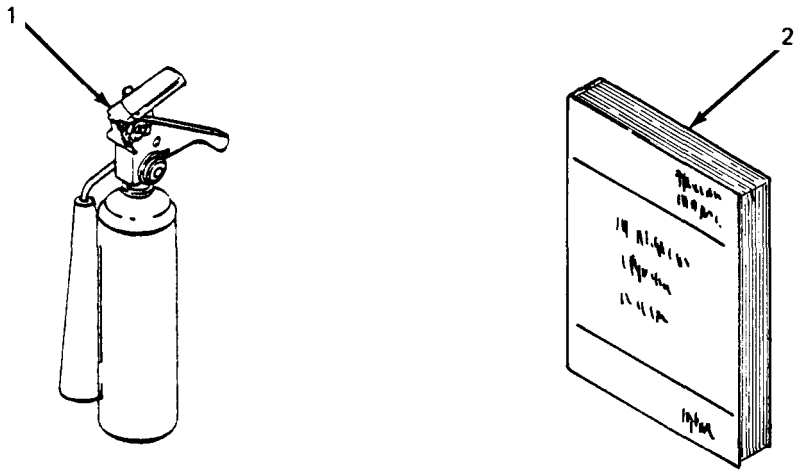

Figure B-2. Basic Issue Items

(1) Illus no.	(2) National stock number	(3) Description FSCM and part number	Usable on code	(4) U/M	(5) Qty'd req'd
1	4210-00-555-8837	Extinguisher, Fire, Hand, 2-3/4 lb. (1.25kg) MIL-E-52031		EA	1
2		Manual, Technical TM 5-6115-623-14&P/ TO-35C2-3-491-1		EA	1

APPENDIX C

MAINTENANCE ALLOCATION CHART

Section I. INTRODUCTION

C-1. General.

a. This section provides a general explanation of all maintenance and repair functions authorized at various maintenance levels.

b. Section II designates overall responsibility for the performance of maintenance functions on the identified end item or component. The implementation of the maintenance functions upon the end item or component will be consistent with the assigned maintenance functions.

c. Section Ill lists the tools and test equipment required for each maintenance function as referenced from Section Il.

d. Section IV contains supplemental instructions, explanatory notes and/or illustrations required for a particular maintenance functions.

C-2. Explanation of Columns in Section Il.

a. Group Number. Column 1. The assembly group is a numerical group assigned to each assembly in a top down breakdown sequence. The applicable assembly groups are listed on the MAC in disassembly sequence beginning with the first assembly removed in a top down disassembly sequence.

b. Assembly Group. Column 2. This column contains a brief description of the components of each assembly group.

c. *Maintenance Functions. Column* 3. This column lists the various maintenance functions (A through K) and indicates the lowest maintenance category authorized to perform these functions. The symbol designations for the various maintenance categories are as follows:

C – Operator or crew
O – Unit maintenance
F – Intermediate direct support maintenance
H – Intermediate general support maintenance
D – Depot maintenance

The maintenance functions are defined as follows:

A – Inspect. To determine serviceability of an item by comparing its physical, mechanical, and electrical characteristics with established standards.

B – Test. To verify serviceability and to detect electrical or mechanical failure by use of test equipment.

C – Service. To clean, to preserve, to charge, and to add fuel, lubricants, cooling agents, and air. If it is desired that elements, such as painting and lubricating, be defined separately, they may be so listed.

D - Adjust. To rectify to the extent necessary to bring into proper operating range.

E - Aline. To adjust specified variable elements of an item to bring to optimum performance.

F - Calibrate. To determine the corrections to be made in the readings of instruments or test equipment used in precise measurement. Consists of the comparison of two instruments, one of which is a certified standard of known accuracy, to detect and adjust any discrepancy in the accuracy of the instrument being compared with the certified standard.

G – Install. To set up for use in an operational environment such as an emplacement, site, or vehicle.

H - Replace. To replace unserviceable items with serviceable like items.

I - Repair. Those maintenance operations necessary to restore an item to serviceable condition through correction of material damage or a specific failure. Repair may be accomplished at each category of maintenance.

J - Overhaul. Normally, the highest degree of maintenance performed by the Army in order to minimize time work in process is consistent with quality and economy of operation. It consists of that maintenance necessary to restore an item to completely serviceable condition as prescribed by maintenance standard in technical publications for each item of equipment. Overhaul normally does not return an item to like new, zero mileage, or zero hour condition.

K - Rebuild. The highest degree of material maintenance. It consists of restoring equipment as nearly as possible to new conditions in accordance with original manufacturing standards. Rebuild is performed only when required by operational considerations or other paramount factors and then only at the depot maintenance category. Rebuild reduces to zero the hours or miles the equipment, or component thereof, has been in use.

d Symbols. The uppercase letter placed in the appropriate column indicates the lowest level at which that particular maintenance function is to be performed.

e. Tools and Equipment. Column 4. This column is provided for referencing by code, the special tools and test equipment, (Section Ill) required to perform the maintenance functions (Section II).

f. Remarks. Column 5. This column is provided for referencing by code, the remarks (Section IV) pertinent to the maintenance functions.

***C-3.* Explanation of Columns in Section Ill.** Section Ill, Tools, Test, and Support Equipment Requirements is not applicable.

***C-4.* Explanation of Columns in Section IV.** Section IV, Remarks, is not applicable.

Section II. MAINTENANCE ALLOCATION CHART

(1) Group no.	(2) Assembly group	(3) Maintenance functions A Inspect	B Test	C Service	D Adjust	E Align	F Calibrate	G Install	H Replace	I Repair	J Overhaul	K Rebuild	(4) Tools and equipment	(5) Remarks
01	ENCLOSURE													
	Fitted Cover	c 0.1							c 0.5	F 1.0				
	Bows	c 0.1							c 0.1					
02	GENERATOR SET	c 0.2		C 2.0					F 3.0					See TM 5-6115-585--12, -34 for generator set maintenance.
03	ACCESSORIES													
	Sledge Hammer	c 0.1							c 0.1					
	Fire Extinguisher	c 0.1							c 0.1					
	Slide Hammer	c 0.1							c 0.1					
	Ground Rods	c 0.1							c 0.1					
04	TRAILER ASSEMBLY	c 0.5	O 1.0	c 0.5										See TM 9-2330-202-14&P for trailer maintenance.
	Accessory Box								0 0.5	F 2.0				
	Fuel Can/Fire Extinguisher Brackets	c 0.1							0 0.5					
	Bed/Fenders								F 4.0	F 4.0				

(1) Group no.	(2) Assembly group	(3) Maintenance functions											(4) Tools and equipment	(5) Remarks
		A	B	C	D	E	F	G	H	I	J	K		
		Inspect	Test	Service	Adjust	Align	Calibrate	Install	Replace	Repair	Overhaul	Rebuild		
	Reflectors	c 0.1							0 0.5					
	Data Plates								o 0.2					
	Leg Prop Assembly	c 0.1		o 0.2					F 0.5	F 0.7				
	Lighting	c 0.1	o 0.3						0 1.0	0 0.5				
	Handbrake	c 0.1												

APPENDIX D

UNIT, INTERMEDIATE (FIELD) (DIRECT SUPPORT AND GENERAL SUPPORT) AND DEPOT MAINTENANCE REPAIR PARTS AND SPECIAL TOOLS LIST

Section I. INTRODUCTION

D-1. Scope. This joint Army and Air Force manual lists repair parts and special tools required for the performance of unit, intermediate (field) (direct and general support) and depot maintenance of the power unit. The following paragraphs are keyed to applicable users. All users should read paragraph 4, Special Information, prior to using this manual.

D-2. General. Repair Parts and Special Tools List is divided into the following sections:

a. (ALL) Repair Parts – Section II. A list of repair parts authorized for the performance of maintenance at the unit, intermediate (field) (direct and general support) and depot level in figure and item number sequence.

b. (ALL) Special Tools, Test and Support Equipment – Section III. A list of special tools, test and support equipment authorized for the performance of maintenance at the unit, intermediate (field) (direct and general support) and depot level.

c. *National Stock Number and Reference Number Index – Section* IV. A list of National stock numbers in numerical sequence, followed by a list of reference numbers appearing in all the listings, in alphanumeric sequence, cross-referenced to the illustration figure number and item number.

d. Reference Designator hdex – Section V. The reference Designator Column includes all assigned reference designators arranged first in alphabetical order, second in numeric order. Opposite each symbol is listed the figure and item number of the part in Section II and the reference number.

D-3. Explanation of columns. The following provides an explanation of columns in the tabular lists in Sections II and III.

a. (ALL) Illustrations, (Column 1). This column is divided as follows:

(1) *Figure Number.* Indicates the figure number of the illustration on which the item is shown.

(2) *Item Number.* Indicates the number used to identify the item on the illustration.

b. *(ALL) Source, Maintenance, and Recoverability Codes (SMR), (Column 2).*

(1) *Uniform Source Codes applicable to all Military Services.*

GENERAL: Source Codes are assigned to support items to indicate the manner of acquiring support items for maintenance, repair, or overhaul of end items. Source codes are entered in the first and second positions of the Uniform SMR Code format as follows:

Code	Definition
PA	Item procured and stocked for anticipated or known usage.
PB	Item procured and stocked for insurance purposes because essentiality dictates that a minimum quantity be available in the supply systems.
PC	Item procured and stocked and which otherwise would be coded PA except that it is deteriorative in nature.
PD	Support item, excluding support equipment, procured for initial issue or outfitting and stocked only for subsequent or additional initial issues or outfittings. Not subject to automatic replenishment.
PE	Support equipment procured and stocked for initial issue or outfittings to specified maintenance repair activities.
PF	Support equipment which will not be stocked but which will be centrally procured on demand.
PG	Item procured and stocked to provide for sustained support for the life of the equipment. It is applied to an item peculiar to the equipment which because of probable discontinuance or shutdown of production facilities would prove uneconomical to reproduce at a later time.
KD	An item of depot overhaul/repair kit and not purchased separately. Depot kit defined as a kit that provides items required at the time of overhaul or repair.
KF	An item of maintenance kit and not purchased separately. Maintenance kit defined as a kit that provides an item that can be replaced at unit or intermediate levels of maintenance.
KB	Item included in both a depot overhaul/repair kit and a maintenance kit.
MO	Item to be manufactured or fabricated at unit level.

Code	Definition
MF	Item to be manufactured or fabricated at intermediate maintenance levels. Air Force – Intermediate (*) Army – General Support (*)
MD	Item to be manufactured or fabricated at depot maintenance level.
AO	Item to be assembled at unit level.
AF	Item to be assembled at intermediate maintenance levels. Air Force – Intermediate (*) Army - Direct Support (*)
AH	Item to be assembled at intermediate maintenance levels. Air Force – Intermediate (*) Army – General Support (*)
AD	Item to be assembled at depot maintenance level.
XA	Item is not procured or stocked because the requirements for the item will result in the replacement of the next higher assembly.
XB	Item is not procured or stocked. If not available through salvage, requisition.
XC	Installation drawings, diagram, instruction sheet, field service drawing, that is identified by manufacturer's part number,
XD	A support item that is not stocked. When required, item will be procured through normal supply channels.

(*) NOTE

For USAF and the USA Safeguard Program, only Code "F" will be used to denote intermediate maintenance. On joint programs, use of either code F or H by the jointing service will denote intermediate maintenance to USAF and USA Safeguard Program.

(2) *Uniform Maintenance Codes applicable to all Military Services:* GENERAL Maintenance Codes are assigned to indicate the levels of maintenance authorized to USE and REPAIR support items. The Maintenance Codes are in the third and fourth position of the Uniform SMR Code Format.

(a) Use (Third Position):The Maintenance Code entered in the third position indicates the lowest level maintenance level authorized to remove, replace, and use the support item. The Maintenance Code entered in the third position indicates one of the following levels of maintenance.

Code	Application/Explanation
o	Support item is removed, replaced, used at the unit level of maintenance.
F	Support item is removed, replaced, used at the following intermediate levels: USAF – Intermediate (*) USA - Direct Support (*)
H	Support item is removed, replaced, used at the following intermediate levels: USAF - Intermediate (*) USA - General Support (*)

Code	Definition
D	Support items that are removed, replaced, used at Depot only: USAF - Depot, Mobile Depot and Specialized Repair Activity. USA - Depot, Mobile Depot and Specialized Repair Activity

(b) Repair (Fourth Position): The maintenance code entered in,the fourth position indicates whether the item is to be repaired and identifies the lowest maintenance level with the capability to perform complete repair (i.e., all authorized maintenance functions).

o	The lowest maintenance level capable of complete repair of the support item is the unit level.
F	The lowest maintenance level capable of complete repair of the support item is the following intermediate level: USAF – Intermediate (*) USA - General Support (*)
H	The lowest maintenance level capable of complete repair of the support item is the following intermediate level: USAF - Intermediate (*) USA - General Support (*)

(*) NOTE

For USAF programs and the USA Safeguard Program, Code F will be used to denote intermediate maintenance. On joint programs, use of either Code For H by the joining Service will denote intermediate maintenance to USAF and the USA Safeguard Program.

Code	Definition
D	The lowest maintenance level capable of complete repair of the support item is the depot level. USAF – Depot, Mobile Depot, and Specialized Repair Activity. USA – Depot, Mobile Depot, and Specialized Repair Activity.

Code	Application/Explanation
L	Repair restricted to designated Specialized Repair Activity.
Z	Nonreparable. No repair is authorized.
B	No repair is authorized. The item may be reconditioned by adjusting, lubricating, etc., at the user level. No parts or special tools are procured for the maintenance of this item.

(3) *Uniform Recoverability Codes applicable to all Military Services: GENERAL:* Recoverability Codes are assigned to support items to indicate the disposition action on unserviceable items. The recoverability code is entered in the fifth position of the uniform SMR Code Format as follows:

Recoverability Codes	Definition
Z	Nonreparable item. When unserviceable, condemn and dispose at the level indicated in column 3.
O	Reparable item. When uneconomically reparable, condemn and dispose at unit level.
F	Reparable item. When uneconomically reparable, condemn and dispose at the following intermediate levels: USAF – Intermediate (*) USA – Direct Support (*)
H	Reparable item. When uneconomically reparable, condemn and dispose at the following levels: USAF – Intermediate (*) USA – General Support (*)

(*) NOTE

For USAF programs and the USA Safeguard Program, Code F will be used to denote intermediate maintenance. On joint programs, use of either Code F or H by the joining Service will denote intermediate level of USAF and the USA Safeguard Program.

Recoverability Codes	Definition
D	Reparable item. When beyond lower level repair capability, return to depot, Condemnation and disposal not authorized below depot level.
L	Reparable item. Repair, condemnation and disposal not authorized below depot/Specialized Repair Activity level.
A	Item requires special handling or condemnation procedure because of specific reasons (i.e., precious metal content, high-dollar value, critical material or hazardous material). Refer to appropriate manuals/directives for specific instructions.

c. (ALL) National Stock Number (Column 4). Indicates the National Stock Number assigned to the item and will be used for requisitioning purposes.

d. (ALL) Description (column 5). Indicates the Federal item name and any additional descriptions of the item required. The abbreviation "w/e" when used as part of the nomenclature, indicates that the National Stock Number includes all armament, equipment, accessories and repair parts issued with the item. A part number or other reference number is followed by the applicable five digit Federal Supply Code for manufacturer in parentheses. If two reference numbers and Federal Supply Codes for manufacturer are listed, the first listing refers to the Department of Defense Drawing Number, the second listing refers to the actual part manufacturer. Items that are included in kits and sets are listed below the name of the kit or set with the quantity of each item in the kit or set indicated in the quantity incorporated in unit column.

e. (ALL) Unit of Measure (U/M) (Column 6). Indicates the standard of the basic quantity of the listed item as used in performing the actual maintenance function. This measure is expressed by a two-character alphabetical abbreviation (e.g., ea, in, pr, etc.). When the unit of measure differs from the unit of issue, the lowest unit of issue that will satisfy the required units of measure will be requisitioned.

f. (ALL) Quantity Incorporated in Unit (Column 7). Indicates the quantity of the item used in the assembly group. A "V" appearing in this column in lieu of a quantity indicates that a definite quantity cannot be indicated (e.g., shims, spacers, etc.).

D-4. Special Information.

a. (ALL) Identification of Usable On Codes for this Manual is not applicable.

b. Army unit maintenance personnel will extract the items which they require from Section II, 3rd or 4th position of column 2 of the intermediate direct and general support RPSTL. Parts which are manufactured or assembled at a higher level than that authorized to install the part are indicated by the use of higher level code in the source column.

c. Stockage Information.

(1) Air Force stockage information is contained in Initial Supply Support Lists issued separately from this publication by Sacramento Air Logistics Center in accordance with AFM 67-1, part 1, chapter 12.

(2) Army stockage is demand based in accordance with AR 710-2. Repair parts listed in this publication represent those authorized for use at indicated maintenance levels and will be requisitioned on an as-required basis until stockage is justified in accordance with AR 710-2.

d. In the parts list, some items are indented to show that they are a component of the item under which they are indented.

D-5. How to Locate Repair Parts.

a. (ALL) When National Stock Number or reference number is unknown:

(1) Using the table of contents, determine the functional group; i.e., batteries and related parts, exhaust and breather pipes, within which the repair part belongs. This is necessary since illustrations are prepared for functional groups.

(2) Find the illustration covering the functional group to which the repair part belongs.

(3) Identify the repair part on the illustration and note the illustration figure and item number of the repair part.

(4) Using the Repair Parts Listing, find the figure and item number noted on the illustration.

b. (ALL) When national stock number or reference number is known:

(1) Using the Index of National Stock Numbers and Reference Numbers, find the pertinent national stock number or reference number. This index is in ascending NSN sequence followed by a list of reference numbers in alphanumeric sequence, cross-referenced to the illustration figure number and item number.

(2) After finding the figure and item number, locate the figure and item number in the repair parts list.

D-6. (F) **Use of the Reference Designator Index Section.** This Section (Section V) is used when the reference designator is known or identified by other technical manuals supporting this equipment. The reference number is given in this section. If description or location is desired, note the figure and item number. Turn to Section II to the noted figure and item number. The location of the part and description is given in this listing.

D-7. Abbreviations.

Abbreviations	Explanation
Not Applicable	

D-8. Federal Supply Codes for Manufacturers.

Code	Manufacturer
Not Applicable	

D-9. Recommendation for Maintenance Publication Improvements. Report of errors, omissions, and recommendations for improving this publication by the individual user is encouraged. Reports should be submitted as follows:

a. Air Force AFTO Form 22 in accordance with T.O.-00-5-1, directly to: Commander, Sacramento Air Logistics Center, ATTN: SM-ALC-MMEDTA, McClellan Air Force Base, CA, 95652-5609,.

b. Army DA Form 2028, directly to: Commander, US Army Aviation and Troop Command, ATTN: AMSAT-I-MT, 4300 Goodfellow Boulevard, St. Louis, MO 63120-1798.

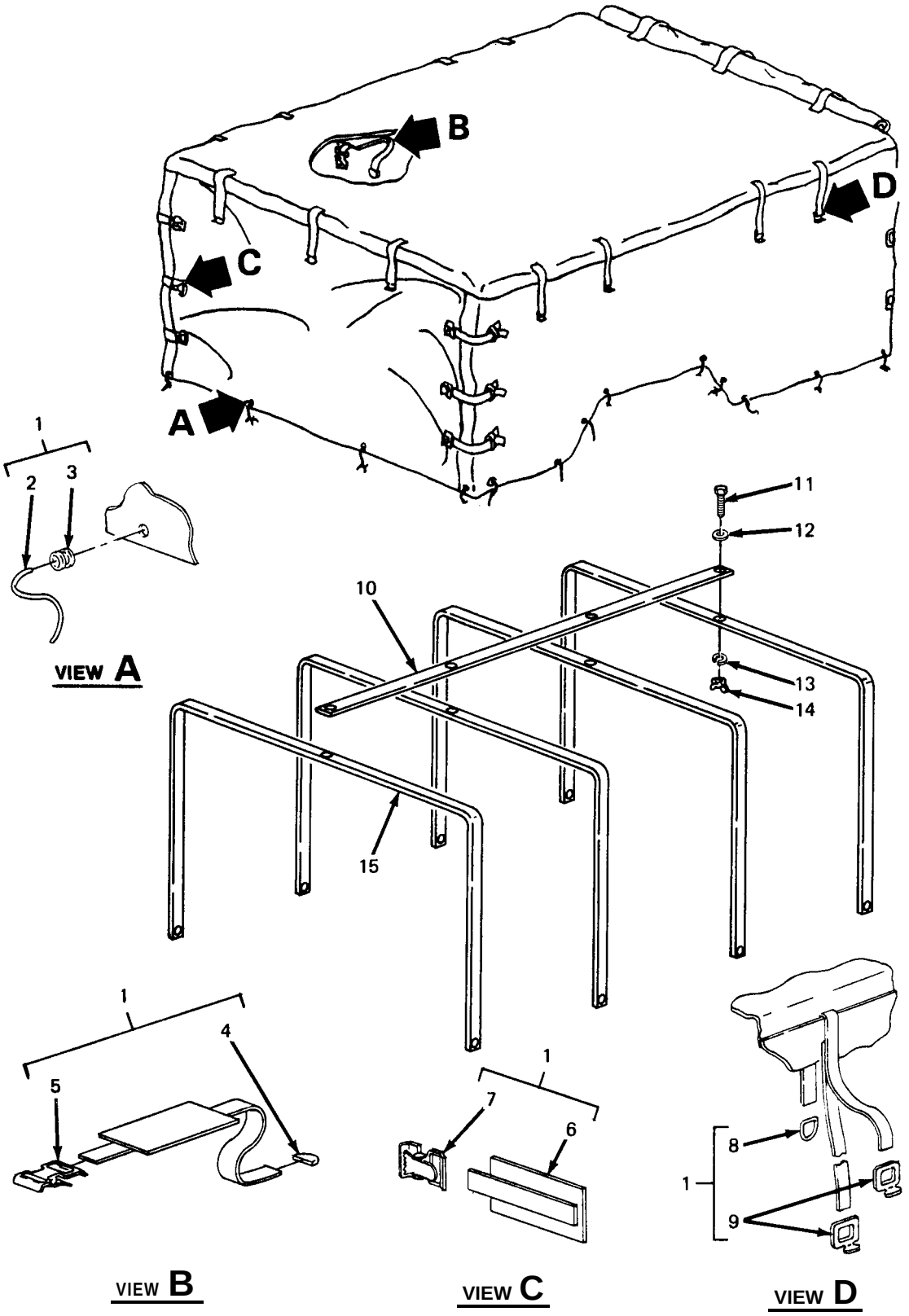

Figure D-1. Enclosure.

SECTION II

(1) ILLUS-TRATION		(2) SMR CODE				(3) USMC		(4)	(5) DESCRIPTION		(6)	(7) QTY	(8) USMC
a FIG NO.	b ITEM NO.	a ARMY	b AIR FORCE	c NAVY	d USMC	a SSI	b REPL FACTOR	NATIONAL STOCK NUMBER	REF NUMBER & MFR CODE	USABLE ON CODE	U/M	INC IN UNIT	QTY PER EQUIP
									Group 01 - ENCLOSURE				
D-1	1	PAOFF						2540-00-926-0993	FITTED COVER 13214E1219	97403	EA	1	
D-1	2	PAOZZ							.ROPE, SISAL T-R-805B	81348	EA	27	
D-1	3	PAFZZ						5325-00-175-3182	GROMMET, METALUC MILQ-16491	81349	EA	27	
D-1	4	PAFZZ						5340-00-078-7029	CUP, END STRAP MS51926-3	99006	EA	20	
D-1	5	PAFZZ						5340-00-057-6956	BUCKLE, SPRING ACTION MS519292	96908	EA	8	
D-1	6	PAFFF							CHAPE ASSEMBLY 13214E1392	97403	EA	12	
D-1	7	PAFZZ						5340-00-057-6956	BUCKLE, SPRING ACTION MS51929-2	9608	EA	12	
D-1	8	PAFZZ						385-01-031-9674	RING, DEE MS51925-1	95906	EA	14	
D-1	9	PAFZZ							HOOK, TEE 13226E0953	97403	EA	22	
D-1	10	PAOZZ						2510-01-198-2885	SUPPORT, TARPAULIN 13221E4799	97403	EA	1	
D-1	11	PAOZZ						5305-00-984-8215	SCREW, MACHINE MS35206-288	96906	EA	4	
D-1	12	PAOZZ						5310-00-014-5850	WASHER, FLAT MS27183-42	96906	EA	8	
D-1	13	PAOZZ						5310-00-933-8121	LOCKWASHER MS35338-139	96906	EA	4	
D-1	14	PAOZZ						5310-00-515-9267	NUT, PLAIN, WING MS35425-37	96906	EA	4	
D-1	15	PAOZZ						2540-00-926-0994	BOW, VEHICULAR, TOP 13214E1218	97403	EA	4	

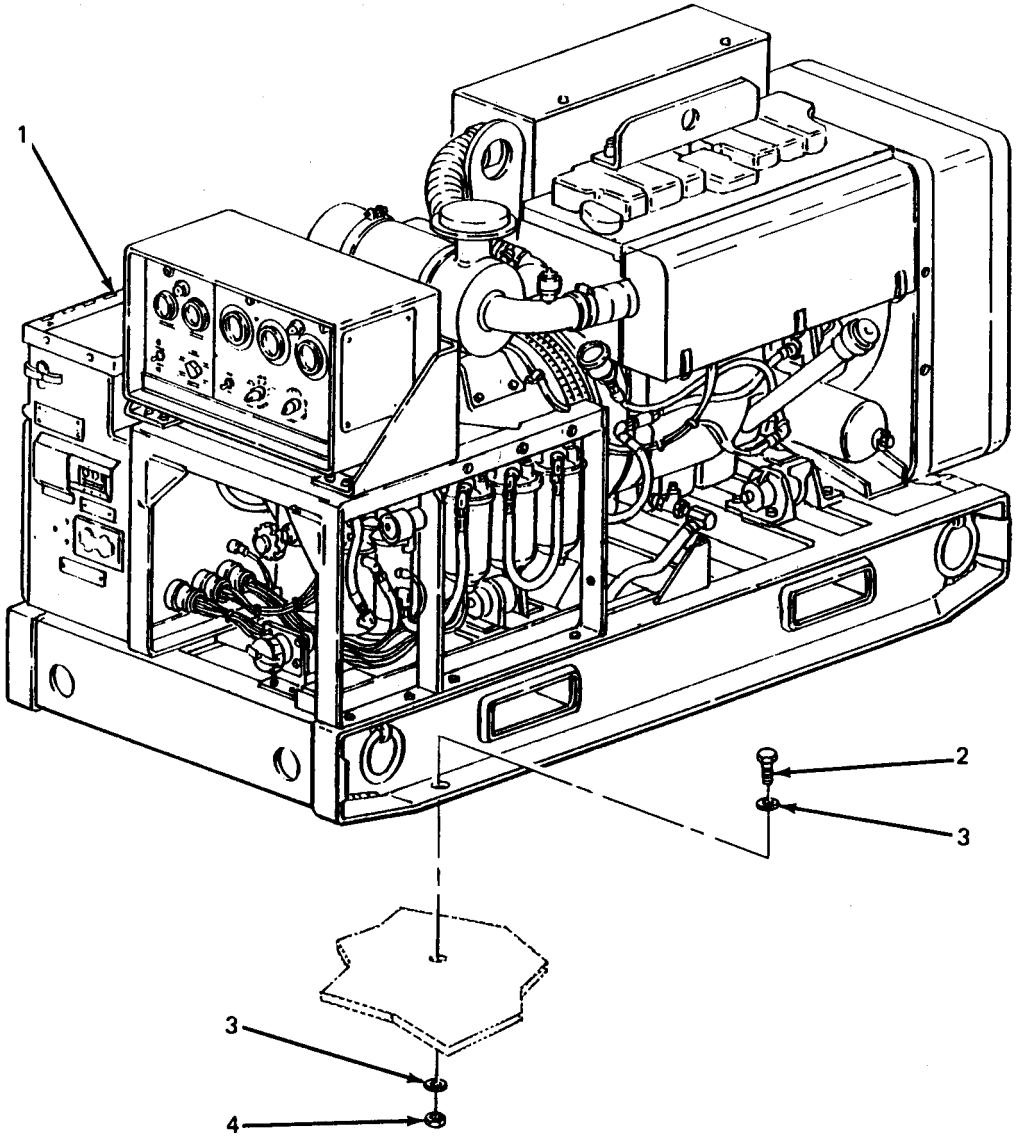

Figure D-2. Generator Set.

SECTION II

(1) ILLUS-TRATION		(2) SMR CODE				(3) USMC		(4)	(5) DESCRIPTION		(6)	(7) QTY	(8) USMC
a FIG NO.	b ITEM NO.	a ARMY	b AIR FORCE	c NAVY	d USMC	a SSI	b REPL FACTOR	NATIONAL STOCK NUMBER	REF NUMBER & MFR CODE	USABLE ON CODE	U/M	INC IN UNIT	QTY PER EQUIP
									Group 02 - GENERATOR				
D-2	1	PDFHA						6115-00-465-1030	GENERATOR SET, DIESEL MEP-003A	30554	EA	1	
D-2	2	PAOZZ						5305-00-719-5235	SCREW, CAP, HEX MS90727-114	96906	EA	4	
D-2	3	PAOZZ						5310-00-809-5998	WASHER, FLAT MS27183-18	96908	EA	8	
D-2	4	PAOZZ						5310-00-087-9507	NUT, SELF-LOCKING MS51922-37	96906	EA	4	

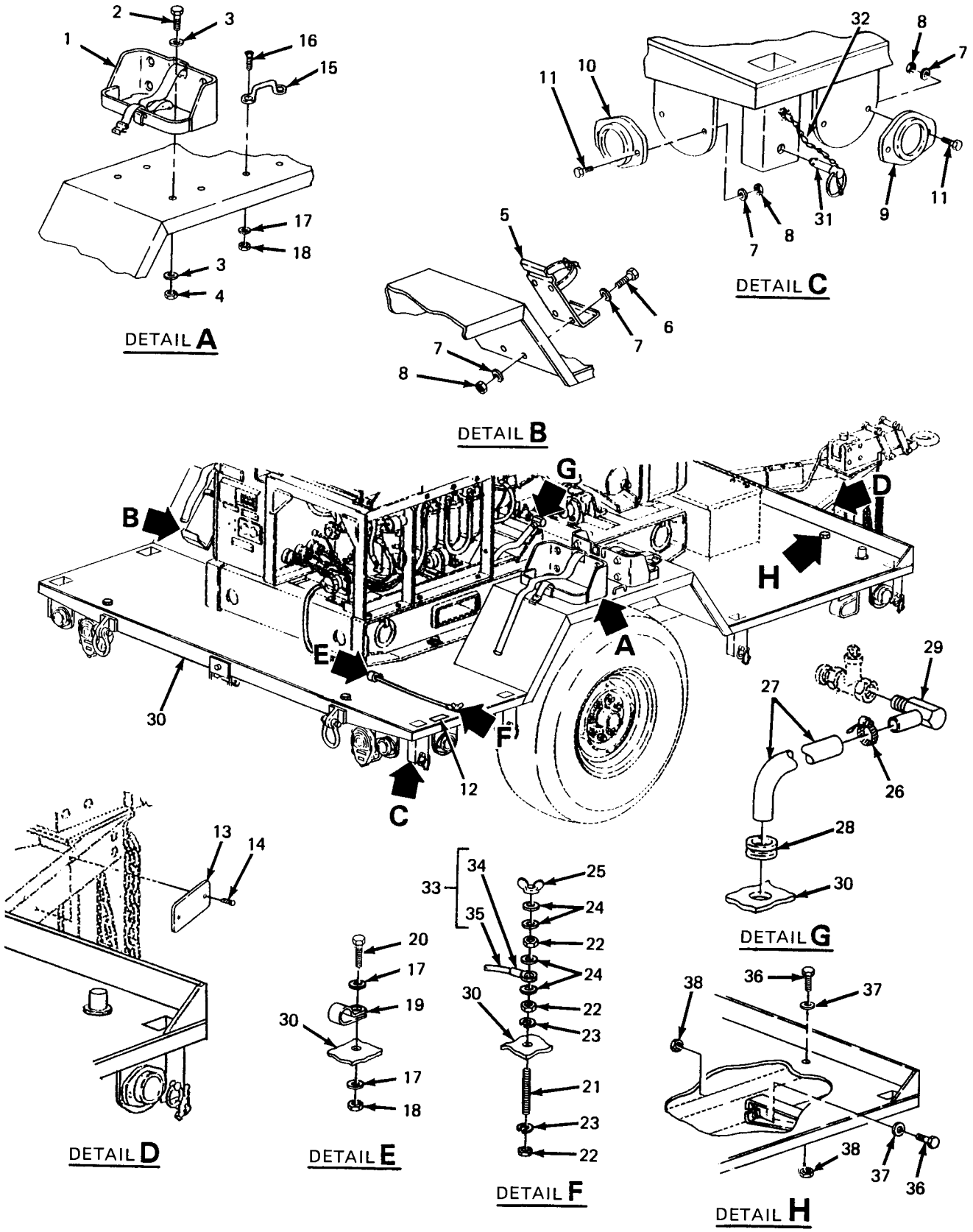

Figure D-3. Trailer Body.

SECTION II

(1) ILLUS-TRATION		(2) SMR CODE				(3) USMC		(4)	(5) DESCRIPTION		(6)	(7) QTY	(8) USMC
a FIG NO.	b ITEM NO.	a ARMY	b AIR FORCE	c NAVY	d USMC	a SSI	b REPL FACTOR	NATIONAL STOCK NUMBER	REF NUMBER & MFR CODE	USABLE ON CODE	U/M	INC IN UNIT	QTY PER EQUIP
									Group 04 - TRAILER 04-Body				
D-3	1	XBOZZ							BRACKET ASSEMBLY, LIQUID CONTAINER MS53052-1	96906	EA	4	
D-3	2	PAOZZ						5305-00-269-3213	SCREW, CAP, HEX MS90725-2	96906	EA	16	
D-3	3	PAOZZ						5310-00-080-6004	WASHER, FLAT MS27183-14	96906	EA	42	
D-3	4	PAOZZ						5310-00-087-4652	NUT, SELF-LOCKING MS51922-17	96906	EA	26	
D-3	5	PAOZZ						4210-00-223-4857	BRACKET ASSEMBLY, FIRE EXTINGUISHER 13214E1235	97403	EA	1	
D-3	6	PAOZZ						5305-00-068-0502	SCREW, CAP, HEX MS90725-6	96906	EA	4	
D-3	7	PAOZZ						5310-00-809-4058	WASHER, FLAT MS27183-10	96906	EA	24	
D-3	8	PAOZZ						5310-00-088-1251	NUT, SELF-LOCKING MS51922-1	96906	EA	16	
D-3	9	PAOZZ						9905-00-205-2795	REFLECTOR MS35387-1	96906	EA	4	
D-3	10	PAOZZ						9905-00-202-3639	REFLECTOR MS35387-2	96906	EA	2	
D-3	11	PAOZZ						5305-00-068-0500	SCREW, CAP, HEX MS90725-3	96906	EA	12	
D-3	12	PAOZZ						9905-00-017-7703	PLATE, IDENTIFICATION 13205E4918	97403	EA	1	
D-3	13	MDFZZ							PLATE, IDENTIFICATION 13216E7604-44	97403	EA	1	
D-3	14	PAOZZ						5305-00-253-5614	SCREW, DRIVE MS21318-20	96906	EA	4	
D-3	15	PAOZZ						5340-00-229-0340	LOOP, STRAP FASTENER MS51939-3	96906	EA	2	
D-3	16	PAOZZ						5305-00-957-7086	SCREW, MACHINE MS24693-S273	96906	EA	4	
D-3	17	PAOZZ						5310-00-014-5850	WASHER, FLAT MS27183-42	96906	EA	8	
D-3	18	PAOZZ						5310-00-877-5797	NUT, SELF-LOCKING MS21044N3	96906	EA	6	
D-3	19	PAOZZ							CLAMP LOOP MS21333-68	96906	EA	2	
D-3	20	PAOZZ						5305-00-98-7435	SCREW, MACHINE MS35207-264	96906	EA	2	

SECTION II

(1) ILLUS-TRATION a FIG NO.	b ITEM NO.	(2) SMR CODE a ARMY	b AIR FORCE	c NAVY	d USMC	(3) USMC a SSI	b REPL FACTOR	(4) NATIONAL STOCK NUMBER	(5) DESCRIPTION REF NUMBER & MFR CODE	USABLE ON CODE	(6) U/M	(7) QTY INC IN UNIT	(8) USMC QTY PER EQUIP
									04 - Body - CONT				
D-3	21	PAOZZ						5307-00-227-1741	STUD 13214E1223	97403	EA	1	
D-3	22	PAOZZ						5310-01-026-5824	NUT, PLAIN MS16203-39	96906	EA	3	
D-3	23	PAOZZ						5310-00-913-9776	LOCKWASHER MS35335-91	96906	EA	2	
D-3	24	PAOZZ						5310-00-187-2413	WASHER, FLAT AN961-616T	88044	EA	4	
D-3	25	PAOZZ						5310-00-543-4717	NUT, PLAIN, WING MS35425-28	96906	EA	1	
D-3	26	PAOZZ						4730-00-908-3194	CLAMP HOSE MS35842-11	96906	EA	1	
D-3	27	MOOOO						4720-01-260-2572	HOSE, RUBBER MIL-H-6000	81349	EA	1	
D-3	28	PAOZZ						5325-00-903-5909	GROMMET MS35489-112	96906	EA	1	
D-3	29	PAOZZ						4730-00-809-9703	ELBOW MS24519-9		EA	1	
D-3	30	XAFHH							BODY, TRAILER (FENDERS AND BED) 13221E7326	97403	EA	1	
D-3	31	PAOZZ						5340-00-087-5269	.PIN, QUICK RELEASE MS17990-C613	96906	EA	8	
D-3	32	PAOZZ						4010-00-188-9011	.CHAIN, WELDLESS RR-C-271	81348	EA	8	
D-3	33	MOOOO							WIRE, GROUND 13221E7329	97403	EA	2	
D-3	34	PAOZZ						6145-00-578-6594	.WIRE, ELECTRICAL M50862-669	81349	FT	5	
D-3	35	PAOZZ						5940-00-115-4992	.TERMINAL, LUG MS20659-110	96906	EA	1	
D-3	36	PAOZZ						5305-00-269-3215	SCREW, CAP, HEX MS90725-65	96906	EA	26	
D-3	37	PAOZZ						5310-00-080-6004	WASHER, FLAT MS27183-14	96906	EA	26	
D-3	38	PAOZZ						5310-0-87-4652	NUT, SELF-LOCKING MS51922-17	96906	EA	26	

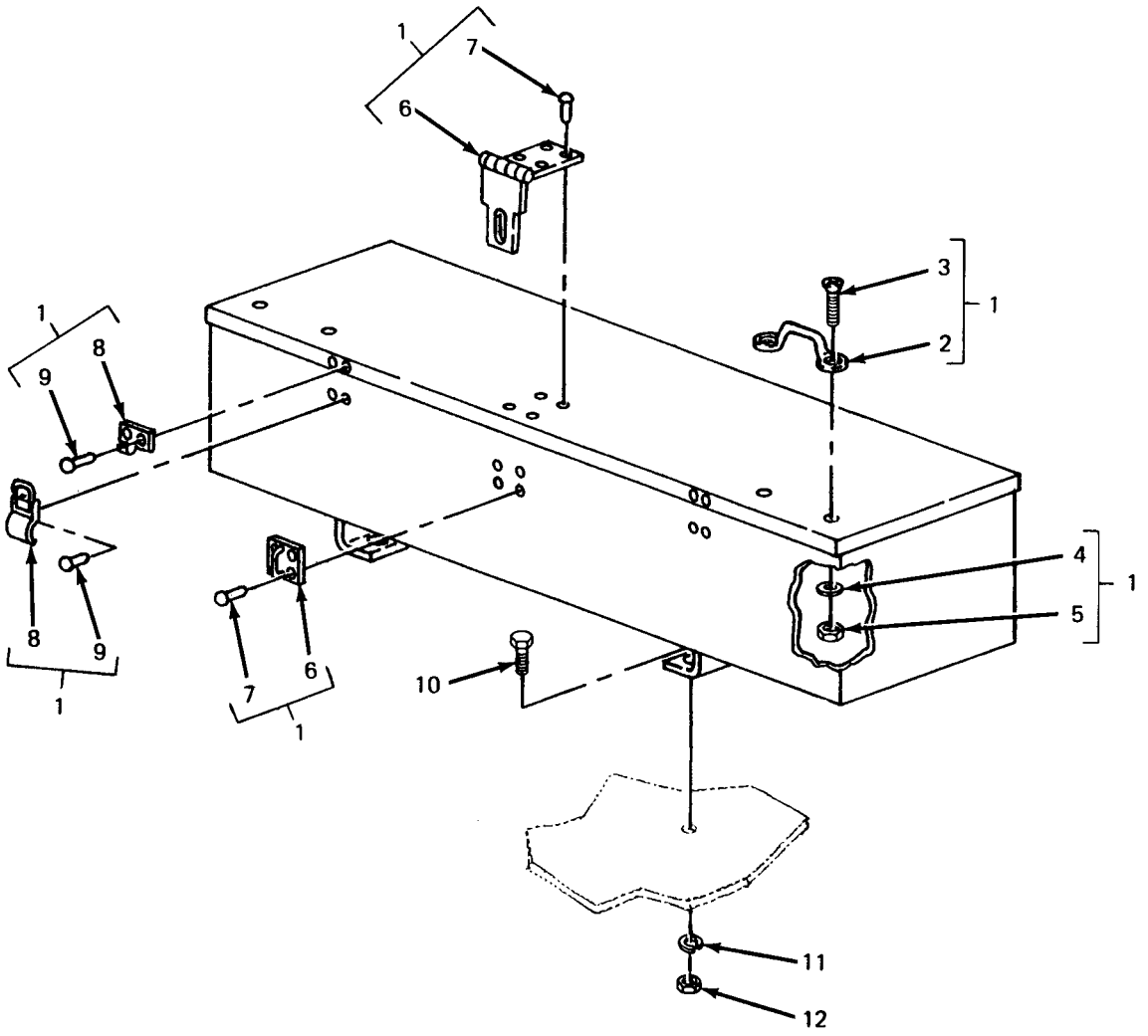

Figure D-4. Accessory Box.

SECTION II

(1) ILLUS-TRATION		(2) SMR CODE				(3) USMC		(4)	(5) DESCRIPTION		(6)	(7) QTY	(8) USMC
a FIG NO.	b ITEM NO.	a ARMY	b AIR FORCE	c NAVY	d USMC	a SSI	b REPL FACTOR	NATIONAL STOCK NUMBER	REF NUMBER & MFR CODE	USABLE ON CODE	U/M	INC IN UNIT	QTY PER EQUIP
									04 - Accessory Box				
D-4	1	XDFFF						6115-01-230-077	BOX, ACCESSORY		EA	1	
									13226E7737	97403			
D-4	2	PAOZZ						5340-00-229-0340	.LOOP, STRAP FASTENER		EA	2	
									MS51939-3	96906			
D-4	3	PAOZZ						5305-00-957-7086	.SCREW, MACHINE		EA	4	
									MS24693-S273	96906			
D-4	4	PAOZZ						5310-00-014-5850	.WASHER, FLAT		EA	4	
									MS27183-42	96906			
D-4	5	PAOZZ						5310-00-059-9263	.NUT, SELF-LOCKING		EA	4	
									MS21046C3	96906			
D-4	6	PAOZZ						5340-00-234-8422	.HASP, HINGED		EA	1	
									MS27969-4	96906			
D-4	7	PAOZZ						5320-01-168-3097	.RIVET, SOLID		EA	8	
									MS9460-102	96906			
D-4	8	PAOZZ						5340-00-75-2126	.CATCH, CLAMPING AND STRIKE		EA	2	
									MS18015-1	96906			
D-4	9	PAOZZ						5320-00-753-3830	.RIVET, SOLID		EA	8	
									MS20613-4P5	96906			
D-4	10	PAOZZ						5306-00-225-8496	BOLT, MACHINE		EA	4	
									MS90725-31	96906			
D-4	11	PAOZZ						5310-00-407-9566	LOCKWASHER		EA	4	
									MS3533- 45	96906			
D-4	12	PAOZZ						5310-00-880-7744	NUT, PLAIN, HEX		EA	4	
									MS51967-5	96906			

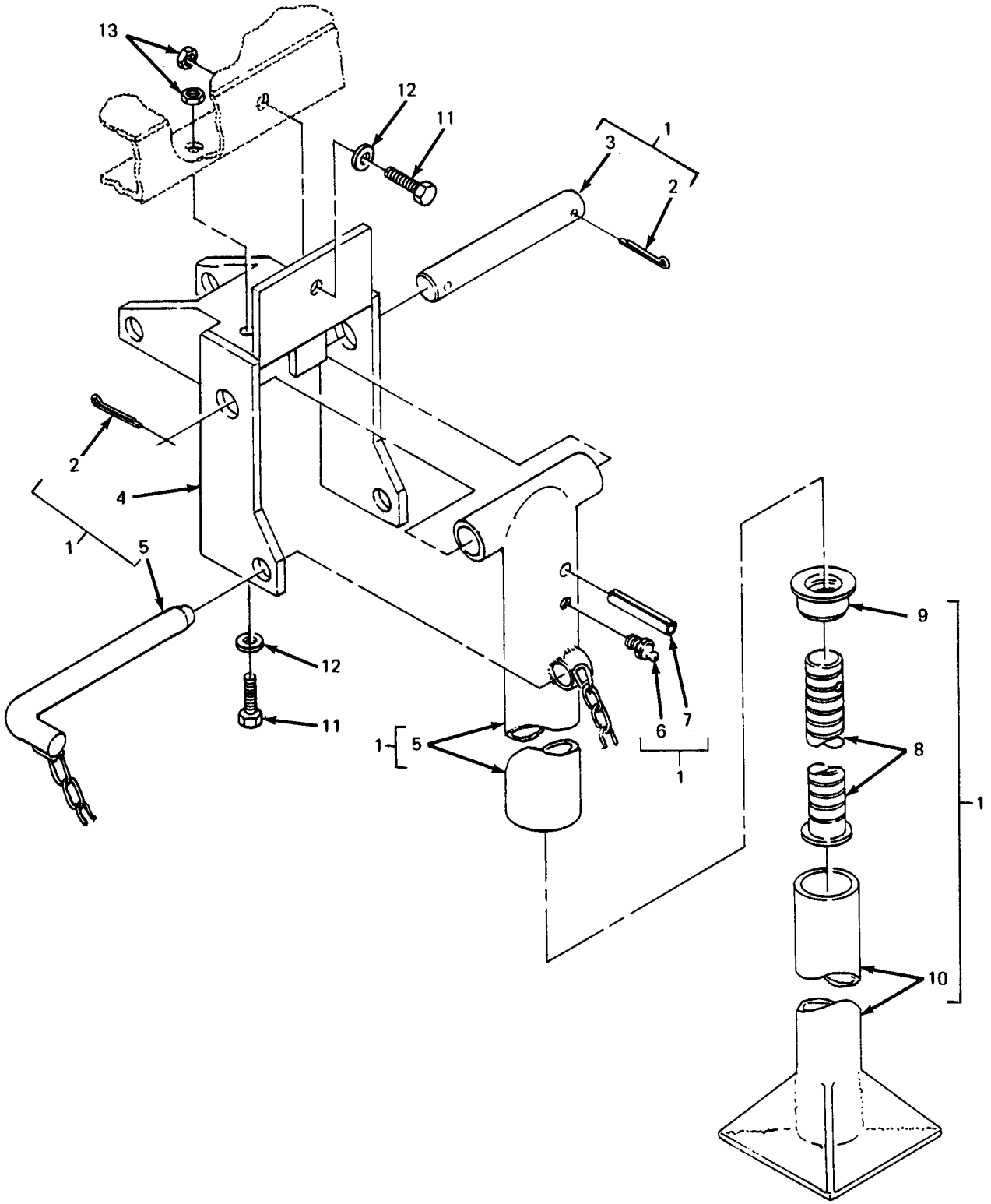

Figure D-5. Leg Prop Assembly.

SECTION II

(1) ILLUS-TRATION		(2) SMR CODE				(3) USMC		(4)	(5) DESCRIPTION		(6)	(7) QTY	(8) USMC
a FIG NO.	b ITEM NO.	a ARMY	b AIR FORCE	c NAVY	d USMC	a SSI	b REPL FACTOR	NATIONAL STOCK NUMBER	REF NUMBER & MFR CODE	USABLE ON CODE	U/M	INC IN UNIT	QTY PER EQUIP
									04- Frame				
D-5	1	XBFFF						2950-00-420-8929	LEG PROP ASSEMBLY 13214E1206	 97403	EA	1	
D-5	2	PAOZZ						5315-00-839-5822	PIN, COTTER M824665-353	 96906	EA	2	
D-5	3	XBOZZ						5315-01-162-0143	SHAFT 13214E1209	 97403	EA	1	
D-5	4	XBOZZ						6115-01-220-1548	BRACKET 13214E1207	 97403	EA	1	
D-5	5	XBOZZ						2590-00-453-8977	LEG, UPPER 13214E1208-2	 97403	EA	1	
D-5	6	PAOZZ						4730-00-172-0049	FITTING, LUBRICATION M815006-1	 96906	EA	1	
D-5	7	PAOZZ						5315-00-838-4584	PIN, SPRING M816562-66	 96906	EA	1	
D-5	8	XBOZZ						5315-01-158-2144	SCREW 13214E1210	 97403	EA	1	
D-5	9	XBOZZ						5310-01-149-0869	NUT 13214E1211	 97403	EA	1	
D-5	10	XBOZZ						2590-01-167-8596	BASE, LEG 13214E1212-2	 97403	EA	1	
D-5	11	PAOZZ						5305-00-269-3213	SCREW, CAP, HEX M890725-62	 96906	EA	3	
D-5	12	PAOZZ						5310-00-080-6004	WASHER, FLAT MS27183-14	 96906	EA	6	
D-5	13	PAOZZ						5310-00-087-4652	NUT, SELF-LOCKING MS51922-17	 96906	EA	3	

SECTION III. SPECIAL TOOLS, TEST AND SUPPORT EQUIPMENT

NOT APPLICABLE

SECTION IV. NATIONAL STOCK NUMBER AND REFERENCE NUMBER INDEX

NSN	FIGURE NO.	ITEM NO.	NSN	FIGURE NO.	ITEM NO.
2510-01-198-2885	D-1	10	5310-00-187-2413	D-3	24
2540-00-926-0993	D-1	1	5310-00-407-9566	D-4	11
2540-00-926-0994	D-1	15	5310-00-515-9267	D-1	14
2590-00-420-8929	D-5	1	5310-00-543-4717	D-3	25
2590-00-453-8977	D-5	5	5310-00-806-4058	D-3	7
2590-01-167-8596	D-5	10	5310-00-809-5998	D-2	3
4010-00-188-9011	D-3	32	5310-00-877-5797	D-3	18
4210-00-223-4857	D-3	5	5310-00-880-7744	D-4	12
4720-01-260-2572	D-3	27	5310-00-913-9776	D-3	23
4730-00-172-0049	D-5	6	5310-00-933-8121	D-1	13
4730-00-809-9703	D-3	29	5310-01-149-0869	D-5	9
4730-00-908-3194	D-3	26	5310-01-026-5824	D-3	22
5305-00-068-0500	D-3	11	5315-00-838-4584	D-5	7
5305-00-068-0502	D-3	6	5315-00-839-5822	D-5	2
5305-00-253-5614	D-3	14	5315-01-158-2144	D-5	8
5305-00-269-3213	D-3	2	5315-01-162-0143	D-5	3
5305-00-269-3213	D-5	11	5320-00-753-3830	D-4	9
5305-00-269-3215	D-3	36	5320-01-168-3097	D-4	7
5305-00-719-5235	D-2	2	5325-00-903-5909	D-3	28
5305-00-957-7086	D-3	16	5325-01-875-3182	D-1	3
5305-00-957-7086	D-4	3	5340-00-057-6956	D-1	5
5305-00-984-6215	D-1	11	5340-00-057-6956	D-1	7
5305-00-989-7435	D-3	20	5340-00-078-7029	D-1	4
5306-00-225-8496	D-4	10	5340-00-087-5269	D-3	31
5307-00-227-1741	D-3	21	5340-00-229-0340	D-3	15
5310-00-014-5850	D-1	12	5340-00-229-0340	D-4	2
5310-00-014-5850	D-3	17	5340-00-234-8422	D-4	6
5310-00-014-5850	D-4	4	5340-00-975-2126	D-4	8
5310-00-059-9263	D-4	5	5365-01-031-9674	D-1	8
5310-00-067-9507	D-2	4	5940-00-115-4992	D-3	35
5310-00-080-6004	D-3	3	6115-00-465-1030	D-2	1
5310-00-080-6004	D-3	37	6115-01-220-1548	D-5	4
5310-00-080-6004	D-5	12	6115-01-230-0677	D-4	1
5310-00-087-4652	D-3	4	6145-00-578-6594	D-3	34
5310-00-087-4652	D-3	38	9905-00-202-3639	D-3	10
5310-00-087-4652	D-5	13	9905-00-205-2795	D-3	9
5310-00-088-1251	D-3	8	9905-01-085-7703	D-3	12

SECTION IV. NATIONAL STOCK NUMBER AND REFERENCE NUMBER INDEX (CONT)

REFERENCE NUMBER	FSCM	FIG. NO.	ITEM NO.	REFERENCE NUMBER	FSCM	FIG. NO.	ITEM NO.
AN961-616T	88044	D-3	24	MS51922-17	96906	D-3	38
MEP-003A	30554	D-2	1	MS51922-17	96906	D-5	13
MIL-G-16491	81349	D-1	3	MS51922-37	96906	D-2	4
MIL-H-6000	81349	D-3	27	MS51925-1	96906	D-1	8
MS15006-1	96906	D-5	6	MS51926-3	96906	D-1	4
MS16203-39	96906	D-3	22	MS51929-2	96906	D-1	5
MS16562-66	96906	D-5	7	MS51929-2	96906	D-1	7
MS17990-C613	96906	D-3	31	MS51939-3	96906	D-3	15
MS18015-1	96906	D-4	8	MS51939-3	96906	D-4	2
MS20613-4P5	96906	D-4	9	MS51967-5	96906	D-4	12
MS20659-110	96906	D-3	35	MS53052-1	96906	D-3	1
MS21044N3	96906	D-3	18	MS90725-3	96906	D-3	11
MS21046C3	96906	D-4	5	MS90725-31	96906	D-4	10
MS21318-20	96906	D-3	14	MS90725-6	96906	D-3	6
MS21333-68	96906	D-3	19	MS90725-62	96906	D-3	2
MS24519-9	96906	D-3	29	MS90725-62	96906	D-5	11
MS24665-353	96906	D-5	2	MS90725-65	96906	D-3	36
MS24693-S273	96906	D-3	16	MS90727-114	96906	D-2	2
MS24693-S273	96906	D-4	3	MS9460-102	96906	D-4	7
MS27183-10	96906	D-3	7	M5086/2-6-9	81349	D-3	34
MS27183-14	96906	D-3	3	RR-C-271	81348	D-3	32
MS27183-14	96906	D-3	37	T-R-605B	81348	D-1	2
MS27183-14	96906	D-5	12	13205E4918	97403	D-3	12
MS27183-18	96906	D-2	3	13214E1206	97403	D-5	1
MS27183-42	96906	D-1	12	13214E1207	97403	D-5	4
MS27183-42	96906	D-3	17	13214E1208	97403	D-5	5
MS27183-42	96906	D-4	4	13214E1209	97403	D-5	3
MS27969-4	96906	D-4	6	13214E1210	97403	D-5	8
MS35206-268	96906	D-1	11	13214E1211	97403	D-5	9
MS35207-264	96906	D-3	20	13214E1212	97403	D-5	10
MS35335-91	96906	D-3	23	13214E1218	97403	D-1	15
MS35338-45	96906	D-4	11	13214E1219	97403	D-1	1
MS35338-139	96906	D-1	13	13214E1223	97403	D-3	21
MS35387-1	96906	D-3	9	13214E1235	97403	D-3	5
MS35387-2	96906	D-3	10	13214E1392	97403	D-1	6
MS35425-28	96906	D-3	25	13216E7604-44	97403	D-3	13
MS35425-37	96906	D-1	14	13221E4799	97403	D-1	10
MS35489-112	96906	D-3	28	13221E7326	97403	D-3	30
MS35842-11	96906	D-3	26	13221E7329	97403	D-3	33
MS51922-1	96906	D-3	8	13226E0953	97403	D-1	9
MS51922-17	96906	D-3	4	13226E7737	97403	D-4	1

SECTION V. REFERENCE DESIGNATOR INDEX

NOT APPLICABLE

* U.S. GOVERNMENT PRINTING OFFICE: 1988-554-169/87053

By Order of the Secretary of the Army:

CARL E. VUONO
General, United States Army
Chief of Staff

Official:

R. L. DILWORTH
Brigadier General, United States Army
The Adjutant General

DISTRIBUTION:
To be distributed in accordance with DA Form 12-25A, Operator, Unit, Direct Support and General Support Maintenance requirements for Generator Sets, Gas/Diesel Engine, Trailer Mounted (PU Series).

RECOMMENDED CHANGES TO EQUIPMENT TECHNICAL PUBLICATIONS

SOMETHING WRONG WITH THIS PUBLICATION?

FROM: (PRINT YOUR UNIT'S COMPLETE ADDRESS)
PFC JOHN DOE
COA, 3d ENGINEER BN
FT. LEONARDWOOD, MO 63108

DATE SENT

PUBLICATION NUMBER	PUBLICATION DATE	PUBLICATION TITLE
TM 5-6115-632-14&P	17 June 1988	Power Unit PU-753/M NSN 6115-00-033-1389

BE EXACT. . PIN-POINT WHERE IT IS

PAGE NO.	PARA-GRAPH	FIGURE NO	TABLE NO.	IN THIS SPACE TELL WHAT IS WRONG AND WHAT SHOULD BE DONE ABOUT IT:
6	2-1 a			In line 6 of paragraph 2-1a the manual states the engine has 6 Cylinders. The engine on my set only has 4 Cylinders. Change the manual to show 4 Cylinders.
B1		4-3		Callout 16 on figure 4-3 is pointing at a bolt. In key to figure 4-3, item 16 is called a shim - Please correct one or the other.
125	line	20		I ordered a gasket, item 19 on figure B-16 by NSN 2910-00-762-3001. I got a gasket but it doesn't fit. Supply says I got what I ordered, so the NSN is wrong. Please give me a good NSN

PRINTED NAME, GRADE OR TITLE, AND TELEPHONE NUMBER: JOHN DOE, PFC (268) 317-7111

SIGN HERE: John Doe
JOHN DOE

DA FORM 1 JUL 79 2028-2

PREVIOUS EDITIONS ARE OBSOLETE.

DRSTS-M Overprint 1, 1 Nov 80

P.S.--IF YOUR OUTFIT WANTS TO KNOW ABOUT YOUR RECOMMENDATION MAKE A CARBON COPY OF THIS AND GIVE IT TO YOUR HEADQUARTERS

TEAR ALONG PERFORATED LINE

REVERSE OF DA FORM 2028-2 Reverse of DRSTS-M Overprint 2, 1 Nov 80

FILL IN YOUR UNIT'S ADDRESS

FOLD BACK

DEPARTMENT OF THE ARMY

OFFICIAL BUSINESS
PENALTY FOR PRIVATE USE $300

POSTAGE AND FEES PAID
DEPARTMENT OF THE ARMY
DOD 314

U.S. MAIL

COMMANDER
U S ARMY TROOP SUPPORT COMMAND
ATTN: AMSTR-MCTS
4300 GOODFELLOW BOULEVARD
ST. LOUIS, MO 63120-1798

TEAR ALONG PERFORATED LINE

RECOMMENDED CHANGES TO EQUIPMENT TECHNICAL PUBLICATIONS

THEN... JOT DOWN THE DOPE ABOUT IT ON THIS FORM. CAREFULLY TEAR IT OUT, FOLD IT AND DROP IT IN THE MAIL!

SOMETHING WRONG WITH THIS PUBLICATION?

FROM: (PRINT YOUR UNIT'S COMPLETE ADDRESS)

DATE SENT

PUBLICATION NUMBER	PUBLICATION DATE	PUBLICATION TITLE
TM 5-6115-632-14&P	17 June 1988	Power Unit PU-753/M NSN 6115-00-033-1389

BE EXACT PIN-POINT WHERE IT IS

PAGE NO	PARA-GRAPH	FIGURE NO	TABLE NO

IN THIS SPACE TELL WHAT IS WRONG AND WHAT SHOULD BE DONE ABOUT IT:

PRINTED NAME, GRADE OR TITLE, AND TELEPHONE NUMBER

SIGN HERE

TEAR ALONG PERFORATED LINE

DA FORM 1 JUL 79 2028-2

PREVIOUS EDITIONS ARE OBSOLETE.

DRSTS-M Overprint 2, 1 Nov 80.

P.S.--IF YOUR OUTFIT WANTS TO KNOW ABOUT YOUR RECOMMENDATION MAKE A CARBON COPY OF THIS AND GIVE IT TO YOUR HEADQUARTERS

REVERSE OF DA FORM 2028-2 Reverse of DRSTS-M Overprint 2, 1 Nov 80

FILL IN YOUR UNIT'S ADDRESS

FOLD BACK

DEPARTMENT OF THE ARMY

OFFICIAL BUSINESS
PENALTY FOR PRIVATE USE $300

POSTAGE AND FEES PAID
DEPARTMENT OF THE ARMY
DOD 314

U.S. MAIL

COMMANDER
U S ARMY TROOP SUPPORT COMMAND
ATTN: AMSTR-MCTS
4300 GOODFELLOW BOULEVARD
ST. LOUIS, MO 63120-1798

TEAR ALONG PERFORATED LINE

RECOMMENDED CHANGES TO EQUIPMENT TECHNICAL PUBLICATIONS

SOMETHING WRONG WITH THIS PUBLICATION?

FROM: (PRINT YOUR UNIT'S COMPLETE ADDRESS)

DATE SENT

PUBLICATION NUMBER	PUBLICATION DATE	PUBLICATION TITLE
TM 5-6115-632-14&P	17 June 1988	Power Unit PU-753/M NSN 6115-00-033-1389

BE EXACT PIN-POINT WHERE IT IS

PAGE NO	PARA-GRAPH	FIGURE NO	TABLE NO

IN THIS SPACE TELL WHAT IS WRONG AND WHAT SHOULD BE DONE ABOUT IT:

PRINTED NAME, GRADE OR TITLE, AND TELEPHONE NUMBER

SIGN HERE

DA FORM 1 JUL 79 2028-2

PREVIOUS EDITIONS ARE OBSOLETE.

DRSTS-M Overprint 2, 1 Nov 80.

P.S.--IF YOUR OUTFIT WANTS TO KNOW ABOUT YOUR RECOMMENDATION MAKE A CARBON COPY OF THIS AND GIVE IT TO YOUR HEADQUARTERS

TEAR ALONG PERFORATED LINE

REVERSE OF DA FORM 2028-2 Reverse of DRSTS-M Overprint 2, 1 Nov 80

TEAR ALONG PERFORATED LINE

FILL IN YOUR UNIT'S ADDRESS

FOLD BACK

DEPARTMENT OF THE ARMY

POSTAGE AND FEES PAID
DEPARTMENT OF THE ARMY
DOD 314

U.S. MAIL

OFFICIAL BUSINESS
PENALTY FOR PRIVATE USE $300

COMMANDER
U S ARMY TROOP SUPPORT COMMAND
ATTN: AMSTR-MCTS
4300 GOODFELLOW BOULEVARD
ST. LOUIS, MO 63120-1798

RECOMMENDED CHANGES TO EQUIPMENT TECHNICAL PUBLICATIONS

THEN . . JOT DOWN THE DOPE ABOUT IT ON THIS FORM, CAREFULLY TEAR IT OUT, FOLD IT AND DROP IT IN THE MAIL!

SOMETHING WRONG WITH THIS PUBLICATION?

FROM: (PRINT YOUR UNIT'S COMPLETE ADDRESS)

DATE SENT

PUBLICATION NUMBER	PUBLICATION DATE	PUBLICATION TITLE
TM 5-6115-632-14&P	17 June 1988	Power Unit PU-753/M NSN 6115-00-033-1389

BE EXACT PIN-POINT WHERE IT IS

PAGE NO	PARA-GRAPH	FIGURE NO	TABLE NO

IN THIS SPACE TELL WHAT IS WRONG AND WHAT SHOULD BE DONE ABOUT IT:

PRINTED NAME, GRADE OR TITLE, AND TELEPHONE NUMBER

SIGN HERE

TEAR ALONG PERFORATED LINE

DA FORM 1 JUL 79 2028-2

PREVIOUS EDITIONS ARE OBSOLETE.

DRSTS-M Overprint 2, 1 Nov 80.

P.S.--IF YOUR OUTFIT WANTS TO KNOW ABOUT YOUR RECOMMENDATION MAKE A CARBON COPY OF THIS AND GIVE IT TO YOUR HEADQUARTERS

The Metric System and Equivalents

Linear Measure

1 centimeter = 10 millimeters = .39 inch
1 decimeter = 10 centimeters = 3.94 inches
1 meter = 10 decimeters = 39.37 inches
1 dekameter = 10 meters = 32.8 feet
1 hectometer = 10 dekameters = 328.08 feet
1 kilometer = 10 hectometers = 3,280.8 feet

Weights

1 centigram = 10 milligrams = .15 grain
1 decigram = 10 centigrams = 1.54 grains
1 gram = 10 decigram = .035 ounce
1 dekagram = 10 grams = .35 ounce
1 hectogram = 10 dekagrams = 3.52 ounces
1 kilogram = 10 hectograms = 2.2 pounds
1 quintal = 100 kilograms = 220.46 pounds
1 metric ton = 10 quintals = 1.1 short tons

Liquid Measure

1 centiliter = 10 milliters = .34 fl. ounce
1 deciliter = 10 centiliters = 3.38 fl. ounces
1 liter = 10 deciliters = 33.81 fl. ounces
1 dekaliter = 10 liters = 2.64 gallons
1 hectoliter = 10 dekaliters = 26.42 gallons
1 kiloliter = 10 hectoliters = 264.18 gallons

Square Measure

1 sq. centimeter = 100 sq. millimeters = .155 sq. inch
1 sq. decimeter = 100 sq. centimeters = 15.5 sq. inches
1 sq. meter (centare) = 100 sq. decimeters = 10.76 sq. feet
1 sq. dekameter (are) = 100 sq. meters = 1,076.4 sq. feet
1 sq. hectometer (hectare) = 100 sq. dekameters = 2.47 acres
1 sq. kilometer = 100 sq. hectometers = .386 sq. mile

Cubic Measure

1 cu. centimeter = 1000 cu. millimeters = .06 cu. inch
1 cu. decimeter = 1000 cu. centimeters = 61.02 cu. inches
1 cu. meter = 1000 cu. decimeters = 35.31 cu. feet

Approximate Conversion Factors

To change	*To*	*Multiply by*	*To change*	*To*	*Multiply by*
inches	centimeters	2.540	ounce-inches	newton-meters	.007062
feet	meters	.305	centimeters	inches	.394
yards	meters	.914	meters	feet	3.280
miles	kilometers	1.609	meters	yards	1.094
square inches	square centimeters	6.451	kilometers	miles	.621
square feet	square meters	.093	square centimeters	square inches	.155
square yards	square meters	.836	square meters	square feet	10.764
square miles	square kilometers	2.590	square meters	square yards	1.196
acres	square hectometers	.405	square kilometers	square miles	.386
cubic feet	cubic meters	.028	square hectometers	acres	2.471
cubic yards	cubic meters	.765	cubic meters	cubic feet	35.315
fluid ounces	milliliters	29,573	cubic meters	cubic yards	1.308
pints	liters	.473	milliliters	fluid ounces	.034
quarts	liters	.946	liters	pints	2.113
gallons	liters	3.785	liters	quarts	1.057
ounces	grams	28.349	liters	gallons	.264
pounds	kilograms	.454	grams	ounces	.035
short tons	metric tons	.907	kilograms	pounds	2.205
pound-feet	newton-meters	1.356	metric tons	short tons	1.102
pound-inches	newton-meters	.11296			

Temperature (Exact)

°F	Fahrenheit temperature	5/9 (after subtracting 32)	Celsius temperature	°C

PIN: 064390-000